Model: NAD 30S/30/40	Date: 31-May-98	No: 1
Subject: China/Taiwan Version Information	Prepared by: S. Tomoe	
From: Technical Service Department.		

Classification:			
	☐ Troubleshooting	☐ Part information	☐ Action required
	☐ Mechanical	☐ Electrical	☒ Service manual revision
	☐ Paper path	☐ Transmit/receive	☐ Retrofit information
	☐ Other ( )		

The China and Taiwan versions are going to be produced from June 1998. This RTB clarifies the differences between other Ricoh versions and China/Taiwan versions.

Please refer to the attached documents for more detail.

For both versions

3. Installation

3.1 Chinese paper sizes

3.1.1 267 mm x 390 mm paper

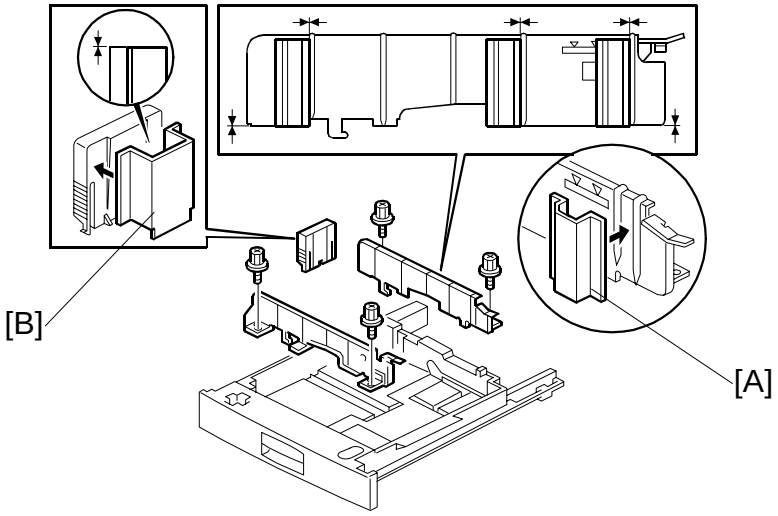

A231I542.WMF

1. Remove the paper tray.
2. Remove the side fences (2 screws each) and the end fence.
3. Peel off the backing of the double-sided tape that is attached to the side fence spacer (t=7.2 mm) [A].
4. Attach the side fence spacer to the side fence as shown (3 spacers for each side fence).
   NOTE: Both edges of the spacer should be aligned with the bottom edge of the fence.
5. Peel off the backing of the double-sided tape that is attached to the end fence spacer (t=31 mm) [B].
6. Attach the end fence spacer to the end fence as shown.
7. Install the side fences in the 11” position in the paper tray.
8. Install the end fence In the A3 position in the paper tray.
9. Install the paper tray in the machine and enter the UP mode.
10. Select the paper size as follows
    - 267 x 390 mm paper = 16

3.1.2 195 mm x 267 mm lengthwise paper

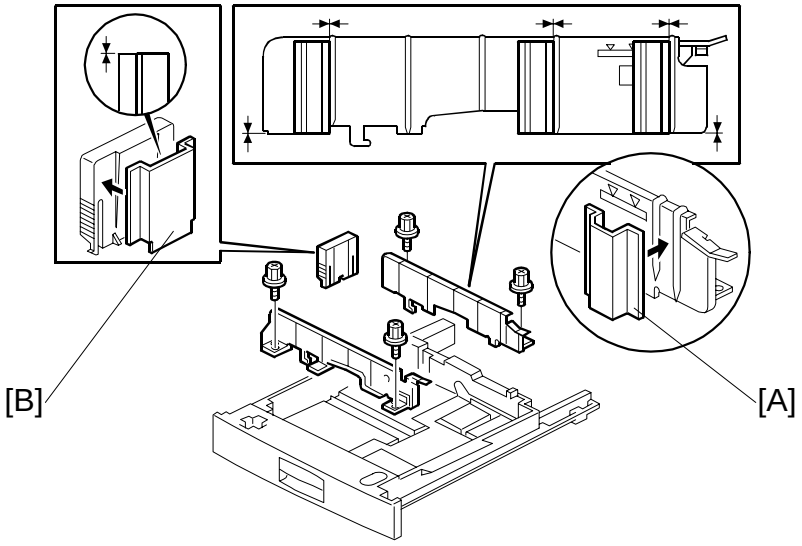

A231I541.WMF

1. Remove the paper tray.
2. Remove the side fences (2 screws each) and the end fence.
3. Peel off the backing of the double-sided tape that is attached to the side fence spacer (t=7.2 mm) [A].
4. Attach the side fence spacer to the side fence as shown (3 spacers for each side fence).
   NOTE: Both edges of the spacer should be aligned with the bottom edge of the fence.
5. Peel off the backing of the double-sided tape that is attached to the end fence spacer (t=16 mm) [B].
6. Attach the end fence spacer to the end fence as shown.
7. Install the side fences in the 11” position in the paper tray.
8. Install the end fence in the A4Y position in the paper tray.
9. Install the paper tray in the machine and enter the UP mode.
10. Select the paper size as follows
    - 195 x 267 mm paper = 8 ▱

3.1.3 267 mm x 195 mm lengthwise paper

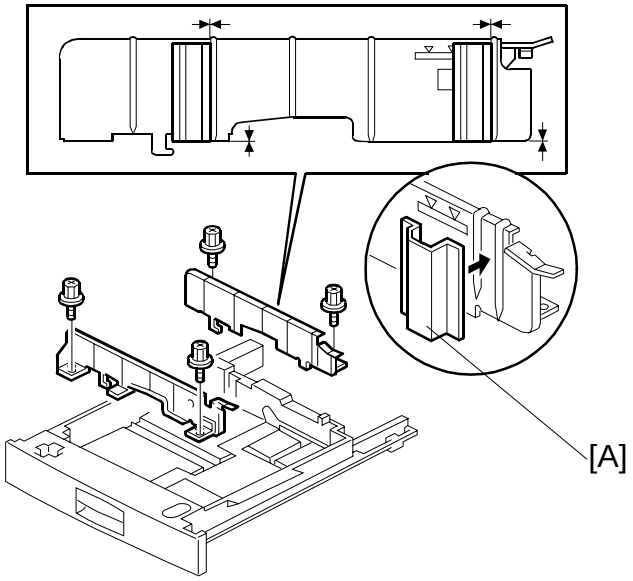

A231I540.WMF

1. Remove the paper tray.
2. Remove the side fences (2 screws each) and the end fence.
3. Peel off the backing of the double sided tape that is attached to the side fence spacer (t=5.1 mm) [A].
4. Attach the side fence spacer to the side-fence as shown (2 spacers for each side fence).
   NOTE: Both edges of the spacer should be aligned with the bottom edge of the fence.
5. Install the side fences in the 8” position in the paper tray.
6. Install the end fence in the 10.5” position in the paper tray.
7. Install the paper tray in the machine and enter the UP mode.
8. Select the paper size as follows
   - 267 x 195 mm paper = 8

4. SERVICE TABLES

4.1 Service program mode

Mode No.			Function	Settings
Class 1 and 2	Class 3			
4-301		APS Sensor Output Check	Displays the APS sensor output signals when an original is placed on the exposure glass. Bit 0: Width sensor 1 Bit 1: Width sensor 2 Bit 2: Length sensor 1 Bit 3: Length sensor 2 Bit 4: Length sensor 3 See "Detailed Section Descriptions – Original Size Detection in Platen Mode" for more details.	00000000 0: Not detected 1: Detected
4-303 *		APS Small Size Original Detection Chinese Paper Size Detection	Selects whether or not the copier determines that the original is A5/HLT size when the APS sensor does not detect the size. *If "A5 length/5.5" x 8.5" is selected, paper sizes that cannot be detected by the APS sensors are regarded as A5 lengthwise or 5.5" x 8.5".* *If "Not detected" is selected, "Cannot detect original size" will be displayed.* *Numbers 2 and 3 are used for Chinese paper sizes (267 x 390 mm and 195 x 267 mm). The meanings of numbers 2 and 3 are the same as for number 1 and 2. However, if the APS sensors detect the original, the machine assumes Chinese paper sizes.* *For example:* *A4 → 195 x 267 mm* *A3 → 267 x 390 mm*	**0: Not detected** 1: A5 length/ 5.5" x 8.5" 2: Not detected (Chinese paper) 3: A5 length (Chinese paper)
4-428*	1*	Standard White Level Adjustment Flag	Displays whether or not the standard white level adjustment has been done.	0: Performed 1: Not performed

4.2 Special Tools and Lubricants

4.2.1 Special tools

Part Number	Description	Q'ty
A2309003	Adjustment Cam – Laser Unit	1
A2309004	Positioning Pin – Laser Unit	1
A2309352	Flash Memory Card – 4MB	1
A2309351	Case – Flash Memory Card	1
A0069104	Scanner Positioning Pin (4 pcs/set)	1
54209516	Test Chart – OS-A3 (10 pcs/Set)	1
A0299387	Digital Multimeter – FLUKE 87	1
A2309099	NVRAM – Minus Counter	1
A2309600	Side Fence Spacer – 7.2 mm (6 pcs)	1
A2309610	Side Fence Spacer – 5.1 mm (4 pcs)	1
A2309620	End Fence Spacer – 31 mm	1
A2309630	End Fence Spacer – 16 mm	1

4. SERVICE TABLES

4.1 Service Program Mode

Mode No.			Function	Settings
Class 1 and 2	**Class 3**			
5-401*	82*	Restricted Access Control for Key Counter – Other Enhanced Kit	**Japanese version only.** **Do not change the value.**	**0: No** 1: Yes
	83*	Restricted Access Control for other counters – Other Enhanced Kit	**Japanese version only.** **Do not change the value.**	**0: No** 1: Yes
5-501 *		PM Alarm Interval	Sets the PM interval, with an alarm. *When the setting is "0", this function is disabled.* *For the China version, this value should be changed to 100k.*	0 ~ 255 1k copies/step **150 k copies**
5-504*	1*	Jam Alarm Level (RSS function)	**Japanese version only.** **Do not change the values.**	0: Z 1: L 2: M **3: H**
	2*	Jam Auto Call (RSS function)		0: Off **1: On**
5-505*		Error Alarm Level	**Japanese version only.** **Do not change the values.**	0 ~ 255 100 copies/step **2500 copies (30)** **5000 copies (40)**

5. PREVENTIVE MAINTENANCE SCHEDULE

5.1 PM TABLE

NOTE: The amounts mentioned as the PM interval indicate the number of prints.

Symbol key: C: Clean, R: Replace, L: Lubricate, I: Inspect

A230/A231/A232	EM	100K	200K	300K	NOTE
SCANNER/OPTICS					
Reflector		C	C	C	Optics cloth
1st Mirror		C	C	C	Optics cloth
2nd Mirror		C	C	C	Optics cloth
3rd Mirror		C	C	C	Optics cloth
Scanner Guide Rails		I	I	I	Do not use alcohol.
Platen Sheet Cover	C	I	I	I	Replace the platen sheet, if necessary. Dry cloth or alcohol
Exposure Glass		C	C	C	Dry cloth or alcohol
Toner Shield Glass		C	C	C	Optics cloth
APS Sensor		C	C	C	Dry cloth or alcohol
AROUND THE DRUM					
Charge Roller	C	R	R	R	Clean with alcohol. After cleaning, dry the roller with a dry cloth.
Charge Roller Cleaning Pad		R	R	R	Dry cloth
Quenching Lamp			C		Dry cloth
Pick-off Pawls	C	R	R	R	Dry cloth
Spur	C	C	C	C	Dry cloth or alcohol
ID Sensor		C	C	C	Perform the ID sensor initial setting (SP3-001-2) after cleaning (blower brush)
CLEANING UNIT					
Drum Cleaning Blade		R	R	R	
Cleaning Entrance Seal	C	C	C	C	Blower brush or dry cloth. Replace if necessary.
Side Seal		I	I	I	
DEVELOPMENT UNIT					
Development Drive Gears		I	I	I	Replace every 5 PM (500k)
Development Filter			R		
Developer		I	R	I	
Entrance Seal		I	I	I	
Side Seal		I	I	I	

A230/A231/A232	EM	100K	200K	300K	NOTE
PAPER FEED					
Registration Roller	C	C	C	C	Clean with water or alcohol.
Paper Feed Roller	I	R	R	R	Check the counter value for each paper tray station (SP7-204). If the value has reached 100k, replace the roller. After replacing the roller, reset the counter (SP7-816).
Separation Roller	I	R	R	R	
Pick-up Roller	I	R	R	R	
Paper Feed Roller (By-pass feed table)	I	R	R	R	
Separation Roller (By-pass feed table)	I	R	R	R	
Pick-up Roller (By-pass feed table)	I	R	R	R	
Paper Feed Guides		C	C	C	Clean with water or alcohol.
Relay Rollers	C	C	C	C	Clean with water or alcohol.
Bottom Plate Pad	C	C	C	C	Clean with water or alcohol.
Bottom Plate Pad (By-pass feed)	C	C	C	C	Clean with water or alcohol.
Registration Sensor		C	C	C	Blower brush
TRANSFER BELT UNIT					
Transfer Belt	C	R	R	R	Dry cloth
Transfer Belt Cleaning Blade		R	R	R	
Transfer Belt Rollers		C	C	C	Dry cloth
Entrance Seal		C	C	C	Dry cloth
Transfer Entrance Guide	C	C	C	C	Dry cloth
Used Toner Tank	I	C	C	C	Empty the tank.
FUSING UNIT AND PAPER EXIT					
Fusing Entrance and Exit Guide Plates		C	C	C	Clean with water or alcohol.
Hot Roller	C	R	R	R	Clean with alcohol (or a suitable solvent)
Pressure Roller		R	R	R	
Fusing Thermistor		I	I	I	Clean if necessary (suitable solvent)
Cleaning Roller		C	C	C	Clean with water or alcohol.
Cleaning Roller Bushings		L	L	L	Grease Barrierta JFE 55/2
Pressure Roller Strippers		C	C	C	Clean with water or alcohol.
Hot Roller Strippers		C	R	C	Clean with water or alcohol.
Paper Exit Guide Ribs		C	C	C	Clean with water or alcohol.
OTHERS					
Drive Belts			I		Replace if necessary

	EM	80K	160K	240K	NOTE
ADF (for originals)					
Transport Belt	C	R	R	R	Belt cleaner
Feed Belt	C	R	R	R	Belt cleaner
Separation Roller	C	R	R	R	Dry or damp cloth
Sensors		C	C	C	Blower brush
Drive Gears		L	L	L	Grease G501

	EM	100K	200K	300K	NOTE
PAPER TRAY UNIT					
Paper Feed Rollers	I	R	R	R	Check the counter value for each paper tray station (SP7-204). If the value has reached 100k, replace the roller. After replacing the roller, reset the counter (SP7-816).
Pick-up Rollers	I	R	R	R	
Separation Rollers	I	R	R	R	
Relay Rollers		C	C	C	Dry or damp cloth
Bottom Plate Pad	C	C	C	C	Dry or damp cloth

	EM	100K	200K	300K	NOTE
LCT					
Paper Feed Roller	I	R	R	R	Check the counter value for each paper tray station (SP7-204). If the value has reached 100k, replace the roller. After replacing the roller, reset the counter (SP7-816).
Pick-up Roller	I	R	R	R	
Separation Roller	I	R	R	R	
Bottom Plate Pad	C	C	C	C	Dry or damp cloth

	EM	100K	200K	300K	NOTE
1,000-SHEET/3,000-SHEET FINISHERS					
Rollers	C				Clean with water or alcohol.
Brush Roller	I	I	I	I	Replace if necessary.
Discharge Brush	C	C	C	C	Clean with a dry cloth
Sensors	C				Blower brush
Jogger Fences	I	I	I	I	Replace if necessary.
Punch Waste Hopper	I	I	I	I	Empty the hopper.

	EM	100K	200K	300K	NOTE
1-BIN TRAY UNIT					
Rollers	C				Dry or damp cloth
Copy Tray	C				Dry or damp cloth
Sensors	C				Blower brush

5.2 Maintenance Items for the China Version

Using Chinese paper, paper dust may accumulate inside the machine during copying. After the machine has been used for a long time, some copy quality or mechanical problems may occur. So, do the following to maintain the machine's quality.

1. PM interval
   Every 100,000 copies
   NOTE: At the machine installation, change the value of SP5-501 (PM alarm interval) to 100 k.
2. At the PM and EM period, change the PM parts and/or clean the parts in accordance with the PM table. Especially, the following should be done.

	PM	EM	Action	Problem	Fig.
Around the Drum					
Charge Roller	Replace	Clean	Clean with alcohol. After cleaning, dry the roller with a dry cloth.	Dirty background on front and rear of paper	A
Pick-off Pawls	Replace	Clean	Clean with a dry cloth.	Toner falls onto the paper.	B
Spurs	Clean	Clean	Clean with a dry cloth.		C
PCU Entrance Seal	Clean	Clean	Clean with a dry cloth		F
ID Sensor	Clean	Clean	Clean with a dry cloth. After cleaning perform, SP3001-2.		E
Cleaning Unit					
Cleaning Entrance Seal	Clean	Clean	Clean with dry cloth	Toner falls onto the paper.	D
Paper Feed					
Relay Rollers	Clean	Clean	Clean with water or alcohol.	Paper non feed or paper double feed	
Registration Roller	Clean	Clean	Clean with water or alcohol.		G
Bottom Plate Pad	Clean	Clean	Clean with water or alcohol.		
Fusing Unit					
Hot roller	Replace	Clean	Clean with alcohol (or a suitable solvent).	Offset image	

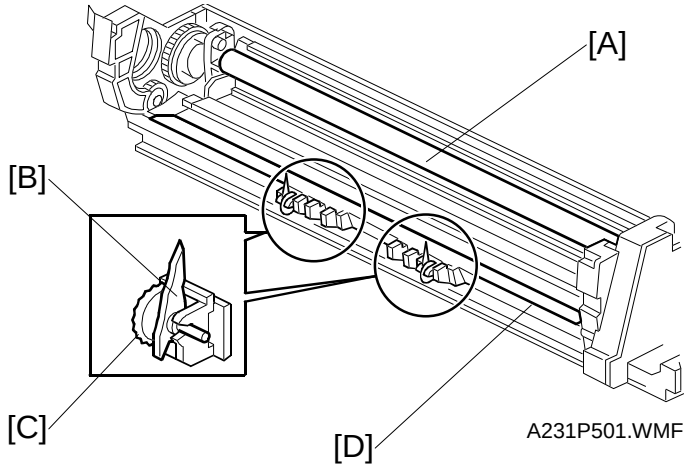

A231P501.WMF

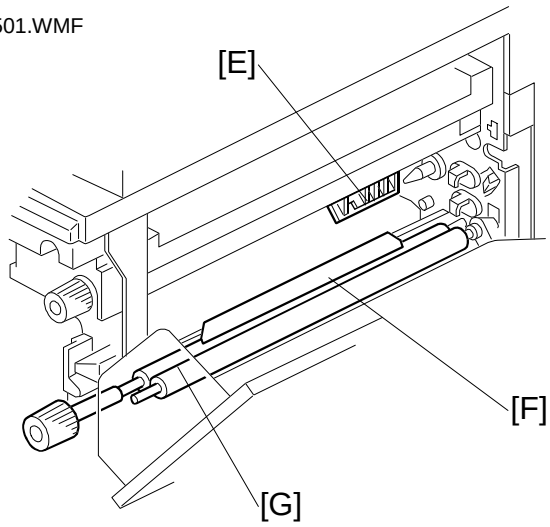

A231P500.WMF

1. Pull out the PCU, then clean the following parts.
   - ID Sensor [E]
   - PCU Entrance Seal [F]
   - Registration Roller [G]
2. Remove the drum, then clean the following parts.
   - Charge Roller [A]
   - Pick-off Pawls [B]
   - Spurs [C]
   - Cleaning Entrance Seal [D]

Taiwan Version

1. Overall Machine Information

5.3 Specifications

Power Consumption:

Mainframe only

(115 V Machine)

	NAD30S/NAD30	NAD40	Note
Maximum	Less than 1.44 kW	Less than 1.44 kW	
	Less than 1.32 kW	Less than 1.32 kW	Taiwan version
Copying	Less than 1.15 kW	Less than 1.3 kW	
		Less than 1.25 kW	Taiwan version
Warm-up	Less than 1.05 kW	Less than 1.15 kW	
Stand-by	Less than 200 W/h	Less than 220 W/h	
Energy Saver Level 1	Ave. 150 W/h	Ave. 170 W/h	
Energy Saver Level 2	Ave. 130 W/h	Ave. 150 W/h	
Auto Shut Off	Ave. 12 W/h	Ave. 12 W/h	

System: Without the optional heaters, fax unit, and printer controller.

(115 V machine)

	NAD30S/NAD30	NAD40	Note
Maximum	Less than 1.44 kW	Less than 1.44 kW	
	Less than 1.32 kW	Less than 1.32 kW	Taiwan version
Copying	Less than 1.2 kW	Less than 1.35 kW	
Warm-up	Less than 1.05 kW	Less than 1.15 kW	
Stand-by	Less than 220 W/h	Less than 260 W/h	

5.4 Machine configuration

Version	Item	Machine Code	No.
Copy	Copier (NAD30-S)	A230	8
	Copier (NAD30)	A231	8
	Copier (NAD40)	A232	8
	ARDF (Option)	A680	2
	Platen Cover (Option)	A381	1
	Paper Tray Unit (Option)	A682	9
	LCT (Option)	A683	7
	By-pass Feed Unit (Option – NAD30S only)	A689	5
	Duplex Unit (Option – NAD30S only)	A687	6
	Interchange Unit (Option – NAD30S only)	A690	4
	1-bin Tray (Option)	A684	3
	Bridge Unit (Option)	A688	13
	1000-sheet Finisher (Option)	A681	11
	3000-sheet Finisher (Option – NAD40 only)	A697	10
	Punch Unit (Option for 3000-sheet Finisher)	A812-17 (3 holes) A812-27 (2 holes)	
	External Output Tray (Option)	A825	12
	Electrical Sort Kit – 8 MB Memory (Option – NAD30S only)	A818	
	Image Enhancement Kit – HDD (Option)*NOTE	A691	
	Key Counter Bracket (Option)	A674	14
	Expansion Box (Option)	A692	
Fax	Fax Unit (Option)	A693	
	ISDN Unit (Option)	A816	
	SAF Memory – HDD (Option)	A818-10	
	Fax Feature Expander (Option)	A818-11	
	400-dpi High Resolution (Option)	A818-12	
	Handset (Option – North America only)	A646	
	Stamp Unit (Option)	A813	

***NOTE:** For the Taiwan version, this kit will be available when the optional printer unit is installed.

Model: NAD 30S/30/40	Date: 31-May-98	No: 2
Subject: Service Manual Corrections	Prepared by: S. Tomoe	
From: Technical Service Department.		

Classification:

☐ Troubleshooting	☐ Part information	☐ Action required
☐ Mechanical	☐ Electrical	☐ Service manual revision
☐ Paper path	☐ Transmit/receive	☐ Retrofit information
☒ Other (Manual Correction)		

The following should be corrected. Please correct your service manual.

1. 2.2.5 MEMORY BLOCK page 2-19

- Incorrect -

Copy Mode	Gradation Processing	DRAM (4 MB)	DRAM + SIMM (4 + 8 MB)	DRAM + SIMM + HDD (12 MB + 1.6GB)
Multiple copy of single page original	Binary/Grayscale	**O / O**	O / O	X / O

- Correct -

Copy Mode	Gradation Processing	DRAM (4 MB)	DRAM + SIMM (4 + 8 MB)	DRAM + SIMM + HDD (12 MB + 1.6GB)
Multiple copy of single page original	Binary/Grayscale	**O / X**	O / O	X / O

2. 2.6.7 TONER NEAR END/END DETECTION Page 2-44

Second paragraph from the bottom

- Incorrect -

If Vsp is **less** than 2.0V, the density of the ID sensor pattern is very light, so …… However, If Vsp is **bigger** than 2.0V but 90 copies have been made after toner near end was detected,….

- Correct -

If Vsp is **bigger** than 2.0V, the density of the ID sensor pattern is very light, so …… However, If Vsp is **less** than 2.0V but 90 copies have been made after toner near end was detected,….

3. 2.10.3 FUSING ENTRANCE GUIDE SHIFT MECHANISM page 2-66

Second and third paragraphs

- Incorrect -

For thin paper, move the entrance guide to the **left** by securing it with screw holes [**C**].

For thick paper, move the entrance guide to the **right** (using screw holes [**B**]).

- Correct -

For thin paper, move the entrance guide to the **right** by securing it with screw holes [**B**].

For thick paper, move the entrance guide to the **left** (using screw holes [**C**]).

4. 3.1.4 POWER REQUIRMENTS page 3-3

- Incorrect -

Input voltage level: 220V ~ 240V, 50 Hz/60 Hz: More than **6**A

- Correct -

Input voltage level: 220V ~ 240V, 50 Hz/60 Hz: More than **8**A

5. 3.3.1 ACCESSORY CHECK page 3-5

- Incorrect -

12. **Operation Instructions – Fax Reference**

- Correct -

12. **Copy Quick Guide**

6. 3.12 1000-SHEET FINISHER INSTALLATION page 3-46

- Delete step 5 and modify illustration A230I704.wmf (see the attached illustration).
- Add the following step after step 13 on page 3-47 and modify illustration A230i706.wmf (see the attached illustration).

14. Attach the staple position decal [F] to the ARDF, as shown.

7. 3.13 3000-SHEET FINISHER INSTALLATION page 3-48

- Change the step from 5 to 8

- Incorrect -

5. Attach **two** lower grounding plates …..

6. **Cut away a part of the main power switch cover [E].**

7. Attach the cushion [**F**] to the plate as shown.

8. Install the entrance guide plate [**G**] (2 screws).

- Correct -

5. Attach **one** lower grounding plate ……

6. Attach the cushion [**E**] to the plate as shown.

7. Install the entrance guide plate [**F**] (2 screws).

- Change illustrations A230I754.wmf and A230I755.wmf.

8. 3.18 KEY COUNTER INSTALLATION page 3-62

Add step 11.

11. Change the value of SP5-401-2 to 1.

NOTE: The key counter function is available for fax and printer modes by changing the following SP modes.

SP5-401-52 (Fax mode)

SP5-401-62 (Printer mode)

9. 4.4.2 SERVICE PROGRAM MODE TABLE page 4-10

- Incorrect -

Mode No.			Function	Setting
Class 1 and 2	Class 3			
2-101	3 *	**Left** Side Edge Erase Margin (Printing)	Adjusts the **left** side erase margin. *The specification is **2** ± **1.5** mm*	0.0 ~ 9.0 0.1 mm/step 2.0 mm
	4 *	**Right** Side Edge Erase Margin (Printing)	Adjusts the **right** side erase margin. *The specification is **2 + 2.5/- 1.5** mm*	0.0 ~ 9.0 0.1 mm/step 2.0 mm

- Correct -

Mode No.			Function	Setting
Class 1 and 2	Class 3			
2-101	3 *	**Right** Side Edge Erase Margin (Printing)	Adjusts the **right** side erase margin. *The specification is **2 + 2.5/- 1.5** mm*	0.0 ~ 9.0 0.1 mm/step 2.0 mm
	4 *	**Left** Side Edge Erase Margin (Printing)	Adjusts the **left** side erase margin. *The specification is **2 ± 1.5** mm*	0.0 ~ 9.0 0.1 mm/step 2.0 mm

10. Laser Beam Pitch Adjustment page 6-18

- Incorrect -

8. Adjust the laser beam pitch position …. Appear on the printout), doing steps **1, 2**, and **3** (in step **1**, input a value which is estimated to be correct, then steps **2** and **3**, then if necessary go back to step **1** and try another value).
9. After adjusting the laser beam pitch ….. (….for 600 dpi). **The laser beam pitch for 600 dpi should be 24 ~ 48 more than for 400 dpi.**

- Correct -

8. Adjust the laser beam pitch position …. Appear on the printout), doing steps **2, 3**, and **4** (in step **2**, input a value which is estimated to be correct, then steps **3** and **4**, then if necessary go back to step **2** and try another value).
9. After adjusting the laser beam pitch ….. (….for 600 dpi). **When starting the adjustment for 600 dpi, input a value for SP2-109-1 that is between 24 and 48 higher than the final result for 400 dpi.**

11. Blank Margin page 6-52

- Incorrect -

	SP mode	Specification
Right edge	SP2-101-**4**	2 +2.5/-1.5 mm
Left edge	SP2-101-**3**	2 ± 1.5 mm

- Correct -

	SP mode	Specification
Right edge	SP2-101-**3**	2 +2.5/-1.5 mm
Left edge	SP2-101-**4**	2 ± 1.5 mm

12. SC630 page 7-18

The SC condition level, [D], should be added.

SC630: CSS (RSS) communication error between line adapter and CSS center **[D]**

13. Illustrations

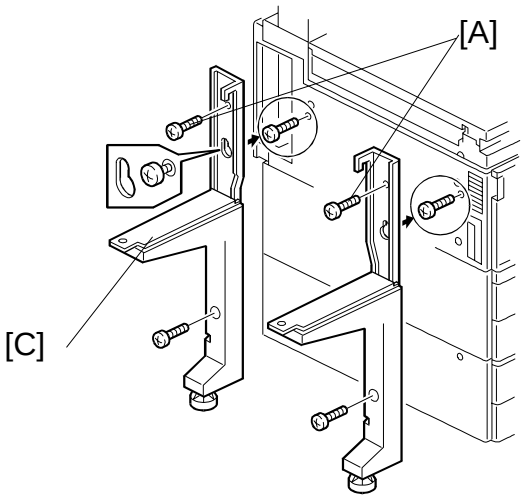

A230i704.wmf

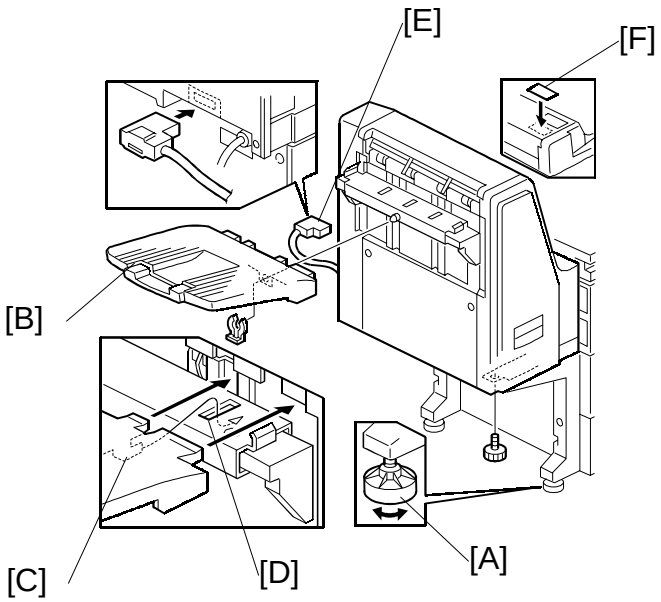

A230i706.wmf

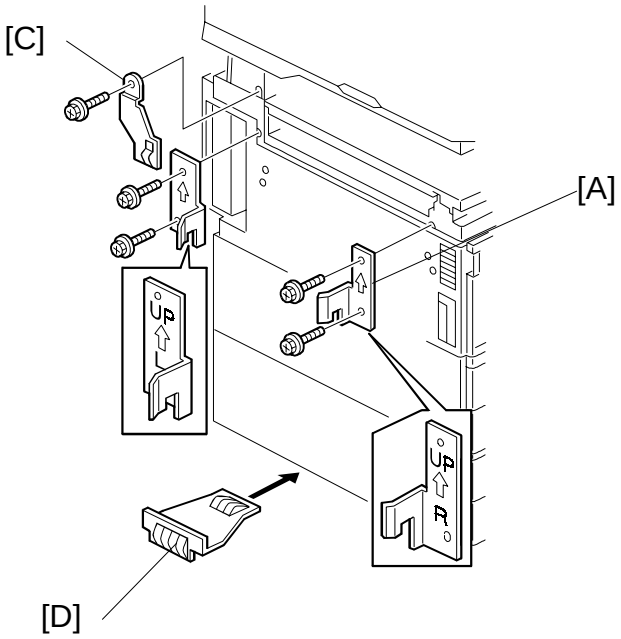

A230i754.wmf

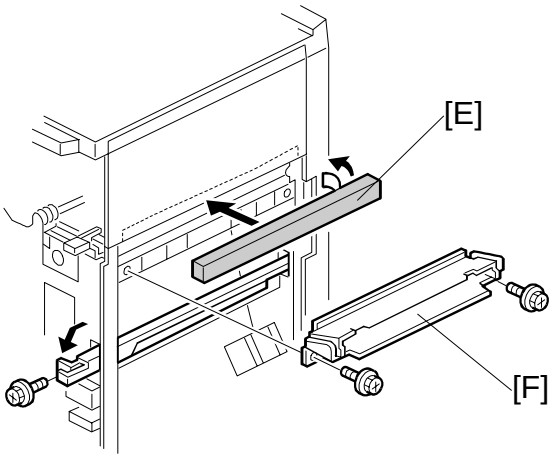

A230i755.wmf

Model: NAD 30S/30/40	Date: 31-May-98	No: 3
Subject: Service Manual Corrections	Prepared by: Y. Furuya	
From: Technical Service Department.		

Classification:			
	☐ Troubleshooting	☐ Part information	☐ Action required
	☐ Mechanical	☐ Electrical	☒ Service manual revision
	☐ Paper path	☐ Transmit/receive	☐ Retrofit information
	☐ Other ( )		

This bulletin contains corrections for the Fax Option Type 450 service manual.

Chapter 3

Problem

1) The installation procedure was not suitable for the Taiwan version
2) A bracket must be removed before installing the expansion box; this was not mentioned.
3) The procedure for attaching the PTT approval label was missing.

Correction

1) The installation procedure has been modified for all versions, including Taiwan.
2) Missing steps have been added. (Items 2 and 3 above; refer to pages 2 to 5.)

NOTE: To install the fax unit, the Expansion Box Type 450 is required in addition. The following procedure is written on the premise that the expansion box has not been installed.

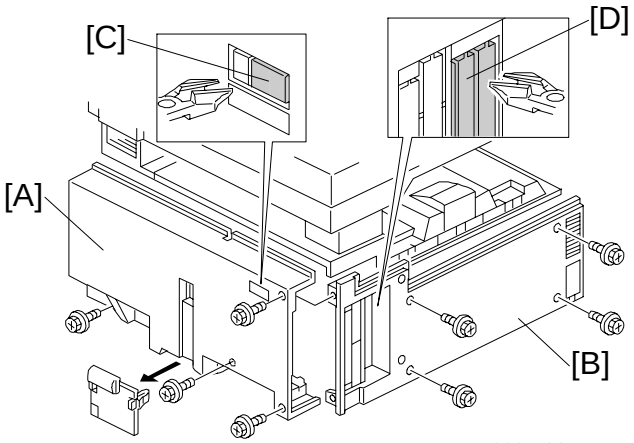

A693I500.WMF

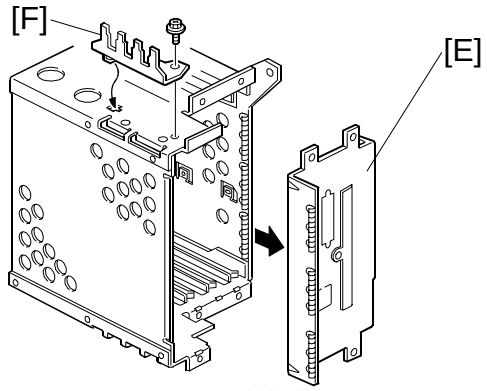

A693I501.WMF

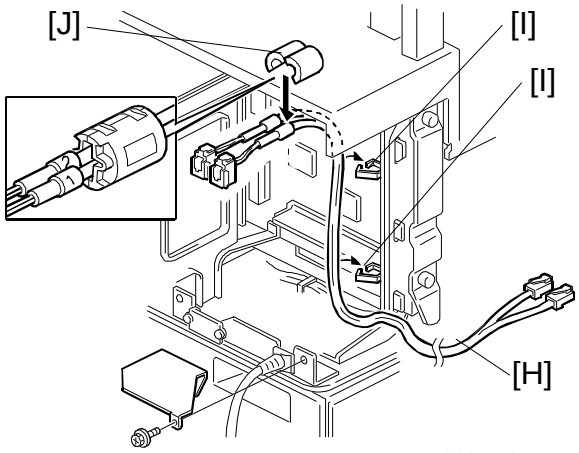

A693I519.WMF

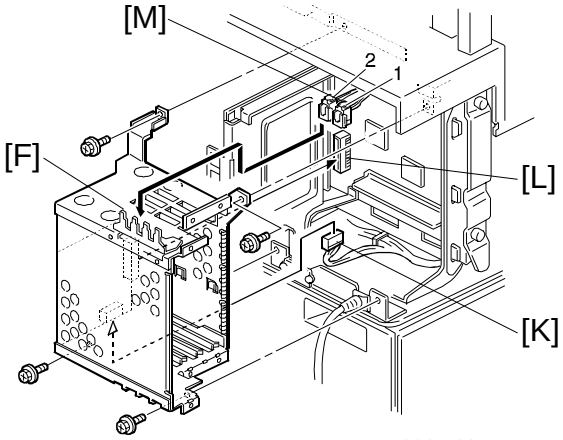

A693I503.WMF

1. Remove the rear cover [A] (4 screws) and the left side cover [B] (4 screws), as shown.
2. Cut away the covers [C] and [D] (shaded parts), as shown.
   NOTE: If installing the fax hard disk option at the same time, refer to the hard disk installation procedure before going on to the next step.
3. Remove the cover [E] from the expansion box, then install the FCU cover bracket [F] (1 screw) as shown.
   NOTE: The bracket [F] is included in the fax unit.
4. Remove the bracket [G], and run the cable [H] through the clamps [I], then install a metal core [J] as shown.
   NOTE: The metal core [J] is not installed the model for Taiwan.
5. Connect the harness [K] to CN355 on the expansion box, then install the expansion box (4 screws) so that the CN350 fits in CN304 [L] on the BiCU.
   NOTE: Use a magnetic screwdriver so as not to drop any screws inside the machine.
6. Attach the modular jacks [M] to the bracket [F] as indicated on the bracket.

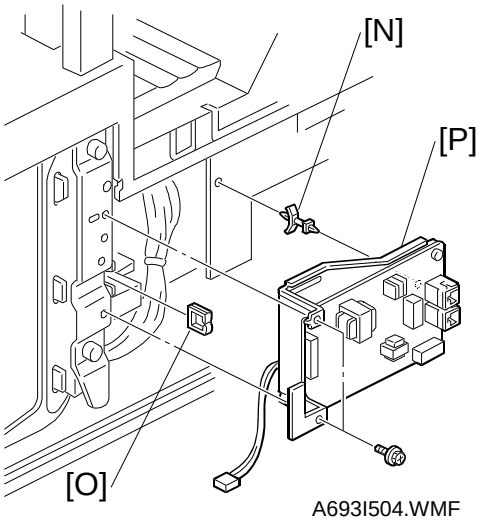

A693I504.WMF

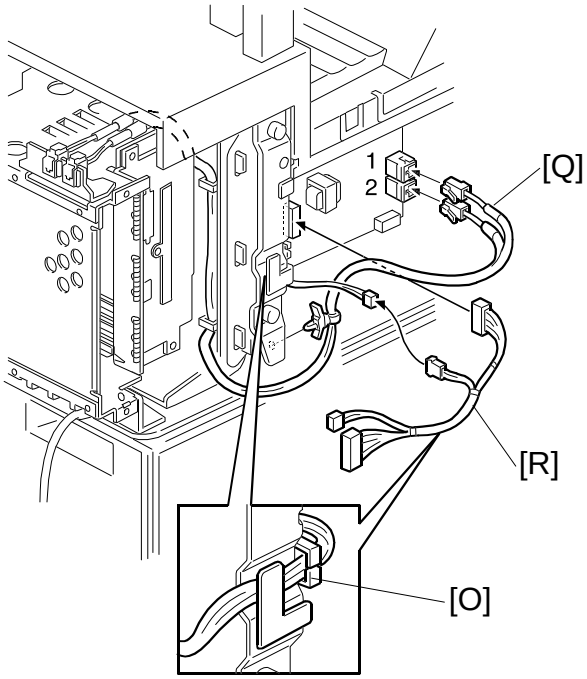

A693I505.WMF

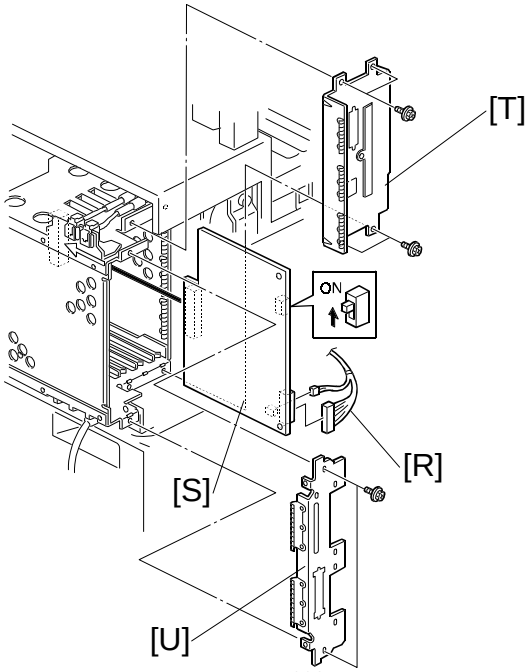

A693I514.WMF

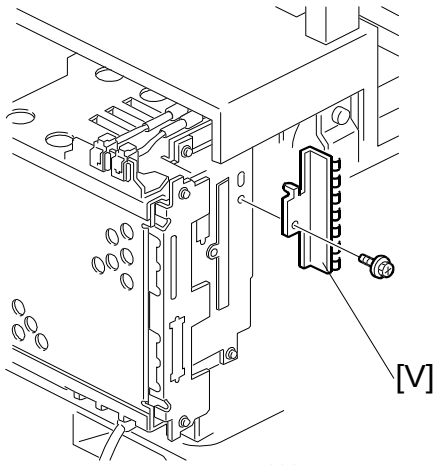

A693I515.WMF

7. Set the locking support [N] and the edge saddle [O] as shown, then install the NCU/Speaker assembly [P] (2 screws).
8. Connect the cable [Q] and the harness [R] as shown. The harness [R] must run through the edge saddle [O] as shown.
9. Turn on the battery switch (SW1) on the FCU [S] then set it in the right-most slot of the expansion box as shown. Connect the harness [R] to the FCU (CN328 and CN330), then slide the FCU [S] all the way in (1 connector).
10. Install the brackets [T] (3 screws), [U] (2 screws) and [V] (1 screw) as shown.
    NOTE: The bracket [U] is installed only in the model for Taiwan.

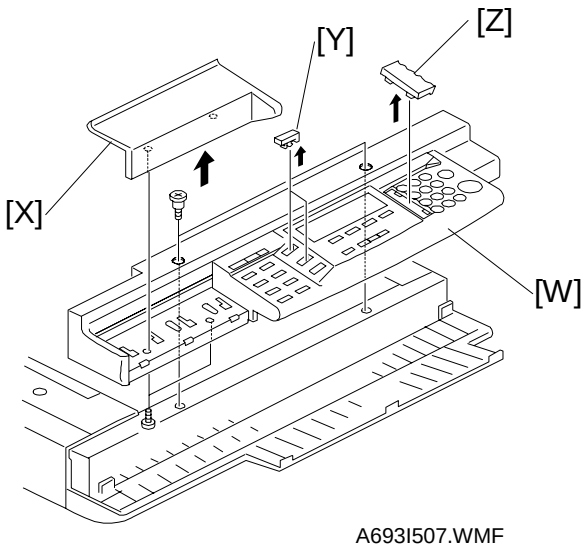

A693I507.WMF

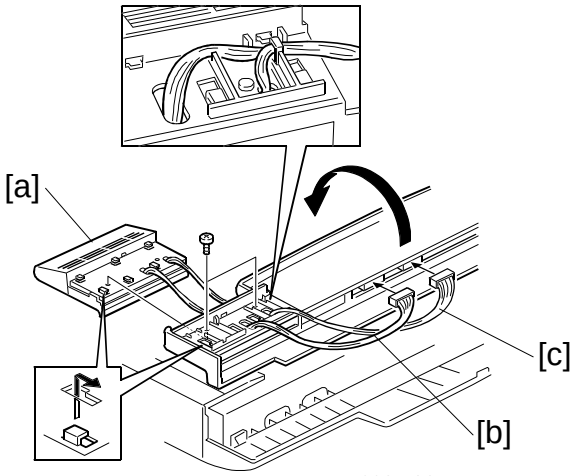

A693I508.WMF

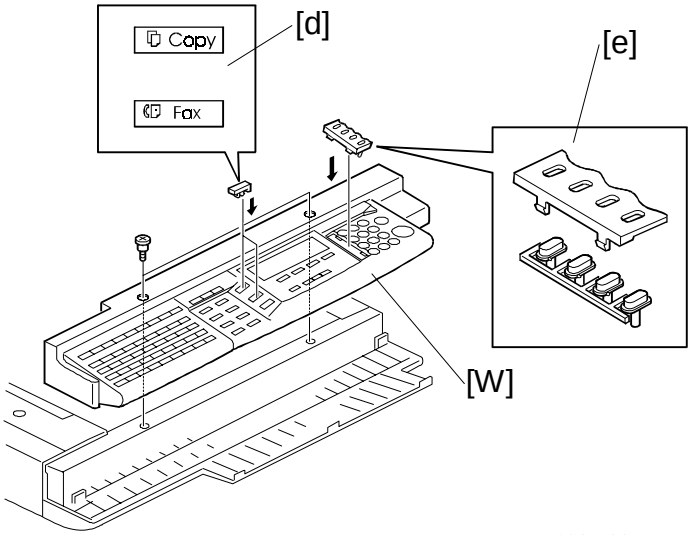

A693I509.WMF

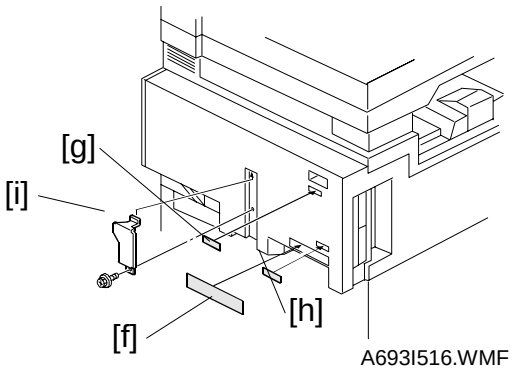

A693I516.WMF

11. Remove the operation panel [W], then remove parts [X], [Y], and [Z].
12. Install part [a], then connect the harnesses [b] and [c] to the operation panel as shown.
13. Replace the operation panel [W], then install the parts [d] and [e], as shown.
14. Replace the left side cover (4 screws) and the rear cover (4 screws).
15. Affix the serial number label [f], the LINE/TEL label [g] and the appropriate approval label [h] onto the rear cover. Then install the bracket [i] (1 screw).
16. Attach the “Super G3” label [j] to the front cover.

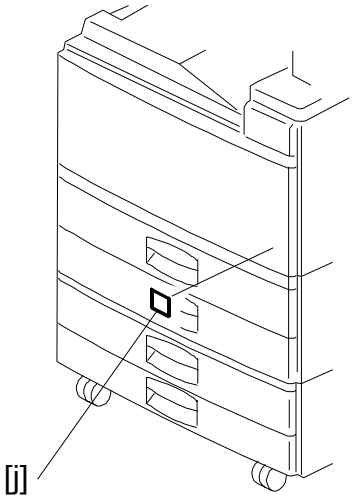

A693I511.WMF

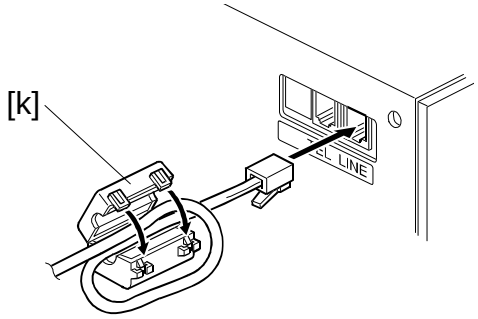

A693I517.WMF

17. Wrap the phone line around the core [k] as shown, and connect it to the “LINE” jack at the rear of the machine.
18. Plug in the machine and turn on the main power switch.
19. Press the ‘Facsimile’ key and check the facsimile LED lights.
    At this time, the display reads: SC1201 - Functional problem with the fax. Data should be initialized.
    NOTE: This is not a functional problem. The machine shows this message only when the fax unit is first installed. If the same message appears at the next power-on, check whether the battery switch (SW1) on the FCU has been turned on.
20. Press “Yes” to initialize the fax unit.
21. Set up and program the items required for fax communications as shown below. If the user function keys (F1, F2, F3, F4, and F5) need to be programmed, attach the label.

    The default settings of the user function keys are as follows:
    - F1: Start Manual Rx
    - F2: Tx Result Display
    - F3: TEL Mode
    - F4: Not programmed
    - F5: Not programmed

    NOTE: Be sure to set the clock (date and time).

Program the serial number into the fax unit (service function 10). The serial number can be found on the serial number label (attached to the machine in step 15).

Chapter 4

4.5 Service RAM Addresses

Two addresses are mentioned for the Rx counter, 4801C4 - 4801C6 (H) and 480A64 - 480A67 (H). This is not correct. 480A64 - 480A67 (H) is the correct address range.

Chapter 5

Section 5.4.1 (Page 5-7)

Problem

SW3 on the FCU MUST BE TURNED OFF after downloading firmware from a flash memory card, but the manual does not explain this.
If SW3 is kept on at power-up, the fax application will not start without a 'master' flash memory card connected.

Correction

Insert the underlined step after step 8 on page 5-7 as shown below.

8. Turn off the main power switch then disconnect the flash memory card.
9. Turn OFF (lower position) SW3 below the card slot.
10. Turn the machine back on.

RC	RE	ASIA	

Model: NAD 30S/30/40	Date: 31-May-98	No: 4
Subject: Software Release Information	Prepared by: S.Tomoe	
From: Technical Service Department.		

Classification:			
	☐ Troubleshooting	☐ Part information	☐ Action required
	☐ Mechanical	☐ Electrical	☐ Service manual revision
	☐ Paper path	☐ Transmit/receive	☐ Retrofit information
	☒ Other ( )		

This RTB shows the software release information for the BICU board.

April 1998

PCB Part Number: A2325051K (BICU board – 115V)
A2325052K (BICU board – 230V)
A2325053C (BICU board – Asia)

Software Version: 13.1.8
Program Number: A2325113E (NA)
A2325114E (EU)
A2325115B (Asia)
Effective date: From first production of April 1998

Spec.

No.	Function	Details
1	When doing initial SP settings such as TD sensor initialization during warming-up, SC542 will occur.	If entering the following SP mode during warming-up, the beeper sounds twice and the operation is canceled. Related SP mode: SP2207 SP2801 SP2805 SP3001-2

Problems

No.	Title	Details
1	The machine may stall when making a combined copy, after printing the archive file list.	This happens when an archive file list is printed with double sided copying, but one side does not have any archive files. Then, the machine makes a combine mode copy with one part blank.
2.	The " Menu" key LED stays on even if copy job is finished.	This happens when selecting the Original Mode in the Menu mode and selecting the staple mode.
3.	When pressing "+" after inputting 400% with the Zoom key, "* maximum" is displayed. If this	

No.	Title	Details
	condition continues until the auto reset time, SC990 may occur.	
4	When the HDD is defective and the main power switch is turned on, the machine does not go to an SC condition but it may stall.	
5.	The description of SP 5803-6 has been corrected.	By-pass Paper Set Sensor → Unit Set Detection
6	Archive file malfunction	When an original is stored as an archive file, two archive files will be made.
7	The memory is cleared automatically, three seconds just after entering SP5801.	The memory should be cleared as follows. 1. Enter SP5801 2. Hold down the "1" for over 3 s.
8	The description of SP2213 does not fit in the display.	
9.	**-17 only** The paper size determined when the machine detects a non-standard original size has been changed.	

2. May 1998

PCB part number: A2325051M (BICU board – 115V)
A2325052M (BICU board – 230V)
A2325053E (BICU board – Asia)

Software Version: 13.6.3
Program Number: A2325113G (NA)
A2325114G (EU)
A2325115D (Asia)
Effective date: Form first production of May, 1998

Spec.

No.	Function
1	When A3 or B4 paper size is selected in the rotate sort (or stack) mode, the machine can now copy with normal sort (or stack) mode.
2	Theh electrical total counter value of brand new machines has been changed from -2000 to –5000.
3	During multiple copying and with no HDD option installed, the machine can scan an original for fax transmission.
4	The copy quality for light original mode has been improved. The gamma curve value for the original mode has been changed.
5	SC900-01 will be generated when the mechanical counter is disconnected.

Problem

No.	Title	Details
1	**NAD40 only:** To improve the copy quality (Medaka image), the default values of the following SP modes have been changed. SP2001-1: 1650V → 1620V SP2005-3: 1650V → 1620V	
2.	The machine sometimes does not reach the stand-by mode condition after the main switches are turned on or after clearing a jam. This is because the machine cannot detect the zero cross signal.	Countermeasure: 1. If the zero cross signal is not detected after main power switch is turned on, SC 547 will occur. 2. If the zero cross signal is not detected after operation switch is turned on, SC 542 will occur.
3.	When changing the value of SP6105 (staple position adjustment) and SP6113 (punch hole position adjustment) to a negative value, then turning the main switch off and on, the machine does not send the SP setting to the finisher.	
4	If the electrical counter value is a negative value, the counters for the fax option do not increment.	

NOTE:

The following software versions were released. However, soon after release, the next version was released. So, the following software version has never been used.

PCB Part number: A2325051L (BICU board – 115V)
A2325052L (BICU board – 230V)
A2325053D (BICU board – Asia)

Software Version: 13.6.1
Program Number: A2325113F (NA)
A2325114F (EU)
A2325115C (Asia)

RTB Correction

Reissue date: **31-Aug-98**

The items in bold italics have been corrected or added.

The items with a line drawn through them have been deleted.

Model: NAD 30S/30/40		Date: 15-Jun-98	No: 5
Subject: Government Version Information		Prepared by: S.Tomoe	
From: Technical Service Department			
Classification:	☐ Troubleshooting	☒ Part information	☐ Action required
	☐ Mechanical	☐ Electrical	☐ Service manual revision
	☐ Paper path	☐ Transmit/receive	☐ Retrofit information
	☐ Other ( )		

The US government version NAD will be produced in Japan, and the standard version in China. Accordingly, some parts used in the government version are different from the standard version. This RTB will introduce the machine codes for the government version and the different parts.

1. Machine Code and Model Name

Brand	Ricoh			Gestetner/Savin		
Machine Code	~~A230-37~~	A231-37	A232-37	~~A230-30~~	A231-30	A232-30
Model Name	~~Aficio 340~~	~~Aficio 350~~ ***Aficio 355***	~~Aficio 450~~ ***Aficio 455***	~~G: 3235S~~ ~~S: 9935D~~	~~G: 3235~~ ***G: 2035*** ~~S: 9935DP~~	~~G: 3245~~ ***G2045*** ~~S: 9945DP~~

2. Parts Information

The following are the unique parts for the government version.

Parts Number	Description	Index No.	Page
AX400077	DC Motor – 3W	18	59
AZ230074	Power Supply Unit – 115V	14	61
A2321289	Lower Rear Cover	16	13
G0201964	Mirror	16	23

NOTE:

The above parts, except for the mirror, are interchangeable with those parts for the standard US version of the machine. If the above mirror is replaced with the standard version's mirror (P/N: AC030115), the laser beam pitch adjustment must be performed.

Model: NAD 30S/30/40 (1000-sheet Finisher)	Date: 30-Jun-98	No: 6
Subject: Paper rolled up on the shift tray	Prepared by: M.Mimura	
From: QAC Field Information Dept.		

Classification:	☒ Troubleshooting	☐ Part information	☐ Action required
	☐ Mechanical	☐ Electrical	☐ Service manual revision
	☐ Paper path	☐ Transmit/receive	☐ Retrofit information
	☐ Other ( )		

SYMPTOM

When a large number of sheets, such as thirty, are stapled in the multiple copy mode, a couple of the bottom sheets in the stapled stack may be rolled up on the shift tray.

CAUSE

If the paper facedown-curls excessively, the stapled set of paper will not slide back all the way to the extreme right position on the shift tray. If this happens, the lower leading edge of the next set may catch on the trailing edge of the set already on the tray, causing a couple of the bottom sheets to roll up.

This symptom could occur with a thick stapled set when the copies have piled up high on the tray. Heavy paper sets will generate stronger friction with the paper set underneath, and as the copies pile up, the angle of the top copies will level off and make sliding back more difficult.

Note: 1. Non-staple mode copies will not exhibit this symptom because single sheets of paper are delivered to the shift tray at a time.

2. Due to the nature of the copy job type in which this problem occurs, this symptom would more likely occur with heavy volume users such as copy shops, rather than with casual users.

SOLUTION

1 The copy paper has a characteristic that one side creates more curl than the other side. Therefore, instruct the customer to flip over the paper in the paper tray to reduce the amount of paper curl.
For those customers who have a wide selection of paper brands, recommending a paper brand which creates less curl might be more beneficial for the customer. (See page 23 of the Copy Reference manual for related remarks.)

2 This symptom may occur more with A4/11” x 8.5” sideways feed. This is because the paper can slide up the tray further than other paper sizes. (Larger sizes of paper will not go that far because of the friction with the lower set of copies.)

If that is the case, install the new version ROM (#A6815103E). The new version ROM decreases the exit speed of A4/11” x 8.5” sideways paper to drop the paper close to the right frame for easy switch back. (This happens for stapling more than 11 sheets.)

Model: NAD 30S/30/40 (1000-sheet Finisher)	Date: 30-Jun-98	No: 6

Cut-in Serial Numbers

The new version ROM will be implemented into the production from July '98. The cut-in serial numbers are as follows:

Code	Brand	Cut-in Serial #s
-15	GES. US / SAVIN	1B48070001
-17	RICOH	A7728070001
-22	NRG	AR2807000
-26	INFOTEC	3R0780001
-55	LANIER	From 1st Production

RTB Correction

Reissue date: **31-Aug-98**

The "INFORMATION" section has been added at the end of this bulletin.

Model: NAD 30S/30/40 (3000 Finisher)		Date: 30-Jun-98	No: 7
Subject: Paper rolled on the shift tray		Prepared by: M.Mimura	
From: QAC Field Information Dept.			
Classification:	☒ Troubleshooting	☐ Part information	☐ Action required
	☐ Mechanical	☐ Electrical	☐ Service manual revision
	☐ Paper path	☐ Transmit/receive	☐ Retrofit information
	☐ Other ( )		

SYMPTOM

When a large number of sheets, such as fifty, are stapled in the multiple copy mode, a couple of the bottom sheets in the stapled stack may be rolled up on the shift tray.

CAUSE

The leading edge of the stapled set of paper tends to hang down when fed out onto the shift tray. If there is an excessive facedown curl at the leading edge, it may catch on the backside of the prior stack and become rolled up.

This is more evident with thick stapled sets because the curl of the upper paper will press against the lower paper and this exaggerates the curl.

Note: 1. Non-staple mode copies will not exhibit this symptom as single sheets of paper are delivered to the shift tray one at a time.

2. Due to the nature of the copy job in which this problem occurs, this symptom would more likely occur with heavy volume users, such as copy shops, rather than with casual users.

SOLUTION

1 The copy paper has a characteristic that one side creates more curl than the other side. Therefore, instruct the customer to flip over the paper in the paper tray to reduce the amount of paper curl.
For those customers who have a wide selection of paper brands, recommending a paper brand which creates less curl might be more beneficial for the customer. (See page 23 of the Copy Reference manual for related remarks.)

2 Install the new version ROM (#A6975656B). The new version ROM is different from the current ROM in the following ways:

2.1 After the shift tray has moved from its stand-by position to the upper position, it will start moving down 50 ms after the paper stack has actuated the finisher exit sensor. Thus, the paper stack makes a "soft landing" on the shift tray, reducing the chances of the paper being rolled up.

2.2 The finisher exit roller speed has been increased from 600 to 700 mm/s which matches that of the stack exit. This will prevent the leading edge from receiving the pressure which may encourage the face-down curl.

Note: The statement in the Service Manual (page # A697-12) that "The speed of the exit roller is higher than the stack feed-out belt speed." is wrong.

2.3 The mode in which the shift tray receives the stapled copies at its stand-by position after the 1,500th copy has been suspended for stapled sets of more than 35 sheets because receiving at the stand-by position may lead to a steeper paper landing angle, causing the rolling-up.

Cut-in Serial Numbers

The new version ROM will be implemented into the production from July '98. The cut-in serial numbers are as follows:

Code	Brand	Cut-in Serial #s
-15	GES. US / SAVIN	1B58070001
-17	RICOH	A7778070001
-22	NRG	AR3807000
-26	INFOTEC	3R1780001
-55	LANIER	From 1st Production

INFORMATION

The ROM version data has not mistakenly been changed to "B", but stayed as "A" with A6975656B ROM.
Check the label attached to the ROM for the correct version identification.

RICOH **T**echnical **B**ulletin **PAGE: 1/1**

Model: NAD 30S/30/40	Date: 30-Jun-98	No: 8
Subject: Jam Location Decal	Prepared by: M.Mimura	
From: QAC Field Information Dept.		

Classification:			
	☐ Troubleshooting	☐ Part information	☐ Action required
	☐ Mechanical	☐ Electrical	☐ Service manual revision
	☐ Paper path	☐ Transmit/receive	☐ Retrofit information
	☒ Other ( )		

This bulletin clarifies the function of the jam location decal in the option decal sheet (#A2327380 for LT and #A2327780 for A4).

The jam locations are indicated on the Jam Removal Sheet (#A2321380) located inside the copier front cover. However, the jam location decal is available so that the customer can determine the jam location without opening the front cover.

The position of the jam location decal is not pre-determined. You may place it wherever it stands out after installing all peripherals.

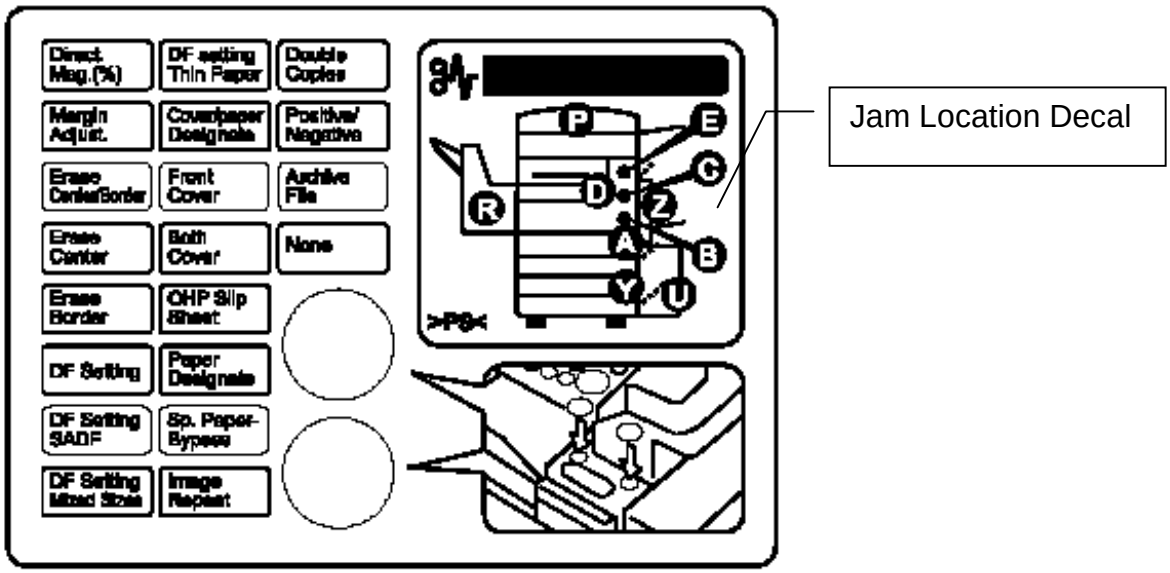

Option Decal Sheet

Model: NAD 30S/30/40	Date: 30-Jun-98	No: 9
Subject: Service Manual Correction	Prepared by: S.Tomoe	
From: QAC Field Information Dept.		

Classification:

☐ Troubleshooting	☐ Part information	☐ Action required
☐ Mechanical	☐ Electrical	☐ Service manual revision
☐ Paper path	☐ Transmit/receive	☐ Retrofit information
☒ Other ( )		

Unify the name of the SP mode both on the machine display and in the service manual.

Incorrect

Class1 and 2	**Class 3**		**Function**	**Setting**
2-805		Process Initial Setting	Performs the process initial setting. Press 1 to start.	1. Start

Correct

Class1 and 2	**Class 3**		**Function**	**Setting**
2-805		**Developer Initialization**	Performs the **developer initialization**. Press 1 to start.	1. Start

RTB Correction

Reissue date: **31-Jul-98**

The contents have been totally revised because the original version was created with incorrect information.

Model: NAD 30S/30/40 - European version (RPL-made) only		Date: 15-Jul-98	No: 10
Subject: Protective Paper on the Development Roller		Prepared by: M.Mimura	
From: QAC Field Information Dept.			
Classification:	☐ Troubleshooting	☐ Part information	☐ Action required
	☐ Mechanical	☐ Electrical	☐ Service manual revision
	☐ Paper path	☐ Transmit/receive	☐ Retrofit information
	☒ Other ( )		

Please be informed that the RPL-made NADs will have a protective sleeve on the development roller (RPL: Ricoh UK Products Limited).

The field technicians are instructed in the Service Manual to keep the development unit away from the PCU when removing / installing the PCU to prevent the development unit from scratching the drum.

For the same purpose at RPL, they cover the development roller with the protective paper. This is because they work with the development unit with a bare roller (which may hit the drum hard) and they produce a large number machines, which requires a more tolerant method for the factory workers.

Therefore, when installing the RPL-made machines, remove the protective paper.

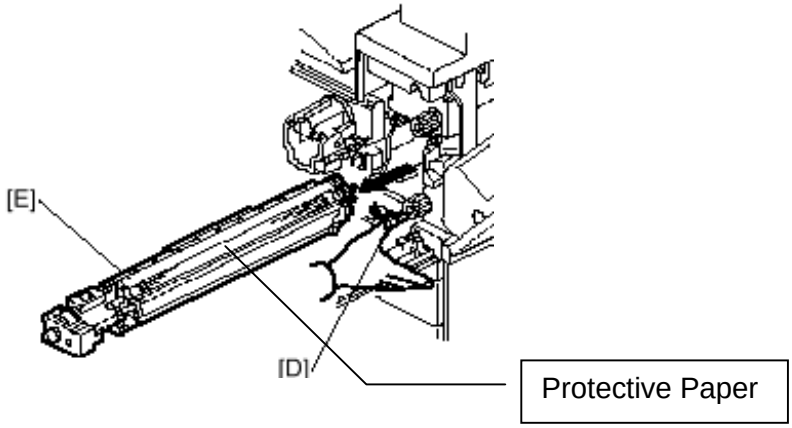

Note: China- and Japan-made NADs will not have the protective paper.

Model: NAD 30S/30/40	Date: 15-Jul-98	No: 11
Subject: Jam History Information	Prepared by: S.Tomoe	
From: QAC Field Information Dept.		

Classification:	☐ Troubleshooting	☐ Part information	☐ Action required
	☐ Mechanical	☐ Electrical	☐ Service manual revision
	☐ Paper path	☐ Transmit/receive	☐ Retrofit information
	☒ Other ( )		

This informs of the meaning of the jam code in SP7-507.

Copy Jam Condition (Jam Code) Table

Code	Condition
01	Jams at power on
03	1st paper tray: paper non-feed jam
04	2nd paper tray : paper non-feed jam
05	3rd paper tray: paper non-feed jam
06	4th paper tray: paper non-feed jam
07	LCT: Paper non-feed jam
08	Upper relay sensor: paper does not activate the sensor
09	Lower relay sensor: paper does not activate the sensor
10	Upper relay sensor – Optional PTU: paper does not activate the sensor
13	Registration sensor: paper does not activate the sensor
16	Exit sensor: paper does not activate the sensor
17	Bridge exit sensor: paper does not activate the sensor
18	Bridge relay sensor: paper does not activate the sensor
19	Duplex entrance sensor: paper does not activate the sensor
23	Duplex exit sensor: paper does not activate the sensor
24	1-bin tray entrance sensor: paper does not activate the sensor
25	Fusing entrance sensor: paper does not activate the sensor
26	3000-sheet finisher upper tray exit sensor: paper does not activate the sensor
27	Finisher shift tray exit sensor: paper does not activate the sensor
28	Staple tray paper sensor: paper does not activate the sensor
29	Finisher stack feed-out belt HP sensor: paper does not activate the sensor
30	Mail box entrance sensor: paper does not activate the sensor
31	Mail box proof tray exit sensor: paper does not activate the sensor
32	Mail box relay sensor: paper does not activate the sensor
33	Mail box sensor: paper does not activate the sensor
57	LCT: paper doe not activate the sensor
58	1st paper tray: paper stays at the sensor
59	2nd paper tray: paper stays at the sensor
60	3rd paper tray: paper stays at the sensor
61	4th paper tray: paper stays at the sensor
63	Registration sensor: paper stays at the sensor
66	Exit sensor: paper stays at the sensor
67	Bridge exit sensor: paper stays at the sensor

Code	Condition
68	Bridge relay sensor: paper stays at the sensor
69	Duplex entrance sensor: paper stays at the sensor
73	Registration sensor: paper stays at the sensor
74	1-bin tray entrance sensor: paper stays at the sensor

Original Jam Condition (Jam Code) Table

Code	Condition
01	Jams at power on
03	Jams in the feed-in area
04	Jams in the feed-out area

RTB Correction

Reissue date: **31-Aug-98**

The items in bold italics have been corrected or added.

The items with a line drawn through them have been deleted.

Model: NAD 30S/30/40	Date: 15-Jul-98	No: 12
Subject: Key Logging Data Information	Prepared by: S.Tomoe	
From: QAC Field Information Dept.		

Classification:			
	☐ Troubleshooting	☐ Part information	☐ Action required
	☐ Mechanical	☐ Electrical	☐ Service manual revision
	☐ Paper path	☐ Transmit/receive	☐ Retrofit information
	☒ Other ( )		

This informs the meaning of the Key Logging Data which is listed in the logging data sheet.

This key logging data may be useful when an unsolved problem is caused by a user operation.

Key Logging Data Table

Code	Key	Code	Key	Code	Key	Code	Key
00		10	Clear	20	Zoom	30	Quick Dial 01
01	Ten key – 1	11	Speed Dial	21	Enhanced Image	31	Quick Dial 02
02	Ten key – 2	12	On Hook	22	Sort	32	Quick Dial 03
03	Ten key – 3	13	Pause	23	Duplex	33	Quick Dial 04
04	Ten key – 4	14	Tone	24	Menu	34	Quick Dial 05
05	Ten key – 5	15	⇦	25	Shortcut 1	35	Quick Dial 06
06	Ten key – 6	16	⇨	26	Shortcut 2	36	Quick Dial 07
07	Ten key – 7	17	LCD F1	27	Shortcut 3	37	Quick Dial 08
08	Ten key – 8	18	LCD F2	28	Shortcut 4	38	Quick Dial 09
09	Ten key – 9	19	LCD F3	29	Stamp	39	Quick Dial 10
0A	Ten key – 0	1A	LCD F4	2A	Resolution	3A	Quick Dial 11
0B	✶/▪	1B	Original Type	2B	Tx Mode	3B	Quick Dial 12
0C	#	1C	Lighter	2C	Fax F1 note1	3C	Quick Dial 13
0D	Start	1D	Darker	2D	Fax F2 note1	3D	Quick Dial 14
0E	Stop	1E	AID	2E	Fax F3 note1	3E	Quick Dial 15
0F	Program	1F	Auto R/E	2F	Fax F4 note1	3F	Quick Dial 16

Code	Key	Code	Key	Code	Key	Code	Key
40	Quick Dial 17	50	Quick Dial 33	60	Quick Dial 49	A0	Clear Modes
41	Quick Dial 18	51	Quick Dial 34	61	Quick Dial 50	A1	User Tools
42	Quick Dial 19	52	Quick Dial 35	62	Quick Dial 51	A2	Copy
43	Quick Dial 20	53	Quick Dial 36	63	Quick Dial 52	A3	Fax
44	Quick Dial 21	54	Quick Dial 37	64	Quick Dial 53	A4	Printer
45	Quick Dial 22	55	Quick Dial 38	65	Quick Dial 54	A5	Interrupt
46	Quick Dial 23	56	Quick Dial 39	66	Quick Dial 55	A6	Operation Sw
47	Quick Dial 24	57	Quick Dial 40	67	Quick Dial 56	A7	User Code
48	Quick Dial 25	58	Quick Dial 41	68	~~Quick Dial 09~~ ***N/A***	A8	Energy Saver
49	Quick Dial 26	59	Quick Dial 42	69	~~Quick Dial 10~~ ***N/A***	A9	SP mode (service)
4A	Quick Dial 27	5A	Quick Dial 43	6A	~~Quick Dial 11~~ ***N/A***	AA	SP mode (factory)
4B	Quick Dial 28	5B	Quick Dial 44	6B	~~Quick Dial 12~~ ***N/A***	AB	SP mode (sales)
4C	Quick Dial 29	5C	Quick Dial 45	6C	~~Quick Dial 13~~ ***N/A***	AC	RSS manual call
4D	Quick Dial 30	5D	Quick Dial 46	6D	~~Quick Dial 14~~ ***N/A***	AD	PM alarm
4E	Quick Dial 31	5E	Quick Dial 47	6E	~~Quick Dial 15~~ ***N/A***	AE	N/A
4F	Quick Dial 32	5F	Quick Dial 48	6F	~~Quick Dial 16~~ ***N/A***	AF	N/A
						B0	Fax Reset
						B1	Fax F1 note2
						B2	Fax F2 note2
						B3	Fax F3 note2
						B4	Fax F4 note2
						B5	Fax F5 note2

Note: 1. These codes will be used when pressing these keys in fax mode.

2. These codes will be used when pressing these keys in any application mode (copy, fax, and printer).

Model: NAD 30S/30/40	Date: 31-Aug-98	No: 13
Subject: Premature Toner Overflow detection	Prepared by: M.Mimura	
From: QAC Field Information Dept.		

Classification:	☒ Troubleshooting	☐ Part information	☐ Action required
	☐ Mechanical	☐ Electrical	☐ Service manual revision
	☐ Paper path	☐ Transmit/receive	☐ Retrofit information
	☐ Other ( )		

SYMPTOM

Toner overflow is detected prematurely.

CAUSE

When heavy copy jobs are made consecutively, used toner scraped off by the transfer belt cleaning blade may scatter and pile up on the toner overflow sensor. In the worst case scenario, this leads to an overflow detection malfunction.

SOLUTION

1. Install the Toner Guide Mylar (#A2323928) on the transfer belt cleaning blade. This mylar will prevent the used toner from passing by the toner overflow sensor.

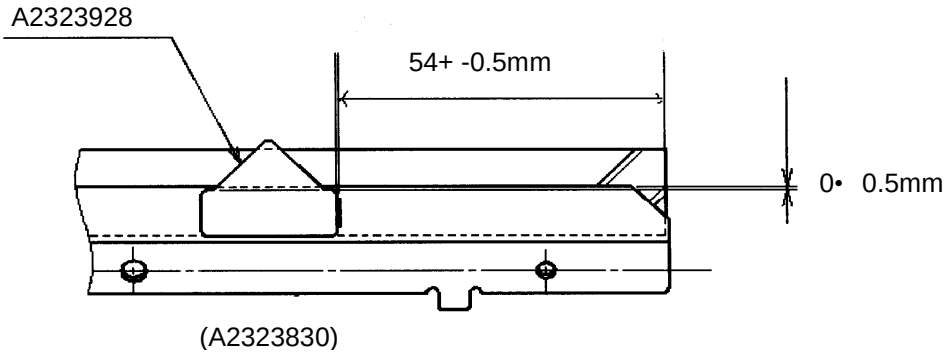

2. Replace the old type blade with the new type blade (#A2323830) which has the toner guide mylar.

Factory Action

The new type cleaning blade has been implemented from the following production runs:

RPL: From July ’98 production

RAI: From August ’98 production

(See an MB to be issued later for the cut-in serial numbers.)

Model: NAD 30S/30/40	Date: 30-Sep-98	No: 14
Subject: Bridge Unit Condensation	Prepared by: E. Fukuyama	
From: QAC Field Information Dept.		

Classification:

☒ Troubleshooting	☐ Part information	☐ Action required
☐ Mechanical	☐ Electrical	☐ Service manual revision
☐ Paper path	☐ Transmit/receive	☐ Retrofit information
☐ Other ( )		

SYMPTOM

If a large number of copies are made shortly after the power has been turned on, condensation may develop inside the bridge unit. Droplets of water will then adhere to the edge of the paper and eventually lead to leaking from the bridge unit. In low humidity environments, the paper may absorb the humidity.

ACTION

1. Please turn around the cooling fan installed at the bottom of the bridge unit. (The label on the fan should now be visible.)
2. Attach a sponge to the inside of the bridge unit to soak up the drops of water.

Turning around the cooling fan will prevent condensation from developing on the paper. However, this may lead to an increase in temperature within the unit and may result in condensation in the unit.
Please see below for details concerning the size of the sponge and the position where it should be attached.

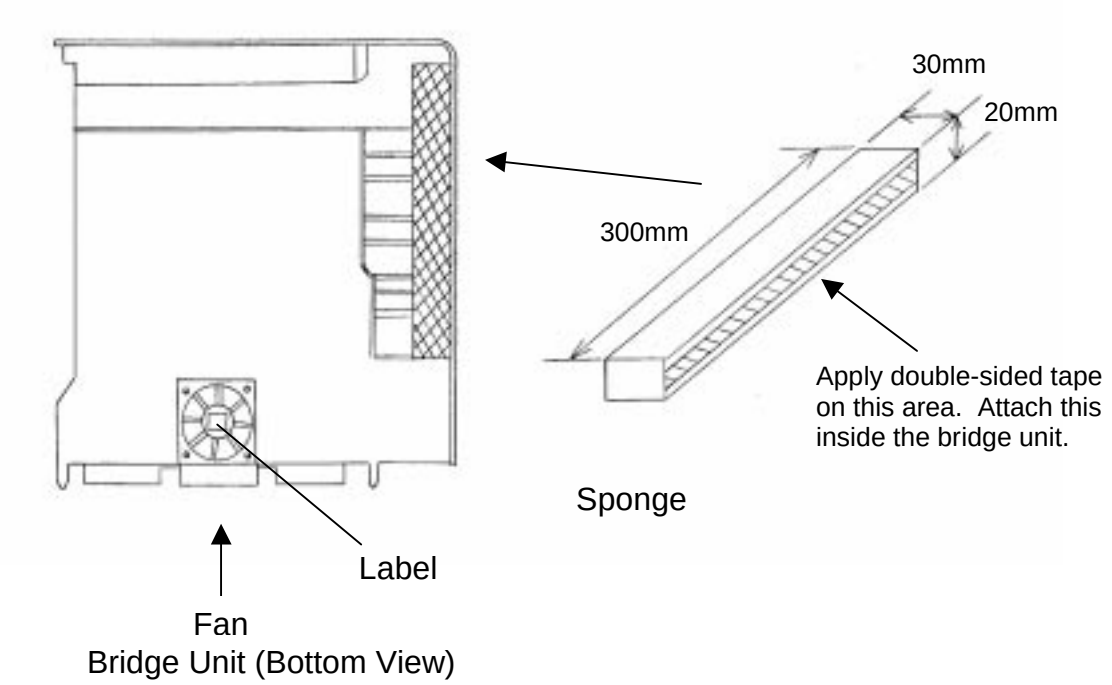

RICOH

Technical Bulletin

Model: NAD 30S/30/40	Date: 30-Sep-98	No: 15
Subject: PC-Fax Expander Type 450	Prepared by: M.Mano	
From: QAC Field Information Dept.		

Classification:

☐ Troubleshooting	☐ Part information	☐ Action required
☐ Mechanical	☐ Electrical	☐ Service manual revision
☐ Paper path	☐ Transmit/receive	☐ Retrofit information
☒ Other (Service manual for new option)		

The service manual for the PC-FAX Expander Type 450 (15 pages) follows.

SERVICE MANUAL
PC-FAX EXPANDER TYPE 450

September 4th, 1998
Subject to change

TABLE OF CONTENTS

1. OVERALL INFORMATION 1-1
1.1 SPECIFICATIONS 1-1
1.2 FEATURES 1-1

2. DETAILED DESCRIPTIONS 2-1
2.1 AT COMMANDS AND RESPONSES 2-1
2.1.1 Class 0 Commands 2-1
2.1.2 Class 2 commands 2-1
2.2 Class 2 FAX communication 2-3
2.2.1 Direct transmission 2-3
2.2.2 Memory transmission 2-3
2.2.3 Direct reception 2-4
2.2.4 Memory reception 2-4
2.3 SCANNING AND PRINTING 2-5
2.3.1 SCANNING 2-5
2.3.2 PRINTING 2-5

3. INSTALLATION 3-1

4. SERVICE TABLES AND PROCEDURES 4-1
4.1 SERVICE MODE FUNCTIONS 4-1
4.1.1 PC Protocol DUMP List 4-1
4.2 Bit swicthes 4-1
4.3 User PARAMETERS 4-1

5. PARTS LIST 5-1

1. OVERALL INFORMATION

1.1 SPECIFICATIONS

Item	Description
PC Fax Interface	EIA/TIA Class 2 (Class 1 is not supported)
Host Interface Connector	EIA/TIA RS232C DB25 female connector
Scanner	TWAIN interface Maximum resolution: 200 x 200 dpi

1.2 FEATURES

- Class 2 fax transmission directly from a host PC
  (PC fax application required)
- Class 2 fax transmission through SAF memory
  (PC fax application required)
- Class 2 fax reception directly to a host PC
  (PC fax application required)
- Class 2 fax reception through SAF memory
  (PC fax application required)
- Local printing from a PC fax application
  (PC fax application required)
- Local scanning from the machine's scanner using TWAIN API
  (CFM Twain driver required)

2. DETAILED DESCRIPTIONS

2.1 AT COMMANDS AND RESPONSES

2.1.1 CLASS 0 COMMANDS

Command	Function	Remarks
ATA	Answer	
ATD	Dial	
ATE	Command echo	
ATH	Switch-hook control	
ATI	Identification	
ATL	Speaker volume	
ATM	Speaker control	
ATP	Set pulse dial as default	The machine returns OK, but the function is not supported.
ATQ	Result code display	
ATS	S register	
ATT	Set tone dial as default	
ATV	Result code form	
ATX	Extended result codes	The machine returns OK, but the function is not supported.
ATZ	Reset	
AT&C	DCD option	The machine returns OK, but the function is not supported.
AT&D	DTR option	
AT&F	Restore factory configuration	

2.1.2 CLASS 2 COMMANDS

Command	Function	Remarks
AT+FCLASS?	Service class	The machine responds “0” or “2”.
AT+FMFR?	Identify manufacturer	The machine responds “RICOH(NAD)”.
AT+FLID	Local ID string	
AT+FBOR	Phase C data bit order	
AT+FCR	Capability to receive	The machine returns OK, but the function is not supported.
AT+FDCC	DCE capability parameters	
AT+FDIS	Current session parameters	
AT+FDT	Data transmission	
AT+FET	Transmit page punctuation	
AT+FDR	Phase C receive data	
AT+FMDL?	Identify model	The machine responds “PC-FAX EXPANDER (NAD)”.

Command	Function	Remarks
AT+FREV?	Identify revision	The machine responds with FCU ROM version and release date.
AT+FAA	Adaptive answer	The machine returns OK, but the function is not supported.
AT+FPHCTO	Phase C timeout	
AT+FECM	ECM parameter	
AT+FBUG	Session manager reporting parameter	
AT+FPTS	Page transfer status	
AT+FAXERR	Fax error value	The machine returns OK, but the function is not supported.
AT+FDCS	Current session results	
AT+FCQ	Copy quality capability parameter	The machine returns OK, but the function is not supported.
AT+FK	Session termination	
+FHNG	Call termination with status	
+FCON	Facsimile connection response	
+FCSI	Report the CSI	
+FTSI	Report the TSI	
+FCFR	Indicate CFR	

2.2 CLASS 2 FAX COMMUNICATION

2.2.1 DIRECT TRANSMISSION

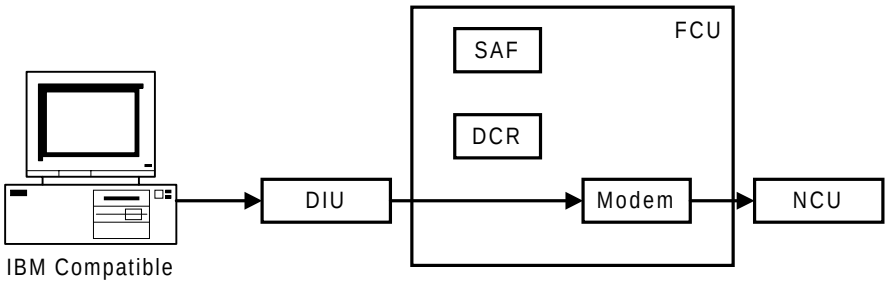

A824D001.WMF

The host computer sends commands and image data to the machine through the DIU during transmission.

NOTE: 1) Group dials programmed in the machine cannot be used.
2) ISDN G4 numbers programmed in quick or speed dials cannot be used.
3) If ISDN is selected for G3 communication (system switch 0A, bit 6), the G3 numbers must have been programmed in quick or speed dial.
4) T.30 optional protocols (e.g., BFT) are not supported by class 2 fax communication.

2.2.2 MEMORY TRANSMISSION

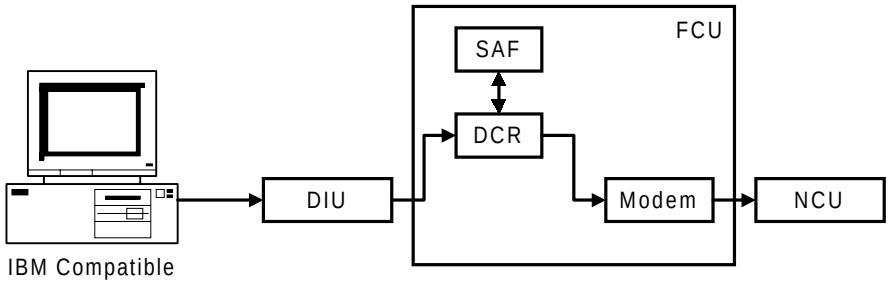

A824D002.WMF

The host computer sends destination number(s) and image data to the machine through the DIU during transmission. The machine stores the image in the SAF memory, then makes a fax transmission.

NOTE: 1) If the memory overflows while storing the first page into SAF memory, the machine does not start the transmission.
2) If the memory overflows while storing the second or subsequent page into SAF memory, the machine transmits all the successfully stored pages.
3) When fax numbers programmed in the machine's quick or speed dials are specified using the PC fax application, all the specified numbers must have been programmed in the fax machine.
4) T.30 optional protocols (e.g., BFT) are not supported by class 2 fax communication.

2.2.3 DIRECT RECEPTION

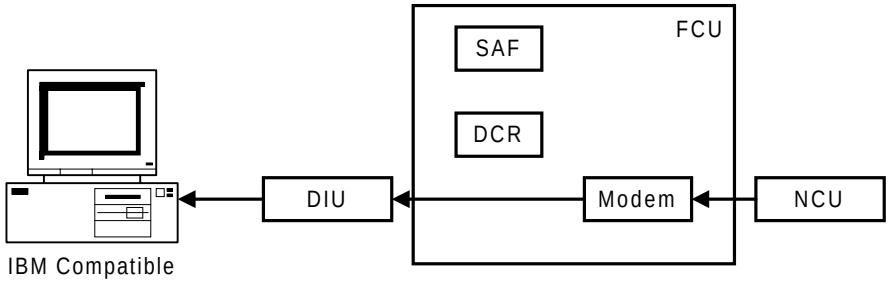

A824D003.WMF

The machine transfers received image data directly to the host PC without storing it into SAF memory.

NOTE: 1) If the host PC is not ready to receive a fax message, the machine receives the message into SAF memory.
2) Even if the SAF memory is full, the machine starts fax reception. However, the machine will not continue reception if the host computer is not ready to receive a message.
3) The “Number of rings to answer” parameter in the PC fax application must not exceed 4.

2.2.4 MEMORY RECEPTION

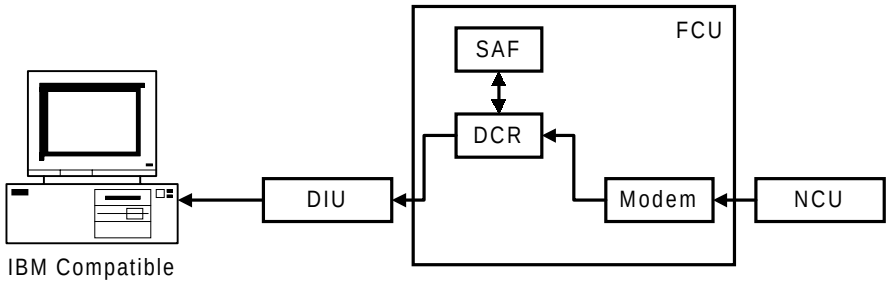

A824D004.WMF

The machine receives a fax message in the SAF memory, then transfers data to the host computer after the reception has finished. The machine prints the received message after transferring data to the host if user parameter 20 – bit 4 is set to “1: Print”.

NOTE: 1) If an error occurs due to cable disconnection, the PC fax application must be restarted to receive the message.
2) Memory reception is not possible when forwarding is enabled.
3) Manual reception from the PC fax application is not supported.
4) The “Number of rings to answer” parameter in the PC fax application must not exceed 4.

2.3 SCANNING AND PRINTING

2.3.1 SCANNING

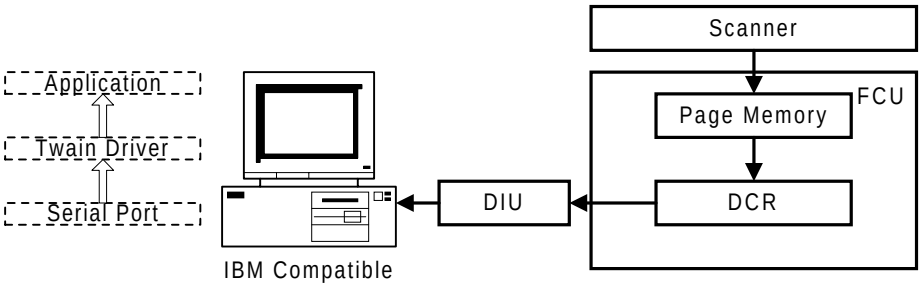

A824D005.WMF

The machine scans an original into page memory, then transfers the data to the host PC. The data is sent to the application through the CFM Twain driver.

NOTE: 1) The maximum resolution is 200 x 200 dpi.

2.3.2 PRINTING

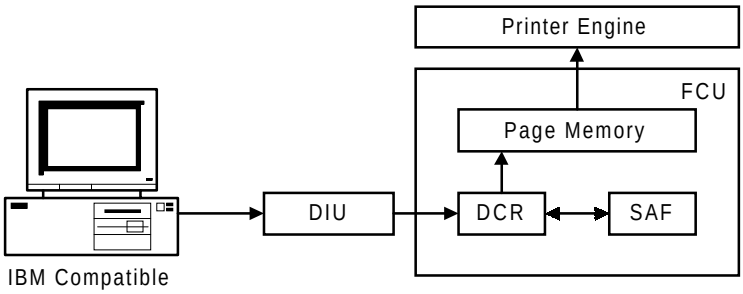

A824D006.WMF

The machine receives print data into SAF memory as fax image data, then prints it after all the data has been transferred from the host PC.
The destination number “0000” informed from the host PC identifies a print job.

NOTE: 1) If SAF memory runs out while receiving print data, the machine prints up to the successfully received data.
2) The machine cannot receive print data while printing a message from the SAF memory. The data will be received after printing.
3) If a fax destination is specified together with the print destination “0000”, the destinations specified after “0000” will be delayed until the machine prints all pages in the message.

3. INSTALLATION

THIS OPTION MUST BE INSTALLED BY A CUSTOMER SERVICE REPRESENTATIVE WHO HAS COMPLETED THE TRAINING COURSES FOR THE BASE COPIER AND THIS OPTION.

NOTE: 1) Never install telephone wiring during a lightning storm.
2) Never install telephone jacks in wet locations unless the jack is specifically designed for wet locations.
3) Never touch uninsulated telephone wires or terminals unless the telephone line has been disconnected at the network interface.
4) Use caution when installing or modifying telephone lines.
5) Avoid using a telephone (other than a cordless type) during an electric storm. There may be a remote risk of electric shock from lightning.
6) Do not use an telephone to report a gas leak in the vicinity of the leak.

⚠CAUTION
Before installing this option, turn off the main switch, and disconnect the power cord.

INSTALLATION PROCEDURE

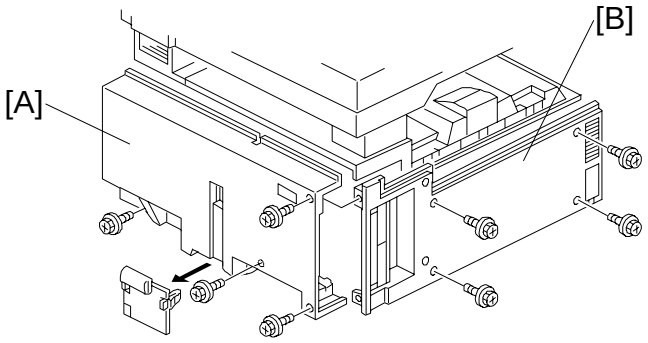

A815I500.WMF

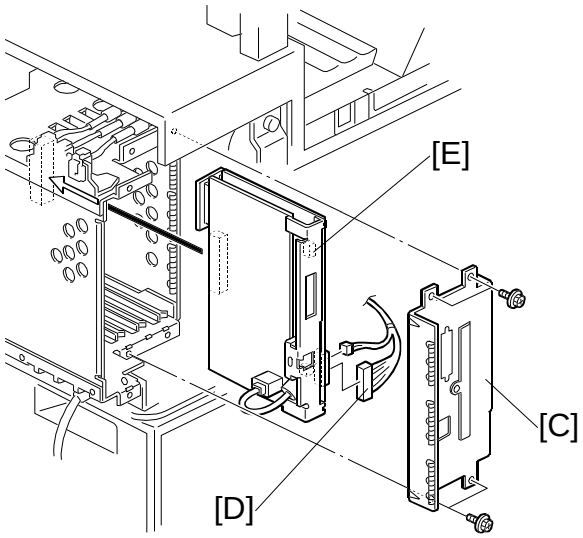

A815I501.WMF

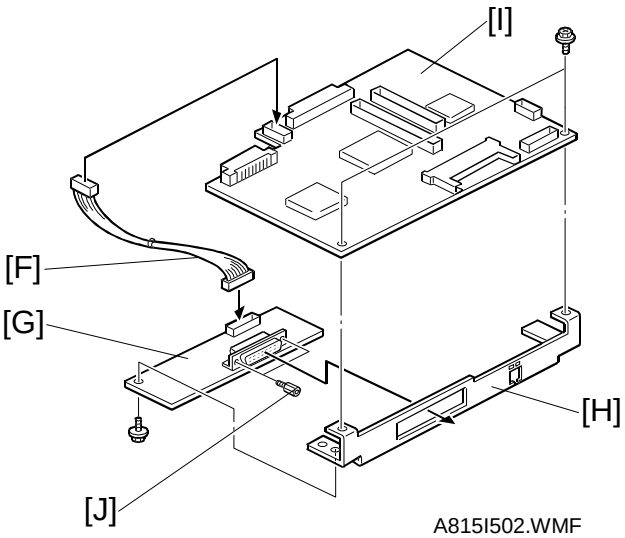

A815I502.WMF

1. Remove the rear cover [A] (4 screws) and the left-side cover [B] (4 screws).
2. Remove the bracket [C] (2 screws) and disconnect the harness [D], then remove the FCU [E] from the expansion box.
   NOTE: If the ISDN unit was already installed, go to “with the ISDN unit” section on the next page.

- **Without the ISDN unit**

3. Connect the harness [F] to the DIU [G]. (RS232C interface)
4. Attach the bracket [H] enclosed in the PC-Fax Expander to the DIU [G]. (2 screws)
5. Attach the FCU [I] to the bracket [H] (2 screws).
6. Connect the harness [F] to the CN326 on the FCU [I] as shown.
7. Remove 2 hexagonal screws [J] from the DIU [G].

Go to step 8 on page 3-4.

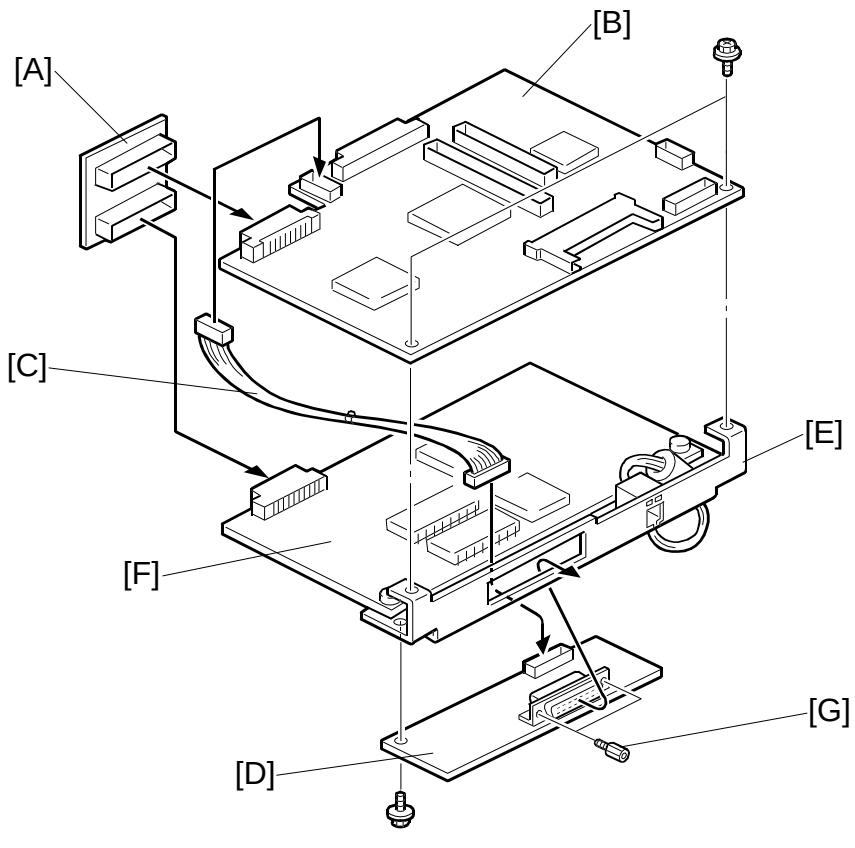

A815I503.WMF

- **With the ISDN unit**

  NOTE: The bracket which is enclosed in the PC-Fax Expander is not used.

3. Disconnect the interface board [A], then remove the FCU [B] from the assembly as shown.
4. Connect the harness [C] to the DIU [D], then attach the DIU [D] to the bracket [E] as shown
5. Make sure that the harness [C] is between the ISDN board [F] and the FCU [B], then replace the FCU [B] as shown.
6. Connect the harness [C] to the CN326 on the FCU [B], then replace the interface board [A] as shown.

   NOTE: Make sure not to pinch the harness [C] between the FCU [B] and the interface board [A] when connecting it.
7. Remove the 2 hexagonal screws [G] from the DIU [D].

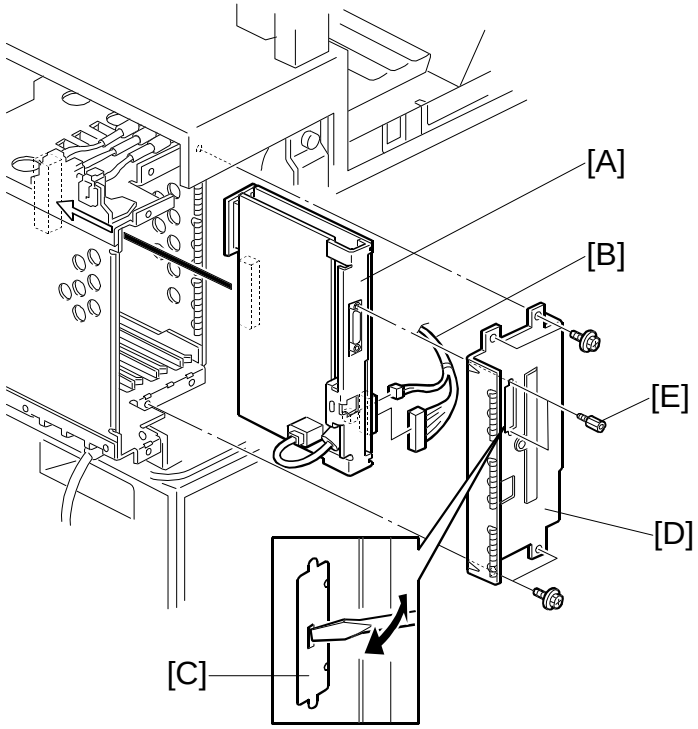

A815I504.WMF

8. Insert the FCU and DIU assembly [A] into the expansion box; connect the harness [B] and slide the assembly into bottom of the box.
9. Open the RS232C connector window [C] on the bracket [D], then install the bracket [D] onto the expansion box.
10. Tighten the 2 hexagonal screws [E] as shown.
11. Replace the left-side and rear covers. (4 screws each).
12. Plug in the machine and turn on the main switch.
13. Enter the service mode, and set bit 3 of system switch 1C to “1”, then turn off and on the main switch.
14. Print the system parameter list. If “TR29” appears in the “option” section of the system parameter list, go head. Otherwise, check the cable connection.
15. Follow the instructions in the Operator’s manual to connect the machine to a host computer and how to set up the machine and the computer, if required.
    NOTE: 1) A “Straight – through” shielded serial cable is required, but it is not enclosed.
    2) One end of the serial cable must have DB25 male connection to connect to the DIU.

4. SERVICE TABLES AND PROCEDURES

4.1 SERVICE MODE FUNCTIONS

4.1.1 PC PROTOCOL DUMP LIST

Use this function to check the AT commands and responses that are exchanged between a host computer and the machine.
Refer to section 2.1 for details of the supported AT commands.

1. Enter service mode, and select 05 “Protocol Dump”.
2. Select 3 “PC Protocol List”, then press Start.

4.2 BIT SWICTHES

System Switch 1C		
No	**FUNCTION**	**COMMENTS**
0	PC-DIU communication record on the Journal **0:** Disabled **1:** Enabled	**1:** Communications between the DIU and a host PC are logged on the Journal. Also, the Data-in LED turns on while data is coming in and going out to the PC. Be sure to reset this bit to “0” after a test.
1 to 2	Not used	Do not change the settings.
3	PC-Fax Expander option **0:** Not installed **1:** Installed	Change this bit to 1 when installing the PC-Fax Expander. (Europe model only)
4 to 7	Not used	Do not change the settings.

4.3 USER PARAMETERS

User Switch 20		
No	**FUNCTION**	**COMMENTS**
0	Class 2 transmission **0:** Direct tx **1:** Memory tx	**0:** Image data is sent directly from a host during communication. **1:** Image data is sent to the fax machine’s SAF memory before starting a fax communication, then it is sent by the fax machine.
1	Addition of fax TTI in class 2 memory transmission **0:** Disabled **1:** Enabled	**1:** The machine adds its TTI to all the messages sent through SAF memory. This setting is effective only when bit 0 is set to “1”.

User Switch 20		
No	**FUNCTION**	**COMMENTS**
2	Message received to: **0:** Fax **1:** PC	**0:** Received messages are printed at the machine. **1:** Received messages are transferred to the host PC.
3	Class 2 reception **0:** Direct rx **1:** Memory rx	**0:** Received messages are transferred to the host PC directly during fax communication. **1:** Received messages are stored in the SAF memory during reception. Then they are transferred to the host PC after reception has been completed.
4	Message printout in class 2 memory rx **0:** Disabled **1:** Enabled	**1:** A message received into memory is printed after it has been transferred to the host PC.
5	Checkered mark on printouts from a PC **0:** Disabled **1:** Enabled	**1:** The machine prints a checkered mark on a document printed through the DIU.
6 to 7	Not used	Do not change the settings.

User Switch 21		
No	**FUNCTION**	**COMMENTS**
0 to 3	Scan density for the “Light” setting in scanner mode. **Bit3 Bit2 Bit1 Bit0 Setting** **0 0 0 1** Level1 **0 0 1 0** Level2	All the other settings are the same as Level1.
4 to 7	Scan density for the “Dark” setting in scanner mode. **Bit7 Bit6 Bit5 Bit4 Setting** **0 0 0 1** Level5 **0 0 1 0** Level6	All the other settings are the same as Level5.

5. PARTS LIST

Index	Part Number	Name	Q'ty/Unit
1	A2335195	PCB - DIU	1
2	A2335282	Harness – FCU-DIU	1
3	A8165801	Bracket	1
4	04513006B	Screw – M3 x 6	4

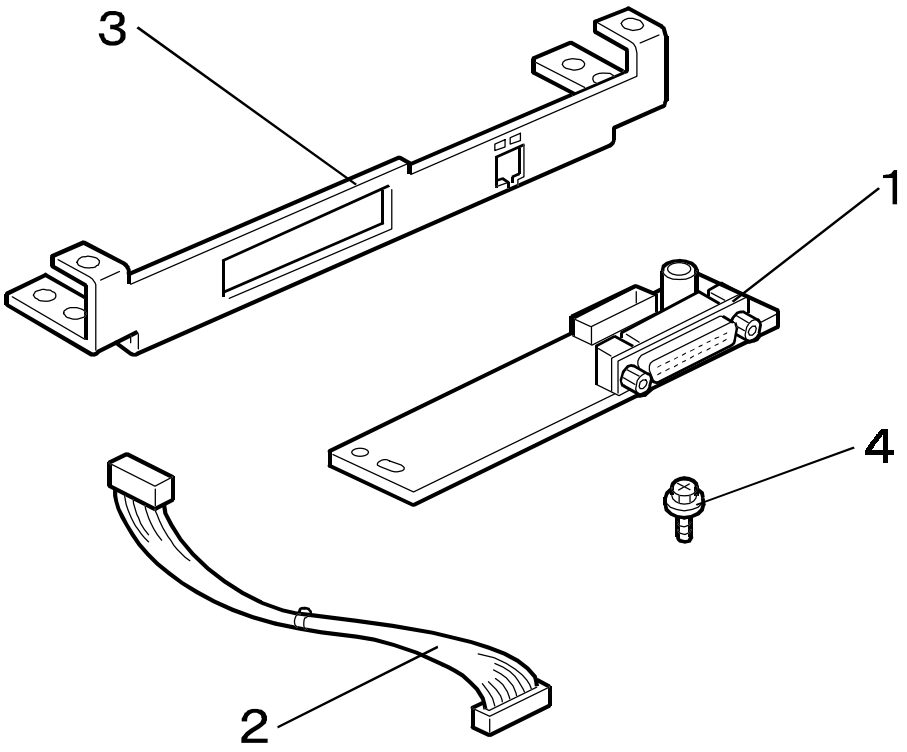

Model: NAD 30S/30/40	Date: 30-Sep-98	No.: 16

Subject: Software Release Information	Prepared by: M.Mimura
From: QAC Field Information Dept.	

Classification:	☐ Troubleshooting	☐ Part information	☐ Action required
	☐ Mechanical	☐ Electrical	☐ Service manual revision
	☐ Paper path	☐ Transmit/receive	☐ Retrofit information
	☒ Other ( )		

The new version of the BICU firmware has been implemented on the production machines.

1. Software Version: 13.6.3.1

Affected Program Numbers:

Program Number	Languages Contained
A2325113H	US English (US), French (F), Spanish (E) - NA
A2325114H	UK English (GB), French (F), German (D) - EU
A2325115E	UK English (GB), Traditional Chinese (CHI) - Asia
A2325116B	UK English (GB), Simplified Chinese (HK) - China
A2325117B	UK English (GB), Traditional Chinese (CHI) - Taiwan
A2325152A	UK English (GB), Spanish (E), Italian (I)
A2325153A	UK English (GB), French (F), Dutch (NL)
A2325154A	UK English (GB), Swedish (S), Norwegian (N)
A2325155A	UK English (GB), Danish (DK), Finnish (FIN)
A2325156A	UK English (GB), Spanish (E), Portuguese (P)
A2325157A	UK English (GB), Polish (PL), Hungarian (H)
A2325158A	UK English (GB), Polish (PL), Czech (CZ)

Corrections

No.	Title	Details
1	SC542	1. In the power save modes, if the customer has left the front cover open for a long time, SC542 may appear. 2. If the front cover is kept open for more than 125 seconds when adjusting SP1-105-01, SC542 occurs.

Note: This fixes the bug created with the version 13.6.1.

Production Cut-in Month

RAI (China): June ’98 Production
RPL (UK): From first production

2. Software Version: 13.6.4.1

Affected Program Numbers:

Program Number	Languages Contained
A2325113J	US English (US), French (F), Spanish (E) – NA
A2325114J	UK English (GB), French (F), German (D) – EU
A2325115F	UK English (GB), Traditional Chinese (CHI) – Asia
A2325116C	UK English (GB), Simplified Chinese (HK) – China
A2325117C	UK English (GB), Traditional Chinese (CHI) – Taiwan
A2325152B	UK English (GB), Spanish (E), Italian (I)
A2325153B	UK English (GB), French (F), Dutch (NL)
A2325154B	UK English (GB), Swedish (S), Norwegian (N)
A2325155B	UK English (GB), Danish (DK), Finnish (FIN)
A2325156B	UK English (GB), Spanish (E), Portuguese (P)
A2325157B	UK English (GB), Polish (PL), Hungarian (H)
A2325158B	UK English (GB), Polish (PL), Czech (CZ)

Corrections

No,	Title	Details
1	Jam Detection Malfunction	If there are A3 / 11”x17” jams in the duplex unit, the jam location indicator “C” may also light even though there is no paper there. This program error has been fixed.
2.	Fusing Control	Current When a non-feed jam occurs, even if other paper going into the copier jams at the same time, the fusing lamp will not be turned off but will operate under the normal temperature control until the front cover is opened. New The fusing lamp will be turned off whenever paper jams occur in the copier.

Production Cut-in Month

RAI (China): August ’98 Production
RPL (UK): August ’98 production

3. Software Version: 13.6.8

Affected Program Numbers:

Program Number	Languages Contained
A2325113K	US English (US), French (F), Spanish (E) – NA
A2325114K	UK English (GB), French (F), German (D) – EU
A2325115G	UK English (GB), Traditional Chinese (CHI) – Asia

Program Number	Languages Contained
A2325116D	UK English (GB), Simplified Chinese (HK) – China
A2325117D	UK English (GB), Traditional Chinese (CHI) – Taiwan
A2325152C	UK English (GB), Spanish (E), Italian (I)
A2325153C	UK English (GB), French (F), Dutch (NL)
A2325154C	UK English (GB), Swedish (S), Norwegian (N)
A2325155C	UK English (GB), Danish (DK), Finnish (FIN)
A2325156C	UK English (GB), Spanish (E), Portuguese (P)
A2325157C	UK English (GB), Polish (PL), Hungarian (H)
A2325158C	UK English (GB), Polish (PL), Czech (CZ)

Specification Changes

No.	Title	Details	Applicable to
1	Default Setting – Duplex Priority	Default mode has been changed from “simplex to duplex” to “simplex to simplex”	All except for NA

Corrections

No.	Title	Details	Applicable to
1	SMC Print	SP5001 to SP5401 can now be printed.	All
2	Memory All Clear	Memory All Clear (SP5801) now functions in the SC condition.	All
3	Jam Recovery	Pressing the Start key now resumes copying when a copier jam occurred after the last original has been fed in. (This occurs when the copy number is two or higher only on machines without hard disks.)	All

Production Cut-in Month

RAI (China): August ’98 Production
RPL (UK): August ’98 Production

Model: NAD 30S/30/40	Date: 15-Oct-98	No.: 17

Subject: SC322/SC326	Prepared by: S. Hizen
From: GTS and S Field Information Dept.	

Classification:	☒ Troubleshooting	☐ Part information	☐ Action required
	☐ Mechanical	☐ Electrical	☐ Service manual revision
	☐ Paper path	☐ Transmit/receive	☐ Retrofit information
	☐ Other ( )		

SYMPTOM

SC322/SC326

CAUSE

The synchronization detector on the laser unit cannot properly receive the laser beam.

SOLUTION

Twist the laser unit using the following procedure.
Note:
This is a temporary solution in the field as the SC322/SC326 problem is still under investigation.

Procedure
1. Open the front cover and remove the inner cover. (See the illustration)

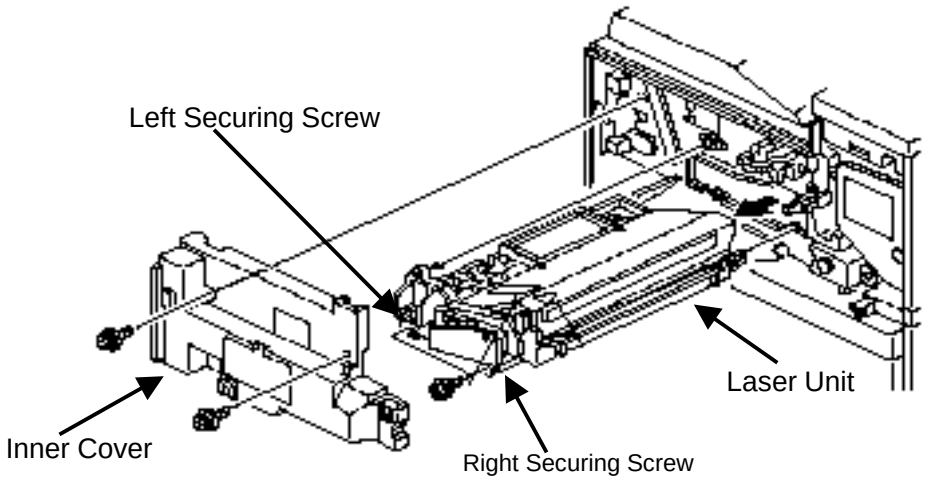

2. Make sure the three laser diode unit securing screws are not loose. If the screws are loose, tighten the screws and check to see if the SC322/SC326 has been solved. If the SC Code still appears, follow the steps below to twist the laser unit.

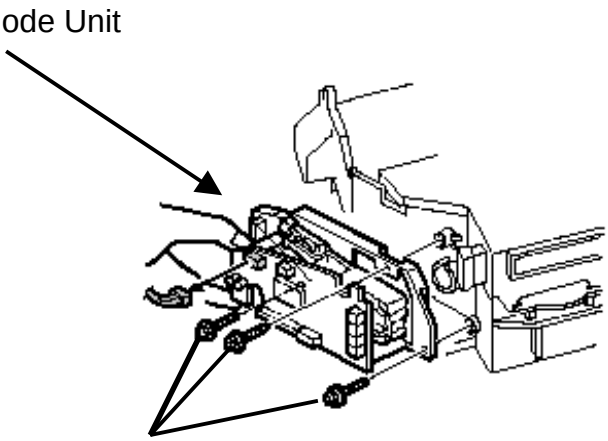

3. Loosen the two securing screws for the laser unit (see the illustration below).
4. Tighten the right securing screw while jacking up the right side of the laser unit with a screwdriver.

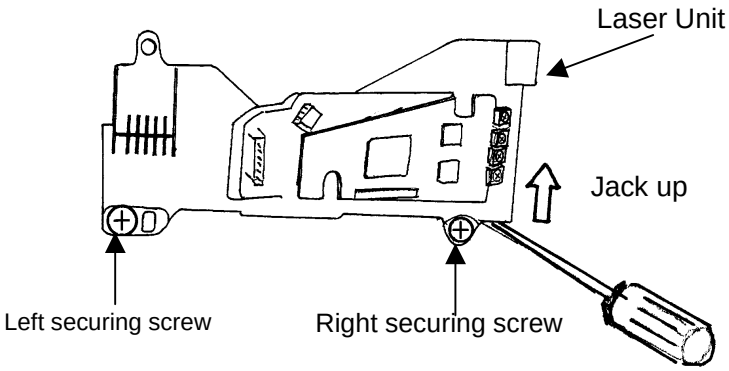

5. Tighten the left securing screw and put the inner cover back on.
6. If SC322/SC326 is still indicated after the above action, replace the laser unit with a brand new one.
   Note:
   The laser unit repair procedure above is not necessary when a brand new laser unit is installed.

Model: NAD 30S/30/40	Date: 31-Oct-98	No.: 18

Subject: Service manual correction	Prepared by: S. Tomoe
From: GTS and S Field Information Dept.	

Classification:	☐ Troubleshooting	☐ Part information	☐ Action required
	☐ Mechanical	☐ Electrical	☐ Service manual revision
	☐ Paper path	☐ Transmit/receive	☐ Retrofit information
	☐ Other (Manual correction)		

The following should be corrected. Please correct your service manual.

1. SP MODE TABLE, p. 4-49

Incorrect

Mode No.			Function	Setting
Class 1 and 2	**Class 3**			
7-808		Resets Counters (except for he total counter)	Resets the following counters: Press “1” to reset. • All counters of SP7-003 • All counters of SP7-006 • All counters which are listed on the counter list (UP1-19-2)	1: Start

Correct

Mode No.			Function	Setting
Class 1 and 2	**Class 3**			
7-808		Resets Counters	***Resets all counters except for the following counters:*** Press “1” to reset. • All counters of SP7-003 • All counters of SP7-006 • All counters which are listed on the counter list (UP1-19-2)	1: Start

2. MACHINE CONFIGURATIONS, p.1-7

Incorrect

Version	Item	Machine Code	No.
Fax	SAF Memory – HDD (Option)	A818-10	
	Fax Feature Expander (Option)	A818-11	

Correct

Version	Item	Machine Code	No.
Fax	SAF Memory – HDD (Option)	***A818-11***	
	Fax Feature Expander (Option)	***A818-10***	

Reissued: 10-Nov-98

RTB Correction

The items in bold italics have been corrected or added.

Model: NAD 30S/30/40		Date: 31-Aug-98	No: 13
Subject: Premature Toner Overflow Detection		Prepared by: M.Mimura	
From: GTSS Field Information Dept.			
Classification:	☒ Troubleshooting	☐ Part information	☐ Action required
	☐ Mechanical	☐ Electrical	☐ Service manual revision
	☐ Paper path	☐ Transmit/receive	☐ Retrofit information
	☐ Other ( )		

SYMPTOM

Toner overflow is detected prematurely.

CAUSE 1:

The electrical contact between the metal plates on the transfer belt unit and the connector pins on the copier right cover is poor because the pins are bent or out of position.

SOLUTION 1:

Set the pins in the correct position and bend the pin so that the distance between the pin edge and the cover rib is 8mm.

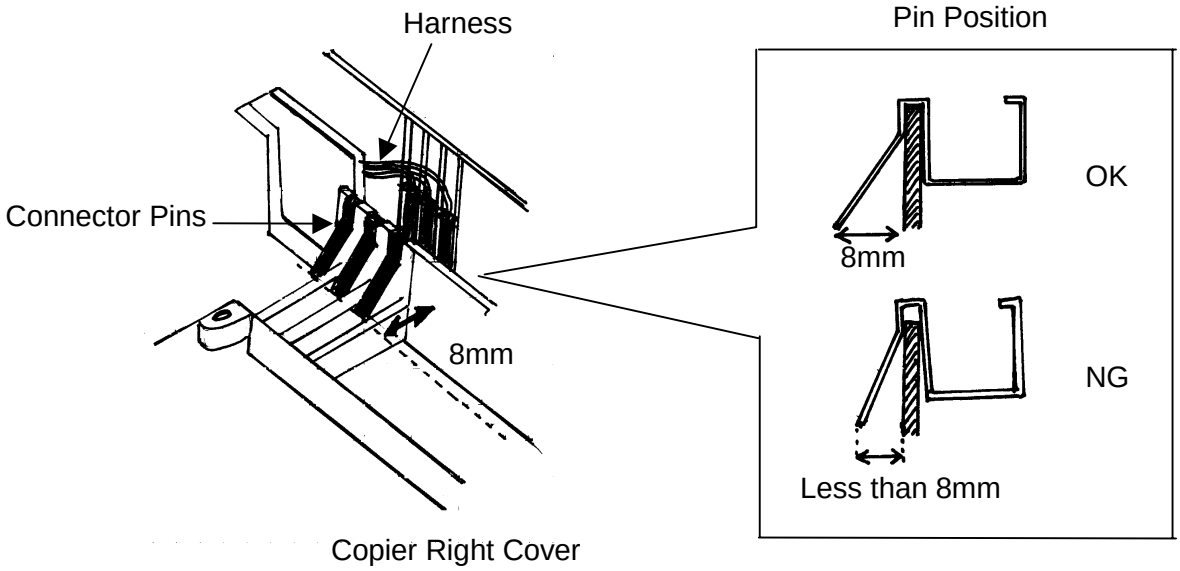

Model: NAD 30S/30/40	Date: 31-Aug-98	No: 13

CAUSE 2:

When heavy copy jobs are made consecutively, used toner scraped off by the transfer belt cleaning blade may scatter and pile up on the toner overflow sensor. In the worst case, this leads to an overflow detection malfunction.

SOLUTION 2:

1. Install the Toner Guide Mylar (#A2323928) on the transfer belt cleaning blade.

   The Toner Guide Mylar will prevent the used toner from passing the toner overflow sensor.

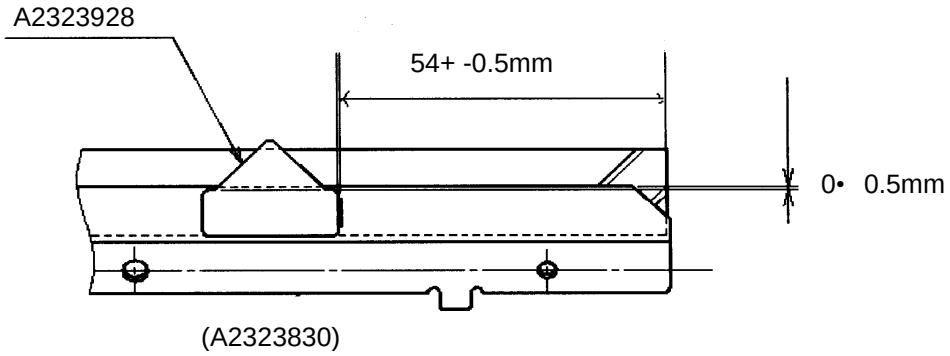

2. Replace the old type blade with the new type blade (#A2323830) which has the Toner Guide Mylar.

Factory Action

The new type cleaning blade has been implemented from the following production runs:

RPL: From July ’98 production

RAI: From August ’98 production

(See the MB to be issued later for the cut-in serial numbers.)

Model: NAD 30S/30/40	Date: 10-Nov-98	No.: 19

Subject: Pressure Roller Damage by Stripper	Prepared by: S. Hizen
From: GTSS Field Information Dept.	

Classification:			
	☒ Troubleshooting	☐ Part information	☐ Action required
	☐ Mechanical	☐ Electrical	☐ Service manual revision
	☐ Paper path	☐ Transmit/receive	☐ Retrofit information
	☐ Other ( )		

Symptom:

The fusing pressure roller is damaged by the pressure roller stripper.

Cause:

When the copies jam in the fusing section, are not removed completely and the customer restarts copy job, the copies jammed in the fusing section bunch up and press the pressure roller stripper. This causes the stripper edges to dig into the pressure roller.

Countermeasure:

The pressure roller stripper has been modified by changing the lead edge angle. This modification is to make a tiny gap between the stripper edge and the roller surface.

Note:

The part number has not been changed. The new style stripper has a projection to make a visual difference from the old style stripper. The starting serial number of the machines with the new style stripper will be added as soon as it is available.

Solution:

Replace the strippers to the new style ones and ask customer to check the fusing section by opening the right side cover when a paper misfeed occurs.

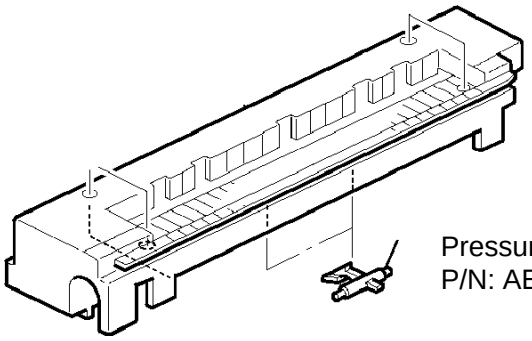

Pressure Roller Stripper
P/N: AE044024

Projection on New Style Strippers

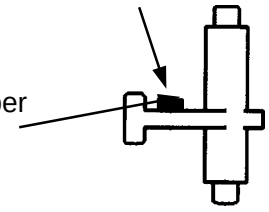

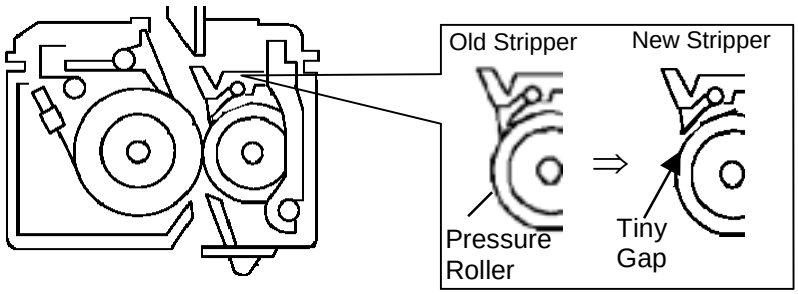

Fusing Unit

Model: NAD 30S/30/40	Date: 15-Nov-98	No.: 20

Subject: Noise from Development Unit	Prepared by: S.Hizen
From: GTSS Field Information Dept.	

Classification:	☒ Troubleshooting	☐ Part information	☐ Action required
	☐ Mechanical	☐ Electrical	☐ Service manual revision
	☐ Paper path	☐ Transmit/receive	☐ Retrofit information
	☐ Other ( )		

SYMPTOM

Noise from the development unit in repeat copy mode (more than 40 sheets).

Note

This noise from the development unit may disappear during the copy run.
Similar kinds of noise may occur from the drive section so please lubricate the gears and the bushings if this occurs.

CAUSE

The temperature of the rubber shield ring in the paddle roller goes up in a repeat copy mode of more than 40 and friction occurs between the rubber ring shield and the retainer. This friction results in noise from the retainer and the ring.

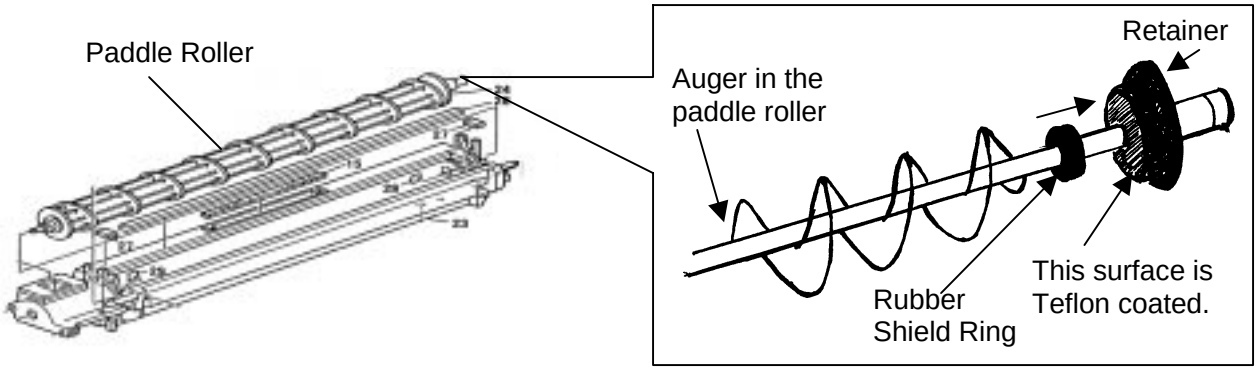

SOLUTION

The surface of the retainer in the paddle roller (see the illustration above) has been Teflon coated to reduce the friction with the rubber shield ring when the temperature of the ring increases.

Action in the field

The development unit should be replaced with the new type if the noise from the development unit does not disappear. The part number for the new development unit is A232-7460 . The start serial number of the machines with the new development unit will be announced by an MB.

Model: NAD 30S/30/40	Date: 30-Nov-98	No.: 21

Subject: Hot Roller Scratched by Thermistor	Prepared by: S.Hizen
From: GTSS Field Information Dept.	

Classification:	☒ Troubleshooting	☐ Part information	☐ Action required
	☐ Mechanical	☐ Electrical	☐ Service manual revision
	☐ Paper path	☐ Transmit/receive	☐ Retrofit information
	☐ Other ( )		

SYMPTOM

The hot roller is scratched by hard toner stuck to the thermistor and a black line appears on the copy if the scratch is deep.

CAUSE

A mixture of toner and paper dust is stuck on the surface of the thermistor. This mixture hardens as the fusing temperature goes up and down. Therefore, the amount and the hardness of the solid stuck on the thermistor are affected by the type of paper and operating conditions. Please note that these conditions may only exist on a limited number of rollers.

SOLUTION

Replace the thermistor with one of the new type.
The thickness of the Teflon cover on the new type of thermistor has been increased to reduce the pressure on the hot roller in the event that a toner/paper mixture is stuck to it.

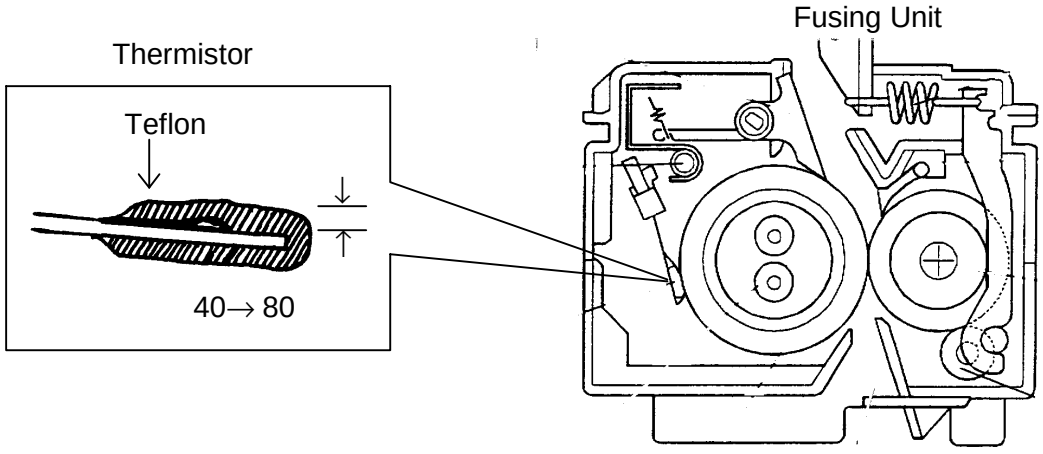

The part number of the new type of thermistor and the starting serial number will be announced as soon as they are available.

Model: NAD 30S/30/40	Date: 15-Dec-98	No.: 22

Subject: Bent Upper Fusing Entrance Guide	Prepared by: E. Fukuyama
From: GTSS Field Information Dept.	

Classification:	☒ Troubleshooting	☐ Part information	☐ Action required
	☐ Mechanical	☐ Electrical	☐ Service manual revision
	☐ Paper path	☐ Transmit/receive	☐ Retrofit information
	☐ Other ( )		

SYMPTOM

The fusing cleaning roller drops when the upper fusing entrance guide is removed.

CAUSE

The upper fusing entrance guide is deformed by heat and the hook section on the roller bushing expands so the roller bushing is no longer secured.

SOLUTION

The following modifications were implemented to prevent deformation caused by heat to the upper fusing entrance guide.

1. A hook has been added to prevent deformation.
2. The width of the plate near the point where the fusing cleaning roller is attached has been increased to 13 mm.

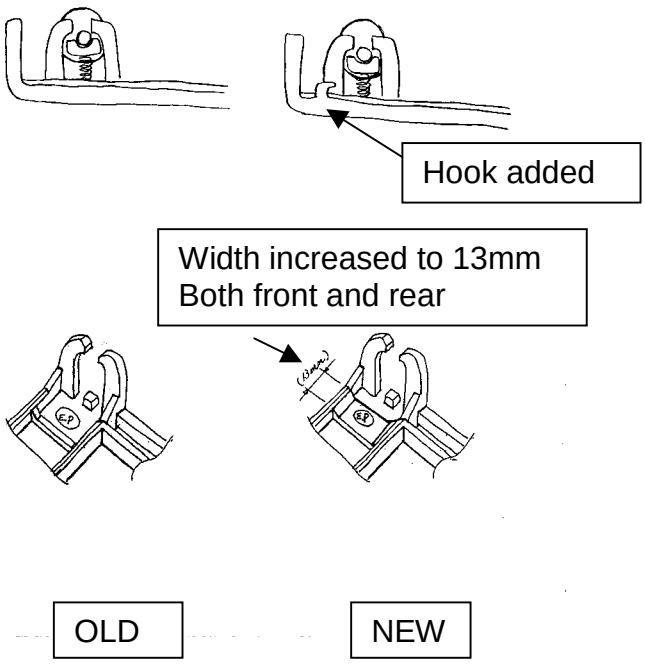

Model: NAD 30S/30/40	Date: 15-Dec-98	No.: 22

Action in the field

Even if the upper entrance guide is bent, the cleaning roller will still clean the pressure roller properly. However, if the upper entrance guide is removed/installed with the fusing unit positioned so that the upper entrance guide is on top, the cleaning roller may fall off and the hot roller and pressure roller may be scratched.
When installing/removing the upper fusing entrance guide, please make sure the fusing unit is positioned as shown below.

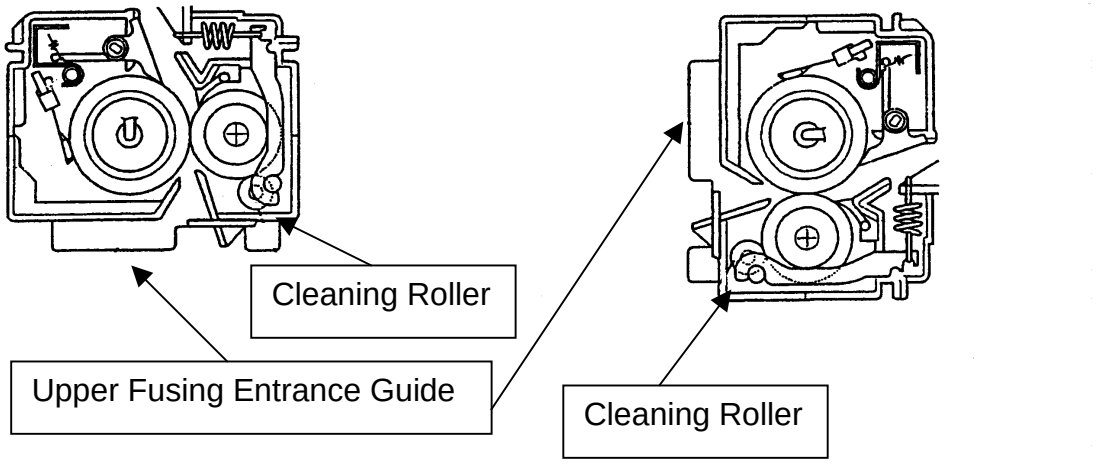

When installed on the machine

When installing/removing the cover

Implemented from the May 1998 production run.

			RAI PRODUCTION	
MODEL NAME	V/Hz	DESTINATION	CODE	SERIAL NUMBER
Gestetner 3235s Savin 9935D	115/60	USA, Canada,	A230-10	1B88850001
Ricoh Aficio340	115/60	USA, Canada	A230-17	A768885096
Ricoh Aficio340	115/60	Taiwan	A230-19	A7688860195
Gestetner 3235S nashuatec D435S Rex-Rotary 2835S	220/50	Europe, etc.	A230-22	AQ18860001
Infotec 4351MF	220/50	Europe, Australia	A230-26	3Q18680001
Ricoh Aficio340	220/50	Europe, etc.	A230-27	A7688860001
Ricoh Aficio340	220/50,60	Asia	A230-39	A7688860105
Lanier 5135	110/60	USA, Canada	A230-55	Implemented from the June 1998 production run.
Lanier 5134	220/50	Europe, Australia	A230-65	Implemented from the June 1998 production run.
Ricoh Aficio340	220/50	China	A230-69	A768850181
Gestetner 3235 Savin 9935DP	115/60	USA, Canada,	A231-10	1B88850001
Ricoh Aficio350	115/60	USA, Canada	A231-17	A7698850855
Ricoh Aficio350	110/60	Taiwan	A231-19	Implemented from the June 1998 production run.
Gestetner 3235 nashuatec D435 Rex Rotary 2835	220/50	Europe, etc.	A231-22	AQ38860001
Infotec 4352 MF	220/50	Europe, Australia	A231-26	3Q28680001
Ricoh Aficio350	220/50	Europe, etc.	A231-27	Implemented from the June 1998 production run.
Ricoh Aficio350	220/50,60	Asia	A231-39	A7698860651
Lanier 5235	115/60	USA, Canada	A231-55	L5238850001
Lanier 5235	220/50	Europe, Australia	A231-65	L5238850026
Ricoh Aficio350	220/50	China	A231-69	A7698860656
Gestetner 3245 Savin 9945DP	115/60	USA, Canada,	A232-10	2B18850001
Ricoh Aficio450	115/60	USA, Canada	A232-17	A7708850612
Ricoh Aficio450	110/60	Taiwan	A232-19	A7708860742
Gestetner 3245 nashuatec D445 Rex-Rotary 2845	220/50	Europe, etc.	A232-22	AQ58860001
Infotec 4451 MF	220/50	Europe, Australia	A232-26	3Q38680001
Ricoh Aficio450	220/50	Europe, etc.	A232-27	A7708860752
Ricoh Aficio450	220/50,60	Asia	A232-39	A7708860651
Lanier 5245	115/60	USA, Canada	A232-55	L5278850001
Lanier 5245	220/50	Europe, Australia	A232-65	L5248850026
Ricoh Aficio450	220/50	China	A232-69	A7708850961

Model: NAD 30S/30/40	Date: 15-Jul-98	No.: 12b

RTB Correction

The items in bold italics have been changed or added.

Subject: Key Logging Data Information	Prepared by: S. Tomoe
From: GTSS Field Information Dept.	

Classification:			
	☐ Troubleshooting	☐ Part information	☐ Action required
	☐ Mechanical	☐ Electrical	☐ Service manual revision
	☐ Paper path	☐ Transmit/receive	☐ Retrofit information
	☒ Other ( )		

This informs the meaning of the Key Logging Data which is listed in the logging data sheet.

1. Function

The machine registers the history of which keys on the operation panel have been pressed. Also, the key logging data can be printed on the logging data sheet (it is one of the SMC print sheets).

2. Key Logging Data Table

Code	Key	Code	Key	Code	Key	Code	Key
00		10	Clear	20	Zoom	30	Quick Dial 01
01	Ten key – 1	11	Speed Dial	21	Enhanced Image	31	Quick Dial 02
02	Ten key – 2	12	On Hook	22	Sort	32	Quick Dial 03
03	Ten key – 3	13	Pause	23	Duplex	33	Quick Dial 04
04	Ten key – 4	14	Tone	24	Menu	34	Quick Dial 05
05	Ten key – 5	15	⇦	25	Shortcut 1	35	Quick Dial 06
06	Ten key – 6	16	⇨	26	Shortcut 2	36	Quick Dial 07
07	Ten key – 7	17	LCD F1	27	Shortcut 3	37	Quick Dial 08
08	Ten key – 8	18	LCD F2	28	Shortcut 4	38	Quick Dial 09
09	Ten key – 9	19	LCD F3	29	Stamp	39	Quick Dial 10
0A	Ten key – 0	1A	LCD F4	2A	Resolution	3A	Quick Dial 11
0B	✶/▪	1B	Original Type	2B	Tx Mode	3B	Quick Dial 12
0C	#	1C	Lighter	2C	Fax F1 note1	3C	Quick Dial 13
0D	Start	1D	Darker	2D	Fax F2 note1	3D	Quick Dial 14
0E	Stop	1E	AID	2E	Fax F3 note1	3E	Quick Dial 15
0F	Program	1F	Auto R/E	2F	Fax F4 note1	3F	Quick Dial 16

Code	Key	Code	Key	Code	Key	Code	Key
40	Quick Dial 17	50	Quick Dial 33	60	Quick Dial 49	A0	Clear Modes
41	Quick Dial 18	51	Quick Dial 34	61	Quick Dial 50	A1	User Tools
42	Quick Dial 19	52	Quick Dial 35	62	Quick Dial 51	A2	Copy
43	Quick Dial 20	53	Quick Dial 36	63	Quick Dial 52	A3	Fax
44	Quick Dial 21	54	Quick Dial 37	64	Quick Dial 53	A4	Printer
45	Quick Dial 22	55	Quick Dial 38	65	Quick Dial 54	A5	Interrupt
46	Quick Dial 23	56	Quick Dial 39	66	Quick Dial 55	A6	Operation Sw
47	Quick Dial 24	57	Quick Dial 40	67	Quick Dial 56	A7	User Code
48	Quick Dial 25	58	Quick Dial 41	68	~~Quick Dial 09~~ N/A	A8	Energy Saver
49	Quick Dial 26	59	Quick Dial 42	69	~~Quick Dial 10~~ N/A	A9	SP mode (service)
4A	Quick Dial 27	5A	Quick Dial 43	6A	~~Quick Dial 11~~ N/A	AA	SP mode (factory)
4B	Quick Dial 28	5B	Quick Dial 44	6B	~~Quick Dial 12~~ N/A	AB	SP mode (sales)
4C	Quick Dial 29	5C	Quick Dial 45	6C	~~Quick Dial 13~~ N/A	AC	RSS manual call
4D	Quick Dial 30	5D	Quick Dial 46	6D	~~Quick Dial 14~~ N/A	AD	PM alarm
4E	Quick Dial 31	5E	Quick Dial 47	6E	~~Quick Dial 15~~ N/A	AE	N/A
4F	Quick Dial 32	5F	Quick Dial 48	6F	~~Quick Dial 16~~ N/A	AF	N/A
						B0	Fax Reset
						B1	Fax F1 note2
						B2	Fax F2 note2
						B3	Fax F3 note2
						B4	Fax F4 note2
						B5	Fax F5 note2

Note: 1. These codes will be used when pressing these keys in fax mode.

2. These codes will be used when pressing these keys in any application mode (copy, fax, and printer).

3. How to use the key logging data

When a problem occurs because of the machine operation, the technician can check how the customer operated the machine (which keys have been pressed).

4. How to check the data

The machine registers new data at the end of the bottom line of the data list.

Example operation procedure (5 sets of copies in Text/Photo mode), followed by SMC data sheet printing

No.	Operation	Keys Used	Logged Data
1	Select Copy mode	copy key	A2
2	Select Text/Photo mode	original type key	1B
3	Input the number of sets	5	5
4	Make copies	Start key	0D
5	Enter the SP mode	Clear/Mode+1+0+7 +Stop	A0+01+0A+07+0E +10+A9
6	Select copy SP mode	1	01
7	Enter SP5990	5+9+9+0+#	05+09+09+0A+0C
8	Select Logging data print-out	Next key x 3 times	F2
9	Print the logging data sheet	1	01

The logging data for the above example will be printed as follows. Data from A2 to 01 (large characters) show the above operations.

<No.> <Name>								<Value>
Key Logging	0A	0A	0A	01	0A	03	0E	10
	0E	10	0E	10	12	0A	0A	03
	05	07	04	02	05	05	08	0A
	0A	0A	01	12	0A	0A	03	05
	04	0A	0A	0A	01	12	0A	0A
	03	05	07	04	02	05	05	03
	08	0D	A6	A2	A2	A2	A0	01
	0A	07	0E	10	A9	01	05	0C
	17	0C	18	01	18	18	01	1A
	1A	1A	1A	A0	01	0A	07	0E
	10	A9	01	17	17	17	0C	17
	0C	01	1A	1A	1A	1A	1A	1A
	A0	A0	A2	A2	A6	A6	A2	05
	22	A0	A6	**A2**	**1B**	**05**	**0D**	**A0**
	01	**0A**	**07**	**0E**	**10**	**A9**	**01**	**05**
	09	**09**	**0A**	**0C**	**18**	**18**	**18**	**01**

Model: NAD 30S/30/40	Date: 15-Jan-99	No.: 23

Subject: Service Manual Correction	Prepared by: S. Tomoe
From: GTSS Field Information Dept.	

Classification:	☐ Troubleshooting	☐ Part information	☐ Action required
	☐ Mechanical	☐ Electrical	☐ Service manual revision
	☐ Paper path	☐ Transmit/receive	☐ Retrofit information
	☒ Other ( )		

The following information should be added to the service manual for the NAD printer option.

4.6 SPECIAL TOOLS

Part Number	Description	Q'ty
A8545120	ROM SIMM	1
G0219350	Loop Back Connector	1

Model: NAD 30S/30/40	Date: 15-Jan-99	No.: 24

Subject: Software Release Information	Prepared by: E.Fukuyama
From: GTSS Field Information Depot	

Classification:	☐ Troubleshooting	☐ Part information	☐ Action required
	☐ Mechanical	☐ Electrical	☐ Service manual revision
	☐ Paper path	☐ Transmit/receive	☐ Retrofit information
	☒ Other ( )		

The new version of the BICU firmware has been implemented on the production machines.

Software Version: 13.6.11

Affected Program Numbers

Program Number	Languages Contained
A2325113M	US English (US), French (F), Spanish (E) - NA
A2325114L	UK English (GB), French (F), German (D) - EU
A2325115H	UK English (GB), Traditional Chinese (CHI) - Asia
A2325116E	UK English (GB), Simplified Chinese (HK) - China
A2325117E	UK English (GB), Traditional Chinese (CHI) - Taiwan
A2325152D	UK English (GB), Spanish (E), Italian (I)
A2325153D	UK English (GB), French (F), Dutch (NL)
A2325154D	UK English (GB), Swedish (S), Norwegian (N)
A2325155D	UK English (GB), Danish (DK), Finnish (FIN)
A2325156D	UK English (GB), Spanish (E), Portuguese (P)
A2325157D	UK English (GB), Polish (PL), Hungarian (H)
A2325158D	UK English (GB), Polish (PL), Czech (CZ)

Corrections

No	Title	Details of Errors
1	Printing of incoming fax messages after resetting an SC related to fusing	Even after the main switch is turned off and on to reset an SC related to fusing, incoming fax messages cannot be printed out.
2.	Printing of incoming fax messages after resetting an SC	Even after the Power key is turned off and on to reset an SC, incoming fax messages cannot be printed out.
3	SCs related to fusing	Sometimes, an SC related to fusing is reset when the Power key is turned off and on just after the main switch is turned off and on. However, the SC will be detected again.
4	Interruption of detection at the registration sensor	Sometimes, the registration roller does not stop turning if the leading edge of the copy is detected twice at the registration sensor

Note: This fixes the bug created with the version 13.6.9

Model: NAD 30S/30/40	Date: 15-Jan-99	No.: 24

Production Cut-in Month

RAI (China): August ’98 Production
RPL (UK): August ’98 production

Model: NAD 30S/30/40	Date: 15-Jan-99	No.: 25

Subject: Software Release Information	Prepared by: E.Fukuyama
From: GTSS Field Information Depot	

Classification:	☐ Troubleshooting	☐ Part information	☐ Action required
	☐ Mechanical	☐ Electrical	☐ Service manual revision
	☐ Paper path	☐ Transmit/receive	☐ Retrofit information
	☒ Other ( )		

The new version of the BICU firmware has been modified.

Software Version: 13.6.19

Note: Please do not use this version because fax reception may not function.

Affected Program Numbers:

Program Number	Contained Languages
A2325113N	US English (US), French (F), Spanish (E) - NA
A2325114M	UK English (GB), French (F), German (D) - EU
A2325115J	UK English (GB), Traditional Chinese (CHI) - Asia
A2325116F	UK English (GB), Simplified Chinese (HK) - China
A2325117F	UK English (GB), Traditional Chinese (CHI) - Taiwan
A2325152E	UK English (GB), Spanish (E), Italian (I)
A2325153E	UK English (GB), French (F), Dutch (NL)
A2325154E	UK English (GB), Swedish (S), Norwegian (N)
A2325155E	UK English (GB), Danish (DK), Finnish (FIN)
A2325156E	UK English (GB), Spanish (E), Portuguese (P)
A2325157E	UK English (GB), Polish (PL), Hungarian (H)
A2325158E	UK English (GB), Polish (PL), Czech (CZ)

Corrections

No,	Title	Details of Errors
1	Printing with 300 DPI	The printed image has been improved in smoothing mode and the printing speed has been increased in electrical sort mode when printing at 300 DPI.
2.	SC321 when printing	SC 321 may be displayed because the image is transferred from the main frame to the printer controller at the wrong time.
3	Error in a big printing job	An error may occur during printing when 250 sheets or more are printed as a job with the SR720.
4	ADF in SP4303	The ADF cannot function when SP4303 is set to 1.
5	Original set LED	The LED for the original set sensor lights when a fax message is coming in the night mode or when the handset is used.
6	Paper end indicator lights erratically	If the hard disk is not installed, the Paper End indicator lights erratically in Enhanced Image mode.

Note: This fixes the bug created with the version 13.6.11

Production Cut-in Month

Not used in any machine.

Model: NAD 30S/30/40	Date: 15-Jan-99	No.: 26

Subject: Software Release Information	Prepared by: E.Fukuyama
From: GTSS Field Information Depot	

Classification:	☐ Troubleshooting	☐ Part information	☐ Action required
	☐ Mechanical	☐ Electrical	☐ Service manual revision
	☐ Paper path	☐ Transmit/receive	☐ Retrofit information
	☒ Other ( )		

The new version of the BICU firmware has been implemented on the production machines.

Software Version: 13.6.20

Affected Program Numbers:

Program Number	Contained Languages
A2325113P	US English (US), French (F), Spanish (E) - NA
A2325114N	UK English (GB), French (F), German (D) - EU
A2325115K	UK English (GB), Traditional Chinese (CHI) - Asia
A2325116G	UK English (GB), Simplified Chinese (HK) - China
A2325117G	UK English (GB), Traditional Chinese (CHI) - Taiwan
A2325152F	UK English (GB), Spanish (E), Italian (I)
A2325153F	UK English (GB), French (F), Dutch (NL)
A2325154F	UK English (GB), Swedish (S), Norwegian (N)
A2325155F	UK English (GB), Danish (DK), Finnish (FIN)
A2325156F	UK English (GB), Spanish (E), Portuguese (P)
A2325157F	UK English (GB), Polish (PL), Hungarian (H)
A2325158F	UK English (GB), Polish (PL), Czech (CZ)

Corrections

No,	Title	Details of Errors
1	Printing in night mode	Incoming fax messages cannot be printed out in the night mode.

Note: This fixes the bug created with version 13.6.19

Production Cut-in Month

RAI (China): January ’99 Production
RPL (UK): January ’99 production

Model: NAD 30S/30/40	Date: 20-Jan-99	No.: 27

Subject: Controller Board Installation	Prepared by: E. Fukuyama
From: GTSS Field Information Dept.	

Classification:			
	☒ Troubleshooting	☐ Part information	☐ Action required
	☐ Mechanical	☐ Electrical	☐ Service manual revision
	☐ Paper path	☐ Transmit/receive	☐ Retrofit information
	☐ Other ( )		

Both the BCU and FCU Boards should be upgraded to the following or a higher version when installing a new controller board. Otherwise, the controller board will not operate properly.

BCU Board : Version 13.6.20

A2325113P (NA) A2325115K (Asia) A2326116G (China),
A2325114N (EU1) A2325152F (EU2) A2325153F (EU3)
A2325154F (EU4) A2325155F (EU5) A2325156F (EU6)
A2325157F (EU7) A2325158F (EU8)

FCU Board : Version 7.02

A2335581C (NA) A2335597B (China) A2335584B (Taiwan)
A2335581E (EU1) A2335590B (EU2) A2335591B (EU3)
A2335592B (EU4) A2335593B (EU5) A2335594B (EU6)
A2335595B (EU7) A2335596B (EU8)

Model: NAD 30S/30/40	Date: 15-Feb-99	No.: 28

Subject: Service manual correction	Prepared by: E. Fukuyama
From: GTSS Field Information Dept.	

Classification:			
	☐ Troubleshooting	☐ Part information	☐ Action required
	☐ Mechanical	☐ Electrical	☐ Service manual revision
	☐ Paper path	☐ Transmit/receive	☐ Retrofit information
	☒ Other ( )		

The following information should be added to the service manual.

SC953 : Scanner image setting error

- Definition - [B]

The settings that are required for image processing using the scanner are not sent from the IPU.

- Possible causes -

Defective software

Reissued: 28-Feb-99

RTB Correction

The items in bold italics have been corrected or added.

Model: NAD 30S/30/40		Date: 31-Aug-98	No: 13b
Subject: Premature Toner Overflow Detection		Prepared by: M.Mimura	
From: GTSS Field Information Dept.			
Classification:	☒ Troubleshooting	☐ Part information	☐ Action required
	☐ Mechanical	☐ Electrical	☐ Service manual revision
	☐ Paper path	☐ Transmit/receive	☐ Retrofit information
	☐ Other ( )		

SYMPTOM

Toner overflow is detected prematurely.

Caution

The following is a note concerning servicing the transfer unit.

If the cover of the waste toner overflow sensor is completely covered with toner, the ON signal may be output even if the case is not actually full of toner.

To prevent toner from adhering to the sensor surface in the transfer unit before the case is full, a waste toner divider (mylar) has been added on the back of the cleaning blade. However, as noted in the explanation below, toner may still adhere to the surface of the sensor.

> ***-If the transfer unit is removed from the main unit and laid flat, the waste toner in the case may shift and adhere to the sensor surface. (If the transfer unit is removed, please wipe the sensor surface right before putting it back in the machine.)***
> ***-If the right cover is opened with a good deal of force, the waste toner in the case may be stirred up and adhere to the sensor surface. (Please open/close the cover gently.)***

In the cases described above in which toner may adhere to the sensor, this may cause incorrect detection. Even after the toner in the case has been cleaned out, toner may adhere to the sensor surface. In these cases, remove the sensor and use a soft cloth to wipe the toner off the surface of the sensor. Do not use any solvents like alcohol.

Model: NAD 30S/30/40	Date: 31-Aug-98	No: 13b

CAUSE 1:

The electrical contact between the metal plates on the transfer belt unit and the connector pins on the copier right cover is poor because the pins are bent or out of position.

SOLUTION 1:

Set the pins in the proper position and bend the pin so that the distance between the pin edge and the cover rib is 8 mm.

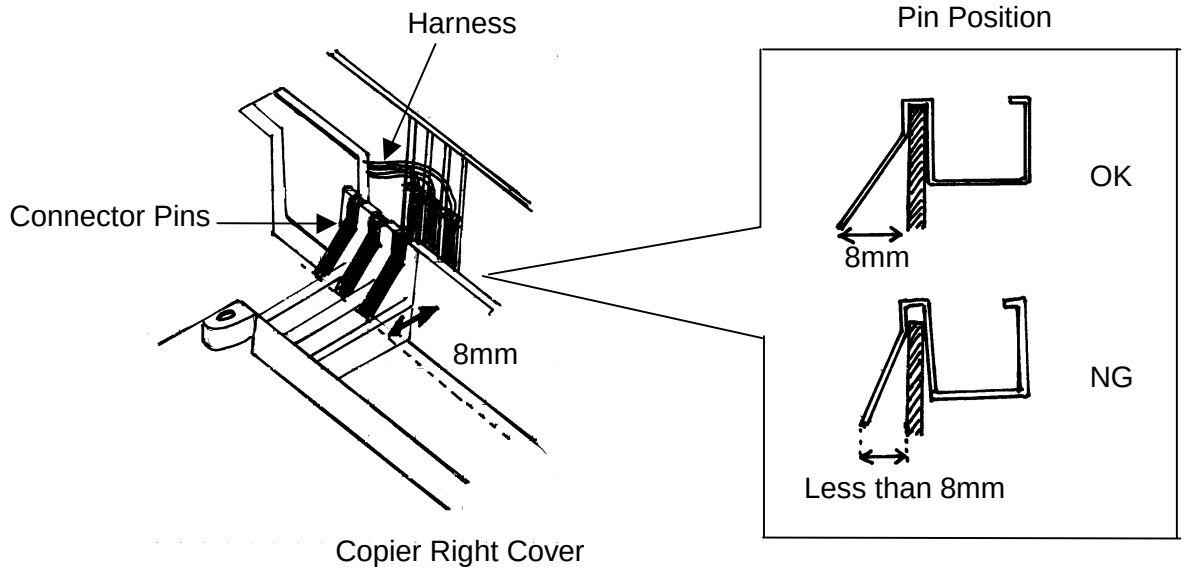

Model: NAD 30S/30/40	Date: 31-Aug-98	No: 13b

CAUSE 2:

When heavy copy jobs are made consecutively, used toner scraped off by the transfer belt cleaning blade may scatter and pile up on the toner overflow sensor. In the worst case scenario, this leads to an overflow detection malfunction.

SOLUTION 2:

1. Install the Toner Guide Mylar (#A2323928) on the transfer belt cleaning blade. This mylar will prevent the used toner from passing by the toner overflow sensor.

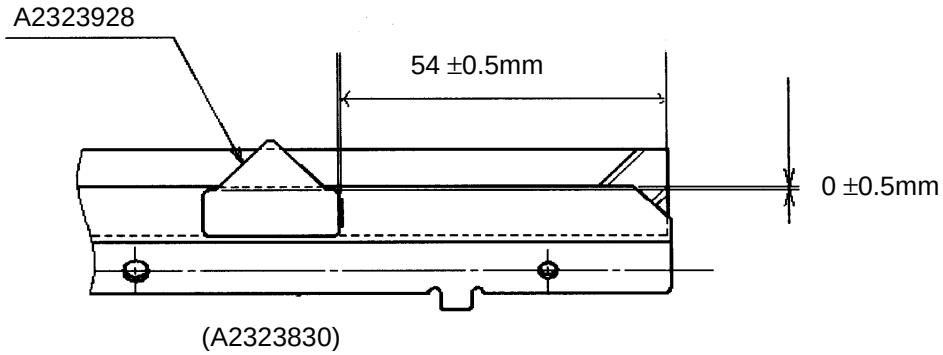

2. Replace the old type blade with the new type blade (#A2323830) which has the Toner Guide Mylar.

Factory Action

The new type cleaning blade has been implemented from the following production runs:

RPL: From July ’98 production

RAI: From August ’98 production

(See the MB to be issued later for the cut-in serial numbers.)

Model: NAD 30S/30/40 (Printer Controller Type 450)	Date: 31-Mar-99	No.: 29

Subject: Installation procedure for Asia (-39), Taiwan (-69) and China (-19) version models.	Prepared by: K. Ugaeri
From: GTSS Field Information Dept.	

Classification:			
	☐ Troubleshooting	☐ Part information	☒ Action required
	☐ Mechanical	☐ Electrical	☐ Service manual revision
	☐ Paper path	☐ Transmit/receive	☐ Retrofit information
	☐ Other ( )		

To solve the problems below, the firmware for the controller and the main frame have been modified. Please install the printer controller type 450 using the installation procedure below.

A. Symptom

1. [Online] has been added for the printer fonts for the China/Taiwan machines. Please install this version when adding the printer for the China/Taiwan machines.

2. The registered fonts are not displayed on the Chinese machines during 4-line displays. Please install this version when adding the scanner option on the Chinese/Taiwan/Asian machines.

B. Installation procedure

When the printer option is installed on the Asia (-39), Taiwan (-69) or China (-19) version of the NAD, use the firmware below for the printer controller and the BICU (main frame) which correspond with the 4-line displays and select the Dip Switch on the controller board depending on the language, as shown below.

1.Firmware version required

BICU F/W

Destination	Version	Part No.	Product Code
Asian (0 UK, 1 TW)	13.6.23 as	A2325115L	-39
Taiwanese (0 TW, 1 UK)	13.6.23 tw	A2325117H	-69
Chinese (0 CH, 1 UK)	13.6.23 ch	A2325116H	-19

These versions of the firmware are available from March production '99.
0 and 1 refer to the settings of Copier SP mode 5009.

Controller F/W

Version 1.75 Program No. A8505280E

2.DIP Switch settings on the controller board

Asian main frame, with the '0 UK (English)/1 TW (Taiwanese)' version firmware
or Taiwanese main frame, with the '0 TW (Taiwanese)/1 UK (English)' version firmware

Dip Switch No.2	Dip Switch No.3	Codes sent from controller
OFF	ON	Taiwanese (BIG-5)

Chinese main frame, with the '0 CH (Chinese)/1 UK (English)' version firmware

Dip Switch No.2	Dip Switch No.3	Codes sent from controller
ON	ON	Chinese (GB)

*UK (English), TW (Taiwanese), and CH (Chinese) are selected in Copy SP mode (5009).

Note: 1 When the printer controller type 450 is installed on the other products, you do not need to change Dip switches, but keep the default (No.2 = OFF, No.3 = ON)

2 If you change the firmware from the European version to Asian version for the main frame, upgrade the controller firmware to ver 1.75 first.

Model: NAD 30S/30/40 (3000 Finisher)	Date: 31-Mar-99	No.: 30

Subject: Software Replacement Information	Prepared by: E. Fukuyama
From: GTSS Field Information Dept.	

Classification:			
	☐ Troubleshooting	☐ Part information	☐ Action required
	☐ Mechanical	☐ Electrical	☐ Service manual revision
	☐ Paper path	☐ Transmit/receive	☐ Retrofit information
	☒ Other ( )		

Below please find the modification history from the first production run for the Main Board up to Suffix D for the 3000-sheet Finisher (SR730).

A6975656D

1. Occurrences of SC990
2. Defective paper exit for LG, DLT, A3 and B4 paper sizes.
3. Two staples missing when B5 size paper is stapled.
4. Stacking problems occur when paper curls during manual staple mode. (Modification of shift tray height during manual staple mode, exit roller rotation, speed and shift tray lowering timing)
5. When the paper curl is large during shift mode, the exit roller rolls up the paper. (Modification of the shift tray height in the shift mode, exit roller rotation speed, and shift tray lowering timing)

Model Code	Cut-in Serial #s
A697-15	1B58120001
A697-17	A7778110001
A697-22	AR38110281
A697-26	3R1128001
A697-55	L0328110267

A6975656C

1. When a jam occurs in the finisher, if the jam is not removed, the stapler motor will not shut off.
2. When the power save mode command from the main frame is received, the machine initializes.

Model Code	Cut-in Serial #s
A697-15	1B58090001
A697-17	A7778090001
A697-22	AR38090001
A697-26	3R10980001
A697-55	L0328100052

A6975656B

1. To improve the stacking in the shift tray during stapling, the following modifications have been implemented.

a. The initial lowering timing of the shift tray is now faster and the stack start time has been modified to allow the shift tray to return to the top position first.

b. The line velocity for the exit roller has been changed from 600 mm/s to 700 mm/s. The paper exit pawl speed has also been changed to match this.

c. The timing for the lowering of the shift tray has been changed to 50 mm/s after the exit sensor has detected the leading edge of the paper.

Model Code	Cut-in Serial #s
A697-15	1B58070001
A697-17	A7778070001
A697-22	AR38070001
A697-26	3R10780001
A697-55	L0328100052

A6975656A

1. Modification to allow use of Chinese paper sizes.
2. Modification of the start of the shift tray in the staple mode.
3. When an exit jam occurs in the staple mode, if the door is shut before the paper is removed,
4. Corrected the problem of an SC not being displayed even though there was a problem with the paper exit pawl home position sensor during initialization.
5. If the diagonal staple mode was selected when there was a problem with the stapler rotation home position sensor, an SC occurred.

Model Code	Cut-in Serial #s
A697-15	1B58070001
A697-17	A7778070001
A697-22	AR38070001
A697-26	3R10780001
A697-55	L0328100052

Model: NAD 30S/30/40 3000 Finisher	Date: 15-Apr-99	No.: RA230031

Subject: SR730 Stapler Motor Harness Route Change	Prepared by: S. Hizen
From: Technical Service Dept., GTS Division	

Classification:	☐ Troubleshooting	☐ Part information	☐ Action required
	☐ Mechanical	☐ Electrical	☐ Service manual revision
	☐ Paper path	☐ Transmit/receive	☐ Retrofit information
	☒ Other ( )		

To prevent the stapler motor harness from being damaged, the harness route has been changed as shown in the illustration below:

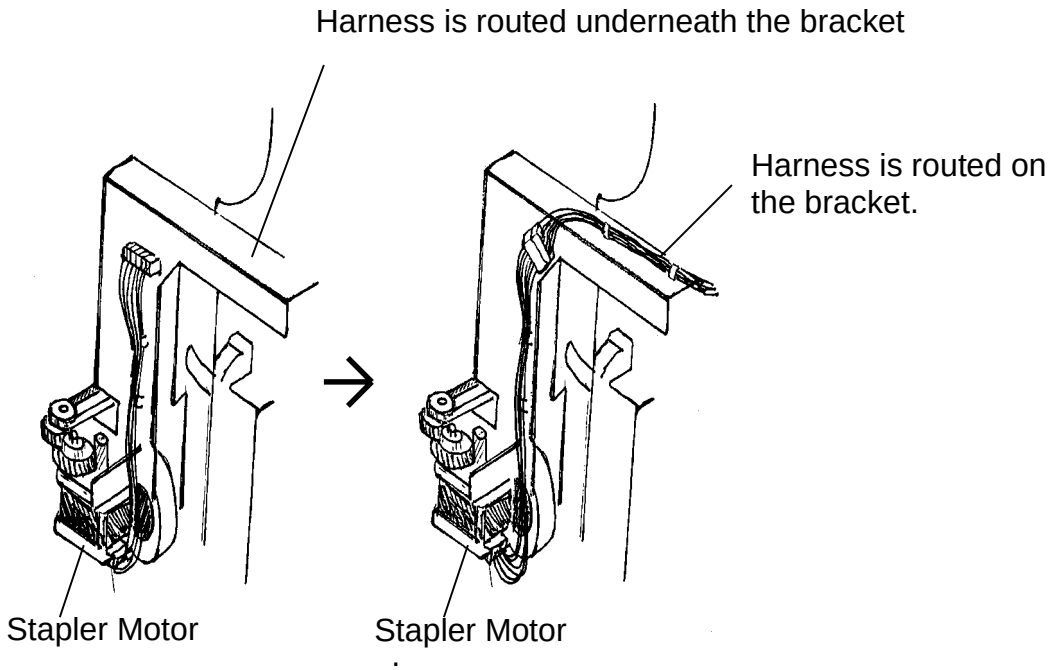

Cut-in serial number for the harness route change:

A697 - 15 : 1B59030221~
- 17 : A7779030001~
- 22 : AR39030001~
- 26 : 3R10390001~
- 55 : L0329032032~

Model: NAD 30S/30/40	Date: 15-Apr-99	No.: RA230032

Subject: SC 543	Prepared by: S. Hizen
From: Technical Service Dept., GTS Division	

Classification:	☐ Troubleshooting	☐ Part information	☐ Action required
	☐ Mechanical	☐ Electrical	☐ Service manual revision
	☐ Paper path	☐ Transmit/receive	☐ Retrofit information
	☒ Other ( )		

SYMPTOM

SC 543 (Fusing overheat error 1)

CAUSE

Not enough heat insulation between the fusing thermistor harness and fusing unit bracket, causing the reading from the thermistor to be too high. The temperature of the fusing unit remained near the upper limit for a sustained period of time and the contact between the harness and the bracket led to the SC543.

SOLUTION

The harness for the thermistor has been wrapped in a heat resistant silicone tube.

Thermistor harness

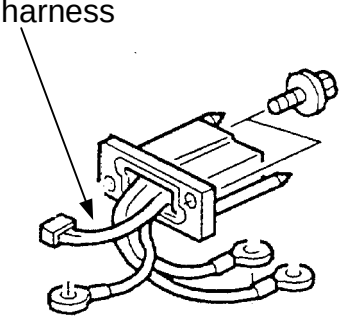

Harness – Fusing Unit 115V (A232-4094)
Harness – Fusing Unit 230V (A232-4151)

Note: The part numbers for both the Harness - Fusing Unit 115V (P/N: A232-4094) and the Harness - Fusing Unit 230V (P/N: A232-4151) have not been changed.

The serial number cut-in for this harness modification is as follows:

			RAI PRODUCTION	
MODEL NAME	V/Hz	DESTINATION	CODE	SERIAL NUMBER
Gestetner 3235s Savin 9935D	115/60	USA, Canada,	A230-10	1B88890001
Ricoh Aficio340	115/60	USA, Canada	A230-17	A7688890001
Ricoh Aficio340	115/60	Taiwan	A230-19	A7688890051
Gestetner 3235S nashuatec D435S Rex-Rotaly 2835S	220/50	Europe, etc.	A230-22	AQ18890001
Infotec 4351MF	220/50	Europe, Australia	A230-26	3Q18980001
Ricoh Aficio340	220/50	Europe, etc.	A230-27	
Ricoh Aficio340	220/50,60	Asia	A230-39	A7688880076
Lanier 5135	110/60	USA, Canada	A230-55	
Lanier 5134	220/50	Europe, Australia	A230-65	
Ricoh Aficio340	220/50	China	A230-69	A7688880326
Gestetner 3235 Savin 9935DP	115/60	USA, Canada,	A231-10	1B98890001
Ricoh Aficio350	115/60	USA, Canada	A231-17	A7698880566
Ricoh Aficio350	110/60	Taiwan	A231-19	
Gestetner 3235 nashuatec D435 Rex Rotaly 2835	220/50	Europe, etc.	A231-22	
Infotec 4352 MF	220/50	Europe, Australia	A231-26	3Q28980001
Ricoh Aficio350	220/50	Europe, etc.	A231-27	A7698890001
Ricoh Aficio350	220/50,60	Asia	A231-39	
Lanier 5235	115/60	USA, Canada	A231-55	L5238880001
Lanier 5235	220/50	Europe, Australia	A231-65	L5238890566
Ricoh Aficio350	220/50	China	A231-69	A7698880776
Gestetner 3245 Savin 9945DP	115/60	USA, Canada,	A232-10	2B18890001
Ricoh Aficio450	115/60	USA, Canada	A232-17	A7708910194
Ricoh Aficio450	110/60	Taiwan	A232-19	A7708890918
Gestetner 3245 nashuatec D445 Rex-Rotaly 2845	220/50	Europe, etc.	A232-22	AQ58890001
Infotec 4451 MF	220/50	Europe, Australia	A232-26	3Q38980001
Ricoh Aficio450	220/50	Europe, etc.	A232-27	A7708890001
Ricoh Aficio450	220/50,60	Asia	A232-39	A7708880841
Lanier 5245	115/60	USA, Canada	A232-55	L5248880181
Lanier 5245	220/50	Europe, Australia	A232-65	
Ricoh Aficio450	220/50	China	A232-69	A7708881047

Model: NAD 30S/30/40	Date: 15-Apr-99	No.: RA230033

Subject: Fan Motor Direction	Prepared by: S. Hizen
From: Technical Service Dept., GTS Division	

Classification:	☒ Troubleshooting	☐ Part information	☐ Action required
	☐ Mechanical	☐ Electrical	☐ Service manual revision
	☐ Paper path	☐ Transmit/receive	☐ Retrofit information
	☐ Other ( )		

Caution:

Please exercise caution when installing/removing the fan motor AX64-0080.

When you install the fan motor, be sure to check that the fan is installed with part number label facing out (exhaust direction) as shown in the illustration. If the fan is installed in the opposite direction (intake direction), a machine malfunction or overheating may occur.

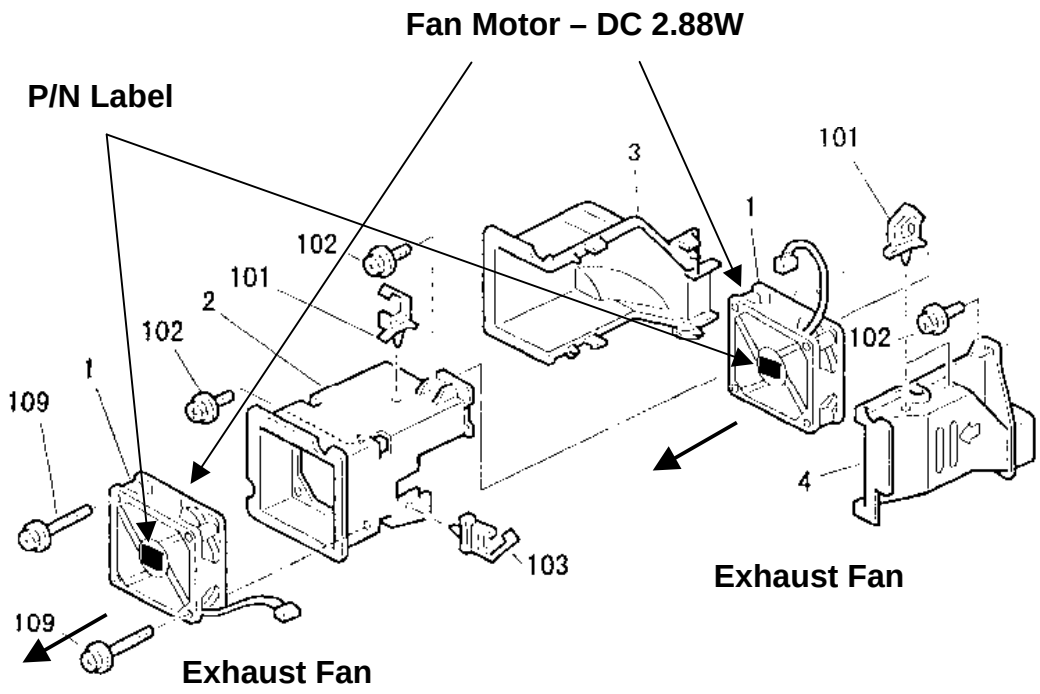

Model: NAD 30S/30/40	Date: 30-Apr-99	No.: RA230034

Subject: No image on half of the page	Prepared by: S. Hizen
From: Technical Service Dept., GTS Division	

Classification:	☐ Troubleshooting	☐ Part information	☐ Action required
	☐ Mechanical	☐ Electrical	☐ Service manual revision
	☐ Paper path	☐ Transmit/receive	☐ Retrofit information
	☒ Other ( )		

SYMPTOM

No image is developed on the rear side. All developer moves to the front side of the machine.

CAUSE

The paddle roller drive gear is deformed and the developer transportation roller in the paddle roller does not rotate properly.

SOLUTION

The paddle roller drive gear has been strengthened by adding ribs. The part number of the gear has not been changed. The difference between the old style and new style gear is the number of ribs: (Old: 6 ribs, New: 12 ribs)

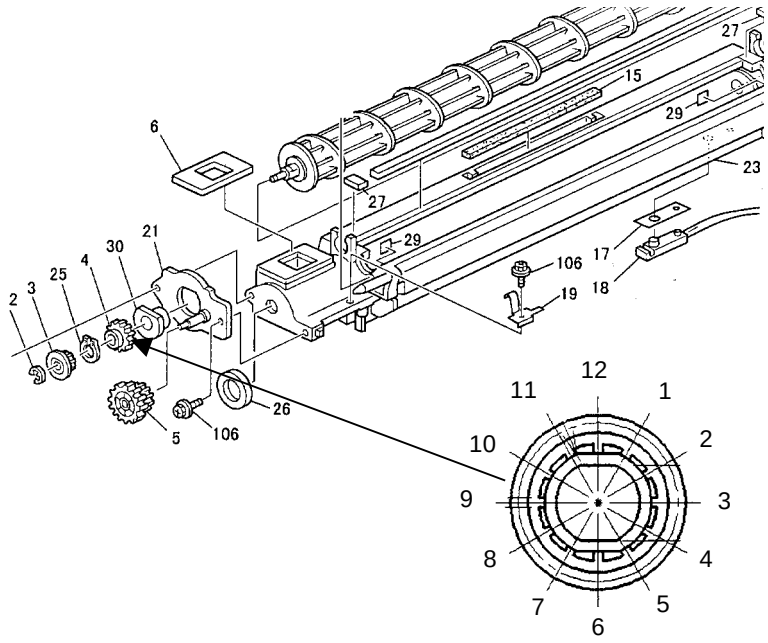

New Gear 21Z
with 12 ribs

Model: NAD 30S/30/40	Date: 30-Apr-99	No.: RA230034

			RAI PRODUCTION	
MODEL NAME	V/Hz	DESTINATION	CODE	SERIAL NUMBER
Gestetner 3235s Savin 9935D	115/60	USA, Canada,	A230-10	1B88880001
Ricoh Aficio340	115/60	USA, Canada	A230-17	A7688880001
Ricoh Aficio340	115/60	Taiwan	A230-19	A7688870076
Gestetner 3235S nashuatec D435S Rex-Rotaly 2835S	220/50	Europe, etc.	A230-22	AQ18880001
Infotec 4351MF	220/50	Europe, Australia	A230-26	3Q18880001
Ricoh Aficio340	220/50	Europe, etc.	A230-27	
Ricoh Aficio340	220/50,60	Asia	A230-39	A7688870091
Lanier 5135	110/60	USA, Canada	A230-55	
Lanier 5134	220/50	Europe, Australia	A230-65	
Ricoh Aficio340	220/50	China	A230-69	
Gestetner 3235 Savin 9935DP	115/60	USA, Canada,	A231-10	2B18880001
Ricoh Aficio350	115/60	USA, Canada	A231-17	A7698880011
Ricoh Aficio350	110/60	Taiwan	A231-19	
Gestetner 3235 nashuatec D435 Rex Rotaly 2835	220/50	Europe, etc.	A231-22	AQ38880001
Infotec 4352 MF	220/50	Europe, Australia	A231-26	3Q38880001
Ricoh Aficio350	220/50	Europe, etc.	A231-27	A7698880001
Ricoh Aficio350	220/50,60	Asia	A231-39	A7698870702
Lanier 5235	115/60	USA, Canada	A231-55	258880001
Lanier 5235	220/50	Europe, Australia	A231-65	25238880166
Ricoh Aficio350	220/50	China	A231-69	A7698870682
Gestetner 3245 Savin 9945DP	115/60	USA, Canada,	A232-10	2B18880001
Ricoh Aficio450	115/60	USA, Canada	A232-17	A7708870271
Ricoh Aficio450	110/60	Taiwan	A232-19	A7708870662
Gestetner 3245 nashuatec D445 Rex-Rotaly 2845	220/50	Europe, etc.	A232-22	
Infotec 4451 MF	220/50	Europe, Australia	A232-26	
Ricoh Aficio450	220/50	Europe, etc.	A232-27	
Ricoh Aficio450	220/50,60	Asia	A232-39	A7708870677
Lanier 5245	115/60	USA, Canada	A232-55	25248880181
Lanier 5245	220/50	Europe, Australia	A232-65	25248880001
Ricoh Aficio450	220/50	China	A232-69	A7708881047

Model: NAD 30S/30/40	Date: 30-Apr-99	No.: RA230035

Subject: Developer Leakage	Prepared by: S. Hizen
From: Technical Service Dept., GTS Division	

Classification:	☐ Troubleshooting	☐ Part information	☐ Action required
	☐ Mechanical	☐ Electrical	☐ Service manual revision
	☐ Paper path	☐ Transmit/receive	☐ Retrofit information
	☒ Other ( )		

SYMPTOM

Developer leakage from the development unit.

CAUSE

1. Tiny clearance between the entrance seal ass'y and development unit casing due to the bowing of the entrance seal ass'y.
2. Tiny clearance between the sponge seals.

SOLUTION

1. The width of the entrance seal ass'y has been changed as shown in the illustration.
2. The width of the side sponge seals has been changed as shown in the illustration.

Note: The part numbers of these parts have not been changed.

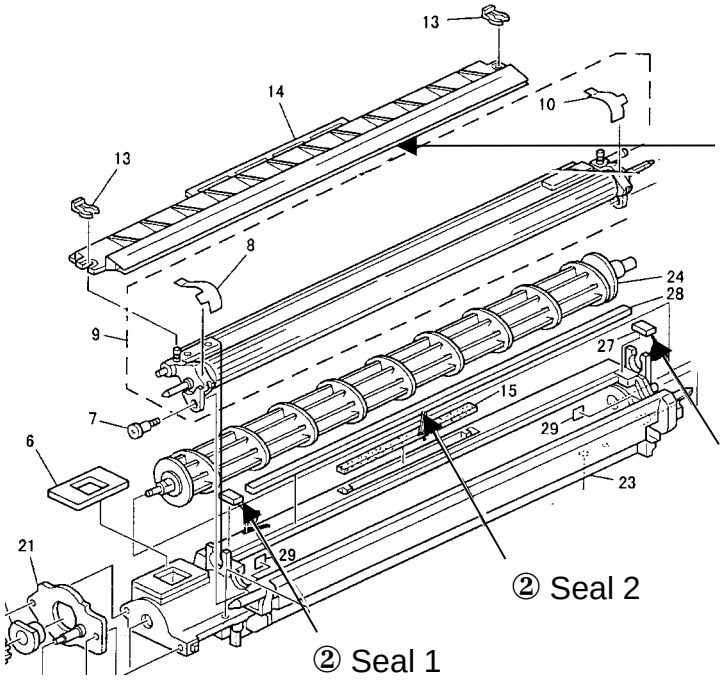

① Entrance Seal Ass'y
A232-3150

② Seal 1
P/N AA15-3054

② Seal 2

② Seal 1
P/N AA15-3054

Model: NAD 30S/30/40	Date: 30-Apr-99	No.: RA230035

① : Entrance Seal Ass'y

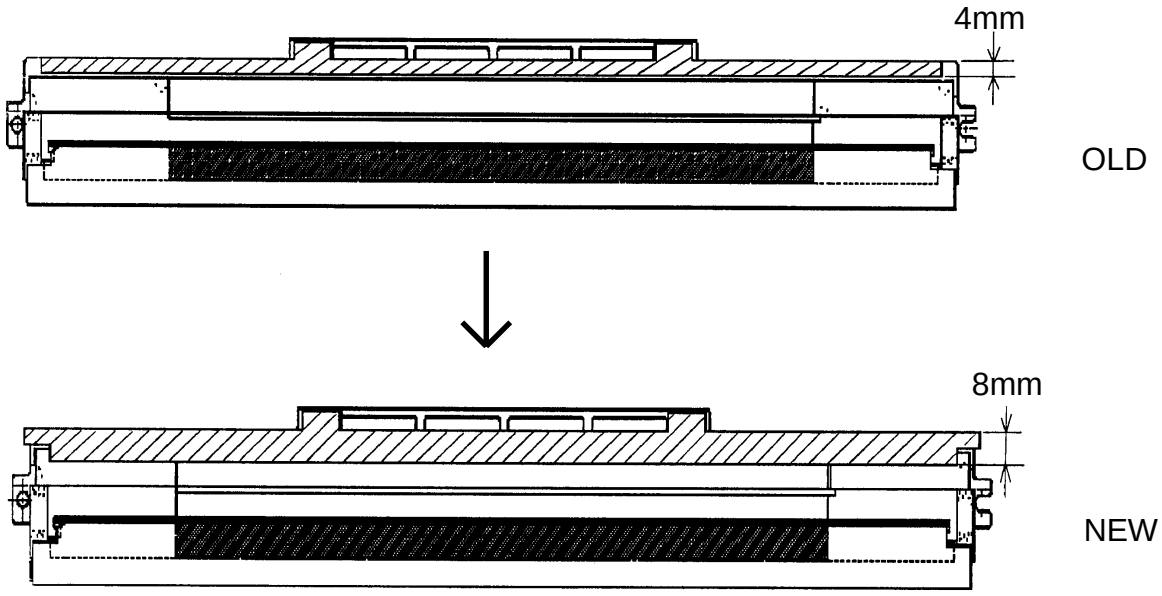

② : The width of seal 1 has been changed from 7 mm to 8 mm.

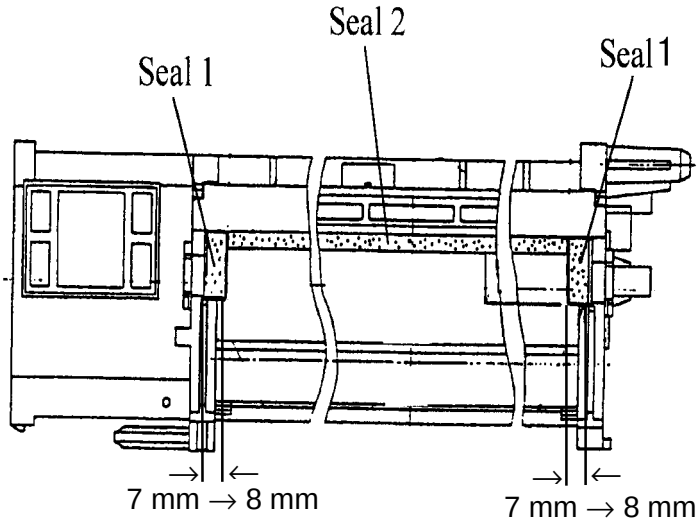

Cut-in Serial Number
(Around October'98: The cut-in serial numbers are not known at this time because there were no part number changes.)

Model: NAD 30S/30/40	Date: 15-May-99	No.: RA230036

Subject: Service manual correction - SC 546	Prepared by: S. Tomoe
From: Technical Service Dept., GTS Division	

Classification:	☐ Troubleshooting	☐ Part information	☐ Action required
	☐ Mechanical	☐ Electrical	☐ Service manual revision
	☐ Paper path	☐ Transmit/receive	☐ Retrofit information
	☒ Other ( )		

The information about SC546 on p7-15 of the service manual should be corrected.

SC546-1: Fusing ready temperature malfunction – 1

-Definition – [A]

After warming-up is completed, the fusing temperature continuously fluctuates between 20°C over and 20°C below the standby temperature.

- Possible causes –

- Poor connection between the thermistor and the harness
- Poor fusing unit connection

SC546-2: Fusing ready temperature malfunction – 2

-Definition – [A]

After warming-up is completed, the fusing temperature fluctuates between 20°C over and 20°C below the standby temperature 3 or more times per minute.

- Possible causes –

- Poor connection between the thermistor and the harness
- Poor fusing unit connection

Model: NAD 30S/30/40	Date: 15-May-99	No.: RA230037

Subject: Service Manual Correction (IOB DIP Switch)	Prepared by: S. Tomoe
From: Technical Service Dept., GTS Division	

Classification:	☐ Troubleshooting	☐ Part information	☐ Action required
	☐ Mechanical	☐ Electrical	☐ Service manual revision
	☐ Paper path	☐ Transmit/receive	☐ Retrofit information
	☒ Other ( )		

The function of switch no.8 of DIP switch 101 on the I/O board should be deleted. This is because this switch is not used for the NAD machines

- Incorrect -

I/O Board: DIP SW 101 (Service manual, P4-67)

No.	Function	ON	OFF
1	Copy Speed	35 cpm (180 mm/s)	45 cpm (230 mm/s)
⋮	⋮	⋮	⋮
8	Paper Size Detection (See Note 2)	Enabled	Disabled

NOTE: 1) Disabling jam detection is effective for the main machine (not for the options)

2) When installing the printer option, change the setting to “ON”.

- Correct -

I/O Board: DIP SW 101 (Service manual, P4-67)

No.	Function	ON	OFF
1	Copy Speed	35 cpm (180 mm/s)	45 cpm (230 mm/s)
⋮	⋮	⋮	⋮
8	Not used	Keep at “OFF”	

NOTE: 1) Disabling jam detection is effective for the main machine (not for the options)

Model: NAD 30S/30/40	Date: 15-Jun-99	No.: RA230038

Subject: Software Release Information	Prepared by: E. Fukuyama
From: Technical Service Dept., GTS Division	

Classification:	☐ Troubleshooting	☐ Part information	☐ Action required
	☐ Mechanical	☐ Electrical	☐ Service manual revision
	☐ Paper path	☐ Transmit/receive	☐ Retrofit information
	☒ Other ( )		

The new version of the BICU firmware has been implemented on the production machines.

1. Software Version: 14.1

Affected Program Numbers:

Program Number	Contained Languages
A2325113R	US English (US), French (F), Spanish (E) – NA
A2325114Q	UK English (GB), French (F), German (D) – EU
A2325116J	UK English (GB), Simplified Chinese (HK) – China
A2325117J	UK English (GB), Traditional Chinese (CHI) – Taiwan
A2325152H	UK English (GB), Spanish (E), Italian (I)
A2325153H	UK English (GB), French (F), Dutch (NL)
A2325154H	UK English (GB), Swedish (S), Norwegian (N)
A2325155H	UK English (GB), Danish (DK), Finnish (FIN)
A2325156H	UK English (GB), Spanish (E), Portuguese (P)
A2325157H	UK English (GB), Polish (PL), Hungarian (H)
A2325158H	UK English (GB), Polish (PL), Czech (CZ)

Model: NAD 30S/30/40	Date: 15-Jun-99	No.: RA230038

Corrections

No,	Title	Errors corrected by modified software:
1	Paper Jam	When a “C” jam occurs, the jam message display can be cleared by opening the front or right door. Modified so that “C” jams can only be cleared by opening the right door. <u>Note:</u> As part of the modification, one right door interlock switch has been added and one front door interlock switch has been removed. Also, SP5957 has been added to allow usage of either the old or new interlock switches. If using the old interlock switch, please set SP5957 to 0. If using the new switch, please set SP5957 to 1. If SP5957 is not set properly, the ‘door open’ panel display may not function properly and toner may not be supplied properly after toner bottle replacement.
2.	Toner overflow condition	When the sensor detects toner, the “Near Full” message is immediately displayed. After the toner signal has been on for 1000 copies, the machine shuts off. Once the toner signal disappears, the “Near Full” message is no longer displayed and the counter is reset. <u>After modification:</u> After the toner signal has been on for 500 consecutive copies, the “Near Full” message is displayed. After “Near Full” has been displayed for 1000 copies, the machine shuts off. Once the toner signal disappears, the counter is reset.
3	Dirty background and leading edge	There is a tendency for a ‘dirty’ background or leading edge to develop after the machine has not been used for a long while. There is also a tendency for increased image density. These tendencies are due to decreased turboelectric charge of the toner.

4.	Machine warm-up stops	The initial machine warm-up operations stop if one or more of the doors to the option units are open (e.g. 1 bin tray, finisher). The machine warm-up does not restart after closing the doors.
5.	User code	In user code mode, after entering power saver mode and then exiting, the counter does not count the number of copies the user makes.
6.	Norwegian language display error	Using the Norwegian language, when the machine should display 'Copying will start after warm up' in Norwegian, it is displayed in French. Conditions: - Switching on the machine in cold condition, - Setting an original and pressing the start key *during machine warm-up.* The French message then appears in the display.
7.	English language display error	SP2207 displayed a spelling error: “Forced” was spelled incorrectly.

Model: NAD 30S/30/40	Date: 30-Jun-99	No.: RA230039

Subject: IOB Board and Toner Bottle Motor	Prepared by: E. Fukuyama
From: Technical Service Dept., GTS Division	

Classification:	☐ Troubleshooting	☐ Part information	☐ Action required
	☐ Mechanical	☐ Electrical	☐ Service manual revision
	☐ Paper path	☐ Transmit/receive	☐ Retrofit information
	☒ Other ( )		

SYMPTOM

Toner Lamp On.

CAUSE:

Both the toner bottle motor and IOB board are damaged.

When short circuits occur in the motor as a result of the toner bottle motor carbon brush having been worn down, an abnormal current flows through the IOB and consequently causes damage to IC122.

SOLUTION:

1. The wearing down of the carbon brush has been minimized by a change in the material of the brush itself.
2. IC122s with internal protective circuits have been added to replace the previous IC122s. This will prevent excessive current flow through the circuit and protect the internal circuitry from damage in the event of a motor short circuit.

Model: NAD 30S/30/40	Date: 30-Jun-99	No.: RA230039

Modified Motor

			RAI PRODUCTION	
MODEL NAME	V/Hz	DESTINATION	CODE	SERIAL NUMBER
Gestetner 3235s Savin 9935D	115/60	USA, Canada,	A230-10	1B89820001
Ricoh Aficio340	115/60	USA, Canada	A230-17	A7689820001
Ricoh Aficio340	115/60	Taiwan	A230-19	A7689820026
Gestetner 3235S nashuatec D435S Rex-Rotaly 2835S	220/50	Europe, etc.	A230-22	AQ19830001
Infotec 4351MF	220/50	Europe, Australia	A230-26	3Q18390001
Ricoh Aficio340	220/50	Europe, etc.	A230-27	
Ricoh Aficio340	220/50,60	Asia	A230-39	A7689820081
Lanier 5135	110/60	USA, Canada	A230-55	
Lanier 5134	220/50	Europe, Australia	A230-65	
Ricoh Aficio340	220/50	China	A230-69	
Gestetner 3235 Savin 9935DP	115/60	USA, Canada,	A231-10	1B99820001
Ricoh Aficio350	115/60	USA, Canada	A231-17	A7699820001
Ricoh Aficio350	110/60	Taiwan	A231-19	
Gestetner 3235 nashuatec D435 Rex Rotaly 2835	220/50	Europe, etc.	A231-22	AQ39830001
Infotec 4352 MF	220/50	Europe, Australia	A231-26	3Q28390001
Ricoh Aficio350	220/50	Europe, etc.	A231-27	A7699830001
Ricoh Aficio350	220/50,60	Asia	A231-39	A7699821461
Lanier 5235	115/60	USA, Canada	A231-55	L5239812078
Lanier 5235	220/50	Europe, Australia	A231-65	L5239832451
Ricoh Aficio350	220/50	China	A231-69	
Gestetner 3245 Savin 9945DP	115/60	USA, Canada,	A232-10	2B19820001
Ricoh Aficio450	115/60	USA, Canada	A232-17	A7709820001
Ricoh Aficio450	110/60	Taiwan	A232-19	A7709820954
Gestetner 3245 nashuatec D445 Rex-Rotaly 2845	220/50	Europe, etc.	A232-22	AQ59830001
Infotec 4451 MF	220/50	Europe, Australia	A232-26	3Q38390001
Ricoh Aficio450	220/50	Europe, etc.	A232-27	A7709830001
Ricoh Aficio450	220/50,60	Asia	A232-39	A7709820651
Lanier 5245	115/60	USA, Canada	A232-55	L5249822066
Lanier 5245	220/50	Europe, Australia	A232-65	L5249822266
Ricoh Aficio450	220/50	China	A232-69	

Model: NAD 30S/30/40	Date: 30-Jun-99	No.: RA230039

Modified IOB Board

			RAI PRODUCTION	
MODEL NAME	V/Hz	DESTINATION	CODE	SERIAL NUMBER
Gestetner 3235s Savin 9935D	115/60	USA, Canada,	A230-10	1B89830001
Ricoh Aficio340	115/60	USA, Canada	A230-17	
Ricoh Aficio340	115/60	Taiwan	A230-19	A7689830001
Gestetner 3235S nashuatec D435S Rex-Rotaly 2835S	220/50	Europe, etc.	A230-22	AQ19840001
Infotec 4351MF	220/50	Europe, Australia	A230-26	3Q18490001
Ricoh Aficio340	220/50	Europe, etc.	A230-27	
Ricoh Aficio340	220/50,60	Asia	A230-39	A7689830041
Lanier 5135	110/60	USA, Canada	A230-55	
Lanier 5134	220/50	Europe, Australia	A230-65	
Ricoh Aficio340	220/50	China	A230-69	
Gestetner 3235 Savin 9935DP	115/60	USA, Canada,	A231-10	1B99830001
Ricoh Aficio350	115/60	USA, Canada	A231-17	A7699830075
Ricoh Aficio350	110/60	Taiwan	A231-19	
Gestetner 3235 nashuatec D435 Rex Rotaly 2835	220/50	Europe, etc.	A231-22	AQ39830001
Infotec 4352 MF	220/50	Europe, Australia	A231-26	3Q28490001
Ricoh Aficio350	220/50	Europe, etc.	A231-27	A7699840001
Ricoh Aficio350	220/50,60	Asia	A231-39	A7699851461
Lanier 5235	115/60	USA, Canada	A231-55	L5239831655
Lanier 5235	220/50	Europe, Australia	A231-65	L5239843286
Ricoh Aficio350	220/50	China	A231-69	
Gestetner 3245 Savin 9945DP	115/60	USA, Canada,	A232-10	2B19830001
Ricoh Aficio450	115/60	USA, Canada	A232-17	A7709830123
Ricoh Aficio450	110/60	Taiwan	A232-19	
Gestetner 3245 nashuatec D445 Rex-Rotaly 2845	220/50	Europe, etc.	A232-22	AQ58930001
Infotec 4451 MF	220/50	Europe, Australia	A232-26	3Q38490001
Ricoh Aficio450	220/50	Europe, etc.	A232-27	A7709841268
Ricoh Aficio450	220/50,60	Asia	A232-39	
Lanier 5245	115/60	USA, Canada	A232-55	L5249832456
Lanier 5245	220/50	Europe, Australia	A232-65	L5249832696
Ricoh Aficio450	220/50	China	A232-69	