NAD30/40
(Machine code: A230, A231, and A232)
SERVICE MANUAL

⚠IMPORTANT SAFETY NOTICES

PREVENTION OF PHYSICAL INJURY

1. Before disassembling or assembling parts of the copier and peripherals, make sure that the copier power cord is unplugged.
2. The wall outlet should be near the copier and easily accessible.
3. Note that some components of the copier and the paper tray unit are supplied with electrical voltage even if the main power switch is turned off.
4. If any adjustment or operation check has to be made with exterior covers off or open while the main switch is turned on, keep hands away from electrified or mechanically driven components.
5. If the Start key is pressed before the copier completes the warm-up period (the Start key starts blinking red and green alternatively), keep hands away from the mechanical and the electrical components as the copier starts making copies as soon as the warm-up period is completed.
6. The inside and the metal parts of the fusing unit become extremely hot while the copier is operating. Be careful to avoid touching those components with your bare hands.

HEALTH SAFETY CONDITIONS

1. Never operate the copier without the ozone filters installed.
2. Always replace the ozone filters with the specified ones at the specified intervals.
3. Toner and developer are non-toxic, but if you get either of them in your eyes by accident, it may cause temporary eye discomfort. Try to remove with eye drops or flush with water as first aid. If unsuccessful, get medical attention.

OBSERVANCE OF ELECTRICAL SAFETY STANDARDS

1. The copier and its peripherals must be installed and maintained by a customer service representative who has completed the training course on those models.
2. The NVRAM on the system control board has a lithium battery which can explode if replaced incorrectly. Replace the NVRAM only with an identical one. The manufacturer recommends replacing the entire NVRAM. Do not recharge or burn this battery. Used NVRAM must be handled in accordance with local regulations.

1. **SAFETY AND ECOLOGICAL NOTES FOR DISPOSAL**
   Do not incinerate toner bottles or used toner. Toner dust may ignite suddenly when exposed to an open flame.
2. Dispose of used toner, developer, and organic photoconductors in accordance with local regulations. (These are non-toxic supplies.)
3. Dispose of replaced parts in accordance with local regulations.
4. When keeping used lithium batteries in order to dispose of them later, do not put more than 100 batteries per sealed box. Storing larger numbers or not sealing them apart may lead to chemical reactions and heat build-up.

LASER SAFETY

The Center for Devices and Radiological Health (CDRH) prohibits the repair of laser-based optical units in the field. The optical housing unit can only be repaired in a factory or at a location with the requisite equipment. The laser subsystem is replaceable in the field by a qualified Customer Engineer. The laser chassis is not repairable in the field. Customer engineers are therefore directed to return all chassis and laser subsystems to the factory or service depot when replacement of the optical subsystem is required.

⚠WARNING

Use of controls, or adjustment, or performance of procedures other than those specified in this manual may result in hazardous radiation exposure.

⚠WARNING

WARNING: Turn off the main switch before attempting any of the procedures in the Laser Unit section. Laser beams can seriously damage your eyes.

CAUTION MARKING:

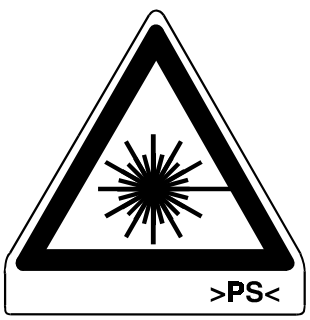

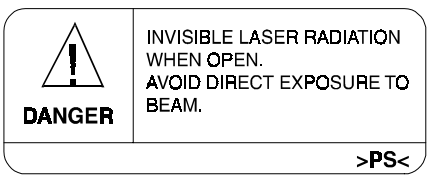

1. OVERALL MACHINE INFORMATION

1.1 SPECIFICATIONS

	NAD30S / NAD30	NAD40	Note
Configuration:	Desktop		
Copy Process:	Dry electrostatic transfer system		
Original:	Sheet/Book		
Original Size	Maximum A3/11" x 17"		
Copy Paper Size:	Maximum A3/11" x 17" Minimum A5/5.5" x 8.5" lengthwise (Paper tray / Duplex) A6/5.5" x 8.5" lengthwise (By-pass)		The duplex unit and by-pass feed unit are not standard for NAD30S.
Copy Paper Weight:	Paper Tray/Duplex: 64 - 105 g/m^2, 20 – 28 lb By-pass 52 - 157 g/m^2, 16 – 42 lb		The duplex unit and by-pass feed unit are not standard for NAD30S.
Reproduction Ratios:	7R5E Metric version (%): 400, 200, 141, 122, 115, 100, 93, 87, 82, 71, 65, 50, 25 Inch version (%): 400, 200, 155, 129, 121, 100, 93, 85, 78, 73, 65, 50, 25	7R5E Metric version (%): 400, 200, 141, 122, 115, 100, 93, 87, 82, 71, 65, 50, 35 Inch version (%): 400, 200, 155, 129, 121, 100, 93, 85, 78, 73, 65, 50, 32	
Zoom:	Both versions: 25% to 400% in 1% steps	Metric version: 35% to 400% in 1% steps Inch version: 32% to 400% in 1% steps	
Copying Speed	35 cpm (A4/11" x 8.5" sideways) 19 cpm (A3/11" x 17")	45 cpm (A4/11" x 8.5" sideways) 22 cpm (A3/11" x 17")	Full size Repeat copy mode
Resolution:	Scanning and Printing: 400 dpi		
Gradation:	Scanning and Printing: 256 levels		
Warm-up Time:	Less than 85 s	Less than 100 s	23°C, 73°F
First Copy Time (1st Tray):	Less than 3.9 s	Less than 3.2 s	A4/11" x 8.5" sideways
Copy Number Input:	Ten-key pad, 1 to 999		Count up or count down

	NAD30S / NAD30	NAD40	Note
Manual Image Density Selection:	5 steps		
Automatic Reset:	60 s is the standard setting; it can be changed with a UP mode.		
Auto Shut Off:	60 min. is the standard setting; it can be changed with a UP mode.		
Copy Paper Capacity:	Paper Tray: 500 sheets (up to 56 mm, 2.2") x 2 By-pass Feed: 50 sheets (up to 5.5 mm, 0.2")		The by-pass feed unit is not standard for NAD30S.
Copy Tray Capacity:	A4/11" x 8.5": 500 sheets A3/B4/8.5" x 14"/11" x 17": 250 sheets		Standard copy tray
Toner Replenishment:	Cartridge exchange (700 g/cartridge)		
Toner Yield:	27k copies (A4 sideways, 6% full black, 1 to 1 copying, ADS mode)		
Power Source:	North America 120V/60Hz, More than 12 A Europe/Asia 220 – 240V/50, 60Hz, More than 8 A		
Dimensions (W x D x H)	NAD30S 600 x 640 x 720 mm (23.7" x 25.2" x 28.3") NAD30/40 670 x 640 x 720 mm (26.4" x 25.2" x 28.3")		Without options
Weight:	NAD30S : 67 kg (147.8 lb), NAD30/40: 75 kg (166 lb)		

Power Consumption:

Mainframe only

(115 V Machine)

	NAD30S/NAD30	NAD40	Note
Maximum	Less than 1.44 kW	Less than 1.44 kW	
Copying	Less than 1.15 kW	Less than 1.3 kW	
Warm-up	Less than 1.05 kW	Less than 1.15 kW	
Stand-by	Less than 200 W/h	Less than 220 W/h	
Energy Saver Level 1	Ave. 150 W/h	Ave. 170 W/h	
Energy Saver Level 2	Ave. 130 W/h	Ave. 150 W/h	
Auto Shut Off	Ave. 12 W/h	Ave. 12 W/h	

(230 V machine)

	NAD30S/NAD30	NAD40	Note
Maximum	Less than 1.5 kW	Less than 1.5 kW	
Copying	Less than 1.10 kW	Less than 1.2 kW	
Warm-up	Less than 1.05 kW	Less than 1.15 kW	
Stand-by	Less than 220 W/h	Less than 240 W/h	
Energy Saver Level 1	Ave. 160 W/h	Ave. 180 W/h	
Energy Saver Level 2	Ave. 154 W/h	Ave. 168 W/h	
Auto Shut Off	Ave. 12 W/h	Ave. 12 W/h	

System

(115 V machine)

	NAD30S/NAD30	NAD40	Note
Maximum	Less than 1.44 kW	Less than 1.44 kW	Without the optional heaters, fax unit, and printer controller.
Copying	Less than 1.2 kW	Less than 1.35 kW	
Warm-up	Less than 1.05 kW	Less than 1.15 kW	
Stand-by	Less than 220 W/h	Less than 260 W/h	

(230 V machine)

	NAD30S/NAD30	NAD40	Note
Maximum	Less than 1.5 kW	Less than 1.5 kW	Without the optional heaters, fax unit, and printer controller.
Copying	Less than 1.15 kW	Less than 1.25 kW	
Warm-up	Less than 1.05 kW	Less than 1.15 kW	
Stand-by	Less than 240 W/h	Less than 280 W/h	

Noise Emission:

	Mainframe Only	System
1. Sound Power Level		
Copying		
NAD30S/NAD30	69 dB(A)	73 dB(A)
NAD40	70 dB(A)	74 dB(A)
Stand-by		
NAD30S/NAD30	42 dB(A)	44 dB(A)
NAD40	42 dB(A)	44 dB(A)
2. Sound Pressure Level at the Operator's Position		
Copying		
NAD30S/NAD30	52 dB(A)	60 dB(A)
NAD40	56 dB(A)	62 dB(A)
Stand-by		
NAD30S/NAD30	27 dB(A)	28 dB(A)
NAD40	27 dB(A)	28 dB(A)

NOTE: 1) The above measurements were made in accordance with ISO 7779.
2) Full system measurements do not include the optional fax unit and the printer controller.
3) In the above stand-by condition, the polygon motor is not rotating.

1.2 PAPER EXIT TRAY SELECTION

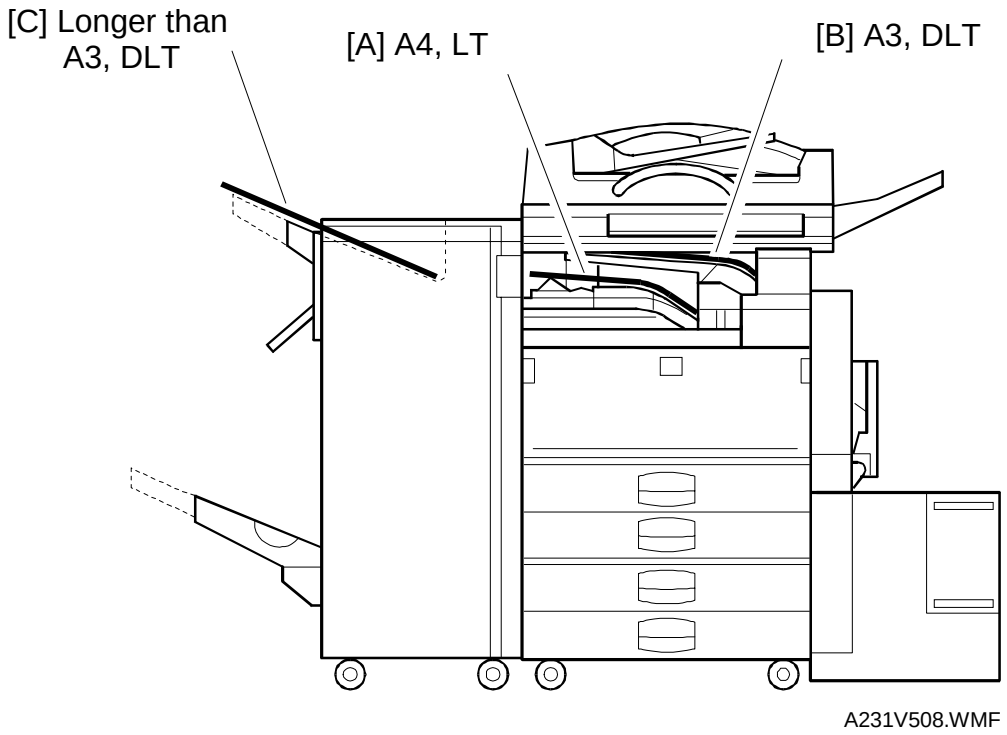

A231V508.WMF

The machine allows selection between the paper tray exit trays: Int. Tray [A] (standard output tray), Int. Tray 2 [B] (optional one-bin tray), and Ext. Tray [C] (finisher or optional external output tray). If the sub-scan length is more than 330 mm, the exit tray is as shown below, if the relevant options have been installed.

Installed options	Exit tray for paper longer than 330 mm
Bridge unit & Finisher (1,000-sheet)	Int. Tray [A]
Bridge unit & Finisher (3,000-sheet)	Ext. Tray [C]: The finisher upper tray
Bridge unit & optional ext. output tray	Ext. Tray [C]: Ext. output tray

1.3 MACHINE CONFIGURATION

1.3.1 SYSTEM COMPONENTS

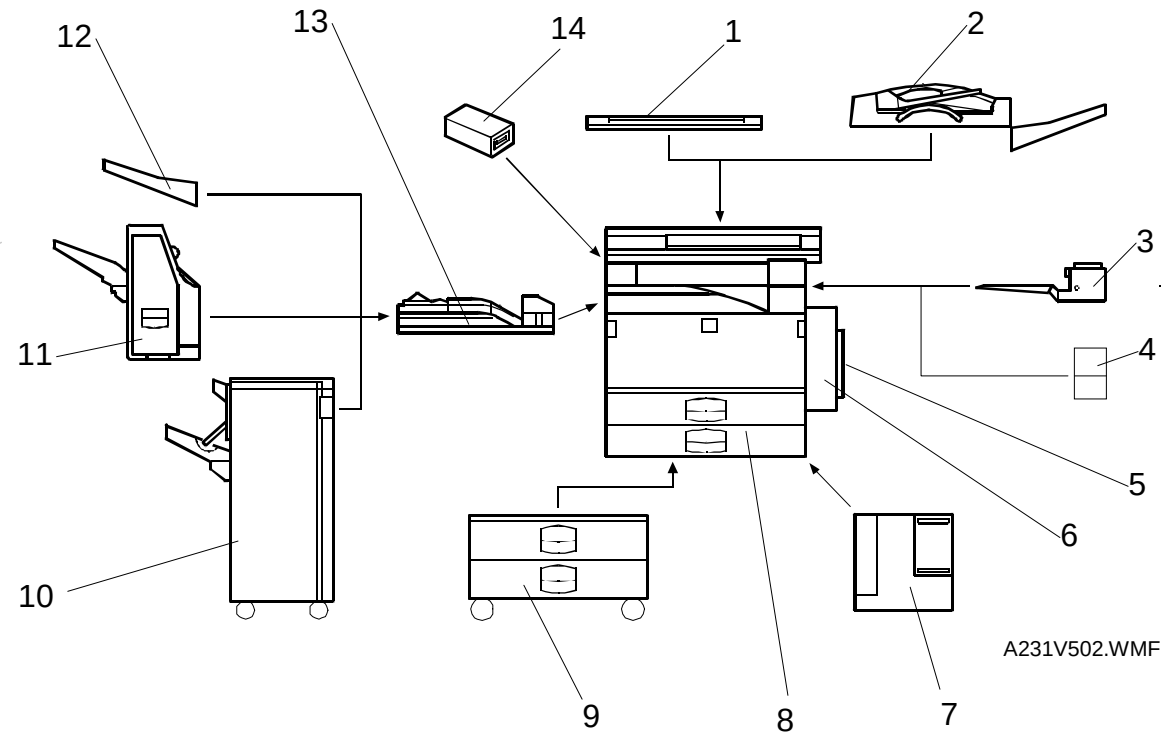

Version	Item	Machine Code	No.
Copy	Copier (NAD30-S)	A230	8
	Copier (NAD30)	A231	8
	Copier (NAD40)	A232	8
	ARDF (Option)	A680	2
	Platen Cover (Option)	A381	1
	Paper Tray Unit (Option)	A682	9
	LCT (Option)	A683	7
	By-pass Feed Unit (Option – NAD30S only)	A689	5
	Duplex Unit (Option – NAD30S only)	A687	6
	Interchange Unit (Option – NAD30S only)	A690	4
	1-bin Tray (Option)	A684	3
	Bridge Unit (Option)	A688	13
	1000-sheet Finisher (Option)	A681	11
	3000-sheet Finisher (Option – NAD40 only)	A697	10
	Punch Unit (Option for 3000-sheet Finisher)	A812-17 (3 holes) A812-27 (2 holes)	
	External Output Tray (Option)	A825	12
	Electrical Sort Kit – 8 MB Memory (Option – NAD30S only)	A818	
	Image Enhancement Kit – HDD (Option)	A691	
	Key Counter Bracket (Option)	A674	14
	Expansion Box (Option)	A692	
Fax	Fax Unit (Option)	A693	
	ISDN Unit (Option)	A816	
	SAF Memory – HDD (Option)	A818-10	
	Fax Feature Expander (Option)	A818-11	
	400-dpi High Resolution (Option)	A818-12	
	Handset (Option – North America only)	A646	
	Stamp Unit (Option)	A813	

1.3.2 INSTALLABLE OPTION TABLE

Copier options

⊙ = Standard, **O** = Available, Δ = Requires another option, **X** = Not available

Option	NAD30-S	NAD30	NAD40	Note
ARDF	O	O	O	
Platen Cover	O	O	O	
Paper Tray Unit	O	O	O	
LCT	Δ	Δ	Δ	Requires the paper tray unit.
By-pass Feed Unit	O	⊙	⊙	
Duplex Unit	Δ	⊙	⊙	Requires the interchange unit and electrical sort kit.
Interchange Unit	O	⊙	⊙	
1-bin Tray	Δ	O	O	Requires the interchange unit.
Bridge Unit	O	O	O	
1,000-sheet Finisher	Δ	Δ	Δ	Requires the paper tray unit and bridge unit.
3,000-sheet Finisher	X	X	Δ	Requires the paper tray unit and bridge unit.
Punch Unit	X	X	Δ	Requires the 3000-sheet finisher.
External Output Tray	Δ	Δ	Δ	Requires the bridge unit.
Electrical Sort Kit – 8 MB Memory	O	⊙	⊙	
Image Enhancement Kit – HDD	Δ	O	O	Requires the electrical sort kit – 8 MB.
Key Counter Bracket	O	O	O	
Expansion Box	O	O	O	It is required only when the fax option and/or printer option is installed.

Fax options

All options for the fax unit are available when the fax unit has been installed.

1.4 MECHANICAL COMPONENT LAYOUT

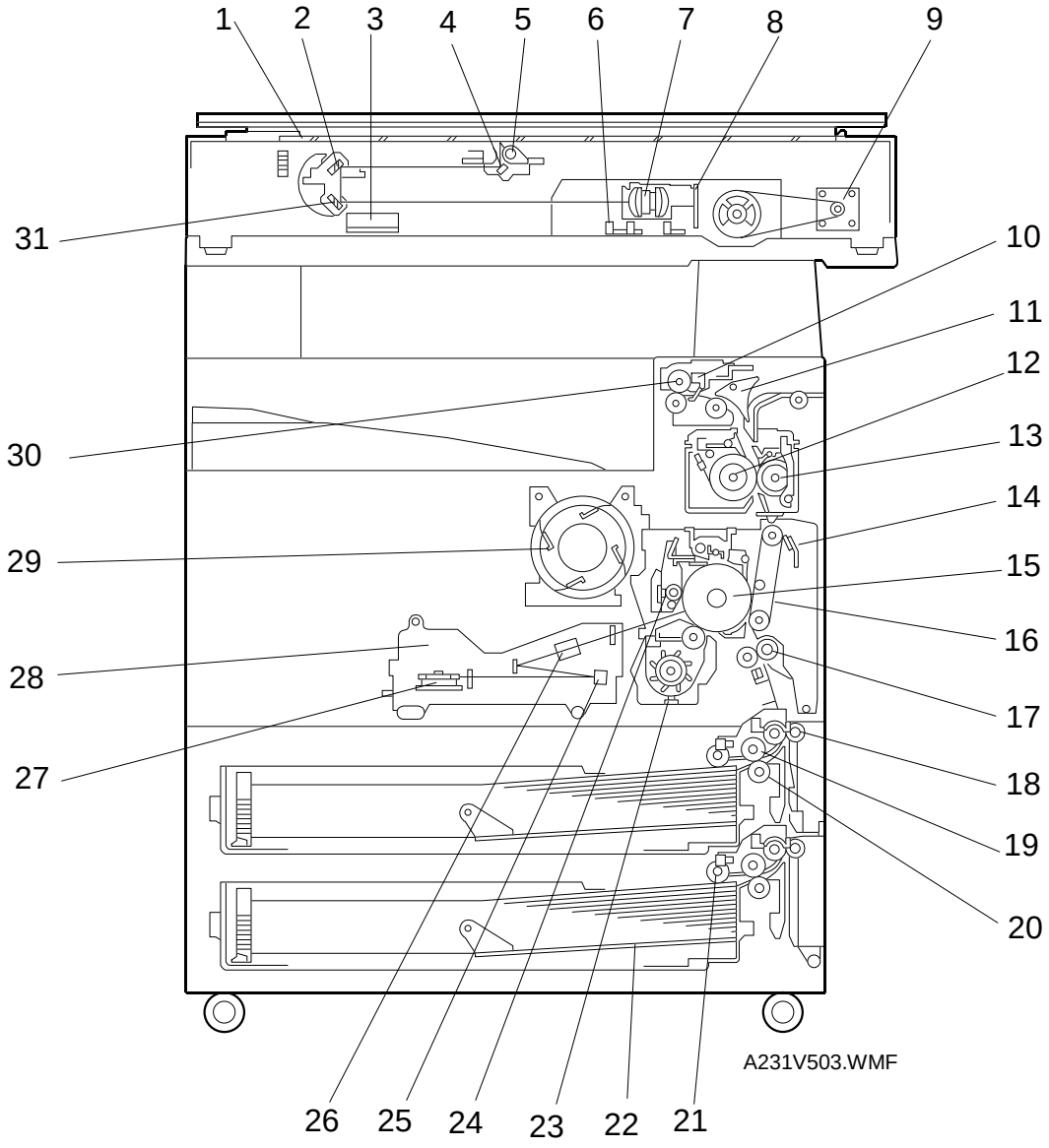

1. Exposure Glass
2. 2nd Mirror
3. Original Width Sensors
4. 1st Mirror
5. Exposure Lamp
6. Original Length Sensors
7. Lens
8. SBU
9. Scanner Motor
10. Paper Exit Sensor
11. Exit Junction Gate
12. Hot Roller
13. Pressure Roller
14. Transfer Belt Cleaning Blade
15. OPC Drum
16. Transfer Belt
17. Registration Roller
18. Upper Relay Rollers
19. Feed Roller
20. Separation Roller
21. Pick-up Roller
22. Bottom Plate
23. Development Unit
24. Charge Roller
25. Fθ Mirror
26. Barrel Toroidal Lens (BTL)
27. Polygonal Mirror Motor
28. Laser Unit
29. Toner Supply Bottle Holder
30. Exit Roller
31. 3rd Mirror

1.5 PAPER PATH

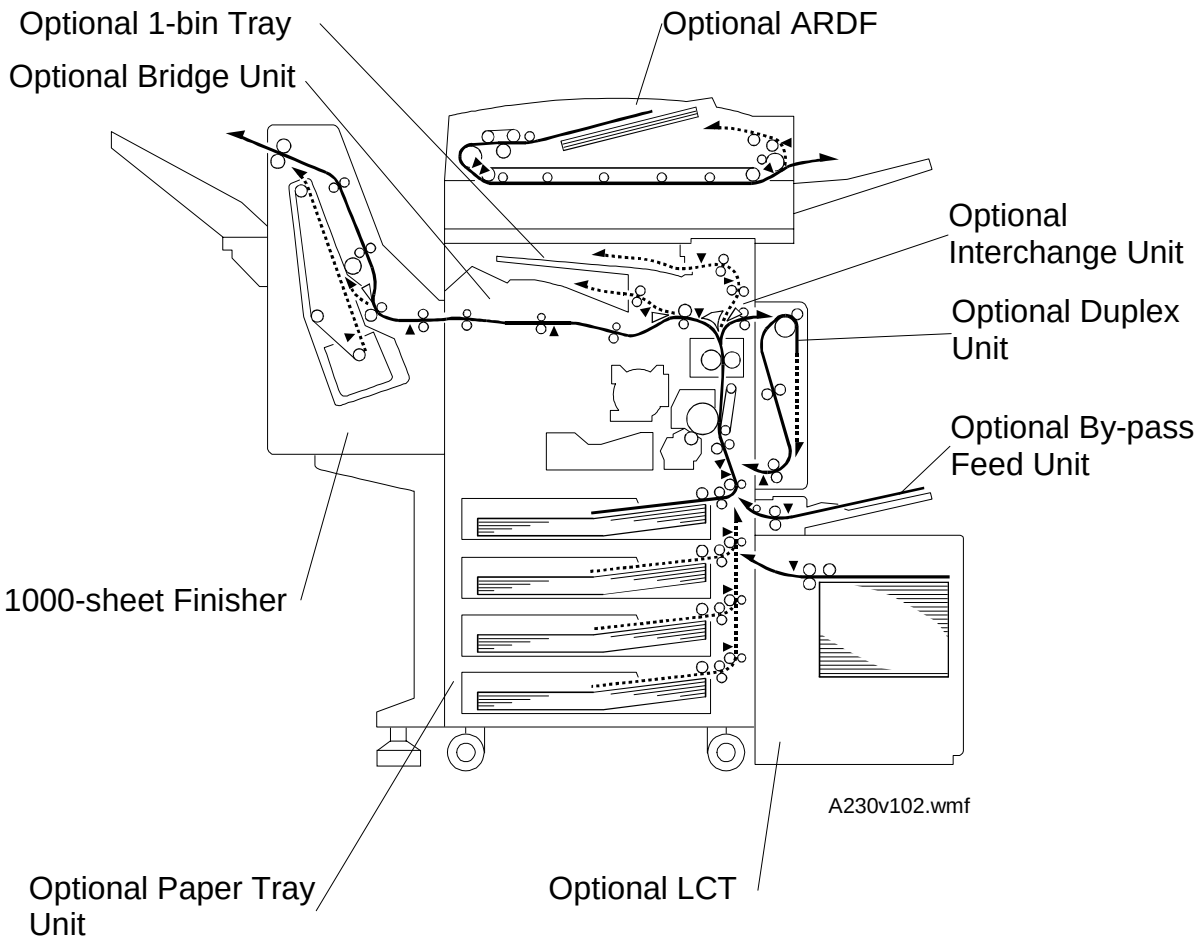

1.6 ELECTRICAL COMPONENT DESCRIPTIONS

Refer to the electrical component layout and the point-to-point diagram on the waterproof paper in the pocket for the locations of these components.

Symbol	Index No.	Description	Note
Printed Circuit Boards			
PCB1	58	BICU (Base Engine & Image Control Unit)	Controls all copier functions both directly and through other control boards.
PCB2	55	PSU (Power Supply Unit)	Provides dc power to the system and ac power to the fusing lamp and optional heaters.
PCB3	61	IOB (Input/Output Board)	Controls the mechanical parts of the printer (excluding the paper feed section), and the fusing lamp power.
PCB4	62	Paper Feed Control (PFB)	Controls the mechanical parts of all paper feed sections.
PCB5	63	High Voltage Supply	Supplies high voltage to the drum charge roller, development roller, and transfer belt.
PCB6	9	SBU (Sensor Board Unit)	Contains the CCD, and outputs a video signal to the BICU board.
PCB7	7	SIB (Scanner Interface Board)	Controls the scanner carriages and passes signals from the scanner unit to the BICU board.
PCB8	11	Operation Panel	Controls the LCD and LED matrix and monitors the key matrix.
PCB9	4	Lamp Stabilizer	Provides dc power to the exposure lamp.
PCB10	19	LDDR (Laser Diode Driver)	Controls the laser diode.
PCB11	54	SIFB (Scanner Interface Board)	Passes signals between the SIFB and BICU boards.
Motors			
M1	35	Main	Drives the main body components.
M2	8	Scanner Drive	Drives the 1st and 2nd scanners.
M3	45	Tray Lift	Raises the bottom plate in the paper tray.
M4	22	Polygonal Mirror	Turns the polygonal mirror.
M5	20	LD Positioning	Rotates the LD unit to adjust the LD beam pitch when a different resolution is selected.
M6	36	Cooling Fan	Removes heat from the main PCBs.
M7	37	Exhaust Fan	Removes heat from around the fusing unit.
M8	34	Toner Supply	Rotates the toner bottle to supply toner to the development unit.
M9	56	PSU Cooling Fan	Removes heat from the PSU.

Symbol	Index No.	Description	Note
Sensors			
S1	2	Scanner Home Position	Informs the CPU when the 1st and 2nd scanners are at the home position.
S2	3	Platen Cover	Informs the CPU whether the platen cover is up or down (related to APS/ARE functions). ARE: Auto Reduce and Enlarge
S3	12	Original Width	Detects the width of the original. This is one of the APS (Auto Paper Select) sensors.
S4	5	Original Length-1	Detects the length of the original. This is one of the APS (Auto Paper Select) sensors.
S5	6	Original Length-2	Detects the length of the original. This is one of the APS (Auto Paper Select) sensors.
S6	21	LD Unit Home Position	Informs the CPU when the LD unit is at the home positon.
S7	17	Toner Density (TD)	Detects the amount of toner inside the development unit.
S8	24	Paper Exit	Detects misfeeds.
S9	27	Registration	Detects the leading edge of the copy paper to determine the stop timing of the paper feed clutch, and detects misfeeds.
S10	26	Image Density (ID)	Detects the density of various patterns and the reflectivity of the drum for process control.
S11	28	Upper Paper Height	Detects when the paper in the upper paper tray is at the feed height.
S12	30	Lower Paper Height	Detects when the paper in the lower paper tray is at the feed height.
S13	29	Upper Paper End	Informs the CPU when the upper paper tray runs out of paper.
S14	31	Lower Paper End	Informs the CPU when the lower paper tray runs out of paper.
S15	33	Upper Relay	Detects misfeeds.
S16	32	Lower Relay	Detects misfeeds.
S17	48	Upper Tray	Informs the CPU whether the upper paper tray is set into the machine or not.
S18	46	Lower Tray	Informs the CPU whether the lower paper tray is set into the machine or not.
S19	38	Transfer Belt Position	Informs the CPU of the current position of the transfer belt unit.
S20	18	Toner Overflow	Detects toner overflow in the toner collection tank.
Switches			
SW1	43	Right Lower Cover	Detects whether the right lower cover is open or closed.
SW2	49	Right Upper Cover	Cut the +5VLD and +24V dc power line and detects whether the right upper cover is open or closed.
SW3	51	Main Power Switch	Supplies power to the copier. If this is off, there is no power supplied to the copier.

Symbol	Index No.	Description	Note
SW4	52	Front Cover Safety	Cuts the +5VLD and +24V dc power line and detects whether the front cover is open or not.
SW5	10	Operation Switch	Provides power for machine operation. The machine still has power if this switch is off.
Magnetic Clutches			
CL1	39	Transfer Belt	Controls the touch and release movement of the transfer belt unit.
CL2	40	Registration	Drives the registration rollers.
CL3	44	Relay	Drives the relay rollers.
CL4	41	Upper Paper Feed	Starts paper feed from the upper paper tray.
CL5	42	Lower Paper Feed	Starts paper feed from the lower paper tray.
Lamps			
L1	13	Exposure	Applies high intensity light to the original for exposure.
L2	16	Fusing	Provides heat to the hot roller.
L3	25	Quenching	Neutralizes any charge remaining on the drum surface after cleaning.
Heaters			
H1	1	Optics Anti-condensation (option)	Turns on when the main power switch is off to prevent moisture from forming on the optics.
H2	47	Tray (option)	Turns on when the main power switch is off to keep paper dry in the paper tray.
Thermistors			
TH1	14	Fusing	Monitors the temperature at the central area of the hot roller.
Thermofuses			
TF1	15	Fusing	Provides back up overheat protection in the fusing unit.
Counters			
CO1	50	Total	Keeps track of the total number of prints made.
CO2	N/A	Key (option)	Used for control of authorized use. If this feature is enabled for copying, copying will be impossible until it is installed. It can also be enabled for fax and printer modes separately.
Others			
CB1	57	Circuit Breaker (220 ~ 240V only)	Provides back-up high current protection for electrical components.
LSD	23	Laser Synchronization Detector	Detects the laser beam at the start of the main scan.

1.7 DRIVE LAYOUT

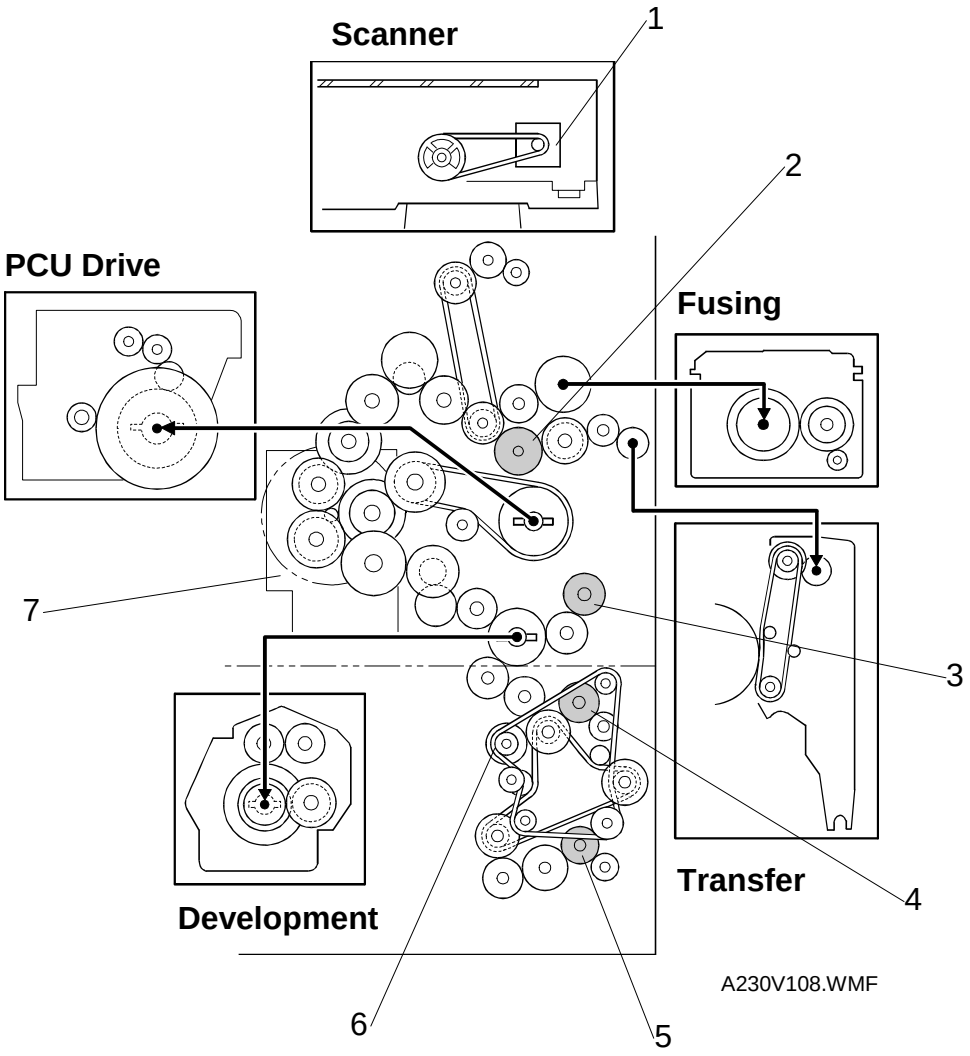

1. Scanner Drive Motor
2. Transfer Belt Clutch
3. Registration Clutch
4. Upper Paper Feed Clutch
5. Lower Paper Feed Clutch
6. Relay Clutch
7. Main Motor

1.8 COPY PROCESS

1.8.1 OVERVIEW

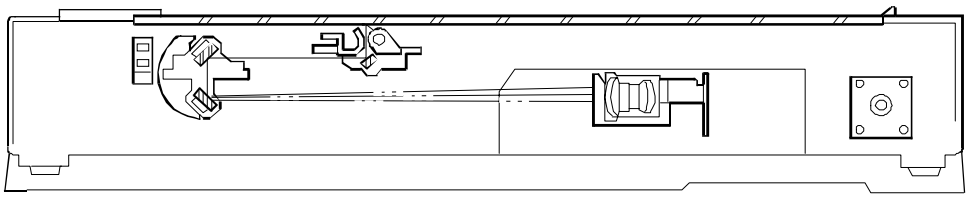

1

A231v500.WMF

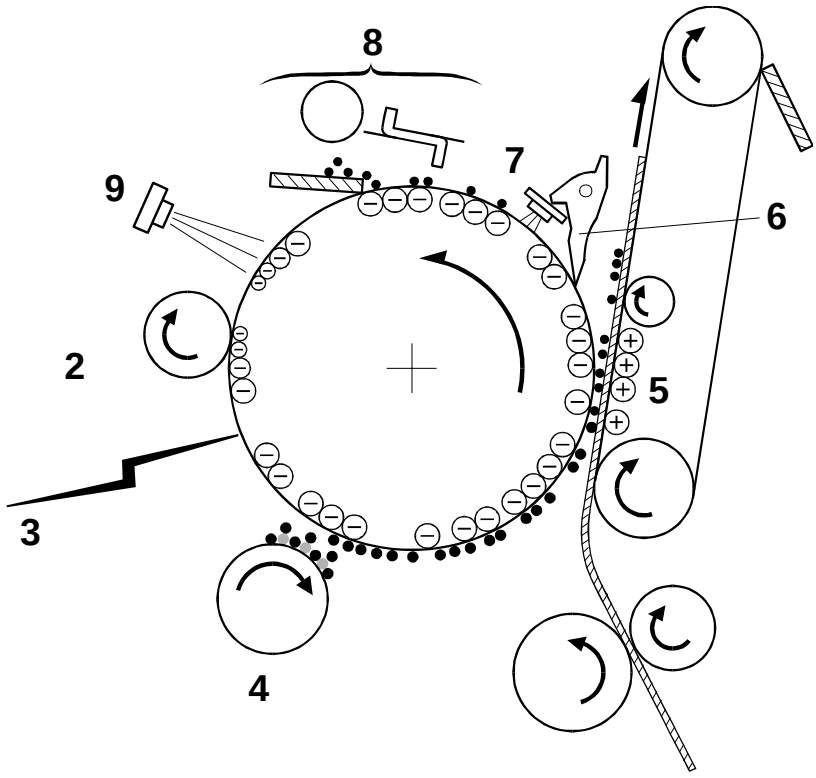

A230V101.WMF

1. EXPOSURE

A xenon lamp exposes the original. Light reflected from the original passes to the CCD, where it is converted into an analog data signal. This data is converted to a digital signal, processed, and stored in the memory. At the time of printing, the data is retrieved and sent to the laser diode. For multi-copy runs, the original is scanned once only and stored to the memory.

2. DRUM CHARGE

In the dark, the charge roller gives a negative charge to the organic photo-conductive (OPC) drum. The charge remains on the surface of the drum because the OPC layer has a high electrical resistance in the dark.

3. LASER EXPOSURE

The processed data from the scanned original is retrieved from the memory and transferred to the drum by two laser beams, which form an electrostatic latent image on the drum surface. The amount of charge remaining as a latent image on the drum depends on the laser beam intensity, which is controlled by the BICU board.

4. DEVELOPMENT

The magnetic developer brush on the development roller comes in contact with the latent image on the drum surface. Toner particles are electrostatically attracted to the areas of the drum surface where the laser reduced the negative charge on the drum.

5. IMAGE TRANSFER

Paper is fed to the area between the drum surface and the transfer belt at the proper time to align the copy paper and the developed image on the drum surface. Then, the transfer bias roller applies a high positive charge to the reverse side of the paper through the transfer belt. This positive charge pulls the toner particles from the drum surface on to the paper. At the same time, the paper is electrically attracted to the transfer belt.

6. PAPER SEPARATION

Paper separates from the drum as a result of the electrical attraction between the paper and the transfer belt. The pick-off pawls help separate the paper from the drum.

7. ID SENSOR

The laser forms a sensor pattern on the drum surface. The ID sensor measures the reflectivity of the pattern. The output signal is one of the factors used for toner supply control. Also, the ID sensor measures the reflectivity of the drum surface. The output signal is used for charge roller voltage control.

8. CLEANING

The drum cleaning blade removes any toner remaining on the drum surface after the image is transferred to the paper.

9. QUENCHING

The light from the quenching lamp electrically neutralizes the charge on the drum surface.

1.9 BOARD STRUCTURE

1.9.1 BLOCK DIAGRAM

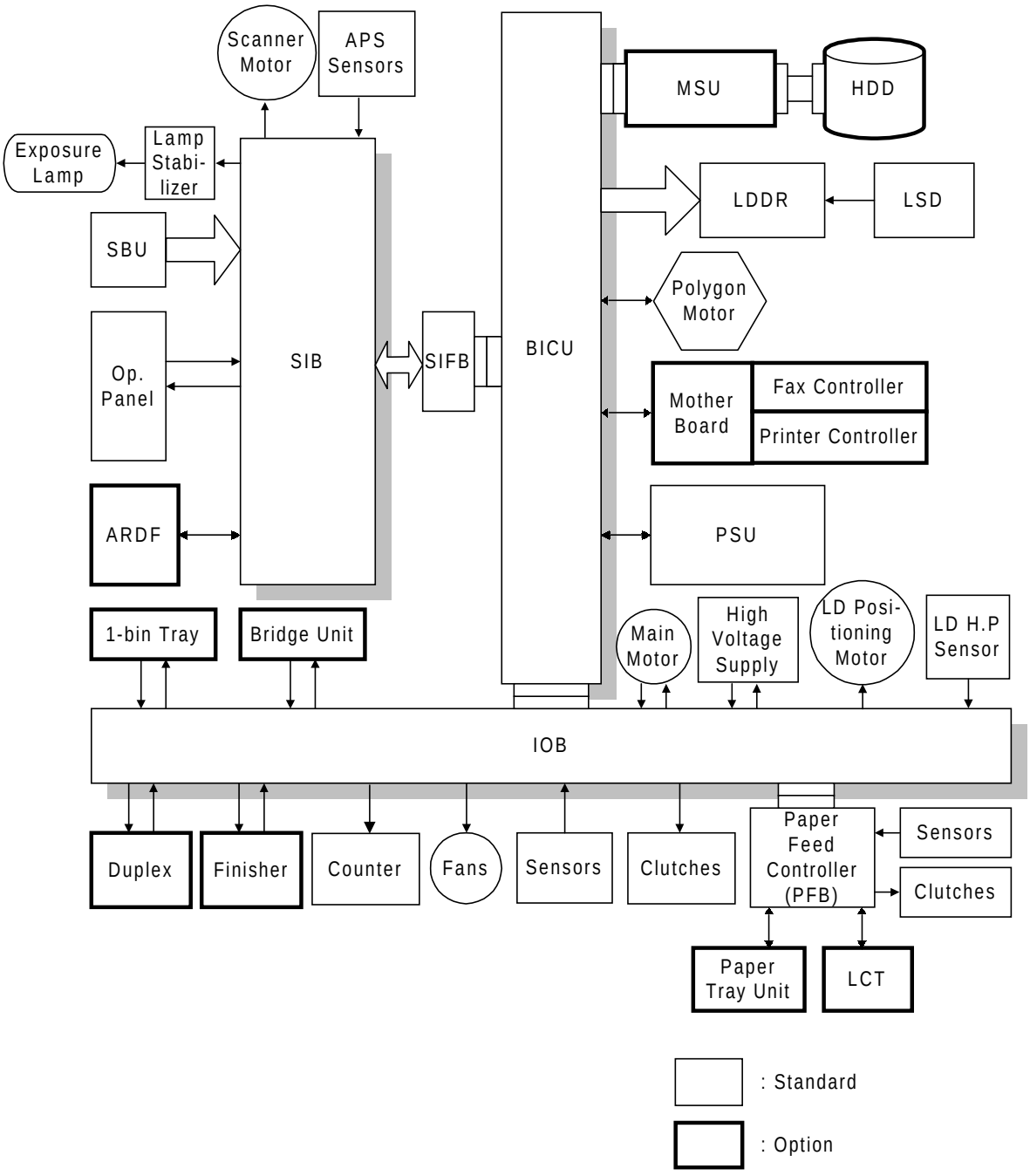

A231V501.WMF

1.9.2 DESCRIPTIONS

1. BICU (Base Engine and Image Control Unit)

This is the main board. It controls the following functions.

- Engine sequence
- Timing control for peripherals
- Image processing, video control
- Operation control
- Application boards (fax, printer, hard disk)

2. IOB (Input/Output Board)

The IOB handles the following functions.

- Drive control for the sensors, motors, and solenoids of the printer
- PWM control for high voltage supply board
- Serial interface with peripherals
- Fusing control

3. SBU (Sensor Board Unit)

The SBU receives the analog signals from the CCD and converts them into digital signals.

4. SIB (Scanner Interface Board)

This board controls the scanner motor and passes signals between the BICU board and the component parts of the scanner unit. Also, it transmits the video signals from the SBU to the BICU board.

5. SIFB (Scanner Interface Board)

This board passes signals between the SIB and BICU.

6. Mother Board (Option)

This board interfaces the BICU with the fax controller and/or the printer controller. The mother board is part of the expansion box option.

2. DETAILED SECTION DESCRIPTIONS

2.1 SCANNING

2.1.1 OVERVIEW

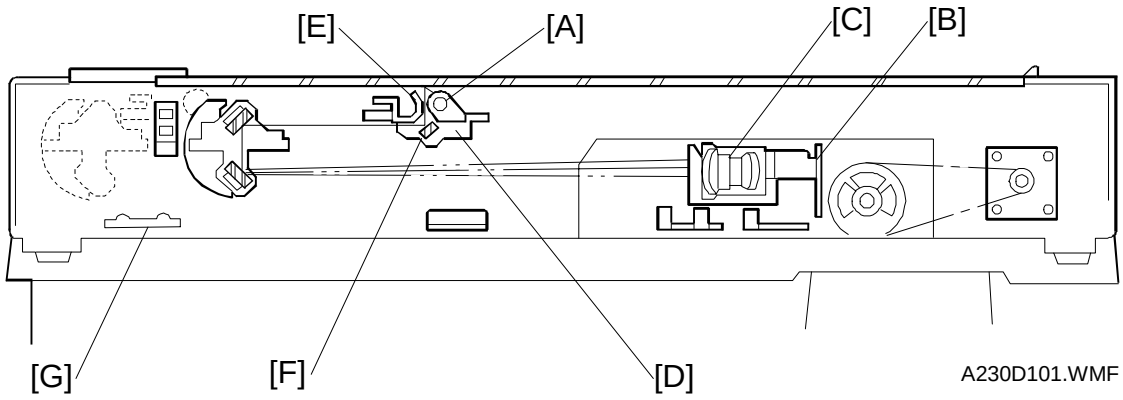

The original is illuminated by the exposure lamp (a xenon lamp in this model) [A]. The image is reflected onto a CCD (charge coupled device) [B] via the 1st, 2nd, and 3rd mirrors, and through the lens [C].

The 1st scanner [D] consists of the exposure lamp, a reflector [E], and the 1st mirror [F].

The exposure lamp is energized by a dc supply to avoid uneven light intensity while the 1st scanner moves in the sub scan direction (down the page). The entire exposure lamp surface is frosted to ensure even exposure in the main scan direction (across the page).

The light reflected by the reflector is of almost equal intensity in all directions, to reduce shadows on pasted originals.

An optics anti-condensation heater [G] is available as an option. It can be installed on the left side of the scanner. It turns on whenever the power cord is plugged in.

2.1.2 SCANNER DRIVE

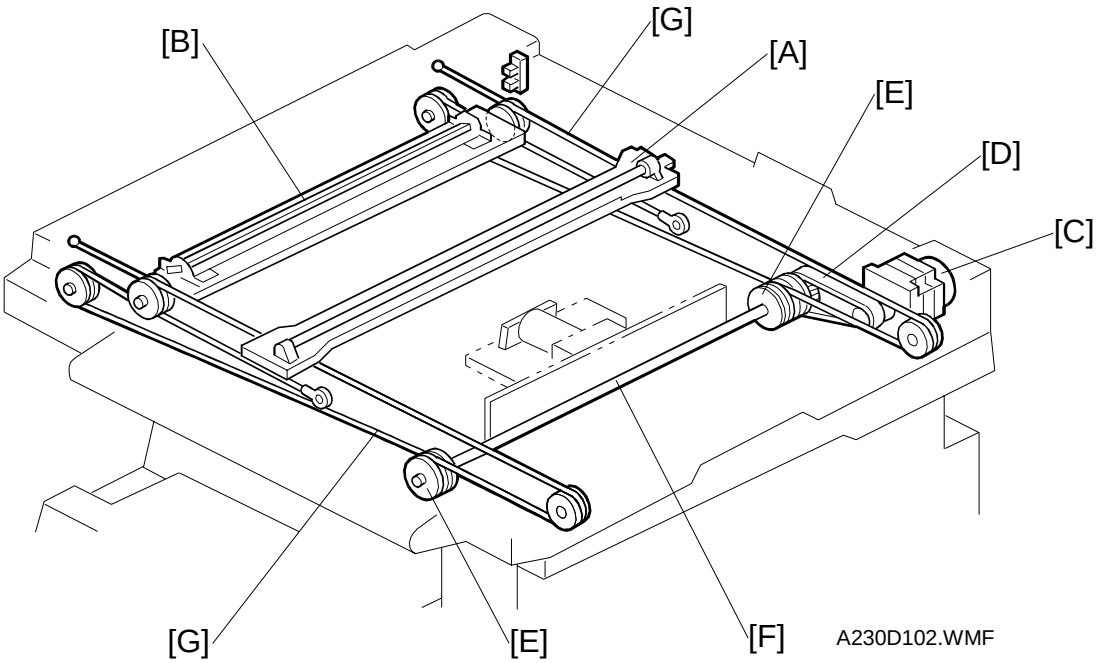

The scanner drive motor is a stepper motor. The 1st and 2nd scanners [A, B] are driven by the scanner drive motor [C] through the timing belt [D], scanner drive pulley [E], scanner drive shaft [F], and two scanner wires [G].

The scanner interface board (SIB) controls the scanner drive motor. In full size mode, the 1st scanner speed is 180 mm/s (NAD30S/NAD30) or 230 mm/s (NAD40) during scanning. The 2nd scanner speed is half that of the 1st scanner.

In reduction or enlargement mode, the scanning speed depends on the magnification ratio. The returning speed is always the same, whether in full size or magnification mode. The image length change in the sub scan direction is done by changing the scanner drive motor speed, and in the main scan direction it is done by image processing on the BICU board.

Magnification in the sub-scan direction can be adjusted by changing the scanner drive motor speed using SP4-008.

2.1.3 ORIGINAL SIZE DETECTION IN PLATEN MODE

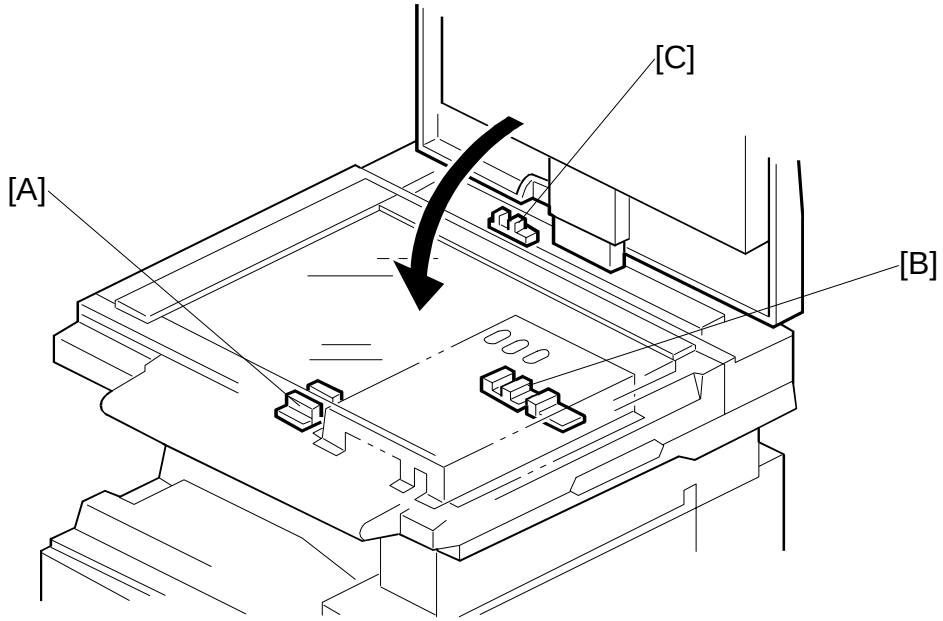

A230D103.WMF

In the optics cavity for original size detection, there are five reflective sensors. The original width sensors [A] detect the original width, and the original length sensors [B] detect the original length. These are the APS (Auto Paper Select) sensors. Each APS sensor is a reflective photosensor.

While the power is on, these sensors are active and the original size data is always sent to the CPU. However, the CPU checks the data only when the platen cover sensor [C] is activated. This is when the platen reaches about 15 cm above the exposure glass, for example while it is being closed. The main CPU can recognize the original size from the on/off signals from the APS sensors.

If the copy is made with the platen fully open, the main CPU decides the original size from the sensor outputs when the Start key is pressed.

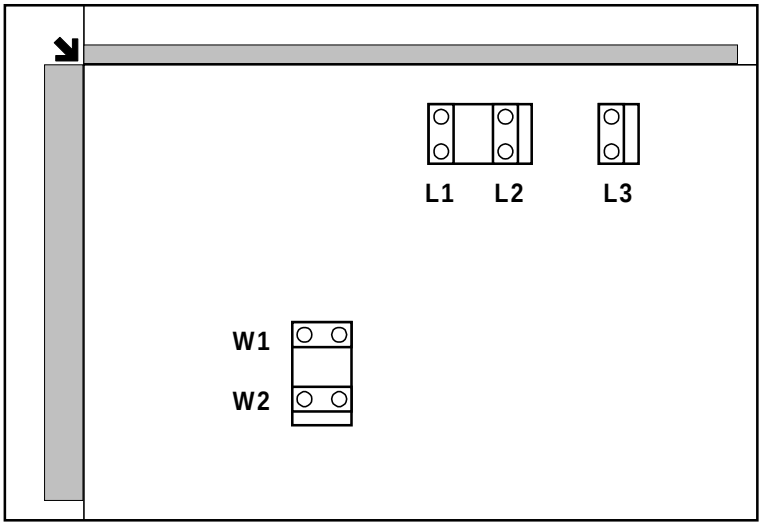

A231D500.WMF

Original Size		Length Sensor			Width Sensor		SP4-301 display
A4/A3 version	LT/DLT version	L3	L2	L1	W2	W1	
A3	11”x17”	O	O	O	O	O	00011111
B4	10”x14”	O	O	O	X	O	00011101
F4	8.5”x14” (8”x13”)	O	O	O	X	X	00011100
A4-L	8.5”x11”	X	O	O	X	X	00001100
B5-L		X	X	O	X	X	00000100
A4-S	11”x8.5”	X	X	X	O	O	00000011
B5-S		X	X	X	X	O	00000001
A5-L, A5-S	5.5”x8.5”, 8.5”x5.5”	X	X	X	X	X	00000000

NOTE: -L: Lengthwise, -S: Sideways, O: High (paper present) X: Low

For other combinations, "CANNOT DETECT ORIG. SIZE" will be indicated on the operation panel display.

The above table shows the outputs of the sensors for each original size. This original size detection method eliminates the necessity for a pre-scan and increases the machine's productivity.

However, if the by-pass feeder is used, note that the machine assumes that the copy paper is lengthwise. For example, if A4 sideways paper is placed on the by-pass tray, the machine assumes it is A3 paper and scans a full A3 area, disregarding the original size sensors. However, for each page, the data signal to the laser diode is stopped to match the copy paper length detected by the registration sensor. This means that copy time for the first page may be slower (because of the longer time required for scanning), but it will be normal for the rest of the job.

Original size detection using the ADF is described in the manual for the ARDF.

2.2 IMAGE PROCESSING

2.2.1 OVERVIEW

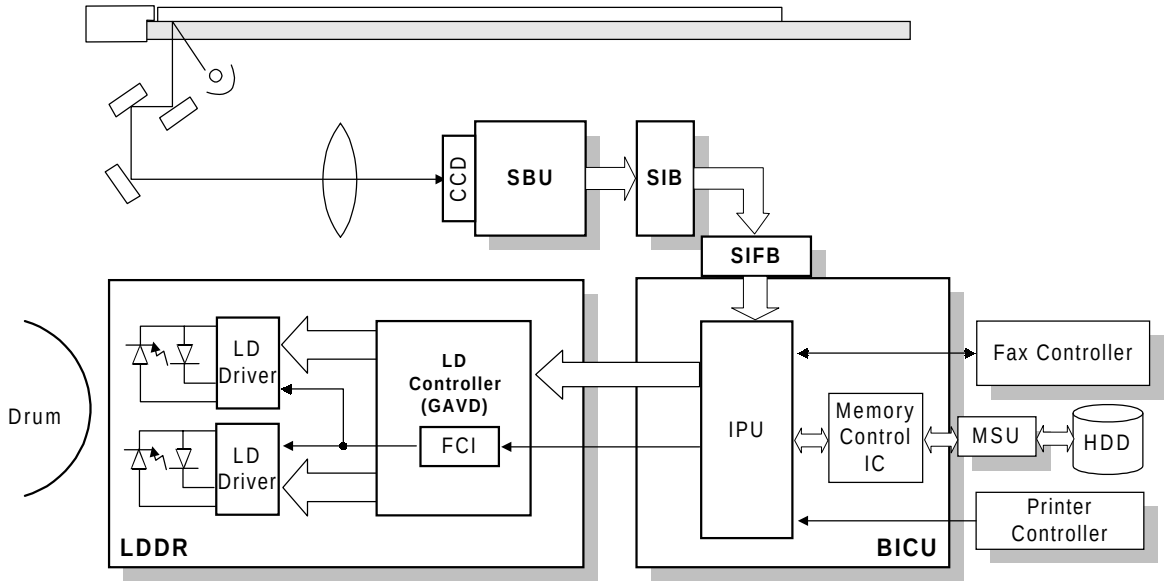

A231D531.WMF

The CCD generates an analog video signal. The SBU (Sensor Board Unit) converts the analog signal to an 8-bit digital signal, then it sends the digital signal to the BICU (Base-engine and Image Control Unit) board.

The BICU board can be divided into two image processing blocks; the IPU (Image Processing Unit) and the memory control IC. These two ICs do the following:

- IPU: Auto shading, filtering, magnification, γ correction, and gradation processing
- Memory controller: Image compression, decompression, and memory address control (binary picture processing mode only)

Finally, the BICU board sends the video data to the LD drive board.

2.2.2 SBU

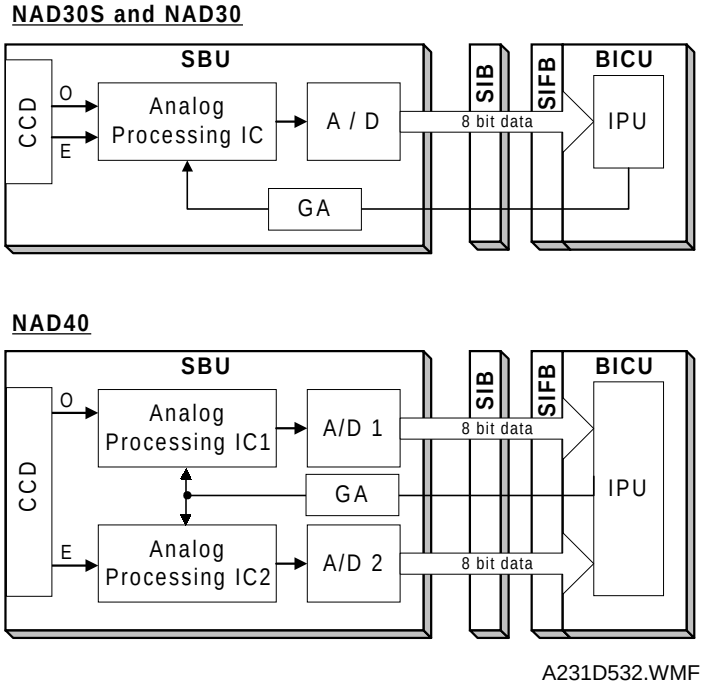

A231D532.WMF

The CCD converts the light reflected from the original into an analog signal. The CCD line has 5,000 pixels and the resolution is 400 dpi (15.7 lines/mm).

The CCD has two output lines, for odd and even pixels, to the analog processing IC. For NAD30S and NAD30, there is one analog processing IC. For NAD40, there are two analog processing ICs; one handles odd pixels and the other handles even pixels. The analog processing IC performs the following operations on the signals from the CCD:

1. Z/C (Zero Clamp):
   Adjusts the black level reference for even pixels to match the odd pixels.

2. Signal Composition: (NAD30S and NAD30 only)
   Analog signals for odd and even pixels from the CCD are merged by a switching device.

3. Signal Amplification
   The analog signal is amplified by operational amplifiers in the AGC circuit. The maximum gains of the operational amplifiers are controlled by the CPU on the BICU board.

After the above processing, the analog signals are converted to 8-bit signals by the A/D converter. This gives a value for each pixel on a scale of 256 grades. Then, this data goes to the BICU board thorough the SIB and SIFB boards. (NAD30S and NAD30 each send one 8-bit signal, and NAD40 sends two 8-bit signals to the BICU board).

2.2.3 AUTO IMAGE DENSITY (ADS)

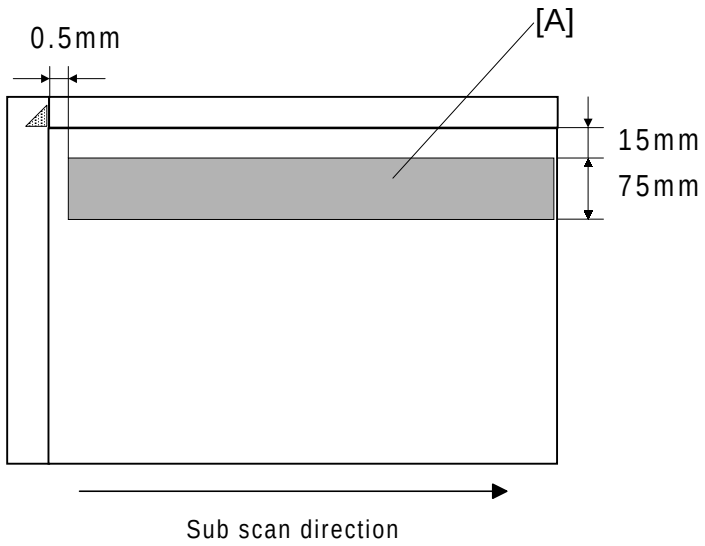

A231D530.WMf

This mode prevents the background of an original from appearing on copies.

The copier scans the auto image density detection area [A]. This corresponds to a narrow strip at one end of the main scan line, as shown in the diagram. As the scanner scans down the page, the IPU on the BICU detects the peak white level for each scan line, within this narrow strip only. From this peak white level, the IPU determines the reference value for A/D conversion for the scan line. Then, the IPU sends the reference value to the A/D controller on the SBU.

When an original with a gray background is scanned, the density of the gray area is the peak white level density. Therefore, the original background will not appear on copies. Because peak level data is taken for each scan line, ADS corrects for any changes in background density down the page.

As with previous digital copiers, the user can select manual image density when selecting auto image density mode and the machine will use both settings when processing the original.

2.2.4 IPU (IMAGE PROCESSING UNIT)

Overview

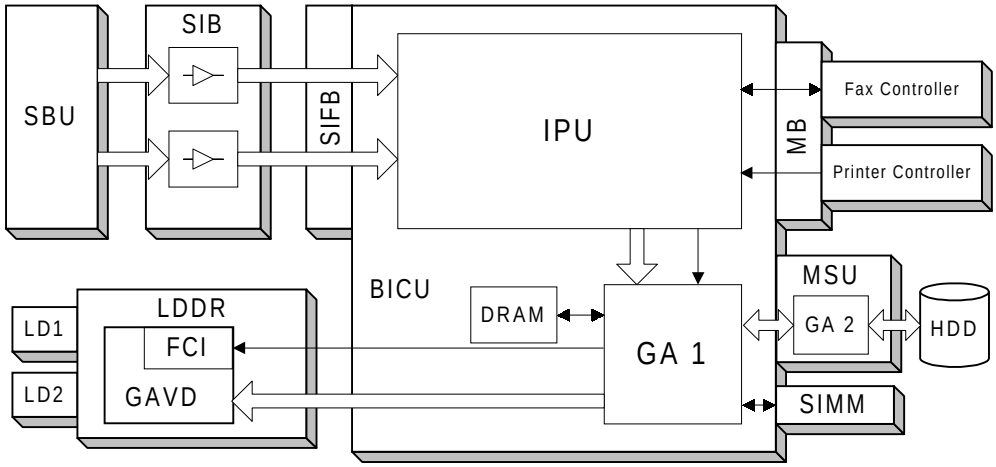

A231D520.WMF

The image data from the SBU goes to the IPU (Image Processing Unit) IC on the BICU board, which carries out the following processes on the image data:

1. Auto shading
2. Filtering (MTF and smoothing)
3. Magnification
4. γ correction
5. Grayscale processing
6. Binary picture processing
7. Error diffusion
8. Dithering
9. Video path control
10. Test pattern generation

The image data then goes to either the LDDR or the memory control IC (GA 1) depending on the selected copy modes.

Image processing path

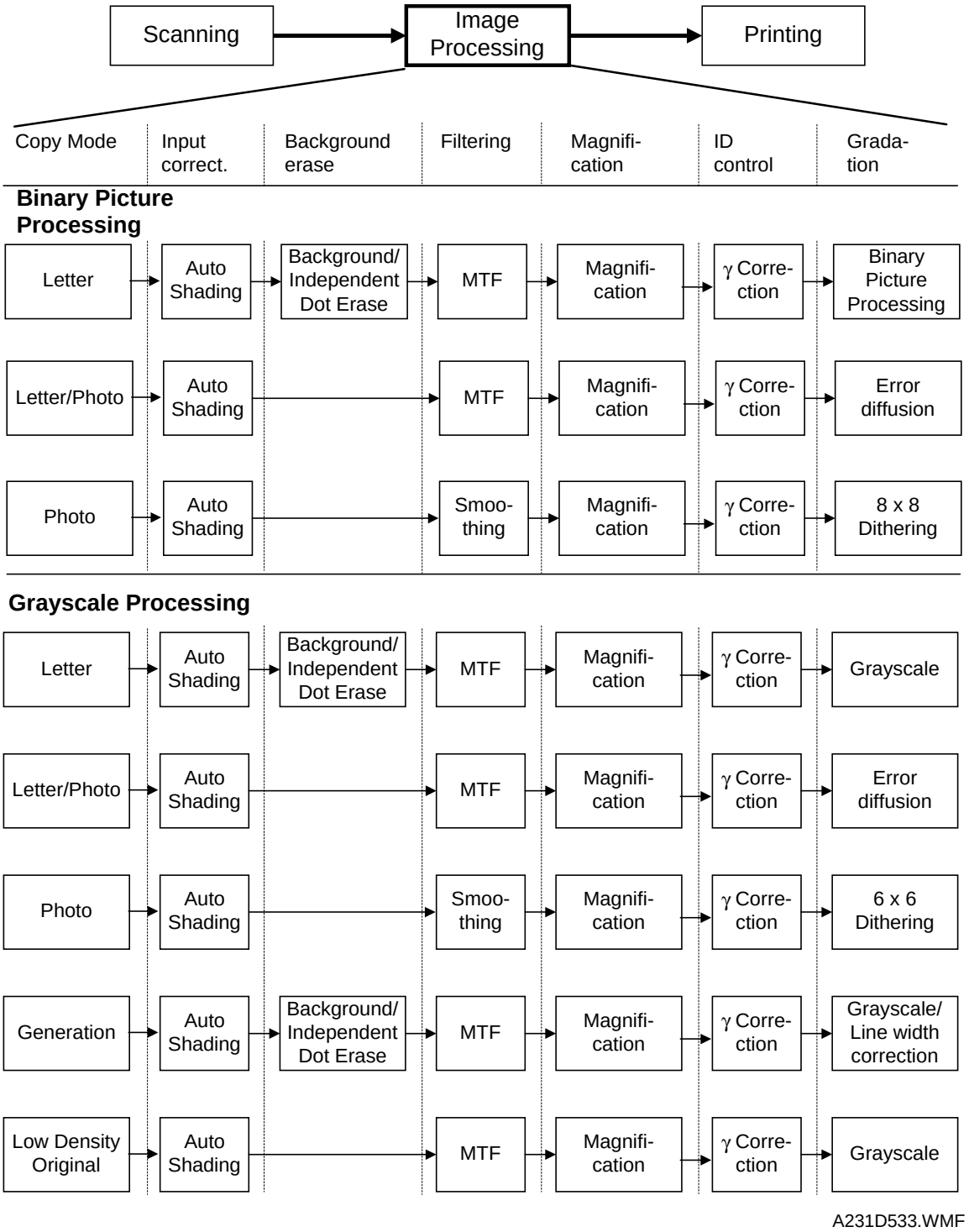

A231D533.WMF

Photo mode: MTF can be used instead of smoothing (SP 4-904-3).

Background erase and independent dot erase can also be used in other modes than indicated above, depending on SP mode settings. The above diagram shows the default condition of the machine.

SP modes for each image process

The following table shows which SP modes are used for each image processing mode.

Binary picture processing mode

Copy mode	Input correct	Background erase	Filtering	Magnifi-cation	ID control	Gradation
Letter	---	**SP4903-34** Background erase level **SP4903-29** Independent dot erase level	**SP4903-41~44** MTF filter coefficient **SP4903-50~53** MTF filter strength	**SP2909-1** Main scan mag.	---	**SP4904-12** Threshold level
Letter/Photo	---	**SP4903-35** Background erase level **SP4903-30** Independent dot erase level	**SP4903-47** MTF filter coefficient **SP4903-55** MTF filter strength	**SP2909-1** Main scan mag.	---	---
Photo	---	**SP4903-36** Background erase level	**SP4904-3** Filter type (smoothing or MTF) **SP4903-16** Smoothing filter coefficient **SP4903-15** MTF filter coefficient **SP4903-24** MTF filter strength	**SP2909-1** Main scan mag.	---	**SP4904-18** Dither matrix type

Grayscale processing

Copy mode	Input correct	Background erase	Filtering	Magnifi-cation	ID cont.	Gradation
Letter		**SP4903-34** Background erase level **SP4903-28** Independent dot erase level	**SP4903-11~14** MTF filter coefficient **SP4903-20~23** MTF filter strength	**SP2909-1** Main scan mag.		**SP4903-38** Error diffusion on/off
Letter/ Photo		**SP4903-35** Background erase level **SP4903-30** Independent dot erase level	**SP4903-17** MTF filter coefficient **SP4903-25** MTF filter strength	**SP2909-1** Main scan mag.		**SP4907** Text/photo auto separation **SP4904-7** Gradation type in text areas **SP4904-8** Gradation type in photo areas
Photo		**SP4903-36** Background erase level	**SP4904-3** Filter type (smoothing or MTF) **SP4903-16** Smoothing filter coefficient **SP4903-15** MTF filter coefficient **SP4903-24** MTF filter strength	**SP2909-1** Main scan mag.		**SP4904-2** Dither matrix type
Copied Original		**SP4903-37** Background erase level **SP4903-32** Independent dot erase level	**SP4903-19** MTF filter coefficient **SP4903-27** MTF filter strength	**SP2909-1** Main scan mag.		**SP4904-6** Line width correction type **SP4903-38** Error diffusion on/off
Low Density Original		**SP4903-31** Independent dot erase level	**SP4903-18** MTF filter coefficient **SP4903-26** MTF filter strength	**SP2909-1** Main scan mag.		**SP4903-38** Error diffusion on/off

Auto shading

Auto shading does two things.

- Zeroes the black level for each scan line of data
- Corrects for variations in white level across the main scan.

Background erase

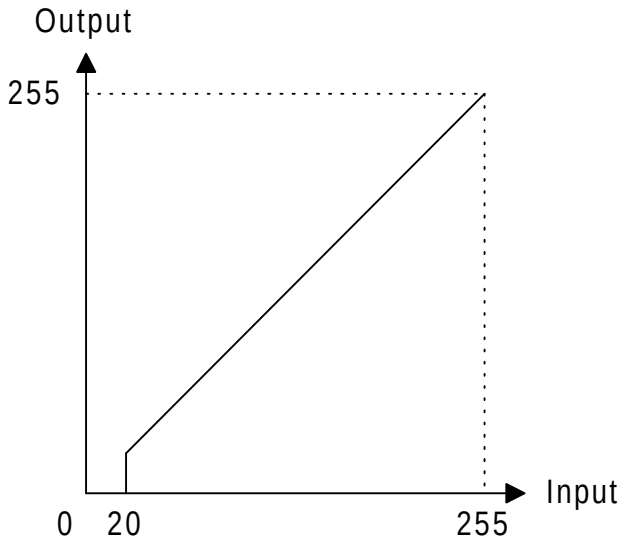

A231D527.WMF

By default, this process is used only in letter mode and copied original mode. However, it can be enabled for other modes by SP mode.

Usually, dirty background is erased using the Auto Image Density (ADS) function. However, sometimes, dirty background areas will still appear. These can be erased by this function.

If any low image density data which is lower than a threshold level remains after auto shading, this data will be changed to “0” = white.

The threshold level can be changed with SP4-903-34 ~ 37. For example, for letter mode, use SP 4-903-34.

Independent dot erase

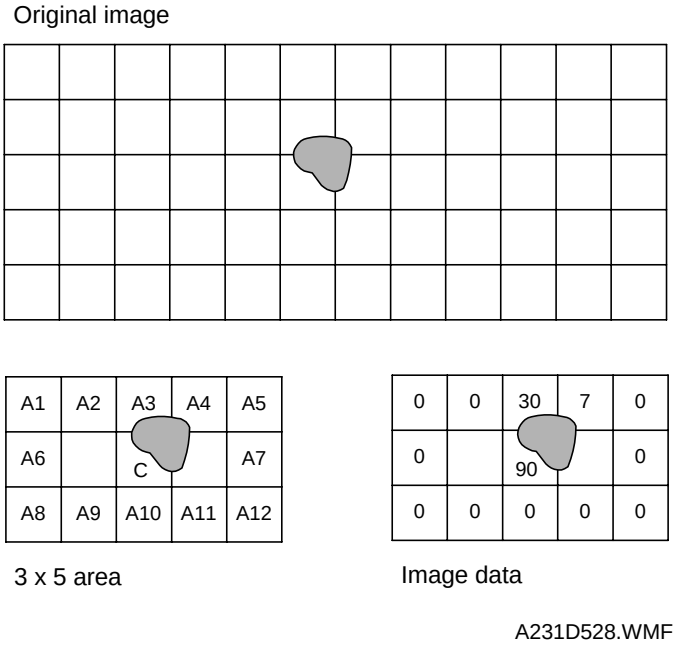

By default, this process is used only in letter mode and copied original mode. However, it can be enabled for other modes by SP mode. It erases independent black dots appearing in the copy or reduces their image density.

The software compares each pixel (C in the diagram above left) with the pixels around the edges of the surrounding 3 x 5 area. If the sum of the pixels at the edges is smaller than the threshold value stored in SP4-903-28 ~ 32 (e.g., for letter mode with binary picture processing, it is SP 4-903-29), the object pixel is changed to 0 (white) or reduced in density to an average of the pixels around the edge, depending on the SP mode setting. Each SP mode has 16 levels as follows.

A= The sum of the pixels at the edges

SP mode value	Function	SP mode value	Function
0	Disabled	8	Disabled
1	If A < 16, the pixel is deleted	9	If A < 16, density is reduced
2	If A < 32, the pixel is deleted	10	If A < 32, density is reduced
3	If A < 48, the pixel is deleted	11	If A < 48, density is reduced
4	If A < 64, the pixel is deleted	12	If A < 64, density is reduced
5	If A < 80, the pixel is deleted	13	If A < 80, density is reduced
6	If A < 96, the pixel is deleted	14	If A < 96, density is reduced
7	If A < 128, the pixel is deleted	15	If A < 128, density is reduced

Pixel density reduction works as follows. For the example in the above drawing, , when the SP mode value is “11”, the sum of the pixels around the edge is less than 48, the object pixel value is reduced from “90” to “3” as shown below.

A: (0 + 0 + 30 + 7 + 0 + 0 + 0 + 0 + 0 + 0 + 0 + 0) / 12 = 3

Filtering, main scan magnification/reduction

Overview

After auto shading, the image data is processed by both filtering and main scan magnification. However, to reduce the occurrence of moire in the image, the processing order depends on the reproduction ratio, as follows.

1. 64% reduction or less

   Main Scan Reduction → Filtering

2. 65% reduction or higher

   Filtering → Main Scan Magnification

Filtering

There are two software filters for enhancing the desired image qualities of the selected original mode: the MTF filter and the smoothing filter.

The MTF filter emphasizes sharpness and is used in text and text/photo modes. The smoothing filter is used in photo mode.

The relationships between the coefficient of the filter and the filter strengths are as follows. The filter strengths and the coefficient for each mode can be adjusted with SP4-903.

MTF Filter Coefficient (SP4-903-11~15, 17~19, 41~47)

(Weak) 11 → 8 → 2 → 1 → 9 → 0 → 5 → 4 → 10 → 7 → 3 → 6 (Strong)

MTF Filter Strength (SP4-903-20~27, 50~53, 55)

(Weak) x0.25 → x0.5 → x1 → x2 → x4 (Strong)

Smoothing Filter Coefficient (SP4-903-16)

(Weak) 7 → 6 → 0 → 5 → 2 → 1 → 3 → 4 (Strong)

A stronger MTF filter leads to sharper lines. A stronger smoothing filter leads to a greater degree of smoothing.

Refer to the tables in ‘SP Modes for Each Image Process’ for more information.

Main scan magnification/reduction

Reduction and enlargement in the sub scan direction are done by changing the scanner speed. However, reduction and enlargement in the main scan direction are handled by the IPU chip.

To reduce or enlarge an image, imaginary points are calculated that would correspond to a physical enlargement or reduction of the image. The image density is then calculated for each of the imaginary points based on the image data of the nearest four true points. The calculated image data then becomes the new (reduced or enlarged) image data.

Gamma (γ) corrEctionr

Gamma correction ensures accurate generation of the various shades in the gray scale from black to white, accounting for the characteristics of the scanner and printer.

Scanner gamma correction corrects the data output to the IPU to account for the characteristics of the scanner (e.g., CCD response, scanner optics).

Printer gamma correction corrects the data output from the IPU to the laser diode to account for the characteristics of the printer (e.g., the characteristics of the drum, laser diode, and lenses).

The data for the scanner and printer gamma correction are fixed and stored in the memory. There are no SP adjustments in this machine.

Gradation processing

These are four types of gradation processing:

1. Grayscale processing: This has 256 output levels for each pixel. When the optional image enhancement kit (HDD) is installed, the binary picture processing mode cannot be selected.
2. Binary picture processing: This has only two output levels (black and white)., and is used only in memory copying (only without HDD) and fax transmission.
3. Error diffusion: In text/photo mode, this is used with either grayscale processing or binary processing.
4. Dithering: In photo mode, this is used with either grayscale processing or binary processing

These four processes are used as follows.

1. Grayscale processing mode

Text mode	Grayscale processing
Text/photo mode:	Error diffusion (256 levels)
Photo mode:	Dithering (256 levels)
Copied original mode:	Grayscale processing + line width correction
Low density original mode	Grayscale processing

2. Binary picture processing mode

Text mode:	Binary picture processing
Text/photo mode:	Error diffusion (2 levels)
Photo mode:	Dithering (2 levels)

The above information is expressed as a diagram in the Image Processing Path section.

Grayscale processing

As stated on the previous page, this process generates up to 256 image density levels for each pixel. To realize this, this machine uses a form of pulse width modulation. In this machine, pulse width modulation consists of the following processes:

- Laser diode pulse positioning
- Laser diode power/pulse width modulation

Laser diode power and pulse width modulation is done by the laser diode drive board (LDDR). Briefly, the width of the laser pulse for a pixel depends on the output level (from 0 to 255) required for the pixel.

This machine can also change the laser pulse position (at the left side of the pixel, at the center, or at the right side) automatically, depending on the location of the image pixel so that the edges of characters and lines become clearer. There is no SP mode adjustment for this, unlike in some earlier models.

Binary picture processing

Each video signal level is converted from 8-bit to 1-bit (black and white image data) in accordance with a threshold value.

The threshold value can be adjusted with SP 4-904-12.

Error diffusion

This is used only in text/photo mode.

The error diffusion process reduces the difference in contrast between light and dark areas of a halftone image. Each pixel is corrected using the difference between it and the surrounding pixels. The corrected pixels are then compared with an error diffusion matrix. Separate error diffusion matrixes are used for copy mode and fax mode.

1. Grayscale processing mode

   The output image signal level has 9 levels (from white to black). There is only one matrix available.

2. Binary picture processing mode

   The output image signal level has just 2 levels (white and black).

Dithering

This is only used in photo mode.

Each pixel is compared with a pixel in a dither matrix. Several matrixes are available, to increase or decrease the detail on the copy.

1. Grayscale processing mode
   The matrix type can be selected with SP4-904-2.
2. Binary picture processing
   The matrix type can be selected with SP4-904-18.

Line width correction

This function is effective only in copied original mode.

Usually, lines will bulge in the main scan direction as a result of the negative/positive development system that is used in this model. So, pixels on edges between black and white areas are compared with adjacent pixels, and if the pixel is on a line, the line thickness will be reduced.

The line width correction is done in the IPU chip.

The line width correction type can be selected with SP4-904-6.

2.2.5 MEMORY BLOCK

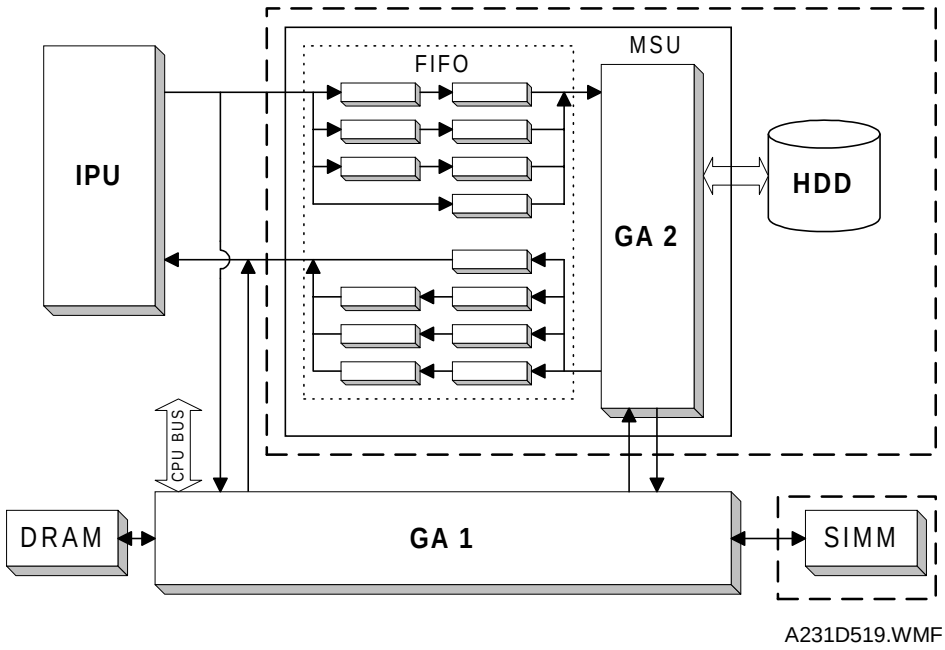

A231D519.WMF

The memory block consists of the GA1 IC, GA2 IC, DRAM, SIMM, and the hard disk drive. The functions of each device are as follows.

GA 1:	Compressing the 1-bit image data Image rotation Image transfer to the DRAM, SIMM memory and GA 2
GA 2:	Compressing the 8-bit image data Image rotation Image data transfer to the HDD, FIFO memory, and GA1 Controls the HDD
DRAM (4 MB):	Stores compressed data in grayscale and binary picture processing mode. Page memory (2 MB), working area (2 MB)
SIMM memory (8 MB):	Stores compressed data with grayscale and binary picture processing mode. In binary picture processing mode, all the memory capacity is used for storing the image data. At this time, the DRAM is used for a working area.
Hard Disk Drive:	Stores compressed data in grayscale mode and stores archive file data.

Image compression is done for both gradation modes (grayscale and binary picture processing) and the compressed data is stored. However, there are limitations in copy mode, depending on the memory capacity and the installed memory components, as follows. DRAM is standard, but the SIMM and HDD are options.

Copy Mode	Gradation Processing	DRAM (4 MB)	DRAM + SIMM (4 + 8 MB)	DRAM + SIMM + HDD (12MB+1.6 GB)
One-to-one	Binary/Grayscale	O / O	O / O	X / O
Multiple copy of single page original	Binary/Grayscale	O / O	O / O	X / O
Multiple copy of multi-page original	Binary/Grayscale	O / X	O / O	X / O
Duplex Copy	Binary/Grayscale	X / X	O / X	X / O
Sort	Binary/Grayscale	X / X	O / X	X / O
Image Rotation	Binary/Grayscale	O / X	O / O	X / O

Key:
O / O: Possible in both binary and grayscale mode if this equipment is installed
O / X: Possible only in binary mode if this equipment is installed
X / O: Possible only in grayscale mode if this equipment is installed
X / X: Not possible in either mode

Example: Multiple copy of multi-page original is impossible with greyscale processing if only the DRAM is installed

Note that the SIMM is standard equipment for the NAD30 and NAD40.

Binary picture processing mode

The data which was treated with binary picture processing goes to the GA1 IC. The data is first compressed and the compressed data is stored in the DRAM and SIMM memory. When printing, the data from the DRAM and SIMM memory goes back to the GA1 IC, where the data is decompressed and image editing is done (e.g., image rotation, repeat image, combine image).

Grayscale processing moder

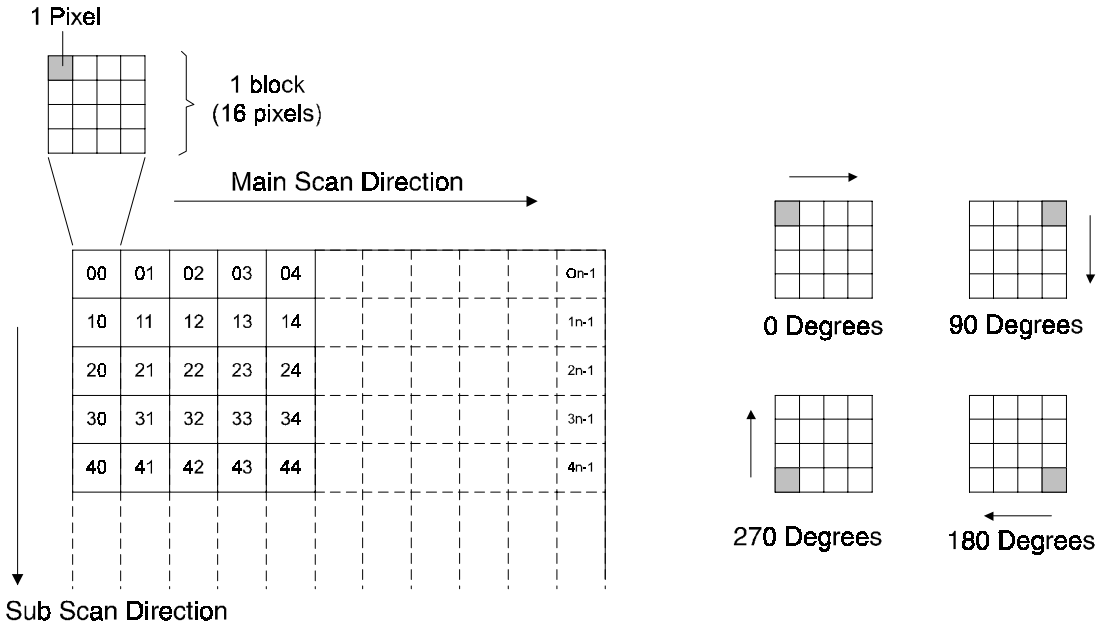

The image data from the IPU first goes to the FIFO block. This block consists of 14 FIFO memories (7 for data input, 7 for data output). FIFOs are used because the image compression is done using four scan lines at the same time to improve the image compression speed.

The image data then goes to the GA2 IC, where the image data for a whole page is divided into many blocks (the block size is 4 x 4 pixels) as shown above left. Then, each block is compressed and sent to HDD, DRAM and SIMM memory. For printing, the compressed data blocks from the HDD, DRAM and SIMM memory go back to the GA2 IC. This IC assigns these blocks to the proper positions for printing, then the data blocks are decompressed. In the image rotation mode, each compressed data block is rotated into the correct orientation and mapped into the proper position, then the blocks are decompressed.

2.2.6 FCI (FINE CHARACTER IMAGE)

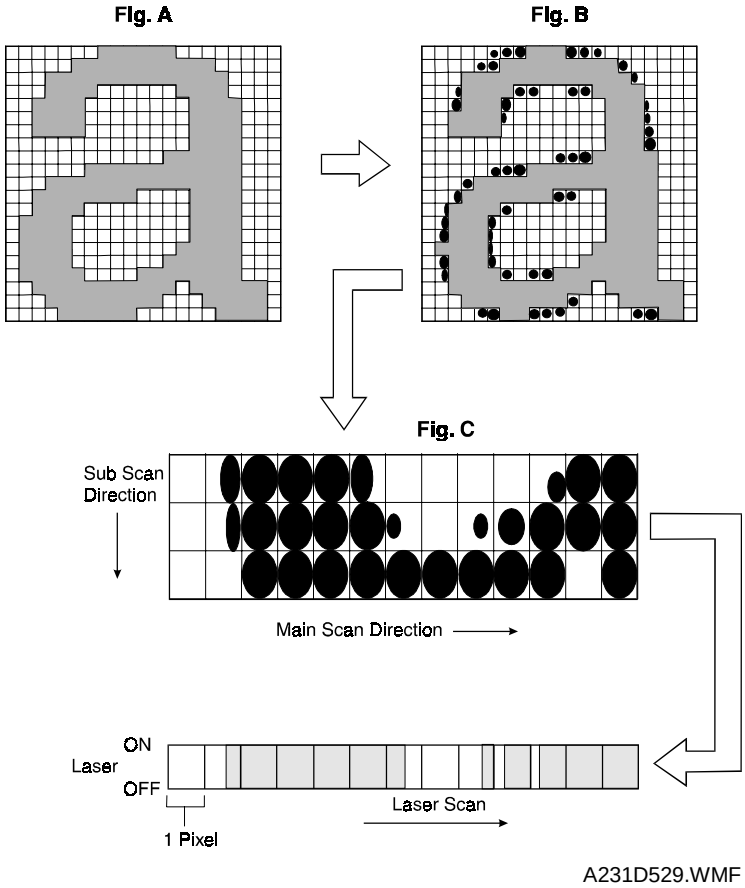

The FCI chip on the LDDR performs image smoothing only in binary picture processed image with Letter mode.

Usually, binary picture processing generates jagged edges on characters as shown in the above left illustration. The FCI reduces jagged edges of characters using the image smoothing process.

Whether or not the object pixel undergoes smoothing depends on the surrounding image data. The smoothing process for the object pixel is done by changing the laser pulse positioning and the laser power.

2.3 LASER EXPOSURE

2.3.1 OVERVIEW

This machine uses two laser diodes to produce electrostatic images on an OPC drum. The laser diode unit converts image data from the BICU board into laser pulses, and the optical components direct these pulses to the drum.

To produce a high quality copy image, these are 256 gradations for the laser pulses, controlled through power modulation (32 levels) and pulse width modulation (8 levels).

Exposure of the drum by the laser beam creates the latent image. The laser beam makes the main scan while drum rotation controls the sub scan.

The combined strength of both beams is 0.336 mW (NAD30S and NAD30), 0.430 mW (NAD40) on the drum surface at a wavelength of 780 nm.

The polygon motor speed is as follows.

Resolution	Modes	Motor Speed (rpm)		1 line cycle (μs)	
		NAD30S/ NAD30	NAD40	NAD30S/ NAD30	NAD40
400 dpi	Copy, Fax	Approx. 14170	Approx. 18110	353	276
600 dpi	Printer	Approx. 21260	Approx. 27170	235	184
391.2 dpi	Fax (image rotation)	Approx. 14400	Approx. 18400	694	543
406.4 dpi	Fax (mm printing)	Approx. 13860	Approx. 17710	361	282

In previous models, the mirror speed increased for higher resolutions. However, for this machine, the line cycle (time taken to output one main scan line of data to the laser diode) varies also, so there is no simple relationship between resolution and mirror speed.

2.3.2 OPTICAL PATH

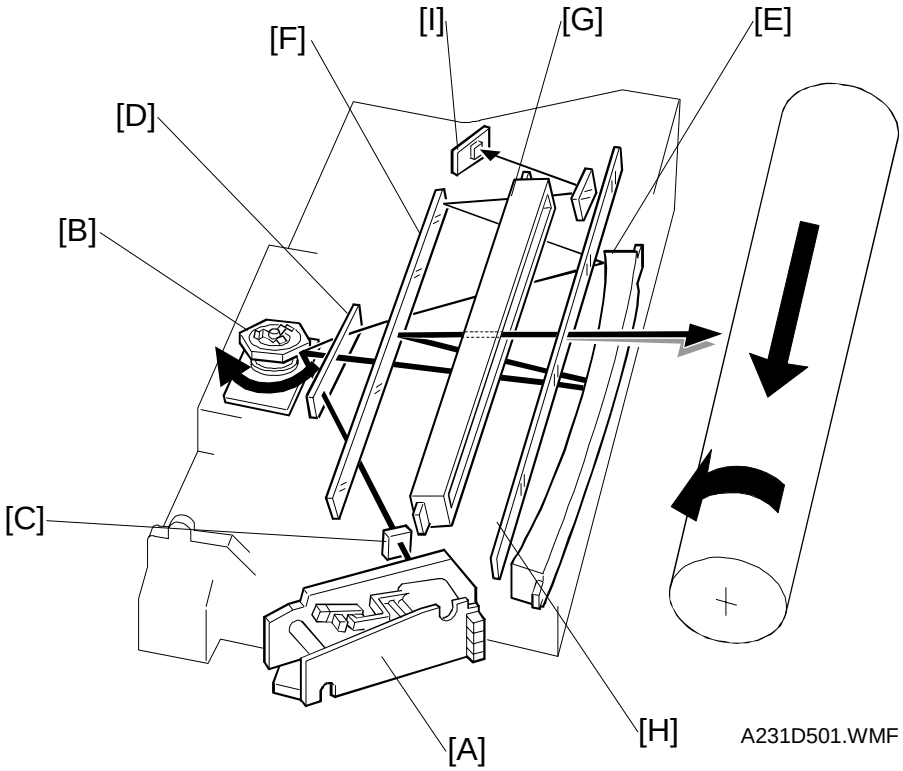

The output path from the laser diode to the drum is shown above.

The LD unit [A] outputs two laser beams to the polygon mirror [B] through the cylindrical lens [C] and the shield glass [D].

Each surface of the polygon mirror reflects two full main scan lines. The laser beams go to the F-theta mirror [E], mirror [F], and BTL (barrel toroidal lens) [G]. Then these laser beams go to the drum through the toner shield glass [H].

The laser synchronizing detector [I] determines the main scan starting position.

2.3.3 AUTO POWER CONTROL (APS)

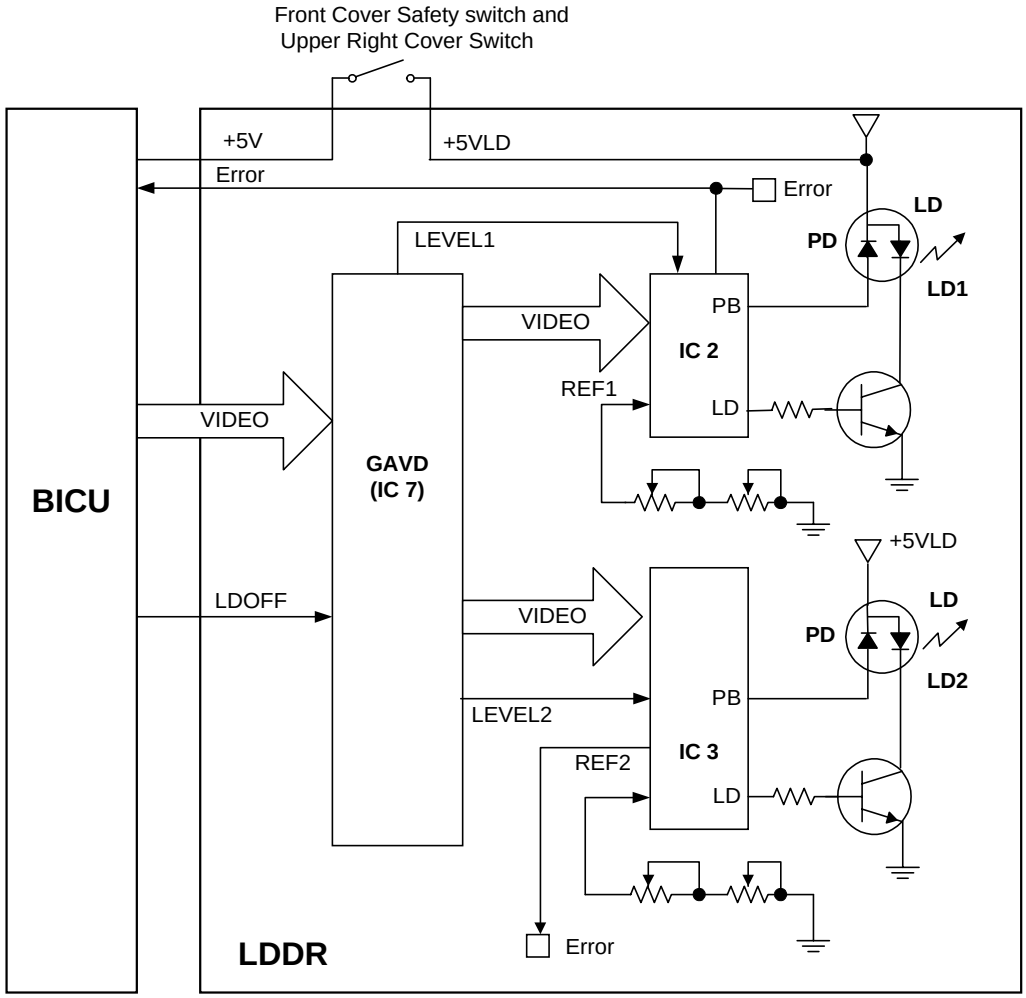

A231D502.WMF

IC2 and IC3 on the LDDR drive the laser diodes. Even if a constant electric current is applied to the laser diode, the intensity of the output light changes with the temperature. The intensity of the output decreases as the temperature increases.

In order to keep the output level constant, IC2 and IC3 monitor the current passing through the photodiode (PD). Then they increase or decrease the current to the laser diode as necessary, comparing it with the reference levels (REF1 and REF2). This auto power control is done just after the machine is turned on and during printing while the laser diode is active.

The reference levels are adjusted on the production line. Do not touch the variable resistors on the LDDR in the field.

2.3.4 DUAL BEAM WRITING

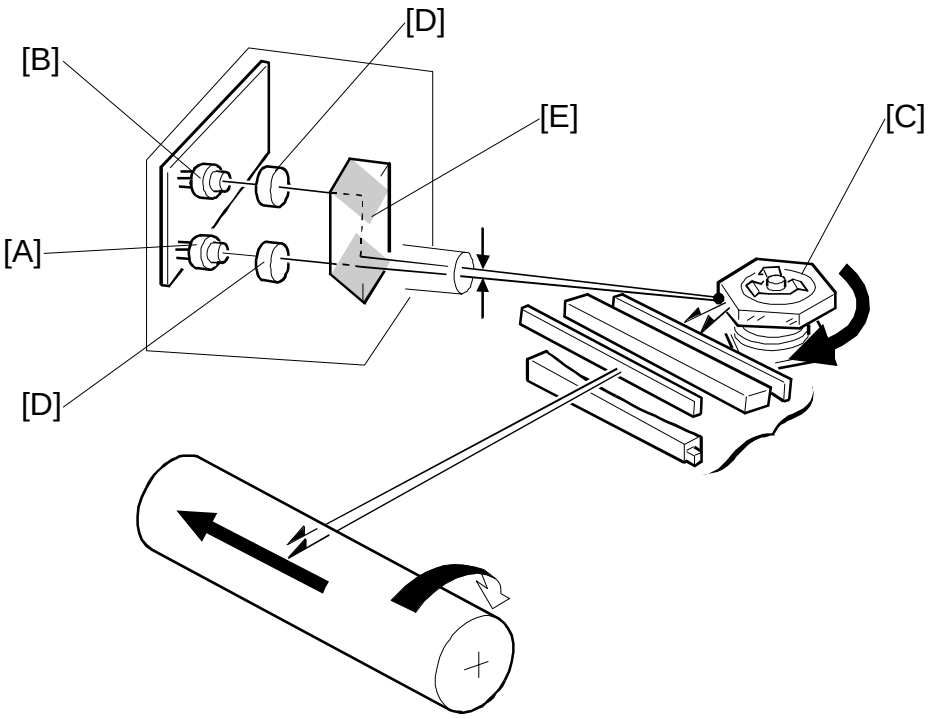

A230D203.WMF

This LD unit has two laser diodes; LD1 [A] and LD2 [B] for writing the image. This means that each face of the polygon mirror writes two main scan lines, and twelve main scans are produced when the polygon mirror rotates once. The reasons for this mechanism are as follows.

1) To reduce the polygon motor rotation speed
2) To reduce the noise generated by the polygon motor
3) To reduce the frequency of the image data clock

Two laser beams are transferred to the polygon mirror [C] through collimating lens [D] and prism [E]. The two laser beams arrive on the drum surface about 2 mm away from each other in the main scan direction and about 0.06 mm (at 400 dpi) in the sub scan direction (see the next page).

The reason for the two-mm difference in the main scan direction is so that the machine can detect a laser synchronization signal for each beam.

2.3.5 LASER BEAM PITCH CHANGE MECHANISM

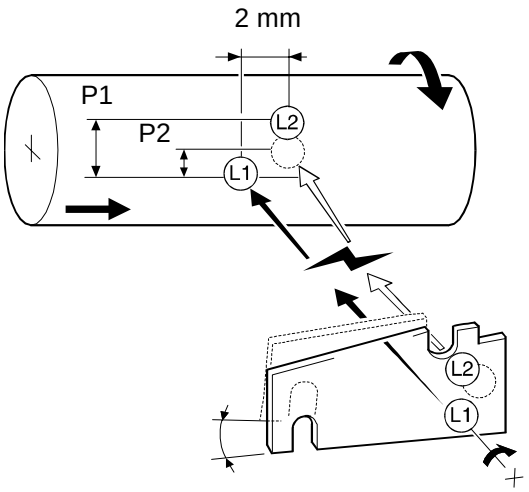

A230D204.WMF

P1: 400 dpi
P2: 600 dpi

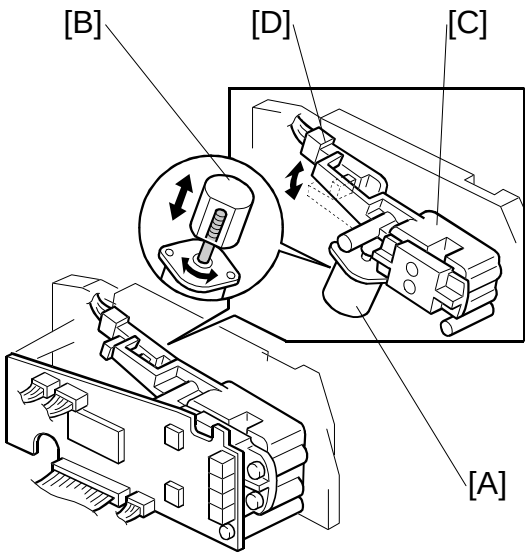

A231D503.WMF

A printer option is available for this machine and the resolution of the printer is 600 dpi. The machine changes the resolution between 400 and 600 dpi by rotating the LD unit.

When the LD positioning motor [A] turns, the metal block [B] (which contacts the LD unit housing [C]) moves up and down. This changes the position of the L2 laser beam (L1 does not move).

Both LD unit positions are at fixed distances from the LD home position sensor [D] (measured by motor pulses). Usually, the LD unit moves directly to the proper position. However, when the number of times that the resolution has changed reaches the value of SP2-109-5, the LD unit moves to the home position (the home position sensor activates), then it moves to the proper position. This recalibrates the LD unit positioning mechanism.

2.3.6 LD SAFETY SWITCHES

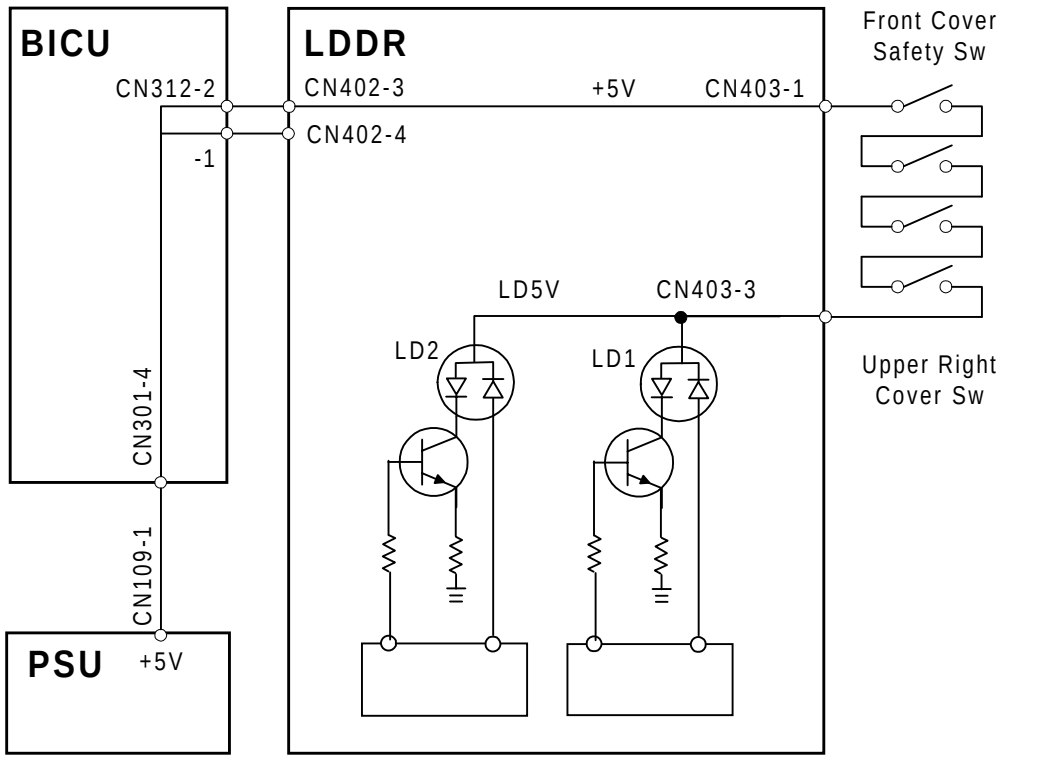

To ensure technician and user safety and to prevent the laser beam from inadvertently switching on during servicing, there are four safety switches located at the front cover and upper right cover. These four switches are installed in series on the LD5 V line coming from the power supply unit (PSU) through the BICU board.

When the front cover or the upper right cover is opened, the power supply to the laser diode is interrupted.

2.4 PHOTOCONDUCTOR UNIT (PCU)

2.4.1 OVERVIEW

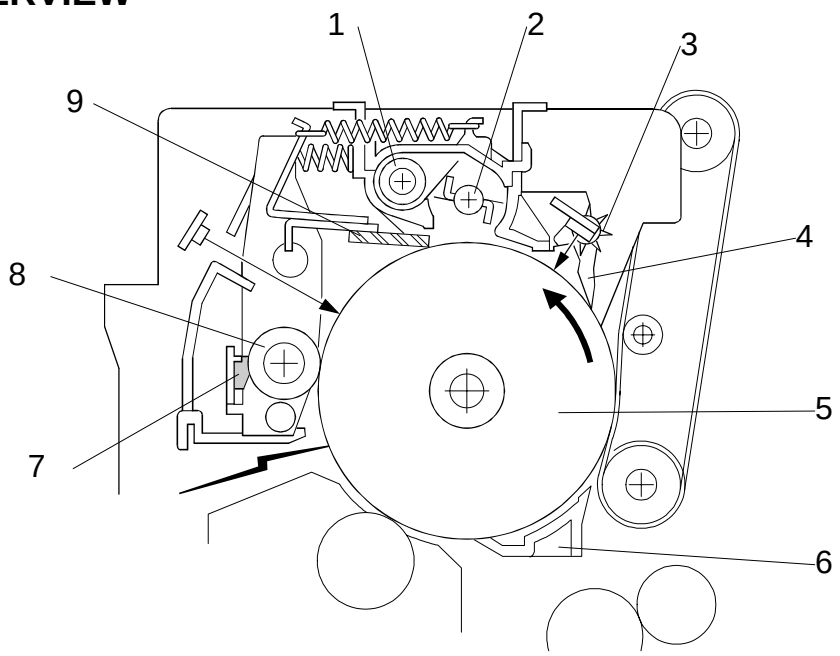

A230D301.WMF

The PCU consists of the components shown in the above illustration. An organic photoconductor (OPC) drum (diameter: 60 mm) is used in this machine.

1. Toner Collection Coil
2. Toner Collection Plate
3. Spur
4. Pick off Pawl
5. OPC Drum
6. Transfer Entrance Guide
7. Charge Roller Cleaning Pad
8. Charge Roller
9. Cleaning Blade

2.4.2 DRIVE MECHANISM

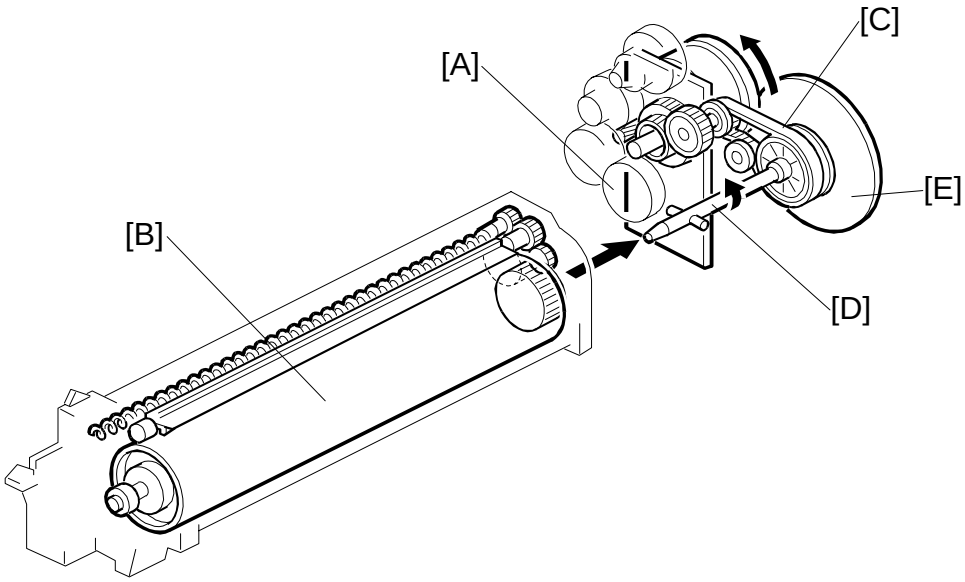

A230D302.WMF

The drive from the main motor [A] is transmitted to the drum [B] through a series of gears, a timing belt [C], and the drum drive shaft [D]. The main motor has a drive controller, which outputs a motor lock signal when the rotation speed is out of the specified range.

The fly-wheel [E] on the end of the drum drive shaft stabilizes the rotation speed (this prevents banding and jitter from appearing on copies).

The NAD40 has two flywheels because of the higher speed.

2.5 DRUM CHARGE

2.5.1 OVERVIEW

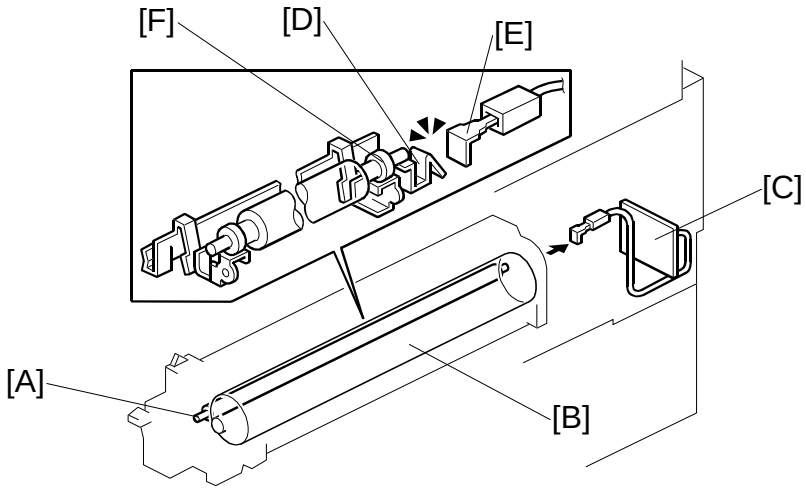

A231D525.WMF

This copier uses a drum charge roller instead of a scorotron corona wire to charge the drum. The drum charge roller [A] always contacts the surface of the drum [B] to give it a negative charge.

The high voltage supply board [C] gives a negative dc voltage to the drum charge roller through the charge roller terminal [D], bias plate [E], and the rear roller bushing [F]. This gives the drum surface a negative charge of –950V.

2.5.2 CHARGE ROLLER VOLTAGE CORRECTION

Correction for Environmental Conditions

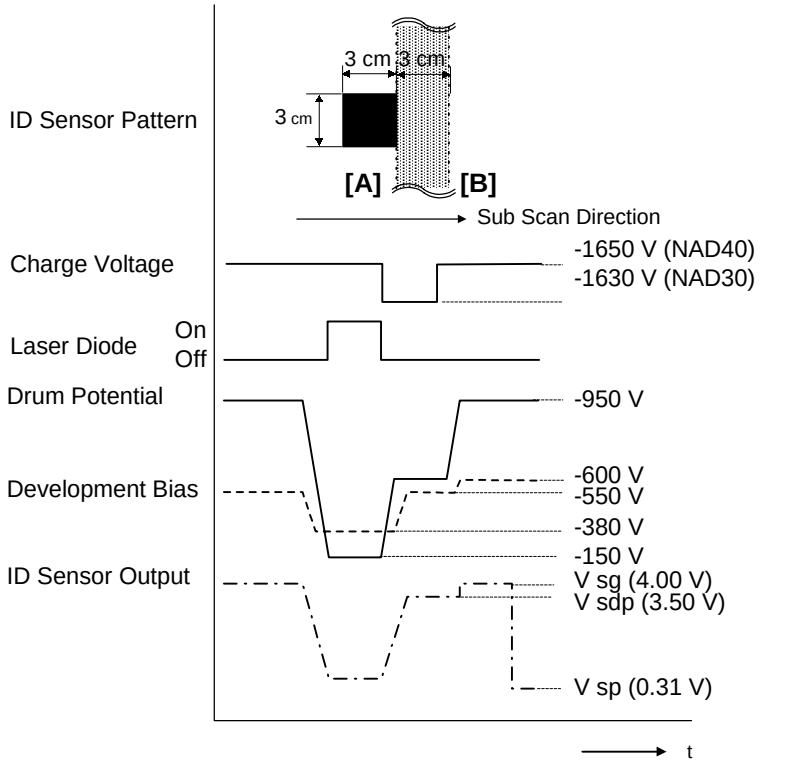

A231D506.WMF

In the drum charge roller system, the voltage transferred from roller to drum varies with the temperature and humidity around the drum charge roller. The lower the temperature or humidity is, the higher the applied voltage required.

To compensate, the machine uses the ID sensor to measure the effects of current environmental conditions. For this measurement, the process control parameters are balanced so that any small change in drum potential caused by environmental effects is reflected in a change in the amount of toner transferred to the drum.

This measurement is made immediately after the ID sensor pattern for toner density control. Immediately after making ID sensor pattern [A], the charge roller voltage drops so that drum potential is reduced to -600V. At the same time, development bias goes back to -550V. The drum potential is now slightly higher than the development bias, so only a very small amount of toner transfers to the drum. The ID sensor measures the density of this pattern [B], and the output voltage is known as Vsdp. This voltage is compared with Vsg (read from the bare drum at the same time).

If the humidity drops, the drum potential goes up even if the charge roller voltage supply stays the same (efficiency of voltage transfer decreases with increased humidity). As a result, more toner is transferred to ID sensor pattern [B]. If the sensor output reaches a certain point, the drum charge voltage will be reduced. To determine whether to change the drum charge roller voltage, the machine compares Vsdp with Vsg.

- Vsdp / Vsg > 0.90 = Reduce the drum charge voltage by 30 V
- Vsdp / Vsg < 0.85 = Increase the drum charge voltage by 30 V

NOTE: The minimum drum charge roller voltage is – 2 kV.

Correction for paper width and thickness (bypass tray only)

The bypass tray can be used for narrower paper than the paper trays. Also, thicker paper can be used, as well as OHP sheets. In these cases, some copy quality problems may occur.

To deal with this, the charge roller voltage can be increased for paper fed from the bypass tray. The voltage corrections are adjusted with SP 2-914-1 and 2. The width thresholds for these adjustments can be adjusted with 2-309-1 and 2-309-2.

Charge roller input voltages

Paper width from 216 mm to 297 mm: SP2-001-1
Paper width from 150 mm to 216 mm: SP2-001-1 + 50 V (adj. with SP2-914-2)
Paper width below 150 mm: SP2-001-1 + 250 V (adj. with SP2-914-1)

Paper width limits

150 mm limit: SP2-309-1
216 mm limit: SP2-309-2

Similar voltage adjustments are available for development bias and transfer current.

2.5.3 ID SENSOR PATTERN PRODUCTION TIMING

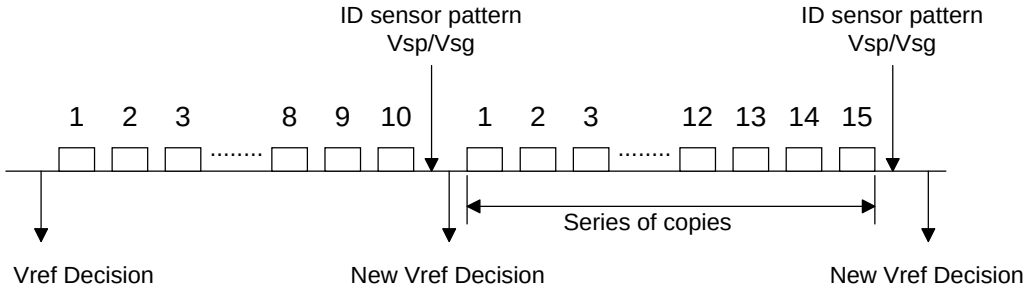

A231D535.WMF

An ID sensor pattern is made during the machine initialization (after the main power switch or operation switch is turned on) and after finishing a copy job in which 10 (this is the default value) or more copies were made.

2.5.4 DRUM CHARGE ROLLER CLEANING

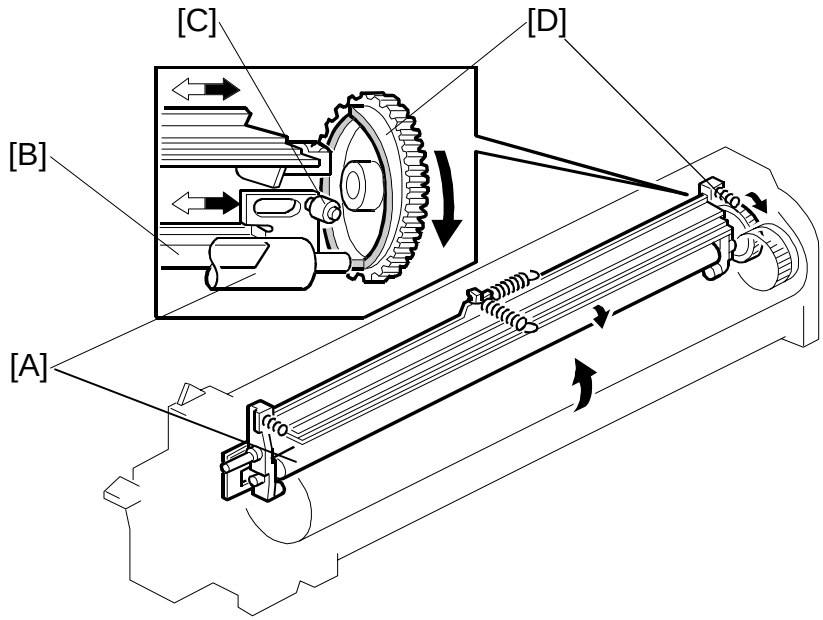

A230D303.WMF

Because the drum charge roller [A] always contacts the drum, it gets dirty easily. So, the cleaning pad [B] also contacts the drum charge roller all the time to clean the surface of the drum charge roller.

The pin [C] at the rear of the cleaning pad holder touches the cam gear [D], and this gear moves the cleaning pad from side to side. This movement improves the cleaning.

2.6 DEVELOPMENT

2.6.1 OVERVIEW

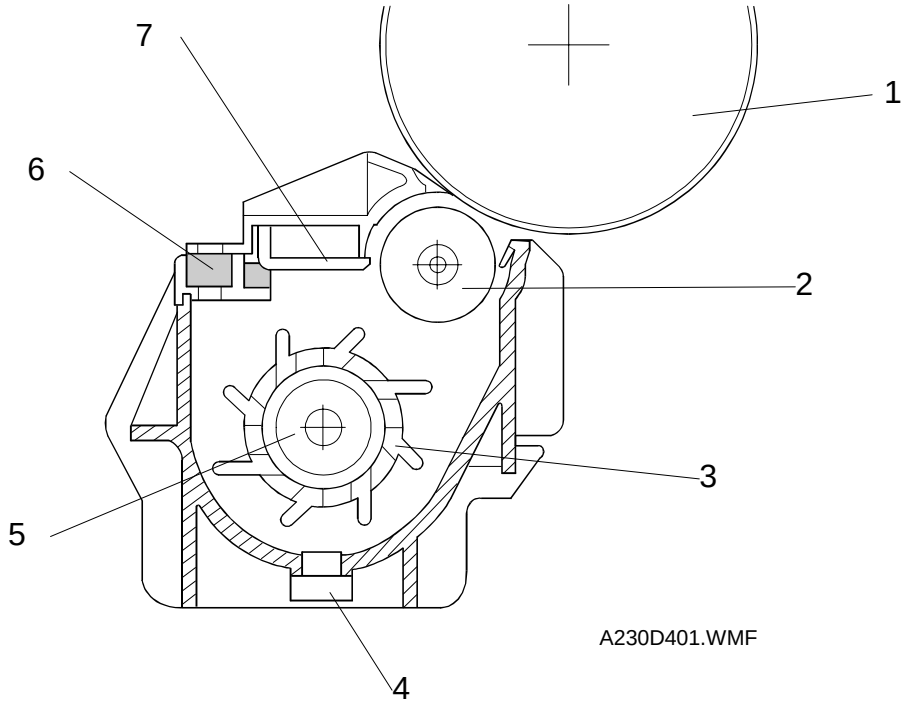

This machine uses a single-roller development system. A dual mixing roller mechanism is used for developer mixing.

1. Drum
2. Development Roller
3. Paddle Roller
4. TD Sensor
5. Mixing Auger
6. Development Filter
7. Doctor Blade

2.6.2 DRIVE MECHANISM

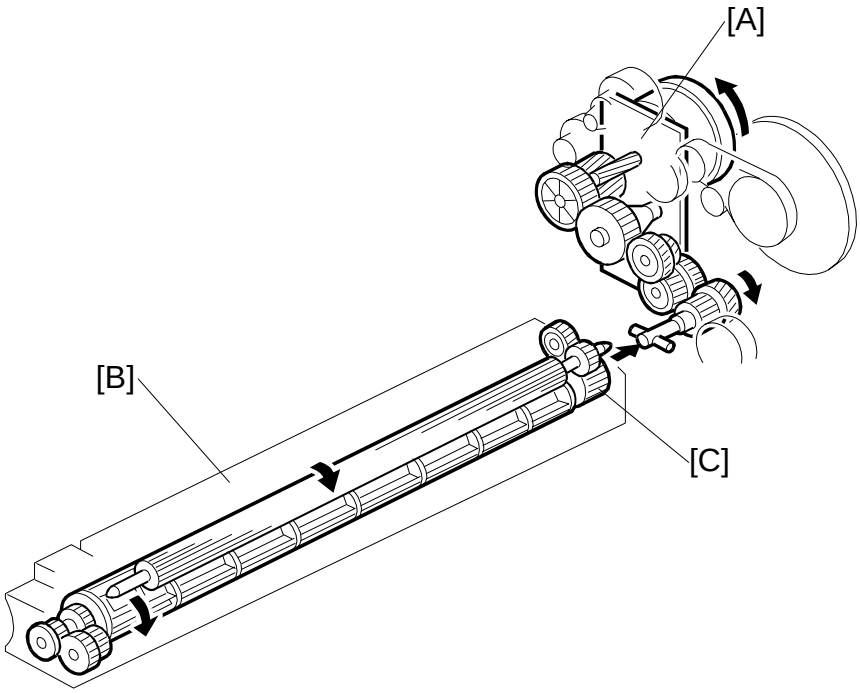

A230D402.WMF

The main motor [A] drives the development roller [B] through a train of gears and the paddle roller gear [C].

The development drive gears are helical gears. These gears are quieter than normal gears.

When the development unit is pushed in, the development drive shaft engages the paddle roller gear.

2.6.3 DEVELOPER MIXING

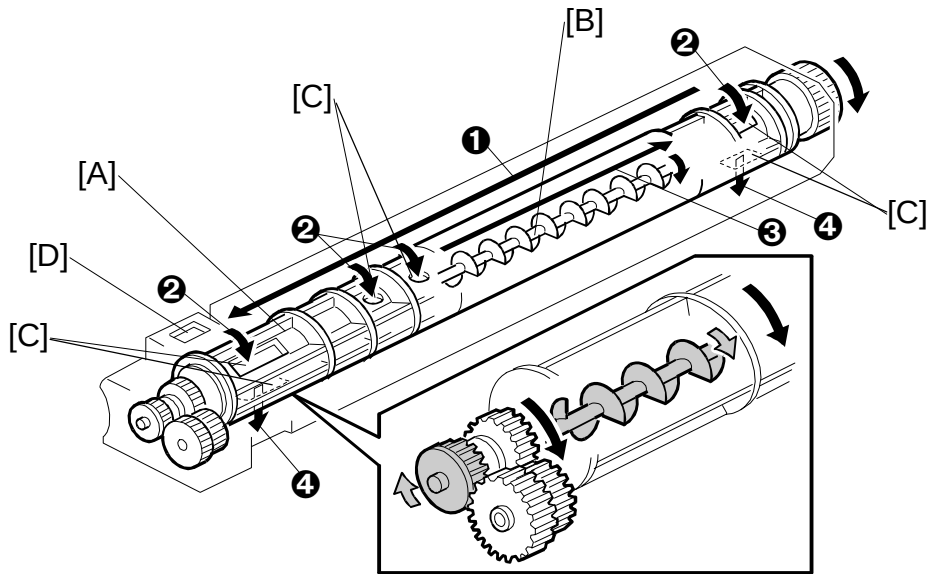

A230D403.WMF

This mechanism supplies toner from the toner bottle to the development roller.

The dual mixing roller consists of the outer paddle [A] and the inner auger [B]. The outer paddle moves developer to the front ❶ and supplies it to the development roller. The developer that is spilt off by the doctor blade ❷ goes through the holes [C] in the outer paddle, and is transported towards the rear ❸ by the inner auger. While the dual mixing roller is moving the developer, some developer also goes back to the development unit through the holes in the bottom of the paddle roller ❹.

New toner from the toner bottle and recycled toner from the toner collection coil both enter the development unit at the top [D]

2.6.4 DEVELOPMENT BIAS

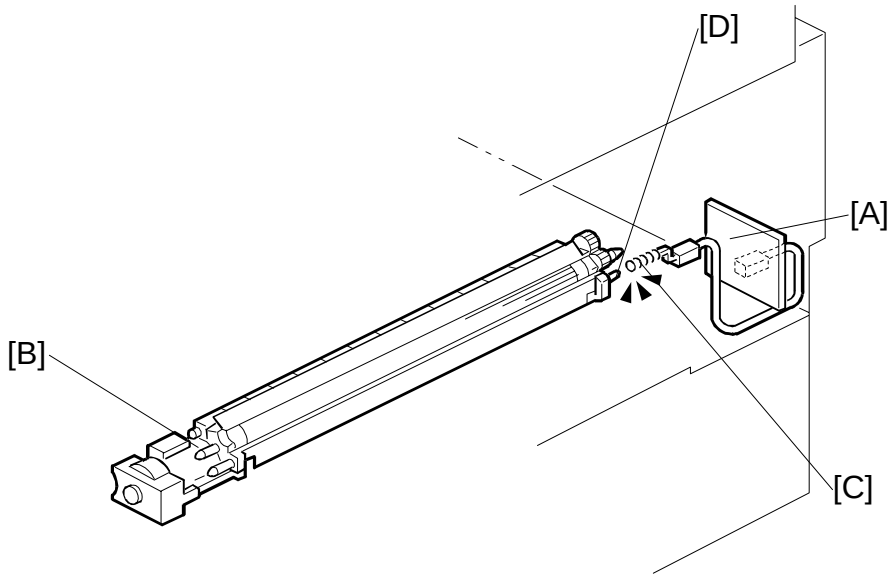

A230D404.WMF

This machine uses a negative-positive development system, in which black areas of the latent image are at a low negative charge (about -150 V) and white areas are at a high negative charge (about -950 V).

To attract negatively charged toner to the black areas of the latent image on the drum, the high voltage supply board [A] applies a bias of -600 volts to the development roller throughout the image development process. The bias is applied to the development roller shaft [B] through the bias terminal spring [C] and bias terminal [D].

The development bias voltage (-600 V) can be adjusted with SP2-201.

Correction for paper width and thickness (bypass tray only)

The bypass tray can be used for narrower paper than the paper trays. Also, thicker paper can be used, as well as OHP sheets. In these cases, some copy quality problems may occur.

To deal with this, the development bias can be increased for paper fed from the bypass tray. The voltage corrections are adjusted with SP 2-914-3 and 4. The width thresholds for these adjustments can be adjusted with 2-309-1 and 2-309-2.

Development bias voltages

Paper width from 216 mm to 297 mm: SP2-201-1
Paper width from 150 mm to 216 mm: SP2-201-1 + 50 V (adj. with SP2-914-4)
Paper width below 150 mm: SP2-201-1 + 200 V (adj. with SP2-914-3)

Paper width limits

150 mm limit: SP2-309-1, 216 mm limit: SP2-309-2

Similar voltage adjustments are available for charge roller input voltage and transfer current.

2.6.5 TONER SUPPLY

Toner bottle replenishment mechanism

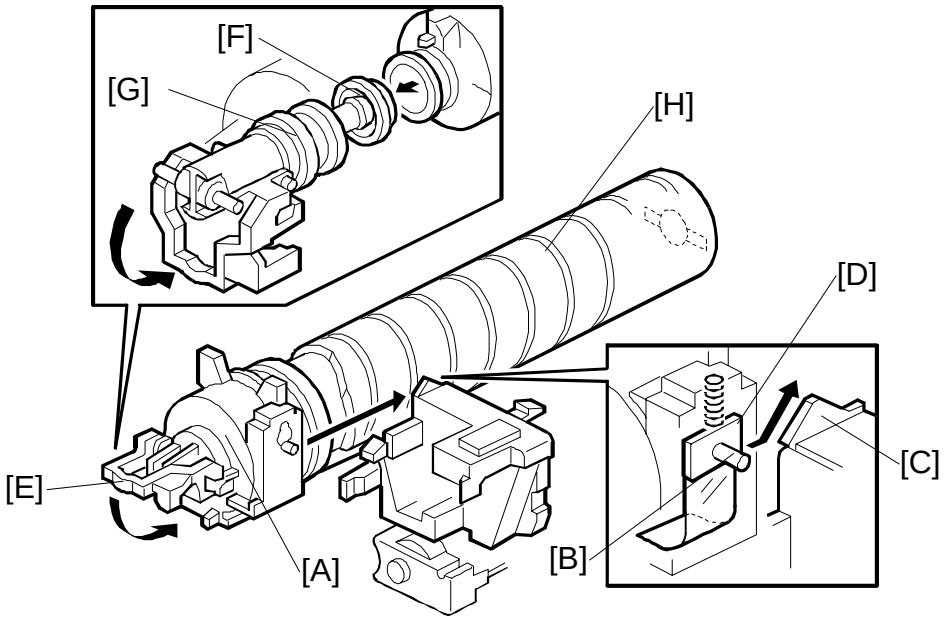

A231D504.WMF

When a toner bottle is placed in the bottle holder unit [A] and the unit is pushed in completely, pin [B] moves against the side [C] of the PCU, and the toner shutter [D] is pulled out to open the bottle. When the toner bottle holder lever [E] is put back in the original position, the cap [F] on the toner bottle is pulled away and kept in place by the chuck [G].

The toner supply mechanism transports toner from the bottle to the development unit. The toner bottle has a spiral groove [H] that helps move toner to the development unit.

When the bottle holder unit is pulled out to add a new toner bottle, the following happens automatically to prevent toner from scattering.

- The chuck releases the toner bottle cap into its proper position.
- The toner shutter shuts to block the opening as a result of pressure from a spring.

Toner supply mechanism

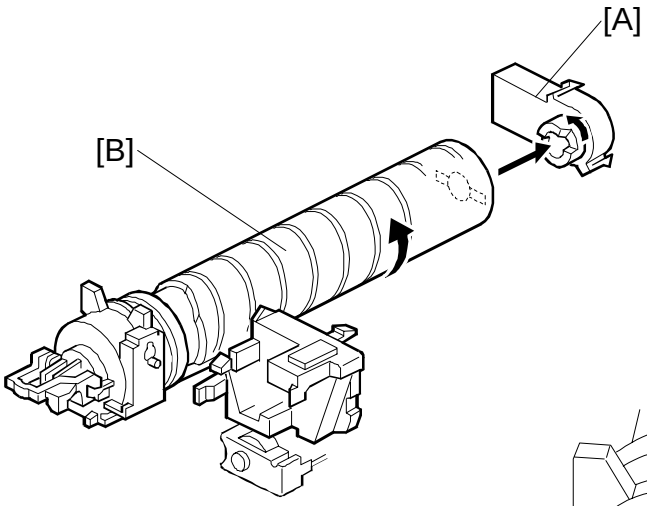

A231D505.WMF

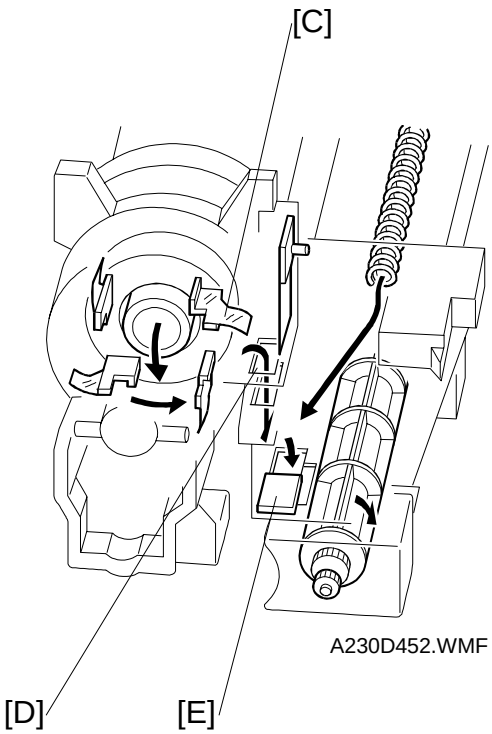

A230D452.WMF

The toner supply motor [A] drives the toner bottle [B] and the mylar blades [C]. First, the toner falls down into the toner bottle holder. The toner supply mylar blades transfer the toner to the slit [D]. When the PCU is installed into the machine, the shutter [E] under the PCU is opened by the development unit. Then the toner falls down into the development unit through the slit and the shutter.

2.6.6 TONER DENSITY CONTROL

Overview

There are two modes for controlling toner supply: sensor control mode and image pixel count control mode. The mode can be changed with SP2-208-1. The factory setting is sensor control mode. Image pixel count mode should only be used if the TD or ID sensor is defective.

Toner Density Control Flow Chart

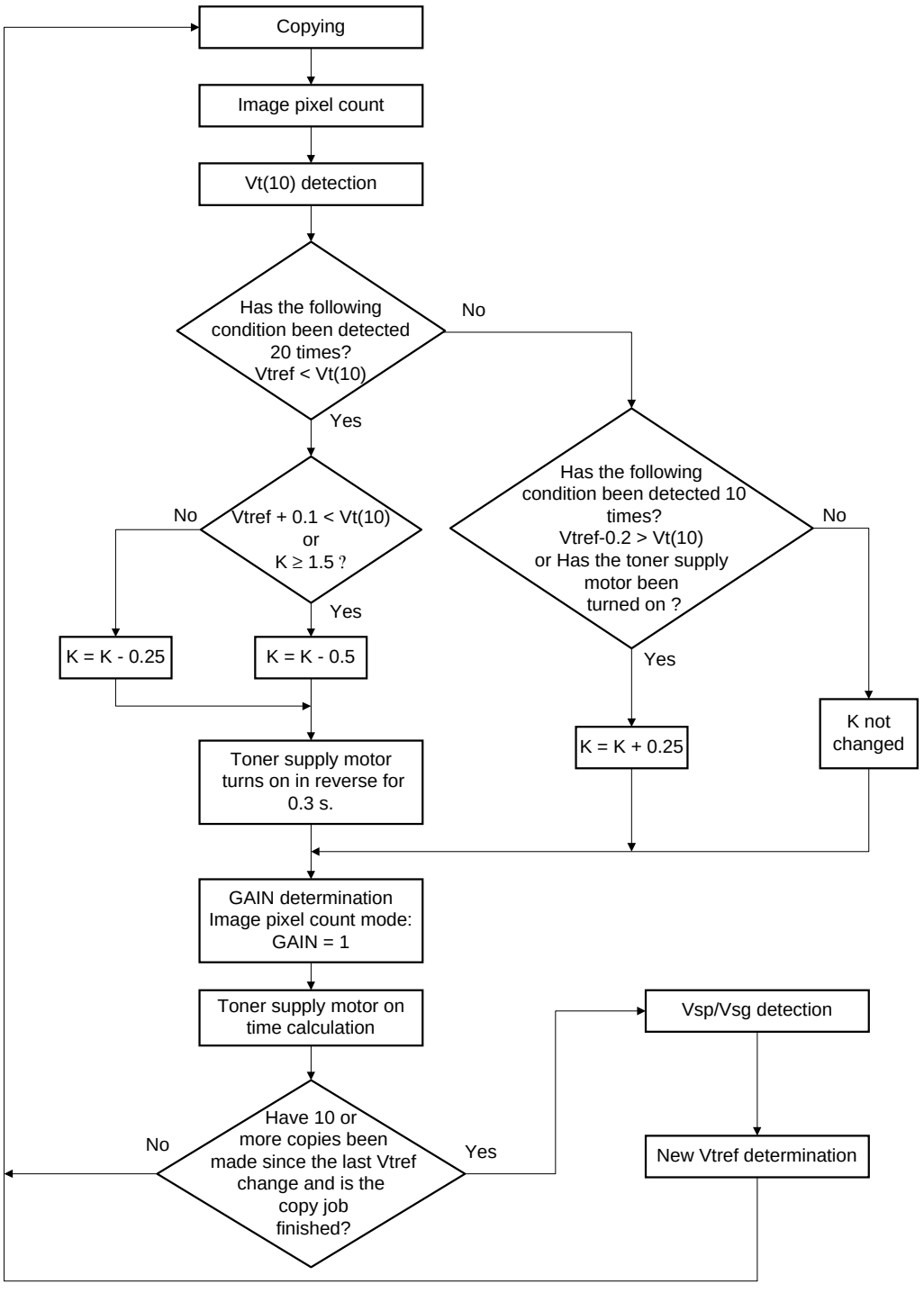

A231D540.WMF

Sensor Control Mode

In sensor control mode, the machine varies toner supply for each copy, to maintain the correct proportion of toner in the developer and to account for changes in drum reflectivity over time. The adjustment depends on two factors

- The amount of toner required to print the page (based on a black pixel amount for the page)
- Readings from the TD sensor and ID sensor

Each step of the previous flow chart is explained in more detail on the following pages.

Toner density sensor initial setting

When new developer with the standard toner concentration is installed (12.5 g of toner in 500 g of developer, which is 2.5% by weight), TD sensor initial setting must be done using SP2-801. This sets sensor output to 4.0V. This value will be used as the toner supply reference voltage (Vtref) of the TD sensor.

Image pixel count

The CPU adds up the image data value of each pixel and converts the sum to a value between 0 and 255. (The value would be 255 if the page was completely black.)

Vt(10) detection

The toner density in the developer is detected once every copy cycle. The sensor output voltage Vt(10) is the average of the 10 most recent sensor output voltage readings.

Toner density measurement

The machine compares Vt(10) and Vtref. If Vt(10) is greater than Vtref, the toner concentration in the development unit is low and more toner should be added.

When Vt(10) > Vtref has been detected 20 times (toner concentration is consistently low), 0.1 is added to Vref, and the conditions are checked again. The result decides the value of “K” (toner supply rate coefficient), which is one of the factors in the toner supply motor on time calculation.

If Vt(10) > Vtref has not been detected 20 times, 0.2 is subtracted from Vtref, and “K” is decided in a similar way as for the previous condition.

GAIN determination

GAIN is another factor in the toner supply motor on time calculation. It is decided using the following data.

- Vtref – Vt(10)
- Ten most recent Vt values

Toner supply motor on time calculation

The toner supply motor on time is decided using the following formula:

$$\left[\frac{0.7\text{mg/cm}^2 \times \text{Image Pixel Count} \times \text{Gain}}{\text{Toner Supply Rate} \times K} + \frac{(Vt - Vtref) \times 10{,}000}{\text{Toner Supply Rate} \times K}\right] \quad \text{.....(1)}$$

$$\left[\frac{(255 - \text{Image Pixel Count})}{255} \times \frac{\text{Gain}}{6}\right] \quad \text{.....(2)}$$

NOTE: 1) The toner supply rate can be changed using SP2-209.
2) K = Toner supply rate coefficient (0.25 ~ 3.0: default = 3.0).
3) The bracket (2) in the above formula is only used if Vtref < Vt.
4) The maximum toner supply motor on time is 1.2 s.

Vsp and Vsg detection

The ID sensor (at the lower right area of the drum) detects the following voltages.

- Vsg: The ID sensor output when checking the drum surface.
- Vsp: The ID sensor output when checking the ID sensor pattern.

In this way, the reflectivity of both the drum surface and the pattern on the drum are checked. This compensates for any variations in the reflectivity of the pattern on the drum or the reflectivity of the drum surface.

The ID sensor pattern is made on the drum by the charge roller and laser diodes.

Vsg/Vsp is detected every 10 copies to decide the new Vtref. The Vsg/Vsp detection period can be changed using SP2-210 (the default is 10).

New Vtref determination

Even if the toner concentration in the developer is kept constant by checking the TD sensor, the toner potential (chargeability) and the image density both change with humidity and the amount of toner on the carrier. Therefore, the actual image density, using the ID sensor output, is also used as one of the factors for deciding the new Vtref which is used for toner density control.

The new Vtref is determined using the following data.

- Vtref – Vt(10)
- Vsp/Vsg

From this point, toner density control is done using the new Vtref.

Image Pixel Count Control Mode.

This mode should only be used as a temporary measure while waiting for replacement parts, such as a TD sensor. This mode controls the toner supply amount using the same formula for the toner bottle motor on time. However, the GAIN value is fixed at 1, and the other coefficients, such as “K”, “toner supply rate” keep the values that they had when the toner density control mode was changed over to image pixel count mode.

2.6.7 TONER NEAR END/END DETECTION

Toner near end/end detection flow chart

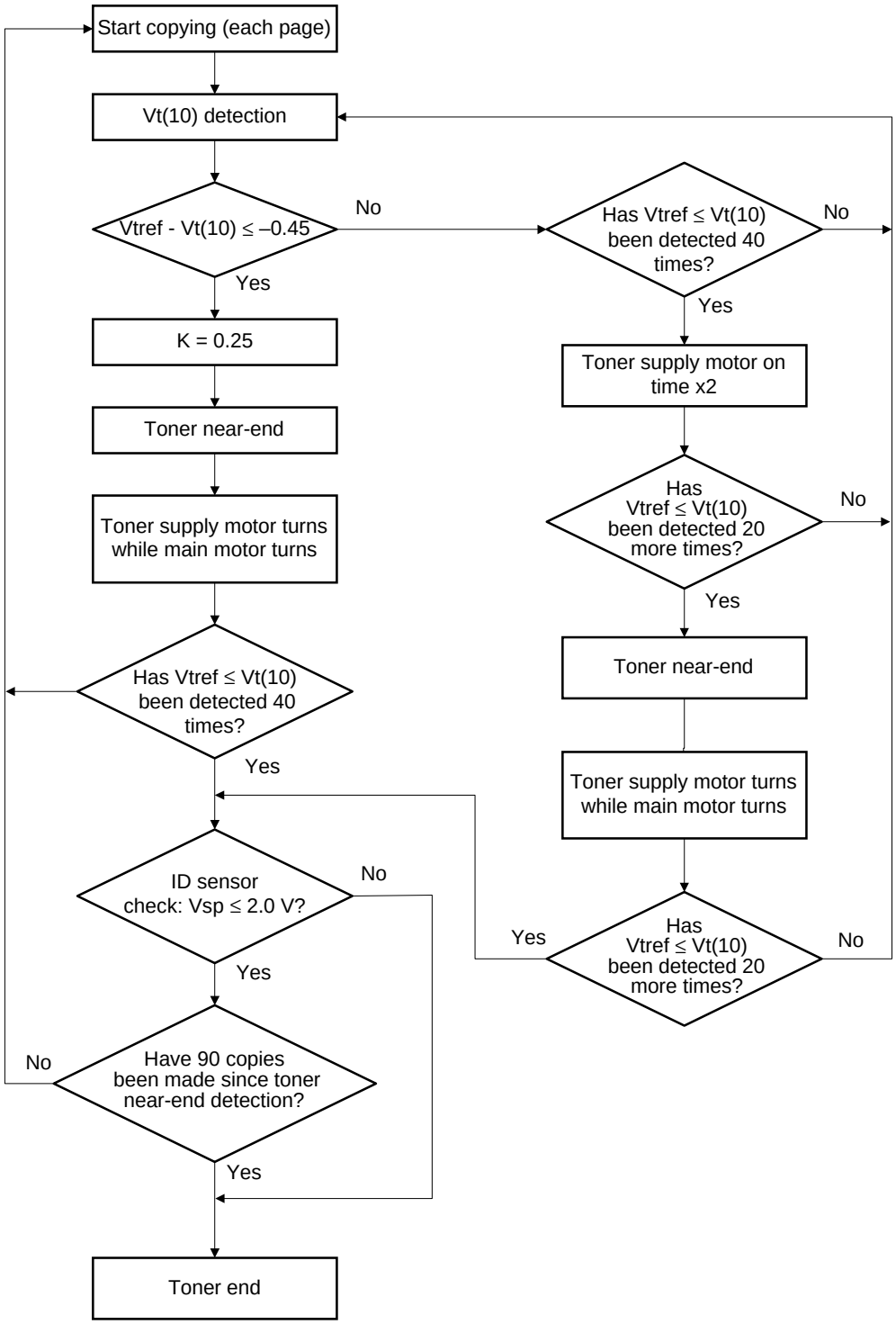

A231D538.WMF

Toner near end is detected using the TD sensor output data.

If Vtref-Vt(10) is less than or equal to -0.45, the toner concentration is very low. “K” becomes 0.25 and the machine enters the toner near end condition. Then, the toner supply motor turns on to supply toner.

If Vtref-Vt(10) is greater than -0.45, the toner concentration is still not terribly low, but the machine does further tests by comparing Vtref and Vt(10). If the machine has detected 40 times that Vt(10) is greater than Vtref, the toner supply motor turns on for double the time that it would be with the previous formula. If the toner concentration is still low, the machine enters the toner near end condition.

Toner end is detected using the ID sensor.

If Vsp is less than 2.0V, the density of the ID sensor pattern is very light, so the machine detects a toner end condition. However, if Vsp stays bigger than 2.0V but 90 copies have been made after toner near end was determined, the machine enters the toner end condition.

The number of copies between toner near-end and toner end can be changed with SP2-213. The default is 90.



2.6.8 TONER END RECOVERY

Toner end recovery flow chart

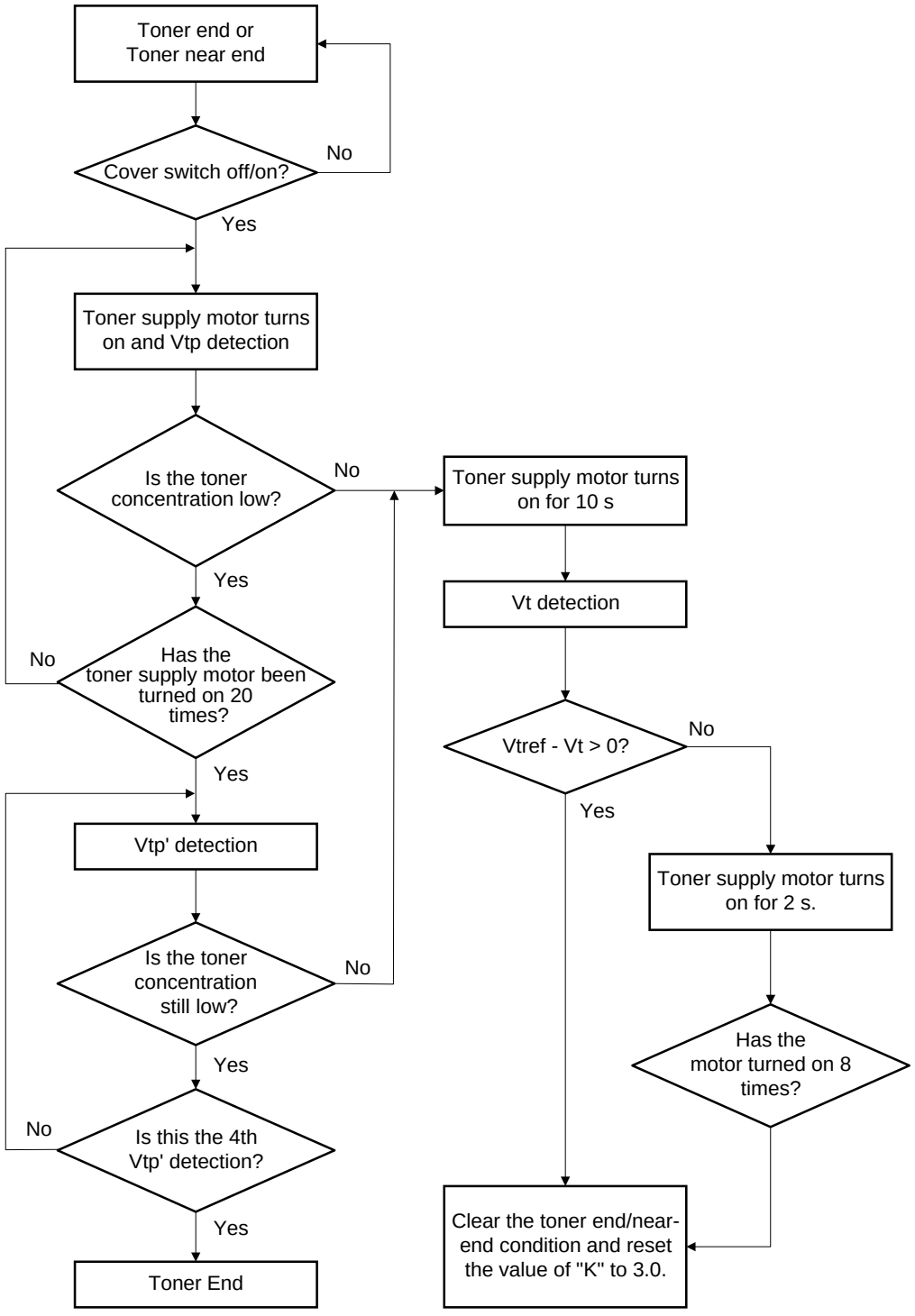

A231D539.WMF

If the front cover is opened and closed while a toner near end/end condition exists, the machine will attempt to recover using measurements from the TD sensor.

When the front cover is closed, the toner supply motor turns on to supply toner. The machine checks the TD sensor output 2 s after the main motor turns on. This is called Vtp. It is checked again every 1 s, and these values are called Vtp'.

The machine detects the toner concentration using Vtref, Vt(10), Vtp, and Vtp'. If the toner concentration is still too low, the toner supply motor turns on for another 10s. Then, the machine checks Vt. If toner concentration is at the standard level, the toner near end/end condition is cancelled and "K" is reset. If toner concentration has not reached the standard level, the toner supply motor rotates continuously until it does (maximum motor on time is 16s).

2.6.9 TONER SUPPLY IN ABNORMAL SENSOR CONDITIONS

The TD sensor is checked every copy. If the readings from the TD sensor become abnormal during a copy job, the machine holds the GAIN factor constant (GAIN is normally calculated from TD sensor readings) to allow toner supply to vary with only pixel count for the rest of the copy job. Then at the end of the copy job, an SC code is generated and the machine must be repaired.

The ID sensor is checked every 10 copies. If readings become abnormal, an SC code is generated and the machine must be repaired. If this happens during a copy job, Vtref is not changed, the copy job is allowed to finish, and then the SC code is generated.

If spare parts are not available, the technician can use SP 2-208-1 to temporarily put the machine in image pixel count mode.

Details of how the machine determines an abnormal sensor detection are in section 7 (Troubleshooting).

2.7 DRUM CLEANING AND TONER RECYCLING

2.7.1 DRUM CLEANING

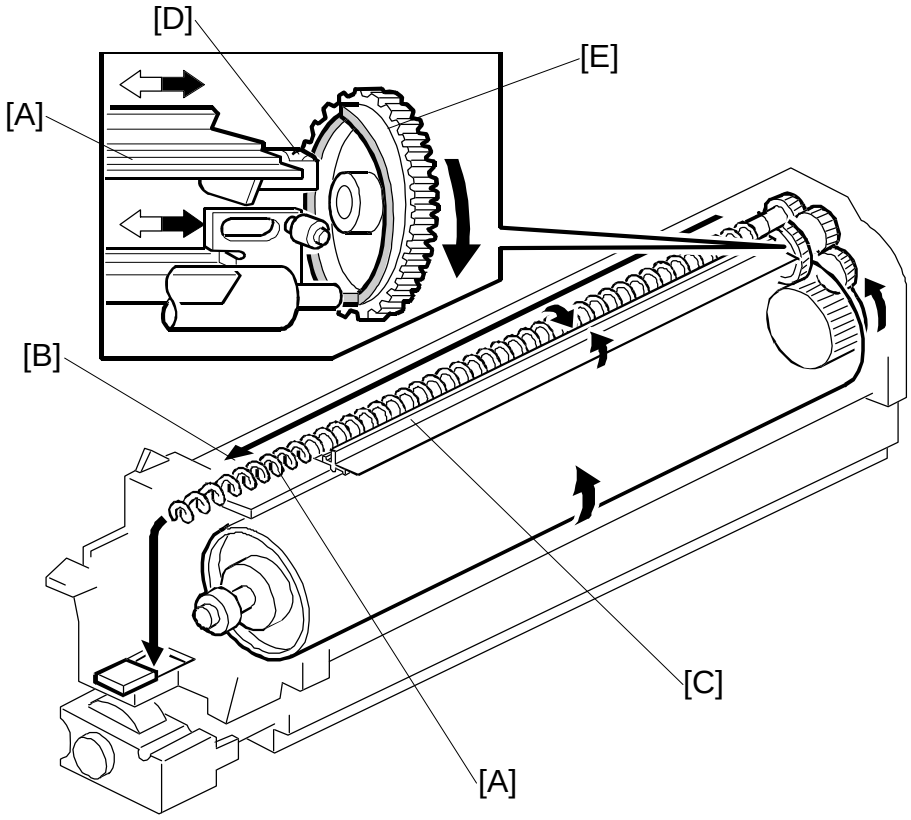

A231D507.WMF

The cleaning blade [A] removes any toner remaining on the drum after the image is transferred to the paper. This model uses a counter blade system.

The toner remaining on the drum is scraped off by the cleaning blade, and is transferred to the toner collection coil [B] by the toner collection plate [C].

The collar [D] on the cleaning blade bracket contacts the outer rim of cam gear [E], and this gear moves the cleaning blade from side to side. (This gear is the same cam gear that moves the charge roller cleaning pad from side to side.) This movement helps to disperse spots of accumulated toner to prevent early blade edge wear at any particular location.

To remove the toner and other particles that are accumulated at the edge of the cleaning blade, the drum turns in reverse for about 5 mm at the end of every copy job.

2.7.2 TONER RECYCLING

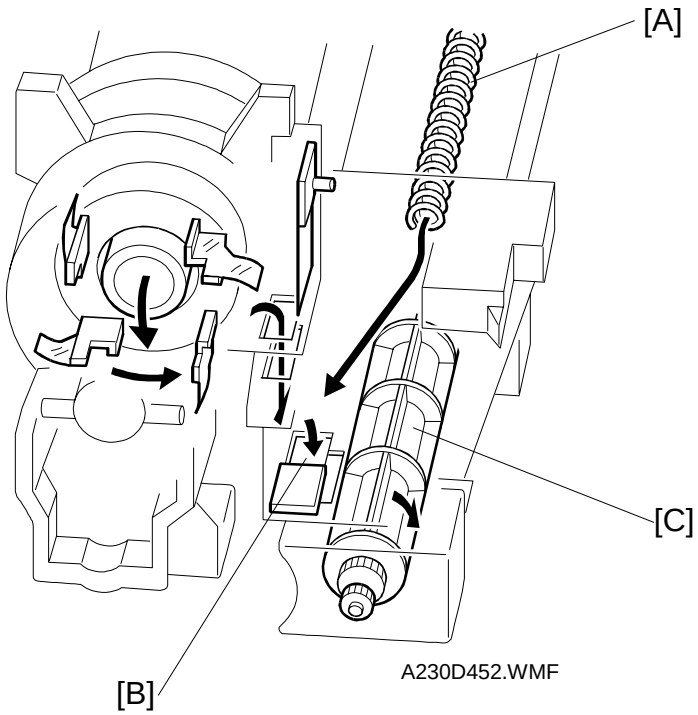

Toner which is transferred to the toner collection coil [A] is transported to the opening [B] in the bottom of the PCU. Then, this toner falls into the development unit with new toner coming from the toner bottle and it is all mixed together by the paddle roller [C].

2.8 PAPER FEED

2.8.1 OVERVIEW

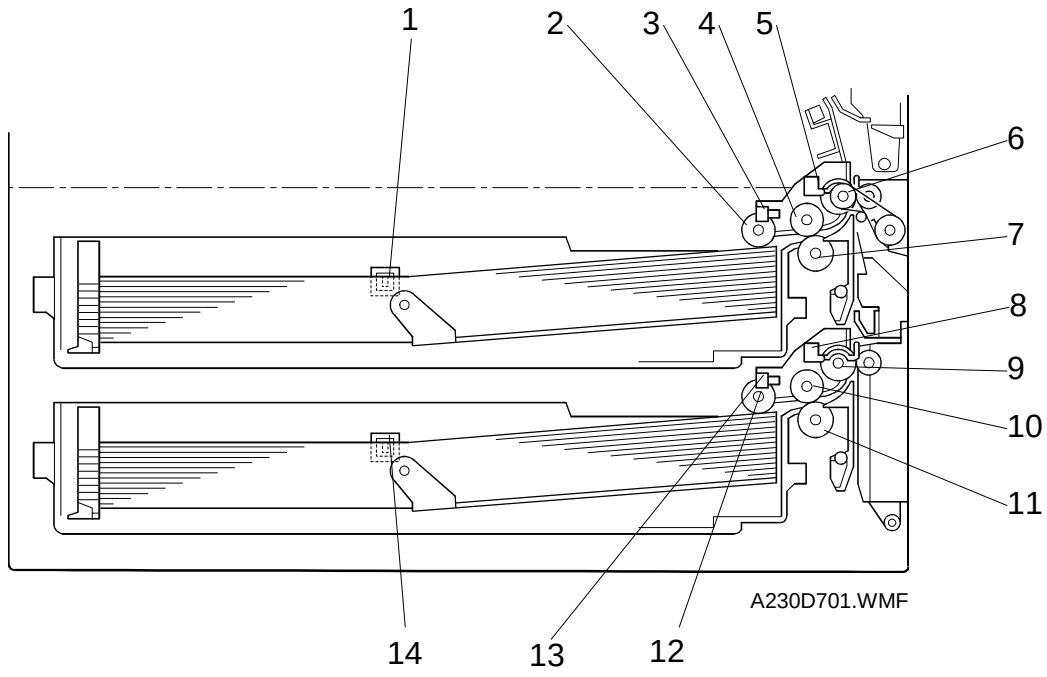

There are two paper trays, each of which can hold 500 sheets.

The paper tray feed stations use an FRR system.

There are two relay sensors, one just above each set of relay rollers. These sensors are used for paper jam detection.

The components of the paper feed section are as follows.

There are no paper size sensors. The user inputs the paper size with a UP mode.

1. Upper Tray Set Sensor
2. Upper Pick-up Roller
3. Upper Paper Height Sensor
4. Upper Paper Feed Roller
5. Upper Relay Sensor
6. Upper Relay Roller
7. Upper Separation Roller
8. Lower Relay Sensor
9. Lower Relay Roller
10. Lower Paper Feed Roller
11. Lower Separation Roller
12. Lower Pick-up Roller
13. Lower Paper Height Sensor
14. Lower Tray Set Sensor

2.8.2 PAPER FEED DRIVE MECHANISM

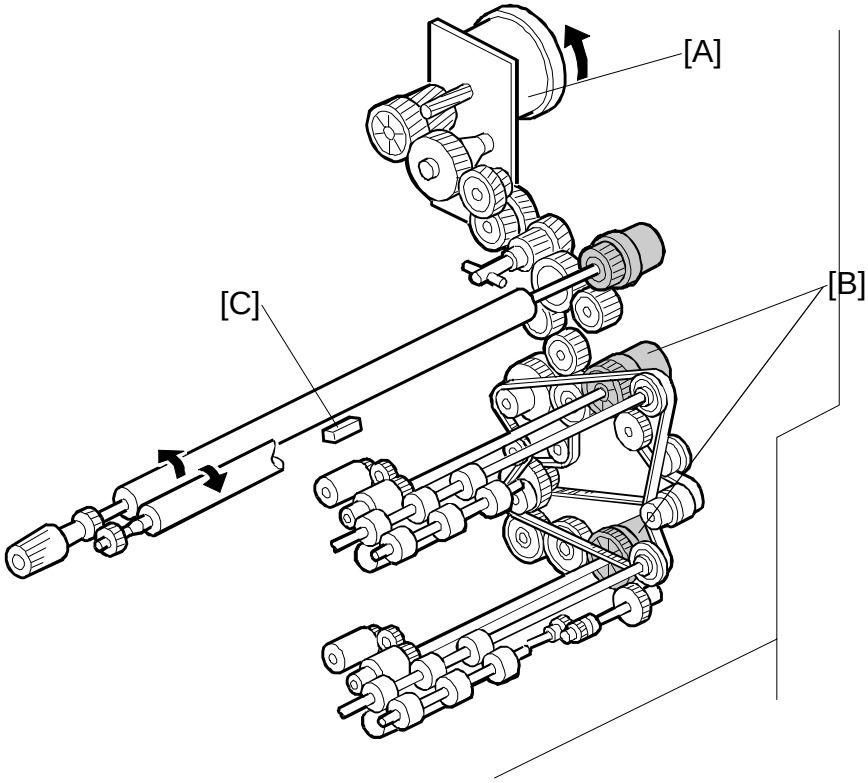

A231D508.WMF

The main motor [A] drives the pick-up and feed mechanism of both the upper and second paper feed stations through gears and the paper feed clutches [B].

When the paper tray is inside the machine, the pick-up roller always contacts the top sheet of the paper stack (see Pick-up and Separation Roller Release Mechanism for more detail). When the paper feed clutch turns on, the pick-up roller, paper feed roller, and separation roller start rotating to feed the paper. The paper feed clutch stays on until shortly after the registration sensor [C] has been activated.

2.8.3 PICK-UP AND SEPARATION ROLLER RELEASE MECHANISM

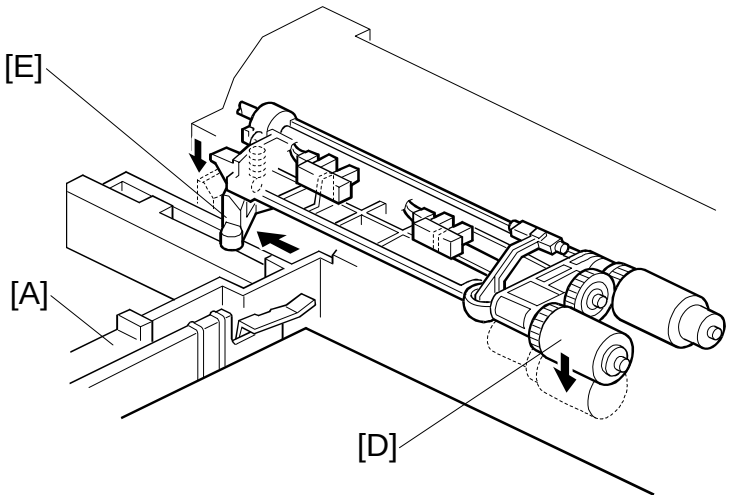

A230D703.WMF

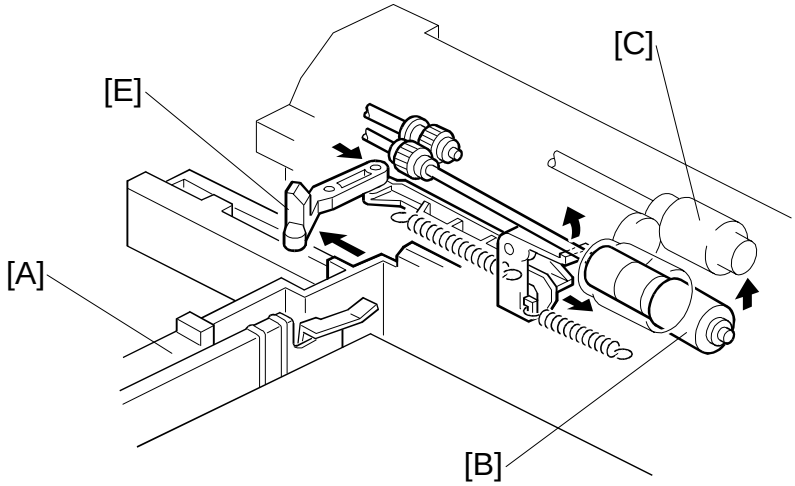

A230D704.WMF

When the paper tray [A] is not inside the machine, the separation roller [B] is away from the paper feed roller [C] and the pick-up roller [D] stays in the upper position.

When the paper tray is set into the machine, it pushes the release lever [E]. This causes the pick-up roller [D] to go down and the separation roller [B] to move up and contact the paper feed roller.

2.8.4 PAPER LIFT MECHANISM

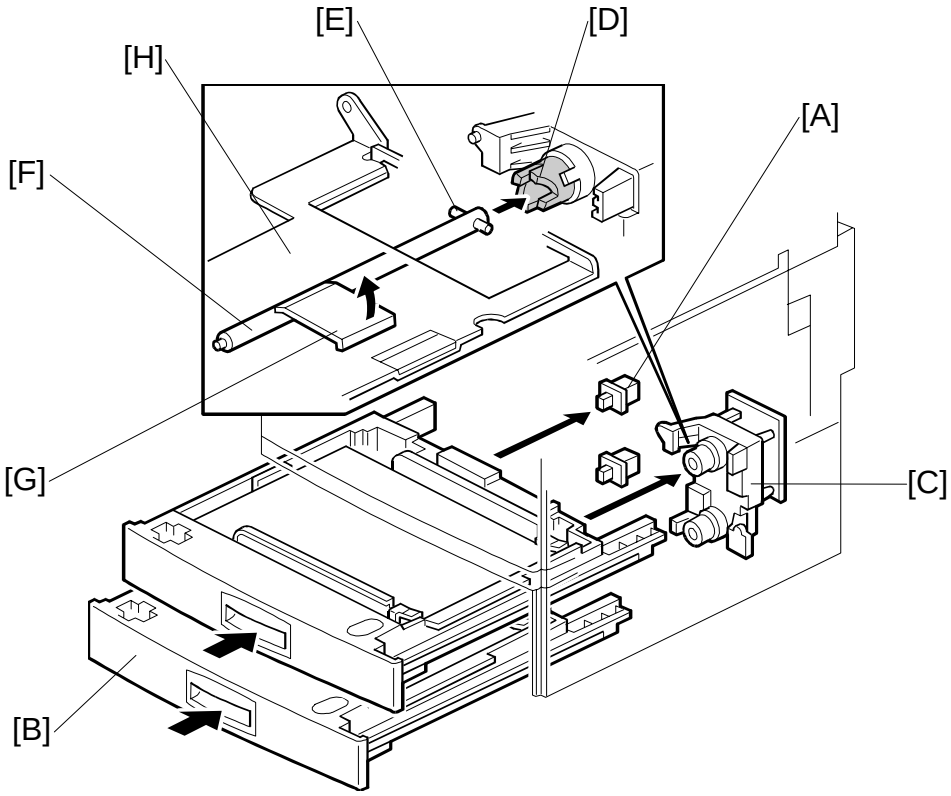

A230D702.WMF

The paper tray sensor [A] detects when the paper tray [B] is placed in the machine. When the machine detects that the paper tray is in the machine, the tray lift motor [C] rotates and the coupling gear [D] on the tray lift motor engages the pin [E] on the lift arm shaft [F]. Then the tray lift arm [G] lifts the tray bottom plate [H].

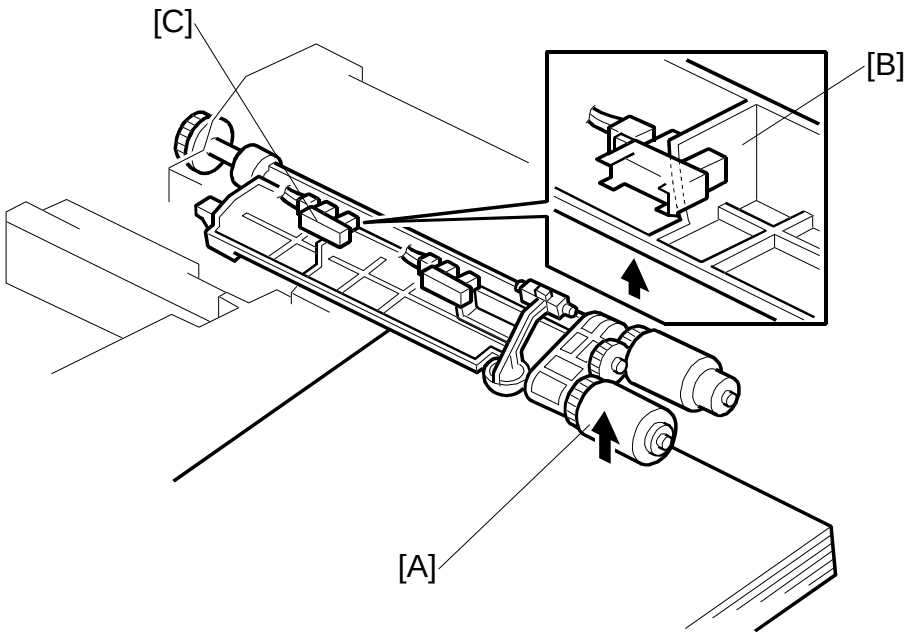

A231D526.WMF

When the paper tray is placed in the machine, the pick-up roller [A] lowers. When the top sheet of paper reaches the proper height for paper feed, the paper pushes up the pick-up roller, and the actuator [B] on the pick-up roller supporter activates the paper height sensor [C] to stop the tray lift motor.

After several paper feed cycles, the paper level gradually lowers and the paper height sensor is de-activated. The tray lift motor turns on again until this sensor is activated again.

When the tray is drawn out of the machine, the tray lift motor coupling gear disengages the pin on the lift arm shaft, and the tray bottom plate then drops under its own weight.

2.8.5 PAPER END DETECTION

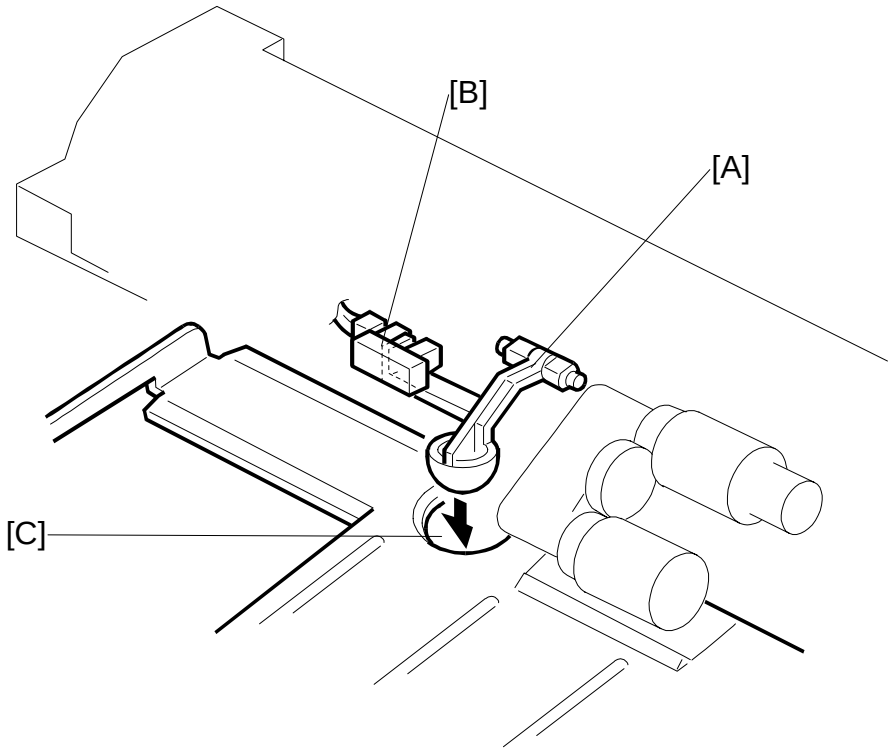

A230D706.WMF

If there is some paper in the paper tray, the paper end feeler [A] is raised by the paper stack and the paper end sensor [B] is deactivated.

When the paper tray runs out of paper, the paper end feeler drops into the cutout [C] in the tray bottom plate and the paper end sensor is activated.

2.8.6 PAPER REGISTRATION

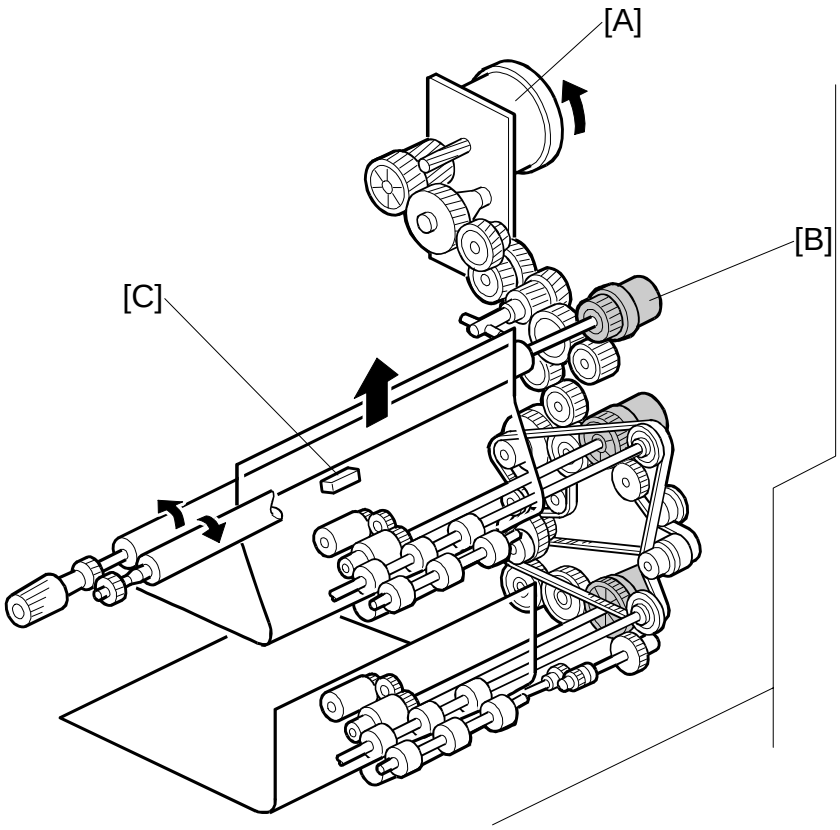

A230D705.WMF

Main motor [A] rotation is transmitted to the registration clutch gear [B] (located on the lower registration roller shaft) through a train of gears.

The registration sensor [C] is positioned just before the registration rollers.

When the paper leading edge activates the registration sensor, the registration clutch is off and the registration rollers are not turning. However, the relay clutch [E] stays on for a bit longer. This delay allows time for the paper to press against the registration rollers and buckle slightly to correct skew. Then, the registration clutch energizes and the relay clutch re-energizes at the proper time to align the paper with the image on the drum. The registration and relay rollers feed the paper to the image transfer section.

The registration sensor is also used for paper misfeed detection.

2.8.7 PAPER FEED AND JAM TIMING

NAD40: From 2nd Paper Tray (A4 sideways)

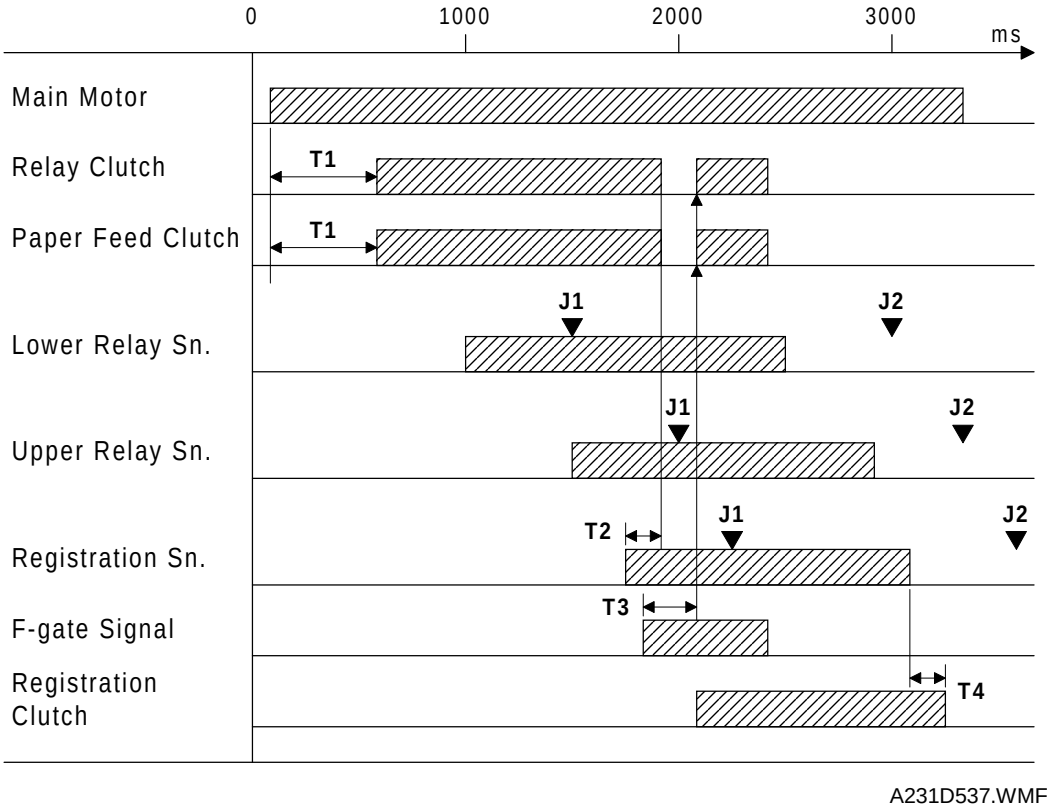

A231D537.WMF

T1. The relay clutch and paper feed clutch turn on 500 ms after the main motor turned on.

T2. The relay clutch and paper feed clutch turn off 138 ms after the registration sensor turned on.

T3. The relay clutch and paper feed clutch turn on again and the registration clutch turns on 186 ms after the F-gate signal (laser main scan writing start) has been activated.

T4. The registration clutch turns off 150 ms after the registration sensor turned off.

J1. Checks whether the sensors are activated within 0.38 s (35 cpm machine) or 0.3 s (45 cpm machine) after the designated time for these sensors.

J2. Checks whether the sensors are deactivated within 0.38 s (35 cpm machine) or 0.3 s (45 cpm machine) after the designated time for these sensors.

2.9 IMAGE TRANSFER AND PAPER SEPARATION

2.9.1 OVERVIEW

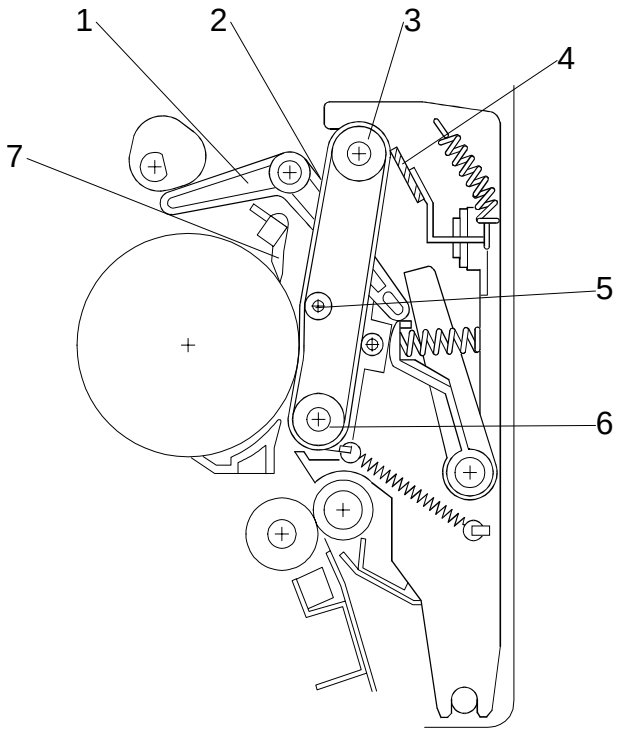

A230D501.WMF

Instead of using a transfer corona or a transfer roller, this machine uses a transfer belt unit. The transfer belt unit consists of the following parts.

1. Contact lever
2. Transfer belt
3. Drive roller
4. Transfer belt cleaning blade
5. Transfer roller
6. Idle roller
7. Pick-off pawl

The belt has a high electrical resistance, so it can hold a high positive electrical potential to attract toner from the drum onto the paper. Also, the electrical potential attracts the paper itself and helps to separate the paper from the drum and to carry the paper upwards. The pick-off pawl ensures that the paper separates from the drum.

The transfer belt cleaning blade removes toner from the transfer belt to prevent the back side of the paper from being stained.

2.9.2 BELT DRIVE MECHANISM

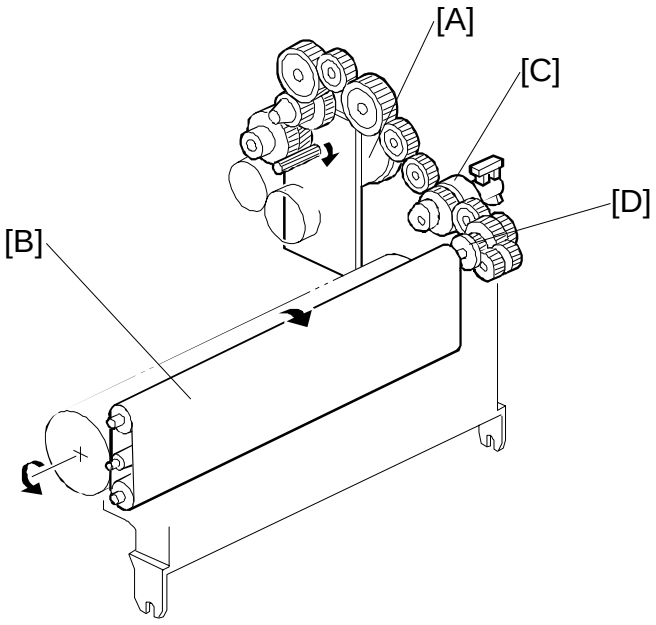

A231D509.WMF

The main motor [A] drives the transfer belt [B] through a train of gears, the belt contact clutch [C], and the drive roller gear [D].

2.9.3 IMAGE TRANSFER AND PAPER SEPARATION MECHANISM

The image is transferred from the drum in the following steps.

1. The registration clutch turns on to feed the paper [A] at the correct time to synchronize the leading edge of the developed latent image on the drum [B] with the leading edge of the paper. The transfer belt [C] is away from the drum at this time.

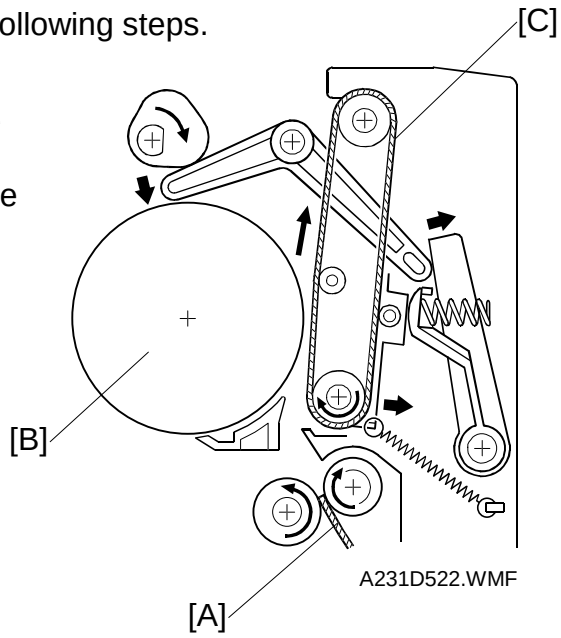

A231D522.WMF

2. The transfer belt contact clutch turns on a certain time after the main motor started. Then, the transfer belt moves into contact with the drum.

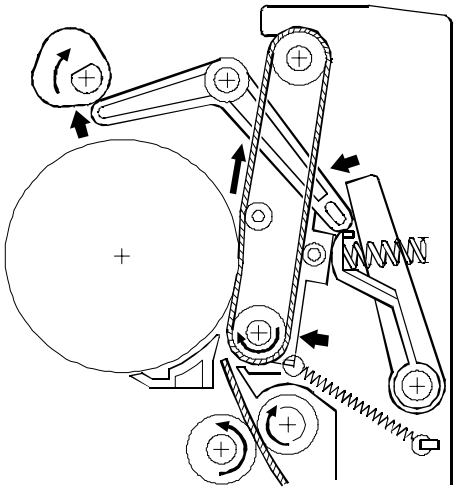

A231D523.WMF

3. When the paper enters the gap between the belt and the drum, the high voltage supply board [A] applies a high positive current to the belt to transfer the image to the paper.
   $I1 = It + I2$

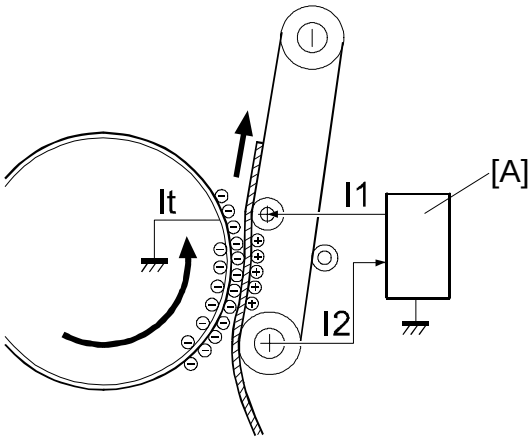

A231D521.WMF

4. After receiving the image from the drum, the paper is fed by the belt.
5. The paper moves to the end of the transfer belt unit, where it separates from the belt as the belt curves away. Then, the paper goes to the fusing unit.

2.9.4 TRANSFER BELT UNIT CONTACT MECHANISM

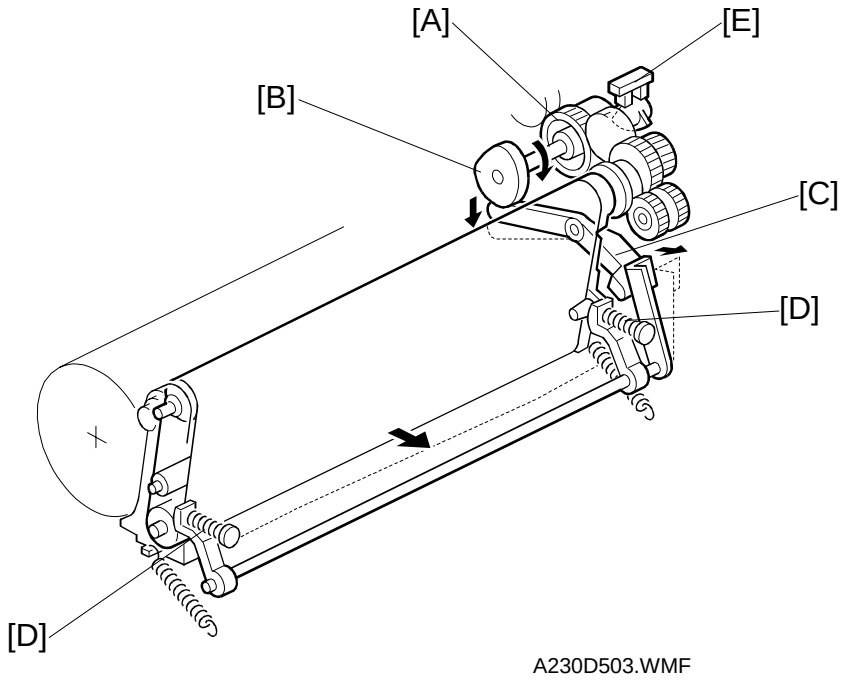

A230D503.WMF

The belt contact and release mechanism consists of the belt contact clutch [A], cam [B], and contact lever [C].

The belt contact clutch turns on and the cam with the clutch rotates half of a complete rotation. The contact lever, riding on the cam, is lifted up and the spring [D] pushes the belt into contact with the drum.

The transfer belt contact home position sensor [E] is used to detect the home position of the cam (this is when the belt is away from the drum).

The belt must be released from the drum between copy jobs. The reasons are as follows.

- To prevent the ID sensor pattern on the drum from being rubbed off by the transfer belt.
- To prevent a change in the drum's characteristics because of the influence of additives inside the rubber belt.

2.9.5 TRANSFER BELT CHARGE

Overview

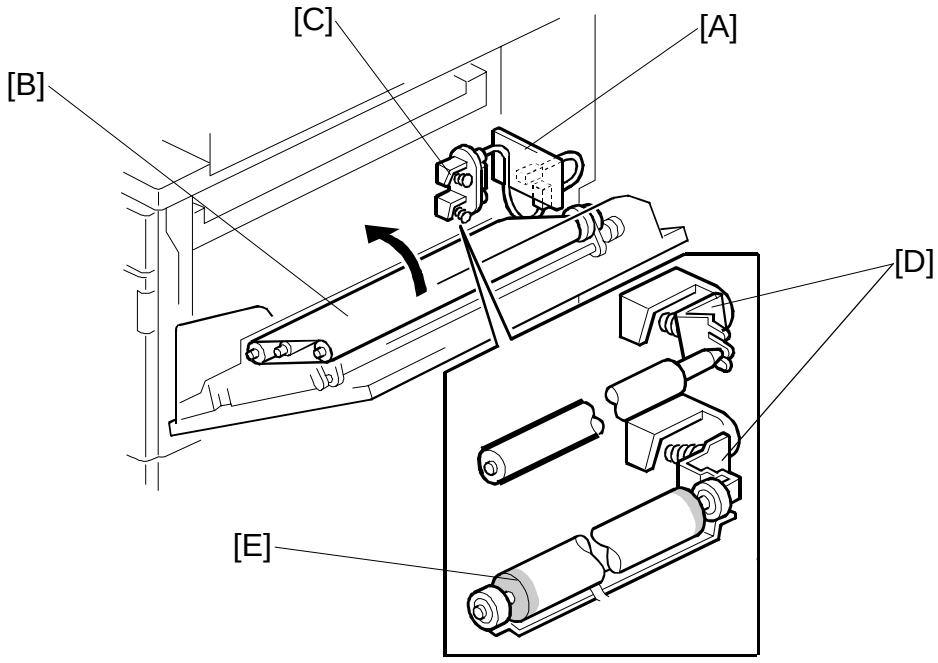

A230D504.WMF

The high voltage supply board [A] applies the positive transfer belt current to the transfer belt [B] through the terminal block [C], terminal plate [D], and the roller [E]. The terminal block and the terminal plate contact each other when the right cover is closed.

The high voltage supply board adjusts the current to the roller to keep a small but constant current flow to ground through the belt, paper, and drum. If this current is not kept constant, efficiency of toner transfer and paper separation will vary with paper thickness, type, environmental condition, or changes in transfer belt surface resistance.

Correction for paper width and thickness

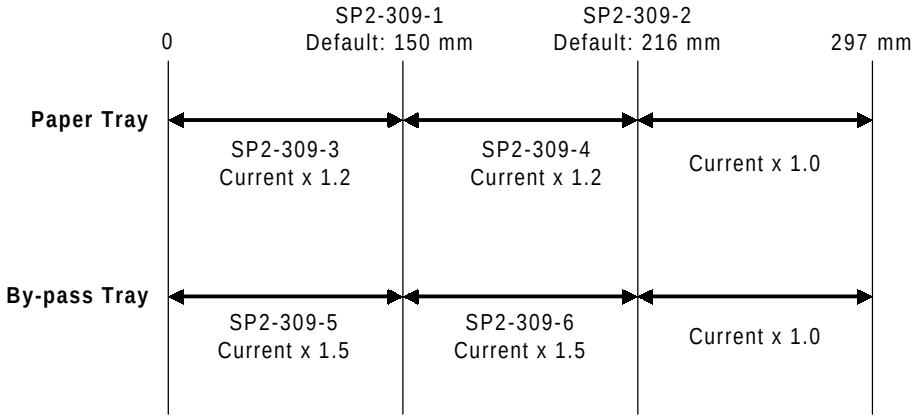

A231D541.WMF

To counteract the effects of paper width and thickness, a range of SP modes are available.

For paper width, there are two thresholds. The factory settings are 150 and 216 mm. Below 216 mm, the transfer current can be increased (by default, it is multiplied by 1.2 for the main body paper trays). Below 150 mm, the transfer current can be set even higher, although by default it is kept the same as the current for below 216 mm. The higher current allows for the fact that current prefers to go to the drum from the belt directly, and not through the paper, which leads to insufficient toner transfer for narrow paper widths.

For thickness, it is assumed that the user will use thicker paper from the bypass tray, so separate settings are available for this tray. By default, the current for paper narrower than 216 mm is 1.5 times the normal current.

The drawing shows the SP modes which control these currents.

Currents applied to leading edge and image areas

The transfer current can also be different for the leading edge and the image area. There are separate adjustments for bypass feed for this also. The timing for starting to apply leading edge current, for the switchover from leading edge current to image area current, and for switching off at the trailing edge can also be changed.

Transfer current SP modes

- Image areas -

Paper trays: Side 1, SP2-301-1; Side 2, SP2-301-2
Bypass: SP2-301-4

Leading edge areas
Paper trays: SP2-301-3, Bypass: SP2-301-5

- Timing -

Leading edge start: SP2-911-1
Switchover to image area: SP2-911-2
Image area end (trailing edge): SP2-911-3

2.9.6 TRANSFER BELT CLEANING MECHANISM

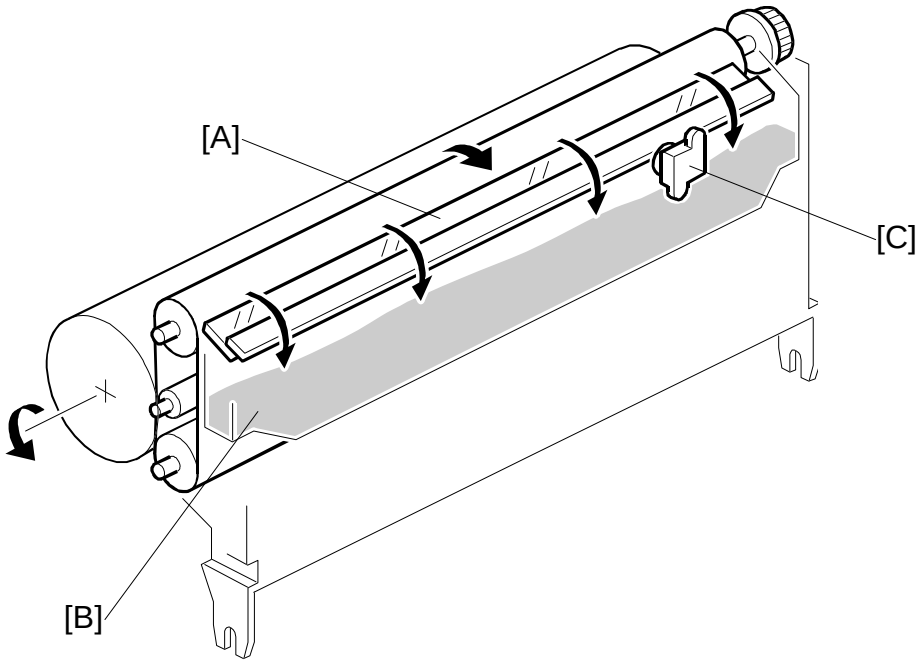

A231D524.WMF

The cleaning blade [A] always contacts the transfer belt. It scrapes off any toner and paper dust remaining on the belt.

To remove toner and other particles that are accumulated at the edge of the cleaning blade, the transfer belt turns in reverse at the end of every copy job, in the same way as the drum cleaning blade mechanism.

The toner and paper dust that is scraped off falls down into the toner collection tank [B], which is in the transfer belt unit. This toner is not recycled.

When the toner overflow sensor [C] in the transfer belt unit detects a toner overflow condition, the toner overflow indicator is lit. After this condition, 999 copies can be made before operation is disabled.

2.10 IMAGE FUSING AND PAPER EXIT

2.10.1 OVERVIEW

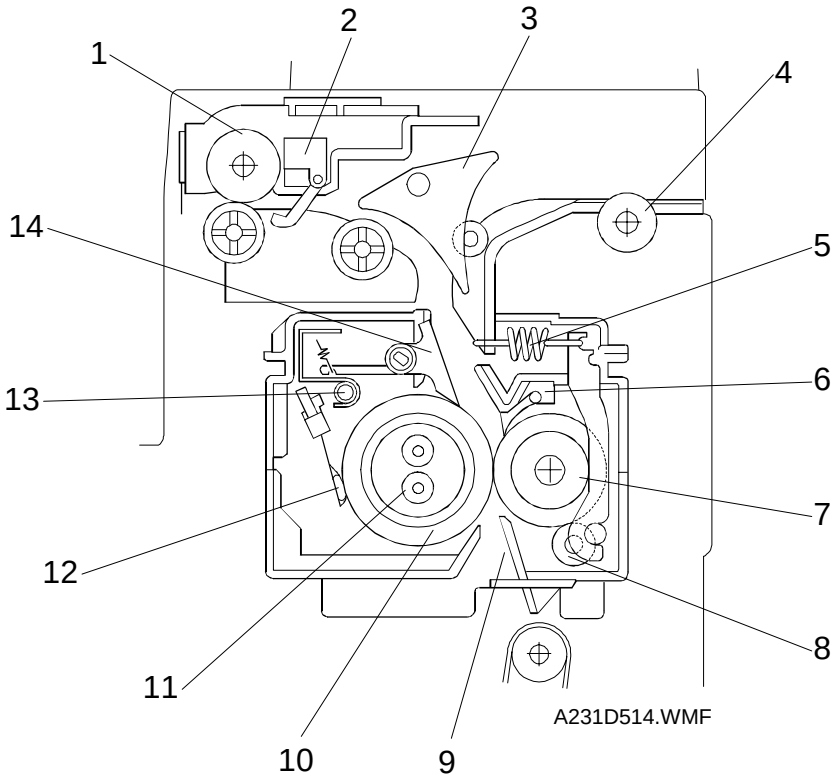

This fusing unit contains pressure roller strippers [6]. These prevent the paper from wrapping around the pressure roller (which is possible for a vertical paper transport mechanism).

The fusing unit and paper exit area consist of the following parts.

1. Paper exit roller
2. Fusing exit sensor
3. Junction gate
4. Transport roller (NAD30 and NAD40 only)
5. Pressure spring
6. Pressure roller strippers
7. Pressure roller
8. Cleaning roller
9. Entrance guide
10. Hot roller
11. Fusing lamp(s) (see the note)
12. Thermistor
13. Thermofuse
14. Hot roller strippers

NOTE: For 115V machines: One lamp is used.
For 230V machines: Two lamps are used.

2.10.2 FUSING DRIVE AND RELEASE MECHANISM

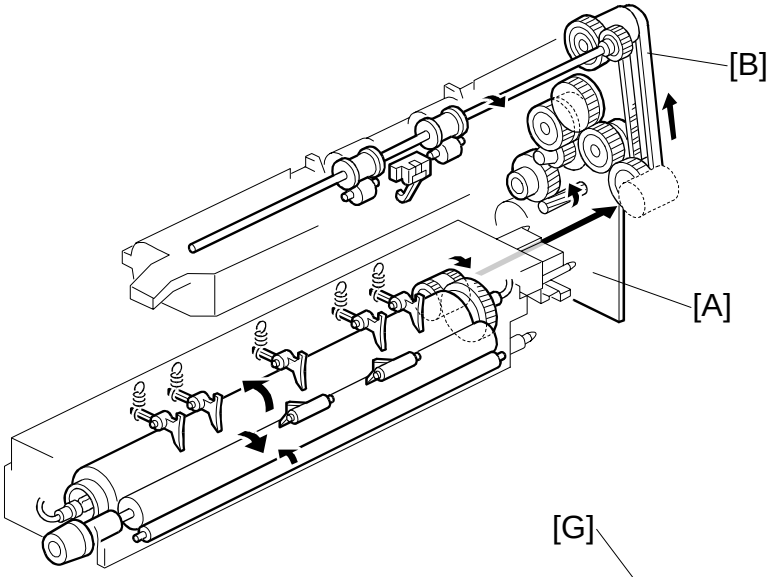

A230D604.WMF

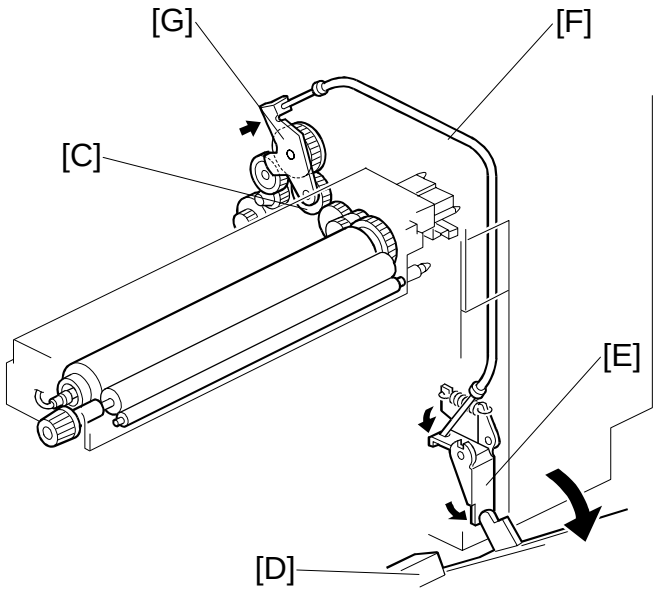

A230D605.WMF

The main motor [A] drives the fusing unit through a train of gears and drives the paper exit rollers through a gear and a timing belt [B].

The fusing unit drive release mechanism automatically disengages the fusing unit drive gear [C] when the right cover [D] is opened. This allows the fusing unit drive gear to rotate freely so that misfed paper can be easily removed.

When the right cover is opened, the actuator plate [E] pulls release wire [F]. The wire pulls the fusing drive gear bracket [G] and the fusing unit drive is disengaged.

2.10.3 FUSING ENTRANCE GUIDE SHIFT MECHANISM

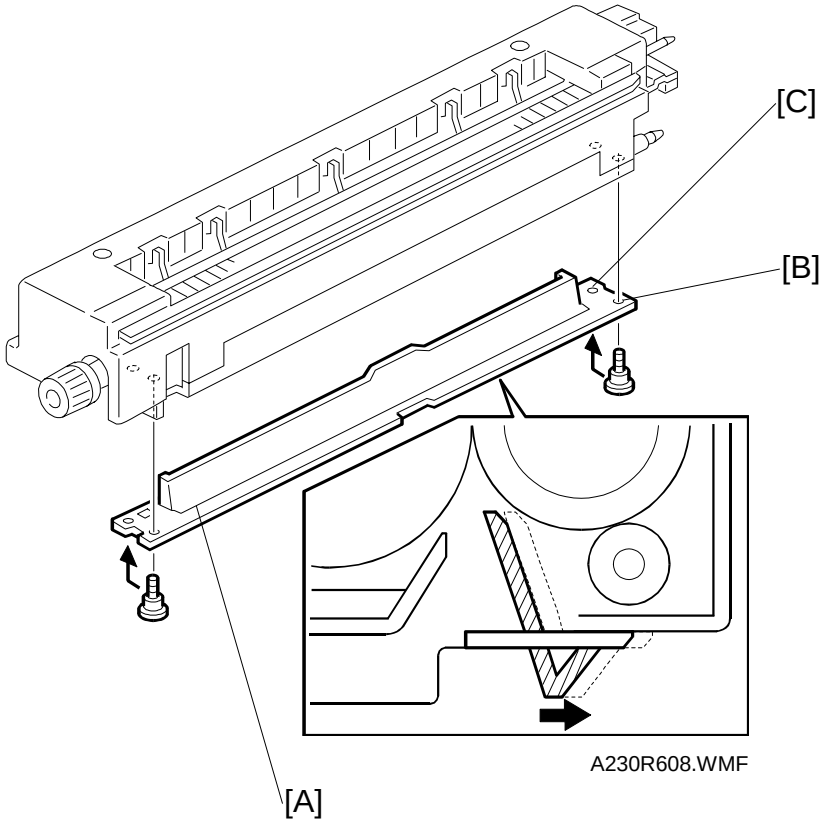

The entrance guide [A] for this machine has two holes on each side to adjust for paper thickness, to prevent creasing. Normally, the right screw hole [B] on each side is used.

For thin paper, move the entrance guide to the right by securing it with screw holes [C]. This slightly lengthens the paper path which prevents the paper from creasing in the fusing unit.

For thick paper, move the entrance guide to the left (use screw holes [B]). This setting allows more direct access to the gap between the hot and pressure rollers. This prevents thick paper from buckling against the hot roller, which can cause blurring at the leading edge of the copy. Also, thick paper does not bend as easily, and is therefore less prone to creasing.

2.10.4 PRESSURE ROLLER

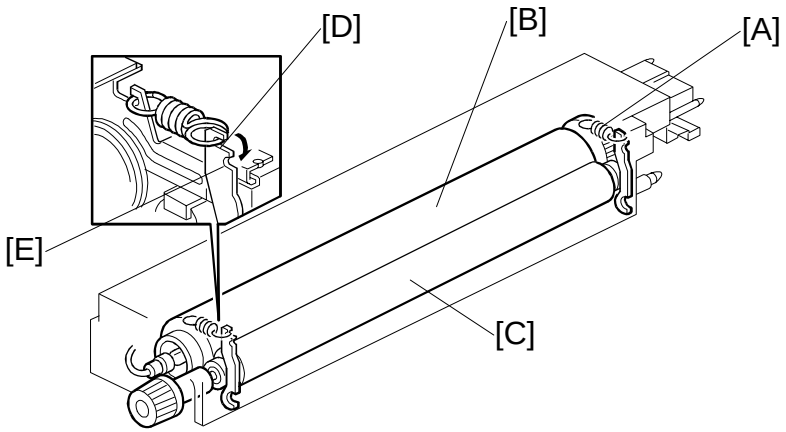

A230D603.WMF

The pressure springs [A] constantly apply pressure between the hot roller [B] and the pressure roller [C].

The pressure can be changed by adjusting the position of the pressure springs. The left position [D] is the normal setting. The right position [E] increases the pressure and this prevents insufficient fusing by the fusing unit.

2.10.5 CLEANING MECHANISM

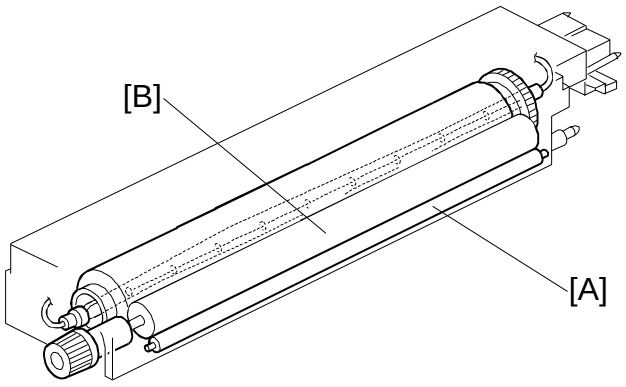

A231D515.WMF

The cleaning roller [A] is always in contact with the pressure roller [B]. It collects toner and paper dust adhering to the surface of the pressure roller. This is because the cleaning roller is made of metal and collects adhering matter more easily than the pressure roller (which has a teflon coating).

2.10.6 FUSING TEMPERATURE CONTROL

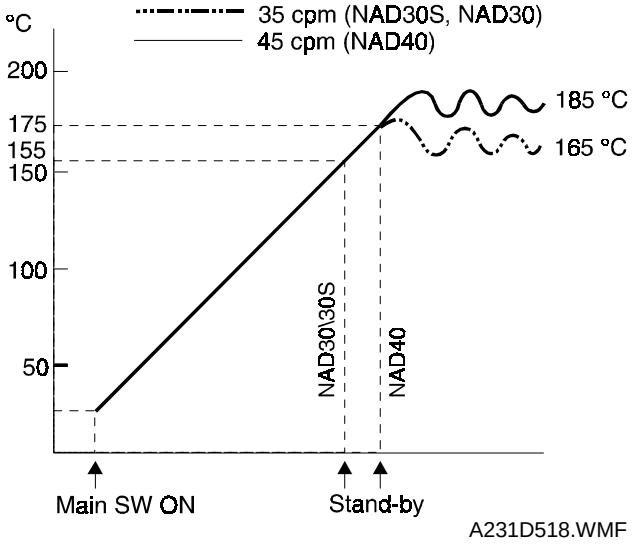

Temperature Control

There are two types of control: on/off control, and phase control. The mode can be selected with SP1-104.

When the main power switch turns on, the CPU checks the ac frequency for 500 ms; this is done in case phase control mode is selected later. Then the CPU turns on the fusing lamp. When the thermistor detects the stand-by temperature (155°C for NAD30/NAD30S, 175°C for NAD40), the machine can start to print. When the thermistor detects the operating temperature (165°C for NAD30/NAD30S, 185°C for NAD40), the CPU turns the fusing lamp off/on to maintain this temperature.

Fusing Idling

If copies are not sufficiently fused soon after the main power switch is turned on, fusing idling should be enabled with SP1-103. When fusing idling is enabled, it is done when the temperature reaches the value of SP1-105-1 (Fusing temperature adjustment) - 20°C

However, even if fusing idling is enabled, it is not done when the temperature at power-up > the value of SP1-105-1 -20°C

In the opposite case, even if fusing idling is disabled, it is done when the temperature at power-up ≤ 15°C

The fusing idling time is as follows.

The temperature at power-up	Fusing idling mode	
	Disabled	Enabled
15°C or less	30 s	2 min *
Higher than 15°C	Not performed	30 s

* In this case, fusing idling also prevents dirty background.

2.10.7 OVERHEAT PROTECTION

If the hot roller temperature becomes greater than 230°C, the CPU cuts off the power to the fusing lamp. At the same time, SC543 will be generated.

Even if the thermistor overheat protection fails, there is a thermofuse in series with the common ground line of the fusing lamp. If the temperature of the thermofuse reaches 169°C, the thermofuse opens, removing power from the fusing lamp. At the same time, the copier stops operating. At this time, SC542 will be generated.

2.11 ENERGY SAVER MODES

2.11.1 OVERVIEW

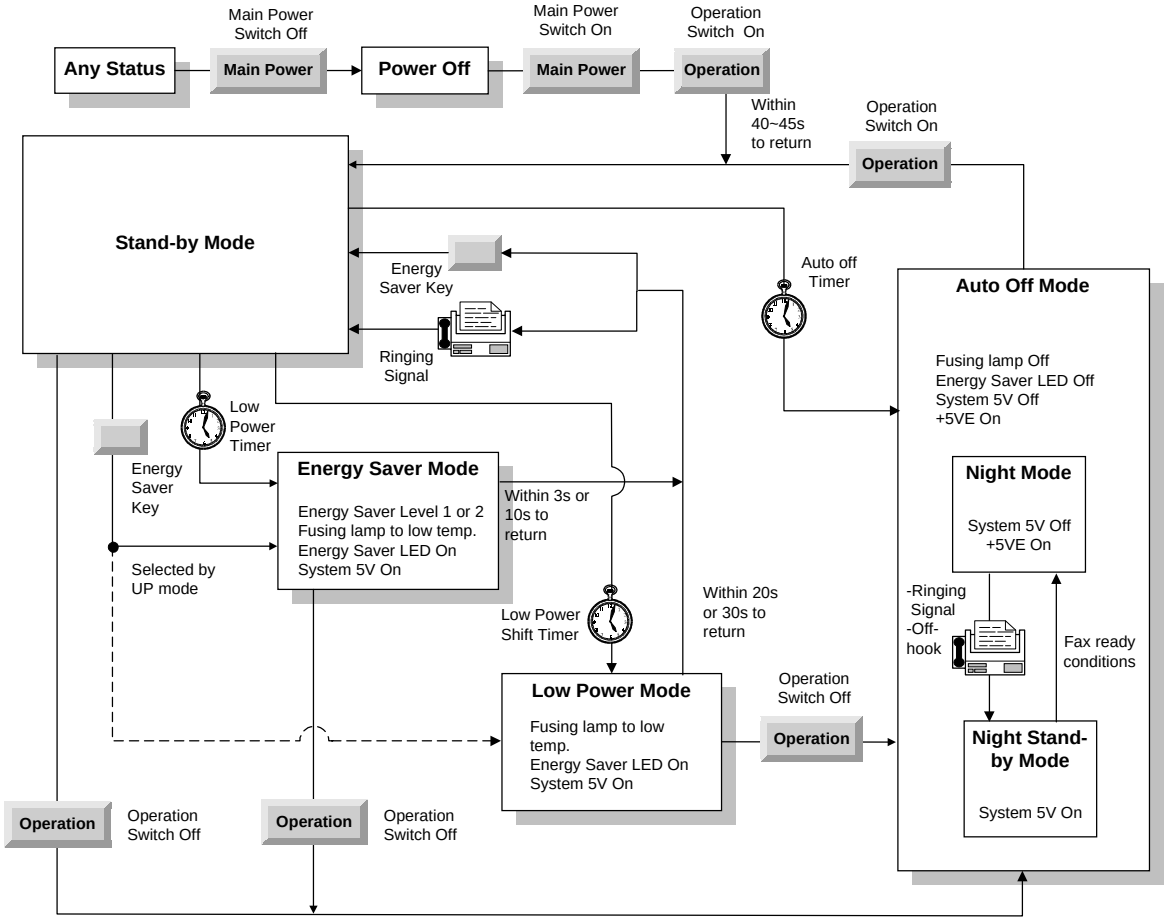

A231D517.WMF

When the machine is not used, the energy saver function reduces power consumption by decreasing the fusing temperature.

This machine has four types of energy saver mode as follows.

1) Energy saver mode
2) Low power mode
3) Auto off mode (copier configuration only)
4) Night mode (copier/fax configuration only)

These modes are controlled by the following UP and SP modes.

- Low power timer
- Low power shift timer
- Auto off timer
- Energy saver mode
- Auto off disabling (SP mode only)

The way that the machine operates depends on the combination of installed equipment (copier only, copier/fax).

2.11.2 ENERGY SAVER MODE

Entering the energy saver mode

There are two energy saver levels; Energy Saver Level 1 and Energy Saver Level 2. The energy saver level can be selected by UP mode.

The machine enters energy saver mode when one of the following is done.

- The Clear Mode/Energy Saver Key is held down for a second (see Note).
- The low power timer runs out after the end of a job.

NOTE: The machine enters either energy saver mode or low power mode when pressing the Clear Mode/Energy Saver key depending on the setting of the UP mode.

What happens in energy saver mode

When the machine enters energy saver mode, the fusing lamp drops to a certain temperature, depending on the energy saver level (see the table below) and the operation panel indicators are turned off except for the Energy Saver LED and the Power LED.

If the CPU receives the image print out command from an application (e. g. to print incoming fax data or to print data from a PC), the fusing temperature rises to print the data. However, the operation indicators stay off.

Return to stand-by mode

If one of the following is done, the machine returns to stand-by mode:

- The Clear Mode/Energy Saver Mode key is pressed
- Any key on the operation panel is pressed
- An original is placed in the ADF
- The ADF is lifted
- A sheet of paper is placed in the by-pass feed table

The recovery time from energy saver level 1 is about **3 s**.

The recovery time from energy saver level 2 is about **10 s**.

Mode	Operation Switch	Energy Saver LED	Fusing Temp.	System +5V
Energy Saver Level 1	On	On	35 cpm: 157 °C 45 cpm: 175 °C	On
Energy Saver Level 2	On	On	35 cpm: 150 °C 45 cpm: 170 °C	On

2.11.3 LOW POWER MODE

Entering the low power mode

The machine enters low power mode when one of the following is done.

- The low power shift timer runs out after the end of a job.
- The Clear Mode/Energy Saver key is held down for a second (see Note).

NOTE: The machine enters either energy saver mode or low power mode when pressing the Clear Mode/Energy Saver key depending on the setting of the UP mode.

What happens in low power mode

The fusing lamp drops to a certain temperature, as shown in the table below (the temperature drops more that in energy saver mode). The other conditions are the same as for energy saver mode.

Return to stand-by mode

The machine returns to standby mode in exactly the same way as from energy saver mode.

The recovery time from low power mode is either 20s or 30s, depending on the setting of SP5-920 (the default is 30s).

Recovery Time	Operation Switch	Energy Saver LED	Fusing Temp.	System +5V
20 seconds	On	On	35 cpm: 137 °C 45 cpm: 157 °C	On
30 seconds	On	On	35 cpm: 125 °C 45 cpm: 145 °C	On

2.11.4 AUTO OFF MODE

The auto off mode is for the copier-only configuration.

Entering auto off mode

The machine enters auto off mode when one of the following is done.

- The auto off timer runs out after the end of a job
- The operation switch is pressed to turn the power off

What happens in auto off mode

When the machine enters auto off mode, the operation switch turns off automatically. The fusing lamp and all dc supplies except +5VE (+5V for energy saver mode) turns off. At this time, only the main power LED is lit.

Returning to stand-by mode

The machine returns to stand-by mode when the operation switch is pressed.

Operation Switch	Energy Saver LED	Fusing Temp.	System +5V	Note
Off	Off	Room Temp. (Fusing lamp off)	Off	Only +5VE is supplied to the BICU.

2.11.5 NIGHT MODE

This function is for the copier/fax configuration. There are two types of night mode: Night Stand-by mode and Night mode. The difference between night stand-by mode and night mode is the machine's condition when the machine enters auto off mode.

Entering night stand-by and night modes

The machine enters the night stand-by mode and night modes when one of the following is done.

- The auto off timer runs out
- The operation switch is pressed to turn the power off

If the machine is in one or more of the following conditions, the machine enters night stand-by mode. If not, the machine enters night mode.

- Error or SC condition
- An optional G4 unit is installed
- An optional fax HDD is installed
- Image data is stored in the memory
- During memory Tx or polling Rx
- The handset is off hook
- An original is in the ADF
- The ADF is open

What happens in night stand-by and night modes

When the machine enters either of these modes, the fusing lamp and operation switch turn off, and only the main power LED is lit.

Night stand-by mode

The system +5V is still supplied to all components. When the machine detects a ringing signal, the +24V supply is activated and the machine automatically prints the incoming message.

Night mode

The system +5V supply also turned off. However, +5VE (+5V for energy saver mode) is still activated. When the machine detects a ringing signal, or off-hook signal, the machine goes back to night stand-by mode and the system +5V and +24V supplies are activated. Then the machine receives the incoming message and prints it.

Returning to stand-by mode

The machine returns to stand-by mode when the operation switch is pressed.

The recovery time is about 45 s.

Mode	Operation Switch	Energy Saver LED	Fusing Temp.	System +5V	Note
Night stand-by mode	Off	Off	Room Temp. (Fusing lamp off)	On	
Night mode	Off	Off	Room Temp. (Fusing lamp off)	Off	Only +5VE is supplied to the fax controller.

3. INSTALLATION PROCEDURE

3.1 INSTALLATION REQUIREMENTS

3.1.1 ENVIRONMENT

1. Temperature Range: 10 °C to 30 °C (50 °F to 86 °F)
2. Humidity Range: 15 % to 90 % RH
3. Ambient Illumination: Less than 1,500 lux (do not expose to direct sunlight.)
4. Ventilation: Room air should turn over at least 30 m3/hr/person
5. Ambient Dust: Less than 0.10 mg/m^3 (2.7 x 10 -6 oz/yd^3)
6. Avoid an area which is exposed to sudden temperature changes. This includes:
   1) Areas directly exposed to cool air from an air conditioner.
   2) Areas directly exposed to heat from a heater.
7. Do not place the machine in an area where it will be exposed to corrosive gases.
8. Do not install the machine at any location over 2,000 m (6,500 ft.) above sea level.
9. Place the copier on a strong and level base. (Inclination on any side should be no more than 5 mm.)
10. Do not place the machine where it may be subjected to strong vibrations.

3.1.2 MACHINE LEVEL

Front to back:	Within 5 mm (0.2”) of level
Right to left:	With in 5 mm (0.2”) of level

3.1.3 MINIMUM SPACE REQUIREMENTS

Place the copier near the power source, providing clearance as shown:

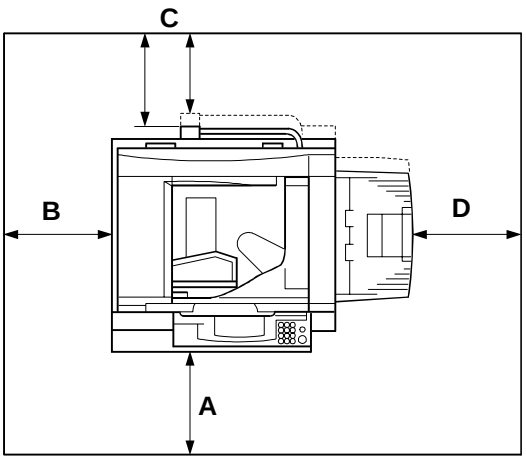

A230I954.WMF

A: In Front: Over 75 cm (29.6”)
B: Left: Over 10 cm (4”)
C: To Rear: Over 10 cm (4”)
D: Right: Over 10 cm (4”)

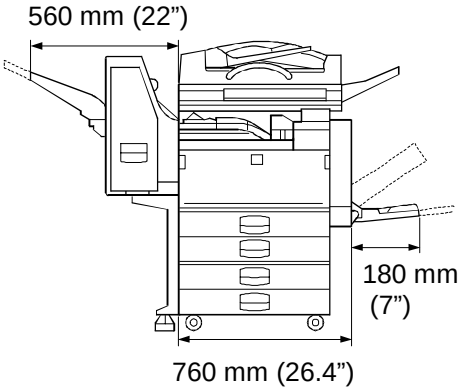

A230I952.WMF

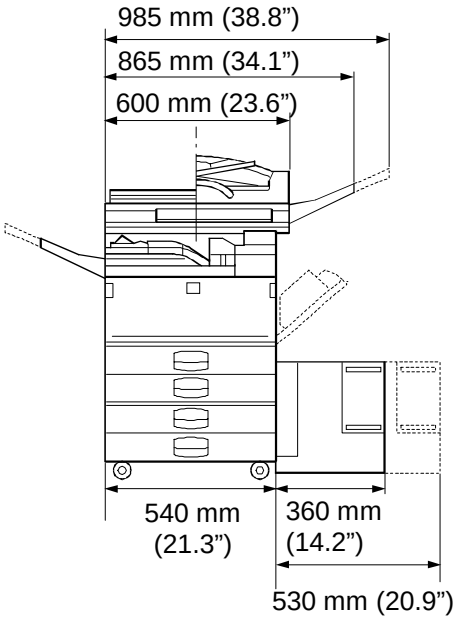

A230I951.WMF

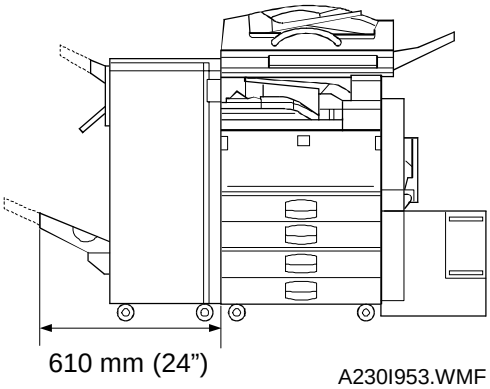

A230I953.WMF

NOTE: The 75 cm recommended for the space at the front is for pulling out the paper tray only. If an operator stands at the front of the copier, more space is required.

3.1.4 POWER REQUIREMENTS

⚠CAUTION

1. Make sure that the wall outlet is near the copier and easily accessible. Make sure the plug is firmly inserted in the outlet.
2. Avoid multi-wiring.
3. Be sure to ground the machine.

1. Input voltage level: 120 V, 60 Hz: More than 10 A
   220 V ~ 240 V, 50 Hz/60 Hz: More than 6 A
2. Permissible voltage fluctuation: ±10 %
3. Do not set anything on the power cord.



3.2 INSTALLATION FLOW CHART

The following flow chart shows how to install the optional units more efficiently.

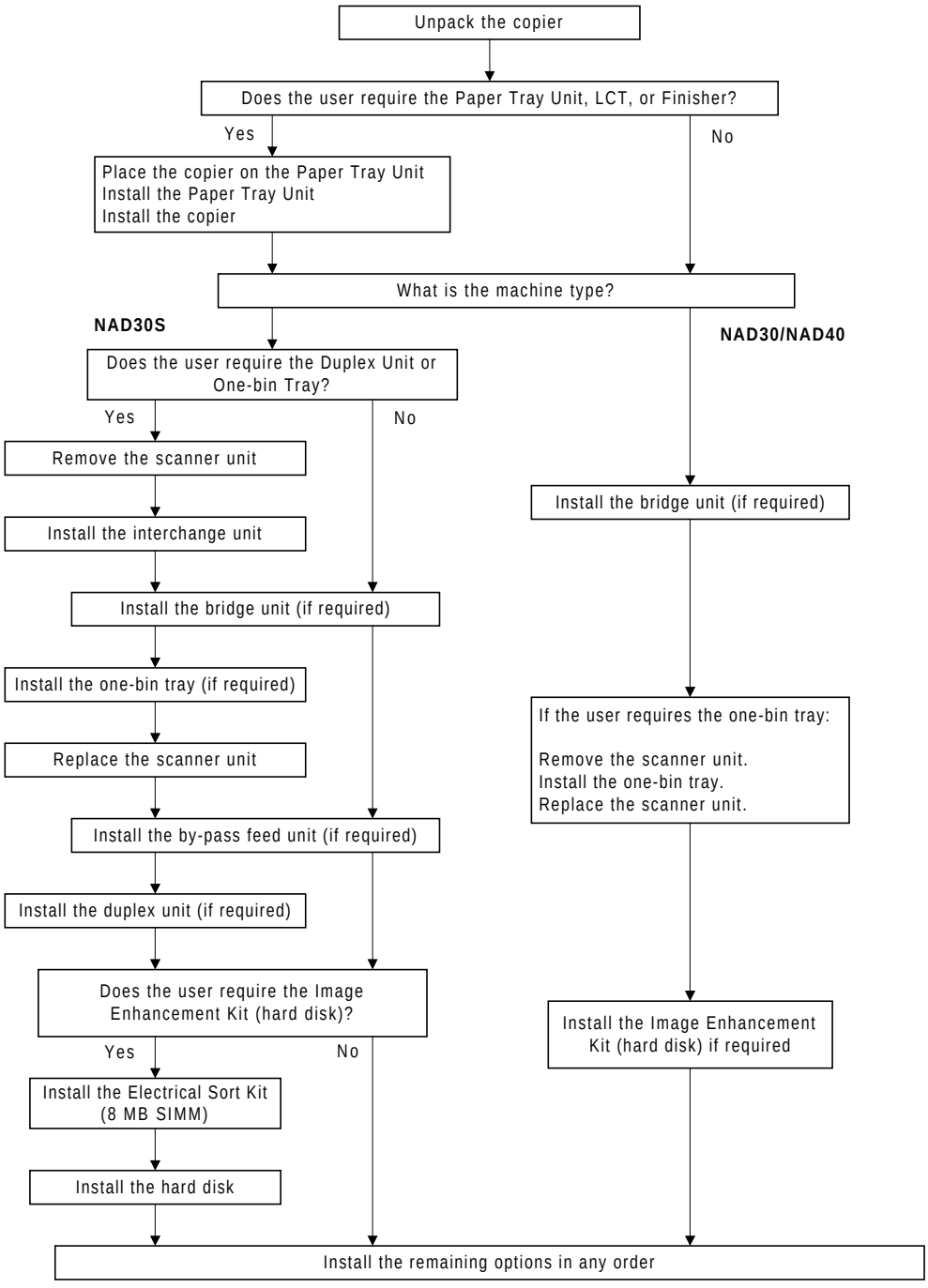

A231I513.WMF

Bridge Unit: Needed for the finishers and the external output tray
Interchange Unit: Needed for the 1-bin tray and the NAD30S duplex unit
Paper Tray Unit: Needed for the LCT and finishers
Other requirements: See Overall Machine Information – Installation Option Table

3.3 COPIER INSTALLATION

3.3.1 ACCESSORY CHECK

Check the quantity and condition of the accessories in the box against the following list:

Description	Q'ty
1. Operation Panel Decal	1
2. Paper Size Decal	1
3. Model Name Decal (-10, -22 machines)	1
4. Operation Panel Brand Sticker (-10, -22 machines)	1
5. NECR – English (-17 machine)	1
6. NECR – Multi-language (-19, -27, -39, -69 machines)	1
7. User Survey Card (-17 machine)	1
8. Cushion	1
9. Pad (until April '98 production machines)	1
10. Operation Instructions – System Setting	1
11. Operation Instructions – Copy Reference	1
12. Operation Instructions – Fax Reference	1



3.3.2 INSTALLATION PROCEDURE

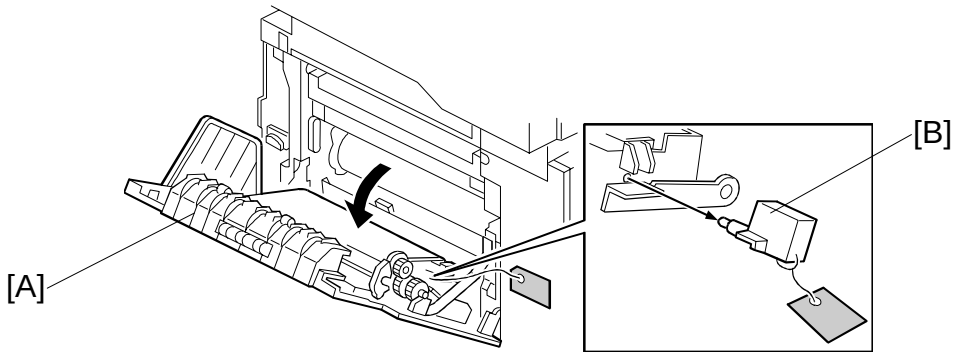

A230I102.WMF

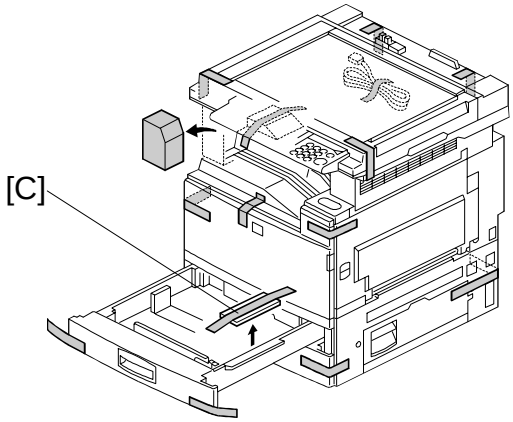

A230I101.WMF

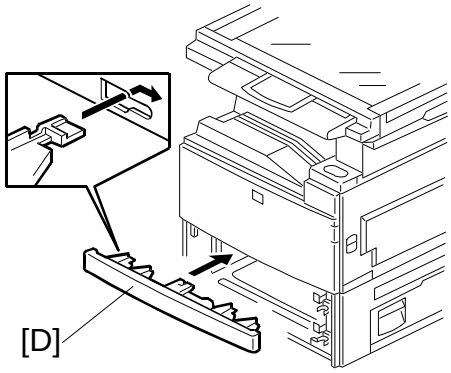

A230I116.WMF

⚠CAUTION

Unplug the machine power cord before starting the following procedure.

If the optional paper tray unit is going to be installed now, put the copier on the paper tray unit first, then install the paper tray unit, then install the copier.

NOTE: Keep the shipping retainers after installing the machine. They will be reused if the machine is moved to another location in the future.

1. Remove the tapes on the exterior of the copier.
2. Open the duplex unit (A231 and A232 machines) and open the upper right cover [A].
3. Remove the pin [B].
4. Pull out the paper trays and remove the bottom plate stoppers [C].
5. Install the middle front cover [D] which is in the second paper tray.
   NOTE: If the optional paper tray unit is installed, this step is done while installing the paper tray unit.

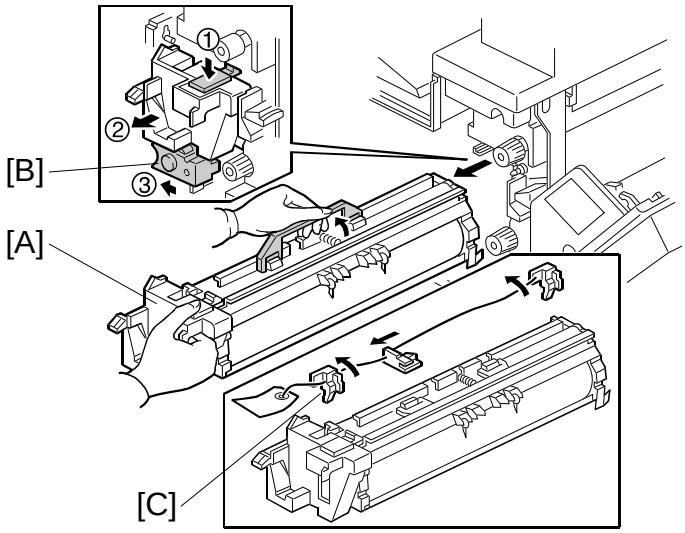

A230I110.WMF

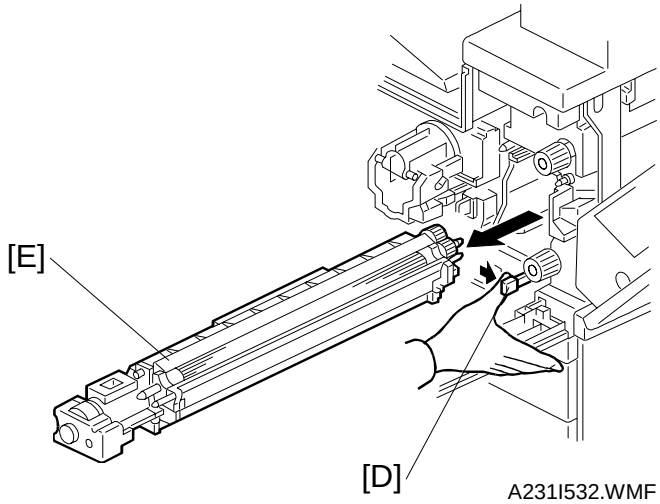

A231I532.WMF

6. Open the front cover.
7. Push down the lever (1). Then pull the PCU [A] out a small distance (2), and move the development unit [B] to the left (3) so that the development unit is away from the drum, then slide out the PCU completely.
8. Remove three clamps [C].
9. Move the lever [D] to the right, then slide out the development unit [E].

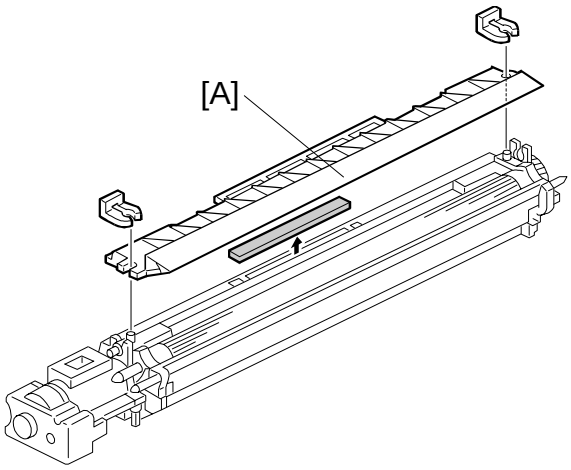

A231I533.WMF

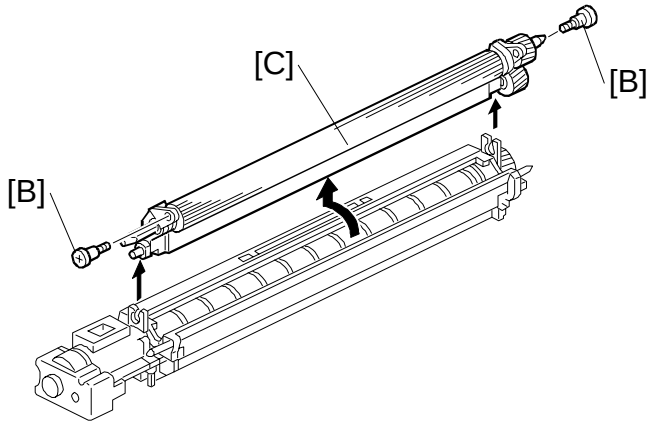

A231I534.WMF

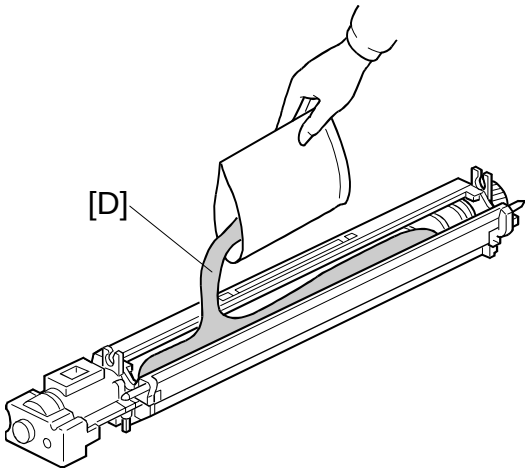

A231I535.WMF

10. Remove the entrance seal plate [A] (2 clamps).
11. Remove two screws [B] and take out the development roller unit [C].
12. Pour all developer [D] into the development unit uniformly.

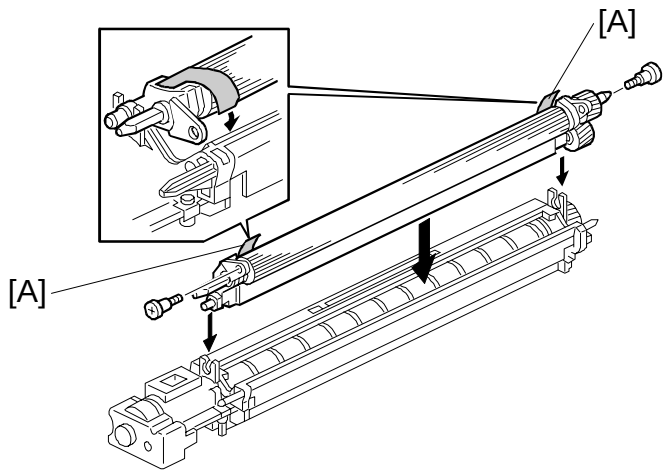

A231I536.WMF

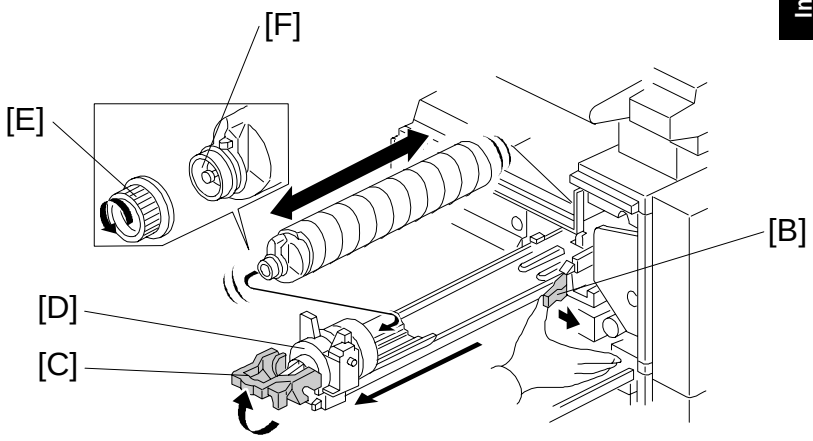

A231I509.WMF

13. Reassemble the development unit.
    NOTE: Make sure that the development side seals [A] are set inside the development unit case.
14. Reassemble the machine.
    NOTE: When reinstalling the PCU, make sure it is installed properly. Otherwise, black copies may be printed.
15. Push lever [B] to the side, raise the toner bottle holder lever [C], and pull the toner bottle holder [D] out.
16. Shake the toner bottle well.
    NOTE: Do not remove the toner bottle cap [E] until after shaking.
17. Unscrew the bottle cap and insert the bottle into the holder.
    NOTE: Do not touch the inner bottle cap [F].
18. Reposition the holder and press down the holder lever to secure the bottle.

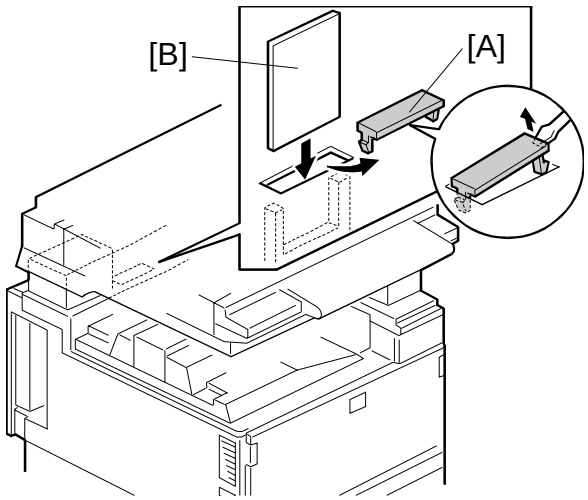

A231I537.WMF

- Steps 20 to 22 are for only Europe versions when the required language is other than English, French, and German -

19. Remove the IC card cover [A] and plug the IC card [B] which includes the appropriate language into the IC socket.
    NOTE: When setting the IC card, the surface of the card which has “B” printed on it should be facing the front of the machine.
20. Plug in the machine and turn on the main power switch, then press the “Yes” key. The machine automatically downloads the software.
21. After the software has been downloaded, turn off the main power switch and remove the IC card.
22. Turn on the main power switch.
23. After the fusing warm-up period, enter the SP mode.
    1) Press the “Clear Mode” key.
    2) Enter “107” using the numeric keys.
    3) Hold down the “Clear/Stop” key for more than 3 seconds.
    4) Select “1” (copier).
    NOTE: Do not enter SP mode during the fusing warm-up period (the LED of the start key is red during this period)
24. Perform the TD sensor initial setting as follows:
    1) Enter “2-801” and press the “Enter” key.
    2) Press “1” to start the TD sensor initial setting.
    NOTE: The machine will automatically stop when TD sensor initial setting is completed, and the TD sensor output voltage will appear on the LCD.
25. Perform the process control initial setting using SP2-805.
26. **Europe:** Select the correct language using SP 5-009.

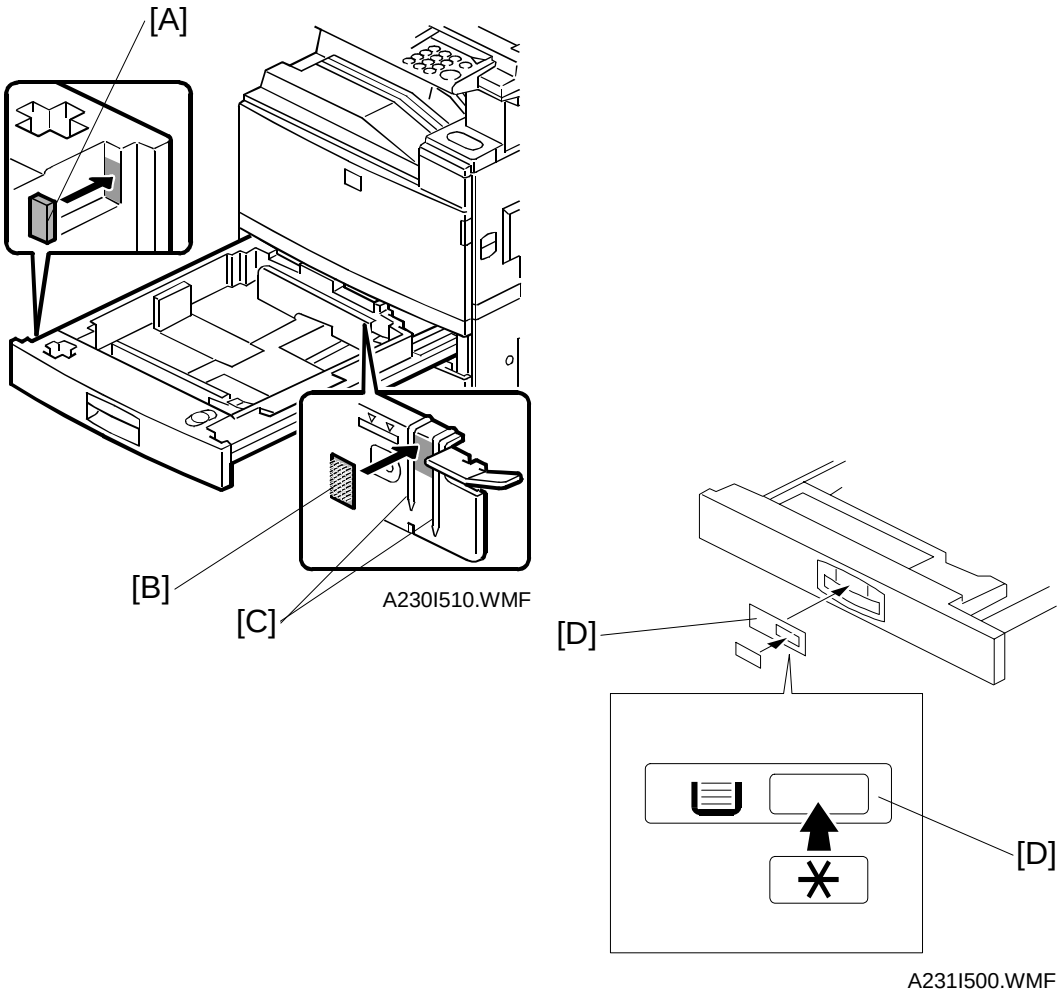

27. When loading paper bigger than A4 (11” x 8.5”) in the 1st paper tray, attach the pad [A] and the cushion [B] to the paper tray as shown.
    NOTE: 1) This procedure is required only for the 1st paper tray.
    2) Make sure that the pad is not attached over the ribs [C].
28. Change the side fences and end fence to match the paper size that will be used. Then pull the paper tray out and load paper into it.
29. Enter the proper paper size for each paper tray using UP mode.
30. Attach the appropriate paper size decal [D] to the paper tray.
    NOTE: Paper size decals are also used for the optional paper tray unit. Keep any remaining decals for use with the paper tray unit.
31. Check the copy quality and machine operation (refer to the “Replacement and Adjustment - Copy Adjustment” section of the service manual).

3.4 PAPER TRAY UNIT INSTALLATION

3.4.1 ACCESSORY CHECK

Check the quantity and condition of the accessories in the box against the following list:

Description	Q'ty
1. Joint Bracket	1
2. Front Stand	1
3. Rear Stand	1
4. Stand Bracket	1
5. Knob Screw – M3	1
6. Knob Screw – M4x10	1
7. NECR – Multi-language (-17, -27 machines)	1
8. Installation Procedure	1

3.4.2 INSTALLATION PROCEDURE

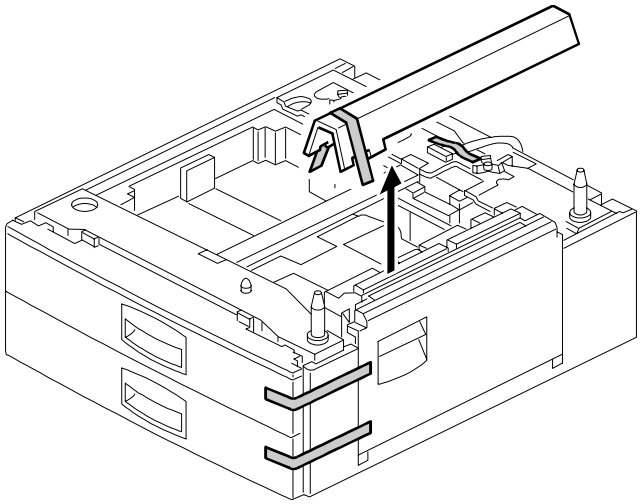

A230I107.WMF

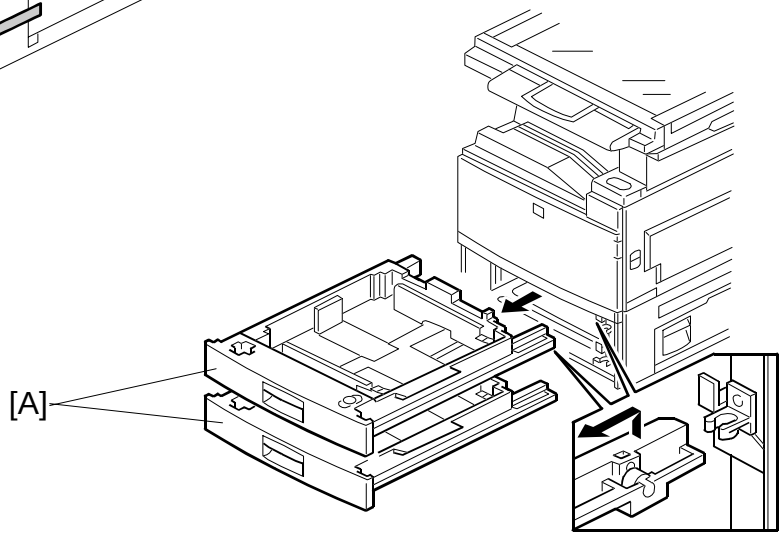

A230I104.WMF

⚠CAUTION

Unplug the main machine power cord before starting the following procedure.

1. Unpack the paper tray unit. Then remove the tapes.
2. Remove the paper trays [A] from the base copier.

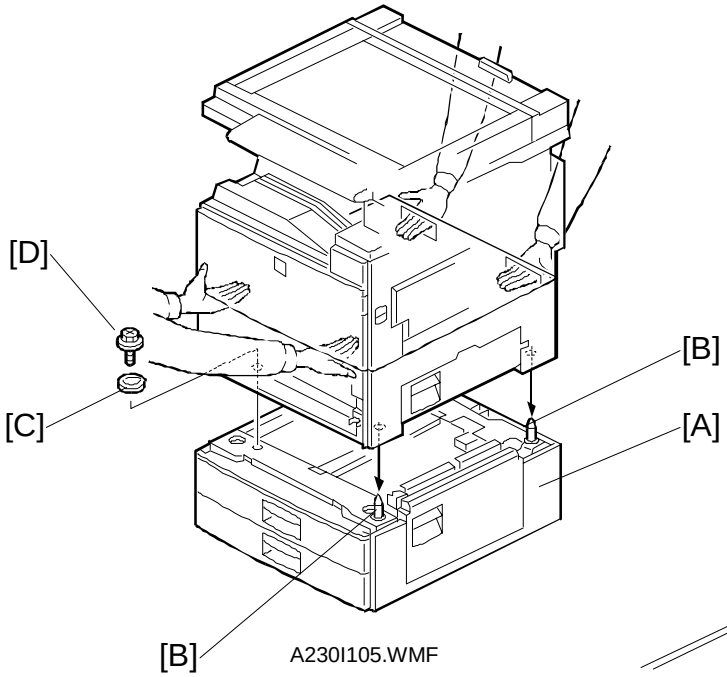

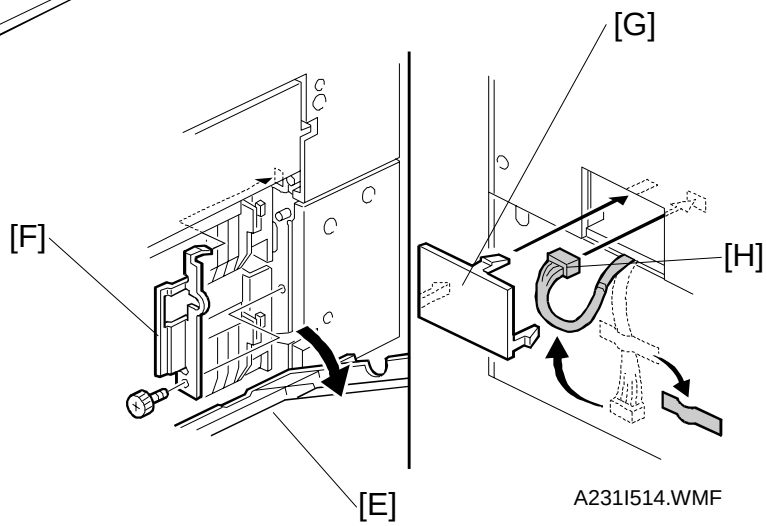

3. Place the main machine on the paper tray unit [A] with the pegs [B] fitting into main machine's peg holes.

   NOTE: 1) The machine must be held as shown in the above illustration.
   2) Do not hold the scanner unit when lifting.

4. Attach the spring washer [C] to the short knob screw [D]. Then secure the paper tray unit.
5. Open the right cover of the paper tray unit [E].
6. Secure the joint bracket [F] (1 long knob screw).
7. Remove the connector cover [G] of the main machine.
8. Connect the paper tray unit harness [H] to the main machine and reinstall the connector cover.

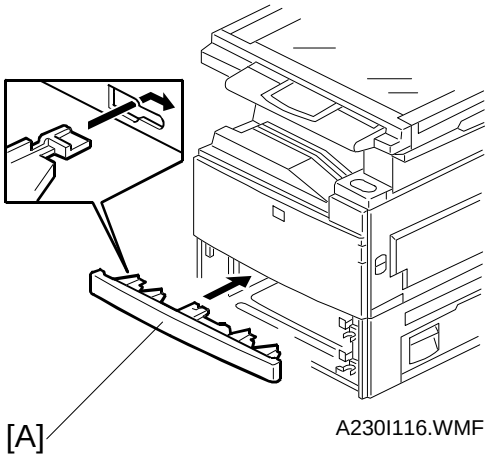

A230I116.WMF

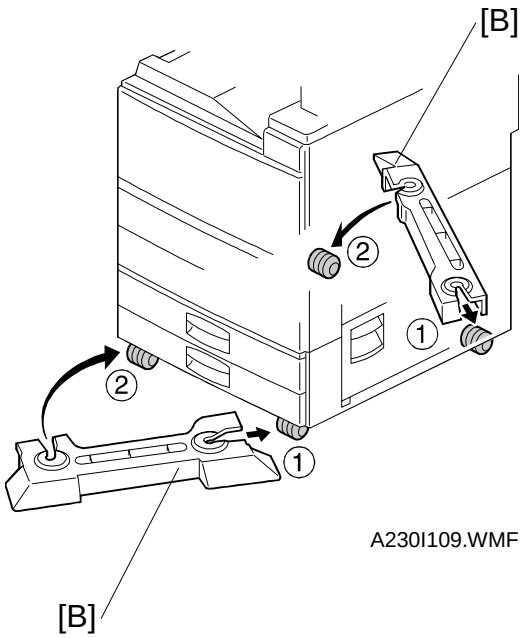

A230I109.WMF

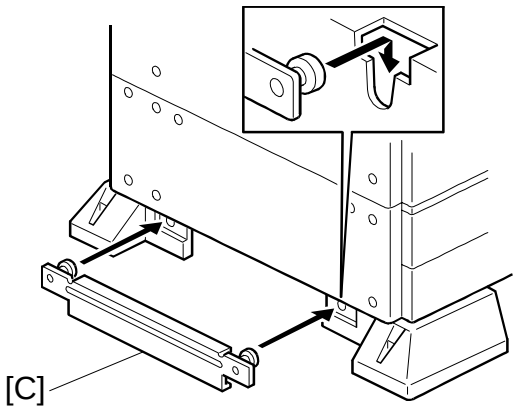

A230I111.WMF

10. Install the middle front cover [A], which is in the 2nd paper tray of the copier.
11. Install the front and rear stands [B] as shown above.
12. Install the stand bracket [C].

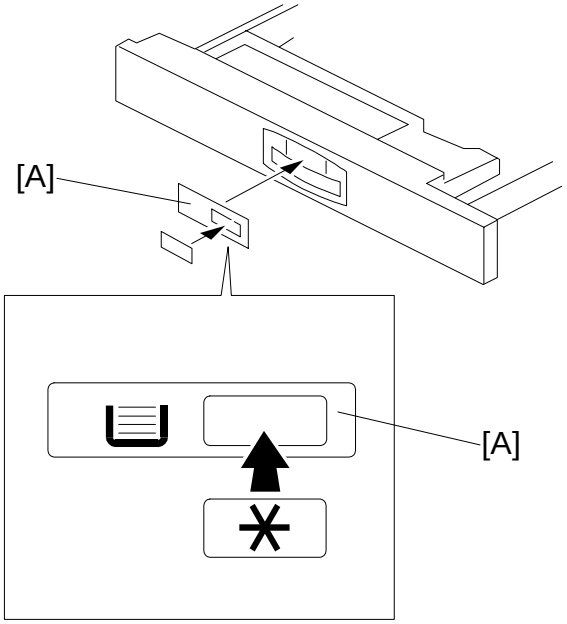

A231I500.WMF

13. Load paper into the paper trays and install the paper trays.
    NOTE: The side and rear fences should be properly positioned using the green screw driver tool.
14. Attach the appropriate tray decals [A] which are included in the accessory box for the main machine.
15. Turn on the main power switch.
16. Enter the paper size for each paper tray using a UP mode.
17. Check the machine's operation and copy quality.

3.5 INTERCHANGE UNIT INSTALLATION

3.5.1 ACCESSORY CHECK

Check the quantity and condition of the accessories in the box against the following list:

Description	Q'ty
1. Timing Belt	1
2. Spring	1
3. Gear/Pulley	1
4. Gear Bracket	1
5. Screw – M3x8	1
6. Installation Procedure	1

3.5.2 INSTALLATION PROCEDURE

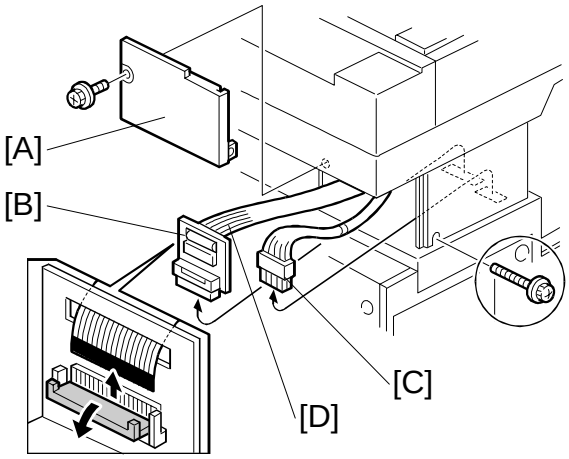

A230I301.WMF

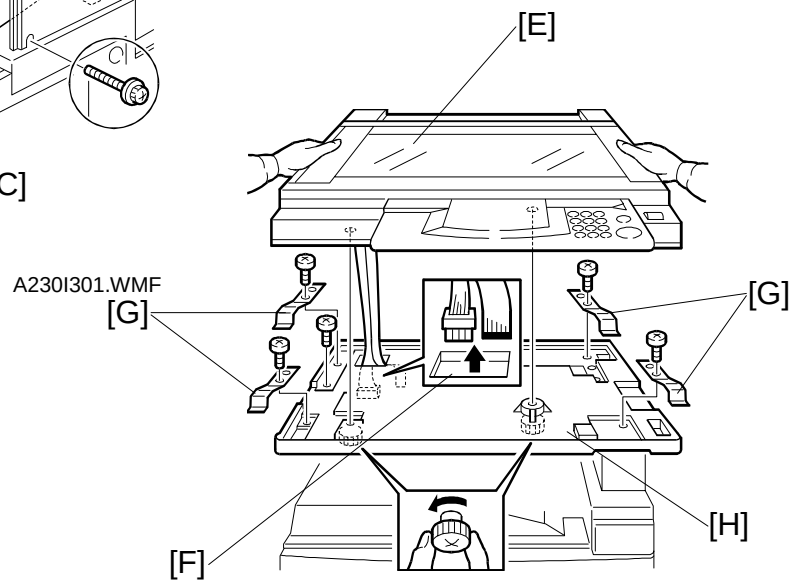

A230I302.WMF

⚠CAUTION

Unplug the main machine power cord before starting the following procedure.

1. Remove the scanner unit.
   NOTE: If the ARDF is installed, remove the ARDF before removing the scanner unit.
   1) Remove the stand rear cover [A] (2 screws).
   2) Disconnect the scanner I/F board [B] and the power connector [C].
   3) Disconnect the scanner I/F harness [D].
   4) Remove the scanner unit [E] (2 knob screws).
   NOTE: 1) Hold the scanner unit as shown in the above illustration. Otherwise, it will be damaged.
   2) Make sure the harnesses are not damaged by the edges of the opening [F].
   3) After removing the scanner, keep it in a flat level place.
   5) Remove four plates [G] (1 screw each).
   6) Remove the scanner unit plate [H] (1 screw).

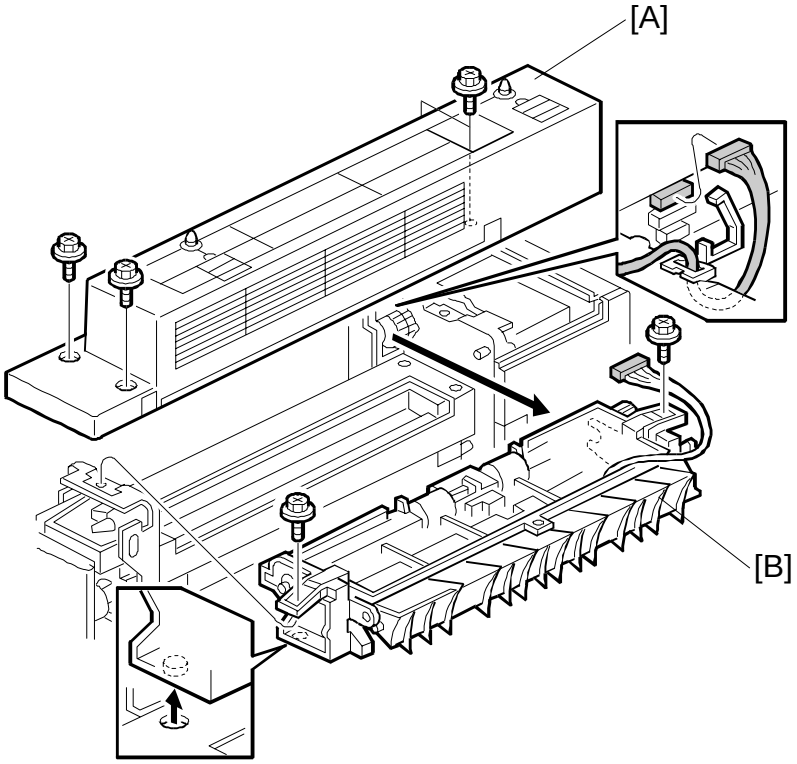

A230I453.WMF

2. Unpack the interchange unit.
3. Remove the paper exit cover [A] (4 screws).
4. Open the upper right cover.
5. Remove the paper exit unit [B] (2 screws, 1 connector).

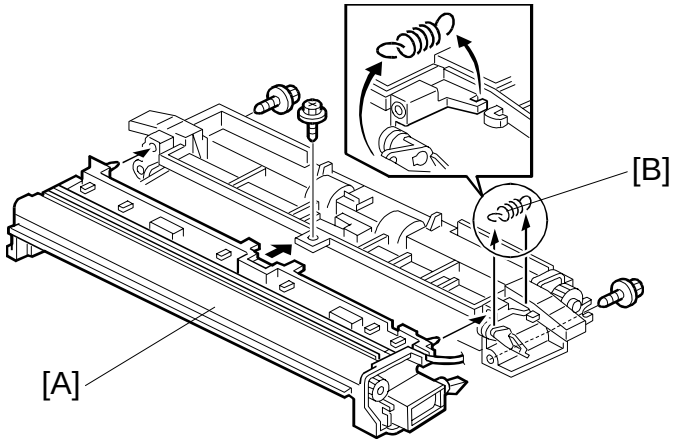

A230I454.WMF

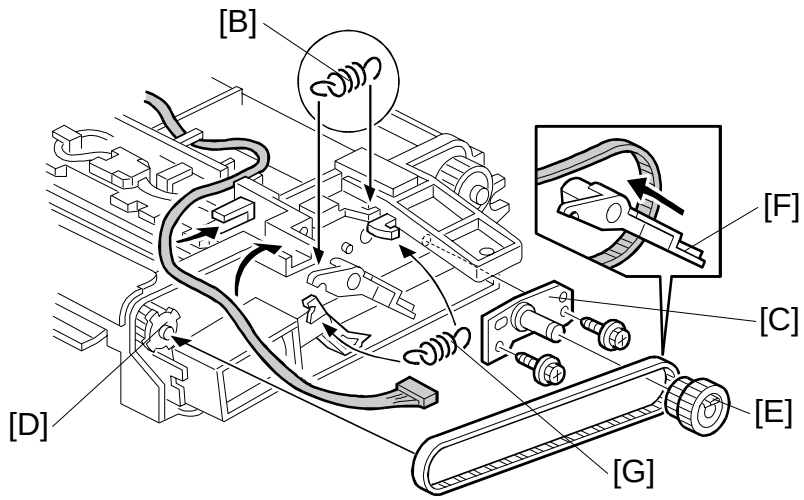

A230I455.WMF

6. Install the interchange unit [A] (3 screws).
7. Remove the spring [B].
8. Install the gear bracket [C] (2 screws).
9. Loop the timing belt around the gear [D].
10. Install the pulley [E] on the gear bracket while looping the timing belt around the pulley.
    NOTE: The junction gate lever [F] should go through the timing belt.
11. Reinstall the spring which was removed in step 7.
12. Install the small spring [G] from the accessories box, as shown.

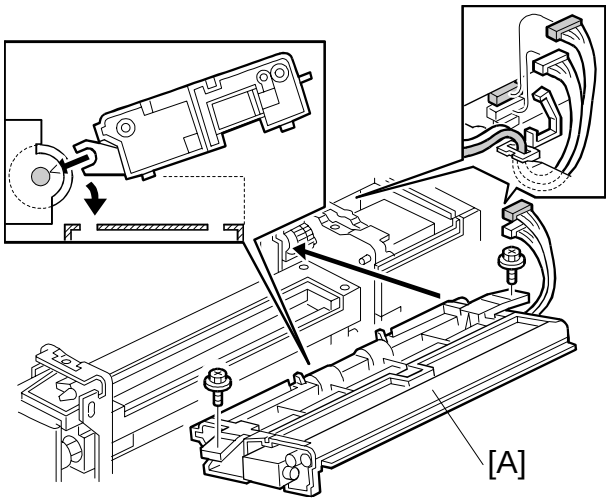

A230I456.WMF

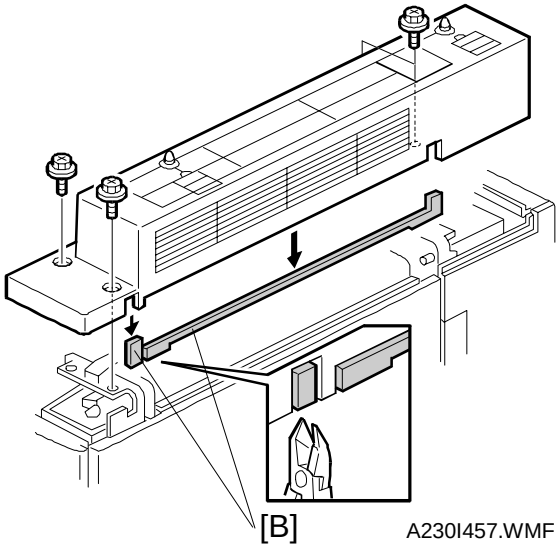

A230I457.WMF

13. Install the paper exit / interchange unit [A] as shown (2 screws, 2 connectors).

- When the 1-bin tray (A684) is going to be installed -

14. Do not reinstall the paper exit cover. Install the 1-bin tray. This installation procedure is now finished.

- When the 1-bin tray (A684) is not going to be installed, do steps 15 to 18 -

15. Cut away the covers [B] and reinstall the paper exit cover (4 screws).
    NOTE: Trim off any remaining unevenness from the edges.
16. Reinstall the scanner unit plate.
17. Reinstall the scanner unit.
18. Turn on the main power switch and check that each paper path through the interchange unit operates properly, without any paper jams.

3.6 1-BIN TRAY UNIT INSTALLATION

3.6.1 ACCESSORY CHECK

Check the quantity and condition of the accessories in the box against the following list:

Description	Q'ty
1. Grounding Bracket	1
2. Connector Cover	1
3. Base Cover	1
4. Copy Tray	1
5. Copy Tray Bracket	1
6. Snap Ring	1
7. Mylar Strip	2
8. Stepped Screw – M3x8	5
9. Screw – M3x8	1
10. Tapping Screw – M3x6	2
11. Tapping Screw – M3x14	1
12. Tapping Screw – M3x8	1
13. NECR	1
14. Installation Procedure	1

3.6.2 INSTALLATION PROCEDURE

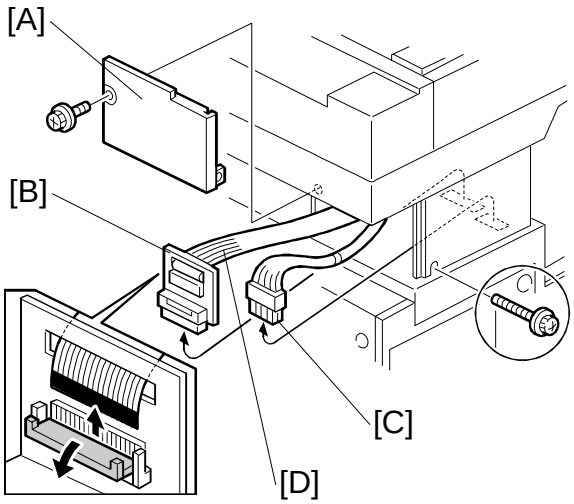

A230I301.WMF

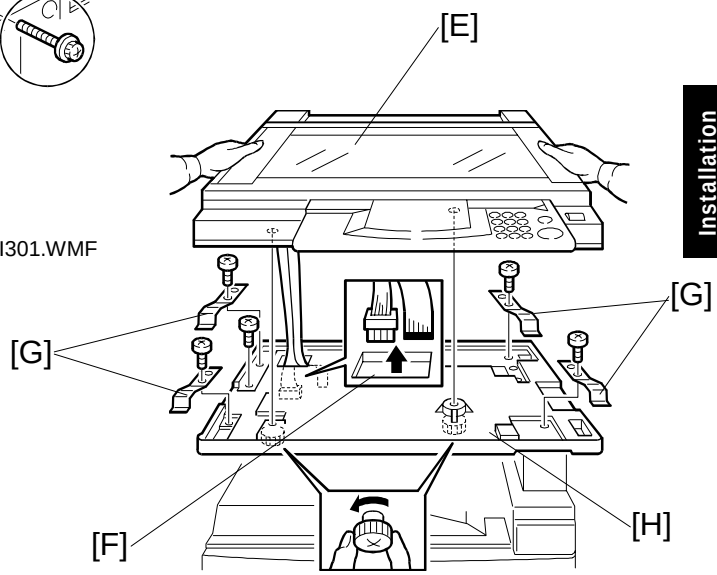

A230I302.WMF

NOTE: The interchange unit (A690) must be installed before installing the 1-bin tray unit.

⚠CAUTION

Unplug the main machine power cord before starting the following procedure.

1. Remove the scanner unit.
   NOTE: If the ARDF is installed, remove the ARDF before removing the scanner unit.
   1) Remove the stand rear cover [A] (2 screws).
   2) Disconnect the scanner I/F board [B] and the power connector [C].
   3) Disconnect the scanner I/F harness [D].
   4) Remove the scanner unit [E] (2 knob screws).
   NOTE: 1) Hold the scanner unit as shown in the above illustration. Otherwise, it may be damaged.
   2) Make sure the harnesses are not damaged by the edges of the opening [F].
   3) After removing the scanner, keep it in a flat level place.
   5) Remove four plates [G] (1 screw each).
   6) Remove the scanner unit plate [H] (1 screw).

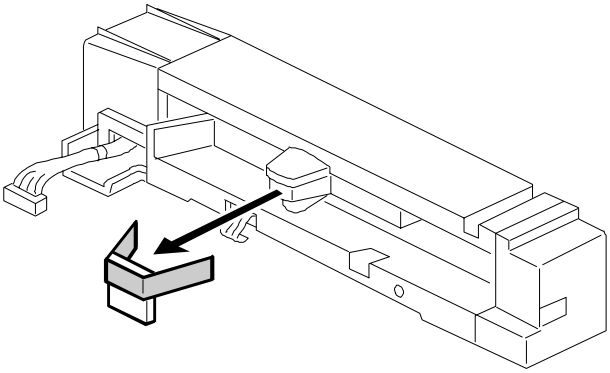

A231I504.WMF

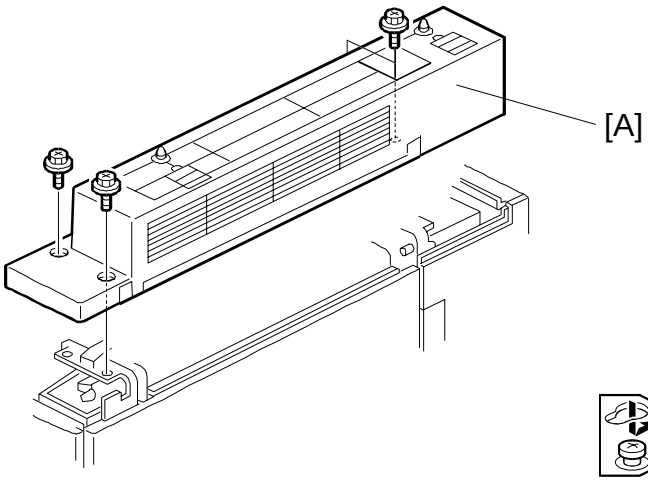

A231I505.WMF

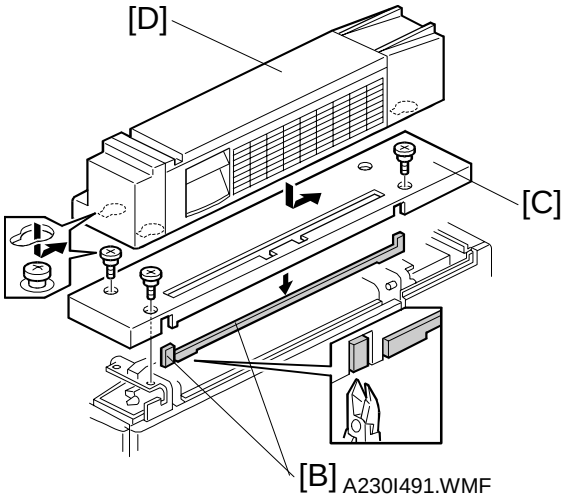

A230I491.WMF

2. Unpack the 1-bin tray unit and remove the tapes.
3. Remove the paper exit cover [A] (4 screws).

Do step 4 only if the duplex unit has been installed or will be installed.

4. Cut away two covers [B] from the base cover [C].
   NOTE: Trim off any remaining unevenness from the edges.
5. Install the base cover (3 stepped screws).
6. Place the 1-bin tray unit [D] on the base cover.
   NOTE: Make sure to hold the 1-bin tray unit at both sides but never at the center.

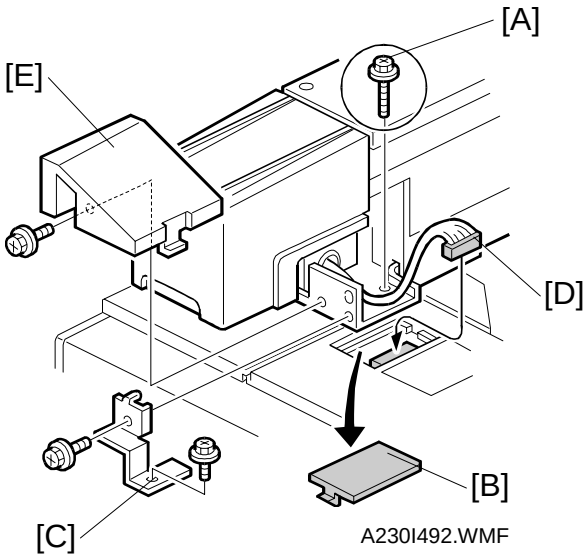

A230I492.WMF

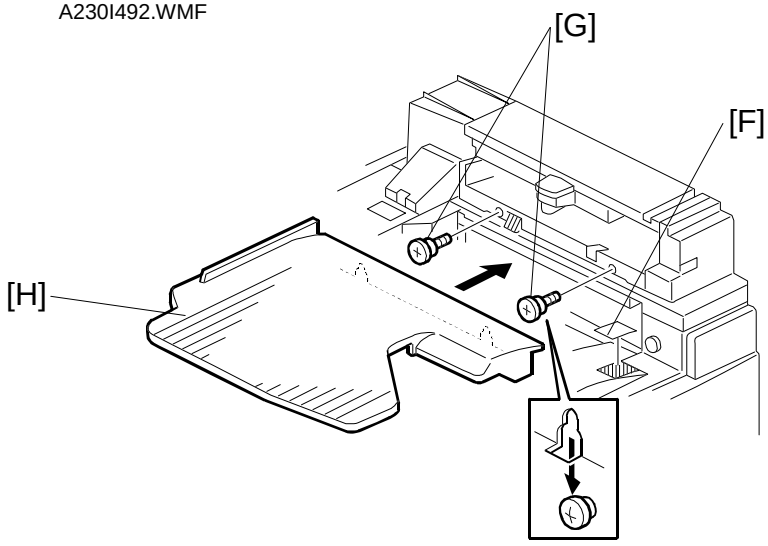

A230I493.WMF

7. Secure the 1-bin tray unit (1 screw [A] – M3 x 10).
8. Remove the cover [B].
9. Install the grounding bracket [C] (2 screws - M3 x 6).
10. Connect the harness [D].
11. Install the connector cover [E] (1 screw - M3 x 8).
12. Install the copy tray.
    - When the Bridge Unit (A688) has not been installed -
    1) Attach the decal [F], as shown.
    2) Install two stepped screws [G], then attach the copy tray [H].

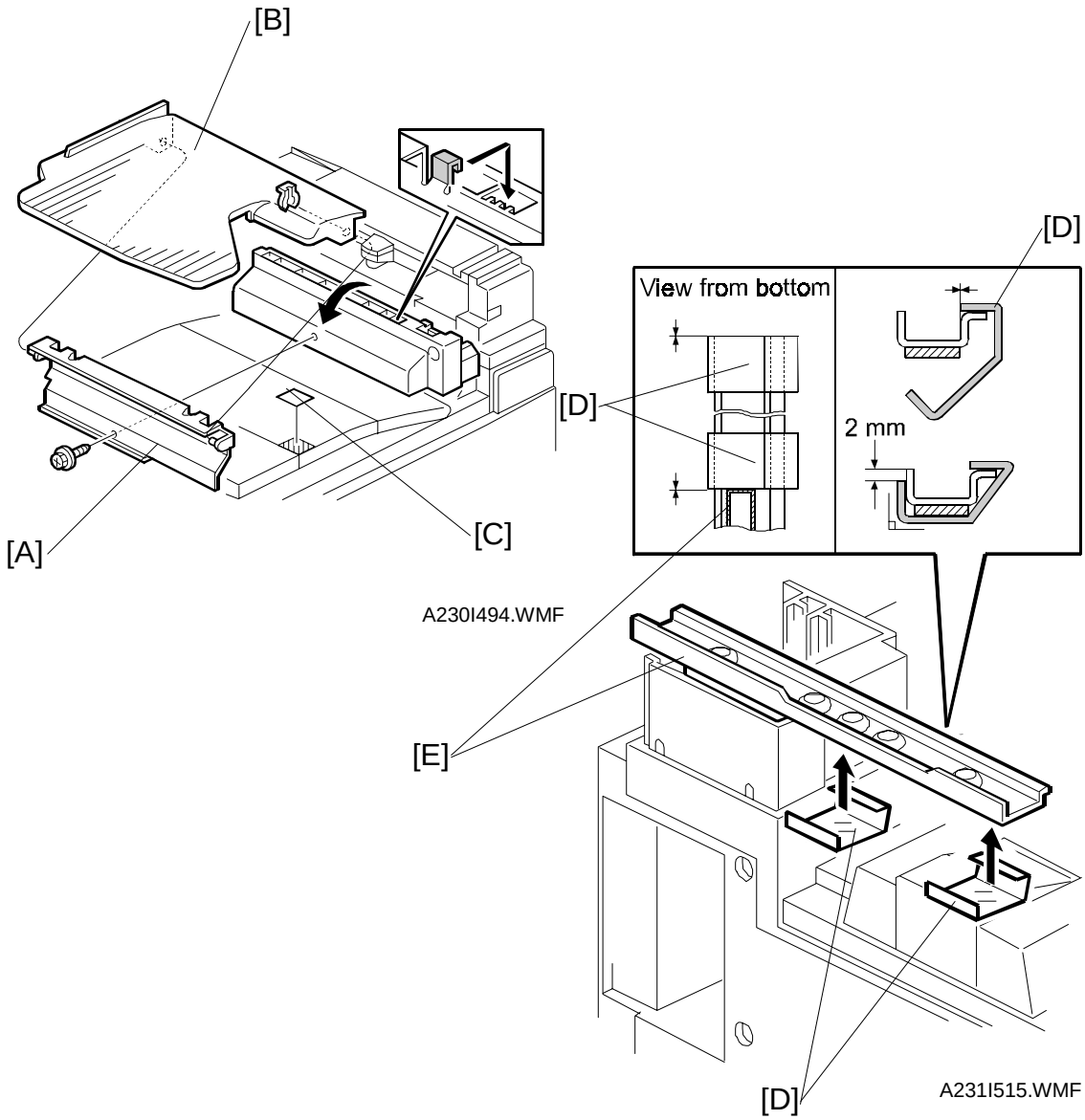

- When the Bridge Unit (A688) has been installed -

1) Open the right cover of the bridge unit.
2) Install the copy tray bracket [A] (1 screw).
3) Install the copy tray [B] (1 snap ring).
4) Attach the decal [C], as shown.

13. Fold two mylar strips [D] around the scanner stand [E], as shown.

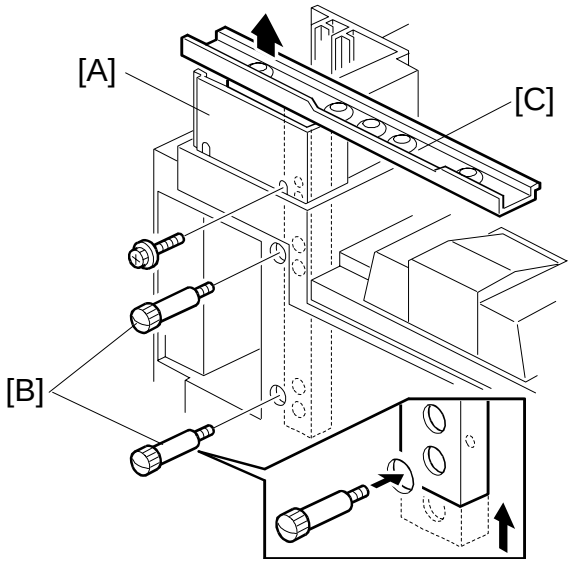

A230I203.WMF

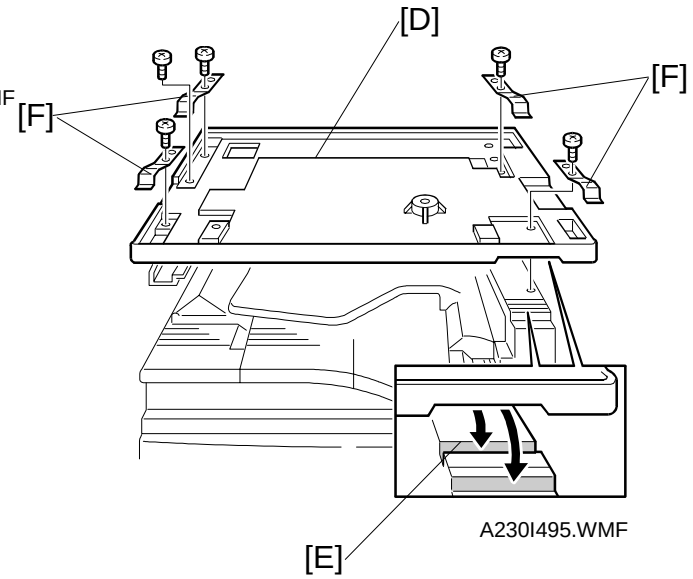

A230I495.WMF

14. Change the height of the scanner stand.
    1) Remove the stand cover [A] (1 screw).
    2) Remove two screws [B] which are securing the scanner stand [C].
    3) Raise the scanner stand until the next set of screw holes in the main frame can be seen through the screw holes in the scanner stand.
    4) Secure the stand.
    5) Reinstall the stand cover.
15. Reinstall the scanner unit plate [D] (1 screw).
    NOTE: The scanner unit plate should be positioned at the rear, as shown [E].
16. Reinstall four plates [F] (1 screw each).
17. Reinstall the scanner unit.
18. Turn on the main power switch and check the 1-bin tray unit operation.

3.7 BRIDGE UNIT INSTALLATION

3.7.1 ACCESSORY CHECK

Check the quantity and condition of the accessories in the box against the following list:

Description	Q'ty
1. Stepped Screw	2
2. Connector Cover	1
3. Entrance Mylar	2
4. Exit Mylar	2
5. NECR	1
6. Installation Procedure	1

3.7.2 INSTALLATION PROCEDURE

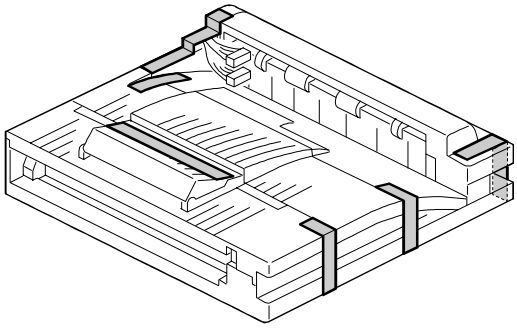

A230I401.WMF

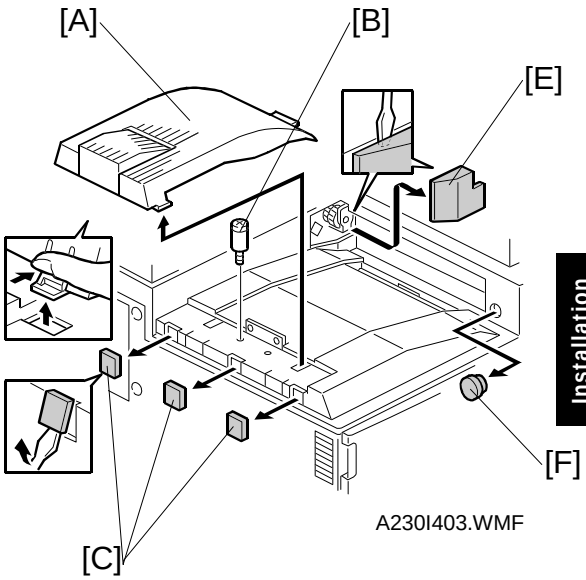

A230I403.WMF

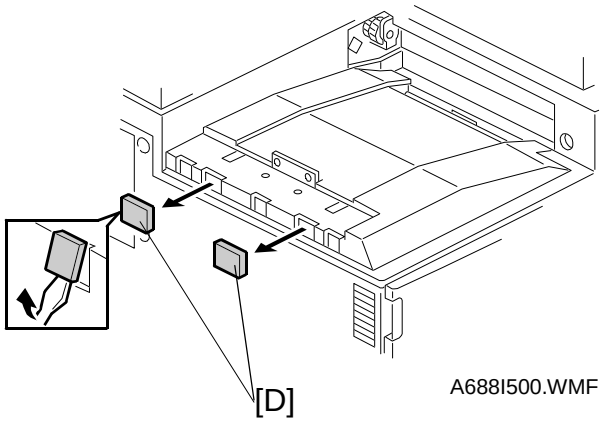

A688I500.WMF

⚠CAUTION

Unplug the main machine power cord before starting the following procedure.

1. Unpack the bridge unit. Then remove the tapes.
2. Remove the inner tray [A].
3. Remove the inner tray pin [B].
4. Remove three covers [C].

If the optional external output tray (A825) will be installed instead of a finisher, do step 5.

5. Remove the two covers [D].
6. Remove the cover [E].
7. Remove the cap [F].

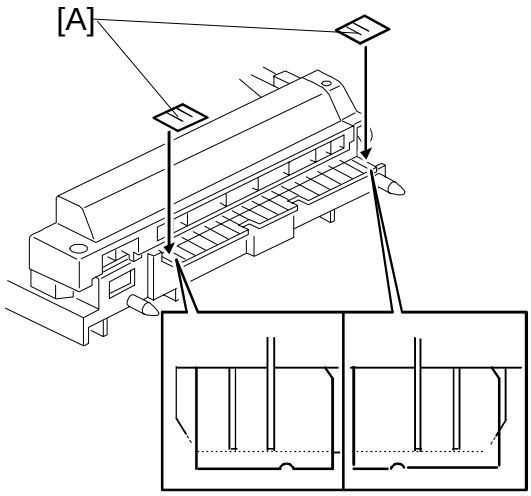

A230I406.wmf

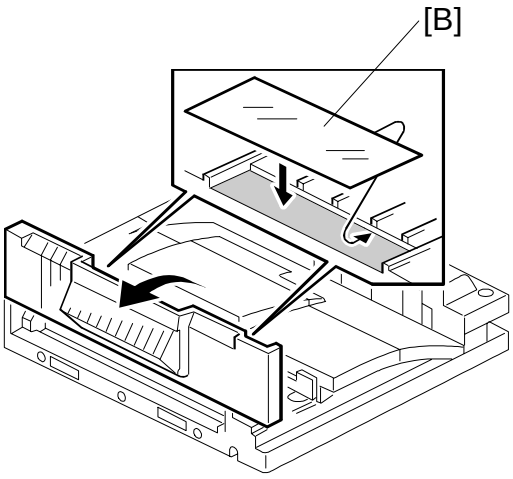

A230I402.WMF

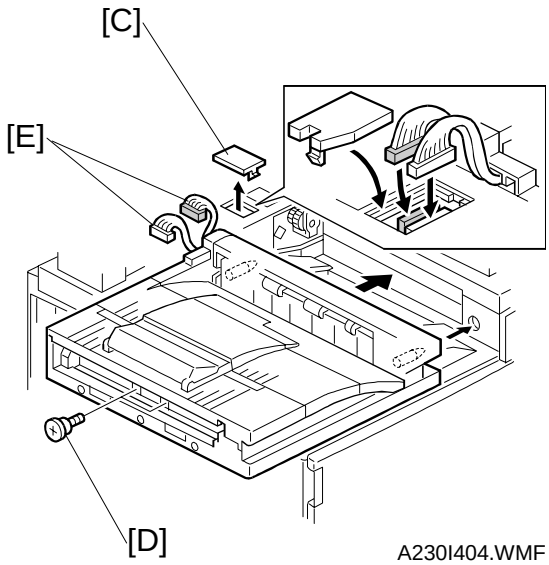

A230I404.WMF

7. Attach two entrance mylars [A] to the paper entrance area of the bridge unit as shown.
8. **If the optional finisher will be installed:**
   Attach two exit mylars [B] to the bridge unit as shown.
9. Remove the cover [C].
10. Install the bridge unit (2 screws) [D].
11. Connect the bridge unit I/F harnesses [E].
12. Install the connector cover.
13. Turn on the main power switch and check the bridge unit operation (make sure that there are no paper jams).

3.8 AUTO REVERSE DOCUMENT FEEDER INSTALLATION

3.8.1 ACCESSORY CHECK

Check the quantity and condition of the accessories in the box against the following list:

Description	Q'ty
1. Stepped Screw	2
2. Knob Screw	2
3. Original Tray	1
4. Screw – M4x17	2
5. NECR	1
6. Installation Procedure	1

3.8.2 INSTALLATION PROCEDURE

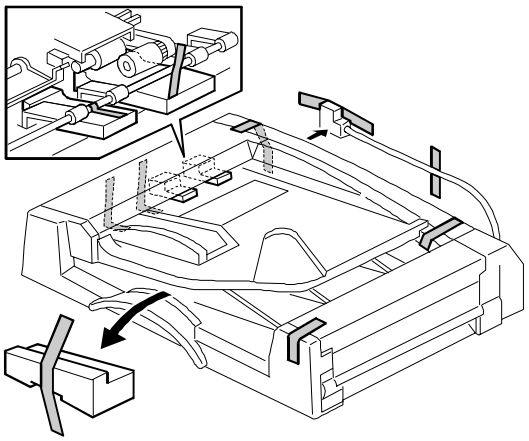

A231I506.WMF

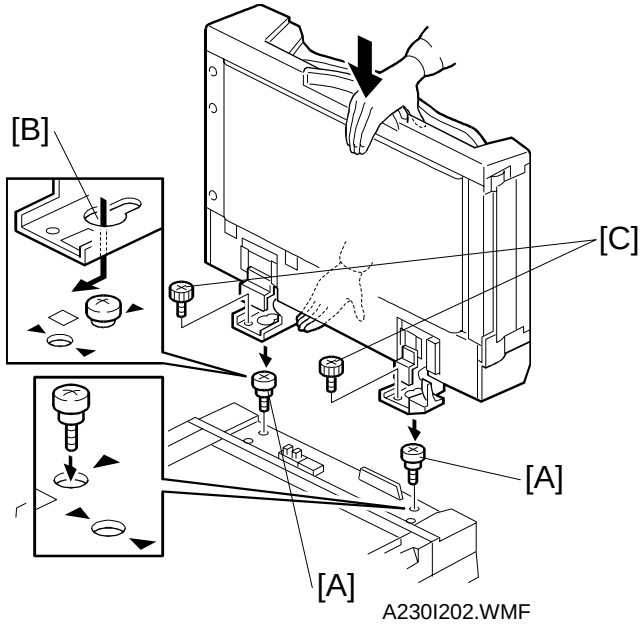

A230I202.WMF

⚠CAUTION

Unplug the main machine power cord before starting the following procedure.

1. Unpack the ARDF. Then remove the tapes on the exterior of the ARDF.
2. Tighten the two stud screws [A].
3. Mount the ARDF by aligning the screw holes [B] in the ARDF over the stud screws, and slide the ARDF to the front as shown.

   NOTE: When mounting the ARDF, hold it by hand as shown in the illustration. Holding it in another way may damage the ARDF.
4. Secure the ARDF (2 knob screws [C]).

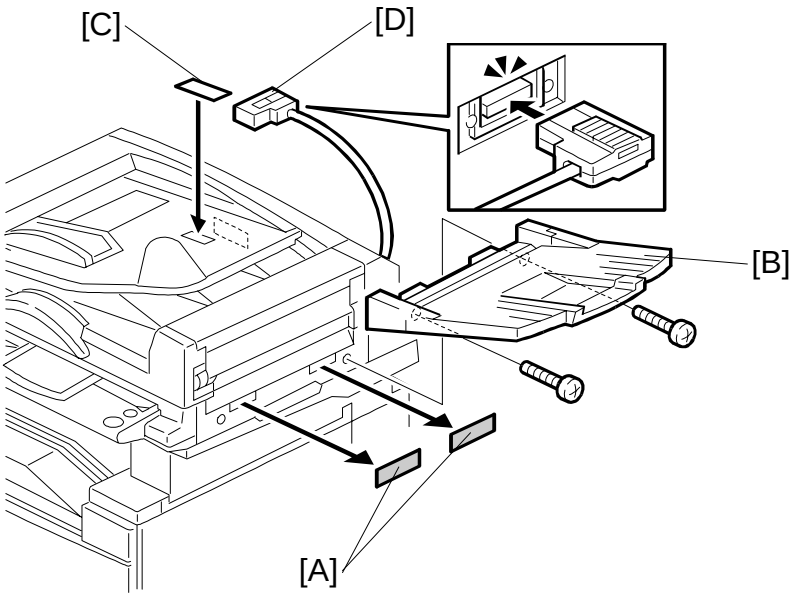

A230I203.WMF

5. Remove the two seals [A].
6. Install the original tray [B] (2 screws).
7. Attach the original direction decal [C] to the DF table as shown.
8. Connect the I/F harness [D] to the main machine.
9. Turn on the main power switch.
10. Check the ARDF operation and copy quality.

3.9 DUPLEX UNIT INSTALLATION

3.9.1 ACCESSORY CHECK

Check the quantity and condition of the accessories in the box against the following list:

Description	Q'ty
1. Link Bracket	1
2. Connector Cover	1
3. Duplex Unit Stand	1
4. Stand Cover	1
5. Front Cover	1
6. Rear Cover	1
7. Roller	1
8. Bushing	2
9. Spring	2
10. Snap Ring	1
11. Screw – M3x6	1
12. Screw – M3x8	5
13. Screw – M4x10	4
14. NECR	1
15. Installation Procedure	1

3.9.2 INSTALLATION PROCEDURE

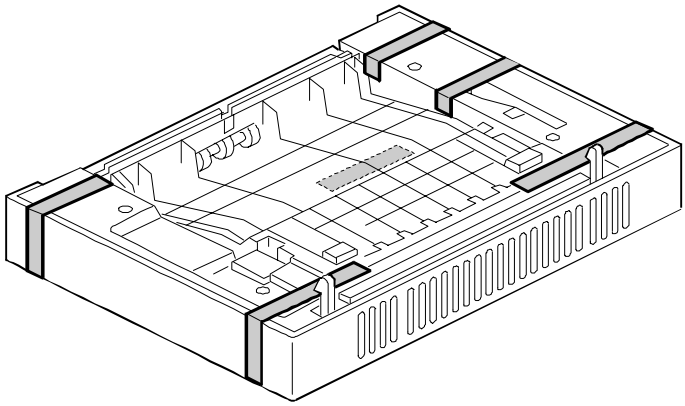

A231I508.WMF

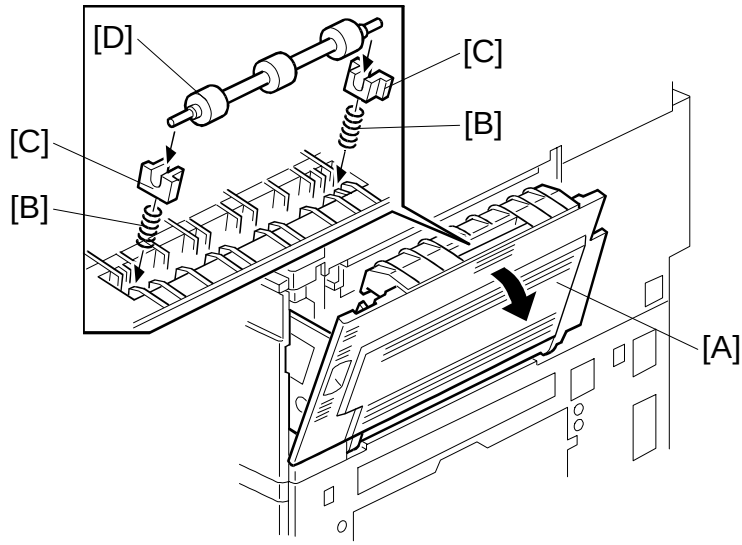

A230I655.WMF

⚠CAUTION

Unplug the main machine power cord before starting the following procedure.

NOTE: The interchange unit (A690) must be installed before installing this duplex unit.

1. Unpack the duplex unit and remove the tapes.
2. Open the upper right cover [A] and install two springs [B], two bushings [C], and roller [D].

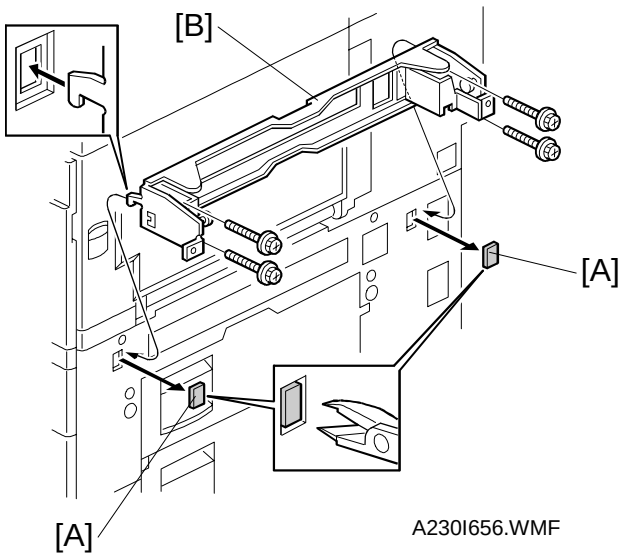

A230I656.WMF

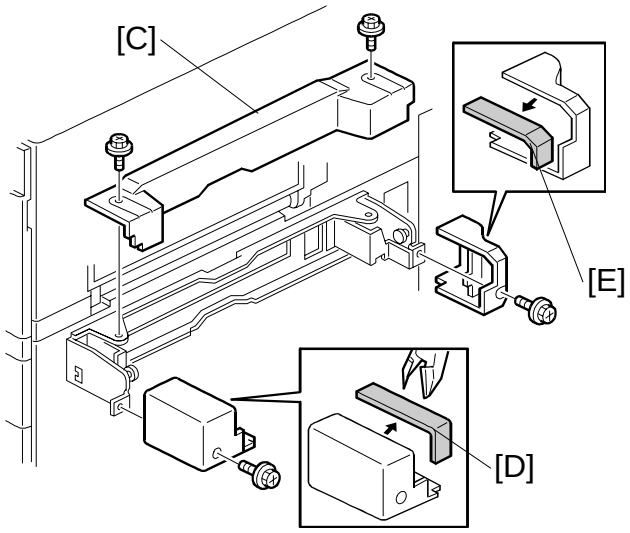

A230I657.WMF

- When the By-pass Feed Unit (A689) has not been installed, do steps 3 to 7 -

3. Remove the covers [A].
4. Install the duplex unit stand [B] (4 screws).
5. Install the stand cover [C] (2 screws).
6. Remove the indicated parts of the front cover [D] and the rear cover [E].
7. Install the front and rear covers (1 screw each).

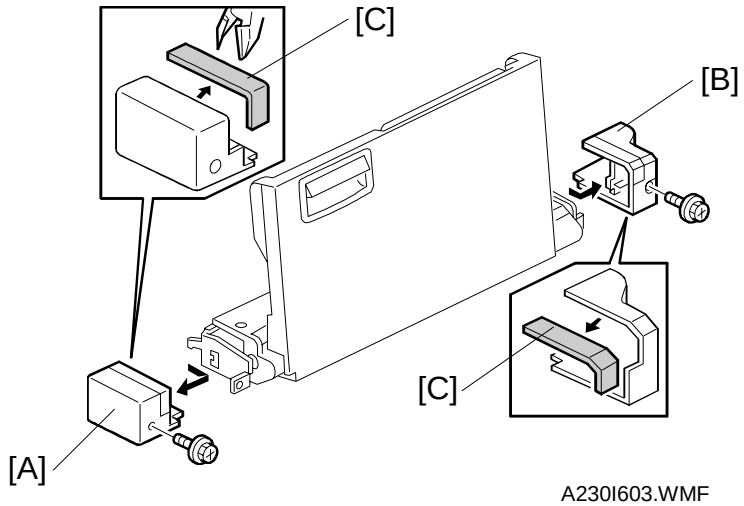

A230I603.WMF

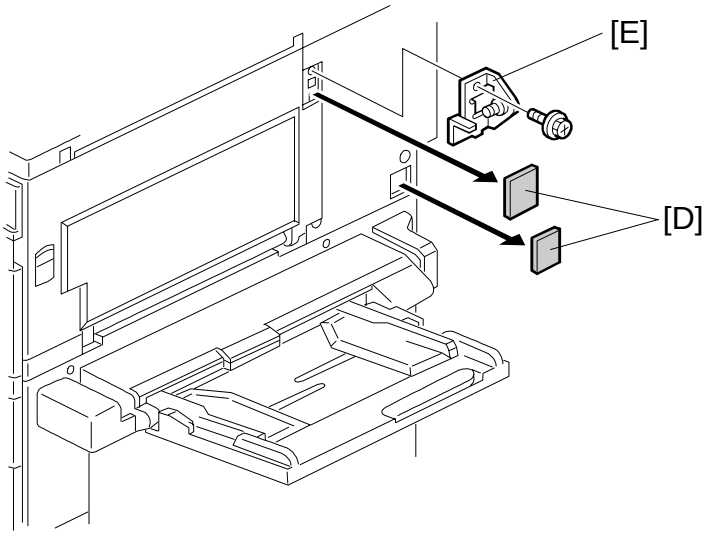

A230I652.WMF

- When the By-pass Feed Unit (A689) has been installed, do steps 8 to 12 -

8. Remove the front cover [A] and rear cover [B] of the by-pass feed unit.
9. Remove the indicated parts of both covers [C].
10. Reinstall the front and rear covers.
11. Remove the covers [D].
12. Install the bracket [E] (1 screw).

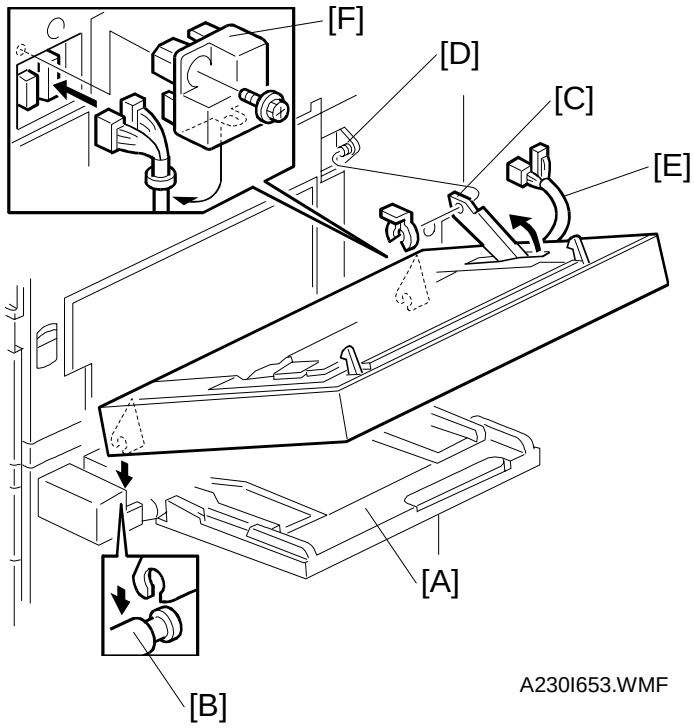

13. Open the by-pass feed table [A], if it has been installed.
14. Set the duplex unit on the shaft [B].
15. Connect the link [C] to the pin [D] (1 snap ring).
16. Connect the duplex I/F harness [E].
17. Install the connector cover [F] (1 screw).
18. Turn on the main power switch and check the duplex unit's operation.

3.10 BY-PASS FEED UNIT INSTALLATION

3.10.1 ACCESSORY CHECK

Check the quantity and condition of the accessories in the box against the following list:

Description	Q'ty
1. Screw – M3x8	2
2. Screw – M4x10	4
3. Front Cover	1
4. Rear Cover	1

3.10.2 INSTALLATION PROCEDURE

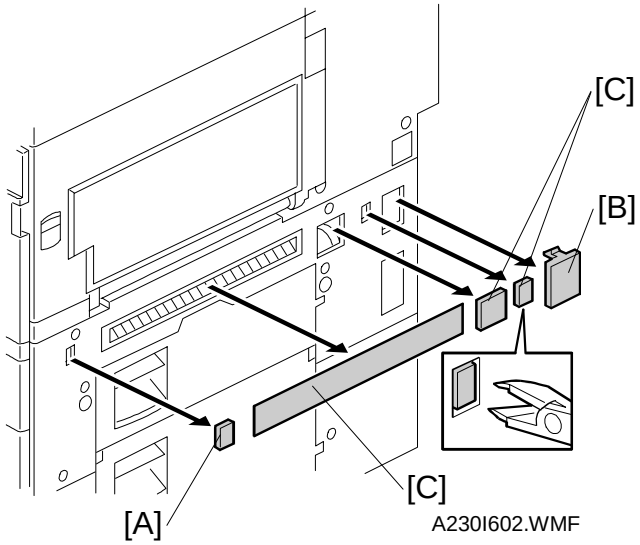

⚠CAUTION

Unplug the main machine power cord before starting the following procedure.

1. Unpack the by-pass feed unit.
2. Remove three covers [A], a cap [B], and the seal [C] from the right side of the main machine.

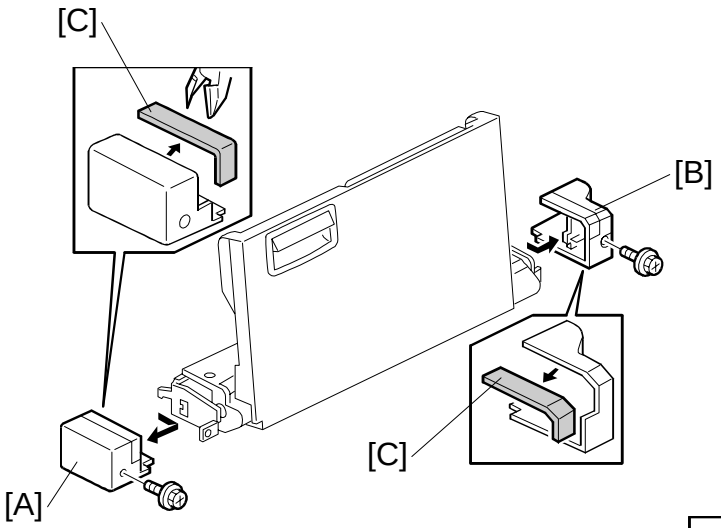

A230I603.WMF

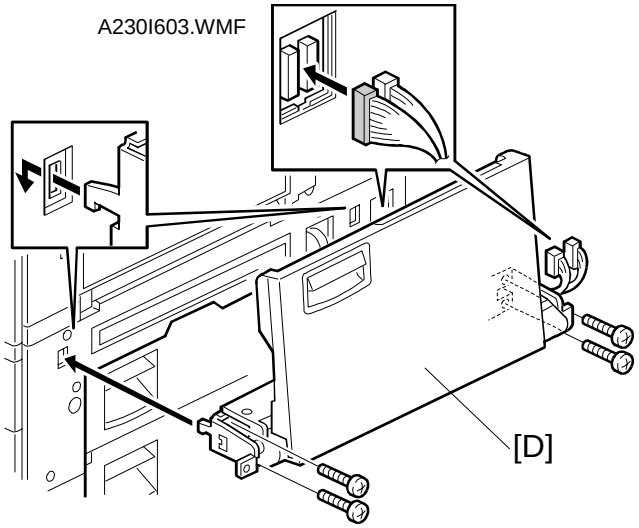

A230I604.WMF

3. Remove the front cover [A] and rear cover [B].
4. **When the Duplex Unit (A687) will be installed:**
   Remove the indicated part of each cover [C].
5. Install the by-pass feed unit [D] (4 screws, 2 connectors).
6. Reinstall the front and rear covers.
7. Turn on the main power switch and check the copy image registration.

3.11 LCT INSTALLATION

3.11.1 ACCESSORY CHECK

Check the quantity and condition of the accessories in the box against the following list:

Description	Q'ty
1. Joint Pin	2
2. Stepped Screw M3x18	4
3. Magnet Cover	1
4. NECR (-17, -27 machines)	1
5. Installation Procedure	1

3.11.2 INSTALLATION PROCEDURE

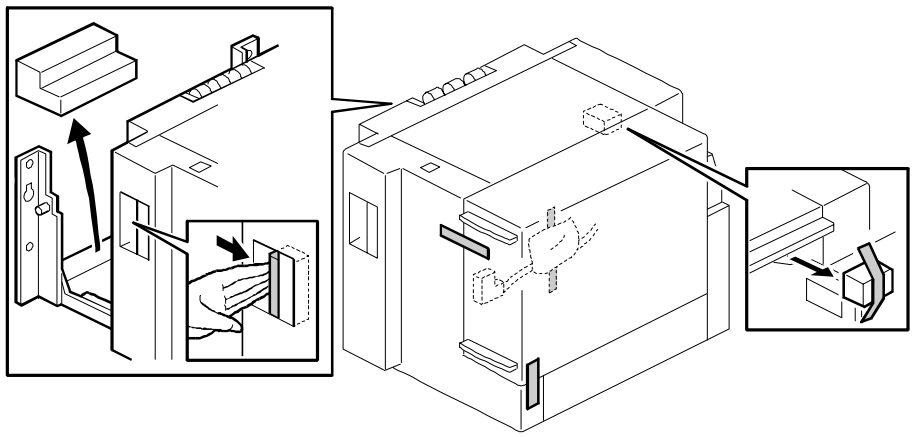

A231I507.WMF

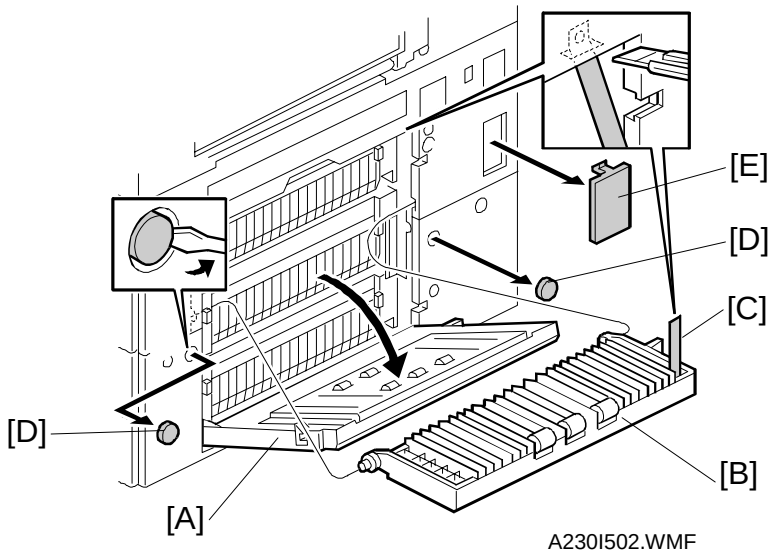

A230I502.WMF

⚠CAUTION

Unplug the main machine power cord before starting the following procedure.

NOTE: The paper tray unit (A682) must be installed before installing the LCT.

1. Unpack the LCT and remove the tapes.
2. Open the right cover of the paper tray unit [A].
3. Open the lower right cover [B] and cut the holding band [C].
   NOTE: When cutting the holding band, the upper part of the band should be cut, as shown. Otherwise, paper jams may occur.
4. Remove the lower right cover, then close the right cover [A].
5. Remove two caps [D] and a cover [E].

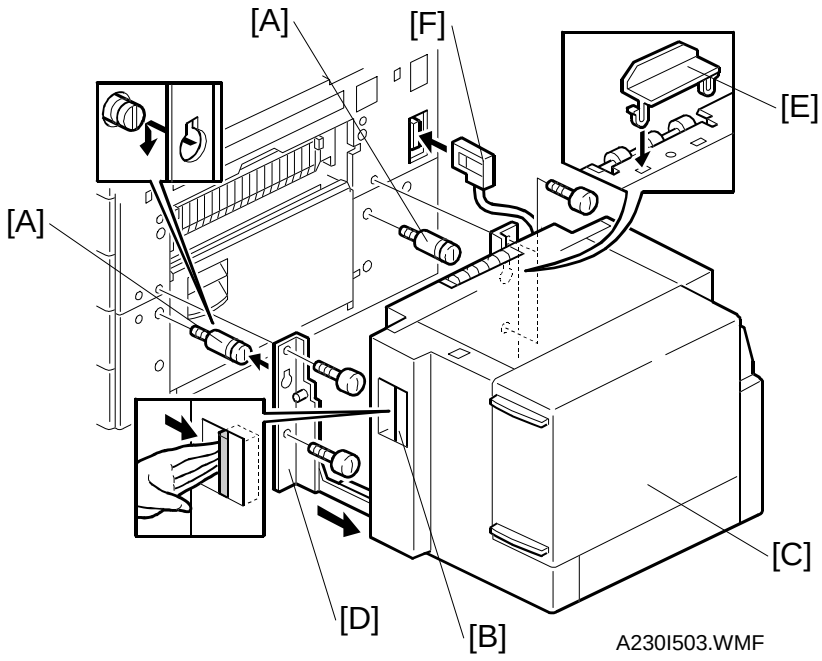

6. Install the joint pins [A].
7. Push the release lever [B] and slide the LCT to the right (front view).
8. Hang the LCT [C] on the joint pins, then secure the brackets [D] (4 screws).
9. **NAD30S: If the By-pass Feed Unit (A689) has not been installed:**
   Install the magnet [E].
10. Return the LCT to the previous position and connect the LCT cable [F].
11. Open the LCT cover and load the paper.
12. Turn on the main power switch and check the LCT operation.

3.12 1,000-SHEET FINISHER INSTALLATION

3.12.1 ACCESSORY CHECK

Check the quantity and condition of the accessories in the box against the following list:

Description	Q'ty
1. Front Stand	1
2. Rear Stand	1
3. Knob Screw	1
4. Screw – M4x12	6
5. NECR (-17 machine)	1
6. Installation Procedure	1

3.12.2 INSTALLATION PROCEDURE

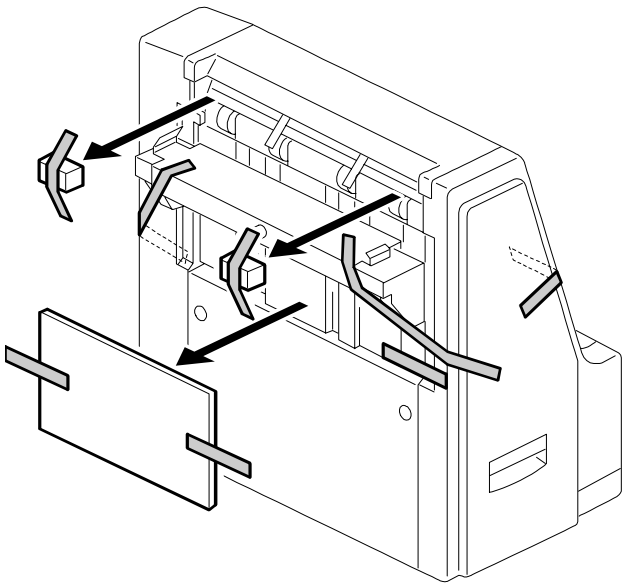

A230I701.WMF

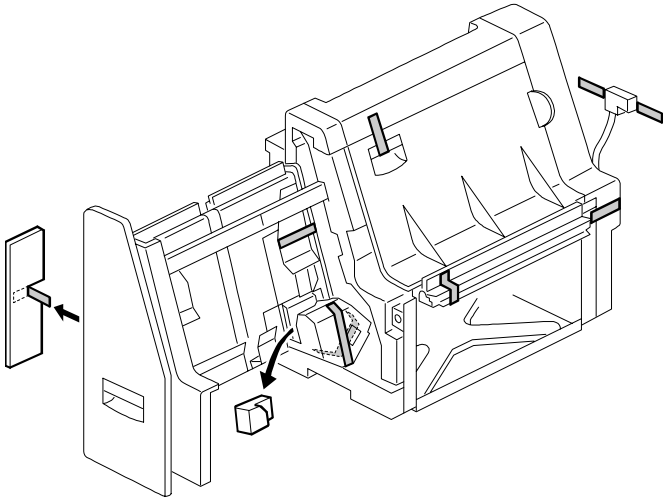

A230I702.WMF

⚠CAUTION

Unplug the main machine power cord before starting the following procedure.

NOTE: The bridge unit (A688) and paper tray unit (A682) must be installed before installing this finisher.

1. Unpack the finisher and remove the tapes.

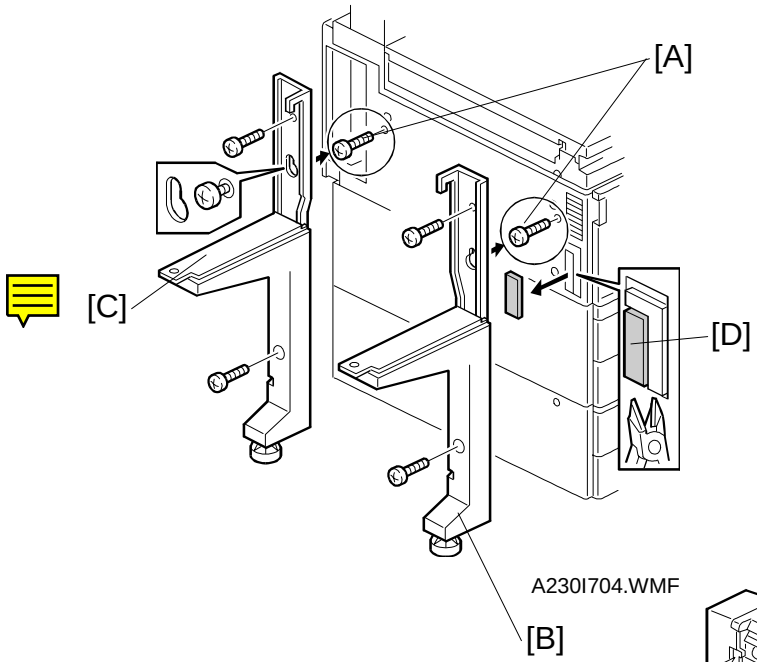

A230I704.WMF

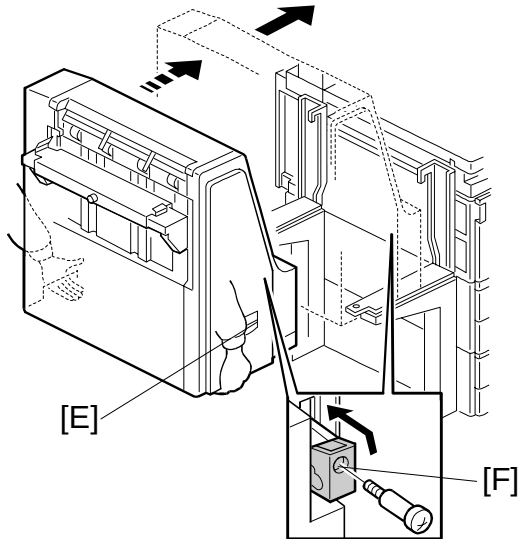

A230I705.WMF

2. Install the two screws [A] loosely.
3. Hang the front stand [B] and rear stand [C] on the screws which were installed in step 2.
4. Secure the front and rear stands (6 screws, including the two screws [A]).
5. Cut away a part of the main power switch cover [D].
6. Pull out the drawer at the front of the finisher, using handle [E], to pull out the stapler unit.
7. Draw out the locking lever [F] (1 screw).
8. Align the finisher on the stands, and lock it in place by pushing the locking lever.
9. Secure the locking lever (1 screw) and push the stapler unit into the finisher.

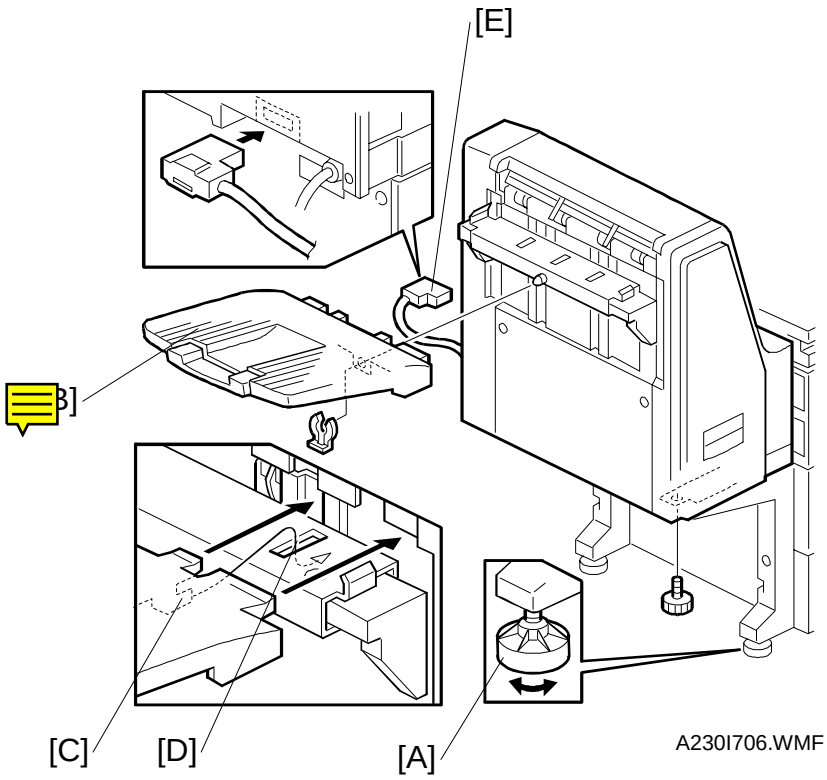

10. Secure the finisher (1 screw).
11. Adjust the securing knobs [A] under the front and rear stands until the finisher is perpendicular to the floor.
12. Install the shift tray [B] (1 snap ring).
    NOTE: Make sure that the three pegs [C] fit into the slots [D] properly.
13. Connect the finisher cable [E] to the main machine.
14. Turn on the main power switch and check the finisher operation.

3.13 3,000-SHEET FINISHER INSTALLATION

3.13.1 ACCESSORY CHECK

Check the quantity and condition of the accessories in the box against the following list:

Description	Q'ty
1. Front Joint Bracket	1
2. Rear Joint Bracket	1
3. Entrance Guide Plate	1
4. Shift Tray	1
5. Exit Guide Mylar (A229 copier only)	1
6. Shift Tray Guide	1
7. Staple Position Decal	1
8. Screw – M3x6	2
9. Screw – M4x14	4
10. Screw – M3x8	4
11. Cushion	1
12. Upper Grounding Plate	1
13. Lower Grounding Plate	2
14. NECR (-17 machine)	1
15. Installation Procedure	1

3.13.2 INSTALLATION PROCEDURE

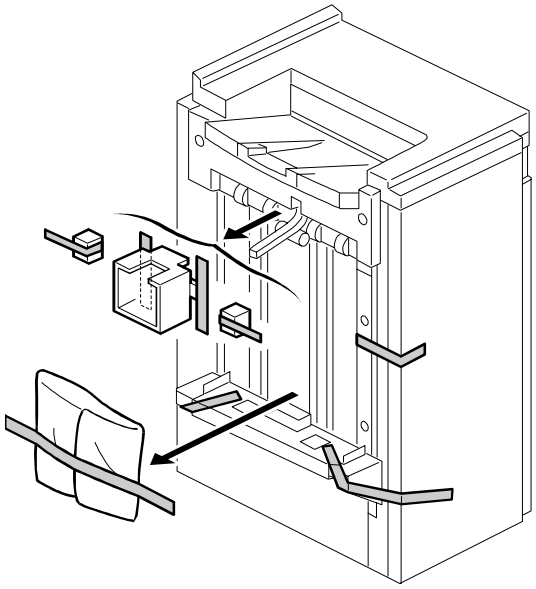

A230I751.WMF

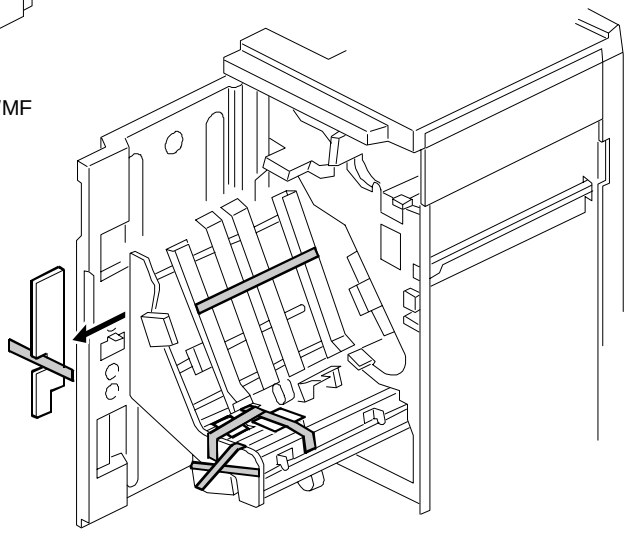

A231I516.WMF

⚠CAUTION

Unplug the main machine power cord before starting the following procedure.

NOTE: The bridge unit (A688) and paper tray unit (A682) must be installed before installing this finisher.

1. Unpack the finisher and remove the tapes.

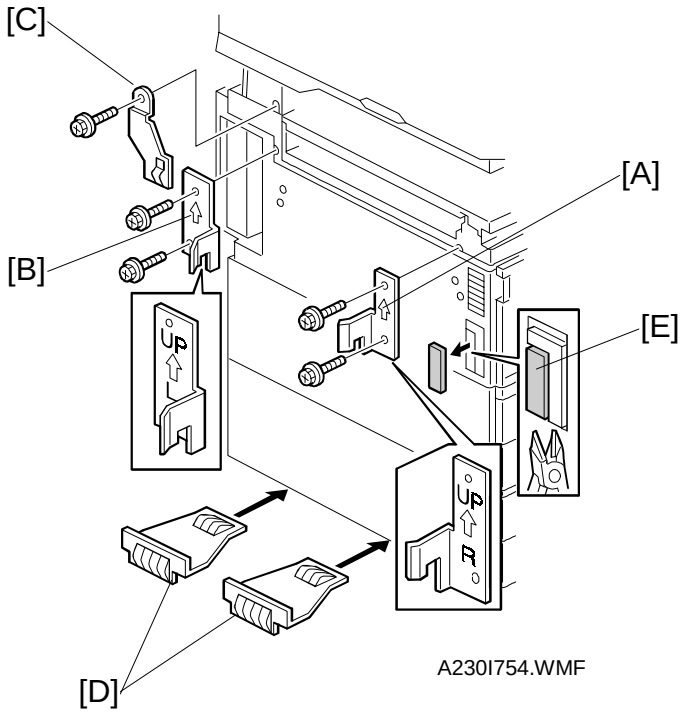

A230I754.WMF

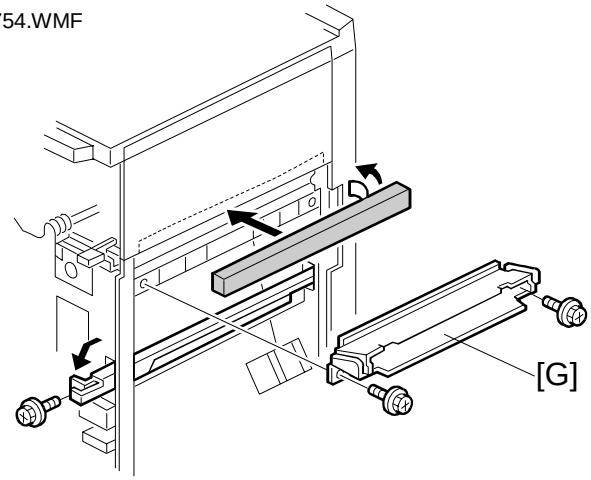

A230I755.WMF

2. Install the front joint bracket [A] and rear joint bracket [B] (2 screws each).
3. Attach the upper grounding plate [C] (1 screw).
4. Peel off the backing of the double sided tape that is attached to the lower grounding plate [D].
5. Attach two lower grounding plates to the bottom edge of the paper tray unit as shown.
6. Cut away a part of the main power switch cover [E].
7. Attach the cushion [F] to the plate as shown.
8. Install the entrance guide plate [G] (2 screws).

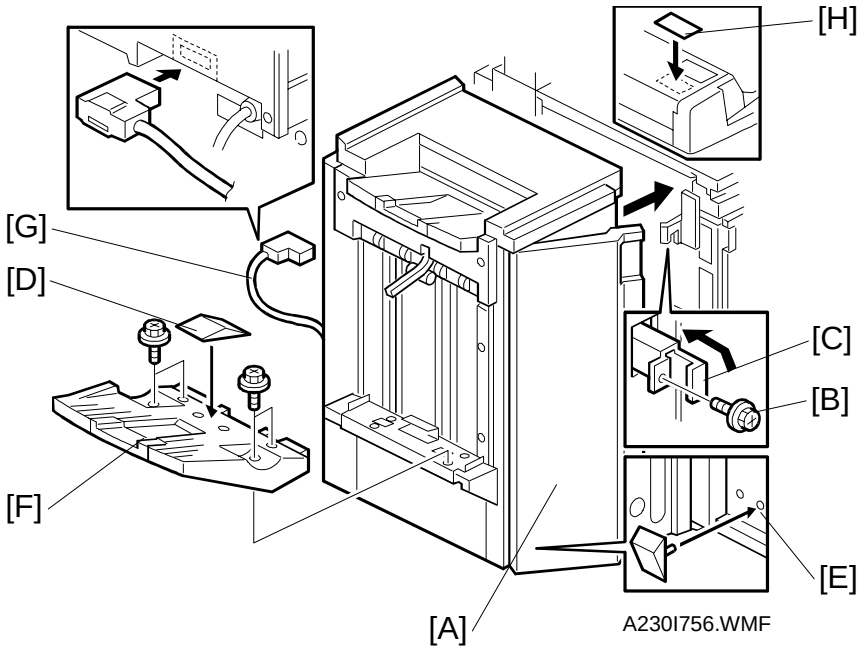

9. If the customer requires the punch unit, install it now, before attaching the finisher to the machine. See Punch Unit Installation.
10. Open the front door of the finisher [A], and remove the screw [B] which secures the locking lever [C]. Then pull the locking lever.
10. Align the finisher on the joint brackets, and lock it in place by pushing the locking lever.
11. Secure the locking lever (1 screw [B]) and close the front door.
12. Install the shift tray guide [D] on the shift tray. If the customer does not wish to install it on the shift tray, store it at location [E].
    NOTE: The shift tray guide is required to assist in proper paper stacking. However, it reduces the capacity of the shift tray by 50, from 3000 to 2950.
13. Install the shift tray [F] (4 screws).
14. Connect the finisher cable [G] to the main machine.
15. Attach the staple position decal [H] to the ARDF or platen cover as shown.
16. Turn on the main power switch and check the finisher operation.

3.14 PUNCH UNIT INSTALLATION

3.14.1 ACCESSORY CHECK

Check the quantity and condition of the accessories in the box against the following list:

Description	Q'ty
1. Spacer – 2 mm	1
2. Spacer – 1 mm	2
3. Stepped Screw – Short	1
4. Stepped Screw – Long	1
5. Punch Unit Knob	1
6. Spring	1
7. Harness – Long	1
8. Harness – Short	1
9. Hopper	1
10. Punch Position Decal	1
11. Tapping Screw – M4x10	2
12. Screw with Flat Washer – M4x6	1
13. NECR	1

3.14.2 INSTALLATION PROCEDURE

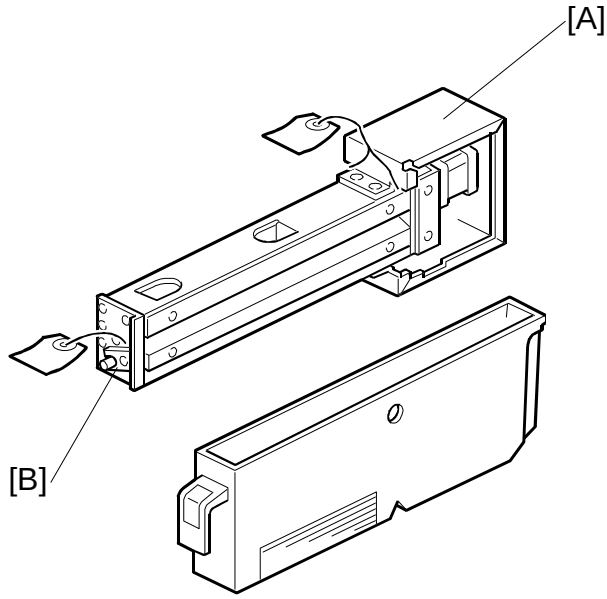

A230I761.WMF

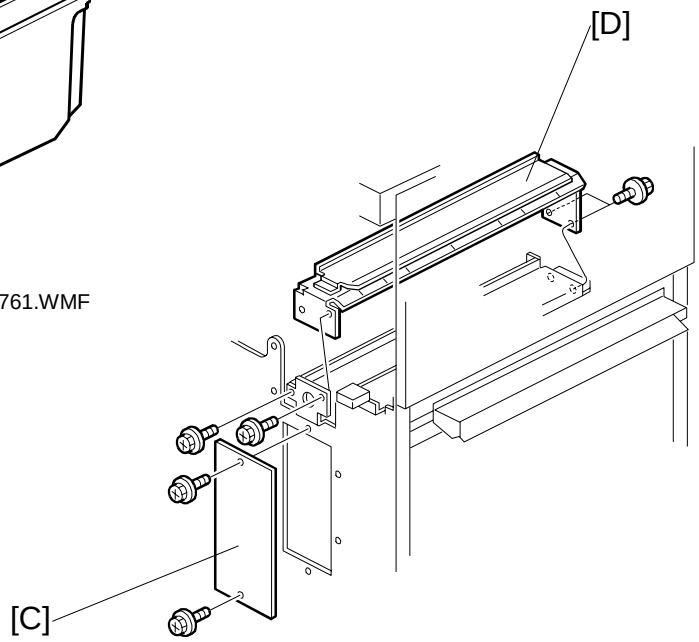

A230I763.WMF

⚠CAUTION

Unplug the copier power cord and remove the 3,000-sheet finisher from the copier before starting the following procedure.

1. Unpack the punch unit and remove the shipping retainers [A] (4 screws) and [B] (1 screw).
2. Open the front door and remove the hopper cover [C] (2 screws).
3. Remove the finisher rear cover (2 screws) and remove the transport guide plate [D] (4 screws).

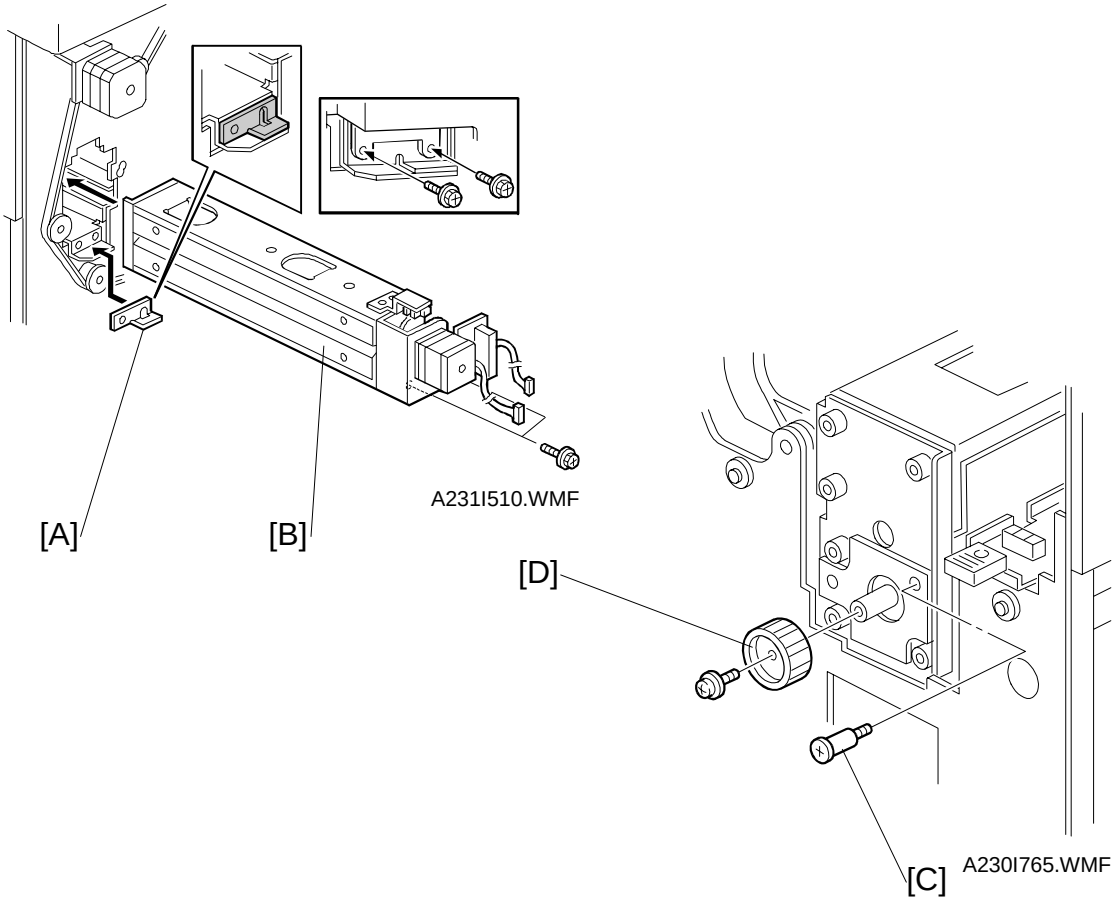

4. Install the spacer [A] (thickness = 2 mm).
   NOTE: There are three spacers in the accessory box. Do not lose the other two spacers (1 mm) because they are used for adjusting the punch hole position.
5. Install the punch unit [B] and secure it with a long stepped screw [C].
6. Install the punch unit knob [D] (1 screw).
7. Secure the rear of the punch unit (2 screws).

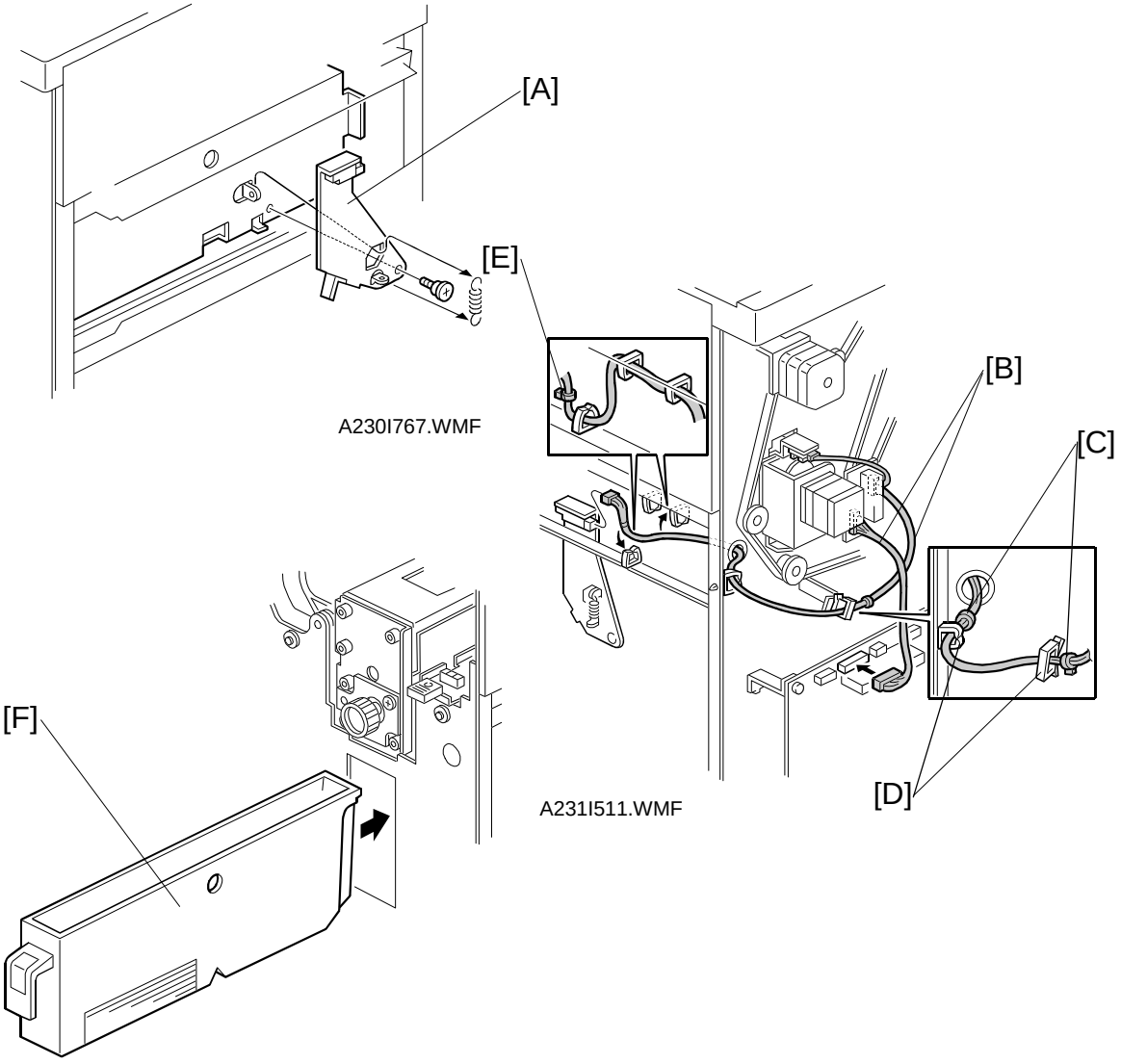

A230I767.WMF

A231I511.WMF

A231I512.WMF

8. Install the sensor bracket [A] (1 short stepped screw, 1 spring).
9. Connect the harnesses [B].

NOTE: 1) The harness binders [C] must not be between the harness clamps [D].
2) The harness binder [E] must be positioned to the left of the harness clamp.

10. **When a three-punch-hole unit is installed:** Change switch 1 of DIP SW 100 on the finisher control board to ON.
11. Slide the hopper [F] into the finisher.
12. Reassemble the finisher and attach the 3,000-sheet finisher to the copier, then check the punch unit function.

3.15 PLATEN COVER INSTALLATION

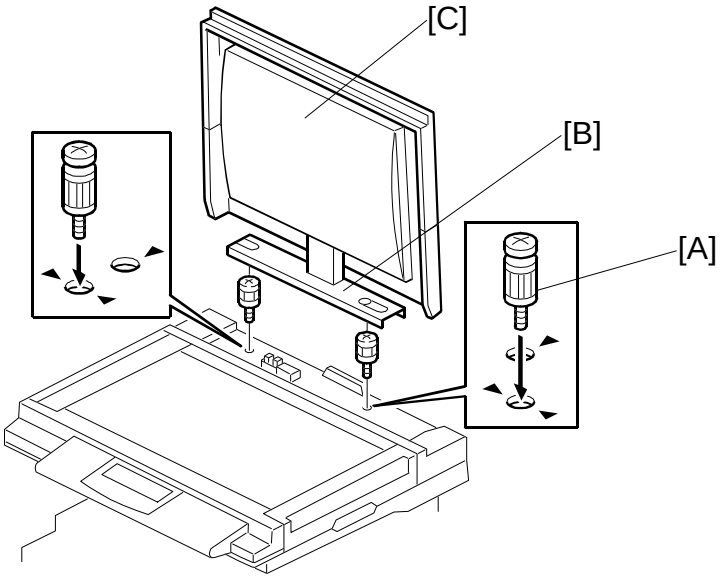

A231I526.WMF

1. Install the two stud screws [A] on the top cover as shown.
2. Position the platen cover bracket [B] on the stud screws and slide the platen cover [C] to the left.

3.16 IMAGE ENHACEMENT KIT (HDD) INSTALLATION

3.16.1 ACCESSORY CHECK

Check the quantity and condition of the accessories in the box against the following list:

Description	Q'ty
1. HDD	1
2. MSU	1
3. HDD Case	1
4. HDD Bracket	1
5. MSU Bracket	1
6. DC Harness	1
7. Interface Harness – MSU/HDD	1
8. Shield Plate	1
9. Harness Clamp	1
10. Stepped Screw	4
11. Pan Head Screw – M3x6	9
12. Screw – M3x6	4

3.16.2 INSTALLATION PROCEDURE

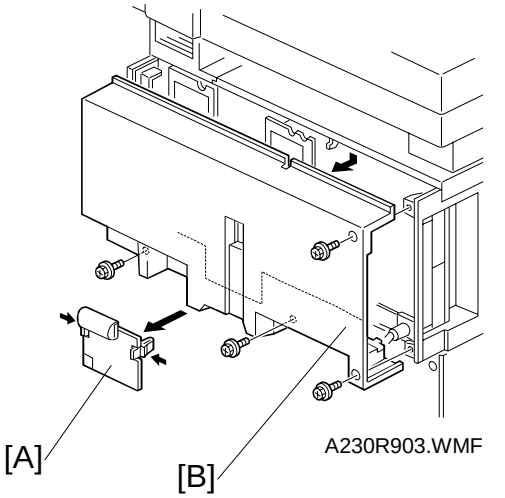

A230R903.WMF

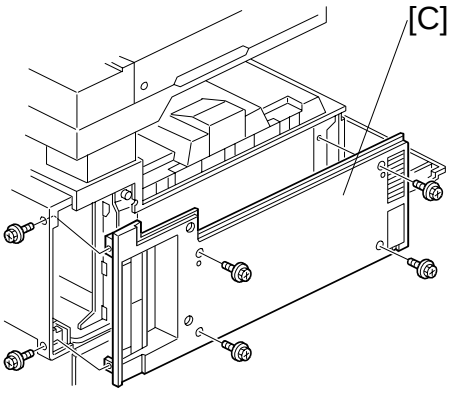

A230R901.WMF

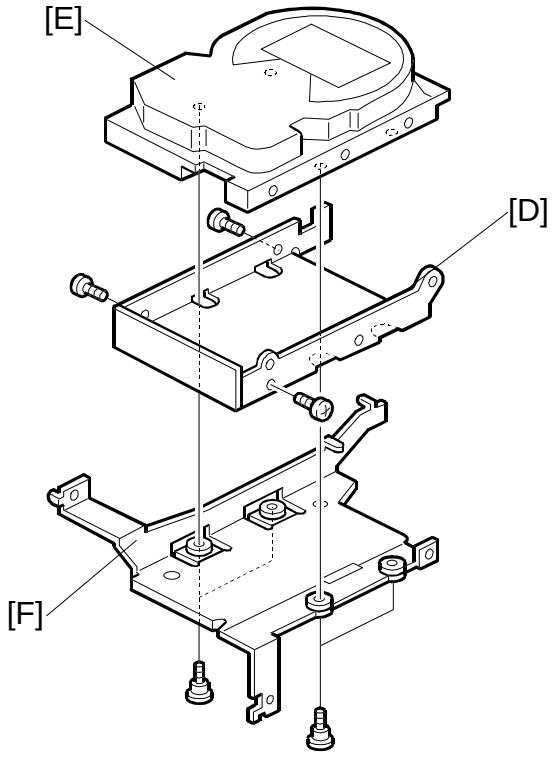

A231I527.WMF

⚠CAUTION

Unplug the machine power cord before starting the following procedure.

NOTE: 1) Do not drop or give a strong shock to the HDD.
2) When installing the HDD in an NAD30S, the electric sort kit must also be installed.
3) If the expansion box has been installed, remove it before starting the following procedure.

1. Remove the connector cover [A] and rear cover [B] (4 screws).
2. Remove the upper left cover [C] (4 screws).
3. Attach the lower HDD case [D] to the HDD [E] (3 screws).
4. Install the HDD bracket [F] (4 stepped screws).

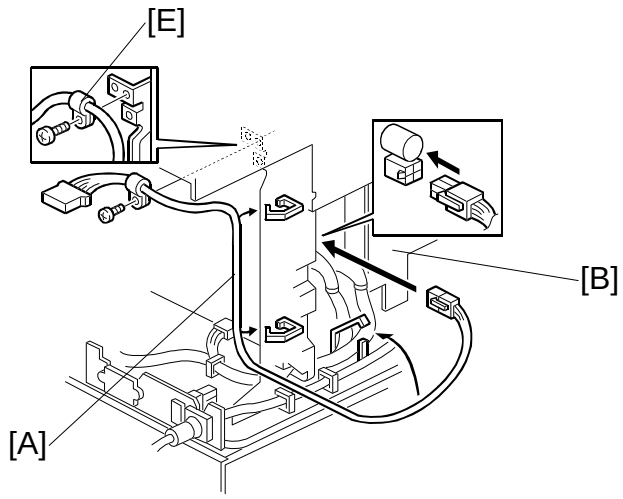

A231I522.WMF

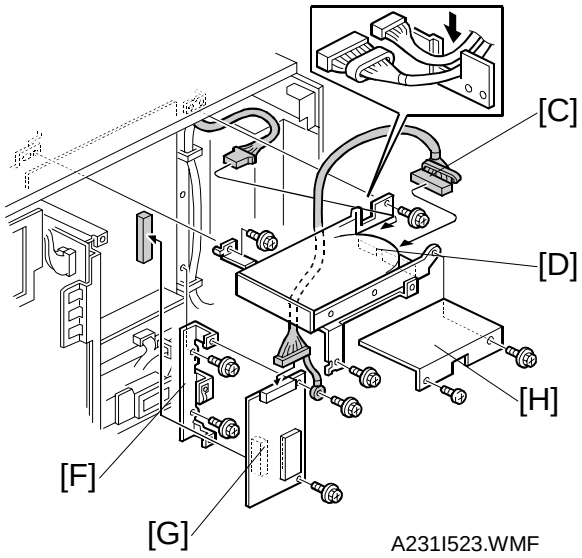

A231I523.WMF

5. Connect the power cable of the HDD [A] to the PSU [B] and route the cable as shown.
6. Connect the power cable and the harness [C] to the HDD.
7. Install the HDD assembly [D] (3 screws).
   NOTE: Make sure that both harnesses are routed through the cutout in the lower HDD case.
8. Clamp the power cable with the metal clamper [E].
9. Install the HDD controller bracket [F] (2 screws).
10. Install the HDD controller [G] (2 screws) and connect the harness.
    NOTE: The upper screw secures the grounding wire, as shown.
11. Install the shield plate [H] (2 screws).

3.17 ELECTRIC SORT KIT INSTALLATION

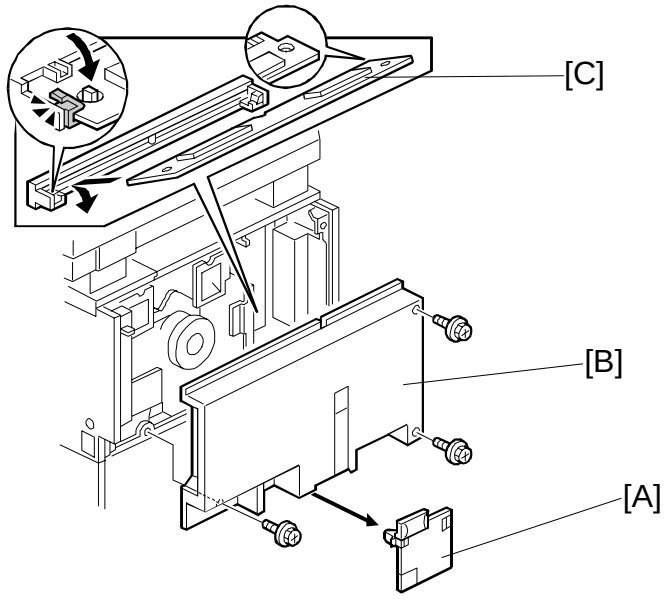

A231I517.WMF

⚠CAUTION
Unplug the machine power cord before starting the following procedure.

NOTE: 1) Do not touch the connector strips (gold parts) with bare hands.
2) If the expansion box and hard disk have been installed, remove them before starting the following procedure.

1. Remove the connector cover [A].
2. Remove the rear cover [B] (4 screws).
3. Connect the electric sort kit [C] to the BICU, as shown.

3.18 KEY COUNTER INSTALLATION

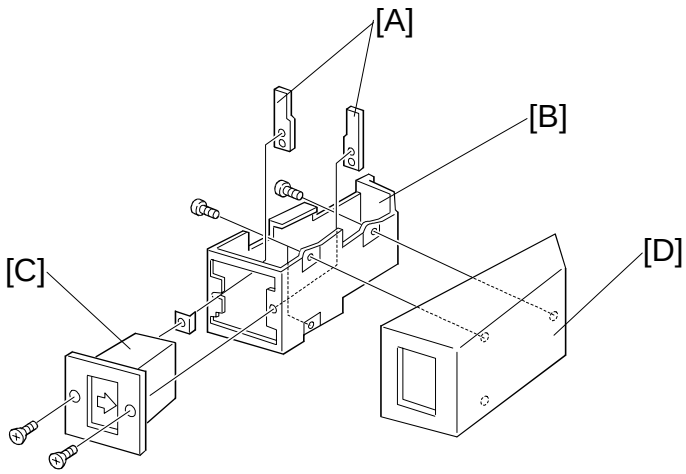

A231I518.WMF

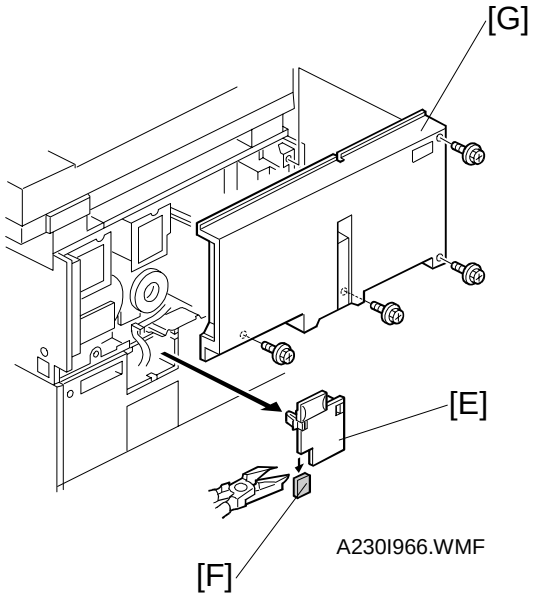

A230I966.WMF

⚠CAUTION

Unplug the machine power cord before starting the following procedure.

1. Hold the key counter plates [A] on the inside of the key counter bracket [B] and insert the key counter holder [C]
2. Secure the key counter holder to the bracket (2 screws).
3. Attach the key counter cover [D] (2 screws).
4. Remove the connector cover [E].
5. Cut off the part [F] of the connector cover.
6. Remove the rear cover [G] (4 screws).

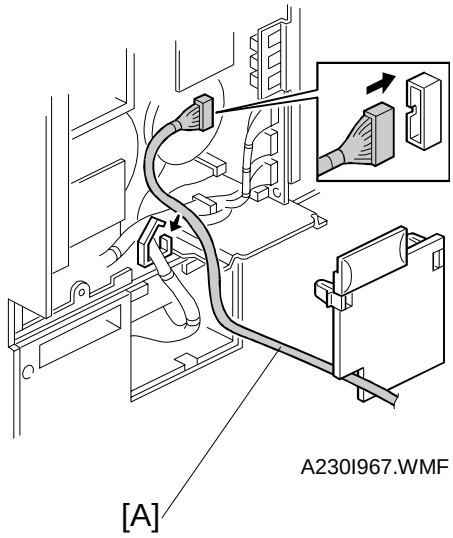

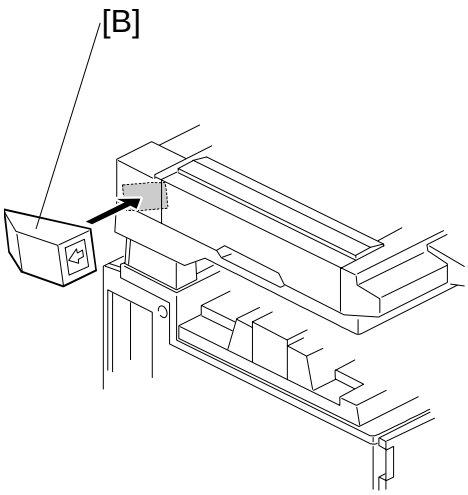

7. Connect the key counter connector [A] to CN211 on the I/O board.
8. Reinstall the covers.
9. Attach the double-sided tape to the key counter bracket.
10. Peel off the backing of the double-sided tape and attach the key counter assembly [B] to the left side of the scanner unit, as shown.
    NOTE: When attaching the key counter assembly, press the assembly against the scanner cover strongly. Otherwise, the key counter assembly may come off easily.

3.19 ANTI-CONDENSATION HEATER

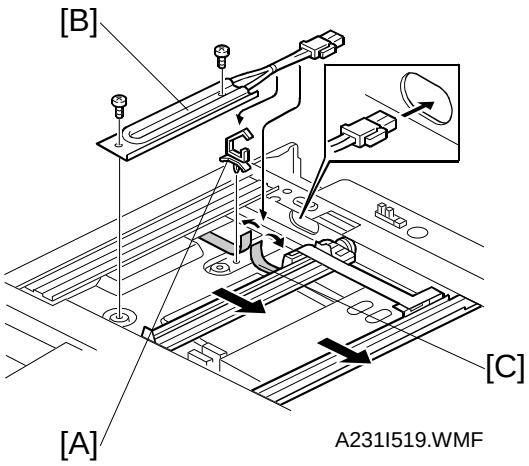

A231I519.WMF

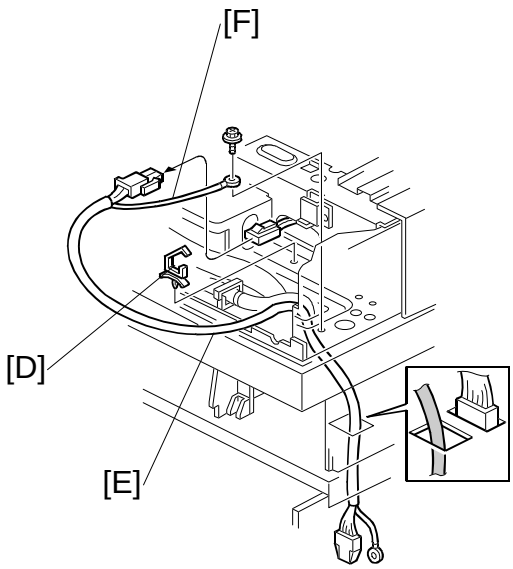

A231I520.WMF

⚠CAUTION

Unplug the machine power cord before starting the following procedure.

1. Remove the exposure glass, scanner rear cover, and stand rear cover (see Interchange Unit Installation for the stand rear cover).
2. Remove the rear cover and upper left cover.
3. Move the 1st and 2nd scanners to the right.
4. Install the harness clamp [A].
5. Install the anti-condensation heater [B] (2 screws).
   NOTE: The heater harness should be routed under the harness guard [C].
6. Install the harness clamp [D].
7. Connect the connector [E] to the heater, then secure the grounding wire [F] (1 screw).

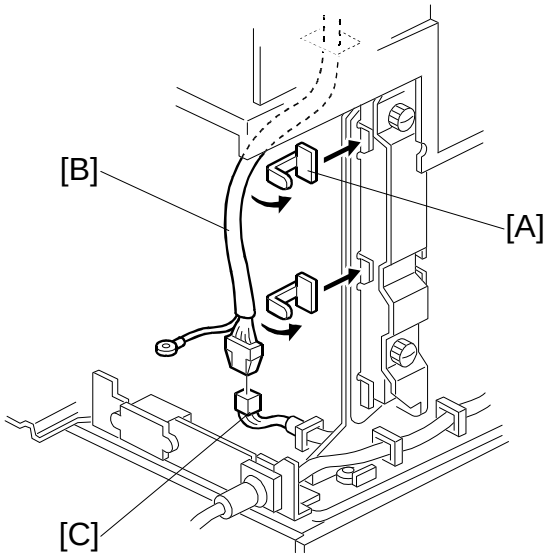

A231I521.WMF

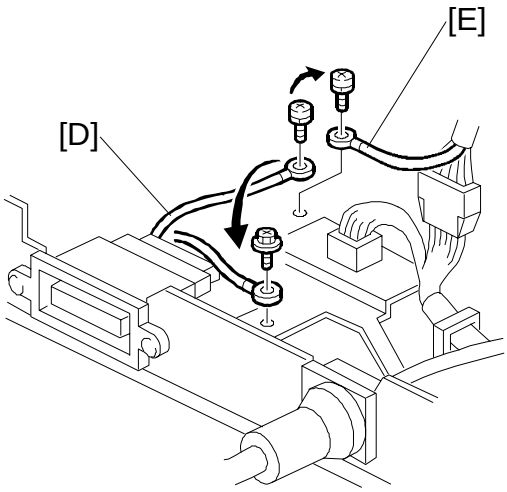

A231I524.WMF

8. Install two harness clamps [A] on the stand bracket.
9. Connect the connector [B] to the ac power harness [C].
10. Move the grounding wire of the connector [D], as shown.
11. Secure the grounding wire [E] of the connector cable (1 screw).

3.20 TRAY HEATER

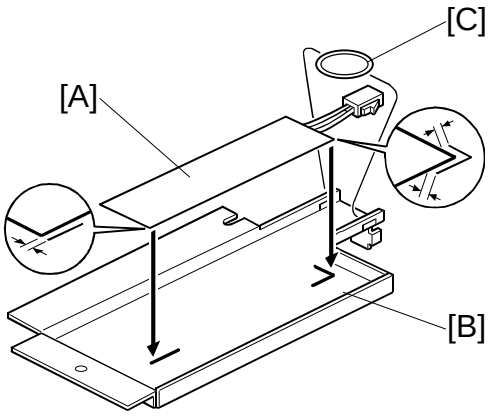

A231I531.WMF

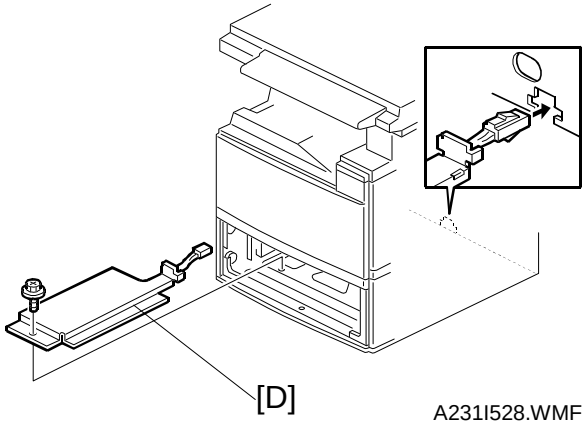

A231I528.WMF

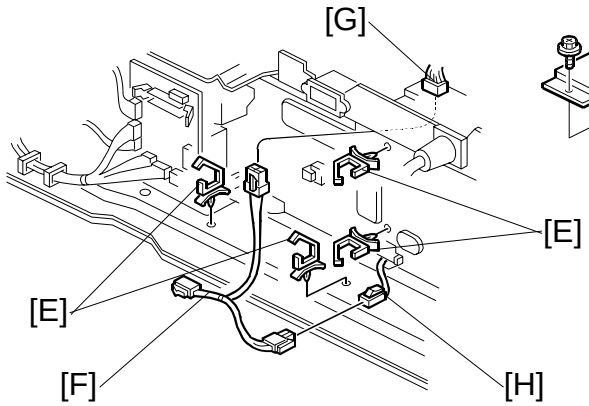

A231I529.WMF

⚠CAUTION

Unplug the machine power cord before starting the following procedure.

1. Attach the optional tray heater [A] to the heater bracket [B].
2. Install the harness holder [C].
3. Remove the rear cover.
4. Draw out the upper and lower paper trays.
5. Install the heater assembly [D] (1 screw).
6. Install four harness clamps [E] as shown.
7. Route the harness [F] and connect it to the ac harness [G] and heater harness [H].

3.21 TRAY HEATER (OPTIONAL PAPER TRAY UNIT)

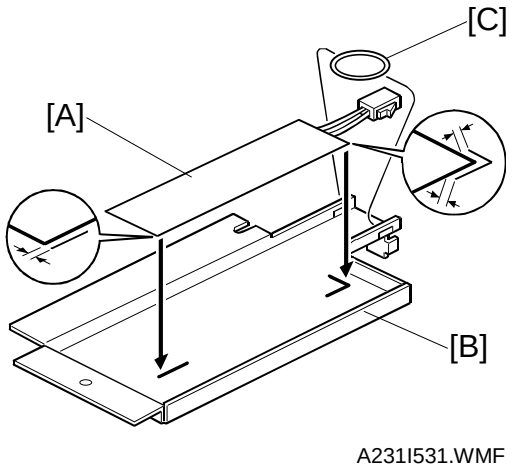

A231I531.WMF

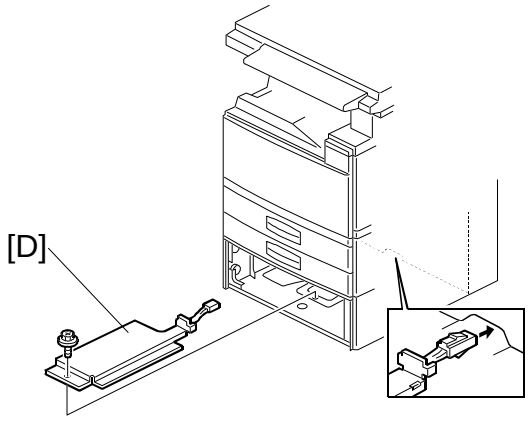

A682I500.WMF

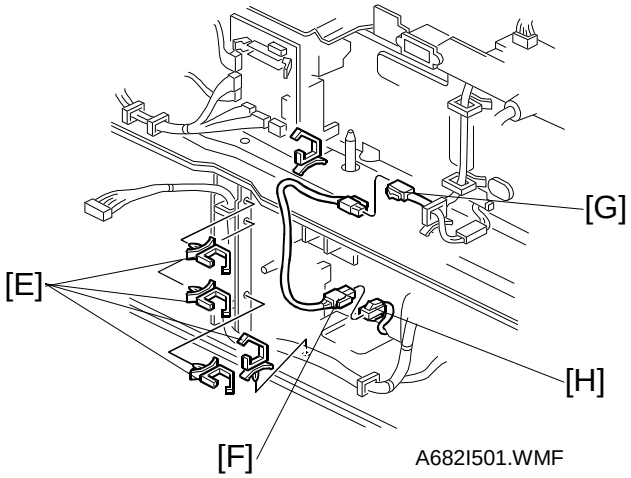

A682I501.WMF

⚠CAUTION

Unplug the machine power cord before starting the following procedure.

1. Attach the optional tray heater [A] to the heater bracket [B].
2. Install the harness holder [C].
3. Remove the rear cover of the machine and the rear cover of the optional paper tray unit.
4. Draw out the upper and lower paper trays of the optional paper tray unit.
5. Install the heater assembly [D] (1 screw).
6. Install four harness clamps [E] as shown.
7. Route the harness [F] and connect it to the harness [G] and heater harness [H].

4. SERVICE TABLES

4.1 GENERAL CAUTIONS

Do not turn off the either of the power switches while any of the electrical components are active. Doing so might cause damage to units such as the transfer belt, drum, and development unit when they are pulled out of or put back into the copier.

4.1.1 DRUM

An organic photoconductor (OPC) drum is more sensitive to light and ammonia gas than a selenium drum. Follow the cautions below when handling an OPC drum.

1. Never expose the drum to direct sunlight.
2. Never expose the drum to direct light of more than 1,000 Lux for more than a minute.
3. Never touch the drum surface with bare hands. When the drum surface is touched with a finger or becomes dirty, wipe it with a dry cloth or clean it with wet cotton. Wipe with a dry cloth after cleaning with wet cotton.
4. Never use alcohol to clean the drum; alcohol dissolves the drum surface.
5. Store the drum in a cool, dry place away from heat.
6. Take care not to scratch the drum as the drum layer is thin and is easily damaged.
7. Never expose the drum to corrosive gases such as ammonia gas.
8. Always keep the drum in the protective sheet when keeping the drum unit, or the drum itself, out of the copier. Doing so avoids exposing it to bright light or direct sunlight, and will protect it from light fatigue.
9. Before pulling out the PCU, place a sheet of paper under the PCU to catch any spilt toner.
10. Dispose of used drums in accordance with local regulations.
11. When installing a new drum in the PCU, the following must be done in the stated order.
    1) Remove the protective sheet after securing the new drum in the drum unit.
    2) Make sure that the charge roller voltage supply is at the standard value (SP2-001-1).
    3) Do the ID Sensor Initial Setting procedure (SP 3-001-2)
    4) Do SP2-805 (process initialization).
12. When installing the PCU, make sure that the PCU is set in the machine properly.

4.1.2 TRANSFER BELT UNIT

1. Replace the transfer belt every PM cycle (150K copies) to avoid bad effects on the drum.
2. Never touch the transfer belt surface with bare hands.
3. Take care not to scratch the transfer belt as the surface is easily damaged.
4. Before installing the new transfer belt, clean all the rollers and the inner part of the transfer belt with a dry cloth to prevent the belt from slipping.

4.1.3 SCANNER UNIT

1. When installing the exposure glass, make sure that the white paint is at the rear left corner.
2. Clean the exposure glass with alcohol or glass cleaner to reduce the amount of static electricity on the glass surface.
3. Use a cotton pad with water or a blower brush to clean the mirrors and lens.
4. Do not bend or crease the exposure lamp flat cable.
5. Do not disassemble the lens unit. Doing so will throw the lens and the copy image out of focus.
6. Do not turn any of the CCD positioning screws. Doing so will throw the CCD out of position.

4.1.4 LASER UNIT

1. Do not loosen the screws that secure the LD drive board to the laser diode casing. Doing so would throw the LD unit out of adjustment.
2. Do not adjust the variable resistors on the LD unit, as they are adjusted in the factory.
3. The polygon mirror and F-theta lenses are very sensitive to dust. Do not open the optical housing unit.
4. Do not touch the glass surface of the polygon mirror motor unit with bare hands.
5. After replacing the LD unit, do the laser beam pitch adjustment. Otherwise, an SC condition will be generated.

4.1.5 CHARGE ROLLER

1. Do not touch the charge roller with bare hands. Oil stains from fingers may cause uneven image density on copies.
2. Clean the charge roller with alcohol and water, then with a dry cloth

4.1.6 DEVELOPMENT

1. Be careful not to nick or scratch the development roller.
2. Place the development unit on a sheet of paper after removing it from the copier.
3. Never disassemble the development roller assembly. The position of the doctor plate is set with special tools and instruments at the factory to ensure the proper gap between the doctor blade and the development roller.
4. Clean the drive gears after removing used developer.
5. Dispose of used developer in accordance with local regulations.
6. Never load different types of developer and toner into the development unit. Doing so will cause poor copy quality and toner scattering.
7. Immediately after installing new developer, the TD sensor initial setting procedure should be performed to avoid damage to the copier. Do not perform the TD sensor initial setting with used developer. Do not make any copies before doing the TD sensor initial setting.
8. When using a vacuum cleaner to clean the development unit casing, always ground the casing with your fingers to avoid damaging the toner density sensor with static electricity.
9. After replacing the TD sensor, do the TD sensor initial setting procedure (SP 2-801).

4.1.7 FUSING UNIT

1. After installing the fusing thermistor, make sure that it is in contact with the hot roller and that it is movable.
2. Be careful not to damage the edges of the hot roller strippers or pressure roller strippers, or their tension springs.
3. Do not touch the fusing lamp and rollers with bare hands.
4. Make sure that the fusing lamp is positioned correctly and that it does not touch the inner surface of the hot roller.

4.1.8 PAPER FEED

1. Do not touch the surface of the pick-up, feed, and separation rollers.
2. The side fences and end fence of the paper tray must be positioned correctly to align with the actual paper size to avoid paper misfeeds.

4.1.9 USED TONER

1. The used toner in the transfer belt unit should be emptied at every PM cycle, but we recommend checking the amount of used toner at every EM.
2. Dispose of used toner in accordance with local regulations. Never throw toner into an open flame, for toner dust may ignite.

4.2 SERVICE PROGRAM MODE

4.2.1 SERVICE PROGRAM MODE OPERATION

The service program (SP) mode is used to check electrical data, change modes, and adjust values.

Service Program Access Procedure

Entering SP mode

1) Press the following keys in sequence.

[#/P] → [1] → [0] → [7] → [C/⊗]

NOTE: Hold the [C/⊗] key for more than 3 seconds.

2) A menu of SP modes is displayed on the LCD.

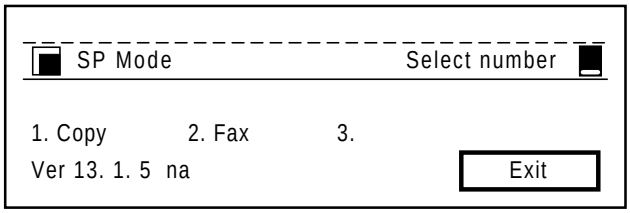

A321M501.WMF

NOTE: 1) The installed applications appear as 1. Copy, 2. Fax, 3. Printer, If an application is not installed, the application name does not appear.

2) The meaning of the bottom line is as follows.
   - "Ver 13.1.5 na" is the BICU board software version.

3) Press the number for the application which you need (e.g. press "1" for copier). Then, the application's SP mode display will appear, as shown.

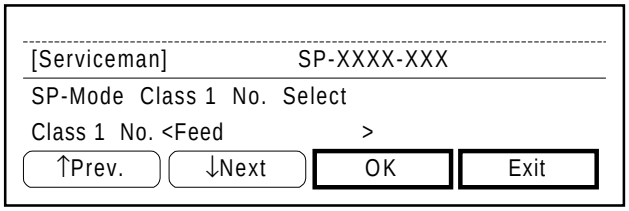

A321M500.WMF

Exiting SP mode

1) Press the "Back" and "Exit" keys until the standby mode display appears.

Service Tables

Accessing Copy Mode from within an SP Mode

1) Press the ⊡ (Interrupt) key.
2) Select the appropriate copy mode and make trial copies.
3) To return to the SP mode, press the ⊡ (Interrupt) key again.

Selecting the Program Number

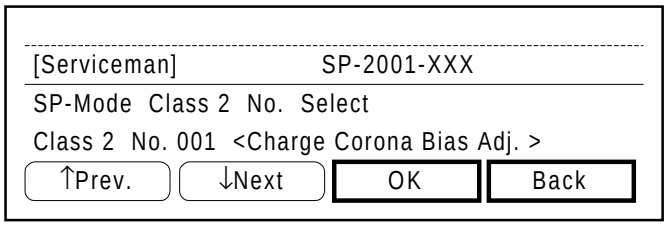

A321M502.WMF

Program numbers are composed of two or three levels.

To input the required program number, select each program level in sequence.

1. Select the 1st level program number at the ten-key pad and press the # key or OK key.
   NOTE: The 1st level program number can be selected using the “arrow” keys or “Prev” key or “Next” key.
2. Select the 2nd level program number at the ten-key pad and press the # key or OK key.
   NOTE: The 2nd level program number can be selected using the “arrow” keys or “Prev” key or “Next” key.
3. If there any are 3rd level programs in the SP mode, they can be selected the same way as the 1st and 2nd level SP modes.
   NOTE: The 3rd level program number can be selected using the “arrow” keys or “Prev” key or “Next” key.

Inputting a Value or Setting for an SP Mode

1. Enter the required program mode as explained above.
2. Enter the required setting using the ten-key pad, then press the # key or OK key.

   NOTE: 1) If you forget to press the # key or OK key, the previous value remains.
   2) Change between “+” and “-“ using the ☒ key before entering the required value.

3. Exit SP mode.

4.2.2 SERVICE PROGRAM MODE TABLES

NOTE: 1) In the Function column, comments are in italics.
2) In the Settings column, the default value is in bold letters.
3) An asterisk " * " after the mode number means that this mode is stored in the NVRAM. If you do a RAM reset, all these SP modes will be reset to their factory settings.
4) In the Settings column, (40) means NAD40 and (30) means NAD30S/30.

Mode No.			Function	Settings
Class 1 and 2	Class 3			
1-001 *		Leading Edge Registration	Adjusts the printing leading edge registration using the trimming area pattern (SP2-902-3, No.10). *Use the ●/✻ key to toggle between + and – before entering the value.* *The specification is 3 ±2 mm. See "Replacement and Adjustment - Copy Adjustments" for details on SP 1-001 and 1-002.*	+9 ~ -9 0.1 mm/step **+ 3.0 mm**
1-002 *	1 *	Side-to-Side Registration (1st paper feed)	Adjusts the printing side-to-side registration from the 1st paper feed station using the trimming area pattern (SP2-902-3, No.10). *Use the ●/✻ key to toggle between + and - before entering the value.* *The specification is 2 ±1.5 mm.*	+9 ~ -9 0.1 mm/step **+ 3.0 mm**
	2 *	Side-to-Side Registration (2nd paper feed)	Adjusts the printing side-to-side registration from the 2nd paper feed station using the trimming area pattern (SP2-902-3, No.10). *Use the ●/✻ key to toggle between + and - before entering the value.* *The specification is 2 ±1.5 mm.*	+9 ~ -9 0.1 mm/step **+ 3.0 mm**
	3 *	Side-to-Side Registration (3rd paper feed: Option PFU tray 1 if present)	Adjusts the printing side-to-side registration from the 3rd paper feed station using the trimming area pattern (SP2-902-3, No.10). *Use the ●/✻ key to toggle between + and - before entering the value.* *The specification is 2 ±1.5 mm.*	+9 ~ -9 0.1 mm/step **+ 2.0 mm**
	4 *	Side-to-Side Registration (4th paper feed: Option PFU tray 2 if present)	Adjusts the printing side-to-side registration from the 4th paper feed station using the trimming area pattern (SP2-902-3, No.10). *Use the ●/✻ key to toggle between + and - before entering the value.* *The specification is 2 ±1.5 mm.*	+9 ~ -9 0.1 mm/step **+ 2.0 mm**

Service Tables

Mode No.			Function	Settings
Class 1 and 2	**Class 3**			
1-002	5 *	Side-to-Side Registration (Duplex)	Adjusts the printing side-to-side registration from the duplex tray using the trimming area pattern (SP2-902-3, No.10). *Use the ●/✻ key to toggle between + and - before entering the value. The specification is 2 ±1.5 mm. See "Replacement and Adjustment - Copy Adjustments" for details on SP1-002.*	+9 ~ -9 0.1 mm/step **+ 0.0 mm**
	6 *	Side-to-Side Registration (By-pass feed)	Adjusts the printing side-to-side registration from the by-pass feed table using the trimming area pattern (SP2-902-3, No.10). *Use the ●/✻ key to toggle between + and - before entering the value. The specification is 2 ±1.5 mm.*	+9 ~ -9 0.1 mm/step **+ 3.0 mm**
	7 *	Side-to-Side Registration (LCT)	Adjusts the printing side-to-side registration from the LCT using the trimming area pattern (SP2-902-3, No.10). *Use the ●/✻ key to toggle between + and - before entering the value. The specification is 2 ±1.5 mm.*	+9 ~ -9 0.1 mm/step **+ 1.5 mm**
1-003 *	1 *	Paper Feed Timing (Paper Feed Trays)	Adjusts the relay clutch timing at registration. The relay clutch timing determines the amount of paper buckle at registration. (A +ve setting leads to more buckling.)	+9 ~ -9 1 mm/step **+ 0 mm**
	2 *	Paper Feed Timing (Duplex)		
	3	Paper Feed Timing (By-pass)		
1-007		By-pass Feed Paper Size Display	Displays the paper width sensor data for the by-pass feed table.	
1-103 *		Fusing Idling	Selects whether fusing idling is done or not. *Normally disabled in this machine. However, if fusing is incomplete on the 1st and 2nd copies, switch it on. This may occur if the room is cold. Refer to "Detailed Section Descriptions - Fusing Temperature Control" for more details.*	**0: Off** 1: On
1-104 *		Fusing Temperature Control	Selects the fusing temperature control mode.	**0: On/Off** 1: Phase

Mode No.			Function	Settings
Class 1 and 2	Class 3			
1-105 *	1*	Fusing Temperature Adjustment (Paper Tray)	Adjusts the fusing temperature for paper fed from a paper tray.	170 ~ 200 (40) 150 ~ 180 (30) 1°C/step **185°C (40)** **165°C (30)**
	2*	Fusing Temperature Adjustment (By-pass)	Adjusts the fusing temperature for paper fed from the by-pass feed unit.	170 ~ 200 (40) 160 ~ 190 (30) 1°C/step **185°C (40)** **175°C (30)**
1-106		Fusing Temperature Display	Displays the fusing temperature.	
1-109		Fusing Nip Band Check	Checks the fusing nip band *Refer to "Nip Band Width Adjustment" for more details.*	1: Start 0: Stop
1-111*		Paper Switch Back Timing (Duplex)	Adjusts the paper switch back timing *Use this SP mode when paper often jams at the inverter gate in the duplex unit.*	+ 5 ~ - 5 1 mm/step **0 mm**
2-001 *	1 *	Charge Roller Bias Adjustment (Copying)	Adjusts the voltage applied to the grid plate during copying. *After replacing the drum or charge roller, change this value to the default.*	-1000 ~ -2000 10 V/step **-1650 V (40)** **-1630 V (30)**
	2 *	Charge Roller Bias Adjustment (ID sensor pattern)	Adjusts the voltage applied to the charge roller when making the Vsdp ID sensor pattern (for charge roller voltage correction). The actual charge roller voltage is this value plus the value of SP2-001-1. ***Do not adjust.***	0 ~ 700 10 V/step **350 V**
2-005*	1 *	Charge Roller Bias Correction 1 (Lower threshold)	Adjusts the lower threshold value for the charge roller correction. *When the value of Vsp/Vsg is greater than this value, the charge roller voltage increases by 30 V (e.g., from –500 to –530).*	0.1 ~ 1.0 0.05/step **0.85**
	2 *	Charge Roller Bias Correction 2 (Upper threshold)	Adjusts the upper threshold value for the charge roller correction. *When the value of Vsp/Vsg is greater than this value, the charge roller voltage decreases by 30 V (absolute value).*	0.1 ~ 1.0 0.05/step **0.90**
	3 *	Charge Roller Bias Correction 3 (Lower limit)	Adjusts the lower limit value for charge roller voltage correction.	-1000 ~ -2000 10 V/step **-1630 V**
	4 *	Charge Roller Bias Correction 4 (Upper limit)	Adjusts the upper limit value for charge roller voltage correction.	-1000 ~ -2000 10 V/step **-2000 V**

Mode No.			Function	Settings
Class 1 and 2	**Class 3**			
2-005*	5 *	Charge Roller Bias Correction Step	Adjusts the correction voltage adjustment step size.	0 ~ 100 10V/Step **30 V**
2-101 *	1 *	Leading Edge Erase Margin (Printing)	Adjusts the leading edge erase margin. *The specification is 3 ±2 mm. See "Replacement and Adjustment - Copy Adjustments" for details.*	0.0 ~ 9.0 0.1 mm/step **3.0 mm**
	2 *	Trailing Edge Erase Margin (Printing)	Adjusts the trailing edge erase margin. *The specification is 2 ±2 mm.*	0.0 ~ 9.0 0.1 mm/step **3.0 mm**
	3 *	Left Side Edge Erase Margin (Printing)	Adjusts the left side erase margin. *The specification is 2 ±1.5 mm.*	0.0 ~ 9.0 0.1 mm/step **2.0 mm**
	4 *	Right Side Edge Erase Margin (Printing)	Adjusts the right side erase margin. *The specification is 2 +2.5/-1.5 mm.*	0.0 ~ 9.0 0.1 mm/step **2.0 mm**
	5*	Trailing Edge Erase Margin (Back side)	Adjusts the trailing edge erase margin on the reverse side of duplex copies. *The specification is 2 ±2 mm*	0.0 ~ 4.0 0.1 mm/step **1.2 mm**
	6*	Left Side Erase Margin (Rear side)	Adjusts the left side erase margin in the reverse side of duplex copies. *The specification is 2 ±1.5 mm.*	0.0 ~ 9.0 0.1 mm/step **0.3 mm**
	7*	Right Side Erase Margin (Rear side)	Adjusts the right side erase margin in the reverse side of duplex copies. *The specification is 2 +2.5/-1.5 mm.*	0.0 ~ 9.0 0.1 mm/step **0.3 mm**
2-103 *	1*	LD Power Adjustment LD1 - 400dpi	Adjusts the power of LD1 for 400 dpi resolution. ***Do not change the value.***	-127 ~ +127 1/step 1=0.6 µW (30) 1=0.8 µW (40) **+0**
	2*	LD Power Adjustment LD1 - 600dpi	Adjusts the power of LD1 for 600 dpi resolution. ***Do not change the value.***	-127 ~ +127 1/step 1=0.6 µW (30) 1=0.8 µW (40) **+0**
	3*	LD Power Adjustment LD2 - 400dpi	Adjusts the power of LD2 for 400 dpi resolution. ***Do not change the value.***	-127 ~ +127 1/step 1=0.6 µW (30) 1=0.8 µW (40) **+0**
	4*	LD Power Adjustment LD2 - 600dpi	Adjusts the power of LD2 for 600 dpi resolution. ***Do not change the value.***	-127 ~ +127 1/step 1=0.6 µW (30) 1=0.8 µW (40) **+0**
	5	LD Power Adjustment – LD1	**Factory use only. Do not use this SP mode.**	0: Stop 1: Start

Mode No.			Function	Settings
Class 1 and 2	**Class 3**			
2-103 *	6	LD Power Adjustment – LD2	**Factory use only. Do not use this SP mode.**	0: Stop 1: Start
2-109*	1*	Laser Beam Pitch Adjustment – 400 dpi	Input the laser beam pitch value for 400 dpi resolution. *After replacing the LD unit or replacing or clearing the NVRAM, use this SP mode and SP2-109-3 to adjust the laser beam pitch. Refer to "Replacement and Adjustment - Laser Beam Pitch Adjustment" for details.*	8 ~ 260 4 pulses/step **144**
	2*	Laser Beam Pitch Adjustment – 600 dpi	Input the laser beam pitch value for 600 dpi resolution. *After replacing the LD unit or replacing or clearing the NVRAM, use this SP mode and SP2-109-4 to adjust the laser beam pitch. Refer to "Replacement and Adjustment - Laser Beam Pitch Adjustment" for details.*	28 ~ 280 4 pulses/step **168**
	3	Laser Beam Pitch Initial Setting – 400 dpi	Initializes the laser beam pitch for 400 dpi to the SP2-109-1 value. Press "1" to initialize. *After inputting data for SP2-109-1, this SP must be performed.*	1: Start
	4	Laser Beam Pitch Initial Setting – 600 dpi	Initializes the laser beam pitch for 600 dpi to the SP2-109-2 value. Press "1" to initialize. *After inputting data for SP2-109-2, this SP must be performed.*	1: Start
	5*	Laser Unit Auto. Adjustment Interval	Input the interval value of the laser beam pitch automatic adjustment. *When the number of times that the resolution been changed reaches this value, the laser unit position is automatically corrected.*	0 ~ 65535 1/step 1000 times
	6	Current LD Unit Position	Displays the current LD unit position (number of pulses from home position). If this is different from the value of 2-109-1 or 2-109-2, LD unit positioning has failed.	
	7	Laser Beam Pitch Change Counter	Displays how many times the LD unit position has been changed (how many times the resolution has changed.) *When the laser beam pitch adjustment is done, this counter is reset to "0".*	

Mode No.			Function	Settings
Class 1 and 2	**Class 3**			
2-109*	8	Beam Pitch Data Reset	Resets the values of SP2-109-6 and SP2-109-7. Press "1" to reset. *After replacing the LD unit, this SP mode must be done.*	1: Start
2-110		Image Resolution Change	**Designer use only. Do not change this value.**	**0: 400 dpi** 1: 600 dpi 2: 15.4 x 16 3: 16 x 15.4
2-111*		FCI Setting	Select the FCI setting. This SP affects copier mode only. **Designer use only. Do not change this value.**	0: Through 1: Edge Smoothing **2: FCI On (parameter 2)** 3: FCI On (parameter 1)
2-112*		Polygon Motor Off Timer	Input the time that the polygon motor turns off after entering the stand-by condition. *If set at "0", the polygon motor never turns off during stand-by. However, when the machine goes into energy saver mode, the polygon motor turns off regardless of this timer.*	0 ~ 60 1 s/step **10 s**
2-201 *	1 *	Development Bias Adjustment (for copying)	Adjusts the development bias for copying. *This can be adjusted as a temporary measure if faint copies appear due to an aging drum.*	200 ~ 700 10 V/step **600 V**
	2 *	Development Bias Adjustment (for ID sensor pattern)	Adjusts the development bias for making the ID sensor pattern for Vsp. *This should not be used in the field, because it affects ID sensor pattern density, which affects toner supply.*	200 ~ 700 1 V/step **380 V**
2-207		Forced Toner Supply	Forces the toner bottle to supply toner to the toner supply unit for 30 seconds. Press "1" to start. *Toner supply finishes automatically after 30 seconds. This process is not normally needed in the field for this model.*	1: Start
2-208 *	1 *	Toner Supply Mode	Selects the toner supply mode. *Use image pixel count mode only as a temporary measure if the ID or TD sensor is defective.*	**0**: Sensor 1: Image Pixel Count
2-209 *	1	Toner Supply Rate	Adjusts the toner supply rate. *Increasing this value reduces the toner supply clutch on time. Use a lower value if the user tends to make lots of copies that have a high proportion of black.*	10 ~ 800 5 mg/s / step **30 mg/s**

Mode No.			Function	Settings
Class 1 and 2	**Class 3**			
2-209 *	2*	Toner Supply Correction Coefficient	Displays the toner supply correction coefficient (K). It can also be used to adjust K, but the value is changed again when Vt is measured for the next copy. *The toner supply rate depends on the amount of toner in the toner bottle. This change is corrected using this coefficient. This SP can be used to check the toner supply condition. In general, the lower the value of K, the lower the toner density.*	0.25 ~ 3.00 0.25/step **3.00**
2-210 *		ID Detection Interval	Changes the interval for making the ID sensor pattern (V_{SP}/V_{SG} detection). *If the user normally makes copies with a high proportion of black, reduce the interval.*	10 ~ 200 1 copy/step **10 copies**
2-213*		Number of Copies After Toner Near-end Condition	Selects the number of copies can be made after entering a toner near-end condition. *If the user normally makes copies with a high proportion of black, reduce the interval.*	**0: 90 copies** 1: Unlimited 2: 10 copies
2-220 *		V_{REF} Manual Setting	Adjust the TD sensor reference voltage (V_{REF}). *Change this value after replacing the development unit with another one that already contains toner.* *For example, when using a development unit from another machine for test purposes, do the following:* *1. Check the value of SP2-220 in both the machine containing the test unit and the machine that you are going to move it to.* *2. Install the test development unit, then input the V_{REF} for this unit into SP2-220.* *3. After the test, put back the old development unit, and change SP2-220 back to the original value.*	1.00 ~ 5.00 0.01V/step **4.00V**
2-223 *	1	V_T Display	Displays the current TD sensor output voltage.	
	2	$V_{T(10)}$ Display	Displays the average of the most recent 10 TD sensor outputs.	
	3	V_T Change Rate Display	Displays the rate of change in the TD sensor output.	
	4	GAIN Display	Displays the value of GAIN which is used for calculating the toner supply motor on time.	
	5	Image Pixel Count Display	Displays the image pixel count.	

Service Tables

Mode No.			Function	Settings
Class 1 and 2	**Class 3**			
2-301 *	1 *	Transfer Current Adjustment (1st side of the paper)	Adjusts the current applied to the transfer belt during copying on the 1st side of the paper. *If the user uses thicker paper, the current may have to be increased to ensure sufficient transfer of toner.*	20 ~ 100 1 μA/step **45 μA (40)** **35 μA (30)**
	2 *	Transfer Current Adjustment (2nd side of the paper)	Adjusts the current applied to the transfer belt during copying on the 2nd side of the paper. *See above.*	20 ~ 100 1 μA/step **32 μA (40)** **25 μA (30)**
	3*	Transfer Current Adjustment (Leading edge of the paper)	Adjusts the current applied to the transfer belt during copying at the leading edge of the paper. *Increase the current to separate the paper from the drum properly in high humidity and high temperature conditions.*	20 ~ 100 1 μA/step **45 μA (40)** **35 μA (30)**
	4 *	Transfer Current Adjustment (By-pass Feed)	Adjusts the current applied to the transfer belt during copying from the by-pass feed table. *See above. If the user normally feeds thicker paper from the bypass tray, use a higher setting..*	20 ~ 100 1 μA/step **45 μA (40)** **35 μA (30)**
	5*	Transfer Current Adjustment (Leading edge of the paper from by-pass Feed)	Adjusts the current applied to the transfer belt during copying at the leading edge of paper from the by-pass feed table. *Increase the current to separate the paper from the drum properly in high humidity and high temperature conditions.*	20 ~ 100 1 μA/step **60 μA (40)** **45 μA (30)**
2-309*	1*	Transfer Current Correction (Paper width - lower)	Adjusts the lower paper width threshold for the transfer current correction. *Use this SP when an image problem (e.g., insufficient toner transfer) occurs with a small width paper. If the paper width is smaller than this value, the transfer current will be multiplied by the factor in SP2-309-3 (paper tray) or SP2-309-5 (bypass). Refer to Detailed Section Descriptions – Image Transfer for more details.*	0 ~ 297 1 mm/step **150 mm**
	2*	Transfer Current Correction (Paper width – upper)	Adjusts the upper paper width threshold for the transfer current correction. *As for SP2-309-1, but the factors are in SP2-309-4 (paper tray) and SP2-309-6 (bypass).*	0 ~ 297 1 mm/step **216 mm**

Mode No.			Function	Settings
Class 1 and 2	**Class 3**			
2-309*	3*	Transfer Current Correction - α (Paper tray)	Adjusts the transfer current correction coefficient which is used if the paper width is less than the setting of SP2-309-1.	1.0 ~ 3.0 0.1/step **1.2**
	4*	Transfer Current Correction - β (Paper tray)	Adjusts the transfer current correction coefficient which is used if the paper width is less than the setting of SP2-309-2.	1.0 ~ 3.0 0.1/step **1.2**
	5*	Transfer Current Correction - γ (By-pass feed)	Adjusts the transfer current correction coefficient which is used if the paper width is less than the setting of SP2-309-1.	1.0 ~ 3.0 0.1/step **1.5**
	6*	Transfer Current Correction - δ (By-pass feed)	Adjusts the transfer current correction coefficient which is used if the paper width is less than the setting of SP2-309-2.	1.0 ~ 3.0 0.1/step **1.5**
2-801		TD Sensor Initial Setting	Performs the TD sensor initial setting. This SP mode controls the voltage applied to the TD sensor to make the TD sensor output about 4.0 V. Press 1 to start. After finishing this, the TD sensor output voltage is displayed. *Use this mode only after installing the machine, changing the TD sensor, or adding new developer.*	1: Start
2-802*	1*	TD Sensor Manual Setting - VTS	Adjusts the TD sensor output (VT). *Change this value after replacing the development unit with another one that already contains toner. For example, when using a development unit from another machine for test purposes. To adjust VT, use a similar procedure as for SP2-220.*	1.0 ~ 5.0 0.01V/step **4.00 V**
	2*	TD Sensor Manual Setting - VTMAX	Adjusts the maximum value for SP2-802-1.	1.0 ~ 5.0 0.01V/step **4.10 V**
	3*	TD Sensor Manual Setting - VTMIN	Adjusts the minimum value for SP2-802-1.	1.0 ~ 5.0 0.01V/step **3.70 V**
2-805		Process Initial Setting	Performs the process initial setting. Press 1 to start. *This SP should be performed after doing SP2-801-1 at installation and after replacing the drum.*	1. Start
2-902	2	Test Pattern Printing (IPU)	Prints the test patterns for the IPU chip. See section 4.2.3. for how to print test patterns. *This SP mode is useful for finding whether the BICU or the SBU is defective. If the printout is not OK, the BICU is defective.*	

Mode No.			Function	Settings
Class 1 and 2	**Class 3**			
2-902	3	Test Pattern Printing (Printing)	Prints the printer test patterns. See section 4.2.3. for how to print test patterns. Example: 10. Trimming Area	
			This SP mode is useful for finding whether the LDDR or the BICU is defective. If the printout is not OK, the LDDR is defective.	
2-909 *	1*	Main Scan Magnification (Copier)	Adjusts the magnification in the main scan direction for copy mode.	- 2.0 ~+ 2.0 0.1 %/step **+ 0.00 %**
			Use the ●/✻ key to toggle between + and -. See "Replacement and Adjustment - Copy Adjustments" for details.	
	2*	Main Scan Magnification (Printer)	Adjusts the magnification in the main scan direction when printing from a personal computer.	- 2.0 ~+ 2.0 0.1 %/step **+ 0.00 %**
			Use the ●/✻ key to toggle between + and -. See "Replacement and Adjustment - Copy Adjustments" for details.	
2-911*	1*	Transfer Current Timing (On Timing)	Adjusts the transfer current on timing at the leading edge.	-30 ~ +30 1 mm/step **0 mm**
	2*	Transfer Current Timing (Switch Timing)	Adjusts the transfer current switch timing. This determines when the leading edge stops and the image area current begins (see SP 2-301).	-30 ~ +30 1 mm/step **10 mm**
	3*	Transfer Current Timing (Off Timing)	Adjusts the transfer current off timing (–5 mm is 5 mm after the trailing edge).	-30 ~ +30 1 mm/step **- 5 mm**
2-912*		Drum Reverse Rotation Time	**Designer use only. Do not change the value.**	0 ~ 50 1 ms/step **50 ms**
2-913		Test Pattern ID Adjustment	Adjusts the image density for printing test patterns (with SP2-902). Usually this SP mode is only used by designers.	0 ~ 15 1/step **15**
			The value is cleared when the main power switch is turned off and on.	
2-914*	1*	Process Control Setting - Cα	Adjusts the charge roller voltage used when paper with a small width is fed from the by-pass tray. The paper width below which the correction starts depends on the value of SP2-309-1.	0 ~ 400 10 V/step **250 V**
			Use this SP when an image problem (such as white spots at the centre of black dots or breaks in thin black lines) occurs when paper with a small width is fed from the by-pass feed tray.	

Mode No.			Function	Settings
Class 1 and 2	**Class 3**			
2-914*	2*	Process Control Setting - Cβ	Adjusts the charge roller voltage used when paper with a small width is fed from the by-pass tray. The paper width below which the correction starts depends on the value of SP2-309-2. *Use this SP when an image problem (see 2-914-1) occurs when paper with a small width is fed from the by-pass feed tray.*	0 ~ 400 10 V/step **50 V**
	3*	Process Control Setting - Bγ	Adjusts the development bias used when paper with a small width is fed from the by-pass tray. The paper width below which the correction starts depends on the value of SP2-309-1. *Use this SP when an image problem (see 2-914-1) occurs when paper with a small width is fed from the by-pass feed tray.*	0 ~ 400 10 V/step **200 V**
	4*	Process Control Setting - Bδ	Adjusts the development bias used when paper with a small width is fed from the by-pass tray. The paper width below which the correction starts depends on the value of SP2-309-2. *Use this SP when an image problem (see 2-914-1) occurs when paper with a small width is fed from the by-pass feed tray.*	0 ~ 400 10 V/step **50 V**
2-920		LD Off Check	**Factory use only.**	**0: On** 1: Off
2-921*		Shading Correction – Printer	Selects whether shading correction for printing is done or not. ***Do not change the setting.***	0: No **1: Yes**
2-960*		Toner Overflow Sensor	Select whether the toner overflow sensor is activated or not. ***Do not change the setting.***	0: No **1: Yes**
3-001*	1*	ID Sensor PWM Setting	This SP mode is added to solve the following problem. In the AD3, an SC condition occurs when ID Sensor Initial Setting is not done after doing an NVRAM Clear or replacing the NVRAM. *The PWM data is stored at doing the ID Sensor Initial Setting.*	0 ~ 255 1/step **100**

Service Tables

Mode No.			Function	Settings
Class 1 and 2	**Class 3**			
3-001*	2*	ID Sensor Initial Setting	Performs the ID sensor initial setting. The ID sensor output for the bare drum (V_{SG}) is adjusted to 4.0 ± 0.2V. *This SP mode should be performed after replacing or cleaning the ID sensor or replacing the drum or doing an NVRAM clear.*	1: Start
3-103 *		ID Sensor Output Display	Displays the current V_{SG} and V_{SP} output. *If the ID sensor does not detect the ID pattern, "V_{SP}=5.0V/V_{SG}=5.0V" is displayed and an SC code is generated..* *If the ID sensor does not detect the bare area of the drum, "V_{SP}=0.0V/V_{SG}=0.0V" is displayed and an SC code is generated.*	V_{SP}= x.xx V V_{SG}= x.xx V
3-903*		Initialization at Power-up	Decides whether or not the machine is initialized (drum cleaning, charge roller H.P check, charge roller voltage correction, etc) at power-up. *If set to "1", the fusing idling mode is disabled regardless of the setting of SP1-103.*	**0: Yes** 1: No
4-008 *		Sub Scan Magnification (Scanning)	Adjusts the magnification in the sub scan direction for scanning. If this value is changed, the scanner motor speed is changed. *Use the ●/✻ key to toggle between + and -. See "Replacement and Adjustment - Copy Adjustments" for details.*	- 9.0 ~ + 9.0 0.1 %/step **+ 0.0 %**
4-010 *		Leading Edge Registration (Scanning)	Adjusts the leading edge registration for scanning. *(-): The image moves in the direction of the leading edge* *Use the ●/✻ key to toggle between + and -. See "Replacement and Adjustment - Copy Adjustments" for details.*	- 9.0 ~ + 9.0 0.1 mm/step **+ 0.0 mm**

Mode No.			Function	Settings
Class 1 and 2	**Class 3**			
4-011 *		Side-to Side Registration (Scanning)	Adjusts the side-to-side registration for scanning. *(-): The image disappears at the left side.* *(+): The image appears at the left side.* *Use the ●/✻ key to toggle between + and -. See "Replacement and Adjustment - Copy Adjustments" for details.*	- 6.0 ~ + 6.0 0.1 mm/step **+ 0.0 mm**
4-012 *	1 *	Leading Edge Erase Margin (Scanning)	Adjusts the leading edge erase margin for scanning. *Do not adjust this unless the user wishes to have a scanner margin that is greater than the printer margin.*	0.0 ~ 0.9 0.1 mm/step **0.5 mm**
	2 *	Trailing Edge Erase Margin (Scanning)	Adjusts the trailing edge erase margin for scanning. *See the comment for SP 4-012-1.*	0.0 ~ 0.9 0.1 mm/step **0.5 mm**
	3 *	Left Side Erase Margin (Scanning)	Adjusts the left side erase margin for scanning. *See the comment for SP 4-012-1.*	0.0 ~ 0.9 0.1 mm/step **0.5 mm**
	4 *	Right Side Erase Margin (Scanning)	Adjusts the right side erase margin for scanning. *See the comment for SP 4-012-1.*	0.0 ~ 0.9 0.1 mm/step **0.5 mm**
4-013		Scanner Free Run	Performs a scanner free run with the exposure lamp off.	
4-301		APS Sensor Output Check	Displays the APS sensor output signals when an original is placed on the exposure glass. Bit 0: Width sensor 1 Bit 1: Width sensor 2 Bit 2: Length sensor 1 Bit 3: Length sensor 2 Bit 4: Length sensor 3 See “Detailed Section Descriptions – Original Size Detection in Platen Mode” for more details.	00000000 0: Not detected 1: Detected
4-303 *		APS Small Size Original Detection	Selects whether or not the copier determines that the original is A5/HLT size when the APS sensor does not detect the size. *If "A5 length/5 1/2" x 8 1/2" is selected, paper sizes that cannot be detected by the APS sensors are regarded as A5 lengthwise or 5 1/2" x 8 1/2".* *If "Not detected" is selected, "Cannot detect original size" will be displayed.*	**0: Not detected** 1: A5 length / 5 1/2" x 8 1/2"
4-428*	1*	Standard White Level Adjustment Flag	Displays whether or not the standard white level adjustment has been done.	0: Performed 1: Not performed

Mode No.			Function	Settings
Class 1 and 2	**Class 3**			
4-428*	2	Standard White Level Adjustment	Corrects the standard white level of the white plate. ***This SP mode is for factory use only. Do not use this SP mode.***	1: Start
4-901 *	1*	SBU E/O Adjustment – E ch	Checks the difference value of the black level for the EVEN channel after adjusting the black level at power-up. ***This SP mode is for designer use only. Do not use this SP mode.***	0 ~255 1/step **147**
	2*	SBU E/O Adjustment – O ch (NAD40 only)	Checks the difference value of the black level for the ODD channel after adjusting the black level at power-up. ***This SP mode is for designer use only. Do not use this SP mode.***	0 ~255 1/step **147**
	3*	Black Level Adjustment - E ch	Checks the value of the black level for the EVEN channel after adjusting the black level at power-up. ***This SP mode is for designer use only. Do not use this SP mode.***	0 ~ 255 1/step **116**
	4*	Black Level Adjustment - O ch (NAD40 only)	Checks the value of the black level for the ODD channel after adjusting the black level at power-up. ***This SP mode is for designer use only. Do not use this SP mode.***	0 ~ 255 1/step **116**
	5*	Digital Gain Adjustment – E ch	Checks the AGC gain value of the white level for the EVEN channel after adjusting the white level at power-up. ***This SP mode is for designer use only. Do not use this SP mode.***	0 ~ 255 1/step **0**
	6*	Digital Gain Adjustment – O ch (NAD40 only)	Checks the AGC gain value of the white level for the ODD channel after adjusting the white level at power-up. ***This SP mode is for designer use only. Do not use this SP mode.***	0 ~ 255 1/step **0**
	7*	Analog Gain Adjustment – E ch	Checks the AGC gain value of the white level for the EVEN channel after adjusting the white level at power-up. ***This SP mode is for designer use only. Do not use this SP mode.***	0 ~ 255 1/step **40**
	8*	Analog Gain Adjustment – O ch (NAD40 only)	Checks the AGC gain value of the white level for the ODD channel after adjusting the white level at power-up. ***This SP mode is for designer use only. Do not use this SP mode.***	0 ~ 255 1/step 4**0**
	9*	Standard White Level Display	Checks the value of the standard white level after adjusting the white level. ***This SP mode is for factory use only. Do not use this SP mode.***	0 ~ 255 1/step **110**

Mode No.			Function	Settings
Class 1 and 2	**Class 3**			
4-901*	10*	A/D Standard Voltage in ADS Mode	Adjusts the upper limit voltage for A/D conversion in ADS mode. ***This SP mode is for designer use only. Do not use this SP mode.***	0 ~ 255 1/step **191**
	11	Image Data Path (SBU)	***This SP mode is for designer use only. Do not change the value.***	**0**
	12 *	Gain Adjustment - E ch	Checks the AGC gain value of the white level for the EVEN channel after adjusting the white level in the factory. ***This SP mode is for factory use only. Do not use this SP mode.***	INI_GAIN (E): **0:40**
	13*	Gain Adjustment - O ch	Checks the AGC gain value of the white level for the ODD channel after adjusting the white level in the factory. ***This SP mode is for factory use only. Do not use this SP mode.***	INI_GAIN (E): **0:17**
	14*	Standard White Level	Checks the value of the standard white level in the factory. ***This SP mode is for factory use only. Do not use this SP mode.***	INI_FER=**110**
	15	Overflow Flag	Checks the overflow flag data during the automatic scanner adjustment. ***This SP mode is for designer use only.***	OFO/SGDO = **0000** OFE/SGDO = **0000**
	16	Time Out Flag	Checks the time out flag data during the automatic scanner adjustment. ***This SP mode is for designer use only.***	TIME OUT/SGDO = **0000**
	17	Error Flag	Checks the error flag data during the automatic scanner adjustment. ***This SP mode is for designer use only.***	GAIN/OET=**00** REF/OT=**00**
	18	White Shading Max/Min Data	Checks either the maximum or minimum white shading data. ***This SP mode is for designer use only.***	0: Maximum 1: Minimum
	19*	Digital Gain Adjustment – E ch (Scanner App.)	**These SP modes are used only for the Japanese version. Do not change the values.**	**0**
	20*	Digital Gain Adjustment – O ch (Scanner App.)		**0**
	21*	Analog Gain Adjustment – E ch (Scanner App.)		**40 (40) 51 (30)**
	22*	Digital Gain Adjustment – O ch (Scanner App.)		**40**

Mode No.			Function	Settings
Class 1 and 2	**Class 3**			
4-902*	9*	Gate Signal Masking	**This SP mode is for designers only. Do not change the value.**	**1**
	13	Intermittent Control Mode	**This SP mode is for designers only. Do not change the value.**	**0**
4-903 *	2*	Filter Mode Setting	Selects the filter combination of the flare filter and edge filter. 0: Flare off, edge off 1: Flare on, edge off 2: Flare off, edge on 3: Flare on, edge on ***Do not change the value.***	0 ~ 3 **0**
	5	Full Size Mode	Selects whether the copy is always in full size mode even if the magnification ratio has been changed. *Set to 1 when checking the magnification in the main scan direction. If the magnification is not 100%, something is wrong with the image processing circuits.*	**0: Normal operation** 1: Always full size mode
	7	Image Shift in Magnification Mode	Adjusts the pixel shift amount in the main scan direction in magnification mode. ***This SP mode is for designer use only.***	0 ~ 5120 1/step **0**
	10*	25%/50% Reduction in Fax Mode	Selects whether the 25% and 50% reduction in fax mode is available or not. ***Do not change the setting.***	**0: Available** 1: Not available
	11*	MTF Filter Coefficient Level (25% ~ 64%)	Selects the MTF filter coefficient for 25% ~ 64% reduction for letter mode using greyscale processing. Weak Strong 11–8–2–1–9–0–5–4–10–7–3–6	0 ~ 11 1/step **7**
	12*	MTF Filter Coefficient Level (65% ~ 154%)	Selects the MTF filter coefficient for 65% ~ 154% magnification for letter mode using greyscale processing. Weak Strong 11–8–2–1–9–0–5–4–10–7–3–6	0 ~ 11 1/step **6**
	13*	MTF Filter Coefficient Level (155% ~ 256%)	Selects the MTF filter coefficient for 155% ~ 256% enlargement for letter mode using greyscale processing. Weak Strong 11–8–2–1–9–0–5–4–10–7–3–6	0 ~ 11 1/step **10**

Mode No.			Function	Settings
Class 1 and 2	Class 3			
4-903 *	14*	MTF Filter Coefficient Level (257% ~ 400%)	Selects the MTF filter coefficient for 257% ~ 400% enlargement for letter mode using greyscale processing. Weak Strong 11–8–2–1–9–0–5–4–10–7–3–6	0 ~ 11 1/step **10**
	15*	MTF Filter Coefficient Level (Photo mode)	Selects the MTF filter coefficient for photo mode using greyscale mode, if MTF is enabled for this mode with SP 4-904-3. Weak Strong 11–8–2–1–9–0–5–4–10–7–3–6	0 ~ 11 1/step **4**
	16*	Smoothing Filter Coefficient Level (Photo mode)	Selects the smoothing filter coefficient for photo mode using greyscale mode, if smoothing is enabled for photo with SP 4-904-3. Weak Strong 7–6–0–5–2–1–3–4	0 ~ 8 1/step **1**
	17*	MTF Filter Coefficient Level (Text/Photo mode)	Selects the MTF filter coefficient for text/photo mode using greyscale mode. Weak Strong 11–8–2–1–9–0–5–4–10–7–3–6	0 ~ 11 1/step **2**
	18*	MTF Filter Coefficient Level (Low Density Original mode)	Selects the MTF filter coefficient for low density original mode (greyscale mode only). Weak Strong 11–8–2–1–9–0–5–4–10–7–3–6	0 ~ 11 1/step **0**
	19*	MTF Filter Coefficient Level (Copied Original mode)	Selects the MTF filter coefficient for copied original mode (greyscale mode only). Weak Strong 11–8–2–1–9–0–5–4–10–7–3–6	0 ~ 11 1/step **4**
	20*	MTF Filter Strength Level (25% ~ 64%)	Selects the MTF strength for 25% ~ 64% reduction for letter mode using greyscale processing.	0: x 0.25 1: x 0.5 **2: x 1** 3: x 2 4: x 4
	21*	MTF Filter Strength Level (65% ~ 154%)	Selects the MTF strength for 65% ~ 154% magnification for letter mode using greyscale processing.	0: x 0.25 1: x 0.5 **2: x 1** 3: x 2 4: x 4
	22*	MTF Filter Strength Level (155% ~ 256%)	Selects the MTF strength for 155% ~ 256% enlargement for letter mode using greyscale processing.	0: x 0.25 1: x 0.5 **2: x 1** 3: x 2 4: x 4
	23*	MTF Filter Strength Level (257% ~ 400%)	Selects the MTF strength for 25% ~ 64% reduction for letter mode using greyscale processing.	0: x 0.25 1: x 0.5 **2: x 1** 3: x 2 4: x 4

Mode No.			Function	Settings
Class 1 and 2	**Class 3**			
4-903 *	24*	MTF Filter Strength Level (Photo mode)	Selects the MTF strength for photo mode using greyscale mode, if MTF is enabled for this mode with SP 4-904-3.	0: x 0.25 **1: x 0.5** 2: x 1 3: x 2 4: x 4
	25*	MTF Filter Strength Level (Text/Photo mode)	Selects the MTF strength for text/photo mode using greyscale mode.	0: x 0.25 **1: x 0.5** 2: x 1 3: x 2 4: x 4
	26*	MTF Filter Strength Level (Low Density Original mode)	Selects the MTF strength for low density original mode using greyscale mode.	0: x 0.25 1: x 0.5 2: x 1 **3: x 2** 4: x 4
	27*	MTF Filter Strength Level (Copied Original mode)	Selects the MTF strength for copied original mode using greyscale mode.	0: x 0.25 **1: x 0.5** 2: x 1 3: x 2 4: x 4
	28*	Independent Dot Erase Level (Letter mode: Grayscale Processing)	Selects the independent dot erase level for letter mode with grayscale processing mode. *Refer to "Detailed Section Description – Independent Dot Erase" for details.*	0 ~ 15 1/step **11**
	29*	Independent Dot Erase Level (Letter mode: Binary Processing)	Selects the independent dot erase level for letter mode with binary processing mode. *Refer to "Detailed Sectional Description – Independent Dot Erase" for details.*	0 ~ 15 1/step **13**
	30*	Independent Dot Erase Level (Text/Photo mode: Greyscale and binary picture modes)	Selects the independent dot erase level for text/photo mode. *Refer to "Detailed Section Description – Independent Dot Erase" for details.*	0 ~ 15 1/step **0 (Disabled)**
	31*	Independent Dot Erase Level (Low Density Original mode)	Selects the independent dot erase level for low density original mode. *Refer to "Detailed Section Description – Independent Dot Erase" for details.*	0 ~ 15 1/step **0 (Disabled)**
	32*	Independent Dot Erase Level (Copied Original mode)	Selects the independent dot erase level for copied original mode. *Refer to "Detailed Sectional Description – Independent Dot Erase" for details.*	0 ~ 15 1/step **11**
	33*	Edge Filter Threshold Level	Adjusts the threshold level for the edge filter. *This value is only effective when the setting of SP4-903-2 is "2" or "3" – Normally not used.*	0 ~ 255 1/step **200**

Mode No.			Function	Settings
Class 1 and 2	Class 3			
4-903 *	34*	Background Erase Level (Text mode)	Adjust the threshold level for the background erase function in the text mode. *A larger value reduces dirty background.*	0 ~ 255 1/step **20**
	35*	Background Erase Level (Text/Photo mode)	Adjust the threshold level for background erase in text/photo mode. *A larger value reduces dirty background.*	0 ~ 255 1/step **0 (Disabled)**
	36*	Background Erase Level (Photo mode)	Adjust the threshold level for background erase in photo mode. *A larger value reduces dirty background.*	0 ~ 255 1/step **0 (Disabled)**
	37*	Background Erase Level (Generation Copy mode)	Adjust the threshold level for background erase in generation copy mode. *A larger value reduces dirty background.*	0 ~ 255 1/step **20**
	38*	Gradation Mode Setting	Selects the standard gradation mode. bit 4: 0: Normal operation 1: No gradation processing bit 3: 0: Normal operation 1: No gamma correction bit 2: Copied original mode 0: Error diffusion off 1: Error diffusion on bit 1: Low density original mode 0: Error diffusion off 1: Error diffusion on bit 0: Text mode 0: Error diffusion off 1: Error diffusion on *Input the setting for all 8 bits at once as a decimal value. Example: To set bits 2, 1, and 0 to 1, input 7.*	0 ~ 63 1/step **0**
	39*	Binary Filter Setting	Selects the binary matrix filter. 0: Filter off 1: Independent dot erase filter - 3x3 2. Independent dot erase filter - 4x4 3: Independent dot erase filter - 5x5 4: Uneven correction filter - 3x3 ***Do not change the value.***	0 ~ 4 1/step **0**

Service Tables

Mode No.			Function	Settings
Class 1 and 2	Class 3			
4-903 *	41*	MTF Filter Coefficient Level – Binary Processing (25% ~ 64%)	Selects the MTF filter coefficient for letter mode with binary processing using 25% ~ 64% reduction. Weak Strong 11–8–2–1–9–0–5–4–10–7–3–6	0 ~ 11 1/step **4**
	42*	MTF Filter Coefficient Level – Binary Processing (65% ~ 154%)	Selects the MTF filter coefficient for letter mode with binary processing with 65% ~ 154% magnification. Weak Strong 11–8–2–1–9–0–5–4–10–7–3–6	0 ~ 11 1/step **4**
	43*	MTF Filter Coefficient Level – Binary Processing (155% ~ 256%)	Selects the MTF filter coefficient for letter mode with binary processing with 155% ~ 256% enlargement. Weak Strong 11–8–2–1–9–0–5–4–10–7–3–6	0 ~ 11 1/step **3**
	44*	MTF Filter Coefficient Level – Binary Processing (257% ~ 400%)	Selects the MTF filter coefficient for letter mode with binary processing with 257% ~ 400% enlargement. Weak Strong 11–8–2–1–9–0–5–4–10–7–3–6	0 ~ 11 1/step **3**
	47*	MTF Filter Coefficient Level – Binary Processing (Text/Photo mode)	Selects the MTF filter coefficient for binary processing in text/photo mode. Weak Strong 11–8–2–1–9–0–5–4–10–7–3–6	0 ~ 11 1/step **4**
	50*	MTF Filter Strength Level – Binary Processing (25% ~ 64%)	Selects the MTF strength for binary processing with 25% ~ 64% reduction.	0: x 0.25 1: x 0.5 **2: x 1** 3: x 2 4: x4
	51*	MTF Filter Strength Level – Binary Processing (65% ~ 154%)	Selects the MTF strength for binary processing with 65% ~ 154% magnification.	0: x 0.25 1: x 0.5 **2: x 1** 3: x 2 4: x 4
	52*	MTF Filter Strength Level – Binary Processing (155% ~ 256%)	Selects the MTF strength l for binary processing with 155% ~ 256% enlargement.	0: x 0.25 1: x 0.5 **2: x 1** 3: x 2 4: x 4
	53*	MTF Filter Strength Level – Binary Processing (257% ~ 400%)	Selects the MTF strength for binary processing with 25% ~ 64% reduction.	0: x 0.25 **1: x 0.5** 2: x 1 3: x 2 4: x 4
	55*	MTF Filter Strength Level – Binary Processing (TextPhoto mode)	Selects the MTF strength for binary processing with text/photo mode.	0: x 0.25 **1: x 0.5** 2: x 1 3: x 2 4: x 4
4-904*	1*	Laser Pulse Positioning	Selects whether or not the laser pulse positioning control is used in text and text/photo modes ***Do not change the value.***	0: Off **1: On**

Mode No.			Function	Settings
Class 1 and 2	**Class 3**			
4-904*	2*	Dither Matrix Setting	Selects the dither matrix for photo mode with greyscale processing *If "0" is selected, the image will be sharper.*	0: 4 x 4 **1: 6 x 6**
	3*	Filter Type Selection in Photo Mode	Selects the filter type for photo mode. *Coefficients used:* *0: SP4-903-15 and SP4-903-24.* *1: SP4-903-16* *If "0" is selected, the image will be sharper. However, dot screen areas will be faint.*	0: MTF **1: Smoothing**
	6*	Line Width Correction Type in Copied Original Mode	Selects the line width correction type for copied original mode. *In copied original mode, lines may bulge in the main scan direction. Adjust this SP mode until the result is satisfactory.*	0: Not corrected 1: Thin line-1 **2: Thin line-2** 3: Thick line
	7*	Processing Type in Text Areas	Selects the process used for text areas in text/photo mode with grayscale mode, if auto text/photo separation enabled with SP 4-907. 0: 1-dot grayscale **1: 1-dot error diffusion** *If "1" is selected, the image becomes sharper in focus. However, gradation will be reduced.*	
	8*	Processing Type in Photo Area	Selects the process used for photo areas in text/photo mode with grayscale mode, if auto text/photo separation enabled with SP 4-907. 0: 2-dot grayscale **1: 2-dot error diffusion** *If "1" is selected, the image becomes sharper in focus. However, gradation will be reduced.*	
	9	Image Data Path - MSU	Selects one of the following video data outputs, which will be used for printing. 0: After image scanning 1: After gradation processing 2: After image data form application 3: After MSU 4: Not output **5: Normal video processing** ***Do not change the value.***	
	12*	Threshold Level in Binary Picture Processing Mode	Adjusts the threshold level for binary picture processing.	0 ~ 255 1/step **128**
	18*	Binary Dither Pattern	Selects the dither pattern for photo mode in binary picture processing mode. *A greater number of lines gives a more detailed copy.*	**0: 70 lines (8x8)** 1: 95 lines (6x6) 2: 140 lines (8x8) 3: 180 lines (8x8)

Mode No.			Function	Settings
Class 1 and 2	**Class 3**			
4-904*	23*	Binary Error Diffusion Pattern	Selects the error diffusion pattern for text/photo mode in binary processing mode.	**0: Matrix 1** 1: Matrix 2
			Do not change the value.	
4-905	1	Image Data Path – Filtering/Magnification	Selects one of the following video data outputs, which will be used for printing. 0: Filtering → Magnification 1: Magnification → Filtering 2: Test mode 1 3: Test mode 2 4: Filtering only 5: Magnification only 6: No processing **7: Normal operation**	
			Do not change the value.	
	2	Image Data Path – Gradation Processing	Selects one of the following video data outputs, which will be used for gradation processing. 0: After image scanning 1: After MSU 2. After image overlay **3: Normal operation**	
			Do not change the value.	
	3	Image Data Path – Image Overlay	Selects one of the following video data outputs, which will be used for the image overlay function. **0: Grayscale processing data** 1: Binary processing data 2: Normal operation	
			Do not change the value.	
	4	Printout Type Selection	Selects one of the following video data outputs, which will be used for the printer controller. **0: Normal operation** 1: Black/white conversion 2: Not printout 3: Application through	
			Do not change the value.	
4-906*		Image Processing Priority in Text/Photo Separation	Selects either text priority or photo priority for text/photo mode, if auto text/photo separation enabled with SP 4-907.	**0: Photo priority** 1: Text priority
			With "Photo priority", all of the image is processed with the image processing for photo mode. With "Text priority", the machine performs the auto text/photo separation and does the appropriate image processing for each area.	
4-907*		Text/Photo Auto Separation	Selects whether auto text/photo separation is done.	**0: No** 1: Yes
4-909*	1*	Laser Pulse Position Threshold	Decides the threshold level for selecting the type of laser pulse width modulation that is used	0 ~255 1/step **32**
			Do not change the value.	

Mode No.			Function	Settings
Class 1 and 2	Class 3			
4-909*	2 *	Line Width Correction 1 - White	Decides the threshold value for a pixel to be white when line width correction type 1 is performed. ***Do not change the value.***	0 ~ 15 1 /step **3**
	3 *	Line Width Correction 1 - Black	Decides the threshold value for a pixel to be black when line width correction type 1 is performed. ***Do not change the value.***	0 ~ 15 1 /step **13**
	4 *	Line Width Correction 2 - White	Decides the threshold value for a pixel to be white when line width correction type 2 is performed. ***Do not change the value.***	0 ~ 15 1 /step **4**
	5 *	Line Width Correction 2 - Black	Decides the threshold value for a pixel to be black when line width correction type 2 is performed. ***Do not change the value.***	0 ~ 15 1 /step **12**
	6*	Error Diffusion Gamma Table	Selects the gamma table for error diffusion. ***Do not change the value.***	**0: Gamma table 0** 1: Gamma table 1
	7 *	Edge Detection 1	Decides the threshold value to calculate the difference between the object pixel and the surrounding pixels. ***Do not change the value.***	0 ~ 255 1 /step **24**
	8 *	Edge Detection 2	Decides the threshold value for detecting an edge area. ***Do not change the value.***	0 ~ 255 1 /step **128**
	19	Image Data Path - Application	Selects one of the following video data outputs, which will be used for application. 0: After image processing 1: After MSU 2: After gamma correction 3: After image scanning 4: Not output **5: Normal operation** ***Do not change the value.***	
	20	Image Data Path - Printing	Selects one of the following video data outputs, which will be used for printing. 0: After image processing 1: After MSU 2: After image overlay 3: From application 4: Test mode 1 5: Test mode 2 6: Test mode 3 7: Not output **8: Normal operation** ***Do not change the value.***	

Service Tables

Mode No.			Function	Settings
Class 1 and 2	**Class 3**			
4-910	1	Data Compression	Selects whether simple data compression is done or not. ***Do not change the value.***	**0: Yes** 1: No
	2	Data Compression Threshold	Selects the threshold level for image compression. ***Do not change the value.***	0 ~ 255 1/step **8**
	3	Data Compression – ABS Through	Selects whether the ABS function is done or not. ***Do not change the value.***	**0: Yes** 1: No
4-911*	1	HDD Setting (Media Test)	Checks for bad sectors on the hard disk that develop during machine use. Press "1" to start. This takes 4 minutes. *This SP mode should be done when an abnormal image is printed. There is no need to do this at installation as the hard disk firmware already contains bad sector information, and damage is not likely during transportation.* *Bad sectors detected with this SP mode will be stored in the NVRAM with the bad sector data copied across from the firmware.* *If the machine detects over 50 bad sectors, SC361 will be generated. At this time, use SP4-911-2.*	1: Start
	2	HDD Setting (Formatting)	Formats the hard disk. This takes 4 minutes. Press "1" to start. **Do not turn off the main power switch during this process.**	1: Start
	3*	HDD Setting (Spindle Control)	Decides the disk drive motor (spindle motor) stop timing. **0: Enabled** The hard disk stops in low power mode. The first copy after returning to standby will take longer. 1: Disabled The hard disk keeps going in low power mode.	
	6	HDD Setting (Bad Sector Information Reset)	Resets the bad sector information which is stored in the NVRAM. Press "1" to start. *This SP should be performed when the hard disk is replaced.*	1: Start
	7	HDD Setting (Bad Sector Display)	Displays the number of bad sectors there are on the hard disk. *If the machine detects over 50 bad sectors, SC361 will be generated. At this time, use SP4-911-2.*	Total: 0 Copy: 0 Printer: 0 AF (Archive File): 0

Mode No.			Function	Settings
Class 1 and 2	**Class 3**			
4-911	8	HDD Model Name Display	Displays the model name of the HDD. *If the hard disk is not installed, "Not Connected" is displayed.*	
5-001		All Indicators On	Turns on all indicators on the operation panel. *Press "1" to check.* *Press [Clear Modes/Clear] to exit this SP mode.*	M/C: Stop 1: Start
5-009*		Language Selection	Selects the language for the display. *After selecting the language, turn the main power switch off and on.*	
5-024*		mm/inch Display Selection	Selects what unit is used. *After selecting the unit, turn the main power switch off and on.*	**0: mm** 1: inch
5-104 *		A3/11"x17" Double Count	Specifies whether the counter is doubled for A3/11"x17" paper. *If "1" is selected, the total counter and the current user code counter count up twice when A3/11"x17" paper is used.*	**0: No** 1: Yes
5-106 *		ADS Level Selection	Selects the image density level that is used in ADS mode.	1 ~ 6 1 notch /step **3**
5-112*		Non-standard Paper Size	Selects whether a non-standard paper size can be input or not. *If "1" is selected, the customer will be able to input a non-standard paper size using a UP mode.*	0: No **1: Yes**
5-113*		Optional Counter Type	**This SP is for Japan only. Do not change the value.**	0 ~ 6 1/step **0**
5-115*		Duplex Punch Hole Margin	Selects whether or not the image on the back of duplex copies shifts for making the punch holes.	**0: Yes** 1: No
5-118 *		Disable Copying	Selects whether the copy function is disabled or not.	**0: No** 1: Yes
5-120		Mode Clear – Op. Counter Removal	**This SP is for Japan only. Do not change the value.**	0 ~ 2 1/step **0**
5-121*		Counter Up Timing	Determines whether the optional key counter counts up at paper feed-in or at paper exit. *The total counter is not affected by this SP mode.*	**0: Feed-in** 1: Exit
5-127*		APS Mode	Selects whether the APS function is enabled or not.	0: Disabled **1: Enabled**

Mode No.			Function	Settings
Class 1 and 2	**Class 3**			
5-129*		"F" Paper Size Selection	Selects the "F" paper size.	**0: 8¼" x 13"** 1: 8½" x 13" 2: 8 x 13"
5-131*		Paper Size Type Selection	Selects the paper size type (for originals and copy paper). • *After changing the value, turn the main power switch off and on.* • *If the paper size type of the archive files stored in the HDD is different, abnormal copies will be made. In this condition, perform SP5-822 and ask the user to restore the archive files.*	0: Japan **1: North America** **2: Europe**
5-305*		Auto Off Mode Disabling	Selects auto off timer setting range *When "1" is selected, the auto off timer range will be wider than the default timer range, and the user can disable the auto off timer. (In UP mode, the user will be able to select a time between 0 and 240 minutes.)*	**0: No** 1: Yes
5-401*	2*	Restricted Access Control for Key Counter – Copy Mode	Selects whether restricted access control is done when using the key counter in copy mode.	**0: No** 1: Yes
	3*	Restricted Access Control for other counters – Copy Mode	**This SP is for Japan only. Do not change the value.**	**0: No** 1: Yes
	52*	Restricted Access Control for Key Counter – Fax Mode	Selects whether restricted access control is done when using the key counter in fax mode.	**0: No** 1: Yes
	53*	Restricted Access Control for other counters – fax Mode	**This SP is for Japan only. Do not change the value.**	**0: No** 1: Yes
	62*	Restricted Access Control for Key Counter – Printer Mode	Selects whether restricted access control is done when using the key counter in printer mode.	**0: No** 1: Yes
	63*	Restricted Access Control for other counters – Printer Mode	**Japanese version only.** **Do not change the value.**	**0: No** 1: Yes

Mode No.			Function	Settings
Class 1 and 2	Class 3			
5-401*	82*	Restricted Access Control for Key Counter – Other Enhanced Kit	**Japanese version only.** **Do not change the value.**	**0: No** 1: Yes
	83*	Restricted Access Control for other counters – Other Enhanced Kit	**Japanese version only.** **Do not change the value.**	**0: No** 1: Yes
5-501 *		PM Alarm Interval	Sets the PM interval, with an alarm. *When the setting is "0", this function is disabled.*	0 ~ 255 1k copies/step **150 k copies**
5-504*	1*	Jam Alarm Level (RSS function)	**Japanese version only.** **Do not change the values.**	0: Z 1: L 2: M **3: H**
	2*	Jam Auto Call (RSS function)		0: Off **1: On**
5-505*		Error Alarm Level	**Japanese version only.** **Do not change the values.**	0 ~ 255 100 copies/step **2500 copies (30)** **5000 copies (40)**
5-507*	128*	Paper Control Call Interval – Other Paper Sizes (RSS function)	**Japanese version only.** **Do not change the values.**	250 ~ 10000 1 page/step **1000 pages**
	132*	Paper Control Call Interval – A3 (RSS function)		
	133*	Paper Control Call Interval – A4 (RSS function)		
	134*	Paper Control Call Interval – A5 (RSS function)		
	141*	Paper Control Call Interval – B4 (RSS function)		
	142*	Paper Control Call Interval – B5 (RSS function)		
	160*	Paper Control Call Interval – DLT (RSS function)		
	164*	Paper Control Call Interval – LG (RSS function)		

Mode No.			Function	Settings
Class 1 and 2	**Class 3**			
5-507*	166*	Paper Control Call Interval – LT (RSS function)	**Japanese version only.** **Do not change the values.**	250 ~ 10,000 1 page/step **1,000 pages**
	172*	Paper Control Call Interval – HLT (RSS function)		
5-590*	1*	Original Auto Call (RSS function)	**Japanese version only.** **Do not change the values.**	**0: Off** 1: On
	2*	Cover Open Auto Call (RSS function)		0: Off **1: On**
	3*	Paper Control Call (RSS function)		**0: Off** 1: On
	4*	Staple Auto Call (RSS function)		**0: Off** 1: On
	5*	Toner Auto Call (RSS function)		**0: Off** 1: On
5-801		Memory All Clear	Resets all correction data for process control and all software counters. Also, returns all modes and adjustments to the default settings. See the "Memory All Clear" section for how to use this SP mode correctly. Press “1” for over 3 seconds, then turn the main power switch off and on.	
			Normally, this SP mode should not be used. *It is used only after replacing the NVRAM, or when the copier malfunctions due to a damaged NVRAM.*	
5-802*		Free Run	Performs a free run. The scanner scans once and the printer prints for the number of copies requested.	**0: Stop** 1: Start
			To perform the free run, after selecting “1”, press the ⊡ key to enter copy mode then input the number of copies. Then, press the Start key. *To stop the free run, press C/⊘.*	
5-803	1 ~ 9	Input Check	Displays the signals received from sensors and switches. See the "Input Check" section for details.	

Mode No.			Function	Settings
Class 1 and 2	**Class 3**			
5-804		Output Check	Turns on the electrical components individually for test purposes. See the "Output Check" section for details.	
5-807	1	Option Connection Check - ADF	Checks the connectors to the optional peripherals.	0: Not connected 1: Connected
	2	Option Connection Check – Paper Tray Unit		
	3	Option Connection Check - LCT		
	4	Option Connection Check - Finisher		
5-811 *		Machine Serial Number	Use to input the machine serial number. (Normally done at the factory.) *This serial number will be printed on the system parameter list.* *Use the ●/✻ key to input "A".*	
5-812 *	1*	Service Telephone Number at SC condition	Use this to input the telephone number of the service representative (this is displayed when a service call condition occurs.) *Press the "●/✻" key to input a pause. Press the "Clear modes" key to delete the telephone number.*	
	2*	Service Fax Number for Counter Printing	Use this to input the fax number of the service representative (this is printed on the Counter Report – UP mode, System No.19) *Press the "●/✻" key to input a pause. Press the "Clear modes" key to delete the telephone number.*	
5-816*	1*	CSS (CSS) Function	**Japanese version only.** **Do not change the values.**	**0: Off** 1: On
	2*	CE Visit Call (CSS function)		0: Start 1: Finish
5-821*		CSS PI Device Code (CSS function)	**Japanese version only.** **Do not change the value.**	0 ~ 4 1/step **0**
5-822		Archive File Clear	Clears all archive file data stored in the HDD. Press "1" to clear. *Before (or after) performing SP5-131, do this SP mode. After this, ask the user to restore the archive files.*	1: Start

Mode No.			Function	Settings
Class 1 and 2	Class 3			
5-907		Plug & Play Brand Name and Production Name Setting	Selects the brand name and the production name for Windows 95 Plug & Play. This information is stored in the NVRAM. If the NVRAM is defective, these names should be registered again. *After selecting, press the "Original Type" key and # at the same time. If the setting is completed, a "*" mark will be displayed before the selection.*	
5-914		Printer Counter Display	Selects whether or not the total printer counter is displayed in the UP mode.	**0: Off** 1: On
5-915		Mechanical Counter Detection	Checks whether the mechanical counter inside the inner cover is connected or not.	0: Not detected 1: Detected 2: Unknown
5-920*		Recovery Time for Low Power Mode	Selects the recovery time from the low power mode.	**0: 30 s** 1: 20 s
5-990	1	SMC Printing (All Data)	Prints all the system parameter lists. See the "System Parameter and Data Lists" section for how to print the lists.	1: Start
	2	SMC Printing (SP Mode Data)	Prints the SP mode data list. See the "System Parameter and Data Lists" section for how to print the lists.	1: Start
	3	SMC Printing (UP Mode Data)	Prints the UP mode data list. See the "System Parameter and Data Lists" section for how to print the lists.	1: Start
	4	SMC Printing (Machine Status Data)	Prints the machine status history data list. See the "System Parameter and Data Lists" section for how to print the lists.	1: Start
	5	SMC Printing (UP Mode - Copy)	Prints the Copy Mode list (UP Mode No.10) See the "System Parameter and Data Lists" section for how to print the lists.	1: Start
	6	SMC Printing (Large Font Size)	Prints the SP mode data list with a large font size. See the "System Parameter and Data Lists" section for how to print the lists. *This SP mode is used when the SMC list is sent by fax to the number stored with SP5-812.*	1: Start

Mode No.			Function	Settings
Class 1 and 2	**Class 3**			
6-006*	1*	ADF Side-to Side Registration	Adjusts the printing side-to-side registration in the ADF mode. *Use the ●/✻ key to toggle between + and -.*	-3 ~ +3 0.1 mm/step **+ 0.0 mm**
	2*	ADF Leading Edge Registration (Simplex)	Adjusts the original stop position. *Use the ●/✻ key to toggle between + and -.*	-29 ~ +29 0.18 mm/step **+ 0.0 mm**
	3*	ADF Leading Edge Registration (Duplex-front)	Adjusts the original stop position against the original left scale in one-sided original mode. *Use the ●/✻ key to toggle between + and -.*	-29 ~ +29 0.18 mm/step **+ 0.0 mm**
	4*	ADF Leading Edge Registration (Duplex-rear)	Adjusts the original stop position against the original left scale in two-sided original mode. *Use the ●/✻ key to toggle between + and -.*	-29 ~ +29 0.1 mm/step **+ 0.0 mm**
	For details on the correct way to use SP 6-006, see the ADF service manual.			
6-007	1	ADF Input Check 1	Displays the signals received from sensors and switches of the ADF. See the "Input Check" section for details.	
	2	ADF Input Check 2	Displays the signals received from sensors and switches of the ADF. See the "Input Check" section for details.	
6-008		ADF Output Check	Turns on the electrical components of the ADF individually for test purposes. See the "Output Check" section for details.	
6-009	1	ADF Free Run (Two-sided original)	Performs an ADF free run with two-sided. Press “1” to start. *This is a general free run controlled from the copier. For more detailed free run modes, see the DF manual.*	1: Start
	2	ADF Free Run (Stamp)	Performs an ADF free run with stamp mode. Press “1” to start. *This is a general free run controlled from the copier. For more detailed free run modes, see the DF manual.*	1: Start

Service Tables

Mode No.			Function	Settings
Class 1 and 2	Class 3			
6-010*		Stamp Position Adjustment	Adjusts the stamp position in the sub-scan direction in facsimile mode. *Use the ●/✻ key to toggle between + and -.*	- 3.5 ~ + 3.5 0.5 mm/step **0 mm**
6-105*		Finisher Staple Position Adjustment (3,000-sheet Finisher Only)	Adjusts the staple position in the main scan direction when using the 3,000-sheet finisher. *Use the ●/✻ key to toggle between + and -.* *A larger value causes the staple position to shift outward.*	- 1~ +3.5 0.5 mm/step **+0.0 mm**
6-113*	1*	Punch Hole Position Adjustment (2 Punch Hole Type)	Adjusts the punch hole position in the sub-scan direction for the punch unit with two punch holes. *Use the ●/✻ key to toggle between + and -. A larger value shifts the punch holes towards the edge of the paper.*	- 7.5 ~ + 7.5 0.5 mm/step **0 mm**
	2*	Punch Hole Position Adjustment (3 Punch Hole Type)	Adjusts the punch hole position in the sub-scan direction for the punch unit with three punch holes. *Use the ●/✻ key to toggle between + and -. A larger value shifts the punch holes towards the edge of the paper.*	- 7.5 ~ + 7.5 0.5 mm/step **0 mm**
7-001*		Total Operation Time Display	Displays the total drum rotation time.	Min.
7-002*	1*	Total Original Counter (Copy and Fax Modes)	Displays the total number of fed originals in copy and fax modes.	
	2*	Total Original Counter (Copy Mode)	Displays the total number of fed originals in copy mode.	
	3*	Total Original Counter (Fax Mode)	Displays the total number of fed originals in fax mode.	
7-003*	1*	Total Copy Counter (All Modes)	Displays the total number of prints in all modes.	
	2*	Total Copy Counter (Copy Mode)	Displays the total number of prints in copy mode.	
	3*	Total Copy Counter (Fax Mode)	Displays the total number of prints in fax mode.	
	4*	Total Copy Counter (Printer Mode)	Displays the total number of prints in printer mode.	

Mode No.			Function	Settings
Class 1 and 2	Class 3			
7-006*	1*	C/O (Copy per Original) Counter	Displays the number of sets of copies per original when making 10 or more sets of copies. e.g.: When making 15 sets of copies of an original, this counter value will increase by “6”.	
	2*	P/O (Print per Original) Counter	Displays the number of sets of prints per original data when making 10 or more sets of prints. e.g.: When making 15 sets of prints of an original data, this counter value will increase by “6”.	
7-101*	4*	Total Copies by Paper Size (A3)	Displays the total number of prints by paper size.	
	5*	Total Copies by Paper Size (A4)		
	6*	Total Copies by Paper Size (A5)		
	13*	Total Copies by Paper Size (B4)		
	14*	Total Copies by Paper Size (B5)		
	32*	Total Copies by Paper Size (DLT)		
	36*	Total Copies by Paper Size (LG)		
	38*	Total Copies by Paper Size (LT)		
	44*	Total Copies by Paper Size (HLT)		
	128*	Total Copies by Paper Size (Other Sizes)		
7-201*		Total Number of Scanning	Displays the total number of scanned originals.	
7-204*	1*	Total Paper Tray Counter (1st Paper Tray)	Displays the total number of sheets fed from each paper feed tray.	
	2*	Total Paper Tray Counter (1st Paper Tray)		
	3*	Total Paper Tray Counter (2nd Paper Tray)		

Mode No.			Function	Settings
Class 1 and 2	Class 3			
7-204*	4*	Total Paper Tray Counter (3rd Paper Tray)	Displays the total number of sheets fed from each paper feed tray.	
	5*	Total Paper Tray Counter (4th Paper Tray)		
	6*	Total Paper Tray Counter (By-pass Feed)		
7-205*		ADF Total Counter	Displays the total number of originals fed by the ADF.	
7-206*		Total Staple Counter	Displays the total number of used staples.	
7-301*	1*	Total Copies by Reproduction Ratio (25% ~ 49%)	Displays the total number of prints by reproduction ratio.	
	2*	Total Copies by Reproduction Ratio (50% ~ 99%)		
	3*	Total Copies by Reproduction Ratio (Full size)		
	4*	Total Copies by Reproduction Ratio (101% ~ 200%)		
	5*	Total Copies by Reproduction Ratio (201% ~ 400%)		
	6*	Total Copies by Reproduction Ratio (Direct Mag.)		
	7*	Total Copies by Reproduction Ratio (Direct Size Mag.)		
	8*	Total Copies by Reproduction Ratio (Size Mag.)		
	9*	Total Copies by Reproduction Ratio (Fix Mag.)		

Mode No.			Function	Settings
Class 1 and 2	Class 3			
7-303*	1*	Total Copies by Image Editing (Posi./Nega.)	Displays the total number of prints by image editing mode.	
	2*	Total Copies by Image Editing (Repeat Copy)		
	3*	Total Copies by Image Editing (Memory Sort)		
	4*	Total Copies by Image Editing (Staple)		
	5*	Total Copies by Image Editing (Combine)		
	6*	Total Copies by Image Editing (Series Copy)		
	7*	Total Copies by Image Editing (Erase Copy)		
7-304*	1*	Total Copies by Copy Mode (Text)	Displays the total number of prints by copy mode.	
	2*	Total Copies by Copy Mode (Text/Photo)		
	3*	Total Copies by Copy Mode (Photo)		
	4*	Total Copies by Copy Mode (Generation)		
	5*	Total Copies by Copy Mode (Light Original)		
	6*	Total Copies by Copy Mode (Duplex)		
	7*	Total Copies by Copy Mode (ADF)		
	8*	Total Copies by Copy Mode (Double Copy)		
	9*	Total Copies by Copy Mode (2-sided Original)		
	10*	Total Copies by Copy Mode (Interrupt)		

Mode No.			Function	Settings
Class 1 and 2	Class 3			
7-304*	11*	Total Copies by Copy Mode (Archive File)	Displays the total number of prints by copy mode.	
	12*	Total Copies by Copy Mode (1-sided to 2-sided)		
	13*	Total Copies by Copy Mode (2-sided to 2-sided)		
	14*	Total Copies by Copy Mode (2-sided to 1-sided)		
	15*	Total Copies by Copy Mode (Book to 2-sided)		
7-305*	1*	Total Copies by Multiple Copy (1 to 1)	Displays the total number of prints by multiple copy quantity.	
	2*	Total Copies by Multiple Copy (1 to 2 ~ 5)		
	3*	Total Copies by Multiple Copy (1 to 6 ~ 10)		
	4*	Total Copies by Multiple Copy (1 to 11 ~ 20)		
	5*	Total Copies by Multiple Copy (1 to 21 ~ 99)		
	6*	Total Copies by Multiple Copy (1 to 100 ~)		
7-401*		Total SC Counter	Displays the total number of service calls that have occurred.	
7-403*	1*	SC History (Latest)	Displays the latest 10 service call codes.	
	2*	SC History (2nd Latest)		
	3*	SC History (3rd Latest)		
	4*	SC History (4th Latest)		
	5*	SC History (5th Latest)		
	6*	SC History (6th Latest)		
	7*	SC History (7th Latest)	.	

Mode No.			Function	Settings
Class 1 and 2	Class 3			
7-403*	8*	SC History (8th Latest)	Displays the latest 10 service call codes.	
	9*	SC History (9th Latest)		
	10*	SC History (10th Latest)		
7-501*		Total Jam Counter	Displays the total number of copy jams and original jams.	
7-502*		Total Copy Jam Counter	Displays the total number of copy jams.	
7-503*		Total Original Jam Counter	Displays the total number of original jams.	
7-504*	1*	Total Copy Jam by Location (At Power On)	Displays the total number of copy jams by location. These are paper non-feed jams.	
	3*	Total Copy Jam by Location (1st Paper Tray)		
	4*	Total Copy Jam by Location (2nd Paper Tray)		
	5*	Total Copy Jam by Location (3rd Paper Tray)		
	6*	Total Copy Jam by Location (4th Paper Tray)		
	7*	Total Copy Jam by Location (LCT)		
	8*	Total Copy Jam by Location (Upper Relay Sensor)	Displays the total number of copy jams by location. These are jams when the paper does not activate the sensor.	
	9*	Total Copy Jam by Location (Lower Relay Sensor)		
	10*	Total Copy Jam by Location (Upper Relay Sensor – Op. PTU)		
	13*	Total Copy Jam by Location (Regist. Sensor)		
	16*	Total Copy Jam by Location (Exit Sensor)	.	
	17*	Total Copy Jam by Location (Bridge Exit Sensor)		

Mode No.			Function	Settings
Class 1 and 2	Class 3			
7-504*	18*	Total Copy Jam by Location (Bridge Relay Sensor)	Displays the total number of copy jams by location. These are jams when the paper does not activate the sensor.	
	19*	Total Copy Jam by Location (Duplex Entrance Sensor)		
	23*	Total Copy Jam by Location (Duplex Exit Sensor)		
	24*	Total Copy Jam by Location (1-bin Tray Entrance Sensor)		
	25*	Total Copy Jam by Location (Finisher Entrance Sensor)		
	26*	Total Copy Jam by Location (3,000-sheet Finisher Upper Tray Exit Sensor)		
	27*	Total Copy Jam by Location (3,000-sheet - Finisher Shift Tray Exit Sensor, 1,000-sheet Finisher Exit Sensor)		
	28*	Total Copy Jam by Location (3,000-sheet Staple Tray Paper Sensor, 1,000-sheet Finisher Jogger Unit Paper Sensor)		
	29*	Total Copy Jam by Location (Finisher Stack Feed-out Belt HP Sensor)		
	30*	Total Copy Jam by Location (Mail Box Entrance Sensor)		
	31*	Total Copy Jam by Location (Mail Box Proof Tray Exit Sensor)		

Mode No.			Function	Settings
Class 1 and 2	Class 3			
7-504*	32*	Total Copy Jam by Location (Mail Box Relay Sensor)	Displays the total number of copy jams by location. These are jams when the paper does not activate the sensor.	
	33*	Total Copy Jam by Location (Mail Box: Mailbox Section)		
	57*	Total Copy Jam by Location (LCT)		
	58*	Total Copy Jam by Location (Upper Relay Sensor)	Displays the total number of copy jams by location. These are jams when the paper stays at the sensor.	
	59*	Total Copy Jam by Location (Lower Relay Sensor)		
	60*	Total Copy Jam by Location (Upper Relay Sensor – Op. PTU)		
	61*	Total Copy Jam by Location (Lower Relay Sensor – Op. PTU)		
	63*	Total Copy Jam by Location (Regist. Sensor)		
	66*	Total Copy Jam by Location (Exit Sensor)		
	67*	Total Copy Jam by Location (Bridge Exit Sensor)		
	68*	Total Copy Jam by Location (Bridge Relay Sensor)		
	69*	Total Copy Jam by Location (Duplex Entrance Sensor)		
	73*	Total Copy Jam by Location (Duplex Exit Sensor)		

Mode No.			Function	Settings
Class 1 and 2	Class 3			
7-504*	74*	Total Copy Jam by Location (1-bin Tray Entrance Sensor)	Displays the total number of copy jams by location. These are jams when the paper stays at the sensor	
7-505*	1*	Total Original Jam by Location (At Power On)	Displays the total number of original jams by location. These are jams when the original does not activate the sensor.	
	3*	Total Original Jam by Location (ADF Feed-in Sensor)		
	4*	Total Original Jam by Location (ADF Feed-out Sensor)		
7-506*	4*	Total Copy Jam by Paper Size (A3)	Displays the total number of copy jams by paper size.	
	5*	Total Copy Jam by Paper Size (A4)		
	6*	Total Copy Jam by Paper Size (A5)		
	13*	Total Copy Jam by Paper Size (B4)		
	14*	Total Copy Jam by Paper Size (B5)		
	32*	Total Copy Jam by Paper Size (DLT)		
	36*	Total Copy Jam by Paper Size (LG)		
	38*	Total Copy Jam by Paper Size (LT)		
	44*	Total Copy Jam by Paper Size (HLT)		
	128*	Total Copy Jam by Paper Size (Other Sizes)		

Mode No.			Function	Settings
Class 1 and 2	Class 3			
7-507*	1*	Total Counter Value at Copy Jam (Latest)	Displays the last 5 digits of the total counter value for the most recent 10 copy jams.	
	2*	Total Counter Value at Copy Jam (2nd Latest)		
	3*	Total Counter Value at Copy Jam (3rd Latest)		
	4*	Total Counter Value at Copy Jam (4th Latest)		
	5*	Total Counter Value at Copy Jam (5th Latest)		
	6*	Total Counter Value at Copy Jam (6th Latest)		
	7*	Total Counter Value at Copy Jam (7th Latest)		
	8*	Total Counter Value at Copy Jam (8th Latest)		
	9*	Total Counter Value at Copy Jam (9th Latest)		
	10*	Total Counter Value at Copy Jam (10th Latest)		
	11*	Total Counter Value at Original Jam (Latest)		
	12*	Total Counter Value at Original Jam (2nd Latest)		
	13*	Total Counter Value at Original Jam (3rd Latest)		

Mode No.			Function	Settings
Class 1 and 2	Class 3			
7-507*	14*	Total Counter Value at Original Jam (4th Latest)	Displays the last 5 digits of the total counter value for the most recent 10 copy jams.	
	15*	Total Counter Value at Original Jam (5th Latest)		
	16*	Total Counter Value at Original Jam (6th Latest)		
	17*	Total Counter Value at Original Jam (7th Latest)		
	18*	Total Counter Value at Original Jam (8th Latest)		
	19*	Total Counter Value at Original Jam (9th Latest)		
	20*	Total Counter Value at Original Jam (10th Latest)		
7-801	1	ROM Version Display (BICU)	Displays the ROM versions.	
	2	ROM Version Display (CSS)		
	3	ROM Version Display (HDD Controller)		
	4	ROM Version Display (ADF)		
	5	ROM Version Display (SIB)		
	6	ROM Version Display (Finisher)		
	7	ROM Version Display (Paper Tray Unit)		
	8	ROM Version Display (LCT)		

Mode No.			Function	Settings
Class 1 and 2	Class 3			
7-801	9	ROM Version Display (Mail Box)	Displays the ROM versions.	
	10	ROM Version Display (FCU)		
	11	ROM Version Display (Printer Controller)		
	12	ROM Version Display (Scanner Controller)	**Japanese version only.**	
	13	ROM Version Display (ANITA)		
7-803*		PM Counter Display	Displays the PM counter since the last PM.	
7-804		PM Counter Reset	Resets the PM counter. Press “1” to reset.	1: Start
7-807		SC/Jam Counter Reset	Resets the SC and jam counters. Press “1” to reset.	1: Start
7-808		Resets Counters (except for the total counter)	Resets the following counters: Press “1” to reset. • All counters of SP7-003 • All counters of SP7-006 • All counters which are listed on the counter list (UP1-19-2)	1: Start
7-810		Key Operator Code Number Reset	Resets the key operator code. Press “1” to reset.	1: Start
7-816	1	Reset the total Copy Counter by Paper Tray (1st Paper Tray)	Resets the total copy counter by paper tray. Press “1” to reset. Use these SP modes when replacing the pick-up, feed, and separation rollers in the paper feed stations	1: Start
	2	Reset the total Copy Counter by Paper Tray (2nd Paper Tray)		1: Start
	3	Reset the total Copy Counter by Paper Tray (3rd Paper Tray)		1: Start
	4	Reset the total Copy Counter by Paper Tray (4th Paper Tray)		1: Start
	5	Reset the Total Copy Counter by Paper Tray (Paper Tray Unit)		1: Start

Mode No.			Function	Settings
Class 1 and 2	Class 3			
7-816	6	Reset the total Copy Counter by Paper Tray (By-pass Feed)	Resets the total copy counter by paper tray. Press “1” to reset. Use these SP modes when replacing the pick-up, feed, and separation rollers in the paper feed stations	1: Start
7-822		Reset the Total Copy Counter by Magnification	Resets all counters of SP7-301. Press “1” to reset.	1: Start
7-823		Reset the Total Copy Counter by Image Editing	Resets all counters of SP7-303. Press “1” to reset.	1: Start
7-825		Electrical Total Counter Reset	Resets the electrical total counter. Press “1” to reset. *Usually, this SP mode is done at installation.* *This SP mode affects only once when the minus (“-“) counter value.*	1: Start
7-904		Reset the Total Copy Counter by Copy Mode	Resets all counters of SP7-304. Press “1” to reset.	1: Start
7-905		Reset the Total Copy Counter by Multiple Copies	Resets all counters of SP7-305. Press “1” to reset.	1: Start

4.2.3 TEST PATTERN PRINTING (SP2-902)

NOTE: Do not operate the machine until the test pattern is printed out completely. Otherwise, an SC may occur.

1. Access the SP mode which contains the test pattern you need.
2. Press the ⊡ key on the operation panel to access the copy mode display.
3. Select required copy features such as paper size, image density, and reproduction ratio.
4. Press the "Start" key to print the test pattern.
5. After checking the test pattern, exit copy mode by pressing the ⊡ key again.
6. Exit the SP mode.

Test Pattern Table (SP2-902-2: Test Pattern Printing – IPU)

No.	Test Pattern	No.	Test Pattern
0	None	8	Vertical Lines (2-dot)
1	Grayscale 1	9	Hatch Pattern
2	Grayscale 2	10	Cross Pattern
3	Grayscale 3	11	Slant Pattern
4	Grayscale 4	12	Cross Stitch (400 dpi)
5	Grayscale 5	13	Cross Stitch (600 dpi)
6	Vertical Lines (256-greyscale)	14	Patch Pattern (256-grayscale)
7	Vertical Lines (1-dot)	15	Patch Pattern (128-grayscale)

Test Pattern Table (SP2-902-3: Test Pattern Printing – Printing)

No.	Test Pattern	No.	Teat Pattern
0	None	11	Argyle Pattern
1	Vertical Line (1-dot)	12	16 Grayscales (Horizontal)
2	Horizontal Line (1-dot)	13	16 Grayscales (Vertical)
3	Vertical Line (2 dot)	14	16 Grayscales (Vert./Hor.)
4	Horizontal Line (2-dot)	15	16 Grayscales (Vert./Hor Overlay)
5	Grid Pattern (Single-dot)	16	Not used
6	Grid Pattern (Double-dot)	17	Horizontal Line (1-dot)
7	Alternating Dot Pattern	18	Grid Pattern (Single-dot)
8	Full Dot Pattern	19	Grid Pattern (Double-dot)
9	Black Band	20	Alternating Dot Pattern
10	Trimming Area	21	Blank Page

4.2.4 INPUT CHECK

Main Machine Input Check (SP5-803)

1. Access SP mode.
2. Select the class 3 SP number which will access the switch or sensor you wish to check.
3. Check the status of the sensor or switch.
   NOTE: If you wish to change to another class 3 level, press the "Next" or "Prev." key.
4. The reading ("0" or "1") will be displayed. The meaning of the display is as follows.

Bit 7	Bit 6	Bit 5	Bit 4	Bit 3	Bit 2	Bit 1	Bit 0
|	|	|	|	|	|	|	|
0	0	0	0	0	0	0	0

Class 3 no.	Bit no.	Description	Reading	
			0	1
1 (Upper Tray)	7	Not used		
	6	Height Sensor 2 (Op. Printer Controller)	Not activated	Activated
	5	Height Sensor 1 (Op. Printer Controller)	Not activated	Activated
	4	Not used		
	3	Paper Size Sensor 4 (Op. Printer Controller)	Switch pressed	Switch not pressed
	2	Paper Size Sensor 3 (Op. Printer Controller)	Switch pressed	Switch not pressed
	1	Paper Size Sensor 2 (Op. Printer Controller)	Switch pressed	Switch not pressed
	0	Paper Size Sensor 1 (Op. Printer Controller)	Switch pressed	Switch not pressed
2 (Lower Tray)	7	Not used		
	6	Height Sensor 2 (Op. Printer Controller)	Not activated	Activated
	5	Height Sensor 1 (Op. Printer Controller)	Not activated	Activated
	4	Not used		
	3	Paper Size Sensor 4 (Op. Printer Controller)	Switch pressed	Switch not pressed
	2	Paper Size Sensor 3 (Op. Printer Controller)	Switch pressed	Switch not pressed
	1	Paper Size Sensor 2 (Op. Printer Controller)	Switch pressed	Switch not pressed
	0	Paper Size Sensor 1 (Op. Printer Controller)	Switch pressed	Switch not pressed

Class 3 no.	Bit no.	Description	Reading	
			0	1
3 (Registration & others)	7	Zero Cross Signal	Detected	Not detected
	6	Transfer Belt Unit H.P Sensor	Not at home position	At home position
	5	Exhaust Fan Lock Signal	Not locked	Locked
	4	Cooling Fan Lock Signal	Not locked	Locked
	3	Main Motor Lock Signal	Not locked	Locked
	2	Toner Overflow Sensor	Tank not full	Tank Full
	1	Cover Open	Cover closed	Cover opened
	0	Registration Sensor	Paper detected	Paper not detected
4 (By-pass)	7	Not used		
	6	Paper End Sensor	Paper detected	Paper not detected
	5	Not used		
	4	Paper Size Sensor 4	See table 1	
	3	Paper Size Sensor 3		
	2	Paper Size Sensor 2		
	1	Paper Size Sensor 1		
	0	Unit Set Signal	Connected	Not connected
5 (Bridge Unit)	7	Not used		
	6	Unit Set Signal	Connected	Not connected
	5	Paper Sensor (Op. Printer Controller)	Paper detected	Paper not detected
	4	Relay Sensor	Paper not detected	Paper detected
	3	Exit Sensor	Paper not detected	Paper detected
	2	Left Cover Switch	Switch pressed (cover closed)	Switch not pressed
	1	Right Cover Switch	Switch pressed (cover closed)	Switch not pressed
	0	Tray Exit Unit Switch	Switch pressed (cover closed)	Switch not pressed
6 (Unit Set)	7	Not used		
	6	F gate Signal	Active	Not active
	5	Height Sensor (Op. Printer Controller)	At feed height position	Not at feed height position
	4	Paper Exit Sensor	Paper detected	Paper not detected
	3	Fusing Unit	Detected	Not detected
	2	Total Counter	Not detected	Detected
	1	Key Counter	Detected	Not detected
	0	Not used		

Class 3 no.	Bit no.	Description	Reading	
			0	1
7 (Paper End)	7	Not used		
	6	Right Lower Cover Switch	Switch not pressed	Switch pressed
	5	2nd Tray Height Sensor	Paper not at upper limit	Paper at upper limit
	4	1st Tray Height Sensor	Paper not at upper limit	Paper at upper limit
	3	Lower Relay Sensor	Paper detected	Paper not detected
	2	Upper Relay Sensor	Paper detected	Paper not detected
	1	Lower Paper End Sensor	Paper not detected	Paper detected
	0	Upper Paper End Sensor	Paper not detected	Paper detected
8 (I/O Board Dip Switch 101)	7	Dip Switch – 8	On	Off
	6	Dip Switch – 7	On	Off
	5	Dip Switch – 6	On	Off
	4	Dip Switch – 5	On	Off
	3	Dip Switch – 4	On	Off
	2	Dip Switch – 3	On	Off
	1	Dip Switch – 2	On	Off
	0	Dip Switch – 1	On	Off
9 (Duplex)	7	Not used		
	6			
	5			
	4			
	3	Exit Sensor	Paper detected	Paper not detected
	2	Entrance Sensor	Paper detected	Paper not detected
	1	Cover Guide Sensor	Cover guide opened	Cover guide closed
	0	Duplex Unit Switch	Switch pressed (cover closed)	Switch not pressed

Table 1: By-pass Feed Table Paper Size Data

Class 3 no.	Bit 4	Bit 3	Bit 2	Bit 1	Paper Width
4	1	1	1	1	Post Card
	1	1	1	0	B6 lengthwise
	1	1	0	1	B5 lengthwise
	1	1	0	0	A5 lengthwise / 5.5”
	1	0	1	1	B4 lengthwise
	1	0	0	1	A4 lengthwise / 8.5” / 8”
	0	1	1	1	A3 lengthwise
	0	0	1	1	11” x 17”

ADF Input Check (SP6-007)

Class 3 no.	Bit no.	Description	Reading	
			0	1
1	7	Inverter Sensor	Paper not detected	Paper detected
	6	Exit Sensor	Paper not detected	Paper detected
	5	Registration Sensor	Paper not detected	Paper detected
	4	Entrance Sensor	Paper not detected	Paper detected
	3	Original Width Sensor 1	Paper not detected	Paper detected
	2	Original Width Sensor 2	Paper not detected	Paper detected
	1	Original Width Sensor 3	Paper not detected	Paper detected
	0	Original Set Sensor	Paper not detected	Paper detected
2 (Lower Tray)	7	Not used		
	6			
	5	Original Stopper H.P Sensor	Original stopper is up	Original stopper is down
	4	Pick-up Roller H.P Sensor	Pick-up roller is up	Pick-up roller is down
	3	Exit Cover Sensor	Cover closed	Cover opened
	2	Feed Cover Sensor	Cover closed	Cover opened
	1	DF Position Sensor	Sensor is not activated (cover open)	Sensor is activated (cover closed or being closed)
	0	APS Start Sensor	Sensor is not activated (cover open)	Sensor is activated (cover closed or being closed)

4.2.5 OUTPUT CHECK

NOTE: Motors keep turning in this mode regardless of upper or lower limit sensor signals. To prevent mechanical or electrical damage, do not keep an electrical component on for a long time.

Main Machine Output Check (SP5-804)

1. Access SP mode 5-804.
2. Select the SP number that corresponds to the component you wish to check.
3. Press “1”, then press # to check that component.
4. Press “0” to interrupt the test.
5. If you wish to check another component, press the “Next” or “Prev.” Key.

No.	Description	No.	Description
1	Upper Paper Feed Clutch	35	Relay Clutch (PTU)
2	Lower Paper Feed Clutch	36	Relay Clutch
3	Upper Paper Feed Clutch (PTU)	37	Not used
4	Lower Paper Feed Clutch (PTU)	38	Relay Clutch (LCT)
5	Paper Feed Clutch (By-pass)	39	Registration Clutch
6	Paper Feed Clutch (LCT)	40	Not used
7 ~ 12	Not used	41	Exit Junction Gate Solenoid (Interchange Unit)
13	Pick-up Solenoid (By-pass)	42	Duplex Junction Gate Solenoid (Interchange Unit)
14	Pick-up Solenoid (LCT)	43, 44	Not used
15, 16	Not used	45	Inverter Gate Solenoid (Duplex)
17	Upper Transport Motor (Finishers)	46	Not used
18	Lower Transport Motor (3,000-sheet Finisher only)	47	Junction Gate Solenoid (Bridge Unit)
19	Shift Tray Exit Motor (3,000-sheet Finisher), Exit Motor (1,000-sheet Finisher)	48, 49	Not used
20	Staple Hammer Motor (Finishers)	50	Tray Junction Gate Solenoid (3,000-sheet Finisher only)
21	Punch Motor (Punch Unit)	51	Stapler Junction Gate Solenoid (Finishers)
22 ~ 24	Not used	52	Positioning Roller Solenoid (Finishers)
25	LCT Motor (LCT)	53 ~ 55	Not used
26	Tray Motor (PTU)	56	Toner Supply Motor
27	Not used	57	Transfer Belt Clutch
28	Main Motor	58 ~ 61	Not used
29	Transport Motor (Duplex)	62	Quenching Lamp
30	Inverter Motor – Reverse (Duplex)	63	Charge Roller Bias
31	Inverter Motor – Forward (Duplex)	64 ~ 66	Not used
32 ~ 34	Not used	67	Development Bias
68	Not used	86 ~ 89	Not used

No.	Description	No.	Description
69	Transfer Belt Bias	90	Laser Diode
70	ID Sensor	91	Not used
71 ~ 74	Not used	92	Shift Tray Lift Motor (Finishers)
75	Exhaust Fan Motor	93	Jogger Motor (3,000-sheet Finisher)/Jogger Fence Motor (1,000-sheet Finisher)
76	Cooling Fan Motor	94	Stapler Motor (3,000-sheet Finisher)
77	Not used	95	Stack Feed Out Motor (Finishers)
78	Cooling Fan Motor (Bridge Unit)	96	Shift Motor (Finishers)
79 ~ 84	Not used	97	Stapler Rotation Motor (3,000-sheet Finisher)
85	Mechanical Counter	98 ~ 99	Not used

ADF Output Check (SP6-008)

No.	Description
1	Feed-in Motor (Forward)
2	Feed-in Motor (Reverse)
3	Transport Motor (Forward)
4	Transport Motor (Reverse)
5	Feed-out Motor
6	Exit Gate Solenoid
7	Inverter Gate Solenoid
8	DF Indicators
9	Pick-up Motor (Forward)
10	Pick-up Motor (Reverse)

4.2.6 SYSTEM PARAMETER AND DATA LISTS (SMC LISTS)

1. Access SP mode 5-990 and select the class 3 number corresponding to the list that you wish to print.
2. Press the ⊡ key to access the copy mode display.
3. Select the paper size and press the “Start” key to print the list.
4. After printing the list, exit the copy mode display by pressing the ⊡ key.
5. Exit SP mode.

4.2.7 NIP BAND WIDTH ADJUSTMENT (SP1-109)

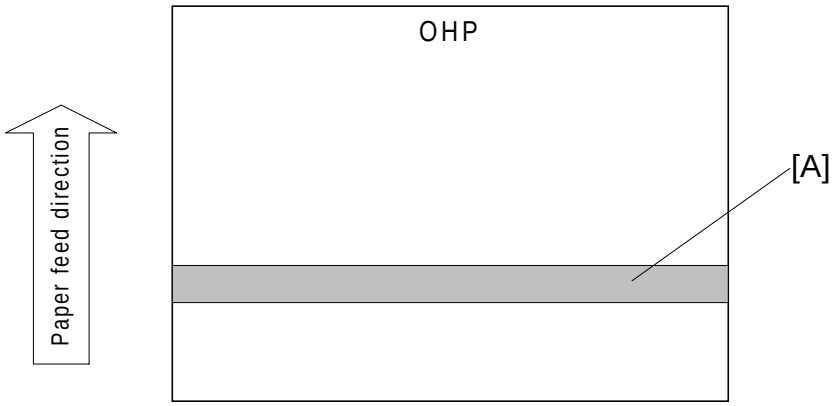

A231M509.WMF

When paper wrinkling or image off-set occurs, the pressure from the pressure roller can be adjusted by changing the position of the pressure springs. At this time, the nip band width can also be checked with SP1-109, as follows.

1. Do a free run (SP5-802) for about 50 sheets.
2. Enter SP1-109 and press the “1” key, then press the # key.
3. Press the ⌧ key to enter copy mode.
4. Place an OHP sheet (A4/8.5”x5.5” sideways) on the by-pass feed tray.
5. Press the “Start” key.
   The OHP sheet is stopped in the fusing unit for about 10 seconds, then it will be fed out automatically.
6. Check the nip band width [A]. The relationship between the position of the pressure spring and the band width is as follows.
   NOTE: Check the nip band width around the centre of the OHP.

Pressure spring position	Nip width
Upper (default position)	6.0 ± 0.5 mm
Lower	6.5 ± 0.6 mm

If the width is out of the above specification, the pressure spring should be replaced.

4.2.8 MEMORY ALL CLEAR (SP5-801)

NOTE: Memory All Clear mode resets all the settings stored in the NVRAM to their default settings except the following:

- Electrical total counter value (SP7-003-1)
- Machine serial number (SP5-811)
- Plug & Play Brand Name and Production Name Setting (SP5-907)

Among the settings that are reset are the correction data for process control and all the software counters.

Normally, this SP mode should not be used. This procedure is required only after replacing the NVRAM or when the copier malfunctions due to a damaged NVRAM.

1. Print out all SMC Data Lists (SP mode 5-990).
2. Access SP mode 5-801.
3. Hold down the "1" key for over 3 seconds. At this time the beeper will sound.
4. Turn the main power switch off and back on.
5. Do the laser beam pitch adjustment.
6. Do the printer and scanner registration and magnification adjustments (see Replacement and Adjustment – Copy Adjustments).
7. Referring to the SMC data lists, re-enter any values which had been changed from their factory settings.
8. Do SP 3-001-2 (ID Sensor Initial Setting) and SP4-911-1 (HDD media test).

Check the copy quality and the paper path, and do any necessary adjustments.

4.2.9 SOFTWARE RESET

The software can be reset when the machine hangs up. Use the following procedure.

Either

Turn the main power switch off and on.

Or

Hold down the * key and # key at the same time for over 10 seconds.

4.2.10 SYSTEM SETTING AND COPY SETTING (UP MODE) RESET

System Setting Reset

The system settings in the UP mode can be reset to their default. Using the following procedure.

1. Confirm that the machine is in the copier standby mode.
2. Press the User Tool key.
3. Holding # key and press “1” using ten-key.
4. The confirmation message will be displayed, then press “Yes”.

Copy Setting Reset

The copy settings in the UP mode can be reset to their default. Using the following procedure.

1. Confirm that the machine is in the copier standby mode.
2. Press the User Tool key.
3. Holding # key and press “2” using ten-key.
4. The confirmation message will be displayed, then press “Yes”.

4.3 PROGRAM DOWNLOAD

In this machine, the BICU software is upgraded using a flash memory card.

There are two program download procedures. One downloads from the flash memory card to the BICU. The other downloads from the BICU to a flash memory card.

NOTE: The procedure for how to write the source software data from a flash memory card writer to a flash memory card is described in the SwapBox FTL manual.

Downloading to the BICU

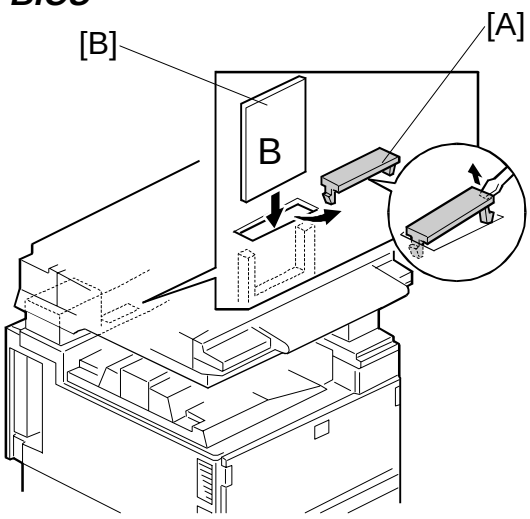

A230R919.WMF

1. Turn off the main power switch.
2. Remove the flash memory card cover [A].
3. Plug the flash memory card [B] into the card slot.
   NOTE: Make sure that the surface printed “B” faces the front of the machine.
4. Turn on the main power switch.

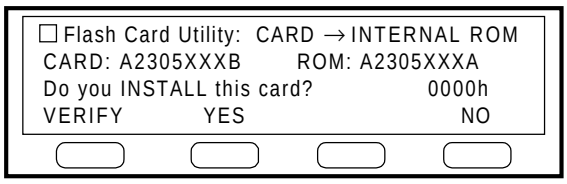

A321M503.WMF

5. Press the “YES” key. The machine erases the current software, then writes the new software to the BICU. This takes about 100 seconds.

Display during erasing

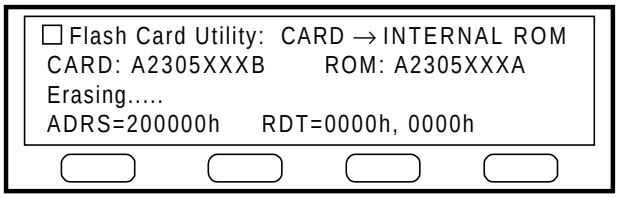

Display during writing

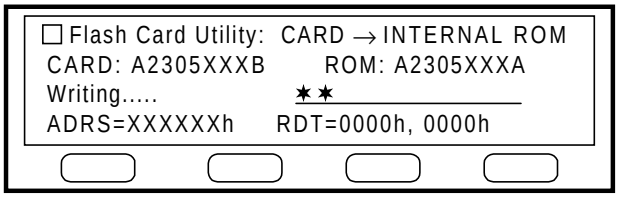

Display when the download is complete

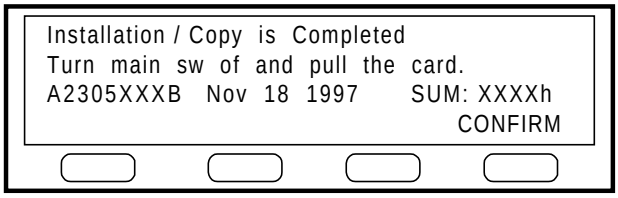

A321M504.WMF

If downloading failed, an error message appears as follows. At this time, press the “CONFIRM” key to re-try the download.

Display if erasing failed

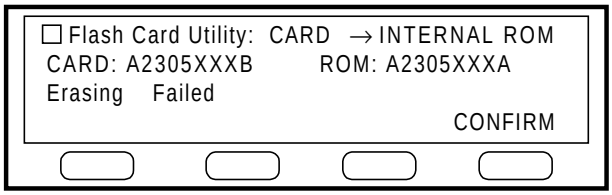

Display if writing failed

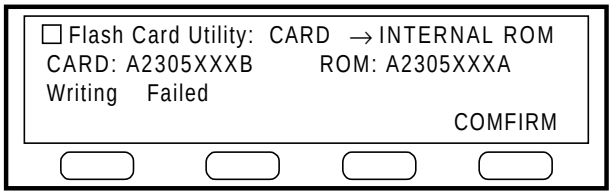

A321M505.WMF

Download from BICU to Flash Memory Card

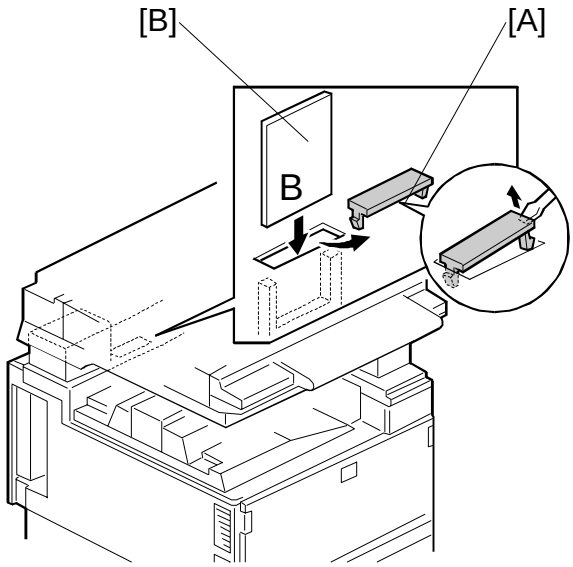

A230R919.WMF

1. Turn off the main power switch.
2. Remove the flash memory card cover [A].
3. Plug the flash memory card [B] into the card slot.
   NOTE: Make sure that the surface printed “B” faces the front of the machine.
4. Turn on the main power switch while holding down the operation switch.

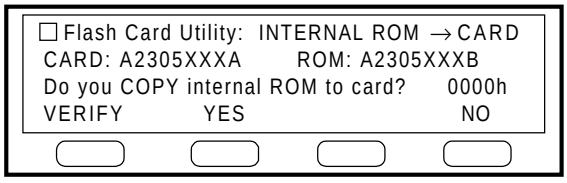

A321M506.WMF

5. Press the “YES” key. The machine erases the current software, then writes the new software to the flash memory card. This takes about 100 seconds.
   NOTE: The display is inverted black on white during downloading from BICU to flash memory card.

Display during erasing

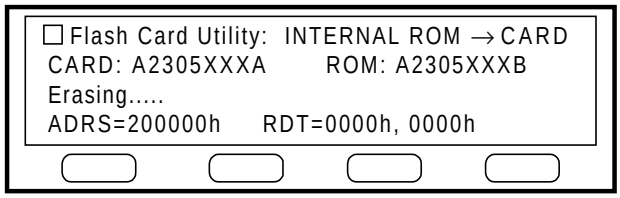

Display during writing

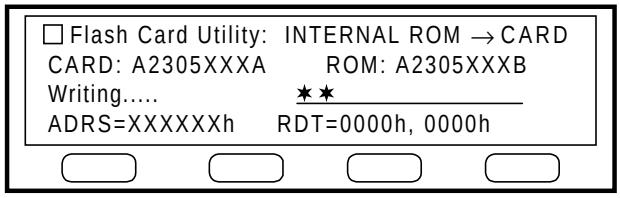

Display when the download is complete

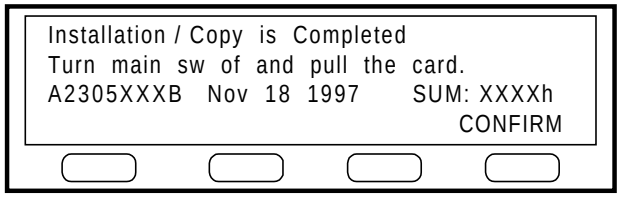

A321M507.WMF

If downloading failed, an error message appears as follows. At this time, press the “CONFIRM” key to re-try the download.

Display if erasing failed

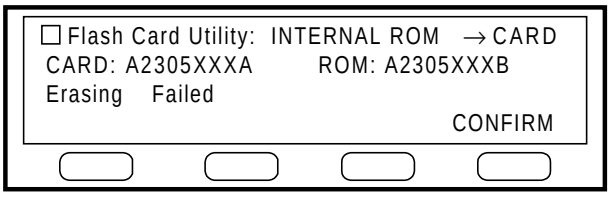

Display if writing failed

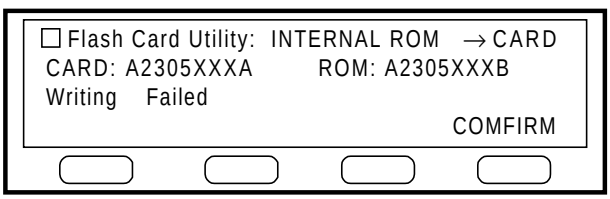

A321M505.WMF

4.4 USER PROGRAM MODE

The user program (UP) mode is accessed by users and operators, and by sales and service staff. UP mode is used to input the copier's default settings.

4.4.1 HOW TO ENTER AND EXIT UP MODE

Press the User Tools button, then select the UP mode program. After finishing the UP mode program, press the User Tools button to exit UP mode.

4.4.2 UP MODE TABLE

NOTE: The function of each UP mode is explained in the System Setting and Copy Reference section of the operating instructions.

System Setting Table

1. System	01. Function Priority	
	02. Panel Beeper	
	03. Ready Beeper	
	04. Copy Count Display	
	05. System Reset	
	06. Function Switch	
	07. Low Power Shift Timer	
	08. Low Power Timer	
	09. Energy Saver Mode	
	10. Auto Off Timer	
	11. Paper Size – Tray	
	12. Paper Tray Priority	
	13. Auto Tray Switch	
	14. Special Paper Indication	
	15. Output Tray	1. Copy
		2. Fax
		3. Printer
	16. Print Priority	
	17. Contrast	
	18. User Code Manage	
	19. Management Setting	1. Show / Print Counter
		2. Print Counter List
		3. Key Operator Code
		4. Register / Change Key Operator Code
	22. ADF Original Eject	
	24. F/F4 Size Setting	

Copy Setting Table

2. Copy	1. General Features	01. APS Priority	
		02. AID Priority	
		03. Original Priority	
		04. Show All Keys	
		05. Maximum Copy Q'ty	
		06. Original Beeper	
		07. Photo Mode	
		08. Reproduction Ratio	
		09. Slip Sheet Tray	
		10. Duplex Priority	
		11. Auto Reset	
		12. Density Pattern	
		13. Initial Mode Set	
		14. Management Setting	1. Counter Reset
			2. Clear Code/Counter
			3. Register User Code
			4. Change/Delete User Code
			5. Counter List Print
	2. Adjust Image	01. Erase Border	
		02. Erase Center	
		03. Margin Adjust – Front	
		04. Margin Adjust – Back	
		05. Double Copy	
		06. Combine Copy	
		07. Image Repeat	
		08. Booklet Original	
	3. Input/Output	01. Duplex Auto Eject	
		02. Combine Auto Eject	
		03. Original Count	
		04. SADF Auto Reset	
		05. Rotate Sort	
		06. Sort	
		07. Stack	
		08. Memory Full – Auto Sort	
		09. Auto Sort Mode	
	4. Shortcut Keys		

4.5 TEST POINTS/DIP SWITCHES/LEDS

4.5.1 DIP SWITCHES

I/O Board: DIP SW101

No.	Function	ON	OFF
1	Copy Speed	35 cpm (180 mm/s)	45 cpm (230 mm/s)
2	Jam Detection (see Note 1)	Off	**On**
3	SC Generation	Disabled	**Enabled**
4	Not used	Keep at “OFF”	
5	Not used	Keep at “OFF”	
6 7	Destination	Off) Japan On) N. America Off) Europe On) Not used Off Off On On	
8	Paper Size Detection (see Note 2)	Enabled	**Disabled**

NOTE: 1) Disabling the jam detection is effective only for the main machine (not for the options).
2) When installing the printer option, change the setting to “ON”.

4.5.2 TEST POINTS

I/O Board

Number	Monitored Signal
TP103	Ground
TP104	+24V
TP136	+5V
TP154	Ground
TP156	+12V
TP158	-12V
TP159	+5VE

BICU

Number	Monitored Signal
TP103	GND
TP145	F-gate signal

4.5.3 LEDS

BICU

Number	Monitored Signal
LED101	Monitors whether the program is working normally or not. The LED blinks in normal conditions.
LED102	Monitors +5VE. During the energy saver mode, this LED will blink.

4.6 SPECIAL TOOLS AND LUBRICANTS

4.6.1 SPECIAL TOOLS

Part Number	Description	Q'ty
A2309003	Adjustment Cam – Laser Unit	1
A2309004	Positioning Pin – Laser Unit	1
A2309352	Flash Memory Card – 4MB	1
A2309351	Case – Flash Memory Card	1
A0069104	Scanner Positioning Pin (4 pcs/set)	1
54209516	Test Chart – OS-A3 (10 pcs/Set)	1
A0299387	Digital Multimeter – FLUKE 87	1
A2309099	NVRAM – Minus Counter	1

4.6.2 LUBRICANTS

Part Number	Description	Q'ty
A0289300	Grease Barrierta JFE 5 5/2	1
52039501	Silicone Grease G-501	1

5. PREVENTIVE MAINTENANCE SCHEDULE

5.1 PM TABLE

NOTE: The amounts mentioned as the PM interval indicate the number of prints.
Symbol key: C: Clean, R: Replace, L: Lubricate, I: Inspect

A230/A231/A232	EM	150K	300K	450K	NOTE
SCANNER/OPTICS					
Reflector		C	C	C	Optics cloth
1st Mirror		C	C	C	Optics cloth
2nd Mirror		C	C	C	Optics cloth
3rd Mirror		C	C	C	Optics cloth
Scanner Guide Rails		I	I	I	Do not use alcohol.
Platen Sheet Cover	C	I	I	I	Replace the platen sheet, if necessary. Dry cloth or alcohol
Exposure Glass		C	C	C	Dry cloth or alcohol
Toner Shield Glass		C	C	C	Optics cloth
APS Sensor		C	C	C	Dry cloth or alcohol
AROUND THE DRUM					
Charge Roller		R	R	R	
Charge Roller Cleaning Pad		R	R	R	
Quenching Lamp			C		Dry cloth
Pick-off Pawls		R	R	R	
Spur		C	C	C	Dry cloth or alcohol
ID Sensor		C	C	C	Perform the ID sensor initial setting (SP3-001-2) after cleaning (blower brush)
CLEANING UNIT					
Drum Cleaning Blade		R	R	R	
Cleaning Entrance Seal		C	C	C	Blower brush. Replace if necessary.
Side Seal		I	I	I	
DEVELOPMENT UNIT					
Development Drive Gears		I	I	I	Replace every 5 PM (750k)
Development Filter			R		
Developer		I	R	I	
Entrance Seal		I	I	I	
Side Seal		I	I	I	
PAPER FEED					
Registration Roller	C	C	C	C	Clean with water or alcohol.

A230/A231/A232	EM	150K	300K	450K	NOTE
Paper Feed Roller	I	R	R	R	Check the counter value for each paper tray station (SP7-204). If the value has reached 150k, replace the roller. After replacing the roller, reset the counter (SP7-816).
Separation Roller	I	R	R	R	
Pick-up Roller	I	R	R	R	
Paper Feed Roller (By-pass feed table)	I	R	R	R	
Separation Roller (By-pass feed table)	I	R	R	R	
Pick-up Roller (By-pass feed table)	I	R	R	R	
Paper Feed Guides		C	C	C	Clean with water or alcohol.
Relay Rollers		C	C	C	Clean with water or alcohol.
Bottom Plate Pad		C	C	C	Clean with water or alcohol.
Bottom Plate Pad (By-pass feed)		C	C	C	Clean with water or alcohol.
Registration Sensor		C	C	C	Blower brush
TRANSFER BELT UNIT					
Transfer Belt	C	R	R	R	Dry cloth
Transfer Belt Cleaning Blade		R	R	R	
Transfer Belt Rollers		C	C	C	Dry cloth
Entrance Seal		C	C	C	Dry cloth
Transfer Entrance Guide	C	C	C	C	Dry cloth
Used Toner Tank	I	C	C	C	Empty the tank.
FUSING UNIT AND PAPER EXIT					
Fusing Entrance and Exit Guide Plates		C	C	C	Clean with water or alcohol.
Hot Roller		R	R	R	
Pressure Roller		R	R	R	
Fusing Thermistor		I	I	I	Clean if necessary (suitable solvent)
Cleaning Roller		C	C	C	Clean with water or alcohol.
Cleaning Roller Bushings		L	L	L	Grease Barrierta JFE 55/2
Pressure Roller Strippers		C	C	C	Clean with water or alcohol.
Hot Roller Strippers		C	R	C	Clean with water or alcohol.
Paper Exit Guide Ribs		C	C	C	Clean with water or alcohol.
OTHERS					
Drive Belts			I		Replace if necessary

	EM	80K	160K	240K	NOTE
ADF (for originals)					
Transport Belt	C	R	R	R	Belt cleaner
Feed Belt	C	R	R	R	Belt cleaner
Separation Roller	C	R	R	R	Dry or damp cloth
Sensors		C	C	C	Blower brush
Drive Gears		L	L	L	Grease G501

	EM	150K	300K	450K	NOTE
PAPER TRAY UNIT					
Paper Feed Rollers		R	R	R	Check the counter value for each paper tray station (SP7-204). If the value has reached 150k, replace the roller. After replacing the roller, reset the counter (SP7-816).
Pick-up Rollers		R	R	R	
Separation Rollers		R	R	R	
Relay Rollers		C	C	C	Dry or damp cloth
Bottom Plate Pad		C	C	C	Dry or damp cloth

	EM	150K	300K	450K	NOTE
LCT					
Paper Feed Roller		R	R	R	Check the counter value for each paper tray station (SP7-204). If the value has reached 150k, replace the roller. After replacing the roller, reset the counter (SP7-816).
Pick-up Roller		R	R	R	
Separation Roller		R	R	R	
Bottom Plate Pad		C	C	C	Dry or damp cloth

	EM	150K	300K	450K	NOTE
1,000-SHEET/3,000-SHEET FINISHERS					
Rollers	C				Clean with water or alcohol.
Brush Roller	I	I	I	I	Replace if necessary.
Discharge Brush	C	C	C	C	Clean with a dry cloth
Sensors	C				Blower brush
Jogger Fences	I	I	I	I	Replace if necessary.
Punch Waste Hopper	I	I	I	I	Empty the hopper.

	EM	150K	300K	450K	NOTE
1-BIN TRAY UNIT					
Rollers	C				Dry or damp cloth
Copy Tray	C				Dry or damp cloth
Sensors	C				Blower brush

6. REPLACEMENT AND ADJUSTMENT

⚠CAUTION

Turn off the main power switch and unplug the machine before attempting any of the procedures in this section.

6.1 SCANNER UNIT

6.1.1 EXPOSURE GLASS

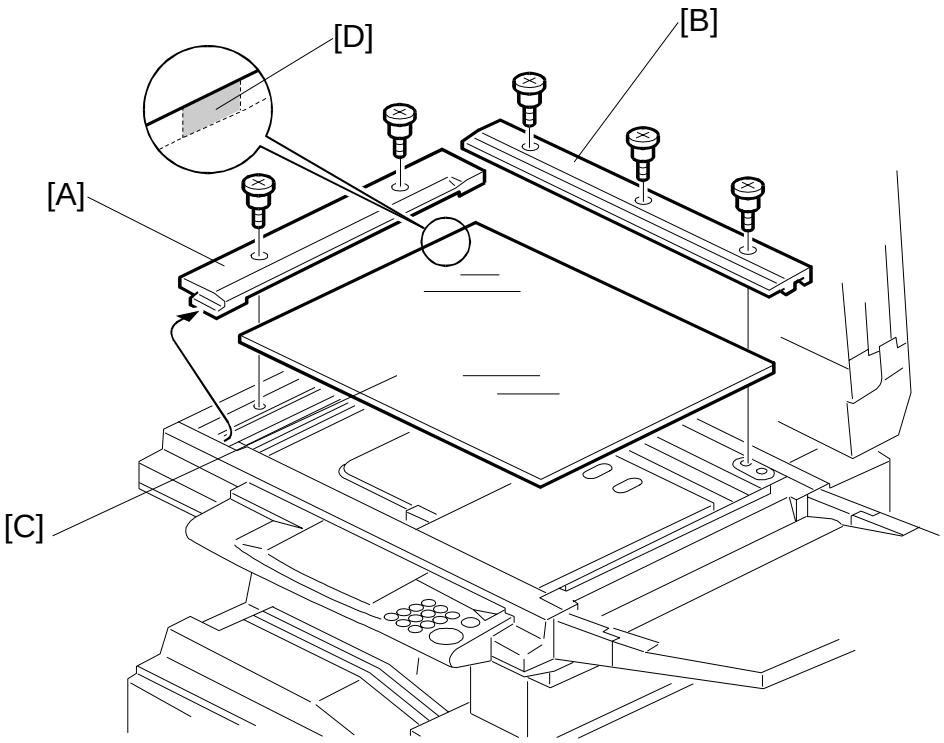

A230R101.WMF

1. Open the ADF or platen cover.
2. Remove the left scale [A] (2 screws).
3. Remove the rear scale [B] (3 screws).
4. Remove the exposure glass [C].

NOTE: When reinstalling the exposure glass, make sure that the mark [D] is positioned at the rear left corner, as shown.

6.1.2 SCANNER EXTERIOR/OPERATION PANEL

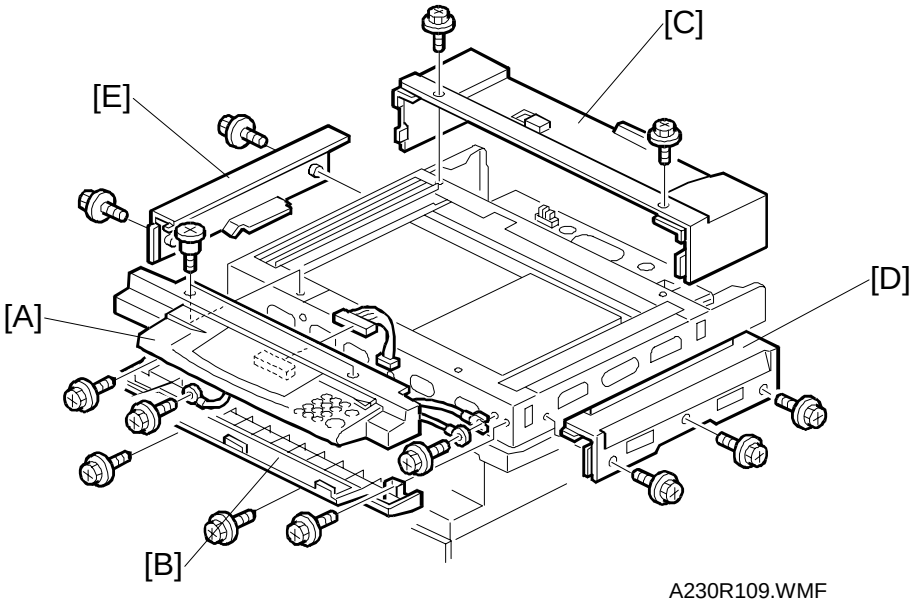

A230R109.WMF

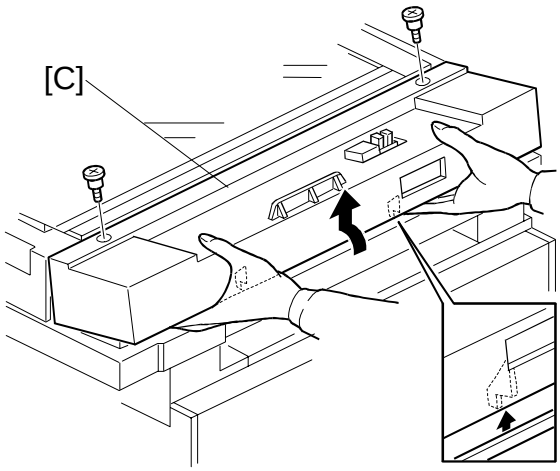

A230R105.WMF

1. Remove the ADF or platen cover.
2. Remove the exposure glass. (See Exposure Glass.)
3. Remove the operation panel [A] (4 screws, 1 connector).
4. Remove the lower operation cover [B] (4 screws).
5. Remove the rear cover [C] (2 screws, 2 pegs).
6. Remove the right cover [D] (3 screws).
7. Remove the left cover [E] (2 screws).

6.1.3 LENS BLOCK/SBU ASSEMBLY

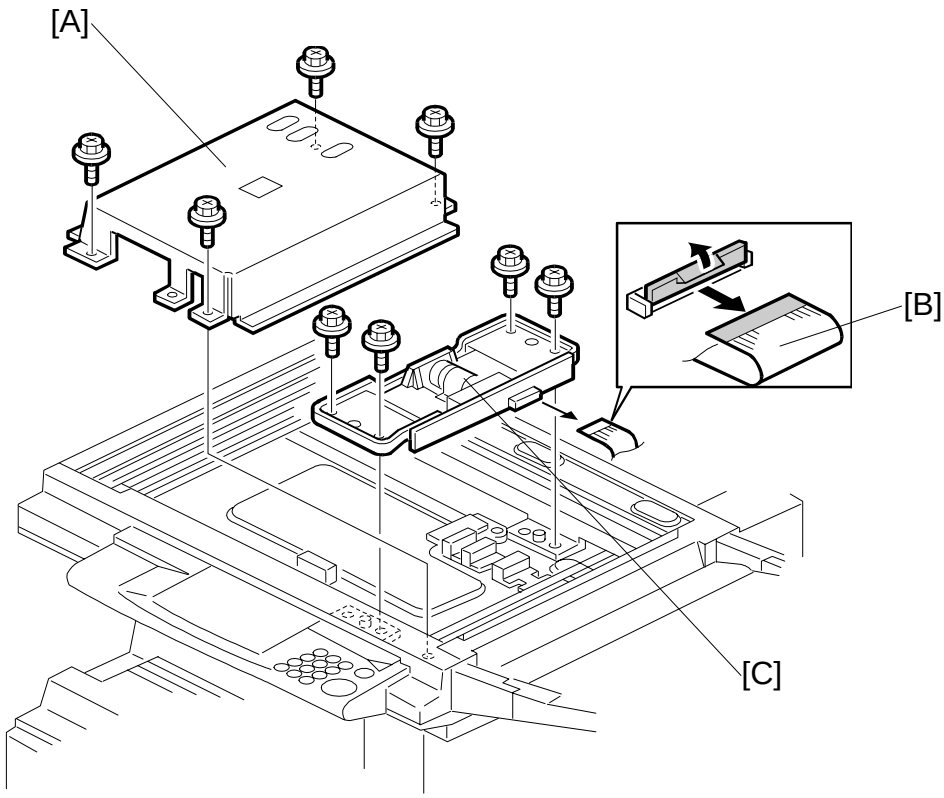

A230R102.WMF

1. Remove the exposure glass. (See Exposure Glass.)
2. Remove the lens cover [A] (4 screws).
3. Disconnect the flexible harness [B].
4. Remove the lens block assembly [C] (4 screws).
5. Do the scanner and printer copy adjustments (see Replacement and Adjustment – Copy Adjustments).

6.1.4 ORIGINAL SIZE SENSORS

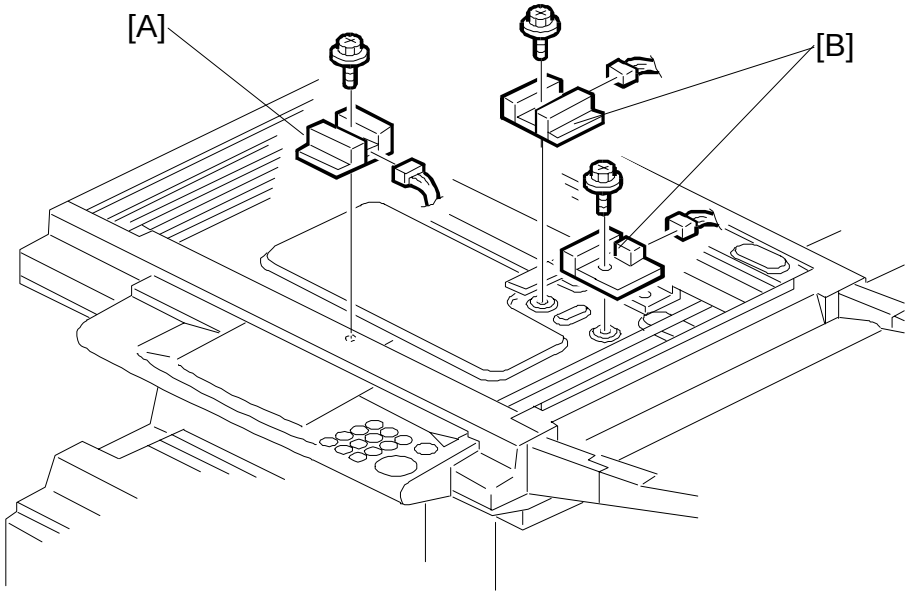

A231R502.WMF

1. Remove the exposure glass. (See Exposure Glass.)
2. Remove the original size sensor [A] (1 screw, 1 connector).
3. Remove the lens block. (See Lens Block/SBU Assembly.)
4. Remove the original size sensors [B] (1 screw, 1 connector each).

6.1.5 EXPOSURE LAMP

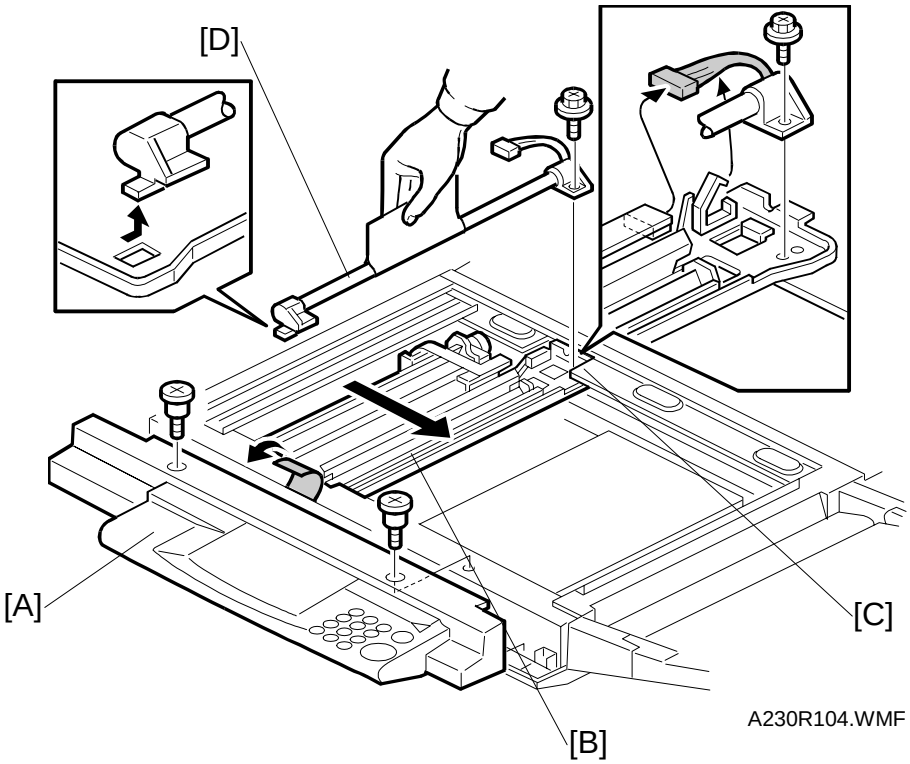

1. Remove the exposure glass. (See Exposure Glass.)
2. Remove the operation panel [A] (4 screws, 1 connector).
3. Slide the 1st scanner [B] to the cutout [C] in the rear scanner frame.
4. Remove the exposure lamp [D] (1 screw, 1 connector).
   NOTE: Do not touch the glass surface of the exposure lamp with fingers.

6.1.6 SCANNER H.P SENSOR/PLATEN COVER SENSOR

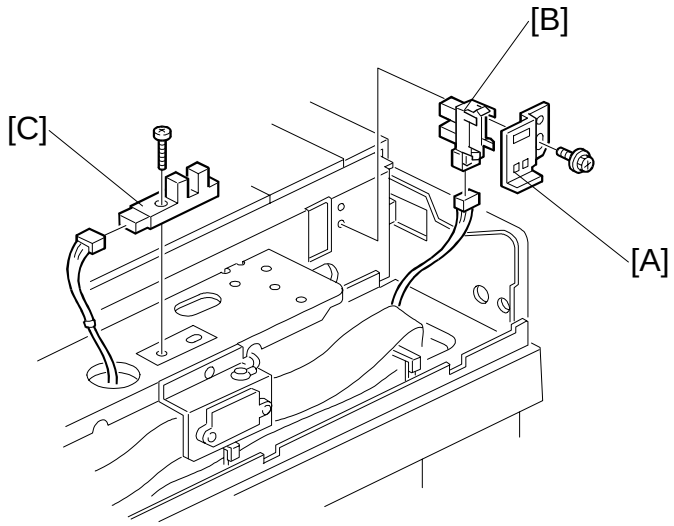

A230R107.WMF

1. Remove the scanner rear cover. (See Scanner Exterior.)
2. Remove the scanner H.P sensor bracket [A] (1 screw).
3. Remove the scanner H.P sensor [B] (1 connector).
4. Remove the platen cover sensor [C] (1 screw, 1 connector).

6.1.7 SCANNER MOTOR

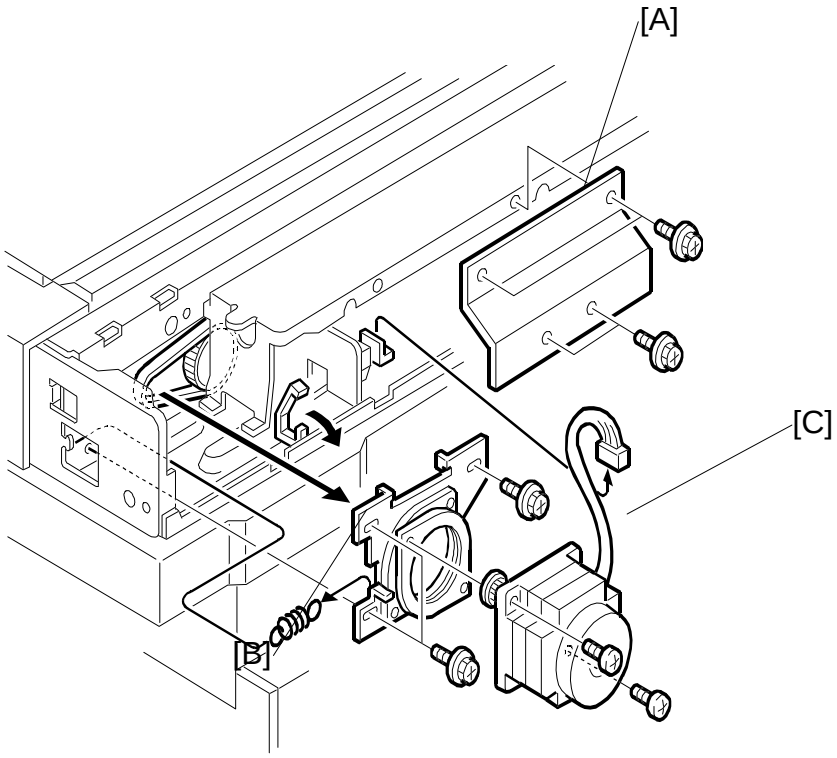

A230R106.WMF

1. Remove the scanner rear cover. (See Scanner Exterior.)
2. Remove the bracket [A] (4 screws).
3. Remove the scanner motor bracket [B] (3 screws, 1 connector, 1 spring, 1 timing belt).
4. Remove the scanner motor [C] (2 screws).
5. Do the scanner and printer copy adjustments (see Replacement and Adjustment – Copy Adjustments).

6.1.8 SIB/LAMP STABILIZER

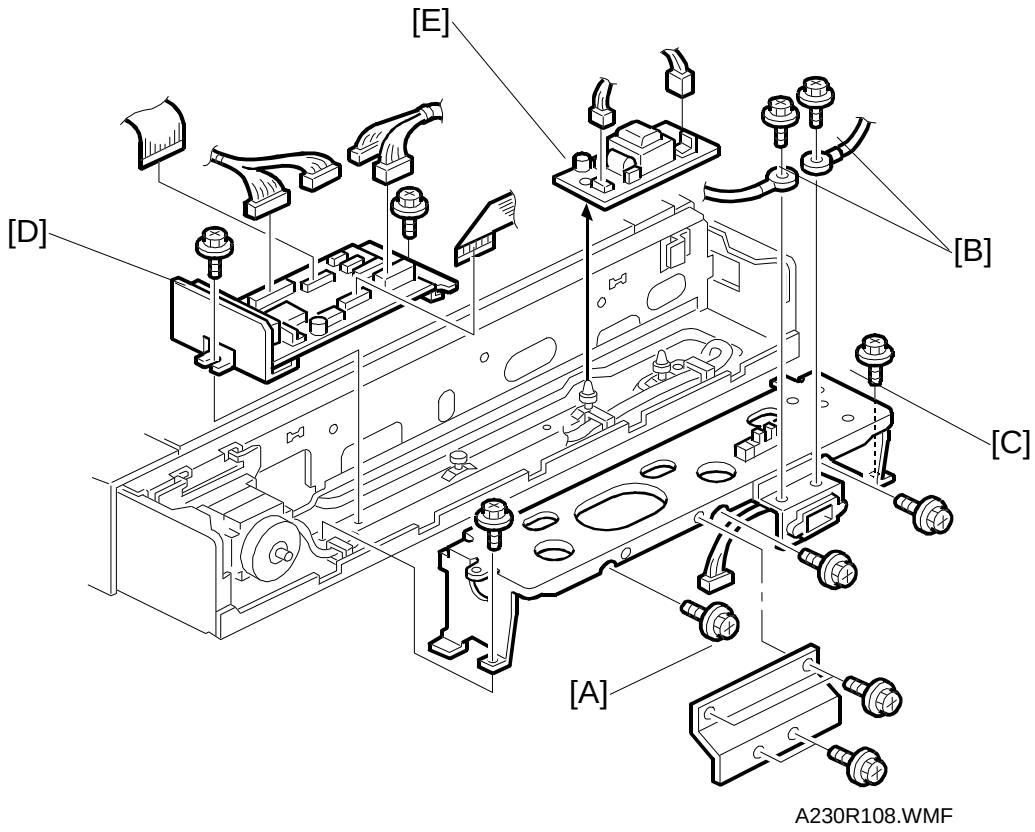

1. Remove the scanner rear cover. (See Scanner Exterior.)
2. Remove the bracket [A] (4 screws).
3. Remove two grounding wires [B] (1 screw each).
4. Remove the rear bracket [C] (5 screws, 2 connectors).
5. Remove the SIB [D] (2 screws, 4 connectors, 2 flexible harnesses).
6. Remove the lamp stabilizer [E] (2 connectors).

6.1.9 SCANNER WIRE

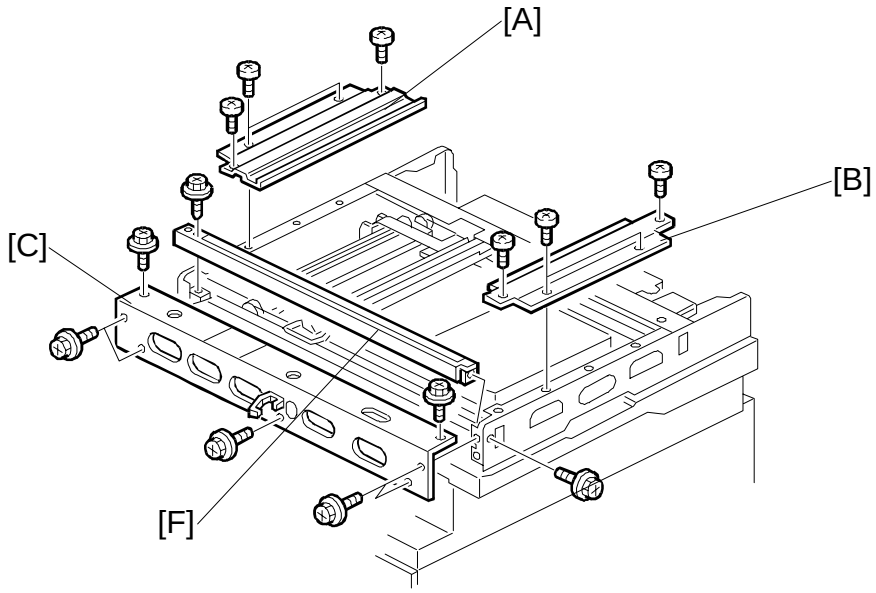

A230R110.WMF

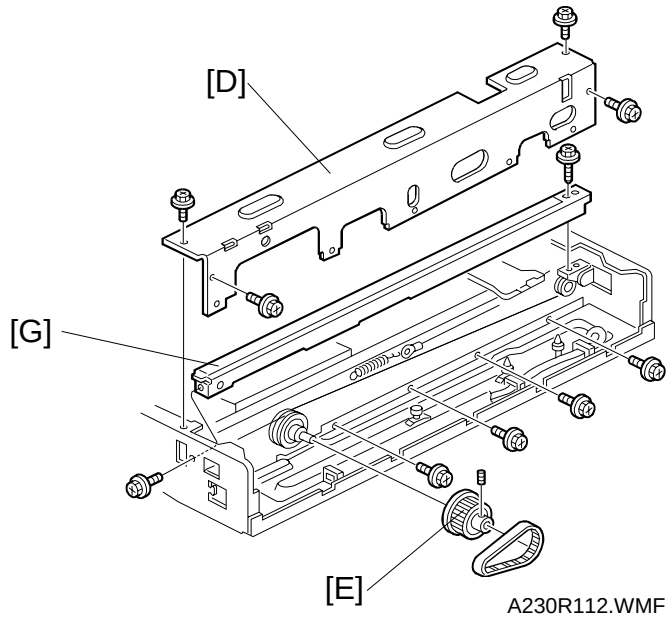

A230R112.WMF

1. Remove the exposure glass, operation panel, and all scanner exterior covers. (See Exposure Glass and Scanner Exterior.)
2. Remove the left upper stay [A] (4 screws).
3. Remove the right upper stay [B] (4 screws).
4. Remove the front frame [C] (7 screws).
5. Remove the scanner motor. (See Scanner Motor.)
6. Remove the rear frame [D] (8 screws).
7. Remove the scanner drive pulley [E] (1 set screw).

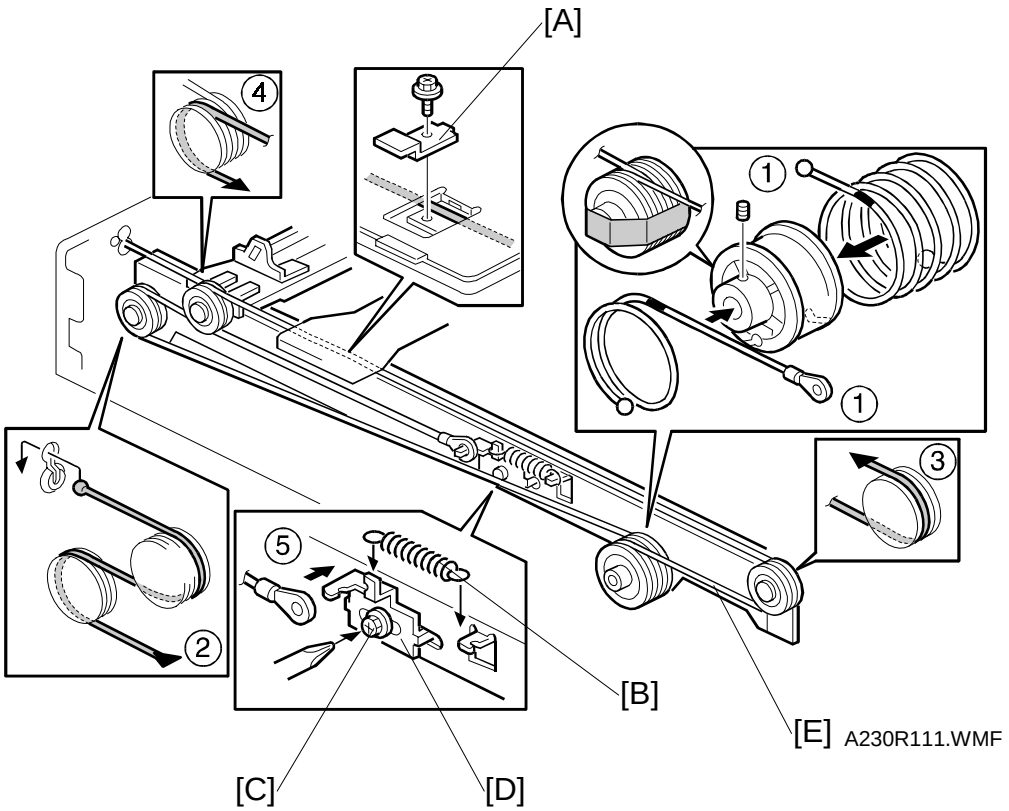

8. Remove the front and rear scanner wire brackets [A] (1 screw each). Then, remove the 1st scanner.
9. Remove the front scanner rail [F] on the previous page (2 screws).
10. Remove the rear scanner rail [G] on the previous page (2 screws).
11. Remove the tension spring [B].
12. Loosen the screw [C] securing the wire tension bracket [D].
13. Remove the scanner wire [E].
14. Wind the new scanner wire around the scanner drive pulley in the correct direction, as shown.
15. Wind the end of the new wire with the ball as shown (②).
16. Wind the end of the new wire with the ring as shown (③, ④, and ⑤).
17. Install the tension spring on the wire tension bracket (⑤).
18. Wind the new scanner wire for the other side as well.

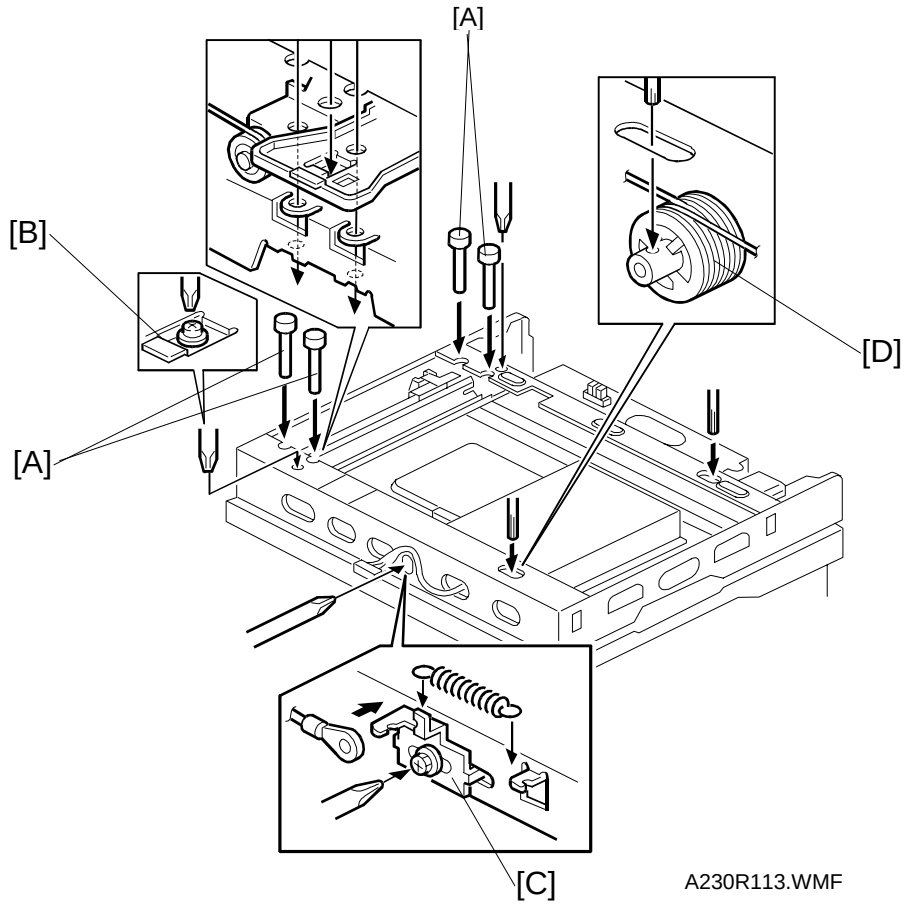

19. Reinstall the front scanner rail and rear scanner rail.
20. Install the 1st scanner and adjust its position with the scanner positioning tools (P/N A0069104) [A].
21. Secure the 1st scanner with the scanner wire bracket [B] (1 screw).
22. Tighten the tension bracket [C].
23. Secure the scanner wire pulley [D] (1 Allen screw).
24. Remove the positioning tools. After sliding the scanner to the right and left several times, set the positioning tools to check the scanner wire bracket and tension bracket again.
25. Reassemble the scanner and do the scanner and printer copy adjustments (see Replacement and Adjustment – Copy Adjustments).

6.1.10 SCANNER UNIT POSITIONING ADJUSTMENT

NOTE: The scanner unit position can be changed so that it is easier to check whether there is paper on the optional one-bin tray.

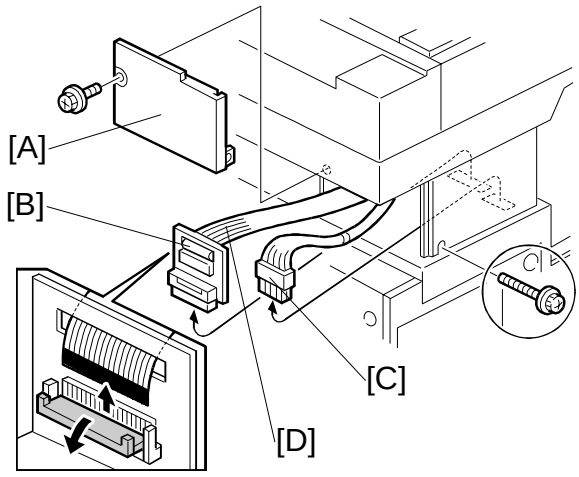

A231R519.WMF

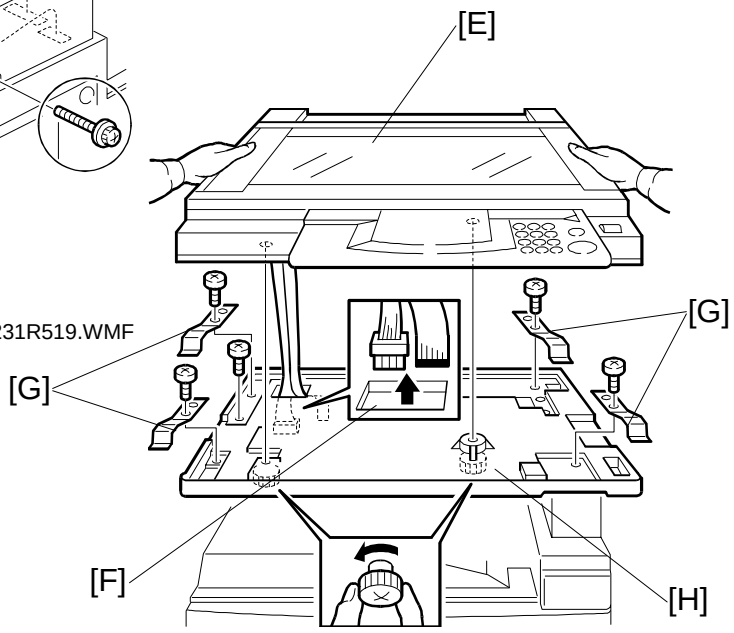

A231R520.WMF

1. Remove the scanner unit.
   NOTE: If the ARDF is installed, remove the ARDF before removing the scanner unit.
   1) Remove the stand rear cover [A] (2 screws).
   2) Disconnect the scanner I/F board [B] and the power connector [C].
   3) Disconnect the scanner I/F harness [D].
   4) Remove the scanner unit [E] (2 knob screws).
   NOTE: 1) Hold the scanner unit as shown in the above illustration. Otherwise, it may be damaged.
   2) Make sure the harnesses are not damaged by the edges of opening [F].
   3) After removing the scanner, keep it in a flat level place.
   5) Remove four plates [G] (1 screw each).
   6) Remove the scanner unit plate [H] (1 screw).

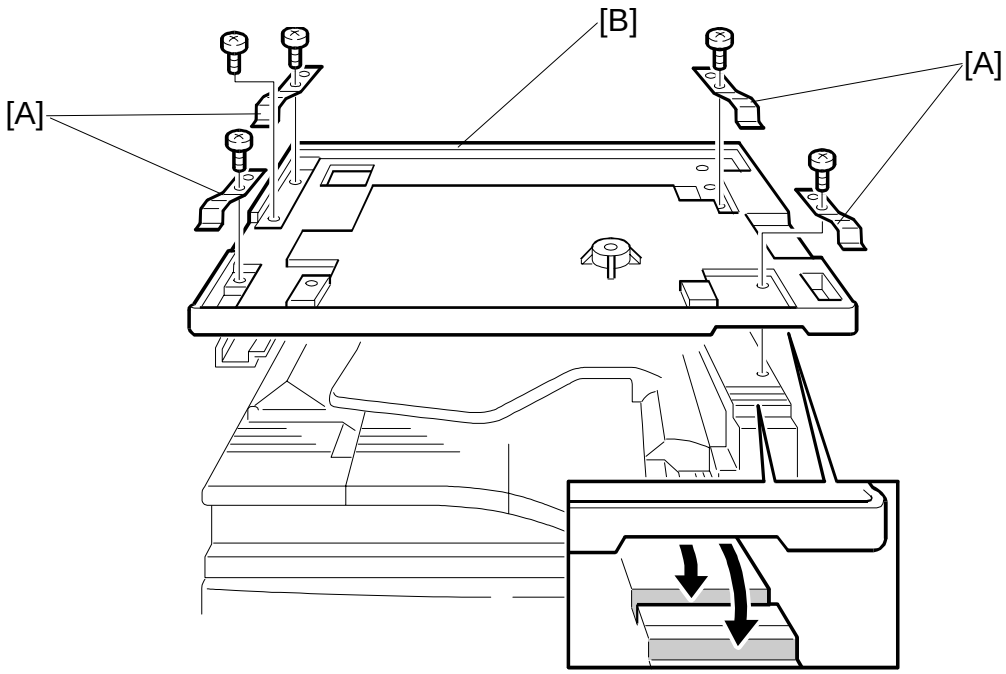

A231R521.WMF

2. Change the scanner unit plate to the appropriate position.
   Without the optional one-bin tray: Either setting can be used
   With the optional one-bin tray: Use the rear setting
3. Reinstall four plates [A] (1 screw each).
4. Secure the scanner unit plate [B] (1 screw).
5. Reinstall the scanner unit (2 knob screws).

6.2 LASER UNIT

⚠WARNING

Turn off the main power switch and unplug the machine before attempting any of the procedures in this section. Laser beams can seriously damage your eyes.

6.2.1 CAUTION DECAL LOCATIONS

Two caution decals are located in the laser section as shown below.

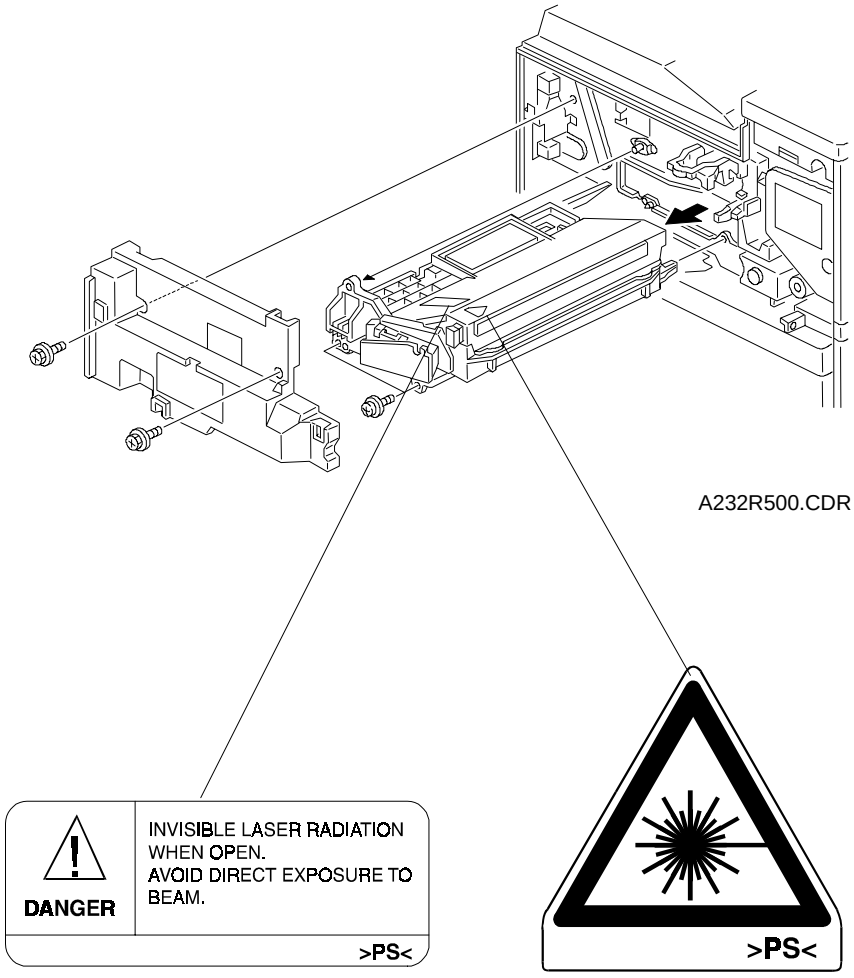

6.2.2 LASER UNIT

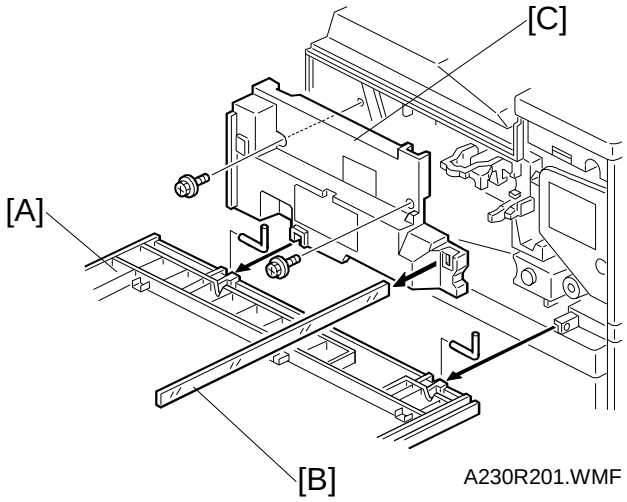

A230R201.WMF

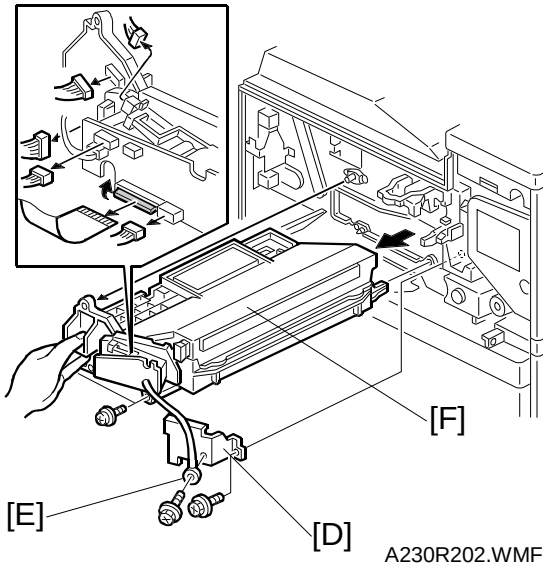

A230R202.WMF

⚠WARNING

Turn off the main power switch and unplug the machine before attempting this procedure. Laser beams can seriously damage your eyes.

1. Remove the front cover [A] (2 pins).
2. Remove the shield glass [B].
3. Remove the inner cover [C] (2 screws, 1 connector - mechanical counter).
4. Remove the shield plate [D] and grounding wire [E] (1 screw each).
5. Remove the laser unit [F] (2 screws, 5 connectors, 1 flexible harness).
   NOTE: 1) When disconnecting the harnesses from the LD unit, hold on to the LD unit.
   2) When sliding out the laser unit, do not hold the LD unit.

6.2.3 POLYGON MIRROR MOTOR

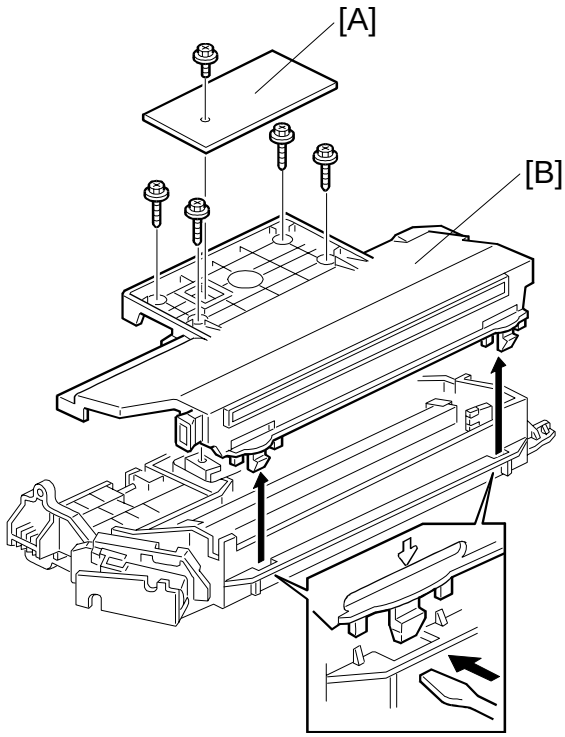

A230R203.WMF

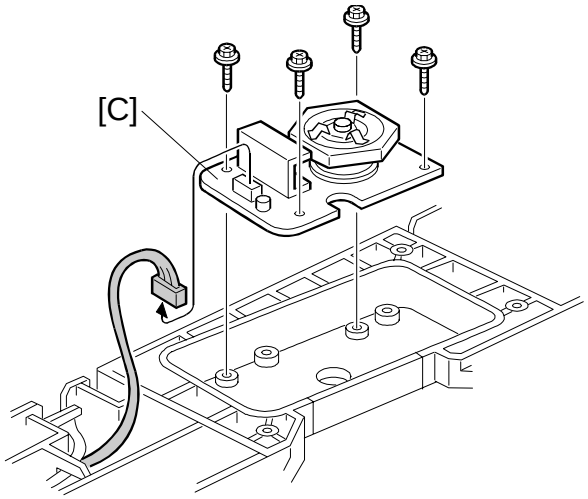

A230R204.WMF

1. Remove the laser unit (see Laser Unit).
1. **NAD40 only:** Remove the heat sink [A] (1 screw).
2. Remove the laser unit cover [B] (4 screw, 2 pawls).
3. Remove the polygon mirror motor [C] (4 screws, 1 connector).

6.2.4 LASER SYNCHRONIZATION DETECTOR

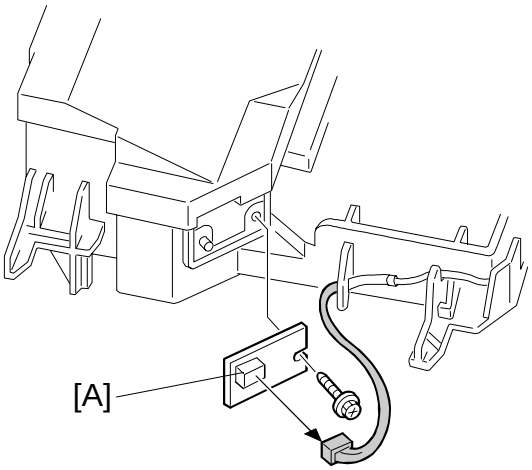

A230R206.WMF

1. Remove the laser unit (See Laser Unit).
2. Remove the laser synchronization detector [A] (1 screw, 1 connector).

6.2.5 LD UNIT

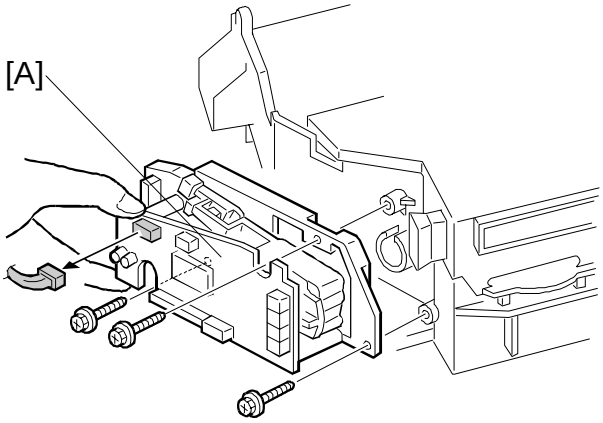

A230R205.WMF

1. Remove the laser unit (See Laser Unit).
2. Remove the LD unit [A] (3 screws, 1 connector)

NOTE: When disconnecting the harness, hold on to the LD unit.

3. After replacing the LD unit, perform SP 2-109-8 then the laser beam pitch adjustment (see the following procedure).

Laser beam pitch adjustment

There are two laser beam pitch adjustment procedures: one for 400 dpi, and one for 600 dpi. These adjustments use the following SP modes.

- SP2-109-1: LD Beam Pitch Adjustment – 400 dpi
- SP2-109-2: LD Beam Pitch Adjustment – 600 dpi
- SP2-109-3: LD Initial Setting – 400 dpi
- SP2-109-4: LD Initial Setting – 600 dpi
- SP2-902-2, no.12: IPU Test Pattern – Cross Stitch – 400 dpi
- SP2-902-2, no.13: IPU Test Pattern – Cross Stitch – 600 dpi

1. Do SP 2-109-8.
2. Input the value “144” into SP2-109-1.
3. Perform SP2-109-3.
4. Print the 400-dpi test pattern onto A3 (11”x17”) paper using SP2-902-1 no.12. (See Service Tables - Test Pattern Printing).
5. Write the value of SP2-109-1 on the test pattern (in this case “144”).
6. Change the value of SP2-109-1 and print another test pattern, repeating steps 2 to 4. Print about 5 patterns with different values for SP2-109-1 (e.g. “48”, “96”, “192”, “240”).
7. Check these test patterns. If the laser beam pitch is not correct, the image looks like a black vertical strip pattern.
   NOTE: As an example, if the pattern made with the value “192” has less obvious strips than the other print outs, the correct value is near “192”.
8. Adjust the laser beam pitch position until the thin lines are of uniform thickness (no striping effect should appear on the printout), doing steps 1, 2, and 3 (in step 1, input a value which is estimated to be correct, then do steps 2 and 3, then if necessary go back to step 1 and try another value).
9. After adjusting the laser beam pitch for 400 dpi, adjust the laser beam pitch for 600 dpi, using the same procedure as for 400 dpi (use the SP modes for 600 dpi). The laser beam pitch for 600 dpi should be 24 ~ 48 more than for 400 dpi.

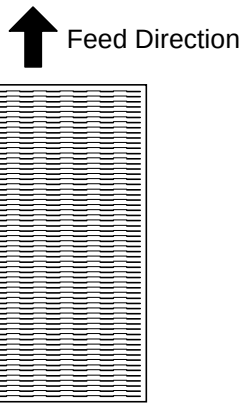

A231R512.WMF

Adjustment not complete

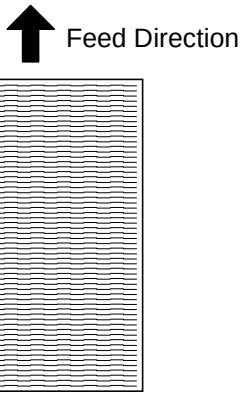

A231R513.WMF

Adjustment complete

6.3 PHOTOCONDUCTOR UNIT (PCU)

6.3.1 PCU

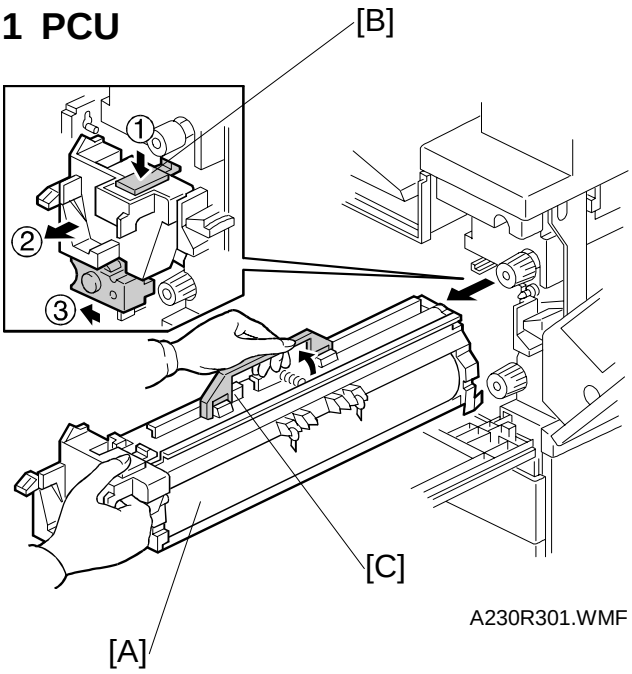

A230R301.WMF

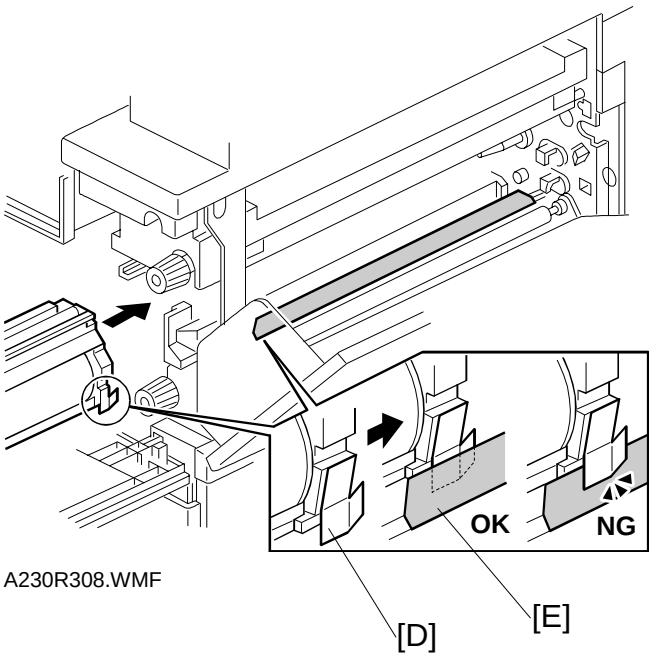

A230R308.WMF

1. Open the right cover and front cover.
2. Pull the PCU [A] out slightly while pushing the release lever [B].
3. Push the development unit to the left. Then, pull the PCU out, holding the handle [C].

When reinstalling the PCU, make sure of the following:

- The development unit should be pushed to the left.
- The mylar [D] should not be deformed by the PCU entrance seal [E].

6.3.2 DRUM

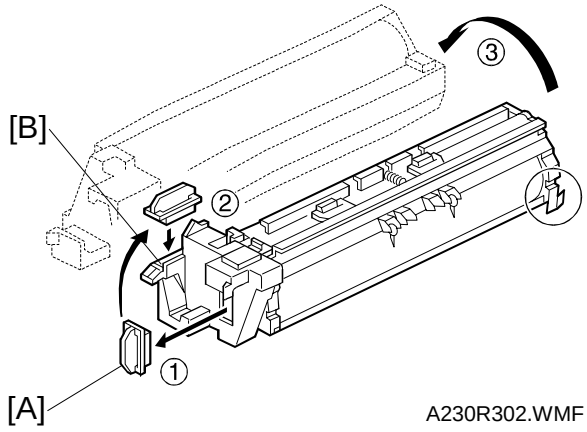

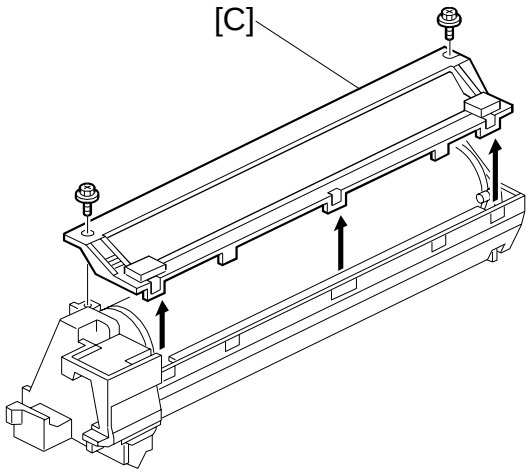

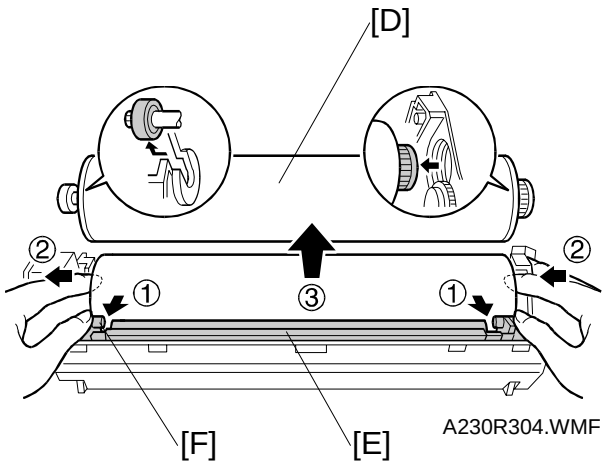

1. Pull the PCU out. (See PCU.)
2. Remove the toner cap [A] and put it over the toner entrance hole [B].
3. Turn the PCU upside-down. Then, remove the lower PCU cover [C] (2 screws, 3 pawls).
4. Push the drum [D] towards the front ② (the left side in the illustration), while releasing the charge roller [E] using the release lever ① [F]. Then, remove the drum ③.
   NOTE: Do not touch the drum surface with bare hands.
5. After replacing the charge roller, check the value of SP2-001-1. If it is not at the standard value, change it to the standard value using SP2-001-1.
   NOTE: If this is not done, the carrier will be attracted to the drum because the charge roller voltage will be too high.
6. After replacing the drum, perform the ID sensor initial setting using SP3-001-2.
7. Do the process initial setting procedure (SP2-805).

6.3.3 PICK-OFF PAWLS

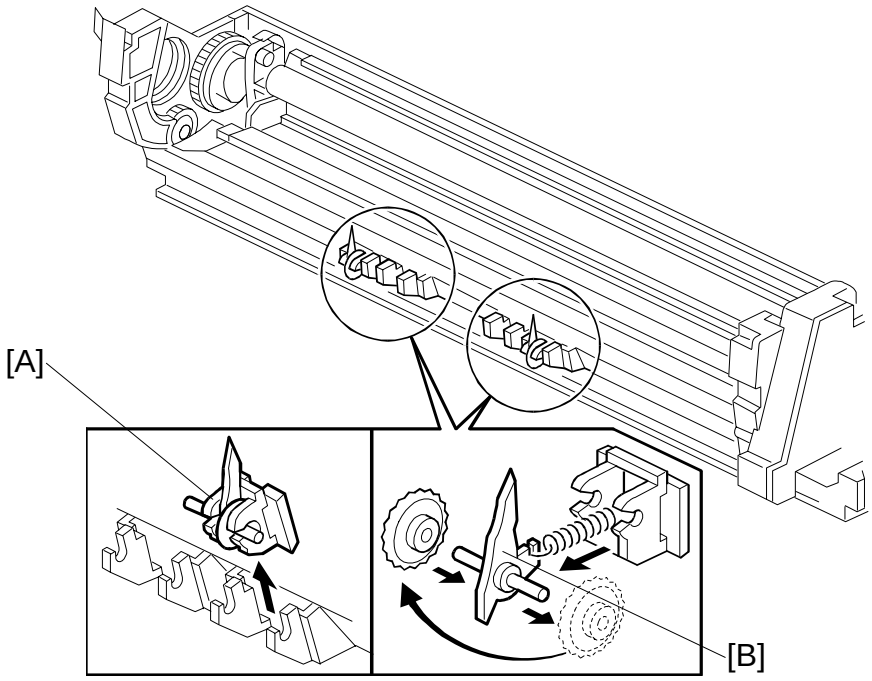

A230R305.WMF

1. Remove the drum. (See Drum.)
2. Remove the pick-off pawl assembly [A].
3. Remove the pick-off pawl [B] (1 spring, 1 spur).

Pick-off pawl position adjustment

If a line has appeared on the drum surface because of the pick-off pawl, the pick-off pawl position can be adjusted using either or both of the following:

- Changing the spur position.
- Changing the pick-off pawl assembly position

6.3.4 CHARGE ROLLER/CHARGE ROLLER CLEANING PAD

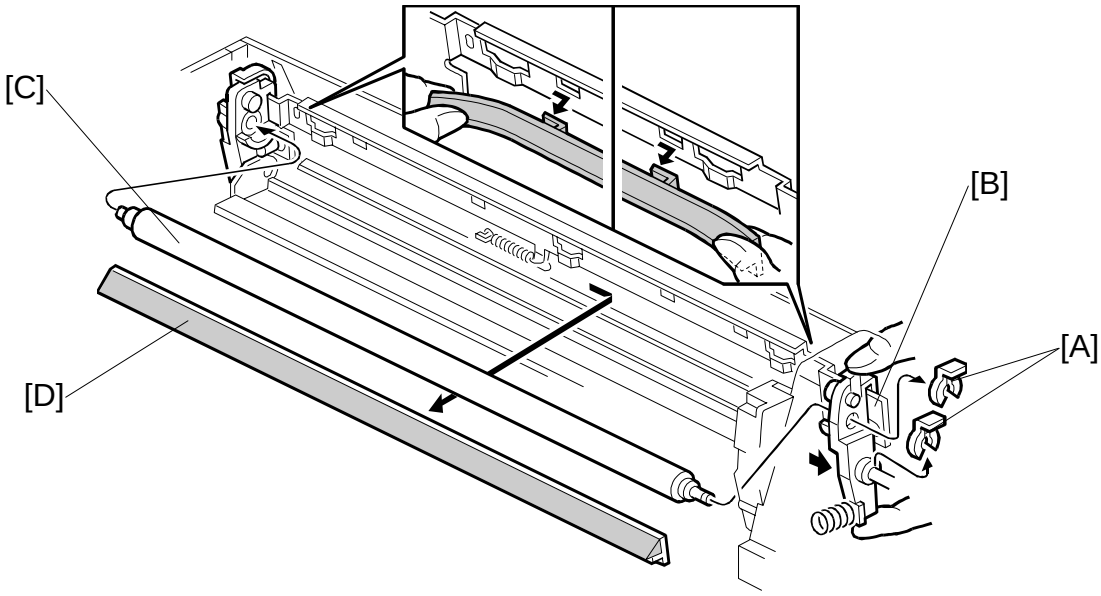

A230R306.WMF

1. Remove the drum. (See Drum.)
2. Remove two snap rings [A] and slide out the front charge roller holder [B].
3. Remove the charge roller [C].
   NOTE: Do not touch the charge roller with bare hands.
4. Remove the charge roller cleaning pad [D] (4 hooks).
5. After replacing the charge roller, check the value of SP2-001-1. If it is not at the standard value, change it to the standard value using SP2-001-1.
   NOTE: If this is not done, the carrier will be attracted to the drum because the charge roller voltage will be too high.

   Standard value: 1630V (NAD30/30S), 1650V (NAD40)

6.3.5 DRUM CLEANING BLADE

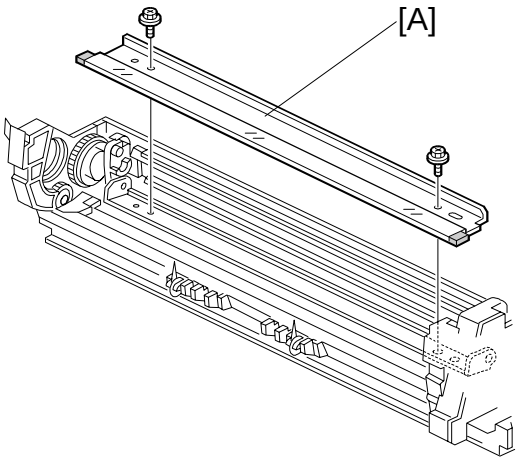

A230R307.WMF

1. Remove the drum. (See Drum.)
2. Remove the charge roller. (See Charge Roller.)
3. Remove the drum cleaning blade [A] (2 screws).

6.3.6 ID SENSOR

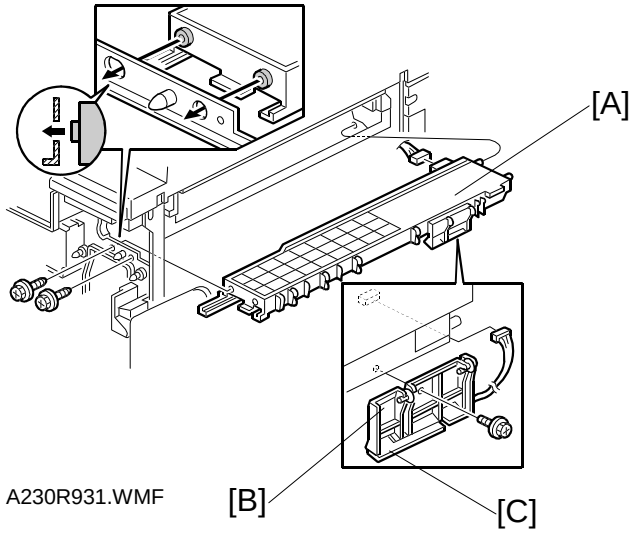

A230R931.WMF

1. Remove the PCU, fusing unit, and development unit.
2. Remove the PCU rail [A] (2 screws, 1 connector).
3. Remove the ID sensor bracket [B] (1 screw, 1 connector).
4. Remove the ID sensor [C] (1 screw).
5. Perform the ID sensor initial setting using SP3-001-2.

6.4 DEVELOPMENT

6.4.1 DEVELOPMENT UNIT

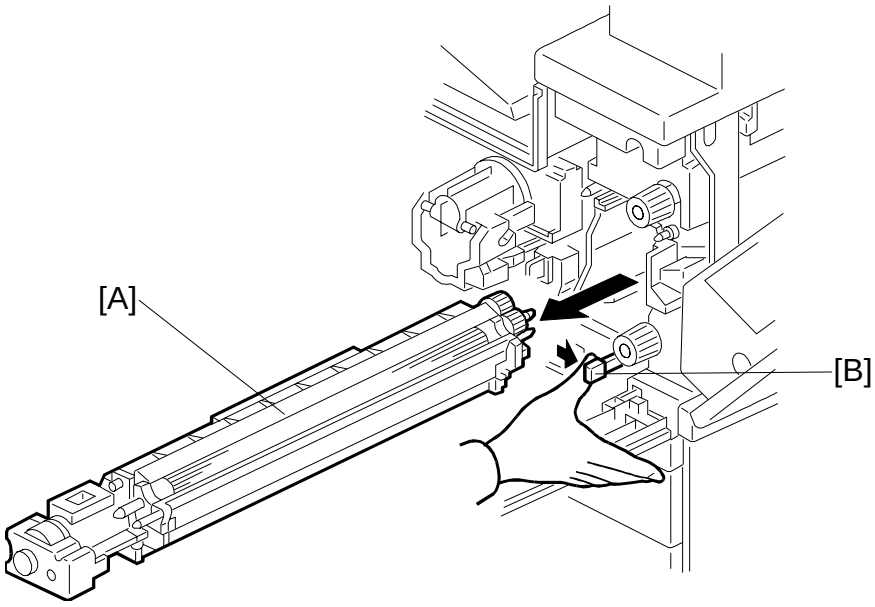

A230R401.WMF

1. Open the right upper cover and front cover.
2. Remove the PCU. (See Photoconductor Unit.)
3. Remove the development unit [A] while pushing the release lever [B] to the right.

NOTE: Be careful not to nick or scratch the development roller.

If you are temporarily installing a used development unit for test purposes for a long time, perform SP2-220 and 2-802 after installation (see the SP mode table for details).

6.4.2 DEVELOPMENT FILTER

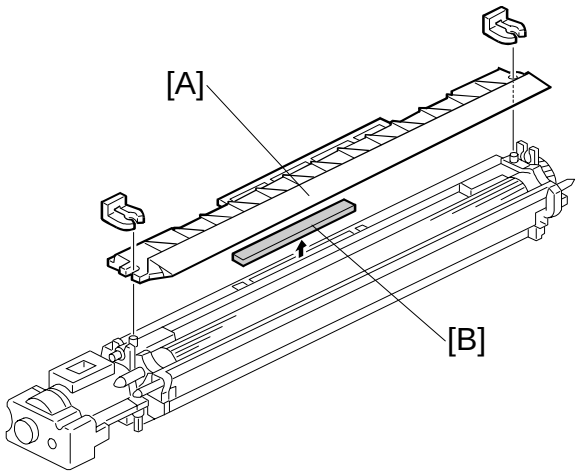

A230R402.WMF

1. Remove the development unit. (See Development Unit.)
2. Remove the upper development cover [A] (2 snap rings).
3. Remove the development filter [B]

NOTE: Make sure that the surface with a red mark is facing up.

6.4.3 DEVELOPMENT ROLLER

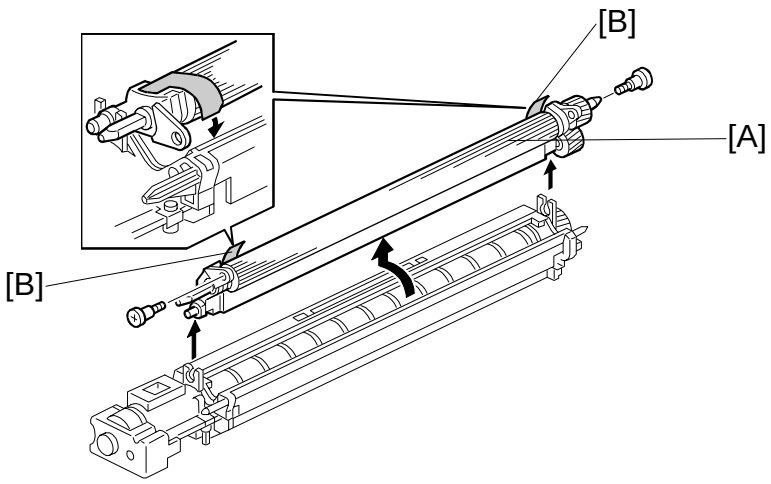

A230R403.WMF

1. Remove the development unit and upper development cover. (See Development and Development Filter.)
2. Remove the development roller [A] (2 screws).

NOTE: 1) Be careful not to nick or scratch the development roller.
2) When reinstalling the development roller, the side seals [B] should be inside the development unit case.

6.4.4 DEVELOPER

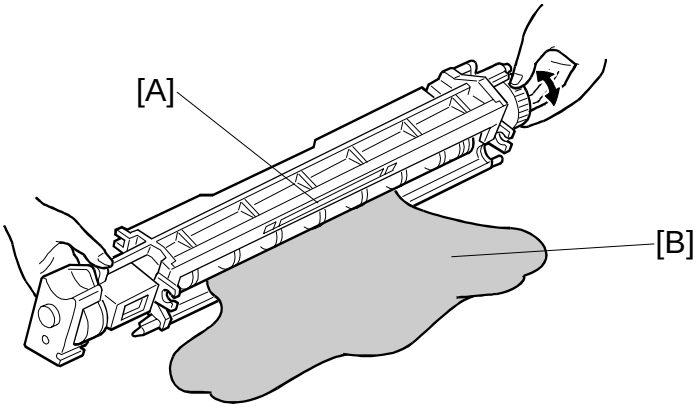

A230R404.WMF

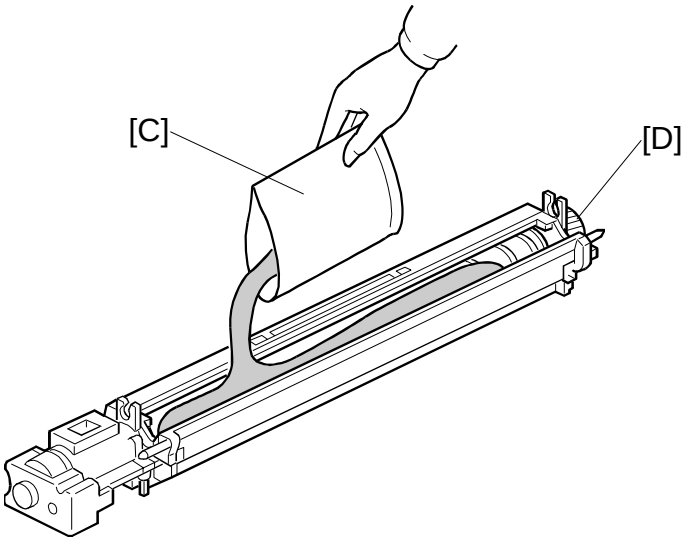

A230R405.WMF

1. Remove the development unit and place it on a clean sheet. (See Development Unit.)
2. Remove the development roller. (See Development Roller.)
3. Turn over the development unit (the development filter [A] must be at the top as the unit turns over, as shown) and empty all the old developer [B]. Make sure that no developer remains on the development roller or in the unit.
   NOTE: 1) Dispose of the used developer in accordance with local regulations.
   2) Be careful not to nick or scratch the development roller.
4. Pour all the new developer [C] into the development unit. Then, rotate the gear [D] so that the developer is distributed evenly.

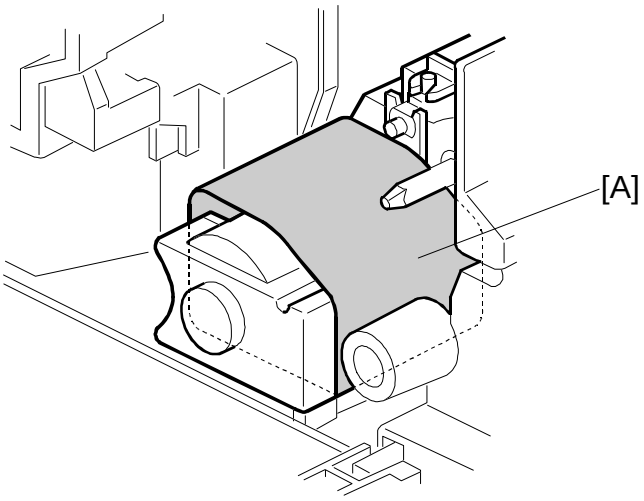

A231R518.WMF

5. Reassemble the development unit and cover the toner entrance hole with a piece of paper [A], as shown.
6. Install the development unit into the machine.
7. Turn on the main power switch, make sure that the machine has warmed up, then perform the TD sensor initial setting using SP 2-801.
8. After performing the TD sensor initial setting, take out the sheet [A] from the development unit.

NOTE: When doing the TD sensor initial setting, cover the toner entrance hole with a piece of paper. This is because, if used toner in the PCU falls into the development unit through the toner entrance opening during TD sensor initial setting, Vref (toner density reference voltage) will not be measured correctly.

6.4.5 TD SENSOR

1. Remove the development unit and empty all the developer. (See Developer.)
2. Remove the TD sensor.
   NOTE: When installing the new TD sensor, secure it with double-sided tape.
3. Pour new developer into the development unit and perform the TD sensor initial setting using SP2-801.
   NOTE: When performing the TD sensor initial setting, cover the toner entrance hole with a piece of paper (see the above illustration).

6.5 TRANSFER UNIT

6.5.1 TRANSFER BELT UNIT

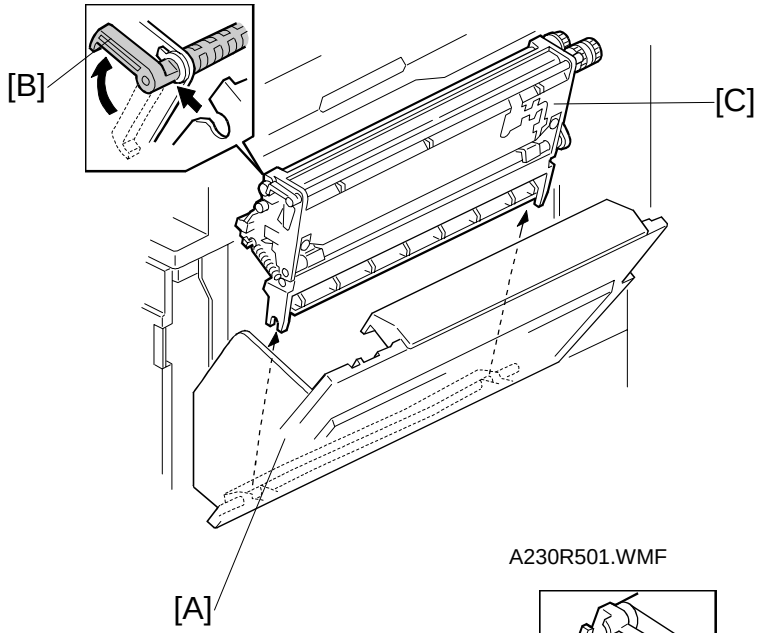

A230R501.WMF

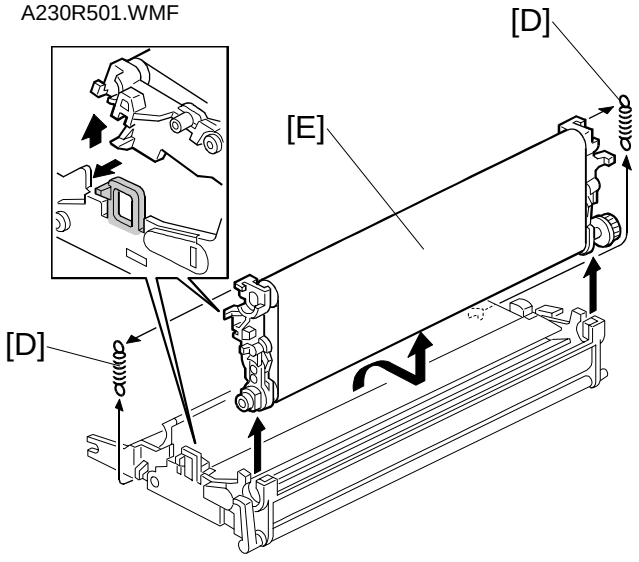

A230R502.WMF

NOTE: Do not keep the right cover open for a long time, to prevent the drum from being exposed to direct light. When keeping the right cover open for a long time, cover the drum with paper, or remove the PCU then cover the PCU with paper.

1. Open the right cover [A].
2. Release the release lever [B] then remove the transfer unit [C].
3. Remove the springs [D].
4. Remove the transfer belt unit [E] (1 hook).
   NOTE: Do not touch the transfer belt surface.

6.5.2 TRANSFER BELT

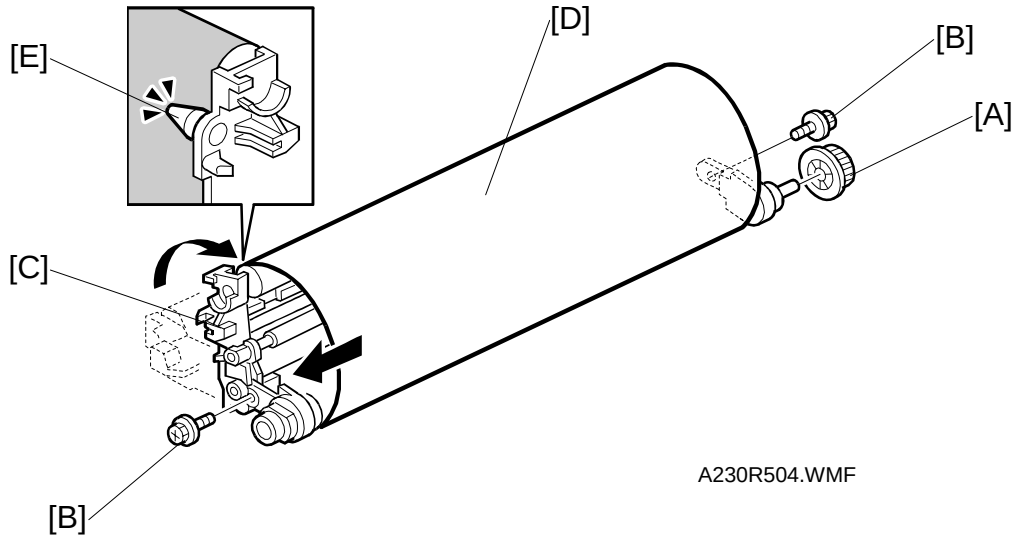

1. Remove the transfer belt unit. (See Transfer Belt Unit.)
2. Remove the belt drive gear [A].
3. Remove the screws [B] at both sides and turn the belt holder [C] until it is vertical.
4. Remove the transfer belt [D].

NOTE: 1) Do not touch the transfer belt surface with bare hands.
2) Before installing the new transfer belt, clean all the rollers and shafts with alcohol to prevent the belt from slipping.
3) When reinstalling the transfer belt, make sure that the belt is under the pin [E].
4) When reinstalling, to avoid damage to the transfer belt, manually turn the rollers and check that the new transfer belt is not running over the edge of any of the rollers.

6.5.3 TRANSFER BELT CLEANING BLADE/TONER OVERFLOW SENSOR

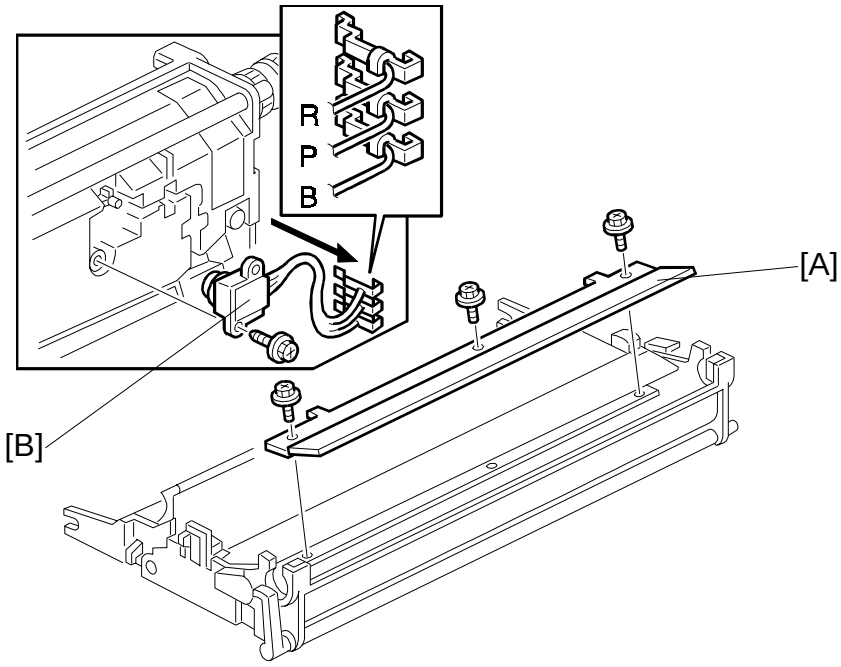

A230R503.WMF

Transfer Belt Cleaning Blade

1. Remove the transfer belt. (See Transfer Belt.)
2. Remove the transfer belt cleaning blade [A] (3 screws).

NOTE: 1) Do not touch the edge of the new blade.
2) Check that there is no dust/no damage on the edge of the new blade.

Toner Overflow Sensor

1. Remove the transfer belt cleaning blade.
2. Turn over the transfer unit and empty the used toner in the transfer unit.
3. Remove the toner overflow sensor [B] (1 screw, 3 terminal wires).

NOTE: When reinstalling the terminal wires, the wire color order is red, purple, blue, from the top.

6.5.4 RIGHT COVER

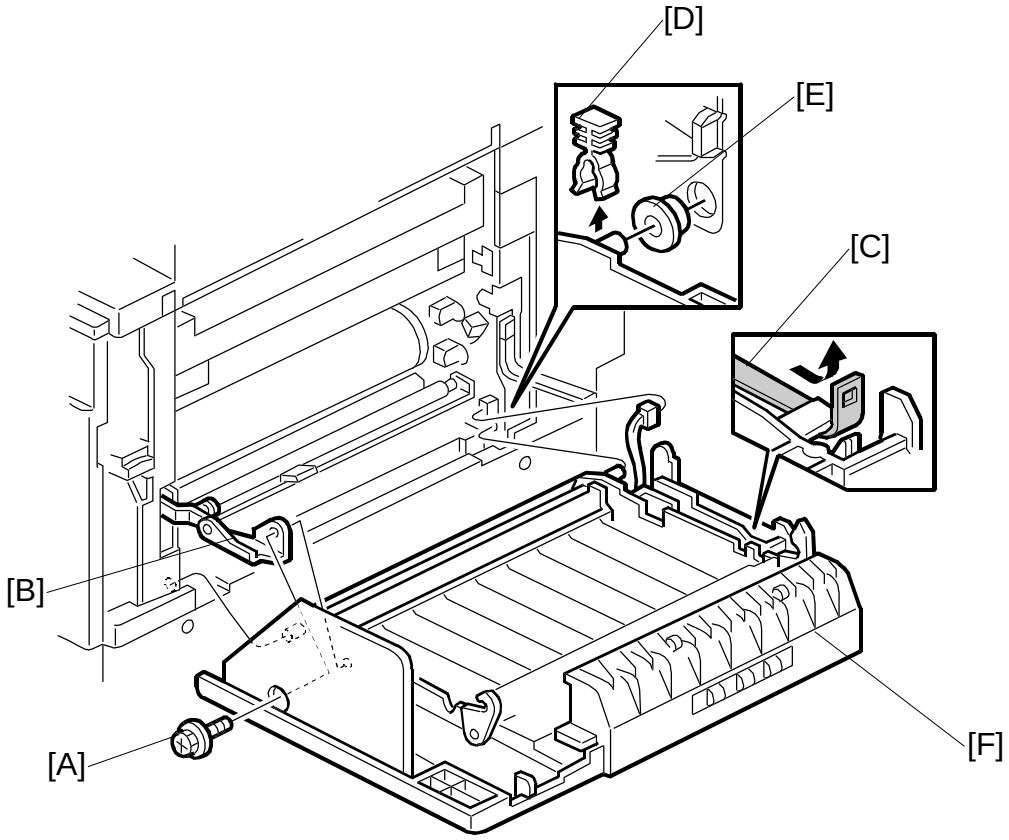

A230R915.WMF

NOTE: Do not keep the right cover open for a long time, to prevent the drum from being exposed to direct light. When keeping the right cover open for a long time, cover the drum with paper, or remove the PCU then cover the PCU with paper.

1. Remove the transfer belt unit. (See Transfer Belt Unit.)
2. Remove the screw [A] which secures the link [B].
3. Remove the unit band [C].
4. Remove the clip [D] and bushing [E].
5. Remove the right cover [F] (1 connector).

6.6 PAPER FEED

6.6.1 PICK-UP, SEPARATION, AND FEED ROLLERS

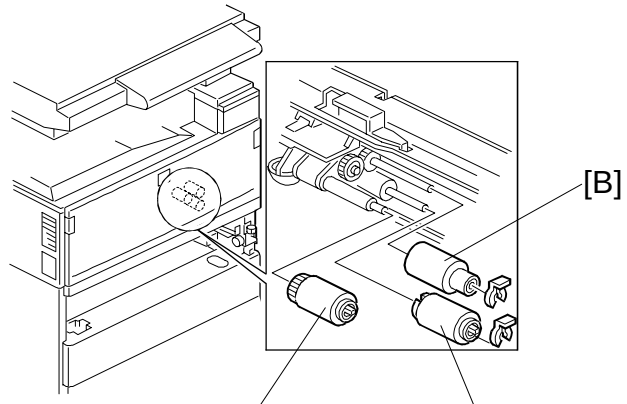

1. Remove the paper tray.
2. Remove the pick-up roller [A].
3. Remove the feed [B] and separation rollers [C] (1 clip each).

NOTE: Do not touch the roller surface with bare hands.
After installing the new rollers, do SP 7-816 for the appropriate paper tray.

6.6.2 LOWER RIGHT COVER/LOWER REAR COVER

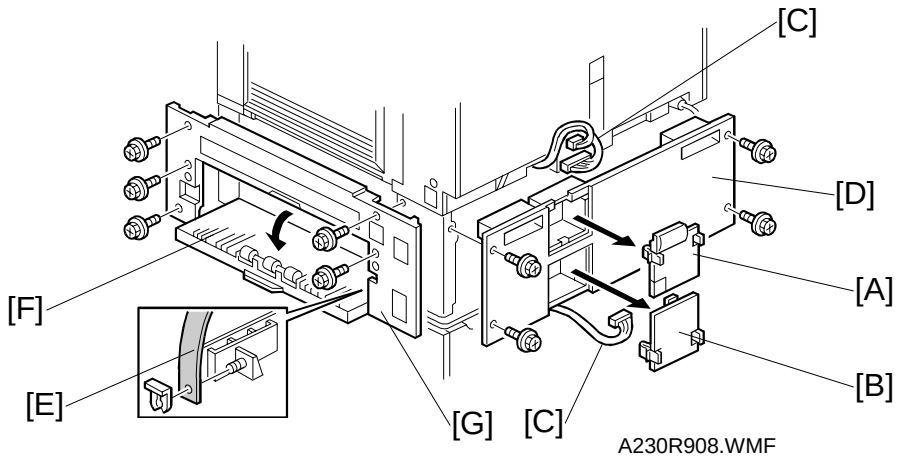

NOTE: If the optional LCT has been installed, remove the LCT before doing the following procedure.

1. Remove the upper connector cover [A] and lower connector cover [B] then disconnect the harnesses [C].
2. Remove the lower rear cover [D] (4 screws).
3. Remove the unit band [E] (1 clip) and remove the vertical transport cover [F].
4. Remove the lower right cover [G] (5 screws).

6.6.3 RELAY/UPPER PAPER FEED/LOWER PAPER FEED CLUTCHES

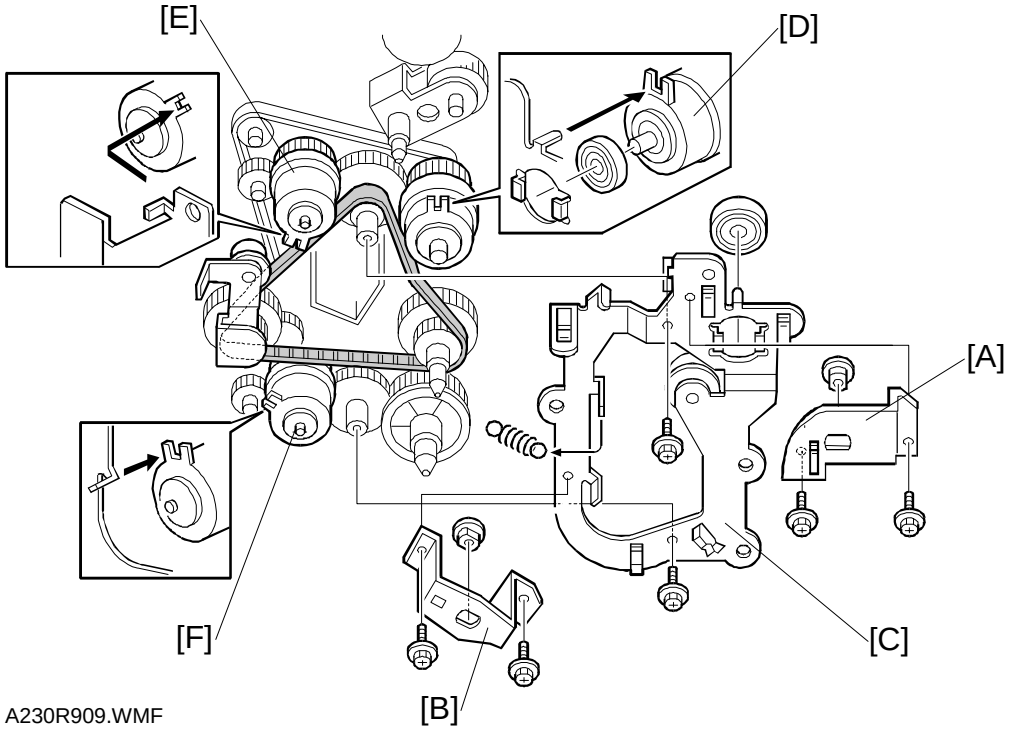

1. Remove the lower rear cover. (See Lower Right Cover/Lower Rear Cover.)
2. Remove the first paper feed clutch bracket [A] (2 screws, 1 bushing).
3. Remove the second paper feed clutch bracket [B] (2 screws, 1 bushing).
4. Remove the drive bracket [C] (2 screws, 1 spring, 1 bearing).
5. Remove the relay clutch [D] (1 connector).
6. Remove the upper paper feed clutch [E] (1 connector).
7. Remove the lower paper feed clutch [F] (1 connector).

6.6.4 UPPER PAPER FEED UNIT

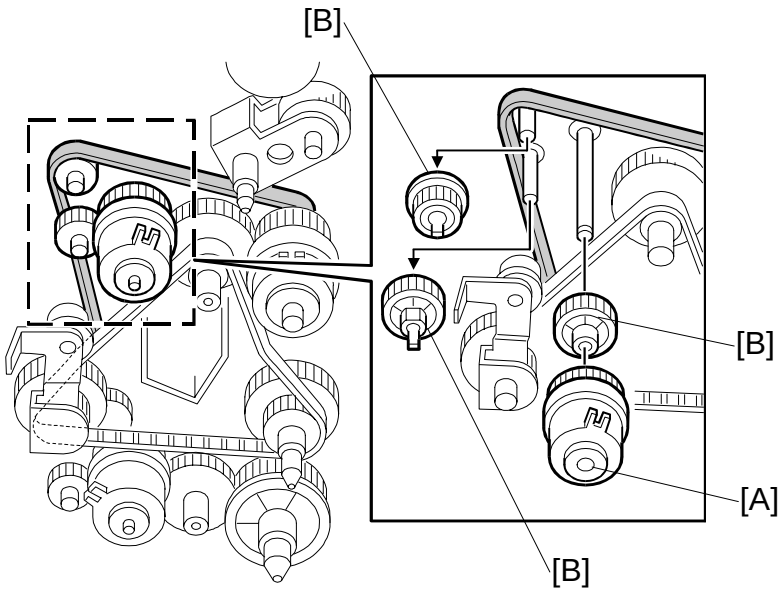

A230R910.wmf

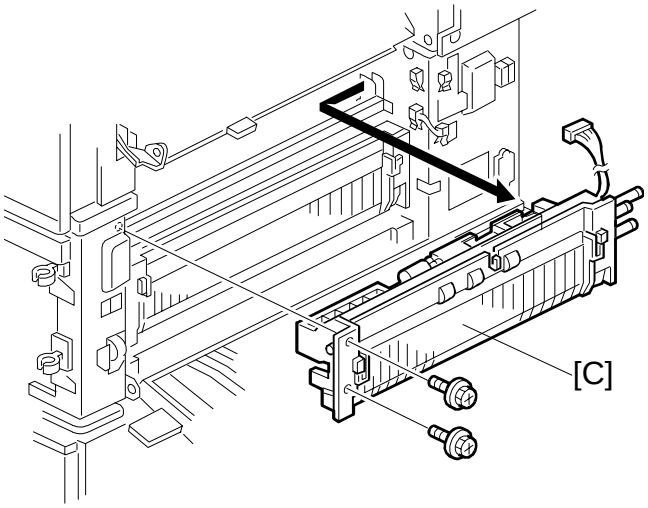

A230R911.WMF

1. Remove the upper paper feed clutch [A]. (See Relay/Upper Paper Feed/Lower Paper Feed Clutches.)
2. Remove the lower right cover. (See Lower Right Cover/Lower Rear Cover.)
3. Remove three relay gears [B].
4. Remove the upper paper feed unit [C] (2 screws, 1 connector).

6.6.5 LOWER PAPER FEED UNIT

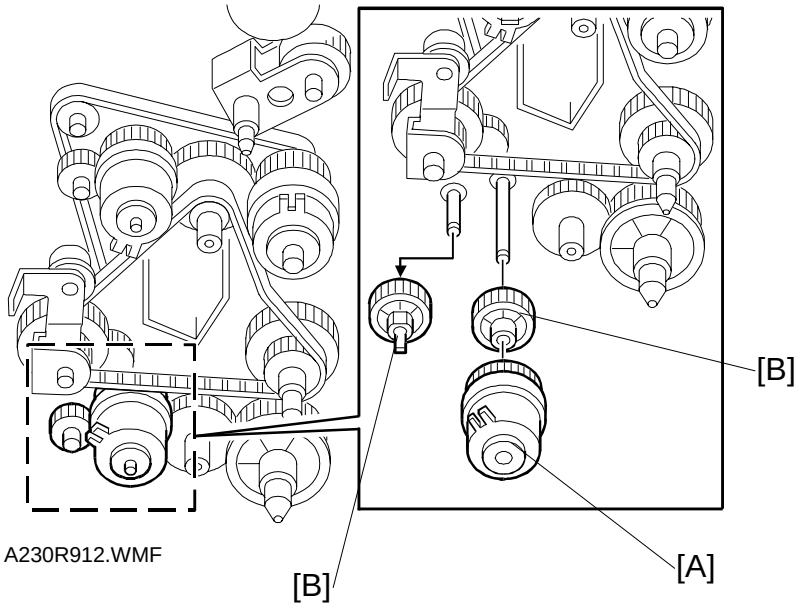

A230R912.WMF

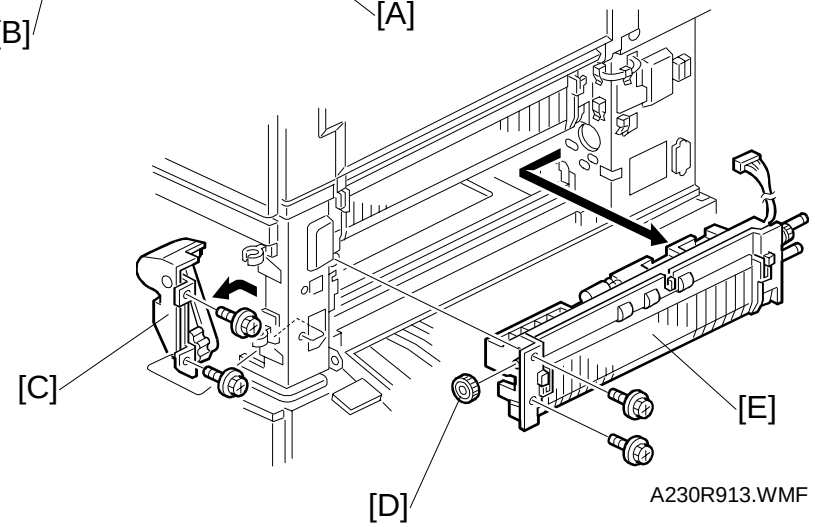

A230R913.WMF

1. Remove the lower paper feed clutch [A] (See Relay/Upper Paper Feed/Lower Paper Feed Clutches.)
2. Remove two relay gears [B].
3. Remove the paper trays.
4. Remove the lower right cover. (See Lower Right Cover/Lower Rear Cover.)
5. Remove the cover [C] (2 screws).
6. Remove the gear [D].
7. Remove the lower paper feed unit [E] (2 screws, 1 connector).

6.6.6 PAPER END/PAPER HEIGHT/RELAY SENSORS

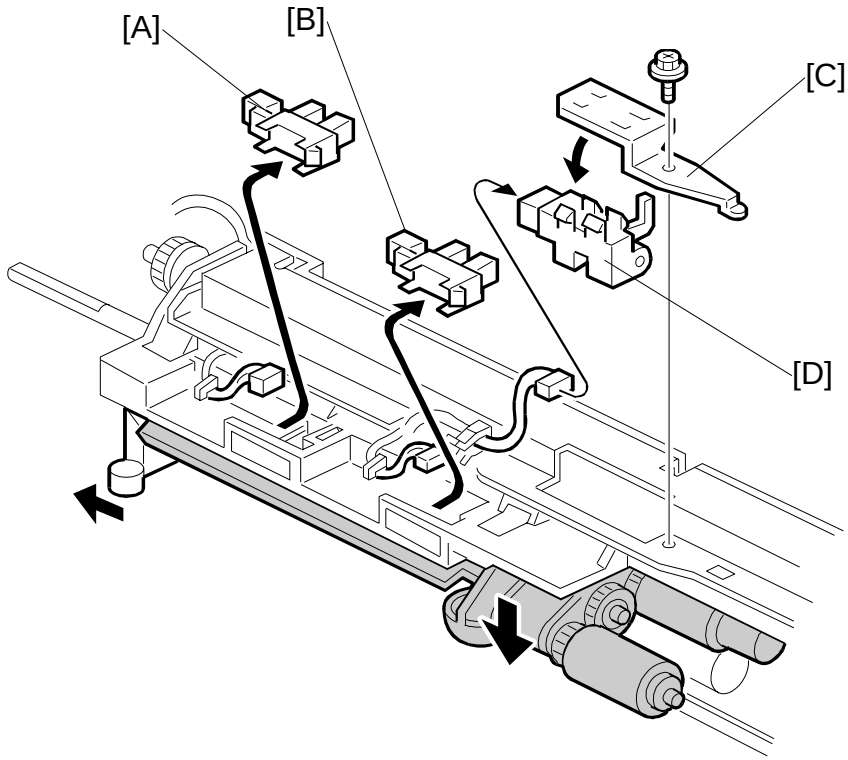

A230R914.WMF

1. Remove the appropriate paper feed unit. (See Upper or Lower Paper Feed Unit.)
2. Remove the paper height sensor [A] (1 connector).
3. Remove the paper end sensor [B] (1 connector).
4. Remove the relay sensor bracket [C] (1 screw, 1 connector).
5. Remove the relay sensor [D].

6.6.7 REGISTRATION SENSOR

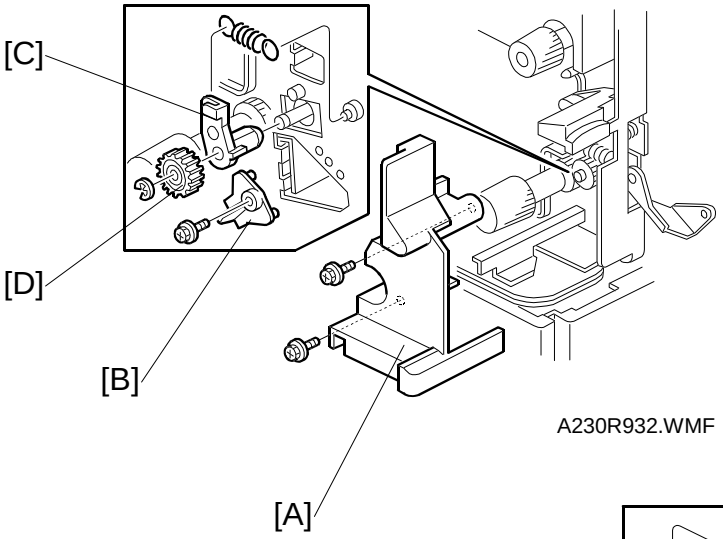

A230R932.WMF

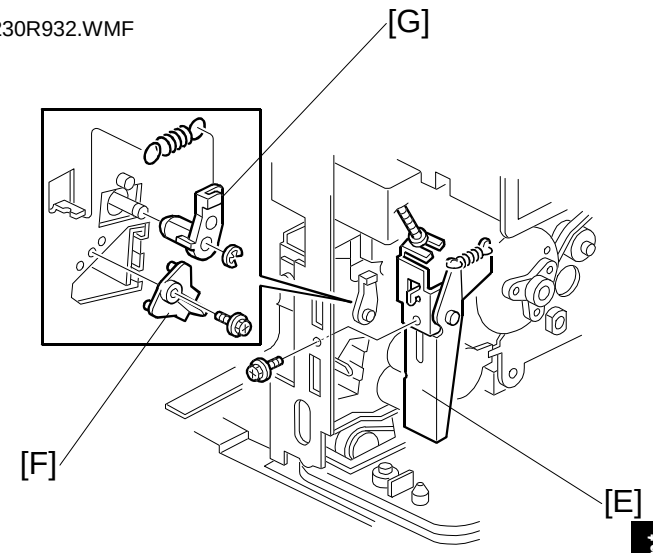

A230R933.WMF

1. Remove the front cover, rear cover, and right rear cover.
2. Remove the PCU and development unit.
3. Remove the transfer belt unit and right cover. (See Transfer Belt and Right Cover.)
4. Remove the inner cover [A] (2 screws).
5. Remove the front registration holder [B] (1 screw).
6. Remove the registration roller bushing [C] and front registration roller gear [D] (1 E-ring, 1 spring).
7. Remove the right cover switch bracket [E] (1 screw).
8. Remove the rear registration holder [F] (1 screw).
9. Remove the registration roller bushing [G] (1 E-ring, 1 spring).

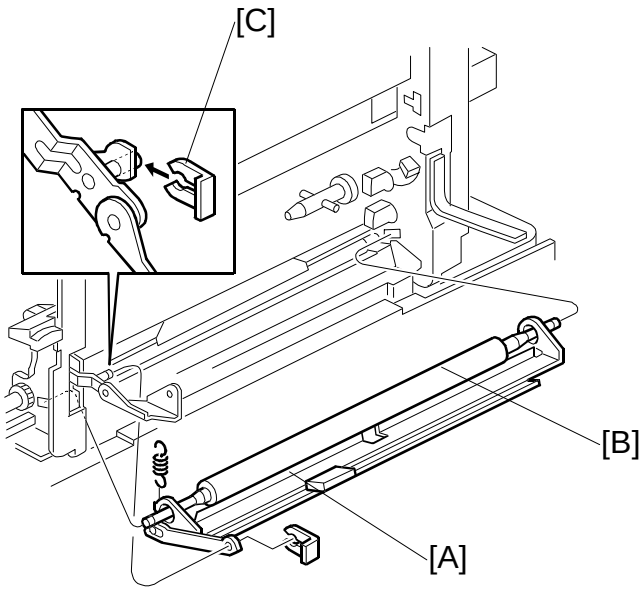

A230R934.WMF

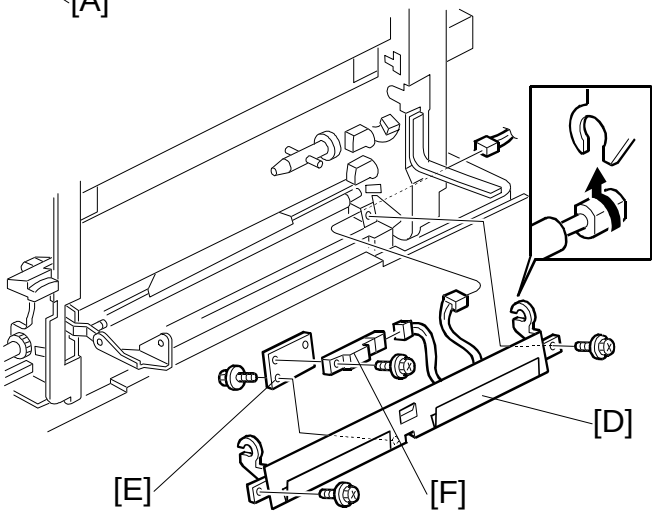

A230R935.WMF

10. Remove the guide plate [A] and registration roller [B] (1 spring, 1 clip).
    NOTE: When reinstalling the clip [C], its position must be as shown.
11. Remove the registration guide plate [D] (2 screws, 1 connector).
12. Remove the sensor bracket [E] (1 screw).
13. Remove the registration sensor [F] (1 screw, 1 connector).

6.7 FUSING

6.7.1 FUSING UNIT

⚠CAUTION
Allow time for the unit to cool before doing the following procedure.

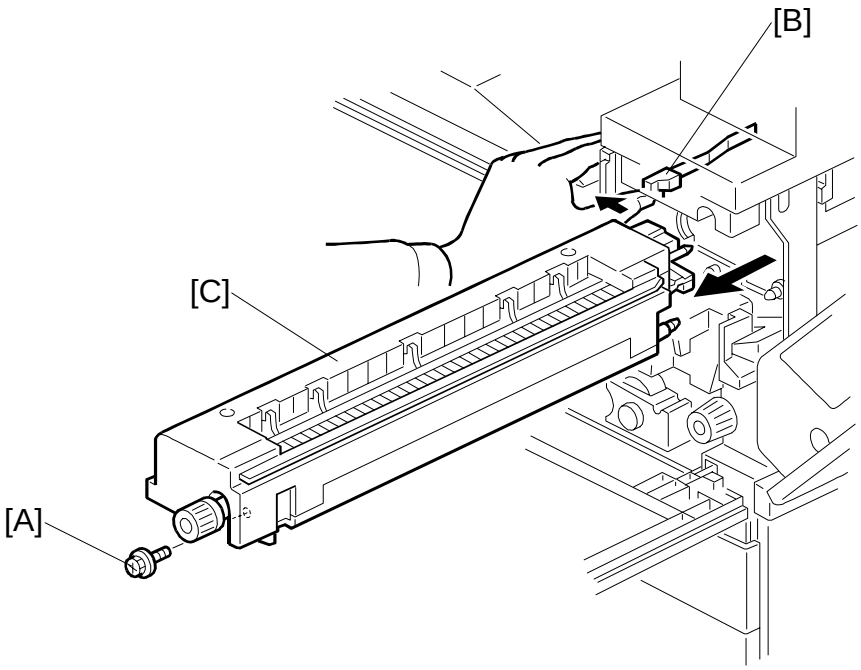

A230R601.WMF

1. Open the front cover and right cover.
2. Remove the screw [A].
3. Release the fusing lever [B] and slide out the fusing unit [C].

NOTE: After removing the fusing unit, close the right cover.

6.7.2 HOT ROLLER STRIPPERS AND FUSING LAMP

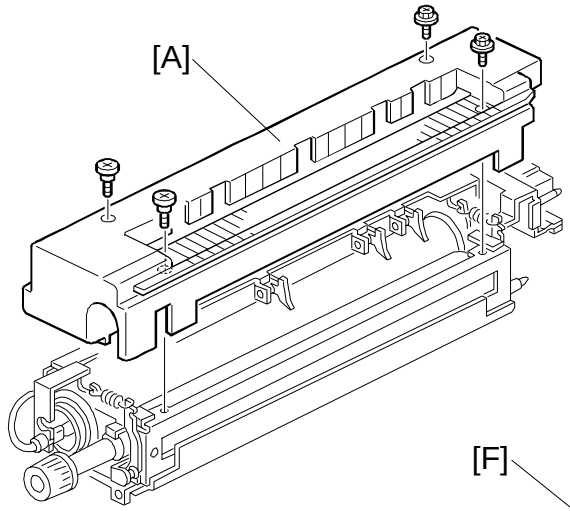

A231R503.WMF

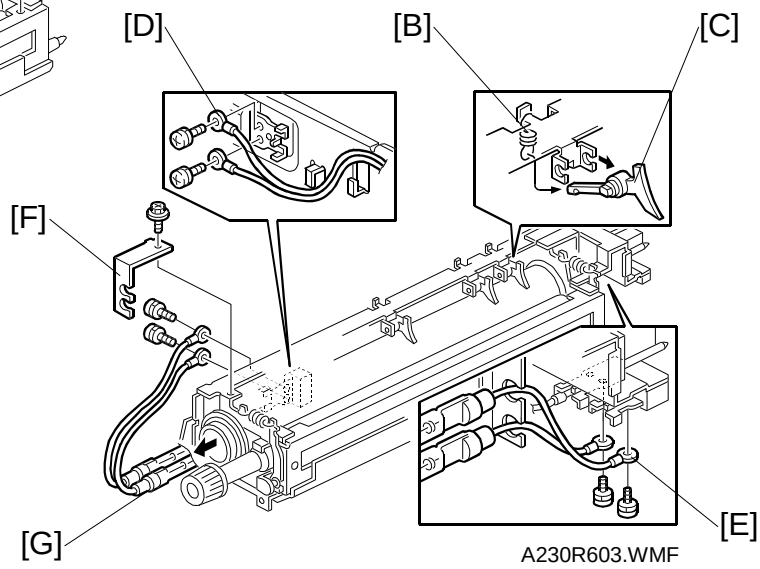

A230R603.WMF

1. Remove the fusing upper cover [A] (4 screws).
2. Remove the spring [B]. Then, remove the hot roller stripper [C].
3. Remove the front fusing lamp wire [D] (1 screw for 115V machines, 2 screws for 230V machines).
4. Remove the rear fusing lamp wire [E] (1 screw for 115V machines, 2 screws for 230V machines).
5. Remove the front lamp holder [F] (1 screw).
6. Remove the fusing lamp [G] (1 lamp for 115V machines, 2 lamps for 230V machines).

NOTE: Do not touch the glass part of the fusing lamp with bare hands.

6.7.3 THERMISTOR AND THERMOFUSE

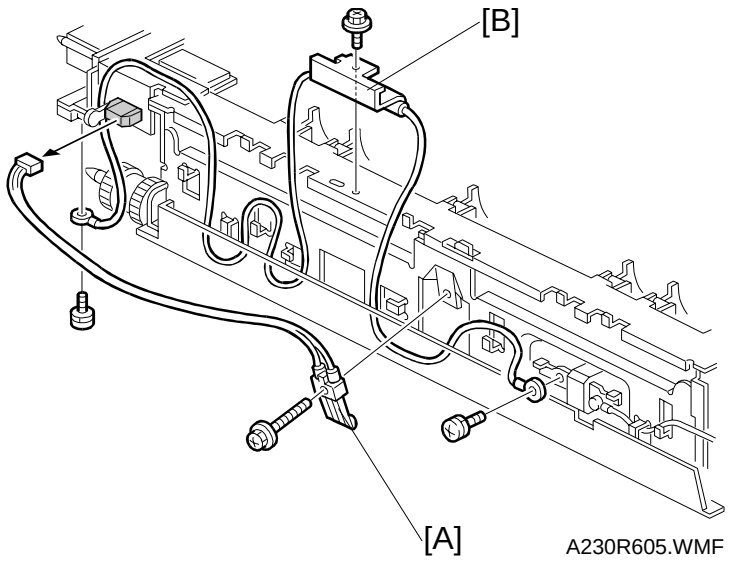

A230R605.WMF

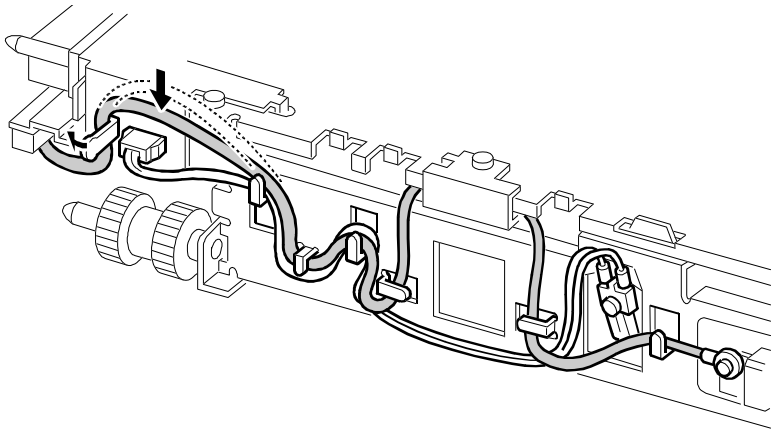

A231R525.WMF

1. Remove the fusing upper cover. (See Hot Roller Strippers and Fusing Lamp.)
2. Remove the thermistor [A] (1 screw, 1 connector).
3. Remove the thermofuse [B] (3 screws).

Route the cable of the thermistor and thermofuse as shown.

6.7.4 CLEANING ROLLER

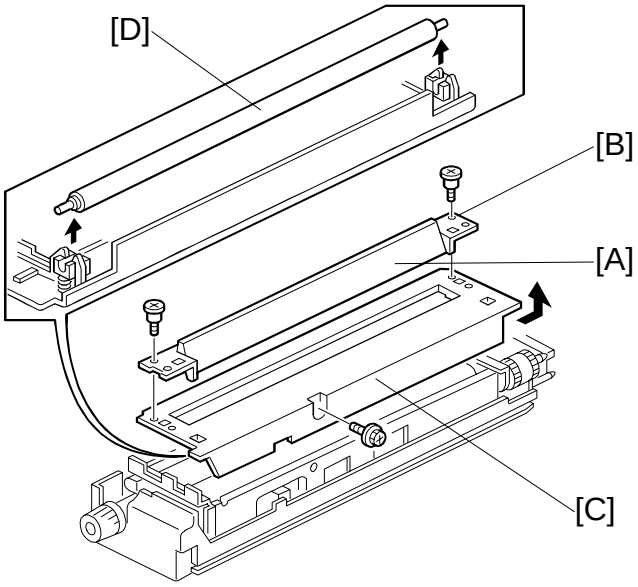

A230R604.WMF

1. Remove the fusing unit.
2. Remove the fusing entrance guide [A] (2 screws).
   NOTE: The standard position of the fusing entrance guide is the upper position, using the lower screw holes [B]
3. Remove the lower fusing cover [C] (1 screw).
   NOTE: When removing the lower fusing cover, be careful not to drop the cleaning roller onto the hot roller.
4. Replace the cleaning roller [D].

6.7.5 HOT ROLLER AND PRESSURE ROLLER

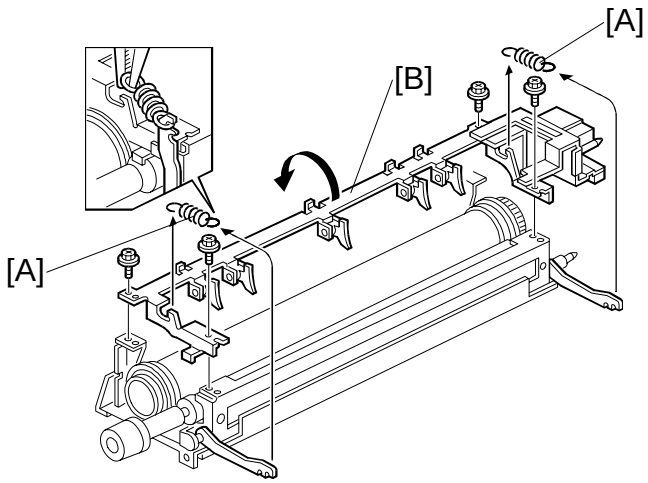

A230R606.WMF

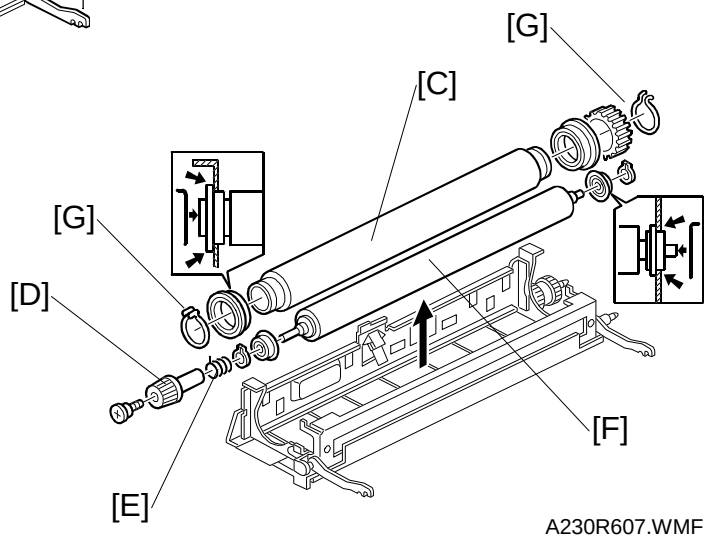

A230R607.WMF

1. Remove the fusing lamp. (See Hot Roller Strippers and Fusing Lamp.)
2. Remove the pressure springs [A].
3. Remove the hot roller stripper bracket [B] (4 screws).
4. Remove the hot roller assembly then replace the hot roller [C] (2 C-rings, 1 gear, 2 bushings)
5. Remove the pressure roller assembly.
6. Remove the fusing knob [D] (1 screw).
7. Remove the spring [E].
8. Replace the pressure roller [F] (2 C-rings, 2 bushings).

NOTE: 1) Before installing the new hot roller, peel off 3 cm (1 inch) from both ends of the protective sheet on the new roller.
2) Do not touch the surface of the rollers.
3) Be careful not to damage the surface of the hot roller.
4) The standard pressure roller position is the upper position.
5) When reinstalling the hot roller assembly and pressure roller assembly, make sure that the flange position of the bushings is as shown.
6) When reinstalling the C-rings [G] of the hot roller, make sure that the position of the C-rings is as shown.

6.8 DRIVE AREA

6.8.1 REGISTRATION CLUTCH AND TRANSFER BELT CLUTCH

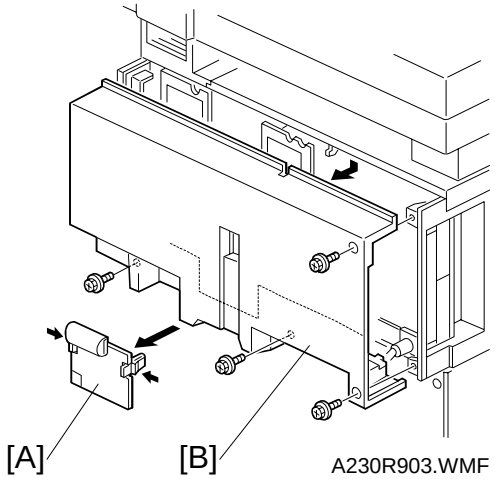

A230R903.WMF

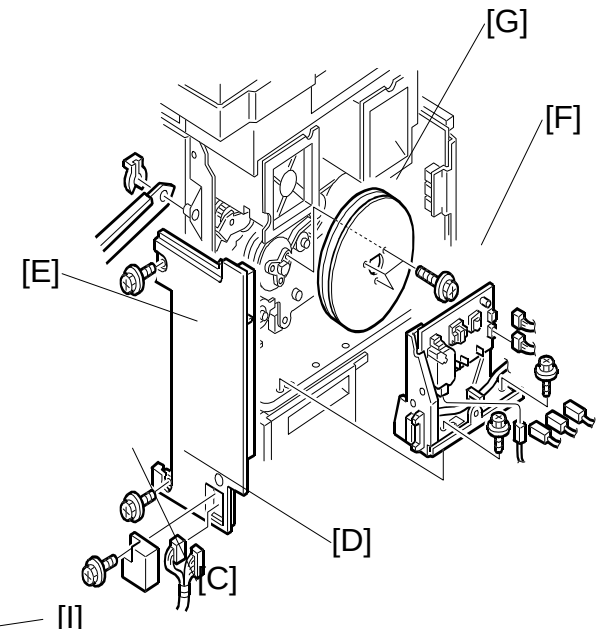

A230R905.WMF

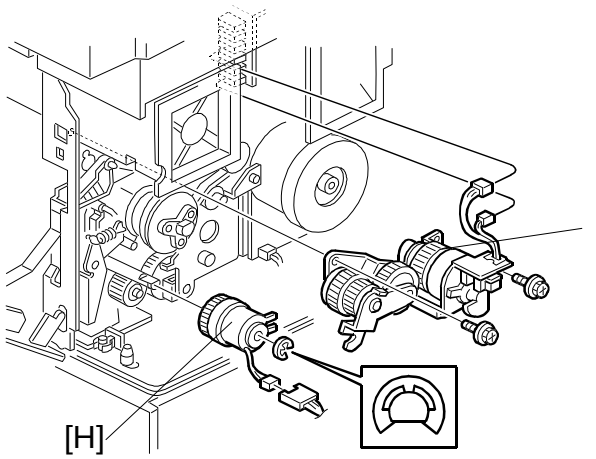

A230R906.WMF

1. Remove the connector cover [A] and rear cover [B] (4 screws).
2. **If the optional LCT has been installed:**
   Remove the harness cover [C] (1 screw) and disconnect the LCT interface harnesses [D]
3. Remove the right rear cover [E] (2 screws).
4. Remove the power pack bracket [F] (2 screws, 6 connectors).
5. Remove the flywheel [G] (3 screws).
   NOTE: One flywheel is used for NAD30S and NAD30. Two flywheels are used for NAD40.
6. Remove the registration clutch [H] (1 E-ring, 1 connector).
7. Remove the transfer belt clutch assembly [I] (2 screws, 2 connectors).

6.8.2 MAIN MOTOR

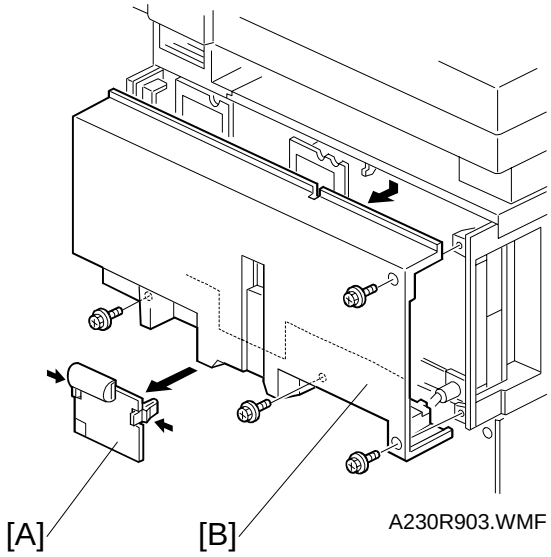

A230R903.WMF

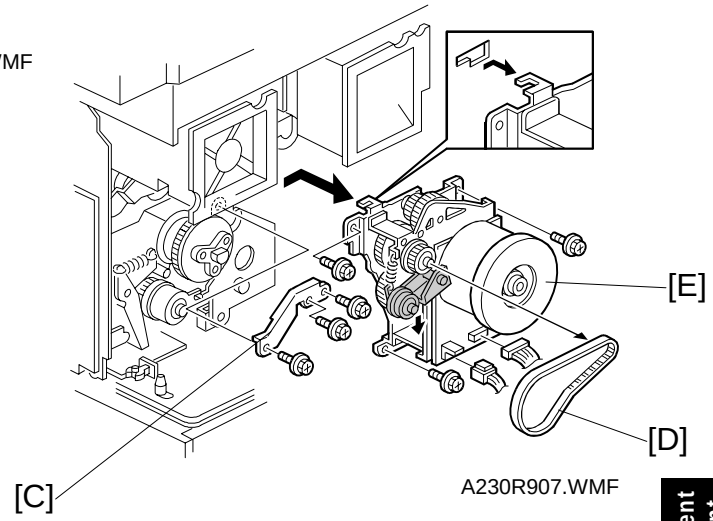

A230R907.WMF

1. Remove the connector cover [A] and rear cover [B] (4 screws).
2. Remove the power pack bracket and fly wheel. (See Registration Clutch and Transfer Belt Clutch.)
3. Remove the bracket [C] (3 screws).
4. Remove the timing belt [D].
5. Remove the main motor [E] (3 screws, 2 connectors).

6.8.3 TONER BOTTLE MOTOR

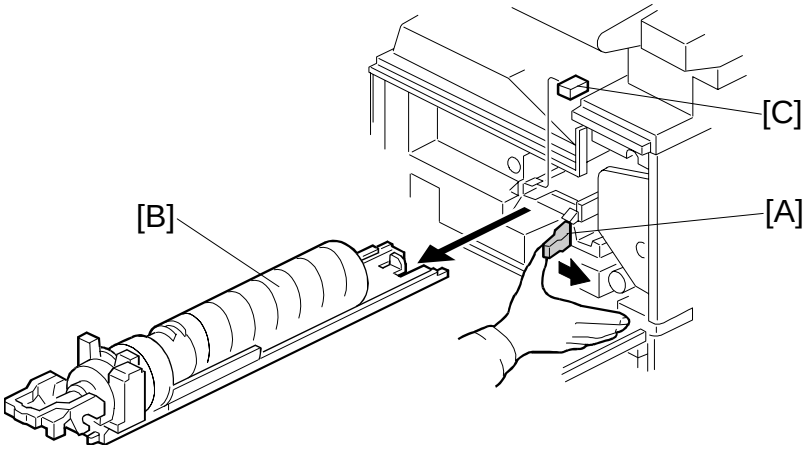

A230R921.WMF

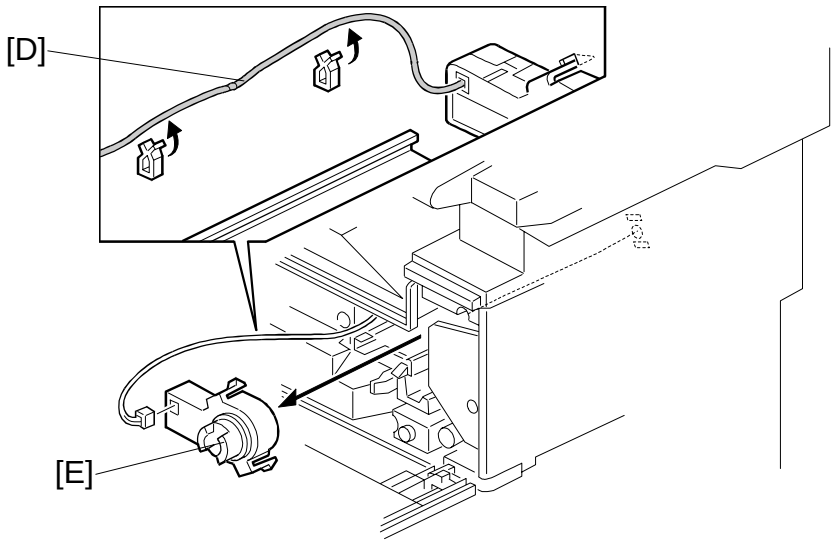

A230R922.WMF

1. Release the toner bottle holder lever [A], then slide out the toner bottle holder [B].
2. Remove the toner bottle [B].
3. Remove the holder stopper [C], then take out the toner bottle holder.
4. Remove the motor harness from two wire clamps [D].
5. Remove the toner bottle motor [E] (2 hooks).
6. Disconnect the harness from the motor.

6.9 PCBS

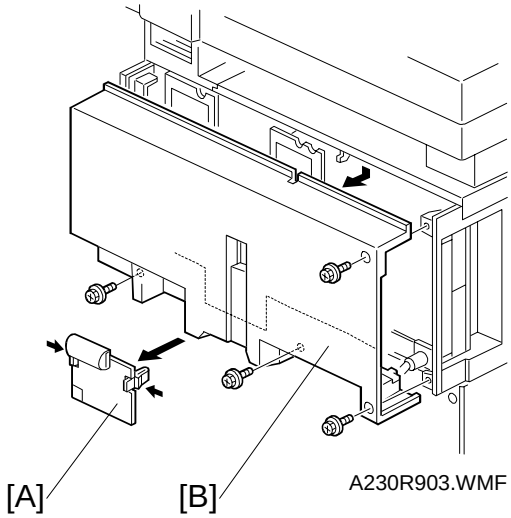

A230R903.WMF

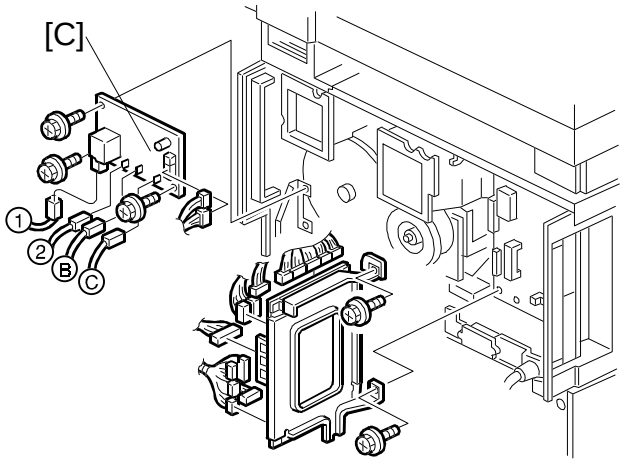

A230R904.WMF

[D]

6.9.1 POWER PACK

1. Remove the connector cover [A] and rear cover [B] (4 screws).
2. Remove the power pack [C] (3 screws, 6 connectors).

6.9.2 I/O BOARD

1. Remove the connector cover [A} and rear cover [B] (4 screws).
2. Remove the HDD unit, modular connector bracket, and expansion box, if these option units have been installed.
3. Remove the I/O board bracket [D] (2 screws, all connectors).
4. Remove the I/O board (4 screws).

NOTE: Make sure that the DIP switch settings on the new board are the same as those on the old board.

6.9.3 BICU BOARD

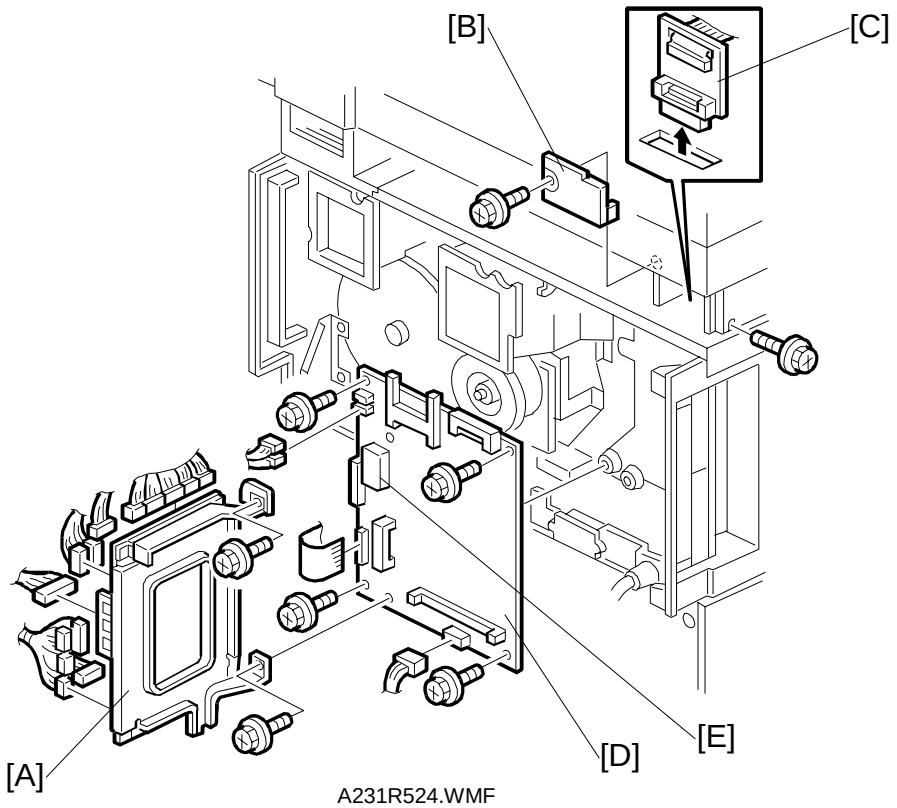

A231R524.WMF

1. Remove the I/O board bracket [A]. (See I/O Board.)
2. Remove the stand rear cover [B] (2 screws).
3. Disconnect the SIFB [C].
4. Remove the BICU board [D] (4 screws, 1 stud, all connectors).
5. Remove the NV RAM [E] from the old BICU board and install it on the new board.
6. **For 230V machines:**
   Download the appropriate language software (not needed for customers using English, German, or French). Then select the correct language with SP5-009 if necessary (switch the main power off/on after changing this SP mode).

6.9.4 PSU

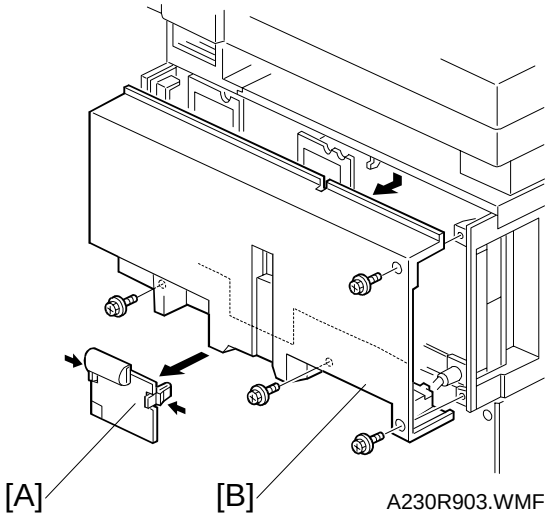

A230R903.WMF

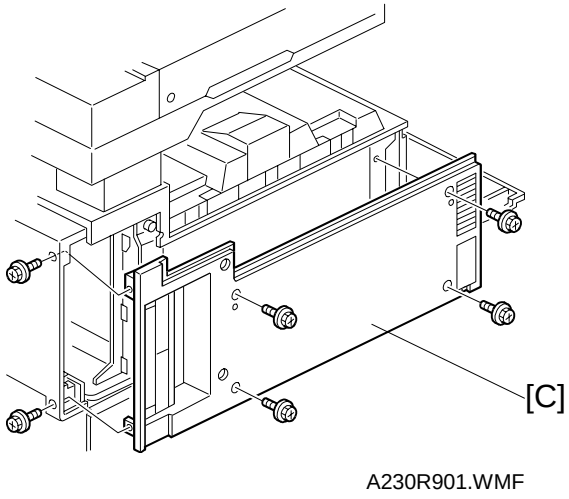

A230R901.WMF

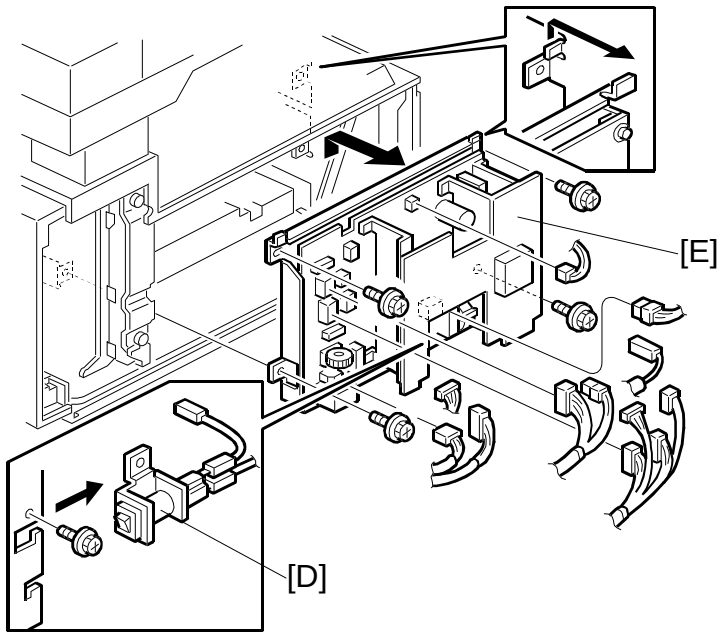

A231R517.WMF

1. Remove the connector cover [A] and rear cover [B] (4 screws).
2. Remove the left cover [C] (4 screws).
3. Remove the NCU bracket (2 screws) if the optional fax unit has been installed.
4. **For 230V machines:** Remove the circuit breaker [D] (1 screw, 1 connector).
5. Remove the PSU [E] (4 screws, all connectors).

6.10 HARD DISK

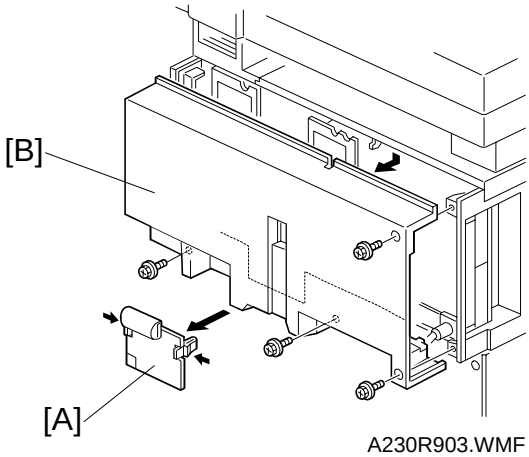

A230R903.WMF

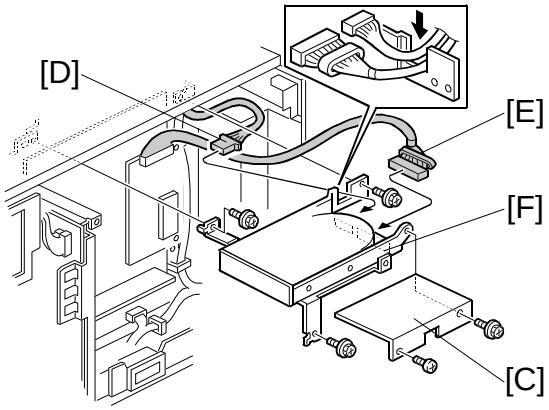

A231R522.WMF

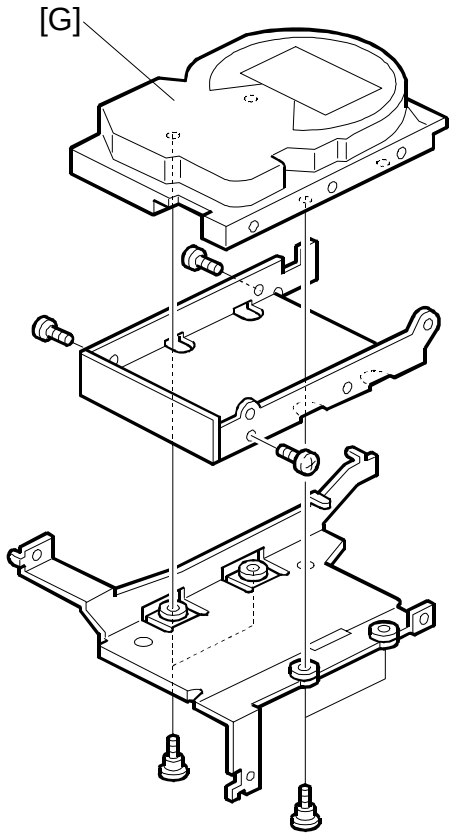

A231R523.WMF

1. Remove the connector cover [A] and rear cover [B] (4 screws).
2. Remove the modular connectors if they have been installed.
3. Remove the shield plate [C] (2 screws).
4. Disconnect the power cable [D] and harness [E].
5. Remove the HDD assembly [F] (3 screws).
6. Replace the HDD [G] (3 screws, 4 stepped screws).
   NOTE: Do not drop the HDD or shock it violently.
7. After replacing the HDD, perform SP4-911-6 “Bad Sector Information Reset”.

6.11 COPY ADJUSTMENTS: PRINTING/SCANNING

NOTE: 1) You need to perform these adjustment(s) after replacing any of the following parts:
- Scanner Wire
- Lens Block/SBU Assembly
- Scanner Drive Motor
- Polygon Mirror Motor
- Paper Side Fence
- Memory All Clear

2) For more details about accessing SP modes, refer to section 4.

6.11.1 PRINTING

NOTE: 1) Make sure the paper is installed correctly in each paper tray before you start these adjustments.
2) Use the Trimming Area Pattern (SP2-902-3, No.10) to print the test pattern for the following procedures.
3) Set SP 2-902-3 to 0 again after completing these printing adjustments.

Registration - Leading Edge/Side-to-Side

1. Check the leading edge registration, and adjust it using SP1-001.
   The specification is: 3 ± 2mm.
2. Check the side-to-side registration for each paper feed station, and adjust them using the following SP modes.

	SP mode	Specification
1st paper feed	SP1-002-1	2 ± 1.5 mm
2nd paper feed	SP1-002-2	
3rd paper feed (Optional PFU tray 1),	SP1-002-3	
4th paper feed (Optional PFU tray 2)	SP1-002-4	
Duplex	SP1-002-5	
By-pass feed	SP1-002-6	
LCT	SP1-002-7	

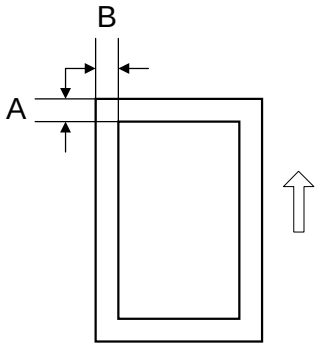

A231R506.WMF

A: Leading Edge Registration
B: Side-to-side Registration

Blank Margin

NOTE: If the leading edge/side-to-side registration can not be adjusted within the specifications, adjust the leading/left side edge blank margin.

1. Check the trailing edge and right side edge blank margins, and adjust them using the following SP modes.

	SP mode	Specification
Trailing edge	SP2-101-2	2 ± 2 mm
Right edge	SP2-101-4	2 +2.5/-1.5 mm
Leading edge	SP2-101-1	3 ± 2 mm
Left edge	SP2-101-3	2 ± 1.5 mm
Trailing edge (duplex copy, 2nd side)	SP2-101-5	2 ± 2 mm
Left edge (duplex copy, 2nd side)	SP2-101-6	2 ± 1.5 mm
Right edge (duplex copy, 2nd side)	SP2-101-7	2 +2.5/-1.5 mm

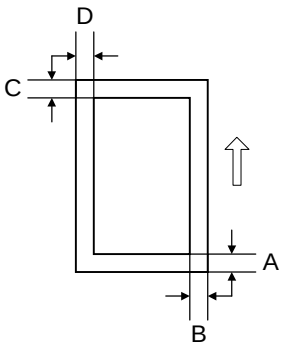

A231r507.wmf

A: Trailing Edge Blank Margin
B: Right Edge Blank Margin
C: Leading Edge Blank Margin
D: Left Edge Blank Margin

Main Scan Magnification

1. Print the single-dot grid pattern (SP2-902-3, no.5).
2. Check the magnification, and adjust the magnification using SP2-909-1 if necessary. The specification is ± 1%.

Parallelogram Image Adjustment

Do the following procedure if a parallelogram is printed while adjusting the printing registration or the printing margin using a trimming area pattern.

NOTE: The following procedure should be done after adjusting the side-to-side registration for each paper tray station.

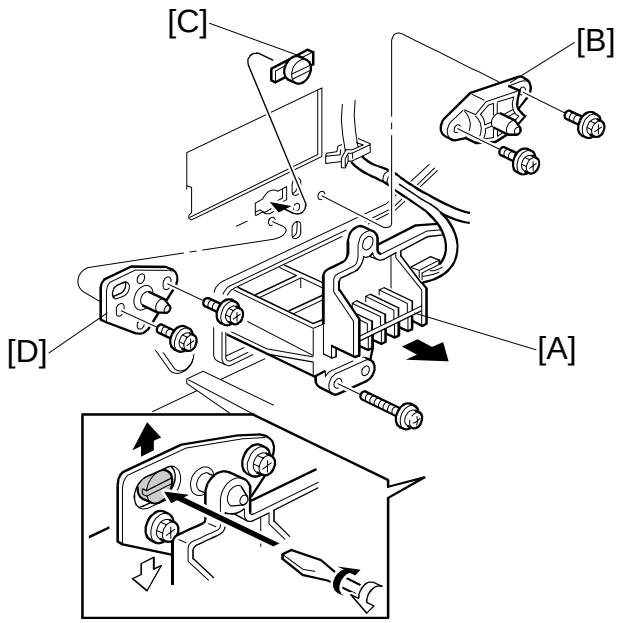

A230R207.WMF

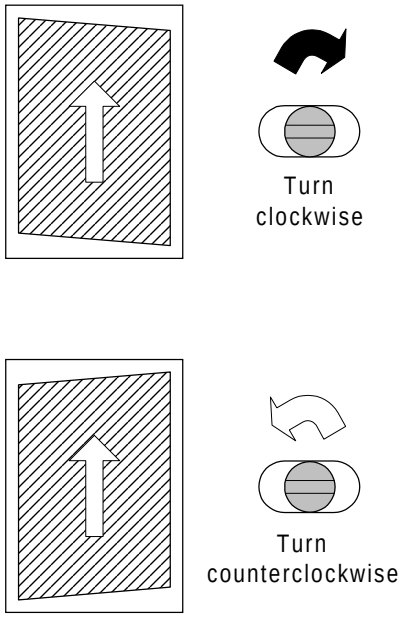

A231R515.WMF

1. Check the trimming area pattern image (SP2-902-3, No.10) whether a parallelogram image appears or not, as shown. If it appears, do the following.
2. Remove the laser unit [A] (see Replacement and Adjustment - Laser Unit).
3. Remove the bracket [B] (2 screws).
4. Install the adjusting cam [C] (P/N: A2309003).
5. Secure the adjustment bracket [D] using the two screws which were used for the bracket [B]. However, do not tighten the screws at this time.
6. Adjusts the laser unit position by turning the adjusting cam. (Refer to the above illustration for the relationship between the image and the cam rotation direction).
7. Tighten the adjustment bracket.
8. Print the trimming area pattern to check the image. If it is still the same, repeat steps 6 to 8.

6.11.2 SCANNING

NOTE: 1) Perform or check the printing registration/side-to-side adjustment and the blank margin adjustment, before doing the following scanner adjustments.
2) Use an OS-A3 test chart to perform the following adjustments.

Registration: Platen Mode

1. Place the test chart on the exposure glass and make a copy from one of the feed stations.
2. Check the leading edge and side-to-side registration, and adjust them using the following SP modes if necessary.

	SP mode
Leading Edge	SP4-010
Side-to-side	SP4-011

A: Leading Edge Registration
B: Side-to-side Registration

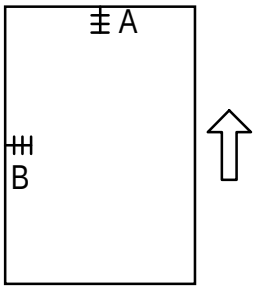

A231R508.WMF

Magnification

NOTE: Use an OS-A3 test chart to perform the following adjustment.

Sub Scan Magnification

A: Main Scan Magnification

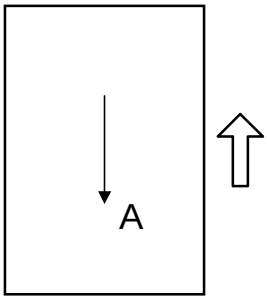

A231R510.WMF

1. Place the test chart on the exposure glass and make a copy from one of the feed stations.
2. Check the magnification ratio, and adjust it using the following SP mode if necessary. The specification is ±1%.

	SP mode
Sub Scan Magnification	SP4-008

Scanner Skew Image Adjustment

Do the following procedure if skew is caused by the scanner (not the printer) while adjusting the scanner registration and magnification.

NOTE: 1) In machines with an ADF, do the following procedure after doing all ADF image adjustments on the following page.
2) The specification is 1.2 mm / 200 mm.

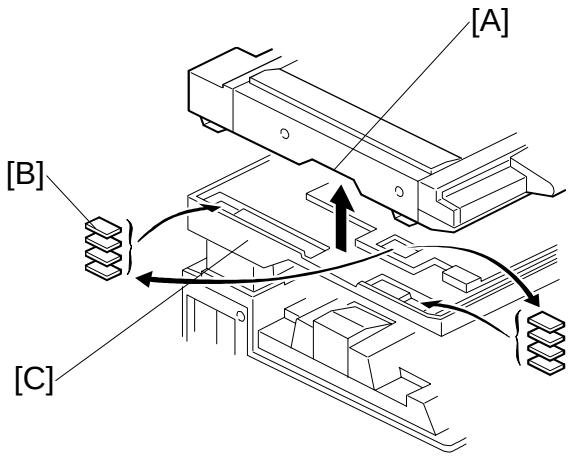

A230R114.WMF

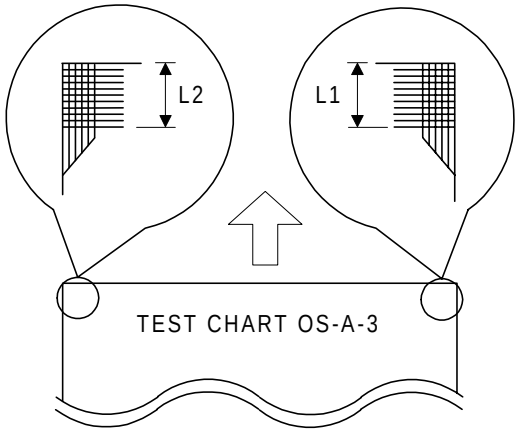

A231R516.WMF

1. Place the OS-A3 test chart on the exposure glass and make a copy from one of the feed stations.
2. Measure the distance from the leading edge of the 10th line at both upper corners on the test chart (L1 and L2 in the above right illustration).
3. If the difference between the two positions is greater than 0.3 mm, do the following steps.
4. Remove the screws that secure the scanner unit and lift up the scanner, holding the grip [A].
5. Put spacer(s) [B] at the front or rear of the scanner plate [C], depending on the skew image.
   - If the distance at the right side is longer than at the left side, add the spacer(s) to the front side of the scanner plate.
   - If the distance at the left side is longer than at the right side, add the spacer(s) to the rear side of the scanner plate.

Difference	No. of spacers
0.3 mm ~ 0.6 mm	1
0.6 mm ~ 0.8 mm	2
0.8 mm ~ 1.1 mm	3

6. Make a copy again using the test chart to check the skew.
7. If there is still some skew, redo steps 5 and 6.
8. If the skew has been corrected, secure the scanner unit (2 screws).

6.11.3 ADF IMAGE ADJUSTMENT

Registration

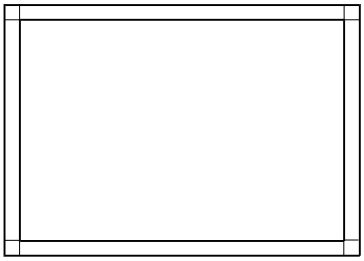

A231R511.WMF

A: Leading Edge Registration
B: Side-to-side Registration

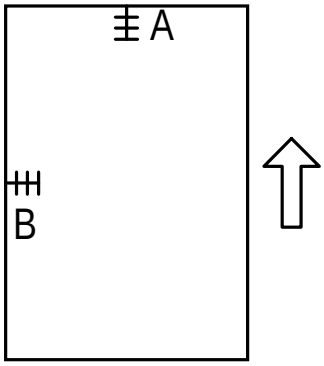

A231R508.WMF

NOTE: Make a temporary test chart as shown above using A3/DLT paper.

1. Place the temporary test chart on the ADF and make a copy from one of the feed stations.
2. Check the registration, and adjust using the following SP modes if necessary.

	SP mode
Side-to-side Registration	SP6-006-1
Leading Edge Registration (Simplex)	SP6-006-2
Leading Edge Registration (Duplex: front)	SP6-006-3
Leading Edge Registration (Duplex: rear)	SP6-006-4

7. TROUBLESHOOTING

7.1 SERVICE CALL CONDITIONS

7.1.1 SUMMARY

There are 4 levels of service call conditions.

Level	Definition	Reset Procedure
A	To prevent the machine from being damaged, the SC can only be reset by a service representative (see the note below). The copier cannot be operated at all.	Enter SP mode, then turn the main power switch off and on.
B	The SC can be reset by turning the main power switch off and on if the SC was caused by incorrect sensor detection.	Turn the operation switch or main power switch off and on. A level B' SC can only be reset by turning the main power switch off and on.
C	The copier can be operated as usual except for the unit related to the service call.	Turn the operation switch off and on.
D	The SC history is updated. The machine can be operated as usual.	The SC will not displayed. All that happens is that the SC history is updated.

NOTE: 1) If the problem concerns electrical circuit boards, first disconnect then reconnect the connectors before replacing the PCBs.
2) If the problem concerns a motor lock, first check the mechanical load before replacing motors or sensors.
3) When a Level A or B SC occurs while in an SP mode, the display does not indicate the SC number. If this occurs, check the SC number after leaving the SP mode. This does not apply to Level B' codes.

7.1.2 SC CODE DESCRIPTIONS

SC101: Exposure lamp error

- Definition - [B]

The standard white level was not detected properly when scanning the white plate.

- Possible cause -

- Exposure lamp defective
- Lamp stabilizer defective
- Exposure lamp connector defective
- Dirty standard white plate
- Dirty scanner mirror or scanner mirror out of position
- SBU board defective
- SBU connector defective
- Lens block out of position
- SIB defective

SC120: Scanner home position error 1

-Definition- [B']

The scanner home position sensor does not detect the on condition during initialization or copying.

- Possible causes -

- Scanner home position sensor defective
- Scanner drive motor defective
- SIB defective
- Scanner home position sensor connector defective
- Scanner drive motor connector defective

SC121: Scanner home position error 2

-Definition- [B']

The scanner home position sensor does not detect the off condition during initialization or copying.

- Possible causes -

- Scanner home position sensor defective
- Scanner drive motor defective
- SIB defective
- Scanner home position sensor connector defective
- Scanner drive motor connector defective

SC302: Charge roller current leak

-Definition- [B]

A charge roller current leak signal is detected.

- Possible causes -

- Charge roller damaged
- High voltage supply board defective
- Poor PCU connection

SC 304: Charge roller current correction error

-Definition- [B]

The charge roller bias correction is performed twice even if the maximum charge roller bias (-2000V) is applied to the roller.

- Possible causes –

- ID sensor defective

SC320: Polygon motor error

-Definition- [B']

The polygon motor does not reach its operating speed within 20 seconds after the polygon motor on signal, or the lock signal is still activated for more than 20 seconds after the polygon motor off signal.

- Possible causes -

- Polygon motor defective
- Poor connection between the polygon motor driver and the BICU board
- BICU board defective

SC321: No laser writing signal (F-GATE) error 1

- Definition- [B]

The laser writing signal (F-GATE) does not go to LOW for more than 15 seconds after the copy paper reaches the registration sensor.

- Possible causes -

- BICU board defective
- Poor connection of the fax controller or printer controller
- Fax controller or printer controller defective

SC322: 1st laser synchronization error

-Definition- [B']

The 1st laser synchronization signal cannot be detected by the main scan synchronization detector board even if the laser diodes are activated.

- Possible causes -

- Poor connection between the laser synchronization detector board and the LD unit.
- Laser synchronization detector board out of position
- Laser synchronization detector board defective
- LD unit defective

SC323: LD drive current over

-Definition- [B']

The LD drive board applies more than 110 mA to the LD.

- Possible causes -

- LD unit defective (not enough power, due to aging)
- Poor connection between the LD unit and the BICU board
- BICU defective

SC326: 2nd laser synchronization error

-Definition- [B']

The 2nd laser synchronization signal cannot be detected by the main scan synchronization detector board even if the laser diodes are activated.

- Possible causes -

- Poor connection between the laser synchronization detector board and the LD unit.
- Laser synchronization detector board out of position
- Laser synchronization detector board defective
- LD unit defective

SC327: LD unit home position error 1

-Definition- [B']

The LD unit home position sensor does not detect an on condition when the LD unit moves to its home position.

- Possible causes -

- LD unit home position sensor defective
- LD positioning motor defective
- LD unit movement blocked because of incorrect connector routing

SC328: LD unit home position error 2

-Definition- [B']

The LD unit home position sensor does not detect an off condition when the LD unit moves from its home position.

- Possible causes -

- LD unit home position sensor defective
- LD positioning motor defective
- LD unit movement blocked because of incorrect connector routing

SC329: Laser beam pitch adjustment error

-Definition- [B]

The LD unit home position sensor does not detect an on condition while changing the LD unit position for correcting the LD position or changing the dpi.

- Possible causes -

- The laser beam pitch adjustment (SP2-109-3 and 4) was not done after replacing the NVRAM or doing an NVRAM clear.
- The laser beam pitch adjustment (SP2-109-1 ~ 4) was not done after replacing the LD unit.
- LD unit movement blocked because of incorrect connector routing

SC350-1: ID sensor error 1

-Definition- [B]

One of the following ID sensor output voltages was detected twice consecutively when checking the ID sensor pattern.

1) Vsp $\geq$ 2.5V
2) Vsg $\leq$ 2.5V
3) Vsp = 0V
4) Vsg = 0V

- Possible causes -

- ID sensor defective
- ID sensor connector defective
- Poor ID sensor connector connection
- I/O board (IOB) defective
- High voltage supply board defective
- Dirty ID sensor
- Defect at ID sensor pattern writing area of the drum

SC350-2: ID sensor error 2

-Definition- [B]

The ID sensor output voltage is 5.0V and the PWM signal input to the ID sensor is 0 when checking the ID sensor pattern.

- Possible causes -

- ID sensor defective
- ID sensor connector defective
- Poor ID sensor connector connection
- I/O board (IOB) defective
- High voltage supply board defective
- Dirty ID sensor
- Defect at the ID sensor pattern writing area of the drum

SC350-3: ID sensor error 3

-Definition- [B]

The ID sensor pattern edge voltage is detected to be not 2.5V twice consecutively during an 800 ms interval.

- Possible causes -

- ID sensor defective
- ID sensor connector defective
- Poor ID sensor connector connection
- I/O board (IOB) defective
- High voltage supply board defective
- Dirty ID sensor
- Defect at the ID sensor pattern writing area of the drum

SC350-4: ID sensor error 4

-Definition- [B]

One of the following ID sensor output voltages is detected at ID sensor initialization.

1) Vsg < 4.0V when the maximum PWM input (255) is applied to the ID sensor.
2) Vsg ≥ 4.0V when the minimum PWM input (0) is applied to the ID sensor.

- Possible causes -

- ID sensor defective
- ID sensor connector defective
- Poor ID sensor connector connection
- I/O board (IOB) defective
- High voltage supply board defective
- Dirty ID sensor
- Defect at the ID sensor pattern writing area of the drum

SC350-5: ID sensor error 5

-Definition- [B]

Vsg falls out of the adjustment target (4.0 ± 0.2V) during Vsg checking.

- Possible causes -

- ID sensor defective
- ID sensor connector defective
- Poor ID sensor connector connection
- I/O board (IOB) defective
- High voltage supply board defective
- Dirty ID sensor
- Defect at the ID sensor pattern writing area of the drum

SC360: Hard disk drive error 1

-Definition- [B]

The machine does not detect the connection signal from the HDD.

- Possible causes -

- Poor connection between the HDD and HDD controller board
- The ac power connector to the HDD is disconnected.
- HDD defective
- HDD controller board defective
- BICU defective

SC361: Hard disk drive error 2

-Definition- [B]

The image data stored in the HDD cannot be output properly.

- Possible causes –

When this SC occurs only once, this problem will be solved after turning the main power switch off and on.

- When this SC occurs while performing SP4-911-1 (HDD media check), it can be cured by doing SP4-911-2 (HDD formatting).
- HDD defective

SC362: IMAC (image compression IC) error

-Definition- [B]

An error occurs during image processing in the IMAC, which handles image compression and image data transmission.

- Possible causes -

- BICU defective
- HDD controller board defective

SC365: Image storage address error

-Definition- [B]

The BICU receives an image data output request signal for data that is not stored in memory.

- Possible causes -

- BICU defective

SC390-1: TD sensor error 1

-Definition- [B]

The TD sensor output voltage is less than 0.5V or more than 5.0V 10 consecutively during copying.

- Possible causes -

- TD sensor abnormal
- Poor connection between the TD sensor and the I/O board (IOB)
- I/O board (IOB) defective

SC390-2: TD sensor error 2

-Definition- [B]

The TD sensor output voltage is less than 1.8V or more than 4.8V during TD sensor initial setting.

- Possible causes -

- TD sensor abnormal
- No developer in the development unit

SC391: Development bias leak

-Definition- [B]

A development bias leak signal is detected.

- Possible causes -

- Poor connection between the development bias terminal and the high voltage supply board
- High voltage supply board defective

SC401-1: Transfer roller leak error

-Definition- [B]

A transfer roller current leak signal is detected.

- Possible causes -

- High voltage supply board defective
- Poor connection between the transfer current terminal and the high voltage supply board

SC401-2: Transfer roller open error

-Definition- [B]

The transfer roller current feedback signal is not detected.

- Possible causes -

- High voltage supply board defective
- Poor connection between the transfer current terminal and the high voltage supply board
- Poor PCU connection

SC403: Transfer belt position sensor error

-Definition- [B]

The transfer belt position sensor does not activate even if the transfer belt clutch has rotated once.

- Possible causes -

- Main motor/drive malfunction
- Transfer belt position sensor defective
- Poor transfer belt position sensor connection

SC 405: Transfer belt error

-Definition- [B]

The transfer belt does not move away from the drum during ID sensor pattern checking.

- Possible causes -

- Main motor/drive malfunction
- Transfer belt position sensor defective
- Poor transfer belt position sensor connection

SC440: Main motor lock

-Definition- [B]

A main motor lock signal is not detected within 2 seconds after the main motor turns on.

- Possible causes -

- Too much load on the drive mechanism
- Main motor defective

SC490: Exhaust fan motor lock

-Definition- [B]

An exhaust fan motor lock signal is not detected within 5 seconds after the exhaust fan motor turns on.

- Possible causes -

- Too much load on the drive mechanism
- Exhaust fan motor defective
- Poor fan motor connector connection

SC492: Cooling fan motor lock

-Definition- [B]

A cooling fan motor lock signal is not detected within 5 seconds after the cooling fan motor turns on.

- Possible causes -

- Too much load on the drive mechanism
- Cooling fan motor defective
- Poor fan motor connector connection

SC493: Bridge unit cooling fan lock

-Definition- [B]

A bridge unit cooling fan motor lock signal is not detected within 5 seconds after the bridge unit cooling fan motor turns on.

- Possible causes -

- Too much load on the drive mechanism
- Bridge unit cooling fan motor defective
- Poor fan motor connector connection

SC501-1: 1st tray lift malfunction 1

-Definition- [C]

The paper upper limit sensor is not activated after the tray lift motor has been on for 10 seconds.

- Possible causes -

- 1st tray upper limit sensor defective
- Tray lift motor defective
- Poor tray lift motor connection

SC501-2: 1st tray lift malfunction 2

-Definition- [C]

If the main power switch is turned on when the paper is already at the feed height, the paper height position is detected again. At this time, the paper upper limit sensor should de-activate within 5 seconds after the paper bottom plate starts to drop. If it does not deactivate within 5 s four times consecutively, this SC will be generated.

- Possible causes -

- 1st tray upper limit sensor defective
- Tray lift motor defective
- Too much paper in the tray

SC502-1: 2nd tray lift malfunction 1

-Definition- [C]

The paper upper limit sensor is not activated after the tray lift motor has been on for 10 seconds.

- Possible causes -

- 2nd tray upper limit sensor defective
- Tray lift motor defective
- Poor tray lift motor connection

SC502-2: 2nd tray lift malfunction 2

-Definition- [C]

If the main power switch is turned on when the paper is already at the feed height, the paper height position is detected again. At this time, the paper upper limit sensor should de-activate within 5 seconds after the paper bottom plate starts to drop. If it does not deactivate within 5 s four times consecutively, this SC will be generated.

- Possible causes -

- 2nd tray upper limit sensor defective
- Tray lift motor defective
- Too much paper in the tray

SC503-1: 3rd tray lift malfunction 1 (optional paper tray unit)

-Definition- [C]

The paper upper limit sensor is not activated after the tray lift motor has been on for 13 seconds.

- Possible causes -

- 3rd tray upper limit sensor defective
- Tray lift motor defective
- Poor tray lift motor connection

SC503-2: 3rd tray lift malfunction 2 (optional paper tray unit)

-Definition- [C]

If the main power switch is turned on when the paper is already at the feed height, the paper height position is detected again. At this time, the paper upper limit sensor should de-activate within 5 seconds after the paper bottom plate starts to drop. If it does not deactivate within 5 s four times consecutively, this SC will be generated.

- Possible causes -

- 3rd tray upper limit sensor defective
- Tray lift motor defective
- Too much paper in the tray

SC504-1: 4th tray lift malfunction 1 (optional paper tray unit)

-Definition- [C]

The paper upper limit sensor is not activated after the tray lift motor has been on for 13 seconds.

- Possible causes -

- 4th tray upper limit sensor defective
- Tray lift motor defective
- Poor tray lift motor connection

SC504-2: 4th tray lift malfunction 2 (optional paper tray unit)

-Definition- [C]

If the main power switch is turned on when the paper is already at the feed height, the paper height position is detected again. At this time, the paper upper limit sensor should de-activate within 5 seconds after the paper bottom plate starts to drop. If it does not deactivate within 5 s four times consecutively, this SC will be generated.

- Possible causes -

- 4th tray upper limit sensor defective
- Tray lift motor defective
- Too much paper in the tray

SC506: Paper tray unit main motor lock (optional paper tray)

-Definition- [C]

A main motor lock signal is detected for more than 0.5 s during rotation.

- Possible causes -

- Paper tray unit main motor defective
- Too much load on the drive mechanism
- Poor motor connector connection

SC507: LCT main motor lock (optional LCT)

-Definition- [C]

A main motor lock signal is detected for more than 0.5 s during rotation.

- Possible causes -

- LCT main motor defective
- Too much load on the drive mechanism
- Poor motor connector connection

SC510-1: LCT tray malfunction 1

-Definition- [C]

1) The LCT lift sensor does not activate for more than 18 seconds after the LCT lift motor turned on.
2) The LCT lower limit sensor does not activate for more than 18 seconds after the LCT lift motor turned on.
3) The LCT lift sensor is already activated when the LCT lift motor turns on.

- Possible causes -

- LCT lift motor defective
- Pick-up solenoid defective
- Poor motor connector connection
- Poor pick-up solenoid connector connection
- Paper end sensor defective
- LCT lift sensor defective
- LCT lower limit sensor defective

SC510-2: LCT tray malfunction-2

-Definition- [C]

1) During paper lifting, the LCT lift sensor does not activate for more than 1.5 seconds after the paper end sensor turned on. If this condition occurs four times consecutively, this SC will be generated.
2) During paper lifting, after the top of the paper reaches the upper limit position, the paper is lowered until the LCT lift sensor is de-activated. At this time, the LCT lift sensor does not de-activate for more than 5 seconds.

- Possible causes -

- LCT lift motor defective
- Pick-up solenoid defective
- Poor motor connector connection
- Poor pick-up solenoid connector connection
- Paper end sensor defective
- Too much paper in the LCT
- Paper is not properly loaded in the LCT

SC541: Fusing thermistor open

-Definition- [A]

The fusing temperature detected by the thermistor was below 7°C for 16 seconds.

- Possible causes -

- Fusing thermistor defective or out of position
- Poor thermistor terminal connection

SC542: Fusing temperature warming-up error

-Definition- [A]

The fusing temperature does not reach the fusing standby temperature within 125 seconds after the main power switch is turned on.

- Possible causes -

- Fusing thermistor defective or out of position
- Fusing lamp open
- Fusing thermofuse open
- BICU defective
- Power supply board defective
- Poor fusing unit connection

SC543: Fusing overheat error 1

-Definition- [A]

A fusing temperature of over 231°C is detected for 5 seconds by the fusing thermistor.

- Possible causes -

- Fusing thermistor defective
- BICU defective
- I/O board (IOB) defective

SC545: Fusing overheat error 2

-Definition- [A]

The fusing lamp stays on at full power for 30 seconds while in the stand-by condition after warming-up is completed.

- Possible causes -

- Fusing thermistor out of position

SC546: Fusing ready temperature malfunction

-Definition- [A]

The fusing temperature goes 20 °C below or 20 °C over the stand-by temperature after warm-up is completed.

- Possible causes -

- Poor thermistor connector connection
- Poor fusing unit connection

SC547: Zero cross signal malfunction

-Definition- [A]

Zero cross signals are not detected within a certain period within 500 ms after the main power switch has been turned on.

- Possible causes -

- Power supply board defective
- Noise on the ac power line



SC548: Fusing unit installation error

- Definition - [A]

The machine cannot detect the fusing unit when the front cover and right cover are closed.

- Possible causes -

- Fusing unit is not installed
- Poor fusing unit connection

SC599: 1-bin tray motor lock (optional 1-bin tray unit)

-Definition- [C]

A 1-bin tray motor lock signal is not detected for more than 0.3 seconds during rotation.

- Possible causes -

- 1-bin tray motor defective
- Too much load on the drive mechanism
- Poor motor connector connection

SC601: Communication error between BICU and scanner unit

-Definition- [B']

The BICU cannot communicate with the BIS board properly.

- Possible causes -

- Poor connection between the SIB and SIFB boards.
- Poor connection between the SIFB and BICU boards.
- SIB board defective
- SIFB board defective
- BICU board defective

SC602: Communication error between BICU and HDD control board

-Definition- [B']

The BICU cannot communicate with the HDD control board properly.

- Possible causes -

- Poor connection between the BICU board and HDD control board
- HDD control board defective
- BICU board defective

SC620-1: Communication error between BICU and ADF 1

-Definition- [B']

The BICU cannot receive a response signal three times when a communication error has occurred.

- Possible causes -

- Poor connection between the BICU board and ADF main board
- ADF main board defective
- BICU board defective

SC620-2: Communication error between BICU and ADF 2

-Definition- [B']

The BICU receives a "Break" signal from the ADF main board.

- Possible causes -

- Poor connection between the BICU board and ADF main board
- ADF main board defective
- BICU board defective

SC620-3: Communication error between BICU and ADF 3

-Definition- [B']

The BICU sends a command to the ADF main board which does not operate an ADF function.

- Possible causes -

- Poor connection between the BICU board and the ADF main board
- ADF main board defective
- BICU board defective

SC621: Communication error between BICU and finisher

-Definition- [B']

The BICU cannot communicate with the finisher properly.

- Possible causes -

- Poor connection between the BICU board and the finisher main board
- Finisher main board defective
- BICU board defective

SC623: Communication error between BICU and paper tray unit

-Definition- [B']

The BICU cannot communicate with the paper tray unit properly.

- Possible causes -

- Poor connection between the BICU board and the paper tray unit main board
- Paper tray unit main board defective
- BICU board defective

SC624: Communication error between BICU and LCT

-Definition- [B']

The BICU cannot communicate with the LCT properly.

- Possible causes -

- Poor connection between the BICU board and the LCT main board
- LCT main board defective
- BICU board defective

SC630: CSS (RSS) communication error between line adapter and CSS center

Japan only

SC700: ADF original pick-up malfunction

-Definition- [B']

The original stopper H.P sensor does not activate three times consecutively after the pick-up motor has turned on.

- Possible causes -

- Original stopper H.P sensor defective
- Pick-up motor defective
- Timing belt out of position
- ADF main board defective

SC701: ADF original pick-up malfunction

-Definition- [B']

The original pick-up H.P sensor does not activate three times consecutively after the pick-up motor has turned on.

- Possible causes -

- Original pick-up H.P sensor defective
- Pick-up motor defective
- ADF main board defective

SC722: Finisher jogger motor error

-Definition- [B']

1) The finisher jogger H.P sensor remains de-activated for a certain time when returning to home position.
2) The finisher jogger H.P sensor remains activated for a certain time when moving away from home position.

- Possible causes -

- Jogger H.P sensor defective
- Jogger motor defective

SC724: Finisher staple hammer motor error

-Definition- [B']

Stapling does not finish for more than 600 ms after the staple hammer motor turned on.

- Possible causes -

- Staple hammer motor defective
- Staple jam

SC725: Finisher stack feed-out motor error

- Definition - [B']

The stack feed-out belt H.P sensor does not activate within a certain time after the stack feed-out motor turned on.

- Possible causes -

- Stack feed-out H.P sensor defective
- Stack feed-out motor defective

SC726: Finisher shift/lift motor error

- Definition - [B']

1) Tray shift does not finish within a certain time after the shift motor turned on.
2) The stack height sensor does not activate within a certain time after the shift tray lift motor turned on.

- Possible causes -

- Shift motor defective
- Shift tray lift motor defective

SC727: Finisher stapler rotation motor error

- Definition - [B']

1) Stapler rotation does not finish within a certain time after the staple rotation motor turned on.
2) The stapler does not return to its home position within a certain time after stapling finished.

- Possible causes -

- Stapler rotation motor defective
- Poor stapler rotation motor connection

SC729: Finisher punch motor error

- Definition - [B']

The punch H.P sensor does not activate within a certain time after the punch motor turned on.

- Possible causes -

- Punch motor defective
- Punch H.P sensor defective
- Poor punch motor connection

SC730: Finisher stapler position motor error

- Definition - [B']

1) The stapler does not return to its home position within a certain time after the stapler motor turned on.
2) The stapler H.P sensor does not activate within a certain time after the stapler motor turned on.

- Possible causes -

- Stapler motor defective
- Stapler H.P sensor defective
- Poor stapler motor connection

SC900: Electrical total counter error

-Definition- [A]

The value of the total counter has already exceeded 9,999,999

- Possible causes -

- NVRAM defective

SC951: F-gate signal error 2



-Definition- [B']

When the IPU has already received the F-gate signal, the IPU receives another F-gate signal.

- Possible causes -

- BICU defective

SC954: Printer image setting error

-Definition- [B']

The settings that are required for image processing using the printer controller are not sent from the IPU.

- Possible causes -



- Software defective

SC955: Memory setting error

-Definition- [B']

The settings that are required for image processing using the memory are not sent from the IPU.

- Possible causes -

- Software defective

SC959: Printer setting ID error

-Definition- [B']

The ID that is required for image processing using the printer is not sent from the IPU.

- Possible causes -

- Software defective

SC960: Printer return ID error

-Definition- [B']

The ID that is sent from the printer controller after finishing the printout is incorrect.

- Possible causes -

- Software defective

SC961: Printer ready ID error

-Definition- [B']

The ID that is sent from the printer controller in the printer controller printing ready condition is incorrect.

- Possible causes -

- Software defective

SC962: Memory setting ID error

-Definition- [B']

The ID that is sent from the memory when the IPU sent the memory ready signal is incorrect.

- Possible causes -

- Software defective

SC963: Memory finishing ID error

-Definition- [B']

The ID that is sent from the memory when the IPU sent the memory finish signal is incorrect.

- Possible causes -

- Software defective

SC964: Printer ready error

-Definition- [B']

The print ready signal is not generated for more than 17 seconds after the IPU received the print start signal.

- Possible causes -

- Software defective

SC980: HDD access error

-Definition- [B']

Incorrect parameter sent from the BICU to the MSU.

- Possible causes -

- Software defective
- Poor connection between BICU and MSU.

SC981: HDD response error

-Definition- [B']

The HDD control board does not generate any response when the IPU sends a read/write signal to the MSU.

- Possible causes -

- Software defective
- Poor connection between BICU and MSU
- HDD defective

SC982: HDD construction error

-Definition- [B']

1) The HDD has been installed without the electric sort kit (SIMM memory).
2) A HDD that does not have the correct specifications has been installed.

- Possible causes -

- Hard disk defective
- Incorrect hard disk type
- The electric sort kit is not installed

SC990: Software performance error

-Definition- [B']

The software performs an unexpected function.

- Possible causes -

- Software defective



When this SC occurs, the file name, address, and data will be stored in the NVRAM. These data can be checked by entering SP mode then pressing "0".

Note the above data and the situation in which this SC occurs. Then report the data and conditions to your technical control centre.

7.2 ELECTRICAL COMPONENT DEFECTS

7.2.1 SENSORS

Component (Symbol)	CN	Condition	Symptom
Scanner Home Position (S1)	505-5 (SIB)	Open	SC121 is displayed.
		Shorted	SC120 is displayed.
Platen Cover (S2)	505-8 (SIB)	Open	APS and ARE do not function properly.
		Shorted	No symptom.
Original Width (S3)	502-2,3 (SIB)	Open	The CPU cannot detect the original size properly. APS and ARE do not function correctly.
		Shorted	
Original Length-1 (S4)	502-7,8 (SIB)	Open	The CPU cannot detect the original size properly. APS and ARE do not function correctly.
		Shorted	
Original Length-2 (S5)	502-12 (SIB)	Open	The CPU cannot detect the original size properly. APS and ARE do not function correctly.
		Shorted	
LD Unit Home Position (S6)	220-2 (IOB)	Open	SC328 is displayed when the laser beam pitch is changed.
		Shorted	SC327 is displayed when the laser beam pitch is changed.
Toner Density (TD) (S7)	204-3 (IOB)	Open	The add toner indicator blinks even if there is toner in the development unit.
		Shorted	SC390-01 is displayed.
Paper Exit (S8)	203-B2 (IOB)	Open	The Paper Jam indicator will light whenever a copy is made.
		Shorted	The Paper Jam indicator lights even if there is no paper.
Registration (S9)	207-B2 (IOB)	Open	The Paper Jam indicator lights even if there is no paper.
		Shorted	The Paper Jam indicator will light whenever a copy is made.
Image Density (ID) (S10)	219-5 (IOB)	Open	SC350-03 is displayed after copying.
		Shorted	SC350-01 is displayed after copying.
Upper Paper Height (S11)	235-2 (PFB)	Open	Add Paper is displayed even if there is paper. If this condition occurred four times, SC501-02 will be displayed.
		Shorted	SC501-01 is displayed.

Component (Symbol)	CN	Condition	Symptom
Lower Paper Height (S12)	236-2 (PFB)	Open	Add Paper is displayed even if there is paper. If this condition occurred four times, SC502-02 will be displayed.
		Shorted	SC502-01 is displayed.
Upper Paper End (S13)	235-8 (PFB)	Open	The Paper End indicator lights even if paper is placed in the upper paper tray.
		Shorted	The Paper End indicator does not light even if there is no paper in the upper paper tray.
Lower Paper End (S14)	236-8 (PFB)	Open	The Paper End indicator lights even if paper is placed in the lower paper tray.
		Shorted	The Paper End indicator does not light even if there is no paper in the lower paper tray.
Upper Relay (S15)	235-5 (PFB)	Open	The Paper Jam indicator will light whenever a copy is made.
		Shorted	The Paper Jam indicator lights even if there is no paper.
Lower Relay (S16)	236-5 (PFB)	Open	The Paper Jam indicator will light whenever a copy is made.
		Shorted	The Paper Jam indicator lights even if there is no paper.
Upper Tray (S17)	239-1 (PFB)	Open	Add Paper indicated even if there is paper.
		Shorted	Add Paper indicated when the tray is set.
Lower Tray (S18)	239-3 (PFB)	Open	Add Paper indicated even if there is paper.
		Shorted	Add Paper indicated when the tray is set.
Transfer Belt Position (S19)	203-A8 (IOB)	Open	No symptom
		Shorted	SC403 is displayed

7.2.2 SWITCHES

Component (Symbol)	CN	Condition	Symptom
Right Lower Cover (SW1)	232-3 (PFB)	Open	Doors/Covers Open is displayed even if the right lower cover is closed.
		Shorted	The LCD goes blank when the lower cover is opened.
Main (SW3)	102-1~4 (PSU)	Open	The machine does not turn on.
		Shorted	The machine does not turn off.
Front Cover Safety (SW4)	219-11 (IOB)	Open	Doors/Covers Open is displayed even if the front cover is closed.
		Shorted	Doors/Covers Open is not displayed even if the front cover is opened.

7.3 BLOWN FUSE CONDITIONS

Fuse	Rating		Symptom when turning on the main power switch
	115V	210 ~ 230V	
Power Supply Board			
FU1	6.3A / 125V	6.3A / 250V	“Doors/Covers Open” is displayed
FU2	6.3A / 125V	6.3A / 250V	“Doors/Covers Open” for the finisher is displayed
FU3	4A / 125V	4A / 250V	Paper end condition
FU4	6.3A / 125V	6.3A / 250V	SC121 is displayed
FU5	6.3A / 125V	6.3A / 250V	One of SC302, or SC403, or SC405 is displayed
FU101	15A / 125V	---	No response
FU102	8A / 125V	5A / 250V	No response
FU103	2A / 125V	1A / 250V	Normal operation (optional heaters do not work)

A232 Point to Point Diagram (1/2)

Signal Table

———	AC Line
———	PC Line
- - -	Puls
◄►	Signal Direction
< >	Signal Direction
▲	Active High
▼	Active Low
[ ]	Voltage

SBU PCB6 · CN521 · CN503 · CN504 · 12V · +12V · GND · GND [0] · 5V [5]

SIB · PCB7 · PCB8 · Operation Panel · Scanner Drive · M2 · CN509 · CN451 · CN502 · CN506 · CN508 · CN569A · CN569B · CN569C · ARDF · T2 · CN501 · S3 · S4 · S5 · S2 · S1 · PCB9 · CN563 · CN565 · CN564 · CN561 · CN562 · CN505 · Original Width · Original Length-1 · Original Length-2 · Platen Cover · Scanner HP · Lamp Stabilizer · Exposure · L1

SIFB · PCB11 · CN358 · CN302 · CN507 · CN357

BICU(PCB1) · CN303(BICU) for CN401(LDB) · CN313(BICU) for CN401(LDB) · CN308 · CN304(BICU) for CN350(MB) · CN313 · CN393 · CN401 · CN312 · CN402 · CN310 · CN301 · CN109 · CN107

MSU · HDD · CN658 · Right Upper Cover · SW2 · SW4 Front Cover Safety · PCB-10 LDB · VCCD · GND · 5V [5] GND [0] · CN404 · NC406 · LSD · Laser Synchronization Detector · Polygonal Mirror · M4 · CN651 · CN601 · CN603

Mother Board · CN304 · CN350 · CN351 · FAX · CN352 · PRINTER

SPU (PCB2) · Fusing Lamp Relay [▼24] · Fusing Lamp [▲5] · Zerocross [▼4] · Door Open [▼5] · Power Switch [▼5] · ✻ Fusing Lamp 2 · ✻ 220/240V Version only · HOT · Fusing Lamp 1 · Fusing Lamp 2 · N.C. · GND [0] · +24V [24] · CN103 · CN804 · CN113 · FG · Fusing Unit · Thermistor · Unit Set [▼5] [0] · CN840 · CN715 · Finisher

IOB (PCB3) · CN208 · CN213 · A1, B1 · A25, B25 · Fusing Lamp Relay [▼24] · Fusing Lamp [▲5] · Zerocross [▼4] · Door Open [▼5] · Power Switch [▼5] · ✻ 220/240 V Version only · Static Eliminator [▼5] · CCW [▼5] · LOCK [▼5] · +24V [24] · [▼24] · GND [0] · +5V [5] · FB: Transfer Current · FB: Development Voltage · FB: Development Bias · PWM: Transfer · PWM: Development · PWM: Charger · Power Supply · Main Switch · Optics Anti-condensation · Tray Heater · Paper Tray Unit · CN217 · CN221 · CN762 · CN761 · LCT

Paper Feed Control (PCB4) · CN232 · CN234 · CN235 · CN236 · CN237 · CN238 · CN239 · CN240 · CN241 · CN242 · CN243 · Paper Tray Unit · By-pass · By-pass Paper Size: Bit 0 [▼5] · By-pass Paper Size: Bit 1 [▼5] · By-pass Paper Size: Bit 2 [▼5] · By-pass Paper Size: Bit 3 [▼5] · By-pass Pick-up Solenoid [▼24] · By-pass Paper Feed Clutch [▼24] · By-pass Tray Set [▼5] · By-pass Paper End [▲5] · Upper Tray: Up [▼24] · Upper Tray: Down [▼24] · Lower Tray: Up [▼24] · Lower Tray: Down [▼24] · Right Lower Cover Sw. · Upper Paper Amount 1 · Upper Paper Amount 2 · Lower Paper Amount 1 · Lower Paper Amount 2 · Upper Paper Height · Upper Relay · Upper Paper End · Lower Paper Height · Lower Relay · Lower Paper End · Paper Size Sensor Board · By-pass Pick-up · By-pass Feed · By-pass Paper End · Tray Lift · Upper Tray Set · Lower Tray Set · Relay · Upper Paper Feed · Lower Paper Feed

Bridge Unit · Duplex · Junction Gate · Inverter · Transport · Cover Guide · Entrance · Exit · Duplex Unit Open · CN835 · CN836 · CN834 · CN653 · CN833 · CN216 · CN254 · CN255 · CN253 · CN251 · CN252 · CN719 · CN218 · Main Board · Duplex Unit Connection · Duplex Unit Open · Cover Guide Sensor · Entrance · Exit · Junction Gate Motor · Transport Motor · Transport Motor A · Transport Motor B · Inverter Motor A · Inverter Motor B

Toner Density · S7 · M6 · Cooling Fan · CN204 · CN716 · CN713 · CN718 · CN205 · Junction Gate · SOL · Tray Exit Unit · SW · Tray Exit · CN828 · CN829 · CN830 · CN706 · CN209 · CN707 · Left Guide · Relay · Paper Limit · Right Guide · Cooling Fan · M9 · PSU Cooling · CN711 · CN722 · CO2 · Key Counter · CN212 · CN705 · 1 Bin Tray · CN214 · CN215 · CN216 · CSS1 · CSS2 · CSS3 · CN219 · L3 · Quenching · CN704 · CN826 · S10 · Image Density · CN700 · CN703 · M8 · Toner Supply · CN701 · CO1 · Total · CN908 · SW4 · Front Cover Safety · CN902 · S6 · LD Unit HP · CN900 · M5 · LD Positioning · CN820 · CN708 · CN711 · CN713 · CN712 · CN710 · M7 · Exhaust Fan · CN846 · S19 · Transfer Belt Position · CL1 · Transfer Belt · CN806 · S8 · Paper Exit · CN807 · S · Paper Limit · CN809 · CN810 · SOL · Exit Junction Gate · SOL · Duplex Junction Gate · Interchange Unit

CN503(SIB) for CN521(SBU)

1	-12V	>
2	-12V	>
3	+12V	>
4	+12V	>
5	+5V	>
6	+5V	>
7	+5V	>
8	+5V	>
9	< SOUT	>
10	XSCAN	>
11	SIN	>
12	XSLEAD	>
13	XCS	>
14	XRDSYNC	>
15	SCLK	>
16	< XOPESYNC	
17	GND	
18	GND	
19	GND	
20	GND	
21	GND	
22	GND	
23	< XCLK	
24	GND	
25	GND	
26	GND	
27	< ADE7	
28	ADO7	
29	< ADE6	
30	ADO6	
31	GND	
32	GND	
33	< ADE5	
34	ADO5	
35	< ADE4	
36	< ADO4	
37	GND	
38	GND	
39	< ADE3	
40	< ADO3	
41	< ADE2	
42	< ADO2	
43	GND	
44	GND	
45	< ADE1	
46	< ADO1	
47	< ADE0	
48	ADO0	
49	GND	
50	< SELECT	

CN303(BICU) for CN401(LDB)

1	GND		61		5VE
2	XPOR	>	62		5VE
3	GND		63	<	SD(4) >
4	GND	>	64	<	SD(5) >
5	GND		65	<	SD(6) >
6	< VDSW		66	<	SD(7) >
7	GND		67	<	SD(8) >
8	SCLK	>	68	<	SD(9) >
9	GND		69	<	SD(10) >
10	XCS	>	70	<	SD(11) >
11	ENCO(0)	>	71	<	SD(12) >
12	REFCLK	>	72	<	SD(13) >
13	GND		73	<	SD(14) >
14	XDE3	>	74	<	SD(15) >
15	GND		75		5VE
16	XDE2	>	76		5VE
17	GND		77		5VE
18	XDE1	>	78		5VE
19	GND		79		5VE
20	XDE0	>	80		MID(0)
21	GND		81		MID(1) >
22	XDO3	>	82		MID(2)
23	GND		83		MID(3)
24	XDO2	>	84		MID(4)
25	GND		85		MID(5)
26	XDO1	>	86		MID(6)
27	GND		87		MID(7)
28	XDO0	>	88		GND
29	GND		89		GND
30	SE	>	90		GND
31	IROT		91		GND
32	SO	>	92		GND
33	GND		93		GND
34	GND		94		GND
35	GND		95		GND
36	GND		96	<	XMIFGATE
37	GND		97	<	XMILSYNC
38	GND		98	<	XMFGATE
39	GND		99	<	XMLSYNC
40	GND		100	<	MOD(0)
41	MCLK 2		101		MOD(1)
42	GND		102		MOD(2)
43	XRST3TB		103		MOD(3)
44	XLFWEG		104		MOD(4)
45	XOPREG		105		MOD(5)
46	XSEOF		106		MOD(6)
47	SREQ	>	107		MOD(7)
48	XSACK		108	<	FBT_TX
49	XSOUT		109		FBT_RX >
50	SD(0)	>	110		GND
51	SD(1)	>	111	<	MPCK
52	SD(2)	>	112		GND
53	SD(3)	>	113		GND
54	GND		114		GND
55	GND		115		GND
56	GND		116		GND
57	GND		117		GND
58	GND		118		GND
59	GND		119		GND
60	GND		120		GND

CN308

1	GND		
2	D3		
3	< D4	>	
4	< D5	>	
5	< D6	>	
6	< D7	>	
7	< GND	>	
8	< A10	>	
9	< XOECRD	>	
10	< A11	>	
11	A9	>	
12	A8	>	
13	A13	>	
14	A14	>	
15	XWECRD	>	
16	N.C.	>	
17	+5VE	>	
18	N.C.		
19	A16	>	
20	A15	>	
21	A12	>	
22	A7	>	
23	< A6		
24	< A5		
25	< A4	>	
26	< A3		
27	< A2		
28	A1		
29	A0	>	
30	D0		
31	< D1		
32	D2	>	
33	NC		
34	< N.C.		
35	GND	>	
36	XCD1	>	
37	D11	>	
38	D12	>	
39	D13	>	
40	D14		
41	D15	>	
42	GND		
43	< N.C.		
44	< N.C.		
45	< N.C.		
46	< A17		
47	< A18		
48	< A19		
49	A20		
50	N.C.		
51	+5VE		
52	N.C.		
53	N.C.		
54	N.C.		
55	N.C.		
56	N.C.		
57	N.C.		
58	N.C.		
59	N.C.		
60	N.C.		
61	N.C.		
62	N.C.		
63	N.C.		
64	< D8		
65	< D9		
66	< D10		
67	< XCD2		
68	GND		

CN304(BICU) for CN350(MB)

1	GND		31	<	XRTRG
2	< XDATA_IN		32		GND
3	XOEN		33	<	XARKD7
4	< XARKD6		34	<	XARKD5
5	< XARKD4		35	<	XARKD3
6	< XARKD2		36	<	XARKD1
7	< XARKD0		37		GND
8	XFSYNC	>	38		XWRSYNC >
9	< XARFGT		39	<	XARLSYC
10	< XARLGT		40		GND
11	< XARCLK		41		GND
12	XAWKD7	>	42		XAWKD6 >
13	XAWKD5	>	43		XAWKD4 >
14	XAWKD3	>	44		XAWKD2 >
15	XAWKD1	>	45		XAWKD0 >
16	< XTRG		46	<	XPOSE_M
17	GND		47		XAWEGT >
18	XAWLSYC	>	48		XAWLGT >
19	GND		49		XAWCLK >
20	GND		50	<	RXD1
21	TXD1	>	51	<	XCTS1
22	RXRDY1	>	52	<	EX_ECU
23	XSW_ON	>	53		GND
24	GND		54	<	RCVDT4
25	TXD4	>	55		GND
26	< RCVDT3		56		TXD3 >
27	GND		57	<	RCVDT2
28	TXD2	>	58	<	XOE_A1 >
29	XOE_A0	>	59		GND
30	< RINGING		60		GND

MSU for HDD

1	X_RST-HDD	>
2	GND	
3	HDT	
4	HDT	
5	HDT	
6	HDT	
7	HDT	
8	HDT	
9	HDT	
10	HDT	
11	HDT	
12	HDT	
13	HDT	
14	HDT	
15	HDT	
16	HDT	
17	HDT	
18	HDT	
19	GND	
20	GND	
21	< DMRQ	
22	GND	
23	XDIOW	>
24	GND	
25	XDIOR	>
26	GND	
27	< IORDY	>
28	N.C.	
29	XDMACK	>
30	GND	
31	< INTRQ	
32	< XIOCS16	
33	ADDR 1	
34	N.C.	
35	ADDR 0	>
36	ADDR 2	>
37	XCS1FX	>
38	XCS3FX	>
39	N.C.	
40	GND	

MB-CN351 for FAX

1	+5V	
2	+5V	
3	+5V	
4	+5V	
5	+5VE	
6	+5VE	
7	-	
8	-	
9	RXRDY 1	>
10	< XCTS 1	
11	TXDI	>
12	< RXDI	
13	GND	
14	GND	
15	XWCLK	>
16	GND	
17	GND	
18	GND	
19	XAWLGT	>
20	GND	
21	XAWLSYC	>
22	GND	
23	XAWFGT	>
24	GND	
25	< XPOSE_M	
26	XTRG	>
27	GND	
28	GND	
29	XAWKD 0	>
30	XAWKD 1	>
31	XAWKD 2	>
32	XAWKD 3	>
33	XAWKD 4	>
34	XAWKD 5	>
35	XAWKD 6	>
36	XAWKD 7	>
37	GND	
38	GND	
39	< XARCLK	
40	GND	
41	GND	
42	GND	
43	< XARLGT	
44	< XDATA_IN	
45	< XARLSYC	
46	< XRTRG	
47	< XARFGT	
48	XSW_ON	>
49	XWRSYNC	>
50	< EX_FCU	
51	XFSYNC	>
52	< XOE1	
53	GND	
54	GND	
55	< XARKD 0	
56	< XARKD 1	
57	< XARKD 2	
58	< XARKD 3	
59	< XARKD 4	
60	< XARKD 5	
61	< XARKD 6	
62	< XARKD 7	
63	GND	
64	GND	
65	GND	
66	GND	
67	< CIS_F	>
68	< RXRDY_F	
69	RXD_F	>
70	< TXD_F	
71	-	
72	< RINGING	
73	GND	
74	GND	
75	-12V	
76	-12V	
77	+12V	
78	+12V	
79	+24V	
80	+24V	

MB-CN352 for PRINTER

A1	GND	
A2	< XARKD 6	
A3	< XARKD 4	
A4	< XARKD 2	
A5	< XARKD 0	
A6	GND	
A7	< XFSYNC	>
A8	< XWRSYNC	>
A9	< XARFGT	
A10	< XARLSYC	
A11	< XARLGT	
A12	GND	
A13	< XARCLK	
A14	GND	
A15	N.C.	
A16	N.C.	
A17	N.C.	
A18	N.C.	
A19	GND	
A20	-	
A21	N.C.	
A22	N.C.	
A23	N.C.	
A24	GND	
A25	N.C.	
A26	GND	
A27	TXD 2	>
A28	GND	
B1	< RXD_F	
B2	+5VE	
B3	+5VE	
B4	+5VE	
B5	GND	
B6	GND	
B7	< XARKD 7	
B8	< XARKD 5	
B9	< XARKD 3	
B10	< XARKD 1	
B11	GND	
B12	GND	
B13	GND	
B14	GND	
B15	N.C.	
B16	N.C.	
B17	N.C.	
B18	GND	
B19	GND	
B20	< TXD_F	
B21	GND	
B22	GND	
B23	GND	
B24	GND	
B25	GND	
B26	GND	
B27	< RXD 2	
B28	GND	
B29	TXD_F	>
B30	+5VE	
B31	+5VE	
B32	+5VE	

CN208(IOB) for CN233(PFD)

A1		N.C.	
A2	<	/Upper Paper Size: 4	
A3	<	/Upper Paper Size: 3	
A4	<	/Upper Paper Size: 2	
A5	<	/Upper Paper Size: 1	
A6	<	Upper Paper Amount: 2	
A7	<	Upper Paper Amount: 1	
A8	<	/Upper Paper Height	
A9	<	Upper Relay	
A10	<	Upper Paper End	
A11	<	/Upper Paper Feed CL	>
A12		/Upper Tray Lift Motor: Down	>
A13		/Upper Tray Lift Motor: Up	>
A14		N.C.	
A15		N.C.	
A16		N.C.	
A17		N.C.	
A18		Paper Tray Unit: GND	
A19	<	Paper Tray Unit: RXD	
A20		Paper Tray Unit: GND	
A21		Paper Tray Unit: TXD	>
A22		LCT: CLK	
A23		LCT: RXD	
A24		LCT: GND	
A25		LCT: TXD	>
B1		N.C.	
B2	<	/Lower Paper Size: 4	
B3	<	/Lower Paper Size: 3	
B4	<	/Lower Paper Size: 2	
B5	<	/Lower Paper Size: 1	
B6	<	Lower Paper Amount: 2	
B7	<	Lower Paper Amount: 1	
B8	<	Lower Paper Height	
B9	<	/Lower Relay	
B10	<	Lower Paper End	
B11		/Lower Paper Feed CL	>
B12		/Lower Tray Lift Motor: Down	>
B13		/Lower Tray Lift Motor: Up	>
B14		/Relay CL	>
B15	<	Right Lower Cover Sw.	
B16		/By-pass Paper Feed CL	>
B17		/By-pass Pick-up Sol	>
B18	<	By-pass Paper End	
B19			
B20	<	/By-pass Paper Size: Bit 0	
B21	<	/By-pass Paper Size: Bit 1	
B22	<	/By-pass Paper Size: Bit 2	
B23	<	/By-pass Paper Size: Bit 3	
B24	<	/By-pass Tray Set	
B25		N.C.	

A232 Point to Point Diagram 2/2

MB

CN351

1		VCC	Vcc-3(+5V)
2		VCC	Vcc-3(+5V)
3		VCC	Vcc-3(+5V)
4		VCC	Vcc-3(+5V)
5		VSB	Vcc-1(+5VE)
6		VSB	Vcc-1(+5VE)
7		NC	NC
8		NC	NC
9		-CTS1	RXRDY1 >
10	<	RXRDY1	-CTS1
11		RXD1	TXD1 >
12	<	TXD1	RXD1
13		CGND	COM1
14		CGND	COM1
15		XAWCLK	-AWCLK >
16		CGND	COM1
17		CGND	COM1
18		CGND	COM1
19		XAWLGT	-AWLGT >
20		CGND	COM1
21		XAWLSYC	-AWLSYC >
22		CGND	COM1
23		XAWFGT	-AWFGT >
24		CGND	COM1
25		NC	NC
26		NC	NC
27		CGND	COM1
28		CGND	COM1
29		XAWKD0	-AWKD0 >
30		XAWKD1	-AWKD1 >
31		XAWKD2	-AWKD2 >
32		XAWKD3	-AWKD3 >
33		XAWKD4	-AWKD4 >
34		XAWKD5	-AWKD5 >
35		XAWKD6	-AWKD6 >
36		XAWKD7	-AWKD7 >
37		CGND	COM1
38		CGND	COM1
39	<	XARCLK	-ARCLK
40		CGND	COM1
41		CGND	COM1
42		CGND	COM1
43	<	XARLGT	-ARLGT
44		NC	NC
45	<	XARLSYC	-ARLSYC
46		NC	NC
47	<	XARFGT	-ARFGT
48		NC	NC
49		XWRSYNC	-WRSYNC >
50	<	EX_FCU	EX_FCU
51		XFSYNC	-FSYNC0 >
52		XOE1	-OE1 >
53		CGND	COM1
54		CGND	COM1
55	<	XARKD0	-ARKD0
56	<	XARKD1	-ARKD1
57	<	XARKD2	-ARKD2 >
58	<	XARKD3	-ARKD3
59	<	XARKD4	-ARKD4 >
60	<	XARKD5	-ARKD5
61	<	XARKD6	-ARKD6
62	<	XARKD7	-ARKD7
63		CGND	COM1
64		CGND	COM1
65		CGND	COM1
66		CGND	COM1
67		XCTS_F	-UCTS3
68	<	RXRDY_F	-URTS3
69		RXD_F	URXD3 >
70	<	TXD_F	-TXD3
71		NC	NC
72	<	RINGING	-RTRG
73		CGND	COM1
74		CGND	COM1
75		VCB(-12V)	VCB(-12V)
76		VCB(-12V)	VCB(-12V)
77		VCA(+12V)	VCA(+12V)
78		VCA(+12V)	VCA(+12V)
79		VAA(+24V)	VAA(+24V)
80		VAA(+24V)	VAA(+24V)

CN321

1		VCC	Vcc-3(+5V)
2		VCC	Vcc-3(+5V)
3		VCC	Vcc-3(+5V)
4		VCC	Vcc-3(+5V)
5		VSB	Vcc-1(+5VE)
6		VSB	Vcc-1(+5VE)
7		NC	NC
8		NC	NC
9		-CTS1	RXRDY1 >
10	<	RXRDY1	-CTS1
11		RXD1	TXD1 >
12	<	TXD1	RXD1
13		CGND	COM1
14		CGND	COM1
15		XAWCLK	-AWCLK >
16		CGND	COM1
17		CGND	COM1
18		CGND	COM1
19		XAWLGT	-AWLGT >
20		CGND	COM1
21		XAWLSYC	-AWLSYC >
22		CGND	COM1
23		XAWFGT	-AWFGT >
24		CGND	COM1
25		NC	NC
26		NC	NC
27		CGND	COM1
28		CGND	COM1
29		XAWKD0	-AWKD0 >
30		XAWKD1	-AWKD1 >
31		XAWKD2	-AWKD2 >
32		XAWKD3	-AWKD3 >
33		XAWKD4	-AWKD4 >
34		XAWKD5	-AWKD5 >
35		XAWKD6	-AWKD6 >
36		XAWKD7	-AWKD7 >
37		CGND	COM1
38		CGND	COM1
39	<	XARCLK	-ARCLK
40		CGND	COM1
41		CGND	COM1
42		CGND	COM1
43	<	XARLGT	-ARLGT
44		NC	NC
45	<	XARLSYC	-ARLSYC
46		NC	NC
47	<	XARFGT	-ARFGT
48		NC	NC
49		XWRSYNC	-WRSYNC >
50	<	EX_FCU	EX_FCU
51		XFSYNC	-FSYNC0 >
52		XOE1	-OE1 >
53		CGND	COM1
54		CGND	COM1
55	<	XARKD0	-ARKD0
56	<	XARKD1	-ARKD1
57	<	XARKD2	-ARKD2 >
58	<	XARKD3	-ARKD3
59	<	XARKD4	-ARKD4 >
60	<	XARKD5	-ARKD5
61	<	XARKD6	-ARKD6
62	<	XARKD7	-ARKD7
63		CGND	COM1
64		CGND	COM1
65		CGND	COM1
66		CGND	COM1
67		XCTS_F	-UCTS3
68	<	RXRDY_F	-URTS3
69		RXD_F	URXD3 >
70	<	TXD_F	-TXD3
71		NC	NC
72	<	RINGING	-RTRG
73		CGND	COM1
74		CGND	COM1
75		VCB(-12V)	VCB(-12V)
76		VCB(-12V)	VCB(-12V)
77		VCA(+12V)	VCA(+12V)
78		VCA(+12V)	VCA(+12V)
79		VAA(+24V)	VAA(+24V)
80		VAA(+24V)	VAA(+24V)

PMU

CN323

1		COM1	COM1
2		COM1	COM1
3		PGA10	PGA10 >
4		PGA9	PGA9 >
5		PGA8	PGA8 >
6		PGA7	PGA7 >
7		PGA6	PGA6 >
8		PGA5	PGA5 >
9		PGA4	PGA4 >
10		PGA3	PGA3 >
11		PGA2	PGA2 >
12		PGA1	PGA1 >
13		COM1	COM1
14	<	PGD15	PGD15 >
15	<	PGD14	PGD14 >
16	<	PGD13	PGD13 >
17	<	PGD12	PGD12 >
18	<	PGD11	PGD11 >
19	<	PGD10	PGD10 >
20	<	PGD9	PGD9 >
21	<	PGD8	PGD8 >
22		+5V	+5V
23	<	PGD6	PGD6 >
24	<	PGD7	PGD7 >
25	<	PGD4	PGD4 >
26	<	PGD5	PGD5 >
27	<	PGD2	PGD2 >
28	<	PGD3	PGD3 >
29	<	PGD0	PGD0 >
30	<	PGD1	PGD1 >
31		COM1	COM1
32		-PGRAS5	-PGRAS5 >
33		-PGCASU	-PGCASU >
34		-PGCASL	-PGCASL >
35		-PGWRL	-PGWRL >
36		-PGRD	-PGRD >
37	<	BCD1	BCD1
38		-DACK14	-DACK14
39		-DRQ14	-DRQ14
40		-DACK16	-DACK16
41		-DRQ14	-DRQ14
42		-DRQ16	-DRQ16
43		COM1	COM1
44	<	DCRSL	DCRSL
45		JBIGSL	JBIGSL >
46		-DACK15	-DACK15 >
47		-DACK13	-DACK13 >
48		-JBIGCS	-JBIGCS >
49		DMA8	DMA8 >
50		DMA7	DMA7 >
51		DMA3	DMA3 >
52		DMA2	DMA2 >
53		DMA1	DMA1 >
54		-DIOWR	-DIOWR >
55		-DIORD	-DIORD >
56		JRESET	JRESET >
57		COM1	COM1
58	<	DMD15	DMD15 >
59	<	DMD14	DMD14 >
60	<	DMD13	DMD13 >
61	<	DMD12	DMD12 >
62	<	DMD11	DMD11 >
63	<	DMD10	DMD10 >
64	<	DMD9	DMD9 >
65	<	DMD8	DMD8 >
66	<	DMD7	DMD7 >
67	<	DMD6	DMD6 >
68	<	DMD5	DMD5 >
69	<	DMD4	DMD4 >
70	<	DMD3	DMD3 >
71	<	DMD2	DMD2 >
72	<	DMD1	DMD1 >
73	<	DMD0	DMD0 >
74		+5V	+5V
75		+5V	+5V
76	<	-DRQ13	-DRQ13
77	<	-DRQ15	-DRQ15
78	<	-INTJBIG	-INTJBIG
79		COM1	COM1
80		COM1	COM1

CN333

1		COM1	COM1
2		COM1	COM1
3		PGA10	PGA10 >
4		PGA9	PGA9 >
5		PGA8	PGA8 >
6		PGA7	PGA7 >
7		PGA6	PGA6 >
8		PGA5	PGA5 >
9		PGA4	PGA4 >
10		PGA3	PGA3 >
11		PGA2	PGA2 >
12		PGA1	PGA1 >
13		COM1	COM1
14	<	PGD15	PGD15 >
15	<	PGD14	PGD14 >
16	<	PGD13	PGD13 >
17	<	PGD12	PGD12 >
18	<	PGD11	PGD11 >
19	<	PGD10	PGD10 >
20	<	PGD9	PGD9 >
21	<	PGD8	PGD8 >
22		+5V	+5V
23	<	PGD6	PGD6 >
24	<	PGD7	PGD7 >
25	<	PGD4	PGD4 >
26	<	PGD5	PGD5 >
27	<	PGD2	PGD2 >
28	<	PGD3	PGD3 >
29	<	PGD0	PGD0 >
30	<	PGD1	PGD1 >
31		COM1	COM1
32		-PGRAS5	-PGRAS5 >
33		-PGCASU	-PGCASU >
34		-PGCASL	-PGCASL >
35		-PGWRL	-PGWRL >
36		-PGRD	-PGRD >
37	<	BCD1	BCD1
38		-DACK14	-DACK14
39		-DRQ14	-DRQ14
40		-DACK16	-DACK16
41		-DRQ14	-DRQ14
42		-DRQ16	-DRQ16
43		COM1	COM1
44	<	DCRSL	DCRSL
45		JBIGSL	JBIGSL >
46		-DACK15	-DACK15 >
47		-DACK13	-DACK13 >
48		-JBIGCS	-JBIGCS >
49		DMA8	DMA8 >
50		DMA7	DMA7 >
51		DMA3	DMA3 >
52		DMA2	DMA2 >
53		DMA1	DMA1 >
54		-DIOWR	-DIOWR >
55		-DIORD	-DIORD >
56		JRESET	JRESET >
57		COM1	COM1
58	<	DMD15	DMD15 >
59	<	DMD14	DMD14 >
60	<	DMD13	DMD13 >
61	<	DMD12	DMD12 >
62	<	DMD11	DMD11 >
63	<	DMD10	DMD10 >
64	<	DMD9	DMD9 >
65	<	DMD8	DMD8 >
66	<	DMD7	DMD7 >
67	<	DMD6	DMD6 >
68	<	DMD5	DMD5 >
69	<	DMD4	DMD4 >
70	<	DMD3	DMD3 >
71	<	DMD2	DMD2 >
72	<	DMD1	DMD1 >
73	<	DMD0	DMD0 >
74		+5V	+5V
75		+5V	+5V
76	<	-DRQ13	-DRQ13
77	<	-DRQ15	-DRQ15
78	<	-INTJBIG	-INTJBIG
79		COM1	COM1
80		COM1	COM1

FCU

CN322

1		GND	COM1
2	<	D3	CPD3 >
3	<	D4	CPD4 >
4	<	D5	CPD5 >
5	<	D6	CPD6 >
6	<	D7	CPD7 >
7	<	-CE1/SCDFROM	-CROMCS0
8	<	A10	CPA10
9	<	-OE/SMRD	-MRD
10	<	A11	CPA11
11	<	A9	CPA9
12	<	A8	CPA8
13	<	A13	CPA13
14	<	A14	CPA14
15	<	-WE/SMWRL	-MWRLZ
16		NC/RDY,BSY	-BSY >
17		Vcc	+5V
18		NC/VPP	+12V
19	<	A16	CPA16
20	<	A15	CPA15
21	<	A12	CPA12
22	<	A7	CPA7
23	<	A6	CPA6
24	<	A5	CPA5
25	<	A4	CPA4
26	<	A3	CPA3
27	<	A2	CPA2
28	<	A1	CPA1
29	<	NC/A0	CPA0
30	<	D0	CPD0 >
31	<	D1	CPD1 >
32	<	D2	CPD2 >
33	<	RTCCS	RTCCS >
34		GND	COM1
35		GND	COM1
36		-CD1	CD1 >
37	<	D11	CPD11 >
38	<	D12	CPD12 >
39	<	D13	CPD13 >
40	<	D14	CPD14 >
41	<	D15	CPD15 >
42	<	-CE2/SCDSRAM	-CRAMCS0
43		NC	NC
44	<	NC/SFROMCS	-FROMCS >
45		NC/SSRAMCS	NC
46	<	A17	CPA17
47	<	A18	CPA18
48	<	A19	CPA19
49	<	A20	CPA20
50		NC/1SRAMCS	RAMCS >
51		Vcc	+5V
52		VCA	+12V
53		NC	NC
54		NC	NC
55		NC	-WP >
56		NC	-BYTE >
57		NC	NC
58	<	-MWRH	-MWRH
59		NC/SEXCARD	-EXCARD >
60	<	NC/SSLEEP	-SLEEP
61	<	-VPCNTD	-VPCNT0
62	<	-SLEEP	-SLEEP
63		BVD1/SCSCNT	-CSCNT >
64	<	D8	CPD8 >
65	<	D9	CPD9 >
66	<	D10	CPD10 >
67		-CD2	CD2 >
68		GND	COM1

CN324

1		COM1	COM1
2		COM1	COM1
3		CPA18	CPA18 >
4		CPA17	CPA17 >
5		CPA16	CPA16 >
6		CPA15	CPA15 >
7		CPA14	CPA14 >
8		CPA13	CPA13 >
9		CPA12	CPA12 >
10		CPA11	CPA11 >
11		+5V	+5V
12		+5V	+5V
13		COM1	COM1
14		COM1	COM1
15		CPA10	CPA10 >
16		CPA9	CPA9 >
17		CPA8	CPA8 >
18		CPA7	CPA7 >
19		CPA6	CPA6 >
20		CPA5	CPA5 >
21		CPA4	CPA4 >
22		CPA3	CPA3 >
23		CPA2	CPA2 >
24		CPA1	CPA1 >
25		CPA0	CPA0 >
26		COM1	COM1
27		COM1	COM1
28	<	CPD7	CPD7 >
29	<	CPD6	CPD6 >
30	<	CPD5	CPD5 >
31	<	CPD4	CPD4 >
32	<	CPD3	CPD3 >
33	<	CPD2	CPD2 >
34	<	CPD1	CPD1 >
35	<	CPD0	CPD0 >
36		+5V	+5V
37		+5V	+5V
38		-DRAMCS	-DRAMCS >
39		-MRD	-MRD >
40		-MWRLZ	-MWRLZ >
41		-DROMCS	-DROMCS >
42		COM1	COM1
43		COM1	COM1
44		-DIORD	-DIORD >
45		-DIOWR	-DIOWR >
46		-RESET	-RESET >
47		-HDDCS	-HDDCS >
48		-DAKHDD	-DAKHDD >
49	<	-INTHDD	-INTHDD
50	<	-CDSET	-CDSET
51		NC	NC
52		NC	NC
53		COM1	COM1
54		COM1	COM1
55		DMA10	DMA10 >
56		DMA9	DMA9 >
57		DMA8	DMA8 >
58		DMA7	DMA7 >
59		DMA6	DMA6 >
60		DMA5	DMA5 >
61		DMA4	DMA4 >
62		DMA3	DMA3 >
63		DMA2	DMA2 >
64		DMA1	DMA1 >
65		COM1	COM1
66		COM1	COM1
67	<	DMD15	DMD15 >
68	<	DMD14	DMD14 >
69	<	DMD13	DMD13 >
70	<	DMD12	DMD12 >
71	<	DMD11	DMD11 >
72	<	DMD10	DMD10 >
73	<	DMD9	DMD9 >
74	<	DMD8	DMD8 >
75		COM1	COM1
76		+5VD	+5VD
77		+5VD	+5VD
78	<	DMD7	DMD7 >
79	<	DMD6	DMD6 >
80	<	DMD5	DMD5 >
81	<	DMD4	DMD4 >
82	<	DMD3	DMD3 >
83	<	DMD2	DMD2 >
84	<	DMD1	DMD1 >
85	<	DMD0	DMD0 >
86		COM1	COM1
87		-DMRAS2	-DMRAS2 >
88		-DMRAS3	-DMRAS3 >
89		-DCASU	-DCASU >
90		-DCASL	-DCASL >
91		-DMWR	-DMWR >
92		-DMRD	-DMRD >
93	<	BCD3	BCD3
94	<	BCD2	BCD2
95		NC	NC
96		+5VD	+5VD
97		+5VD	+5VD
98		NC	NC
99		COM1	COM1
100		COM1	COM1

CN325

1		VTXMDM	VTXMDM >
2	<	VRXMDM	VRXMDM
3		COM1	COM1
4		-12V	-12V
5		-G4CS	-G4CS >
6		-RESET	-RESET >
7		COM1	COM1
8	<	-INTG4	-INTG4
9	<	-CWAIT	-CWAIT
10		-CODCCS	-CODCCS >
11		CPA14	CPA14 >
12		CPA13	CPA13 >
13		CPA12	CPA12 >
14		CPA10	CPA10 >
15		CPA9	CPA9 >
16		CPA8	CPA8 >
17		CPA7	CPA7 >
18		CPA6	CPA6 >
19		CPA5	CPA5 >
20		CPA4	CPA4 >
21		CPA3	CPA3 >
22		CPA2	CPA2 >
23		CPA1	CPA1 >
24		CPA0	CPA0 >
25		COM1	COM1
26		COM1	COM1
27	<	CPD6	CPD6 >
28	<	CPD7	CPD7 >
29	<	CPD4	CPD4 >
30	<	CPD5	CPD5 >
31	<	CPD2	CPD2 >
32	<	CPD3	CPD3 >
33	<	CPD0	CPD0 >
34	<	CPD1	CPD1 >
35		NC	NC
36		NC	NC
37		COM1	COM1
38		+24V	+24V
39		COM1	COM1
40		+24V	+24V
41		NC	NC
42		+5V	+5V
43		+5V	+5V
44		COM1	COM1
45		COM1	COM1
46		COM1	COM1
47		COM1	COM1
48		+12V	+12V
49		+12V	+12V
50		NC	NC

Flash Memory Card

CN326

1		GND	COM1
2	<	D3	CPD3 >
3	<	D4	CPD4 >
4	<	D5	CPD5 >
5	<	D6	CPD6 >
6	<	D7	CPD7 >
7	<	-CE1/SCDFROM	-CROMCS0
8	<	A10	CPA10
9	<	-OE/SMRD	-MRD
10	<	A11	CPA11
11	<	A9	CPA9
12	<	A8	CPA8
13	<	A13	CPA13
14	<	A14	CPA14
15	<	-WE/SMWRL	-MWRLZ
16		NC/RDY,BSY	-BSY >
17		Vcc	+5V
18		NC/VPP	+12V
19	<	A16	CPA16
20	<	A15	CPA15
21	<	A12	CPA12
22	<	A7	CPA7
23	<	A6	CPA6
24	<	A5	CPA5
25	<	A4	CPA4
26	<	A3	CPA3
27	<	A2	CPA2
28	<	A1	CPA1
29	<	NC/A0	CPA0
30	<	D0	CPD0 >
31	<	D1	CPD1 >
32	<	D2	CPD2 >
33	<	RTCCS	RTCCS >
34		GND	COM1
35		GND	COM1
36		-CD1	CD1 >
37	<	D11	CPD11 >
38	<	D12	CPD12 >
39	<	D13	CPD13 >
40	<	D14	CPD14 >
41	<	D15	CPD15 >
42	<	-CE2/SCDSRAM	-CRAMCS0
43		NC	NC
44	<	NC/SFROMCS	-FROMCS >
45		NC/SSRAMCS	NC
46	<	A17	CPA17
47	<	A18	CPA18
48	<	A19	CPA19
49	<	A20	CPA20
50		NC/1SRAMCS	RAMCS >
51		Vcc	+5V
52		VCA	+12V
53		NC	NC
54		NC	NC
55		NC	-WP >
56		NC	-BYTE >
57		NC	NC
58	<	-MWRH	-MWRH
59		NC/SEXCARD	-EXCARD >
60	<	NC/SSLEEP	-SLEEP
61	<	-VPCNTD	-VPCNT0
62	<	-SLEEP	-SLEEP
63		BVD1/SCSCNT	-CSCNT >
64	<	D8	CPD8 >
65	<	D9	CPD9 >
66	<	D10	CPD10 >
67		-CD2	CD2 >
68		GND	COM1

TR29

CN336

(DOM=NONE)

CN326

1	<	UDTR3	-UDTR3
2	<	URTS	-URTS
3	<	TXD	-TXD
4		URXD	URXD >
5		UDCD	-UDCD3 >
6		URI	-URI3
7	<	UDSR3	-UDSR3 >
8		UCTS	-UCTS >
9		+5V	+5V
10		+5V	+5V
11		COM1	COM1
12		COM1	COM1

NCU

CN4

(EU=CN1)

CN328

15		+24VN	+24VN
14		COM3	COM1
13	<	RINGP1(NA=NC,EU=RSEL)	RINGPL
12	<	RNGP0(NA,EU=NC)	RNGVCK
11	<	RIDETSW(NA=NC,EU=DOSW)	RIDET
10	<	CMLSW	CMLSW
9	<	OHDISW	OHDISW
8		COM1	COM1
7		EXTDI(EU=NC)	-EXTDI >
6		HOOK1	-HOOK1 >
5		HOOK0	-HOOK0 >
4		EXRING	-EXRING1 >
3		COM2	COM2
2		RITONE(NA,EU=NC)	RITONE >
1	<	TRXD	TRXD >

CN2

(DOM,NA=NONE)

CN329

5	<	CSELL1	CSELL1
4		CSELL0	CSELL0 >
3	<	GSSW	GSSW
2		+5VE	+5VE
1		+5VE	+5VE

Speaker

CN330

1	<	MONSP	MONSP
2		COM1	COM1

Debug Monitor

CN331

1		DBRXD	DBRXD >
2		COM1	COM1
3	<	DBTXD	DBTXD

ASAP Monitor

CN332

1		RXD1	RXD1 >
2		COM1	COM1
3	<	TXD1	TXD1

EXSAF

CN334

1		COM1	COM1
2		COM1	COM1
3		CPA18	CPA18 >
4		CPA17	CPA17 >
5		CPA16	CPA16 >
6		CPA15	CPA15 >
7		CPA14	CPA14 >
8		CPA13	CPA13 >
9		CPA12	CPA12 >
10		CPA11	CPA11 >
11		+5V	+5V
12		+5V	+5V
13		COM1	COM1
14		COM1	COM1
15		CPA10	CPA10 >
16		CPA9	CPA9 >
17		CPA8	CPA8 >
18		CPA7	CPA7 >
19		CPA6	CPA6 >
20		CPA5	CPA5 >
21		CPA4	CPA4 >
22		CPA3	CPA3 >
23		CPA2	CPA2 >
24		CPA1	CPA1 >
25		CPA0	CPA0 >
26		COM1	COM1
27		COM1	COM1
28	<	CPD7	CPD7 >
29	<	CPD6	CPD6 >
30	<	CPD5	CPD5 >
31	<	CPD4	CPD4 >
32	<	CPD3	CPD3 >
33	<	CPD2	CPD2 >
34	<	CPD1	CPD1 >
35	<	CPD0	CPD0 >
36		+5V	+5V
37		+5V	+5V
38		-DRAMCS	-DRAMCS >
39		-MRD	-MRD >
40		-MWRLZ	-MWRLZ >
41		-DROMCS	-DROMCS >
42		COM1	COM1
43		COM1	COM1
44		-DIORD	-DIORD >
45		-DIOWR	-DIOWR >
46		-RESET	-RESET >
47		-HDDCS	-HDDCS >
48		-DAKHDD	-DAKHDD >
49	<	-INTHDD	-INTHDD
50	<	-CDSET	-CDSET
51		NC	NC
52		NC	NC
53		COM1	COM1
54		COM1	COM1
55		DMA10	DMA10 >
56		DMA9	DMA9 >
57		DMA8	DMA8 >
58		DMA7	DMA7 >
59		DMA6	DMA6 >
60		DMA5	DMA5 >
61		DMA4	DMA4 >
62		DMA3	DMA3 >
63		DMA2	DMA2 >
64		DMA1	DMA1 >
65		COM1	COM1
66		COM1	COM1
67	<	DMD15	DMD15 >
68	<	DMD14	DMD14 >
69	<	DMD13	DMD13 >
70	<	DMD12	DMD12 >
71	<	DMD11	DMD11 >
72	<	DMD10	DMD10 >
73	<	DMD9	DMD9 >
74	<	DMD8	DMD8 >
75		COM1	COM1
76		+5VD	+5VD
77		+5VD	+5VD
78	<	DMD7	DMD7 >
79	<	DMD6	DMD6 >
80	<	DMD5	DMD5 >
81	<	DMD4	DMD4 >
82	<	DMD3	DMD3 >
83	<	DMD2	DMD2 >
84	<	DMD1	DMD1 >
85	<	DMD0	DMD0 >
86		COM1	COM1
87		-DMRAS2	-DMRAS2 >
88		-DMRAS3	-DMRAS3 >
89		-DCASU	-DCASU >
90		-DCASL	-DCASL >
91		-DMWR	-DMWR >
92		-DMRD	-DMRD >
93	<	BCD3	BCD3
94	<	BCD2	BCD2
95		NC	NC
96		+5VD	+5VD
97		+5VD	+5VD
98		NC	NC
99		COM1	COM1
100		COM1	COM1

CN335

1		-RESET	-RESET >
2		COM1	GND
3	<	DMD7	D7 >
4	<	DMD8	D8 >
5	<	DMD6	D6 >
6	<	DMD9	D9 >
7	<	DMD5	D5 >
8	<	DMD10	D10 >
9	<	DMD4	D4 >
10	<	DMD11	D11 >
11	<	DMD3	D3 >
12	<	DMD12	D12 >
13	<	DMD2	D2 >
14	<	DMD13	D13 >
15	<	MDM1	D1 >
16	<	DMD14	D14 >
17	<	DMD0	D0 >
18	<	DMD15	D15 >
19		COM1	GND
20		NC	KEY
21		NC	DMARQ
22		COM1	GND
23		-DIOWR	-DIOW >
24		COM1	GND >
25		-DIORD	-DIOR
26		COM1	GND
27		NC	IORDY
28		COM1	CSEL
29		NC	-DMACK
30		COM1	GND
31	<	INTHDD	IRQ
32		NC	-IO16
33		DA1	DA1 >
34		NC	-PDIAG
35		DA0	DA0 >
36		DA2	DA2 >
37		-CS0	-CS0 >
38		-CS1	-CS1 >
39	<	-DASP	-DASP
40		COM1	GND
41		+5V	Vcc
42		+5V	Vcc
43		COM1	GND
44		NC	NC

HDD

G4IF

CN2

CN1

1		VTXMDM	VTXMDM >
2	<	V

COPIER (A232) ELECTRICAL COMPONENTS

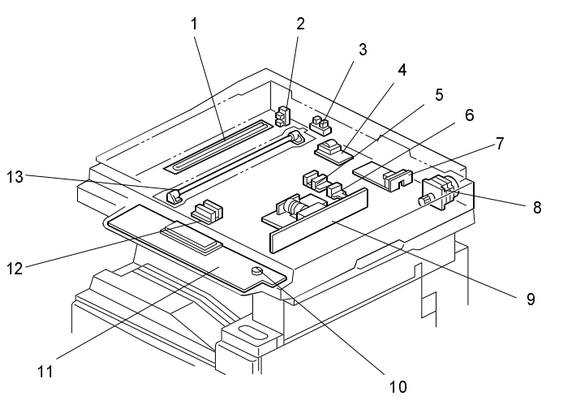

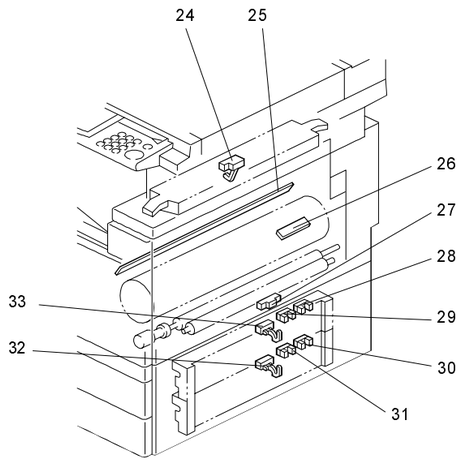

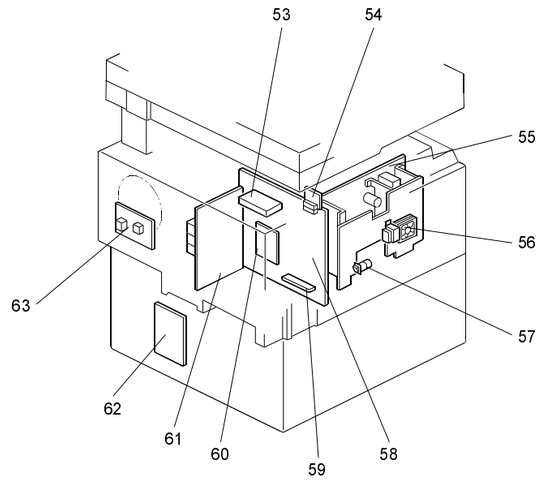

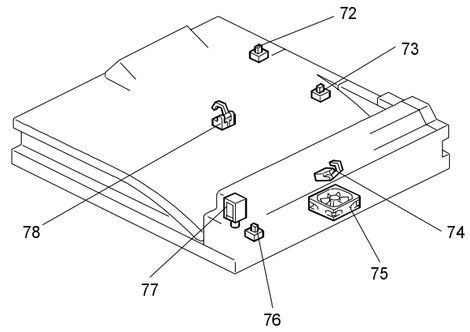

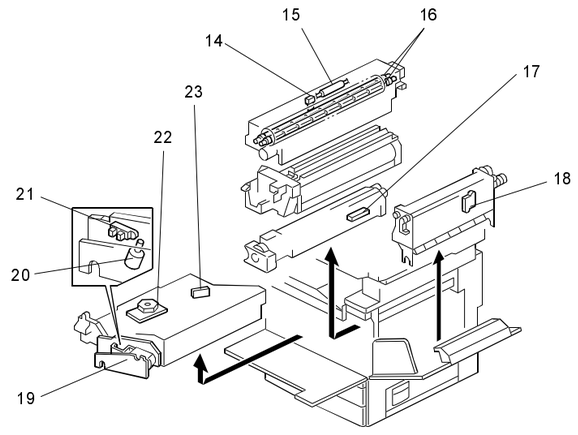

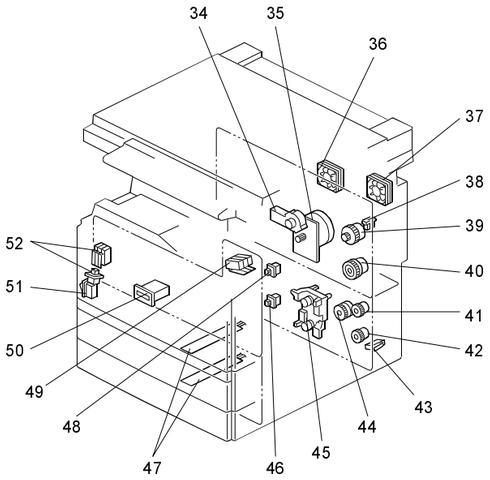

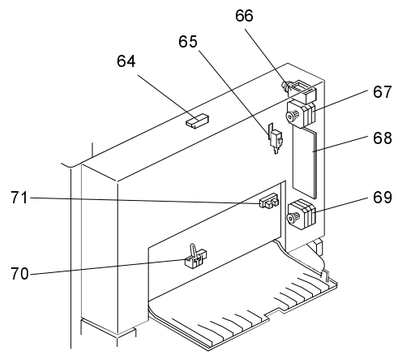

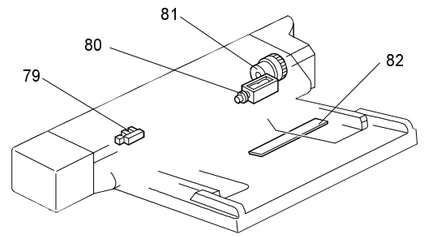

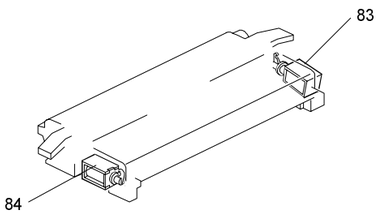

Symbol	Index No.	Description	P to P
Printed Circuit Boards			
PCB1	58	BICU (Base Engine & Image Control Unit)	F8
PCB2	55	PSU (Power Supply Unit)	L6
PCB3	61	IOB (Input/Output Board)	L3
PCB4	62	Paper Feed Control (PFB)	O3
PCB5	63	High Voltage Supply	J4
PCB6	9	SBU (Sensor Board Unit)	B12
PCB7	7	SIB (Scanner Interface Board)	B10
PCB8	11	Operation Panel	A10
PCB9	4	Lamp Stabilizer	A7
PCB10	19	LDDR (Laser Diode Driver)	I11
PCB11	54	SIFB (Scanner Interface Board)	D7
Motors			
M1	35	Main	I4
M2	8	Scanner Drive	A11
M3	45	Tray Lift	Q4
M4	22	Polygonal Mirror	J10
M5	20	LD Positioning	J1
M6	36	Cooling Fan	A1
M7	37	Exhaust Fan	K1
M8	34	Toner Supply	I2
M9	56	PSU Cooling Fan	E1

Symbol	Index No.	Description	P to P
Sensors			
S1	2	Scanner Home Position	A7
S2	3	Platen Cover	A7
S3	12	Original Width	A8
S4	5	Original Length-1	A8
S5	6	Original Length-2	A7
S6	21	LD Unit Home Position	J1
S7	17	Toner Density (TD)	A1
S8	24	Paper Exit	L1
S9	27	Registration	J5
S10	26	Image Density (ID)	I1
S11	28	Upper Paper Height	Q7
S12	30	Lower Paper Height	Q6
S13	29	Upper Paper End	Q7
S14	31	Lower Paper End	Q6
S15	33	Upper Relay	Q7
S16	32	Lower Relay	Q6
S17	48	Upper Tray Set	Q4
S18	46	Lower Tray Set	Q4
S19	38	Transfer Belt Position	K1
S20	18	Toner Overflow	J5
Switches			
SW1	43	Right Lower Cover	Q9
SW2	49	Right Upper Cover	K11,I5
SW3	51	Main Power Switch	L4
SW4	52	Front Cover Safety	K11,H5
SW5	10	Operation Switch	(A10)

Symbol	Index No.	Description	P to P
Magnetic Clutches			
CL1	39	Transfer Belt	L1
CL2	40	Registration	I4
CL3	44	Relay	Q3
CL4	41	Upper Paper Feed	Q3
CL5	42	Lower Paper Feed	Q3
Lamps			
L1	13	Exposure	A6
L2	16	Fusing	(N7)
L3	25	Quenching	H1
Heaters			
H1	1	Optics Anti-condensation (option)	L4
H2	47	Tray (option)	L4
Thermistors			
TH1	14	Fusing	(N7)
Thermofuses			
TF1	15	Fusing	(N7)
Counters			
CO1	50	Total	I1
Others			
CB1	57	Circuit Breaker (220 ~ 240V only)	
LSD	23	Laser Synchronization Detector	K10

DUPLEX (A687)

Symbol	Index No.	Description	P to P
Motors			
M1	67	Inverter	A5
M2	69	Transport	B5
Sensors			
S1	64	Entrance	C5
S2	70	Exit	C5
S3	71	Cover Guide	B5
Switches			
SW1	65	Duplex Unit	D5
Solenoids			
SOL1	66	Inverter Gate	A5
PCBs			
PCB1	68	Main	B4

BRIDGE UNIT (A688)

Symbol	Index No.	Description	P to P
Motors			
M1	75	Cooling Fan	D1
Sensors			
S1	74	Tray Exit	B1
S2	78	Relay	C1
Switches			
SW1	76	Tray Exit Unit	B1
SW2	73	Right Guide	D1
SW3	72	Left Guide	C1
Solenoid			
SOL1	77	Junction Gate	B1

BY-PASS (A689)

Symbol	Index No.	Description	P to P
Sensors			
S1	79	Paper End	Q5
S2	82	Paper Size Sensor Board	Q6
Solenoids			
SOL1	80	Pick-up	Q5
Magnetic Clutches			
MC1	81	Paper Feed	Q5

INTERCHANGE UNIT (A690)

Symbol	Index No.	Description	P to P
Solenoids			
SOL1	84	Duplex Junction Gate	M1
SOL2	83	Exit Junction Gate	L1

OTHERS

Symbol	Index No.	Description	P to P
Others			
-	53	HDD	K12
-	59	8 MB Memory	(F8)
-	60	MSU	J12
-	-	Mother Board	J9

POINT TO POINT DIAGRAM (ADF: A680)

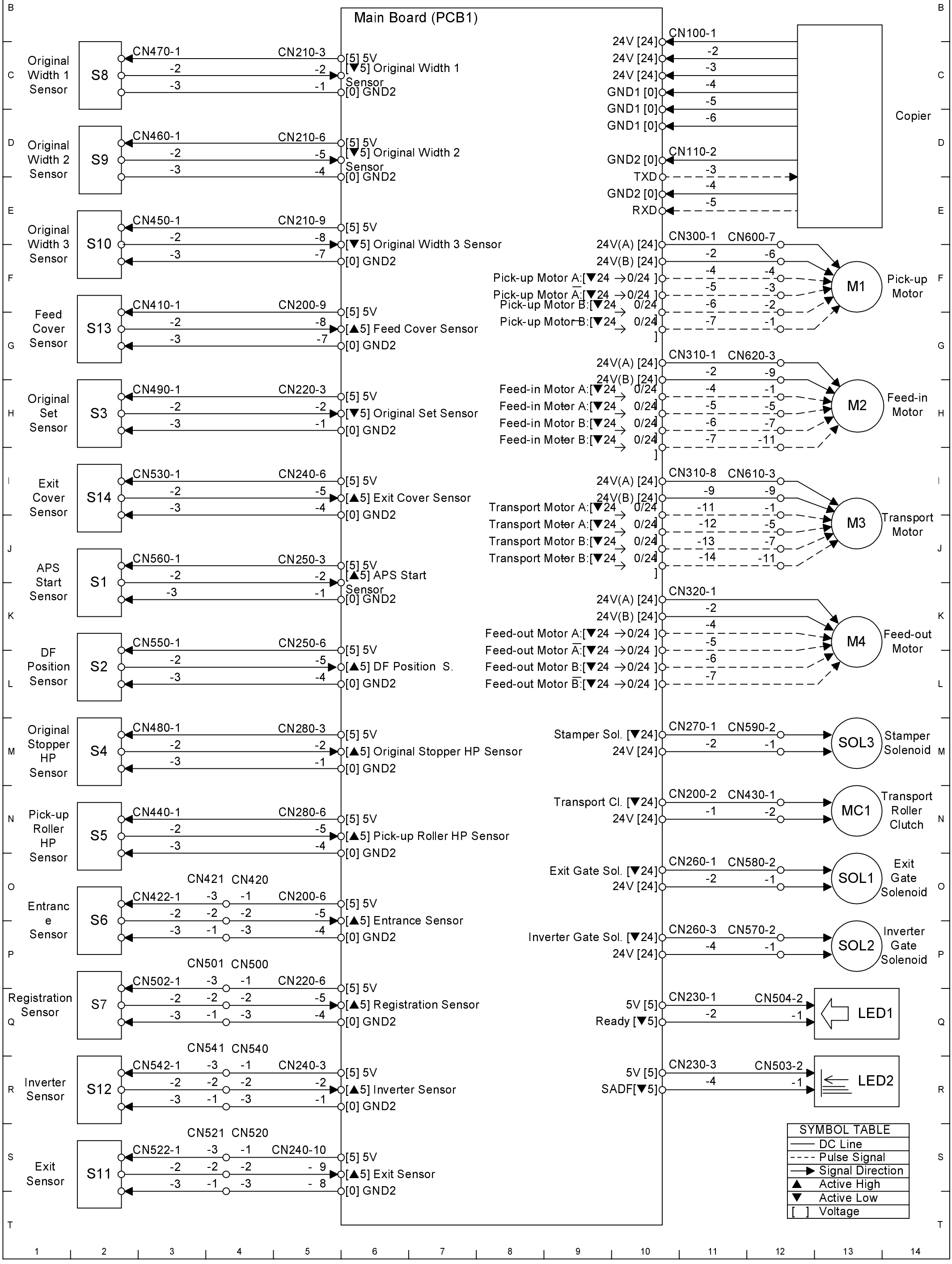

AUTO DOCUMENT FEEDER (A680) ELECTRICAL COMPONENT LAYOUT

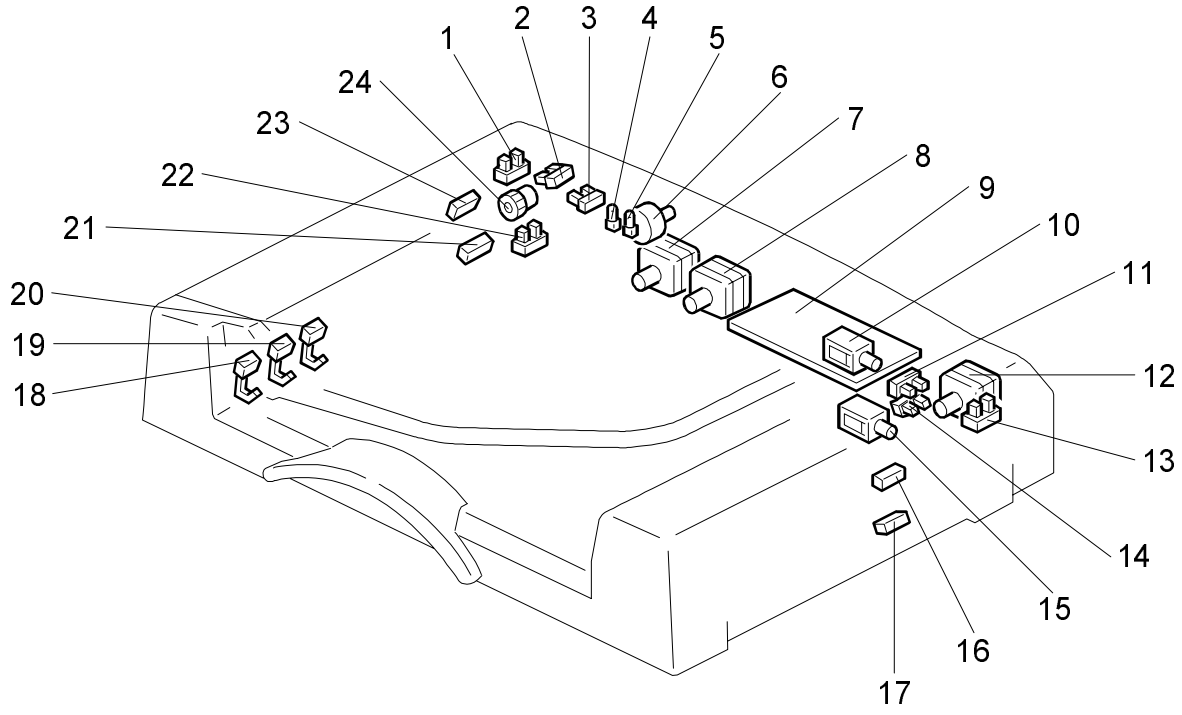

Symbol	Index No.	Description	P to P
Motors			
M1	6	Pick-up	F13
M2	7	Feed-in	H13
M3	8	Transport Belt	I13
M4	12	Feed-out	K13
Sensors			
S1	14	APS Start	J2
S2	11	DF Position	L2
S3	22	Original Set	H2
S4	3	Original Stopper HP	M2
S5	2	Pick-up Roller HP	N2
S6	23	Entrance	S2
S7	21	Registration	Q2
S8	20	Original Width 1	C2
S9	19	Original Width 2	D2
S10	18	Original Width 3	E2
S11	17	Exit	O2
S12	16	Inverter	R2
S13	1	Feed Cover	G2
S14	13	Exit Cover	I2
Solenoids			
SOL1	15	Exit Gate	O13
SOL2	10	Inverter Gate	P13
Clutch			
MC1	24	Transport Roller	N13
PCB			
PCB1	9	Main	B6
LEDs			
LED1	4	Ready	Q13
LED2	5	SADF	R13

POINT TO POINT DIAGRAM (FINISHER 1,000: A681)

Main Board (PCB1)

Entrance Sensor — S1
CN335-3 / CN410-3 / CN115-1
-2 / -2 / -2
-1 / -1 / -3
[▼5] Entrance Sensor
[0] GND2
[5] 5V

Shift Tray Lower Limit — S11
CN340-3 / CN115-5
-2 / -6
-1 / -7
[0] GND2
[▼5] Shift Tray Lower Limit Sensor
[5] 5V

Shift Tray Half-turn Sensor — S12
CN345-3 / CN115-8
-2 / -9
-1 / -10
[0] GND2
[▼5] Shift Tray Half-turn Sensor
[5] 5V

Exit Sensor — S9
CN300-3 / CN400-3 / CN125-1
-2 / -2 / -2
-1 / -1 / -3
[5] 5V
[▼5] Exit Sensor
[0] GND2

Stack Height Sensor — S10
CN305-3 / CN405-3 / CN125-4
-2 / -2 / -5
-1 / -1 / -6
[5] 5V
[▼5] Stack Height Sensor
[0] GND2

Exit Guide Plate Open Sensor — S8
CN310-1 / CN125-8
-2 / -9
-3 / -10
[0] GND2
[▲5] Exit Guide Plate Open Sensor
[5] 5V

Exit Guide Plate HP Sensor — S7
CN315-3 / CN125-11
-2 / -12
-1 / -13
[0] GND2
[▲5] Exit Guide Plate HP Sensor
[5] 5V

Jogger Fence HP Sensor — S3
CN320-3 / CN135-1
-2 / -2
-1 / -3
[0] GND2
[▲5] Jogger Fence HP Sensor
[5] 5V

Stack Feed-out Belt HP Sensor — S5
CN325-3 / CN135-4
-2 / -5
-1 / -6
[0] GND2
[▼5] Stack Feed-out Belt HP Sensor
[5] 5V

Jogger Unit Paper Sensor — S2
CN330-1 / CN135-9
-2 / -10
-3 / -11
[5] 5V
[▼5] Jogger Unit Paper Sensor
[0] GND2

Rear Fence HP Sensor — S4
CN350-3 / CN135-12
-2 / -13
-1 / -14
[0] GND2
[▲5] Rear Fence HP Sensor
[5] 5V

Right Cover Safety Switch — SW2
CN110-1
-2
[24] 24V
[▲24] Right Cover Safety Switch → A

Stack Feed-out Motor — M5
CN210-7 / CN120-1
-6 / -2
-4 / -4
-3 / -5
-2 / -6
-1 / -7
[24] 24V
[24] 24V → A
[▼24→0/24] Motor A
[▼24→0/24] Motor $\overline{A}$
[▼24→0/24] Motor B
[▼24→0/24] Motor $\overline{B}$

Jogger Fence Motor — M2
CN215-7 / CN130-1
-6 / -2
-4 / -4
-4 / -5
-2 / -6
-1 / -7
[24] 24V
[24] 24V → A
[▼24→0/24] Motor A
[▼24→0/24] Motor $\overline{A}$
[▼24→0/24] Motor B
[▼24→0/24] Motor $\overline{B}$

Stapler
Motor - [▼24] / Motor - [▼24] / Motor + [▼24] / Motor + [▼24]
CN180-12 / CN415-1 / CN255-1
-11 / -2 / -2
-9 / -4 / -4
-8 / -5 / -5
M4
Cartridge Set Switch [▼5] — -6 / -7 / -7 — SW3
Staple End Switch [▼5] — -5 / -8 / -8 — SW4
Staple Hammer HP Sensor [▼5] — -4 / -9 / -9 — S6
Stapler Set [▼5] — -3 / -10 / -10
GND2 [0] — -2 / -11 / -11
5V [5] — -1 / -12 / -12

Transport Motor — M1
24V [24] / 24V [24] → A
CN140-1 / CN220-7
-2 / -6
Motor A [▼24→0/24] — -4 / -4
Motor $\overline{A}$ [▼24→0/24] — -5 / -3
Motor B [▼24→0/24] — -6 / -2
Motor $\overline{B}$ [▼24→0/24] — -7 / -1

Exit Motor — M7
24V [24] / 24V [24] → A
CN150-1 / CN225-7
-2 / -6
Motor A [▼24→0/24] — -4 / -4
Motor $\overline{A}$ [▼24→0/24] — -5 / -3
Motor B [▼24→0/24] — -6 / -2
Motor $\overline{B}$:[▼24→0/24] — -7 / -1

Rear Fence Motor — M3
24V [24] → A
CN190-1 / CN260-6
Motor $\overline{B}$:[▼24→0/24] — -2 / -5
Motor A [▼24→0/24] — -3 / -4
Motor $\overline{A}$:[▼24→0/24] — -4 / -3
Motor B [▼24→0/24] — -5 / -2
24V [24] → A — -6 / -1

Shift Motor — M9
24V [24] → A
CN160-1 / CN230-2
Shift Motor [▼24] — -2 / -1

Shift Tray Lift Motor — M8
Shift Tray Lift Motor + [▼24] / Shift Tray Lift Motor - [▼24] → A
CN160-3 / CN235-2
-4 / -1

Shift Tray Upper Limit Switch
Shift Tray Upper Limit Switch [▼24]
CN145-1
24V [24] — -2

Exit Guide Plate Motor — M6
24V [24] → A
CN170-1 / CN240-2
Exit Guide Plate Motor [▼24] — -2 / -1

Exit Gate Solenoid — SOL 1
24V [24] → A
CN170-3 / CN245-2
Junction Gate Solenoid [▼24] — -4 / -1

Positioning Roller Solenoid — SOL 2
24V [24] → A
CN170-5 / CN250-2
Positioning Roller Solenoid [▼24] — -6 / -1

Copier
CN100-1
24V [24] — -2
24V [24] — -3
24V [24] — -4
GND1 [0] — -5
GND1 [0] — -6
GND1 [0]
GND2 [0]
CN105-2
TXD — -3
GND2 [0] — -4
RXD — -5

SYMBOL TABLE

——	DC Line
- - - -	Pulse Signal
—▶	Signal Direction
▲	Active High
▼	Active Low
[ ]	Voltage

1,000-SHEET FINISHER (A681) ELECTRICAL COMPONENT LAYOUT

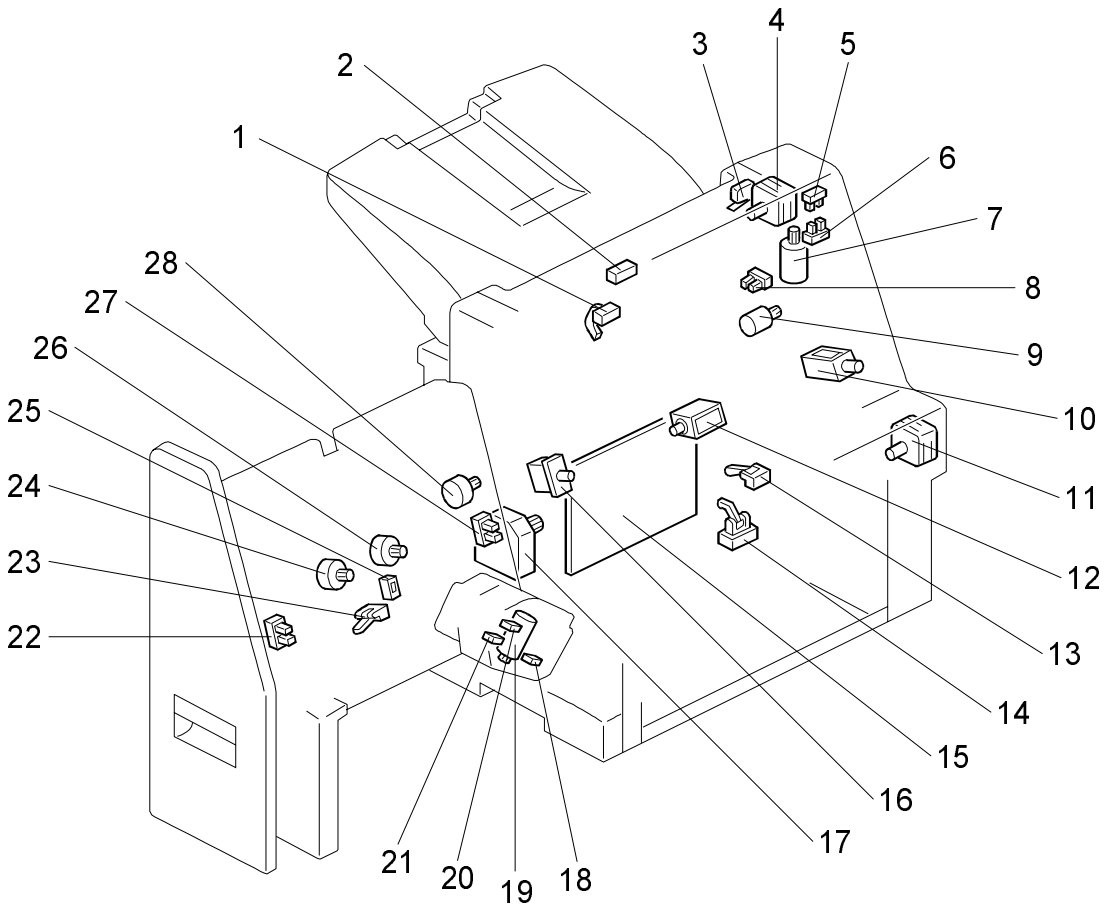

Symbol	Index No.	Description	P to P
Motors			
M1	11	Transport	F13
M2	24	Jogger Fence	Q2
M3	26	Rear Fence	J13
M4	19	Staple Hammer	C13
M5	28	Stack Feed-out	O2
M6	7	Exit Guide Plate	M13
M7	4	Exit	H13
M8	17	Shift Tray Lift	L13
M9	9	Shift	K13
Sensors			
S1	14	Entrance	C2
S2	25	Jogger Unit Paper	L2
S3	22	Jogger Fence HP	J2
S4	27	Rear Fence HP	M2
S5	23	Stack Feed-out Belt HP	K2
S6	18	Staple Hammer HP	D13
S7	6	Exit Guide Plate	I2
S8	5	Exit Guide Plate Open	H2
S9	2	Exit	F2
S10	1	Stack Height	G2
S11	13	Shift Tray Lower Limit	D2
S12	8	Shift Tray Half-turn	E2

Symbol	Index No.	Description	P to P
Solenoids			
SOL1	10	Junction Gate	N13
SOL2	12	Positioning Roller	O13
Switches			
SW1	3	Shift Tray Upper Limit	L13
SW2	16	Right Cover Safety	N2
SW3	20	Cartridge Set	C13
SW4	21	Staple End	D13
PCB			
PCB1	15	Main	B6

POINT TO POINT DIAGRAM (PAPER TRAY UNIT: A682)

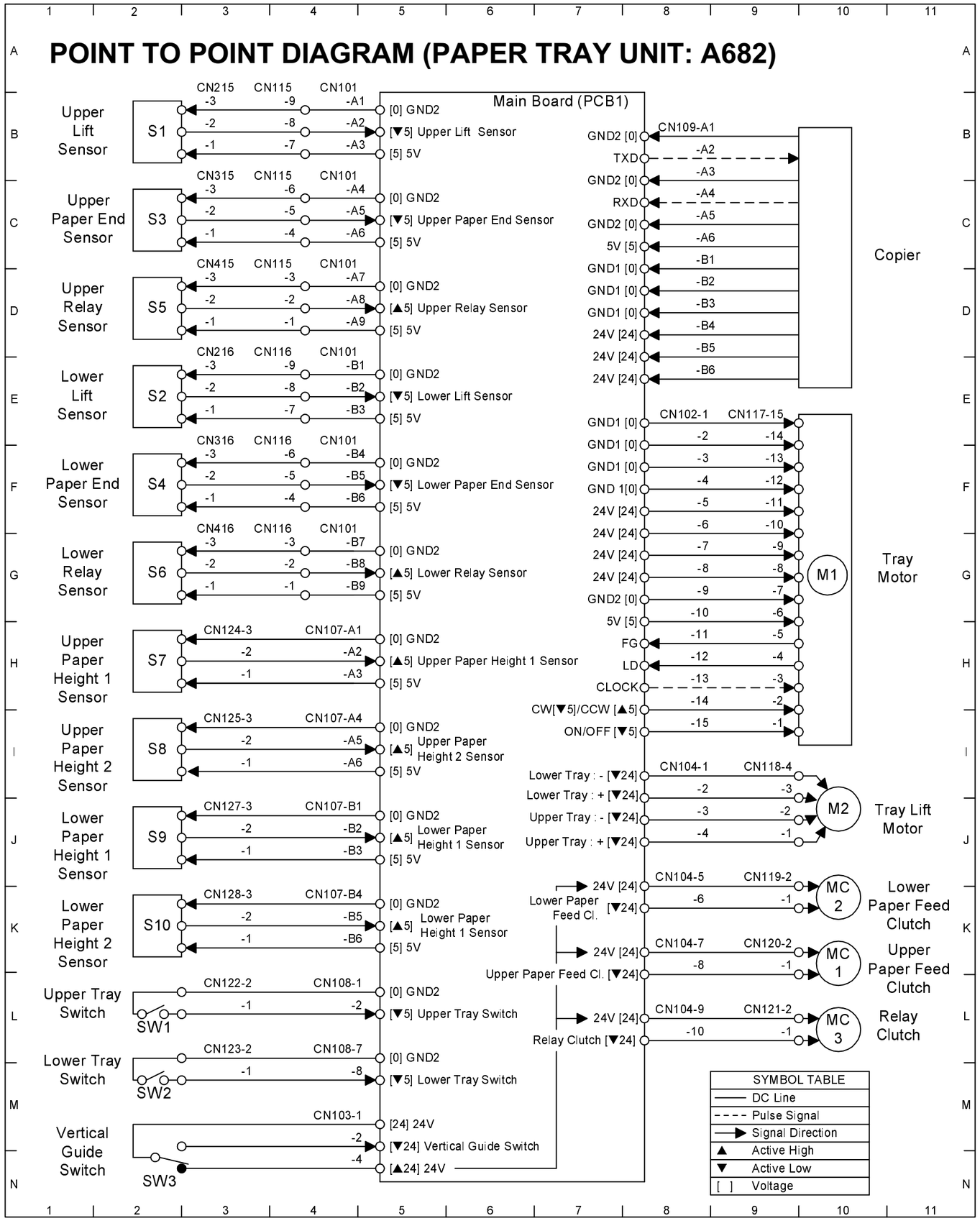

PAPER TRAY UNIT (A682) ELECTRICAL COMPONENT LAYOUT

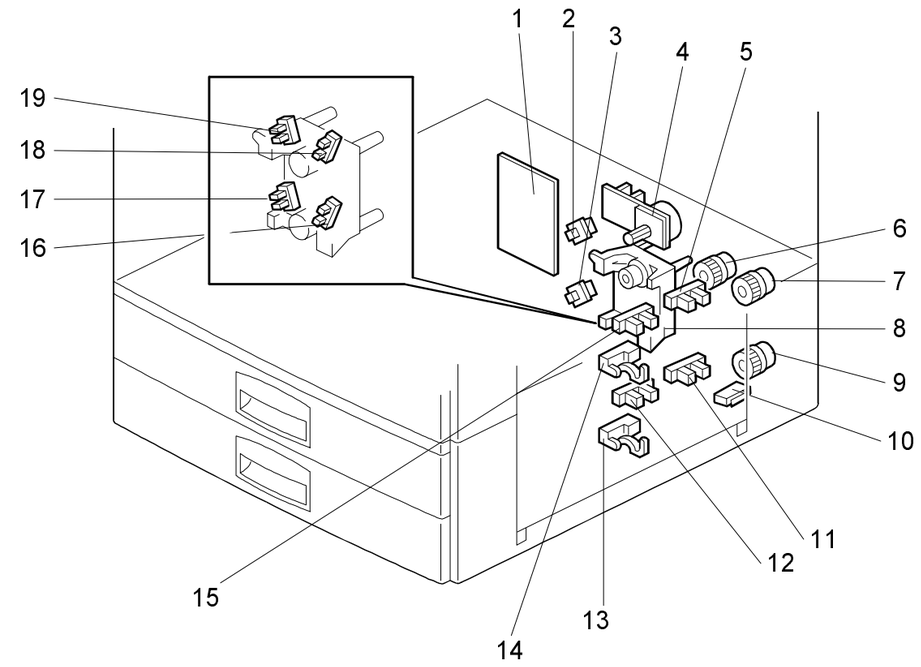

Symbol	Index No.	Description	P to P
Motors			
M1	4	Tray	G10
M2	8	Tray Lift	J10
Sensors			
S1	5	Upper Lift	B2
S2	11	Lower Lift	E2
S3	15	Upper Paper End	C2
S4	12	Lower Paper End	F2
S5	14	Upper Relay	D2
S6	13	Lower Relay	G2
S7	17	Upper Paper Height 1	J2
S8	16	Upper Paper Height 2	K2
S9	19	Lower Paper Height 1	H2
S10	18	Lower Paper Height 2	I2
Switches			
SW1	2	Upper Tray	L2
SW2	3	Lower Tray	M2
SW3	10	Vertical Guide	M2
Magnetic Clutches			
MC1	7	Upper Paper Feed	K10
MC2	9	Lower Paper Feed	K10
MC3	6	Relay	L10
PCB			
PCB1	1	Main	B6

POINT TO POINT DIAGRAM (LCT: A683)

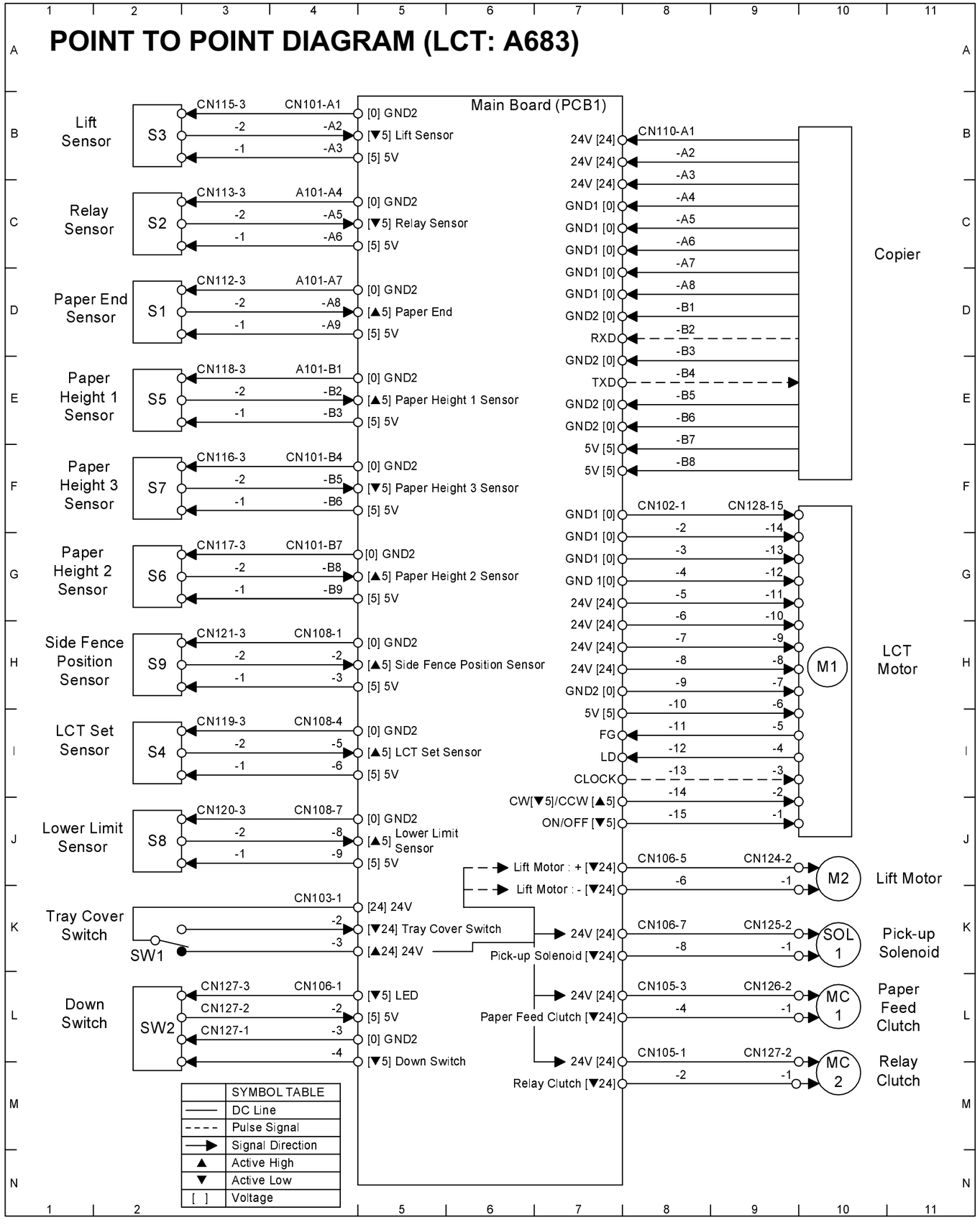

LCT (A683) ELECTRICAL COMPONENT LAYOUT

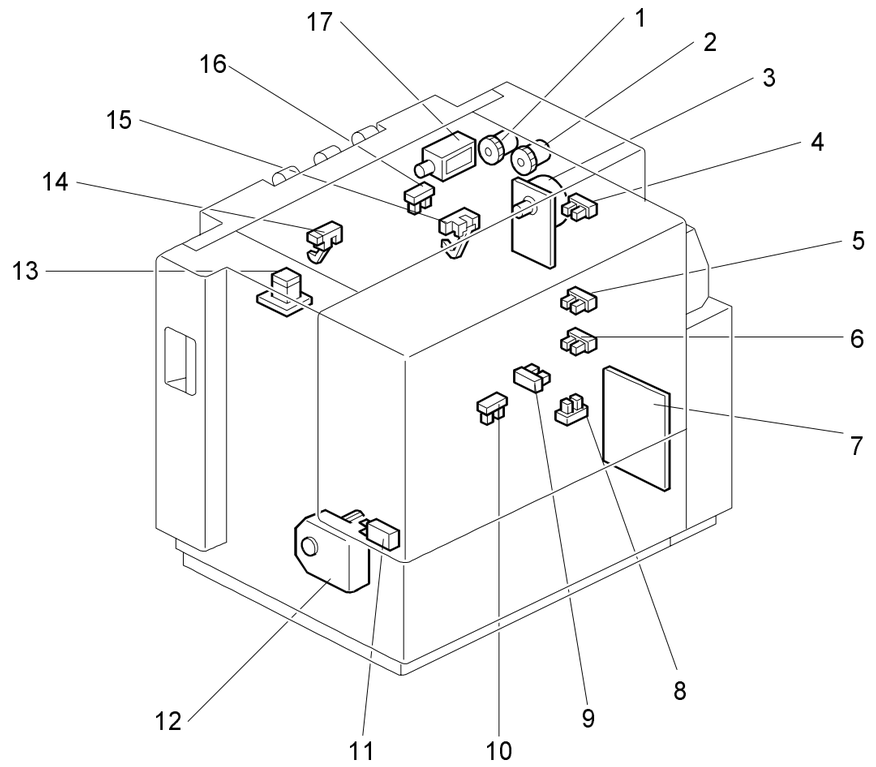

Symbol	Index No.	Description	P to P
Motors			
M1	3	LCT	H10
M2	12	Lift	J10
Sensors			
S1	15	Paper End	D2
S2	14	Relay	C2
S3	16	Lift	B2
S4	9	Lower Limit	I2
S5	4	Paper Height 1	E2
S6	5	Paper Height 2	G2
S7	6	Paper Height 3	F2
S8	10	LCT Set	J2
S9	8	Side Fence Position	H2
Switches			
SW1	11	Tray Cover	K2
SW2	13	Down	L2
Solenoid			
SOL1	17	Pick-up	K10
Magnetic Clutches			
MC1	2	Paper Feed	L10
MC2	1	Relay	M10
PCB			
PCB1	7	Main	B6

POINT TO POINT DIAGRAM (1-BIN TRAY: A684)

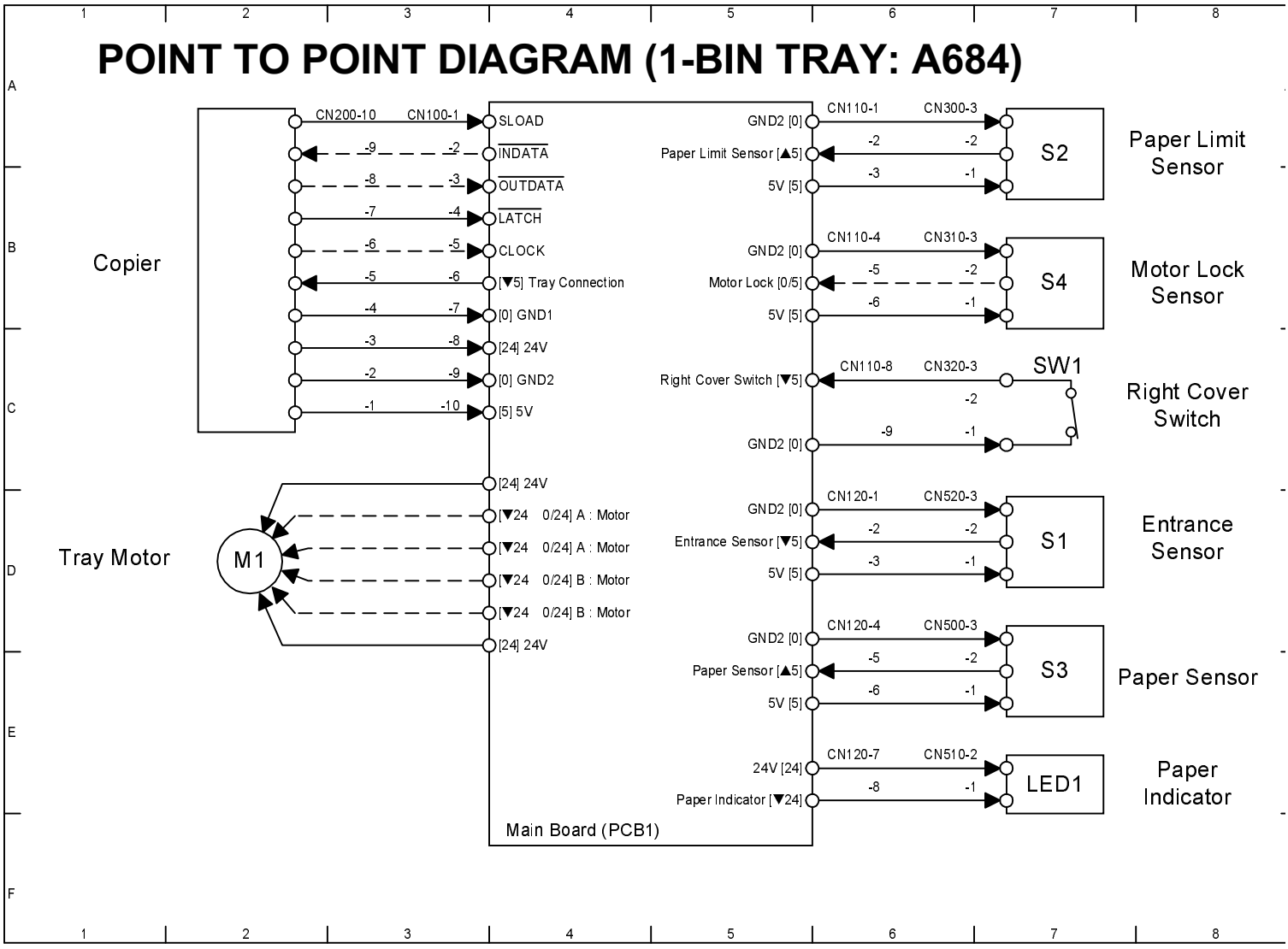

1-BIN TRAY (A684) ELECTRICAL COMPONENT LAYOUT

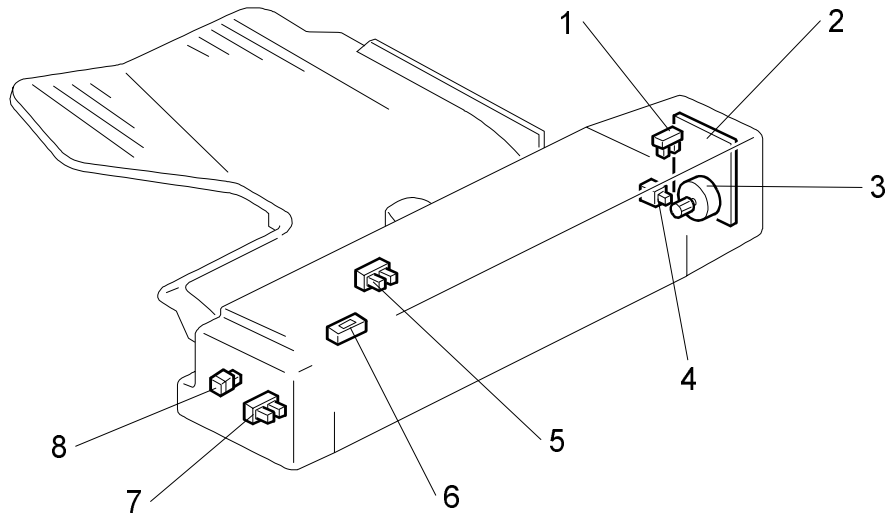

Symbol	Index No.	Description	P to P
Motor			
M1	3	Tray	D2
Sensors			
S1	7	Entrance	D7
S2	5	Paper Limit	A7
S3	6	Paper	E7
S4	1	Motor Lock	B7

Symbol	Index No.	Description	P to P
Switch			
SW1	4	Right Cover	C7
PCB			
PCB1	2	Main	A4
LED			
LED1	8	Paper Indicator	E7

POINT TO POINT DIAGRAM (FINISHER 3,000: A697)

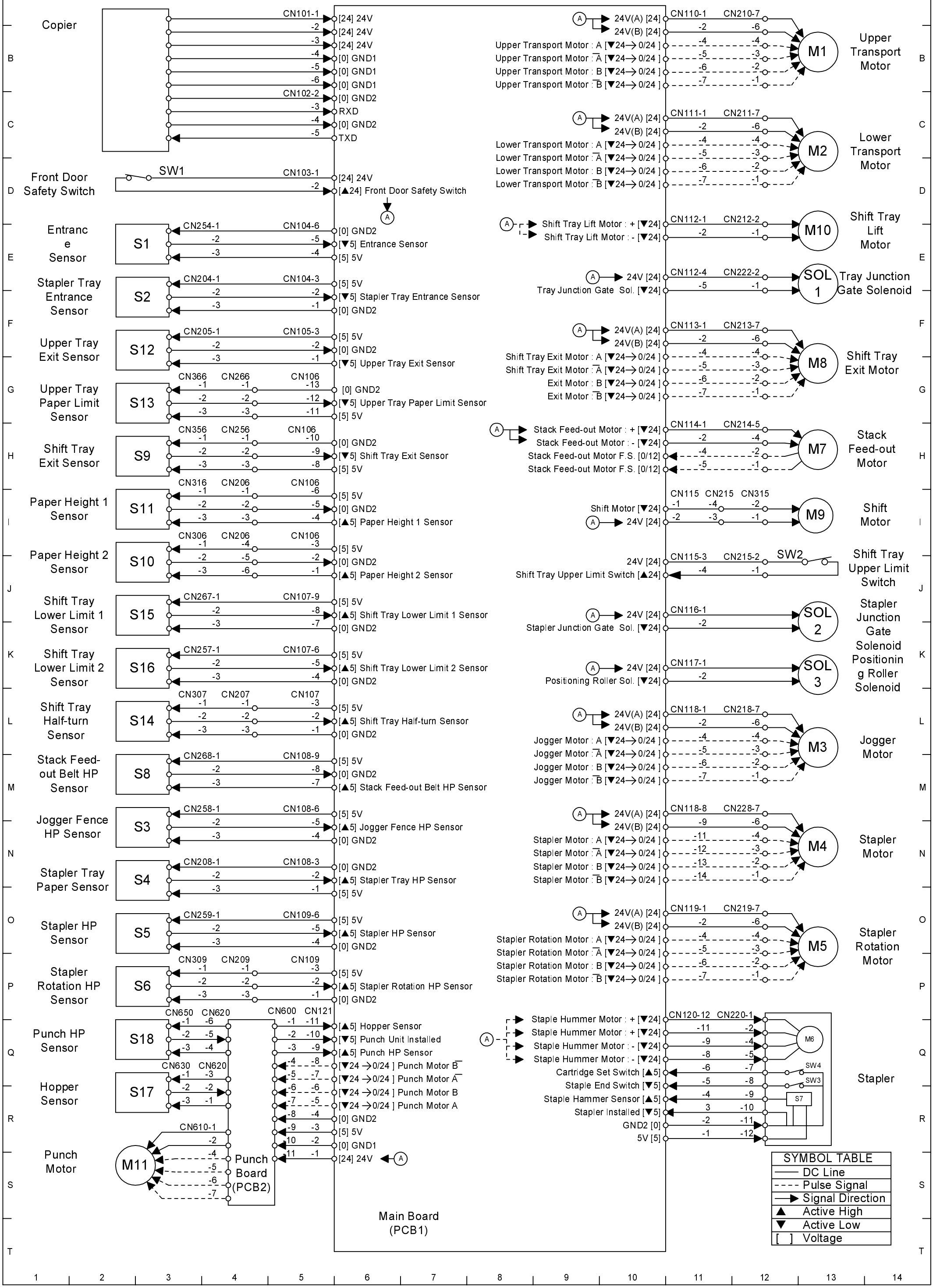

3,000-SHEET FINISHER (A697) ELECTRICAL COMPONENT LAYOUT

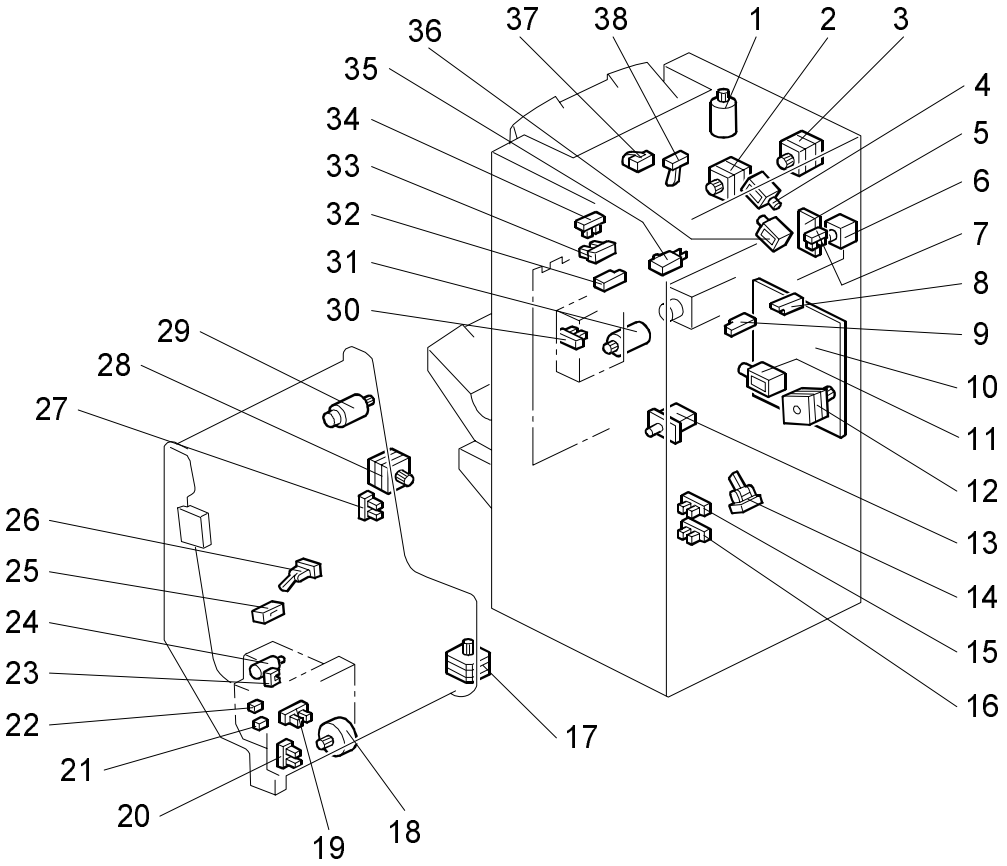

Symbol	Index No.	Description	P to P
Motors			
M1	3	Upper Transport	B13
M2	11	Lower Transport	C13
M3	28	Jogger	L13
M4	17	Stapler	N13
M5	18	Stapler Rotation	O13
M6	24	Staple Hammer	Q13
M7	29	Stack Feed-out	H13
M8	2	Shift Tray Exit	G13
M9	31	Shift	I13
M10	1	Shift Tray Lift	E13
M11	6	Punch	S2
Sensors			
S1	9	Entrance	E2
S2	14	Stapler Tray Entrance	F2
S3	27	Jogger Fence HP	N2
S4	25	Stapler Tray Paper	N2
S5	20	Stapler HP	O2
S6	19	Stapler Rotation HP	P2
S7	23	Staple Hammer HP	R13
S8	26	Stack Feed-out Belt HP	M2
S9	32	Shift Tray Exit	H2
S10	34	Stack Height 1	I2
S11	33	Stack Height 2	J2
S12	38	Upper Tray Exit	F2
S13	37	Upper Tray Ppaer Limit	G2
S14	30	Shift Tray Half-turn	L2
S15	15	Shift Tray Lower Limit 1	J2
S16	16	Shift Tray Lower Limit 2	K2
S17	8	Hopper	R2
S18	7	Punch HP	Q2

Symbol	Index No.	Description	P to P
Switches			
SW1	13	Front Door Safety	D2
SW2	35	Shift Tray Upper Limit	J13
SW3	21	Staple End	R13
SW4	22	Cartridge Set	Q13
Solenoids			
SOL1	4	Tray Junction Gate	E13
SOL2	36	Stapler Junction Gate	J13
SOL3	12	Positioning Roller	K13
PCBs			
PCB1	10	Main	T6
PCB2	5	Punch	Q4