Adonis-C1b/C1c
(Machine Code: A283 and A284)

SERVICE MANUAL

⚠IMPORTANT SAFETY NOTICES

PREVENTION OF PHYSICAL INJURY

1. Before disassembling or assembling parts of the copier and peripherals, make sure that the copier power cord is unplugged.
2. The wall outlet should be near the copier and easily accessible.
3. Note that some components of the copier and the paper tray unit are supplied with electrical voltage even if the main power switch is turned off.
4. If any adjustment or operation check has to be made with exterior covers off or open while the main switch is turned on, keep hands away from electrified or mechanically driven components.
5. If the Start key is pressed before the copier completes the warm-up period (the Start key starts blinking red and green alternatively), keep hands away from the mechanical and the electrical components as the copier starts making copies as soon as the warm-up period is completed.
6. The inside and the metal parts of the fusing unit become extremely hot while the copier is operating. Be careful to avoid touching those components with your bare hands.

HEALTH SAFETY CONDITIONS

1. Never operate the copier without the ozone filters installed.
2. Always replace the ozone filters with the specified ones at the specified intervals.
3. Toner and developer are non-toxic, but if you get either of them in your eyes by accident, it may cause temporary eye discomfort. Try to remove with eye drops or flush with water as first aid. If unsuccessful, get medical attention.

OBSERVANCE OF ELECTRICAL SAFETY STANDARDS

1. The copier and its peripherals must be installed and maintained by a customer service representative who has completed the training course on those models.
2. The NVRAM on the system control board has a lithium battery which can explode if replaced incorrectly. Replace the NVRAM only with an identical one. The manufacturer recommends replacing the entire NVRAM. Do not recharge or burn this battery. Used NVRAM must be handled in accordance with local regulations.

SAFETY AND ECOLOGICAL NOTES FOR DISPOSAL

1. Do not incinerate toner bottles or used toner. Toner dust may ignite suddenly when exposed to an open flame.
2. Dispose of used toner, developer, and organic photoconductors in accordance with local regulations. (These are non-toxic supplies.)
3. Dispose of replaced parts in accordance with local regulations.
4. When keeping used lithium batteries in order to dispose of them later, do not put more than 100 batteries per sealed box. Storing larger numbers or not sealing them apart may lead to chemical reactions and heat build-up.

LASER SAFETY

The Center for Devices and Radiological Health (CDRH) prohibits the repair of laser-based optical units in the field. The optical housing unit can only be repaired in a factory or at a location with the requisite equipment. The laser subsystem is replaceable in the field by a qualified Customer Engineer. The laser chassis is not repairable in the field. Customer engineers are therefore directed to return all chassis and laser subsystems to the factory or service depot when replacement of the optical subsystem is required.

⚠WARNING

Use of controls, or adjustment, or performance of procedures other than those specified in this manual may result in hazardous radiation exposure.

⚠WARNING

WARNING: Turn off the main switch before attempting any of the procedures in the Laser Unit section. Laser beams can seriously damage your eyes.

CAUTION MARKING:



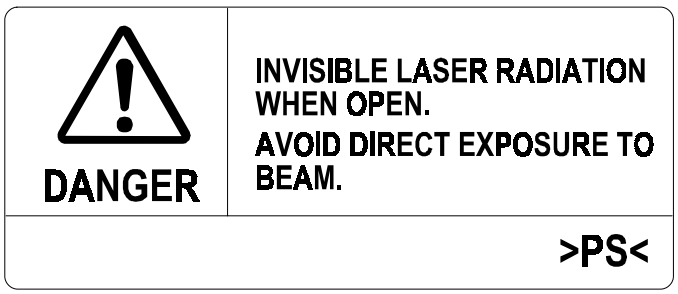

TABLE OF CONTENTS

1. OVERALL MACHINE INFORMATION 1-1
1.1 SPECIFICATIONS 1-1
1.2 PAPER EXIT TRAY SELECTION 1-4
1.3 MACHINE CONFIGURATION 1-5
1.3.1 SYSTEM COMPONENTS 1-5
1.3.2 INSTALLABLE OPTION TABLE 1-7
1.4 MECHANICAL COMPONENT LAYOUT 1-8
1.5 PAPER PATH 1-9
1.6 DRIVE LAYOUT 1-9
1.7 ELECTRICAL COMPONENT DESCRIPTIONS 1-10
1.8 BOARD STRUCTURE 1-14
1.8.1 BLOCK DIAGRAM 1-14
1.8.2 DESCRIPTIONS 1-15

2. DETAILED DESCRIPTIONS 2-1
2.1 SCANNING 2-1
2.1.1 OVERVIEW 2-1
2.2 IMAGE PROCESSING 2-2
2.2.1 OVERVIEW 2-2
2.2.2 SBU 2-3
2.2.3 IMAGE PROCESSING 2-4

3. INSTALLATION PROCEDURE 3-1
3.1 INSTALLATION REQUIREMENTS 3-1
3.1.1 ENVIRONMENT 3-1
3.1.2 MACHINE LEVEL 3-1
3.1.3 MINIMUM SPACE REQUIREMENTS 3-2
3.1.4 POWER REQUIREMENTS 3-3
3.2 INSTALLATION FLOW CHART 3-4
3.3 COPIER INSTALLATION 3-5
3.3.1 ACCESSORY CHECK 3-5
3.3.2 INSTALLATION PROCEDURE 3-6
3.4 PAPER TRAY UNIT INSTALLATION 3-11
3.4.1 ACCESSORY CHECK 3-11
3.4.2 INSTALLATION PROCEDURE 3-12
3.5 1-BIN TRAY UNIT INSTALLATION 3-16
3.5.1 ACCESSORY CHECK 3-16
3.5.2 INSTALLATION PROCEDURE 3-17
3.6 BRIDGE UNIT INSTALLATION 3-22
3.6.1 ACCESSORY CHECK 3-22
3.6.2 INSTALLATION PROCEDURE 3-23
3.7 AUTO REVERSE DOCUMENT FEEDER INSTALLATION 3-25
3.7.1 ACCESSORY CHECK 3-25
3.7.2 INSTALLATION PROCEDURE 3-26

3.8 LCT INSTALLATION 3-28
3.8.1 ACCESSORY CHECK 3-28
3.8.2 INSTALLATION PROCEDURE 3-29
3.9 1,000-SHEET FINISHER INSTALLATION 3-31
3.9.1 ACCESSORY CHECK 3-31
3.9.2 INSTALLATION PROCEDURE 3-32
3.10 3,000-SHEET FINISHER INSTALLATION 3-35
3.10.1 ACCESSORY CHECK 3-35
3.10.2 INSTALLATION PROCEDURE 3-36
3.11 PUNCH UNIT INSTALLATION 3-39
3.11.1 ACCESSORY CHECK 3-39
3.11.2 INSTALLATION PROCEDURE 3-40
3.12 PLATEN COVER INSTALLATION 3-43
3.13 KEY COUNTER INSTALLATION 3-44
3.14 ANTI-CONDENSATION HEATER 3-46
3.15 TRAY HEATER 3-48
3.16 TRAY HEATER (OPTIONAL PAPER TRAY UNIT) 3-49

4. SERVICE TABLES 4-1
4.1 SERVICE PROGRAM MODE TABLES 4-1
4.1.1 TEST PATTERN PRINTING (SP2-902) 4-42
4.1.2 INPUT CHECK 4-43
4.1.3 OUTPUT CHECK 4-47
4.1.4 SYSTEM PARAMETER AND DATA LISTS (SMC LISTS) 4-48
4.1.5 NIP BAND WIDTH ADJUSTMENT (SP1-109) 4-49
4.1.6 MEMORY ALL CLEAR (SP5-801) 4-50
4.1.7 SOFTWARE RESET 4-51
4.1.8 SYSTEM SETTING AND COPY SETTING (UP MODE) RESET 4-51
4.1.9 NVRAM DATA DOWNLOAD 4-52
4.2 PROGRAM DOWNLOAD 4-54
4.3 USER PROGRAM MODE 4-58
4.3.1 HOW TO ENTER AND EXIT UP MODE 4-58
4.3.2 UP MODE TABLE 4-58
4.4 TEST POINTS/DIP SWITCHES/LEDS 4-60
4.4.1 DIP SWITCHES 4-60
4.4.2 TEST POINTS 4-60
4.4.3 LEDS 4-61
4.5 SPECIAL TOOLS AND LUBRICANTS 4-61
4.5.1 SPECIAL TOOLS 4-61
4.5.2 LUBRICANTS 4-61

5. PREVENTIVE MAINTENANCE SCHEDULE 5-1
5.1 PM TABLE 5-1

6. REPLACEMENT AND ADJUSTMENT 6-1
6.1 SCANNER UNIT 6-1
6.1.1 EXPOSURE GLASS 6-1
6.1.2 SCANNER EXTERIOR/OPERATION PANEL 6-2
6.1.3 LENS BLOCK/SBU ASSEMBLY 6-3
6.1.4 SCANNER MOTOR 6-4
6.1.5 SIB/LAMP STABILIZER 6-5
6.2 LASER UNIT 6-6
6.2.1 CAUTION DECAL LOCATIONS 6-6
6.2.2 LASER UNIT 6-7
6.2.3 LASER BEAM PITCH ADJUSTMENT 6-8
6.3 COPY ADJUSTMENTS: PRINTING/SCANNING 6-9
6.3.1 PRINTING 6-9
6.3.2 SCANNING 6-12
6.3.3 ADF IMAGE ADJUSTMENT 6-14

7. TROUBLESHOOTING 7-1
7.1 SERVICE CALL CONDITIONS 7-1
7.1.1 SUMMARY 7-1
7.1.2 SC CODE DESCRIPTIONS 7-2
7.2 ELECTRICAL COMPONENT DEFECTS 7-24
7.2.1 SENSORS 7-24
7.2.2 SWITCHES 7-25
7.3 BLOWN FUSE CONDITIONS 7-26

1. OVERALL MACHINE INFORMATION

1.1 SPECIFICATIONS

The "*" mark indicates differences between these machines and the NAD machines.

	Adonis-C1b (35 cpm)	Adonis-C1c (45 cpm)	Note
Configuration:	Desktop		
Copy Process:	Dry electrostatic transfer system		
Original:	Sheet/Book		
Original Size	Maximum A3/11" x 17"		
Copy Paper Size:	Maximum: A3/11" x 17" Minimum: A5/5.5" x 8.5" lengthwise (Paper tray / Duplex) A6/5.5" x 8.5" lengthwise (By-pass)		
Copy Paper Weight:	Paper Tray/Duplex: 64 - 105 g/m^2, 20 – 28 lb By-pass: 52 - 157 g/m^2, 16 – 42 lb		
Reproduction Ratios:	7R5E Metric version (%): 400, 200, 141, 122, 115, 100, 93, 87, 82, 71, 65, 50, 25 Inch version (%): 400, 200, 155, 129, 121, 100, 93, 85, 78, 73, 65, 50, 25	7R5E Metric version (%): 400, 200, 141, 122, 115, 100, 93, 87, 82, 71, 65, 50, 35 Inch version (%): 400, 200, 155, 129, 121, 100, 93, 85, 78, 73, 65, 50, 32	
Zoom:	Both versions: 25% to 400% in 1% steps	Metric version: 35% to 400% in 1% steps Inch version: 32% to 400% in 1% steps	
Copying Speed	35 cpm (A4/11" x 8.5" sideways) 19 cpm (A3/11" x 17")	45 cpm (A4/11" x 8.5" sideways) 22 cpm (A3/11" x 17")	Full size Repeat copy mode
Resolution*:	Scanning and Printing: 600 dpi		
Gradation:	Scanning and Printing: 256 levels		
Warm-up Time:	Less than 85 s	Less than 100 s	23°C, 73°F
First Copy Time (1st Tray):	Less than 3.9 s	Less than 3.2 s	A4/11" x 8.5" sideways (1st paper tray)
Copy Number Input:	Ten-key pad, 1 to 999		Count up or count down

	Adonis-C1b (35 cpm)	Adonis-C1c (45 cpm)	Note
Manual Image Density Selection:	5 steps		
Automatic Reset:	60 s is the standard setting; it can be changed with a UP mode.		
Auto Shut Off:	60 min. is the standard setting; it can be changed with a UP mode.		
Copy Paper Capacity:	Paper Tray: 500 sheets (stack thickness up to 56 mm, 2.2") x 2 By-pass Feed: 50 sheets (stack thickness up to 5.5 mm, 0.2")		
Copy Tray Capacity:	A4/11" x 8.5": 500 sheets A3/B4/8.5" x 14"/11" x 17": 250 sheets		Standard copy tray
Toner Replenishment:	Cartridge exchange (700 g/cartridge)		
Toner Yield:	27k copies (A4 sideways, 6% full black, 1 to 1 copying, ADS mode)		
Power Source:	North America 120V/60Hz, More than 12 A		
Dimensions (W x D x H)	670 x 640 x 720 mm (26.4" x 25.2" x 28.3")		Without options
Weight:	75 kg (166 lb)		

Power Consumption:

Mainframe only

	Adonis-C1b	Adonis-C1c	Note
Maximum	Less than 1.44 kW	Less than 1.44 kW	
Copying	Less than 1.05 kW	Less than 1.05 kW	
Warm-up	Less than 1.00 kW	Less than 1.05 kW	
Stand-by	Less than 200 Wh	Less than 220 Wh	

System

	Adonis-C1b	Adonis-C1c	Note
Maximum	Less than 1.44 kW	Less than 1.44 kW	Without the optional heaters, fax unit, and printer controller.
Copying	Less than 1.15 kW	Less than 1.15 kW	
Warm-up	Less than 1.00 kW	Less than 1.05 kW	
Stand-by	Less than 200 Wh	Less than 230 Wh	

Noise Emission:

	Mainframe Only	Full System
Copying		
Adonis-C1b	52 dB(A) or less	60 dB(A) or less
Adonis-C1c	56 dB(A) or less	62 dB(A) or less
Stand-by		
Adonis-C1b	27 dB(A) or less	28 dB(A) or less
Adonis-C1c	27 dB(A) or less	28 dB(A) or less

NOTE: 1) The above measurements were made in accordance with ISO 7779.
2) Full system measurements do not include the optional fax unit and the printer controller.
3) In the above stand-by condition, the polygon motor is not rotating.

1.2 PAPER EXIT TRAY SELECTION

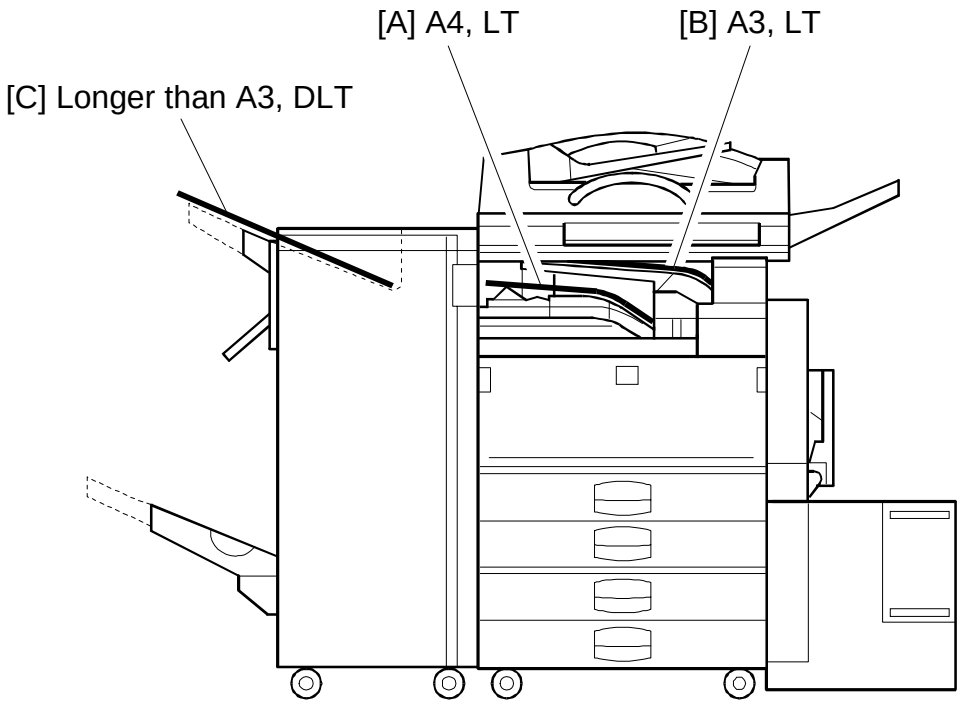

A284V508.WMF

The machine allows selection between the paper tray exit trays: Int. Tray [A] (standard output tray), Int. Tray 2 [B] (optional one-bin tray), and Ext. Tray [C] (finisher or optional external output tray). If the sub-scan length is more than 330 mm, the exit tray is as shown below, if the relevant options have been installed.

Installed options	Exit tray for paper longer than 330 mm
Bridge unit & Finisher (1,000-sheet)	Int. Tray [A]
Bridge unit & Finisher (3,000-sheet)	Ext. Tray [C]: The finisher upper tray
Bridge unit & optional ext. output tray	Ext. Tray [C]: Ext. output tray

1.3 MACHINE CONFIGURATION

1.3.1 SYSTEM COMPONENTS

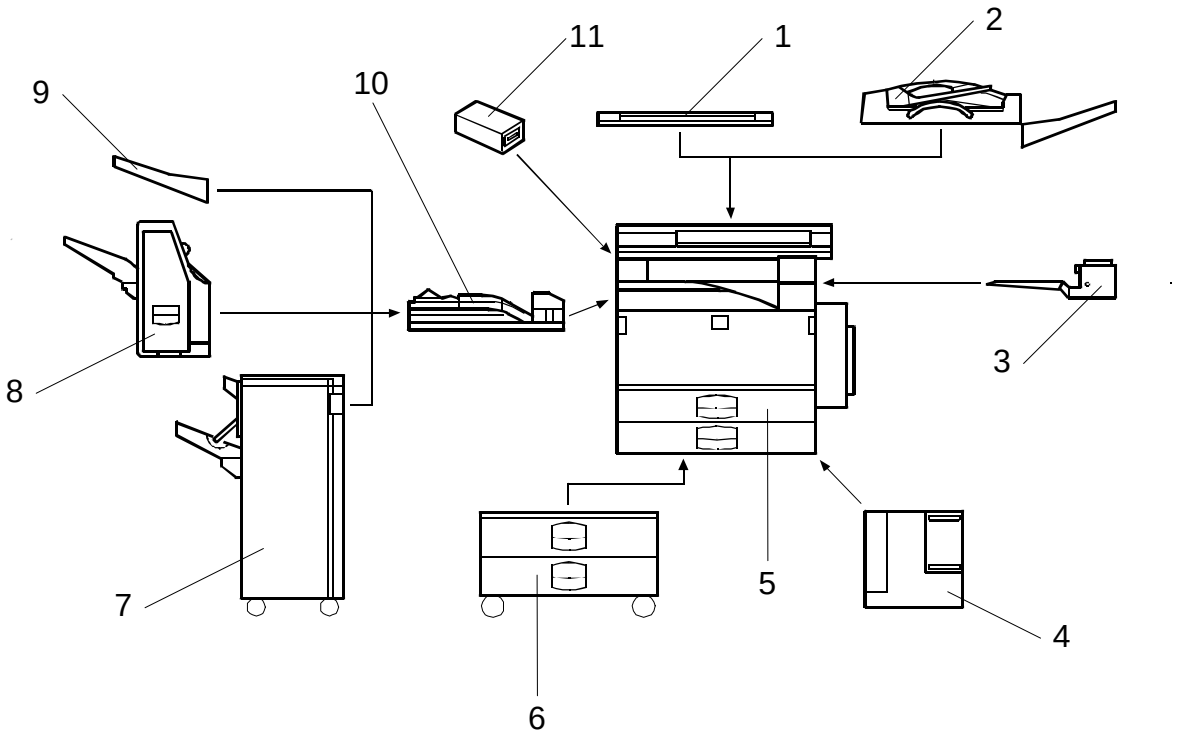

A284V502.WMF

Symbol: U: Unique option, C: Option also used with other products

Version	Item	Machine Code	No.	Note
Copy	Copier (Adonis-C1b)	A283	5	
	Copier (Adonis-C1c)	A284	5	
	ARDF (Option)	A680	2	C: (NAD)
	Platen Cover (Option)	A381	1	C: (NAD)
	Paper Tray Unit (Option)	A682	6	C: (NAD)
	LCT (Option)	A683	4	C: (NAD)
	1-bin Tray (Option)	A684	3	C: (NAD)
	Bridge Unit (Option)	A688	10	C: (NAD)
	1000-sheet Finisher (Option)	A681	8	C: (NAD)
	3000-sheet Finisher (Option – Adonis-C1c only)	A697	7	C: (NAD)
	Punch Unit (Option for 3000-sheet Finisher)	A812-17 (3 holes) A812-27 (2 holes)	---	C: (NAD)
	External Output Tray (Option)	A825	9	C: (NAD)
	Key Counter Bracket (Option)	A674	11	C: (NAD)
	Expansion Box (Option)	A872	---	U
Fax	Fax Unit (Option)	A874	---	U
	ISDN Unit (Option)	A816	---	C: (NAD)
	RAM SIMM (Option)	---	---	
	400-dpi High Resolution (Option)	A892	---	C: (Russian)
	PC-Fax Expander	B368	---	U
	Handset (Option)	A646	---	C: (NAD)
	Stamp Unit (Option)	A813	---	C: (NAD)
Printer	Printer Controller	B358	---	U
	PostScript Kit	A854	---	C: (NAD)
	Hard Disk	A853	---	C: (NAD)
	Network Interface Board	A855	---	C: (NAD)
	Mailbox	G909	---	C: (NAD)
	Mailbox Bridge Unit	G912	---	C: (NAD)
	RAM SIMM	---	---	
Scanner	Scanner Kit	B359	---	U
	RAM SIMM	---	---	

Symbol: U: Unique options C: Option also used with other products

1.3.2 INSTALLABLE OPTION TABLE

Copier options

O = Available, Δ = Requires another option, **X** = Not available

Option	Adonis-C1b	Adonis-C1c	Note
ARDF	O	O	
Platen Cover	O	O	
Paper Tray Unit	O	O	
LCT	Δ	Δ	Requires the paper tray unit.
1-bin Tray	O	O	
Bridge Unit	O	O	
1,000-sheet Finisher	Δ	Δ	Requires the paper tray unit and bridge unit.
3,000-sheet Finisher	X	Δ	Requires the paper tray unit and bridge unit.
Punch Unit	X	Δ	Requires the 3000-sheet finisher.
External Output Tray	Δ	Δ	Requires the bridge unit.
Key Counter Bracket	O	O	
Expansion Box	O	O	It is required only when the fax option and/or printer option is installed.

Printer options

O = Available, Δ = Requires another option

Option	Adonis-C1b	Adonis-C1c	Note
PostScript Kit	O	O	
Hard Disk	O	O	
Network Interface Board	O	O	
Mailbox	Δ	Δ	Requires the paper tray unit.
Mailbox Bridge Unit	Δ	Δ	Requires the mailbox.
RAM SIMM	O	O	

Fax options and scanner kits

All options for the fax unit are available when the fax unit has been installed.

Relationship between main machine, mailbox, and finisher

O = Available, **X** = Not available

Model	Mailbox	1000-sheet Finisher	3000-sheet Finisher
Adonis-C1b	Installed	X	X
	Not Installed	O	X
Adonis-C1c	Installed	X	O
	Not Installed	O	O

1.4 MECHANICAL COMPONENT LAYOUT

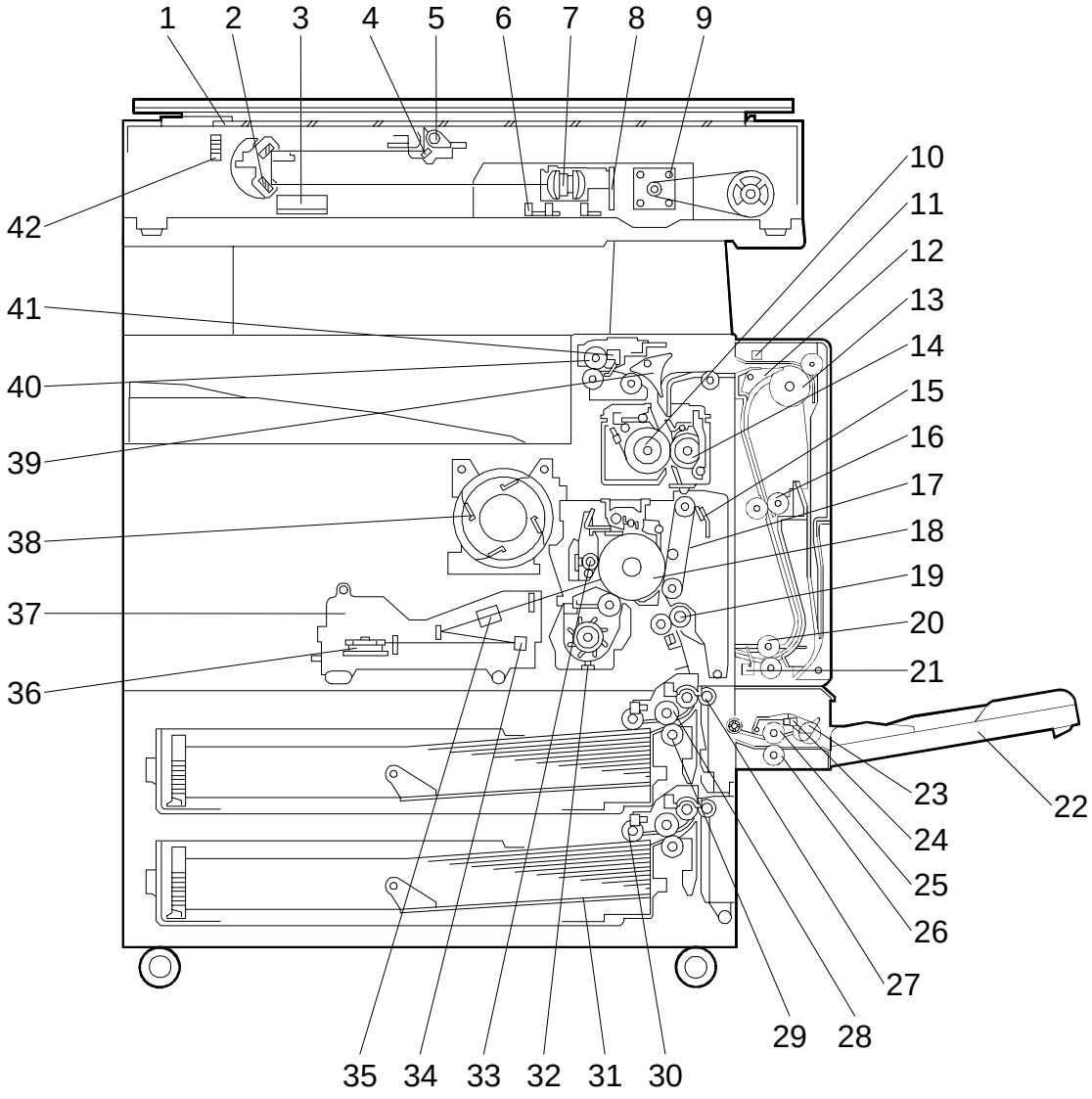

A284V503.WMF

1. Exposure Glass
2. 2nd Mirror
3. Original Width Sensors
4. 1st Mirror
5. Exposure Lamp
6. Original Length Sensors
7. Lens
8. SBU
9. Scanner Motor
10. Hot Roller
11. Entrance Sensor
12. Inverter Gate
13. Inverter Roller
14. Pressure Roller
15. Transfer Belt Cleaning Blade
16. Upper Transport Roller
17. Transfer Belt
18. OPC Drum
19. Registration Roller
20. Lower Transport Roller
21. Exit Sensor
22. By-pass Tray
23. Pick-up Roller
24. Paper End Sensor
25. Paper Feed Roller
26. Separation Roller
27. Upper Relay Roller
28. Feed Roller
29. Separation Roller
30. Pick-up Roller
31. Bottom Plate
32. Development Unit
33. Charge Roller
34. Fθ Mirror
35. Barrel Toroidal Lens (BTL)
36. Polygonal Mirror Motor
37. Laser Unit
38. Toner Supply Bottle Holder
39. Exit Junction Gate
40. Exit Roller
41. Paper Exit Sensor
42. 3rd Mirror

1.5 PAPER PATH

The paper path is the same as for NAD machines.

1.6 DRIVE LAYOUT

The drive layout is the same as for NAD machines.

1.7 ELECTRICAL COMPONENT DESCRIPTIONS

Refer to the electrical component layout and the point-to-point diagram on the waterproof paper in the pocket for the locations of these components.

Symbol	Index No.	Description	Note
Printed Circuit Boards			
PCB1	58	BICU (Base Engine & Image Control Unit)	Controls all copier functions both directly and through other control boards.
PCB2	55	PSU (Power Supply Unit)	Provides dc power to the system and ac power to the fusing lamp and optional heaters.
PCB3	61	IOB (Input/Output Board)	Controls the mechanical parts of the printer (excluding the paper feed section), and the fusing lamp power.
PCB4	62	Paper Feed Control (PFB)	Controls the mechanical parts of all paper feed sections.
PCB5	63	High Voltage Supply	Supplies high voltage to the drum charge roller, development roller, and transfer belt.
PCB6	9	SBU (Sensor Board Unit)	Contains the CCD, and outputs a video signal to the BICU board.
PCB7	7	SIB (Scanner Interface Board)	Controls the scanner carriages and passes signals from the scanner unit to the BICU board.
PCB8	11	Operation Panel	Controls the LCD and LED matrix and monitors the key matrix.
PCB9	4	Lamp Stabilizer	Provides dc power to the exposure lamp.
PCB10	19	LDDR (Laser Diode Driver)	Controls the laser diode.
PCB11	54	SIFB (Scanner Interface Board)	Passes signals between the SBU and BICU boards.
PCB12	65	Main (Duplex)	Controls the duplex unit and communicates with the copier.
Motors			
M1	35	Main	Drives the main body components.
M2	8	Scanner Drive	Drives the 1st and 2nd scanners.
M3	45	Tray Lift	Raises the bottom plate in the paper tray.
M4	22	Polygonal Mirror	Turns the polygonal mirror.
M5	20	LD Positioning	Rotates the LD unit to adjust the LD beam pitch when a different resolution is selected.
M6	36	Cooling Fan	Removes heat from the main PCBs.
M7	37	Exhaust Fan	Removes heat from around the fusing unit.
M8	34	Toner Supply	Rotates the toner bottle to supply toner to the development unit.
M9	56	PSU Cooling Fan	Removes heat from the PSU.
M10	64	Inverter (Duplex)	Drives the duplex inverter roller.
M11	66	Transport (Duplex)	Drives the duplex upper and lower transport rollers.

Symbol	Index No.	Description	Note
Sensors			
S1	2	Scanner Home Position	Informs the CPU when the 1st and 2nd scanners are at the home position.
S2	3	Platen Cover	Informs the CPU whether the platen cover is up or down (related to APS/ARE functions). ARE: Auto Reduce and Enlarge
S3	12	Original Width	Detects the width of the original. This is one of the APS (Auto Paper Select) sensors.
S4	5	Original Length-1	Detects the length of the original. This is one of the APS (Auto Paper Select) sensors.
S5	6	Original Length-2	Detects the length of the original. This is one of the APS (Auto Paper Select) sensors.
S6	21	LD Unit Home Position	Informs the CPU when the LD unit is at the home positon.
S7	17	Toner Density (TD)	Detects the amount of toner inside the development unit.
S8	24	Paper Exit	Detects misfeeds.
S9	27	Registration	Detects the leading edge of the copy paper to determine the stop timing of the paper feed clutch, and detects misfeeds.
S10	26	Image Density (ID)	Detects the density of various patterns and the reflectivity of the drum for process control.
S11	28	Upper Paper Height	Detects when the paper in the upper paper tray is at the feed height.
S12	30	Lower Paper Height	Detects when the paper in the lower paper tray is at the feed height.
S13	29	Upper Paper End	Informs the CPU when the upper paper tray runs out of paper.
S14	31	Lower Paper End	Informs the CPU when the lower paper tray runs out of paper.
S15	33	Upper Relay	Detects misfeeds.
S16	32	Lower Relay	Detects misfeeds.
S17	48	Upper Tray	Informs the CPU whether the upper paper tray is set into the machine or not.
S18	46	Lower Tray	Informs the CPU whether the lower paper tray is set into the machine or not.
S19	38	Transfer Belt Position	Informs the CPU of the current position of the transfer belt unit.
S20	18	Toner Overflow	Detects toner overflow in the toner collection tank.
S21	61	Duplex Entrance	Detects the trailing edge of the copy paper to turn on the inverter gate solenoid and turn on the inverter motor in reverse. Checks for misfeeds.
S22	67	Exit (Duplex)	Checks for misfeeds.
S23	68	Cover Guide (Duplex)	Detects whether the cover guide is opened or not.

Symbol	Index No.	Description	Note
S24	69	Paper End (By-pass)	Informs the copier when the by-pass tray runs out of paper.
S25	72	Paper Size Sensor Board (By-pass)	Detects the paper width for the by-pass tray unit.
Switches			
SW1	43	Right Lower Cover	Detects whether the right lower cover is open or closed.
SW2	49	Right Upper Cover	Cut the +5VLD and +24V dc power line and detects whether the right upper cover is open or closed.
SW3	51	Main Power Switch	Supplies power to the copier. If this is off, there is no power supplied to the copier.
SW4	52	Front Cover Safety	Cuts the +5VLD and +24V dc power line and detects whether the front cover is open or not.
SW5	10	Operation Switch	Provides power for machine operation. The machine still has power if this switch is off.
SW6	62	Duplex Unit	Detects whether the duplex unit is opened or not.
Magnetic Clutches			
CL1	39	Transfer Belt	Controls the touch and release movement of the transfer belt unit.
CL2	40	Registration	Drives the registration rollers.
CL3	44	Relay	Drives the relay rollers.
CL4	41	Upper Paper Feed	Starts paper feed from the upper paper tray.
CL5	42	Lower Paper Feed	Starts paper feed from the lower paper tray.
CL6	71	Paper Feed (By-pass)	Starts paper feed from the by-pass tray unit.
Solenoids			
SOL1	63	Inverter Gate (Duplex)	Controls the duplex inverter gate.
SOL2	70	Pick-up (By-pass)	Moves the pick-up roller for the by-pass feed tray to contact the paper.
SOL3	73	Exit Junction Gate (Interchange unit)	Controls the exit junction gate.
SOL4	74	Duplex Junction Gate (Interchange unit)	Controls the duplex junction gate.
Lamps			
L1	13	Exposure	Applies high intensity light to the original for exposure.
L2	16	Fusing	Provides heat to the hot roller.
L3	25	Quenching	Neutralizes any charge remaining on the drum surface after cleaning.

Symbol	Index No.	Description	Note
Heaters			
H1	1	Optics Anti-condensation (option)	Turns on when the main power switch is off to prevent moisture from forming on the optics.
H2	47	Tray (option)	Turns on when the main power switch is off to keep paper dry in the paper tray.
Thermistors			
TH1	14	Fusing	Monitors the temperature at the central area of the hot roller.
Thermofuses			
TF1	15	Fusing	Provides back up overheat protection in the fusing unit.
Counters			
CO1	50	Total	Keeps track of the total number of prints made.
CO2	N/A	Key (option)	Used for control of authorized use. If this feature is enabled for copying, copying will be impossible until it is installed. It can also be enabled for fax and printer modes separately.
Others			
LSD	23	Laser Synchronization Detector	Detects the laser beam at the start of the main scan.

1.8 BOARD STRUCTURE

1.8.1 BLOCK DIAGRAM

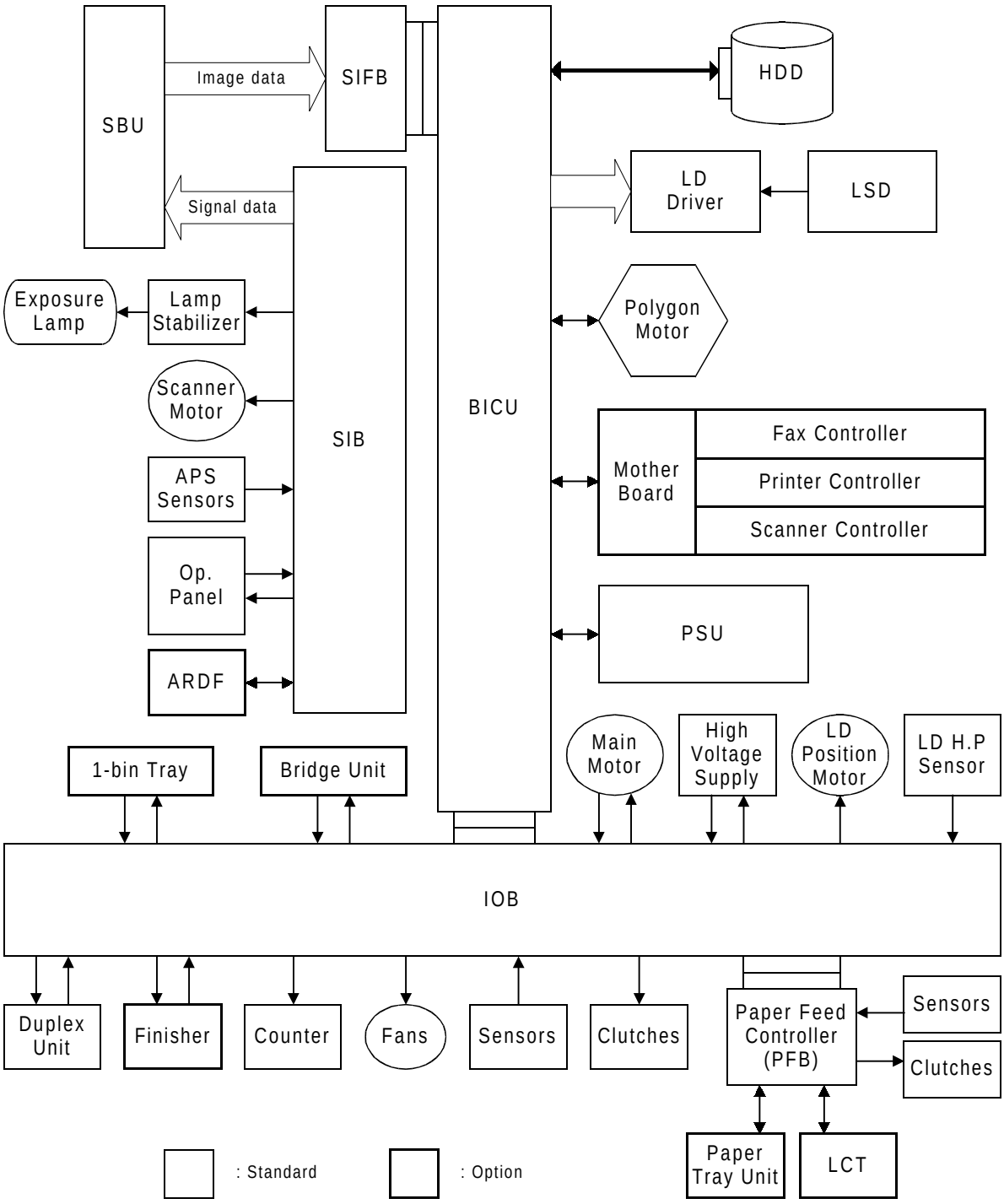

A284V501.WMF

1.8.2 DESCRIPTIONS

1. BICU (Base Engine and Image Control Unit)

This is the main board. It controls the following functions.

- Engine sequence
- Timing control for peripherals
- Image processing, video control
- Operation control
- Application boards (fax, printer, scanner)

2. IOB (Input/Output Board)

The IOB handles the following functions.

- Drive control for the sensors, motors, and solenoids in the printer engine
- PWM control for the high voltage supply board
- Serial interface with peripherals
- Fusing control

3. SBU (Sensor Board Unit)

The SBU receives analog signals from the CCD and converts them into digital signals.

4. SIB (Scanner Interface Board)

This board controls the scanner motor and passes signals between the BICU board and the component parts of the scanner unit.

5. SIFB (Scanner Interface Board)

This board interfaces the SBU with the BICU.

6. Mother Board (Option)

This board interfaces the BICU with the fax controller, printer controller and/or the scanner kit. The mother board is part of the expansion box option.

2. DETAILED DESCRIPTIONS

2.1 SCANNING

2.1.1 OVERVIEW

For NAD

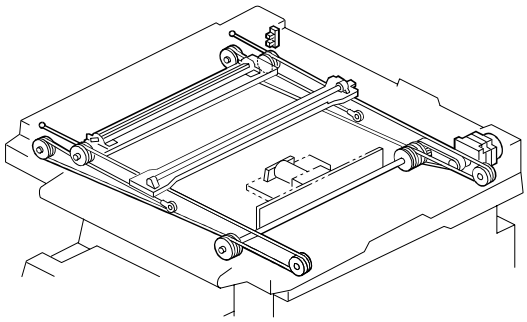

A284D501.WMF

For Adonis-C1

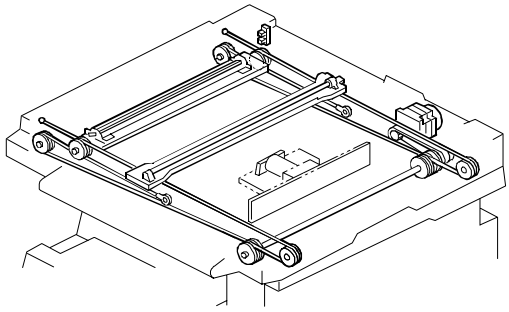

A284D502.WMF

The mechanical components of the scanner unit are the same as for the NAD. However, the following items have been changed because this machine scans at 600 dpi.

- The lens is larger
- Because the lens size has been changed, the drive layout has been changed as shown in the above illustration (note the position of the scanner drive motor).
- Image processing is slightly different
- To reduce the electrical noise generated by the high frequency image data signal, a shield plate has been added to the lens block unit.

2.2 IMAGE PROCESSING

2.2.1 OVERVIEW

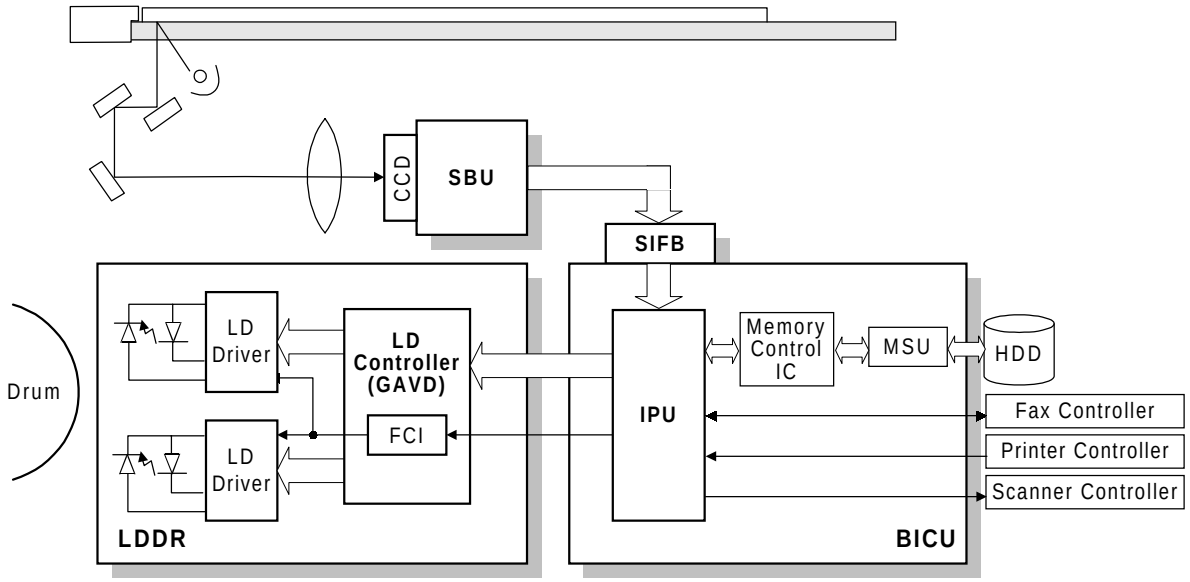

A284D531.WMF

The image data flows similarly to the NAD machine. The differences are the following.

- The video data go to the IPU chip through only the SIFB.
- The MSU circuit is on the BICU board.
- The image processing is changed.

2.2.2 SBU

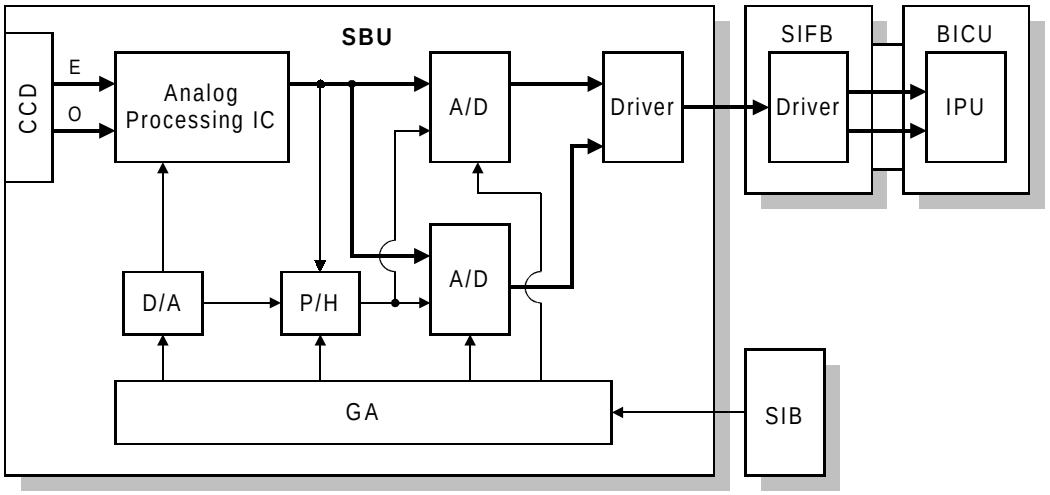

A283D500.WMF

The CCD has two output lines, one each for odd and even pixels, to the analog processing IC. The analog processing IC performs the zero clamp and signal amplification. The analog signals are then converted to 8-bit signals by the A/D converter. The digital signals go to the driver, where they are converted to serial data. Then, these go to the SIFB. In the SIFB, the data is converted to parallel signals (8-bit x 2) by the driver, and these go to the IPU chip.

The SIB controls the circuits on the SBU (such as those for shading).

2.2.3 IMAGE PROCESSING

Overview

The differences in the image processing from the NAD are as follows.

- 600 dpi scanning and printing
- Only grayscale processing mode is available.
- The copy quality for the low contrast image is improved (the filters and the γ table have been modified).
- To consist with gradation and resolution in the text mode, using the error diffusion processing.

Image Processing Path

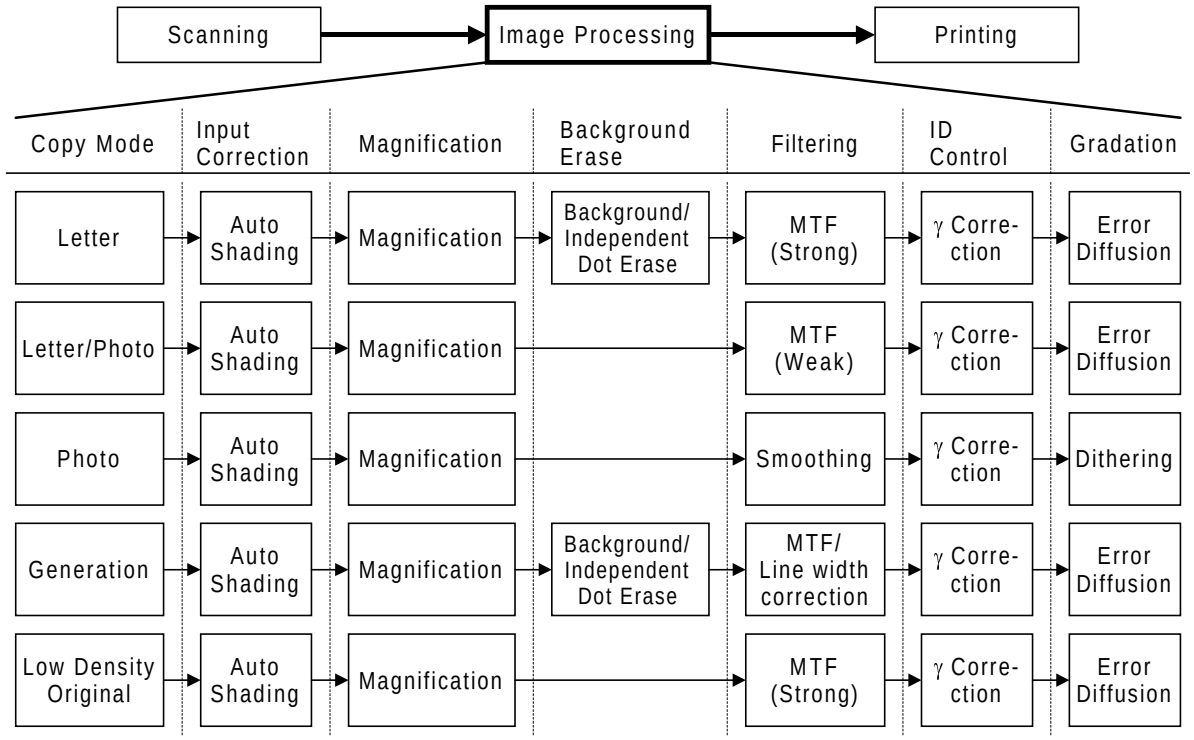

A284D533.WMF

Photo mode: MTF can be used instead of smoothing (SP4-904-3).

SP modes for each image processing mode

Copy mode	Background erase	Filtering	Magnification	Gradation
Letter	**SP4903-34** Background erase level **SP4903-28** Independent dot erase level	**SP4903-11~14, 41~44** MTF filter coefficient **SP4903-20~23, 50~53** MTF filter strength	**SP2909-1** Main scan mag.	
Letter/ Photo	**SP4903-35** Background erase level **SP4903-30** Independent dot erase level	**SP4903-17, 47** MTF filter coefficient **SP4903-25, 55** MTF filter strength	**SP2909-1** Main scan mag.	
Photo	**SP4903-36** Background erase level	**SP4904-3** Filter type (smoothing or MTF) **SP4903-16** Smoothing filter coefficient **SP4903-15, 48** MTF filter coefficient **SP4903-24, 54** MTF filter strength	**SP2909-1** Main scan mag.	**SP4904-2** Dither matrix type
Copied Original	**SP4903-37** Background erase level **SP4903-32** Independent dot erase level	**SP4903-19, 46** MTF filter coefficient **SP4903-27, 57** MTF filter strength	**SP2909-1** Main scan mag.	**SP4904-6** Line width correction type
Low Density Original	**SP4903-31** Independent dot erase level	**SP4903-18, 45** MTF filter coefficient **SP4903-26, 56** MTF filter strength	**SP2909-1** Main scan mag.	

Filtering

There are two software filters: MTF and smoothing, as in the NAD. There are four MTF filter types: filter strength for main scan direction, filter strength for sub scan direction, filter coefficient for main scan direction, and filter coefficient for sub scan direction. These filters can be adjusted with SP mode.

When the filter is stronger in the main scan direction, lines parallel to the feed direction are emphasized. When the filter is stronger in the sub scan direction, lines at right angles to the feed direction are emphasized.

The relationship between the filter coefficient and the filter strength is as follows.

MTF filter coefficient

(Weak) (Strong)
$0 \rightarrow 1 \rightarrow 2 \rightarrow 3 \rightarrow 4 \rightarrow 5 \rightarrow 6 \rightarrow 7 \rightarrow 8 \rightarrow 9 \rightarrow 10 \rightarrow 11 \rightarrow 12 \rightarrow 13 \rightarrow 14 \rightarrow 15$

MTF filter strength

(Weak) $0 \rightarrow 1 \rightarrow 2 \rightarrow 3 \rightarrow 4 \rightarrow 5 \rightarrow 6 \rightarrow 7$ (Strong)

Smoothing filter coefficient

(Weak) $0 \rightarrow 1 \rightarrow 2 \rightarrow 3 \rightarrow 4 \rightarrow 5 \rightarrow 6 \rightarrow 7$ (Strong)

It is difficult to explain how to use the filter coefficient and filter strengths to control MTF and smoothing. Refer to the following charts to determine how to make the filters weaker or stronger. The values in the bold columns are the default settings.

Text mode: 25 ~ 64 %							
MTF strength	Strong (Sharp)	←	←	**Normal**	→	→	Weak (Soft)
Main scan: Filter coefficient (SP4903-11)	9	15	14	**12**	10	9	9
Sub scan: Filter coefficient (SP4903-41)	11	13	13	**12**	12	12	10
Main scan: Filter Strength (SP4903-20)	3	2	2	**2**	2	2	2
Sub scan: Filter Strength (SP4903-50)	3	2	2	**2**	2	2	2

Text mode: 65 ~ 154 %							
MTF strength	Strong (Sharp)	←	←	Normal	→	→	Weak (Soft)
Main scan: Filter coefficient (SP4903-12)	9	9	15	14	12	10	9
Sub scan: Filter coefficient (SP4903-42)	13	11	13	13	13	13	13
Main scan: Filter Strength (SP4903-21)	3	3	2	2	2	2	2
Sub scan: Filter Strength (SP4903-51)	3	3	2	2	2	2	2

Text mode: 155 ~ 400 %							
MTF strength	Strong (Sharp)	←	←	Normal	→	→	Weak (Soft)
Main scan: Filter coefficient (SP4903-13)	10	9	9	15	14	12	10
Sub scan: Filter coefficient (SP4903-43)	13	13	11	13	13	13	13
Main scan: Filter Strength (SP4903-22)	3	3	3	2	2	2	2
Sub scan: Filter Strength (SP4903-52)	3	3	3	2	2	2	2

Text mode: Notch 1 (lightest image density setting), 65 ~ 154 %							
MTF strength	Strong (Sharp)	←	←	Normal	→	→	Weak (Soft)
Main scan: Filter coefficient (SP4903-14)	9	9	15	14	12	10	9
Sub scan: Filter coefficient (SP4903-44)	13	11	13	13	13	13	13
Main scan: Filter Strength (SP4903-23)	4	4	3	3	3	3	3
Sub scan: Filter Strength (SP4903-53)	4	4	3	3	3	3	3

Photo mode: (when MTF filtering is selected with SP4903-3)							
MTF strength	Strong (Sharp)	←	←	Normal	→	→	Weak (Soft)
Main scan: Filter coefficient (SP4903-15)	9	9	15	14	12	10	9
Sub scan: Filter coefficient (SP4903-48)	13	11	13	13	13	13	13
Main scan: Filter Strength (SP4903-24)	2	2	1	1	1	1	1
Sub scan: Filter Strength (SP4903-54)	2	2	1	1	1	1	1

Text/Photo mode							
MTF strength	Strong (Sharp)	←	←	Normal	→	→	Weak (Soft)
Main scan: Filter coefficient (SP4903-17)	9	14	10	9	8	10	9
Sub scan: Filter coefficient (SP4903-47)	10	13	13	10	9	13	10
Main scan: Filter Strength (SP4903-25)	2	1	1	1	1	0	0
Sub scan: Filter Strength (SP4903-55)	2	1	1	1	1	0	0

Low density mode							
MTF strength	Strong (Sharp)	←	←	Normal	→	→	Weak (Soft)
Main scan: Filter coefficient (SP4903-18)	14	12	10	9	9	14	10
Sub scan: Filter coefficient (SP4903-45)	13	13	13	13	10	13	13
Main scan: Filter Strength (SP4903-26)	3	3	3	3	3	2	2
Sub scan: Filter Strength (SP4903-56)	3	3	3	3	3	2	2

Copied original mode							
MTF strength	Strong (Sharp)	←	←	Normal	→	→	Weak (Soft)
Main scan: Filter coefficient (SP4903-19)	9	9	12	10	9	9	14
Sub scan: Filter coefficient (SP4903-46)	13	10	13	13	13	10	13
Main scan: Filter Strength (SP4903-27)	3	3	2	2	2	2	1
Sub scan: Filter Strength (SP4903-57)	3	3	2	2	2	2	1

3. INSTALLATION PROCEDURE

3.1 INSTALLATION REQUIREMENTS

3.1.1 ENVIRONMENT

1. Temperature Range: 10°C to 30°C (50°F to 86°F)
2. Humidity Range: 15% to 80% RH
3. Ambient Illumination: Less than 1,500 lux (do not expose to direct sunlight.)
4. Ventilation: Room air should turn over at least 30 m3/hr/person
5. Ambient Dust: Less than 0.10 mg/m^3 (2.7 x 10 -6 oz/yd^3)
6. Avoid an area which is exposed to sudden temperature changes. This includes:
   1) Areas directly exposed to cool air from an air conditioner.
   2) Areas directly exposed to heat from a heater.
7. Do not place the machine in an area where it will be exposed to corrosive gases.
8. Do not install the machine at any location over 2,000 m (6,500 ft.) above sea level.
9. Place the copier on a strong and level base. (Inclination on any side should be no more than 5 mm.)
10. Do not place the machine where it may be subjected to strong vibrations.

3.1.2 MACHINE LEVEL

Front to back:	Within 5 mm (0.2") of level
Right to left:	With in 5 mm (0.2") of level

3.1.3 MINIMUM SPACE REQUIREMENTS

Place the copier near the power source, providing clearance as shown:

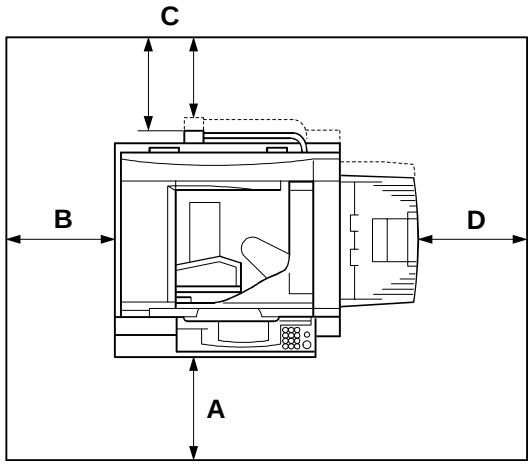

A284I501.WMF

A: In Front: Over 75 cm (29.6")
B: Left: Over 10 cm (4")
C: To Rear: Over 10 cm (4")
D: Right: Over 10 cm (4")

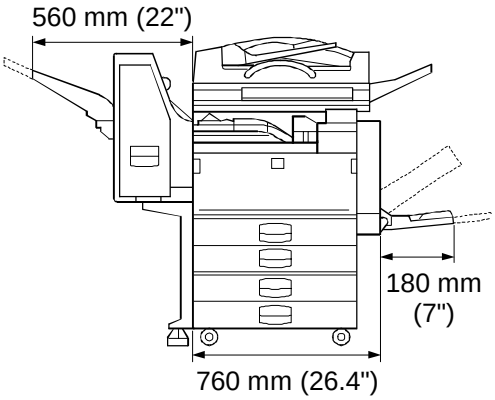

A284I502.WMF

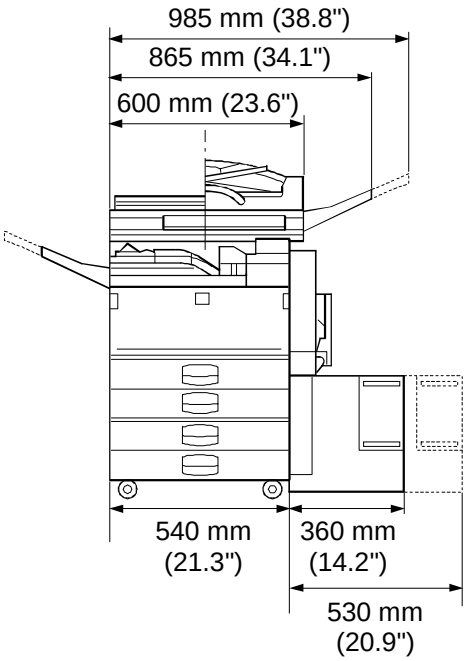

A284I504.WMF

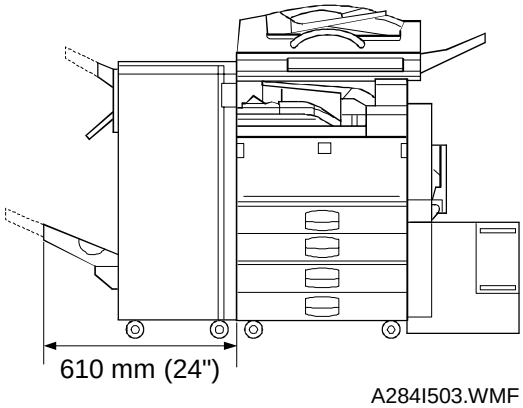

A284I503.WMF

NOTE: The 75 cm recommended for the space at the front is for pulling out the paper tray only. If an operator stands at the front of the copier, more space is required.

3.1.4 POWER REQUIREMENTS

⚠CAUTION

1. Make sure that the wall outlet is near the copier and easily accessible. Make sure the plug is firmly inserted in the outlet.
2. Avoid multi-wiring.
3. Be sure to ground the machine.

1. Input voltage level: 120 V, 60 Hz: More than 10 A
2. Permissible voltage fluctuation: ±10 %
3. Do not set anything on the power cord.

3.2 INSTALLATION FLOW CHART

The following flow chart shows how to install the optional units more efficiently.

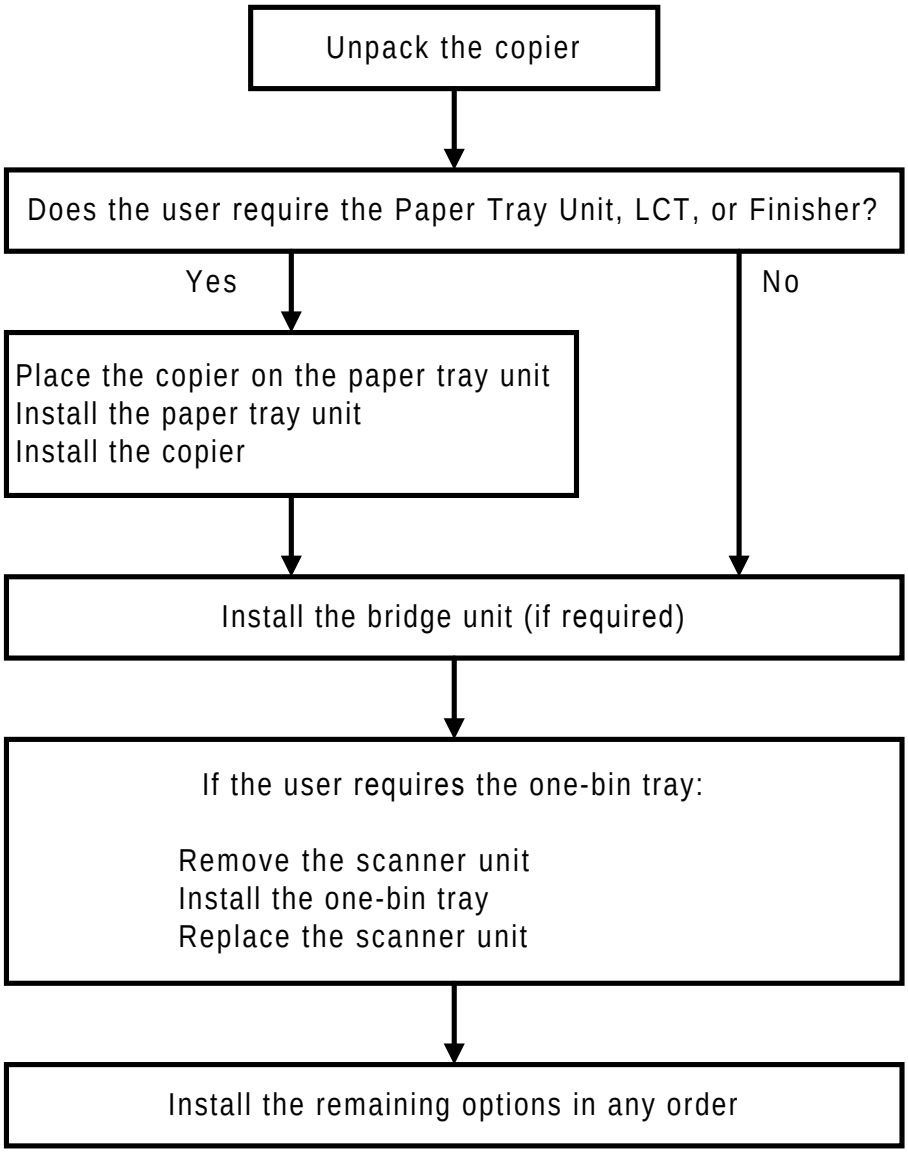

A284I515.WMF

Bridge Unit: Needed for the finishers and the external output tray
Paper Tray Unit: Needed for the LCT and finishers
Other requirements: See Overall Machine Information – Installation Option Table

3.3 COPIER INSTALLATION

3.3.1 ACCESSORY CHECK

Check the quantity and condition of the accessories in the box against the following list:

Description	Q'ty
1. Operation Panel Decal	1
2. Paper Size Decal	1
3. Model Name Decal (-10 machines)	1
4. Operation Panel Brand Sticker (-10 machines)	1
5. NECR – English (-17 machine)	1
6. Cushion	1
7. Operation Instructions – System Setting	1
8. Operation Instructions – Copy Reference	1
9. Operation Instructions – Quick Reference	1

3.3.2 INSTALLATION PROCEDURE

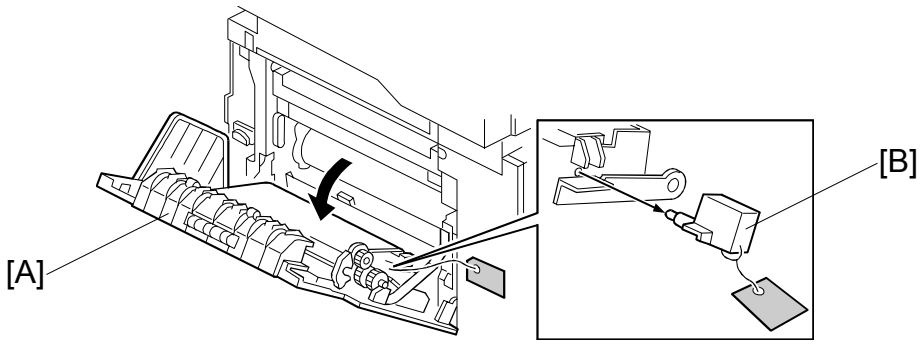

A284I505.WMF

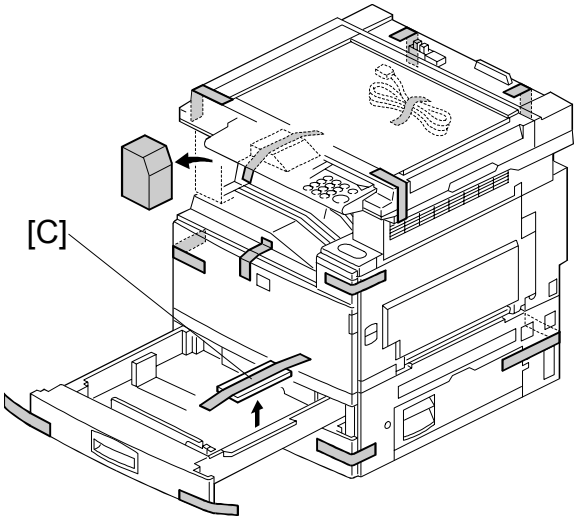

A284I506.WMF

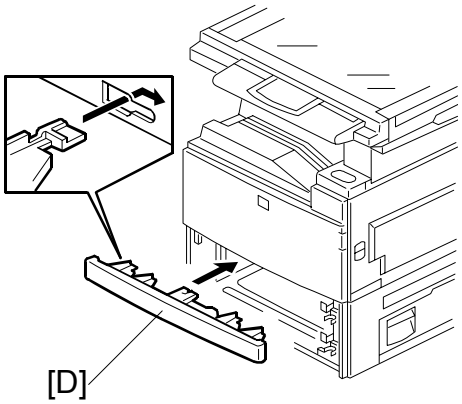

A284I507.WMF

⚠CAUTION

Unplug the machine power cord before starting the following procedure.

If the optional paper tray unit is going to be installed now, put the copier on the paper tray unit first, then install the paper tray unit, then install the copier.

NOTE: Keep the shipping retainers after installing the machine. They will be reused if the machine is moved to another location in the future.

1. Remove the tapes on the exterior of the copier.
2. Open the duplex unit and open the upper right cover [A].
3. Remove the pin [B].
4. Pull out the paper trays and remove the bottom plate stoppers [C].
5. Install the middle front cover [D] which is in the second paper tray.
   NOTE: If the optional paper tray unit is installed, this step is done while installing the paper tray unit.

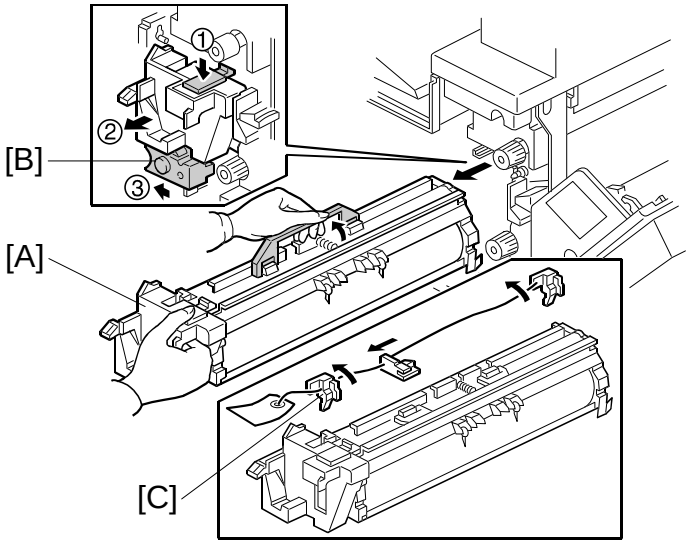

A284I508.WMF

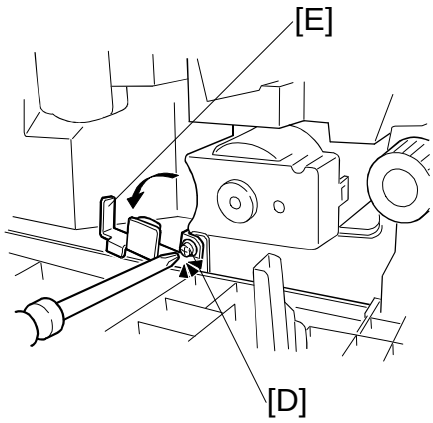

A284I500.WMF

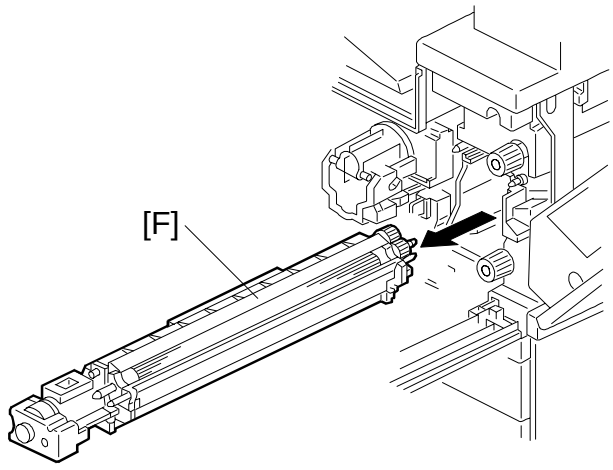

A284I516.WMF

6. Open the front cover.
7. Push down the lever (1). Then pull the PCU [A] out a small distance (2), and move the development unit [B] to the left (3) so that the development unit is away from the drum, then slide out the PCU completely.
8. Remove three clamps [C].
9. Loosen the screw [D] and rotate the bracket [E] as shown.
10. Slide out the development unit [F].

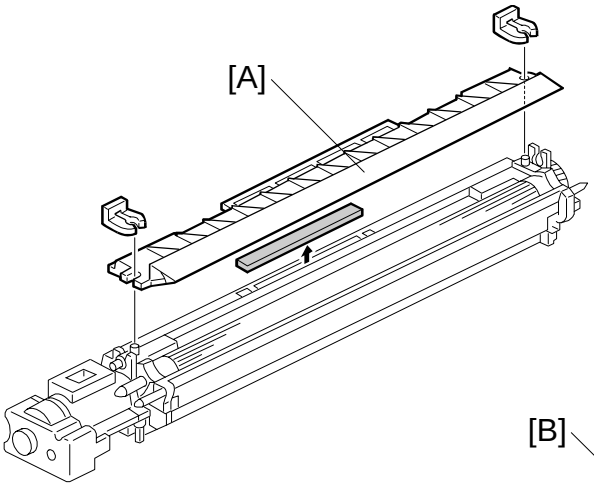

A284I509.WMF

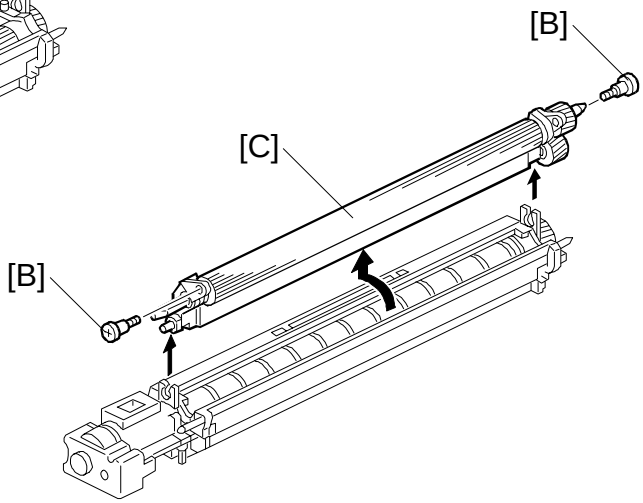

A284I510.WMF

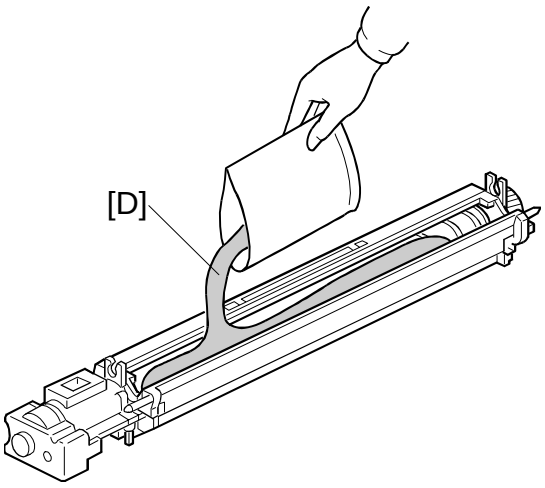

A284I511.WMF

11. Remove the entrance seal plate [A] (2 clamps).
12. Remove two screws [B] and take out the development roller unit [C].
13. Pour all developer [D] into the development unit uniformly.

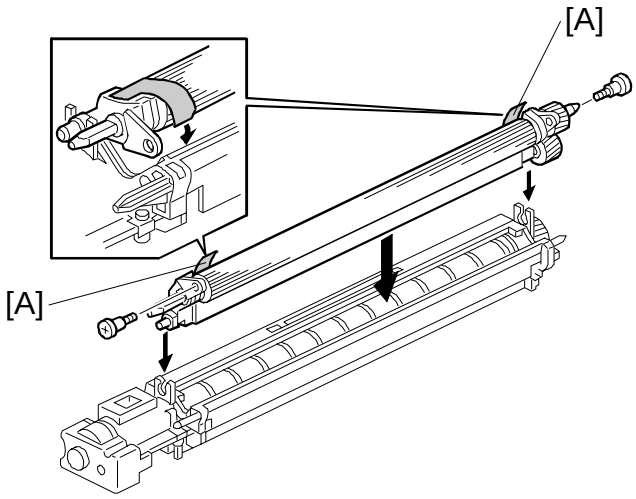

A284I512.WMF

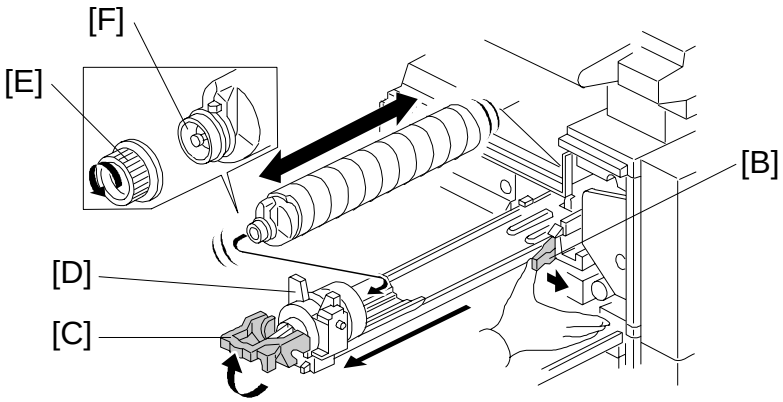

A284I513.WMF

14. Reassemble the development unit.
    NOTE: Make sure that the development side seals [A] are set inside the development unit case.
15. Reassemble the machine.
    NOTE: When reinstalling the PCU, make sure it is installed properly. Otherwise, black copies may be printed.
16. Push lever [B] to the side, raise the toner bottle holder lever [C], and pull the toner bottle holder [D] out.
17. Shake the toner bottle well.
    NOTE: Do not remove the toner bottle cap [E] until after shaking.
18. Unscrew the bottle cap and insert the bottle into the holder.
    NOTE: Do not touch the inner bottle cap [F].
19. Reposition the holder and press down the holder lever to secure the bottle.

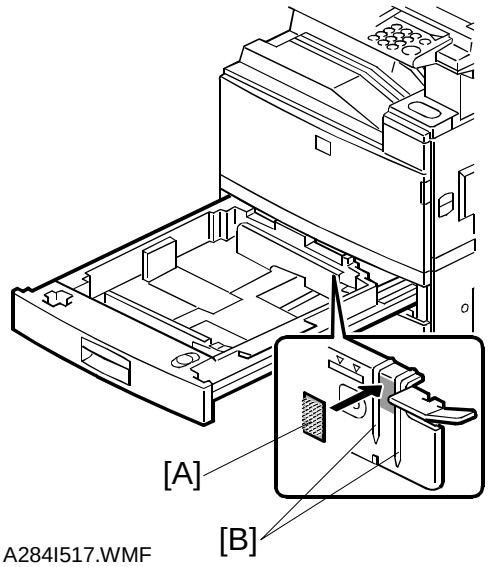

A284I517.WMF

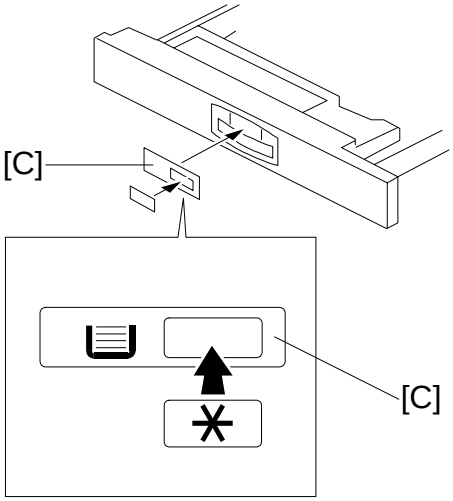

A284I514.WMF

20. Turn on the main power switch.
21. After the fusing warm-up period, enter the SP mode.
    1) Press the “Clear Mode” key.
    2) Enter “107” using the numeric keys.
    3) Hold down the “Clear/Stop” key for more than 3 seconds.
    4) Select “1” (copier).
    NOTE: Do not enter SP mode during the fusing warm-up period (the LED of the start key is red during this period)
22. Perform the TD sensor initial setting as follows:
    1) Enter “2-801” and press the “Enter” key.
    2) Press “1” to start the TD sensor initial setting.
    NOTE: The machine will automatically stop when TD sensor initial setting is completed, and the TD sensor output voltage will appear on the LCD.
23. Perform the process control initial setting using SP2-805.
24. When loading paper bigger than A4 (11" x 8.5") in the 1st paper tray, attach the cushion [A] to the paper tray as shown.
    NOTE: 1) This procedure is required only for the 1st paper tray.
    2) Make sure that the pad is not attached over the ribs [B].
25. Change the side fences and end fence to match the paper size that will be used. Then pull the paper tray out and load paper into it.
26. Enter the proper paper size for each paper tray using UP mode.
27. Attach the appropriate paper size decal [C] to the paper tray.
    NOTE: Paper size decals are also used for the optional paper tray unit. Keep any remaining decals for use with the paper tray unit.
28. Check the copy quality and machine operation (refer to the “Replacement and Adjustment - Copy Adjustment” section of the service manual).

3.4 PAPER TRAY UNIT INSTALLATION

3.4.1 ACCESSORY CHECK

Check the quantity and condition of the accessories in the box against the following list:

Description	Q'ty
1. Joint Bracket	1
2. Front Stand	1
3. Rear Stand	1
4. Stand Bracket	1
5. Knob Screw – M3	1
6. Knob Screw – M4x10	1
7. NECR – Multi-language (-17, -27 machines)	1
8. Installation Procedure	1

3.4.2 INSTALLATION PROCEDURE

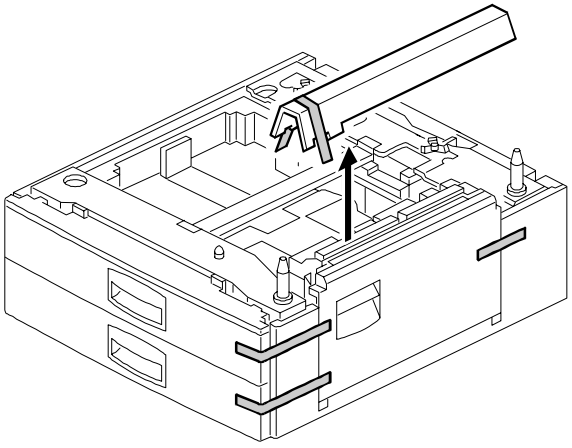

A682I557.WMF

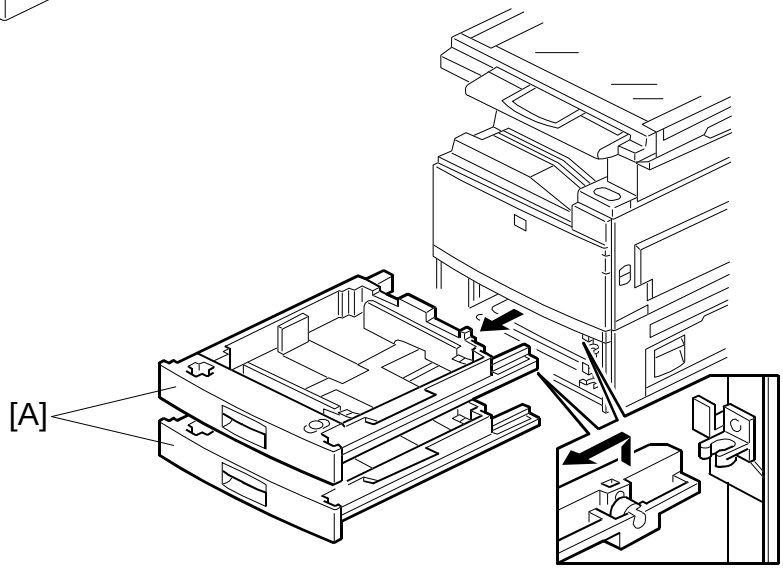

A682I504.WMF

⚠CAUTION

Unplug the main machine power cord before starting the following procedure.

1. Unpack the paper tray unit. Then remove the tapes.
2. Remove the paper trays [A] from the base copier.

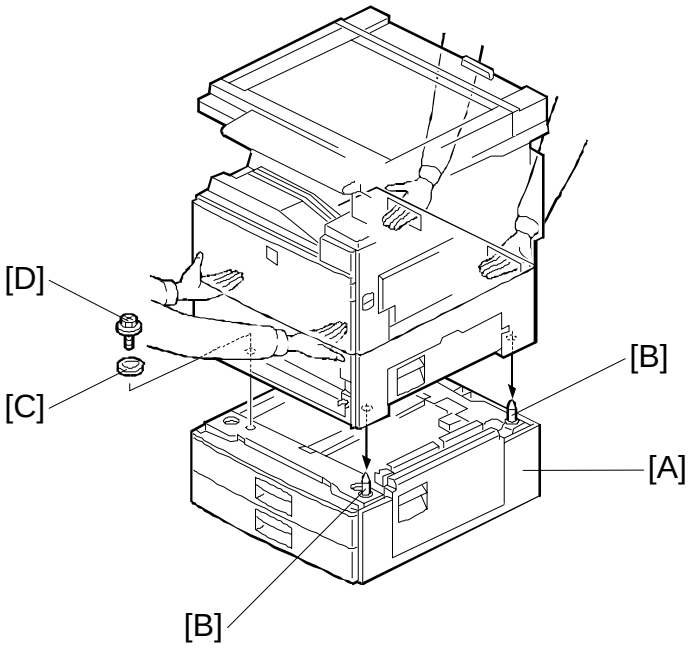

A682I505.WMF

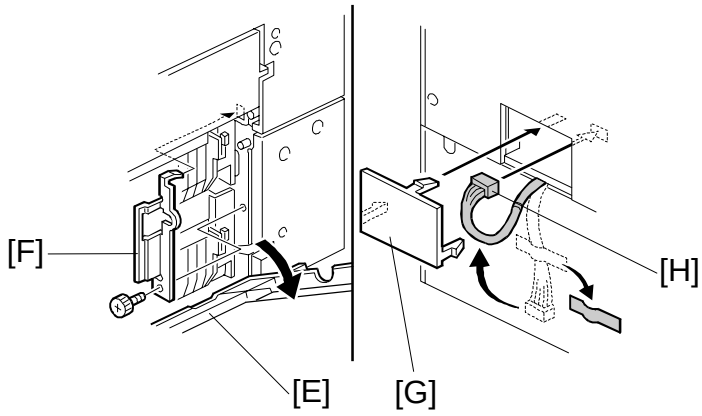

A682I514.WMF

3. Place the main machine on the paper tray unit [A] with the pegs [B] fitting into main machine's peg holes.
   NOTE: 1) The machine must be held is as shown in the above illustration.
   2) Do not hold the scanner unit.
4. Attach the spring washer [C] to the short knob screw [D]. Then, secure the paper tray unit.
5. Open the right cover of the paper tray unit [E].
6. Secure the joint bracket [F] (1 long knob screw).
7. Remove the connector cover [G] of the main machine.
8. Connect the paper tray unit harness [H] to the main machine and reinstall the connector cover.

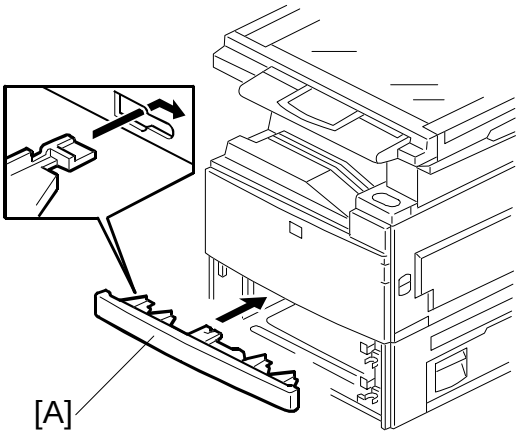

A682I516.WMF

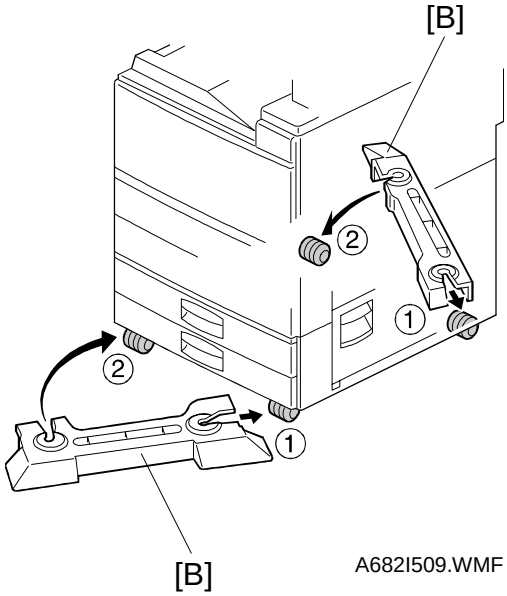

A682I509.WMF

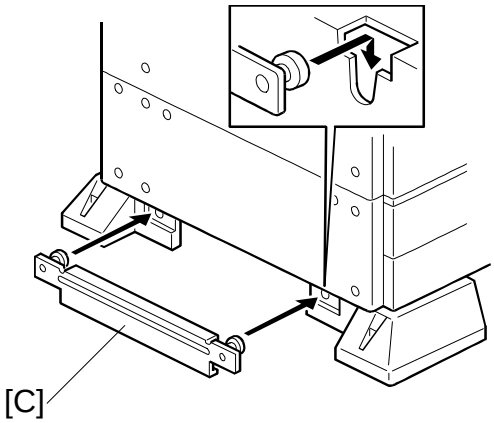

A682I511.WMF

9. Install the middle front cover [A] which in the 2 nd paper tray.
10. Install the front and rear stands [B] as shown above.
11. Install the stand bracket [C].

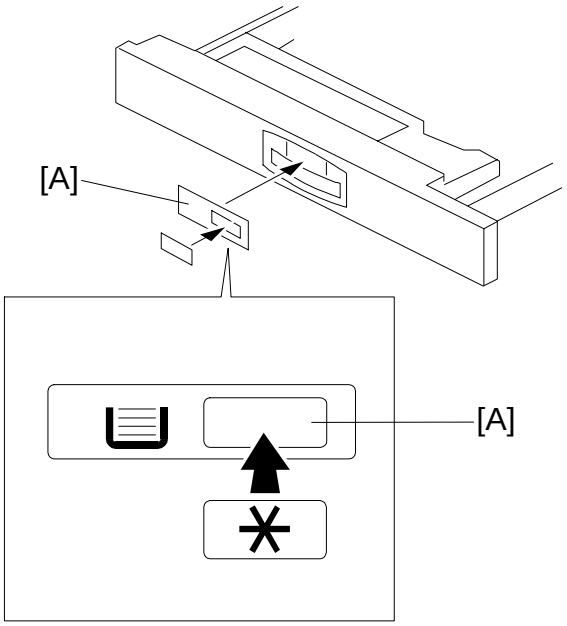

A682I500.WMF

12. Load paper into the paper tray and install the paper trays.
    NOTE: The side and rear fences should be properly positioned using the green screw driver tool.
13. Attach the appropriate tray decals [A] which are included in the accessory box for the main machine.
14. Turn on the ac switch.
15. Enter the paper size for each paper tray using a UP mode.
16. Check the machine's operation and copy quality.

3.5 1-BIN TRAY UNIT INSTALLATION

3.5.1 ACCESSORY CHECK

Check the quantity and condition of the accessories in the box against the following list:

Description	Q'ty
1. Grounding Bracket	1
2. Connector Cover	1
3. Base Cover	1
4. Copy Tray	1
5. Copy Tray Bracket	1
6. Snap Ring	1
7. Mylar Strip	2
8. Stepped Screw – M3x8	5
9. Screw – M3x8	1
10. Tapping Screw – M3x6	2
11. Tapping Screw – M3x14	1
12. Tapping Screw – M3x8	1
13. NECR	1
14. Installation Procedure	1

3.5.2 INSTALLATION PROCEDURE

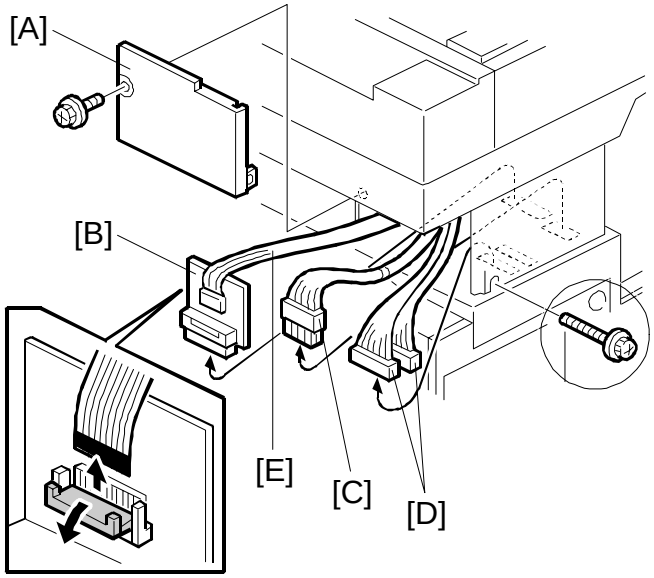

A684I001.WMF

NOTE: The Interchange Unit (A690) must be installed before installing the 1-bin tray unit.

⚠CAUTION

Unplug the main machine power cord before starting the following procedure.

1. Remove the scanner unit.
   NOTE: If the ARDF is installed, remove the ARDF before removing the scanner unit.
   1) Remove the stand rear cover [A] (2 screws).
   2) Disconnect the scanner I/F board [B] and the power connector [C].
   3) Disconnect the harness [D].
   4) Disconnect the scanner I/F harness [E].

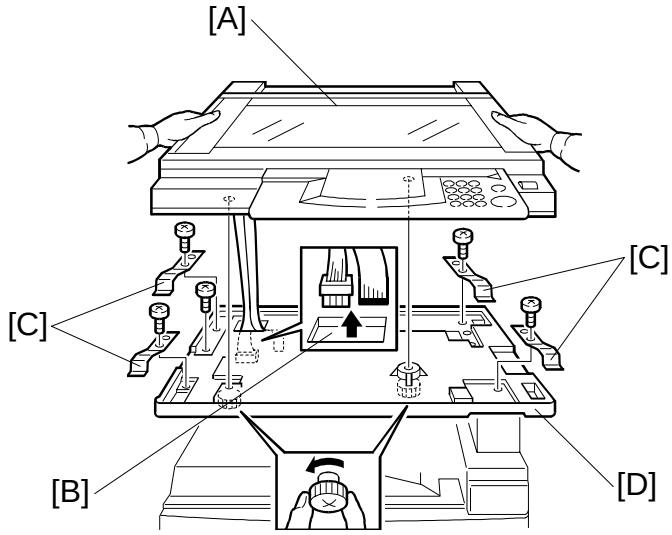

A684I302.WMF

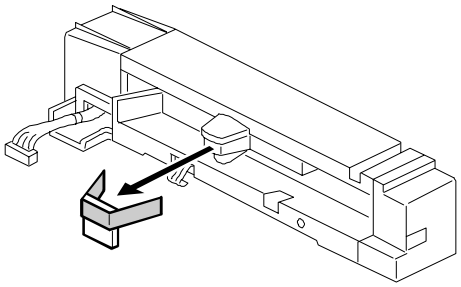

A684I504.WMF

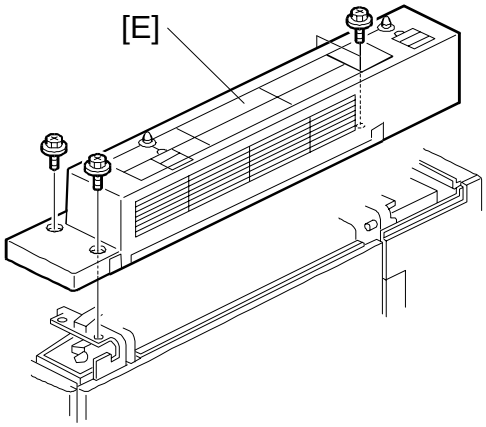

A684I505.WMF

5) Remove the scanner unit [A] (2 knob screws).

NOTE: 1) Hold the scanner unit as shown in the above illustration. Otherwise, scanner unit may be damaged.
2) Make sure the harnesses are not damaged by the edges of the opening [B].
3) After removing the scanner, keep it in a flat level place.

6) Remove four plates [C] (1 screw each).
7) Remove the scanner unit plate [D] (1 screw).

2. Unpack the 1-bin tray unit and remove the tapes.
3. Remove the paper exit cover [E] (4 screws).

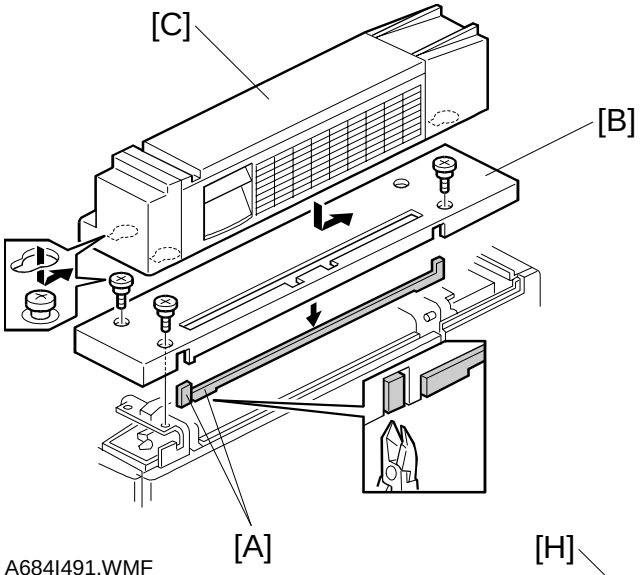

A684I491.WMF

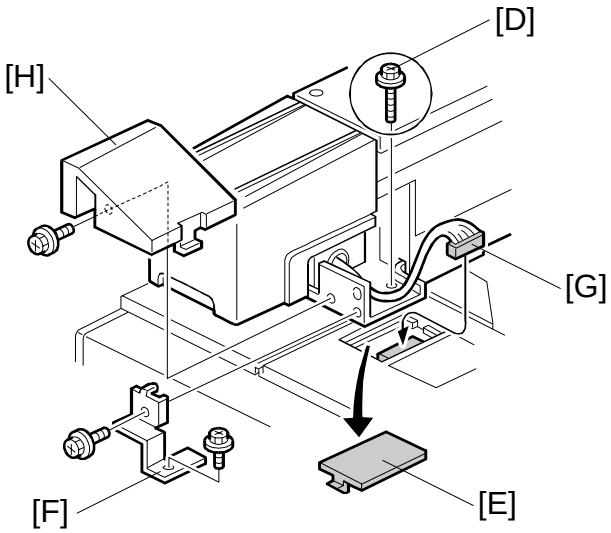

A684I492.WMF

4. Cut away two covers [A] from the base cover [B].
   NOTE: Trim off any remaining unevenness from the edges.
5. Install the base cover (3 stepped screws).
6. Place the 1-bin tray unit [C] on the base cover.
   NOTE: Make sure to hold the 1-bin tray unit at the both sides but never hold the unit at the center.
7. Secure the 1-bin tray unit (1 screw [D] - M3x10).
8. Remove the cover [E].
9. Install the grounding bracket [F] (2 screws - M3x6).
10. Connect the harness [G].
11. Install the connector cover [H] (1 screw - M3x8).

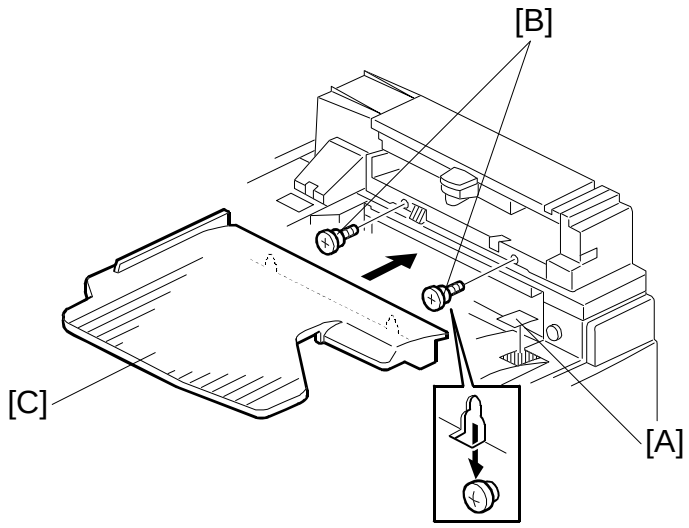

A684I493.WMF

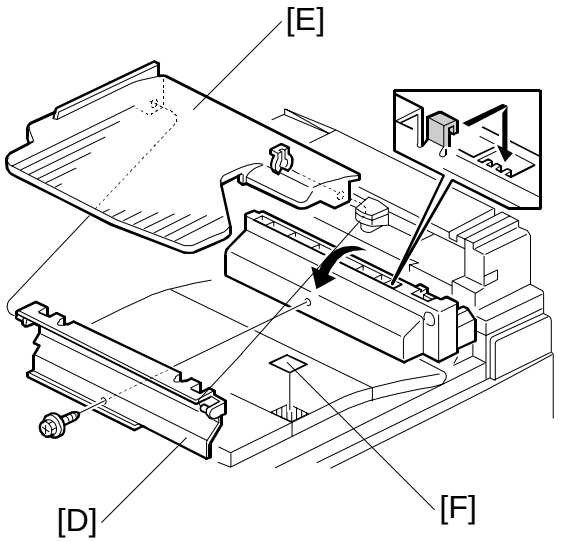

A684I494.WMF

12. Install the copy tray.

- When the Bridge Unit (A688) is not installed -

1) Attach the decal [A], as shown.
2) Install two stepped screws [B], then attach the copy tray [C].

- When the Bridge Unit (A688) is installed -

1) Open the right cover of the bridge unit.
2) Install the copy tray bracket [D] (1 screw).
3) Install the copy tray [E] (1 snap ring).
4) Attach the decal [F], as shown.

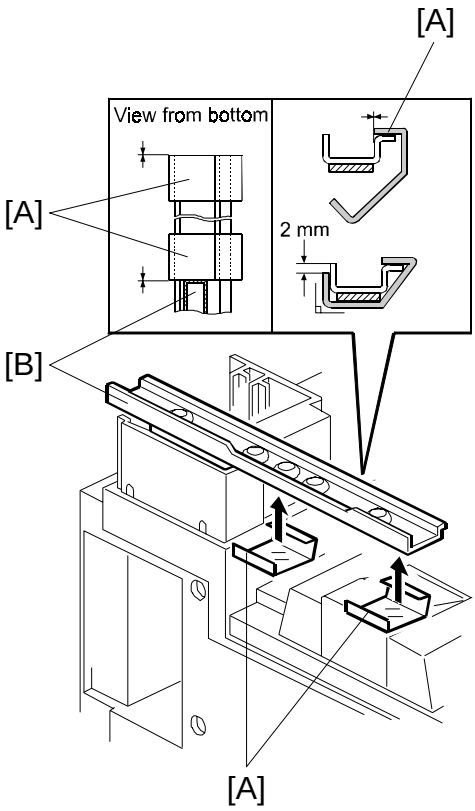

A684I515.WMF

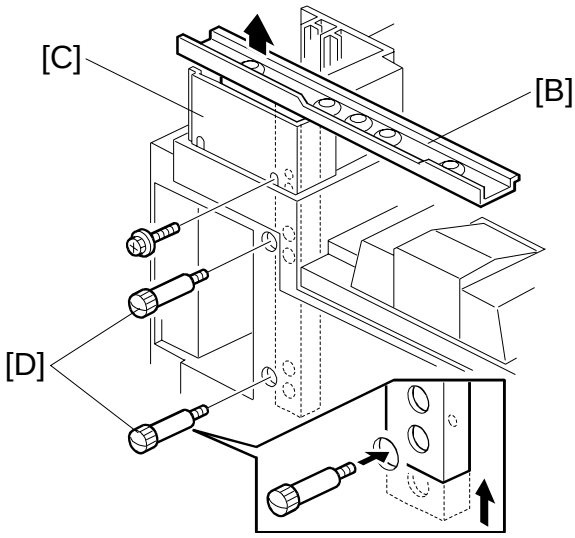

A684I303.WMF

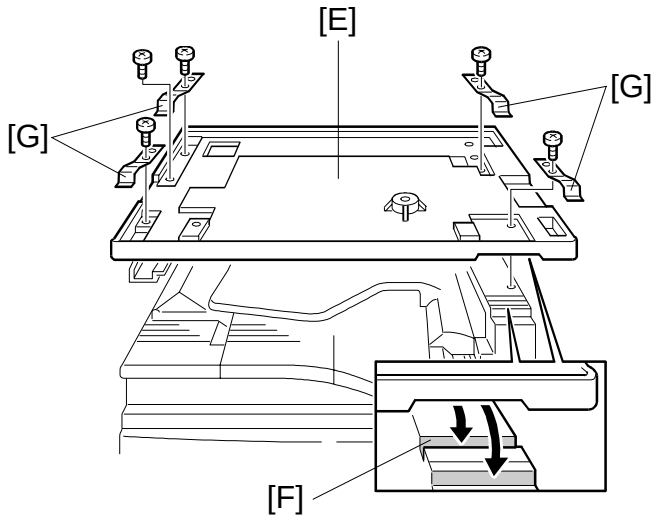

A684I495.WMF

13. Attach two mylar strips [A] to the scanner stand [B], as shown.
14. Change the height of the scanner stand.
    1) Remove the stand cover [C] (1 screw).
    2) Remove two screws [D] which are securing the scanner stand [B].
    3) Raise the scanner stand position.
    4) Secure the stand.
    5) Reinstall the stand cover.
15. Reinstall the scanner unit plate [E] (1 screw).
    NOTE: The scanner unit plate should be positioned at the rear, as shown [F].
16. Reinstall four plates [G] (1 screw each).
17. Reinstall the scanner unit (2 knob screws).
18. Turn on the ac switch and check the 1-bin tray unit operation.

3.6 BRIDGE UNIT INSTALLATION

3.6.1 ACCESSORY CHECK

Check the quantity and condition of the accessories in the box against the following list:

Description	Q'ty
1. Stepped Screw	2
2. Connector Cover	1
3. Entrance Mylar	2
4. Exit Mylar	2
5. NECR	1
6. Installation Procedure	1

3.6.2 INSTALLATION PROCEDURE

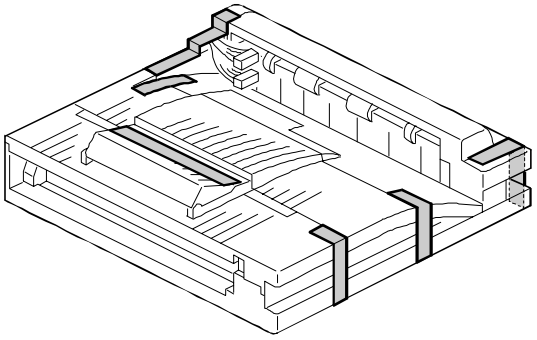

A688I401.WMF

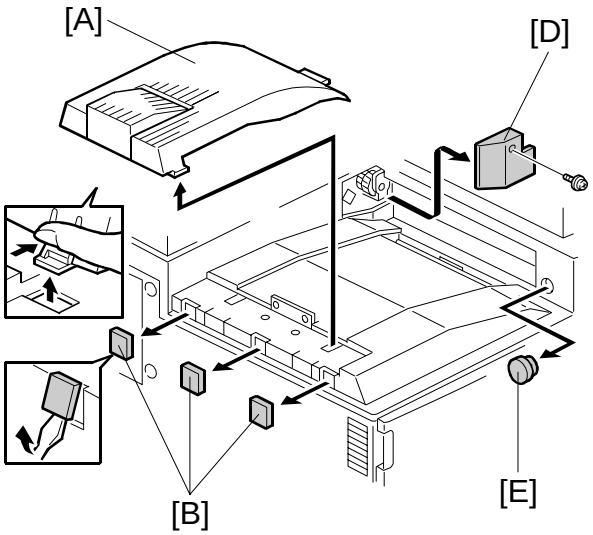

A688I407.WMF

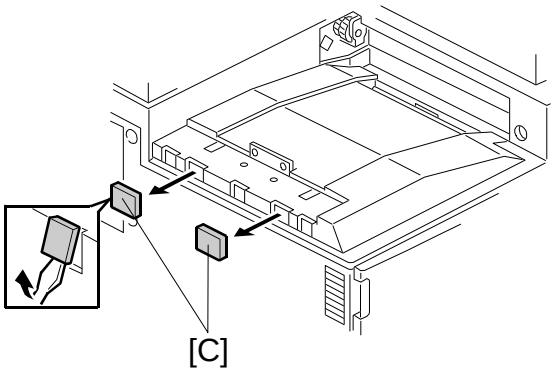

A688I500.WMF

⚠CAUTION

Unplug the main machine power cord before starting the following procedure.

1. Unpack the bridge unit. Then remove the tapes.
2. Remove the inner tray [A].
3. Remove three covers [B].

If the optional external output tray (A825) will be installed instead of a finisher, do step 4.

4. Remove the two covers [C].
5. Remove the cover [D] (1 screw).
6. Remove the cap [E].

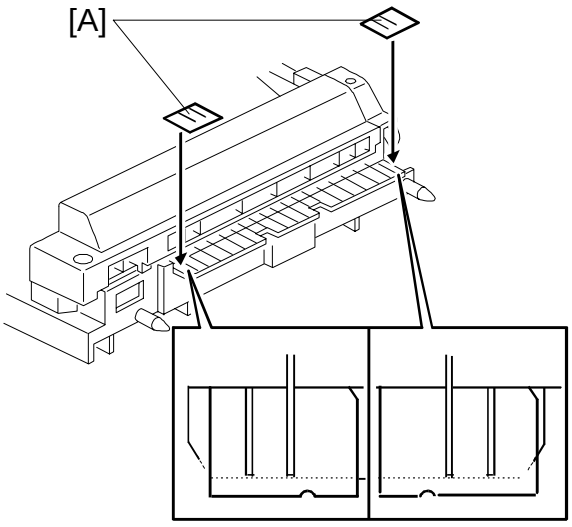

A688I406.WMF

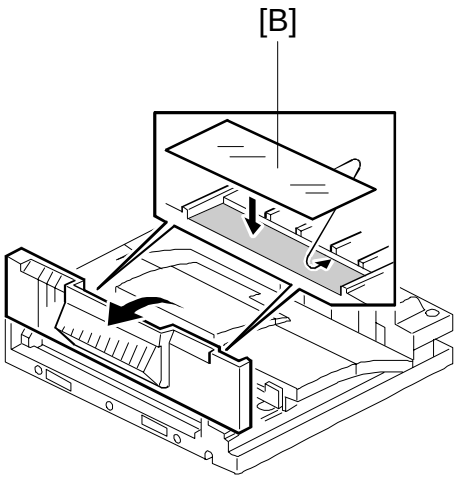

A688I402.WMF

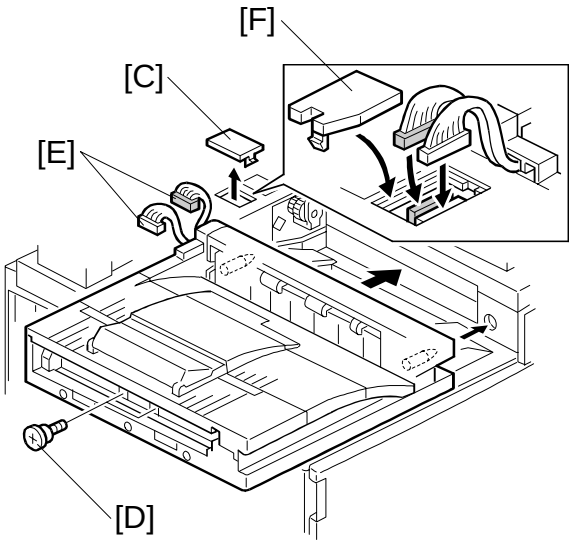

A688I404.WMF

7. Attach two mylars [A] to the paper entrance area of the bridge unit as shown.
8. **If the optional finisher is installed:**
   Attach two mylars [B] to the bridge unit as shown.
9. Remove the cover [C].
10. Install the bridge unit (2 screws) [D].
11. Connect the bridge unit I/F harnesses [E].
12. Install the connector cover [F].
13. Turn on the ac switch and check the bridge unit operation.

3.7 AUTO REVERSE DOCUMENT FEEDER INSTALLATION

3.7.1 ACCESSORY CHECK

Check the quantity and condition of the accessories in the box against the following list:

Description	Q'ty
1. Stepped Screw	2
2. Knob Screw	2
3. Original Tray	1
4. Screw – M4x17	2
5. NECR	1
6. Installation Procedure	1

3.7.2 INSTALLATION PROCEDURE

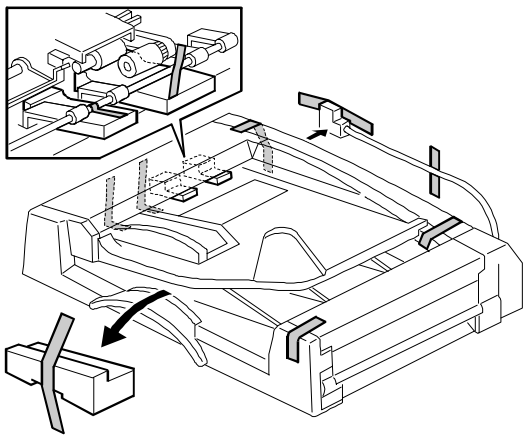

A680I500.WMF

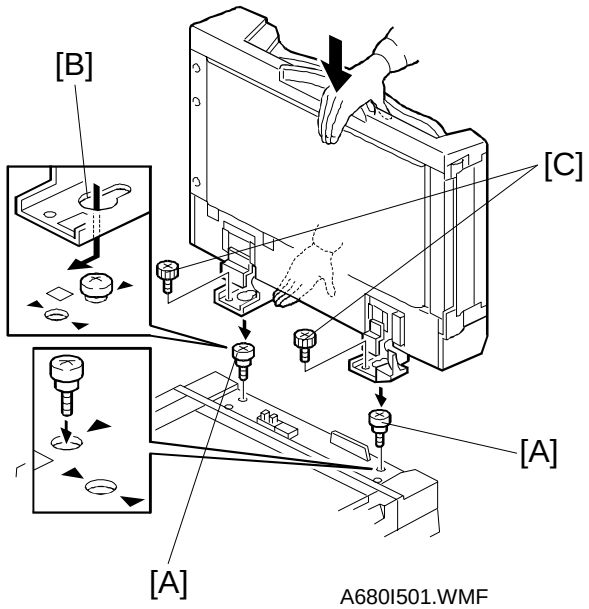

A680I501.WMF

⚠CAUTION

Unplug the main machine power cord before starting the following procedure.

1. Unpack the ARDF. Then remove the tapes on the exterior of the ARDF.
2. Tighten the two stud screws [A].
3. Mount the ARDF by aligning the screw holes [B] in the ARDF over the stud screws, and slide the ARDF to front as shown.

   NOTE: When mounting the ARDF, hold it by hand as shown in the illustration. Holding it in another way may damage the ARDF.
4. Secure the ARDF (2 knob screws [C]).

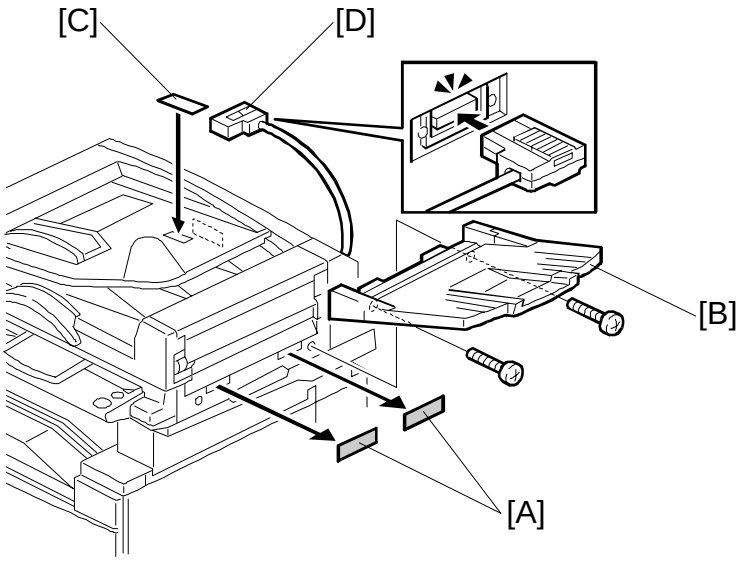

A680I502.WMF

5. Remove the two seals [A].
6. Install the original tray [B] (2 screws).
7. Attach the original direction decal [C] to the DF table as shown.
8. Connect the I/F harness [D] to the main machine.
9. Turn on the ac switch.
10. Check the ARDF operation and copy quality.

3.8 LCT INSTALLATION

3.8.1 ACCESSORY CHECK

Check the quantity and condition of the accessories in the box against the following list:

Description	Q'ty
1. Joint Pin	2
2. Stepped Screw M3x18	4
3. Magnet Cover	1
4. NECR (-17, -27 machines)	1
5. Installation Procedure	1

3.8.2 INSTALLATION PROCEDURE

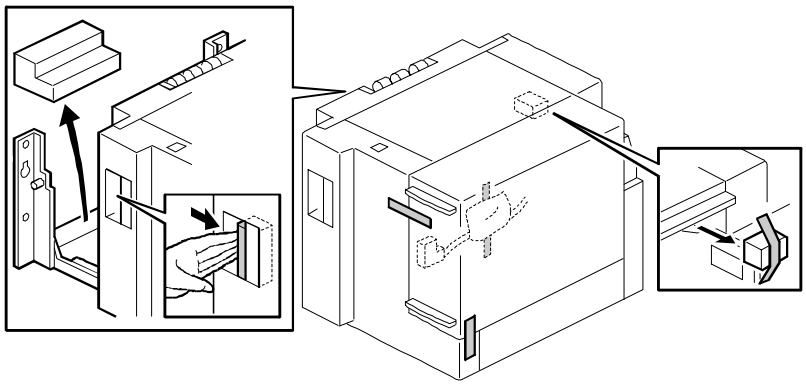

A683I501.WMF

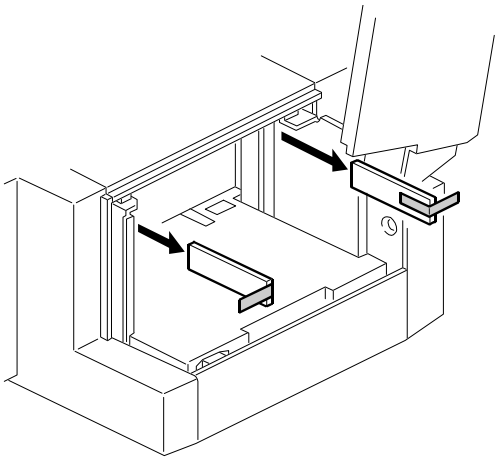

A683I500.WMF

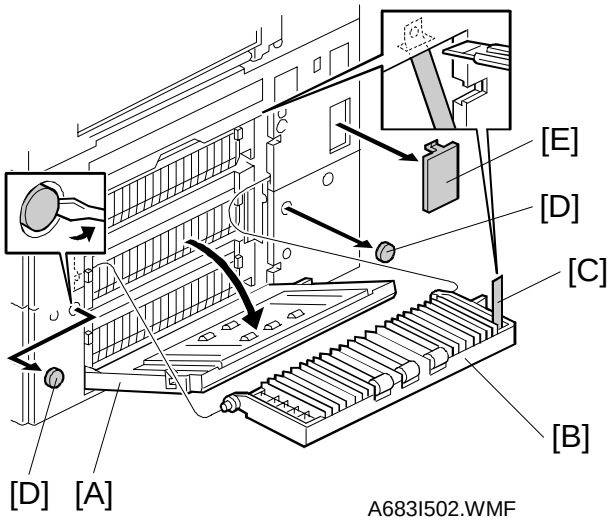

A683I502.WMF

⚠CAUTION

Unplug the main machine power cord before starting the following procedure.

NOTE: The Paper Tray Unit (A682) must be installed before installing the LCT.

1. Unpack the LCT and remove the tapes.
2. Open the right cover of the paper tray unit [A].
3. Open the lower right cover [B] and cut the holding band [C].
   NOTE: When cutting the holding band, the upper part of the band should be cut as shown. Otherwise, paper jams may occur.
4. Remove the lower right cover.
5. Remove two caps [D] and a cover [E].

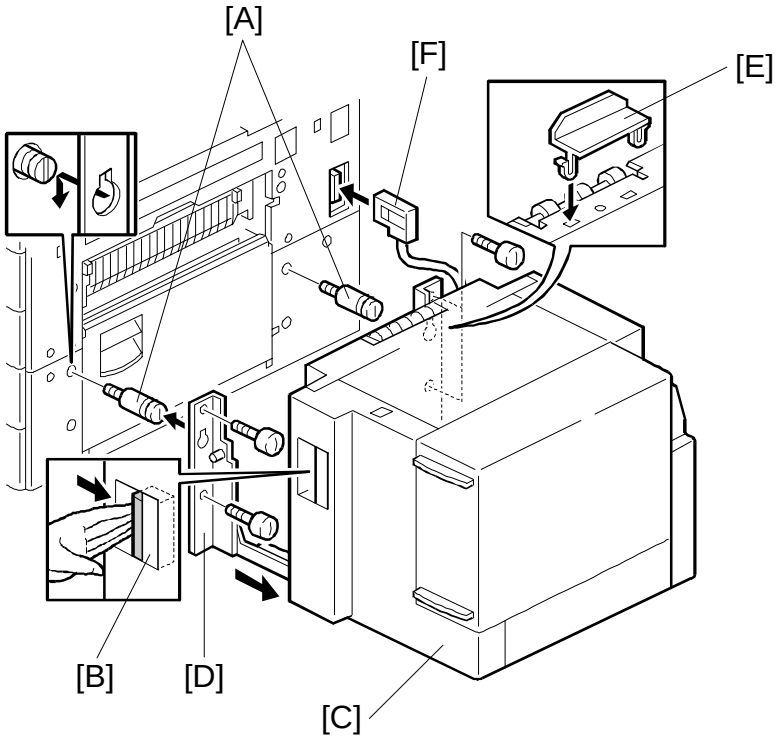

6. Install the joint pins [A].
7. Push the release lever [B] and slide the LCT to the right (front view).
8. Hang the LCT [C] on the joint pins, then secure the brackets [D] (4 screws).
9. Return the LCT to the previous position and connect the LCT cable [F].
10. Open the LCT cover and load the paper.
11. Turn on the ac switch and check the LCT operation.

3.9 1,000-SHEET FINISHER INSTALLATION

3.9.1 ACCESSORY CHECK

Check the quantity and condition of the accessories in the box against the following list:

Description	Q'ty
1. Front Stand	1
2. Rear Stand	1
3. Knob Screw	1
4. Screw – M4x12	6
5. NECR (-17 machine)	1
6. Installation Procedure	1

3.9.2 INSTALLATION PROCEDURE

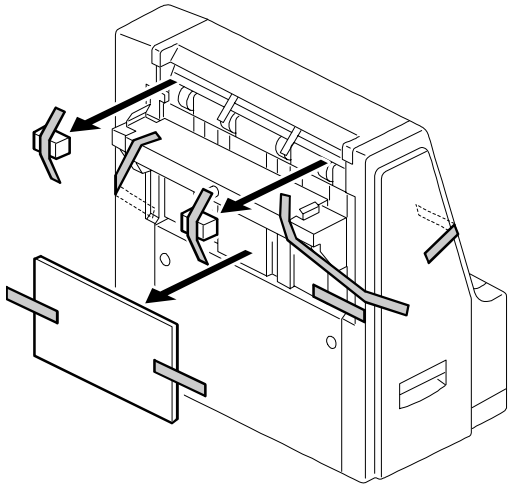

A681I503.WMF

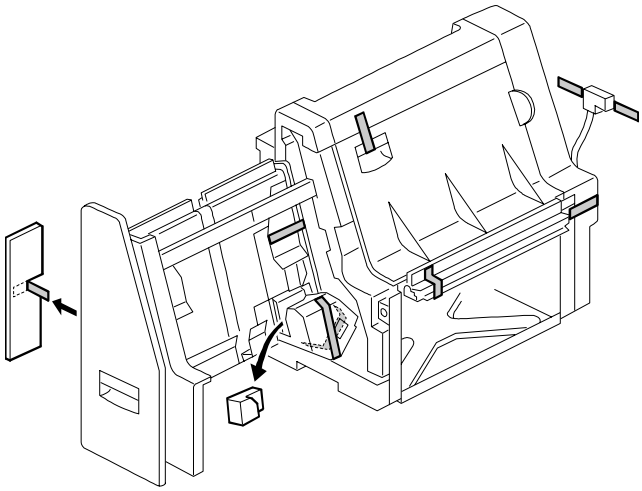

A681I504.WMF

⚠CAUTION
Unplug the main machine power cord before starting the following procedure.

NOTE: The bridge unit (A688) and paper tray unit (A682) must be installed before installing this finisher.

1. Unpack the finisher and remove the tapes.

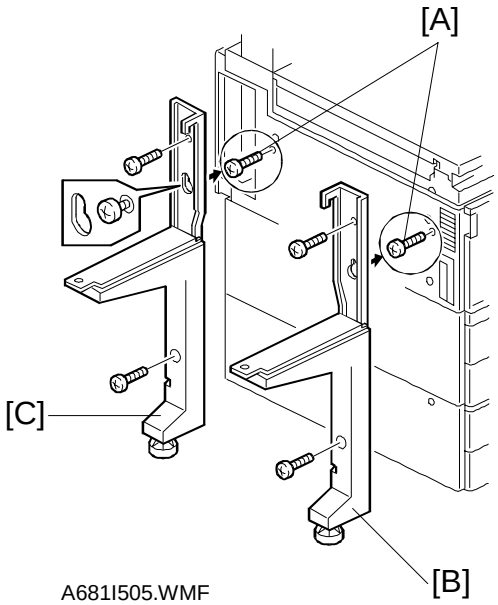

A681I505.WMF

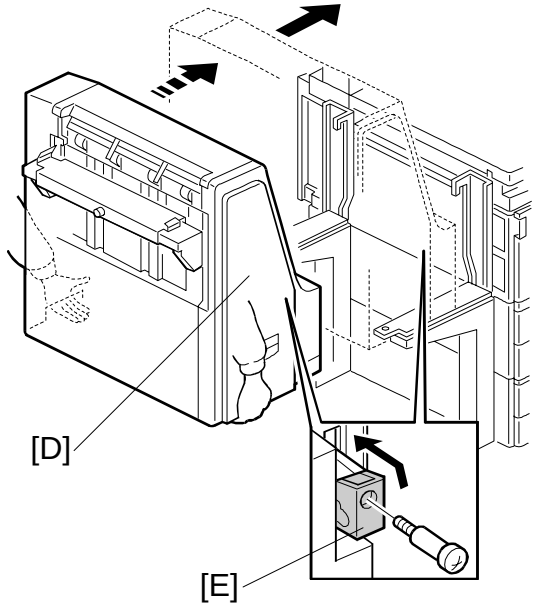

A681I506.WMF

1. Install two screws [A] loosely.
2. Hang the front stand [B] and rear stand [C] on the screws which were installed in step 2.
3. Secure the front and rear stands (6 screws, including the two screws [A]).
4. Pull out the stapler unit [D].
5. Draw out the locking lever [E] (1 screw).
6. Align the finisher on the stands, and lock it in place by pushing the locking lever.
7. Secure the locking lever (1 screw) and push the stapler unit into the finisher.

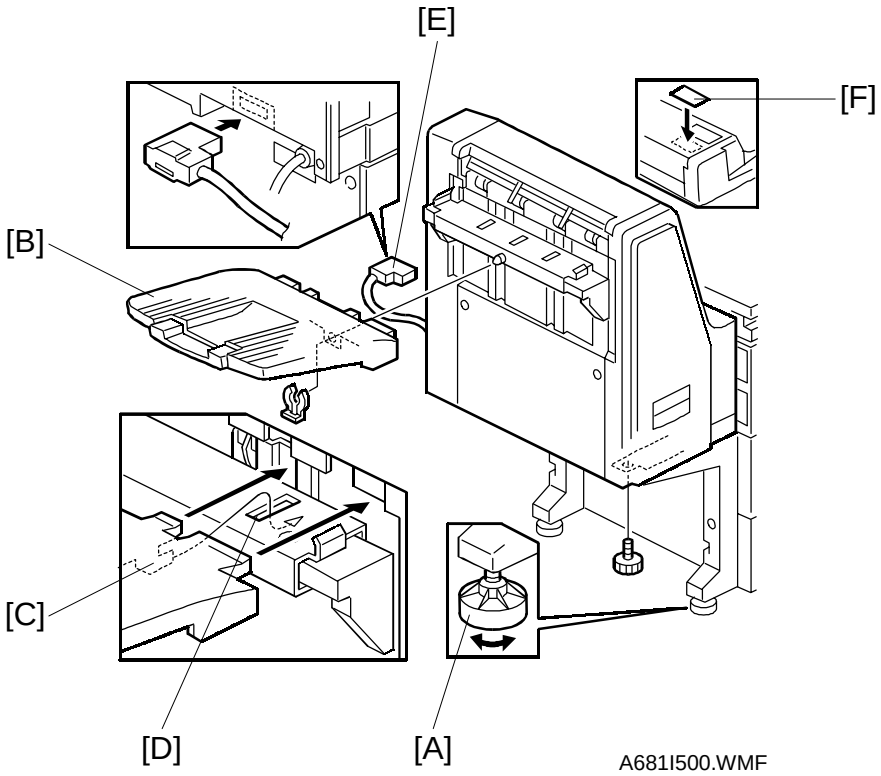

8. Secure the finisher (1 screw).
9. Adjust the securing knobs [A] under the front and rear stand until the finisher is perpendicular to the floor.
10. Install the shift tray [B] (1 snap ring).
    NOTE: Make sure that the three pegs [C] fit into the slots [D] properly.
11. Connect the finisher cable [E] to the main machine.
12. Attach the staple position decal [F] to the ARDF as shown.
13. Turn on the main power switch and check the finisher operation.

3.10 3,000-SHEET FINISHER INSTALLATION

3.10.1 ACCESSORY CHECK

Check the quantity and condition of the accessories in the box against the following list:

Description	Q'ty
1. Front Joint Bracket	1
2. Rear Joint Bracket	1
3. Entrance Guide Plate	1
4. Shift Tray	1
5. Exit Guide Mylar (A229 copier only)	1
6. Shift Tray Guide	1
7. Staple Position Decal	1
8. Screw – M3x6	2
9. Screw – M4x14	4
10. Screw – M3x8	4
11. Cushion	1
12. Upper Grounding Plate	1
13. Lower Grounding Plate	2
14. NECR (-17 machine)	1
15. Installation Procedure	1

3.10.2 INSTALLATION PROCEDURE

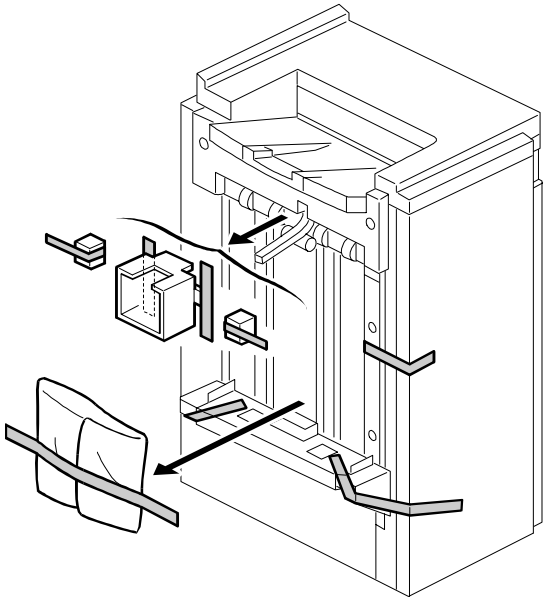

A697I506.WMF

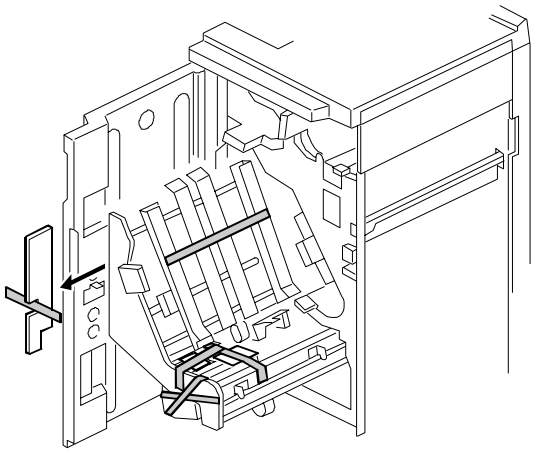

A697I507.WMF

⚠CAUTION

Unplug the main machine power cord before starting the following procedure.

NOTE: The bridge unit (A688) and paper tray unit (A682) must be installed before installing this finisher.

1. Unpack the finisher and remove the tapes.

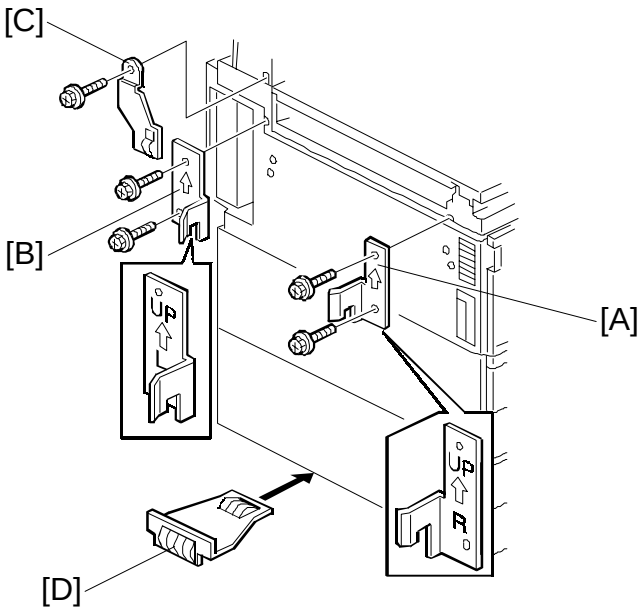

A697I508.WMF

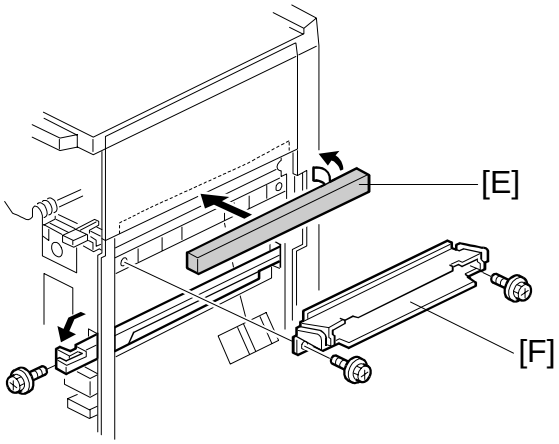

A697I755.WMF

2. Install the front joint bracket [A] and rear joint bracket [B] (2 screws each).
3. Attach the upper grounding plate [C] (1 screw).
4. Peel off the backing of the double sided tape that is attached to the lower grounding plate [D].
5. Attach one lower grounding plate to the center position of the paper tray unit as shown.
6. Attach the cushion [E] to the plate as shown.
7. Install the entrance guide plate [F] (2 screws).

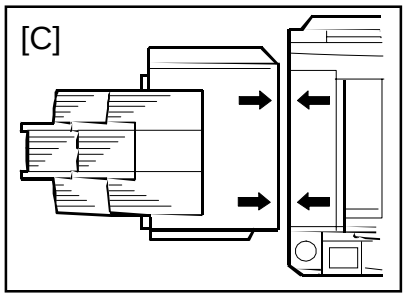

A697I534.WMF

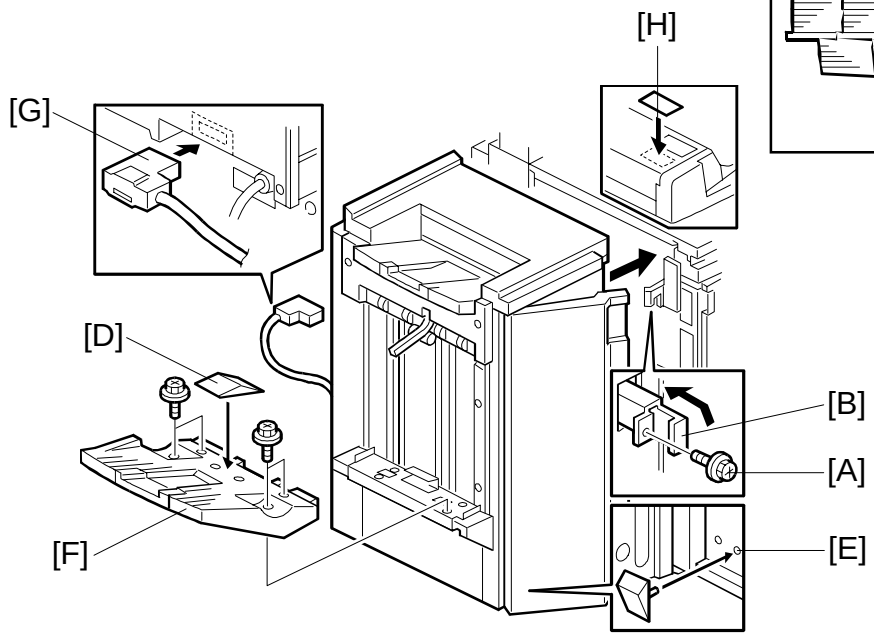

A697I756.WMF

8. If the customer requires the punch unit, install it now, before attaching the finisher to the machine. See Punch Unit Installation.
9. Open the front door of the finisher, and remove the screw [A] which secures the locking lever [B]. Then pull the locking lever.
10. Align the finisher on the joint brackets, and lock it in place by pushing the locking lever.
    NOTE: Before securing the locking lever, make sure that the top edges of the finisher and the copier are parallel from front to rear as shown [C].
11. Secure the locking lever (1 screw) and close the front door.
12. Install the sub shift tray [D] on the shift tray. If the customer does not wish to install it on the shift tray, store it at location [E].
    NOTE: The shift tray guide is required to assist in proper paper stacking. However, it reduces the capacity of the shift tray by 50, from 3,000 to 2,950.
13. Install the shift tray [F] (4 screws).
14. Connect the finisher cable [G] to the main machine.
15. Attach the staple position decal [H] to the ARDF as shown.
16. Turn on the main power switch and check the finisher operation.

3.11 PUNCH UNIT INSTALLATION

3.11.1 ACCESSORY CHECK

Check the quantity and condition of the accessories in the box against the following list:

Description	Q'ty
1. Spacer – 2 mm	1
2. Spacer – 1 mm	2
3. Stepped Screw – Short	1
4. Stepped Screw – Long	1
5. Punch Unit Knob	1
6. Spring	1
7. Harness – Long	1
8. Harness – Short	1
9. Hopper	1
10. Punch Position Decal	1
11. Tapping Screw – M4x10	2
12. Screw with Flat Washer – M4x6	1
13. NECR	1

3.11.2 INSTALLATION PROCEDURE

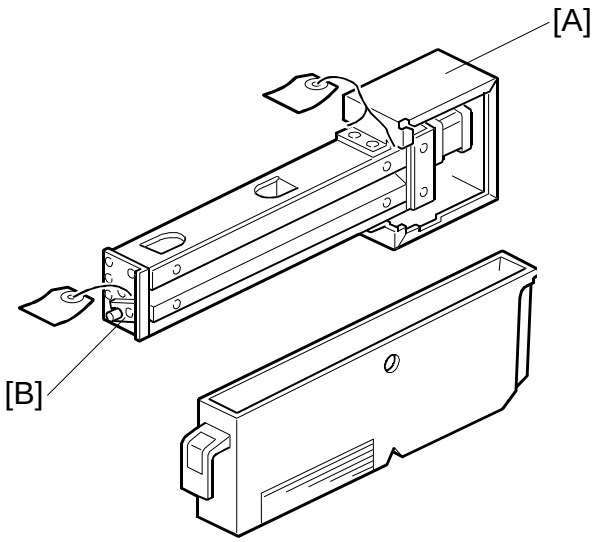

A284I761.WMF

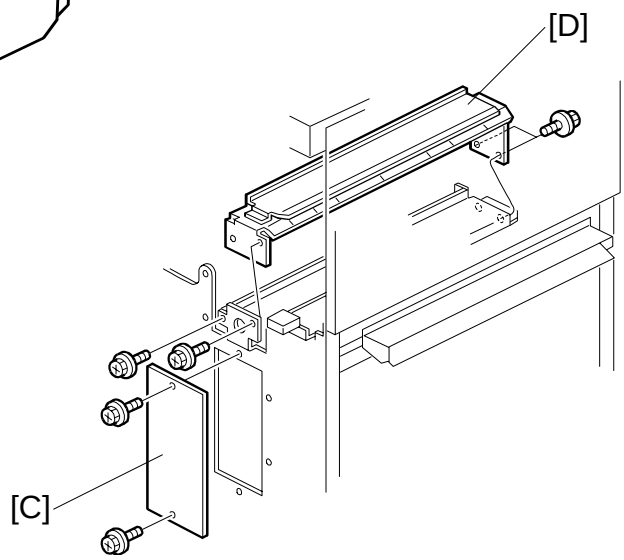

A284I763.WMF

⚠CAUTION

Unplug the copier power cord and remove the 3,000-sheet finisher from the copier before starting the following procedure.

1. Unpack the punch unit and remove the shipping retainers [A] (4 screws) and [B] (1 screw).
2. Open the front door and remove the hopper cover [C] (2 screws).
3. Remove the finisher rear cover (2 screws) and remove the transport guide plate [D] (4 screws).

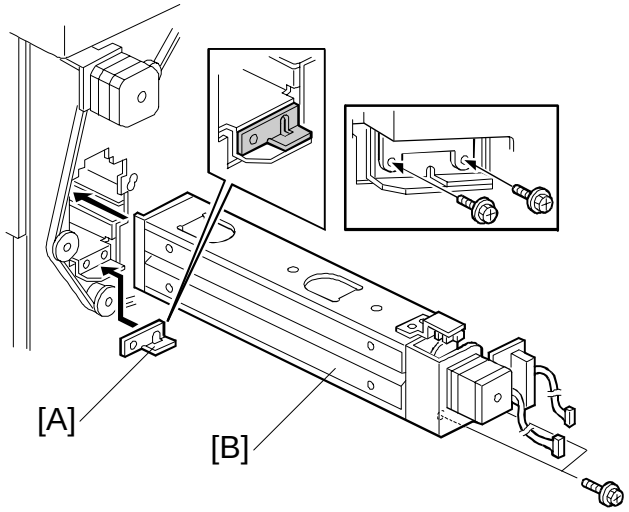

A284I610.WMF

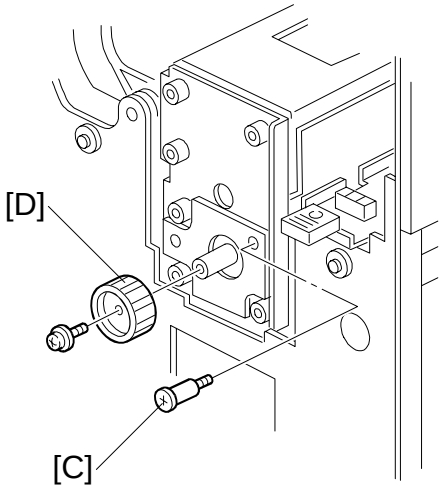

A284I765.WMF

4. Install the spacer [A] (thickness = 2 mm).
   NOTE: There are three spacers in the accessory box. Do not lose the other two spacers (1 mm) because they are used for adjusting the punch hole position.
5. Install the punch unit [B] and secure it with a long stepped screw [C].
6. Install the punch unit knob [D] (1 screw).
7. Secure the rear of the punch unit (2 screws).

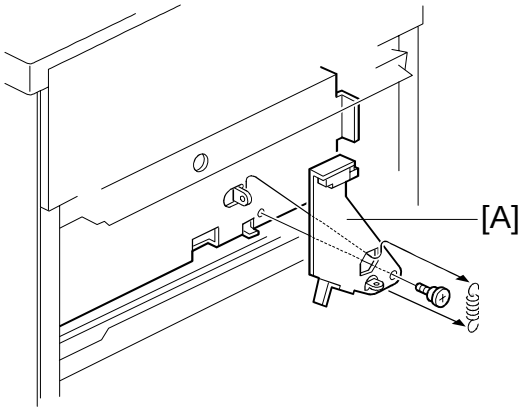

A284I767.WMF

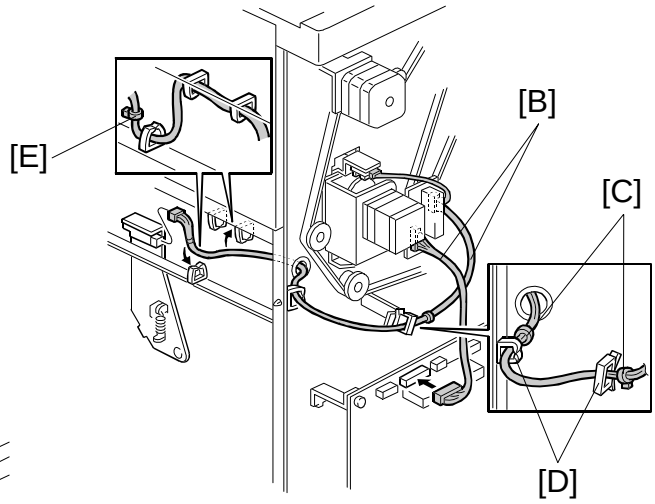

A284I611.WMF

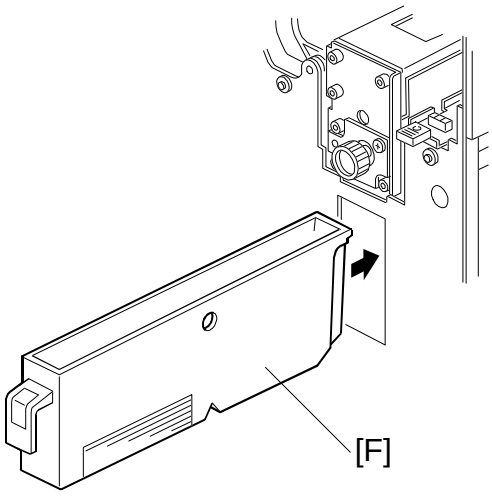

A284I612.WMF

8. Install the sensor bracket [A] (1 short stepped screw, 1 spring).
9. Connect the harnesses [B].

NOTE: 1) The harness binders [C] must not be between the harness clamps [D].
2) The harness binder [E] must be positioned to the left of the harness clamp.

10. **When a three-punch-hole unit is installed:**
Change switch 1 of DIP SW 100 on the finisher control board to ON.
11. Slide the hopper [F] into the finisher.
12. Reassemble the finisher and attach the 3,000-sheet finisher to the copier, then check the punch unit function.

3.12 PLATEN COVER INSTALLATION

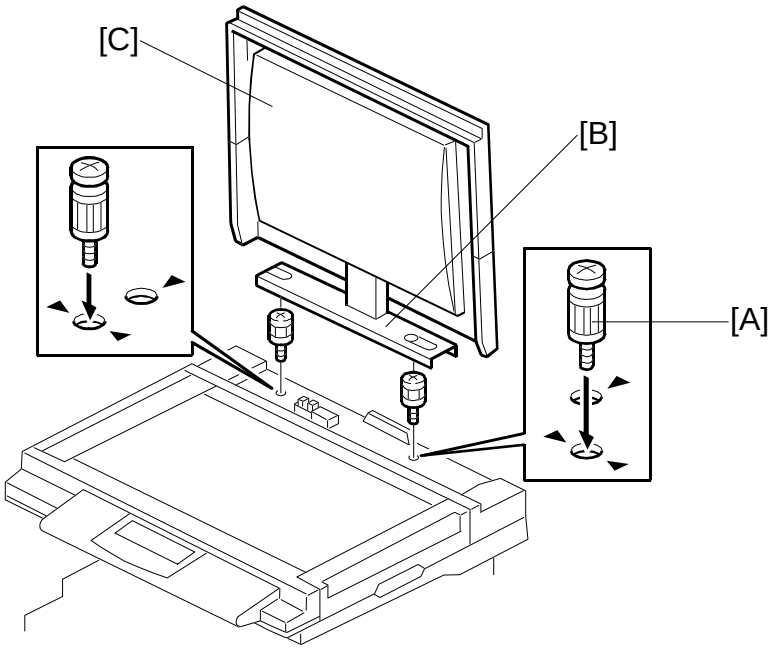

A284I526.WMF

1. Install the two stud screws [A] on the top cover as shown.
2. Position the platen cover bracket [B] on the stud screws and slide the platen cover [C] to the left.

3.13 KEY COUNTER INSTALLATION

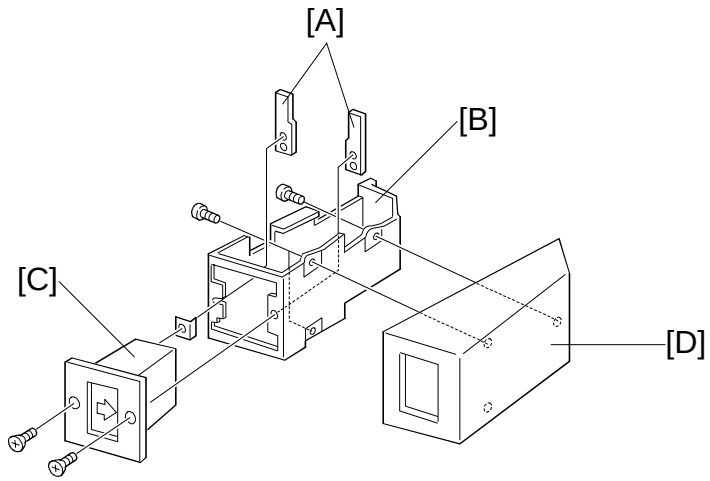

A284I518.WMF

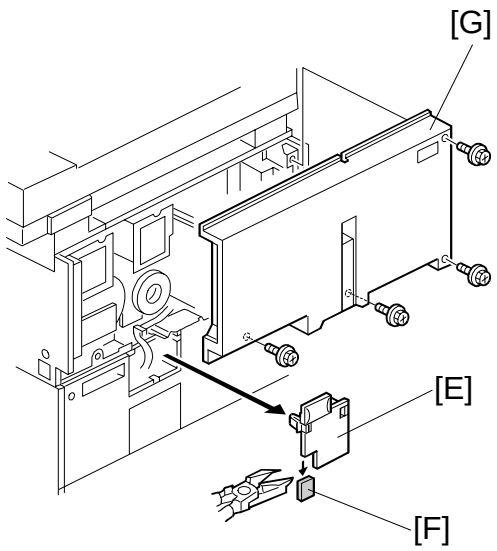

A284I966.WMF

⚠CAUTION

Unplug the machine power cord before starting the following procedure.

1. Hold the key counter plates [A] on the inside of the key counter bracket [B] and insert the key counter holder [C]
2. Secure the key counter holder to the bracket (2 screws).
3. Attach the key counter cover [D] (2 screws).
4. Remove the connector cover [E].
5. Cut off the part [F] of the connector cover.
6. Remove the rear cover [G] (4 screws).

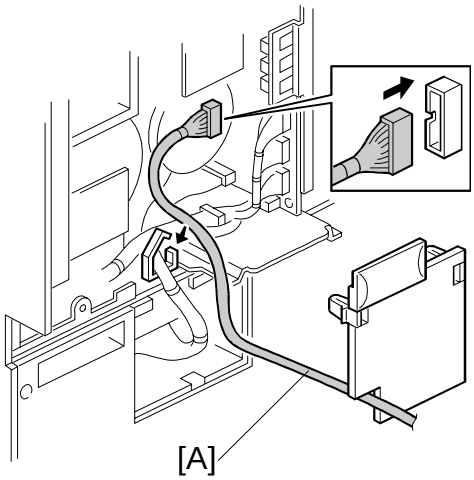

A284I967.WMF

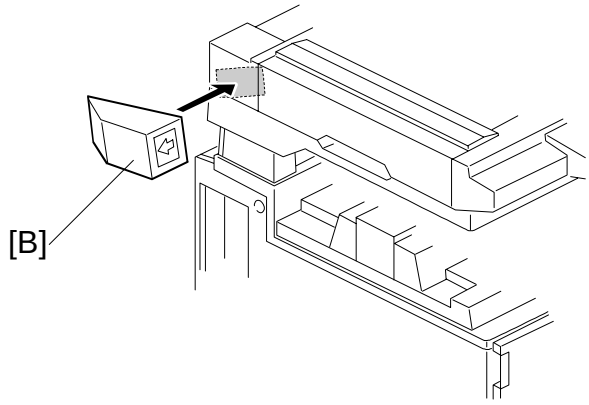

A284I965.WMF

7. Connect the key counter connector [A] to CN211 on the I/O board.
8. Reinstall the covers.
9. Attach the double-sided tape to the key counter bracket.
10. Peel off the backing of the double-sided tape and attach the key counter assembly [B] to the left side of the scanner unit, as shown.
    NOTE: When attaching the key counter assembly, press the assembly against the scanner cover strongly. Otherwise, the key counter assembly may come off easily.
11. Change the value of SP5-401-2 at 1.
    NOTE: The key counter function is available for Fax and printer modes by changing the following SP modes.
    - SP5-401-52 (Fax mode)
    - SP5-401-62 (Printer mode)

3.14 ANTI-CONDENSATION HEATER

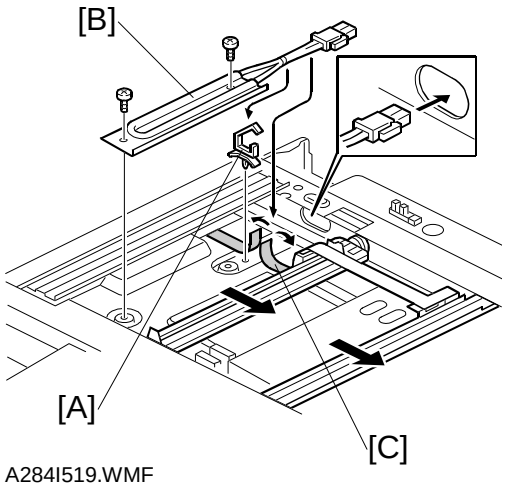

A284I519.WMF

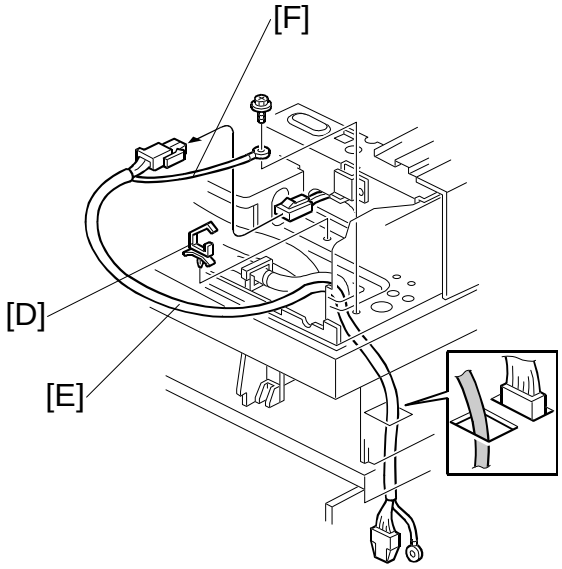

A284I520.WMF

⚠CAUTION
Unplug the machine power cord before starting the following procedure.

1. Remove the exposure glass, scanner rear cover, and stand rear cover (see Interchange Unit Installation for the stand rear cover).
2. Remove the rear cover and upper left cover.
3. Move the 1st and 2nd scanners to the right.
4. Install the harness clamp [A].
5. Install the anti-condensation heater [B] (2 screws).
   NOTE: The heater harness should be routed under the harness guard [C].
6. Install the harness clamp [D].
7. Connect the connector [E] to the heater, then secure the grounding wire [F] (1 screw).

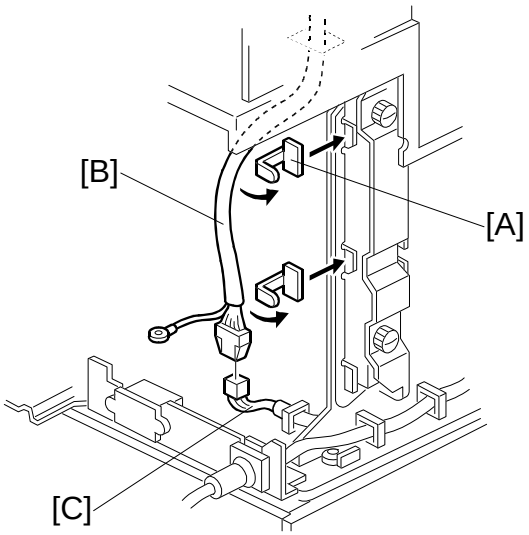

A284I521.WMF

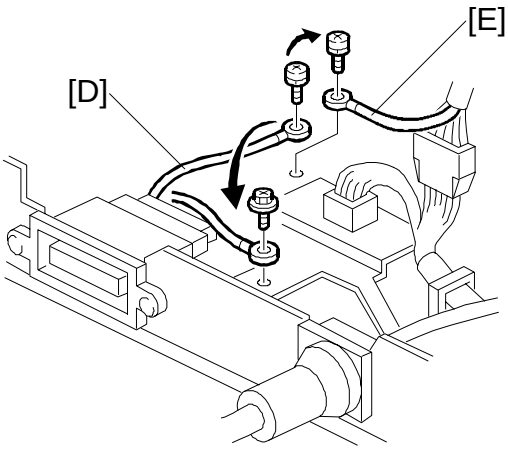

A284I524.WMF

8. Install two harness clamps [A] on the stand bracket.
9. Connect the connector [B] to the ac power harness [C].
10. Move the grounding wire of the connector [D], as shown.
11. Secure the grounding wire [E] of the connector cable (1 screw).

3.15 TRAY HEATER

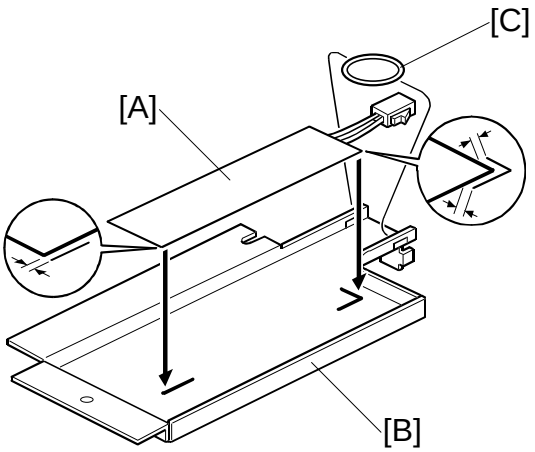

A284I531.WMF

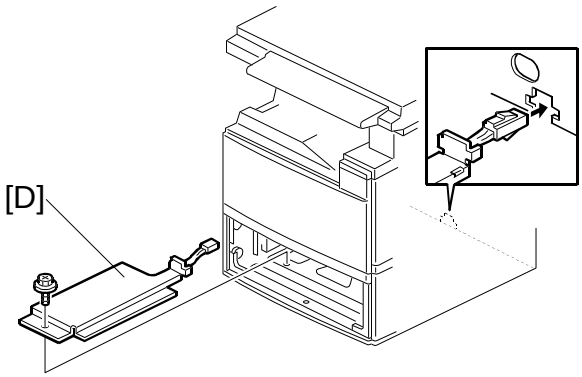

A284I528.WMF

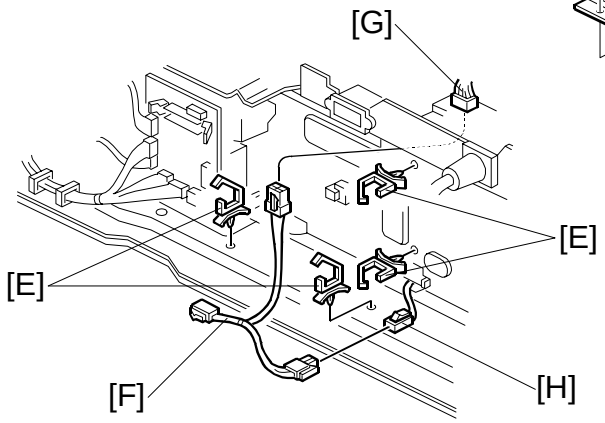

A284I529.WMF

⚠CAUTION

Unplug the machine power cord before starting the following procedure.

1. Attach the optional tray heater [A] to the heater bracket [B].
2. Install the harness holder [C].
3. Remove the rear cover.
4. Draw out the upper and lower paper trays.
5. Install the heater assembly [D] (1 screw).
6. Install four harness clamps [E] as shown.
7. Route the harness [F] and connect it to the ac harness [G] and heater harness [H].

3.16 TRAY HEATER (OPTIONAL PAPER TRAY UNIT)

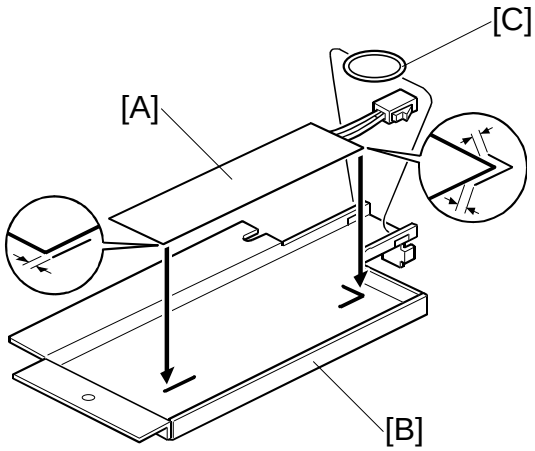

A284I531.WMF

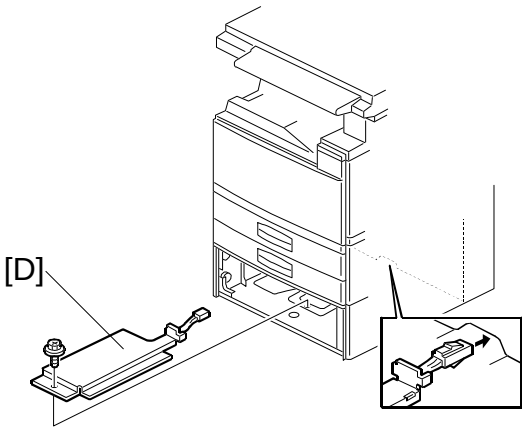

A284I600.WMF

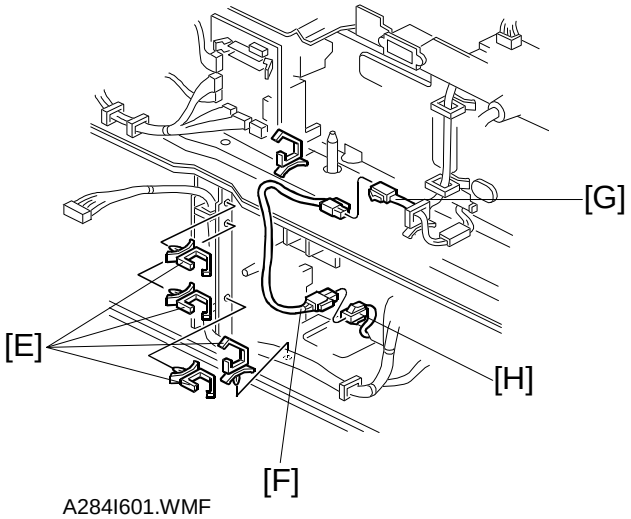

A284I601.WMF

⚠CAUTION

Unplug the machine power cord before starting the following procedure.

1. Attach the optional tray heater [A] to the heater bracket [B].
2. Install the harness holder [C].
3. Remove the rear cover of the machine and the rear cover of the optional paper tray unit.
4. Draw out the upper and lower paper trays of the optional paper tray unit.
5. Install the heater assembly [D] (1 screw).
6. Install four harness clamps [E] as shown.
7. Route the harness [F] and connect it to the harness [G] and heater harness [H].

4. SERVICE TABLES

4.1 SERVICE PROGRAM MODE TABLES

NOTE: 1) A "#" mark by the mode number means that this SP mode has been changed.
2) In the Function column, comments are in italics.
3) In the Settings column, the default value is in bold letters.
4) An asterisk " * " after the mode number means that this mode is stored in the NVRAM. If you do a RAM reset, all these SP modes will be reset to their factory settings.
5) In the Settings column, (40) means Adonis-C1c and (30) means Adonis-C1b.

Mode No.			Function	Settings
Class 1 and 2	**Class 3**			
1-001*		Leading Edge Registration	Adjusts the printing leading edge registration using the trimming area pattern (SP2-902-3, No.10). *Use the ●/✻ key to toggle between + and – before entering the value.* *The specification is 3 ±2 mm. See "Replacement and Adjustment - Copy Adjustments" for details on SP1-001 and 1-002.*	+9 ~ –9 0.1 mm/step **+3.0 mm**
1-002*	1*	Side-to-Side Registration (1st paper feed)	Adjusts the printing side-to-side registration from the 1st paper feed station using the trimming area pattern (SP2-902-3, No.10). *Use the ●/✻ key to toggle between + and – before entering the value.* *The specification is 2 ±1.5 mm.*	+9 ~ –9 0.1 mm/step **+3.0 mm**
	2*	Side-to-Side Registration (2nd paper feed)	Adjusts the printing side-to-side registration from the 2nd paper feed station using the trimming area pattern (SP2-902-3, No.10). *Use the ●/✻ key to toggle between + and – before entering the value.* *The specification is 2 ±1.5 mm.*	+9 ~ –9 0.1 mm/step **+3.0 mm**
	3*	Side-to-Side Registration (3rd paper feed: Option PFU tray 1 if present)	Adjusts the printing side-to-side registration from the 3rd paper feed station using the trimming area pattern (SP2-902-3, No.10). *Use the ●/✻ key to toggle between + and – before entering the value.* *The specification is 2 ±1.5 mm.*	+9 ~ –9 0.1 mm/step **+2.0 mm**

Service Tables

Mode No.			Function	Settings
Class 1 and 2	**Class 3**			
1-002*	4*	Side-to-Side Registration (4th paper feed: Option PFU tray 2 if present)	Adjusts the printing side-to-side registration from the 4th paper feed station using the trimming area pattern (SP2-902-3, No.10). *Use the ●/✻ key to toggle between + and – before entering the value.* *The specification is 2 ±1.5 mm.*	+9 ~ –9 0.1 mm/step **+2.0 mm**
	5*	Side-to-Side Registration (Duplex)	Adjusts the printing side-to-side registration from the duplex tray using the trimming area pattern (SP2-902-3, No.10). *Use the ●/✻ key to toggle between + and – before entering the value.* *The specification is 2 ±1.5 mm. See "Replacement and Adjustment - Copy Adjustments" for details on SP1-002.*	+9 ~ –9 0.1 mm/step **+0.0 mm**
	6*	Side-to-Side Registration (By-pass feed)	Adjusts the printing side-to-side registration from the by-pass feed table using the trimming area pattern (SP2-902-3, No.10). *Use the ●/✻ key to toggle between + and – before entering the value.* *The specification is 2 ±1.5 mm.*	+9 ~ –9 0.1 mm/step **+3.0 mm**
	7*	Side-to-Side Registration (LCT)	Adjusts the printing side-to-side registration from the LCT using the trimming area pattern (SP2-902-3, No.10). *Use the ●/✻ key to toggle between + and – before entering the value.* *The specification is 2 ±1.5 mm.*	+9 ~ –9 0.1 mm/step **+1.5 mm**
1-003*	1*	Paper Feed Timing (Paper Feed Trays/LCT)	Adjusts the relay clutch timing at registration. The relay clutch timing determines the amount of paper buckle at registration. (A +ve setting leads to more buckling.)	+9 ~ –9 1 mm/step **+0 mm**
	2*	Paper Feed Timing (Duplex)		
	3*	Paper Feed Timing (By-pass)		
1-007		By-pass Feed Paper Size Display	Displays the paper width sensor data for the by-pass feed table.	
1-103*		Fusing Idling	Selects whether fusing idling is done or not. *Normally disabled in this machine. However, if fusing is incomplete on the 1st and 2nd copies, switch it on. This may occur if the room is cold.* *Refer to "Detailed Section Descriptions - Fusing Temperature Control" of the NAD manual for more details.*	**0: Off** 1: On
1-104*		Fusing Temperature Control	Selects the fusing temperature control mode.	**0: On/Off** 1: Phase

Mode No.			Function	Settings
Class 1 and 2	**Class 3**			
1-105*	1*	Fusing Temperature Adjustment (Paper Tray)	Adjusts the fusing temperature for paper fed from a paper tray.	170 ~ 200 (40) 150 ~ 180 (30) 1°C/step **185°C (40)** **165°C (30)**
	2*	Fusing Temperature Adjustment (By-pass)	Adjusts the fusing temperature for paper fed from the by-pass feed unit.	170 ~ 200 (40) 160 ~ 190 (30) 1°C/step **185°C (40)** **175°C (30)**
1-106		Fusing Temperature Display	Displays the fusing temperature.	
1-109		Fusing Nip Band Check	Checks the fusing nip band *Refer to "Nip Band Width Adjustment" for more details.*	1: Start 0: Stop
1-111*		Paper Switch Back Timing (Duplex)	Adjusts the paper switch back timing *Use this SP mode when paper often jams at the inverter gate in the duplex unit.*	+5 ~ –5 1 mm/step **0 mm**
2-001*	1*	Charge Roller Bias Adjustment (Copying)	Adjusts the voltage applied to the grid plate during copying. *After replacing the drum or charge roller, change this value to the default.*	–1000 ~ –2000 10 V/step **–1650 V (40)** **–1630 V (30)**
	2*	Charge Roller Bias Adjustment (ID sensor pattern)	Adjusts the voltage applied to the charge roller when making the V_{SDP} ID sensor pattern (for charge roller voltage correction). The actual charge roller voltage is this value plus the value of SP2-001-1. ***Do not adjust.***	0 ~ 700 10 V/step **350 V**
2-005*	1*	Charge Roller Bias Correction 1 (Lower threshold)	Adjusts the lower threshold value for the charge roller correction. *When the value of V_{SP}/V_{SG} is greater than this value, the charge roller voltage increases by 30 V (e.g., from –500 to –530).*	0.1 ~ 1.0 0.05/step **0.85**
	2*	Charge Roller Bias Correction 2 (Upper threshold)	Adjusts the upper threshold value for the charge roller correction. *When the value of V_{SP}/V_{SG} is greater than this value, the charge roller voltage decreases by 30 V (absolute value).*	0.1 ~ 1.0 0.05/step **0.90**
	3*	Charge Roller Bias Correction 3 (Lower limit)	Adjusts the lower limit value for charge roller voltage correction.	–1000 ~ –2000 10 V/step –1650 V (40) **–1630 V (30)**
	4*	Charge Roller Bias Correction 4 (Upper limit)	Adjusts the upper limit value for charge roller voltage correction.	–1000 ~ –2000 10 V/step **–2000 V**
	5*	Charge Roller Bias Correction Step	Adjusts the correction voltage adjustment step size.	0 ~ 100 10 V/Step **30 V**

Mode No.			Function	Settings
Class 1 and 2	**Class 3**			
2-101*	1*	Leading Edge Erase Margin (Printing)	Adjusts the leading edge erase margin. *The specification is 3 ±2 mm. See "Replacement and Adjustment - Copy Adjustments" for details.*	0.0 ~ 9.0 0.1 mm/step **3.0 mm**
	2*	Trailing Edge Erase Margin (Printing)	Adjusts the trailing edge erase margin. *The specification is 2 ±2 mm.*	0.0 ~ 9.0 0.1 mm/step **3.0 mm**
	3*	Right Side Edge Erase Margin (Printing)	Adjusts the right side erase margin. *The specification is 2 ±2.5/–1.5 mm.*	0.0 ~ 9.0 0.1 mm/step **2.0 mm**
	4*	Left Side Edge Erase Margin (Printing)	Adjusts the light side erase margin. *The specification is 2 +1.5 mm.*	0.0 ~ 9.0 0.1 mm/step **2.0 mm**
	5*	Trailing Edge Erase Margin (Back side)	Adjusts the trailing edge erase margin on the reverse side of duplex copies. *The specification is 2 ±2 mm*	0.0 ~ 4.0 0.1 mm/step **1.2 mm**
	6*	Left Side Erase Margin (Rear side)	Adjusts the left side erase margin in the reverse side of duplex copies. *The specification is 2 ±1.5 mm.*	0.0 ~ 9.0 0.1 mm/step **0.3 mm**
	7*	Right Side Erase Margin (Rear side)	Adjusts the right side erase margin in the reverse side of duplex copies. *The specification is 2 +2.5/–1.5 mm.*	0.0 ~ 9.0 0.1 mm/step **0.3 mm**
2-103*	1*	LD Power Adjustment LD1 - 400dpi	Adjusts the power of LD1 for 400 dpi resolution. ***Do not change the value.***	–127 ~ +127 1/step 1 = 0.6 μW (30) 1 = 0.8 μW (40) **+0**
	2*	LD Power Adjustment LD1 - 600dpi	Adjusts the power of LD1 for 600 dpi resolution. ***Do not change the value.***	–127 ~ +127 1/step 1 = 0.6 μW (30) 1 = 0.8 μW (40) **+0**
	3*	LD Power Adjustment LD2 - 400dpi	Adjusts the power of LD2 for 400 dpi resolution. ***Do not change the value.***	–127 ~ +127 1/step 1 = 0.6 μW (30) 1 = 0.8 μW (40) **+0**
	4*	LD Power Adjustment LD2 - 600dpi	Adjusts the power of LD2 for 600 dpi resolution. ***Do not change the value.***	–127 ~ +127 1/step 1 = 0.6 μW (30) 1 = 0.8 μW (40) **+0**
	5	LD Power Adjustment - LD1	**Factory use only. Do not use this SP mode.**	0: Stop 1: Start
	6	LD Power Adjustment - LD2	**Factory use only. Do not use this SP mode.**	0: Stop 1: Start

Mode No.			Function	Settings
Class 1 and 2	**Class 3**			
2-109*	1*	Laser Beam Pitch Adjustment - 400 dpi	Input the laser beam pitch value for 400 dpi resolution. *After replacing the LD unit or replacing or clearing the NVRAM, use this SP mode and SP2-109-3 to adjust the laser beam pitch. Refer to "Replacement and Adjustment - Laser Beam Pitch Adjustment" for details.*	0 ~ 262 4 pulses/step **144**
	2*	Laser Beam Pitch Adjustment - 600 dpi	Input the laser beam pitch value for 600 dpi resolution. *After replacing the LD unit or replacing or clearing the NVRAM, use this SP mode and SP2-109-4 to adjust the laser beam pitch. Refer to "Replacement and Adjustment - Laser Beam Pitch Adjustment" for details.*	0 ~ 284 4 pulses/step **168**
	3	Laser Beam Pitch Initial Setting - 400 dpi	Initializes the laser beam pitch for 400 dpi to the SP2-109-1 value. Press "1" to initialize. *After inputting data for SP2-109-1, this SP must be performed.*	1: Start
	4	Laser Beam Pitch Initial Setting - 600 dpi	Initializes the laser beam pitch for 600 dpi to the SP2-109-2 value. Press "1" to initialize. *After inputting data for SP2-109-2, this SP must be performed.*	1: Start
	5*	Laser Unit Auto. Adjustment Interval	Input the interval value of the laser beam pitch automatic adjustment. *When the number of times that the resolution been changed reaches this value, the laser unit position is automatically corrected.*	0 ~ 65535 1/step 1000 times
	6	Current LD Unit Position	Displays the current LD unit position (number of pulses from home position). If this is different from the value of 2-109-1 or 2-109-2, LD unit positioning has failed.	
	7	Laser Beam Pitch Change Counter	Displays how many times the LD unit position has been changed (how many times the resolution has changed.) *When the laser beam pitch adjustment is done, this counter is reset to "0".*	
	8	Beam Pitch Data Reset	Resets the values of SP2-109-6 and SP2-109-7. Press "1" to reset. *After replacing the LD unit, this SP mode must be done.*	1: Start
2-110		Image Resolution Change	**Designer use only. Do not change this value.**	**0: 400 dpi** 1: 600 dpi 2: 15.4 x 16 3: 16 x 15.4

Service Tables

Mode No.			Function	Settings
Class 1 and 2	**Class 3**			
2-112*		Polygon Motor Off Timer	Input the time that the polygon motor turns off after entering the stand-by condition. *If set at "0", the polygon motor never turns off during stand-by. However, when the machine goes into energy saver mode, the polygon motor turns off regardless of this timer.*	0 ~ 60 5 s/step **10 s**
2-201*	1*	Development Bias Adjustment (for copying)	Adjusts the development bias for copying. *This can be adjusted as a temporary measure if faint copies appear due to an aging drum.*	200 ~ 700 10 V/step **600 V**
	2*	Development Bias Adjustment (for ID sensor pattern)	Adjusts the development bias for making the ID sensor pattern for V_{SP}. *This should not be used in the field, because it affects ID sensor pattern density, which affects toner supply.*	200 ~ 700 1 V/step **380 V**
2-207		Forced Toner Supply	Forces the toner bottle to supply toner to the toner supply unit for 30 seconds. Press "1" to start. *Toner supply finishes automatically after 30 seconds. This process is not normally needed in the field for this model.*	1: Start
2-208*	1*	Toner Supply Mode	Selects the toner supply mode. *Use image pixel count mode only as a temporary measure if the ID or TD sensor is defective.*	**0**: Sensor 1: Image Pixel Count
2-209*	1	Toner Supply Rate	Adjusts the toner supply rate. *Increasing this value reduces the toner supply clutch on time. Use a lower value if the user tends to make lots of copies that have a high proportion of black.*	10 ~ 800 5 mg/s/step **30 mg/s**
	2*	Toner Supply Correction Coefficient	Displays the toner supply correction coefficient (K). It can also be used to adjust K, but the value is changed again when V_T is measured for the next copy. *The toner supply rate depends on the amount of toner in the toner bottle. This change is corrected using this coefficient. This SP can be used to check the toner supply condition. In general, the lower the value of K, the lower the toner density.*	0.25 ~ 3.00 0.25/step **3.00**
2-210*		ID Detection Interval	Changes the interval for making the ID sensor pattern (V_{SP}/V_{SG} detection). *If the user normally makes copies with a high proportion of black, reduce the interval.*	10 ~ 200 1 copy/step **10 copies**

Mode No.			Function	Settings
Class 1 and 2	**Class 3**			
2-213*		Number of Copies After Toner Near-end Condition	Selects the number of copies can be made after entering a toner near-end condition. *If the user normally makes copies with a high proportion of black, reduce the interval.*	**0: 90 copies** 1: Unlimited 2: 10 copies
2-220*		VREF Manual Setting	Adjust the TD sensor reference voltage (VREF). *Change this value after replacing the development unit with another one that already contains toner.* *For example, when using a development unit from another machine for test purposes, do the following:* *1. Check the value of SP2-220 in both the machine containing the test unit and the machine that you are going to move it to.* *2. Install the test development unit, then input the VREF for this unit into SP2-220.* *3. After the test, put back the old development unit, and change SP2-220 back to the original value.*	1.00 ~ 5.00 0.01 V/step **4.00 V**
2-223 *	1	VT Display	Displays the current TD sensor output voltage.	
	2	VT (10) Display	Displays the average of the most recent 10 TD sensor outputs.	
	3	VT Change Rate Display	Displays the rate of change in the TD sensor output.	
	4	GAIN Display	Displays the value of GAIN which is used for calculating the toner supply motor on time.	
	5	Image Pixel Count Display	Displays the image pixel count.	
2-301*	1*	Transfer Current Adjustment (1st side of the paper)	Adjusts the current applied to the transfer belt during copying on the 1st side of the paper. *If the user uses thicker paper, the current may have to be increased to ensure sufficient transfer of toner.*	20 ~ 100 1 μA/step **45 μA (40)** **35 μA (30)**
	2*	Transfer Current Adjustment (2nd side of the paper)	Adjusts the current applied to the transfer belt during copying on the 2nd side of the paper. *See above.*	20 ~ 100 1 μA/step **32 μA (40)** **25 μA (30)**
	3*	Transfer Current Adjustment (Leading edge of the paper)	Adjusts the current applied to the transfer belt during copying at the leading edge of the paper. *Increase the current to separate the paper from the drum properly in high humidity and high temperature conditions.*	20 ~ 100 1 μA/step **45 μA (40)** **35 μA (30)**

Service Tables

Mode No.			Function	Settings
Class 1 and 2	**Class 3**			
2-301*	4*	Transfer Current Adjustment (By-pass Feed)	Adjusts the current applied to the transfer belt during copying from the by-pass feed table. *See above. If the user normally feeds thicker paper from the bypass tray, use a higher setting.*	20 ~ 100 1 μA/step **45 μA (40)** **35 μA (30)**
	5*	Transfer Current Adjustment (Leading edge of the paper from by-pass Feed)	Adjusts the current applied to the transfer belt during copying at the leading edge of paper from the by-pass feed table. *Increase the current to separate the paper from the drum properly in high humidity and high temperature conditions.*	20 ~ 100 1 μA/step **60 μA (40)** **45 μA (30)**
2-309*	1*	Transfer Current Correction (Paper width - lower)	Adjusts the lower paper width threshold for the transfer current correction. *Use this SP when an image problem (e.g., insufficient toner transfer) occurs with a small width paper. If the paper width is smaller than this value, the transfer current will be multiplied by the factor in SP2-309-3 (paper tray) or SP2-309-5 (by-pass).* *Refer to Detailed Section Descriptions - Image Transfer for more details.*	0 ~ 297 1 mm/step **150 mm**
	2*	Transfer Current Correction (Paper width - upper)	Adjusts the upper paper width threshold for the transfer current correction. *As for SP2-309-1, but the factors are in SP2-309-4 (paper tray) and SP2-309-6 (by-pass).*	0 ~ 297 1 mm/step **216 mm**
	3*	Transfer Current Correction - α (Paper tray)	Adjusts the transfer current correction coefficient which is used if the paper width is less than the setting of SP2-309-1.	1.0 ~ 3.0 0.1/step **1.2**
	4*	Transfer Current Correction - β (Paper tray)	Adjusts the transfer current correction coefficient which is used if the paper width is less than the setting of SP2-309-2.	1.0 ~ 3.0 0.1/step **1.2**
	5*	Transfer Current Correction - γ (By-pass feed)	Adjusts the transfer current correction coefficient which is used if the paper width is less than the setting of SP2-309-1.	1.0 ~ 3.0 0.1/step **1.5**
	6*	Transfer Current Correction - δ (By-pass feed)	Adjusts the transfer current correction coefficient which is used if the paper width is less than the setting of SP2-309-2.	1.0 ~ 3.0 0.1/step **1.5**

Mode No.			Function	Settings
Class 1 and 2	**Class 3**			
2-801		TD Sensor Initial Setting	Performs the TD sensor initial setting. This SP mode controls the voltage applied to the TD sensor to make the TD sensor output about 4.0 V. Press 1 to start. After finishing this, the TD sensor output voltage is displayed. *Use this mode only after installing the machine, changing the TD sensor, or adding new developer.*	1: Start
2-802*	1*	TD Sensor Manual Setting - VTS	Adjusts the TD sensor output (VT). *Change this value after replacing the development unit with another one that already contains toner. For example, when using a development unit from another machine for test purposes. To adjust VT, use a similar procedure as for SP2-220.*	1.0 ~ 5.0 0.01 V/step **4.00 V**
	2*	TD Sensor Manual Setting - VTMAX	Adjusts the maximum value for SP2-802-1.	1.0 ~ 5.0 0.01 V/step **4.10 V**
	3*	TD Sensor Manual Setting - VTMIN	Adjusts the minimum value for SP2-802-1.	1.0 ~ 5.0 0.01 V/step **3.70 V**
2-805		Developer Initialization	Performs the developer initialization. Press 1 to start. *This SP should be performed after doing SP2-801-1 at installation and after replacing the drum.*	1: Start
2-902	2	Test Pattern Printing (IPU)	Prints the test patterns for the IPU chip. See section 4.2.3. for how to print test patterns. *This SP mode is useful for finding whether the BICU or the SBU is defective. If the printout is not OK, the BICU is defective.*	
	3	Test Pattern Printing (Printing)	Prints the printer test patterns. See section 4.2.3 for how to print test patterns. Example: 10. Trimming Area *This SP mode is useful for finding whether the LDDR or the BICU is defective. If the printout is not OK, the LDDR is defective.*	
2-909*	1*	Main Scan Magnification (Copier)	Adjusts the magnification in the main scan direction for copy mode. *Use the ●/✻ key to toggle between + and –. See "Replacement and Adjustment - Copy Adjustments" for details.*	–2.0 ~+2.0 0.1 %/step **+0.00 %**

Service Tables

Mode No.			Function	Settings
Class 1 and 2	**Class 3**			
2-909*	2*	Main Scan Magnification (Printer)	Adjusts the magnification in the main scan direction when printing from a personal computer. *Use the ●/✻ key to toggle between + and –. See "Replacement and Adjustment - Copy Adjustments" for details.*	–2.0 ~+ 2.0 0.1 %/step **+0.00 %**
2-911*	1*	Transfer Current Timing (On Timing)	Adjusts the transfer current on timing at the leading edge.	–30 ~ +30 1 mm/step **0 mm**
	2*	Transfer Current Timing (Switch Timing)	Adjusts the transfer current switch timing. This determines when the leading edge stops and the image area current begins (see SP2-301).	–30 ~ +30 1 mm/step **10 mm**
	3*	Transfer Current Timing (Off Timing)	Adjusts the transfer current off timing (–5 mm is 5 mm after the trailing edge).	–30 ~ +30 1 mm/step **–5 mm**
2-912*		Drum Reverse Rotation Time	**Designer use only. Do not change the value.**	0 ~ 50 1 ms/step **0 ms**
2-914*	1*	Process Control Setting - Cα	Adjusts the charge roller voltage used when paper with a small width is fed from the by-pass tray. The paper width below which the correction starts depends on the value of SP2-309-1. *Use this SP when an image problem (such as white spots at the centre of black dots or breaks in thin black lines) occurs when paper with a small width is fed from the by-pass feed tray.*	0 ~ 400 10 V/step **250 V**
	2*	Process Control Setting - Cβ	Adjusts the charge roller voltage used when paper with a small width is fed from the by-pass tray. The paper width below which the correction starts depends on the value of SP2-309-2. *Use this SP when an image problem (see 2-914-1) occurs when paper with a small width is fed from the by-pass feed tray.*	0 ~ 400 10 V/step **50 V**
	3*	Process Control Setting - Bγ	Adjusts the development bias used when paper with a small width is fed from the by-pass tray. The paper width below which the correction starts depends on the value of SP2-309-1. *Use this SP when an image problem (see 2-914-1) occurs when paper with a small width is fed from the by-pass feed tray.*	0 ~ 300 10 V/step **200 V**

Mode No.			Function	Settings
Class 1 and 2	**Class 3**			
2-914*	4*	Process Control Setting - Bδ	Adjusts the development bias used when paper with a small width is fed from the by-pass tray. The paper width below which the correction starts depends on the value of SP2-309-2. *Use this SP when an image problem (see 2-914-1) occurs when paper with a small width is fed from the by-pass feed tray.*	0 ~ 300 10 V/step **50 V**
2-920		LD Off Check	**Factory use only.**	**0: On** 1: Off
2-921*		Shading Correction - Printer	Selects whether shading correction for printing is done or not. ***Do not change the setting.***	0: No **1: Yes**
2-960*		Toner Overflow Sensor	Select whether the toner overflow sensor is activated or not. ***Do not change the setting.***	0: No **1: Yes**
# 2-969*		LD PWM Selection - Printer	Changes the LD power PWM control. A larger value causes a darker image. *Use this SP to adjust the image density for printing from a personal computer or printing a received fax message.*	1 ~ 5 1/step **4**
3-001*	1*	ID Sensor PWM Setting	This SP mode is added to solve the following problem. In the AD3, an SC condition occurs when ID Sensor Initial Setting is not done after doing an NVRAM Clear or replacing the NVRAM. *The PWM data is stored at doing the ID Sensor Initial Setting.*	0 ~ 255 1/step **100**
	2*	ID Sensor Initial Setting	Performs the ID sensor initial setting. The ID sensor output for the bare drum (V_{SG}) is adjusted to 4.0 ±0.2 V. *This SP mode should be performed after replacing or cleaning the ID sensor or replacing the drum or doing an NVRAM clear.*	1: Start
3-103*		ID Sensor Output Display	Displays the current V_{SG} and V_{SP} output. *If the ID sensor does not detect the ID pattern, "V_{SP} = 5.0 V/V_{SG} = 5.0 V" is displayed and an SC code is generated.* *If the ID sensor does not detect the bare area of the drum, "V_{SP} = 0.0 V/V_{SG} =0.0 V" is displayed and an SC code is generated.*	V_{SP} = x.xx V V_{SG} = x.xx V

Mode No.			Function	Settings
Class 1 and 2	**Class 3**			
3-903*		Initialization at Power-up	Decides whether or not the machine is initialized (drum cleaning, charge roller H.P check, charge roller voltage correction, etc) at power-up. *If set to "1", the fusing idling mode is disabled regardless of the setting of SP1-103.*	**0: Yes** 1: No
4-008*		Sub Scan Magnification (Scanning)	Adjusts the magnification in the sub scan direction for scanning. If this value is changed, the scanner motor speed is changed. *Use the ●/✻ key to toggle between + and –. See "Replacement and Adjustment - Copy Adjustments" for details.*	–9.0 ~ +9.0 0.1 %/step **+0.0 %**
4-010*		Leading Edge Registration (Scanning)	Adjusts the leading edge registration for scanning. *(–): The image moves in the direction of the leading edge* *Use the ●/✻ key to toggle between + and –. See "Replacement and Adjustment - Copy Adjustments" for details.*	–9.0 ~ +9.0 0.1 mm/step **+0.0 mm**
4-011*		Side-to Side Registration (Scanning)	Adjusts the side-to-side registration for scanning. *(–): The image disappears at the left side.* *(+): The image appears at the left side.* *Use the ●/✻ key to toggle between + and –. See "Replacement and Adjustment - Copy Adjustments" for details.*	–4.6 ~ +4.6 0.1 mm/step **+0.0 mm**
4-012*	1*	Leading Edge Erase Margin (Scanning)	Adjusts the leading edge erase margin for scanning. *Do not adjust this unless the user wishes to have a scanner margin that is greater than the printer margin.*	0.0 ~ 0.9 0.1 mm/step **0.5 mm**
	2*	Trailing Edge Erase Margin (Scanning)	Adjusts the trailing edge erase margin for scanning. *See the comment for SP4-012-1.*	0.0 ~ 0.9 0.1 mm/step **0.5 mm**
	3*	Left Side Erase Margin (Scanning)	Adjusts the left side erase margin for scanning. *See the comment for SP4-012-1.*	0.0 ~ 0.9 0.1 mm/step **0.5 mm**
	4*	Right Side Erase Margin (Scanning)	Adjusts the right side erase margin for scanning. *See the comment for SP4-012-1.*	0.0 ~ 0.9 0.1 mm/step **0.5 mm**
4-013		Scanner Free Run	Performs a scanner free run with the exposure lamp off.	

Mode No.			Function	Settings
Class 1 and 2	**Class 3**			
4-301		APS Sensor Output Check	Displays the APS sensor output signals when an original is placed on the exposure glass. Bit 0: Width sensor 1 Bit 1: Width sensor 2 Bit 2: Length sensor 1 Bit 3: Length sensor 2 Bit 4: Length sensor 3 See "Detailed Section Descriptions - Original Size Detection in Platen Mode" for more details.	00000000 0: Not detected 1: Detected
4-303*		APS Small Size Original Detection	Selects whether or not the copier determines that the original is A5/HLT size when the APS sensor does not detect the size. *If A5 length/5 1/2" x 8 1/2" is selected, paper sizes that cannot be detected by the APS sensors are regarded as A5 lengthwise or 5 1/2" x 8 1/2".* *If "Not detected" is selected, "Cannot detect original size" will be displayed.*	**0: Not detected** 1: A5 length/ 5 1/2" x 8 1/2"
4-428*	1*	Standard White Level Adjustment Flag	Displays whether or not the standard white level adjustment has been done.	0: Performed 1: Not performed
	2	Standard White Level Adjustment	Corrects the standard white level of the white plate. ***This SP mode is for factory use only. Do not use this SP mode.***	1: Start
# 4-901*	1 #	Image Data Path (SBU)	***This SP mode is for designer use only. Do not use this SP mode.***	0 ~ 3 1/step **0**
	2 #	ASIC ID Display	Displays the ID code for the ASIC. ***This SP mode is for designer use only. Do not use this SP mode.***	
	3* #	Black Level Adjustment (current value)	Checks the black level adjustment value at power-up. ***This SP mode is for designer use only. Do not use this SP mode.***	0 ~ 255 1/step **209**
	4 *#	BK E/O Adjustment	Checks the difference between black levels for Even and Odd channels after adjusting the black level at power-up. ***This SP mode is for designer use only. Do not use this SP mode.***	0 ~ 255 1/step **128**
	5* #	Temporary AGC Range Adjustment	Checks the temporary AGC range value after adjusting the white level at power-up. ***This SP mode is for designer use only. Do not use this SP mode.***	0 ~ 255 1/step **160 (30)** **187 (40)**
	6* #	AGC Range Adjustment	Checks the AGC range value after adjusting the white level at power-up. ***This SP mode is for designer use only. Do not use this SP mode.***	0 ~ 255 1/step **160 (30)** **187 (40)**

Service Tables

Mode No.			Function	Settings
Class 1 and 2	**Class 3**			
# 4-901*	7* #	AGC Gain Adjustment - E ch	Checks the AGC gain value for the Even channel after adjusting the white level at power-up. ***This SP mode is for designer use only. Do not use this SP mode.***	0 ~ 255 1/step **0**
	8* #	AGC Gain Adjustment - O ch	Checks the AGC gain value for the Odd channel after adjusting the white level at power-up. ***This SP mode is for designer use only. Do not use this SP mode.***	0 ~ 255 1/step **0**
	9* #	Temporary AGC Range Adjustment (Scanner App.)	Checks the temporary AGC range value for the scanner application after adjusting the white level at power-up. ***This SP mode is for designer use only. Do not use this SP mode.***	0 ~ 255 1/step **140 (30)** **167 (40)**
	10* #	AGC Range Adjustment (Scanner App.)	Checks the AGC range value for the scanner application after adjusting the white level at power-up. ***This SP mode is for designer use only. Do not use this SP mode.***	0 ~ 255 1/step **160 (30)** **187 (40)**
	11* #	AGC Gain Adjustment - E ch (Scanner Option)	Checks the AGC gain value for the Even channel for the scanner application after adjusting the white level at power-up. ***This SP mode is for designer use only. Do not use this SP mode.***	0 ~ 255 1/step **0**
	12* #	AGC Gain Adjustment - O ch (Scanner Option)	Checks the AGC gain value for the Odd channel for the scanner application after adjusting the white level at power-up. ***This SP mode is for designer use only. Do not use this SP mode.***	0 ~ 255 1/step **0**
	13* #	Standard White Level Display	Checks the value of the standard white level after adjusting the white level. ***This SP mode is for factory use only. Do not use this SP mode.***	0 ~ 255 1/step **94**
	14* #	Overflow Flag	Checks the overflow flag data during the automatic scanner adjustment. ***This SP mode is for designer use only.***	
	15* #	Time Out Flag	Checks the time out flag data during the automatic scanner adjustment. ***This SP mode is for designer use only.***	
	16* #	Error Flag	Checks the error flag data during the automatic scanner adjustment. ***This SP mode is for designer use only.***	
	17* #	SBU Reset Error Flag	Checks the SBU reset error flag after resetting the SBU at power-up. ***This SP mode is for factory use only. Do not use this SP mode.***	

Mode No.			Function	Settings
Class 1 and 2	**Class 3**			
# 4-901*	18* #	AGC Range Adjustment (Factory)	Checks the AGC range value which is adjusted in the factory. ***This SP mode is for designer use only. Do not use this SP mode.***	
	19* #	AGC Gain Adjustment - E ch (Factory)	Checks the AGC gain value for the Even channel that is adjusted in the factory. ***This SP mode is for designer use only. Do not use this SP mode.***	
	20* #	AGC Gain Adjustment - O ch (Factory)	Checks the AGC gain value for the Odd channel that is adjusted in the factory. ***This SP mode is for designer use only. Do not use this SP mode.***	
	21* #	Standard White Level Display (Factory)	Checks the value of the standard white level that is adjusted in the factory. ***This SP mode is for factory use only. Do not use this SP mode.***	
	22* #	A/D Standard Voltage in ADS Mode	Adjusts the upper limit voltage for A/D conversion in ADS mode. ***This SP mode is for factory use only. Do not use this SP mode.***	0 ~ 255 1/step **204**
	23* #	Black Level Adjustment (Previous value)	Use this value when the timeout error for the black level adjustment occurs. This value updates after adjusting the black level without error. ***This SP mode is for designer use only. Do not use this SP mode.***	0 ~ 255 1/step **209**
	24* #	BK E/O Adjustment (Previous value)	Use this value when the timeout error occurs for adjusting the difference between the black levels for Even and Odd channel. This value updates after adjusting it without error. ***This SP mode is for designer use only. Do not use this SP mode.***	0 ~ 255 1/step **128**
	25* #	Standard White Level Data	***This SP mode is for factory use only. Do not use this SP mode.***	0 ~ 255 1/step **94**
	26* #	AGC Range Adjustment (Previous value)	Use this value when the timeout error for the AGC range value adjustment occurs. This value updates after adjusting it without error. ***This SP mode is for designer use only. Do not use this SP mode.***	0 ~ 255 1/step **160 (30)** **187 (40)**
	27* #	AGC Gain Adjustment - E ch (Previous value)	Use this value when the timeout error occurs for the AGC gain adjustment for the Even channel. This value updates after adjusting it without error. ***This SP mode is for designer use only. Do not use this SP mode.***	0 ~ 255 1/step **0**

Service Tables

Mode No.			Function	Settings
Class 1 and 2	**Class 3**			
# 4-901*	28* #	AGC Gain Adjustment - O ch (Previous value)	Use this value when the timeout error occurs for the AGC gain adjustment for the Odd channel. This value updates after adjusting it without error. ***This SP mode is for designer use only. Do not use this SP mode.***	0 ~ 255 1/step **0**
	29 #	Temporally AGC Range Data (Scanner App.)	***This SP mode is for designer use only. Do not use this SP mode.***	
	30 #	AGC Range Data (Scanner App.)	***This SP mode is for designer use only. Do not use this SP mode.***	
	31* #	AGC Gain Adjustment - E ch (Scanner Option)	Use this value when the timeout error occurs for the AGC gain adjustment for the Even channel for the scanner application. This value updates after adjusting it without error. ***This SP mode is for designer use only. Do not use this SP mode.***	0 ~ 255 1/step **0**
	32* #	AGC Gain Adjustment - O ch (Scanner Option)	Use this value when the timeout error occurs for the AGC gain adjustment for the Odd channel for the scanner application. This value updates after adjusting it without error. ***This SP mode is for designer use only. Do not use this SP mode.***	0 ~ 255 1/step **0**
# 4-903*	5	Full Size Mode	Selects whether the copy is always in full size mode even if the magnification ratio has been changed. *Set to 1 when checking the magnification in the main scan direction. If the magnification is not 100%, something is wrong with the image processing circuits.*	**0: Normal operation** 1: Always full size mode
	7	Image Shift in Magnification Mode	Adjusts the pixel shift amount in the main scan direction in magnification mode. ***This SP mode is for designer use only.***	0 ~ 7680 1/step **0**
	10* #	25%/50% Reduction in Fax Mode	Selects whether 25% and 50% reduction in fax mode is available or not. ***Do not change the setting.***	**0: Available** 1: Not available
	11* #	MTF Filter Coefficient (Text: Main: 25% ~ 64%)	Selects the MTF filter coefficient in the main scan direction for letter mode. See “Detailed Descriptions - Image Processing” for details.	0 ~ 15 1/step **12**
	12* #	MTF Filter Coefficient (Text: Main: 65% ~ 154%)		0 ~ 15 1/step **14**

Mode No.			Function	Settings
Class 1 and 2	Class 3			
# 4-903*	13* #	MTF Filter Coefficient (Text: Main: 155% ~ 400%)	Selects the MTF filter coefficient in the main scan direction for letter mode. See "Detailed Descriptions - Image Processing" for details.	0 ~ 15 1/step **15**
	14* #	MTF Filter Coefficient (Text: Main: Notch 1)		0 ~ 15 1/step **14**
	15* #	MTF Filter Coefficient (Photo: Main)		0 ~ 15 1/step **14**
	16* #	Smoothing Filter Coefficient (Photo)	Selects the smoothing filter coefficient for photo mode, if smoothing is enabled for photo mode with SP4-904-3.	0 ~ 7 1/step **2**
	17* #	MTF Filter Coefficient (Text/Photo: Main)	Selects the MTF filter coefficient in the main scan direction for each original type mode. See "Detailed Descriptions - Image Processing" for details.	0 ~ 15 1/step **9**
	18* #	MTF Filter Coefficient (Low Density Original: Main)		0 ~ 15 1/step **9**
	19* #	MTF Filter Coefficient (Copied Original: Main)		0 ~ 15 1/step **10**
	20* #	MTF Filter Strength (Text: Main: 25% ~ 64%)	Selects the MTF filter strength in the main scan direction for each original type mode. SP4-903-24 is only effective if MTF is enabled with SP4-904-3. See "Detailed Descriptions Image Processing" for details.	0 ~ 7 1/step **2**
	21* #	MTF Filter Strength (Text: Main: 65% ~ 154%)		0 ~ 7 1/step **2**
	22* #	MTF Filter Strength (Text: Main: 155% ~ 400%)		0 ~ 7 1/step **2**
	23* #	MTF Filter Strength (Text: Main: Notch 1)		0 ~ 7 1/step **3**
	24* #	MTF Filter Strength (Photo: Main)		0 ~ 7 1/step **1**
	25* #	MTF Filter Strength (Text/Photo: Main)		0 ~ 7 1/step **1**
	26* #	MTF Filter Strength (Low Density Original: Main)		0 ~ 7 1/step **3**
	27* #	MTF Filter Strength (Copied Original: Main)		0 ~ 7 1/step **2**

Mode No.			Function	Settings
Class 1 and 2	**Class 3**			
# 4-903*	28* #	Independent Dot Erase Level (Text mode)	Selects the independent dot erase level for each original type mode. A larger value erases more independent dots. If “0” is selected, independent dot erase is disabled.	0 ~ 15 1/step **4**
	30* #	Independent Dot Erase Level (Text/Photo Mode)		0 ~ 15 1/step **0**
	31* #	Independent Dot Erase Level (Low Density Original)		0 ~ 15 1/step **0**
	32* #	Independent Dot Erase Level (Copied Original mode)		0 ~ 15 1/step **10**
	34* #	Background Erase Level (Text mode)	Adjust the threshold level for background erase. A larger value reduces dirty background. If “0” is selected, background erase is disabled.	0 ~ 255 1/step **5**
	35* #	Background Erase Level (Text/Photo mode)		0 ~ 255 1/step **0**
	36* #	Background Erase Level (Photo mode)		0 ~ 255 1/step **0**
	37* #	Background Erase Level (Copied Original mode)		0 ~ 255 1/step **10**
	41* #	MTF Filter Coefficient (Text: Sub: 25% ~ 64%)	Selects the MTF filter coefficient in the sub scan direction for each original type mode. SP4-903-48 is only effective if MTF is enabled with SP4-904-3. See “Detailed Descriptions - Image Processing” for details.	0 ~ 13 1/step **12**
	42* #	MTF Filter Coefficient (Text: Sub: 65% ~ 154%)		0 ~ 13 1/step **13**
	43* #	MTF Filter Coefficient (Text: Sub: 155% ~ 400%)		0 ~ 13 1/step **13**
	44* #	MTF Filter Coefficient (Text: Sub: Notch 1)		0 ~ 13 1/step **13**
	45* #	MTF Filter Coefficient (Low Density Original: Sub)		0 ~ 13 1/step **13**
	46* #	MTF Filter Coefficient (Copied Original: Sub)		0 ~ 13 1/step **13**

Mode No.			Function	Settings
Class 1 and 2	**Class 3**			
# 4-903	47* #	MTF Filter Coefficient (Text/Photo: Sub)	Selects the MTF filter coefficient in the sub scan direction for each original type mode. SP4-903-48 is only effective if MTF is enabled with SP4-904-3. See "Detailed Descriptions - Image Processing" for details.	0 ~ 13 1/step **10**
	48* #	MTF Filter Coefficient (Photo: Sub)		0 ~ 13 1/step **13**
	50* #	MTF Filter Strength (Text: Sub: 25% ~ 64%)	Selects the MTF filter strength in the sub scan direction for each original type mode. SP4-903-54 is only effective if MTF is enabled with SP4-904-3. See "Detailed Descriptions - Image Processing" for details.	0 ~ 7 1/step **2**
	51* #	MTF Filter Strength (Text: Sub: 65% ~ 154%)		0 ~ 7 1/step **2**
	52* #	MTF Filter Strength (Text: Sub: 155% ~ 400%)		0 ~ 7 1/step **2**
	53* #	MTF Filter Strength (Text: Sub: Notch 1)		0 ~ 7 1/step **3**
	54* #	MTF Filter Strength (Photo: Sub)		0 ~ 7 1/step **1**
	55* #	MTF Filter Strength (Text/Photo: Sub)		0 ~ 7 1/step **1**
	56* #	MTF Filter Strength (Low Density Original: Sub)		0 ~ 7 1/step **3**
	57* #	MTF Filter Strength (Copied Original: Sub)		0 ~ 7 1/step **2**
4-904*	2*	Dither Matrix Setting	Selects the dither matrix for photo mode. *If "0" is selected, the image will be sharper.*	0: 4 x 4 **1: 6 x 6**
	3*	Filter Type Selection in Photo Mode	Selects the filter type for photo mode. *Coefficients used:* *0: SP4-903-15, 24, 48, and 54.* *1: SP4-903-16* *If "0" is selected, the image will be sharper. However, dot screen areas will be faint.*	0: MTF **1: Smoothing**
	6*	Line Width Correction Type in Copied Original Mode	Selects the line width correction type for copied original mode. *In copied original mode, lines may bulge in the main scan direction. Adjust this SP mode until the result is satisfactory.*	0: Not corrected 1: Thin line-1 **2: Thin line-2** 3: Thick line

Mode No.			Function	Settings
Class 1 and 2	**Class 3**			
4-904*	9	Image Data Path - MSU	Selects one of the following video data outputs, which will be used for printing. 0: After image scanning 1: After gradation processing 1 2: After gradation processing 2 3: After image data form application 4: After MSU 1 5: After MSU 2 6: Image synchronize signal only 7: Not output **8: Normal video processing**	
			Do not change the value.	
	12*	Threshold Level in Binary Picture Processing Mode	Adjusts the threshold level for binary picture processing.	0 ~ 255 1/step **128**
	18*	Binary Dither Pattern	Selects the dither pattern for photo mode in binary picture processing mode.	**0: 70 lines (8 x 8)** 1: 95 lines (6 x 6) 2: 140 lines (8 x 8) 3: 180 lines (8 x 8)
			A greater number of lines give a more detailed copy.	
	23*	Binary Error Diffusion Pattern	Selects the error diffusion pattern except for photo mode.	**0: Normal** 1: Matrix 1 2: Matrix 2
			Changes this value If the image quality for the texture original to be improved.	
4-905	1	Image Data Path - Filtering/Magnification	Selects one of the following video data outputs, which will be used for printing. **0: Magnification → Filtering** 1: Magnification only 2: Filtering only 3: No processing	
			Do not change the value.	
	2	Image Data Path - Gradation Processing	Selects one of the following video data outputs, which will be used for gradation processing. 0: After image scanning 1: After MSU 2. After image overlay **3: Normal operation**	
			Do not change the value.	
	4	Printout Type Selection	Selects one of the following video data outputs, which will be used for the printer controller. **0: Normal operation** 1: Black/white conversion 2: Not printout 3: Application through	
			Do not change the value.	
# 4-909*	2 * #	Line Width Correction - Black (Main scan)	Decides the threshold value in the main scan direction for a pixel to be black.	0 ~ 255 1/step **223**
			Do not change the value.	

Mode No.			Function	Settings
Class 1 and 2	**Class 3**			
# 4-909*	3 * #	Line Width Correction - White (Main scan)	Decides the threshold value in the main scan direction for a pixel to be white. ***Do not change the value.***	0 ~ 255 1/step **111**
	4 * #	Line Width Correction - Black (Sub scan)	Decides the threshold value in the sub scan direction for a pixel to be black. ***Do not change the value.***	0 ~ 255 1/step **223**
	5 * #	Line Width Correction - White (Sub scan)	Decides the threshold value in the sub scan direction for a pixel to be white. ***Do not change the value.***	0 ~ 255 1/step **111**
	19	Image Data Path - Application	Selects one of the following video data outputs, which will be used for the application. ***Do not change the value.***	0 ~ 14 1/step **14**
	20	Image Data Path - Printing	Selects one of the following video data outputs, which will be used for printing. ***Do not change the value.***	0 ~ 8 1/step **8**
4-910	3	Data Compression - ABS Through	Selects whether the ABS function is done or not. ***Do not change the value.***	**0: Yes** 1: No
4-911*	1	HDD Setting (Media Test)	Checks for bad sectors on the hard disk that develop during machine use. Press "1" to start. This takes 4 minutes. *This SP mode should be done when an abnormal image is printed. There is no need to do this at installation as the hard disk firmware already contains bad sector information, and damage is not likely during transportation.* *Bad sectors detected with this SP mode will be stored in the NVRAM with the bad sector data copied across from the firmware.* *If the machine detects over 50 bad sectors, SC361 will be generated. At this time, use SP4-911-2.*	1: Start
	2	HDD Setting (Formatting)	Formats the hard disk. This takes 4 minutes. Press "1" to start. **Do not turn off the main power switch during this process.**	1: Start
	3*	HDD Setting (Spindle Control)	Decides the disk drive motor (spindle motor) stop timing. **0: Enabled** The hard disk stops in low power mode. The first copy after returning to standby will take longer. 1: Disabled The hard disk keeps going in low power mode.	
	6	HDD Setting (Bad Sector Information Reset)	Resets the bad sector information which is stored in the NVRAM. Press "1" to start. *This SP should be performed when the hard disk is replaced.*	1: Start

Service Tables

Mode No.			Function	Settings
Class 1 and 2	**Class 3**			
4-911*	7	HDD Setting (Bad Sector Display)	Displays the number of bad sectors there are on the hard disk. *If the machine detects over 50 bad sectors, SC361 will be generated. At this time, use SP4-911-2.*	Total: 0 Copy: 0 Printer: 0 AF: 0 (Archive File)
	8	HDD Model Name Display	Displays the model name of the HDD. *If the hard disk is not installed, "Not Connected" is displayed.*	
5-001		All Indicators On	Turns on all indicators on the operation panel. *Press "1" to check.* *Press [#] to exit this SP mode.*	M/C: Stop 1: Start
5-009*		Language Selection	Selects the language for the display. *After selecting the language, turn the main power switch off and on.*	
5-024*		mm/inch Display Selection	Selects what unit is used. *After selecting the unit, turn the main power switch off and on.*	**0: mm** 1: inch
5-104*		A3/11" x 17" Double Count	Specifies whether the counter is doubled for A3/11" x 17" paper. *If "1" is selected, the total counter and the current user code counter count up twice when A3/11" x 17" paper is used.*	**0: No** 1: Yes
5-106*		ADS Level Selection	Selects the image density level that is used in ADS mode.	1 ~ 5 1 notch/step **3**
5-112*		Non-standard Paper Size	Selects whether a non-standard paper size can be input or not. *If "1" is selected, the customer will be able to input a non-standard paper size using a UP mode.*	0: No **1: Yes**
5-113*		Optional Counter Type	**This SP is for Japan only. Do not change the value.**	0 ~ 5 1/step **0**
5-115*		Duplex Punch Hole Margin	Selects whether or not the image on the back of duplex copies shifts for making the punch holes.	**0: Yes** 1: No
5-118 *		Disable Copying	Selects whether the copy function is disabled or not.	**0: No** 1: Yes
5-120		Mode Clear - Op. Counter Removal	**This SP is for Japan only. Do not change the value.**	0 ~ 2 1/step **0**
5-121*		Counter Up Timing	Determines whether the optional key counter counts up at paper feed-in or at paper exit. *The total counter is not affected by this SP mode.*	**0: Feed-in** 1: Exit
5-127*		APS Mode	Selects whether the APS function is enabled or not.	0: Disabled **1: Enabled**

Mode No.			Function	Settings
Class 1 and 2	**Class 3**			
5-131*		Paper Size Type Selection	Selects the paper size type (for originals and copy paper). • *After changing the value, turn the main power switch off and on.* • *If the paper size type of the archive files stored in the HDD is different, abnormal copies will be made. In this condition, perform SP5-822 and ask the user to restore the archive files.*	0: Japan **1: North America** 2: Europe
5-212*	3*	Page No. position in Duplex Mode (Horizontal)	**Japanese version only. Do not change the value.**	-10 ~ 10 1 mm/step **0 mm**
	4*	Page No. position in Duplex Mode (Vertical)		
5-401*	2*	Restricted Access Control for Key Counter - Copy Mode	Selects whether restricted access control is done when using the key counter in copy mode. *Change this value when install the optional key counter and it will be used for copy mode.*	**0: No** 1: Yes
	3*	Restricted Access Control for other counters - Copy Mode	**This SP is for Japan only. Do not change the value.**	**0: No** 1: Yes
	52*	Restricted Access Control for Key Counter - Fax Mode	Selects whether restricted access control is done when using the key counter in fax mode. *Change this value when install the optional key counter and it will be used for fax mode.*	**0: No** 1: Yes
	53*	Restricted Access Control for other counters - fax Mode	**This SP is for Japan only. Do not change the value.**	**0: No** 1: Yes
	62*	Restricted Access Control for Key Counter - Printer Mode	Selects whether restricted access control is done when using the key counter in printer mode. *Change this value when install the optional key counter and it will be used for printer mode.*	**0: No** 1: Yes
	63*	Restricted Access Control for other counters - Printer Mode	**Japanese version only.** **Do not change the value.**	**0: No** 1: Yes
	82*	Restricted Access Control for Key Counter - Other Enhanced Kit	**Japanese version only.** **Do not change the value.**	**0: No** 1: Yes
	83*	Restricted Access Control for other counters - Other Enhanced Kit	**Japanese version only.** **Do not change the value.**	**0: No** 1: Yes

Mode No.			Function	Settings
Class 1 and 2	**Class 3**			
5-501*		PM Alarm Interval	Sets the PM interval, with an alarm. *When the setting is "0", this function is disabled.*	0 ~ 255 1 k copies/step **0 k copies**
5-504*	1*	Jam Alarm Level (RSS function)	**Japanese version only.** **Do not change the values.**	0: Z 1: L 2: M **3: H**
5-504*	2*	Jam Auto Call (RSS function)	**Japanese version only.** **Do not change the values.**	0: Off **1: On**
5-505*		Error Alarm Level	**Japanese version only.** **Do not change the values.**	0 ~ 255 100 copies/step **2500 copies (30)** **5000 copies (40)**
5-507*	128*	Paper Control Call Interval - Other Paper Sizes (RSS function)	**Japanese version only.** **Do not change the values.**	250 ~ 10000 1 page/step **1000 pages**
	132*	Paper Control Call Interval - A3 (RSS function)		
	133*	Paper Control Call Interval - A4 (RSS function)		
	134*	Paper Control Call Interval - A5 (RSS function)		
	141*	Paper Control Call Interval - B4 (RSS function)		
	142*	Paper Control Call Interval - B5 (RSS function)		
	160*	Paper Control Call Interval - DLT (RSS function)		
	164*	Paper Control Call Interval - LG (RSS function)		
	166*	Paper Control Call Interval - LT (RSS function)		
	172*	Paper Control Call Interval - HLT (RSS function)		
5-590*	1*	Original Auto Call (RSS function)	**Japanese version only.** **Do not change the values.**	**0: Off** 1: On
	2*	Cover Open Auto Call (RSS function)		0: Off **1: On**
	3*	Paper Control Call (RSS function)		**0: Off** 1: On

Mode No.			Function	Settings
Class 1 and 2	**Class 3**			
5-590*	4*	Staple Auto Call (RSS function)	**Japanese version only.** **Do not change the values.**	**0: Off** 1: On
	5*	Toner Auto Call (RSS function)		**0: Off** 1: On
5-801		Memory All Clear	Resets all correction data for process control and all software counters. Also, returns all modes and adjustments to the default settings. See the "Memory All Clear" section for how to use this SP mode correctly. Press "1" for over 3 seconds, then turn the main power switch off and on. ***Normally, this SP mode should not be used.*** *It is used only after replacing the NVRAM, or when the copier malfunctions due to a damaged NVRAM.*	
5-802*		Free Run	Performs a free run. The scanner scans once and the printer prints for the number of copies requested. *To perform the free run, after selecting "1", press the # key to enter copy mode then input the number of copies. Then, press the Start key.* *To stop the free run, press C.*	**0: Stop** 1: Start
5-803	1 ~ 9	Input Check	Displays the signals received from sensors and switches. See the "Input Check" section for details.	
5-804		Output Check	Turns on the electrical components individually for test purposes. See the "Output Check" section for details.	
5-807	1	Option Connection Check - ADF	Checks the connectors to the optional peripherals.	0: Not connected 1: Connected
	2	Option Connection Check - Paper Tray Unit		
	3	Option Connection Check - LCT		
	4	Option Connection Check - Finisher		
5-811*		Machine Serial Number	Use to input the machine serial number. (Normally done at the factory.) *This serial number will be printed on the system parameter list.* *Use the ●/✻ key to input "A".*	

Mode No.			Function	Settings
Class 1 and 2	**Class 3**			
5-812*	1*	Service Telephone Number at SC condition	Use this to input the telephone number of the service representative (this is displayed when a service call condition occurs.) *Press the ●/✻ key to input a pause. Press the "Clear modes" key to delete the telephone number.*	
5-812*	2*	Service Fax Number for Counter Printing	Use this to input the fax number of the service representative (this is printed on the Counter Report - UP mode, System No.19) *Press the ●/✻ key to input a pause. Press the "Clear modes" key to delete the telephone number.*	
5-816*	1*	CSS (CSS) Function	**Japanese version only.** **Do not change the values.**	**0: Off** 1: On
	2*	CE Visit Call (CSS function)		0: Start 1: Finish
5-821*		CSS PI Device Code (CSS function)	**Japanese version only.** **Do not change the value.**	0 ~ 4 1/step **0**
5-822		Archive File Clear	Clears all archive file data stored in the HDD. Press "1" to clear. *Before (or after) performing SP5-131, do this SP mode. After this, ask the user to restore the archive files.*	1: Start
# 5-824		NVRAM Data Upload	Uploads the UP and SP mode data (except for counters and the serial number) from the NVRAM on the BICU board to a flash memory card. **Note:** While using this SP mode, keep the front cover opened. *To prevent any software modules from accessing the NVRAM while uploading the NVRAM data, keep the front cover open.*	1: Start
# 5-825		NVRAM Data Download	Downloads the UP and SP mode data from a flash memory card to the NVRAM on the BICU board. **Note:** While using this SP mode, keep the front cover opened. *To prevent any software modules from accessing the NVRAM while downloading the NVRAM data, keep the front cover opening.*	1: Start
# 5-826		Program Upload	Uploads the system program from the flash memory on the BICU board to a flash memory card.	1: Start

Mode No.			Function	Settings
Class 1 and 2	**Class 3**			
5-907		Plug & Play Brand Name and Production Name Setting	Selects the brand name and the production name for Windows 95 Plug & Play. This information is stored in the NVRAM. If the NVRAM is defective, these names should be registered again. *After selecting, press the "Original Type" key and # at the same time. If the setting is completed, a "*" mark will be displayed before the selection.*	
5-914		Printer Counter Display	Selects whether or not the total printer counter is displayed in the UP mode.	**0: Off** 1: On
5-915		Mechanical Counter Detection	Checks whether the mechanical counter inside the inner cover is connected or not.	0: Not detected 1: Detected 2: Unknown
5-920*		Recovery Time for Low Power Mode	Selects the recovery time from the low power mode.	**0: 30 s** 1: 20 s
5-990	1	SMC Printing (All Data)	Prints all the system parameter lists. See the "System Parameter and Data Lists" section for how to print the lists.	1: Start
	2	SMC Printing (SP Mode Data)	Prints the SP mode data list. See the "System Parameter and Data Lists" section for how to print the lists.	1: Start
	3	SMC Printing (UP Mode Data)	Prints the UP mode data list. See the "System Parameter and Data Lists" section for how to print the lists.	1: Start
	4	SMC Printing (Machine Status Data)	Prints the machine status history data list. See the "System Parameter and Data Lists" section for how to print the lists.	1: Start
	5	SMC Printing (UP Mode - Copy)	Prints the Copy Mode list (UP Mode No.10) See the "System Parameter and Data Lists" section for how to print the lists.	1: Start
	6	SMC Printing (Large Font Size)	Prints the SP mode data list with a large font size. See the "System Parameter and Data Lists" section for how to print the lists. *This SP mode is used when the SMC list is sent by fax to the number stored with SP5-812.*	1: Start
6-006*	1*	ADF Side-to Side Registration	Adjusts the printing side-to-side registration in the ADF mode. *Use the ●/✻ key to toggle between + and –.*	–3 ~ +3 0.1 mm/step **+0.0 mm**
	2*	ADF Leading Edge Registration (Simplex)	Adjusts the original stop position. *Use the ●/✻ key to toggle between + and –.*	–29 ~ +29 0.18 mm/step **+0.0 mm**

Service Tables

Mode No.			Function	Settings
Class 1 and 2	**Class 3**			
6-006*	3*	ADF Leading Edge Registration (Duplex-front)	Adjusts the original stop position against the original left scale in one-sided original mode. *Use the ●/✻ key to toggle between + and –.*	–29 ~ +29 0.18 mm/step **+0.0 mm**
	4*	ADF Leading Edge Registration (Duplex-rear)	Adjusts the original stop position against the original left scale in two-sided original mode. *Use the ●/✻ key to toggle between + and –.*	–29 ~ +29 0.1 mm/step **+0.0 mm**
	For details on the correct way to use SP 6-006, see the ADF service manual.			
6-007	1	ADF Input Check 1	Displays the signals received from sensors and switches of the ADF. See the “Input Check” section for details.	
	2	ADF Input Check 2	Displays the signals received from sensors and switches of the ADF. See the “Input Check” section for details.	
6-008		ADF Output Check	Turns on the electrical components of the ADF individually for test purposes. See the “Output Check” section for details.	
6-009	1	ADF Free Run (Two-sided original)	Performs an ADF free run with two-sided. Press “1” to start. *This is a general free run controlled from the copier. For more detailed free run modes, see the DF manual.*	1: Start
	2	ADF Free Run (Stamp)	Performs an ADF free run with stamp mode. Press “1” to start. *This is a general free run controlled from the copier. For more detailed free run modes, see the DF manual.*	1: Start
6-010*		Stamp Position Adjustment	Adjusts the stamp position in the sub-scan direction in facsimile mode. *Use the ●/✻ key to toggle between + and –.*	–3.5 ~ +3.5 0.5 mm/step **0 mm**
6-105*		Finisher Staple Position Adjustment (3,000-sheet Finisher Only)	Adjusts the staple position in the main scan direction when using the 3,000-sheet finisher. *Use the ●/✻ key to toggle between + and –.* *A larger value causes the staple position to shift outward.*	–1~ +3.5 0.5 mm/step **+0.0 mm**
6-113*	1*	Punch Hole Position Adjustment (2 Punch Hole Type)	Adjusts the punch hole position in the sub-scan direction for the punch unit with two punch holes. *Use the ●/✻ key to toggle between + and –. A larger value shifts the punch holes towards the edge of the paper.*	–7.5 ~ +7.5 0.5 mm/step **0 mm**

Mode No.			Function	Settings
Class 1 and 2	**Class 3**			
6-113*	2*	Punch Hole Position Adjustment (3 Punch Hole Type)	Adjusts the punch hole position in the sub-scan direction for the punch unit with three punch holes. *Use the ●/✻ key to toggle between + and –. A larger value shifts the punch holes towards the edge of the paper.*	–7.5 ~ +7.5 0.5 mm/step **0 mm**
6-902*	1	Saddle Stitch Adjustment (A3)	**Japanese version only**	-30 ~ 30 0.5 mm/step **0.0 mm**
	2	Saddle Stitch Adjustment (B4)		
	3	Saddle Stitch Adjustment (A4)		
7-001*		Total Operation Time Display	Displays the total drum rotation time.	Min.
7-002*	1*	Total Original Counter (Copy and Fax Modes)	Displays the total number of fed originals in copy and fax modes.	
	2*	Total Original Counter (Copy Mode)	Displays the total number of fed originals in copy mode.	
	3*	Total Original Counter (Fax Mode)	Displays the total number of fed originals in fax mode.	
7-003*	1*	Total Copy Counter (All Modes)	Displays the total number of prints in all modes.	
	2*	Total Copy Counter (Copy Mode)	Displays the total number of prints in copy mode.	
	3*	Total Copy Counter (Fax Mode)	Displays the total number of prints in fax mode.	
	4*	Total Copy Counter (Printer Mode)	Displays the total number of prints in printer mode.	
7-006*	1*	C/O (Copy per Original) Counter	Displays the number of sets of copies per original when making 10 or more sets of copies. e.g.: When making 15 sets of copies of an original, this counter value will increase by “6”.	
	2*	P/O (Print per Original) Counter	Displays the number of sets of prints per original data when making 10 or more sets of prints. e.g.: When making 15 sets of prints of an original data, this counter value will increase by “6”.	
7-101*	4*	Total Copies by Paper Size (A3)	Displays the total number of prints by paper size.	
	5*	Total Copies by Paper Size (A4)		

Service Tables

Mode No.			Function	Settings
Class 1 and 2	Class 3			
7-101*	6*	Total Copies by Paper Size (A5)	Displays the total number of prints by paper size.	
	13*	Total Copies by Paper Size (B4)		
	14*	Total Copies by Paper Size (B5)		
	32*	Total Copies by Paper Size (DLT)		
	36*	Total Copies by Paper Size (LG)		
	38*	Total Copies by Paper Size (LT)		
	44*	Total Copies by Paper Size (HLT)		
	128*	Total Copies by Paper Size (Other Sizes)		
7-201*		Total Number of Scanning	Displays the total number of scanned originals.	
7-204*	1*	Total Paper Tray Counter (1st Paper Tray)	Displays the total number of sheets fed from each paper feed tray.	
	2*	Total Paper Tray Counter (1st Paper Tray)		
	3*	Total Paper Tray Counter (2nd Paper Tray)		
	4*	Total Paper Tray Counter (3rd Paper Tray)		
	5*	Total Paper Tray Counter (4th Paper Tray)		
	6*	Total Paper Tray Counter (By-pass Feed)		
7-205*		ADF Total Counter	Displays the total number of originals fed by the ADF.	
7-206*	1*	Total Staple Counter	Displays the total number of used staples.	
	2*	Total Staple Counter Booklet	**Japanese version only**	

Mode No.			Function	Settings
Class 1 and 2	Class 3			
7-301*	1*	Total Copies by Reproduction Ratio (25% ~ 49%)	Displays the total number of prints by reproduction ratio.	
	2*	Total Copies by Reproduction Ratio (50% ~ 99%)		
	3*	Total Copies by Reproduction Ratio (Full size)		
	4*	Total Copies by Reproduction Ratio (101% ~ 200%)		
	5*	Total Copies by Reproduction Ratio (201% ~ 400%)		
	6*	Total Copies by Reproduction Ratio (Direct Mag.)		
	7*	Total Copies by Reproduction Ratio (Direct Size Mag.)		
	8*	Total Copies by Reproduction Ratio (Size Mag.)		
	9*	Total Copies by Reproduction Ratio (Fix Mag.)		
7-303*	1*	Total Copies by Image Editing (Posi./Nega.)	Displays the total number of prints by image editing mode.	
	2*	Total Copies by Image Editing (Repeat Copy)		
	3*	Total Copies by Image Editing (Memory Sort)		
	4*	Total Copies by Image Editing (Staple)		
	5*	Total Copies by Image Editing (Combine)		
	6*	Total Copies by Image Editing (Series Copy)		
	7*	Total Copies by Image Editing (Erase Copy)		
7-304*	1*	Total Copies by Copy Mode (Text)	Displays the total number of prints by copy mode.	

Mode No.			Function	Settings
Class 1 and 2	Class 3			
7-304*	2*	Total Copies by Copy Mode (Text/Photo)	Displays the total number of prints by copy mode.	
	3*	Total Copies by Copy Mode (Photo)		
	4*	Total Copies by Copy Mode (Generation)		
	5*	Total Copies by Copy Mode (Light Original)		
	6*	Total Copies by Copy Mode (Duplex)		
	7*	Total Copies by Copy Mode (ADF)		
	8*	Total Copies by Copy Mode (Double Copy)		
	9*	Total Copies by Copy Mode (2-sided Original)		
	10*	Total Copies by Copy Mode (Interrupt)		
	11*	Total Copies by Copy Mode (Archive File)		
	12*	Total Copies by Copy Mode (1-sided to 2-sided)		
	13*	Total Copies by Copy Mode (2-sided to 2-sided)		
	14*	Total Copies by Copy Mode (2-sided to 1-sided)		
	15*	Total Copies by Copy Mode (Book to 2-sided)		
7-305*	1*	Total Copies by Multiple Copy (1 to 1)	Displays the total number of prints by multiple copy quantity.	
	2*	Total Copies by Multiple Copy (1 to 2 ~ 5)		
	3*	Total Copies by Multiple Copy (1 to 6 ~ 10)		

Mode No.			Function	Settings
Class 1 and 2	Class 3			
7-305*	4*	Total Copies by Multiple Copy (1 to 11 ~ 20)	Displays the total number of prints by multiple copy quantity.	
	5*	Total Copies by Multiple Copy (1 to 21 ~ 99)		
	6*	Total Copies by Multiple Copy (1 to 100 ~)		
7-401*		Total SC Counter	Displays the total number of service calls that have occurred.	
7-403*	1*	SC History (Latest)	Displays the latest 10 service call codes.	
	2*	SC History (2nd Latest)		
	3*	SC History (3rd Latest)		
	4*	SC History (4th Latest)		
	5*	SC History (5th Latest)		
	6*	SC History (6th Latest)		
	7*	SC History (7th Latest)		
	8*	SC History (8th Latest)		
	9*	SC History (9th Latest)		
	10*	SC History (10th Latest)		
7-501*		Total Jam Counter	Displays the total number of copy jams and original jams.	
7-502*		Total Copy Jam Counter	Displays the total number of copy jams.	
7-503*		Total Original Jam Counter	Displays the total number of original jams.	
7-504*	1*	Total Copy Jam by Location (At Power On)	Displays the total number of copy jams by location. These are paper non-feed jams.	
	3*	Total Copy Jam by Location (1st Paper Tray)		
	4*	Total Copy Jam by Location (2nd Paper Tray)		
	5*	Total Copy Jam by Location (3rd Paper Tray)		
	6*	Total Copy Jam by Location (4th Paper Tray)		

Mode No.			Function	Settings
Class 1 and 2	Class 3			
7-504*	7*	Total Copy Jam by Location (LCT)	Displays the total number of copy jams by location. These are paper non-feed jams.	
	8*	Total Copy Jam by Location (Upper Relay Sensor)	Displays the total number of copy jams by location. These are jams when the paper does not activate the sensor.	
	9*	Total Copy Jam by Location (Lower Relay Sensor)		
	10*	Total Copy Jam by Location (Upper Relay Sensor - Op. PTU)		
	13*	Total Copy Jam by Location (Regist. Sensor)		
	16*	Total Copy Jam by Location (Exit Sensor)		
	17*	Total Copy Jam by Location (Bridge Exit Sensor)		
	18*	Total Copy Jam by Location (Bridge Relay Sensor)		
	19*	Total Copy Jam by Location (Duplex Entrance Sensor)		
	23*	Total Copy Jam by Location (Duplex Exit Sensor)		
	24*	Total Copy Jam by Location (1-bin Tray Entrance Sensor)		
	25*	Total Copy Jam by Location (Finisher Entrance Sensor)		
	26*	Total Copy Jam by Location (3,000-sheet Finisher Upper Tray Exit Sensor)		

Mode No.			Function	Settings
Class 1 and 2	Class 3			
7-504*	27*	Total Copy Jam by Location (3,000-sheet Finisher Shift Tray Exit Sensor, 1,000-sheet Finisher Exit Sensor)	Displays the total number of copy jams by location. These are jams when the paper does not activate the sensor.	
	28*	Total Copy Jam by Location (3,000-sheet Staple Tray Paper Sensor, 1,000-sheet Finisher Jogger Unit Paper Sensor)		
	29*	Total Copy Jam by Location (Finisher Stack Feed-out Belt HP Sensor)		
	30*	Total Copy Jam by Location (Mail Box Entrance Sensor)		
	31*	Total Copy Jam by Location (Mail Box Proof Tray Exit Sensor)		
	32*	Total Copy Jam by Location (Mail Box Relay Sensor)		
	33*	Total Copy Jam by Location (Mail Box: Mailbox Section)		
	35*	Total Copy Jam by Location (Booklet Finisher: Entrance 1)	**35 ~ 41 are Japanese version only.**	
	36*	Total Copy Jam by Location (Booklet Finisher: Transport)		
	37*	Total Copy Jam by Location (Booklet Finisher: Entrance 2)		
	38*	Total Copy Jam by Location (Booklet Finisher: Finisher Stapler)		

Mode No.			Function	Settings
Class 1 and 2	Class 3			
7-504*	39*	Total Copy Jam by Location (Booklet Finisher: Saddle Stitch 1)	**35 ~ 41 are Japanese version only.**	
	40*	Total Copy Jam by Location (Booklet Finisher: Saddle Stitch 2)		
	41*	Total Copy Jam by Location (Booklet Finisher: Saddle Stitch Stapler)		
	57*	Total Copy Jam by Location (LCT)	Displays the total number of copy jams by location. These are jams when the paper does not activate the sensor.	
	58*	Total Copy Jam by Location (Upper Relay Sensor)	Displays the total number of copy jams by location. These are jams when the paper stays at the sensor.	
	59*	Total Copy Jam by Location (Lower Relay Sensor)		
	60*	Total Copy Jam by Location (Upper Relay Sensor - Op. PTU)		
	61*	Total Copy Jam by Location (Lower Relay Sensor – Op. PTU)		
	63*	Total Copy Jam by Location (Regist. Sensor)		
	66*	Total Copy Jam by Location (Exit Sensor)		
	67*	Total Copy Jam by Location (Bridge Exit Sensor)		
	68*	Total Copy Jam by Location (Bridge Relay Sensor)		
	69*	Total Copy Jam by Location (Duplex Entrance Sensor)		
	73*	Total Copy Jam by Location (Duplex Exit Sensor)		

Mode No.			Function	Settings
Class 1 and 2	Class 3			
7-504*	74*	Total Copy Jam by Location (1-bin Tray Entrance Sensor)	Displays the total number of copy jams by location. These are jams when the paper stays at the sensor.	
7-505*	1*	Total Original Jam by Location (At Power On)	Displays the total number of original jams by location. These are jams when the original does not activate the sensor.	
	3*	Total Original Jam by Location (ADF Feed-in Sensor)		
	4*	Total Original Jam by Location (ADF Feed-out Sensor)		
7-506*	4*	Total Copy Jam by Paper Size (A3)	Displays the total number of copy jams by paper size.	
	5*	Total Copy Jam by Paper Size (A4)		
	6*	Total Copy Jam by Paper Size (A5)		
	13*	Total Copy Jam by Paper Size (B4)		
	14*	Total Copy Jam by Paper Size (B5)		
	32*	Total Copy Jam by Paper Size (DLT)		
	36*	Total Copy Jam by Paper Size (LG)		
	38*	Total Copy Jam by Paper Size (LT)		
	44*	Total Copy Jam by Paper Size (HLT)		
	128*	Total Copy Jam by Paper Size (Other Sizes)		
7-507*	1*	Total Counter Value at Copy Jam (Latest)	Displays the last 5 digits of the total counter value for the most recent 10 copy jams.	
	2*	Total Counter Value at Copy Jam (2nd Latest)		

Mode No.			Function	Settings
Class 1 and 2	Class 3			
7-507*	3*	Total Counter Value at Copy Jam (3rd Latest)	Displays the last 5 digits of the total counter value for the most recent 10 copy jams.	
	4*	Total Counter Value at Copy Jam (4th Latest)		
	5*	Total Counter Value at Copy Jam (5th Latest)		
	6*	Total Counter Value at Copy Jam (6th Latest)		
	7*	Total Counter Value at Copy Jam (7th Latest)		
	8*	Total Counter Value at Copy Jam (8th Latest)		
	9*	Total Counter Value at Copy Jam (9th Latest)		
	10*	Total Counter Value at Copy Jam (10th Latest)		
	11*	Total Counter Value at Original Jam (Latest)		
	12*	Total Counter Value at Original Jam (2nd Latest)		
	13*	Total Counter Value at Original Jam (3rd Latest)		
	14*	Total Counter Value at Original Jam (4th Latest)		
	15*	Total Counter Value at Original Jam (5th Latest)		
	16*	Total Counter Value at Original Jam (6th Latest)		
	17*	Total Counter Value at Original Jam (7th Latest)		
	18*	Total Counter Value at Original Jam (8th Latest)		
	19*	Total Counter Value at Original Jam (9th Latest)		

Mode No.			Function	Settings
Class 1 and 2	**Class 3**			
7-507*	20*	Total Counter Value at Original Jam (10th Latest)	Displays the last 5 digits of the total counter value for the most recent 10 copy jams.	
7-801	1	ROM Version Display (BICU)	Displays the ROM versions. **No. 13, 14, and 15 are Japanese version only.**	
	2	ROM Version Display (CSS)		
	3	ROM Version Display (HDD Controller)		
	4	ROM Version Display (ADF)		
	5	ROM Version Display (SIB)		
	6	ROM Version Display (Finisher)		
	7	ROM Version Display (Paper Tray Unit)		
	8	ROM Version Display (LCT)		
	9	ROM Version Display (Mail Box)		
	10	ROM Version Display (FCU)		
	11	ROM Version Display (Printer Controller)		
	12	ROM Version Display (Scanner Controller)		
	13	ROM Version Display (ANITA)		
	14	ROM Version Display (Booklet Finisher)		
	15	ROM Version Display (Stamp Card)		
	16	ROM Version Display (SARIC)		
7-803*		PM Counter Display	Displays the PM counter since the last PM.	

Mode No.			Function	Settings
Class 1 and 2	Class 3			
7-804		PM Counter Reset	Resets the PM counter. Press “1” to reset.	1: Start
7-807		SC/Jam Counter Reset	Resets the SC and jam counters. Press “1” to reset.	1: Start
7-808		Resets Counters (except for the total counter)	Resets all counters except for the following counters: Press “1” to reset. • All counters of SP7-003 • All counters of SP7-006 • All counters which are listed on the counter list (UP1-19-2)	1: Start
7-810		Key Operator Code Number Reset	Resets the key operator code. Press “1” to reset.	1: Start
7-816	1	Reset the total Copy Counter by Paper Tray (1st Paper Tray)	Resets the total copy counter by paper tray. Press “1” to reset. Use these SP modes when replacing the pick-up, feed, and separation rollers in the paper feed stations	1: Start
7-816	2	Reset the total Copy Counter by Paper Tray (2nd Paper Tray)	Resets the total copy counter by paper tray. Press “1” to reset. Use these SP modes when replacing the pick-up, feed, and separation rollers in the paper feed stations	1: Start
	3	Reset the total Copy Counter by Paper Tray (3rd Paper Tray)		1: Start
	4	Reset the total Copy Counter by Paper Tray (4th Paper Tray)		1: Start
	5	Reset the Total Copy Counter by Paper Tray (LCT)		1: Start
	6	Reset the total Copy Counter by Paper Tray (By-pass Feed)	Resets the total copy counter by paper tray. Press “1” to reset. Use these SP modes when replacing the pick-up, feed, and separation rollers in the paper feed stations	1: Start
7-822		Reset the Total Copy Counter by Magnification	Resets all counters of SP7-301. Press “1” to reset.	1: Start
7-823		Reset the Total Copy Counter by Image Editing	Resets all counters of SP7-303. Press “1” to reset.	1: Start
7-825		Electrical Total Counter Reset	Resets the electrical total counter. Press “1” to reset. *Usually, this SP mode is done at installation.* *This SP mode affects only once when the minus (“–“) counter value.*	1: Start
# 7-901		SC990 Contents	Displays details about the latest SC990.	

Mode No.			Function	Settings
Class 1 and 2	**Class 3**			
# 7-902	1	SC Details (Latest)	Displays details about the latest SCs. Not all SCs have these details.	
	2	SC Details (Latest 1st)		
	3	SC Details (Latest 2nd)		
7-904		Reset the Total Copy Counter by Copy Mode	Resets all counters of SP7-304. Press “1” to reset.	1: Start
7-905		Reset the Total Copy Counter by Multiple Copies	Resets all counters of SP7-305. Press “1” to reset.	1: Start

4.1.1 TEST PATTERN PRINTING (SP2-902)

NOTE: Do not operate the machine until the test pattern is printed out completely. Otherwise, an SC may occur.

1. Access the SP mode which contains the test pattern you need.
2. Press the ⌯ key on the operation panel to access the copy mode display.
3. Select required copy features such as paper size, image density, and reproduction ratio.
4. Press the "Start" key to print the test pattern.
5. After checking the test pattern, exit copy mode by pressing the ⌯ key again.
6. Exit the SP mode.

Test Pattern Table (SP2-902-2: Test Pattern Printing – IPU)

No.	Test Pattern	No.	Test Pattern
0	None	8	8 Grayscales (Horizontal)
1	Vertical Line (1-dot)	9	8 Grayscales (Vertical)
2	Horizontal Line (1-dot)	10	Patch Pattern (8-grayscale)
3	Vertical Line (2 dot)	11	Cross Pattern
4	Horizontal Line (2-dot)	12	Argyle Pattern
5	Alternating Dot Pattern	13	Not Used
6	Grid Pattern (Single-dot)	14	Not Used
7	Vertical Black Band	15	Not Used

Test Pattern Table (SP2-902-3: Test Pattern Printing – Printing)

No.	Test Pattern	No.	Teat Pattern
0	None	11	Argyle Pattern
1	Vertical Line (1-dot)	12	16 Grayscales (Horizontal)
2	Horizontal Line (1-dot)	13	16 Grayscales (Vertical)
3	Vertical Line (2 dot)	14	16 Grayscales (Vert./Hor.)
4	Horizontal Line (2-dot)	15	16 Grayscales (Vert./Hor Overlay)
5	Grid Pattern (Single-dot)	16	Slant Cross Stitch
6	Grid Pattern (Double-dot)	17	Horizontal Line (1-dot)
7	Alternating Dot Pattern	18	Grid Pattern (Single-dot)
8	Full Dot Pattern	19	Grid Pattern (Double-dot)
9	Black Band	20	Alternating Dot Pattern
10	Trimming Area	21	Blank Page

4.1.2 INPUT CHECK

Main Machine Input Check (SP5-803)

1. Access SP mode.
2. Select the class 3 SP number which will access the switch or sensor you wish to check.
3. Check the status of the sensor or switch.
   NOTE: If you wish to change to another class 3 level, press the "Next" or "Prev." key.
4. The reading ("0" or "1") will be displayed. The meaning of the display is as follows.

Bit 7	Bit 6	Bit 5	Bit 4	Bit 3	Bit 2	Bit 1	Bit 0
|	|	|	|	|	|	|	|
0	0	0	0	0	0	0	0

Class 3 No.	Bit No.	Description	Reading	
			0	1
1 (Upper Tray)	7	Not used		
	6	Height Sensor 2 (Op. Printer Controller)	Not activated	Activated
	5	Height Sensor 1 (Op. Printer Controller)	Not activated	Activated
	4	Not used		
	3	Paper Size Sensor 4	Switch pressed	Switch not pressed
	2	Paper Size Sensor 3	Switch pressed	Switch not pressed
	1	Paper Size Sensor 2	Switch pressed	Switch not pressed
	0	Paper Size Sensor 1	Switch pressed	Switch not pressed
2 (Lower Tray)	7	Duplex Unit Set Sensor	Unit set	Unit not set
	6	Height Sensor 2 (Op. Printer Controller)	Not activated	Activated
	5	Height Sensor 1 (Op. Printer Controller)	Not activated	Activated
	4	Not used		
	3	Paper Size Sensor 4	Switch pressed	Switch not pressed
	2	Paper Size Sensor 3	Switch pressed	Switch not pressed
	1	Paper Size Sensor 2	Switch pressed	Switch not pressed
	0	Paper Size Sensor 1	Switch pressed	Switch not pressed

Class 3 No.	Bit No.	Description	Reading	
			0	1
3 (Registration & Others)	7	Zero Cross Signal	Detected	Not detected
	6	Transfer Belt Unit H.P Sensor	Not at home position	At home position
	5	Exhaust Fan Lock Signal	Not locked	Locked
	4	Cooling Fan Lock Signal	Not locked	Locked
	3	Main Motor Lock Signal	Not locked	Locked
	2	Toner Overflow Sensor	Tank not full	Tank full
	1	Cover Open	Cover closed	Cover opened
	0	Registration Sensor	Paper detected	Paper not detected
4 (By-pass)	7	Not used		
	6	Paper End Sensor	Paper detected	Paper not detected
	5	Not used		
	4	Paper Size Sensor 4	See table 1	
	3	Paper Size Sensor 3		
	2	Paper Size Sensor 2		
	1	Paper Size Sensor 1		
	0	Unit Set Signal	Connected	Not connected
5 (Bridge Unit)	7	Not used		
	6	Unit Set Signal	Connected	Not connected
	5	Paper Sensor (Printer Controller Option)	Paper detected	Paper not detected
	4	Relay Sensor	Paper not detected	Paper detected
	3	Exit Sensor	Paper not detected	Paper detected
	2	Left Cover Switch	Switch pressed (cover closed)	Switch not pressed
	1	Right Cover Switch	Switch pressed (cover closed)	Switch not pressed
	0	Tray Exit Unit Switch	Switch pressed (cover closed)	Switch not pressed
6 (Unit Set)	7	Not used		
	6	F gate Signal	Active	Not active
	5	Height Sensor (Printer Controller Option)	At feed height position	Not at feed height position
	4	Paper Exit Sensor	Paper detected	Paper not detected
	3	Fusing Unit	Detected	Not detected
	2	Total Counter	Not detected	Detected
	1	Key Counter	Detected	Not detected
	0	Not used		
7 (Paper End)	7	Not used		
	6	Right Lower Cover Switch	Switch not pressed	Switch pressed

Class 3 No.	Bit No.	Description	Reading	
			0	1
7 (Paper End)	5	2nd Tray Height Sensor	Paper not at upper limit	Paper at upper limit
	4	1st Tray Height Sensor	Paper not at upper limit	Paper at upper limit
	3	Lower Relay Sensor	Paper detected	Paper not detected
	2	Upper Relay Sensor	Paper detected	Paper not detected
	1	Lower Paper End Sensor	Paper not detected	Paper detected
	0	Upper Paper End Sensor	Paper not detected	Paper detected
8 (I/O Board Dip Switch 101)	7	Dip Switch - 8	On	Off
	6	Dip Switch - 7	On	Off
	5	Dip Switch - 6	On	Off
	4	Dip Switch - 5	On	Off
	3	Dip Switch - 4	On	Off
	2	Dip Switch - 3	On	Off
	1	Dip Switch - 2	On	Off
	0	Dip Switch - 1	On	Off
9 (Duplex)	7	Not used		
	6			
	5			
	4			
	3	Exit Sensor	Paper detected	Paper not detected
	2	Entrance Sensor	Paper detected	Paper not detected
	1	Cover Guide Sensor	Cover guide opened	Cover guide closed
	0	Duplex Unit Switch	Switch pressed (cover closed)	Switch not pressed

Table 1: By-pass Feed Table Paper Size Data

Class 3 No.	Bit 4	Bit 3	Bit 2	Bit 1	Paper Width
4	1	1	1	1	Post card
	1	1	1	0	B6 lengthwise
	1	1	0	1	B5 lengthwise
	1	1	0	0	A5 lengthwise/5.5"
	1	0	1	1	B4 lengthwise
	1	0	0	1	A4 lengthwise/8.5"/8"
	0	1	1	1	A3 lengthwise
	0	0	1	1	11" x 17"

ADF Input Check (SP6-007)

Class 3 No.	Bit No.	Description	Reading	
			0	1
1	7	Inverter Sensor	Paper not detected	Paper detected
	6	Exit Sensor	Paper not detected	Paper detected
	5	Registration Sensor	Paper not detected	Paper detected
	4	Entrance Sensor	Paper not detected	Paper detected
	3	Original Width Sensor 1	Paper not detected	Paper detected
	2	Original Width Sensor 2	Paper not detected	Paper detected
	1	Original Width Sensor 3	Paper not detected	Paper detected
	0	Original Set Sensor	Paper not detected	Paper detected
2 (Lower Tray)	7	Not used		
	6			
	5	Original Stopper H.P Sensor	Original stopper up	Original stopper down
	4	Pick-up Roller H.P Sensor	Pick-up roller up	Pick-up roller down
	3	Exit Cover Sensor	Cover closed	Cover opened
	2	Feed Cover Sensor	Cover closed	Cover opened
	1	DF Position Sensor	Sensor not activated (cover open)	Sensor activated (cover closed or being closed)
	0	APS Start Sensor	Sensor not activated (cover open)	Sensor activated (cover closed or being closed)

4.1.3 OUTPUT CHECK

NOTE: Motors keep turning in this mode regardless of upper or lower limit sensor signals. To prevent mechanical or electrical damage, do not keep an electrical component on for a long time.

Main Machine Output Check (SP5-804)

1. Access SP mode 5-804.
2. Select the SP number that corresponds to the component you wish to check.
3. Press "1", then press # to check that component.
4. Press "0" to interrupt the test.
5. If you wish to check another component, press the "Next" or "Prev." Key.

No.	Description	No.	Description
1	Upper Paper Feed Clutch	35	Relay Clutch (PTU)
2	Lower Paper Feed Clutch	36	Relay Clutch
3	Upper Paper Feed Clutch (PTU)	37	Not used
4	Lower Paper Feed Clutch (PTU)	38	Relay Clutch (LCT)
5	Paper Feed Clutch (By-pass)	39	Registration Clutch
6	Paper Feed Clutch (LCT)	40	Not used
7 ~ 12	Not used	41	Exit Junction Gate Solenoid (Interchange Unit)
13	Pick-up Solenoid (By-pass)	42	Duplex Junction Gate Solenoid (Interchange Unit)
14	Pick-up Solenoid (LCT)	43, 44	Not used
15, 16	Not used	45	Inverter Gate Solenoid (Duplex)
17	Upper Transport Motor (Finishers)	46	Not used
18	Lower Transport Motor (3,000-sheet Finisher only)	47	Junction Gate Solenoid (Bridge Unit)
19	Shift Tray Exit Motor (3,000-sheet Finisher), Exit Motor (1,000-sheet Finisher)	48, 49	Not used
20	Staple Hammer Motor (Finishers)	50	Tray Junction Gate Solenoid (3,000-sheet Finisher only)
21	Punch Motor (Punch Unit)	51	Stapler Junction Gate Solenoid (Finishers)
22 ~ 24	Not used	52	Positioning Roller Solenoid (Finishers)
25	LCT Motor (LCT)	53 ~ 55	Not used
26	Tray Motor (PTU)	56	Toner Supply Motor
27	Not used	57	Transfer Belt Clutch
28	Main Motor	58 ~ 61	Not used
29	Transport Motor (Duplex)	62	Quenching Lamp
30	Inverter Motor – Reverse (Duplex)	63	Charge Roller Bias
31	Inverter Motor – Forward (Duplex)	64 ~ 66	Not used
32 ~ 34	Not used	67	Development Bias

No.	Description	No.	Description
68	Not used	86 ~ 89	Not used
69	Transfer Belt Bias	90	Laser Diode
70	ID Sensor	91	Not used
71 ~ 74	Not used	92	Shift Tray Lift Motor (Finishers)
75	Exhaust Fan Motor	93	Jogger Motor (3,000-sheet Finisher)/Jogger Fence Motor (1,000-sheet Finisher)
76	Cooling Fan Motor	94	Stapler Motor (3,000-sheet Finisher)
77	Not used	95	Stack Feed Out Motor (Finishers)
78	Cooling Fan Motor (Bridge Unit)	96	Shift Motor (Finishers)
79 ~ 84	Not used	97	Stapler Rotation Motor (3,000-sheet Finisher)
85	Mechanical Counter	98 ~ 99	Not used

ADF Output Check (SP6-008)

No.	Description
1	Feed-in Motor (Forward)
2	Feed-in Motor (Reverse)
3	Transport Motor (Forward)
4	Transport Motor (Reverse)
5	Feed-out Motor
6	Exit Gate Solenoid
7	Inverter Gate Solenoid
8	DF Indicators
9	Pick-up Motor (Forward)
10	Pick-up Motor (Reverse)

4.1.4 SYSTEM PARAMETER AND DATA LISTS (SMC LISTS)

1. Access SP mode 5-990 and select the class 3 number corresponding to the list that you wish to print.
2. Press the ◁ key to access the copy mode display.
3. Select the paper size and press the “Start” key to print the list.
4. After printing the list, exit the copy mode display by pressing the ◁ key.
5. Exit SP mode.

4.1.5 NIP BAND WIDTH ADJUSTMENT (SP1-109)

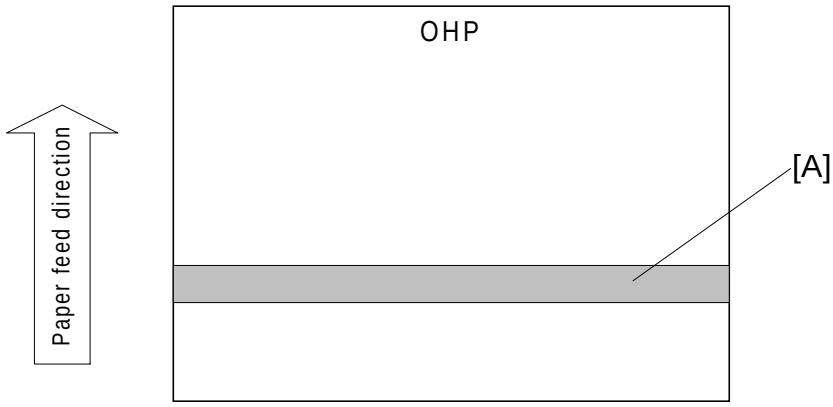

A231M509.WMF

When paper wrinkling or image off-set occurs, the pressure from the pressure roller can be adjusted by changing the position of the pressure springs. At this time, the nip band width can also be checked with SP1-109, as follows.

1. Do a free run (SP5-802) for about 50 sheets.
2. Enter SP1-109 and press the “1” key, then press the # key.
3. Press the key to enter copy mode.
4. Place an OHP sheet (A4/8.5" x 5.5" sideways) on the by-pass feed tray.
5. Press the “Start” key.
   The OHP sheet is stopped in the fusing unit for about 10 seconds, then it will be fed out automatically.
6. Check the nip band width [A]. The relationship between the position of the pressure spring and the band width is as follows.
   NOTE: Check the nip band width around the center of the OHP.

Pressure spring position	Nip width
Upper (default position)	6.0 ± 0.5 mm
Lower	6.5 ± 0.6 mm

If the width is out of the above specification, the pressure spring should be replaced.

4.1.6 MEMORY ALL CLEAR (SP5-801)

NOTE: Memory All Clear mode resets all the settings stored in the NVRAM to their default settings except the following:

- Electrical total counter value (SP7-003-1)
- Machine serial number (SP5-811)
- Plug & Play Brand Name and Production Name Setting (SP5-907)

Among the settings that are reset are the correction data for process control and all the software counters.

Normally, this SP mode should not be used. This procedure is required only after replacing the NVRAM or when the copier malfunctions due to a damaged NVRAM.

1. Print out all SMC Data Lists (SP mode 5-990).
2. Access SP mode 5-801.
3. Hold down the "1" key for over 3 seconds. At this time the beeper will sound.
4. Turn the main power switch off and back on.
5. Do the laser beam pitch adjustment.
6. Do the printer and scanner registration and magnification adjustments (see Replacement and Adjustment - Copy Adjustments).
7. Referring to the SMC data lists, re-enter any values which had been changed from their factory settings.
8. Do SP 3-001-2 (ID Sensor Initial Setting) and SP4-911-1 (HDD media test).
9. Check the copy quality and the paper path, and do any necessary adjustments.

4.1.7 SOFTWARE RESET

The software can be reset when the machine hangs up. Use the following procedure.

Either

Turn the main power switch off and on.

Or

Hold down the ●/✳ key and # key at the same time for over 10 seconds.

4.1.8 SYSTEM SETTING AND COPY SETTING (UP MODE) RESET

System Setting Reset

The system settings in the UP mode can be reset to their defaults. Use the following procedure.

1. Confirm that the machine is in the copier standby mode.
2. Press the User Tool key.
3. Hold the # key and press “1” on the ten-key pad.
4. When a confirmation message is displayed, press “Yes”.

Copy Setting Reset

The copy settings in the UP mode can be reset to their defaults. Use the following procedure.

1. Confirm that the machine is in the copier standby mode.
2. Press the User Tool key.
3. Hold the # key and press “2” on the ten-key pad.
4. When a confirmation message is displayed, press “Yes”.

4.1.9 NVRAM DATA DOWNLOAD

After doing the memory all clear procedure, NVRAM data will be reset to their default settings. So, it is necessary to upload the NVRAM data before clearing the NVRAM, and to download the NVRAM data afterwards.

- SP5-824: Uploads from the BICU to a flash memory card.
- SP5-825: Downloads from a flash memory to the BICU.

NVRAM Data Upload (SP5-824)

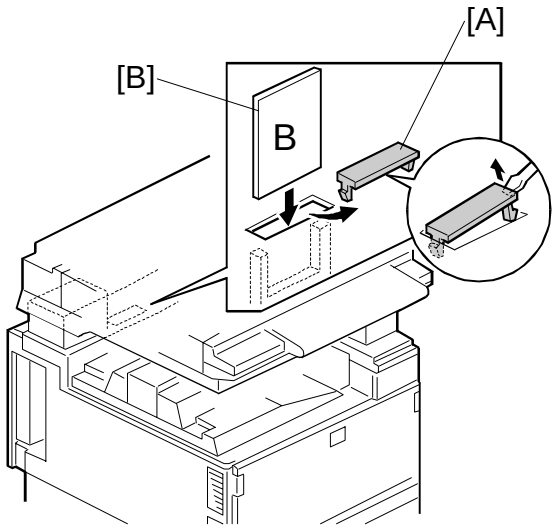

A284M919.WMF

1. Turn off the main switch.
2. Remove the flash memory card cover [A].
3. Plug the flash memory card [B] into the card slot.
   NOTE: Make sure that the surface printed “B” faces the front of the machine.
4. Turn on the main switch.
5. Access the SP mode 5-824.
6. Open the front cover.
7. Press “1” to download the NVRAM data.

NVRAM Data Download (SP5-825)

NOTE: This procedure downloads all the settings stored in the NVRAM except for the following items.

- Electrical Total Counter (SP7-003)
- C/O, P/O Counters (SP7-006)
- Plug and Play brand name and production name settings (SP5-907)

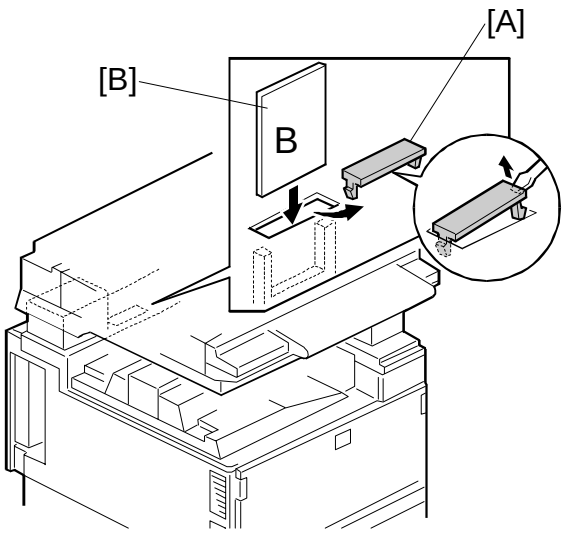

A284M919.WMF

1. Turn off the main switch.
2. Remove the flash memory card cover [A].
3. Plug the flash memory card [B] into the card slot.
   NOTE: Make sure that the surface printed “B” faces the front of the machine.
4. Turn on the main switch.
5. Access the SP mode 5-825.
6. Open the front cover.
7. Press “1” to download the NVRAM data.

4.2 PROGRAM DOWNLOAD

In this machine, the BICU software is upgraded using a flash memory card.

There are two program download procedures. One downloads from the flash memory card to the BICU. The other downloads from the BICU to a flash memory card.

NOTE: The procedure for how to write the source software data from a flash memory card writer to a flash memory card is described in the SwapBox FTL manual.

Downloading to the BICU

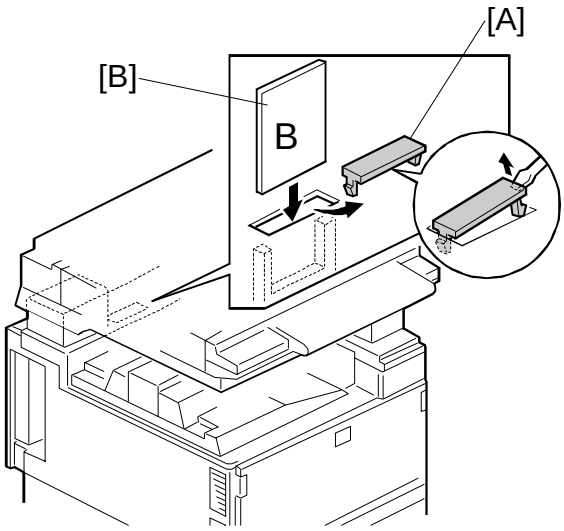

A284M919.WMF

NOTE: Step 4 of the procedure is different from NAD machines.

1. Turn off the main power switch.
2. Remove the flash memory card cover [A].
3. Plug the flash memory card [B] into the card slot.
   NOTE: Make sure that the surface printed “B” faces the front of the machine.
4. Turn on the main power switch <u>while holding down the operation switch.</u>

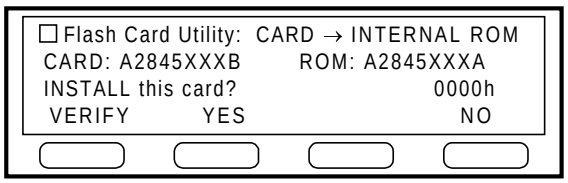

A284M503.WMF

5. Press the “YES” key. The machine erases the current software, then writes the new software to the BICU. This takes about 100 seconds.

Display during erasing

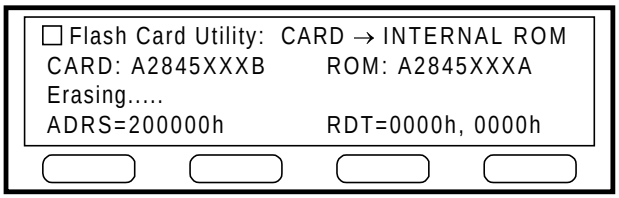

Display during writing

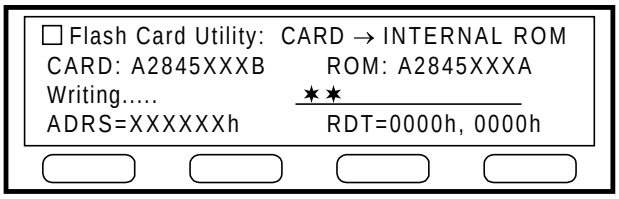

Display when the download is complete

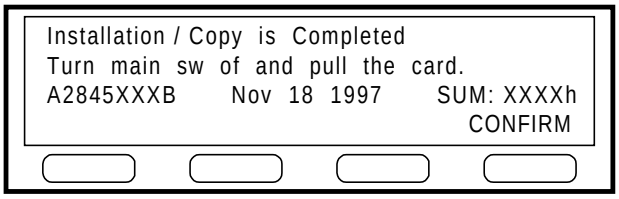

A284M504.WMF

If downloading failed, an error message appears as follows. At this time, press the “CONFIRM” key to re-try the download.

Display if erasing failed

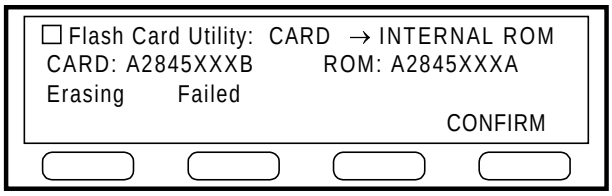

Display if writing failed

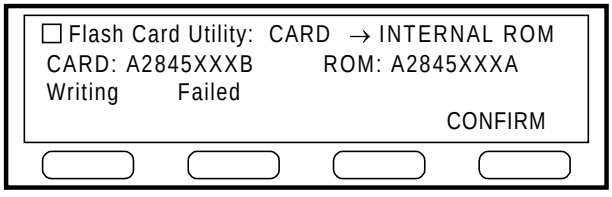

A284M505.WMF

Service Tables

Download from BICU to Flash Memory Card (SP5-826)

NOTE: This function is done by SP mode instead of using the power switches.

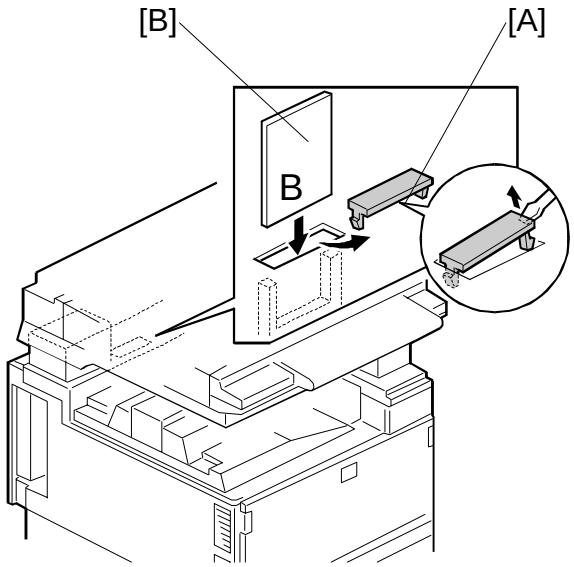

A284M919.WMF

1. Turn off the main power switch.
2. Remove the flash memory card cover [A].
3. Plug the flash memory card [B] into the card slot.
   NOTE: Make sure that the surface printed “B” faces the front of the machine.
4. Turn on the main power switch and access SP5-826.

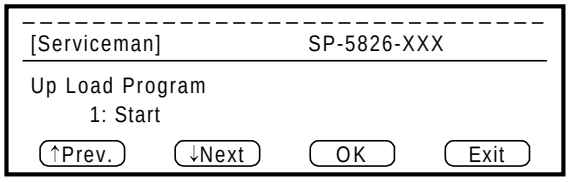

A284M502.WMF

5. Press the “1” key. The machine erases the current software, then writes the new software to the flash memory card. This takes about 100 seconds.
   NOTE: The display is inverted black on white during downloading from BICU to flash memory card.

Display during erasing

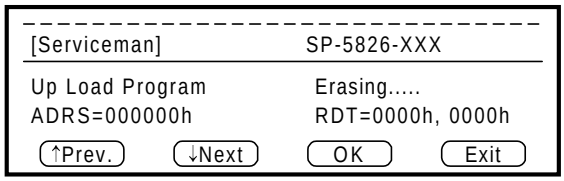

Display during writing

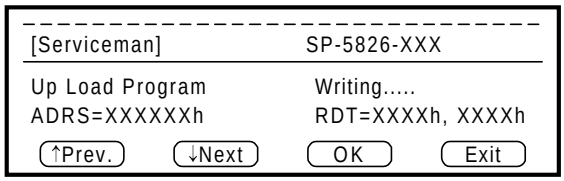

Display Verifing

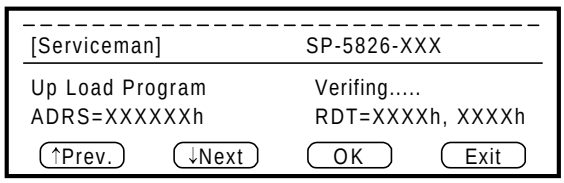

Display when the download is complete

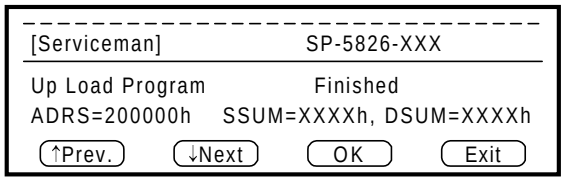

A284M501.WMF

If downloading failed, an error message appears. At this time, re-try the download.

4.3 USER PROGRAM MODE

The user program (UP) mode is accessed by users and operators, and by sales and service staff. UP mode is used to input the copier's default settings.

4.3.1 HOW TO ENTER AND EXIT UP MODE

Press the User Tools button, then select the UP mode program. After finishing the UP mode program, press the User Tools button to exit UP mode.

4.3.2 UP MODE TABLE

NOTE: 1) A "#" mark by the item number means that this UP mode has been added.
2) The function of each UP mode is explained in the System Setting and Copy Reference section of the operating instructions.

System Setting Table

1. System	01. Function Priority	
	02. Panel Beeper	
	03. Ready Beeper	
	04. Copy Count Display	
	05. System Reset	
	06. Function Switch	
	07. Low Power Shift Timer	
	08. Low Power Timer	
	09. Energy Saver Mode	
	10. Auto Off Timer	
	11. Paper Size – Tray	
	12. Paper Tray Priority	
	13. Auto Tray Switch	
	14. Special Paper Indication	
	15. Output Tray	1. Copy
		2. Fax
		3. Printer
	16. Print Priority	
	17. Contrast	
	18. User Code Manage	
	19. Management Setting	1. Show/Print Counter
		2. Print Counter List
		3. Key Operator Code
		4. Register/Change Key Operator Code
		# 5. Key Counter: Copier Access
		# 6. AOF (Keep it on)
	22. ADF Original Eject	
	23. Memory Priority	
	# 24. Print/Scan Priority	
	25. F/F4 Size Setting	

Copy Setting Table

2. Copy	1. General Features	01. APS Priority	
		02. AID Priority	
		03. Original Priority	
		04. Show All Keys	
		05. Maximum Copy Q'ty	
		06. Original Beeper	
		07. Photo Mode	
		08. Reproduction Ratio	
		09. Slip Sheet Tray	
		10. Duplex Priority	
		11. Auto Reset	
		12. Density Pattern	
		13. Initial Mode Set	
		14. Management Setting	1. Counter Reset
			2. Clear Code/Counter
			3. Register User Code
			4. Change/Delete User Code
			5. Counter List Print
	2. Adjust Image	01. Erase Border	
		02. Erase Center	
		03. Margin Adjust – Front	
		04. Margin Adjust – Back	
		05. Double Copy	
		06. Combine Copy	
		07. Image Repeat	
		08. Booklet Original	
	3. Input/Output	01. Duplex Auto Eject	
		02. Combine Auto Eject	
		03. Original Count	
		04. SADF Auto Reset	
		05. Rotate Sort	
		06. Sort	
		07. Stack	
		08. Memory Full – Auto Sort	
		09. Auto Sort Mode	
	4. Shortcut Keys		

4.4 TEST POINTS/DIP SWITCHES/LEDS

4.4.1 DIP SWITCHES

I/O Board: DIP SW101

No.	Function	ON	OFF
1	Copy Speed	35 cpm (180 mm/s)	45 cpm (230 mm/s)
2	Jam Detection (see Note)	Off	**On**
3	SC Generation	Disabled	**Enabled**
4	Not used	Keep at "OFF"	
5	Not used	Keep at "OFF"	
6 7	Destination	Off) Japan On) N. America Off) Europe On) Not used Off Off On On	
8	Not used	Keep at "OFF"	

NOTE: Disabling jam detection is effective only for the main machine (not for the options).

4.4.2 TEST POINTS

I/O Board

Number	Monitored Signal
TP103	Ground
TP104	+24 V
TP136	+5 V
TP154	Ground
TP156	+12 V
TP158	–12 V
TP159	+5 VE

BICU

Number	Monitored Signal
TP103	GND
TP145	F-gate signal

4.4.3 LEDS

BICU

Number	Monitored Signal
LED101	Monitors whether the program is working normally or not. The LED blinks in normal conditions.
LED102	Monitors +5VE. During the energy saver mode, this LED will blink.

4.5 SPECIAL TOOLS AND LUBRICANTS

4.5.1 SPECIAL TOOLS

Part Number	Description	Q'ty
A2309003	Adjustment Cam – Laser Unit	1
A2309004	Positioning Pin – Laser Unit	1
A2309352	Flash Memory Card – 4MB	1
A2309351	Case – Flash Memory Card	1
A0069104	Scanner Positioning Pin (4 pcs/set)	1
54209516	Test Chart – OS-A3 (10 pcs/Set)	1
A0299387	Digital Multimeter – FLUKE 87	1
A2849099	NVRAM – Minus Counter	1

4.5.2 LUBRICANTS

Part Number	Description	Q'ty
A0289300	Grease Barrierta JFE 5 5/2	1
52039501	Silicone Grease G-501	1

5. PREVENTIVE MAINTENANCE SCHEDULE

5.1 PM TABLE

NOTE: The amounts mentioned as the PM interval indicate the number of prints.

Symbol key: C: Clean, R: Replace, L: Lubricate, I: Inspect

A283/A284	EM	150K	300K	450K	NOTE
SCANNER/OPTICS					
Reflector		C	C	C	Optics cloth
1st Mirror		C	C	C	Optics cloth
2nd Mirror		C	C	C	Optics cloth
3rd Mirror		C	C	C	Optics cloth
Scanner Guide Rails		I	I	I	Do not use alcohol.
Platen Sheet Cover	C	I	I	I	Replace the platen sheet, if necessary. Dry cloth or alcohol
Exposure Glass		C	C	C	Dry cloth or alcohol
Toner Shield Glass		C	C	C	Optics cloth
APS Sensor		C	C	C	Dry cloth or alcohol
AROUND THE DRUM					
Charge Roller		R	R	R	
Charge Roller Cleaning Pad		R	R	R	
Quenching Lamp			C		Dry cloth
Pick-off Pawls		R	R	R	
Spur		C	C	C	Dry cloth or alcohol
ID Sensor		C	C	C	Perform the ID sensor initial setting (SP3-001-2) after cleaning (blower brush)
CLEANING UNIT					
Drum Cleaning Blade		R	R	R	
Cleaning Entrance Seal		C	C	C	Blower brush. Replace if necessary.
Side Seal		I	I	I	
DEVELOPMENT UNIT					
Development Drive Gears		I	I	I	Replace every 5 PM (750 k)
Development Filter			R		
Developer		I	R	I	
Entrance Seal		I	I	I	
Side Seal		I	I	I	

A283/A284	EM	150K	300K	450K	NOTE
PAPER FEED					
Registration Roller	C	C	C	C	Clean with water or alcohol.
Paper Feed Roller	I	R	R	R	Check the counter value for each paper tray station (SP7-204). If the value has reached 150 k, replace the roller. After replacing the roller, reset the counter (SP7-816).
Separation Roller	I	R	R	R	
Pick-up Roller	I	R	R	R	
Paper Feed Roller (By-pass feed table)	I	R	R	R	
Separation Roller (By-pass feed table)	I	R	R	R	
Pick-up Roller (By-pass feed table)	I	R	R	R	
Paper Feed Guides		C	C	C	Clean with water or alcohol.
Relay Rollers		C	C	C	Clean with water or alcohol.
Bottom Plate Pad		C	C	C	Clean with water or alcohol.
Bottom Plate Pad (By-pass feed)		C	C	C	Clean with water or alcohol.
Registration Sensor		C	C	C	Blower brush
TRANSFER BELT UNIT					
Transfer Belt	C	R	R	R	Dry cloth
Transfer Belt Cleaning Blade		R	R	R	
Transfer Belt Rollers		C	C	C	Dry cloth
Entrance Seal		C	C	C	Dry cloth
Transfer Entrance Guide	C	C	C	C	Dry cloth
Used Toner Tank	I	C	C	C	Empty the tank.
FUSING UNIT AND PAPER EXIT					
Fusing Entrance and Exit Guide Plates		C	C	C	Clean with water or alcohol.
Hot Roller		R	R	R	
Pressure Roller		R	R	R	
Fusing Thermistor		I	I	I	Clean if necessary (suitable solvent)
Cleaning Roller		C	C	C	Clean with water or alcohol.
Cleaning Roller Bushings		L	L	L	Grease Barrierta JFE 55/2
Pressure Roller Strippers		C	C	C	Clean with water or alcohol.
Hot Roller Strippers		C	R	C	Clean with water or alcohol.
Paper Exit Guide Ribs		C	C	C	Clean with water or alcohol.
OTHERS					
Drive Belts			I		Replace if necessary

	EM	80K	160K	240K	NOTE
ADF (for originals)					
Transport Belt	C	R	R	R	Belt cleaner
Feed Belt	C	R	R	R	Belt cleaner
Separation Roller	C	R	R	R	Dry or damp cloth
Sensors		C	C	C	Blower brush
Drive Gears		L	L	L	Grease G501

	EM	150K	300K	450K	NOTE
PAPER TRAY UNIT					
Paper Feed Rollers		R	R	R	Check the counter value for each paper tray station (SP7-204). If the value has reached 150 k, replace the roller. After replacing the roller, reset the counter (SP7-816).
Pick-up Rollers		R	R	R	
Separation Rollers		R	R	R	
Relay Rollers		C	C	C	Dry or damp cloth
Bottom Plate Pad		C	C	C	Dry or damp cloth

	EM	150K	300K	450K	NOTE
LCT					
Paper Feed Roller		R	R	R	Check the counter value for each paper tray station (SP7-204). If the value has reached 150 k, replace the roller. After replacing the roller, reset the counter (SP7-816).
Pick-up Roller		R	R	R	
Separation Roller		R	R	R	
Bottom Plate Pad		C	C	C	Dry or damp cloth

	EM	150K	300K	450K	NOTE
1,000-SHEET/3,000-SHEET FINISHER					
Rollers	C				Clean with water or alcohol.
Brush Roller	I	I	I	I	Replace if necessary.
Discharge Brush	C	C	C	C	Clean with a dry cloth
Sensors	C				Blower brush
Jogger Fences	I	I	I	I	Replace if necessary.
Punch Waste Hopper	I	I	I	I	Empty the hopper.

	EM	150K	300K	450K	NOTE
1-BIN TRAY UNIT					
Rollers	C				Dry or damp cloth
Copy Tray	C				Dry or damp cloth
Sensors	C				Blower brush

6. REPLACEMENT AND ADJUSTMENT

⚠CAUTION

Turn off the main power switch and unplug the machine before attempting any of the procedures in this section.

6.1 SCANNER UNIT

6.1.1 EXPOSURE GLASS

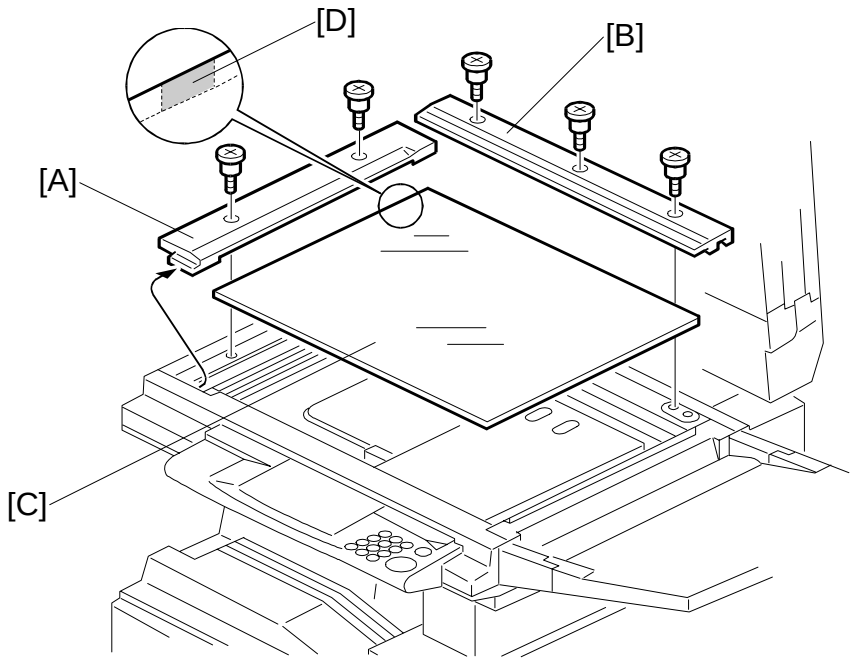

A284R101.WMF

1. Open the ADF or platen cover.
2. Remove the left scale [A] (2 screws).
3. Remove the rear scale [B] (3 screws).
4. Remove the exposure glass [C].

NOTE: When reinstalling the exposure glass, make sure that the mark [D] is positioned at the rear left corner, as shown.

6.1.2 SCANNER EXTERIOR/OPERATION PANEL

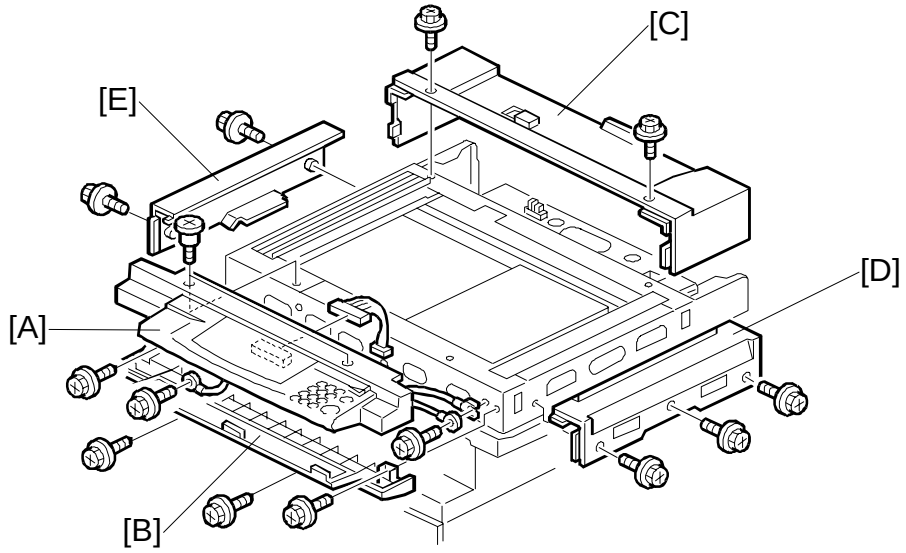

A284R109.WMF

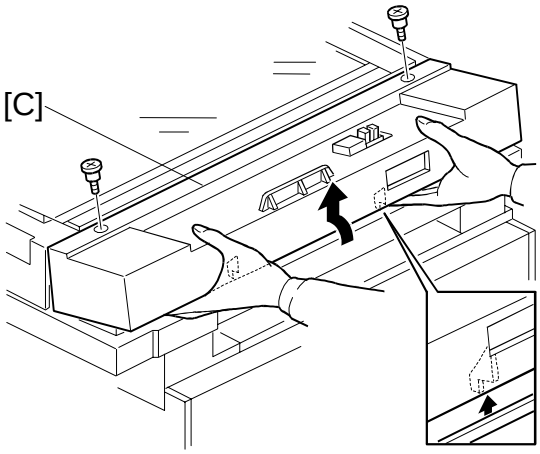

A284R105.WMF

1. Remove the ADF or platen cover.
2. Remove the exposure glass. (See Exposure Glass.)
3. Remove the operation panel [A] (4 screws, 1 connector).
4. Remove the lower operation cover [B] (4 screws).
5. Remove the rear cover [C] (2 screws, 2 pegs).
6. Remove the right cover [D] (3 screws).
7. Remove the left cover [E] (2 screws).

6.1.3 LENS BLOCK/SBU ASSEMBLY

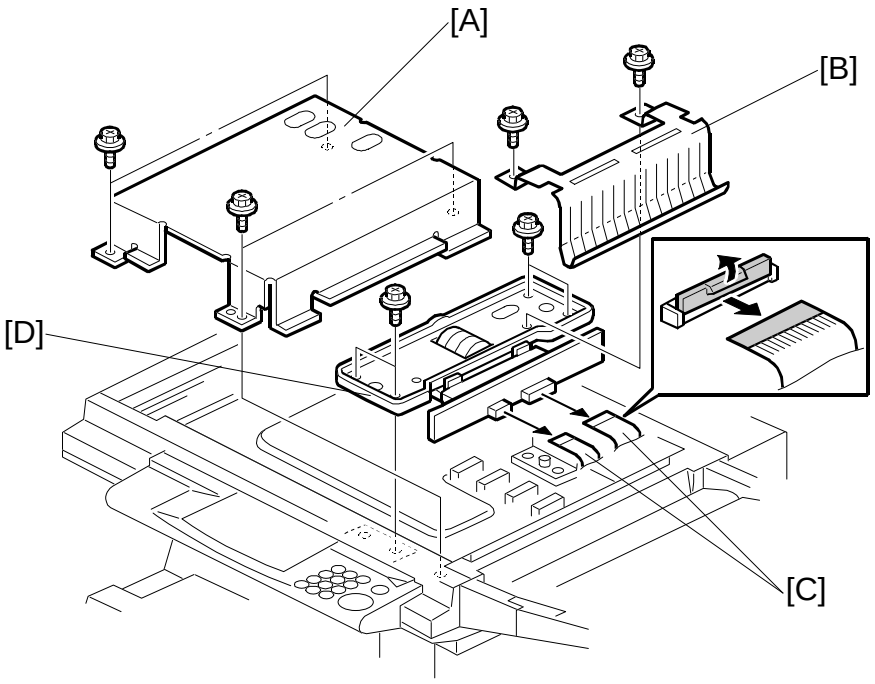

A284R102.WMF

1. Remove the exposure glass. (See Exposure Glass.)
2. Remove the lens cover [A] (4 screws).
3. Remove the grounding plate [B] (2 screws).
4. Disconnect the flexible harnesses [C].
5. Remove the lens block assembly [D] (4 screws).
6. Do the scanner and printer copy adjustments (see Replacement and Adjustment – Copy Adjustments).

6.1.4 SCANNER MOTOR

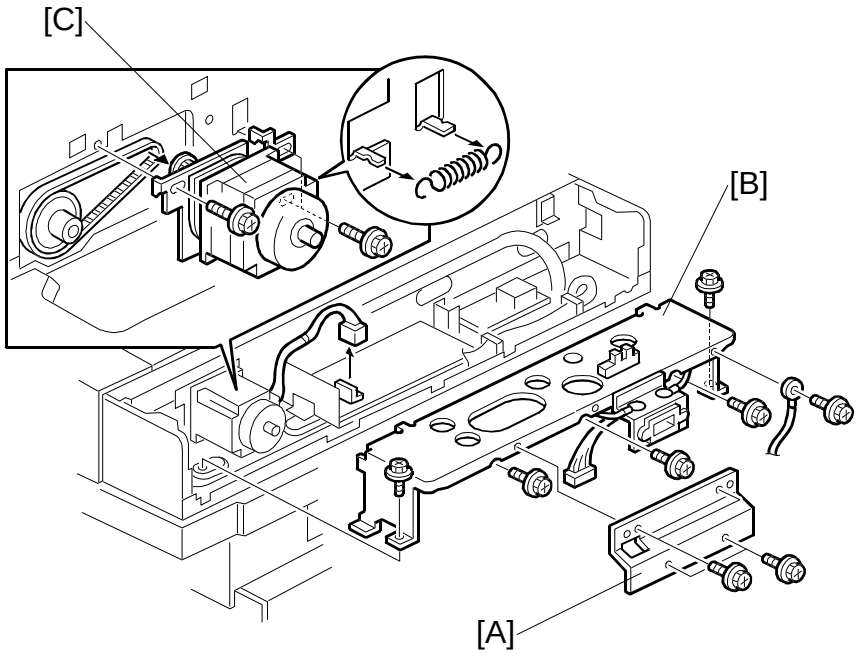

A284R106.WMF

1. Remove the scanner rear cover. (See Scanner Exterior.)
2. Remove the bracket [A] (4 screws).
3. Remove the rear bracket [B] (5 screws, 1 grounding wire, 1 connector).
4. Remove the scanner motor assembly [C] (3 screws, 1 connector, 1 spring, 1 timing belt).
5. Do the scanner and printer copy adjustments (see Replacement and Adjustment – Copy Adjustments).

6.1.5 SIB/LAMP STABILIZER

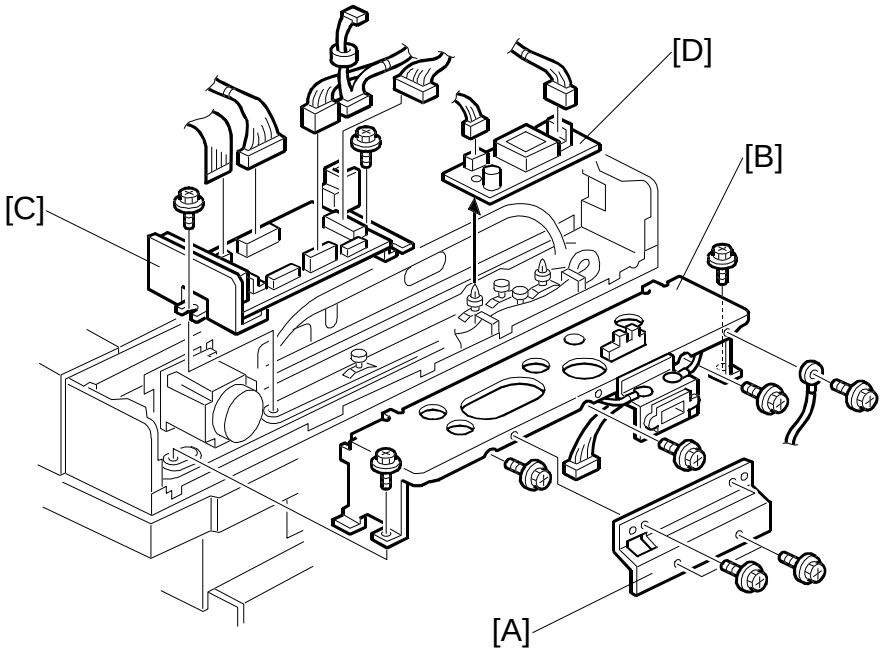

A284R108.WMF

1. Remove the scanner rear cover. (See Scanner Exterior.)
2. Remove the bracket [A] (4 screws).
3. Remove the rear bracket [B] (5 screws, 1 grounding wire, 1 connector).
4. Remove the SIB [C] (2 screws, all connectors).
5. Remove the lamp stabilizer [D] (2 connectors).

6.2 LASER UNIT

⚠WARNING

Turn off the main power switch and unplug the machine before attempting any of the procedures in this section. Laser beams can seriously damage your eyes.

6.2.1 CAUTION DECAL LOCATIONS

Two caution decals are located in the laser section as shown below.

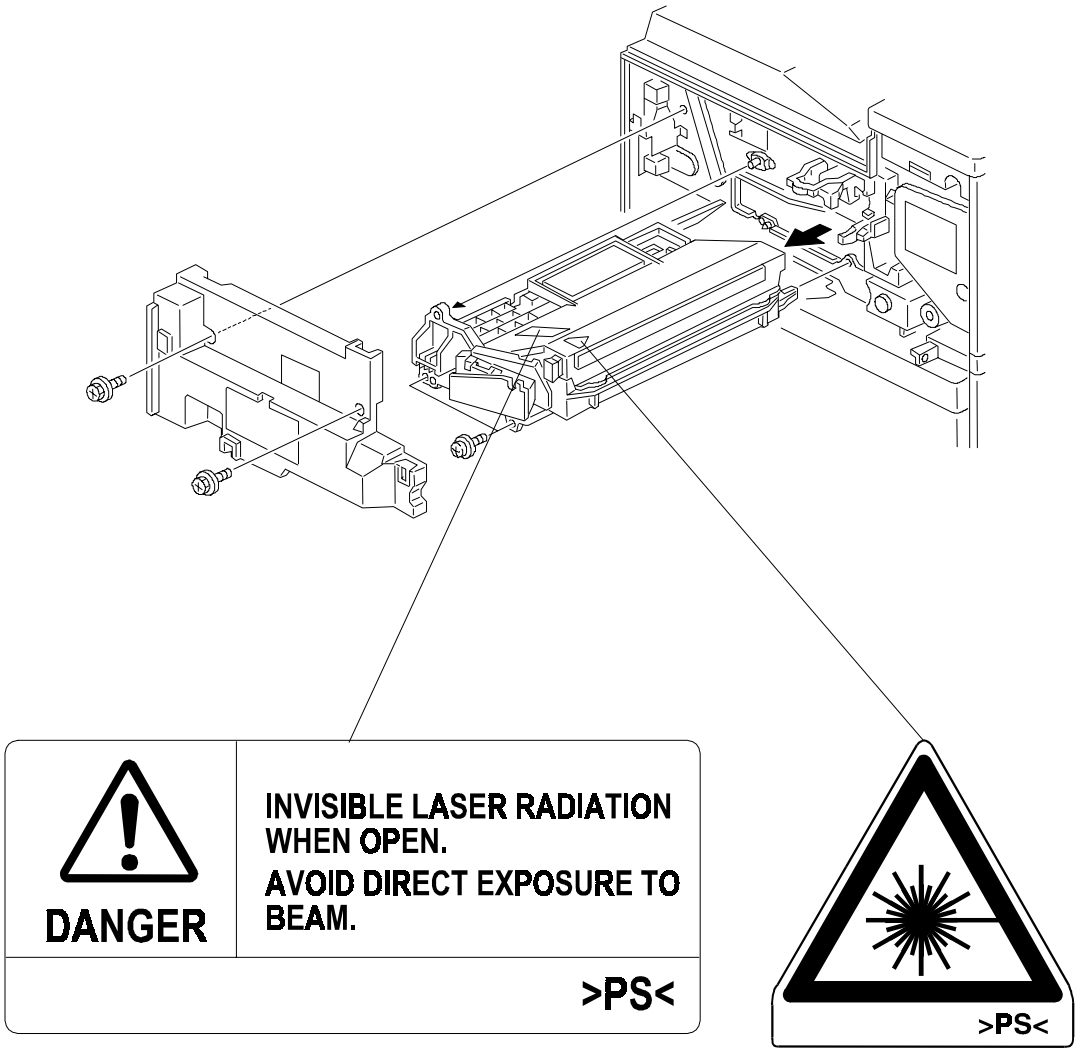

6.2.2 LASER UNIT

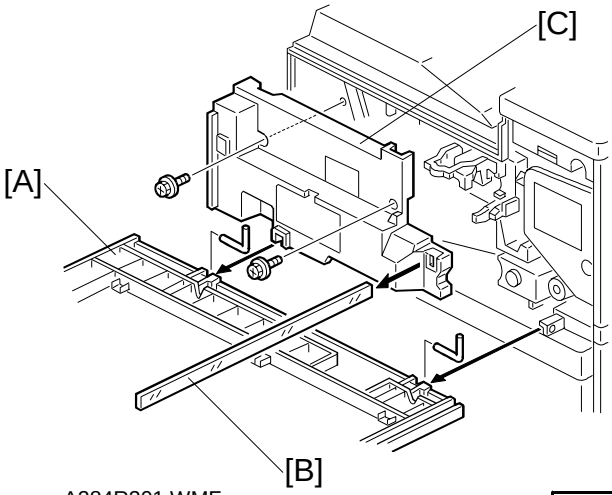

A284R201.WMF

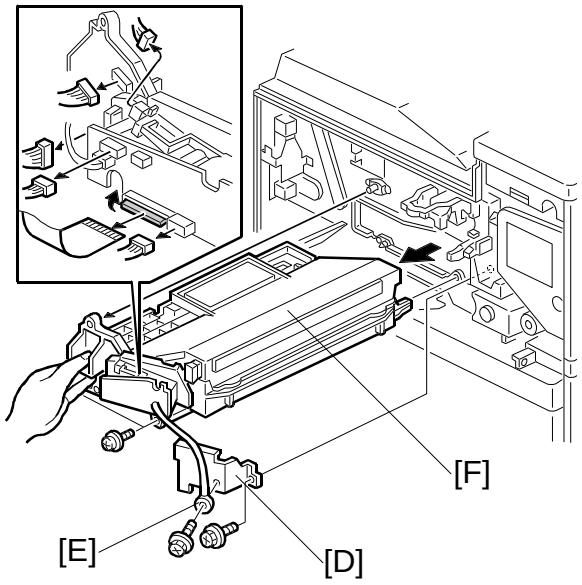

A284R202.WMF

⚠WARNING

Turn off the main power switch and unplug the machine before attempting this procedure. Laser beams can seriously damage your eyes.

1. Remove the front cover [A] (2 pins).
2. Remove the shield glass [B].
3. Remove the inner cover [C] (2 screws, 1 connector - mechanical counter).
4. Remove the shield plate [D] and grounding wire [E] (1 screw each).
5. Remove the laser unit [F] (2 screws, 5 connectors, 1 flexible harness).
   NOTE: 1) When disconnecting the harnesses from the LD unit, hold on to the LD unit.
   2) When sliding out the laser unit, do not hold the LD unit.

6.2.3 LASER BEAM PITCH ADJUSTMENT

After replacing the LD unit, perform the laser beam pitch adjustment. There are two laser beam pitch adjustment procedures: one for 400 dpi, and one for 600 dpi. These adjustments use the following SP modes.

- SP2-109-1: LD Beam Pitch Adjustment – 400 dpi
- SP2-109-2: LD Beam Pitch Adjustment – 600 dpi
- SP2-109-3: LD Initial Setting – 400 dpi
- SP2-109-4: LD Initial Setting – 600 dpi
- SP2-902-2, no.12: IPU Test Pattern – Cross Stitch – 400 dpi
- SP2-902-2, no.13: IPU Test Pattern – Cross Stitch – 600 dpi

1. Do SP 2-109-8.
2. Input the value “144” into SP2-109-1.
3. Perform SP2-109-3.
4. Print the 400-dpi test pattern onto A3 (11" x 17") paper using SP2-902-1 no.12. (See Service Tables - Test Pattern Printing).
5. Write the value of SP2-109-1 on the test pattern (in this case “144”).
6. Change the value of SP2-109-1 and print another test pattern, repeating steps 2 to 4. Print about 5 patterns with different values for SP2-109-1 (e.g. “48”, “96”, “192”, “240”).
7. Check these test patterns. If the laser beam pitch is not correct, the image looks like a black vertical strip pattern.
   NOTE: As an example, if the pattern made with the value “192” has less obvious strips than the other print outs, the correct value is near “192”.
8. Adjust the laser beam pitch position until the thin lines are of uniform thickness (no striping effect should appear on the printout), doing steps 1, 2, and 3 (in step 1, input a value which is estimated to be correct, then do steps 2 and 3, then if necessary go back to step 1 and try another value).
9. After adjusting the laser beam pitch for 400 dpi, adjust the laser beam pitch for 600 dpi, using the same procedure as for 400 dpi (use the SP modes for 600 dpi). The laser beam pitch for 600 dpi should be 24 ~ 48 more than for 400 dpi.

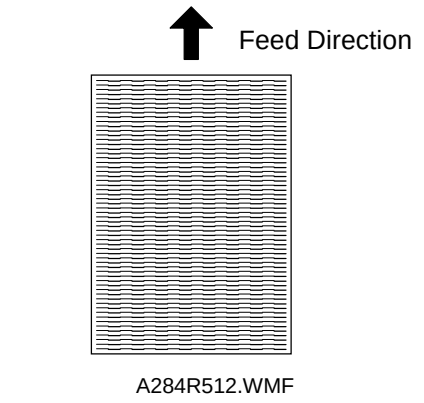

A284R512.WMF

Adjustment not complete

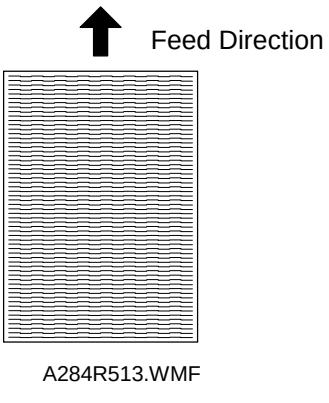

A284R513.WMF

Adjustment complete

6.3 COPY ADJUSTMENTS: PRINTING/SCANNING

NOTE: 1) You need to perform these adjustment(s) after replacing any of the following parts:
- Scanner Wire
- Lens Block/SBU Assembly
- Scanner Drive Motor
- Polygon Mirror Motor
- Paper Side Fence
- Memory All Clear

2) For more details about accessing SP modes, refer to section 4.

6.3.1 PRINTING

NOTE: 1) Make sure the paper is installed correctly in each paper tray before you start these adjustments.
2) Use the Trimming Area Pattern (SP2-902-3, No.10) to print the test pattern for the following procedures.
3) Set SP 2-902-3 to 0 again after completing these printing adjustments.

Registration - Leading Edge/Side-to-Side

1. Check the leading edge registration, and adjust it using SP1-001.
   The specification is: 3 ± 2mm.
2. Check the side-to-side registration for each paper feed station, and adjust them using the following SP modes.

	SP mode	Specification
1st paper feed	SP1-002-1	2 ± 1.5 mm
2nd paper feed	SP1-002-2	
3rd paper feed (Optional PFU tray 1)	SP1-002-3	
4th paper feed (Optional PFU tray 2)	SP1-002-4	
Duplex	SP1-002-5	
By-pass feed	SP1-002-6	
LCT	SP1-002-7	

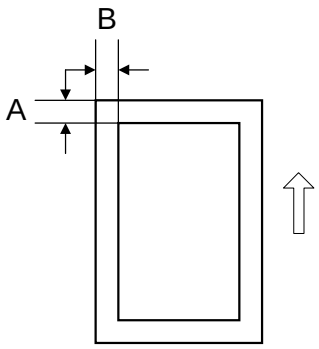

A284R506.WMF

A: Leading Edge Registration
B: Side-to-side Registration

Blank Margin

NOTE: If the leading edge/side-to-side registration can not be adjusted within the specifications, adjust the leading/left side edge blank margin.

1. Check the trailing edge and right side edge blank margins, and adjust them using the following SP modes.

	SP mode	Specification
Trailing edge	SP2-101-2	2 ± 2 mm
Right edge	SP2-101-4	2 +2.5/-1.5 mm
Leading edge	SP2-101-1	3 ± 2 mm
Left edge	SP2-101-3	2 ± 1.5 mm
Trailing edge (duplex copy, 2nd side)	SP2-101-5	2 ± 2 mm
Left edge (duplex copy, 2nd side)	SP2-101-6	2 ± 1.5 mm
Right edge (duplex copy, 2nd side)	SP2-101-7	2 +2.5/-1.5 mm

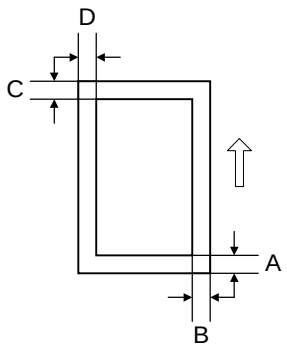

A284R507.WMF

A: Trailing Edge Blank Margin
B: Right Edge Blank Margin
C: Leading Edge Blank Margin
D: Left Edge Blank Margin

Main Scan Magnification

1. Print the single-dot grid pattern (SP2-902-3, no.5).
2. Check the magnification, and adjust the magnification using SP2-909-1 if necessary. The specification is ±1%.

Parallelogram Image Adjustment

Do the following procedure if a parallelogram is printed while adjusting the printing registration or the printing margin using a trimming area pattern.

NOTE: The following procedure should be done after adjusting the side-to-side registration for each paper tray station.

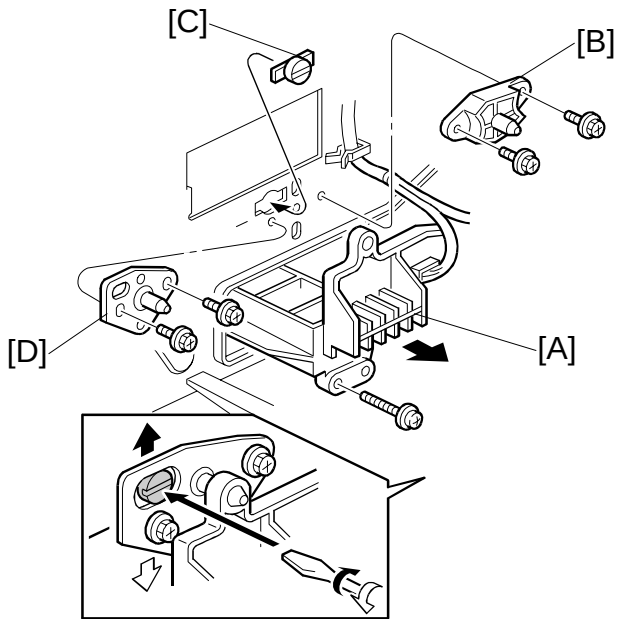

A284R207.WMF

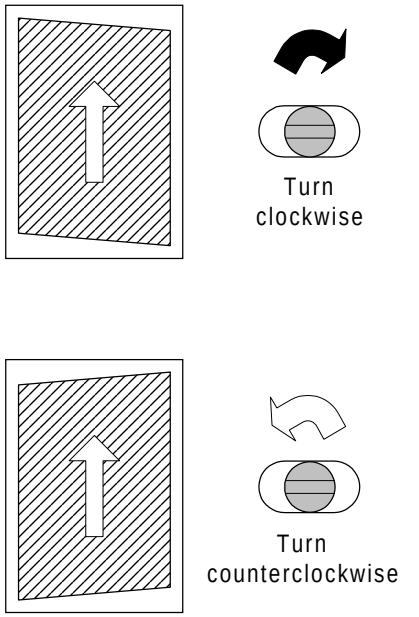

A284R515.WMF

1. Check the trimming area pattern image (SP2-902-3, No.10) whether a parallelogram image appears or not, as shown. If it appears, do the following.
2. Remove the laser unit [A] (see Replacement and Adjustment - Laser Unit).
3. Remove the bracket [B] (2 screws).
4. Install the adjusting cam [C] (P/N: A2309003).
5. Secure the adjustment bracket [D] using the two screws which were used for the bracket [B]. However, do not tighten the screws at this time.
6. Adjusts the laser unit position by turning the adjusting cam. (Refer to the above illustration for the relationship between the image and the cam rotation direction).
7. Tighten the adjustment bracket.
8. Print the trimming area pattern to check the image. If it is still the same, repeat steps 6 to 8.

6.3.2 SCANNING

NOTE: 1) Perform or check the printing registration/side-to-side adjustment and the blank margin adjustment, before doing the following scanner adjustments.
2) Use an OS-A3 test chart to perform the following adjustments.

Registration: Platen Mode

1. Place the test chart on the exposure glass and make a copy from one of the feed stations.
2. Check the leading edge and side-to-side registration, and adjust them using the following SP modes if necessary.

	SP mode
Leading Edge	SP4-010
Side-to-side	SP4-011

A: Leading Edge Registration
B: Side-to-side Registration

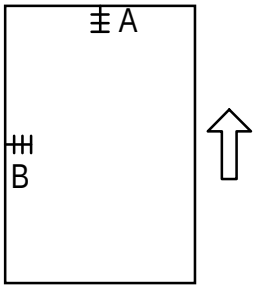

A284R508.WMF

Magnification

NOTE: Use an OS-A3 test chart to perform the following adjustment.

Sub Scan Magnification

A: Main Scan Magnification

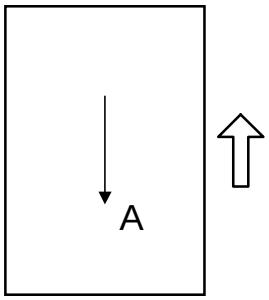

A284R510.WMF

1. Place the test chart on the exposure glass and make a copy from one of the feed stations.
2. Check the magnification ratio, and adjust it using the following SP mode if necessary. The specification is ±1%.

	SP mode
Sub Scan Magnification	SP4-008

Scanner Skew Image Adjustment

Do the following procedure if skew is caused by the scanner (not the printer) while adjusting the scanner registration and magnification.

NOTE: 1) In machines with an ADF, do the following procedure after doing all ADF image adjustments on the following page.
2) The specification is 1.2 mm / 200 mm.

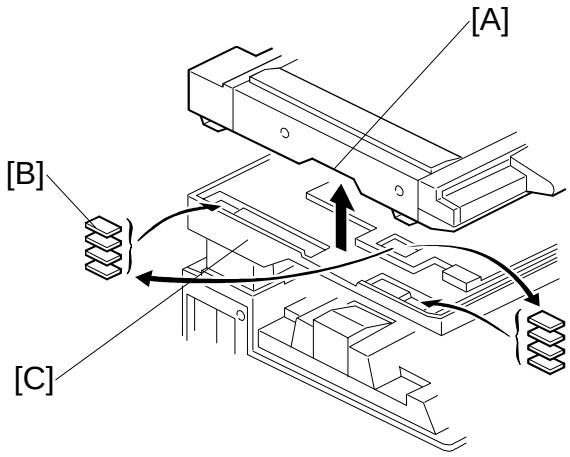

A284R114.WMF

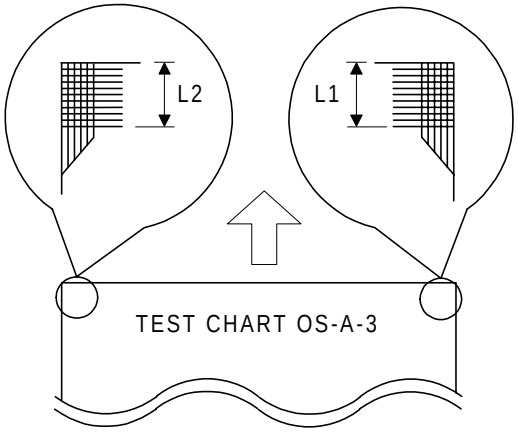

A284R516.WMF

1. Place the OS-A3 test chart on the exposure glass and make a copy from one of the feed stations.
2. Measure the distance from the leading edge of the 10th line at both upper corners on the test chart (L1 and L2 in the above right illustration).
3. If the difference between the two positions is greater than 0.3 mm, do the following steps.
4. Remove the screws that secure the scanner unit and lift up the scanner, holding the grip [A].
5. Put spacer(s) [B] at the front or rear of the scanner plate [C], depending on the skew image.
   - If the distance at the right side is longer than at the left side, add the spacer(s) to the front side of the scanner plate.
   - If the distance at the left side is longer than at the right side, add the spacer(s) to the rear side of the scanner plate.

Difference	No. of spacers
0.3 mm ~ 0.6 mm	1
0.6 mm ~ 0.8 mm	2
0.8 mm ~ 1.1 mm	3

6. Make a copy again using the test chart to check the skew.
7. If there is still some skew, redo steps 5 and 6.
8. If the skew has been corrected, secure the scanner unit (2 screws).

6.3.3 ADF IMAGE ADJUSTMENT

Registration

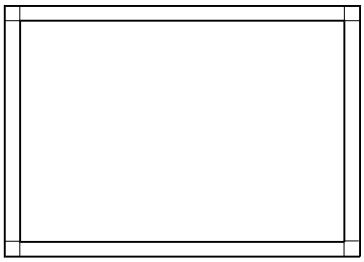

A284R511.WMF

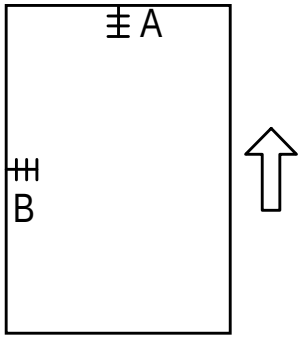

A284R508.WMF

A: Leading Edge Registration
B: Side-to-side Registration

NOTE: Make a temporary test chart as shown above using A3/DLT paper.

1. Place the temporary test chart on the ADF and make a copy from one of the feed stations.
2. Check the registration, and adjust using the following SP modes if necessary.

	SP mode
Side-to-side Registration	SP6-006-1
Leading Edge Registration (Simplex)	SP6-006-2
Leading Edge Registration (Duplex: front)	SP6-006-3
Leading Edge Registration (Duplex: rear)	SP6-006-4

7. TROUBLESHOOTING

7.1 SERVICE CALL CONDITIONS

7.1.1 SUMMARY

There are 4 levels of service call conditions.

Level	Definition	Reset Procedure
A	To prevent the machine from being damaged, the SC can only be reset by a service representative (see the note below). The copier cannot be operated at all.	Enter SP mode, then turn the main power switch off and on.
B	The SC can be reset by turning the main power switch off and on if the SC was caused by incorrect sensor detection.	Turn the operation switch or main power switch off and on. A level B' SC can only be reset by turning the main power switch off and on.
C	The copier can be operated as usual except for the unit related to the service call.	Turn the operation switch off and on.
D	The SC history is updated. The machine can be operated as usual.	The SC will not displayed. All that happens is that the SC history is updated.

NOTE: 1) If the problem concerns electrical circuit boards, first disconnect then reconnect the connectors before replacing the PCBs.
2) If the problem concerns a motor lock, first check the mechanical load before replacing motors or sensors.
3) When a Level A or B SC occurs while in an SP mode, the display does not indicate the SC number. If this occurs, check the SC number after leaving the SP mode. This does not apply to Level B' codes.

7.1.2 SC CODE DESCRIPTIONS

SC101: Exposure Lamp Error

Definition [B]

The standard white level was not detected properly when scanning the white plate.

Possible Cause

- Exposure lamp defective
- Lamp stabilizer defective
- Exposure lamp connector defective
- Dirty standard white plate
- Dirty scanner mirror or scanner mirror out of position
- SBU board defective
- SBU connector defective
- Lens block out of position
- SIB defective

SC120: Scanner Home Position Error 1

Definition [B']

The scanner home position sensor does not detect the on condition during initialization or copying.

Possible Causes

- Scanner home position sensor defective
- Scanner drive motor defective
- SIB defective
- Scanner home position sensor connector defective
- Scanner drive motor connector defective

SC121: Scanner Home Position Error 2

Definition [B']

The scanner home position sensor does not detect the off condition during initialization or copying.

Possible Causes

- Scanner home position sensor defective
- Scanner drive motor defective
- SIB defective
- Scanner home position sensor connector defective
- Scanner drive motor connector defective

SC302: Charge Roller Current Leak

Definition [B]

A charge roller current leak signal is detected.

Possible Causes

- Charge roller damaged
- High voltage supply board defective
- Poor PCU connection

SC 304: Charge Roller Current Correction Error

Definition [B]

The charge roller bias correction is performed twice even if the maximum charge roller bias (-2000V) is applied to the roller.

Possible Causes

- ID sensor defective

SC320: Polygon Motor Error

Definition [B']

The polygon motor does not reach its operating speed within 20 seconds after the polygon motor on signal, or the lock signal is still activated for more than 20 seconds after the polygon motor off signal.

Possible Causes

- Polygon motor defective
- Poor connection between the polygon motor driver and the BICU board
- BICU board defective

SC321: No Laser Writing Signal (F-gate) Error 1

Definition [B]

The laser writing signal (F-GATE) does not go to LOW for more than 15 seconds after the copy paper reaches the registration sensor.

Possible Causes

- BICU board defective
- Poor connection of the fax controller or printer controller
- Fax controller or printer controller defective

SC322: 1st Laser Synchronization Error

Definition[B']

The 1st laser synchronization signal cannot be detected by the main scan synchronization detector board even if the laser diodes are activated.

Possible Causes

- Poor connection between the laser synchronization detector board and the LD unit.
- Laser synchronization detector board out of position
- Laser synchronization detector board defective
- LD unit defective

SC323: LD Drive Current Over

Definition [B']

The LD drive board applies more than 110 mA to the LD.

Possible Causes

- LD unit defective (not enough power, due to aging)
- Poor connection between the LD unit and the BICU board
- BICU defective

SC326: 2nd Laser Synchronization Error

Definition [B']

The 2nd laser synchronization signal cannot be detected by the main scan synchronization detector board even if the laser diodes are activated.

Possible Causes

- Poor connection between the laser synchronization detector board and the LD unit.
- Laser synchronization detector board out of position
- Laser synchronization detector board defective
- LD unit defective

SC327: LD Unit Home Position Error 1

Definition [B']

The LD unit home position sensor does not detect an on condition when the LD unit moves to its home position.

Possible Causes

- LD unit home position sensor defective
- LD positioning motor defective
- LD unit movement blocked because of incorrect connector routing

SC328: LD Unit Home Position Rrror 2

Definition- [B']

The LD unit home position sensor does not detect an off condition when the LD unit moves from its home position.

Possible Causes

- LD unit home position sensor defective
- LD positioning motor defective
- LD unit movement blocked because of incorrect connector routing

SC329: Laser Beam Pitch Adjustment Error

Definition [B]

The LD unit home position sensor does not detect an on condition while changing the LD unit position for correcting the LD position or changing the dpi.

Possible Causes

- The laser beam pitch adjustment (SP2-109-3 and 4) was not done after replacing the NVRAM or doing an NVRAM clear.
- The laser beam pitch adjustment (SP2-109-1 ~ 4) was not done after replacing the LD unit.
- LD unit movement blocked because of incorrect connector routing

SC350-1: ID Sensor Error 1

Definition [B]

One of the following ID sensor output voltages was detected twice consecutively when checking the ID sensor pattern.

1) Vsp $\geq$ 2.5V
2) Vsg $\leq$ 2.5V
3) Vsp = 0V
4) Vsg = 0V

Possible Causes

- ID sensor defective
- ID sensor connector defective
- Poor ID sensor connector connection
- I/O board (IOB) defective
- High voltage supply board defective
- Dirty ID sensor
- Defect at ID sensor pattern writing area of the drum

SC350-2: ID Sensor Error 2

Definition [B]

The ID sensor output voltage is 5.0V and the PWM signal input to the ID sensor is 0 when checking the ID sensor pattern.

Possible Causes

- ID sensor defective
- ID sensor connector defective
- Poor ID sensor connector connection
- I/O board (IOB) defective
- High voltage supply board defective
- Dirty ID sensor
- Defect at the ID sensor pattern writing area of the drum

SC350-3: ID Sensor Error 3

Definition [B]

The ID sensor pattern edge voltage is detected to be not 2.5V twice consecutively during an 800 ms interval.

Possible Causes

- ID sensor defective
- ID sensor connector defective
- Poor ID sensor connector connection
- I/O board (IOB) defective
- High voltage supply board defective
- Dirty ID sensor
- Defect at the ID sensor pattern writing area of the drum

SC350-4: ID Sensor Error 4

Definition [B]

One of the following ID sensor output voltages is detected at ID sensor initialization.

1) Vsg < 4.0V when the maximum PWM input (255) is applied to the ID sensor.
2) Vsg ≥ 4.0V when the minimum PWM input (0) is applied to the ID sensor.

Possible Causes

- ID sensor defective
- ID sensor connector defective
- Poor ID sensor connector connection
- I/O board (IOB) defective
- High voltage supply board defective
- Dirty ID sensor
- Defect at the ID sensor pattern writing area of the drum

SC350-5: ID Sensor Error 5

Definition [B]

Vsg falls out of the adjustment target (4.0 ± 0.2V) during Vsg checking.

Possible Causes

- ID sensor defective
- ID sensor connector defective
- Poor ID sensor connector connection
- I/O board (IOB) defective
- High voltage supply board defective
- Dirty ID sensor
- Defect at the ID sensor pattern writing area of the drum

SC360: Hard Disk Drive Error 1

Definition [B]

The machine does not detect the connection signal from the HDD.

Possible Causes

- Poor connection between the HDD and HDD controller board
- The ac power connector to the HDD is disconnected.
- HDD defective
- HDD controller board defective
- BICU defective

SC361: Hard Disk Drive Error 2

Definition [B]

The image data stored in the HDD cannot be output properly.

Possible Causes

- When this SC occurs only once, this problem will be solved after turning the main power switch off and on.
- When this SC occurs while performing SP4-911-1 (HDD media check), it can be cured by doing SP4-911-2 (HDD formatting).
- HDD defective

SC362: IMAC (Image Compression IC) Error

Definition [B]

An error occurs during image processing in the IMAC, which handles image compression and image data transmission.

Possible Causes

- BICU defective
- HDD controller board defective

SC365: Image Storage Address Error

Definition [B]

The BICU receives an image data output request signal for data that is not stored in memory.

Possible Causes

- BICU defective

SC390-1: TD Sensor Error 1

Definition [B]

The TD sensor output voltage is less than 0.5V or more than 5.0V 10 consecutively during copying.

Possible Causes

- TD sensor abnormal
- Poor connection between the TD sensor and the I/O board (IOB)
- I/O board (IOB) defective

SC390-2: TD Sensor Error 2

Definition [B]

The TD sensor output voltage is less than 1.8V or more than 4.8V during TD sensor initial setting.

Possible Causes

- TD sensor abnormal
- No developer in the development unit

SC391: Development Bias Leak

Definition [B]

A development bias leak signal is detected.

Possible Causes

- Poor connection between the development bias terminal and the high voltage supply board
- High voltage supply board defective

SC401-1: Transfer Roller Leak Error

Definition [B]

A transfer roller current leak signal is detected.

Possible Causes

- High voltage supply board defective
- Poor connection between the transfer current terminal and the high voltage supply board

SC401-2: Transfer Roller Open Error

Definition [B]

The transfer roller current feedback signal is not detected.

Possible Causes

- High voltage supply board defective
- Poor connection between the transfer current terminal and the high voltage supply board
- Poor PCU connection

SC403: Transfer Belt Position Sensor Error

Definition [B]

The transfer belt position sensor does not activate even if the transfer belt clutch has rotated once.

Possible Causes

- Main motor/drive malfunction
- Transfer belt position sensor defective
- Poor transfer belt position sensor connection

SC 405: Transfer Belt Error

Definition [B]

The transfer belt does not move away from the drum during ID sensor pattern checking.

Possible Causes

- Main motor/drive malfunction
- Transfer belt position sensor defective
- Poor transfer belt position sensor connection

SC440: Main Motor Lock

Definition [B]

A main motor lock signal is not detected within 2 seconds after the main motor turns on.

Possible Causes

- Too much load on the drive mechanism
- Main motor defective

SC490: Exhaust Fan Motor Lock

Definition [B]

An exhaust fan motor lock signal is not detected within 5 seconds after the exhaust fan motor turns on.

Possible Causes

- Too much load on the drive mechanism
- Exhaust fan motor defective
- Poor fan motor connector connection

SC492: Cooling Fan Motor Lock

Definition [B]

A cooling fan motor lock signal is not detected within 5 seconds after the cooling fan motor turns on.

Possible Causes

- Too much load on the drive mechanism
- Cooling fan motor defective
- Poor fan motor connector connection

SC493: Bridge Unit Cooling Fan Lock

Definition [B]

A bridge unit cooling fan motor lock signal is not detected within 5 seconds after the bridge unit cooling fan motor turns on.

Possible Causes

- Too much load on the drive mechanism
- Bridge unit cooling fan motor defective
- Poor fan motor connector connection

SC501-1: 1st Tray Lift Malfunction 1

Definition [C]

The paper upper limit sensor is not activated after the tray lift motor has been on for 10 seconds.

Possible Causes

- 1st tray upper limit sensor defective
- Tray lift motor defective
- Poor tray lift motor connection

SC501-2: 1st Tray Lift Malfunction 2

Definition [C]

If the main power switch is turned on when the paper is already at the feed height, the paper height position is detected again. At this time, the paper upper limit sensor should de-activate within 5 seconds after the paper bottom plate starts to drop. If it does not deactivate within 5 s four times consecutively, this SC will be generated.

Possible Causes

- 1st tray upper limit sensor defective
- Tray lift motor defective
- Too much paper in the tray

SC502-1: 2nd Tray Lift Malfunction 1

Definition [C]

The paper upper limit sensor is not activated after the tray lift motor has been on for 10 seconds.

Possible Causes

- 2nd tray upper limit sensor defective
- Tray lift motor defective
- Poor tray lift motor connection

SC502-2: 2nd Tray Lift Malfunction 2

Definition [C]

If the main power switch is turned on when the paper is already at the feed height, the paper height position is detected again. At this time, the paper upper limit sensor should de-activate within 5 seconds after the paper bottom plate starts to drop. If it does not deactivate within 5 s four times consecutively, this SC will be generated.

Possible Causes

- 2nd tray upper limit sensor defective
- Tray lift motor defective
- Too much paper in the tray

SC503-1: 3rd Tray Lift Malfunction 1 (Optional Paper Tray Unit)

Definition [C]

The paper upper limit sensor is not activated after the tray lift motor has been on for 13 seconds.

Possible Causes

- 3rd tray upper limit sensor defective
- Tray lift motor defective
- Poor tray lift motor connection

SC503-2: 3rd Tray Lift Malfunction 2 (Optional Paper Tray Unit)

Definition [C]

If the main power switch is turned on when the paper is already at the feed height, the paper height position is detected again. At this time, the paper upper limit sensor should de-activate within 5 seconds after the paper bottom plate starts to drop. If it does not deactivate within 5 s four times consecutively, this SC will be generated.

Possible Causes

- 3rd tray upper limit sensor defective
- Tray lift motor defective
- Too much paper in the tray

SC504-1: 4th Tray Lift Malfunction 1 (Optional Paper Tray Unit)

Definition [C]

The paper upper limit sensor is not activated after the tray lift motor has been on for 13 seconds.

Possible Causes

- 4th tray upper limit sensor defective
- Tray lift motor defective
- Poor tray lift motor connection

SC504-2: 4th Tray Lift Malfunction 2 (Optional Paper Tray Unit)

Definition [C]

If the main power switch is turned on when the paper is already at the feed height, the paper height position is detected again. At this time, the paper upper limit sensor should de-activate within 5 seconds after the paper bottom plate starts to drop. If it does not deactivate within 5 s four times consecutively, this SC will be generated.

Possible Causes

- 4th tray upper limit sensor defective
- Tray lift motor defective
- Too much paper in the tray

SC506: Paper Tray Unit Main Motor Lock (Optional Paper Tray)

Definition [C]

A main motor lock signal is detected for more than 0.5 s during rotation.

Possible Causes

- Paper tray unit main motor defective
- Too much load on the drive mechanism
- Poor motor connector connection

SC507: LCT Main Motor Lock (Optional LCT)

Definition [C]

A main motor lock signal is detected for more than 0.5 s during rotation.

Possible Causes

- LCT main motor defective
- Too much load on the drive mechanism
- Poor motor connector connection

SC510-1: LCT Tray Malfunction 1

Definition [C]

1) The LCT lift sensor does not activate for more than 18 seconds after the LCT lift motor turned on.
2) The LCT lower limit sensor does not activate for more than 18 seconds after the LCT lift motor turned on.
3) The LCT lift sensor is already activated when the LCT lift motor turns on.

Possible Causes

- LCT lift motor defective
- Pick-up solenoid defective
- Poor motor connector connection
- Poor pick-up solenoid connector connection
- Paper end sensor defective
- LCT lift sensor defective
- LCT lower limit sensor defective

SC510-2: LCT Tray Malfunction-2

Definition [C]

1) During paper lifting, the LCT lift sensor does not activate for more than 1.5 seconds after the paper end sensor turned on. If this condition occurs four times consecutively, this SC will be generated.
2) During paper lifting, after the top of the paper reaches the upper limit position, the paper is lowered until the LCT lift sensor is de-activated. At this time, the LCT lift sensor does not de-activate for more than 5 seconds.

Possible Causes

- LCT lift motor defective
- Pick-up solenoid defective
- Poor motor connector connection
- Poor pick-up solenoid connector connection
- Paper end sensor defective
- Too much paper in the LCT
- Paper is not properly loaded in the LCT

SC541: Fusing Thermistor Open

Definition [A]

The fusing temperature detected by the thermistor was below 7°C for 16 seconds.

Possible Causes

- Fusing thermistor defective or out of position
- Poor thermistor terminal connection

SC542: Fusing Temperature Warming-up Error

Definition [A]

The fusing temperature does not reach the fusing standby temperature within 125 seconds after the main power switch is turned on.

Possible Causes

- Fusing thermistor defective or out of position
- Fusing lamp open
- Fusing thermofuse open
- BICU defective
- Power supply board defective
- Poor fusing unit connection

SC543: Fusing Overheat Error 1

Definition [A]

A fusing temperature of over 231°C is detected for 5 seconds by the fusing thermistor.

Possible Causes

- Fusing thermistor defective
- BICU defective
- I/O board (IOB) defective

SC545: Fusing Overheat Error 2

Definition [A]

The fusing lamp stays on at full power for 30 seconds while in the stand-by condition after warming-up is completed.

Possible Causes

- Fusing thermistor out of position

SC546-1: Fusing Ready Temperature Malfunction - 1

Definition [A]

After warming-up is completed, the fusing temperature continuously fluctuates between 40°C over and 40°C below the stand-by temperature.

Possible Causes

- Poor connection between the thermistor and the harness
- Poor fusing unit connection

SC546-2: Fusing Ready Temperature Malfunction - 2

Definition [A]

After warming-up is completed, the fusing temperature fluctuates between 40°C over and 40°C below the stand-by temperature 5 or more times per minutes.

Possible Causes

- Poor connection between the thermistor and the harness
- Poor fusing unit connection

SC547: Zero Cross Signal Malfunction

Definition [A]

Zero cross signals are not detected within a certain period within 500 ms after the main power switch has been turned on.

Possible Causes

- Power supply board defective
- Noise on the ac power line

SC548: Fusing Unit Installation Error

Definition [A]

The machine cannot detect the fusing unit when the front cover and right cover are closed.

Possible Causes

- Fusing unit is not installed
- Poor fusing unit connection

SC599: 1-Bin Tray Motor Lock (Optional 1-Bin Tray Unit)

Definition [C]

A 1-bin tray motor lock signal is not detected for more than 0.3 seconds during rotation.

Possible Causes

- 1-bin tray motor defective
- Too much load on the drive mechanism
- Poor motor connector connection

SC601: Communication Error between BICU and Scanner Unit

Definition [B']

The BICU cannot communicate with the BIS board properly.

Possible Causes

- Poor connection between the SIB and SIFB boards.
- Poor connection between the SIFB and BICU boards.
- SIB board defective
- SIFB board defective
- BICU board defective

SC602: Communication Error between BICU and HDD Control Board

Definition [B']

The BICU cannot communicate with the HDD control board properly.

Possible Causes

- Poor connection between the BICU board and HDD control board
- HDD control board defective
- BICU board defective

SC620-1: Communication Error between BICU and ADF 1

Definition [B']

The BICU cannot receive a response signal three times when a communication error has occurred.

Possible Causes

- Poor connection between the BICU board and ADF main board
- ADF main board defective
- BICU board defective

SC620-2: Communication Error between BICU and ADF 2

Definition [B']

The BICU receives a "Break" signal from the ADF main board.

Possible Causes

- Poor connection between the BICU board and ADF main board
- ADF main board defective
- BICU board defective

SC620-3: Communication Error between BICU and ADF 3

Definition [B']

The BICU sends a command to the ADF main board which does not operate an ADF function.

Possible Causes

- Poor connection between the BICU board and the ADF main board
- ADF main board defective
- BICU board defective

SC621: Communication Error between BICU and Finisher

Definition [B']

The BICU cannot communicate with the finisher properly.

Possible Causes

- Poor connection between the BICU board and the finisher main board
- Finisher main board defective
- BICU board defective

SC623: Communication Error between BICU and Paper Tray Unit

Definition [B']

The BICU cannot communicate with the paper tray unit properly.

Possible Causes

- Poor connection between the BICU board and the paper tray unit main board
- Paper tray unit main board defective
- BICU board defective

SC624: Communication Error between BICU and LCT

Definition [B']

The BICU cannot communicate with the LCT properly.

Possible Causes

- Poor connection between the BICU board and the LCT main board
- LCT main board defective
- BICU board defective

SC630: CSS (RSS) Communication Error between Line Adapter and CSS Center [D]

- **Japan Only**

SC700: ADF Original Pick-up Malfunction

Definition [B']

The original stopper H.P sensor does not activate three times consecutively after the pick-up motor has turned on.

Possible Causes

- Original stopper H.P sensor defective
- Pick-up motor defective
- Timing belt out of position
- ADF main board defective

SC701: ADF Original Pick-up Malfunction

Definition [B']

The original pick-up H.P sensor does not activate three times consecutively after the pick-up motor has turned on.

Possible Causes

- Original pick-up H.P sensor defective
- Pick-up motor defective
- ADF main board defective

SC722: Finisher Jogger Motor Error

Definition [B']

1) The finisher jogger H.P sensor remains de-activated for a certain time when returning to home position.
2) The finisher jogger H.P sensor remains activated for a certain time when moving away from home position.

Possible Causes

- Jogger H.P sensor defective
- Jogger motor defective

SC724: Finisher Staple Hammer Motor Error

Definition [B']

Stapling does not finish for more than 600 ms after the staple hammer motor turned on.

Possible Causes

- Staple hammer motor defective
- Staple jam

SC725: Finisher Stack Feed-out Motor Error

Definition [B']

The stack feed-out belt H.P sensor does not activate within a certain time after the stack feed-out motor turned on.

Possible Causes

- Stack feed-out H.P sensor defective
- Stack feed-out motor defective

SC726: Finisher Shift/Lift Motor Error

Definition [B']

1) Tray shift does not finish within a certain time after the shift motor turned on.
2) The stack height sensor does not activate within a certain time after the shift tray lift motor turned on.

Possible Causes

- Shift motor defective
- Shift tray lift motor defective

SC727: Finisher Stapler Rotation Motor Error

Definition [B']

1) Stapler rotation does not finish within a certain time after the staple rotation motor turned on.
2) The stapler does not return to its home position within a certain time after stapling finished.

Possible Causes

- Stapler rotation motor defective
- Poor stapler rotation motor connection

SC729: Finisher Punch Motor Error

Definition [B']

The punch H.P sensor does not activate within a certain time after the punch motor turned on.

Possible Causes

- Punch motor defective
- Punch H.P sensor defective
- Poor punch motor connection

SC730: Finisher Stapler Position Motor Error

Definition [B']

1) The stapler does not return to its home position within a certain time after the stapler motor turned on.
2) The stapler H.P sensor does not activate within a certain time after the stapler motor turned on.

Possible Causes

- Stapler motor defective
- Stapler H.P sensor defective
- Poor stapler motor connection

SC900: Electrical Total Counter Error

Definition [A]

The value of the total counter has already exceeded 9,999,999

Possible Causes

- NVRAM defective

SC951: F-gate Signal Error 2

Definition [B']

When the IPU has already received the F-gate signal, the IPU receives another F-gate signal.

Possible Causes

- BICU defective

SC954: Printer Image Setting Error

Definition [B']

The settings that are required for image processing using the printer controller are not sent from the IPU.

Possible Causes

- Software defective

SC955: Memory Setting Error

Definition [B']

The settings that are required for image processing using the memory are not sent from the IPU.

Possible Causes

- Software defective

SC959: Printer Setting ID Error

Definition [B']

The ID that is required for image processing using the printer is not sent from the IPU.

Possible Causes

- Software defective

SC960: Printer Return ID Error

Definition [B']

The ID that is sent from the printer controller after finishing the printout is incorrect.

Possible Causes

- Software defective

SC961: Printer Ready ID Error

Definition [B']

The ID that is sent from the printer controller in the printer controller printing ready condition is incorrect.

Possible Causes

- Software defective

SC962: Memory Setting ID Error

Definition [B']

The ID that is sent from the memory when the IPU sent the memory ready signal is incorrect.

Possible Causes

- Software defective

SC963: Memory Finishing ID Error

Definition [B']

The ID that is sent from the memory when the IPU sent the memory finish signal is incorrect.

Possible Causes

- Software defective

SC964: Printer Ready Error

Definition [B']

The print ready signal is not generated for more than 17 seconds after the IPU received the print start signal.

Possible Causes

- Software defective

SC980: HDD Access Error

Definition [B']

Incorrect parameter sent from the BICU to the MSU.

Possible Causes

- Software defective
- Poor connection between BICU and MSU.

SC981: HDD Response Error

Definition [B']

The HDD control board does not generate any response when the IPU sends a read/write signal to the MSU.

Possible Causes

- Software defective
- Poor connection between BICU and MSU
- HDD defective

SC982: HDD Construction Error

Definition [B']

1) The HDD has been installed without the electric sort kit (SIMM memory).
2) A HDD that does not have the correct specifications has been installed.

Possible Causes

- Hard disk defective
- Incorrect hard disk type
- The electric sort kit is not installed



SC990: Software Performance Error

Definition [B']

The software performs an unexpected function.

Possible Causes

- Software defective
- When this SC occurs, the file name, address, and data will be stored in the NVRAM. These data can be checked by using SP 7-901.
- Note the above data and the situation in which this SC occurs. Then report the data and conditions to your technical control center.

7.2 ELECTRICAL COMPONENT DEFECTS

7.2.1 SENSORS

Component (Symbol)	CN	Condition	Symptom
Scanner Home Position (S1)	505-5 (SIB)	Open	SC121 is displayed.
		Shorted	SC120 is displayed.
Platen Cover (S2)	505-8 (SIB)	Open	APS and ARE do not function properly.
		Shorted	No symptom.
Original Width (S3)	501-A3, 4 (SIB)	Open	The CPU cannot detect the original size properly. APS and ARE do not function correctly.
		Shorted	
Original Length-1 (S4)	501-A8, 9 (SIB)	Open	The CPU cannot detect the original size properly. APS and ARE do not function correctly.
		Shorted	
Original Length-2 (S5)	501-A13 (SIB)	Open	The CPU cannot detect the original size properly. APS and ARE do not function correctly.
		Shorted	
LD Unit Home Position (S6)	220-2 (IOB)	Open	SC328 is displayed when the laser beam pitch is changed.
		Shorted	SC327 is displayed when the laser beam pitch is changed.
Toner Density (TD) (S7)	204-3 (IOB)	Open	The add toner indicator blinks even if there is toner in the development unit.
		Shorted	SC390-01 is displayed.
Paper Exit (S8)	203-B2 (IOB)	Open	The Paper Jam indicator will light whenever a copy is made.
		Shorted	The Paper Jam indicator lights even if there is no paper.
Registration (S9)	207-B2 (IOB)	Open	The Paper Jam indicator lights even if there is no paper.
		Shorted	The Paper Jam indicator will light whenever a copy is made.
Image Density (ID) (S10)	219-5 (IOB)	Open	SC350-03 is displayed after copying.
		Shorted	SC350-01 is displayed after copying.
Upper Paper Height (S11)	235-2 (PFB)	Open	Add Paper is displayed even if there is paper. If this condition occurred four times, SC501-02 will be displayed.
		Shorted	SC501-01 is displayed.
Lower Paper Height (S12)	236-2 (PFB)	Open	Add Paper is displayed even if there is paper. If this condition occurred four times, SC502-02 will be displayed.
		Shorted	SC502-01 is displayed.

Component (Symbol)	CN	Condition	Symptom
Upper Paper End (S13)	235-8 (PFB)	Open	The Paper End indicator lights even if paper is placed in the upper paper tray.
		Shorted	The Paper End indicator does not light even if there is no paper in the upper paper tray.
Lower Paper End (S14)	236-8 (PFB)	Open	The Paper End indicator lights even if paper is placed in the lower paper tray.
		Shorted	The Paper End indicator does not light even if there is no paper in the lower paper tray.
Upper Relay (S15)	235-5 (PFB)	Open	The Paper Jam indicator will light whenever a copy is made.
		Shorted	The Paper Jam indicator lights even if there is no paper.
Lower Relay (S16)	236-5 (PFB)	Open	The Paper Jam indicator will light whenever a copy is made.
		Shorted	The Paper Jam indicator lights even if there is no paper.
Upper Tray (S17)	239-1 (PFB)	Open	Add Paper indicated even if there is paper.
		Shorted	Add Paper indicated when the tray is set.
Lower Tray (S18)	239-3 (PFB)	Open	Add Paper indicated even if there is paper.
		Shorted	Add Paper indicated when the tray is set.
Transfer Belt Position (S19)	203-A8 (IOB)	Open	No symptom
		Shorted	SC403 is displayed

7.2.2 SWITCHES

Component (Symbol)	CN	Condition	Symptom
Right Lower Cover (SW1)	232-3 (PFB)	Open	Doors/Covers Open is displayed even if the right lower cover is closed.
		Shorted	The LCD goes blank when the lower cover is opened.
Main (SW3)	102-1~4 (PSU)	Open	The machine does not turn on.
		Shorted	The machine does not turn off.
Front Cover Safety (SW4)	219-11 (IOB)	Open	Doors/Covers Open is displayed even if the front cover is closed.
		Shorted	Doors/Covers Open is not displayed even if the front cover is opened.

7.3 BLOWN FUSE CONDITIONS

Fuse	Rating		Symptom when turning on the main power switch
	115 V	210 ~ 230 V	
Power Supply Board			
FU1	6.3 A/125 V	6.3 A/250 V	“Doors/Covers Open” is displayed
FU2	6.3 A/125 V	6.3 A/250 V	“Doors/Covers Open” for the finisher is displayed
FU3	4 A/125 V	4 A/250 V	Paper end condition
FU4	6.3 A/125 V	6.3 A/250 V	SC121 is displayed
FU5	6.3 A/125 V	6.3 A/250 V	One of SC302, or SC403, or SC405 is displayed
FU101	15 A/125 V	---	No response
FU102	8 A/125 V	5 A/250 V	No response
FU103	2 A/125 V	1 A/250 V	Normal operation (optional heaters do not work)

COPIER (A283/284) ELECTRICAL COMPONENTS

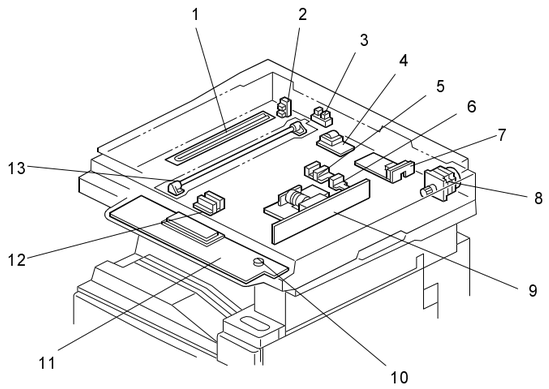

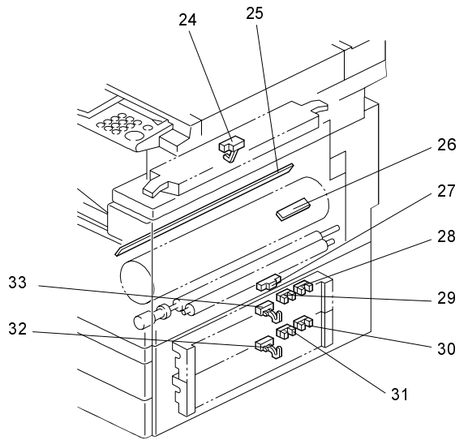

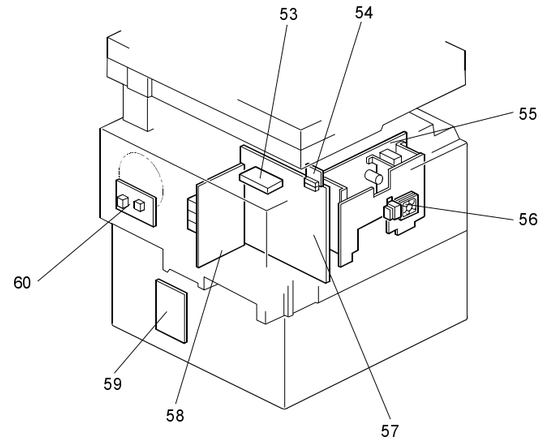

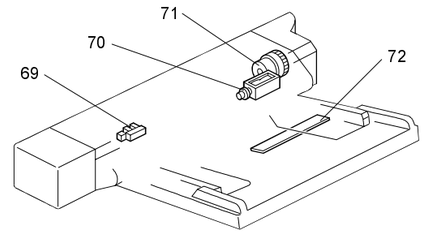

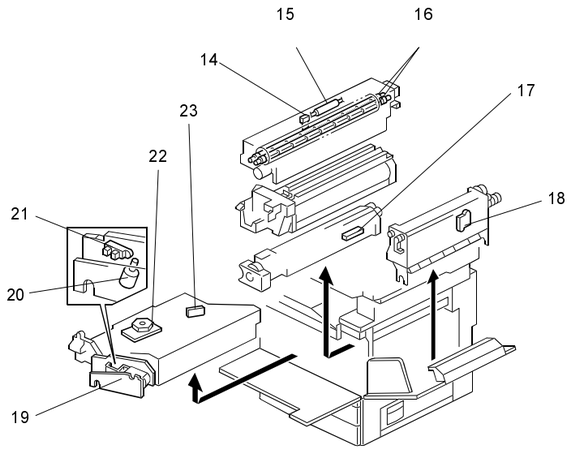

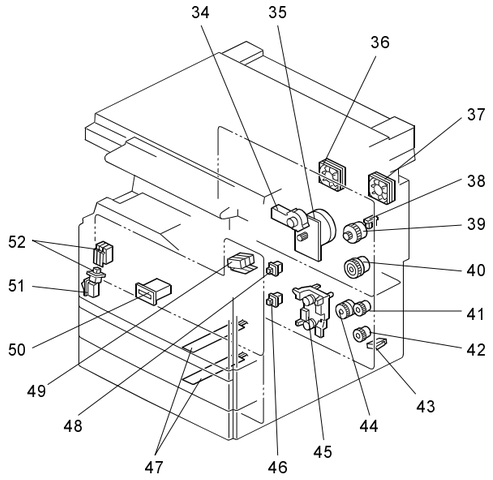

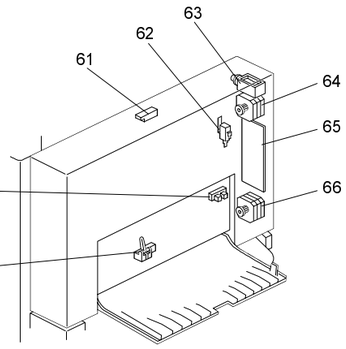

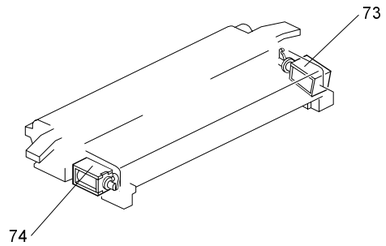

Symbol	Index No.	Description	P to P
Printed Circuit Boards			
PCB1	57	BICU (Base Engine & Image Control Unit)	F8
PCB2	55	PSU (Power Supply Unit)	K6
PCB3	58	IOB (Input/Output Board)	G3
PCB4	59	Paper Feed Control (PFB)	O4
PCB5	60	High Voltage Supply	J4
PCB6	9	SBU (Sensor Board Unit)	C11
PCB7	7	SIB (Scanner Interface Board)	C8
PCB8	11	Operation Panel	A7
PCB9	4	Lamp Stabilizer	A6
PCB10	19	LDDR (Laser Diode Driver)	I11
PCB11	54	SIFB (Scanner Interface Board)	D10
Motors			
M1	35	Main	I4
M2	8	Scanner Drive	A10
M3	45	Tray Lift	Q4
M4	22	Polygonal Mirror	I10
M5	20	LD Positioning	J1
M6	36	Cooling Fan	B1
M7	37	Exhaust Fan	K1
M8	34	Toner Supply	I2
M9	56	PSU Cooling Fan	E2

Symbol	Index No.	Description	P to P
Sensors			
S1	2	Scanner Home Position	A7
S2	3	Platen Cover	A7
S3	12	Original Width	A8
S4	5	Original Length-1	A8
S5	6	Original Length-2	A7
S6	21	LD Unit Home Position	J1
S7	17	Toner Density (TD)	A1
S8	24	Paper Exit	K1
S9	27	Registration	I4
S10	26	Image Density (ID)	H1
S11	28	Upper Paper Height	Q7
S12	30	Lower Paper Height	Q7
S13	29	Upper Paper End	Q7
S14	31	Lower Paper End	Q6
S15	33	Upper Relay	Q7
S16	32	Lower Relay	Q6
S17	48	Upper Tray Set	Q4
S18	46	Lower Tray Set	Q4
S19	38	Transfer Belt Position	K1
S20	18	Toner Overflow	J5
Switches			
SW1	43	Right Lower Cover	Q9
SW2	49	Right Upper Cover	J11, H4
SW3	51	Main Power Switch	L4
SW4	52	Front Cover Safety	J11, H4
SW5	10	Operation Switch	(A9)

Symbol	Index No.	Description	P to P
Magnetic Clutches			
CL1	39	Transfer Belt	K1
CL2	40	Registration	I4
CL3	44	Relay	Q3
CL4	41	Upper Paper Feed	Q3
CL5	42	Lower Paper Feed	Q3
Lamps			
L1	13	Exposure	B6
L2	16	Fusing	(M7)
L3	25	Quenching	H1
Heaters			
H1	1	Optics Anti-condensation (option)	L4
H2	47	Tray (option)	L4
Thermistors			
TH1	14	Fusing	(M7)
Thermofuses			
TF1	15	Fusing	(M7)
Counters			
CO1	50	Total	I1
Others			
LSD	23	Laser Synchronization Detector	J10

DUPLEX

Symbol	Index No.	Description	P to P
Motors			
M10	64	Inverter	B5
M11	66	Transport	B5
Sensors			
S21	61	Entrance	C5
S22	67	Exit	C5
S23	68	Cover Guide	C5
Switches			
SW6		Duplex Unit	D5
Solenoids			
SOL1	63	Inverter Gate	A5
PCBs			
PCB12	65	Main	C4

BY-PASS

Symbol	Index No.	Description	P to P
Sensors			
S24	69	Paper End	Q5
S25	72	Paper Size Sensor Board	Q6
Solenoids			
SOL2	70	Pick-up	Q6
Magnetic Clutches			
CL6	71	Paper Feed	Q6

INTERCHANGE UNIT

Symbol	Index No.	Description	P to P
Solenoids			
SOL4	74	Duplex Junction Gate	L1
SOL3	73	Exit Junction Gate	L1

OTHERS

Symbol	Index No.	Description	P to P
Others			
-	53	HDD	J11
-	-	Mother Board	I8

A284 Point to Point Diagram

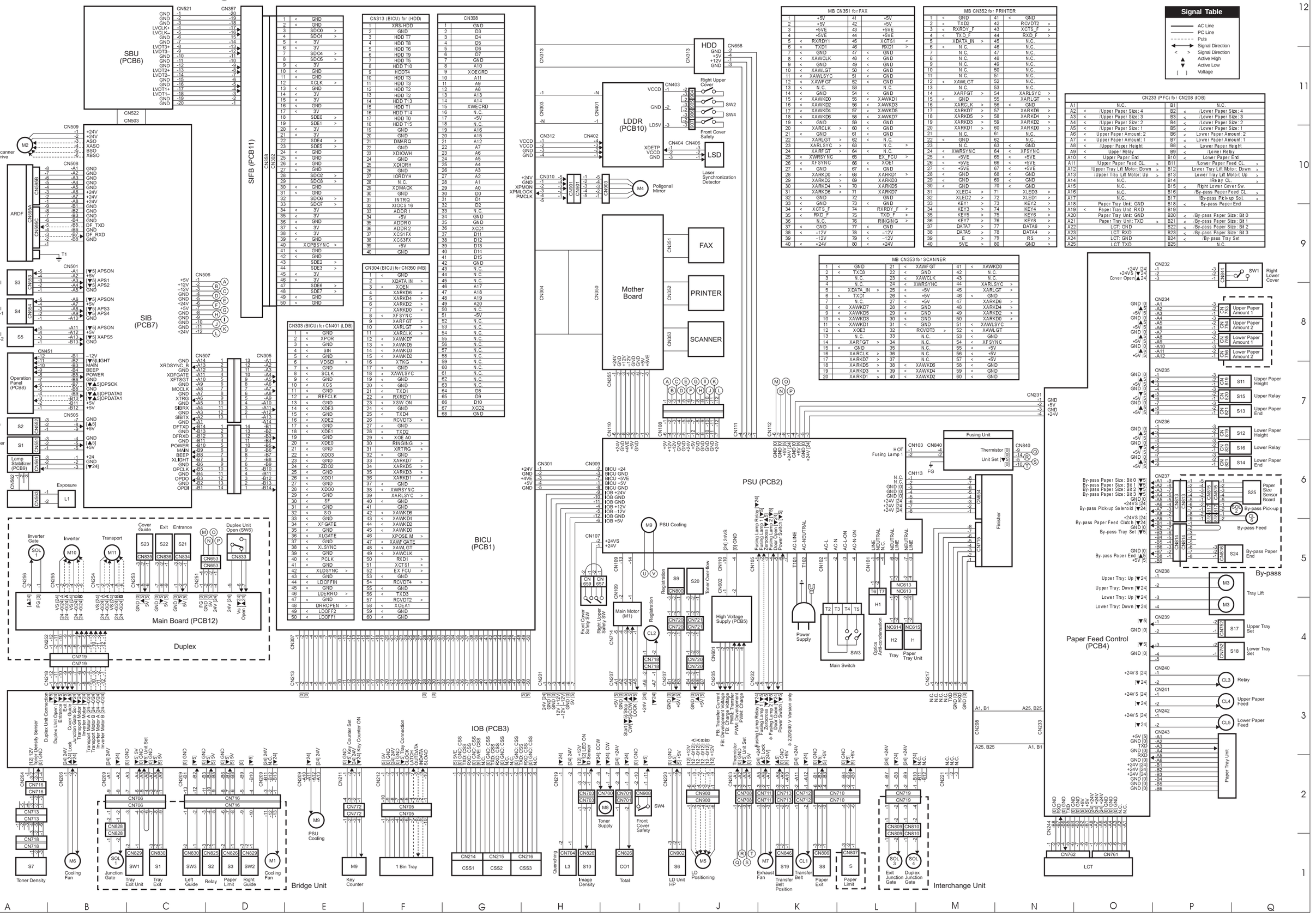

MB CN351 for FAX					
1		+5V	41		+5V
2		+5V	42		+5V
3		+5VE	43		+5VE
4		+5VE	44		+5VE
5	<	RXRDY1	45		XCTS1 >
6	<	TXD1	46		RXD1 >
7	<	GND	47	<	GND
8	<	XAWCLK	48	<	GND
9	<	GND	49	<	GND
10	<	XAWLGT	50	<	GND
11	<	XAWLSYC	51	<	GND
12	<	XAWFGT	52	<	GND
13	<	N.C.	53		N.C.
14	<	GND	54	<	GND
15	<	XAWKD0	55	<	XAWKD1
16	<	XAWKD2	56	<	XAWKD3
17	<	XAWKD4	57	<	XAWKD5
18	<	XAWKD6	58	<	XAWKD7
19	<	GND	59	<	GND
20	<	XARCLK >	60	<	GND
21	<	GND	61	<	GND
22		XARLGT >	62	<	N.C.
23		XARLSYC >	63	<	N.C. >
24		XARFGT >	64	<	N.C.
25	<	XWRSYNC	65		EX_FCU >
26	<	XFSYNC	66	<	XOE1
27	<	GND	67	<	GND
28		XARKD0 >	68		XARKD1 >
29		XARKD2 >	69		XARKD3
30		XARKD4 >	70		XARKD5
31		XARKD6 >	71		XARKD7
32	<	GND	72		GND
33	<	GND	73	<	GND
34	<	XCTS_F	74		RXRDY_F >
35	<	RXD_F	75		TXD_F >
36		N.C.	76		RINGING >
37	<	GND	77	<	GND
38	<	+12V	78	<	-12V
39	<	-12V	79	<	-12V
40	<	+24V	80	<	+24V

MB CN352 for PRINTER					
1	<	GND	41	<	GND
2	<	TXD2	42		RCVDT2 >
3	<	RXRDY_F	43		XCTS_F >
4	<	TXD_F	44		RXD_F >
5		XDATA_IN >	45		N.C.
6	<	N.C.	46		N.C.
7		N.C.	47		N.C.
8		N.C.	48		N.C.
9		N.C.	49		N.C.
10		N.C.	50		N.C.
11		N.C.	51		N.C.
12	<	XAWLGT	52		N.C.
13		N.C.	53		N.C.
14		XARFGT >	54		XARLSYC >
15	<	GND	55		XARLGT >
16		XARCLK >	56	<	GND
17		XARKD7 >	57		XARKD6 >
18		XARKD5 >	58		XARKD4 >
19		XARKD3 >	59		XARKD2 >
20		XARKD1 >	60		XARKD0 >
21		N.C.	61		N.C.
22	<	GND	62		N.C.
23		N.C.	63	<	GND
24	<	XWRSYNC	64	<	XFSYNC
25	<	+5VE	65	<	+5VE
26	<	+5VE	66	<	+5VE
27	<	+5VE	67	<	+5VE
28	<	GND	68	<	GND
29	<	GND	69	<	GND
30	<	GND	70	<	GND
31		XLED4 >	71		XLED3 >
32		XLED2 >	72		XLED1 >
33		KEY1 >	73		KEY2 >
34		KEY3 >	74		KEY4 >
35		KEY5 >	75		KEY6 >
36		KEY7 >	76		KEY8 >
37		DATA7 >	77		DATA6 >
38		DATA5 >	78		DATA4 >
39		E >	79		RS >
40		5VE >	80	<	GND >

MB CN353 for SCANNER					
1	<	GND	21	<	XAWFGT	41	<	XAWKD0
2	<	TXD3	22	<	GND	42		N.C.
3		N.C.	23	<	XAWCLK	43		N.C.
4		N.C.	24	<	XWRSYNC	44		XARLSYC >
5		XDATA_IN >	25	<	+5V	45		XARLGT >
6	<	TXD1	26	<	+5V	46	<	GND
7		N.C.	27	<	+5V	47		XARKD6 >
8	<	XAWKD7	28	<	GND	48		XARKD4 >
9	<	XAWKD5	29	<	GND	49		XARKD2 >
10	<	XAWKD3	30	<	GND	50		XARKD0 >
11	<	XAWKD1	31	<	GND	51	<	XAWLSYC
12	<	XOE3	32		RCVDT3 >	52	<	XAWLGT
13		N.C.	33		N.C.	53	<	GND
14		XARFGT >	34		N.C.	54	<	XFSYNC
15	<	GND	35		N.C.	55	<	+5V
16		XARCLK >	36		N.C.	56	<	+5V
17		XARKD7 >	37		N.C.	57	<	+5V
18		XARKD5 >	38	<	XAWKD6	58	<	GND
19		XARKD3 >	39	<	XAWKD4	59	<	GND
20		XARKD1 >	40	<	XAWKD2	60	<	GND

CN233 (PFC) for CN208 (IOB)					
A1		N.C.	B1		N.C.
A2	<	/Upper Paper Size: 4	B2	<	/Lower Paper Size: 4
A3	<	/Upper Paper Size: 3	B3	<	/Lower Paper Size: 3
A4	<	/Upper Paper Size: 2	B4	<	/Lower Paper Size: 2
A5	<	/Upper Paper Size: 1	B5	<	/Lower Paper Size: 1
A6	<	Upper Paper Amount: 2	B6	<	Lower Paper Amount: 2
A7	<	Upper Paper Amount: 1	B7	<	Lower Paper Amount: 1
A8	<	/Upper Paper Height	B8	<	Lower Paper Height
A9	<	Upper Relay	B9	<	/Lower Relay
A10	<	Upper Paper End	B10	<	Lower Paper End
A11		/Upper Paper Feed CL. >	B11		/Lower Paper Feed CL. >
A12		/Upper Tray Lift Motor: Down >	B12		Lower Tray Lift Motor: Down >
A13		/Upper Tray Lift Motor: Up >	B13		Lower Tray Lift Motor: Up >
A14		N.C.	B14		/Relay CL. >
A15		N.C.	B15	<	Right Lower Cover Sw.
A16		N.C.	B16		/By-pass Paper Feed CL. >
A17		N.C.	B17		/By-pass Pick-up Sol. >
A18		Paper Tray Unit: GND	B18	<	By-pass Paper End
A19	<	Paper Tray Unit: RXD	B19		
A20		Paper Tray Unit: GND	B20	<	/By-pass Paper Size: Bit 0
A21		Paper Tray Unit: TXD >	B21	<	/By-pass Paper Size: Bit 1
A22		LCT: GND	B22	<	/By-pass Paper Size: Bit 2
A23		LCT: RXD	B23	<	/By-pass Paper Size: Bit 3
A24		LCT: GND	B24	<	/By-pass Tray Set
A25		LCT: TXD	B25		N.C.

CN313 (BICU) for (HDD)		
1		XRS-HDD
2		GND
3		HDD T7
4		HDD T8
5		HDD T6
6		HDD T9
7		HDD T5
8		HDD T10
9		HDDT4
10		HDD T3
11		HDD T3
12		HDD T2
13		HDD T2
14		HDD T13
15		HDD T1
16		HDD T14
17		HDD T0
18		HDD T15
19		GND
20		GND
21		DMARQ
22		GND
23		XDIOW/H
24		GND
25		XDIORH
26		GND
27		IORDY/H
28		N.C.
29		XDMACK
30		GND
31		INTRQ
32		XIOCS 16
33		ADDR 1
34		+5V
35		ADDR 0
36		ADDR 2
37		XCS1FX
38		XCS3FX
39		+5V
40		GND

CN308	
1	GND
2	D3
3	D4
4	D5
5	D6
6	D7
7	GND
8	A10
9	XOECRD
10	A11
11	A9
12	A8
13	A13
14	A14
15	XWECRD
16	N.C.
17	+5V
18	N.C.
19	A16
20	A15
21	A12
22	A7
23	A6
24	A5
25	A4
26	A3
27	A2
28	A1
29	A0
30	D0
31	D1
32	D2
33	N.C.
34	GND
35	GND
36	XCD1
37	D11
38	D12
39	D13
40	D14
41	D15
42	GND
43	N.C.
44	N.C.
45	N.C.
46	A17
47	A18
48	A19
49	A20
50	N.C.
51	+5V
52	N.C.
53	N.C.
54	N.C.
55	N.C.
56	N.C.
57	N.C.
58	N.C.
59	N.C.
60	N.C.
61	N.C.
62	N.C.
63	N.C.
64	D8
65	D9
66	D10
67	XCD2
68	GND

CN304 (BICU) for CN350 (MB)		
1	<	GND
2		XDATA IN >
3	<	XOEN
4		XARKD6 >
5		XARKD4 >
6		XARKD2 >
7		XARKD0 >
8	<	XFSYNC
9		XARFGT >
10		XARLGT >
11		XARCLK >
12	<	XAWKD7
13	<	XAWKD5
14	<	XAWKD3
15	<	XAWKD2
16		XTKG >
17	<	GND
18	<	XAWLSYC
19	<	GND
20	<	GND
21	<	TXD1
22	<	RXRDY1
23	<	XSW ON
24	<	GND
25	<	TXD4
26		RCVDT3 >
27	<	GND
28	<	TXD2
29	<	XOE A0
30		RINGING >
31		XRTRG >
32	<	GND
33	<	XARKD7 >
34	<	XARKD5 >
35	<	XARKD3 >
36	<	XARKD1 >
37	<	GND
38	<	XWRSYNC
39		XARLSYC >
40	<	GND
41	<	GND
42	<	XAWKD0
43	<	XAWKD2
44	<	XAWKD4
45	<	XAWKD6
46		XPOSE M >
47	<	XAWFGATE
48	<	XAWLGT
49	<	XAWCLK
50		RXD1 >
51		XCTS1 >
52		EX FCU >
53	<	GND
54		RCVDT4 >
55	<	GND
56	<	TXD3
57		RCVDT2 >
58	<	XOEA1
59	<	GND
60	<	GND

CN303 (BICU) for CN401 (LDB)		
1	<	GND
2	<	XPOR
3	<	GND
4	<	SIN
5	<	GND
6		VDSDI >
7	<	GND
8	<	SCLK
9	<	GND
10	<	XCS
11	<	GND
12	<	REFCLK
13	<	GND
14	<	XDE3
15	<	GND
16	<	XDE2
17	<	GND
18	<	XDE1
19	<	GND
20	<	XDE0
21	<	GND
22	<	XDO3
23	<	GND
24	<	ZDO2
25	<	GND
26	<	XDO1
27	<	GND
28	<	XDO0
29	<	GND
30	<	SF
31	<	GND
32	<	SO
33	<	GND
34	<	XFGATE
35	<	GND
36	<	XLGATE
37	<	GND
38	<	XLSYNC
39	<	GND
40	<	PCLK
41	<	GND
42		XLDSYNC >
43	<	GND
44	<	LDOFFIN
45	<	GND
46		LDERRO >
47	<	GND
48		DRROPEN >
49	<	LDOFF2
50	<	LDOFF1