RICOH **M**odification **B**ulletin

Model: Plover	Date: 31-Jul-98	No: 1
Modified Article: Parts Catalog	Prepared by: H.Someya	
From: QAC Field Information Dept.		

Reason for Modification:

- ☒ Parts catalog correction
- ☐ Vendor change
- ☐ To meet standards ( )
- ☐ To facilitate assembly
- ☐ To improve reliability
- ☐ Part standardization
- ☐ Other

Correct your parts catalog as follows.

Page No. 7

Delete the following item.

Part Number	Description	Qty	Index	Drawing No.
A2271696	Decal - Lens Home Position (A227)	0	40	1

Page No. 9

Parts Number Correction.

Incorrect Number	Correct Number	Description	Qty	Index
A2275314	A2275323	Harness - Registration Sensor	1	17

Page No. 11

Not Listed.

Part Number	Description	Qty	Index	Drawing No.
A2271235	Bias Terminal Support Bracket	1	44*	2

*New Index

Page No. 15

Parts Number Correction.

Incorrect Number	Correct Number	Description	Qty	Index
A2274069	A2274063	Pressure Roller	1	39

Model: Plover	Date: 31-Jul-98	No: 1

Page No. 17

Parts Number Correction.

Incorrect Number	Correct Number	Description	Qty	Index
A2272254	A2272255	Transfer Assy	1	8

Page No. 19

Supply Unit Correction.

Incorrect Number	Correct Number	Description	Qty	Index	Drawing No.
A2275621		Noise Filter - 120V	0	5	3
A2275623		Noise Filter - 230V	0	5	3
A2271174		Noise Filter Bracket	0	7	3
A1285878		Spacer - 6.4mm	0	26	3
	A2271109	Noise Filter Assy - 120V	1	28*	3
	A2271110	Noise Filter Assy - 230V	1	28*	3

* New Index

Drawing 1

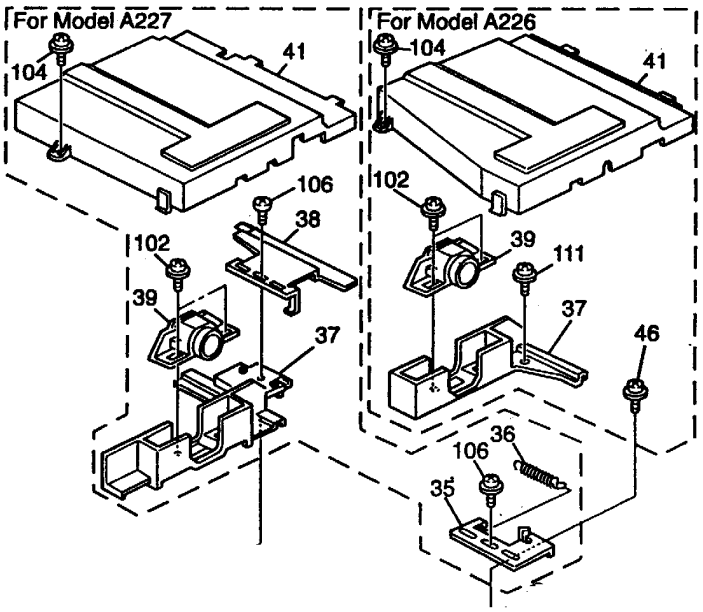

Model: Plover	Date: 31-Jul-98	No: 1

Drawing 2

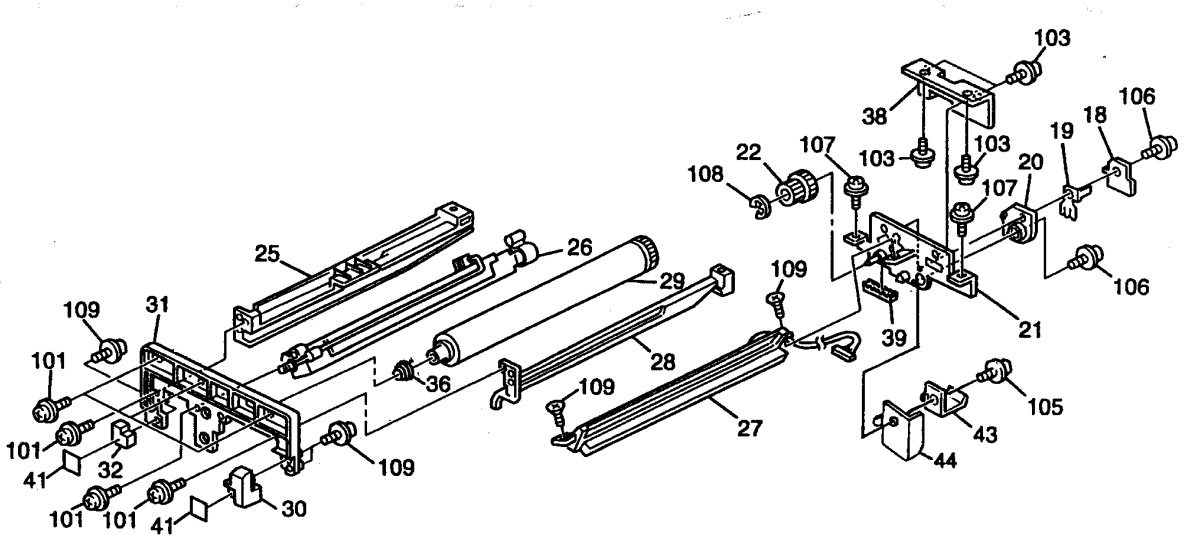

Drawing 3

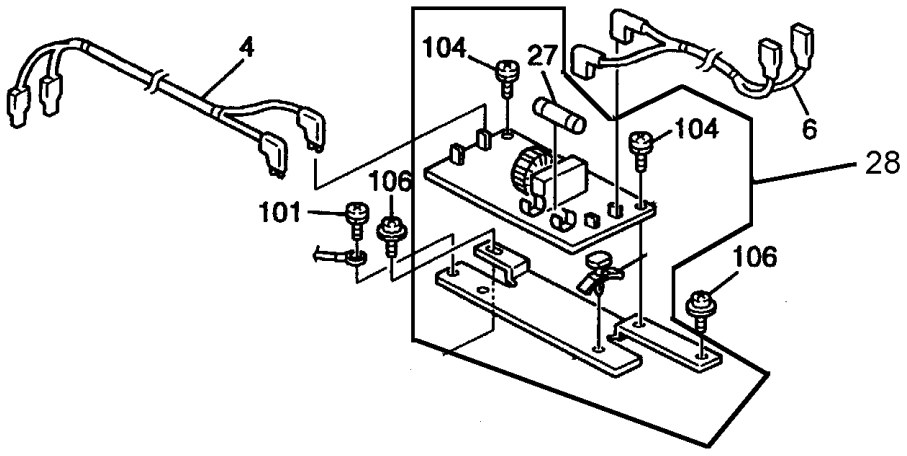

MODEL NAME	V/Hz	DESTINATION	CODE	SELIAL NUMBER
Ges 2808/ Nash 3708s/ Rex 8708	120 / 60	Latin America, Middle East, Others	A226 – 10	AR7
Ricoh Business Pro 800	120 / 60	North America	A226 – 17	A778
Ges 2808/ Nash 3708s/ Rex 8708	230 / 50,60	Europe, Asia, Middle East, Others	A226 – 22	AR6
Ricoh FT1008	220 / 50,60	CIS	A226 – 23	A778
Infotec 5081	230 / 50,60	Europe	A226 – 26	3P5
Ricoh FT1008	230 / 50,60	Europe, Latin America, Middle East	A226 – 27	A778
Ricoh FT1008	220 / 50,60	Asia, Africa, Middle East	A226 – 29	A778
Ricoh FT1008	120 / 60	North America, Latin America	A226 – 57	A778
Ges 2808Z/ Nash 3708Z/ Rex 8708Z	120 / 60	Latin America, Middle Ease, Others	A227 – 10	AR9
Ricoh Business Pro 800R	120 / 60	North America	A227 – 17	A779
Ges 2808Z/ Nash 3708Z/ Rex 8708Z	230 / 50,60	Europe, Asia, Middle East, Others	A227 – 22	AR8
Ricoh FT1208	120 / 50,60	CIS	A227 – 23	A779
Infotec 5081Z	230 / 50,60	Europe	A227 – 26	3P6
Ricoh FT1208	230 / 50,60	Europe, Latin America, Middle East	A227 – 27	A779
Ricoh FT1208	220 / 50,60	Asia, Africa, Middle East	A227 – 29	A779
Ricoh FT1208	120 / 60	North America, Latin America	A227 – 57	A779

Model: Plover	Date: 15-Sep-98	No.: 2

Modified Article: Parts Catalog			Prepared by: H. Someya
From: QAC Field Information Dept.			
Reason for Modification:	☒ Parts catalog correction ☐ To facilitate assembly ☐ Part standardization	☐ Vendor change ☐ To improve reliability ☐ Other	☐ To meet standards ( )

Correct your parts catalog as follows.

Old part number	New part number	Description	Qty	Int	Page	Index	Note
	07080040Z	Flat Washer - M4	1		7	49*	
A2271867	A2271868	Total Counter Cover	1		11	16	
A2274054	A2274056	Stopper - Fusing Roller Bushing	1		15	35	
	52152621	Snap Ring - M6	1		17	37*	
	H0062316	Spacer	1		17	38*	
	08074127	Wave Washer	1		17	39*	

*New Index

Page 6

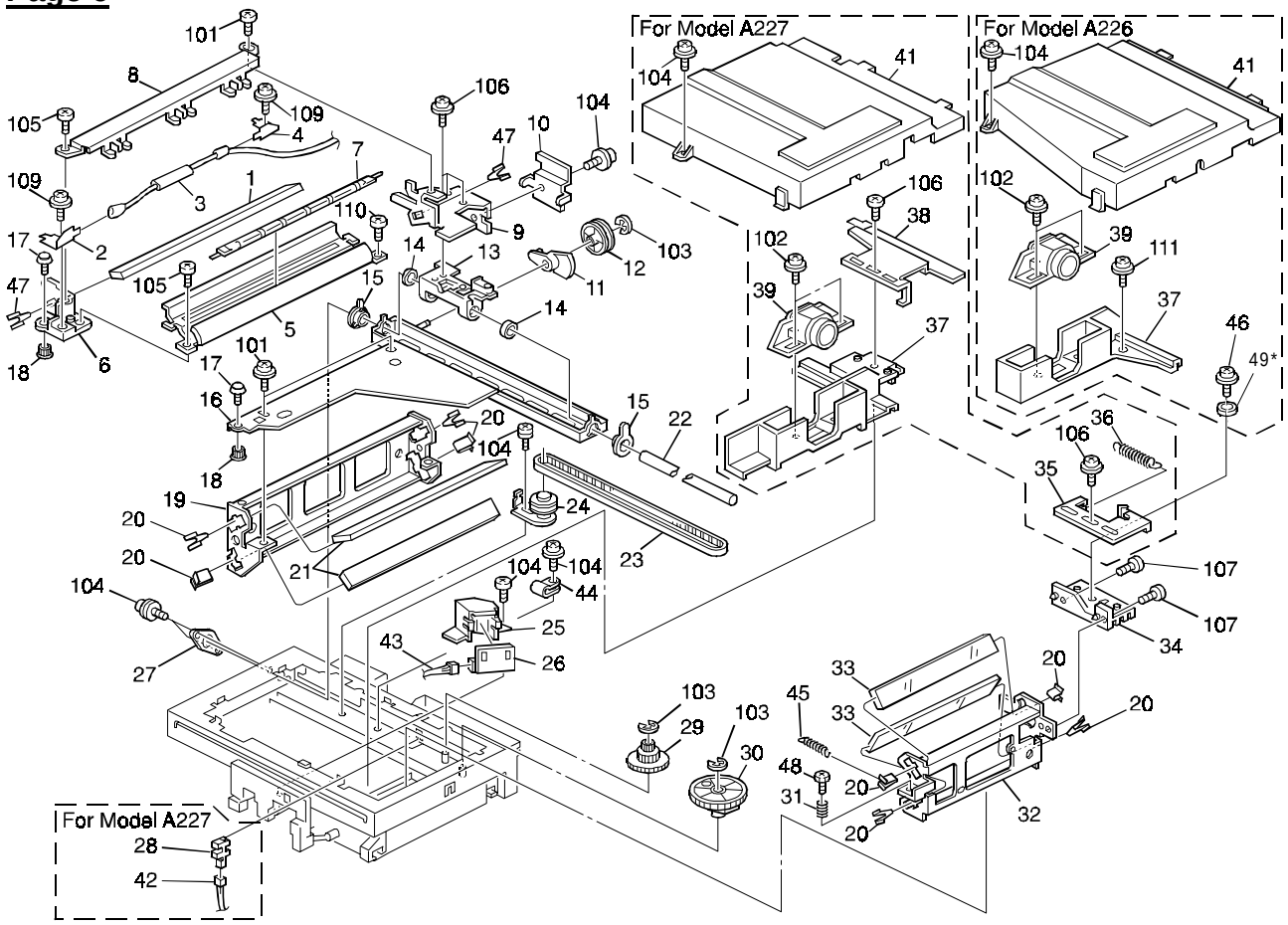

Model: Plover	Date: 15-Sep-98	No.: 2

Page 16

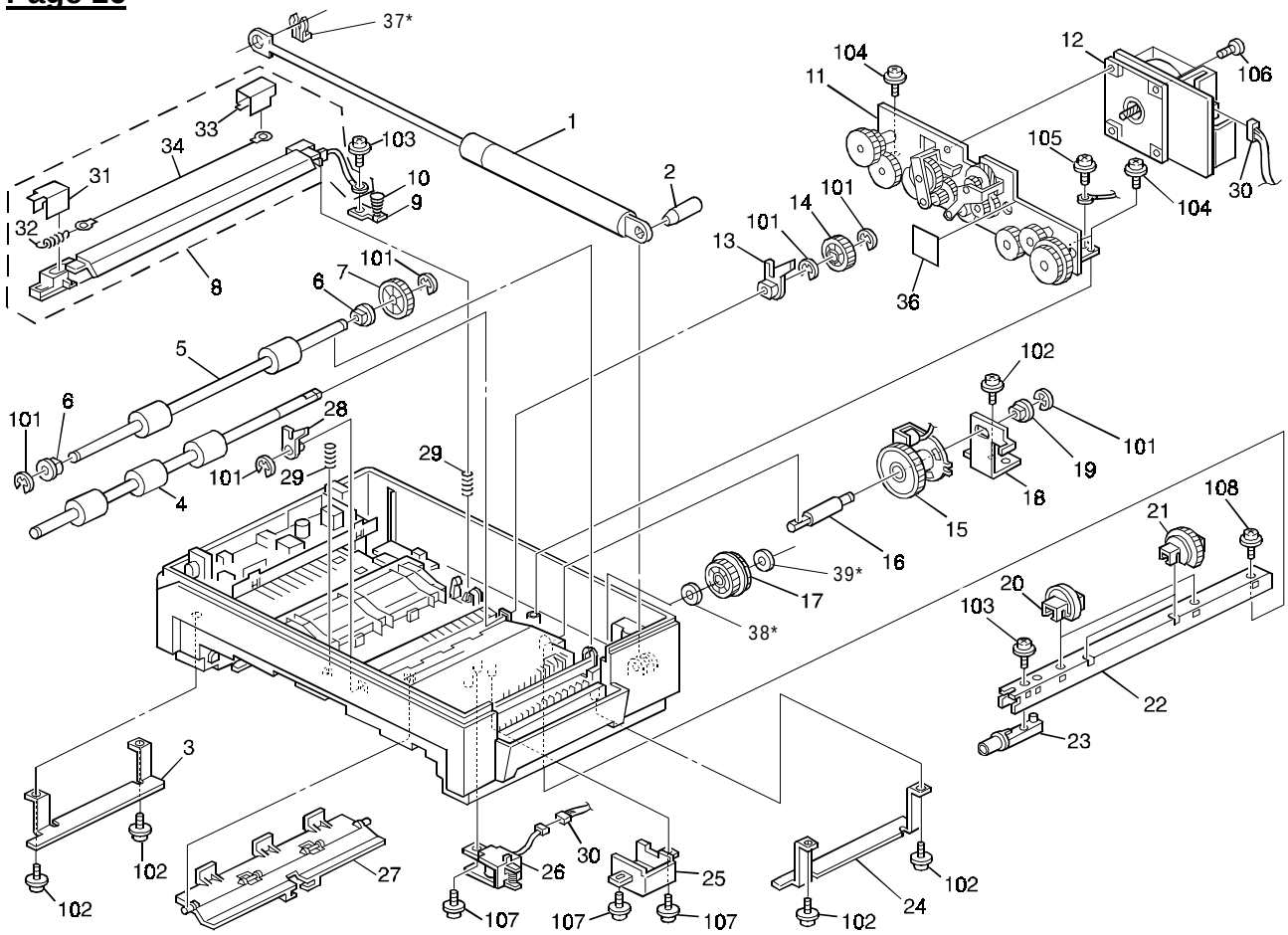

Model: Plover	Date: 15-Sep-98	No.: 2

MODEL NAME	V/Hz	DESTINATION	CODE	SERIAL NUMBER
Ges 2808/ Nash 3708s/ Rex 8708	120 / 60	Latin America, Middle East, Others	A226 – 10	AR7
Ricoh Business Pro 800	120 / 60	North America	A226 – 17	A778
Ges 2808/ Nash 3708s/ Rex 8708	230 / 50,60	Europe, Asia, Middle East, Others	A226 – 22	AR6
Ricoh FT1008	220 / 50,60	CIS	A226 – 23	A778
Infotec 5081	230 / 50,60	Europe	A226 – 26	3P5
Ricoh FT1008	230 / 50,60	Europe, Latin America, Middle East	A226 – 27	A778
Ricoh FT1008	220 / 50,60	Asia, Africa, Middle East	A226 – 29	A778
Ricoh FT1008	120 / 60	North America, Latin America	A226 – 57	A778
Ges 2808Z/ Nash 3708Z/ Rex 8708Z	120 / 60	Latin America, Middle Ease, Others	A227 – 10	AR9
Ricoh Business Pro 800R	120 / 60	North America	A227 – 17	A779
Ges 2808Z/ Nash 3708Z/ Rex 8708Z	230 / 50,60	Europe, Asia, Middle East, Others	A227 – 22	AR8
Ricoh FT1208	120 / 50,60	CIS	A227 – 23	A779
Infotec 5081Z	230 / 50,60	Europe	A227 – 26	3P6
Ricoh FT1208	230 / 50,60	Europe, Latin America, Middle East	A227 – 27	A779
Ricoh FT1208	220 / 50,60	Asia, Africa, Middle East	A227 – 29	A779
Ricoh FT1208	120 / 60	North America, Latin America	A227 – 57	A779

RICOH

Modification Bulletin

Model: Plover	Date: 15-Sep-98	No.: 3

Modified Article: Operation Panel			Prepared by: H. Someya
From: QAC Field Information Dept.			
Reason for Modification:	☐ Parts catalog correction ☐ To facilitate assembly ☐ Part standardization	☐ Vendor change ☒ To improve reliability ☐ Other	☐ To meet standards ( )

Old part Number	New part Number	Description	Qty	Int	Page	Index	Note
A2261895	A2261865	Operation Panel - LT(A226)	1	X/O	5	3	
A2261898	A2261866	Operation Panel - A4(A226)	1	X/O	5	3	
A2271895	A2271865	Operation Panel - LT(A227)	1	X/O	5	3	
A2271898	A2271866	Operation Panel - A4(A227)	1	X/O	5	3	

If the user presses the Start key too forcefully, the key cover might turn slightly counterclockwise and cause the hook [A] to catch under the locking rib [B]. If this happens, the hook will cause the Start key to stay on and the machine will make copies continuously. To prevent this problem, the height of rib [B] has been increased.

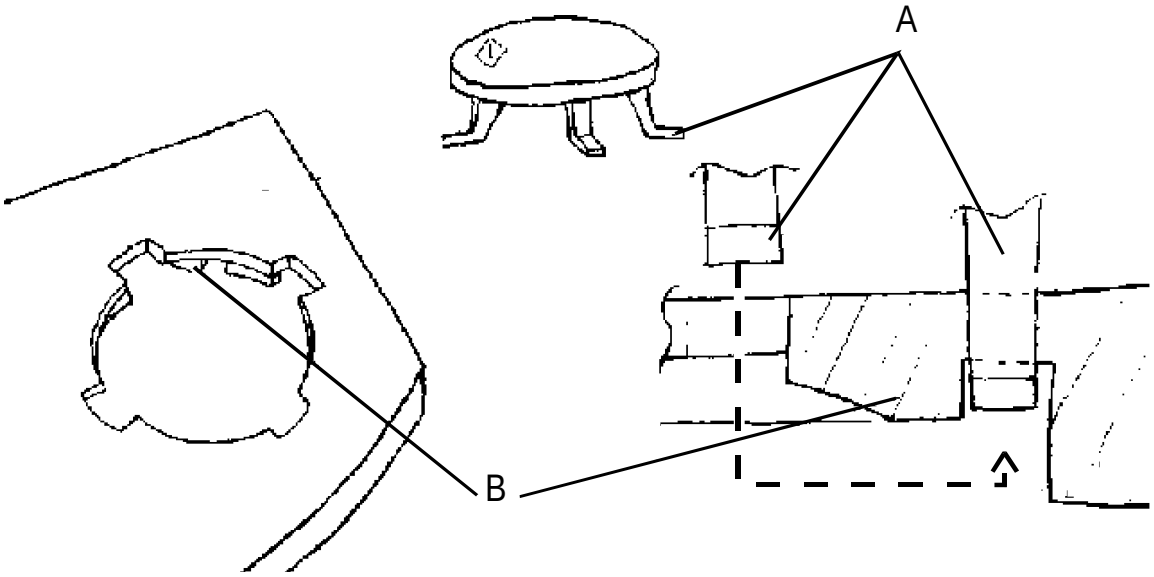

MODEL NAME	V/Hz	DESTINATION	CODE	SERIAL NUMBER
Ges 2808/ Nash 3708s/ Rex 8708	120 / 60	Latin America, Middle East, Others	A226 – 10	AR78040001
Ricoh Business Pro 800	120 / 60	North America	A226 – 17	A778808xxxx
Ges 2808/ Nash 3708s/ Rex 8708	230 / 50,60	Europe, Asia, Middle East, Others	A226 – 22	AR68050001
Ricoh FT1008	220 / 50,60	CIS	A226 – 23	A7788041278
Infotec 5081	230 / 50,60	Europe	A226 – 26	3P50580001
Ricoh FT1008	230 / 50,60	Europe, Latin America, Middle East	A226 – 27	A7788040781
Ricoh FT1008	220 / 50,60	Asia, Africa, Middle East	A226 – 29	A778808xxxx
Ricoh FT1008	120 / 60	North America, Latin America	A226 – 57	A778808xxxx
Ges 2808Z/ Nash 3708Z/ Rex 8708Z	120 / 60	Latin America, Middle Ease, Others	A227 – 10	AR9808xxxx
Ricoh Business Pro 800R	120 / 60	North America	A227 – 17	A779808xxxx
Ges 2808Z/ Nash 3708Z/ Rex 8708Z	230 / 50,60	Europe, Asia, Middle East, Others	A227 – 22	AR88040001
Ricoh FT1208	120 / 50,60	CIS	A227 – 23	A7798041254
Infotec 5081Z	230 / 50,60	Europe	A227 – 26	3P60580001
Ricoh FT1208	230 / 50,60	Europe, Latin America, Middle East	A227 – 27	A7798041060
Ricoh FT1208	220 / 50,60	Asia, Africa, Middle East	A227 – 29	A779808xxxx
Ricoh FT1208	120 / 60	North America, Latin America	A227 – 57	A779808xxxx

Model: Plover	Date: 15-Sep-98	No.: 4

Modified Article: Pressure Arm - Registration Bracket			Prepared by: H. Someya
From: QAC Field Information Dept.			
Reason for Modification:	☐ Parts catalog correction ☐ To facilitate assembly ☐ Part standardization	☐ Vendor change ☒ To improve reliability ☐ Other	☐ To meet standards ( )

Old part Number	New part Number	Description	Qty	Int	Page	Index	Note
A2273233	A2273230	Pressure Arm - Registration Bracket	1	X/O	19	17	

The pressure arm might come between the upper registration guide and the drum guide rail if the upper cover is closed by pushing the upper unit backwards. To prevent this problem, the pressure arm for the registration bracket has been changed as follows.

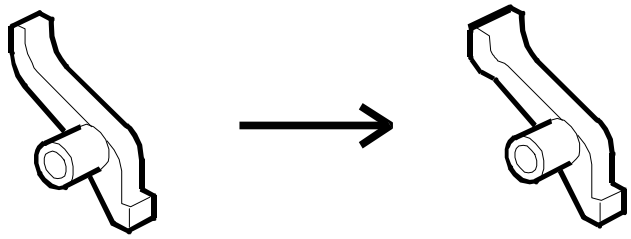

MODEL NAME	V/Hz	DESTINATION	CODE	SERIAL NUMBER
Ges 2808/ Nash 3708s/ Rex 8708	120 / 60	Latin America, Middle East, Others	A226 – 10	AR78060001
Ricoh Business Pro 800	120 / 60	North America	A226 – 17	A778808xxxx
Ges 2808/ Nash 3708s/ Rex 8708	230 / 50,60	Europe, Asia, Middle East, Others	A226 – 22	AR68060001
Ricoh FT1008	220 / 50,60	CIS	A226 – 23	A7788061375
Infotec 5081	230 / 50,60	Europe	A226 – 26	3P50680001
Ricoh FT1008	230 / 50,60	Europe, Latin America, Middle East	A226 – 27	A7788070311
Ricoh FT1008	220 / 50,60	Asia, Africa, Middle East	A226 – 29	A778808xxxx
Ricoh FT1008	120 / 60	North America, Latin America	A226 – 57	A778808xxxx
Ges 2808Z/ Nash 3708Z/ Rex 8708Z	120 / 60	Latin America, Middle Ease, Others	A227 – 10	AR9808xxxx
Ricoh Business Pro 800R	120 / 60	North America	A227 – 17	A779808xxxx
Ges 2808Z/ Nash 3708Z/ Rex 8708Z	230 / 50,60	Europe, Asia, Middle East, Others	A227 – 22	AR88060001
Ricoh FT1208	120 / 50,60	CIS	A227 – 23	A7798060890
Infotec 5081Z	230 / 50,60	Europe	A227 – 26	3P60680001
Ricoh FT1208	230 / 50,60	Europe, Latin America, Middle East	A227 – 27	A7798060001
Ricoh FT1208	220 / 50,60	Asia, Africa, Middle East	A227 – 29	A779808xxxx
Ricoh FT1208	120 / 60	North America, Latin America	A227 – 57	A779808xxxx

Model: Plover	Date: 15-Sep-98	No.: 5

Modified Article: Paper Tray			Prepared by: H. Someya
From: QAC Field Information Dept.			
Reason for Modification:	☐ Parts catalog correction ☐ To facilitate assembly ☐ Part standardization	☐ Vendor change ☒ To improve reliability ☐ Other	☐ To meet standards ( )

for A4 models (-22/23/26/27/29)

Old part Number	New part Number	Description	Qty	Int	Page	Index	Note
A2272802	A2272804	Paper Tray Assy - A4	1	X/O	13	1	
A2272882	A2272890	Front Side Fence - A4	1	X/O	13	12	*1
A2272883	A2272891	Rear Side Fence - A4	1	X/O	13	6	*1
A2272880		Side Fence Spacer	0		13	13	*1
A2272887	A2272892	Bottom Plate	1	O/O	13	5	*2

for 8½" x 11" models (-10/17/57)

Old part Number	New part Number	Description	Qty	Int	Page	Index	Note
A2272801	A2272803	Paper Tray Assy - LT	1	X/O	13	1	
A2272887	A2272892	Bottom Plate	1	X/O	13	5	*2

*1:
To improve the reliability of horizontal registration of the copy paper and to prevent A4 paper from slipping from under the corner separators when the tray is closed, two support posts [A] have been attached to the outside of each side fence so that the fences do not move.

*2:
To prevent the bottom plate from coming out from under the corner separators when using the 8½" x 11" paper tray assembly, the width [B] of the bottom plate has been changed from 215 mm to 221 mm.

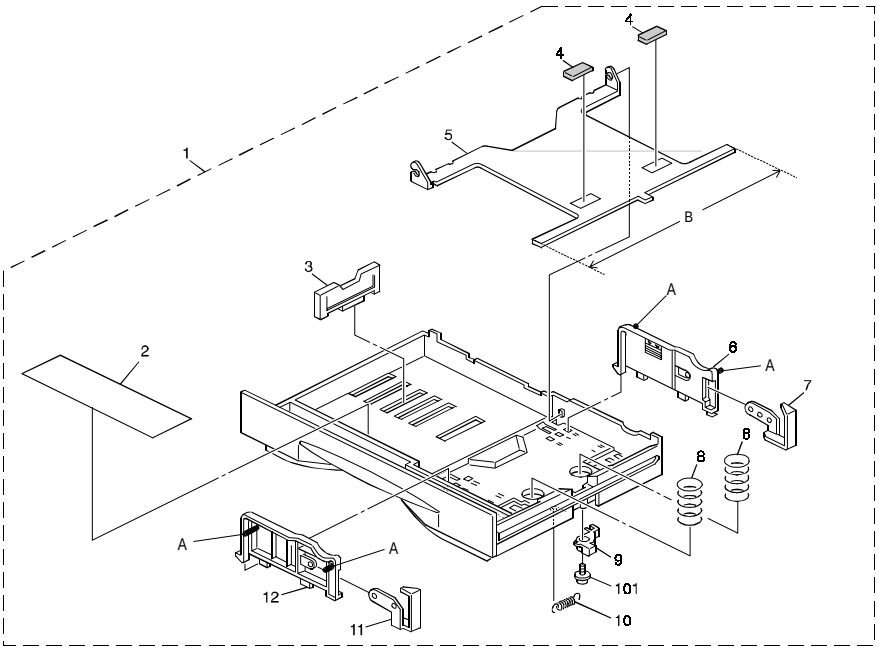

*1

MODEL NAME	V/Hz	DESTINATION	CODE	SERIAL NUMBER
Ges 2808/ Nash 3708s/ Rex 8708	120 / 60	Latin America, Middle East, Others	A226 – 10	AR7
Ricoh Business Pro 800	120 / 60	North America	A226 – 17	A778
Ges 2808/ Nash 3708s/ Rex 8708	230 / 50,60	Europe, Asia, Middle East, Others	A226 – 22	AR68060001
Ricoh FT1008	220 / 50,60	CIS	A226 – 23	A7788061144
Infotec 5081	230 / 50,60	Europe	A226 – 26	3P50680001
Ricoh FT1008	230 / 50,60	Europe, Latin America, Middle East	A226 – 27	A7788060001
Ricoh FT1008	220 / 50,60	Asia, Africa, Middle East	A226 – 29	A778808xxxx
Ricoh FT1008	120 / 60	North America, Latin America	A226 – 57	A778
Ges 2808Z/ Nash 3708Z/ Rex 8708Z	120 / 60	Latin America, Middle Ease, Others	A227 – 10	AR9
Ricoh Business Pro 800R	120 / 60	North America	A227 – 17	A779
Ges 2808Z/ Nash 3708Z/ Rex 8708Z	230 / 50,60	Europe, Asia, Middle East, Others	A227 – 22	AR88060001
Ricoh FT1208	120 / 50,60	CIS	A227 – 23	A7798060890
Infotec 5081Z	230 / 50,60	Europe	A227 – 26	3P60680001
Ricoh FT1208	230 / 50,60	Europe, Latin America, Middle East	A227 – 27	A7798060001
Ricoh FT1208	220 / 50,60	Asia, Africa, Middle East	A227 – 29	A779808xxxx
Ricoh FT1208	120 / 60	North America, Latin America	A227 – 57	A779

*2

MODEL NAME	V/Hz	DESTINATION	CODE	SERIAL NUMBER
Ges 2808/ Nash 3708s/ Rex 8708	120 / 60	Latin America, Middle East, Others	A226 – 10	AR78060001
Ricoh Business Pro 800	120 / 60	North America	A226 – 17	A778808xxxx
Ges 2808/ Nash 3708s/ Rex 8708	230 / 50,60	Europe, Asia, Middle East, Others	A226 – 22	AR6
Ricoh FT1008	220 / 50,60	CIS	A226 – 23	A778
Infotec 5081	230 / 50,60	Europe	A226 – 26	3P5
Ricoh FT1008	230 / 50,60	Europe, Latin America, Middle East	A226 – 27	A778
Ricoh FT1008	220 / 50,60	Asia, Africa, Middle East	A226 – 29	A778
Ricoh FT1008	120 / 60	North America, Latin America	A226 – 57	A778808xxxx
Ges 2808Z/ Nash 3708Z/ Rex 8708Z	120 / 60	Latin America, Middle Ease, Others	A227 – 10	AR9808xxxx
Ricoh Business Pro 800R	120 / 60	North America	A227 – 17	A779808xxxx
Ges 2808Z/ Nash 3708Z/ Rex 8708Z	230 / 50,60	Europe, Asia, Middle East, Others	A227 – 22	AR8
Ricoh FT1208	120 / 50,60	CIS	A227 – 23	A779
Infotec 5081Z	230 / 50,60	Europe	A227 – 26	3P6
Ricoh FT1208	230 / 50,60	Europe, Latin America, Middle East	A227 – 27	A779
Ricoh FT1208	220 / 50,60	Asia, Africa, Middle East	A227 – 29	A779
Ricoh FT1208	120 / 60	North America, Latin America	A227 – 57	A779808xxxx

Model: Plover	Date: 15-Sep-98	No.: 6

Modified Article: Gas Spring			Prepared by: H. Someya
From: QAC Field Information Dept.			
Reason for Modification:	☐ Parts catalog correction ☐ To facilitate assembly ☐ Part standardization	☐ Vendor change ☒ To improve reliability ☐ Other	☐ To meet standards ( )

Old part Number	New part Number	Description	Qty	Int	Page	Index	Note
A2271355		Gas Spring	0		17	1	
A2271852		Gas Spring Bracket	0		11	4	
52152621		Snap Ring - M6	0		17	37	
	A2271351	Gas Spring Assy	1	X/O	17	40*	

*New Index

The gas spring has been changed so that the upper unit does not slowly drop down.

Note: Since there is no interchangeability between the old and new gas springs, the gas spring must be replaced as an assembly. The part number of the assembly is A2271351.

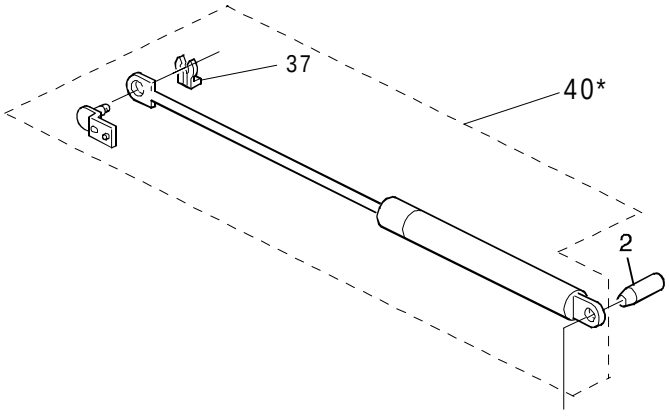

MODEL NAME	V/Hz	DESTINATION	CODE	SERIAL NUMBER
Ges 2808/ Nash 3708s/ Rex 8708	120 / 60	Latin America, Middle East, Others	A226 – 10	AR78060001
Ricoh Business Pro 800	120 / 60	North America	A226 – 17	A778808xxxx
Ges 2808/ Nash 3708s/ Rex 8708	230 / 50,60	Europe, Asia, Middle East, Others	A226 – 22	AR68060001
Ricoh FT1008	220 / 50,60	CIS	A226 – 23	A7788071201
Infotec 5081	230 / 50,60	Europe	A226 – 26	3P50680001
Ricoh FT1008	230 / 50,60	Europe, Latin America, Middle East	A226 – 27	A7788070311
Ricoh FT1008	220 / 50,60	Asia, Africa, Middle East	A226 – 29	A778808xxxx
Ricoh FT1008	120 / 60	North America, Latin America	A226 – 57	A778808xxxx
Ges 2808Z/ Nash 3708Z/ Rex 8708Z	120 / 60	Latin America, Middle Ease, Others	A227 – 10	AR9808xxxx
Ricoh Business Pro 800R	120 / 60	North America	A227 – 17	A779808xxxx
Ges 2808Z/ Nash 3708Z/ Rex 8708Z	230 / 50,60	Europe, Asia, Middle East, Others	A227 – 22	AR88060001
Ricoh FT1208	120 / 50,60	CIS	A227 – 23	A7798060890
Infotec 5081Z	230 / 50,60	Europe	A227 – 26	3P60680001
Ricoh FT1208	230 / 50,60	Europe, Latin America, Middle East	A227 – 27	A7798060513
Ricoh FT1208	220 / 50,60	Asia, Africa, Middle East	A227 – 29	A779808xxxx
Ricoh FT1208	120 / 60	North America, Latin America	A227 – 57	A779808xxxx

Model: Plover	Date: 15-Sep-98	No.: 7

Modified Article: Scanner Motor Bracket			Prepared by: H. Someya
From: QAC Field Information Dept.			
Reason for Modification:	☐ Parts catalog correction ☐ To facilitate assembly ☐ Part standardization	☐ Vendor change ☒ To improve reliability ☐ Other	☐ To meet standards ( )

Old part Number	New part Number	Description	Qty	Int	Page	Index	Note
A2271737		Scanner Motor Pulley	0		11	13	
A2271794		Bracket - Scanner Motor	0		11	14	
07200040G		Retaining Ring - M4	0		11	104	
	A2271630	Scanner Motor Bracket Assy	1	X/O	11	45*	

*New Index

To prevent the scanner wire from coming off the scanner pulley, the shape of the scanner motor pulley and the length of the scanner motor bracket shaft have been changed.

Note: Since there is no interchangeability between the old and new scanner motor pulleys, the scanner motor pulley must be replaced as an assembly. The part number of the assembly is A2271630.

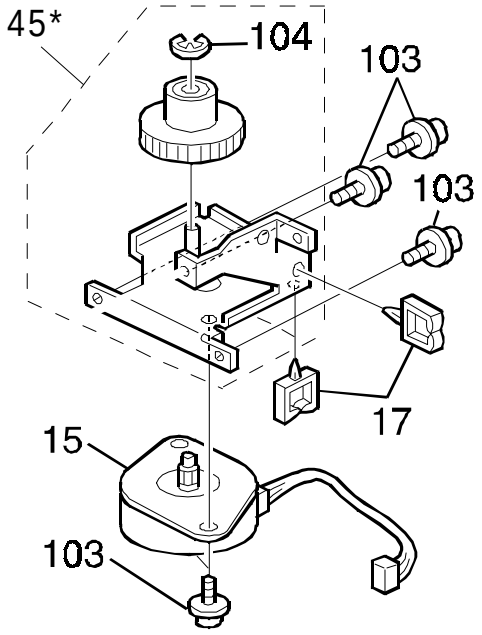

MODEL NAME	V/Hz	DESTINATION	CODE	SERIAL NUMBER
Ges 2808/ Nash 3708s/ Rex 8708	120 / 60	Latin America, Middle East, Others	A226 – 10	AR78050001
Ricoh Business Pro 800	120 / 60	North America	A226 – 17	A778808xxxx
Ges 2808/ Nash 3708s/ Rex 8708	230 / 50,60	Europe, Asia, Middle East, Others	A226 – 22	AR68040001
Ricoh FT1008	220 / 50,60	CIS	A226 – 23	A7788051421
Infotec 5081	230 / 50,60	Europe	A226 – 26	3P50480001
Ricoh FT1008	230 / 50,60	Europe, Latin America, Middle East	A226 – 27	A7788040098
Ricoh FT1008	220 / 50,60	Asia, Africa, Middle East	A226 – 29	A778808xxxx
Ricoh FT1008	120 / 60	North America, Latin America	A226 – 57	A778808xxxx
Ges 2808Z/ Nash 3708Z/ Rex 8708Z	120 / 60	Latin America, Middle Ease, Others	A227 – 10	AR9808xxxx
Ricoh Business Pro 800R	120 / 60	North America	A227 – 17	A779808xxxx
Ges 2808Z/ Nash 3708Z/ Rex 8708Z	230 / 50,60	Europe, Asia, Middle East, Others	A227 – 22	AR88050001
Ricoh FT1208	120 / 50,60	CIS	A227 – 23	A7798051101
Infotec 5081Z	230 / 50,60	Europe	A227 – 26	3P60480001
Ricoh FT1208	230 / 50,60	Europe, Latin America, Middle East	A227 – 27	A7798040001
Ricoh FT1208	220 / 50,60	Asia, Africa, Middle East	A227 – 29	A779808xxxx
Ricoh FT1208	120 / 60	North America, Latin America	A227 – 57	A779808xxxx

RICOH **M**odification **B**ulletin

Model: Plover	Date: 15-Sep-98	No.: 8

Modified Article: Pressure Arm - Shutter Lever			Prepared by: H. Someya
From: QAC Field Information Dept.			
Reason for Modification:	☐ Parts catalog correction ☐ To facilitate assembly ☐ Part standardization	☐ Vendor change ☒ To improve reliability ☐ Other	☐ To meet standards ( )

Old part Number	New part Number	Description	Qty	Int	Page	Index	Note
A2273234	A2273231	Pressure Arm – Shutter Lever	1	X/O	19	19	

To ensure that the pressure arm releases the CTDM shutter when the upper unit is closed, a rib has been added to the arm as follows.

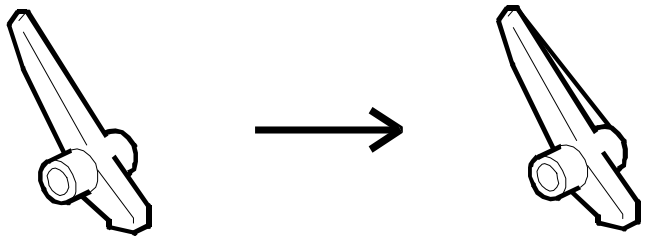

MODEL NAME	V/Hz	DESTINATION	CODE	SERIAL NUMBER
Ges 2808/ Nash 3708s/ Rex 8708	120 / 60	Latin America, Middle East, Others	A226 – 10	AR78060001
Ricoh Business Pro 800	120 / 60	North America	A226 – 17	A778808xxxx
Ges 2808/ Nash 3708s/ Rex 8708	230 / 50,60	Europe, Asia, Middle East, Others	A226 – 22	AR68060001
Ricoh FT1008	220 / 50,60	CIS	A226 – 23	A7788061484
Infotec 5081	230 / 50,60	Europe	A226 – 26	3P50680001
Ricoh FT1008	230 / 50,60	Europe, Latin America, Middle East	A226 – 27	A7788070311
Ricoh FT1008	220 / 50,60	Asia, Africa, Middle East	A226 – 29	A778808xxxx
Ricoh FT1008	120 / 60	North America, Latin America	A226 – 57	A778808xxxx
Ges 2808Z/ Nash 3708Z/ Rex 8708Z	120 / 60	Latin America, Middle Ease, Others	A227 – 10	AR9808xxxx
Ricoh Business Pro 800R	120 / 60	North America	A227 – 17	A779808xxxx
Ges 2808Z/ Nash 3708Z/ Rex 8708Z	230 / 50,60	Europe, Asia, Middle East, Others	A227 – 22	AR88060001
Ricoh FT1208	120 / 50,60	CIS	A227 – 23	A779806890
Infotec 5081Z	230 / 50,60	Europe	A227 – 26	3P60680001
Ricoh FT1208	230 / 50,60	Europe, Latin America, Middle East	A227 – 27	A7798060001
Ricoh FT1208	220 / 50,60	Asia, Africa, Middle East	A227 – 29	A779808xxxx
Ricoh FT1208	120 / 60	North America, Latin America	A227 – 57	A779808xxxx

Model: Plover	Date: 15-Sep-98	No.: 9

Modified Article: Copy Tray			Prepared by: H. Someya
From: QAC Field Information Dept.			
Reason for Modification:	☐ Parts catalog correction ☐ To facilitate assembly ☐ Part standardization	☐ Vendor change ☒ To improve reliability ☐ Other	☐ To meet standards ( )

Old part Number	New part Number	Description	Qty	Int	Page	Index	Note
A2271104	A2271151	Copy Tray	1	X/O	5	4	

To make it easier to put the copy tray in the machine and to strengthen of the ribs of the tray, the material and shape of the tray have been changed.

MODEL NAME	V/Hz	DESTINATION	CODE	SERIAL NUMBER
Ges 2808/ Nash 3708s/ Rex 8708	120 / 60	Latin America, Middle East, Others	A226 – 10	AR7808xxxx
Ricoh Business Pro 800	120 / 60	North America	A226 – 17	A778808xxxx
Ges 2808/ Nash 3708s/ Rex 8708	230 / 50,60	Europe, Asia, Middle East, Others	A226 – 22	AR6808xxxx
Ricoh FT1008	220 / 50,60	CIS	A226 – 23	A778808xxxx
Infotec 5081	230 / 50,60	Europe	A226 – 26	3P5088xxxx
Ricoh FT1008	230 / 50,60	Europe, Latin America, Middle East	A226 – 27	A778808xxxx
Ricoh FT1008	220 / 50,60	Asia, Africa, Middle East	A226 – 29	A778808xxxx
Ricoh FT1008	120 / 60	North America, Latin America	A226 – 57	A778808xxxx
Ges 2808Z/ Nash 3708Z/ Rex 8708Z	120 / 60	Latin America, Middle Ease, Others	A227 – 10	AR9808xxxx
Ricoh Business Pro 800R	120 / 60	North America	A227 – 17	A779808xxxx
Ges 2808Z/ Nash 3708Z/ Rex 8708Z	230 / 50,60	Europe, Asia, Middle East, Others	A227 – 22	AR8808xxxx
Ricoh FT1208	120 / 50,60	CIS	A227 – 23	A779808xxxx
Infotec 5081Z	230 / 50,60	Europe	A227 – 26	3P6088xxxx
Ricoh FT1208	230 / 50,60	Europe, Latin America, Middle East	A227 – 27	A7798070661
Ricoh FT1208	220 / 50,60	Asia, Africa, Middle East	A227 – 29	A779808xxxx
Ricoh FT1208	120 / 60	North America, Latin America	A227 – 57	A779808xxxx

RICOH

Modification Bulletin

Model: Plover	Date: 15-Sep-98	No.: 10

Modified Article: 3rd Scanner Bracket			Prepared by: H.Someya
From: QAC Field Information Dept.			
Reason for Modification:	☐ Parts catalog correction ☐ To facilitate assembly ☐ Part standardization	☐ Vendor change ☒ To improve reliability ☐ Other	☐ To meet standards ( )

Old part Number	New part Number	Description	Qty	Int	Page	Index	Note
A2271701		3rd Scanner Bracket	0		7	32	
A2271702		Mirror Motor Bracket	0		7	34	
04130060W		Philips Screw With Flat Washer - M3x6	0		7	101	
	A2271617	3rd Scanner Bracket Assy	1	X/O	7	50*	
A2271703	A2271709	Adjust Bracket	1	X/O	7	35	

*New Index

To prevent the 3rd scanner from being deformed during transportation, the 3rd scanner bracket has been strengthened.

Note: Since there is no interchangeability between the old and new 3rd scanner brackets, the 3rd scanner bracket must be replaced as an assembly. The part number of the assembly is A2271617.

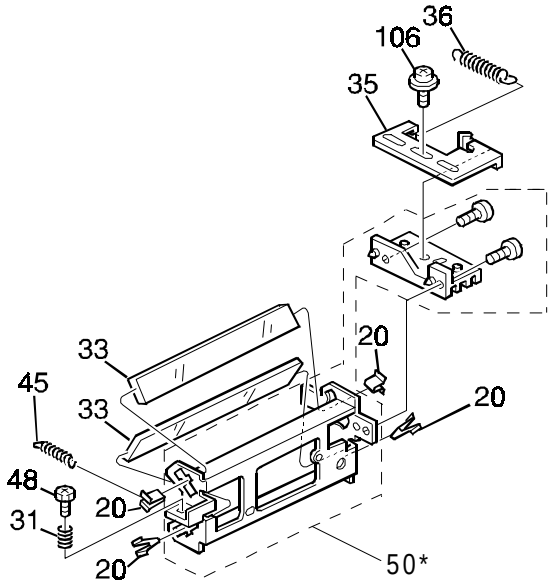

MODEL NAME	V/Hz	DESTINATION	CODE	SERIAL NUMBER
Ges 2808/ Nash 3708s/ Rex 8708	120 / 60	Latin America, Middle East, Others	A226 – 10	AR7808xxxx
Ricoh Business Pro 800	120 / 60	North America	A226 – 17	A778808xxxx
Ges 2808/ Nash 3708s/ Rex 8708	230 / 50,60	Europe, Asia, Middle East, Others	A226 – 22	AR68080001
Ricoh FT1008	220 / 50,60	CIS	A226 – 23	A7788080831
Infotec 5081	230 / 50,60	Europe	A226 – 26	3P58080001
Ricoh FT1008	230 / 50,60	Europe, Latin America, Middle East	A226 – 27	A778808xxxx
Ricoh FT1008	220 / 50,60	Asia, Africa, Middle East	A226 – 29	A778808xxxx
Ricoh FT1008	120 / 60	North America, Latin America	A226 – 57	A778808xxxx
Ges 2808Z/ Nash 3708Z/ Rex 8708Z	120 / 60	Latin America, Middle Ease, Others	A227 – 10	AR9808xxxx
Ricoh Business Pro 800R	120 / 60	North America	A227 – 17	A779808xxxx
Ges 2808Z/ Nash 3708Z/ Rex 8708Z	230 / 50,60	Europe, Asia, Middle East, Others	A227 – 22	AR88080131
Ricoh FT1208	120 / 50,60	CIS	A227 – 23	A7798080326
Infotec 5081Z	230 / 50,60	Europe	A227 – 26	3P60880001
Ricoh FT1208	230 / 50,60	Europe, Latin America, Middle East	A227 – 27	A7798080284
Ricoh FT1208	220 / 50,60	Asia, Africa, Middle East	A227 – 29	A779808xxxx
Ricoh FT1208	120 / 60	North America, Latin America	A227 – 57	A779808xxxx

Model: Plover	Date: 28-Feb-99	No.: 11

Modified Article: Lower Middle Roller			Prepared by: M. Ishihara
From: GTSS Field Information Dept			
Reason for Modification:	☐ Parts catalog correction ☐ To facilitate assembly ☐ Part standardization	☐ Vendor change ☒ To improve reliability ☐ Other	☐ To meet standards ( )

Old part number	New part number	Description	Qty	Int	Page	Index	Note
A2272557	A2272548	Lower Middle Roller	1-1	X/X	17	5	A
A2271204	A2271289	Gear – Z26	1-1	X/X	17	7	A
A2271206	A2271236	Idle Gear – Z29/Z26	1-1	X/O	17	17	A
-	A2271237	Lower Middle Roller Ass'y	0-1		17	37	*

* New

To prevent noise in the gear area, the lower middle roller, gear – Z26 and the idle gear – Z29/Z26 have been modified. Although the lower middle roller and the gear – Z26 are not interchangeable individually, they are interchangeable as a set.
To facilitate replacement in the field, the lower middle roller assembly (A2271237) has been prepared:
The lower middle roller assembly consists of the following parts.

Index	Parts No.	Q'ty
5	A2272548	1
7	A2271289	1
6	50530447	2
101	07200040G	2

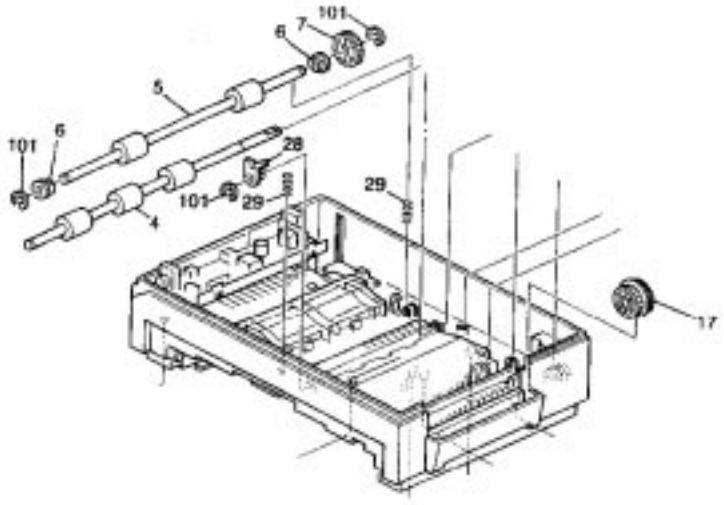

MODEL NAME	V/Hz	DESTINATION	CODE	SELIAL NUMBER
Ges 2808/ Nash 3708s/ Rex 8708	120 / 60	Latin America, Middle East, Others	A226 – 10	AR78060001~
Ricoh Business Pro 800	120 / 60	North America	A226 – 17	-
Ges 2808/ Nash 3708s/ Rex 8708	230 / 50,60	Europe, Asia, Middle East, Others	A226 – 22	AR68070001~
Ricoh FT1008	220 / 50,60	CIS	A226 – 23	A7788071201~
Infotec 5081	230 / 50,60	Europe	A226 – 26	3P50780001~
Ricoh FT1008	230 / 50,60	Europe, Latin America, Middle East	A226 – 27	A7788070393~
Ricoh FT1008	220 / 50,60	Asia, Africa, Middle East	A226 – 29	-
Ricoh FT1008	120 / 60	North America, Latin America	A226 – 57	-
Ges 2808Z/ Nash 3708Z/ Rex 8708Z	120 / 60	Latin America, Middle Ease, Others	A227 – 10	AR98070001~
Ricoh Business Pro 800R	120 / 60	North America	A227 – 17	-
Ges 2808Z/ Nash 3708Z/ Rex 8708Z	230 / 50,60	Europe, Asia, Middle East, Others	A227 – 22	AR88070001~
Ricoh FT1208	120 / 50,60	CIS	A227 – 23	A7798070001~
Infotec 5081Z	230 / 50,60	Europe	A227 – 26	3P60780001~
Ricoh FT1208	230 / 50,60	Europe, Latin America, Middle East	A227 – 27	A7798070101~
Ricoh FT1208	220 / 50,60	Asia, Africa, Middle East	A227 – 29	-
Ricoh FT1208	120 / 60	North America, Latin America	A227 – 57	-

RICOH **M**odification **B**ulletin

Model: Plover	Date: 30-Jun-99	No.: MA226012

Modified Article: Earth Wire - Upper Guide			Prepared by: M. Ishihara
From: Technical Service Dept., GTS Division			
Reason for Modification:	☐ Parts catalog correction ☐ To facilitate assembly ☐ Part standardization	☐ Vendor change ☒ To improve reliability ☐ Other	☐ To meet standards ( )

Old part number	New part number	Description	Q'ty	Int	Page	Index	Note
-	A2275354	Earth Wire – Upper Guide	0-1	-	9	28	New
A2272597	A2272697	Upper Registration Guide	1-1	X/O	9	12	
-	09513006W	Philips Screw with Flat Washer – M3x6	0-1	-	9	107	New

Static electricity is generated under the conditions mentioned below.
- Low temperature
- Low humidity
- Copy paper with high frictional resistance
- Multi-copy runs (50 copies or higher)

As a result, the toner end sensor may malfunction.
So an earth wire (A2275354) has been added between the upper registration guide and the main frame using an M3x6 screw with washer.
A hole has been made in the upper registration guide for the M3 screw. The part number for the guide with the hole is A2272697.

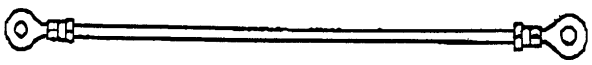

A2275354

MODEL NAME	V/Hz	DESTINATION	CODE	SELIAL NUMBER
Ges 2808/ Nash 3708s/ Rex 8708	120 / 60	Latin America, Middle East, Others	A226 – 10	AR7905xxxx
Ges 2808/ Nash 3708s/ Rex 8708	230 / 50,60	Europe, Asia, Middle East, Others	A226 – 22	AR6905xxxx
Ricoh FT1008	220 / 50,60	CIS	A226 – 23	A778778905xxxx
Infotec 5081	230 / 50,60	Europe	A226 – 26	3P5059xxxx
Ricoh FT1008	230 / 50,60	Europe, Latin America, Middle East	A226 – 27	A7789050001
Ges 2808Z/ Nash 3708Z/ Rex 8708Z	120 / 60	Latin America, Middle Ease, Others	A227 – 10	AR9905xxxx
Ges 2808Z/ Nash 3708Z/ Rex 8708Z	230 / 50,60	Europe, Asia, Middle East, Others	A227 – 22	AR8905xxxx
Ricoh FT1208	120 / 50,60	CIS	A227 – 23	A779905xxxx
Infotec 5081Z	230 / 50,60	Europe	A227 – 26	3P6059xxxx
Ricoh FT1208	230 / 50,60	Europe, Latin America, Middle East	A227 – 27	A7799070001