PLOVER (A226/A227)

PARTS CATALOG

First Edition March 1998

RICOH COMPANY, LTD.

PARTS CATALOG

INTRODUCTION

This chapter instructs you the numbers and names of parts on this machine.

INDEX to PARTS CATALOG

LOCATION OF UNIT 2
1. EXTERIOR 4
2. OPTICS SECTION 1 6
3. OPTICS SECTION 2 8
4. OPTICS SECTION 3 10
5. PAPER TRAY 12
6. FUSING UNIT 14
7. DRIVE SECTION 16
8. ELECTRICAL SECTION 18
9. MAIN CONTROL BOARD 20
10. DECAL AND DOCUMENT 22
11. SPECIAL TOOLS 24
PARTS INDEX 27

LOCATION OF UNIT

1. EXTERIOR

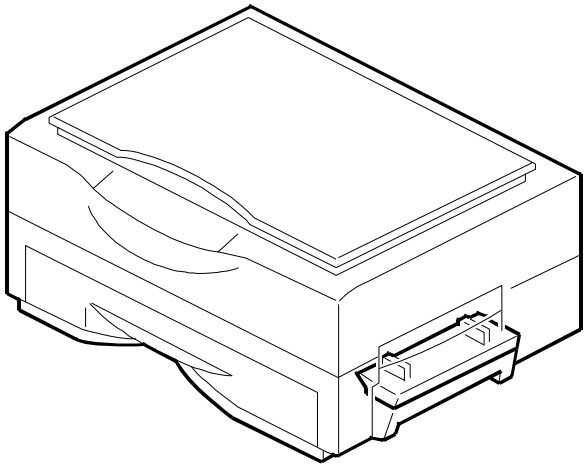

See Page 5

2. OPTICS SECTION 1

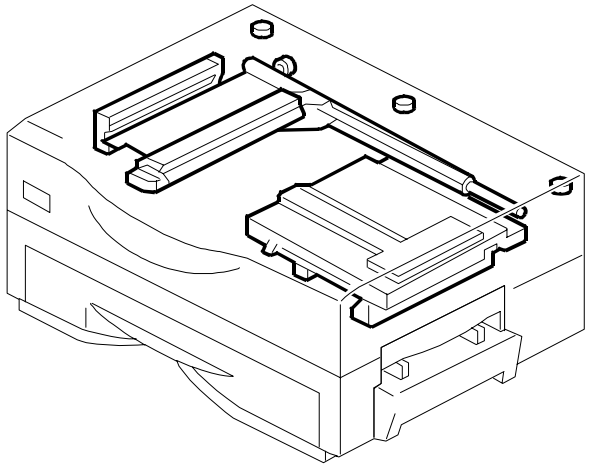

See Page 7

3. OPTICS SECTION 2

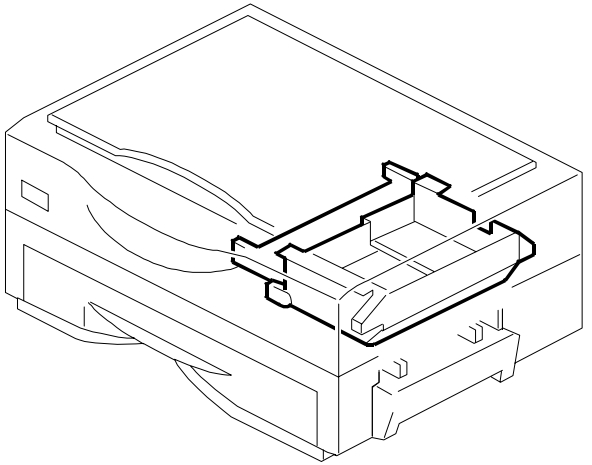

See Page 9

4. OPTICS SECTION 3

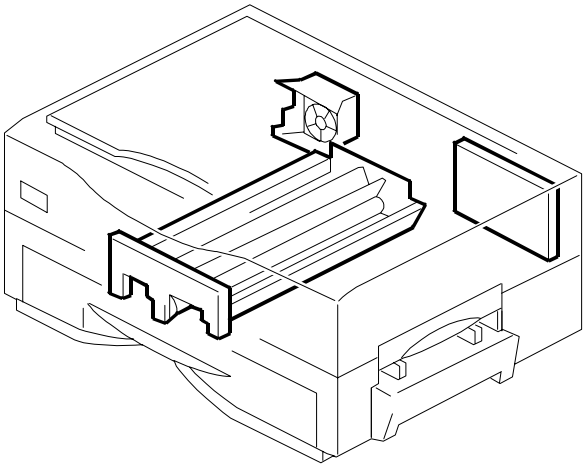

See Page 11

5. PAPER TRAY

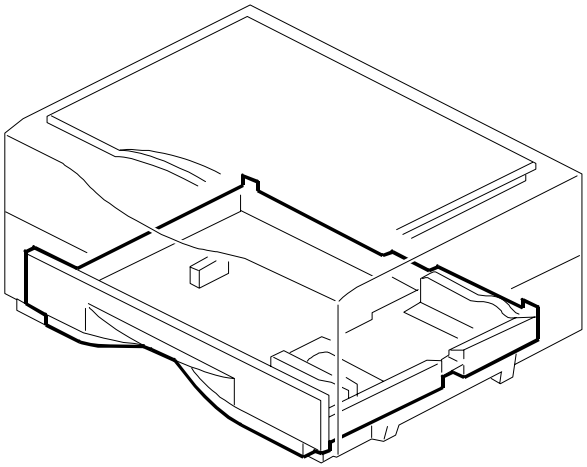

See Page 13

6. FUSING UNIT

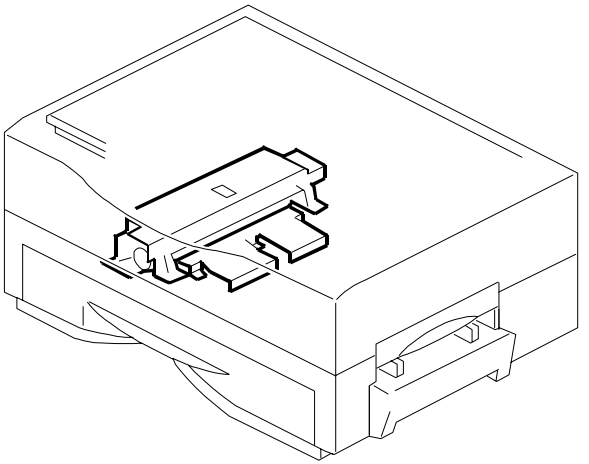

See Page 15

LOCATION OF UNIT

7. DRIVE SECTION

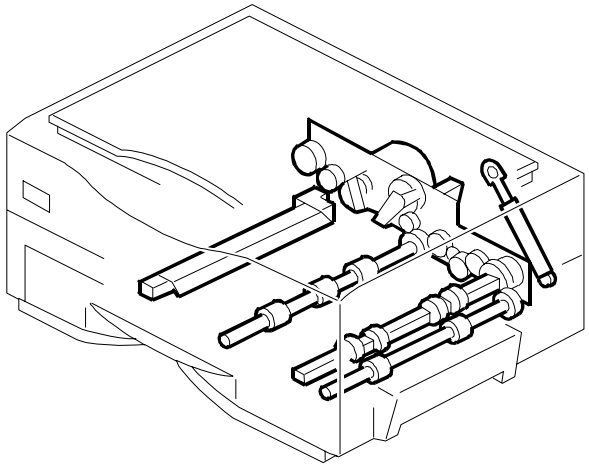

See Page 17

8. ELECTRICAL SECTION

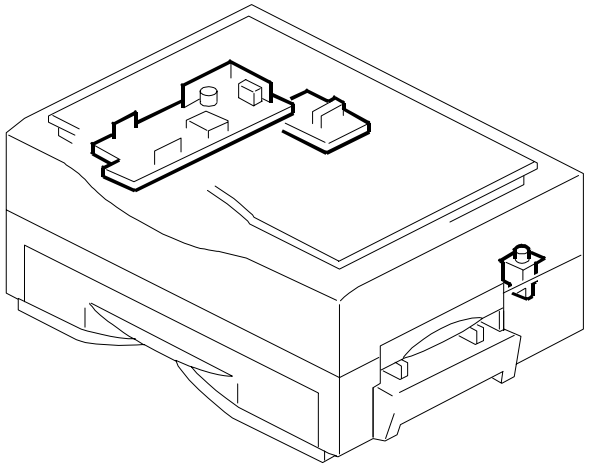

See Page 19

1. EXTERIOR

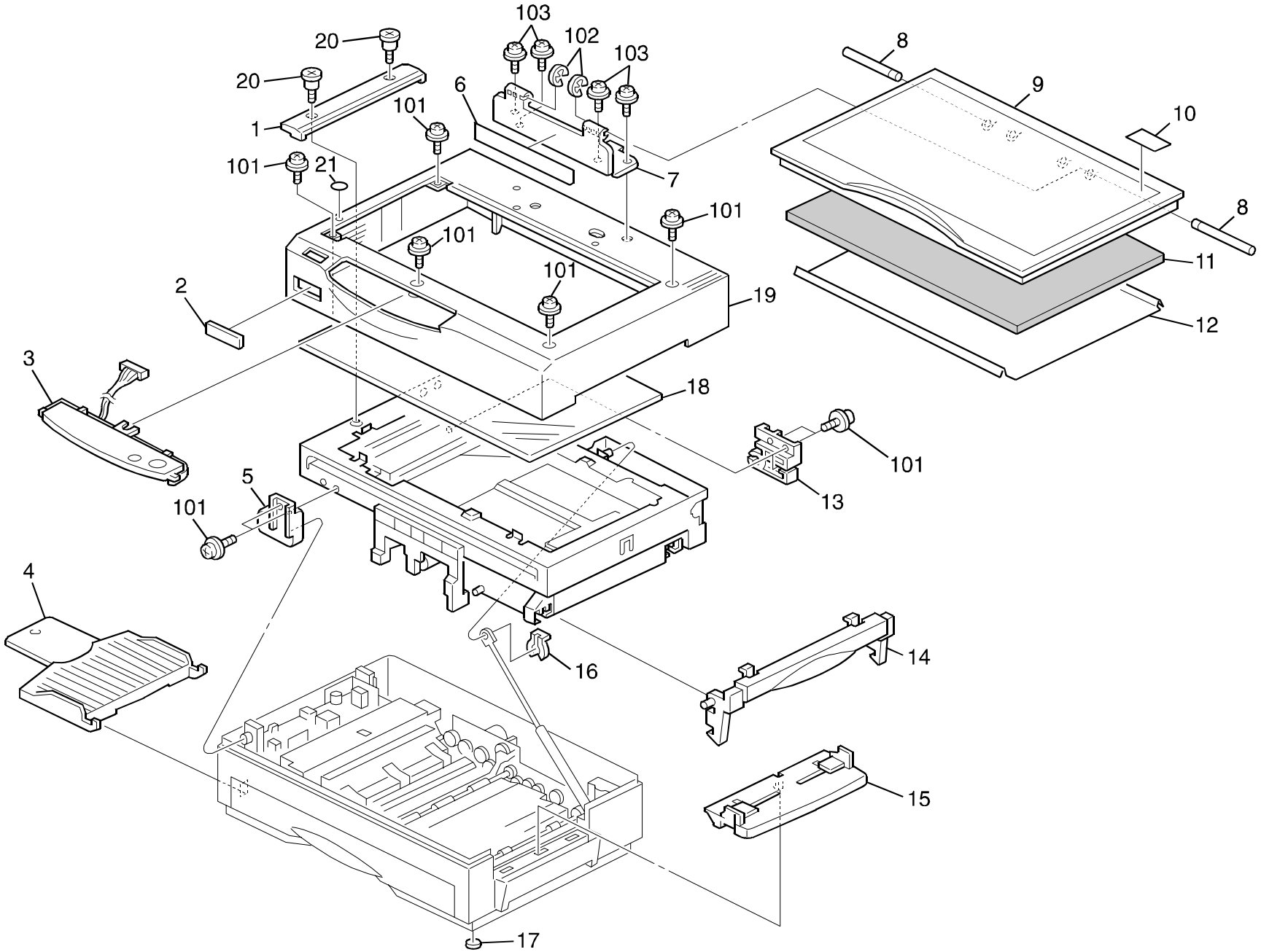

103
102
103
20
20
1
101
6
8
9
10
101
21
7
101
8
101
11
101
2
19
12
3
18
101
5
13
101
4
16
14
15
17

1. EXTERIOR

Index No.	Part No.	Description	Q'ty Per Assembly
1	A227 1892	Left Scale Plate	1
2	A226 1054	Model Name Plate (A226-17)	1
2	A226 1055	Model Name Plate (A226-26)	1
2	A226 1056	Model Name Plate (A226-27/57/23/29)	1
2	A226 1057	Model Name Plate (A226-10/22) (GES)	1
2	A226 1058	Model Name Plate (A226-10/22) (NSA)	1
2	A226 1059	Model Name Plate (A226-10/22) (REX)	1
2	A227 1053	Model Name Plate (A227-17)	1
2	A227 1054	Model Name Plate (A227-27/57/23/29)	1
2	A227 1055	Model Name Plate (A227-26)	1
2	A227 1057	Model Name Plate (A227-10/22) (GES)	1
2	A227 1058	Model Name Plate (A227-10/22) (NSA)	1
2	A227 1059	Model Name Plate (A227-10/22) (REX)	1
3	A226 1895	Operation Panel - LT(A226)	1
3	A226 1898	Operation Panel - A4(A226)	1
3	A227 1895	Operation Panel - LT(A227)	1
3	A227 1898	Operation Panel - A4(A227)	1
4	A227 1104	Copy Tray	1
5	A227 1081	Hinge - Upper Front	1
6	A227 1875	Decal - Error Indication - Russian	1
6	A227 1876	Decal - Error Indication - Portuguese	1
6	A227 1881	Decal - Error Indication - English	1
6	A227 1882	Decal - Error Indication - French	1
6	A227 1883	Decal - Error Indication - Spanish	1
6	A227 1884	Decal - Error Indication - German	1
6	A227 1885	Decal - Error Indication - Italian	1
7	A227 1769	Pressure Hinge	1
8	5216 1374	Hinge Shaft - Platen Cover	2
9	A227 1765	Platen Cover	1
10	A227 1761	Decal - Close Upper Unit	1
11	A227 1767	Pressure Pad Seal	1
12	A227 1768	Platen Sheet	1
13	A227 1082	Hinge - Upper Rear	1
14	A227 1333	Upper Release Lever	1
15	A227 2518	Manual Feed Ass'y	1

Index No.	Part No.	Description	Q'ty Per Assembly
16	5215 2621	Snap Ring - M6	1
17	A227 1052	Rubber Foot	2
18	A227 1744	Exposure Glass	1
19	A227 1891	Upper Cover	1
20	A128 1845	Stepped Screw - M5	2
21	A227 3801	Decal - Upper	1
101	0951 3008W	Philips Screw With Flat Washer - M3x8	
102	0720 0025G	Retaining Ring - 2.5	
103	0413 0082W	Tapping Screw - M3x8	

2. OPTICS SECTION 1

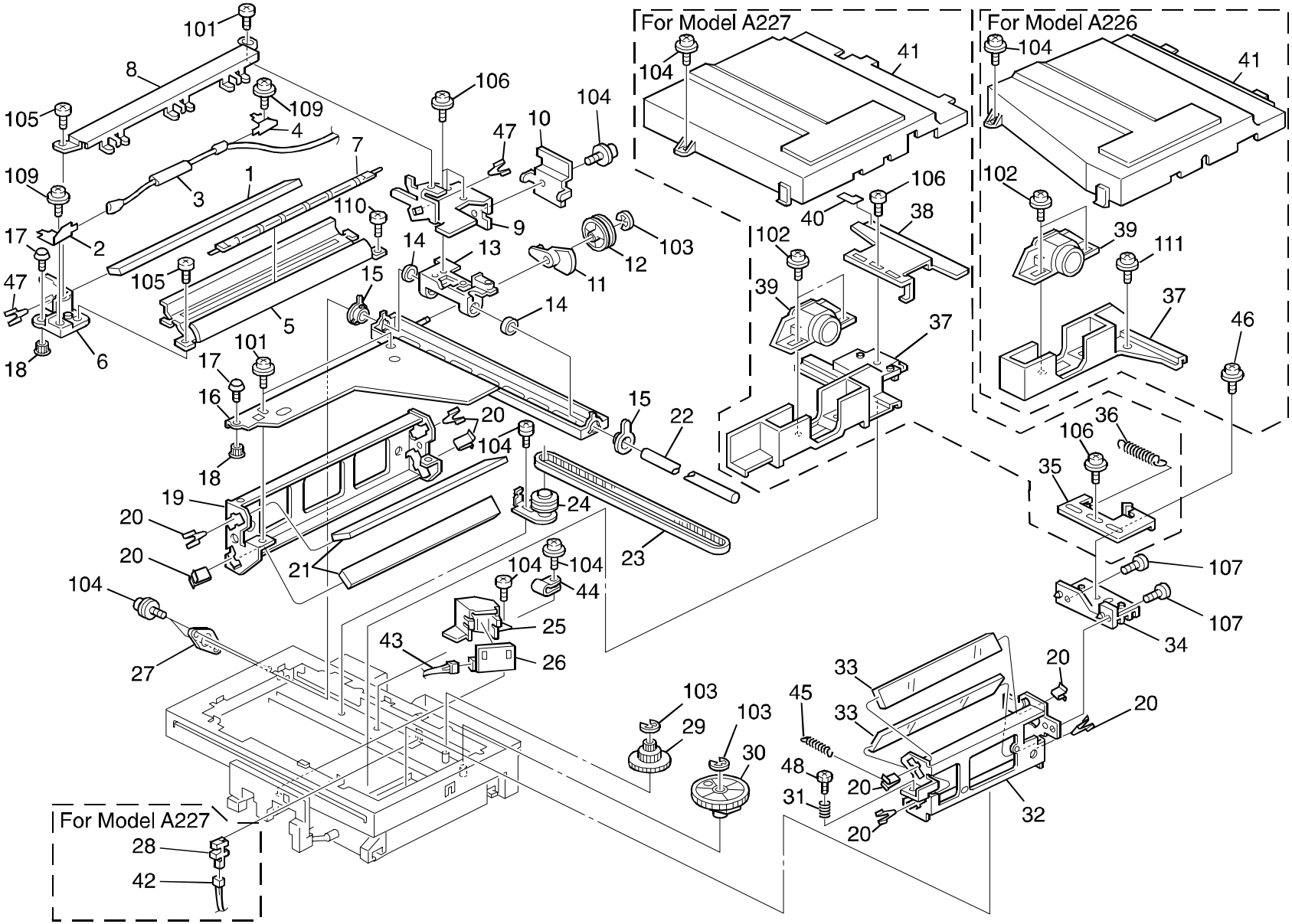

2. OPTICS SECTION 1

Index No.	Part No.	Description	Q'ty Per Assembly
1	A227 1661	1st Mirror	1
2	A227 1657	Front Terminal Plate	1
3	A227 5360	Scanner Thermal Fuse	1
4	A227 1659	Rear Terminal Plate	1
5	A227 1651	Reflector	1
6	A227 1656	Scanner Front Bracket	1
7	A227 1654	Halogen Lamp - 97V 150W (120V)	1
7	A227 1655	Halogen Lamp - 180V 210W (230V)	1
8	A227 1664	Adjust Plate	1
9	A227 1658	Scanner Rear Bracket	1
10	A227 1660	Wire Clamp Bracket	1
11	A227 1677	Harness Guide	1
12	A227 1678	Pulley - Scanner Mirror	1
13	A227 1665	Rod Guidde Bushing	1
14	A227 1762	Guide Rod Cleaner	2
15	A184 1685	2nd Slider Bushing	2
16	A227 1674	Slider Frame	1
17	A096 1873	Scanner Shoe Pin	1
18	A069 1883	Shoe - Scanner	1
19	A227 1672	2nd Mirror Bracket	1
20	A077 1690	Spring Plate - Mirror	8
21	A227 1673	2nd/3rd Bracket	2
22	A227 1733	Guide Rod Shaft	1
23	A184 1846	Timing Belt - L530	1
24	A227 1726	Belt Drive Pulley	1
25	A227 1759	ADS Cover	1
26	A227 5120	Optics Control Board	1
27	A227 1814	Guide Rod Bracket	1
28	AW02 0086	Photointerruptor	1
29	A227 1730	Lens Drive Pulley	1
30	A227 1757	Cam	1
31	A227 1705	Adjust Spring	1
32	A227 1701	3rd Scanner Bracket	1
33	A227 1707	4th/5th Mirror	2
34	A227 1702	Mirror Drive Bracket	1

Index No.	Part No.	Description	Q'ty Per Assembly
35	A227 1703	Adjust Bracket	1
36	A227 1758	Magnification Spring	1
37	A226 1823	Lens Bracket (A226)	1
37	A227 1691	Lens Bracket (A227)	1
38	A227 1695	Lens Bracket	1
39	A227 1692	Scanner Lens	1
40	A227 1696	Decal - Lens Home Position	1
41	A226 1833	Lens Cover (A226)	1
41	A227 1743	Lens Cover (A227)	1
42	A227 5315	Harness - Lens Home Position (A227)	1
43	A227 5322	Harness - ADS	1
44	A173 5401	Clamp	1
45	AA06 0267	Spring	1
46	A226 1825	Step Screw (A226)	1
47	A048 1721	Spring Plate	2
48	A153 1906	Adjust Shoe	1
101	0951 3006W	Philips Screw With Flat Washer - M3x6	
102	0965 3010B	Tapping Screw With Flat Washer M3x10	
103	0720 0040G	Retaining Ring - M4	
104	0413 0060W	Tapping Screw - M3x6	
105	0413 0062W	Tapping Screw - M3x6	
106	0413 0082W	Tapping Screw - M3x8	
107	0413 0080W	Tapping Screw - M3x8	
109	0313 0060W	Philips Pan Head Screw - M3x6	
110	0313 0040W	Philips Pan Head Screw - M3x4	
111	0951 3010W	Philips Screw With Flat Washer - M3x10	

3. OPTICS SECTION 2

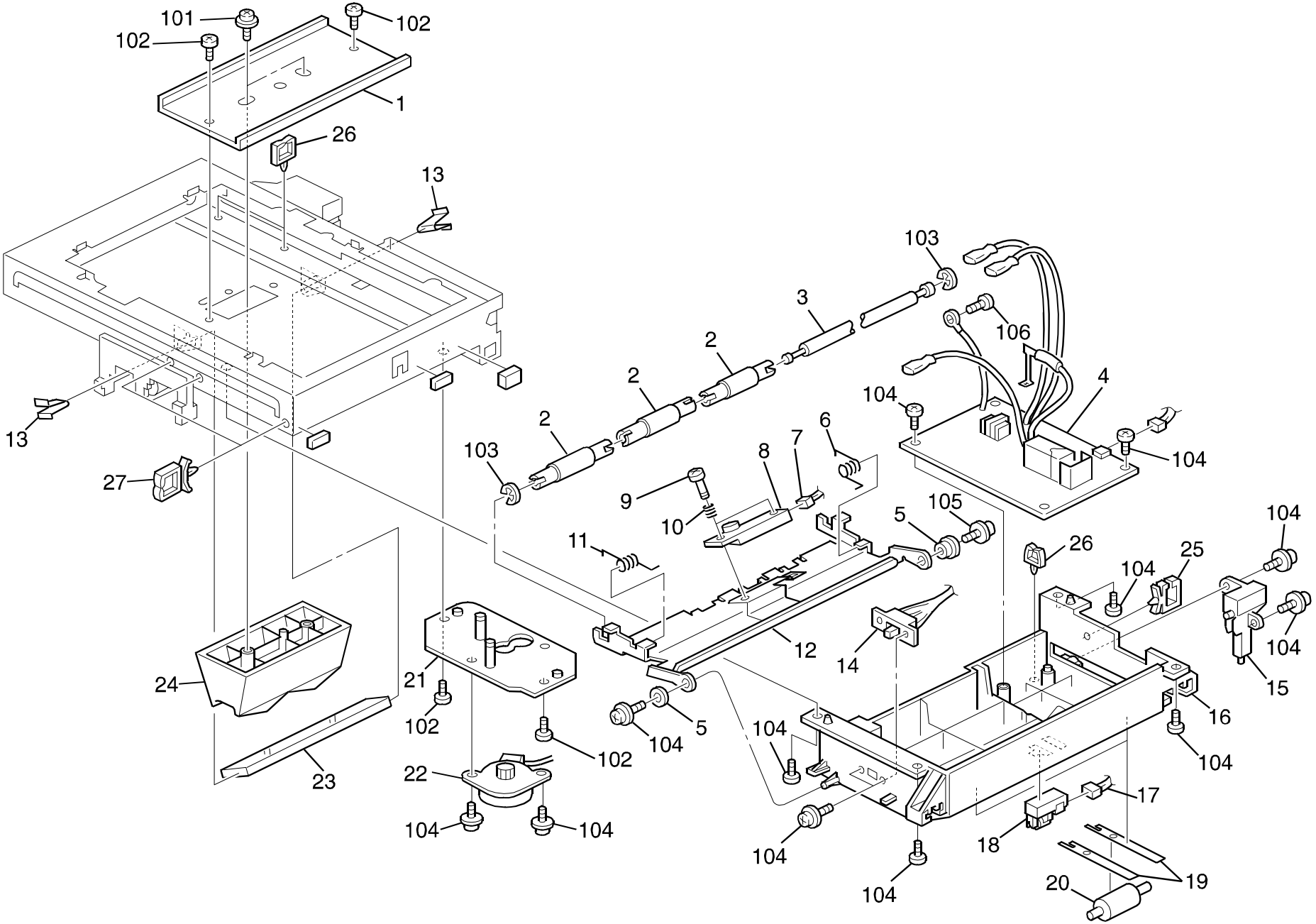

3. OPTICS SECTION 2

Index No.	Part No.	Description	Q'ty Per Assembly
1	A227 1722	Cleaner Support Bracket	1
2	A227 2573	Upper Registration Roller	3
3	A227 2572	Shaft - Upper Registration Roller	1
4	A227 5039	Power Pack	1
5	A227 2591	Registration Guide Bushing	2
6	A227 2588	Registration Roller Spring - Front	1
7	A227 5313	Harness - Toner Sensor	1
8	A227 3113	Toner End Sensor	1
9	A227 3238	Step Screw	1
10	A227 3239	Toner Sensor Spring	1
11	A227 2589	Registration Roller Spring - Rear	1
12	A227 2597	Upper Registration Guide	1
13	A048 1721	Spring Plate	2
14	A227 5312	Notch Switch	1
15	A227 2520	Transfer Terminal Holder	1
16	A227 2559	Upper Guide	1
17	A227 5314	Harness - Registration Sensor	1
18	A184 5290	Photoinerrupter	1
19	A227 2560	Pressure Spring Plate - Drive	4
20	A227 2561	Upper Niddle Roller	2
21	A227 1754	Magnification Motor Bracket	1
22	A184 5205	Scanner Motor - DC24V 96W	1
23	A227 1747	6th Mirror	1
24	A227 3171	Cleaner Barcket Plate	1
25	A227 5871	Side Wire Saddle	1
26	A128 5875	Clamp	2
27	A227 5872	Wire Saddle	1

Index No.	Part No.	Description	Q'ty Per Assembly
101	0413 0082W	Tapping Screw - M3x8	
102	0413 0060W	Tapping Screw - M3x6	
103	0720 0040G	Retaining Ring - M4	
104	0965 3008B	Tapping Screw With Washer - M3x8	
105	0965 3006W	Tapping Screw With Flat Washer - M3x6	
106	0965 3012B	Tapping Screw With Washer - M3x12	

4. OPTICS SECTION 3

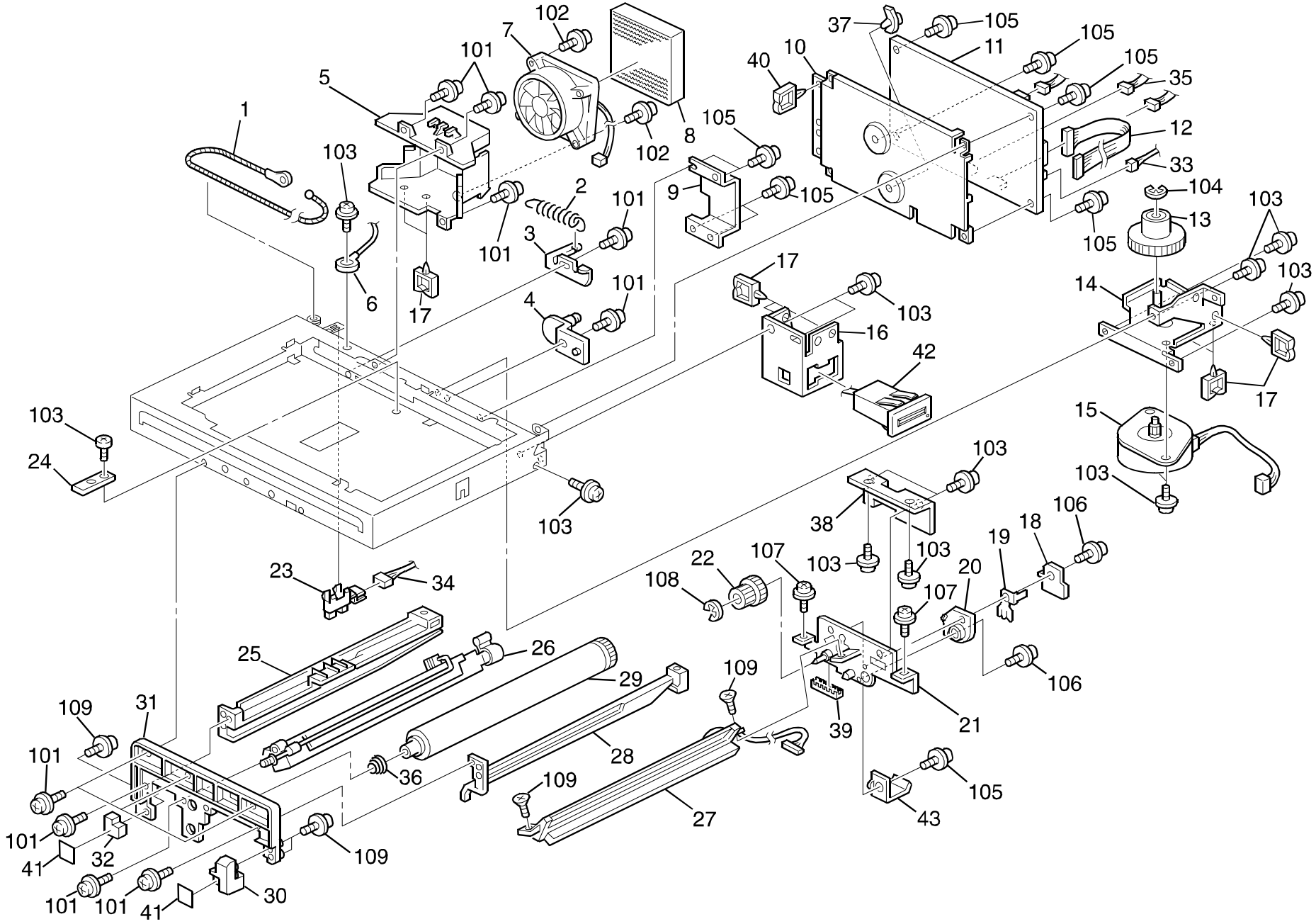

4. OPTICS SECTION 3

Index No.	Part No.	Description	Q'ty Per Assembly
1	A227 1734	Scanner Drive Wire	1
2	A227 1812	Scanner Wire Spring	1
3	A227 1817	Wire Spring Bracket	1
4	A227 1852	Gas Spring Bracket	1
5	A227 1896	Duct Bracket	1
6	A227 1740	Thermistor	1
7	A227 1841	Fan Motor	1
8	A184 1363	Ozone Filter	1
9	A227 1725	Support Bracket	1
10	A227 5650	Main Board Bracket	1
11	A226 5260	Main Control Board(A226)	1
11	A227 5160	Main Control Board(A227)	1
12	A227 5310	Harness - OP/Main	1
13	A227 1737	Scanner Motor Pulley	1
14	A227 1794	Bracket - Scanner Motor	1
15	A227 1805	Lens Drive Motor	1
16	A227 1867	Total Counter Bracket	1
17	A227 5870	Micro Wire Saddle	1
18	A227 2114	Bias Holder Cover	1
19	A227 2111	Bias Terminal Plate	1
20	A227 2110	Bias Terminal Holder	1
21	A227 2107	Rear Drum Stay	1
22	A227 2112	Idle Gear	1
23	AW02 0086	Photointerruptor	1
24	A227 1766	Bracket - 2n Clamp	1
25	A227 3501	Left Rail - Ctdm	1
26	A227 2257	Main Charger Ass'y	1
27	A226 2403	Eraser(A226)	1
27	A227 2401	Eraser(A227)	1
28	A227 3502	Right Rail - CTDM	1
29	A226 9510	OPC Drum	1
30	A227 3506	Right Guide Rail	1
31	A227 2103	Front Drum Stay	1
32	A227 3505	Left Guide Rail	1
33	A227 5311	Harness - Power Pack (CN102)	1

Index No.	Part No.	Description	Q'ty Per Assembly
34	A227 5319	Harness - Scanner Home Position (CN115)	1
35	A227 5380	Harness - OP/ADS 2 (CN109)	1
36	A227 2121	Drum Spring	1
37	A212 5803	Spacer	1
38	A227 1878	Drum Support Bracket Rear	1
39	A227 5875	Cover Bushing	1
40	A128 5876	Clamp	1
41	A227 3187	Decal - CTDM Set	2
42	AX31 0024	Total Counter	1
43	A227 3806	Spring Plate	1
101	0964 3006W	Tapping Screw With Flat Washer - M3x6	
102	0414 0202W	Tapping Screw - M4x20	
103	0413 0060W	Tapping Screw - M3x6	
104	0720 0040G	Retaining Ring - M4	
105	0951 3006B	Philips Screw With Flat Washer - M3X6	
106	0443 0060W	Hexagon Head Tapping Screw - M3x6	
107	0443 0080W	Hexagon Head Tapping Screw - M3x8	
108	0720 0030G	Retaining Ring - M3	
109	0413 0082W	Tapping Screw - M3x8	

5. PAPER TRAY

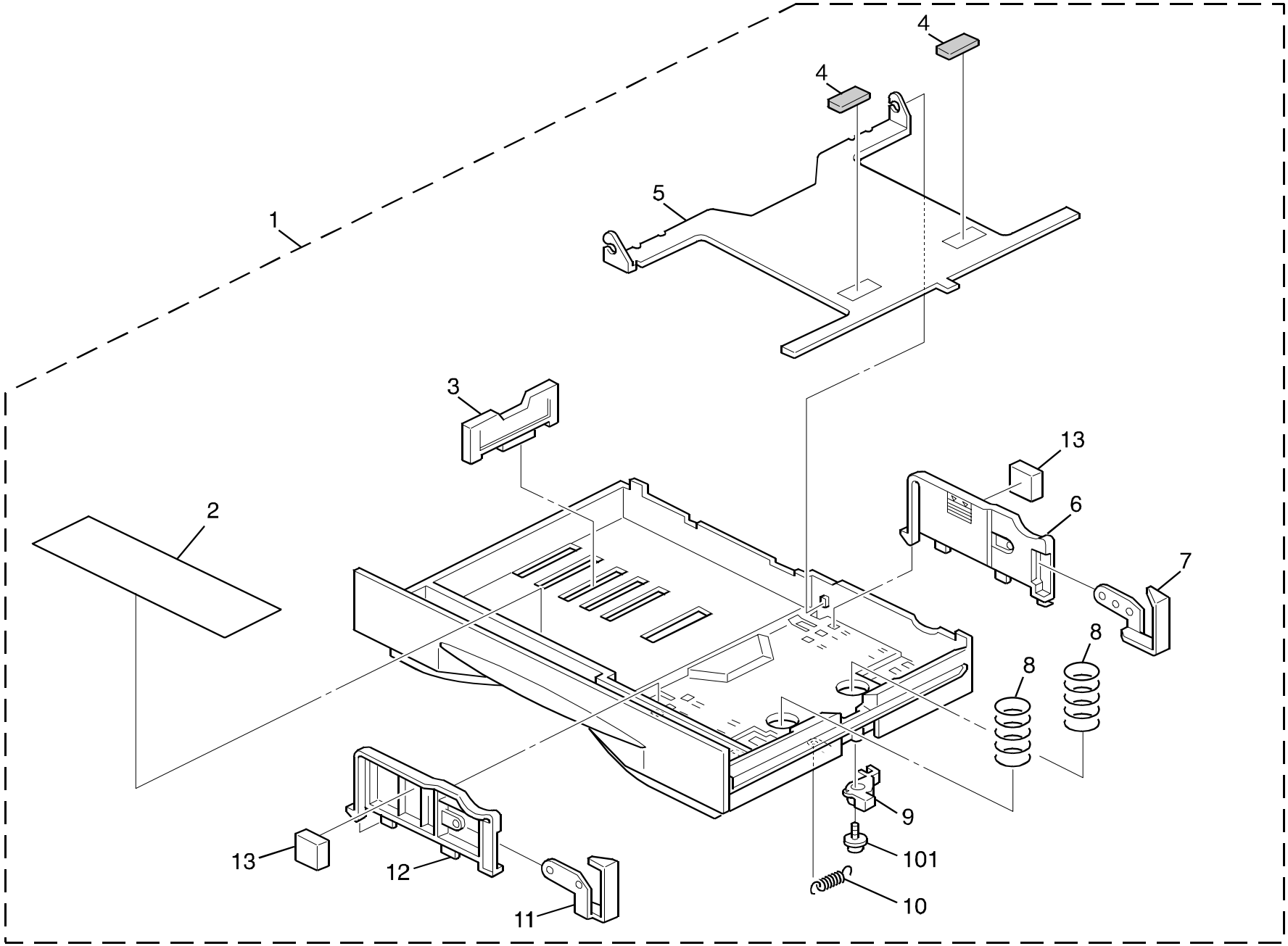

5. PAPER TRAY



Index No.	Part No.	Description	Q'ty Per Assembly
1	A227 2801	Paper Tray Ass'y - LT	1
1	A227 2802	Paper Tray Ass'y - A4	1
2	A227 2888	Decal - Paper Set	1
3	A227 2884	End Fence	1
4	A227 2858	Friction Pad	2
5	A227 2887	Bottom Plate	1
6	A227 2883	Rear Side Fence	1
7	A227 2886	Rear Corner Separator	1
8	A227 2859	Pressure Spring	2
9	A227 2862	Bottom Plate Stopper	1
10	A227 2863	Stopper Spring	1
11	A227 2885	Front Corner Separator	1
12	A227 2882	Front Side Fence	1
13	A227 2880	Side Fence Spacer - A4	2

Index No.	Part No.	Description	Q'ty Per Assembly
101	0965 3008B	Tapping Screw With Washer - M3x8	

6. FUSING UNIT

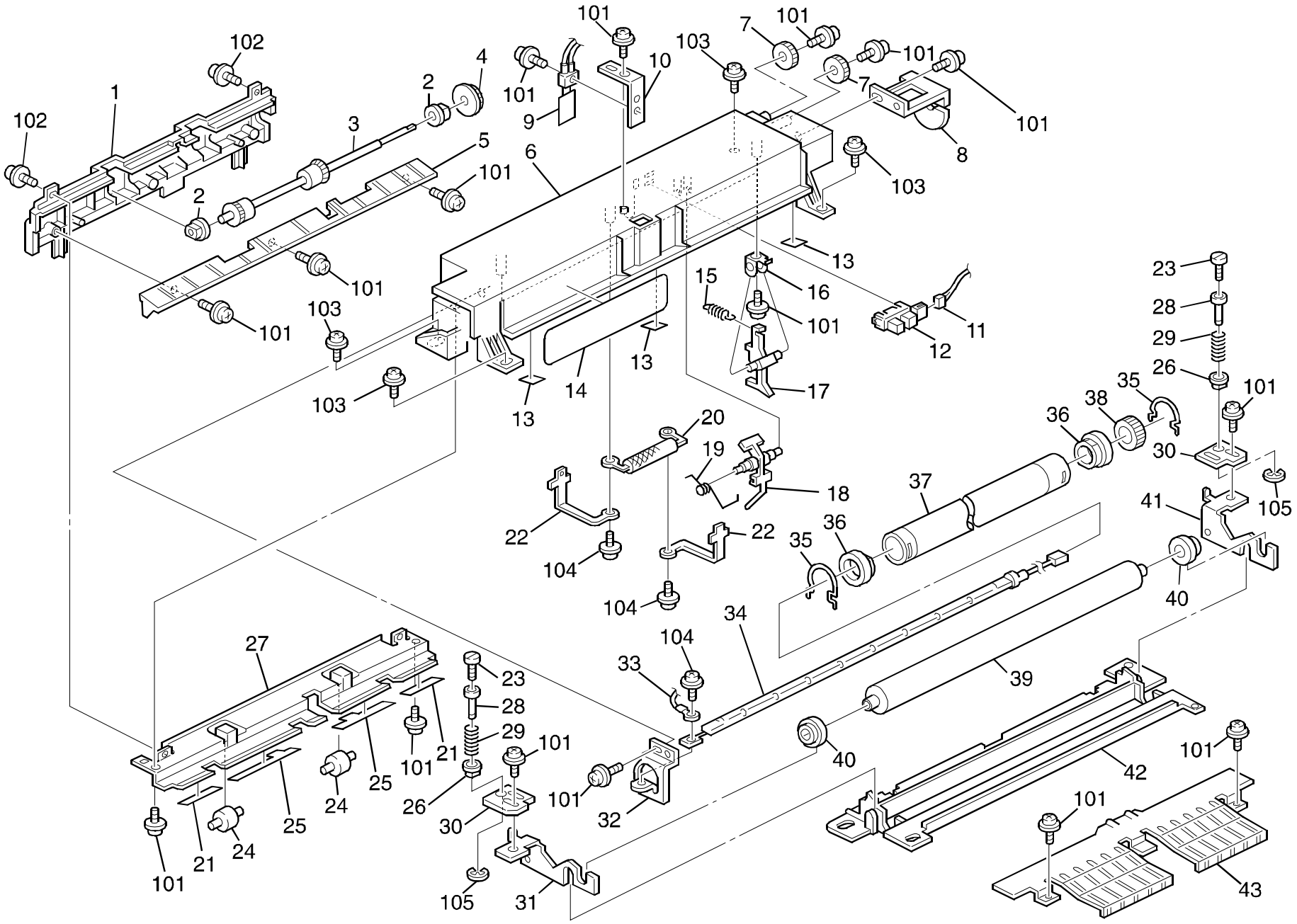

6. FUSING UNIT

Index No.	Part No.	Description	Q'ty Per Assembly
1	A227 4152	Paper Exit Cover	1
2	A227 4154	Bushing	2
3	A227 4153	Paper Exit Roller - Lower	1
4	A227 4155	Gear - 20Z	1
5	A227 4151	Paper Exit Guide - Lower	1
6	A227 4051	Upper Fusing Cover	1
7	A227 4098	Gear - 15Z	2
8	A227 4101	Rear Lamp Holder	1
9	A184 4082	Thermistor	1
10	A227 4092	Thermistor Bracket	1
11	A227 5330	Harness - Exit Sensor Connector (Relay)	1
12	AW02 0086	Photointerruptor	1
13	A227 4053	Mylar - Fusing Cover	3
14	A227 4100	Decal - High Temperature Caution	1
14	A227 4102	Decal - High Temperature Caution - Russian	1
15	A227 4099	Stripper Spring	3
16	A227 4093	Stripper Holder	3
17	5214 4121	Hot Roller Stripper	3
18	A227 4068	Paper Exit Feeler	1
19	AA06 6210	Spring - Feeler	1
20	A227 4105	Thermal Fuse	1
21	A227 4107	Mylar - Side Fusing Bracket	2
22	A227 4059	Bracet - Terminal Fuse	2
23	A227 4208	Fusing Step Screw	2
24	AF04 0031	Driven Roller	2
25	A227 4106	Mylar - Center Fusing Bracket	2
26	AA08 2047	Bushing	2
27	A227 4096	Bracket - Fusing Unit	1
28	A227 4209	Fusing Pressure Shaft	2
29	A227 4210	Fusing Pressure Spring	2
30	A227 4205	Pressure Lever Bracket	2
31	A227 4104	Pressure Roller Bracket - Front	1
32	A227 4062	Front Lamp Holder	1
33	A227 5336	Harness - User Terminal	1
34	A227 4061	Fusing Lamp - 700W 115V	1

Index No.	Part No.	Description	Q'ty Per Assembly
34	A227 4075	Fusing Lamp - 700W 230V	1
35	A227 4054	Stopper - Fusing Roller Bushing	2
36	A227 4321	Fusing Roller Bushing	2
37	A227 4052	Fusing Roller	1
38	A227 4055	Gear - 31Z	1
39	A227 4069	Pressure Roller	1
40	A227 4071	Pressure Roller Bearing	2
41	A227 4103	Pressure Roller Bracket - Rear	1
42	A227 4201	Lower Fusing Cover	1
43	A227 4076	Entrance Guide	1
101	0965 3008B	Tapping Screw With Washer - M3x8	
102	0965 3006W	Tapping Screw With Flat Washer - M3x6	
103	0965 4012W	Tapping Screw With Flat Washer - M4x12	
104	0965 3006B	Tapping Screw With Flat Washer - M3x6	
105	0720 0060G	Retaining Ring - M6	

7. DRIVE SECTION

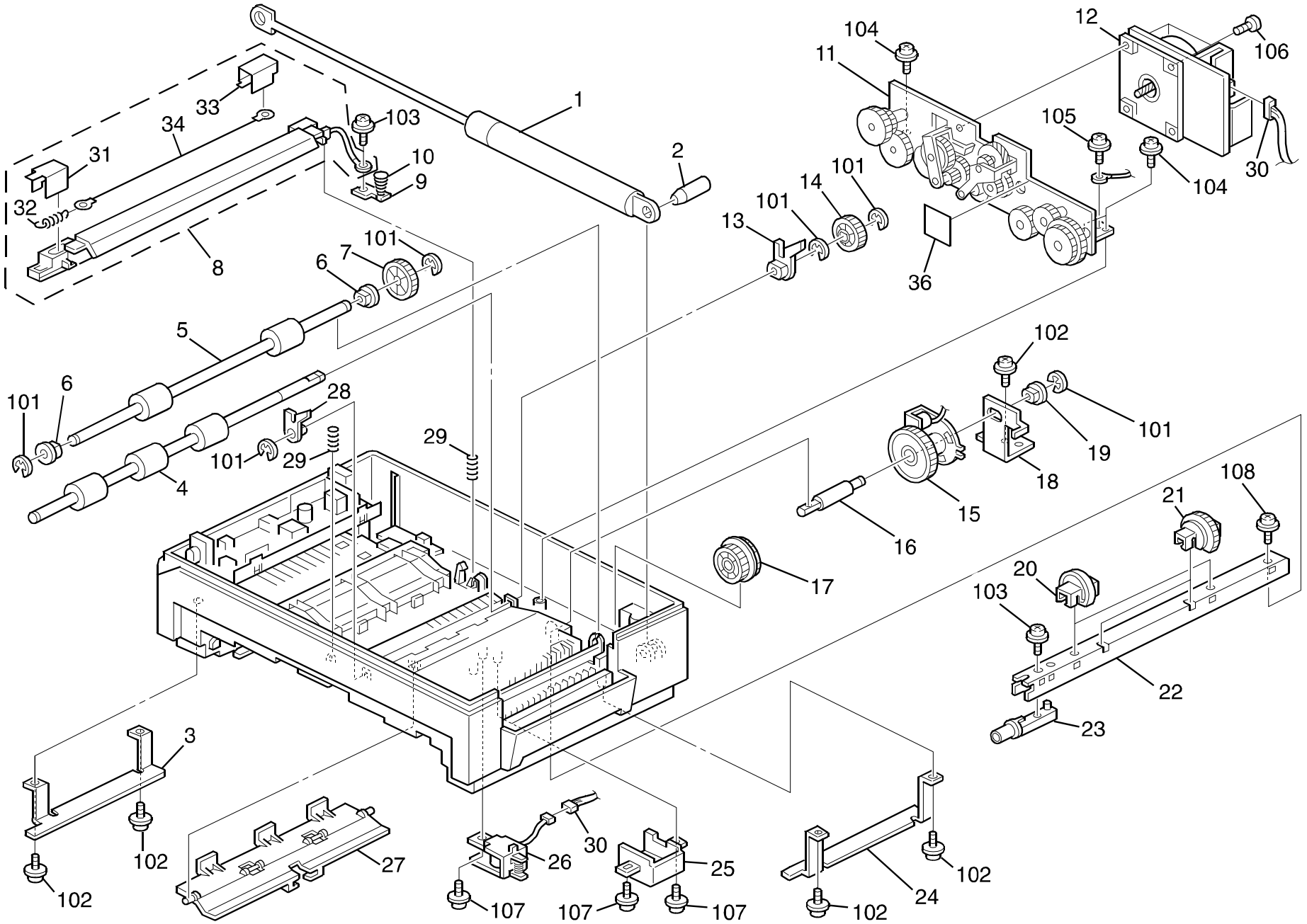

7. DRIVE SECTION

Index No.	Part No.	Description	Q'ty Per Assembly
1	A227 1355	Air Spring	1
2	A227 1325	Lower Hinge Shaft	1
3	A227 1171	Left Rail	1
4	A227 2551	Lower Registration Roller	1
5	A227 2557	Lower Middle Roller	1
6	5053 0447	Bushing - 6mm	2
7	A227 1204	Gear - Z26	1
8	A227 2254	Transfer Ass'y	1
9	A227 1919	Terminal Bracket	1
10	AA06 3036	Spring - Transport Roller	1
11	A227 1209	Drive Unit	1
12	A227 1201	Motor - DC24V	1
13	A227 2593	Rear Registration Bushing	1
14	A227 1203	Registration Gear - 29Z	1
15	AX20 0124	Magnetic Clutch	1
16	A227 2579	Shaft - Feed Roller Clutch	1
17	A227 1206	Idle Gear - Z29/Z26	1
18	A227 2563	Feed Roller Bracket	1
19	A227 2577	Feed Roller Bushing	1
20	A227 2587	Feed Roller Guide	2
21	A227 2555	Feed Roller	2
22	A227 2567	Feed Roller Shaft	1
23	A227 2566	Feed Roller Boss	1
24	A227 1172	Right Rail	1
25	A227 1173	Solenoid Cover	1
26	A227 2553	Paper Feed Solenoid	1
27	A227 2552	Registration Stopper	1
28	A227 2592	Front Registration Bushing	1
29	A227 1907	Transfer Spring	2
30	A227 5380	Harness - OP/ADS 2	1
31	A227 1908	End Block Mylar - Front	1
32	A227 1910	Spring - Main Corona	1
33	A227 1914	End Block Mylar - Rear	1
34	A227 1906	Charger Wire - Transfer	1
35	A227 1909	Mylar - Transfer Ass'y	1

Index No.	Part No.	Description	Q'ty Per Assembly
36	A227 1234	Seal - Drive	1
101	0720 0040G	Retaining Ring - M4	
102	0965 4008W	Tapping Screw With Flat Washer - M4x8	
103	0965 3008B	Tapping Screw With Washer - M3x8	
104	0965 4010W	Tapping Screw With Flat Washer - M4x10	
105	0353 0060W	Philips Pan Head Screw - M3x6	
106	0950 4006B	Tapping Screw With Flat Washer - M4x6	
107	0965 3008W	Tapping Screw With Flat Washer - M3x8	
108	0951 3006W	Philips Screw With Flat Washer - M3x6	

8. ELECTRICAL SECTION

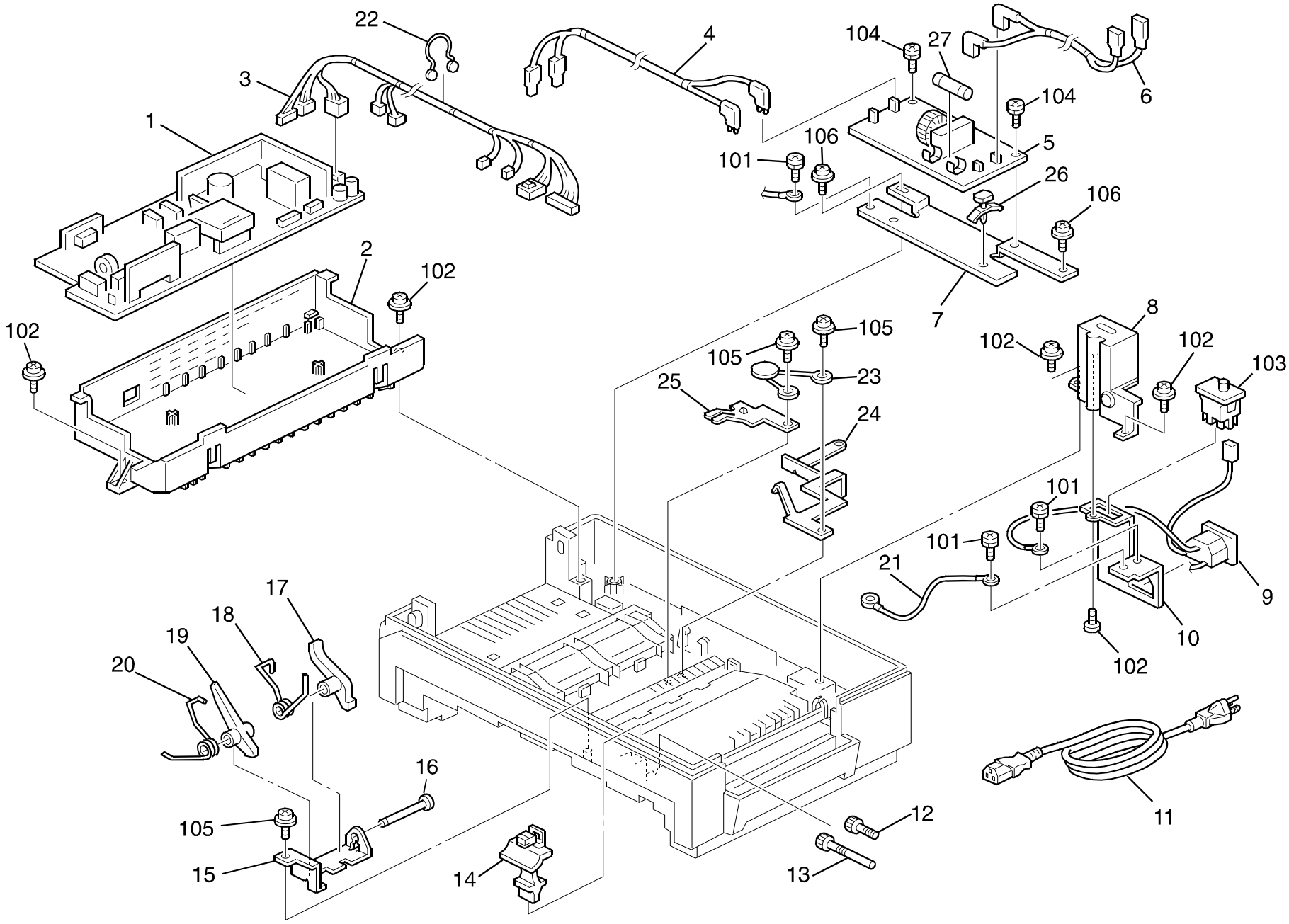

8. ELECTRICAL SECTION

Index No.	Part No.	Description	Q'ty Per Assembly
1	A227 5620	Power Supply Board - 120V	1
1	A227 5622	Power Supply Board - 230V	1
2	A227 1251	Left Cover	1
3	A227 5370	Harness - Psu/Exit/Fuser	1
4	A227 5340	Harness - AC Outlet - 120V	1
4	A227 5341	Harness - AC Outlet - 230V	1
5	A227 5621	Noise Filter - 120V	1
5	A227 5623	Noise Filter - 230V	1
6	A227 5332	Harness - Interlock - 120V	1
6	A227 5339	Harness - Interlock - 230V	1
7	A227 1174	Noise Filter Bracket	1
8	A227 1163	Interlock Switch Cover	1
9	A227 5335	Harness - AC Receptacle - 120V	1
9	A227 5338	Harness - AC Receptacle - 230V	1
10	A227 1162	Interlock Switch Bracket	1
11	A227 5026	Power Cord - 230V (Except - 27)	1
11	A227 5471	Power Cord - 120V	1
12	A227 1871	Scanner Stopper - 1st/2nd	1
13	A227 1872	Scanner Stopper - 4th/5th Mirror	1
14	A227 1175	Cleaner Holder	1
15	A227 3235	Shutter Arm Bracket	1
16	A227 3236	Shutter Arm Shaft	1
17	A227 3233	Pressure Arm - Registration Bracket	1
18	A227 2617	Spring - Up - R, Leveer	1
19	A227 3234	Pressure Arm - Shutter Lever	1
20	A227 2618	Shutter Lever Spring	1
21	A227 5334	Harness - Rame Gnd Terminal	1
22	A227 5874	Twist Lock Support	1
23	A227 1917	Varistor - Transfer	1
24	A227 1918	Earth Plate - Guide	1
25	A227 1913	Earth Plate	1
26	A128 5878	Spacer - 6.4mm	1
27	A227 5631	Fuse - 15A 125V (120V)	1
27	A227 5633	Fuse - 6.3A 250V (230V)	1

Index No.	Part No.	Description	Q'ty Per Assembly
101	0950 4006M	Philips Screw With Flat Washer - M4x6	
102	0965 3010W	Tapping Screw With Flat Washer - M3x10	
103	1204 2334	Interlock Switch	
104	0965 4010W	Tapping Screw With Flat Washer - M4x10	
105	0965 3008B	Tapping Screw With Washer - M3x8	
106	0965 3006B	Tapping Screw With Flat Washer - M3x6	

9. MAIN CONTROL BOARD

*1 ---- A227 only
*2 ---- A226 only

CAPACITOR

SYMBOL NO.	INDEX NO.
C101	145
C102	145
C103	144
C104	143
C105	143
C106	143
C107	148
C108	148
C109 *1	148
C110 *1	148

SYMBOL NO.	INDEX NO.
C111	149
C112	147
C113	147
C114	148
C115 *1	149
C116 *1	148
C117	148
C118	147
C119	147
C120	148

SYMBOL NO.	INDEX NO.
C121	147
C122	148
C123	148
C124	147
C125	146
C126 *1	149
C127	4
C128	148
C129	148
C130	149

SYMBOL NO.	INDEX NO.
C131	147
C132	146
C133	149
C134	148
C135	148
C136	149
C137	125
C138	125
C139	149
C140	148

SYMBOL NO.	INDEX NO.
C141	149
C142	148
C143	149
C144	149
C145	149
C146	149
C147	125
C148	125
C150	149
C151	149

SYMBOL NO.	INDEX NO.
C152	149
C250	148
C251	147
C252 *1	146
C253 *1	146
C254 *1	146
C255 *1	146
C256 *1	146
C257 *1	146

CONNECTOR

SYMBOL NO.	INDEX NO.
CN105	102
CN114	104
CN117	103

DIODE

SYMBOL NO.	INDEX NO.
D100 *2	150
D101 *2	150
D102 *2	150
D103 *2	150
D104	110

IC

SYMBOL NO.	INDEX NO.
IC100	116
IC101 *1	117
IC102 *1	120
IC103	119
(Socket)	105
IC104 *1	114
IC105	3
(Socket)	1
IC106 *1	113
IC107	2

SYMBOL NO.	INDEX NO.
IC108	115
IC110	112
IC112	122
IC113	121
IC114	118

JP

SYMBOL NO.	INDEX NO.
JP201	101

OSC

SYMBOL NO.	INDEX NO.
OSC100	123

RESISTOR

SYMBOL NO.	INDEX NO.
R100	124
R101	124
R102	133
R103	133
R104	128
R105 *1	133
R106 *1	128
R107	133
R108	128
R109	133

SYMBOL NO.	INDEX NO.
R110	128
R111 *1	129
R112 *1	129
R113 *1	129
R114 *1	129
R115	133
R116	133
R117	126
R118	126
R119	133

SYMBOL NO.	INDEX NO.
R120	129
R121	133
R122	129
R123	129
R124	133
R125	133
R126	129
R127	129
R128	133
R129	133

RESISTOR

SYMBOL NO.	INDEX NO.
R130	133
R131	133
R132	128
R133	128
R134 *2	126
R135	128
R136 *1	128
R137 *2	126
R138 *1	133
R140 *2	126

SYMBOL NO.	INDEX NO.
R141 *1	133
R142 *1	133
R143	133
R144	133
R145	133
R146	133
R147	133
R148	133
R149	130
R150 *1	135

SYMBOL NO.	INDEX NO.
R150 *2	126
R151 *1	135
R151 *2	126
R152 *1	135
R152 *2	126
R154 *1	135
R154 *2	126
R155 *1	135
R155 *2	126
R156	133

SYMBOL NO.	INDEX NO.
R157	133
R158	133
R159	133
R160	133
R161	133
R162	133
R163	126
R164	128
R165	133
R166	126

SYMBOL NO.	INDEX NO.
R167	126
R168	133
R169	133
R170	133
R171	133
R172	126
R173	133
R174 *2	133
R176	126
R177	129

SYMBOL NO.	INDEX NO.
R178	129
R179	126
R180	128
R181	129
R182	126
R183	134
R184	131
R185 *1	128
R186	129
R187	141

SYMBOL NO.	INDEX NO.
R188	138
R189	134
R190	131
R191 *1	129
R192	132
R193	127
R194	126
R195	134
R196	142
R197	140

SYMBOL NO.	INDEX NO.
R198	129
R199	139
R200	136
R201	126
R202	128
R203	137
R204	128
R205	134
R206	126
R207	129

SYMBOL NO.	INDEX NO.
R208	133
R209	129
R210	126
R211 *1	126
R212	137
R213	137
R214	129
R216	126
R217	126
R218	126

SYMBOL NO.	INDEX NO.
R219	136
R220	129
R221	129
R222	128
R223	128
R224	129
R225	129
R226	126
R227 *1	135
R228 *1	135

SYMBOL NO.	INDEX NO.
R229 *1	135
R230 *1	135

TRANSISTOR

SYMBOL NO.	INDEX NO.
Q100	106
Q101 *1	106
Q102	106
Q103	106
Q104	106
Q105	107

VR

SYMBOL NO.	INDEX NO.
VR100	5

ZD

SYMBOL NO.	INDEX NO.
ZD100 *1	108
ZD101	109
ZD102	111

9. MAIN CONTROL BOARD

Index No.	Part No.	Description	Q'ty Per Assembly
*	A226 5260	Main Control Board(A226)	1
*	A227 5160	Main Control Board(A227)	1
1	A077 5702	IC Socket - 28P	1
2	A184 5105	IC - RF5A93	1
3	A227 2384	IC - PROM	1
4	A227 4731	Capacitor - 0.047μF10% 50V	1
5	A227 5399	Variable Resistor - GF06UT2-100K	1
101	1002 0307	Jumper Wire	
102	1102 4201	Connector - 2P	
103	1102 5303	Connector - 4P	
104	1103 1772	Pin Header - 6P	
105	1104 0511	IC SOCKET - 8P - DICF-8CS-E	
106	1400 0369	Transidtor - 2SA1213Y	
107	1400 0558	Transidtor - 2SD780	
108	1402 0277	Zener Diode - 1Z12	
109	1402 0430	Zener Diode - BZ-071	
110	1402 0478	Diode - 1SS226TE85L	
111	1402 1125	Zener Diode - 1W - RD33FB2	
112	1407 2187	TTLIC - SN74LS07NS	
113	1407 2344	IC - TD62382F	
114	1407 3173	Driver - 16BIT - M66311FP	
115	1407 3764	IC - TC7SU04F	
116	1407 3857	Transidtor - ARRAY - TD62381F	
117	1407 4316	IC - TD52308BF	

Index No.	Part No.	Description	Q'ty Per Assembly
118	1407 4642	IC - MTD1110	
119	1407 4662	EEPROM - IS93C46-3I	
120	1407 4672	TTL - HD74LS368FP	
121	1408 0398	Comparator - NJM2903M	
122	1408 0611	IC - 3771	
123	1503 0563	Oscillator - 9.83MTZ040	
124	1601 5295	Resistor - 0.47Ω ±2% 1W	
125	1605 0305	Capacitor - 3300pF 50V ±10%	
126	1633 0000	Resistor - 0 Ω 1/10W	
127	1630 1101	Resistor - 100 Ω 1/4W ±5%	
128	1630 3102	Resistor - 1KΩ 1/10W ±5%	
129	1630 3103	Resistor - 10KΩ 1/10W ±5%	
130	1630 3104	Resistor - 100K Ω 1/10W ±5%	
131	1630 3105	Resistor - 1M Ω ±5% 1/10W	
132	1630 3222	Resistor - 2.2KΩ 1/10W ±5%	
133	1630 3223	Resistor - 22KΩ - 1/10W	
134	1630 3472	Resistor - 4.7KΩ 1/10W ±5%	
135	1630 3680	Resistor - 68 Ω ±5% 1/10W	
136	1630 3752	Resistor - 7.5K Ω ±5% 1/10W	
137	1633 1001	Resistor - 1K Ω ±1% 1/10W	
138	1633 1002	Resistor - 10K Ω ±1% 1/10W	
139	1633 1960	Resistor - 196 Ω 1/10W ±1%	
140	1633 3321	Resistor - 3.32K Ω ±1% 1/10W	
141	1633 3901	Resistor - 3.9 Ω ±1% 1/10W	
142	1633 3920	Resistor - 392Ω±1% 1/10W	
143	1640 5101	Capacitor - 100μF±20% 50V	
144	1640 5109	Capacitor - 1μF- ±20% - 50V	
145	1642 5100	Capacitor - 10μF±20% 50V	
146	1660 3101	Capacitor - 100pF 50V	
147	1660 3471	Capacitor - 470pF 50V	
148	1660 7103	Capacitor - 10000pF 50V	
149	1660 7104	Capacitor - 100000pF 50V	
150	1401 0611	Diode - ISI588	

10. DECAL AND DOCUMENT

1

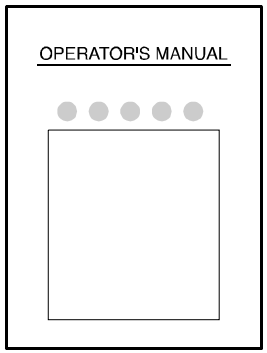

3

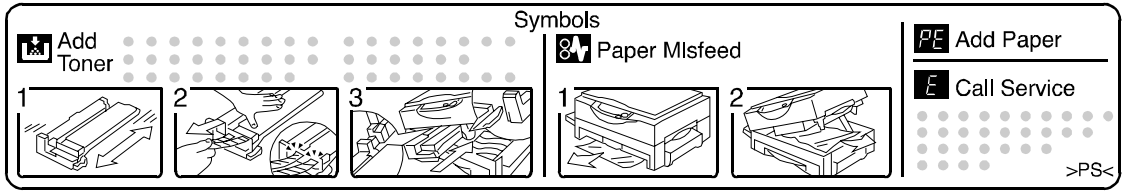

2

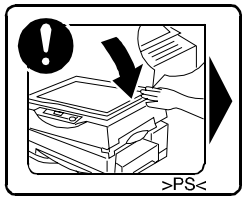

4

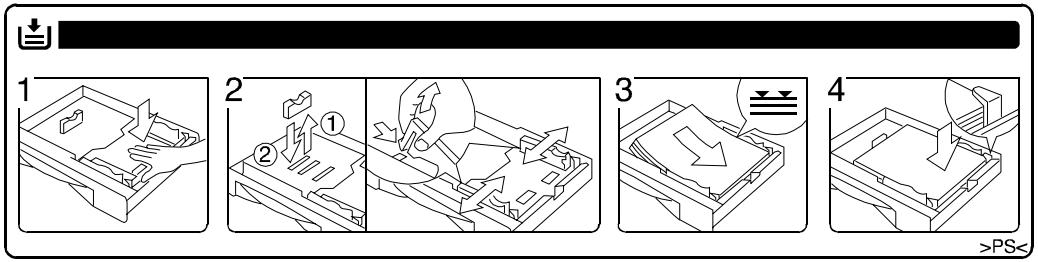

5

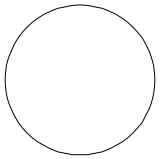

6

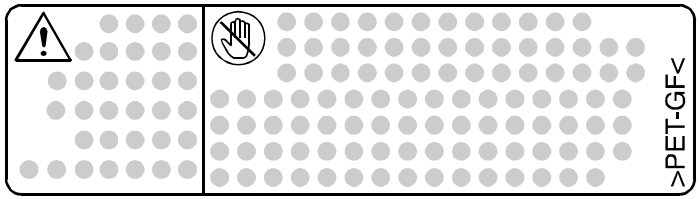

7

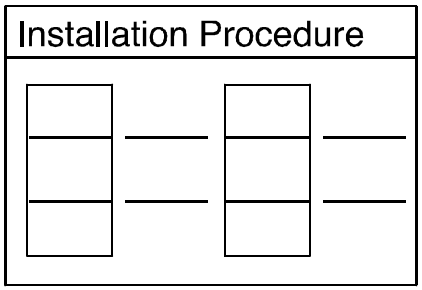

8

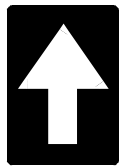

10. DECAL AND DOCUMENT

Index No.	Part No.	Description	Q'ty Per Assembly
1	A226 8608	Operator's Manual - English (-29)	1
1	A226 8637	Operator's Manual - English (-57)	1
1	A226 8638	Operator's Manual - Russian (-23)	1
1	A226 8642	Operator's Manual - French (-17)	1
1	A226 8644	Operator's Manual - Spanish (-17)	1
1	A226 8647	Operator's Manual - English (-17)	1
1	A226 8660	Operator's Manual - English (-26)	1
1	A226 8690	Operator's Manual - English (-22)	1
1	A226 8697	Operator's Manual - English (-10)	1
2	A227 1761	Decal - Close Upper Unit	1
3	A227 1881	Decal - Error Indication - English	1
3	A227 1882	Decal - Error Indication - French	1
3	A227 1883	Decal - Error Indication - Spanish	1
3	A227 1884	Decal - Error Indication - German	1
3	A227 1885	Decal - Error Indication - Italian	1
4	A227 2888	Decal - Paper Set	1
5	A227 3801	Decal - Upper	1
6	A227 4100	Decal - High Temperature Caution	1
6	A227 4102	Decal - High Temperature Caution - Russian	1
7	A227 8600	Installation Procedure - English	1
7	A227 8601	Installation Procedure - German	1
7	A227 8602	Installation Procedure - French	1
7	A227 8603	Installation Procedure - Italian	1
7	A227 8604	Installation Procedure - Spanish	1
7	A227 8636	Installation Procedure - Portuguese	1
7	A227 8638	Installation Procedure - Russian	1
7	A227 8642	Installation Procedure - French (-17)	1
7	A227 8644	Installation Procedure - Spanis (-17)	1
7	A227 8647	Installation Procedure - English (-17)	1
8	A227 3187	Decal - CTDM Set	2

Index No.	Part No.	Description	Q'ty Per Assembly

11. SPECIAL TOOLS

1 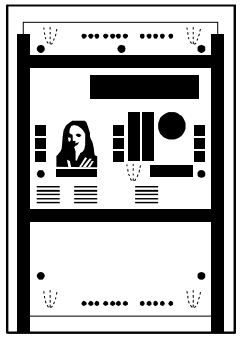	2 	3 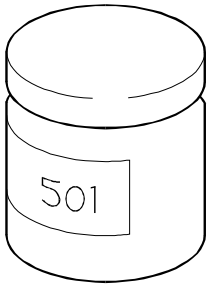	4 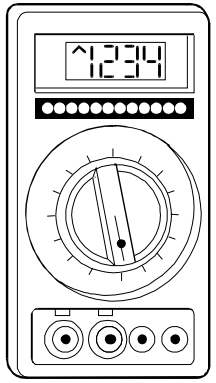
5 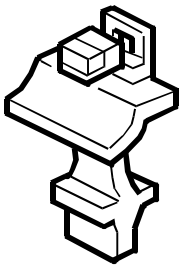	6 	7 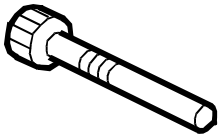	8 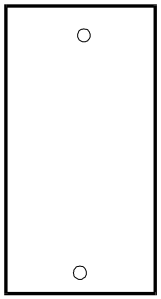

11. SPECIAL TOOLS

Index No.	Part No.	Description	Q'ty Per Assembly
1	5214 9500	Test Chart OS-A4 (10 pcs/set)	1
1	5214 9501	Test Chart OS-A4 (100 pcs/set)	1
2	5442 9103	Launa Oil 40	1
3	5203 9501	Grease 501	1
4	5420 9507	Digital Multimeter - Beckman	1
5	A227 1175	Cleaner Holder	1
6	A227 1871	Scanner Stopper - 1st/2nd	1
7	A227 1872	Scanner Stopper - 4th/5th Mirror	1
8	A227 8610	Scanner Stopper Tag	1

Index No.	Part No.	Description	Q'ty Per Assembly

PARTS INDEX

Part No.	Description	Page and Index No.
A226 1054	Model Name Plate (A226-17)	5- 2
A226 1055	Model Name Plate (A226-26)	5- 2
A226 1056	Model Name Plate (A226-27/57/23/29)	5- 2
A226 1057	Model Name Plate (A226-10/22) (GES)	5- 2
A226 1058	Model Name Plate (A226-10/22) (NSA)	5- 2
A226 1059	Model Name Plate (A226-10/22) (REX)	5- 2
A226 1823	Lens Bracket (A226)	7- 37
A226 1825	Step Screw (A226)	7- 46
A226 1833	Lens Cover (A226)	7- 41
A226 1895	Operation Panel - LT(A226)	5- 3
A226 1898	Operation Panel - A4(A226)	5- 3
A226 2403	Eraser(A226)	11- 27
A226 5260	Main Control Board(A226)	21- *
A226 5260	Main Control Board(A226)	11- 11
A226 8608	Operator's Manual - English (-29)	23- 1
A226 8637	Operator's Manual - English (-57)	23- 1
A226 8638	Operator's Manual - Russian (-23)	23- 1
A226 8642	Operator's Manual - French (-17)	23- 1
A226 8644	Operator's Manual - Spanish (-17)	23- 1
A226 8647	Operator's Manual - English (-17)	23- 1
A226 8660	Operator's Manual - English (-26)	23- 1
A226 8690	Operator's Manual - English (-22)	23- 1
A226 8697	Operator's Manual - English (-10)	23- 1
A226 9510	OPC Drum	11- 29

Part No.	Description	Page and Index No
AA06 0267	Spring	7- 45
AA06 3036	Spring - Transport Roller	17- 10
AA06 6210	Spring - Feeler	15- 19
AA08 2047	Bushing	15- 26
AF04 0031	Driven Roller	15- 24
AW02 0086	Photointerruptor	7- 28
AW02 0086	Photointerruptor	11- 23
AW02 0086	Photointerruptor	15- 12
AX20 0124	Magnetic Clutch	17- 15
AX31 0024	Total Counter	11- 42

Part No.	Description	Page and Index No.
A048 1721	Spring Plate	7- 47
A048 1721	Spring Plate	9- 13
A069 1883	Shoe - Scanner	7- 18
A077 1690	Spring Plate - Mirror	7- 20
A077 5702	IC Socket - 28P	21- 1
A096 1873	Scanner Shoe Pin	7- 17
A128 1845	Stepped Screw - M5	5- 20
A128 5875	Clamp	9- 26
A128 5876	Clamp	11- 40
A128 5878	Spacer - 6.4mm	19- 26
A153 1906	Adjust Shoe	7- 48
A173 5401	Clamp	7- 44
A184 1363	Ozone Filter	11- 8
A184 1685	2nd Slider Bushing	7- 15
A184 1846	Timing Belt - L530	7- 23
A184 4082	Thermistor	15- 9
A184 5105	IC - RF5A93	21- 2
A184 5205	Scanner Motor - DC24V 96W	9- 22
A184 5290	Photoinerrupter	9- 18
A212 5803	Spacer	11- 37
A227 1052	Rubber Foot	5- 17
A227 1053	Model Name Plate (A227-17)	5- 2
A227 1054	Model Name Plate (A227-27/57/23/29)	5- 2
A227 1055	Model Name Plate (A227-26)	5- 2
A227 1057	Model Name Plate (A227-10/22) (GES)	5- 2
A227 1058	Model Name Plate (A227-10/22) (NSA)	5- 2
A227 1059	Model Name Plate (A227-10/22) (REX)	5- 2
A227 1081	Hinge - Upper Front	5- 5
A227 1082	Hinge - Upper Rear	5- 13
A227 1104	Copy Tray	5- 4
A227 1162	Interlock Switch Bracket	19- 10
A227 1163	Interlock Switch Cover	19- 8
A227 1171	Left Rail	17- 3
A227 1172	Right Rail	17- 24
A227 1173	Solenoid Cover	17- 25

Part No.	Description	Page and Index No
A227 1174	Noise Filter Bracket	19- 7
A227 1175	Cleaner Holder	19- 14
A227 1175	Cleaner Holder	25- 5
A227 1201	Motor - DC24V	17- 12
A227 1203	Registration Gear - 29Z	17- 14
A227 1204	Gear - Z26	17- 7
A227 1206	Idle Gear - Z29/Z26	17- 17
A227 1209	Drive Unit	17- 11
A227 1234	Seal - Drive	17- 36
A227 1251	Left Cover	19- 2
A227 1325	Lower Hinge Shaft	17- 2
A227 1333	Upper Release Lever	5- 14
A227 1355	Air Spring	17- 1
A227 1651	Reflector	7- 5
A227 1654	Halogen Lamp - 97V 150W (120V)	7- 7
A227 1655	Halogen Lamp - 180V 210W (230V)	7- 7
A227 1656	Scanner Front Bracket	7- 6
A227 1657	Front Terminal Plate	7- 2
A227 1658	Scanner Rear Bracket	7- 9
A227 1659	Rear Terminal Plate	7- 4
A227 1660	Wire Clamp Bracket	7- 10
A227 1661	1st Mirror	7- 1
A227 1664	Adjust Plate	7- 8
A227 1665	Rod Guidde Bushing	7- 13
A227 1672	2nd Mirror Bracket	7- 19
A227 1673	2nd/3rd Bracket	7- 21
A227 1674	Slider Frame	7- 16
A227 1677	Harness Guide	7- 11
A227 1678	Pulley - Scanner Mirror	7- 12
A227 1691	Lens Bracket (A227)	7- 37
A227 1692	Scanner Lens	7- 39
A227 1695	Lens Bracket	7- 38
A227 1696	Decal - Lens Home Position	7- 40
A227 1701	3rd Scanner Bracket	7- 32
A227 1702	Mirror Drive Bracket	7- 34

Part No.	Description	Page and Index No.
A227 1703	Adjust Bracket	7- 35
A227 1705	Adjust Spring	7- 31
A227 1707	4th/5th Mirror	7- 33
A227 1722	Cleaner Support Bracket	9- 1
A227 1725	Support Bracket	11- 9
A227 1726	Belt Drive Pulley	7- 24
A227 1730	Lens Drive Pulley	7- 29
A227 1733	Guide Rod Shaft	7- 22
A227 1734	Scanner Drive Wire	11- 1
A227 1737	Scanner Motor Pulley	11- 13
A227 1740	Thermistor	11- 6
A227 1743	Lens Cover (A227)	7- 41
A227 1744	Exposure Glass	5- 18
A227 1747	6th Mirror	9- 23
A227 1754	Magnification Motor Bracket	9- 21
A227 1757	Cam	7- 30
A227 1758	Magnification Spring	7- 36
A227 1759	ADS Cover	7- 25
A227 1761	Decal - Close Upper Unit	5- 10
A227 1761	Decal - Close Upper Unit	23- 2
A227 1762	Guide Rod Cleaner	7- 14
A227 1765	Platen Cover	5- 9
A227 1766	Bracket - 2n Clamp	11- 24
A227 1767	Pressure Pad Seal	5- 11
A227 1768	Platen Sheet	5- 12
A227 1769	Pressure Hinge	5- 7
A227 1794	Bracket - Scanner Motor	11- 14
A227 1805	Lens Drive Motor	11- 15
A227 1812	Scanner Wire Spring	11- 2
A227 1814	Guide Rod Bracket	7- 27
A227 1817	Wire Spring Bracket	11- 3
A227 1841	Fan Motor	11- 7
A227 1852	Gas Spring Bracket	11- 4
A227 1867	Total Counter Bracket	11- 16
A227 1871	Scanner Stopper - 1st/2nd	25- 6

Part No.	Description	Page and Index No
A227 1871	Scanner Stopper - 1st/2nd	19- 12
A227 1872	Scanner Stopper - 4th/5th Mirror	25- 7
A227 1872	Scanner Stopper - 4th/5th Mirror	19- 13
A227 1875	Decal - Error Indication - Russian	5- 6
A227 1876	Decal - Error Indication - Portuguese	5- 6
A227 1878	Drum Support Bracket Rear	11- 38
A227 1881	Decal - Error Indication - English	23- 3
A227 1881	Decal - Error Indication - English	5- 6
A227 1882	Decal - Error Indication - French	23- 3
A227 1882	Decal - Error Indication - French	5- 6
A227 1883	Decal - Error Indication - Spanish	5- 6
A227 1883	Decal - Error Indication - Spanish	23- 3
A227 1884	Decal - Error Indication - German	23- 3
A227 1884	Decal - Error Indication - German	5- 6
A227 1885	Decal - Error Indication - Italian	23- 3
A227 1885	Decal - Error Indication - Italian	5- 6
A227 1891	Upper Cover	5- 19
A227 1892	Left Scale Plate	5- 1
A227 1895	Operation Panel - LT(A227)	5- 3
A227 1896	Duct Bracket	11- 5
A227 1898	Operation Panel - A4(A227)	5- 3
A227 1906	Charger Wire - Transfer	17- 34
A227 1907	Transfer Spring	17- 29
A227 1908	End Block Mylar - Front	17- 31
A227 1909	Mylar - Transfer Ass'y	17- 35
A227 1910	Spring - Main Corona	17- 32
A227 1913	Earth Plate	19- 25
A227 1914	End Block Mylar - Rear	17- 33
A227 1917	Varistor - Transfer	19- 23
A227 1918	Earth Plate - Guide	19- 24
A227 1919	Terminal Bracket	17- 9
A227 2103	Front Drum Stay	11- 31
A227 2107	Rear Drum Stay	11- 21
A227 2110	Bias Terminal Holder	11- 20
A227 2111	Bias Terminal Plate	11- 19

Part No.	Description	Page and Index No.
A227 2112	Idle Gear	11- 22
A227 2114	Bias Holder Cover	11- 18
A227 2121	Drum Spring	11- 36
A227 2254	Transfer Ass'y	17- 8
A227 2257	Main Charger Ass'y	11- 26
A227 2384	IC - PROM	21- 3
A227 2401	Eraser(A227)	11- 27
A227 2518	Manual Feed Ass'y	5- 15
A227 2520	Transfer Terminal Holder	9- 15
A227 2551	Lower Registration Roller	17- 4
A227 2552	Registration Stopper	17- 27
A227 2553	Paper Feed Solenoid	17- 26
A227 2555	Feed Roller	17- 21
A227 2557	Lower Middle Roller	17- 5
A227 2559	Upper Guide	9- 16
A227 2560	Pressure Spring Plate - Drive	9- 19
A227 2561	Upper Niddle Roller	9- 20
A227 2563	Feed Roller Bracket	17- 18
A227 2566	Feed Roller Boss	17- 23
A227 2567	Feed Roller Shaft	17- 22
A227 2572	Shaft - Upper Registration Roller	9- 3
A227 2573	Upper Registration Roller	9- 2
A227 2577	Feed Roller Bushing	17- 19
A227 2579	Shaft - Feed Roller Clutch	17- 16
A227 2587	Feed Roller Guide	17- 20
A227 2588	Registration Roller Spring - Front	9- 6
A227 2589	Registration Roller Spring - Rear	9- 11
A227 2591	Registration Guide Bushing	9- 5
A227 2592	Front Registration Bushing	17- 28
A227 2593	Rear Registration Bushing	17- 13
A227 2597	Upper Registration Guide	9- 12
A227 2617	Spring - Up - R, Leveer	19- 18
A227 2618	Shutter Lever Spring	19- 20
A227 2801	Paper Tray Ass'y - LT	13- 1
A227 2802	Paper Tray Ass'y - A4	13- 1

Part No.	Description	Page and Index No
A227 2858	Friction Pad	13- 4
A227 2859	Pressure Spring	13- 8
A227 2862	Bottom Plate Stopper	13- 9
A227 2863	Stopper Spring	13- 10
A227 2880	Side Fence Spacer - A4	13- 13
A227 2882	Front Side Fence	13- 12
A227 2883	Rear Side Fence	13- 6
A227 2884	End Fence	13- 3
A227 2885	Front Corner Separator	13- 11
A227 2886	Rear Corner Separator	13- 7
A227 2887	Bottom Plate	13- 5
A227 2888	Decal - Paper Set	23- 4
A227 2888	Decal - Paper Set	13- 2
A227 3113	Toner End Sensor	9- 8
A227 3171	Cleaner Barcket Plate	9- 24
A227 3187	Decal - CTDM Set	23- 8
A227 3187	Decal - CTDM Set	11- 41
A227 3233	Pressure Arm - Registration Bracket	19- 17
A227 3234	Pressure Arm - Shutter Lever	19- 19
A227 3235	Shutter Arm Bracket	19- 15
A227 3236	Shutter Arm Shaft	19- 16
A227 3238	Step Screw	9- 9
A227 3239	Toner Sensor Spring	9- 10
A227 3501	Left Rail - Ctdm	11- 25
A227 3502	Right Rail - CTDM	11- 28
A227 3505	Left Guide Rail	11- 32
A227 3506	Right Guide Rail	11- 30
A227 3801	Decal - Upper	23- 5
A227 3801	Decal - Upper	5- 21
A227 3806	Spring Plate	11- 43
A227 4051	Upper Fusing Cover	15- 6
A227 4052	Fusing Roller	15- 37
A227 4053	Mylar - Fusing Cover	15- 13
A227 4054	Stopper - Fusing Roller Bushing	15- 35
A227 4055	Gear - 31Z	15- 38

Part No.	Description	Page and Index No.
A227 4059	Bracet - Terminal Fuse	15- 22
A227 4061	Fusing Lamp - 700W 115V	15- 34
A227 4062	Front Lamp Holder	15- 32
A227 4068	Paper Exit Feeler	15- 18
A227 4069	Pressure Roller	15- 39
A227 4071	Pressure Roller Bearing	15- 40
A227 4075	Fusing Lamp - 700W 230V	15- 34
A227 4076	Entrance Guide	15- 43
A227 4092	Thermistor Bracket	15- 10
A227 4093	Stripper Holder	15- 16
A227 4096	Bracket - Fusing Unit	15- 27
A227 4098	Gear - 15Z	15- 7
A227 4099	Stripper Spring	15- 15
A227 4100	Decal - High Temperature Caution	23- 6
A227 4100	Decal - High Temperature Caution	15- 14
A227 4101	Rear Lamp Holder	15- 8
A227 4102	Decal - High Temperature Caution - Russian	23- 6
A227 4102	Decal - High Temperature Caution - Russian	15- 14
A227 4103	Pressure Roller Bracket - Rear	15- 41
A227 4104	Pressure Roller Bracket - Front	15- 31
A227 4105	Thermal Fuse	15- 20
A227 4106	Mylar - Center Fusing Bracket	15- 25
A227 4107	Mylar - Side Fusing Bracket	15- 21
A227 4151	Paper Exit Guide - Lower	15- 5
A227 4152	Paper Exit Cover	15- 1
A227 4153	Paper Exit Roller - Lower	15- 3
A227 4154	Bushing	15- 2
A227 4155	Gear - 20Z	15- 4
A227 4201	Lower Fusing Cover	15- 42
A227 4205	Pressure Lever Bracket	15- 30
A227 4208	Fusing Step Screw	15- 23
A227 4209	Fusing Pressure Shaft	15- 28
A227 4210	Fusing Pressure Spring	15- 29
A227 4321	Fusing Roller Bushing	15- 36
A227 4731	Capacitor - 0.047µF 10% 50V	21- 4

Part No.	Description	Page and Index No
A227 5026	Power Cord - 230V (Except - 27)	19- 11
A227 5039	Power Pack	9- 4
A227 5120	Optics Control Board	7- 26
A227 5160	Main Control Board(A227)	11- 11
A227 5160	Main Control Board(A227)	21- *
A227 5310	Harness - OP/Main	11- 12
A227 5311	Harness - Power Pack (CN102)	11- 33
A227 5312	Notch Switch	9- 14
A227 5313	Harness - Toner Sensor	9- 7
A227 5314	Harness - Registration Sensor	9- 17
A227 5315	Harness - Lens Home Position (A227)	7- 42
A227 5319	Harness - Scanner Home Position (CN115)	11- 34
A227 5322	Harness - ADS	7- 43
A227 5330	Harness - Exit Sensor Connector (Relay)	15- 11
A227 5332	Harness - Interlock - 120V	19- 6
A227 5334	Harness - Rame Gnd Terminal	19- 21
A227 5335	Harness - AC Receptacle - 120V	19- 9
A227 5336	Harness - User Terminal	15- 33
A227 5338	Harness - AC Receptacle - 230V	19- 9
A227 5339	Harness - Interlock - 230V	19- 6
A227 5340	Harness - AC Outlet - 120V	19- 4
A227 5341	Harness - AC Outlet - 230V	19- 4
A227 5360	Scanner Thermal Fuse	7- 3
A227 5370	Harness - Psu/Exit/Fuser	19- 3
A227 5380	Harness - OP/ADS 2 (CN109)	11- 35
A227 5380	Harness - OP/ADS 2	17- 30
A227 5399	Variable Resistor - GF06UT2-100K	21- 5
A227 5471	Power Cord - 120V	19- 11
A227 5620	Power Supply Board - 120V	19- 1
A227 5621	Noise Filter - 120V	19- 5
A227 5622	Power Supply Board - 230V	19- 1
A227 5623	Noise Filter - 230V	19- 5
A227 5631	Fuse - 15A 125V (120V)	19- 27
A227 5633	Fuse - 6.3A 250V (230V)	19- 27
A227 5650	Main Board Bracket	11- 10

Part No.	Description	Page and Index No.
A227 5870	Micro Wire Saddle	11- 17
A227 5871	Side Wire Saddle	9- 25
A227 5872	Wire Saddle	9- 27
A227 5874	Twist Lock Support	19- 22
A227 5875	Cover Bushing	11- 39
A227 8600	Installation Procedure - English	23- 7
A227 8601	Installation Procedure - German	23- 7
A227 8602	Installation Procedure - French	23- 7
A227 8603	Installation Procedure - Italian	23- 7
A227 8604	Installation Procedure - Spanish	23- 7
A227 8610	Scanner Stopper Tag	25- 8
A227 8636	Installation Procedure - Portuguese	23- 7
A227 8638	Installation Procedure - Russian	23- 7
A227 8642	Installation Procedure - French (-17)	23- 7
A227 8644	Installation Procedure - Spanis (-17)	23- 7
A227 8647	Installation Procedure - English (-17)	23- 7

Part No.	Description	Page and Index No
5053 0447	Bushing - 6mm	17- 6
5203 9501	Grease 501	25- 3
5214 4121	Hot Roller Stripper	15- 17
5214 9500	Test Chart OS-A4 (10 pcs/set)	25- 1
5214 9501	Test Chart OS-A4 (100 pcs/set)	25- 1
5215 2621	Snap Ring - M6	5- 16
5216 1374	Hinge Shaft - Platen Cover	5- 8
5420 9507	Digital Multimeter - Beckman	25- 4
5442 9103	Launa Oil 40	25- 2

Part No.	Description	Page and Index No.
0313 0040W	Philips Pan Head Screw - M3x4	7-110
0313 0060W	Philips Pan Head Screw - M3x6	7-109
0353 0060W	Philips Pan Head Screw - M3x6	17-105
0413 0060W	Tapping Screw - M3x6	7-104
0413 0060W	Tapping Screw - M3x6	9-102
0413 0060W	Tapping Screw - M3x6	11-103
0413 0062W	Tapping Screw - M3x6	7-105
0413 0080W	Tapping Screw - M3x8	7-107
0413 0082W	Tapping Screw - M3x8	7-106
0413 0082W	Tapping Screw - M3x8	5-103
0413 0082W	Tapping Screw - M3x8	11-109
0413 0082W	Tapping Screw - M3x8	9-101
0414 0202W	Tapping Screw - M4x20	11-102
0443 0060W	Hexagon Head Tapping Screw - M3x6	11-106
0443 0080W	Hexagon Head Tapping Screw - M3x8	11-107
0720 0025G	Retaining Ring - 2.5	5-102
0720 0030G	Retaining Ring - M3	11-108
0720 0040G	Retaining Ring - M4	7-103
0720 0040G	Retaining Ring - M4	17-101
0720 0040G	Retaining Ring - M4	9-103
0720 0040G	Retaining Ring - M4	11-104
0720 0060G	Retaining Ring - M6	15-105
0950 4006B	Tapping Screw With Flat Washer - M4x6	17-106
0950 4006M	Philips Screw With Flat Washer - M4x6	19-101
0951 3006B	Philips Screw With Flat Washer - M3X6	11-105
0951 3006W	Philips Screw With Flat Washer - M3x6	17-108
0951 3006W	Philips Screw With Flat Washer - M3x6	7-101
0951 3008W	Philips Screw With Flat Washer - M3x8	5-101
0951 3010W	Philips Screw With Flat Washer - M3x10	7-111
0964 3006W	Tapping Screw With Flat Washer - M3x6	11-101
0965 3006B	Tapping Screw With Flat Washer - M3x6	15-104
0965 3006B	Tapping Screw With Flat Washer - M3x6	19-106
0965 3006W	Tapping Screw With Flat Washer - M3x6	15-102
0965 3006W	Tapping Screw With Flat Washer - M3x6	9-105
0965 3008B	Tapping Screw With Washer - M3x8	15-101

Part No.	Description	Page and Index No
0965 3008B	Tapping Screw With Washer - M3x8	17-103
0965 3008B	Tapping Screw With Washer - M3x8	13-101
0965 3008B	Tapping Screw With Washer - M3x8	9-104
0965 3008B	Tapping Screw With Washer - M3x8	19-105
0965 3008W	Tapping Screw With Flat Washer - M3x8	17-107
0965 3010B	Tapping Screw With Flat Washer M3x10	7-102
0965 3010W	Tapping Screw With Flat Washer - M3x10	19-102
0965 3012B	Tapping Screw With Washer - M3x12	9-106
0965 4008W	Tapping Screw With Flat Washer - M4x8	17-102
0965 4010W	Tapping Screw With Flat Washer - M4x10	17-104
0965 4010W	Tapping Screw With Flat Washer - M4x10	19-104
0965 4012W	Tapping Screw With Flat Washer - M4x12	15-103
1002 0307	Jumper Wire	21-101
1102 4201	Connector - 2P	21-102
1102 5303	Connector - 4P	21-103
1103 1772	Pin Header - 6P	21-104
1104 0511	IC SOCKET - 8P - DICF-8CS-E	21-105
1204 2334	Interlock Switch	19-103
1400 0369	Transidtor - 2SA1213Y	21-106
1400 0558	Transidtor - 2SD780	21-107
1401 0611	Diode - ISI588	21-150
1402 0277	Zener Diode - 1Z12	21-108
1402 0430	Zener Diode - BZ-071	21-109
1402 0478	Diode - 1SS226TE85L	21-110
1402 1125	Zener Diode - 1W - RD33FB2	21-111
1407 2187	TTLIC - SN74LS07NS	21-112
1407 2344	IC - TD62382F	21-113
1407 3173	Driver - 16BIT - M66311FP	21-114
1407 3764	IC - TC7SU04F	21-115
1407 3857	Transidtor - ARRAY - TD62381F	21-116
1407 4316	IC - TD52308BF	21-117
1407 4642	IC - MTD1110	21-118
1407 4662	EEPROM - IS93C46-3I	21-119
1407 4672	TTL - HD74LS368FP	21-120
1408 0398	Comparator - NJM2903M	21-121

Part No.	Description	Page and Index No.
1408 0611	IC - 3771	21-122
1503 0563	Oscillator - 9.83MTZ040	21-123
1601 5295	Resistor - 0.47Ω ±2% 1W	21-124
1605 0305	Capacitor - 3300pF 50V ±10%	21-125
1630 1101	Resistor - 100 Ω 1/4W ±5%	21-127
1630 3102	Resistor - 1KΩ 1/10W ±5%	21-128
1630 3103	Resistor - 10KΩ 1/10W ±5%	21-129
1630 3104	Resistor - 100K Ω 1/10W ±5%	21-130
1630 3105	Resistor - 1M Ω ±5% 1/10W	21-131
1630 3222	Resistor - 2.2KΩ 1/10W ±5%	21-132
1630 3223	Resistor - 22KΩ - 1/10W	21-133
1630 3472	Resistor - 4.7KΩ 1/10W ±5%	21-134
1630 3680	Resistor - 68 Ω ±5% 1/10W	21-135
1630 3752	Resistor - 7.5K Ω ±5% 1/10W	21-136
1633 0000	Resistor - 0 Ω 1/10W	21-126
1633 1001	Resistor - 1K Ω ±1% 1/10W	21-137
1633 1002	Resistor - 10K Ω ±1% 1/10W	21-138
1633 1960	Resistor - 196 Ω 1/10W ±1%	21-139
1633 3321	Resistor - 3.32K Ω ±1% 1/10W	21-140
1633 3901	Resistor - 3.9 Ω ±1% 1/10W	21-141
1633 3920	Resistor - 392Ω±1% 1/10W	21-142
1640 5101	Capacitor - 100µF ±20% 50V	21-143
1640 5109	Capacitor - 1µF - ±20% - 50V	21-144
1642 5100	Capacitor - 10µF ±20% 50V	21-145
1660 3101	Capacitor - 100pF 50V	21-146
1660 3471	Capacitor - 470pF 50V	21-147
1660 7103	Capacitor - 10000pF 50V	21-148
1660 7104	Capacitor - 100000pF 50V	21-149

Part No.	Description	Page and Index No