FT1008/FT1208
(PLOVER, A226/A227)
SERVICE MANUAL
(SCREEN VERSION)

Issued April 8, 1998, Ricoh CO., LTD.

IMPORTANT SAFETY NOTES

PREVENTION OF PHYSICAL INJURY

1. Before disassembling or assembling any parts of the copier, make sure that the power cord is unplugged.
2. The wall outlet should be near the copier and easily accessible.
3. If any adjustment or operation check has to be made with exterior covers off or open while the main switch is turned on, keep hands away from electrified or mechanically driven components.
4. If the Start key is pressed before the copier completes the warm-up period the Ready indicator will alternately light green and red. When in this condition, keep hands away from mechanical and electrical components, as the copier will start making copies as soon as the warm-up period is completed.
5. The inside and the metal parts of the fusing unit become extremely hot while the copier is operating. Be careful to avoid touching those components with your bare hands.

HEALTH SAFETY CONDITIONS

1. Toner and developer are non-toxic, but if you get either of them in your eyes by accident, it may cause temporary eye discomfort. Try to remove with eye drops or flush with water as first aid. If unsuccessful, get medical attention.
2. Never operate the copier without the ozone filter installed.

OBSERVANCE OF ELECTRICAL SAFETY STANDARDS

1. The copier must be maintained by a trained customer service representative.

SAFETY AND ECOLOGICAL NOTES FOR DISPOSAL

1. Do not incinerate the CTDM. Toner dust may ignite suddenly when exposed to open flame.
2. Dispose of the CTDM and organic photoconductor in accordance with local regulations. (These are non-toxic supplies.)
3. Dispose of replaced parts in accordance with local regulations.

OVERALL MACHINE INFORMATION

SPECIFICATIONS

Configuration:	Desk top	
Copy Process:	Dry electrostatic transfer system	
Originals:	Sheet/Book	
Original Size:	Maximum: A4/8½" x 14"	
Copy Paper Size	Paper tray feed:	
	A5, B5, A4, 5½" x 8½", 8½" x 11", 8½" x 13", 8½" x 14"	
	By-pass feed:	
	Maximum:	A4/8½" x 14"
	Minimum:	A6/8½" x 5½"
Copy Paper weight:	Paper tray feed:	60 to 90 g/m^2, 16 to 24 lb
	By-pass feed:	60 to 180 g/m^2, 16 to 48 lb

Reproduction Ratios:

	Metric Version	Inch Version
Enlargement	141% 122%	141%
Full Size	100%	100%
Reduction	82% 71%	93% 78% 70%

Zoom (A227 model only): From 70% to 141% in 1% steps

Copy Speed: 8 copies/minute (A4/8½" x 11")

Warm-up Time: Less than 15 seconds (at 23°C/73°F)

First Copy Time: Less than 10 seconds (A4/8½" x 11")

Copy Number Input: Up/Down key, 1 to 50

Manual Image Density Selection: 4 steps including halftone

Automatic Reset: 1 minute standard setting; can also be set to 3 minutes or no auto reset

Paper capacity: Paper Tray: 250 sheets (80 g/m^2/20 lb)



By-pass feed entrance: 1 sheet (180 g/m^2/48 lb)

Toner Replenishment: CTDM exchange (140g/CTDM)

Copy Tray Capacity: 50 sheets

Power Source: 120 V, 60 Hz, more than 10 A (for North America)

220 ~ 240 V, 50/60 Hz, more than 6 A
(for Europe/Asia)

220 V, 50/60 Hz, more than 6 A (for Asia)

Power Consumption:

Maximum	1,200 W/1,300W
Copy cycle	400 W/450W
Warm-up	750 W/790W
Stand-by	55 W/91W
Auto Shut-off	5W/5W

(120 V machines/230 V machines)

Dimensions: Width: 485 mm, 19.1"

Depth: 385 mm, 15.2"

Height: 260 mm, 10.2"

Noise Emissions:

Sound pressure level at the operator position	Less than 55 dB
Sound power level in stand-by condition	Less than 40 dB
Sound power level during copy cycle	Less than 62 dB

The measurements were made according to ISO 7779

Weight:	Less than 16.5 kg, 36.4 lb
Energy Star	Enabled by SP77—default is ON) Sleep time selected by SP14—default is 30 minutes (Note: When in sleep mode, only the Start indicator is on (blinking green). To restore operation, press any key other than the Start key.)

COPY PROCESSES AROUND THE DRUM

1. Drum Charge

In the dark, the charge corona unit gives a uniform negative charge to the organic photoconductor (OPC) drum. The charge remains on the surface of the drum because the OPC drum has a high electrical resistance in the dark.

2. Exposure

An image of the original is reflected to the drum surface via the optics assembly. The charge on the drum surface is dissipated in direct proportion to the intensity on the reflected light, thus producing an electrical latent image on the drum surface.

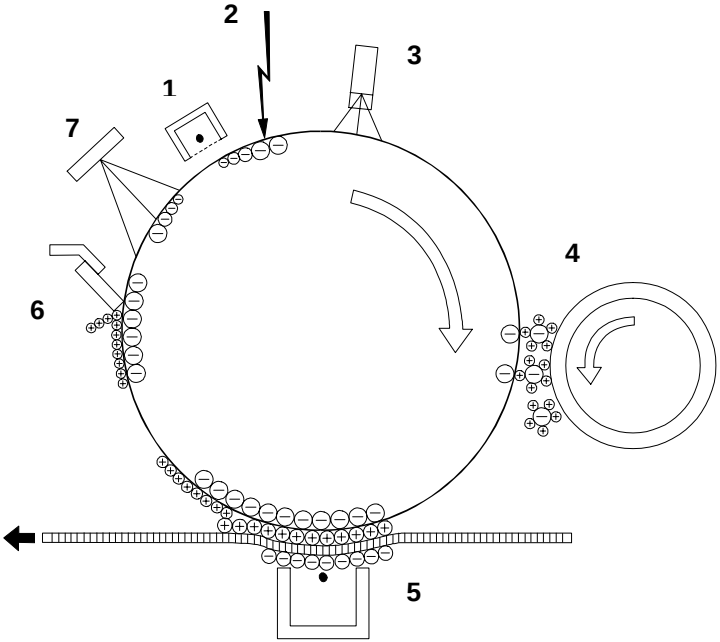

3. Erase

The erase lamp illuminates the area of the charged drum surface that will not be used for the copy image. The resistance of the drum in the illuminated areas drops and the charge on those areas dissipates.

4. Development

Positively charged toner is attracted to the negatively charged areas of the drum, thus developing the latent image. (The positive triboelectric charge is caused by friction between the carrier and toner particles.)

5. Image Transfer

Paper is fed to the drum surface at the proper time so as to align the copy paper and the developed image on the drum surface. Then, a strong negative charge is applied to the back side of the copy paper, producing an electrical force which pulls the toner particles from the drum surface to the copy paper. At the same time, the copy paper is electrically attracted to the drum surface.

6. Cleaning

The cleaning blade scrapes any toner that was not transferred off of the drum.

7. Quenching

Light from the quenching lamp electrically neutralizes the drum surface.

MECHANICAL COMPONENT LAYOUT

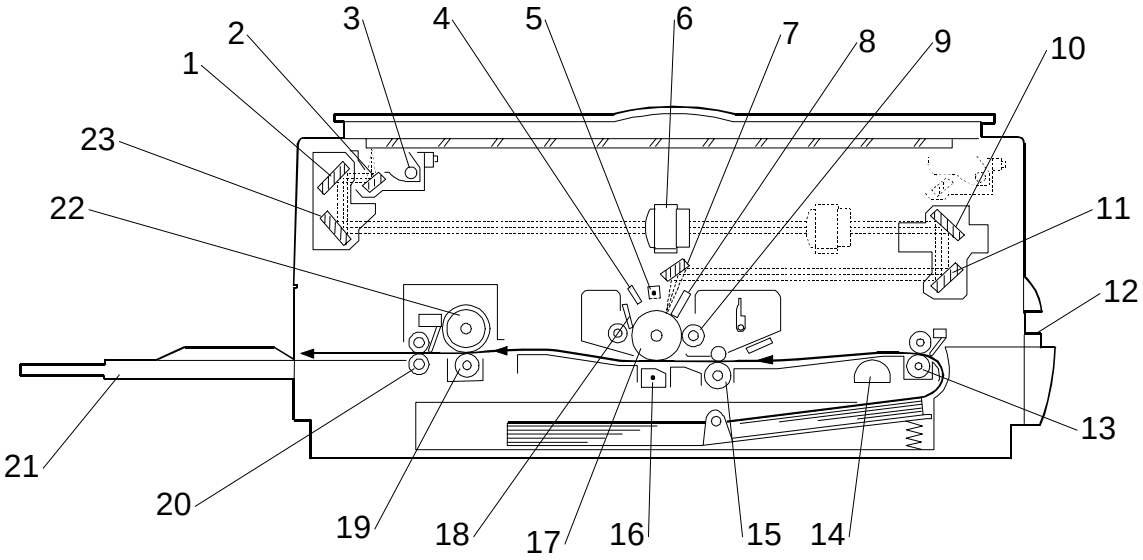

1. 2nd mirror
2. 1st mirror
3. Exposure lamp
4. Quenching lamp
5. Charge corona unit
6. Lens
7. 6th mirror
8. Erase lamp
9. Development roller
10. 4th mirror
11. 5th mirror
12. By-pass feed table
13. Relay rollers
14. Paper feed rollers
15. Registration rollers
16. Transfer corona unit
17. Drum
18. Cleaning blade
19. Pressure roller
20. Exit rollers
21. Copy tray
22. Hot roller
23. 3rd mirror

ELECTRICAL COMPONENT LAYOUT

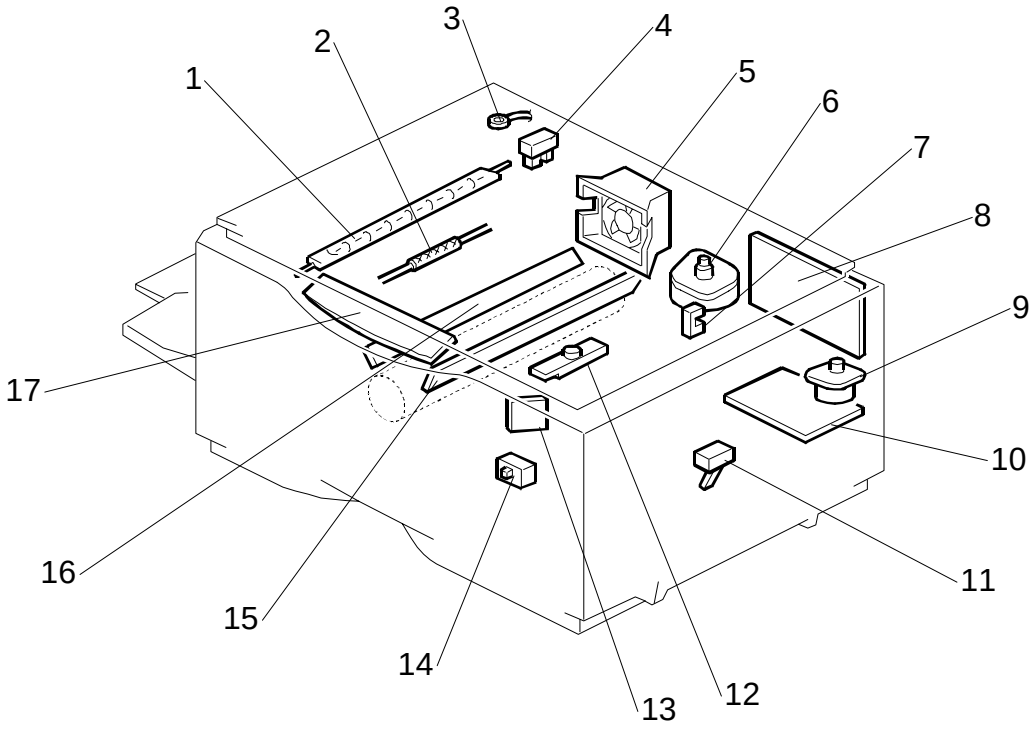

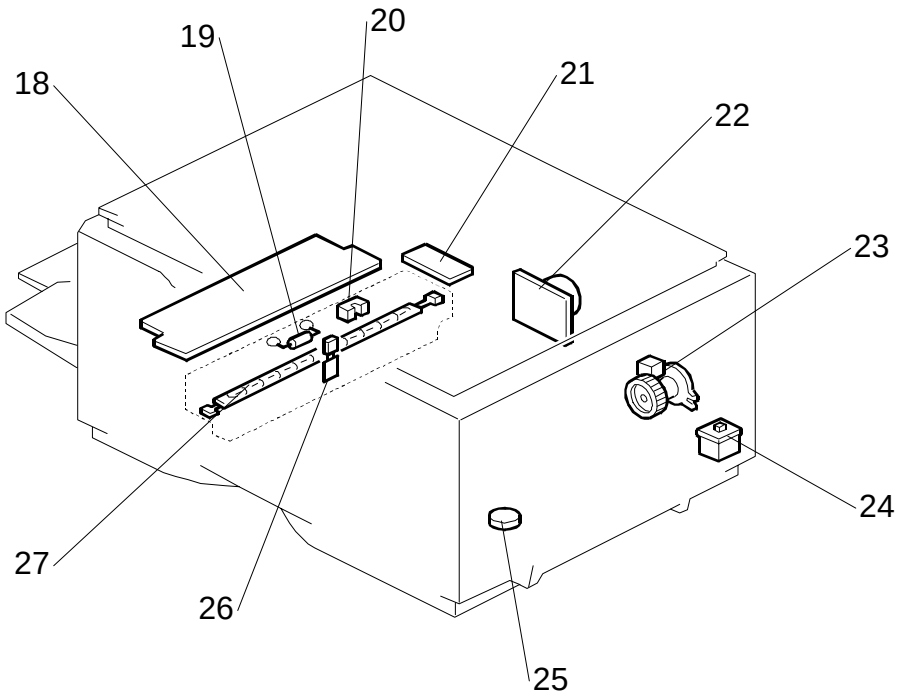
18
19
20
21
22
23
24
25
26
27

ELECTRICAL COMPONENT DESCRIPTIONS

Refer to the electrical component layout and the point-to-point diagram on the waterproof foldout sheet for symbols and index numbers.

Symbol	Name	Function	Index No.
Motors			
M1	Main Motor	Drives all the main unit components except for the optics unit and fans.	22
M2	Exhaust Fan Motor	Removes heat from around the fusing unit and blows the ozone built up around the charge corona unit to the ozone filter. Prevents build-up of hot air in the optics cavity.	5
M3	Scanner Drive Motor	Drives the scanners (1st and 2nd).	6
M4	Lens and Mirror Motor (A227 machines only)	Moves the lens and 4th/5th mirror positions in accordance with the selected magnification.	9
Clutches			
CL1	Paper Feed clutch	Transfers main motor drive to the paper feed roller.	23
Switches			
SW1	Interlock Switch	Cuts all power when the upper unit is opened.	24
SW2	V_L Switch	Changes the light intensity of exposure lamp.	14

Sensors			
S1	ADS Sensor	Detects the background density of the original.	13
S2	Registration Sensor	Detects paper end condition. Checks if paper is set on the by-pass feed table.	11
S3	Lens and Mirror H. P. Sensor (A227 machines only)	Informs the CPU when the lens and 4th/5th mirror assembly are at the home position (full size position).	7
S4	Scanner H. P. Sensor	Informs the CPU when the 1st scanner is at the home position.	4
S5	Toner End Sensor	Detects toner end condition.	12
S6	Exit Sensor	Detects misfeeds.	20
Solenoid			
SOL1	Registration Solenoid	Releases the stopper, synchronizing the paper-feed timing with the original scan.	25
Printed Circuit Boards			
PCB1	Main Control Board	Controls all copier functions.	8
PCB2	Power Pack	Provides high voltage for the charge corona, transfer corona, and development bias.	10
PCB3	Power Supply Board	Generates 5 Vdc and 24 Vdc outputs from 120 Vac or 230 Vac inputs. Drives the exposure lamp, fusing lamp, and main motor.	18

PCB4	Operation Panel Board	Informs the CPU of the selected modes and displays the machine condition on the panel.	17
PCB5	Noise Filter	Removes electrical noise from the input power.	21
Lamps			
L1	Exposure Lamp	Applies high intensity light to the original for exposure.	1
L2	Fusing Lamp	Provides heat to the hot roller.	27
L3	Quenching Lamp (QL)	Neutralizes any charge remaining on the drum surface after cleaning.	16
L4	Erase Lamp	Discharges the drum outside of the image area. (Provides leading/trailing edge and side erase.)	15
Others			
TH1	Optics Thermistor	Monitors the temperature around the exposure lamp for overheat protection.	3
TH2	Fusing Thermistor	Monitors the fusing temperature.	26
TF1	Exposure Lamp Thermofuse	Provides back up overheat protection around the exposure lamp.	2
TF2	Fusing Thermofuse	Provides back up overheat protection in the fusing unit.	19
CO	Total Counter	Keeps a count of the total copies made. (option)	—

DETAILED DESCRIPTIONS

DRUM

OPC DRUM CHARACTERISTICS

The OPC (Organic Photoconductor) Drum used in this machine is small in diameter (30 mm), ensuring good paper separation. An OPC drum has the characteristics of:

1. Being able to accept a high negative electrical charge in the dark. (The electrical resistance of a photoconductor is high in the absence of light.)
2. Dissipating the electrical charge when exposed to light. (Exposure to light greatly increases the conductivity of a photoconductor.)
3. Dissipating an amount of charge in direct proportion to the intensity of the light. That is, where stronger light is directed to the photoconductor surface, a smaller voltage remains on the drum.
4. Being less sensitive to changes in temperature (when compared to selenium F type drums).
5. During the drum's life, drum residual voltage gradually increases and the photoconductive surface becomes worn. Therefore, some compensation for these characteristics is required.

CHARGE

OVERVIEW

This machine uses a single wire scorotron to charge the drum. The corona wire [A] generates a corona of negative ions when the power pack applies a negative voltage (approximately -4.7 kV). The stainless steel grid plate [B] ensures that the drum coating receives a uniform negative charge (-880 V applied by the power pack) as it rotates past the corona.

The charge corona unit contains a wire cleaner for user maintenance.

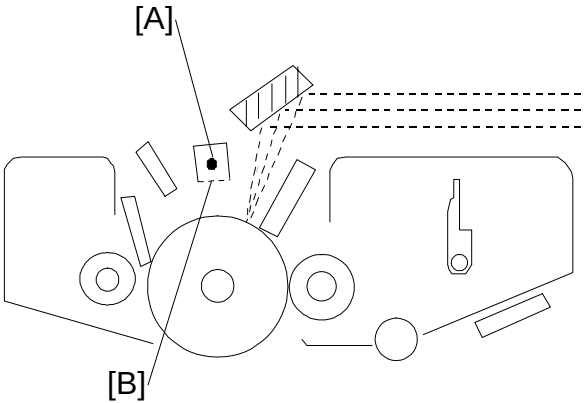

EXHAUST FAN AND OZONE FILTER

The exhaust fan [C] causes a flow of air through the charge corona section. This prevents an uneven build-up of negative ions that can cause uneven image density. The exhaust fan also cools the optics cavity.

An ozone filter [D], which adsorbs ozone (O_3) generated by the charge corona, is located behind the exhaust fan. The ozone filter decreases in efficiency over time as it adsorbs ozone. The expected life of the ozone filter is 30k copies.

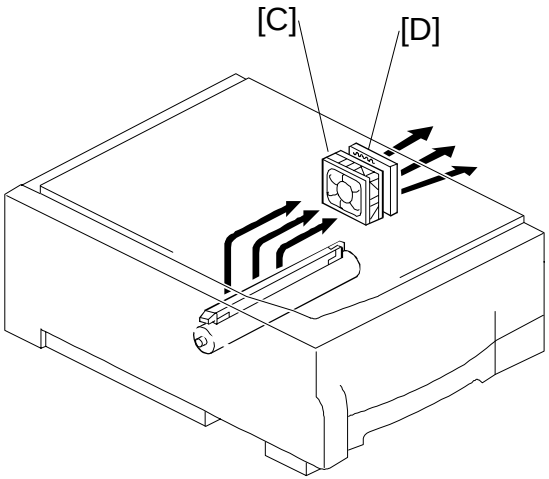

OPTICS

OVERVIEW

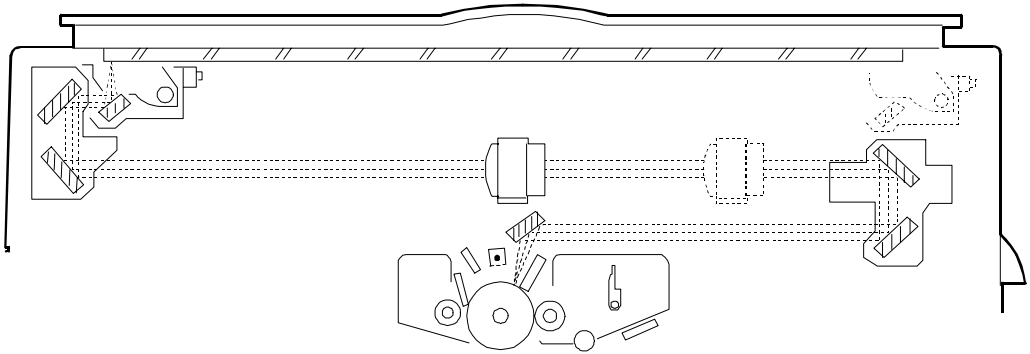

During the copy cycle, an image of the original on the exposure glass is reflected onto the drum surface through the optics assembly.

This machine has five (metric version) or four (inch version) standard reproduction ratios (A227 machine only), and reproduction ratios in one-percent steps from 70% to 141% by zoom function. A stepper motor is used to change the positions of the lens and the 4th/5th mirrors to enlarge/reduce

the image perpendicular to the scanning direction. Changes in reproduction ratio in the scanning direction are achieved by changing the scanner speed (A227 machine only).

The CPU monitors the temperature around the optics through a thermistor that is located on the scanner frame. When the temperature reaches 43°C, the machine stops copying and displays “U1” on the operation panel. Then the machine moves the scanner to the return position, turns off the fusing lamp, and starts rotating the exhaust fan faster to cool the optics cavity. After the temperature drops below 40°C, the machine returns the scanner to the home position, turns on the fusing lamp, and rotates the fan at the normal speed.

Additionally, a thermofuse on the first scanner provides back up overheat protection. It opens if the temperature reaches 128°C and cuts ac power to the exposure lamp.

SCANNER DRIVE

A stepper motor [A] is used to drive the scanner.

The first scanner [B] consists of the exposure lamp and the first mirror. The second scanner [C] consists of the second and third mirrors. The scanner drive motor drives the first and second scanners using a scanner drive wire [D] via a pulley [E]. Both of the scanners move along the guide rod [F]. The second scanner speed is a half of the first scanner speed.

The home position sensor [G] detects when the scanner is at the home position. The scanner return position is determined by counting the scanner motor drive pulses.

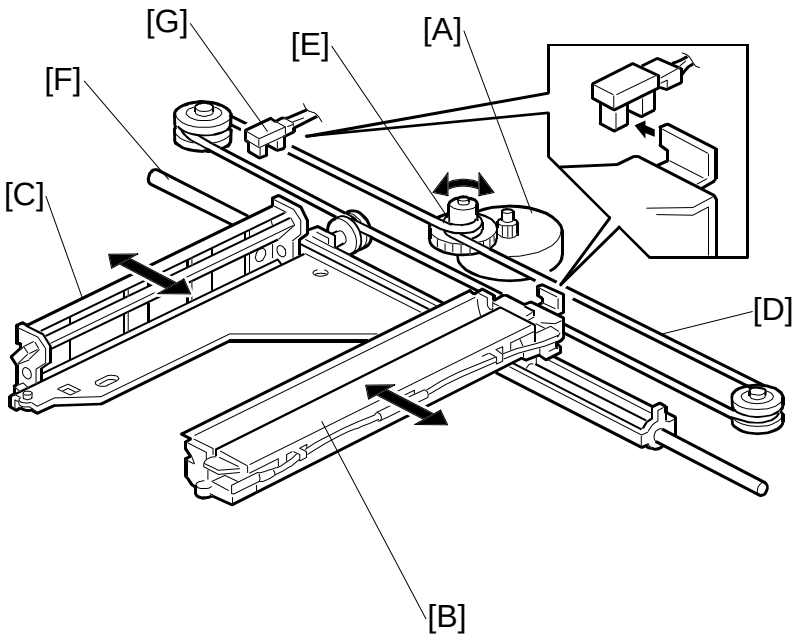

LENS AND 4TH/5TH MIRROR DRIVE (A227 MACHINE ONLY)

Drive from the lens motor [A] is transmitted to the timing belt [B] on which the lens unit [C] is clamped. The lens position is changed to provide the proper optical distance between the lens and the drum surface corresponding to the selected reproduction ratio. The home position sensor [D] detects when the lens is at its home position. The main control boards keeps track of the lens position based on the number of pulses sent to the lens motor.

Drive from the lens motor is also transmitted to the 4th/5th-mirror drive cam [E]. As the lens unit position is changed, the cam rotates to change the 4th/5th-mirror [F] position to provide proper the focal distance between the lens and the drum surface.

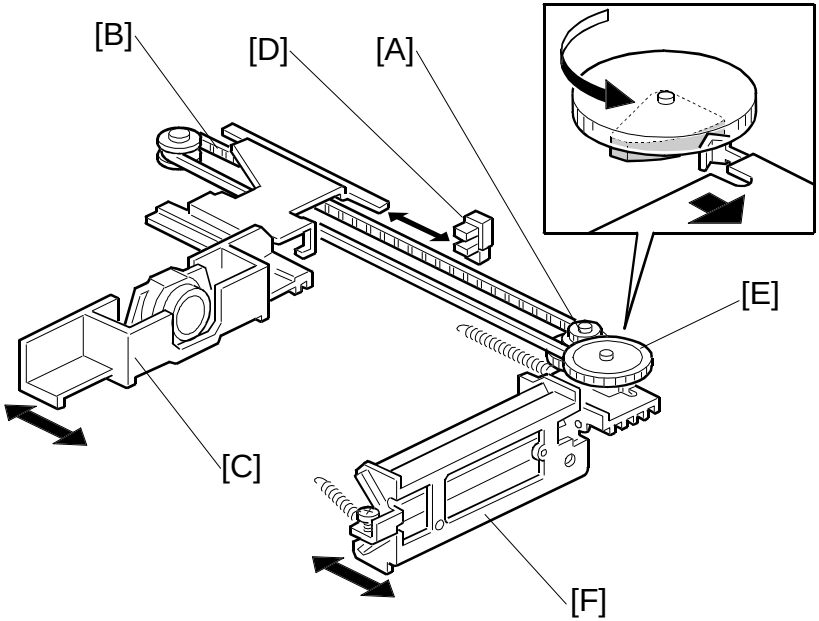

AUTOMATIC IMAGE DENSITY CONTROL SYSTEM (ADS)

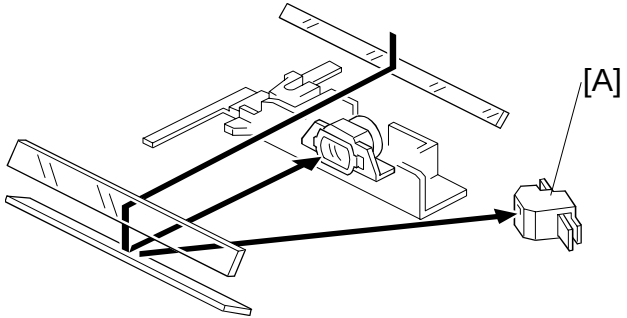

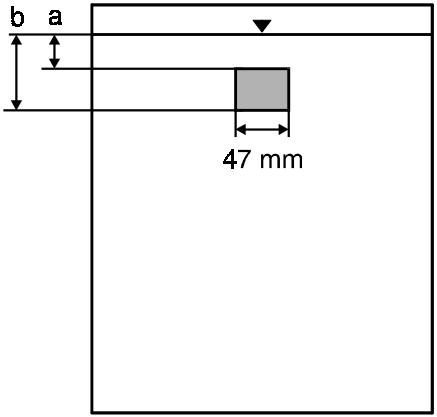

In ADS mode, the original background density is sensed by the ADS sensor [A] and the CPU determines an appropriate development bias voltage for the original to prevent dirty background from appearing on copies.

The sensor, a photodiode, is mounted on the upper front frame. The sensor cover has a hole to allow the light reflected from the original to fall directly onto the sensor.

Sampling starts 6 millimeters “a” from the leading edge of the original and continues for 15.0 millimeters “b” from the leading edge of original in full size mode. These lengths “a” and “b” will vary depending on the selected reproduction ratio.

The photosensor circuit converts the light intensity to a voltage. The detected voltage is amplified and sent to the main control board. The output from the sensor is adjusted to 2.5 volts for a normal white original. The sensor outputs a lower voltage as less light is reflected from the original (the background is darker). The CPU compares the maximum detected voltage with the ADS reference voltage (2.5 ± 0.2 volts) and compensates the copy image density by changing the development bias voltage.

EXPOSURE LAMP VOLTAGE CONTROL

The main board controls the exposure lamp voltage through the power supply board. The copy image density is controlled by the lamp intensity and development bias.
This section explains how the exposure lamp voltage control affects the copy image density.

Base Lamp Voltage Setting

The base lamp voltage is determined by the SP48 setting.

Base Lamp Voltage =

SP48 value x 0.5 (120 V machines)
SP48 value x 1.0 (230 V machines)

The default settings (may not equal to factory settings) of SP48 are:

128 for 120 V machines (= 64 V)
120 for 230 V machines (= 120 V)

Increasing the value makes the copy image lighter.

The maximum value of the lamp voltage setting including compensation factors (see following) is 180 for 230-volt models and 194 for 120-volt models. For 120-volt machines, the actual lamp voltage is one-half the lamp voltage setting; therefore, the maximum lamp voltage is 97 volts. For 230-volt machines the actual lamp voltage is the same as the lamp voltage setting; so, the maximum voltage is 180 volts.

Compensation Factors

The base lamp voltage is shifted by several factors as discussed in the following sections.

NOTE: In the following tables, the default settings are in bold type.

1. Reproduction Ratio Correction

The exposure lamp voltage increases or decreases depending on the magnification ratio. This compensates for the change in concentration of light on the drum.

Magnification Ratio	Exposure Lamp
70% to 99%	-1 step
100%	0
101% to 141%	+1 step

2. Image Density Adjustment Setting (SP34)

SP34 can adjust the copy image density to adapt the machine to its operating environment. Depending on the SP34 setting, both the exposure lamp voltage and the development bias may change.

SP34 (This can also be changed by UP1.)

SP34 Setting	Setting	Exposure Lamp Voltage Change	Development Bias Change
0	**Normal**	**0**	**0**
1	Light	0	-40 V
2	Dark	0	+40 V
3	Lighter	+3 steps	-40 V
4	Darker	-3 steps	+40 V
5	Lightest	+7 steps	-40 V
6	Darkest	-7 steps	+40 V

1 step = 0.5 V (120 V machines) or 1.0 V (230 V machines)

3. Image Density Setting Position

The operation panel has four image density level positions. Depending on the position, the exposure lamp base voltage is changed. (ADS is the default.)

Photo Mode	Darker	ADS	Lighter
0	- 6 steps	0	+ 6 steps

In the photo mode, the exposure lamp voltage is unchanged; however, the development voltage is changed to improve the copy image for halftone originals. (Refer to Development section.)

(Image Density Adjustment At Darker Setting Position)

There are two SP modes which can adjust the image density when the “Darker” position is selected on the operation panel.
Both SP modes change the exposure lamp voltage as shown below.

SP35: Coarse Adjustment (This can also be changed by the UP2)

SP35 Setting	Setting	Exposure Lamp Voltage
0	**Normal**	**-6 steps**
1	Darker	-8 steps
2	Darkest	-10 steps

SP38: Fine Adjustment

Setting	SP38 Setting	Lamp Voltage Change
Darkest	0	-3 steps
↕	1	-2 steps
	2	-1 step
	3	**0**
	4	+1 step
	5	+2 steps
Lightest	6	+3 steps

(Image Density Adjustment at Lighter Setting Position)

There are two SP modes which can adjust the image density when the “Lighter” position is selected on the operation panel.
Only the SP mode (SP39) for the fine adjustment of the image density changes the exposure lamp voltage. The coarse adjustment (SP36) changes the development bias (see Development section).

SP39: Fine Adjustment

Setting	SP39 Setting	Lamp Voltage Change
Darkest	0	-3 steps
↑	1	-2 steps
↑	2	-1 step
↑	**3**	**0**
↑	4	+1 step
↑	5	+2 steps
Lightest	6	+3 steps

(Image Density Adjustment At Photo Mode Position)

The image density in the Photo mode can be changed by the SP64.

The exposure lamp voltage and the base development bias are changed by SP64 as shown in the table.

SP64 (This can also be changed by UP4.)

Settings	No.	Base Bias Voltage	Exposure Lamp Change
Lightest	0	-270 V	+4 steps
↕	1	-270 V	+2 steps
	2	-270V	0
	3	**-230 V**	**0**
	4	-210 V	0
Darkest	5	-190 V	0

4. V_L Correction

The light intensity may decrease because of dust accumulated on the optics parts. Additionally, the drum sensitivity gradually decreases during the drum's life. This may cause dirty background on copies. This is automatically compensated for by the V_L correction.

The exposure lamp voltage is increased by +1.0 volts (230-V machines), or +0.5 volts (120-V machines) at the set copy count interval. The V_L correction counter tracks the copy count interval. Note that if the V_L counter is cleared, an improper correction will be applied. The table below shows the relationship between the SP setting and the interval.

SP63 Setting	Exposure Lamp Voltage	Special UP31
0	**+1 step/4000 copies**	**0**
1	+1 step/3000 copies	1
2	+1 step/2500 copies	2
3	+1 step/2000 copies	3
4	+1 step/1500 copies	4
5	+1 step/1000 copies	5
6	+1 step/500 copies	-
7	+1 step/250 copies	-
8	No Correction	-

(Special UP Modes)

There are thirteen user program modes on this model (refer to the operator's manual and UP mode and SP mode cross-reference table). The operator's manual, however, explains only eight modes of them.

The UP modes numbered from 30 to 34 are special UP modes. If it is necessary to change any settings related to the special UP modes, the service representative may ask the user to change it and thus avoid a visit.

Please note that UP31 accepts settings only from 0 to 5.

(V_L Switch)

Depending on the environment, the default automatic V_L correction may not be enough to correct the image density. The V_L switch is located on the upper registration roller assembly in the machine and allows the operator to correct image density manually.

The exposure lamp voltage is increased according to the V_L switch position.



Position 0	Position 1	Position 2
0	+10 steps	+20 steps

The amount of increase in each position can be changed by SP62 as shown below:

SP62 Setting	Special UP Mode	Exposure Lamp Voltage		
	UP32	SW Position 0	SW Position 1	SW Position 2
0	**0**	**0**	**+10 steps**	**+20 steps**
1	1	0	+5 steps	+10 steps
2	2	0	+15 steps	+30 steps
3	3	0	+20 steps	+40 steps

ERASE

OVERVIEW

The erase lamp [A], which is installed in the upper unit, consists of a single row of LEDs extended across the full width of the drum. The erase lamp has the following functions:

- Leading edge erase
- Side erase (A227 machines only)
- Trail edge erase

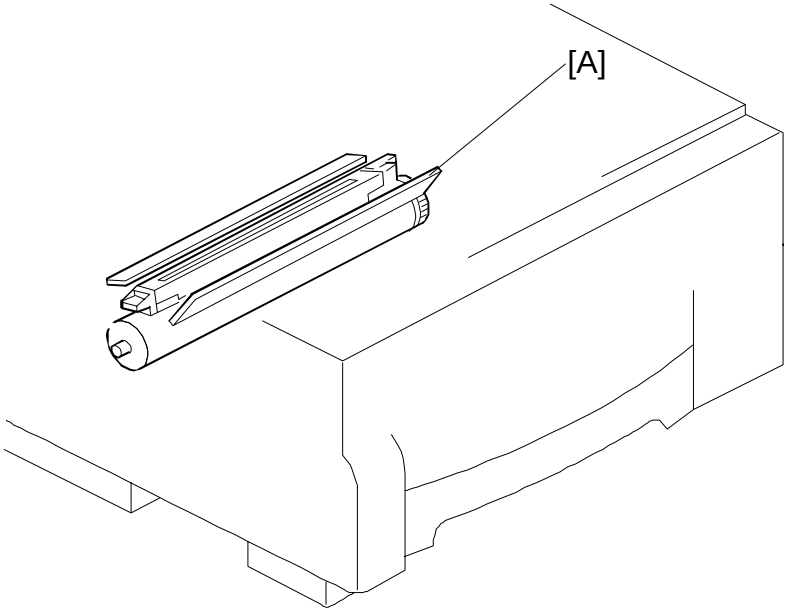

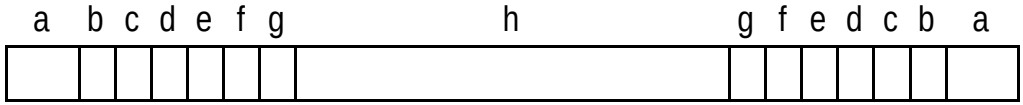

LEAD EDGE ERASE

The entire line of LEDs turns on when the main motor turns on. They stay on until the erase margin slightly overlaps the lead edge of the original image area on the drum (Lead Edge Erase Margin). This prevents the shadow of the original edge from being developed on the copy. At this point, side erase starts (A227 machines only). The width of the leading erase margin can be adjusted using SP41.

SIDE ERASE (A227 MACHINES ONLY)

Based on the reproduction ratio, the LEDs turn on blocks (labeled “a” to “h” on the previous page). This reduces toner consumption and drum cleaning load.

The CPU determines which blocks to turn on based on the selected reproduction ratio as follows.

Reproduction Ratio (%)	Blocks ON
70 to 72	a - g
73 to 76	a - f
77 to 80	a - e
81 to 85	a - d
86 to 88	a - c
89 to 92	a - b
93 to 97	a
98 to 100	All Off

TRAILING EDGE ERASE

This minimizes toner consumption.

The entire line of LEDs turns on after the trailing edge of the latent image has passed 10 mm from the erase lamp. The length of the latent image is determined by the paper length, which is checked by the registration sensor. The LEDs stay on to erase the leading edge of the latent image in the next copy cycle. After the final copy, the erase lamps and the main motor turn off at the same time.

DEVELOPMENT

OVERVIEW

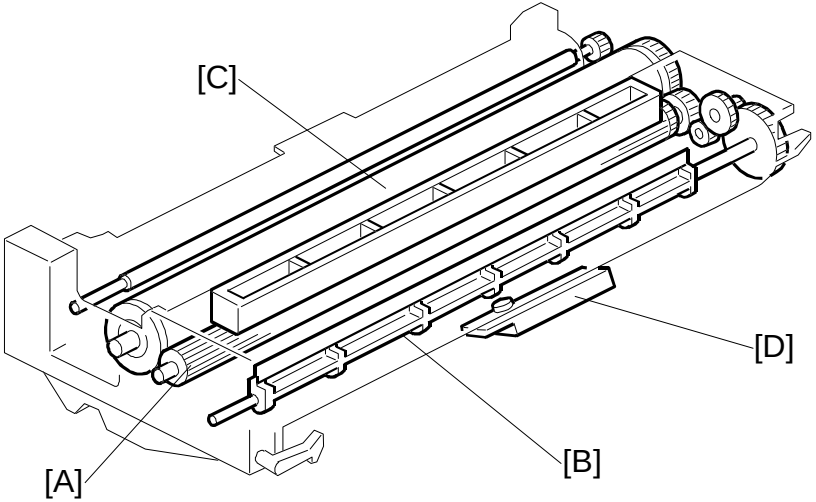

The development unit is contained in the CTDM (Cleaning Toner Development Magazine). When the main motor turns on, the development roller [A] and agitator [B] start turning.

There are permanent magnets in the development roller which attract the developer to the roller. The turning sleeve of the development roller carries the developer past the doctor blade, which trims the developer to the desired thickness.

The development roller sleeve continues to turn, carrying the developer to the drum [C]. When the developer brush contacts the drum surface, the negatively charged areas of the drum surface attract and hold the positively charged toner. In this way, the latent image is developed. The amount of toner consumed during development is supplied from the toner bottle automatically.

The development roller is given a suitable negative bias to prevent toner from being attracted to the non-image areas, which may have a residual negative charge. The bias also controls image density. The toner end sensor [D] detects when toner in the CTDM has run out.

TONER SUPPLY MECHANISM

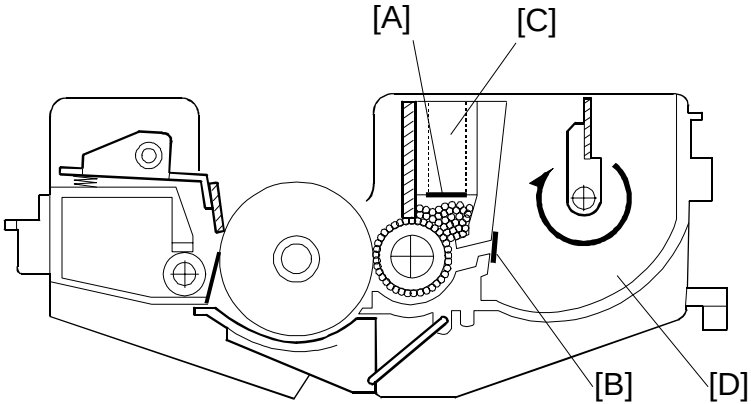

Before the two seals [A, B] and are removed from a new CTDM, the developer is divided into six cells to prevent developer in it from biasing during shipment. Toner and developer mix when the seals are removed. Whenever a new CTDM is installed into the machine, CTDM initialization must be performed to mix the toner and developer evenly, and create the triboelectric charge.
CTDM initialization is performed at the following times:

- when the main switch is turned off and on at the toner end condition
- when the upper cover is opened and closed at the toner end condition
- SP12 is performed

NOTE: CTDM initialization must be performed by using SP12 if the CTDM is replaced when the toner end condition does not exist.

The developer case is full of developer and toner after CTDM initialization. Toner density in the developer case [C] is kept uniform all the time since the amount of consumed toner is supplied from the toner case [D] automatically.

DEVELOMENT BIAS FOR IMAGE DENSITY CONTROL

Image density is controlled by changing two items—the amount of bias voltage applied to the development roller sleeve, and the amount of voltage applied to the exposure lamp.

Applying a bias voltage to the development sleeve reduces the potential between the development roller and the drum, thereby reducing the amount of toner transferred. As the bias voltage becomes greater, the copy becomes lighter.

The method of control depends on whether the image density is manually selected or auto image density is used.

Base Bias Voltage in Each Image Density Mode

The base bias voltage for non-image areas (between copies) is fixed at -150 Volts. This value is also be compensated by the factors explained later.

The base bias voltage for image areas is determined according to the setting of the image density mode. The following table shows the base development bias. The exposure lamp base voltage correction value is included as a reference.

	Photo Mode	Darker	ADS	Lighter
Base Bias	-230 V	-150 V	-150 V	-190 V
Exposure Lamp Voltage	0	-6 steps	0	+6 steps

Compensation Factors

1. Automatic Image Density (ADS) Mode

In ADS mode, the exposure lamp base voltage is fixed at a value that is determined by SP48 (see Optics section). Image density is controlled by changing only the development bias voltage.

The bias voltage for ADS mode depends on the background image density of the original as measured by the ADS sensor.

The CPU checks the voltage output from the automatic ID circuit. This circuit has a peak hold function. The peak hold voltage corresponds to the maximum reflectivity of the original. The CPU then determines the proper development bias level with reference to the peak hold voltage.

The table below shows the ratio of the ADS voltage (actual original background density) to the ADS reference voltage (standard white background density) and the development bias voltage.

ADS Voltage Ratio (%)	Development Bias Voltage
80 to 100 (light)	-150 V
73 to 79	-190 V
60 to 72	-230 V
30 to 59	-270 V
0 to 29 (dark)	-290 V

2. Image Density Adjustment Setting (SP34)

Based on SP34, compensation will be applied to the development base bias voltage as shown in the following table. This compensation is applied to all the image density adjustment positions.

SP34 (This can also be changed by UP1)

SP34 Setting	Setting	Development Bias Change	Exposure Lamp Voltage Change
0	**Normal**	**+0 V**	**0**
1	Light	-40 V	0
2	Dark	+40 V	0
3	Lighter	-40 V	+3 steps
4	Darker	+40 V	-3 steps
5	Lightest	-40 V	+7 steps
6	Darkest	+40 V	-7 steps

NOTE: The value in the list will be added to the base bias voltage.
Example)
Operation panel set to “Darker”
Base bias voltage = -150 Volts
SP34 Setting = 3
Development bias = -150 + (-40) = -190 Volts

3. Image Density Adjustment at Lighter Setting Position (SP36)

SP36 can change the base bias voltage when the “Lighter” position is selected on the operation panel.

SP36 (This can also be changed by UP3)

SP36 Setting	Image Density	Base Bias Voltage at Lighter Position
0	**Normal**	**-190 V**
1	Lighter	-230 V
2	Lightest	-270 V

4. Photo Mode Correction (SP64)

The image density in the Photo mode can be changed by the SP64 as shown in the following table.

SP64 (This can also be changed by UP4)

No.	Setting	Base Bias Voltage	Exposure Lamp
0	Lightest	-270 V	+4 steps
1	Lighter	-270 V	+2 steps
2	Light	-270V	0
3	**Normal**	**-230 V**	0
4	Dark	-210 V	0
5	Darker	-190 V	0

TONER END CONDITION

Toner end condition is determined by the toner end sensor, which is located below the toner bottle of the CTDM.

Toner Near-end Condition

While the main motor is rotating, the machine monitors the voltage output from the toner end sensor. The voltage from the sensor is high when the toner bottle of the CTDM is full and becomes low when the toner bottle is almost empty.

If the CPU detects a low output from the toner end sensor more than 3 times in a row, the CPU starts to blink the Replace CTDM indicator (). This is the toner near-end condition. After it detects this condition, the machine can make 50 copies.

The machine clears the toner near-end condition if the output from the toner end sensor goes back high for 5 seconds.

Toner End Condition

If the machine makes more 50 sheets of copies during toner near-end condition or the CPU detects a low output for more than 5 seconds, it disables copying and lights the Replace CTDM indicator ().

The machine clears the toner end condition if the output from the toner end sensor goes back high for 5 seconds.

Toner End Recovery

Replacing the CTDM clears the toner end condition. If the main switch is turned off and back on, or the upper cover is opened and closed during the toner near-end condition or toner end condition, the machine expects that the CTDM has been replaced. It then rotates the main motor for CTDM Initialization, and then the CPU monitors an output from the sensor. The machine clears the toner end condition if the CPU detects a high output from the toner end sensor for more than 5 seconds.

NOTE: 1) The machine also detects the toner end condition when the CTDM is not installed in it.
2) CTDM initialization can be executed using SP12.

IMAGE TRANSFER

A high negative voltage (approximately -5.5 kV) is applied to the transfer corona wire [A] by the power pack, and the corona wire generates negative ions. These negative ions are applied to the back side of the copy paper. This negative charge forces the paper against the drum and attracts the positively charged toner onto the paper.

The paper separates from the drum automatically because of the drum's small diameter. Due to the paper's stiffness, it cannot make the sharp turn and separates without any assistance. This is sometimes referred to as *curvature separation*.

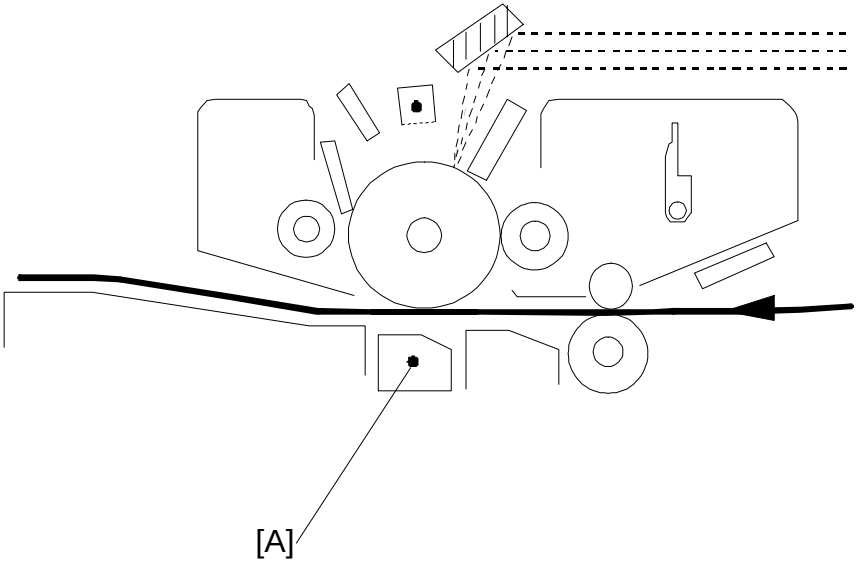

DRUM CLEANING

The cleaning unit and the used toner tank are contained in the CTDM.

A counter blade system is used for drum cleaning. The cleaning blade [A] scrapes off any toner remaining on the drum after the image is transferred to the paper.

There is no used toner overflow detection mechanism because the used toner tank is large enough for the lifetime of the CTDM.

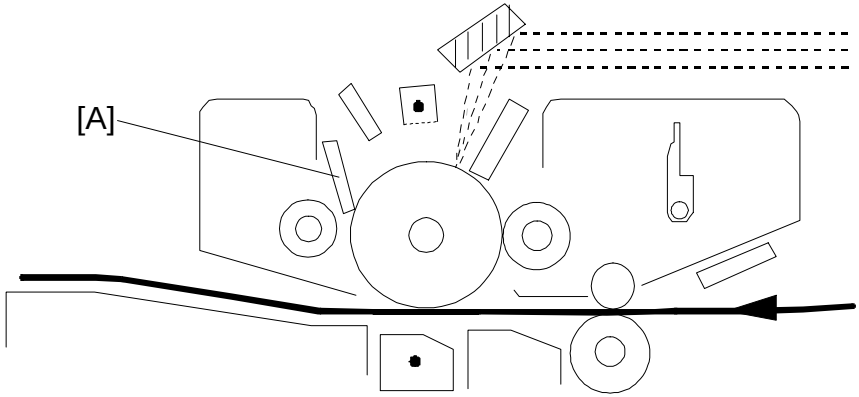

QUENCHING

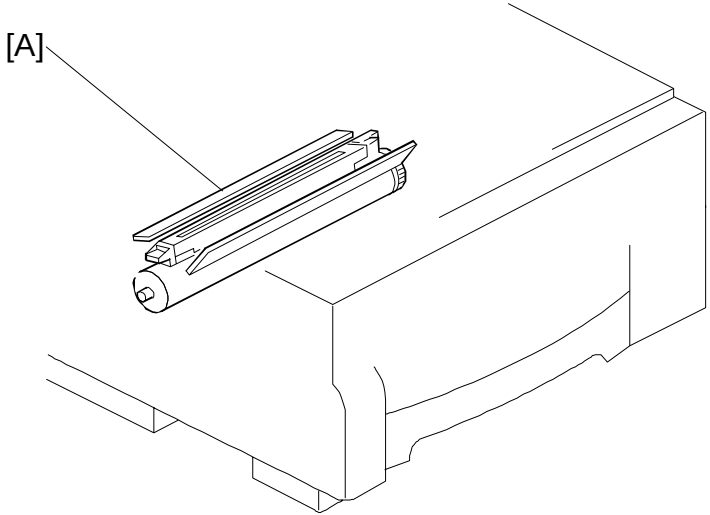

In preparation for the next copy cycle, light from the quenching lamp (LEDs) [A] neutralizes any charge remaining on the drum. The quenching lamp is installed on the charge corona unit.

PAPER FEED AND REGISTRATION

OVERVIEW

This machine has one paper feed station and a by-pass feed table.

The paper feed station uses a paper tray [A] which can hold 250 sheets. The by-pass feed table [B] can hold 1 sheet.

The paper tray uses two semicircular feed rollers [C] and a corner separator. The semicircular feed rollers make one rotation to drive the top sheet of the paper stack to the relay rollers [D].

The paper tray has two corner separators, which allow only one sheet to feed. They also serve to hold the paper stack.

If a sheet of paper is set on the by-pass feed table, the registration sensor [E] is actuated and the machine goes to by-pass feed mode.

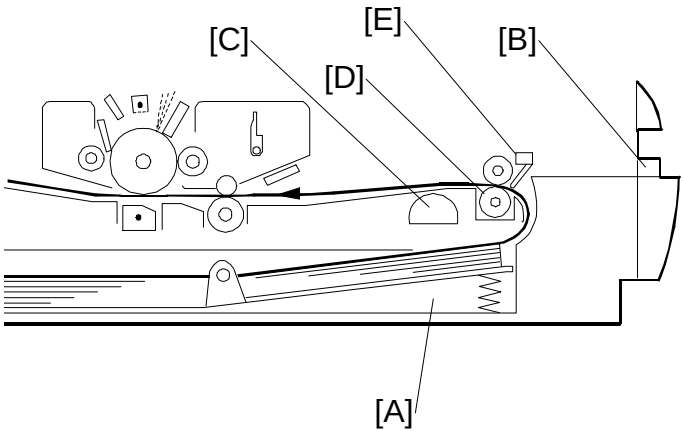

PAPER FEED MECHANISM

The main motor rotation is transmitted to the paper feed clutch gear [A] though several gears. The rotation of the paper feed clutch gear is transmitted to the relay roller gear [B] through an idle gear.

After the Start key is pressed, the solenoid [C] of the paper feed clutch is energized to release the stopper [D], and the rotation of the relay roller gear is transmitted to the feed roller shaft [E]. The solenoid stays on for 250 milliseconds and then turns off. The feed rollers stop when they complete one rotation.

Before the feed rollers stop, the relay rollers [F] catch the leading edge of the paper and continue feeding it.

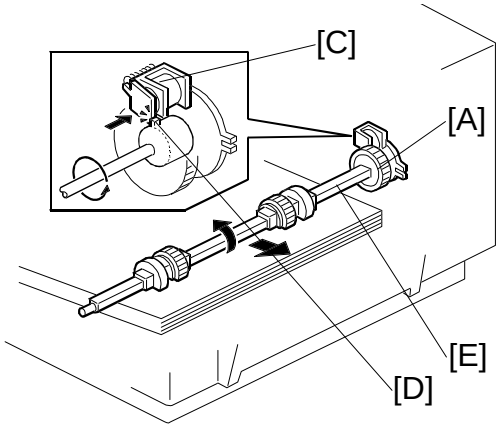

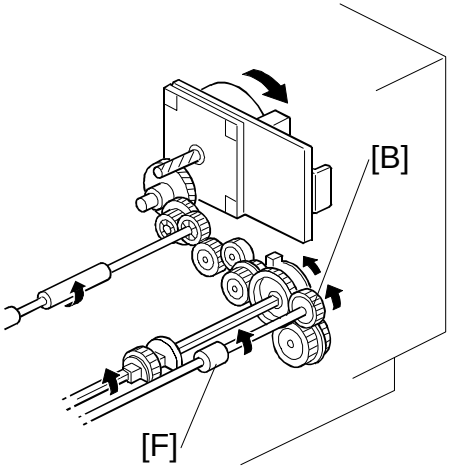

REGISTRATION MECHANISM

The relay rollers always rotate while the main motor rotates. They transport the paper to the registration rollers [A]. The registration rollers are also driven by the main motor through idle gears.

There is a paper stopper [B] between the relay rollers and the registration rollers. After the leading edge of the paper reaches the stopper, it buckles slightly to remove skew. Then, 2.9 seconds after the paper feed clutch is turned on, the registration solenoid [C] is energized to release the stopper, synchronizing the paper feeding with the image on the drum. After 0.6 seconds, the registration solenoid is de-energized.

The registration sensor detects paper length and paper end.

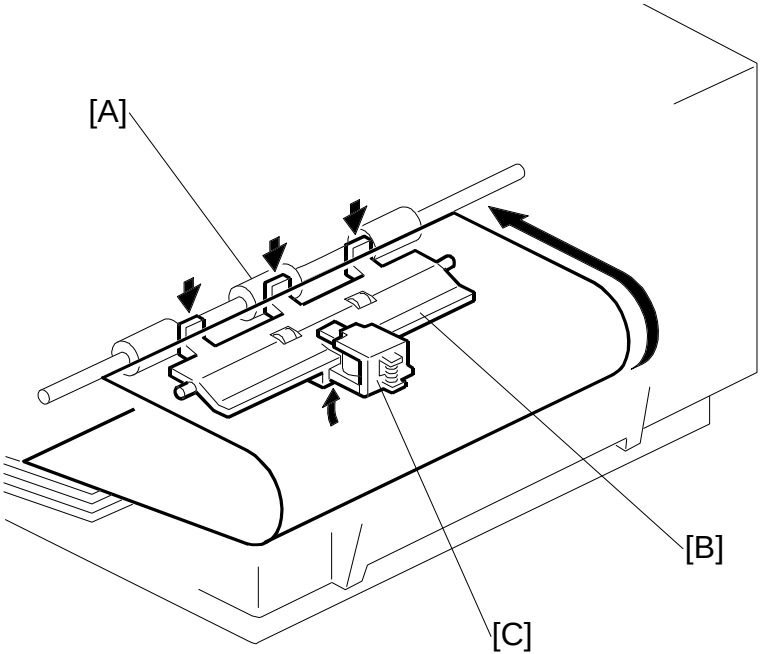

BY-PASS FEED

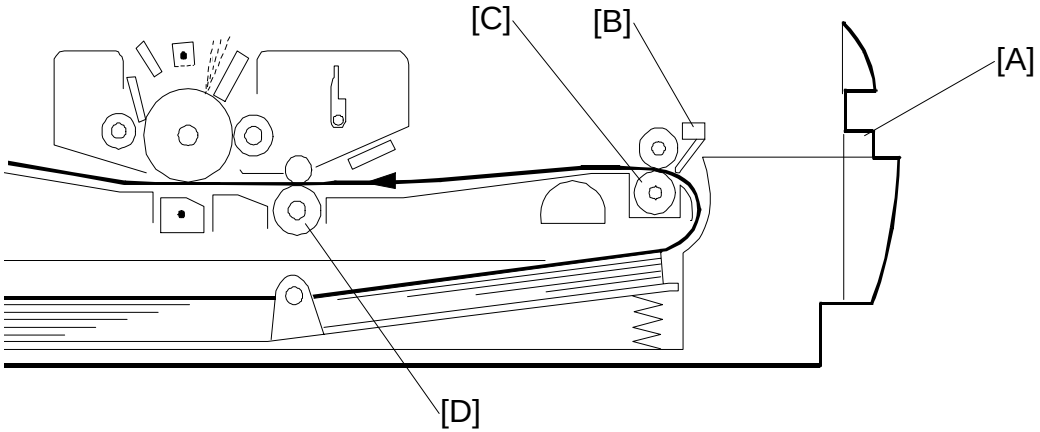

If a sheet of paper is inserted in the by-pass feed table [A], the registration sensor [B] is actuated and the machine goes to by-pass feed mode. 300 milliseconds after the registration sensor is actuated, the main motor turns on for 230 milliseconds to drive the relay roller [C] to catch the leading edge of the paper. The relay roller then transports the paper to the registration roller [D]. The registration solenoid is energized 2358 milliseconds after the main motor starts rotating.

PAPER FEED AND MISFEED DETECTION TIMING

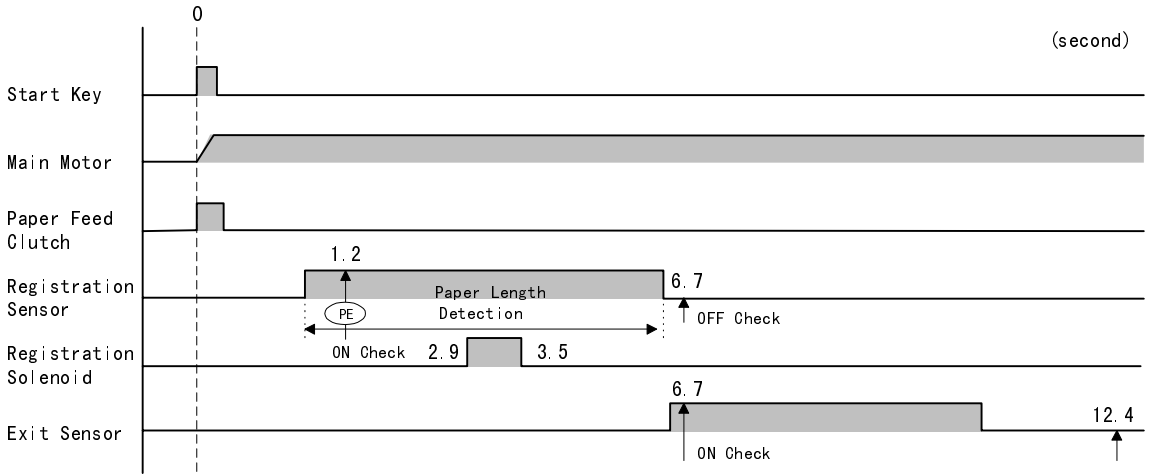

The registration sensor and the exit sensor are used for misfeed detection. If the CPU detects a misfeed, the Check Paper Path indicator (⚠) turns on or “PE” is displayed on the copy counter.

When the main switch is turned on, the CPU checks these sensors for initial misfeed.

During the copy cycle, the CPU performs four kinds of misfeed detection:

PE: Checks whether the registration sensor is actuated within 1.2 seconds after the Start key is pressed. Since this machine has no indicator or sensor to detect paper end, the “PE” indicator is lit in the paper end condition as well.

ϟ” (1): Checks whether the copy paper has passed through the registration sensor 6.7 seconds after the Start key is pressed.

ϟ” (2): Checks whether the exit sensor is actuated within 6.7 seconds after the Start key is pressed.

ϟ” (3): Checks whether the copy paper has passed through the exit sensor 12.4 seconds after the Start key is pressed.

IMAGE FUSING

OVERVIEW

After the image is transferred, the copy paper enters the fusing unit. The image is fused to the copy paper by the process of heat and pressure through the use of a hot roller [A] and pressure roller [B].

The CPU monitors the hot roller temperature through a thermistor [C] that is in contact with the hot roller surface. A thermofuse [D] protects the fusing unit from overheating.

The hot roller strippers [E] separate the copy paper from the hot roller and direct it to the exit rollers. The exit sensor [F] monitors the progress of the copy paper through the fusing unit and acts as a misfeed detector. The exit rollers drive the copy paper to the copy tray.

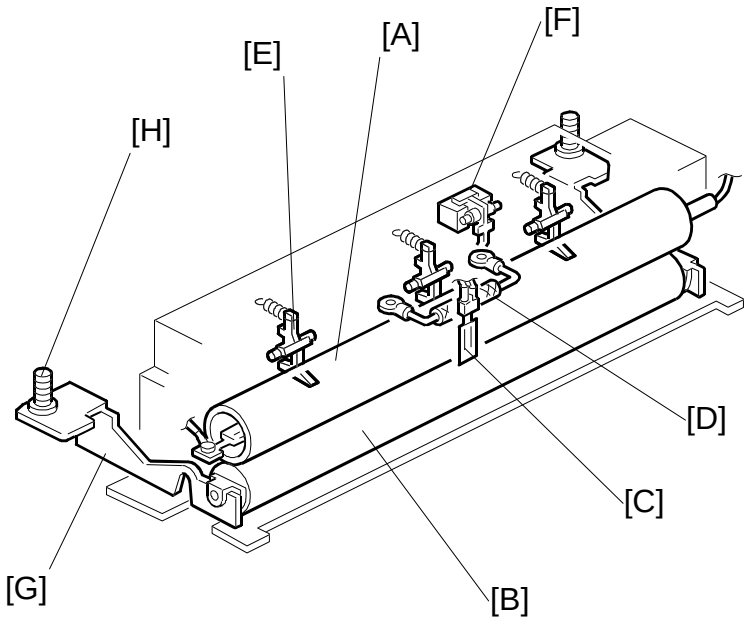

When the upper unit is closed, the pressure roller is pushed up by the arms [G]. The springs [H] of front and rear apply the proper fusing pressure between the hot roller and the pressure roller.

FUSING LAMP CONTROL

The CPU monitors the temperature of the hot roller surface using a thermistor. The fusing lamp is turned on and off to keep the hot roller surface at the target temperature. The target temperature depends on the machine condition as follows.

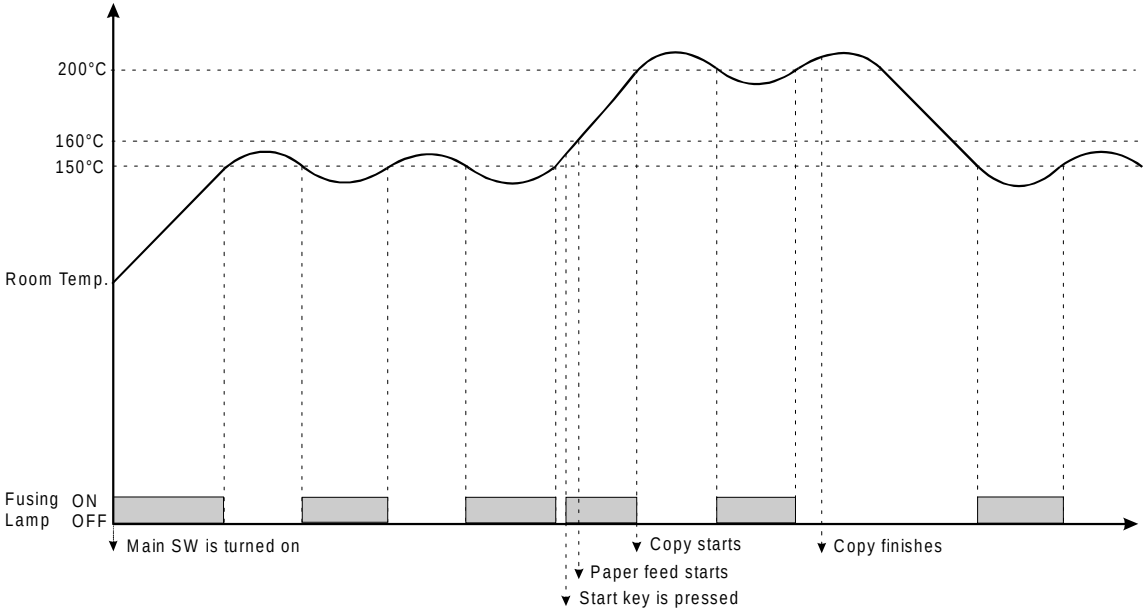

Machine Condition	Fusing Lamp ON/OFF Threshold	Remarks
After the main switch is turned on and the fusing temperature has reached 160°C.	160°C	When the Start key is pressed the red indicator lights and the fusing temperature increases. Paper feed starts after the fusing temperature reaches 160°C.
During copying	200°C	
Within 30 minutes after copying is finished	160°C	
Over 30 minutes after copying is finished	150°C	

When the main switch is turned on, the CPU turns on the fusing lamp. When the fusing thermistor detects 160°C, the machine enters the ready condition.

If the fusing temperature is higher than 160°C when the Start key is pressed, the machine starts copying immediately. Otherwise, copying starts after the fusing temperature reaches 160°C. The fusing temperature is controlled at 200°C during copying.

Within 30 minutes after copying is finished, the fusing temperature is controlled at 160°C. Over 30 minutes after copying is finished, the fusing temperature is controlled at 150°C. If auto shut off is selected, the fusing lamp is turned off when the time selected by SP14 passes after copying is finished.

FUSING LAMP CONTROL CIRCUIT

Overview

The main control board monitors the fusing temperature through a thermistor to control the applied power. Two fusing lamp control systems are provided for this machine.

On/Off Control

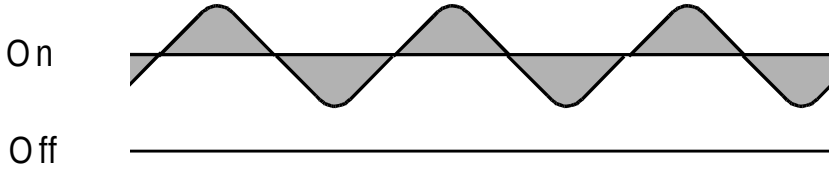

A227D522.WMF

The voltage applied to the fusing lamp is the full duty cycle of the ac waveform. The power is applied to the lamp until the operating temperature is reached.

Phase Control Mode

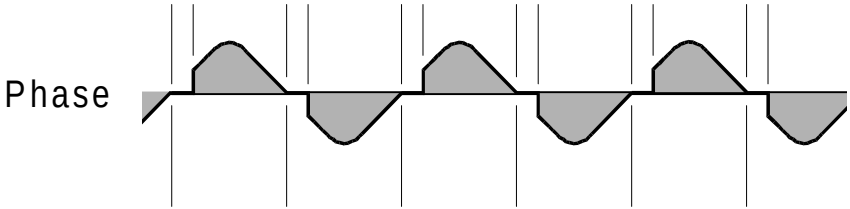

A227D523.WMF

The amount of time that power is applied to the fusing lamp depends on the temperature of the hot roller.

NOTE: Phase control mode is used only if the customer has a problem with electrical noise or interference.

Overheat Protection

There is an overheat protection circuit in the main control board. If the hot roller temperature reaches 230°C, the resistance of the thermistor becomes too low. If the main control board detects this condition for 3 seconds continuously, “E-53” is displayed on the operation panel and power to the fusing lamp is cut.

If the thermistor overheat protection circuit fails, the thermofuse opens when it reaches 169°C, removing power from the fusing lamp.

INSTALLATION

INSTALLATION REQUIREMENTS

ENVIRONMENT

1. Temperature Range: 10°C to 35°C (50°F to 95°F)
2. Humidity Range: 15% to 80% RH
3. Ambient Illumination: Less than 1,500 lux (Do not expose to direct sunshine.)
4. Ventilation: Minimum space 30 m^3.
   Room air should turn over at least 3 times per hour
5. Ambient Dust: Less than 0.15 mg/m^3 (4 x 10^{-3} oz/yd^3)

6. If the place of installation is air-conditioned or heated, do not place the machine:
   1) Where it will be subjected to sudden temperature changes.
   2) Where it will be directly exposed to cool air from an air-conditioner.
   3) Where it will be directly exposed to heat from a heater.
7. Do not place the machine where it will be exposed to corrosive gasses.
8. Do not install the machine at any location over 2,000 m (6,500 feet) above sea level.

9. Place the machine on a strong and level base.
10. Do not place the machine where it may be subjected to strong vibration.

MACHINE LEVEL

1. Front to back: Within 3 mm (0.12") of level
2. Right to left: Within 3 mm (0.12") of level

MINIMUM SPACE REQUIREMENTS

Place the machine near the power source, providing clearance as shown:

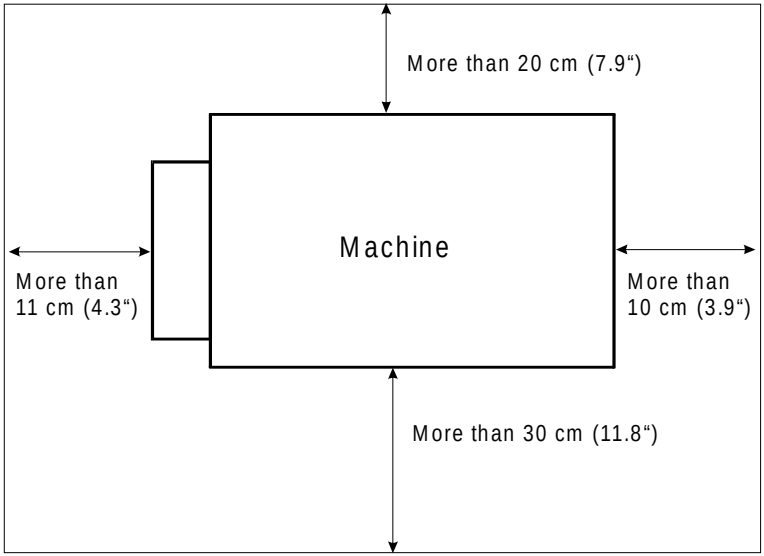

POWER REQUIREMENTS

1. Input voltage level: 120 V, 60 Hz: More than 10 A
   220 ~ 240 V, 50/60 Hz: More than 6 A
2. Permissible voltage fluctuation: 10 %

Do not set anything on the power cord.

Make sure the plug is firmly inserted in the outlet.

Avoid multi-wiring.

MACHINE INSTALLATION

Refer to the procedure packed in the box with the machine or to the procedure in the operator's manual.

SERVICE TABLES

SERVICE REMARKS

GENERAL CAUTIONS

1. To prevent physical injury, keep hands away from the mechanical drive components when the main switch is on (especially during the warm-up cycle). If the Start key is pressed before the machine finishes the warm-up cycle, the Start key indicator starts blinking and the machine starts making copies as soon as the warm-up cycle is completed.
2. Before disassembling or assembling any parts of the machine, make sure that the power cord is unplugged.
3. To avoid possible injury or machine damage, always hold the upper unit firmly with one hand while opening the upper unit or releasing the gas spring with the other.
4. Keep all the shipping retainers for future shipping use.
5. Do not loosen any of the paint-locked screws. Such screws are used for optic components, the drum stay, and doctor blade of the CTDM.
6. Do not release the gas spring from the pin while the upper unit is closed. Otherwise the gas spring will expand suddenly and may cause injury.

7. To prevent the upper unit from falling when separating the gas spring from it, hold the upper unit firmly with one hand while releasing the gas spring with the other.
8. Do not leave the upper unit fully opened. Otherwise, the unit or whole machine may be fall over.

DRUM

1. Never expose the drum to direct sunlight.
2. Never touch the drum surface with bare hands. If the drum surface is touched with fingers or becomes dirty, wipe it with a clean, dry cloth.
3. Never use alcohol to clean the drum; alcohol dissolves the drum surface.
4. Store the drum in a cool, dry place away from heat.
5. Take care not to scratch the drum as the drum's surface layer is thin and easily damaged.
6. Never expose the drum to corrosive gasses such as ammonia gas.
7. Always keep the drum in its protective sheet when it is out of the machine.

CTDM (CLEANING TONER DEVELOPMENT MAGAZINE)

1. Place the CTDM on a clean and level place when it is out of the machine.

2. Do not turn the CTDM upside down. Toner and developer may fall from the unit.
3. Be careful not to damage the edge of the cleaning blade.
4. Do not store the CTDM under high temperature and high humidity conditions.

CHARGE CORONA UNIT

1. Do not touch the charge corona wire or grid plate with bare hands. Oil stains may cause uneven image density on copies.
2. Clean the charge corona wire by sliding the wire-cleaning tool from front to rear.
3. Clean the charge grid with a blower brush (not with a cloth).
4. Clean the quenching lamp (LED) with a blower brush or a dry cloth.

ERASE LAMP

1. Clean the erase lamp with a blower brush or dry cloth.

OPTICS

1. Clean the exposure glass with glass cleaner and a damp cloth to reduce the amount of static electricity on the glass surface.
2. Only use a clean soft cloth to clean the mirror and reflectors.
3. Only use a blower brush to clean the lens.
4. Do not touch the following parts with bare hands:
   a) Reflectors
   b) Exposure Lamp
   c) Mirrors and Lens
5. Whenever cleaning the optics, all the following actions must be done in order.
   a) Optics cleaning
   b) SP95 (V_L Correction Reset)
   c) Copy Quality Adjustment
   d) SP56 (ADS Reference Voltage Adjustment) See the SP mode table for details.

TRANSFER CORONA

1. Clean the corona wire by sliding the wire-cleaning tool from front to rear.

FUSING UNIT

1. Be careful not to damage the edges of the hot roller strippers.
2. Be careful not to damage the tension springs of the hot roller strippers.
3. Do not touch the fusing lamp with bare hands.
4. Make sure that both fusing lamp insulators are properly set in the holders, and that fusing lamp does not touch the inner surface of the hot roller.

PAPER FEED

1. Do not touch the feed roller with bare hands.
2. The side fences and the end fence of the paper tray should be positioned correctly so that they securely hold the paper. Otherwise, paper misfeeds may occur.
3. Avoid storing paper for a long time. At high temperature and high humidity, or at low temperature and low humidity, store paper in a plastic bag. This is especially important to decrease the amount of curling or waving of the paper that would lead to paper misfeeds.

OTHERS

1. When replacing the main control board, remove the EEPROM (IC105) from the old board and replace it on the new board. Then install the new main board in the machine.
2. Never perform SP99 (Clear All Memory) except for the following two cases:
   a) When the copier malfunctions due to a damaged EEPROM.
   b) When using a brand-new EEPROM.
3. When SP99 is performed, copy quality may be affected. Adjust copy quality if necessary.
4. Tighten securely the screws used for grounding the following PCBs when reinstalling them.
   - Main Control Board
   - Power Supply Board
   - High Voltage Power Pack

PROGRAM MODES

BASIC OPERATION

Component

This machine is equipped with two program modes. One is the Service Program (SP) mode for factory and field technician usage, and the other is the User Program (UP) mode for user usage. These program modes have a different access procedures, but all the UP mode functions can be accessed from the SP mode.

To make it possible to reset a service call (E5x) condition such as a fusing error using the SP mode, the SP mode can be accessed while the error condition exists.

Operation

To access these program modes, a certain key must be held down while turning on the main switch. After accessing, select the required mode number and perform the necessary procedures needed for that function. It is possible to move on to the next required mode without exiting each time.

To leave the SP or UP mode, turn the main switch off and on.

Display

To display and to distinguish various conditions using the Copy Counter, the appearance of the Copy Counter varies. When the Copy Counter is blinking, the machine is ready to accept a program mode number, and it displays the program mode number.

When the Copy Counter stops blinking, the machine is ready to accept an adjustment value, and it may be displaying the current adjustment value.

The Photo mode indicator is always blinking when in the program modes.

Notes

1. Since the Image Density key is used during the SP modes, image density cannot be changed using the Image Density key while in the SP modes.
2. With the exception of SP57 and SP58, all copies made inside the SP modes are made with ADS setting without ADS compensation.
3. Since the Copy Counter is used to display the adjustment values and data, it cannot display the number of copies.

SP MODE

Service Program Mode Access Procedure

1. Turn off the main switch.
2. While pressing the Increase Quantity “+” key and Clear/Stop key together, turn on the main switch.
3. Release the Increase Quantity “+” key and the Clear/Stop key, and within 5 seconds, press the Image Density key (If not pressed within 5 seconds, the machine will return to the copy mode). The machine is ready to accept the program number.

How to Select the Program Number

1. By using the Increase or Decrease Quantity (“+” or “-”) keys, select the required program number. At this point, the Copy Counter and Photo Mode indicator will blink.
2. Press the Image Density key. The number that is currently blinking in the Copy Counter will be entered as the selected program number.

NOTE: To access the UP mode, turn on the main switch while pressing the Clear/Stop key.

Changing the Value of an SP Mode

1. Select the desired value or setting using the Increase or Decrease Quantity (“+” or “-”) key. For some modes, since the Copy Counter has only 2 digits, the hundred digit is shown by the combination of indicators turned on in the Manual Image Density indicator as shown below.

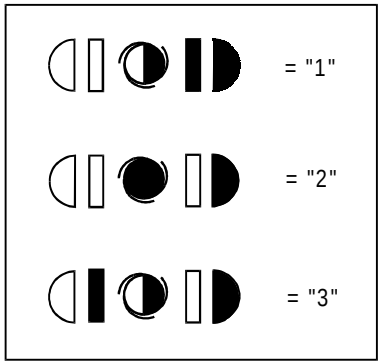

For example:

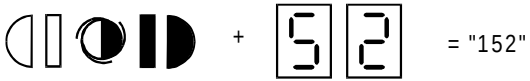

2. When the Image Density key is pressed, the number which is currently displayed in the Copy Counter will be entered as the new value or setting, and will be stored in memory.
3. The machine is ready to accept the new program number. Repeat to select the program number or leave SP mode by turning the main switch off/on.

SP MODE QUICK REFERENCE TABLE

SP Mode No.	Function	SP Mode No.	Function
3	Destination Setting	49	Fusing Temperature Adjustment
4	Forced Free Run	51	Exposure Lamp Voltage Display
5	Forced Free Run with Exposure Lamp Off	52	Fusing Temperature Display
6	Misfeed Detection Off	55	ADS Reference Voltage Display
7	Free Run	56	ADS Reference Voltage Adjustment
8	Input Check	57	ADS Output Voltage Display
9	Output Check	58	Development Bias Voltage Display
10	Scanner Free Run	59	Optics Temperature Display
11	All Indicators On	60	Drum Potential Measurement (With Paper)
12	CTDM Initialization	61	Drum Potential Measurement (Without Paper)
14	Auto Shut Off (Energy Star) Time Setting	62	V_L Switch Setting
15	Auto Reset Time Setting	63	V_L Correction Interval
16	Count Up/Down Selection	64	Photo Mode Compensation Setting
19	Disable ADS Compensation	66	OPC Counter Clear
21	A4 Lengthwise Erase Selection	69	OPC Counter Display
23	CTDM Initialization Time Setting	70	V_L Correction Display

SP Mode No.	Function	SP Mode No.	Function
29	Fusing Temperature Control Selection	77	Auto Shut Off (Energy Star) Selection
30	Exhaust Fan Speed Setting	81	Factory Initialization
34	Image Density Adjustment	82	Data Communication
35	Coarse Image Density Adjustment at Darker Setting Position	88	Total Copy Counter Display
36	Coarse Image Density Adjustment at Lighter Setting Position	90	Factory Data and Counter Clear
38	Fine Image Density Adjustment at Darker Setting Position	91	Optics Cooling Fan Operation
39	Fine Image Density Adjustment at Lighter Setting Position	95	V_L Correction Counter Clear
*41	Lead Edge Erase Margin Adjustment	96	Forced Toner End Reset
*42	Registration Adjustment	97	Service Call (E5x) Reset
*43	Vertical Magnification Adjustment	98	Total Counter Clear
*44	Horizontal Magnification Adjustment	99	All Memory Clear
*48	Light Intensity Adjustment		

*For these items, values set in the factory are listed on “SP MODE FACTORY SET DATA” sheet.

UP MODE AND SP MODE CROSS REFERENCE TABLE

UP Mode No.	SP MODE No.	Function
1	34	Image Density Adjustment
2	35	Coarse Image Density Adjustment at Darker Setting Position
3	36	Coarse Image Density Adjustment at Lighter Setting Position
4	64	Photo Mode Compensation Setting
5	14	Auto Shut Off (Energy Star) Time Setting
6	15	Auto Reset Time Setting
7	16	Count Up/Down Selection
8	88	Total Copy Counter Display
30	69	OPC Counter Display
31	63	V_L Correction Interval
32	62	V_L Switch Setting
33	12	CTDM Initialization
34	77	Auto Shut Off (Energy Star) Selection

NOTE: The UP modes numbered from 30 to 34 are special UP modes, which are not explained in the operator's manual. If it is necessary to change any settings related to the special UP modes, the service representative may ask the end user to change it (and thereby avoid a service visit).

SERVICE PROGRAM MODE

NOTE: The default value is printed in bold letters.

SP3: Destination Setting

This mode must be set depending on the paper size being used.

No.	Settings	Copy Count (SP16 Setting)	Note
0	---	---	---
1	Inch	Count up	Factory setting for 120 V machines
2	Metric 1	Count up	Factory setting for 230 V machines
3	Metric 2	Count up	Factory setting for 100 V machines

SP3 does not have any relationship to the electrical power supply. Only erase and magnification ratio mechanisms are changed. For example, changing this mode will allow European machines to use inch size paper.

NOTE: 1) The error code “E15” is displayed in the copy counter if SP3 is set to “0”.
2) Lengthwise erase timing of 8½” x 11” is always performed as A4 if SP3 is set to “2” or “3”.

SP4: Forced Free Run

In this mode, free run can be performed even if the fusing unit does not reach the required temperature. See free run mode (SP7) for more details.

SP5: Forced Free Run with Exposure Lamp Off

This mode forces free run mode (SP4) with exposure lamp off.

SP6: Misfeed Detection Off

This mode allows operation without misfeed detection by the registration and exit sensors. Press the Start key to make a copy. Copying stops upon reaching the set count, or when the C/S key is pressed.

Use this mode to check whether the paper misfeed was caused by a sensor malfunction. The total counter increments when copies are made in this mode.

SP7: Free Run

In this mode, free run is performed. Press the Start key to start the free run. Press C/S to stop the free run.

The machine operates with the normal copy process for 8½" x 14" paper and selected reproduction ratio with no paper feed and no total counter increment.

NOTE: Before starting, close the platen cover to minimize toner consumption.

SP8: Input Check

The Manual Image Density and the Reproduction Ratio Indicators are used to display the data from the sensors while making a normal copy.

Press the Start key to perform this mode. Press the Image Density key to stop this mode.

Sensor	Indication	Display Condition
Registration	Darker Image Density	ON: Paper Present
Exit	ADS	ON: Paper Present
Scanner HP	Lighter Image Density	ON: Home Position
Lens HP*	Reproduction Ratio 141%	ON: Actuator inside Sensor

*A227 machine only

SP9: Output Check

SP9 is used to turn on individual electrical components. Select the desired number from the following table. Press the Start key to turn on the electrical component. Press the C/S key to turn off the electrical component.

No.	Electrical Components	Note
1	Main Motor, Quenching Lamp, and Exhaust Fan Motor (High Speed)	
2	Charge Corona, Transfer Corona, and Development Bias	Development bias is the base voltage without correction.
3	Exhaust Fan Motor (High Speed)	
4	---	Not used
5	Registration Solenoid	
6	Paper Feed Clutch	
7	Eraser Lamp	All LEDs on
8	Exposure Lamp and Exhaust Fan Motor (High Speed)	

SP10: Scanner Free Run

SP10 is used to perform the scanner free run. Scanner free run starts a few seconds after pressing the Start key. Press the C/S key to stop the free run. Scanner free run is performed with the scanner process for 8½" x 14" paper size and selected reproduction ratio.

SP11: All indicators On

SP11 is used to turn on all the indicators on the operation panel for 30 seconds. To turn off the indicators manually (before 30 seconds have passed), press the Image Density key.

SP12: CTDM Initialization (UP33)

SP12 is used to initialize developer in a brand-new CTDM. Press the Start key to start the CTDM initialization. The initialization time can be changed by using SP23.

NOTE: This mode is performed automatically if the main switch is turned off and on, or the upper unit is opened and closed during toner end condition.

SP14: Auto Shut Off (Energy Star) Time Setting (UP5)

SP14 is used to select the auto shut off time.

The main switch is shut off automatically after the selected auto shut off time if SP77 is at “0”.

No.	Settings	No.	Settings
0	5 min.	4	1.5 h
1	10 min.	5	2 h
2	**30 min.**	6	3 h
3	1 h	7	4 h

SP15: Auto Reset Time Setting (UP6)

SP15 is used to select an auto-reset time of 1 or 3 minutes, or to cancel auto-reset.

No.	Settings
0	**1 min.**
1	3 min.
2	None

SP16: Count Up/Down Selection (UP7)

SP16 is used to select count up or count down in the copy number display.

No.	Settings
0	**Up**
1	Down

SP19: Disable ADS Compensation

SP19 is used to disable ADS compensation while adjusting the base exposure lamp voltage (SP48: Light intensity adjustment).

Always change the setting to 1 when adjusting the base exposure lamp voltage. Do not forget to change it back to 0 after adjustment.

No.	Settings
0	**ADS**
1	Disable ADS compensation

SP21: A4 Lengthwise Erase Selection

SP21 is used to set the trailing edge erase timing to A4 lengthwise on a machine in which the setting of SP3 (Destination Setting) is set to “1” (inch).

Set this to 1 for customers that make copies of A4 paper occasionally on the 120 volt machines.

No.	Settings
0	**8½” x 11”**
1	A4

NOTE: The setting of this mode is ignored if SP3 is set to “2” or “3” (metric).

SP23: CTDM Initialization Time Setting

SP23 is used to select the CTDM initialization time. This SP mode is provided for designers' evaluation. There is no need to change the setting in the field.

No.	Settings	No.	Settings
0	15 s	4	35 s
1	20 s	5	40 s
2	25 s	6	50 s
3	**30 s**	7	1 min.

SP29: Fusing Temperature Control Selection

SP29 is used to select the fusing temperature control mode. It should be set to "1" only if the cutomer has a problem with electrical noise or interference.

After selecting the control mode, you must turn the main switch off/on to change the fusing temperature control mode.

No.	Settings
0	**ON/OFF control**
1	Phase control

SP30: Exhaust Fan Speed Setting

SP30 is used to select the exhaust fan speed. SP30 was provided for designers' evaluation. There is no need to change the setting in the field.

No.	Speed	Duty
0	Slow	30 %
1	↓	**35 %**
2	↓	40 %
3	↓	45 %
4	↓	50 %
5	↓	55 %
6	↓	60 %
7	↓	65 %
8	High	70 %

SP34: Image Density Adjustment (UP1)

SP34 can adjust the copy image density. Both the development bias and the exposure lamp may be changed. To make a copy in this mode after adjusting, press the Start key.

No.	Settings	Development Bias Change	Exposure Lamp Change
0	**Normal**	**0**	**0**
1	Light	-40 V	0
2	Dark	+40 V	0
3	Lighter	-40 V	+3 steps
4	Darker	+40 V	-3 steps
5	Lightest	-40 V	+7 steps
6	Darkest	+40 V	-7 steps

1 step = 0.5 V (120 V machines) or 1.0 V (230 V machines)

SP35: Coarse Image Density Adjustment at Darker Setting Position (UP2)

SP35 adjusts the copy image density at the Darker setting position on the operation panel by changing the exposure lamp voltage. To make a copy in this mode after adjusting, press the Start key.

No.	Settings	Exposure Lamp Change
0	**Normal**	**-6 steps**
1	Darker	-8 steps
2	Darkest	-10 steps

1 step = 0.5 V (120 V machines) or 1.0 V (230 V machines)

SP36: Coarse Image Density Adjustment at Lighter Setting Position (UP3)

SP36 adjusts the copy image density at the Lighter setting position on the operation panel by changing the development bias voltage. To make a copy in this mode after adjusting, press the Start key.

No.	Settings	Development Bias Change
0	**Normal**	**-40 V**
1	Lighter	-80 V
2	Lightest	-120 V

SP38: Fine Image Density Adjustment at Darker Setting Position

SP38 adjusts the copy image density at the Darker setting position on the operation panel by changing the exposure lamp voltage. To make a copy in this mode after adjusting, press the Start key.

No.	Settings	Exposure Lamp Change
0	Darkest	-3 steps
1	Darker	-2 steps
2	Dark	-1 step
3	**Normal**	**0**
4	Light	+1 step
5	Lighter	+2 steps
6	Lightest	+3 steps

1 step = 0.5 V (120 V machines) or 1.0 V (230 V machines)

SP39: Fine Image Density Adjustment at Lighter Setting Position

SP39 adjusts the copy image density at the Lighter setting position on the operation panel by changing the exposure lamp voltage. To make a copy in this mode after adjusting, press the Start key.

No.	Settings	Exposure Lamp Change
0	Darkest	-3 steps
1	Darker	-2 steps
2	Dark	-1 step
3	**Normal**	**0**
4	Light	+1 step
5	Lighter	+2 steps
6	Lightest	+3 steps

1 step = 0.5 V (120 V machines) or 1.0 V (230 V machines)

SP41: Lead Edge Erase Margin Adjustment

SP41 adjusts the lead edge erase margin. The lead edge erase margin can be adjusted by 0.5 millimeters per step (-4.0 mm to +3.5 mm). To make a copy in this mode after adjusting, press the Start key. See “Replacement and Adjustment — Copy Quality adjustment” for details.

Default setting: 8

SP42: Registration Adjustment

SP42 adjusts image to paper registration. Registration can be adjusted by 0.5 mm per step (-4.0 mm to +3.5 mm). To make a copy in this mode after adjusting, press the Start key. See “Replacement and Adjustment — Copy Quality adjustment” for details.

Default setting: 8

SP43: Vertical Magnification Adjustment

SP43 adjusts magnification in the paper travel direction by changing the scanner speed. Magnification can be adjusted by 0.2% per step (-3.2% to +3.0%). To make a copy in this mode after adjusting, press the Start key. See “Replacement and Adjustment — Copy Quality adjustment” for details.

Default setting: 16

SP44: Horizontal Magnification Adjustment (A227 copier only)

SP44 adjusts magnification perpendicular to the direction of paper travel by changing the home position of the lens and mirrors. The magnification can be adjusted by 0.2% per step (-3.2% to +3.0%). See “Replacement and Adjustment — Copy Quality adjustment” for details.

Default setting: 16

SP48: Light Intensity Adjustment

SP48 adjusts the exposure lamp voltage. To make a copy in this mode after adjusting, press the Start key.

No.	Lamp Voltage (V)	
	120 V (NA) Version	230 V (EU) Version
100	50.0	100
101	50.5	101
102	51.0	102
↓	↓	↓
120	60.0	**120**
↓	↓	↓
128	**64.0**	128
↓	↓	↓
180	90.0	180
↓	↓	---
193	96.5	---
194	97.0	---

↓ = sequence continues at 0.5 volt/step for 115 V machines and 1.0 volt/step for 230 V machines.

Do this adjustment whenever the optics are cleaned or V_L correction counter is cleared (SP95). After doing this adjustment, adjust the ADS reference voltage using SP56. See “Replacement and Adjustment — Copy Quality adjustment” for details.

SP49: Fusing Temperature Adjustment

SP49 adjusts the control temperature of the hot roller during coping. The fusing temperature can be adjusted between 195°C and 205°C in 1°C steps. The fusing temperature can be calculated from the displayed value by adding 15 (i.e. 180 = 195°C).

Default setting: 185 (200°C)

SP51: Exposure Lamp Voltage Display

SP51 displays the current exposure lamp voltage. For 120 V machines, the actual applied voltage equals to half of the displayed voltage. The exposure lamp turns on for 10 seconds when this mode is selected.

The Image Density Indicators are used to display the hundreds digit.

NOTE: Do not repeat more than 5 times to avoid overheating the optics cavity.

SP52: Fusing Temperature Display

This mode is performed to display the fusing temperature detected by the fusing thermistor. Press the Start key to monitor the temperature during the normal copy cycle. The Image Density Indicators are used to display the hundreds digit.

SP55: ADS Reference Voltage Display

SP55 displays the ADS reference voltage adjusted by SP56. The number to two decimal places is displayed in the counter. The Image Density Indicators are used to display the unit digit as shown below.

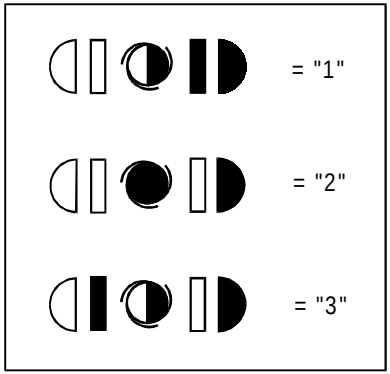

For example:

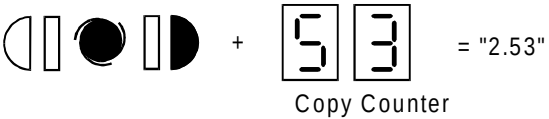

SP56: ADS Reference Voltage Adjustment

SP56 is used to adjust the ADS reference voltage using VR100 on the main control board. The number to two decimal places of ADS sensor output is displayed in the counter. The Image Density Indicators are used to display the unit digit. After 10 seconds, the output is stored as the ADS reference voltage. The voltage is displayed as shown in the SP55 example.

The adjustment standard voltage is 2.5 ± 0.2 volts. See “Replacement and Adjustment — Copy Quality adjustment” for details.

SP57: ADS Output Voltage Display

SP57 displays the ADS output voltage.

Press the Start key to monitor the output voltage during the normal copy cycle. The number to two decimal places is displayed in the counter. The Manual Image Density Indicators are used to display the unit digit. The voltage is displayed as shown in the SP55 example.

When in SP57 mode, the machine makes copies in the ADS mode.

SP58: Development Bias Voltage Display

SP58 displays the development bias voltage.

Press the Start key to monitor the development bias voltage during the normal copy cycle. The Manual Image Density Indicators are used to display the hundreds digit.

When in SP58 mode, the machine makes copies in the ADS mode.

SP59: Optics Temperature Display (SP59)

SP59 displays the optics temperature detected by the optics thermistor.

Press the Start key to monitor the optics temperature during the normal copy cycle.

SP60: Drum Potential Measurement (With Paper)

Factory use only using special tools.

SP61: Drum Potential Measurement (Without Paper)

Factory use only using special tools.

SP62: V_L Switch Setting (UP32)

SP62 sets the effective level for the V_L switch inside of the machine.

SP62 Settings	Special UP Mode UP32	Exposure Lamp Voltage Change		
		SW Position 0	SW Position 1	SW Position 2
0	**0**	**0**	**+10 steps**	**+20 steps**
1	1	0	+5 steps	+10 steps
2	2	0	+15 steps	+30 steps
3	3	0	+20 steps	+40 steps

1 step = 0.5 V (120 V machines) or 1.0 V (230 V machines)

SP63: V_L Correction Interval (UP31)

SP63 sets the interval for V_L correction. The exposure lamp voltage (SP48) is increased by 1 step at the set copy count interval. Based on copy count, V_L correction is performed at the intervals shown in the below table.

SP63 Settings	Exposure Lamp Voltage change	Special UP Mode UP31
0	**+1 step/4000 copies**	**0**
1	+1 step/3000 copies	1
2	+1 step/2500 copies	2
3	+1 step/2000 copies	3
4	+1 step/1500 copies	4
5	+1 step/1000 copies	5
6	+1 step/500 copies	---
7	+1 step/250 copies	---
8	No Correction	---

1 step = 0.5 V (120 V machines) or 1.0 V (230 V machines)

SP64: Photo Mode Compensation Setting (UP4)

SP64 sets the image density level for photo mode.

The development bias and the exposure lamp voltage are compensated according to the setting of this mode.

No.	Settings	Development Bias	Exposure Lamp Change
0	Lightest	-270 V	+4 steps
1	Lighter	-270 V	+2 steps
2	Light	-270 V	---
3	**Normal**	**-230 V**	**---**
4	Dark	-210 V	---
5	Darker	-190 V	---

1 step = 0.5 V (120 V machines) or 1.0 V (230 V machines)

SP66: OPC Counter Clear

Use SP66 to clear the OPC counter after replacing the new OPC drum.

Set SP66 to 1, and then press the Image Density key and Start key together.

SP69: OPC Counter Display (UP30)

SP69 shows the total number of copies made by the OPC drum installed in the machine.

Two digits at a time of the six digits for the OPC counter are displayed on the copy counter. To view the next two digits, press the Start key.

Lighter Image Density Indicator is lit when the sixth and fifth digits are displayed.
Auto Image Density Indicator is lit when the fourth and third digits are displayed.
Darker Image Density Indicator is lit when the second and first digits are displayed.

The example to the right shows the counter display when the copy count is 25148.

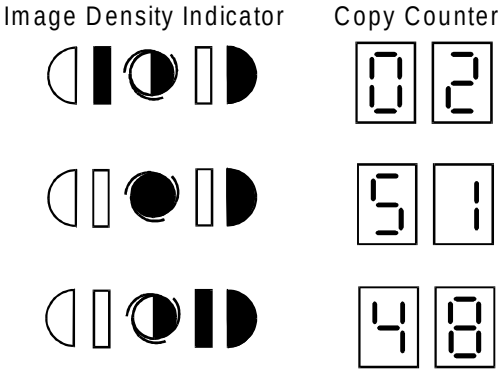

SP70: V_L Correction Display

SP70 displays the V_L correction counter. This counter value is used for V_L correction (SP63).

Two digits at a time of the six digits for the counter are displayed on the copy counter. To view the next two digits, press the Start key.

Lighter Image Density Indicator is lit when the sixth and fifth digits are displayed.
Auto Image Density Indicator is lit when the fourth and third digits are displayed.
Darker Image Density Indicator is lit when the second and first digits are displayed.

This counter is displayed as shown in the SP69 example.

SP77: Auto Shut Off (Energy Star) Selection (UP34)

SP77 selects the “Automatic Shut Off” mode.

The machine automatically shuts itself off at the auto shut off time selected by SP14.

No.	Settings
0	**Enabled**
1	Disabled

SP81: Factory Initialization

Factory use only using special tools.

SP82: Data Communication

Factory use only using special tolls.

SP88: Total Copy Counter Display (UP8)

SP88 displays the total copy counter. (This machine uses a software counter rather than a mechanical counter to count total copies.)

Two digits at a time of the six digits for the counter are displayed on the copy counter. To view the next two digits, press the Start key.

Lighter Image Density Indicator is lit when the sixth and fifth digits are displayed.
Auto Image Density Indicator is lit when the fourth and third digits are displayed.
Darker Image Density Indicator is lit when the second and first digits are displayed.

This counter is displayed as shown in the SP69 example.

SP90: Factory Data and Counter Clear

Factory use only using special tools.

SP91: Optics Cooling Fan Operation

Factory use only using special tools.

SP95: V_L Correction Counter Clear

SP95 resets the exposure lamp data and counter for the V_L correction. To clear, enter “1” and press the Image Density key and the Start key at the same time.

Before performing this mode, clean the optics parts. After performing this mode, adjust copy quality and then execute SP56. See “Replacement and Adjustment — Copy Quality adjustment” for details.

SP96: Forced Toner End Reset

SP96 forces the toner end condition to be canceled.

Just selecting SP96 resets the toner near-end or toner end condition.

SP97: Service Call (E5x) Reset

SP97 resets a service call (E5x) condition.

Service call conditions (E5x) cannot be reset by turning the main switch off and on.

SP98: Total Counter Clear

SP98 clears the total counter.

Normally, this SP mode should not be used.

To clear, enter “1” and press the Image Density key and the Start key at the same time.

NOTE: This machine does not come with a mechanical counter installed. A mechanical counter may be installed as an option.

SP99: All Memory Clear

SP99 clears all counters and returns all modes to the default settings. See the Clear All Memory Procedure below for more details.

Normally, this SP mode should not be used.

SP99 should be used only when the EEPROM is replaced, or when the machine malfunctions due to a damaged EEPROM.

To clear, enter “1” and press the Image Density key and the Start key at the same time.

CLEAR ALL MEMORY PROCEDURE

⚠CAUTION

The Clear All Memory procedure (SP99) resets all the correction data for copy process control and all the software counters, and returns all modes and adjustments to the default settings.

Normally, this SP procedure should not be performed.

This procedure is required only when replacing the EEPROM or when the machine malfunctions due to a damaged EEPROM.

1. Enter SP99.
2. Enter “1”.
3. Press the Image Density key and Start key at the same time.
4. Turn the main switch off and on.

- Recovering the machine after a memory reset -

⚠CAUTION
If SP99 is performed, V_L correction counter is reset and the copy image may be affected. After doing SP99, execute the following procedure to return the machine to its normal operation.

1. Clean the optics and inside the machine if necessary.
2. Refer to the “SP MODE FACTORY SET DATA” sheet located at front right corner of the base unit and enter the data that were stored in the following SP modes at the factory.
   - SP41: Lead Edge Erase Margin
   - SP42: Registration Adjustment
   - SP43: Vertical Magnification Adjustment
   - SP44: Horizontal Magnification Adjustment
   - SP48: Light Intensity Adjustment
3. Open SP3 (Destination Setting), and select the appropriate setting to match the customer’s environment.
4. Check the copy quality and the paper path and do any necessary adjustments (see Replacement and Adjustment—Copy Quality Adjustment).

SERVICE TABLES

VARIABLE RESISTORS

Number	Location	Function
VR100	Main Control Board	Adjust the ADS voltage (2.5 ± 0.2 V)
CT	Power Pack	Adjust the charge and transfer corona voltage
B	Power Pack	Adjust the standard development bias voltage
G	Power Pack	Adjust the charge grid voltage

SERVICE CALL CONDITIONS

NOTE: 1) E-codes are displayed in the copy counter. The “E” and the “code number” are displayed alternatively.
2) Copying copy is disabled during a service call condition.
3) To clear the service call condition, turn the main switch off and on.
4) When “E5x” service call conditions occur, for safety reasons, they cannot be cleared by turning the main switch off and on. The following procedure must be performed to clear these service call conditions.
   1. Turn on the main switch.
   2. Execute SP mode 97.
   3. Turn the main switch off and on.

E11: Exposure Lamp Error 1

- Definition -

- The feedback signal becomes higher than 4.5 volts (rms) for 1.0 second when the exposure lamp is on.
- The feedback signal becomes higher than 1.0 volts (rms) for 1.0 second when the exposure lamp is off.

- Possible Causes -

- Triac short circuit
- Exposure lamp open
- Thermofuse open
- Defective lamp voltage detection circuit

E12: Exposure Lamp Error 2

- Definition -

- The feedback signal falls below 0.5 volts (rms) for 1.0 second when the exposure lamp is on.
- The exposure lamp stays on for longer than 25 seconds.

- Possible Causes -

- Defective power supply board
- Defective main control board

E13: Zero Cross Signal Error 1

- Definition -

- The interval between zero cross signal is more than 2.0 seconds.

- Possible Causes -

- Defective main control board
- Defective power supply board
- Zero cross line open
- CN118 on the main control board or CN404 on the power supply board is not correctly connected.

E14: Zero Cross Signal Error 2

- Definition -

- The detected current is not 50 or 60 Hz.

- Possible Causes -

- Defective main control board
- Defective power supply board
- Zero cross line open
- CN118 on the main control board or CN404 on the power supply board is not correctly connected.
- Power frequency not stable

E15: Zero Cross Signal Error 3

- Definition -

- The detected current is 50 Hz on a 60 Hz machine, or there is an SP3 (destination setting) error.

- Possible Causes -

- Wrong power line connection
- SP3 is set to “0”.
- SP3 input error

E21: Scanner Home Position Error 1

- Definition -

- The scanner home position sensor’s output remains LOW (de-actuated) for 10 seconds after the main switch is turned on, or the output remains LOW (de-actuated) after the scanner returns during the copy process.

- Possible Causes -

- Defective home position sensor

- Defective scanner drive motor
- Defective main control board
- Defective power supply board

E22: Scanner Home Position Error 2

- Definition -

- The scanner home position sensor's output remains HIGH (actuated) for 4.0 seconds after the main switch is turned on, or the output remains HIGH (actuated) for 0.3 seconds after the scanner starts.

- Possible Causes -

- Defective home position sensor
- Defective scanner drive motor
- Defective main control board
- Defective power supply board

E28: Lens/Mirror Home Position Error 1 (A227 machine only)

- Definition -

- The lens/mirror home position sensor's output remains LOW (de-actuated) for 5.0 seconds after the main switch is turned on or the reproduction ratio is changed.

- Possible Causes -

- Defective lens/mirror home position sensor
- Defective lens/mirror drive motor
- Defective main control board
- Defective lens/mirror drive mechanism

E29: Lens/Mirror Home Position Error 1 (A227 machine only)

- Definition -

- The lens/mirror home position sensor's output remains HIGH (actuated) for 5.0 seconds after the switch is turned on or the reproduction ratio is changed.

- Possible Causes -

- Defective lens/mirror home position sensor
- Defective lens/mirror drive motor
- Defective main control board

- Defective lens/mirror drive mechanism

E40: Optics Thermistor Error

- Definition -

- Extremly high resistance or open thermistor circuit is detected for 10 seconds continuously.

- Possible Causes -

- Defective optics thermistor
- Defective main control board
- CN116 on the main control board is not correctly connected.

E52: Fusing Error 1

- Definition -

- The temperature detected by the thermistor does not reach 100°C within 15 seconds after the main switch is turned on.

- Possible Causes -

- Defective fusing thermistor
- Fusing lamp open

- Defective power supply board
- Defective main control board
- CN118 on the main control board or CN404 on the power supply board is not correctly connected.

E53: Fusing Error 2

- Definition -

- The temperature detected by the thermistor becomes higher than 230°C for more than 3.0 seconds.

- Possible Causes -

- Thermistor short
- Defective power supply board
- Defective main control board
- Fusing harness shorted
- Triac shorted

E54: Fusing Error 3

- Definition -

- The temperature detected by the thermistor does not rise to 15°C within 15 seconds after the fusing lamp is turned on during stand-by.

- Possible Causes -

- Poor thermistor connection
- Defective thermistor
- Defective power supply board
- Defective main control board
- Defective fusing lamp

E55: Fusing Error 4

- Definition -

- Extremely high resistance or open thermistor circuit is detected for 2.0 seconds continuously after 15 seconds after the main switch is turned on.
- The temperature change detected by the thermistor is more than 20°C within any one second after 15 seconds after the main switch is turned on.

- Possible Causes -

- Defective thermistor
- Defective main control board
- Defective power supply board
- Fusing lamp open
- Poor thermistor connection

ERROR CODE FOR USER

Error Code	Contents
U1	After the temperature around the optics reaches 43°C, making a copy is disabled until the temperature drops below 40°C.

SERVICE MAINTENANCE

MAINTENANCE ITEMS AND METHODS

The following items must be done any time the machine receives service.

Action Symbol: L: Lubricate I: Inspect C: Clean A: Adjust

Item	Action	Method
Optics		
Reflectors	C	Silicon cloth
1st to 5th Mirrors	C	Silicon cloth
6th Mirror	C	Silicon cloth
Lens	C	Blower brush
Exposure Glass	C	Soft cloth dampened with alcohol or water
Platen Cover Sheet	C	Soft cloth dampened with water
Scanner Guide Rod	L	Apply Launa oil to felt pads on the rod
Scanner Guide Rail	L	G501
4th/5th Mirror Guide Rail	L	G501
Around Drum		
Transfer Corona Unit	C	Use cleaning tool in the machine
Transfer Corona Guide	C	Use cleaning tool in the machine
Charge Corona Unit	C	Use cleaning tool in the machine

Item	Action	Method
Erase Lamp	C	Blower brush or dry cloth
Paper Feed		
Paper Feed Rollers	C	Soft cloth dampened with water
Bottom Plate Pads	C	Soft cloth dampened with water
Relay Rollers	C	Soft cloth dampened with water
Registration Rollers	C	Soft cloth dampened with water
Paper Feed Guide	C	Soft cloth dampened with water
Fusing		
Hot Roller	I	Replace if necessary
Hot Roller Bushings	I	Replace if necessary
Pressure Roller	I	Replace if necessary
Pressure Roller Bushings	I	Replace if necessary
Stripper Pawls	C	Use suitable solvent
Fusing Entrance and Exit Guide Plates	C	Use suitable solvent
Fusing Thermistor	C	Use suitable solvent
Others		
ADS	A	Adjust when the exposure lamp voltage is changed.

Item	Action	Method
Exit and Registration Sensors	I	
Bushings	I	
Ozone Filter	I	Replace if necessary
OPC Drum	I	Replace if necessary

REPLACEMENT AND ADJUSTMENT

EXTERIOR

EXTERIOR COVER/EXPOSURE GLASS REMOVAL

A: Platen cover
B: 2 tapping screws
C: 2 Philips screws

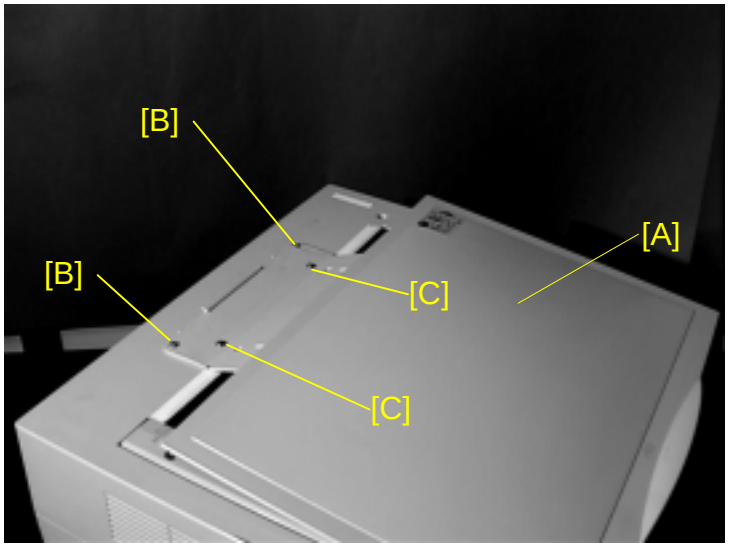

D: Left scale
E: 2 shoulder screws

F: Upper cover
G: 5 Philips screws
H: Operation panel connector
I: Exposure glass

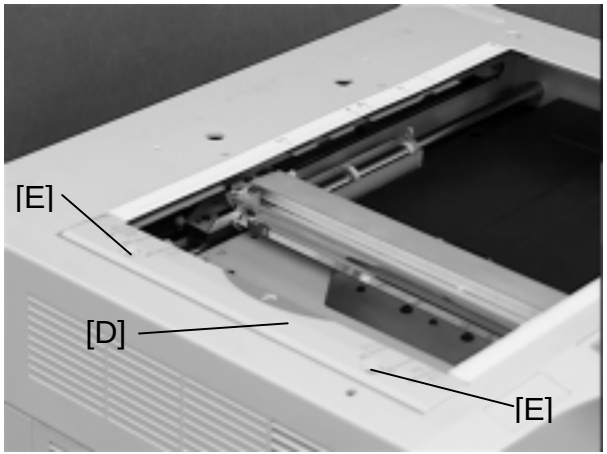

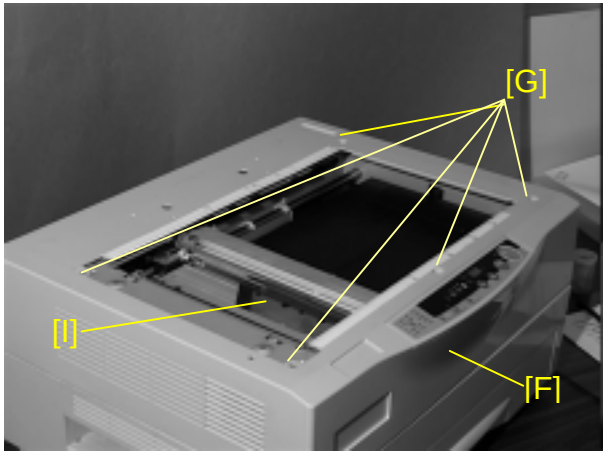

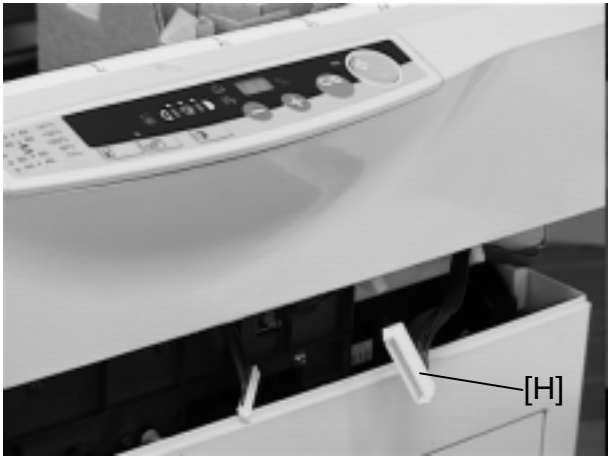

UPPER UNIT REMOVAL

Preparation:

Remove the upper cover and the exposure glass.
(See Exterior Cover/Exposure Glass Removal)

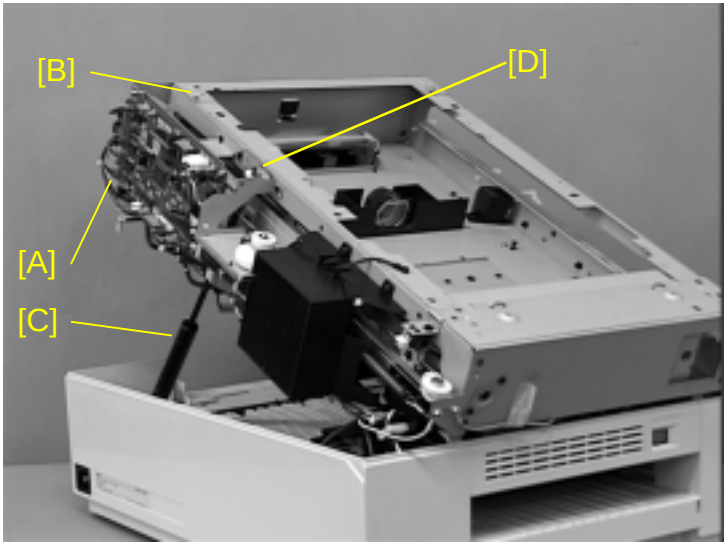

A: Five connectors
(CN109,111,112,117,118)

B: Open the upper unit.

C: Release the gas spring.

D: Snap ring

⚠WARNING

1. Do not release the gas spring from the pin while the upper unit is closed. Otherwise, the gas spring will expand suddenly and may cause injury.
2. When the gas spring is released, hold the upper unit to prevent it from falling.

G: Connector(CN402)

H: Upper unit

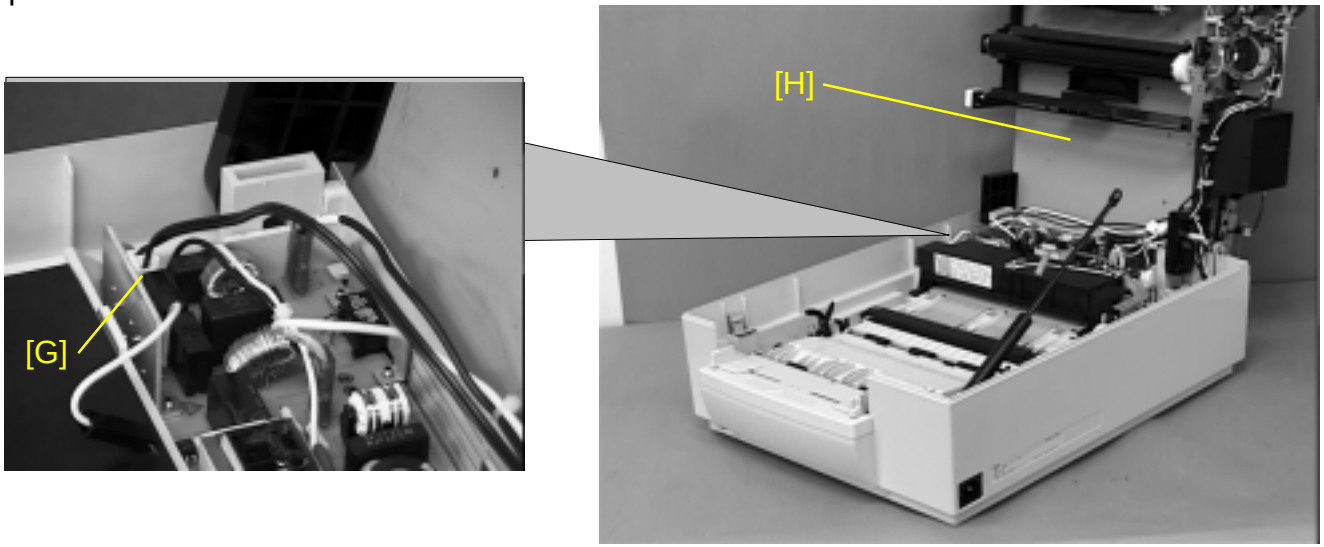

CAUTION: 1) Do not leave the upper unit fully opened.
Otherwise, the upper unit or whole machine may tip over.
2) If the upper unit is opened more than 90 degrees, the exterior cover of the lower unit might be damaged.

OPTICS

Preparation:

Remove the upper cover and the exposure glass. (See Exterior Cover/Exposure Glass Removal)

EXPOSURE LAMP REMOVAL

Move the 1st scanner [A] to cut out position [B] of optics unit by rotating the scanner drive pulley [C]. (Do not grasp the scanner to move it.)

D: Adjustment plate

E: Tapping screw

F: Philips screw

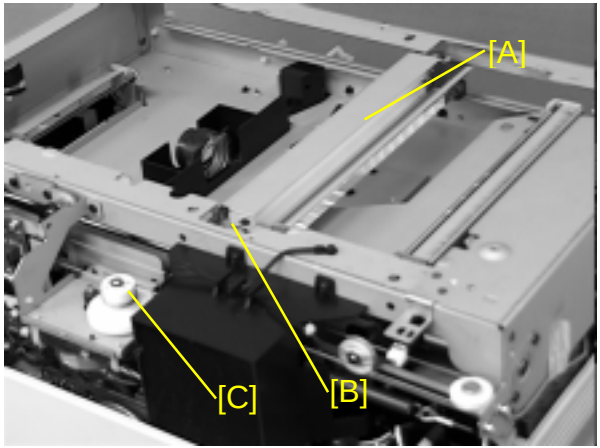

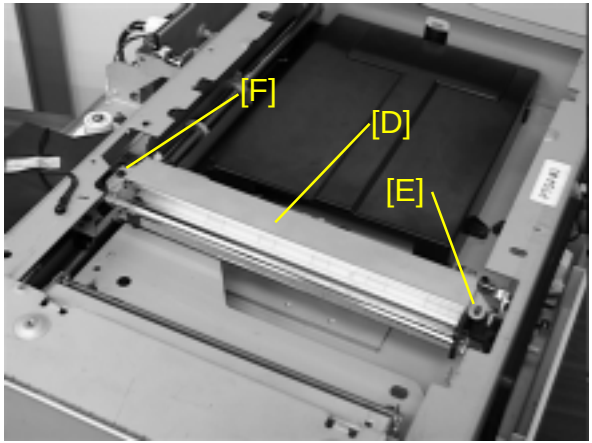

G: Lamp harness (2 Philips screws)

H: Exposure lamp

NOTE: Do not touch the exposure lamp with bare hands.

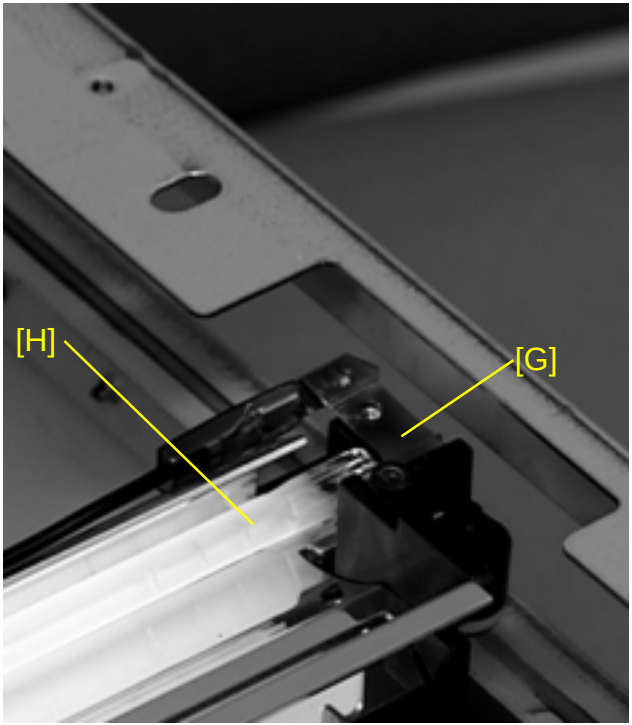

1ST MIRROR REMOVAL

Preparation:

Move the 1st scanner [A] to cut out position [B] of the optics unit by rotating the scanner drive pulley [C]. (Do not grasp the scanner to move it.)

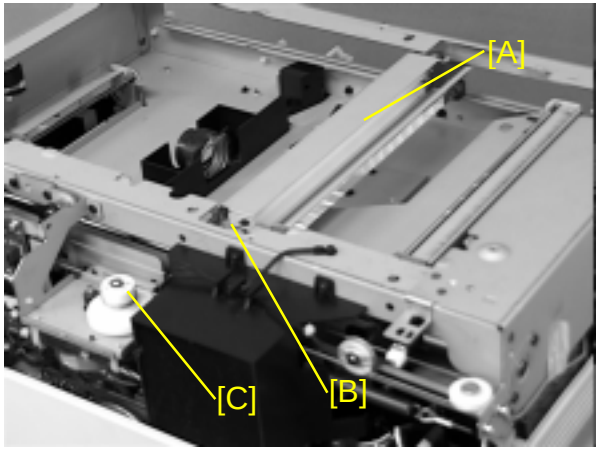

E: 1st mirror

D: Spring plates

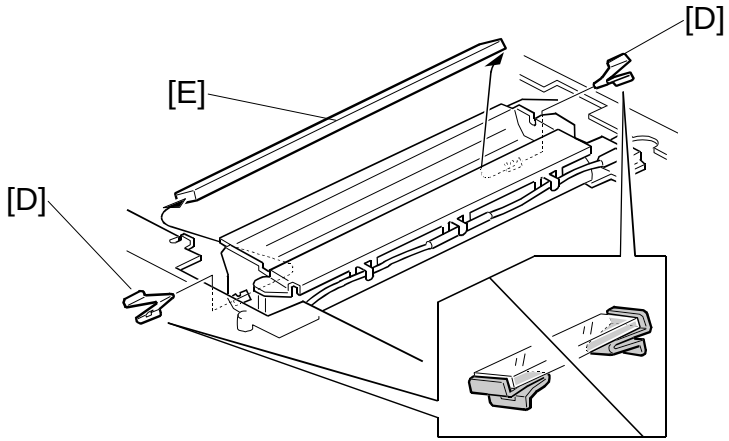

Reinstallation

1) Make sure that the notches in the spring plates are correctly set in position.
2) Do not touch the mirror surface with bare hands.
3) Make sure that the 1st mirror reflecting surface faces the lamp.

EXPOSURE LAMP THERMOFUSE REMOVAL

Preparation:

Remove the exposure lamp. (See the Exposure Lamp Removal procedure.)

A: Scanner guide rod

B: Rod support plate (2 Philips screws)

C: Harness clamp (1 tapping screw)

D: Optics thermofuse harness

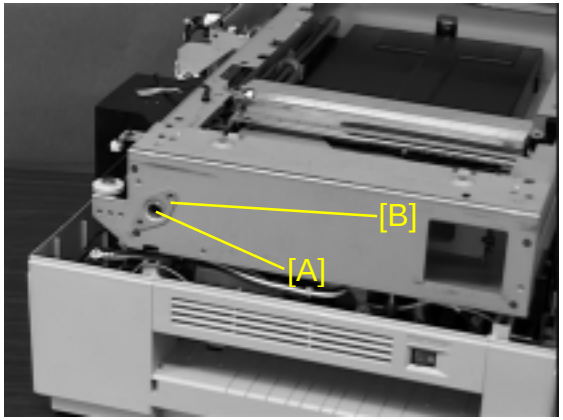

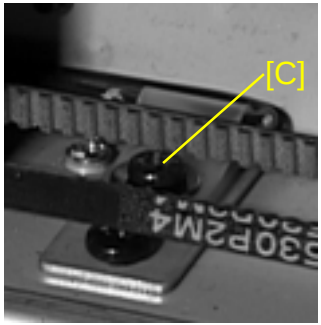

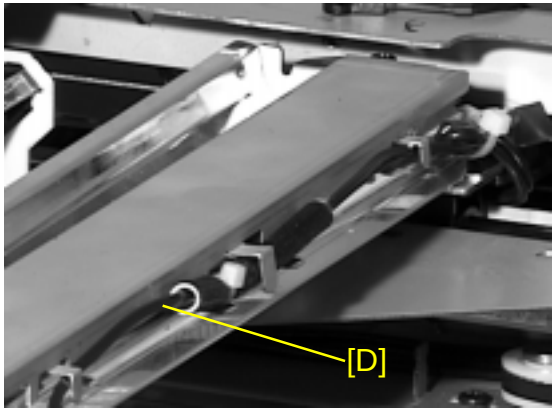

NOTE: 1) Do not touch the scanner guide rod with bare hands.
2) Do not scratch the scanner guide rod.

2ND AND 3RD MIRRORS REMOVAL

Preparation:

Slide the 1st scanner until the 2nd scanner [A] comes to the optics cut out position [B] by rotating the scanner drive pulley. (Do not grasp the scanner to move it.)

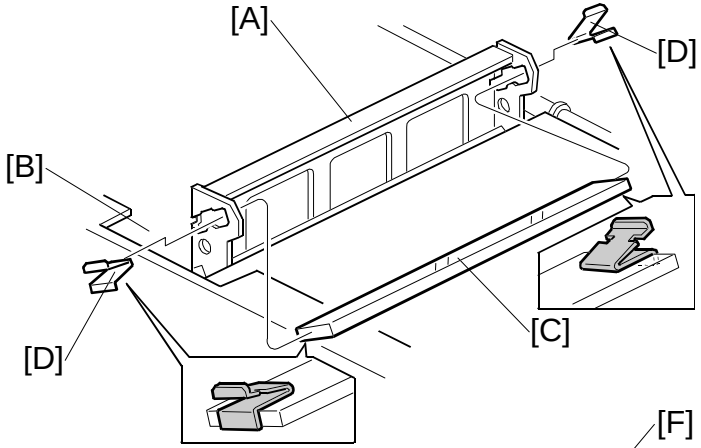

C:2nd mirror

D: 2 spring plates

E: 3rd mirror

F: 2 spring plates

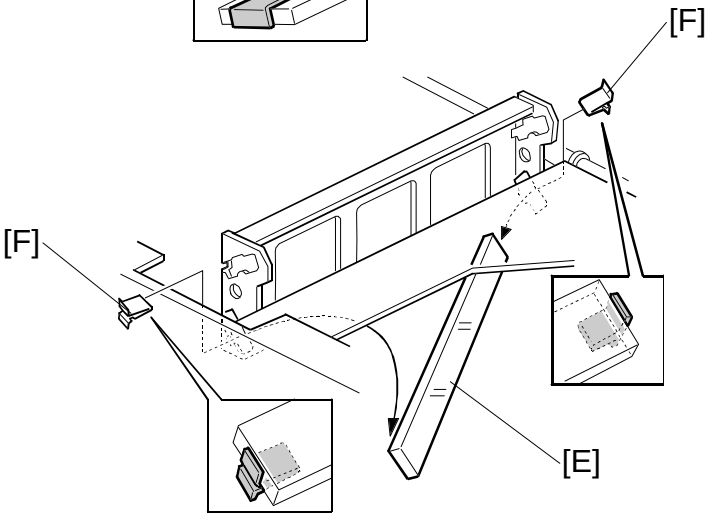

Reinstallation

1) Make sure that the notches in the spring plates are correctly set in position.
2) Do not touch the mirror surface with bare hands.
3) Make sure that the 2nd and 3rd mirror reflecting surface faces the lens.

4TH MIRROR REMOVAL

A: Lens unit cover (1 Philips screw and 1 hook)

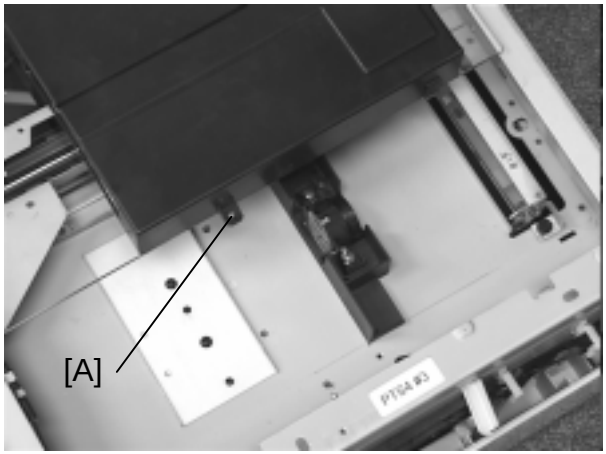

B: 4th mirror
C: 2 spring plates

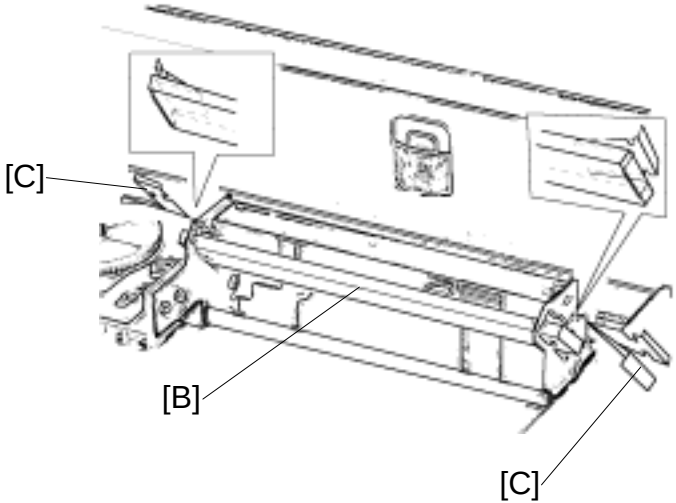

Reinstallation

NOTE: 1) Make sure that the notches in the spring plates are correctly set in position.
2) Do not touch the mirror surface with bare hands.
3) Make sure that the 4th mirror reflecting surface faces the lens.

5TH MIRROR REMOVAL (A227 MODEL)

Preparation:

Remove the lens unit cover. (See 4th Mirror Removal.)

A: 4th/5th mirror unit
B: E-ring
C: Spring
D: Spring

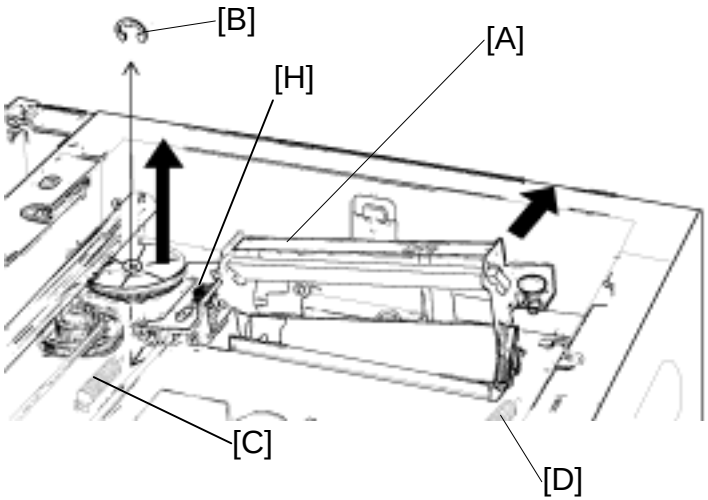

E: 5th mirror
F: 2 spring plates

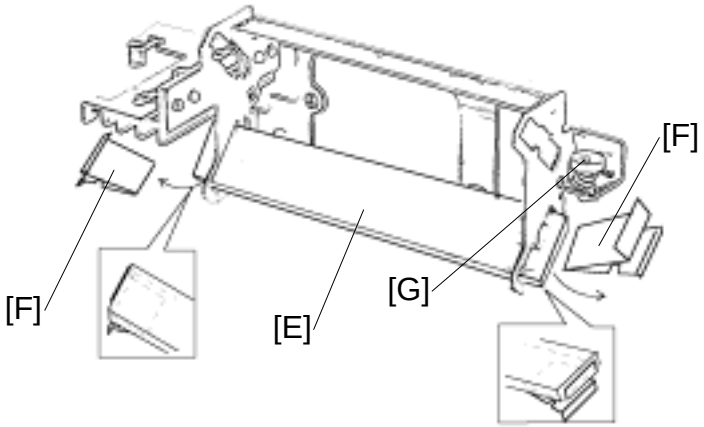

NOTE: 1) Do not touch the mirror angle adjustment screw [G].
Parallelogram image adjustment is required if the screw is removed.
2) Do not remove screw fixing the cam plate [H].
Focus adjustment is required if the screw is removed.

Reinstallation

Perform lens and 4TH/5TH mirror position adjustment.

NOTE: 1) Make sure that the notches in the spring plates are correctly set in position.
2) Do not touch the mirror surface with bare hands.
3) Make sure that the 5th mirror reflecting surface faces the lens.

5TH MIRROR REMOVAL (A226 MODEL)

Preparation: Remove the lens unit cover (See 4th Mirror Removal)

A: 4th/5th mirror unit
B: Shoulder screw
C: Spring

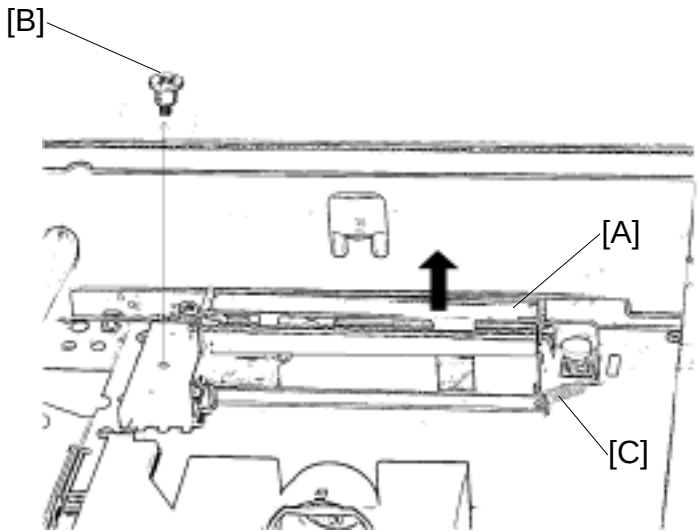

D: 5th mirror
E: 2 spring plates

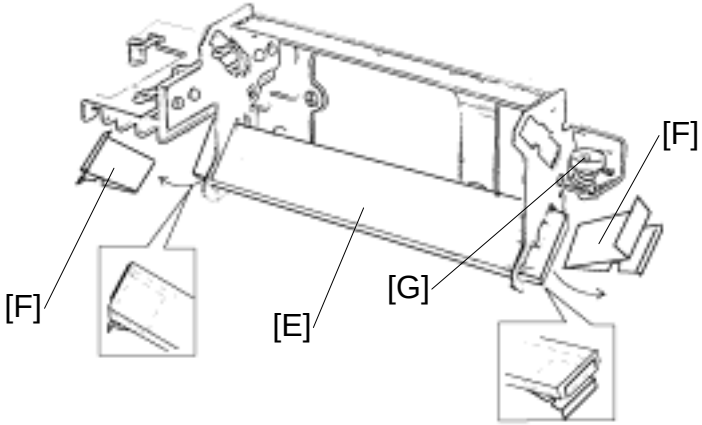

NOTE: 1) Do not touch the mirror angle adjustment screw [F].
Parallelogram image adjustment is required if the screw is removed.

Reinstallation

NOTE: 1) Make sure that the notches in the spring plates are correctly set in position.
2) Do not touch the mirror surface with bare hands.
3) Make sure that the 5th mirror reflecting surface faces the lens.

LENS AND 4TH/5TH MIRROR POSITION ADJUSTMENT (A227 MODEL)

Preparation:

1) Make sure the cam gear [A] is set.
2) Plug in the power cord and turn on the main switch. (To move the lens to the home position)
3) Turn off the main switch and unplug the power cord.
4) Remove the lens unit cover. (See 4th Mirror Removal.)

1. Reposition the cam gear [A] so that it's hole [B] matches the notch in the bracket [C].
2. Perform the focus adjustment if necessary. (See Focus Adjustment.)

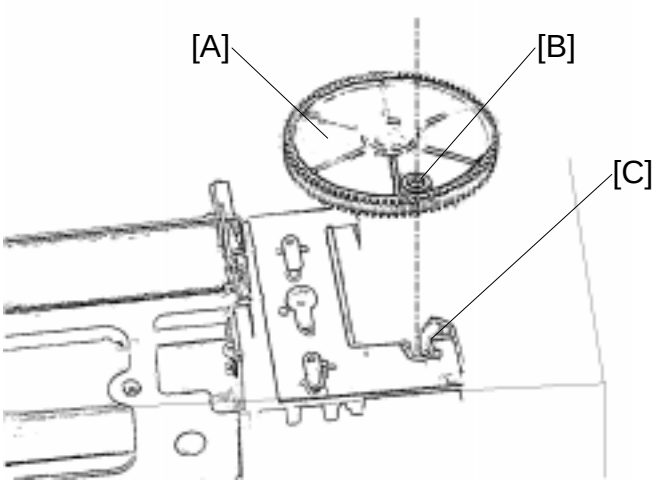

LENS AND MIRROR MOTOR REMOVAL

Preparation

1) Remove the upper cover and the exposure glass. (See Exterior Cover/Exposure Glass Removal.)
2) Remove the upper unit. (See Upper Unit Removal.)
3) Remove the upper registration guide assembly. (See Power Pack Replacements.)
4) Remove the 4th /5th mirror unit. (See 4th/5th Mirror Replacement.)

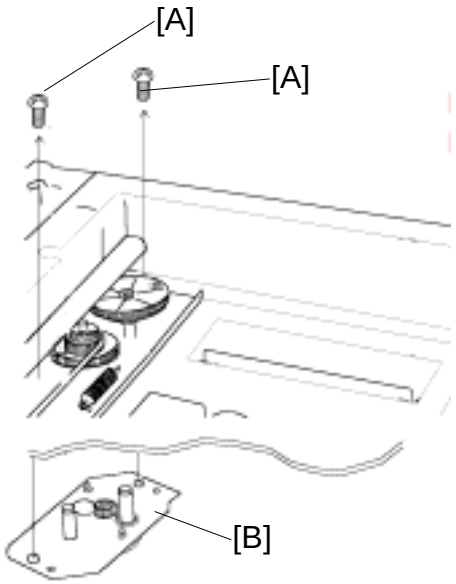

1. Remove 2 Philips screws [A] while holding the lens and mirror motor unit [B] from bottom side of the top unit.
2. Remove the Lens and mirror motor [C] (2 Philips screws).

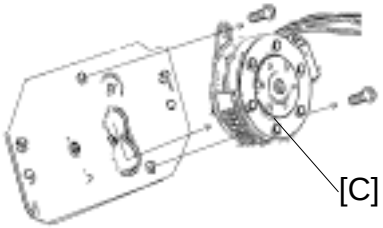

Reinstallation

Perform the Lens And 4th/5th Mirror Position Adjustment.

SCANNER WIRE REMOVAL

Preparation

Remove the upper cover and the exposure glass. (See Exterior Cover/Exposure Glass Removal.)

A: Fan motor assembly
B: 3 tapping screws
C: Scanner home position sensor actuator plate (1 Philips screw)
D: Scanner wire
E: Tension spring

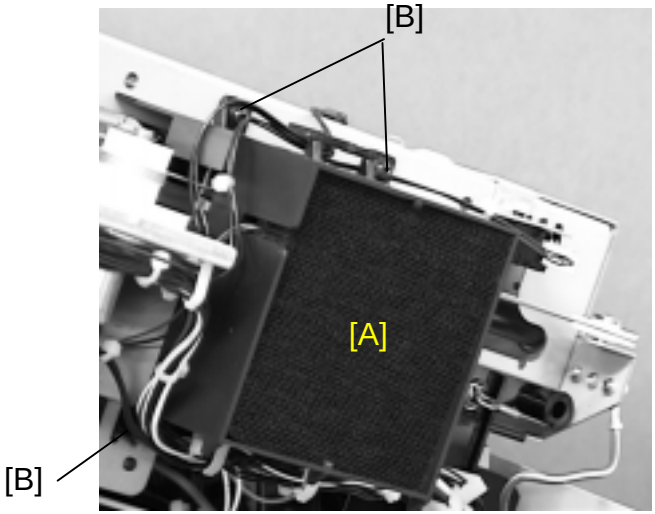

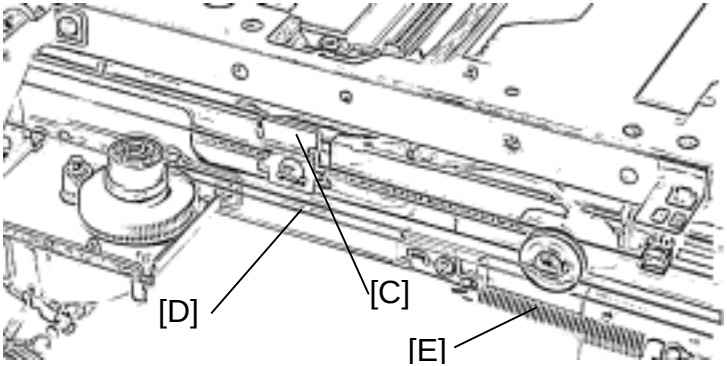

Reinstallation

1. Hook the beaded end of the wire in the slot [F] on the scanner motor bracket [G].
2. Run the scanner drive wire around the pulleys as shown.
3. Hook the other end of the wire to the tension spring [E].

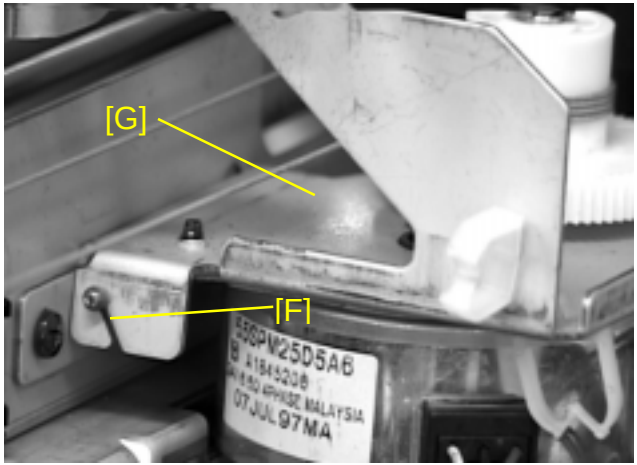

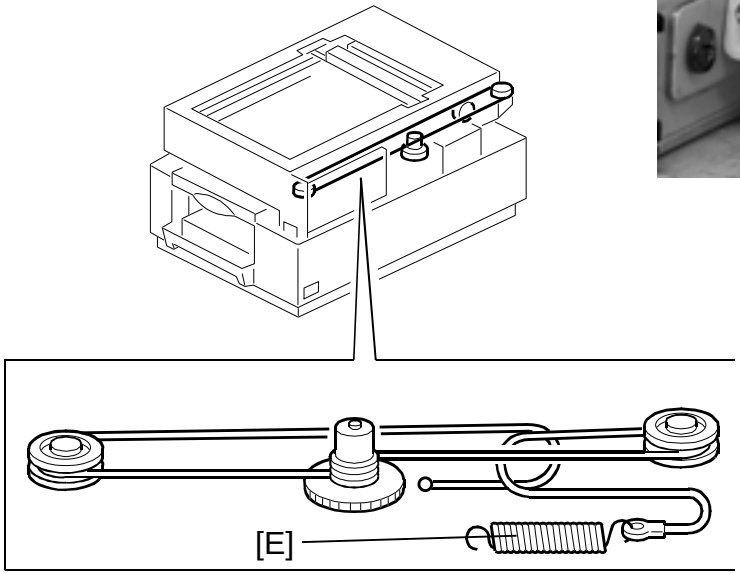

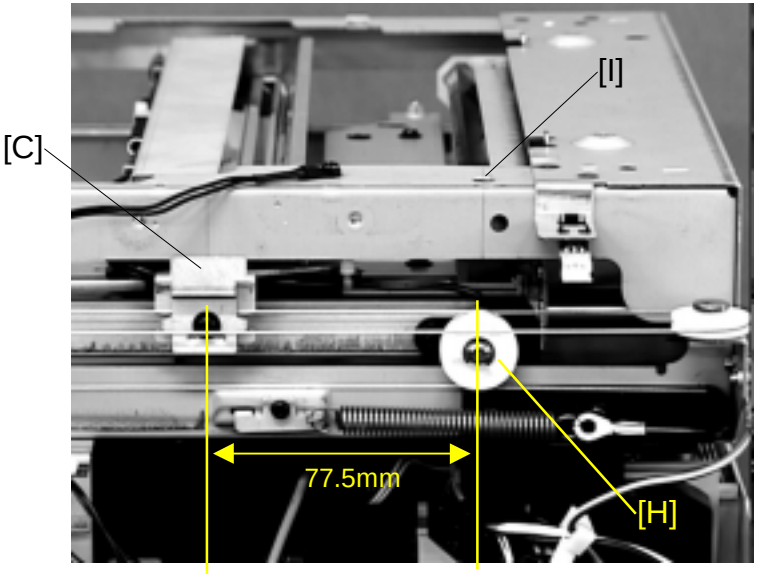

4. Move the 2nd scanner so that the 2nd scanner pulley [H] position matches the position of the hole [I] in the optics frame.
5. Fix the scanner home position sensor actuator plate [C] to the scanner wire so that distance between the 1st scanner and the 2nd scanner is 77.5 mm.
6. Adjust vertical magnification. (See Vertical Magnification Adjustment.)

AROUND THE DRUM UNIT

OPC DRUM REMOVAL

Preparation

1) Open the upper cover.
2) Remove the CTDM.

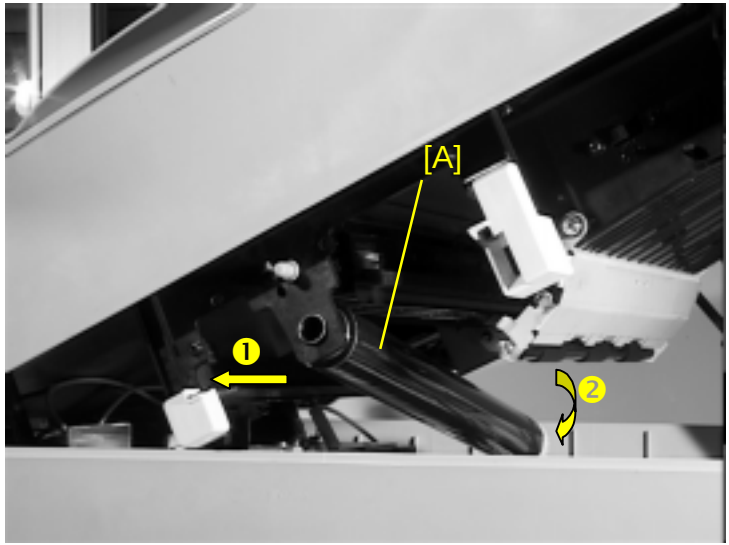

1. Push the OPC drum [A] to the front.
2. Pull down rear side of the OPC drum.
3. Remove the OPC drum.

Reinstallation

NOTE: 1) Remove the protection sheet after setting.
2) Clear the OPC counter.(SP66)

CHARGE CORONA UNIT REMOVAL

Preparation

1) Remove the upper cover and the exposure glass.
   (See Exterior Cover/Exposure Glass Removal)
2) Remove the OPC drum.(See OPC Drum Removal)

A: Charge corona power cable
B: Grid power cable
C: Quenching lamp harness (CN113) on the main control board

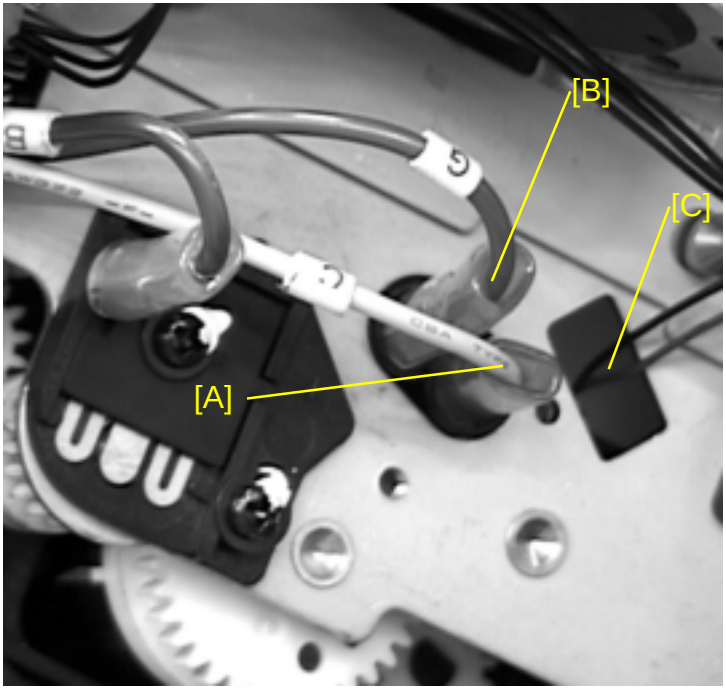

D: ADS sensor connector
E: Front stay
Mark the original position of the fixing screw [F]
G: 2 tapping screws
Remove screw [F].
H: 3 Philips screws
I: Charge corona unit

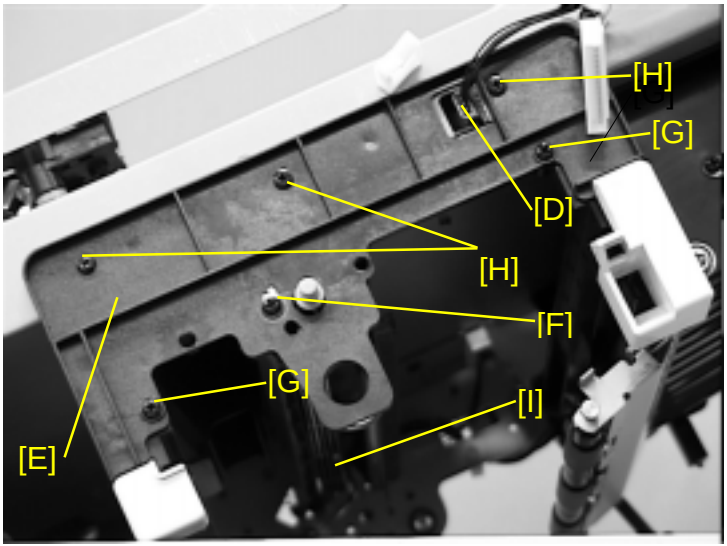

Reinstallation:

1. Fix the charge corona unit at the marked original position.
2. Confirm the side to side image density using the OS-A4 test chart.

ERASE LAMP REMOVAL

Preparation

1) Remove the upper cover and the exposure glass.
   (See Exterior Cover/Exposure Glass Removal.)
2) Remove the OPC drum. (See OPC Drum Removal.)
3) Remove the fan motor. (See Scanner Wire Removal.)
4) Remove the main control board. (See Power Pack Removal.)

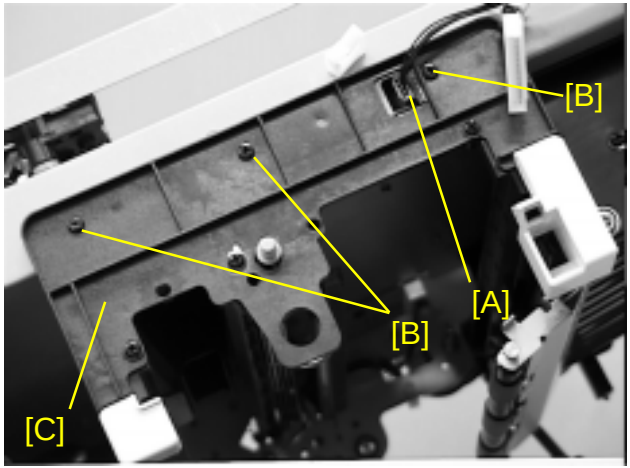

A: ADS sensor connector
B: 3 screws
C: Front stay

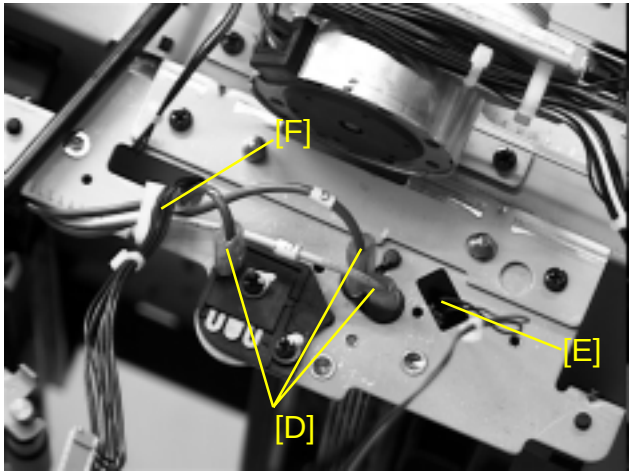

D: 3 high voltage cables
E: Quenching lamp harness (CN113)
F: Erase lamp harness (CN107)

G: Rear stay
[H]: 2 screws
I: Drum housing
J: Erase lamp (2 tapping screws)

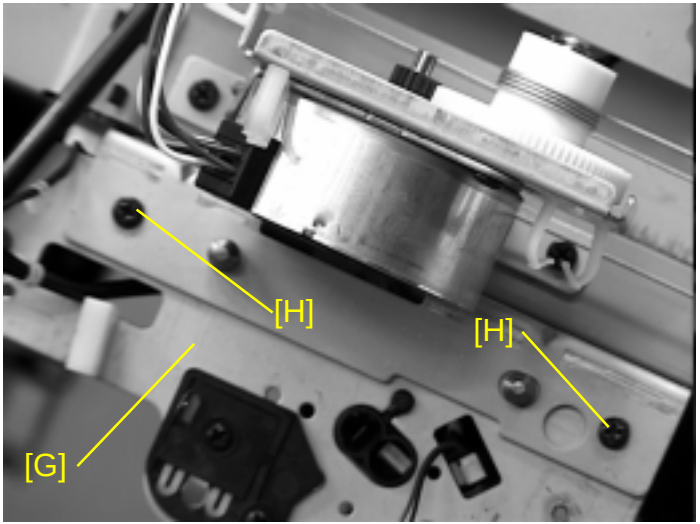

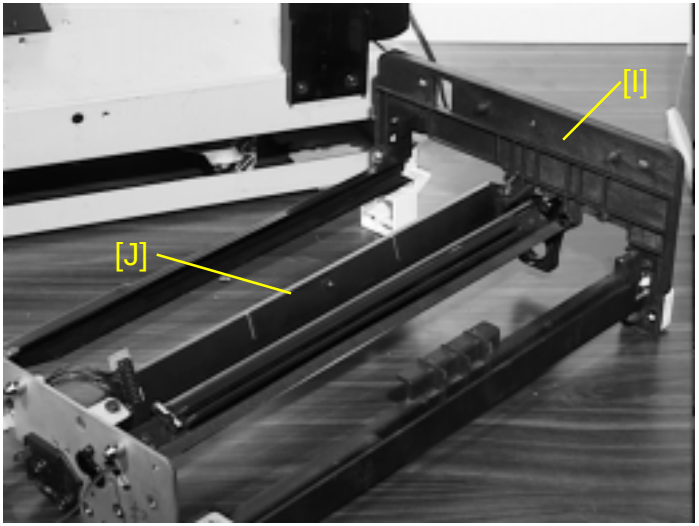

PAPER FEED

Preparation:

1) Remove the upper cover and the exposure glass. (See Exterior Cover/Exposure Glass Removal)
2) Remove the upper unit. (See upper unit Removal)
3) Remove the paper tray.

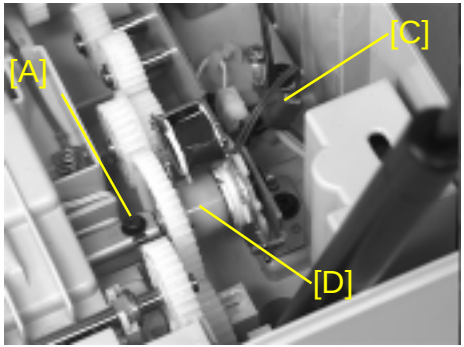

PAPER FEED CLUTCH REMOVAL

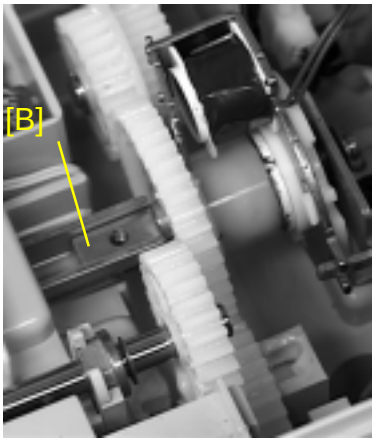

A: Philips screw
B: Turn 180 degrees.

NOTE: Do not touch the feed roller with bare hands.

C: Connector
D: Paper feed clutch (1 Philips screw)

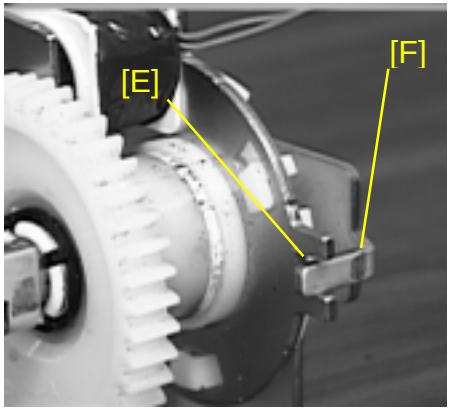

Reinstallation

When reinstalling the clutch, engage the notch [E] with the stopper [F].

PAPER FEED ROLLER REMOVAL

Preparation:

Remove the paper feed clutch.

Remove the paper feed roller assembly as shown. (Do not touch the rollers with bare hands.)

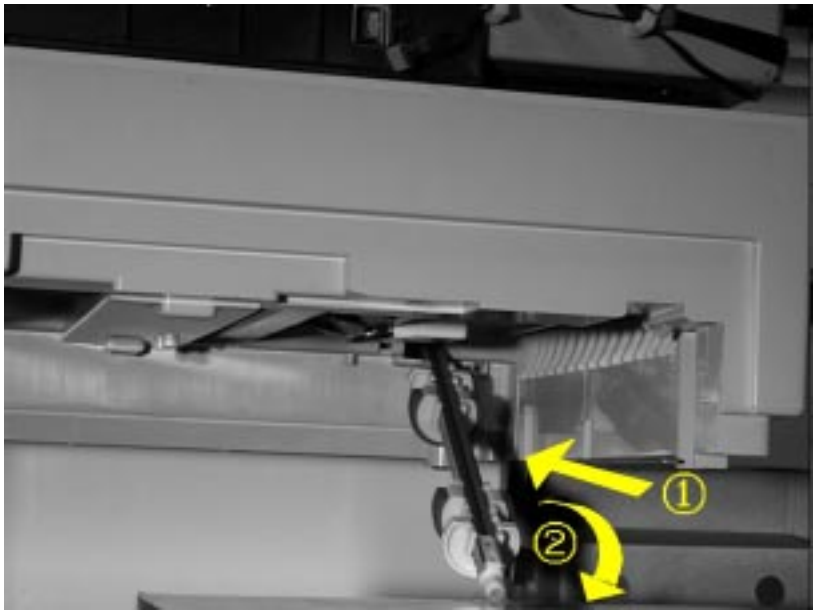

REGISTRATION SOLENOID REMOVAL

Preparation:

Remove the paper feed clutch.

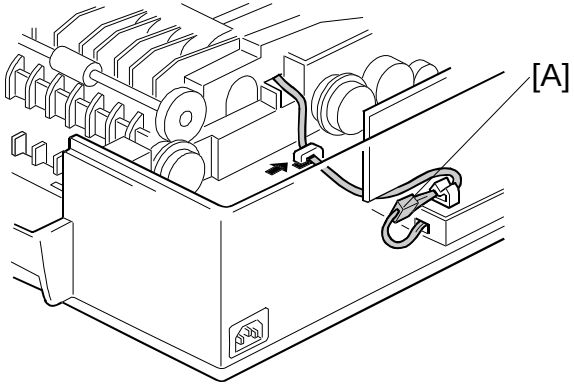

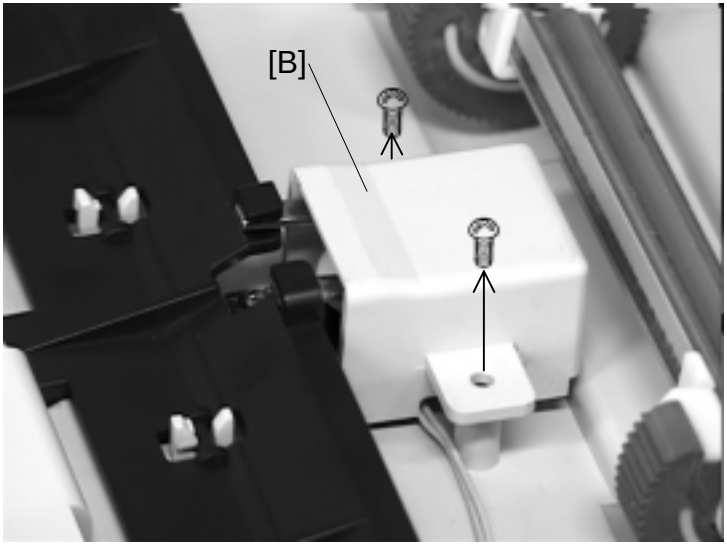

A: Registration solenoid connector

Machine Bottom Side:

B: Registration solenoid cover (2 tapping screws)

C: Registration solenoid
D: Tapping screw

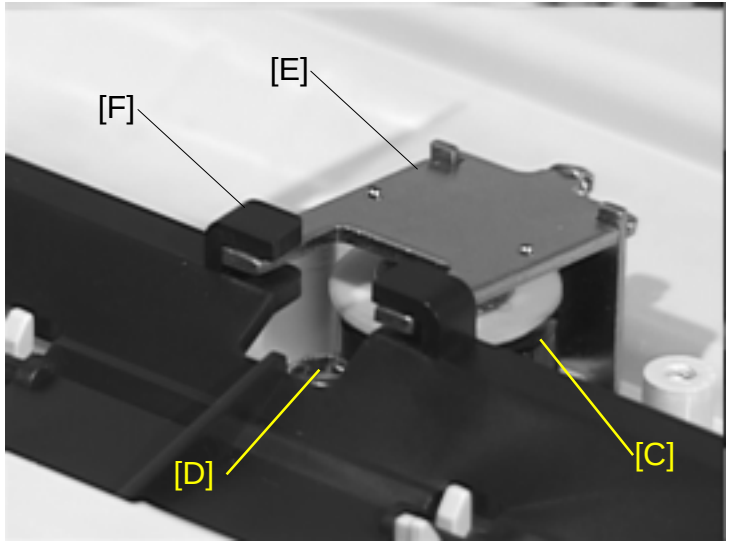

Reinstallation

NOTE: 1) Make sure the solenoid plate [E] is positioned into the registration stopper plate [F] correctly.
2) Make sure the solenoid harness is secured under the harness hook [G].

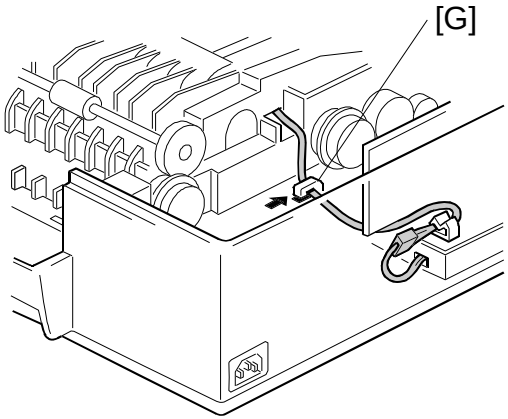

FUSING

Preparation:

1) Remove the upper cover and the exposure glass. (See Exterior Cover/Exposure Glass Removal.)
2) Remove the upper unit. (See Upper Unit Removal.)

FUSING UPPER UNIT REMOVAL

Connectors [A] [B] [C] [D]

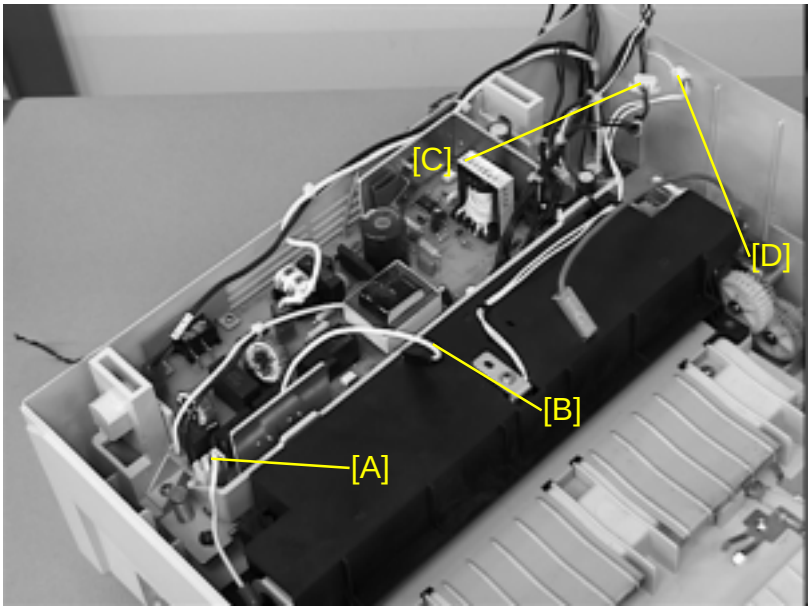

E: Fusing upper unit (4 tapping screws)

NOTE: 1) Do not touch the fusing rollers with bare hands.

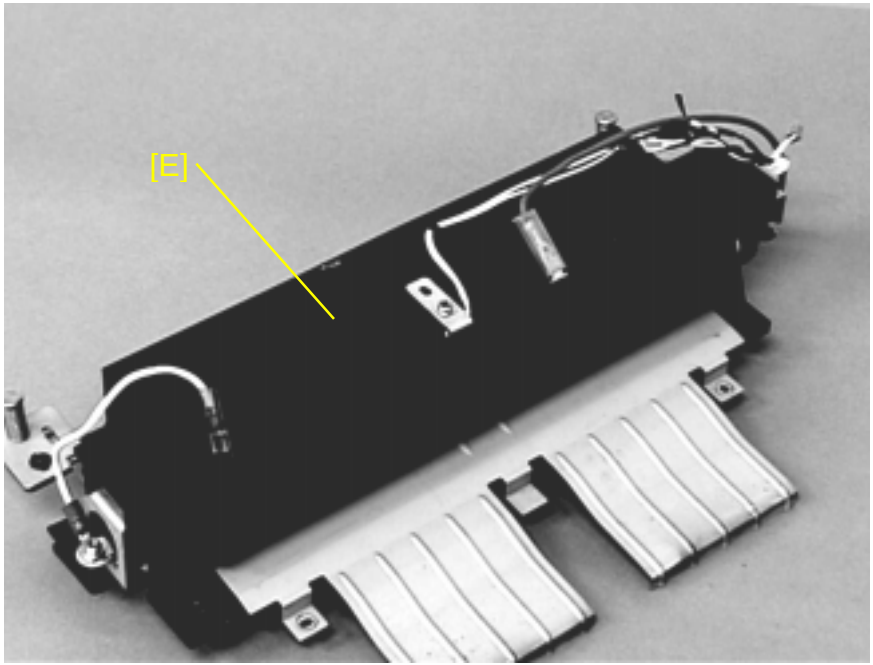

PRESSURE ROLLER REMOVAL

Preparation:

Remove the fusing upper unit. (See Fusing Upper Unit Removal.)

A: Pressure roller

B: 2 bushings

NOTE: 1) The pressure rollers used in the initial production machines have a gap between the roller [A] and the bearings [B]. A spacer (P/N: A2274072) fills this gap. The pressure rollers of later production machines and all service parts are modified and do not require the spacers.
Do not use the spacers whenever the pressure roller is replaced with the service part.

2) Do not touch the pressure roller surface with bare hands.

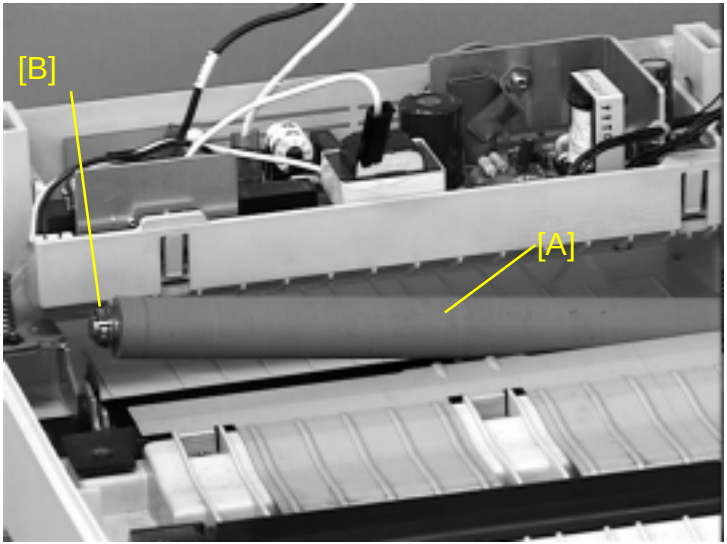

FUSING LAMP REMOVAL

Preparation:

Remove the fusing upper unit. (See Fusing Upper Unit Removal.)

A: Connector
B: Front lamp terminal. (1 Philips screw)
C: Rear lamp holder (1 tapping screw)
D: Fusing lamp

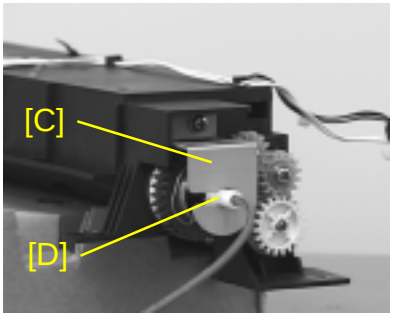

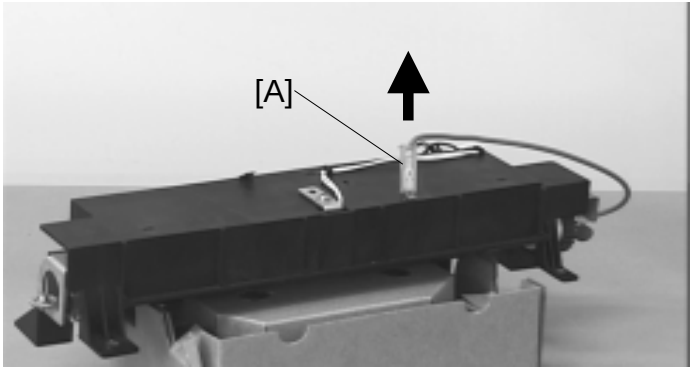

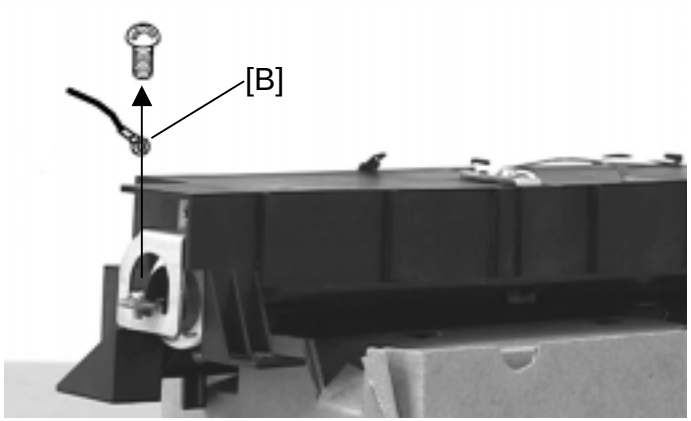

NOTE: 1) Do not touch the fusing lamp with bare hands.
2) Make sure the fusing lamp is securely positioned in the lamp holder.

HOT ROLLER STRIPPER PAWL REMOVAL

Preparation:

Remove the fusing upper unit. (See Fusing Upper Unit Removal.)

A: Fusing exit guide assembly (2 Philips screws)
B: Gear
C: Fusing exit upper roller assembly (2 tapping screws)

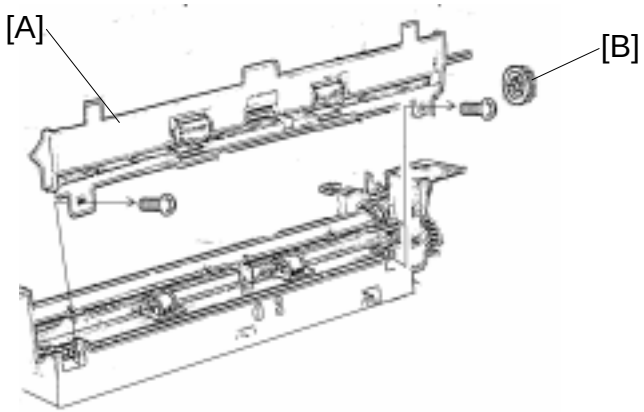

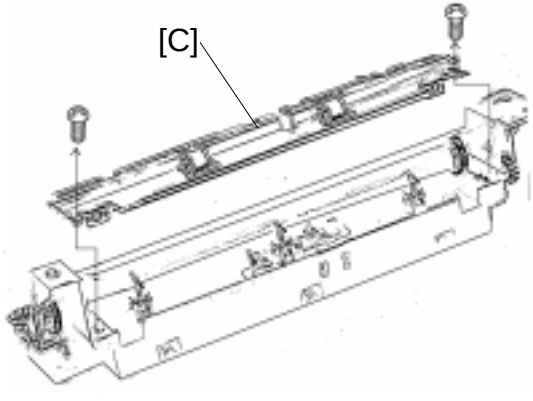

D: 3 springs
E: 3 hot roller stripper pawls

NOTE: 1) Do not touch the hot roller.
2) Do not deform the springs.
3) Do not damage the hot roller stripper pawls.

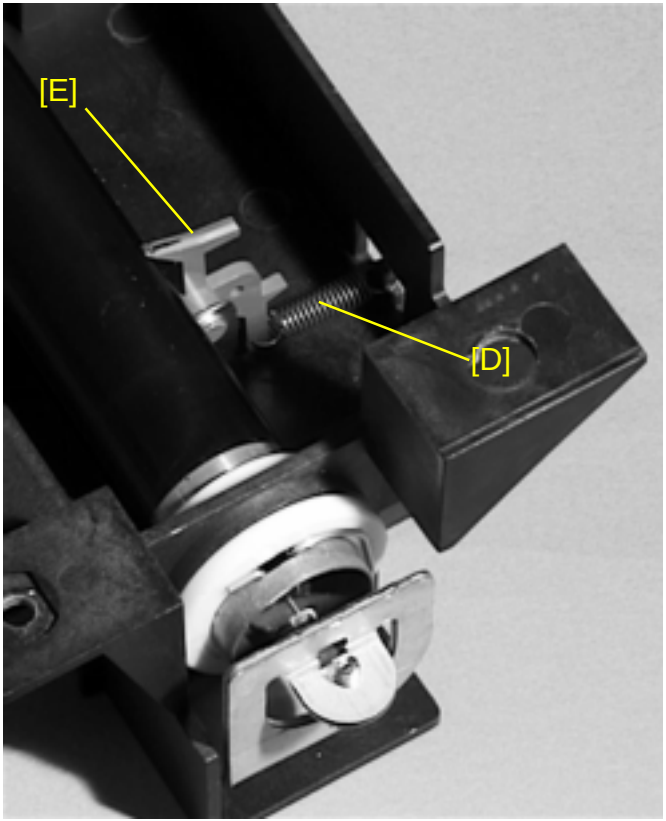

HOT ROLLER REMOVAL

Preparation:

1) Remove the fusing upper unit. (See Fusing Upper Unit Removal.)
2) Remove the hot roller striper pawls. (See Hot Roller Stripper Pawl Replacement.)
3) Remove the fusing lamp. (See Fusing Lamp Replacement.)

A: 2 clips
B: Gear
C: 2 bushings

NOTE: Do not touch the hot roller surface with bare hands.

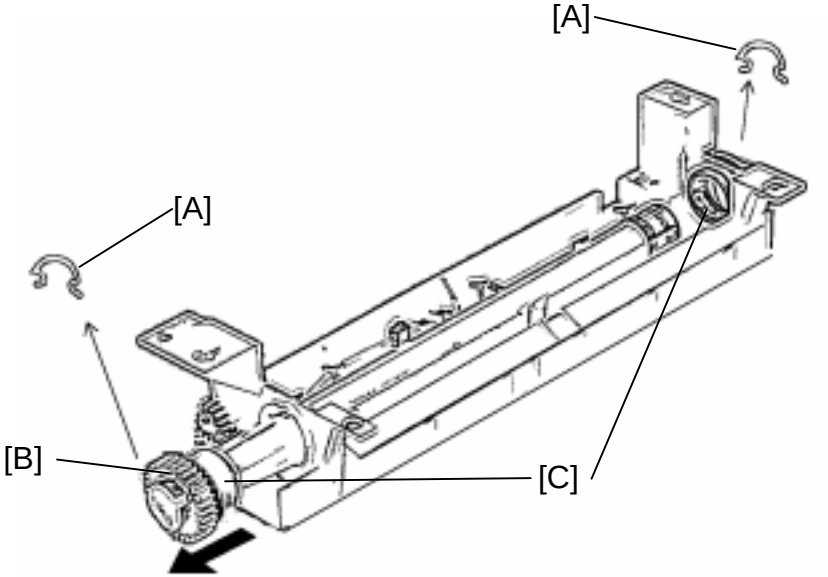

Reinstallation

Be careful not to damage the fusing thermistor.

FUSING THERMISTOR REMOVAL

A: Fusing thermistor (1 tapping screw)

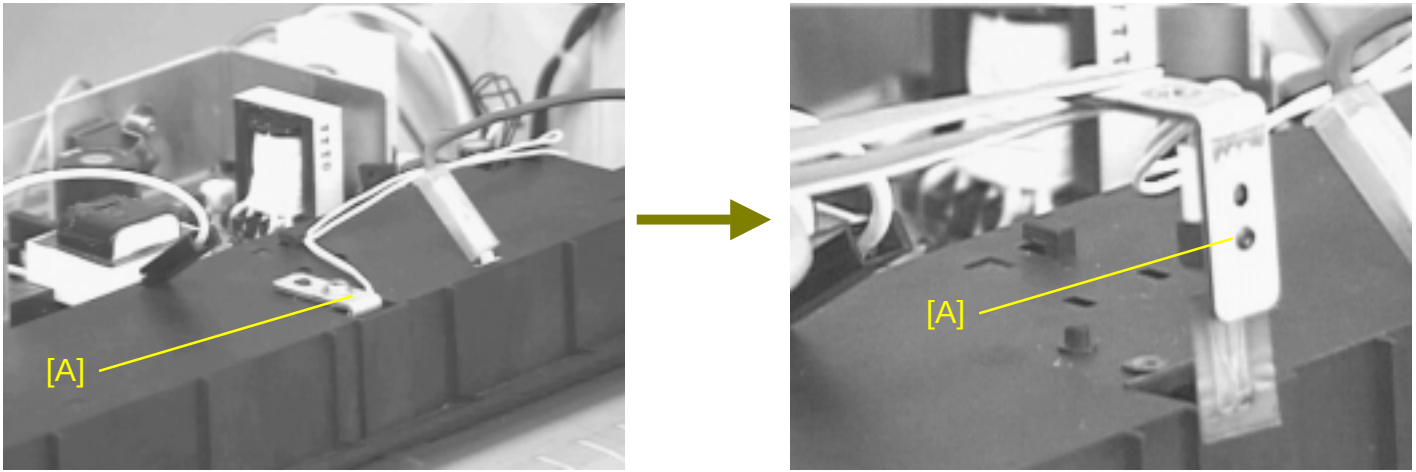

NOTE: Do not deform the fusing thermistor.

FUSING THERMOFUSE REMOVAL

Preparation:

1) Remove the fusing upper unit. (See Fusing Upper Unit Removal.)
2) Remove the hot roller striper pawls. (See Hot Roller Stripper Pawl Replacement.)
3) Remove the fusing lamp. (See Fusing Lamp Replacement.)
4) Remove the hot roller. (See Hot Roller Replacement.)

A: Thermofuse (2 Philips screws)

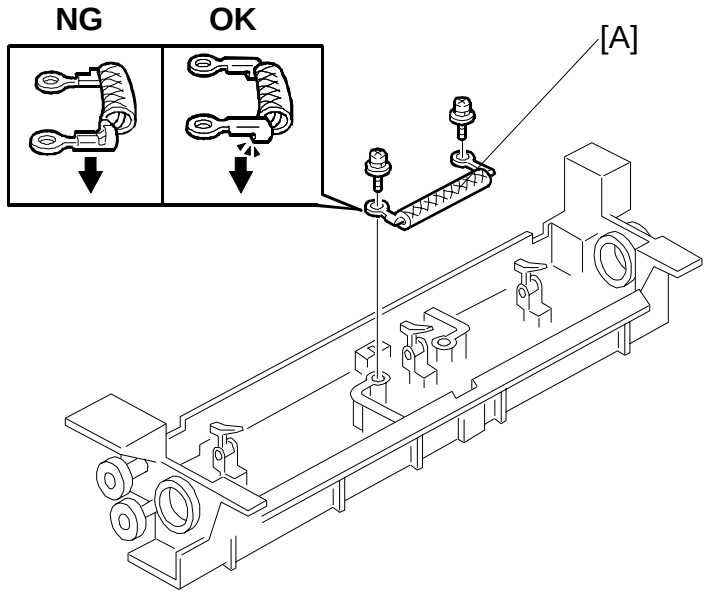

Reinstallation

CAUTION: 1) Do not deform the thermofuse.
2) Do not install the thermofuse upside down.

FUSING PRESSURE ADJUSTMENT

1. Adjustment standard

	Screw height (A=)
Front	0.6 mm
Rear	1.6 mm

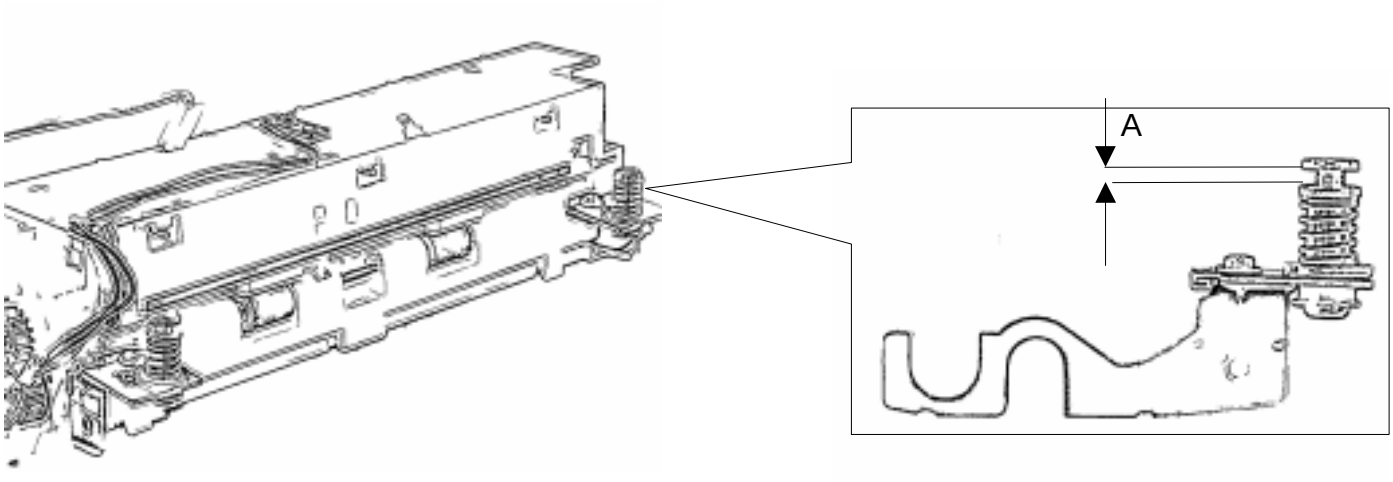

NOTE: If the front and rear pressure are maladjusted, an image skew problem at the trailing area may occur.

OTHERS

TRANSFER CORONA UNIT REMOVAL

Preparation:

1) Remove the upper cover and the exposure glass. (See Upper Cover Removal.)
2) Remove the upper unit. (See Upper Unit Removal.)

A: Transfer corona power cable (1 tapping screw)
B: Transfer corona unit

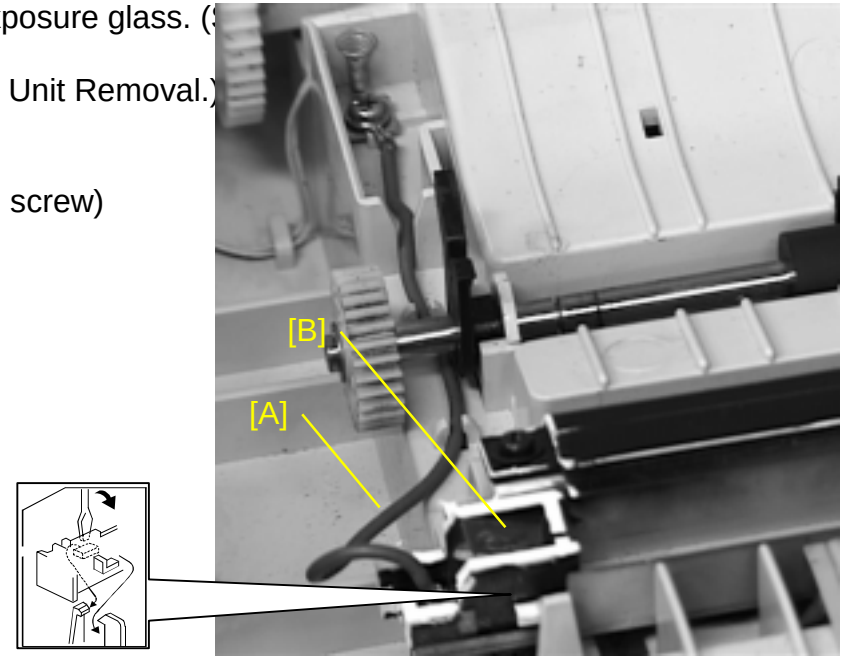

MAIN MOTOR REMOVAL

Preparation:

Remove the feed clutch.

A: E-ring
B: Slide in arrow direction.

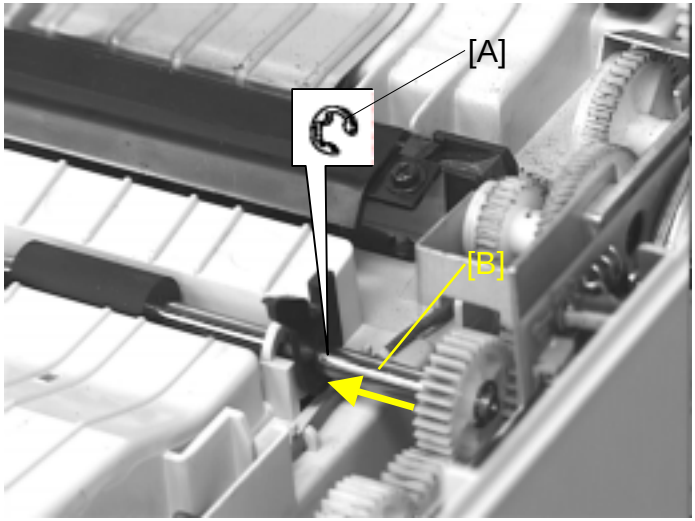

C: Connector
D: Main drive unit (4 tapping screws)

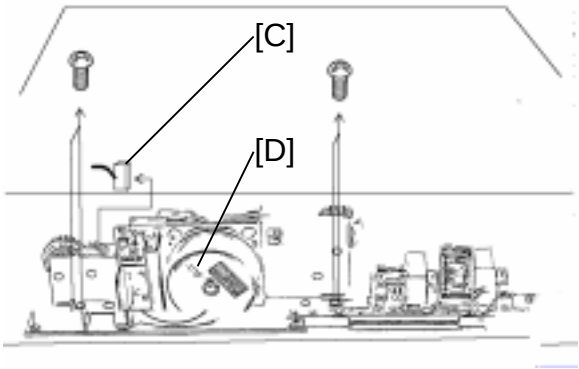

E: Main motor unit
(4 Philips screws)

NOTE: Do not damage the transfer corona cable.

Reinstallation

NOTE: 1) The main motor unit must be installed with the connector to the left (rear view).
2) Make sure no wires are pinched under the main drive unit.

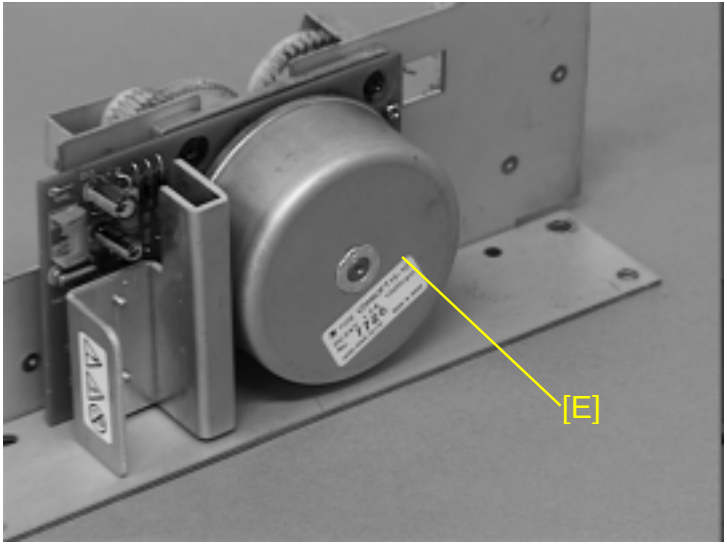

OZONE FILTER REMOVAL

Preparation:

Remover the upper cover and the exposure glass. (See Exterior Cover/Exposure Glass Removal.)

A: Ozone filter

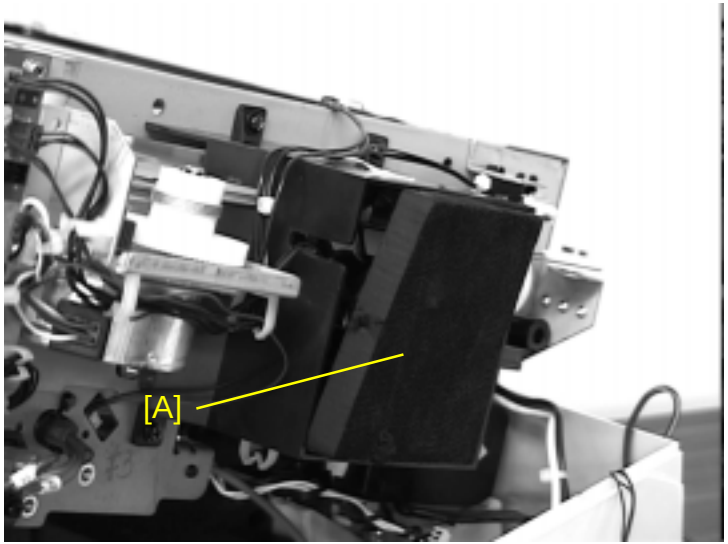

TONER END SENSOR REMOVAL

Preparation:
Open the upper unit.

A: Upper registration roller assembly (2 tapping screws)
B: Toner end sensor connector
C: Toner end sensor
D: 2 Philips screws with springs

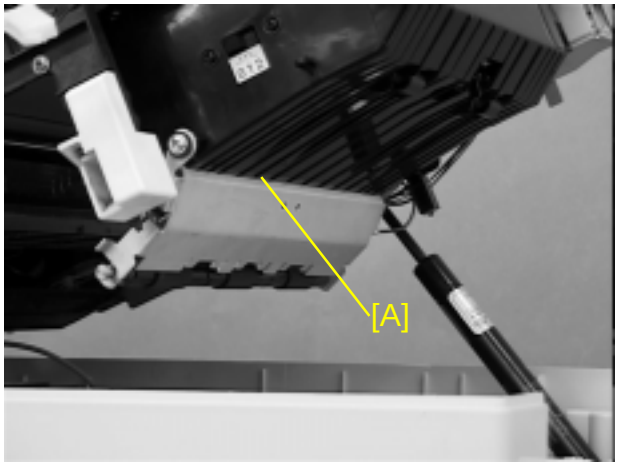

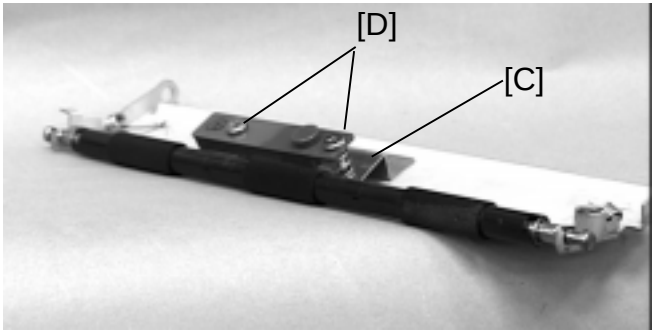

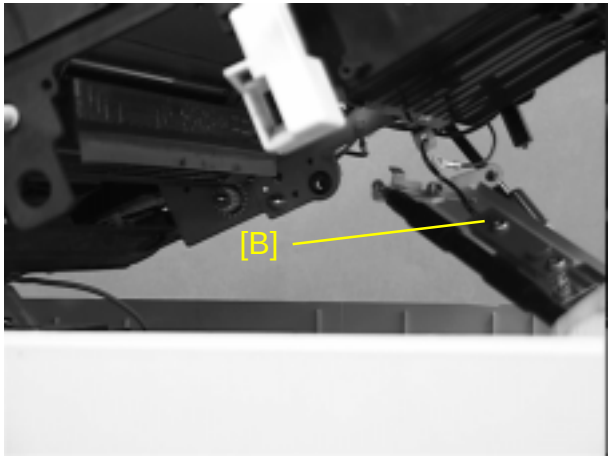

POWER PACK REMOVAL

Preparation:

1) Remove the upper cover and the exposure glass. (See Exterior Cover/Exposure Glass Removal.)
2) Remove the upper unit. (See Upper Unit Removal.)
3) Place the upper unit on the table upside down.

A: Main board
B: 3 Philips screws and all connectors

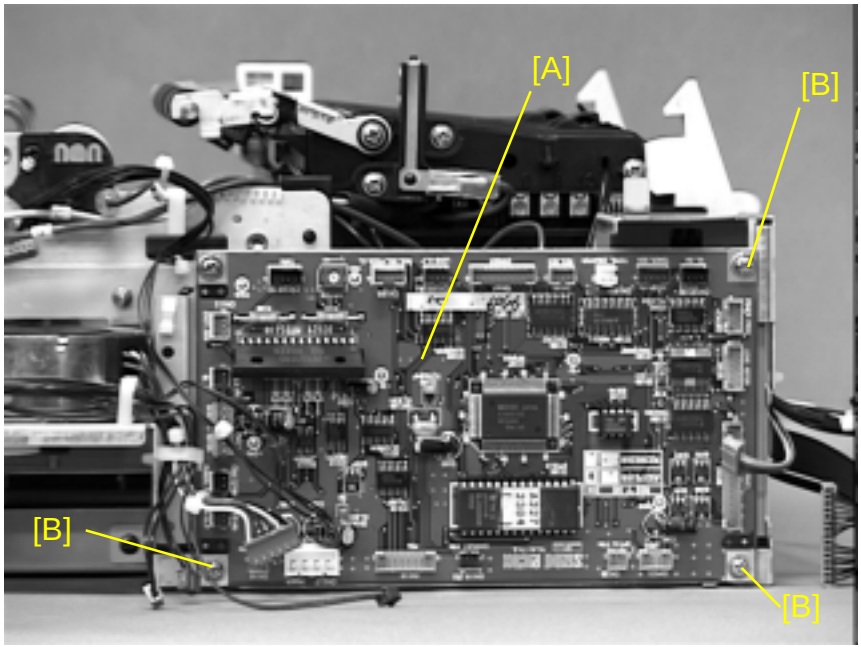

C: Grounding wire (1 Philips screw)

D: 3 high voltage cables

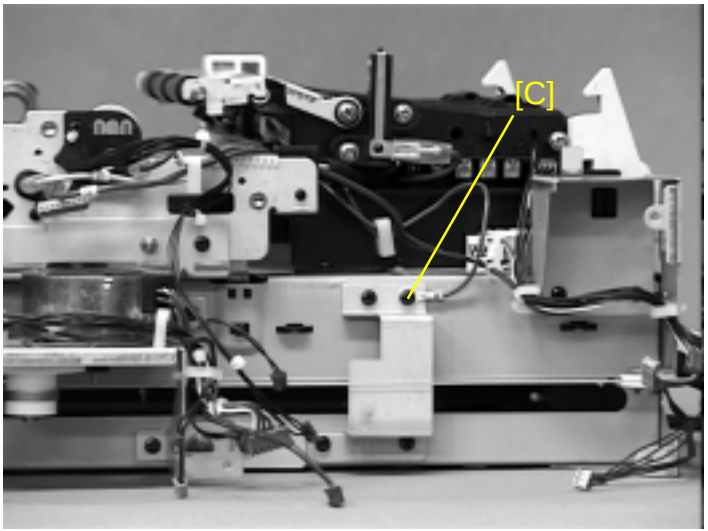

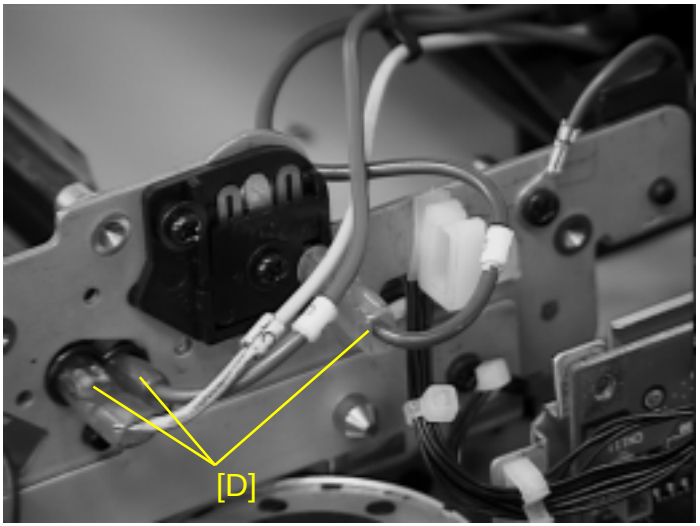

E: Upper unit release lever
F: Upper registration guide assembly (4 Philips screws)
G: Transfer corona terminal
H: Power pack (2 tapping screws)

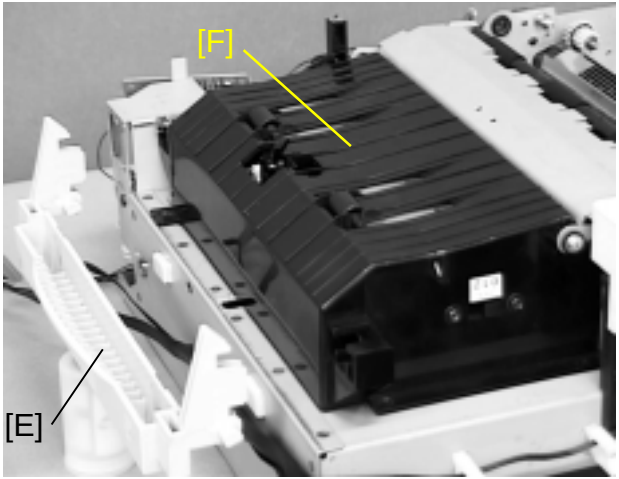

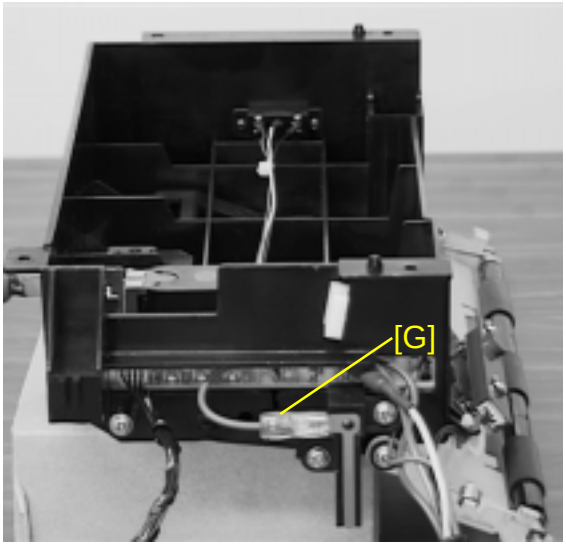

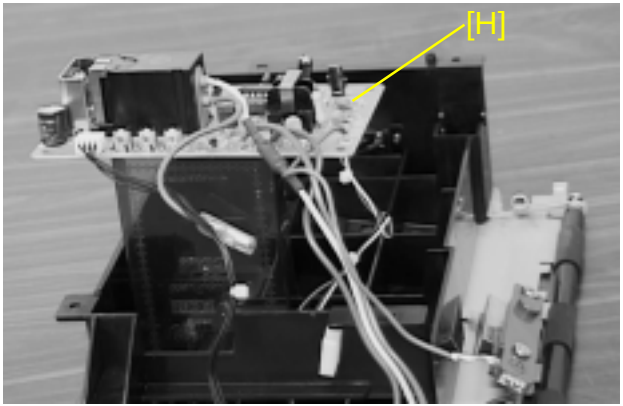

POWER PACK OUTPUT ADJUSTMENT

The power pack has outputs for Charge and Transfer coronas, and for the Grid and Development Bias voltages. Since the output values of the service part have been adjusted in the factory before shipment, their adjustment in the field is not required normally.
The following adjustment procedures are just in case the potentiometers on the power pack are turned mistakenly when the power pack is replaced.

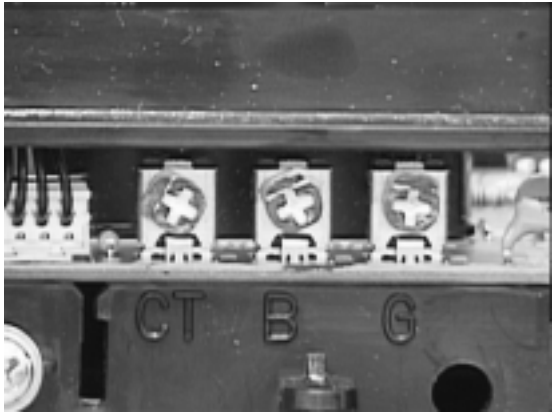

Preparation:

1. Remove the upper cover and the exposure glass. (See Exterior Cover/Exposure Glass Removal)
2. Open the upper unit and actuate the interlock switch [A] for upper unit.

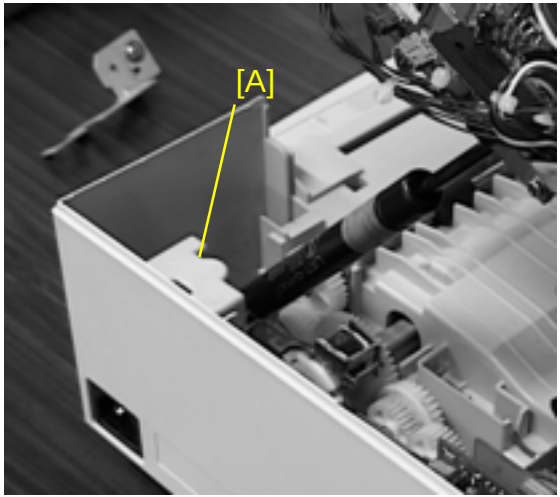

TRANSFER CORONA CURRENT ADJUSTMENT

⚠WARNING

Very high voltage is applied from the high voltage supply terminals. Pay attention when adjusting the power pack outputs. Make sure that the machine is unplugged before connecting the multi-meter.

Adjustment Standard:

DC 285 ± 5 μA

Measurement Points:

–: Transfer corona output terminal [A]

+: Transfer corona terminal [B]

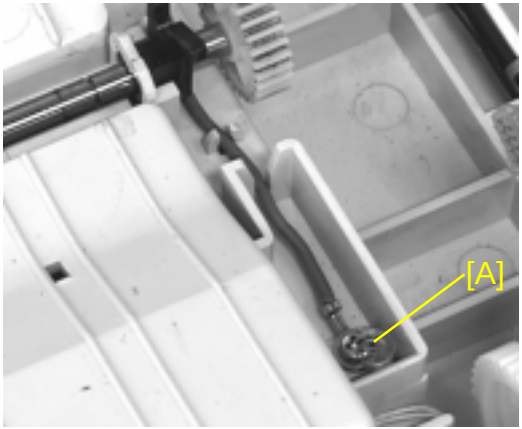

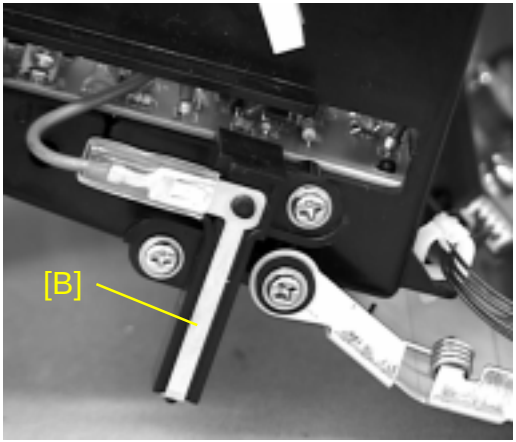

Procedure:

1. Connect the multi-meter to the measurement points.
2. Plug in the machine and turn on the main switch.
3. Access SP9 and select #2.
4. Press the Start key to energize the power pack.
5. Adjust the current by turning the potentiometer [C] on the power pack.

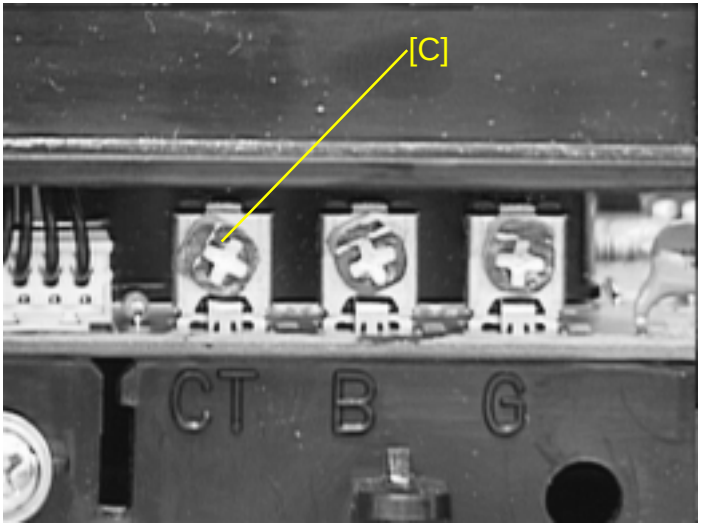

GRID VOLTAGE ADJUSTMENT

⚠WARNING

Very high voltage is applied from the high voltage supply terminals. Pay attention when adjusting the power pack outputs. Make sure that the machine is unplugged before connecting the multi-meter.

Adjustment Standard:

DC -880 ± 5 V

Measurement Points:

–: Frame Ground [A]

+: Grid Terminal [B]

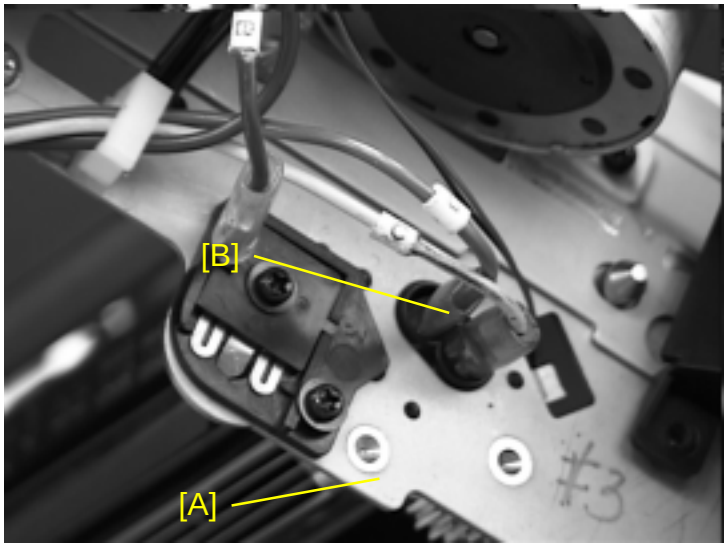

Procedure:

1. Connect the multi-meter to the measurement points.
2. Plug in the machine and turn on the main switch.
3. Access SP9 and select #2.
4. Press the Start key to energize the power pack.
5. Adjust the voltage by turning the potentiometer [C] on the power pack.

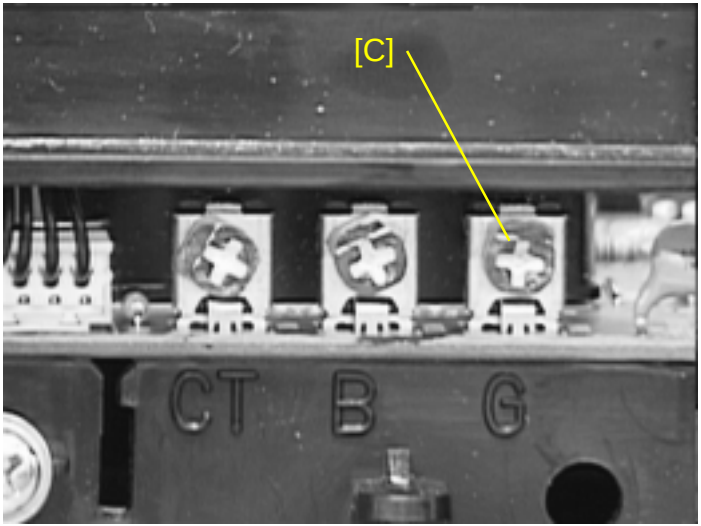

BIAS VOLTAGE ADJUSTMENT

⚠WARNING

Very high voltage is applied from the high voltage supply terminals. Pay attention when adjusting the power pack outputs. Make sure that the machine is unplugged before connecting the multi-meter.

Adjustment Standard:

DC –150 ± 5 V

Measurement Points:

–: Frame Ground [A]

+: Bias Terminal [B]

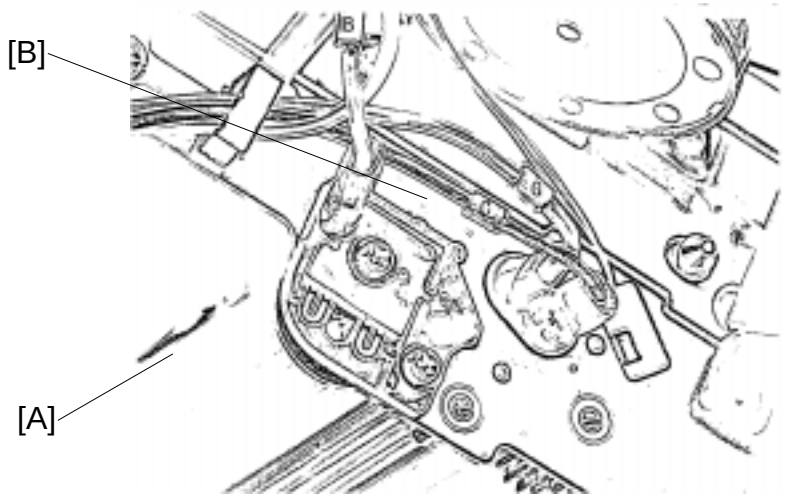

A227R583.TIF

Procedure:

1. Connect the multi-meter to the measurement points.
2. Plug in the machine and turn on the main switch.
3. Access SP9 and select #2.
4. Press the Start key to energize the power pack.
5. Adjust the voltage by turning the potentiometer [C] on the power pack.

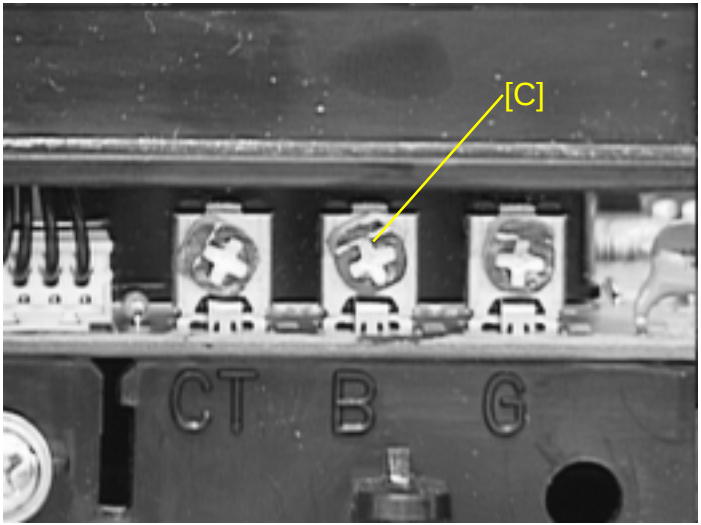

COPY QUALITY ADJUSTMENT

IMAGE DENSITY ADJUSTMENT

Copy image density is affected by the following factors:

1. Light Intensity (Exposure Lamp Voltage)
2. Development Bias Voltage
3. Drum Current (Corona Output)

Since the drum current is carefully adjusted by using special tools in the factory, it is very difficult for field service technicians to adjust it correctly. The power pack output that determines the drum current must not be changed to adjust the image density.
The exposure lamp voltage and development bias voltage can be changed to adjust the image density.

1. Base Exposure Lamp Voltage Adjustment

Adjustment Standard:

Level 2 of the gray scale on the OS-A4 chart should be just visible on the copy in full size mode.

Since there is no center position of the manual image density mode on this model, the ADS position should be selected while the ADS is disabled by the SP19.

Adjustment tool:

SP48: Light Intensity Adjustment

The factory setting of SP48 is on the “SP MODE FACTORY SET DATA” sheet in the machine.

Procedure:

1. Turn off the main switch and unplug the power cord.
2. Clean the following parts:
   - Optics
   - Corona Wires
   - Quenching Lamp
   - Erase Lamp
3. Plug in the power cord and turn on the main switch.

4. Reset the V_L correction using SP95 (V_L Correction Counter Reset).
5. Set SP34 (Image Density Adjustment) to the default ”0”.
6. Set the V_L switch position to the default “0”.
7. Set SP19 (Disable ADS Compensation) to “1”.
8. Place an OS-A4 test chart on the exposure glass and close the platen cover.
9. Make a full size copy in the ADS mode setting.
10. Check if level 2 of the gray scale is just visible on the copy.
11. If it is not, adjust the image density by changing the setting of SP48.
12. Set SP19 (Disable ADS Compensation) back to “0”.
13. Perform ADS adjustment.

2. ADS Adjustment

Adjustment Standard:

ADS Reference Voltage = 2.5 ± 0.2 Volts

Adjustment Tool:

SP56: ADS Reference Voltage Adjustment

VR100 on the main control board

OS-A4 Test Chart

Procedure:

1. Place 5 sheets of A4 white paper on the exposure glass and close the platen cover.
2. Access SP56 and press the Start key. The ADS sensor output is displayed.
3. Adjust the display voltage to the standard by turning VR100 on the main control board.

3. Other Adjustment Tools for Image Density

The following tools are available to adjust the image density based on the two above adjustments to adapt the customer requirements. Refer to the Service Program Mode section for the details of the setting.

1) Total Image Density
- SP34: Image Density Adjustment (UP1)

2) For Darker Setting Position
- SP35: Coarse Image Density Adjustment at Darker Setting Position (UP2)
- SP38: Fine Image Density Adjustment at Darker Setting Position

3) For Lighter Setting Position
- SP36: Coarse Image Density Adjustment at Lighter Setting Position (UP3)
- SP39: Fine Image Density Adjustment at Lighter Setting Position

4) For Photo Mode
- SP64: Photo Mode Compensation Setting (UP4)

5) Compensation for Copy Run
- V_L Switch (For End User)
- SP62: V_L Switch Setting (UP32)
- SP63: V_L Correction Interval (UP31)

REGISTRATION ADJUSTMENT

Adjustment Standard:

Paper Tray: 0 ± 2.0 millimeters

By-pass Feed: $0\ ^{+3.0}_{-2.0}$ millimeters

Adjustment Tool:

SP42: Registration Adjustment (0.5 millimeter/step, 15 steps)

The factory setting of SP42 is on the “SP MODE FACTORY SET DATA” sheet in the machine.

Procedure:

1. Place a 150-millimeter scale perpendicular to the left scale on the exposure glass.
2. Make copies in full size mode and check the leading edge registration.
3. Adjust the registration to the standard by changing the SP42 setting.

LEAD EDGE ERASE MARGIN ADJUSTMENT

Adjustment Standard:

2.5 ± 2.0 millimeters

Adjustment Tool:

SP41: Lead Edge Erase Margin Adjustment (0.5 millimeters/step, 15 steps)

The factory setting of SP41 is described in the “SP MODE FACTORY SET DATA” sheet in the machine.

Procedure:

1. Place a 150-millimeter scale perpendicular to the left scale on the exposure glass.
2. Make copies in full size mode and check the lead edge erase margin.
3. Adjust the margin to the standard by changing the SP41 setting.

VERTICAL MAGNIFICATION ADJUSTMENT

Adjustment Standard:

Less than ± 1.0% difference between the original and copy.

Adjustment Tool:

SP43: Vertical Magnification Adjustment (0.2%/step, 31 steps)
The factory setting of SP43 is on the “SP MODE FACTORY SET DATA” sheet in the machine.

Procedure:

1. Place a 150-millimeter scale perpendicular to the left scale on the exposure glass.
2. Make copies in full size mode and compare the length of the copy with the scale.
3. Adjust the magnification to the standard by changing the SP43 setting.

HORIZONTAL MAGNIFICATION ADJUSTMENT (A227 ONLY)

Adjustment Standard:

Less than ± 0.5% difference between the original and copy.

Adjustment Tool:

SP44: Horizontal Magnification Adjustment (0.2%/step, 31 steps)

The factory setting of SP44 is on the “SP MODE FACTORY SET DATA” sheet in the machine.

Procedure:

1. Place a 150-millimeter scale parallel to the left scale on the exposure glass.
2. Make copies in full size mode and compare the length of the scale image on the copy with the scale.
3. Adjust the magnification to the standard by changing the SP44 setting.

FOCUS ADJUSTMENT (A227 ONLY)

If the 4th and 5th mirror unit [A] is removed from the bracket (1 tapping screw [B]), the proper focal length between the lens and drum will be lost. In this case, the focus adjustment must be performed.

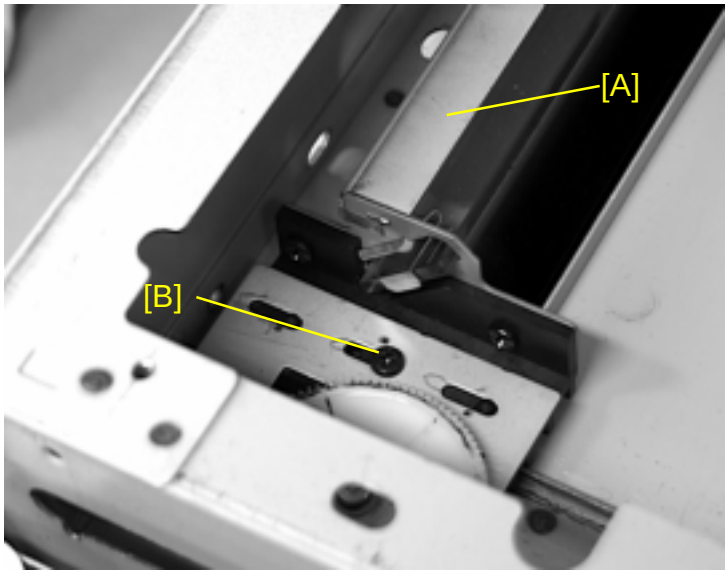

Adjustment Tool:

OS-A4 Test Chart

Adjustment Method:

Adjust the 4th and 5th mirror unit mounting position to the bracket by checking the copy image of the test chart.

PARALLELOGRAM IMAGE ADJUSTMENT

The 1st and 2nd scanners are mounted perpendicular to the scanner rod in the factory. If they are not mounted perpendicular, a parallelogram image may appear. Since they cannot be reinstalled in the field correctly, the mounting screws must not be removed.

The 4th and 5th mirror units have an adjustment screw on the bracket that can change the angle to the lens. If this angle is not correct, a parallelogram image also appears. This position is adjusted in the factory, however, it can be changed in the field by the following procedure if necessary.

> There is no need to adjust this screw position under normal usage conditions. The parallelogram image caused by the incorrect 1st and 2nd scanner mounting angle cannot be fixed by this adjustment.

Adjustment Tool:

OS-A4 Test Chart

Adjustment Method:

Turn the adjusting screw [A] to achieve a rectangular image by checking the copy image of the test chart.

Turning clockwise makes the image as shown by [B].

Turning counter-clockwise makes the image as shown by [C].

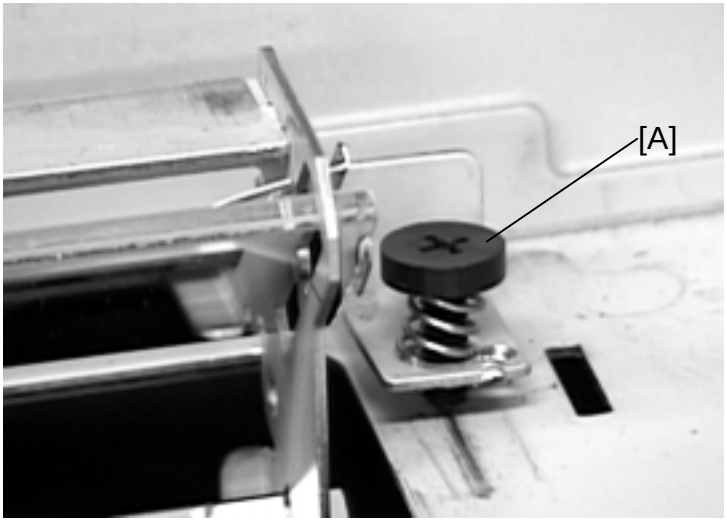

[B]

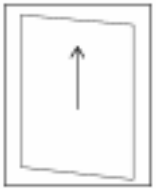

[C]

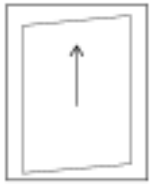

CONNECTOR LAYOUT

MAIN CONTROL BOARD (MCB)

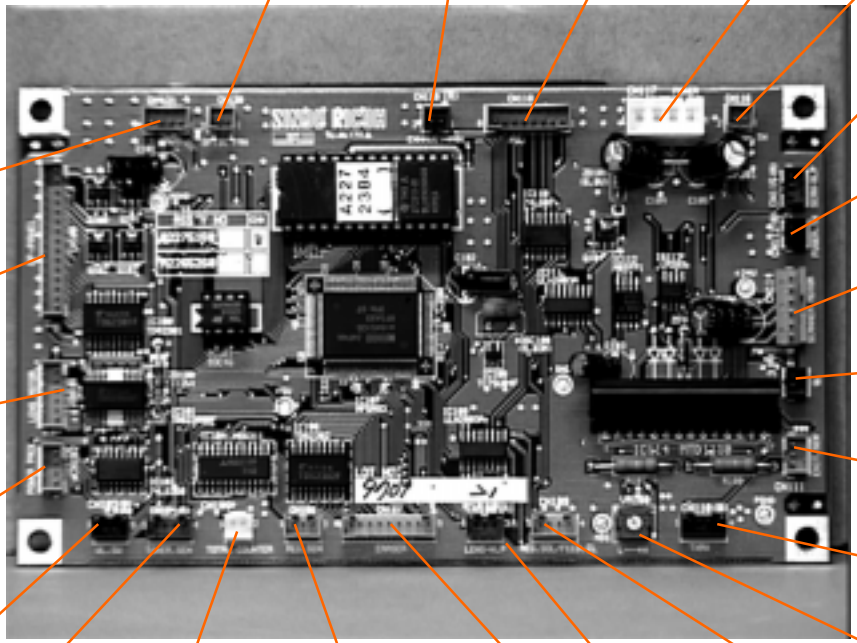

CN 120
2 Pin
Not used

CN 119
2 Pin
Exhaust Fun

CN 118
8 Pin
PSU CN404

CN 117
4 Pin
PSU CN403

CN 116
2 Pin
Optics TH

CN 115
3 Pin
Scanner HP

CN 112
2 Pin
Fuser TH

CN 114
6 Pin
Scanner Motor

CN 113
2 Pin
QL

CN 111
3 Pin
Exit Sensor

CN 110
4 Pin
Not used

VR100

ADS

CN 109
4 Pin
REG SOL
Feed CL

CN 108
3 Pin
Lens HP

CN 107
9 Pin
Eraser

CN 106
3 Pin
REG Sensor

CN 105
2 Pin
Not used

CN 104
4 Pin
Toner sensor

CN 103
3 Pin
VL SW

CN 102
4 Pin
Power Pack

CN 101
6 Pin
Lens Motor

CN 100
15 Pin
OP-panel

CN 121
4 Pin
ADS sensor

POWER SUPPLY UNIT (PSU)

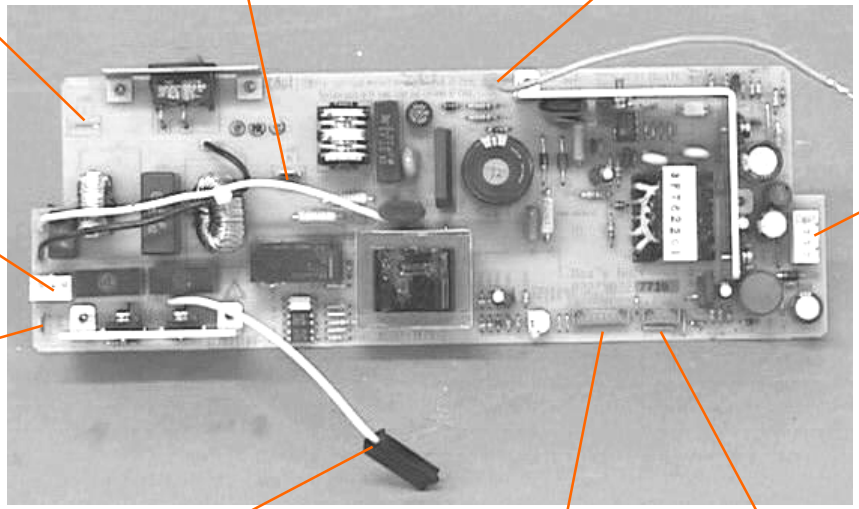

NOISE FILTER

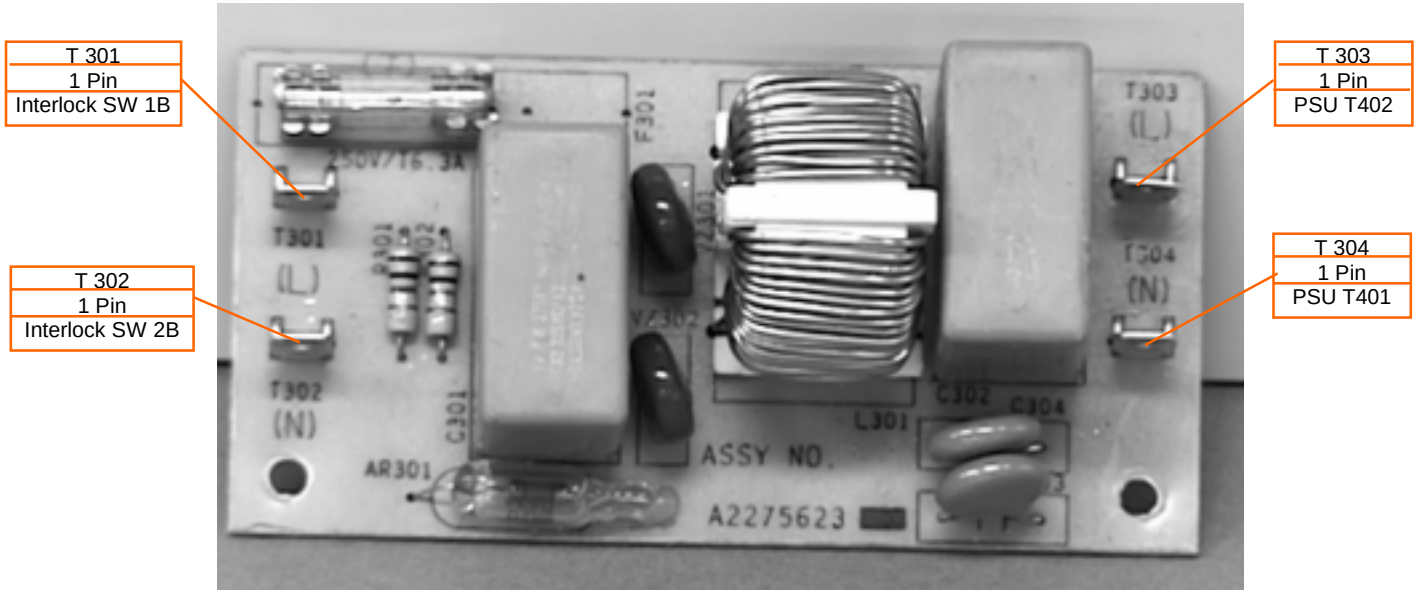

POWER PACK

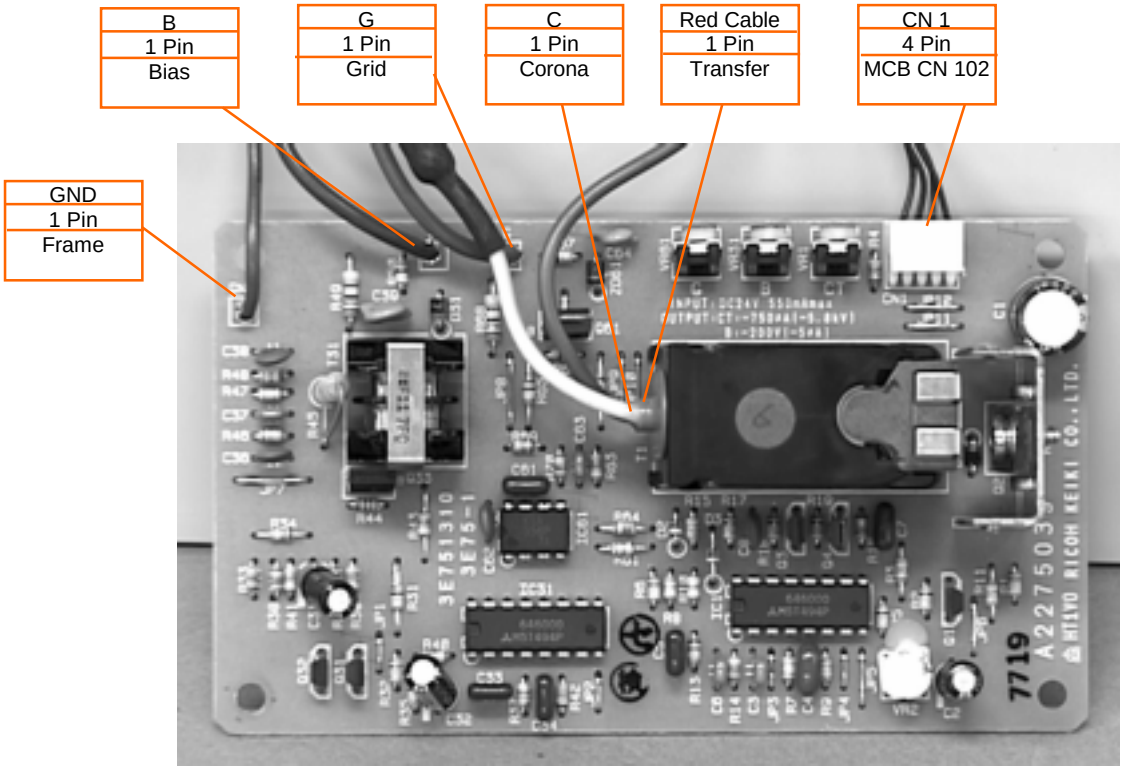
B
1 Pin
Bias
G
1 Pin
Grid
C
1 Pin
Corona
Red Cable
1 Pin
Transfer
CN 1
4 Pin
MCB CN 102
GND
1 Pin
Frame

POINT-TO-POINT DIAGRAM A226/227 COPIER

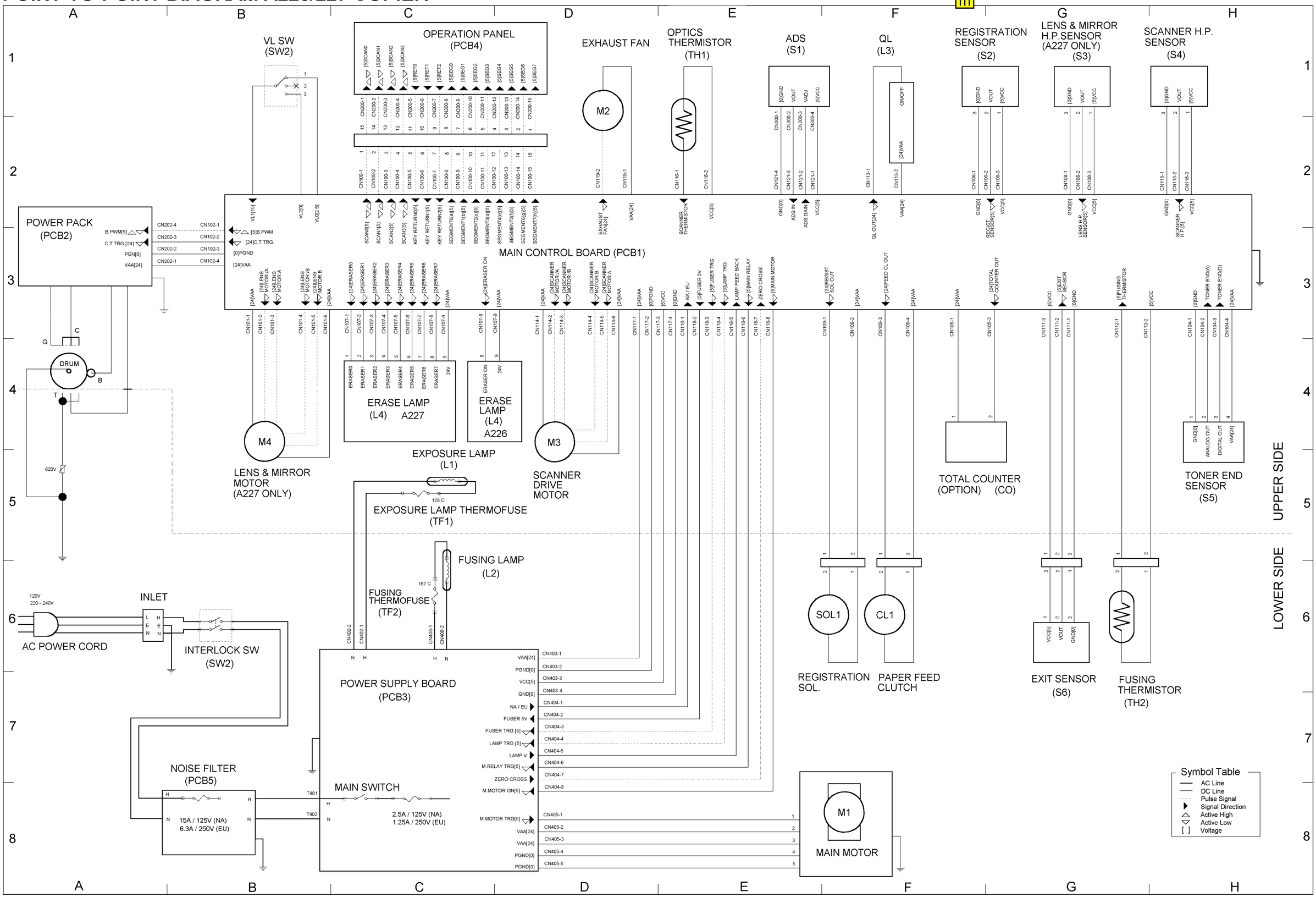

COPIER ELECTRICAL COMPONENT LAYOUT

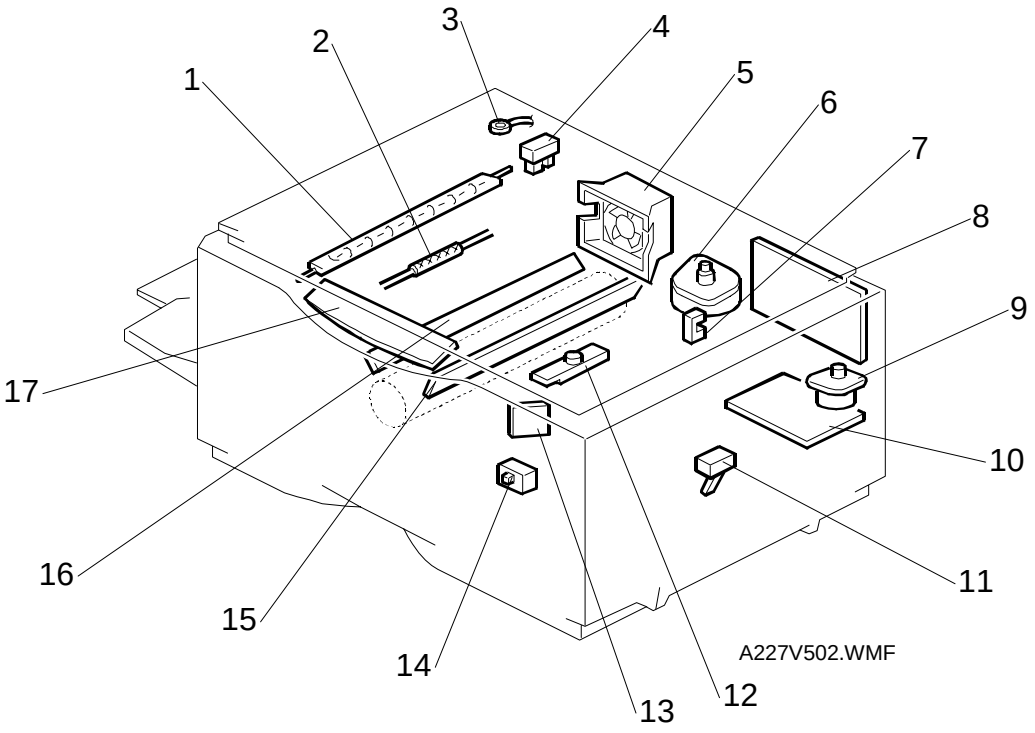

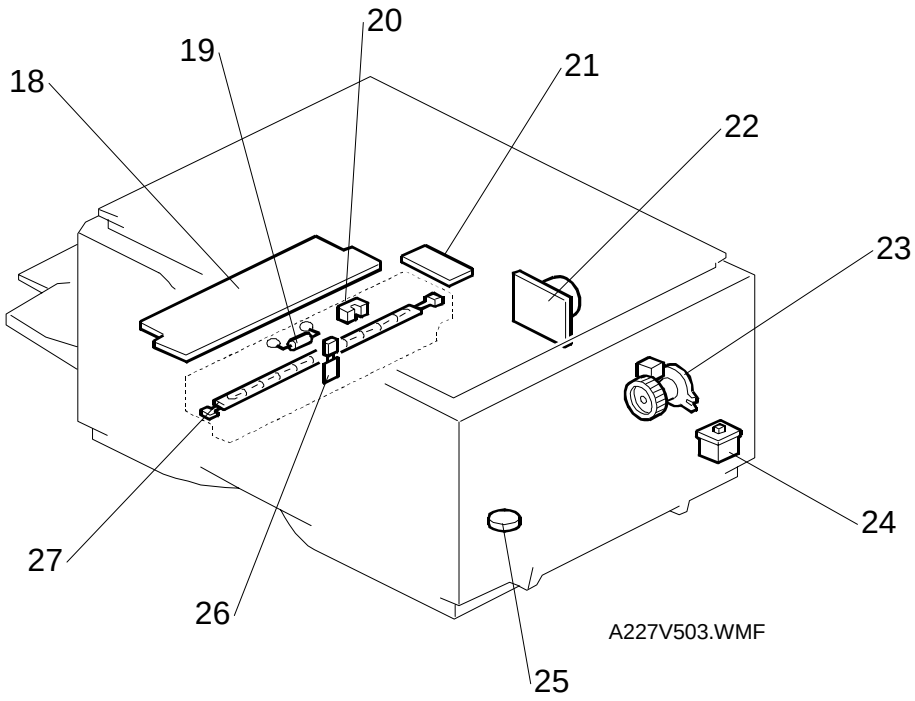

Symbol	Name	Index No.	P-to-P Location
Motors			
M1	Main Motor	22	F8
M2	Exhaust Fan Motor	5	D1
M3	Scanner Drive Motor	6	D4
M4	Lens and Mirror Motor (A227 machines only)	9	B4
Clutches			
CL1	Paper Feed clutch	23	F6
Switches			
SW1	Interlock Switch	24	B6
SW2	V_L Switch	14	B1
Sensors			
S1	ADS Sensor	13	E1
S2	Registration Sensor	11	G1
S3	Lens and Mirror H. P. Sensor (A227 machines only)	7	G1
S4	Scanner H. P. Sensor	4	H1
S5	Toner End Sensor	12	H4
S6	Exit Sensor	20	G6
Solenoid			
SOL1	Registration Solenoid	25	F6
Printed Circuit Boards			
PCB1	Main Control Board	8	D3
PCB2	Power Pack	10	A3
PCB3	Power Supply Board	18	C7
PCB4	Operation Panel Board	17	C1
PCB5	Noise Filter	21	B8
Lamps			
L1	Exposure Lamp	1	C5
L2	Fusing Lamp	27	C6
L3	Quenching Lamp (QL)	16	F1
L4	Erase Lamp	15	C4
Others			
TH1	Optics Thermistor	3	E2
TH2	Fusing Thermistor	26	G6
TF1	Exposure Lamp Thermofuse	2	C5
TF2	Fusing Thermofuse	19	C6
CO	Total Counter	Option	F4

A226/A227 COPIER TIMING CHART

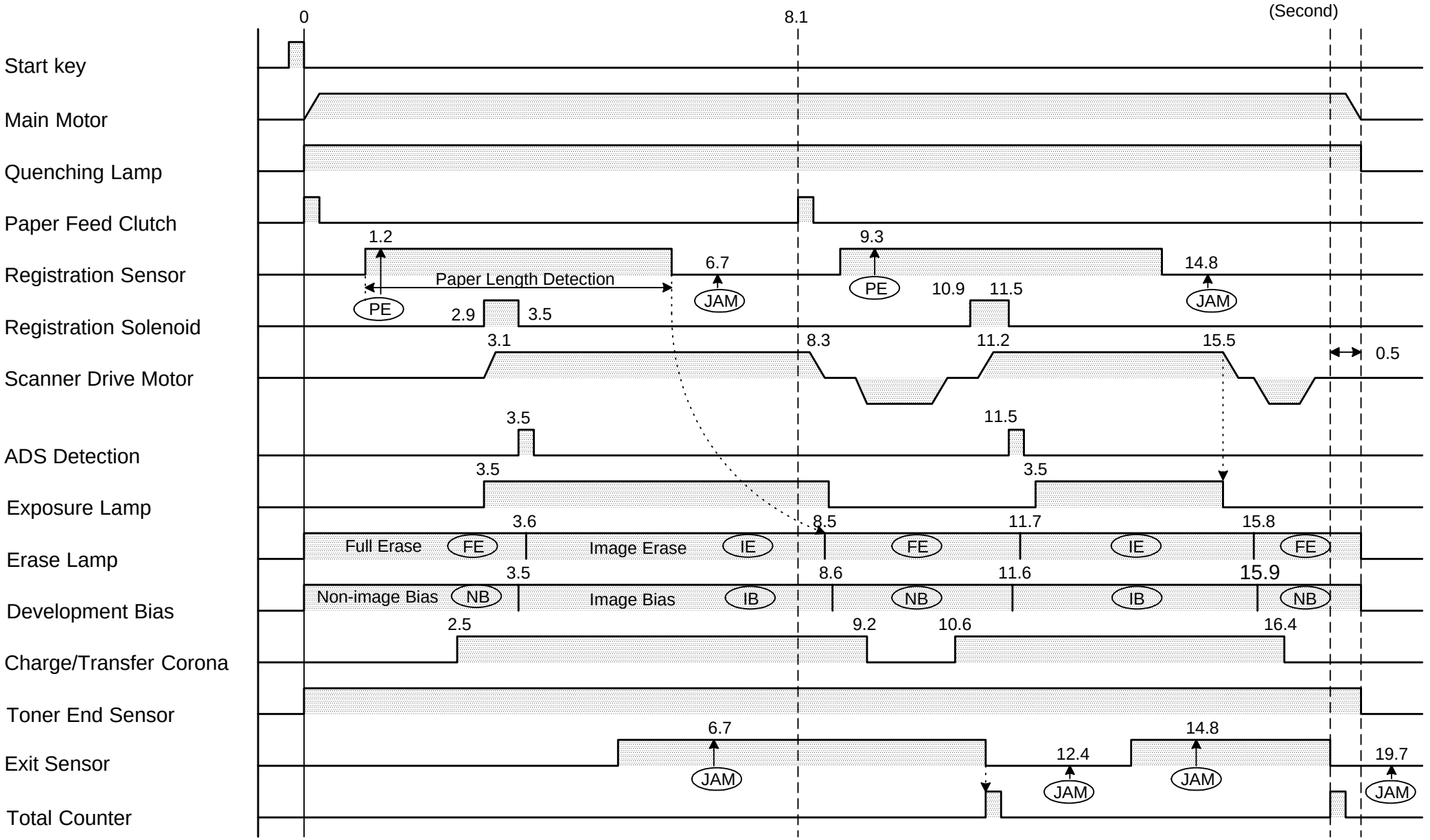

* For the 1st copy cycle, the CPU operates based on the maximum (8 1/2" x 14") paper size.

Note: 1. A4 2 repeat copies
2. 100%
3. ADS mode
4. Paper tray