IMPORTANT SAFETY NOTICES

PREVENTION OF PHYSICAL INJURY

1. Before disassembling or assembling any parts of the copier, make sure that the power cord is unplugged.
2. The wall outlet should be near the copier and easily accessible.
3. If any adjustment or operation check has to be made with exterior covers off or open while the main switch is turned on, keep hands away from electrified or mechanically driven components.
4. The inside and the metal parts of the fusing unit become extremely hot while the copier is operating. Be careful to avoid touching those components with your bare hands.

HEALTH SAFETY CONDITIONS

1. Toner and developer are non-toxic, but if you get either of them in your eyes by accident, it may cause temporary eye discomfort. Try to remove with eye drops or flush with water as first aid. If unsuccessful, get medical attention.

OBSERVANCE OF ELECTRICAL SAFETY STANDARDS

1. The copier must be maintained by a customer service representative who has completed the training course on the model.

SAFETY AND ECOLOGICAL NOTES FOR DISPOSAL

1. Do not incinerate toner cartridges or used toner. Toner dust may ignite suddenly when exposed to open flame.
2. Dispose of imaging units in accordance with local regulations. (These are non-toxic supplies.)
3. Dispose of replaced parts in accordance with local regulations.

SECTION 1

OVERALL
MACHINE INFORMATION

1. SPECIFICATIONS

Configuration: Desk Top

Copy Process: Dry electrostatic transfer system

Originals: Sheet/Book

Original Size: Maximum: A4/8.5" x 14" (A183 copier)
B4/10" x 14" (A184 copier)

Copy Paper Size: Paper tray feed:
A4, 8.5" x 11", 8.5" x 13", 8.5" x 14"
Bypass feed:
Maximum: A4/8.5" x 14"
Minimum: A5/5.5" x 8.5"

Copy Paper Weight: Paper tray feed: 64 to 86 g/m^2, 17 to 23 lb
Bypass feed: 60 to 105 g/m^2, 16 to 27 lb

Reproduction Ratios (A184 model only):

	Metric Version	Inch Version
Enlargement	141% 122%	129%
Full Size	100%	100%
Reduction	93% 82% 71%	93% 85% 78%

Zoom (A184 model only): From 70% to 141% in 1% steps

Copying Speed: 12 copies/minute (A4/8.5" x 11")

Warm-up Time: Less than 30 seconds (at 23°C)

First Copy Time: Less than 9 seconds (A4/8.5" x 11")

Copy Number Input: Up/Down key, 1 to 50

Manual Image Density Selection: 4 steps; can also be set to 5 steps

Automatic Reset: 1 minute standard setting; can also be set to 3 minutes or no auto reset

Paper Capacity: Paper Tray:
250 sheets (A4/8.5" x 11", 80 g/m^2/20 lb)
100 sheets (8.5" x 14", 80 g/m^2/20 lb)
Bypass feed entrance: 1 sheet

Toner Replenishment: Bottle exchange (91 g/bottle)

Copy Tray Capacity:

	Copy tray in the closed position	Copy tray in the open position
A4/8.5" x 11"	20 sheets	50 sheets
8.5" x 14"	10 sheets	50 sheets
OHP	—	1 sheet

Power Source:

120 V/60 Hz:
More than 10 A (for North America)
220 ~ 240 V/50 Hz:
More than 6 A (for Europe)
220 V/50 Hz:
More than 6 A (for Asia)
220 V/60 Hz:
More than 6 A (for Middle East/Asia)
110 V/60 Hz:
More than 10 A (for Taiwan)
127 V/60 Hz:
More than 10 A (for Middle East)

Power Consumption:

Maximum	0.9 kW
Copy cycle condition	0.5 kW
Warm-up condiiton	0.6 kW
Stand-by condition	0.1 kW

Dimensions:

	Width	Depth	Height
Copier	400 mm (15.8")	550 mm (21.7")	220 mm (8.7")

Noise Emissions:

Sound pressure level (the measurements are made according to ISO 7779 at the operator position.)

Less than 55 dB

Sound power level (the measurements are made according to ISO 7779)

Stand-by condition	Less than 40 dB
Copy cycle condition	Less than 63 dB

Weight:

Less than 18 kg, 39.7 Ib

MEMO

2. COPY PROCESS AROUND THE DRUM

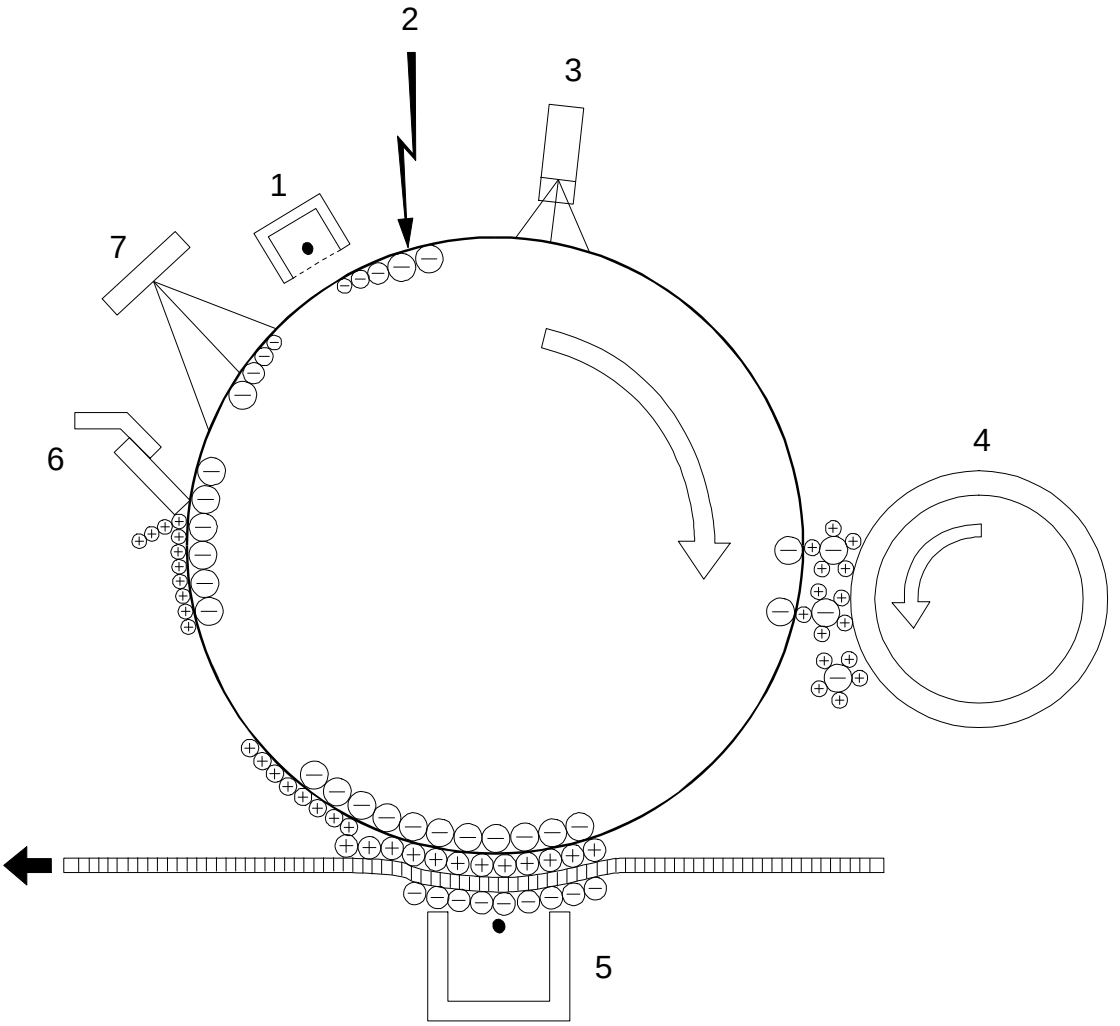

A184V501.wmf

1. DRUM CHARGE

In the dark, the charge corona unit gives a uniform negative charge to the organic photoconductive (OPC) drum. The charge remains on the surface of the drum because the OPC drum has a high electrical resistance in the dark.

2. EXPOSURE

An image of the original is reflected to the drum surface via the optics assembly. The charge on the drum surface is dissipated in direct proportion to the intensity of the reflected light, thus producing an electrical latent image on the drum surface.

3. ERASE

The erase lamp illuminates the area of the charged drum surface that will not be used for the copy image. The resistance of the drum in the illuminated areas drops and the charge on those areas dissipates.

4. DEVELOPMENT

Positively charged toner is attached to the negatively charged areas of the drum, thus developing the latent image. (The positive triboelectric charge is caused by friction between the carrier and toner particles.)

5. IMAGE TRANSFER

Paper is fed to the drum surface at the proper time so as to align the copy paper and the developed image on the drum surface. Then, a strong negative charge is applied to the back side of the copy paper, producing an electrical force which pulls the toner particles from the drum surface to the copy paper. At the same time, the copy paper is electrically attracted to the drum surface.

6. CLEANING

The cleaning blade scrapes the toner off the drum. The collected toner is recycled.

7. QUENCHING

Light from the quenching lamp electrically neutralizes the drum surface.

3. MECHANICAL COMPONENT LAYOUT

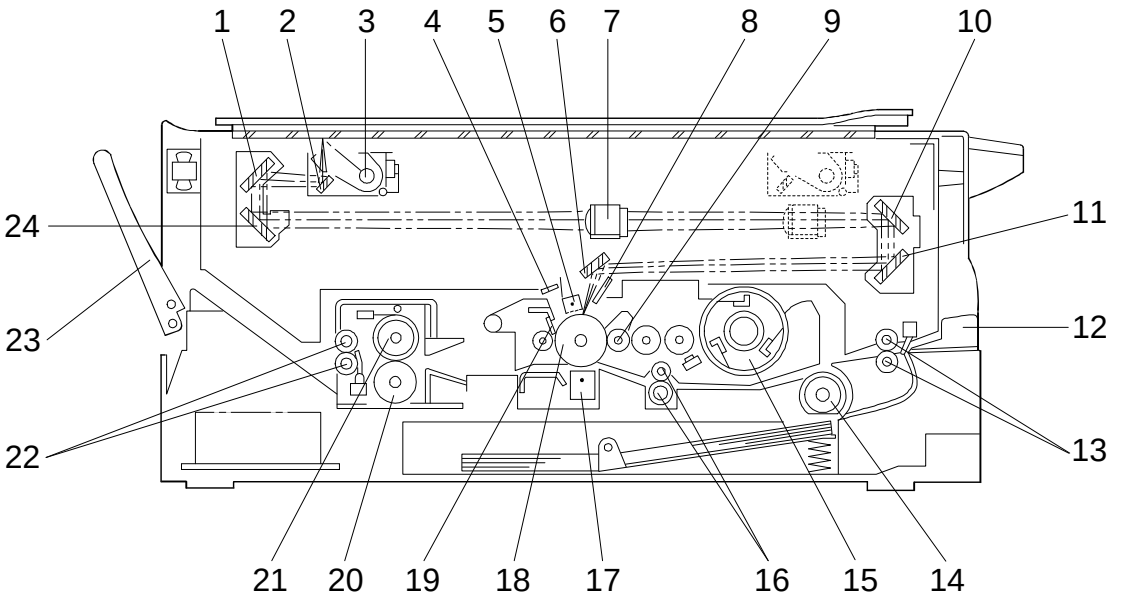

A184V500.wmf

1. 2nd Mirror
2. 1st Mirror
3. Exposure Lamp
4. Quenching Lamp
5. Charge Corona Unit
6. 6th Mirror
7. Lens
8. Erase Lamp
9. Development Roller
10. 4th Mirror
11. 5th Mirror
12. By-pass Feed Table
13. Relay Rollers
14. Paper Feed Roller
15. Toner Bottle Holder
16. Registration Rollers
17. Transfer Corona Unit
18. Drum
19. Cleaning Blade
20. Pressure Roller
21. Hot Roller
22. Exit Rollers
23. Copy Tray
24. 3rd Mirror

4. ELECTRICAL COMPONENT DESCRIPTIONS

Refer to the electrical component layout and the point-to-point diagram on the waterproof paper in the pocket for symbols and index numbers.

Symbol	Name	Function	Index No.
Motors			
M1	Main Motor	Drives all the main unit components except for the optics unit and fans.	23
M2	Exhaust Fan Motor	Removes heat from around the fusing unit and blows the ozone built up around the charge corona unit to the ozone filter.	6
M3	Scanner Drive Motor	Drives the scanners (1st and 2nd).	10
M4	Lens and Mirror Motor (A184 machines only)	Moves the lens and 4th/5th mirror positions in accordance with the selected magnification.	11
M5	Optics Cooling Fan Motor (220 ~ 240 V machines only)	Prevents build-up of hot air in the optics cavity.	18
Clutches			
CL1	Toner Supply Clutch	Transfers main motor drive to the toner bottle gear.	25
CL2	Paper Feed Clutch	Transfers main motor drive to the paper feed roller.	24
Switches			
SW1	Main Switch	Supplies power to the copier.	28
SW2	Interlock Switch	Cuts all power when the upper unit is opened.	29
Sensors			
S1	ADS Sensor	Detects the background density of the original.	15
S2	Registration Sensor	Detects paper end conditions. Checks if paper is set on the by-pass feed table.	26
S3	Lens and Mirror H. P. Sensor (A184 machines only)	Informs the CPU when the lens and 4th/5th mirror assembly are at the home position (full size position).	8
S4	Scanner H. P. Sensor	Informs the CPU when the 1st scanner is at the home position.	2
S5	Toner Density (TD) Sensor	Detects the ratio of toner to carrier in the developer.	14
S6	Exit Sensor	Detects misfeeds.	30
Solenoid			
SOL 1	Registration Solenoid	Releases the stopper, synchronizing the paper-feed timing with the original scan.	27

Symbol	Name	Function	Index No.
Printed Circuit Boards			
PCB1	Main Control Board	Controls all copier functions.	5
PCB2	Scanner Drive Board	Controls the scanner drive motor.	9
PCB3	High Voltage Supply Board - CT/B/G	Provides high voltage for the charge corona, transfer corona and development bias.	7
PCB4	AC Drive / DC Power Supply Board	Drives the exposure lamp, fusing lamp and main motor. Rectifies 30 Vac and 8 Vac input and outputs 5 Vdc and 24 Vdc.	19
PCB5	Operation Panel Board	Informs the CPU of the selected modes and displays the situation on the panel.	13
Lamps			
L1	Exposure Lamp	Applies high intensity light to the original for exposure.	1
L2	Fusing Lamp	Provides heat to the hot roller.	22
L3	Quenching Lamp (QL)	Neutralizes any charge remaining on the drum surface after cleaning.	17
L4	Erase Lamp	Discharges the drum outside of the image area. (Provides leading/trailing edge and side erases.)	16
Others			
CO	Total Counter (except for -17 machines)	Keeps track of the total number of copies made.	12
TH1	Optics Thermistor	Monitors the temperature around the exposure lamp for overheat protection.	3
TH2	Fusing Thermistor	Monitors the fusing temperature.	21
TF1	Exposure Lamp Thermofuse	Provide back-up overheat protection around the exposure lamp.	4
TF2	Fusing Thermofuse	Provide back-up overheat protection in the fusing unit.	20
TR	Transformer	Steps down the wall voltage to 30 Vac and 8 Vac.	31

SECTION 2

DETAILED DESCRIPTIONS

1. DRUM

1.1 OPC DRUM CHARACTERISTICS

The OPC (Organic Photoconductor) Drum used in this copier is small in diameter (30 mm), ensuring good paper separation. An OPC drum has the characteristics of:

1. Being able to accept a high negative electrical charge in the dark. (The electrical resistance of a photoconductor is high in the absence of light.)
2. Dissipating the electrical charge when exposed to light. (Exposure to light greatly increases the conductivity of a photoconductor.)
3. Dissipating an amount of charge in direct proportion to the intensity of the light. That is, where stronger light is directed to the photoconductor surface, a smaller voltage remains on the drum.
4. Being less sensitive to changes in temperature (when compared to selenium F type drums).
5. During the drums' life, drum residual voltage gradually increases and the photoconductive surface becomes worn. Therefore, some compensation for these characteristics is required.

1.2 DRIVE MECHANISM

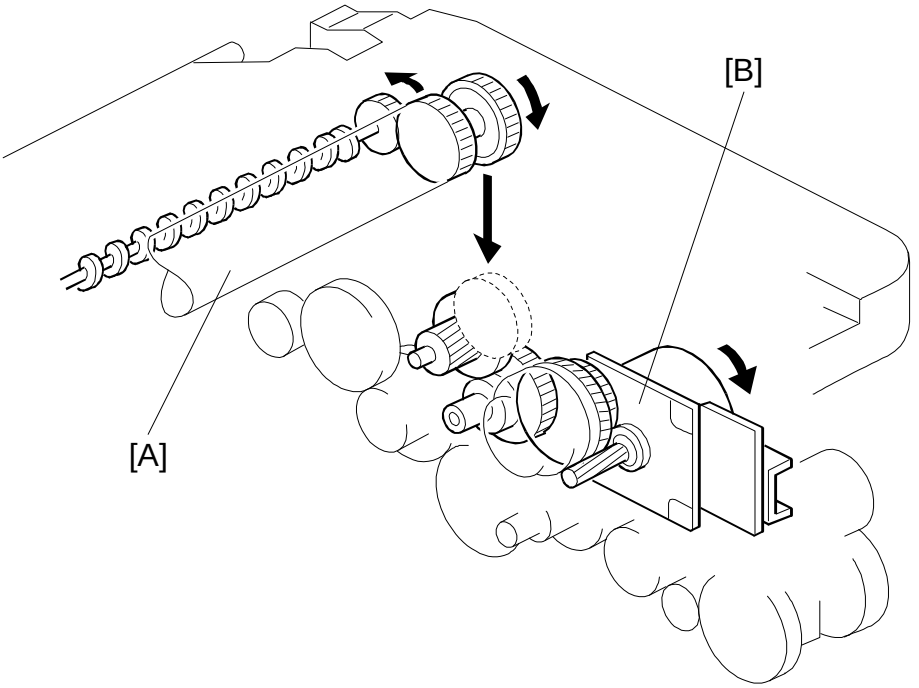

A184D500.wmf

The drum [A] is driven by the main motor [B] through idle gears.

2. CHARGE

2.1 OVERVIEW

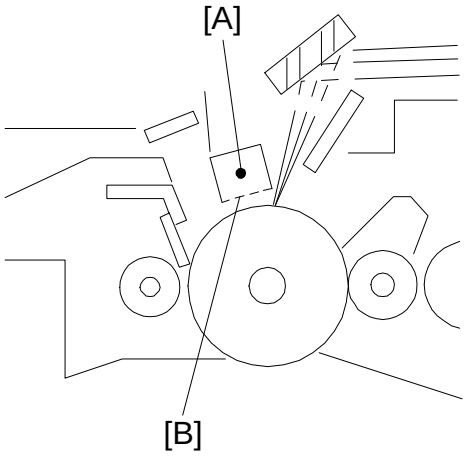

A184D501.wmf

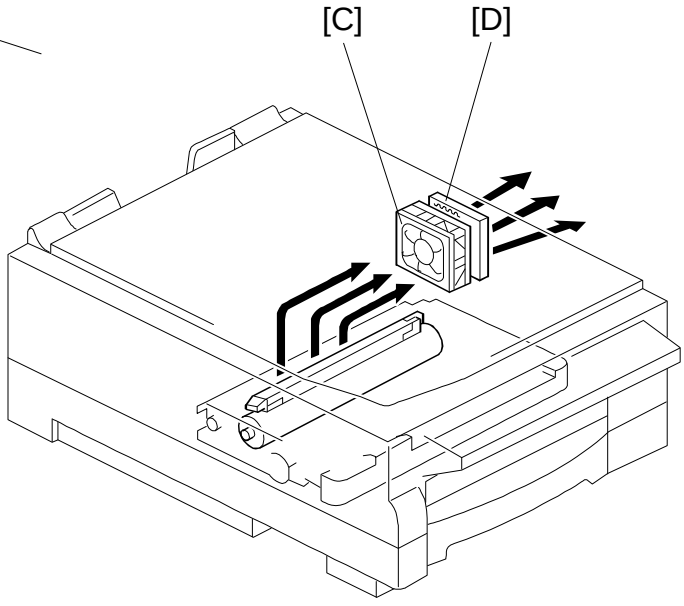

A184D502.wmf

This copier uses a single wire scorotron to charge the drum. The corona wire [A] generates a corona of negative ions when the high voltage supply unit applies a negative voltage. The stainless steel grid plate [B] ensures that the drum coating receives a uniform negative charge as it rotates past the corona unit.

The exhaust fan [C] causes a flow of air through the charge corona section. This prevents an uneven build-up of negative ions that can cause uneven image density.

An ozone filter [D], which adsorbs ozone (O_3) generated by the charge corona, is located beside the exhaust fan. The ozone filter decreases in efficiency over time as it adsorbs ozone. The ozone filter should be replaced every 30 k copies.

2.2 CHARGE CORONA CIRCUIT

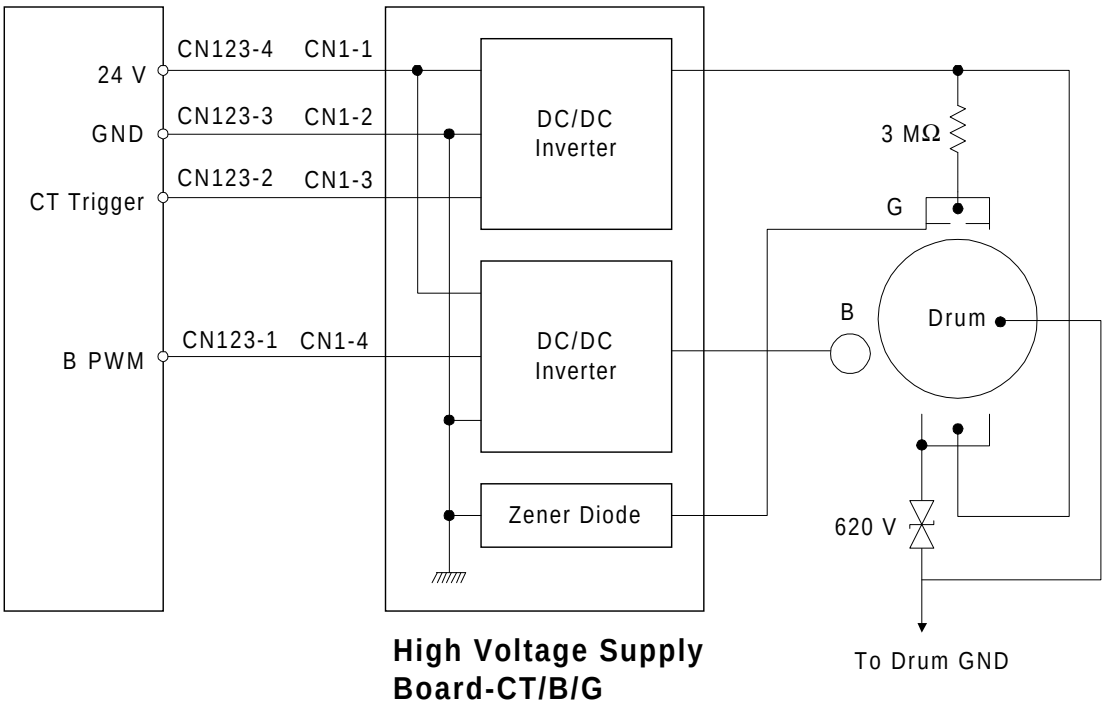

A184D503.wmf

The main board supplies +24 V to the high voltage supply board at CN123-4 as the power source. After the Start key is pressed, the CPU drops CN123-2 from +24 V to 0 V. This activates the charge corona circuit which applies a high negative voltage of approximately –5 k volts to the charge corona wire. The corona wire then generates a negative corona charge.

The grid plate limits the charge voltage to ensure that the charge does not fluctuate and that an even charge is applied to the entire drum surface. The grid plate is connected to ground through a zener diode in the high voltage supply unit. The grid plate drains any charge in excess of –850 V, which is discharged to the ground through the zener diode.

3. OPTICS

3.1 OVERVIEW

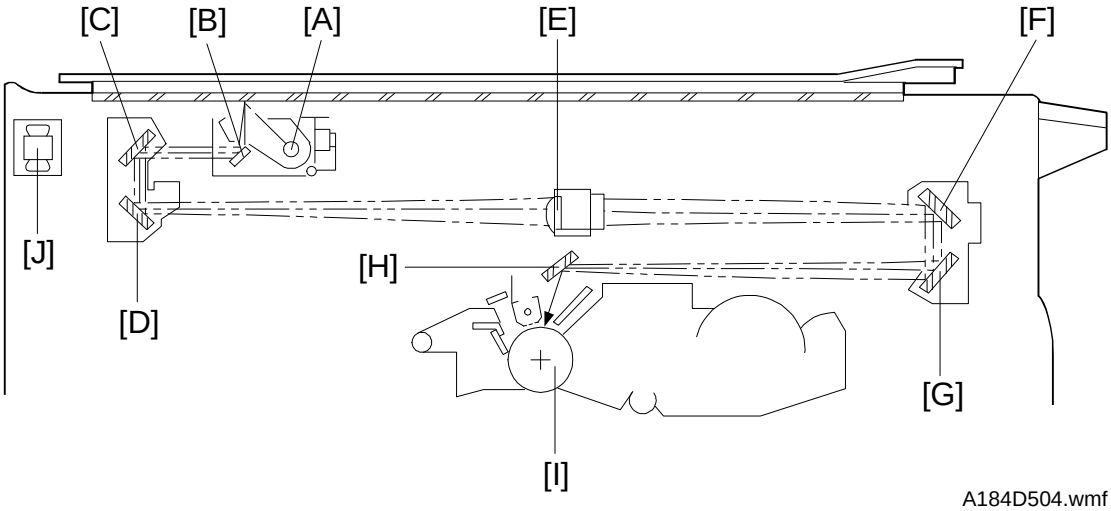

A184D504.wmf

During the copy cycle, an image of the original is reflected onto the drum surface through the optics assembly as follows:

Light path:
Exposure Lamp [A] → Original → First Mirror [B] → Second Mirror [C] → Third Mirror [D] → Lens [E] → Fourth Mirror [F] → Fifth Mirror [G] → Sixth Mirror [H] → Drum [I]

This copier has five (metric version) or four (inch version) standard reproduction ratios (A184 copier only) and a zoom function. The operator can also change the reproduction ratio in one-percent steps from 70% to 141%. One stepper motor is used to change the positions of the lens and 4th/5th mirrors to enlarge/reduce the image across the page. Changes in reproduction ratio down the page are achieved by changing the scanner speed (A184 copier only).

The CPU monitors the temperature around the optics through a thermistor which is located on the scanner frame. When the temperature reaches 35°C, the optics cooling fan [J] (230 V machines only) starts rotating to draw cool air into the optics cavity. The fan operates until the temperature drops below 32°C. (However, 120 V machines are not equipped with a cooling fan.) For all models, the machine will stop if the optics cavity overheats to a certain temperature. (See Troubleshooting for details.) In this case, the Start key turns red.

Additionally, a thermofuse on the 1st scanner provides back-up overheat protection. It opens when the temperature reaches 128°C and cuts ac power to the exposure lamp.

3.2 SCANNER DRIVE

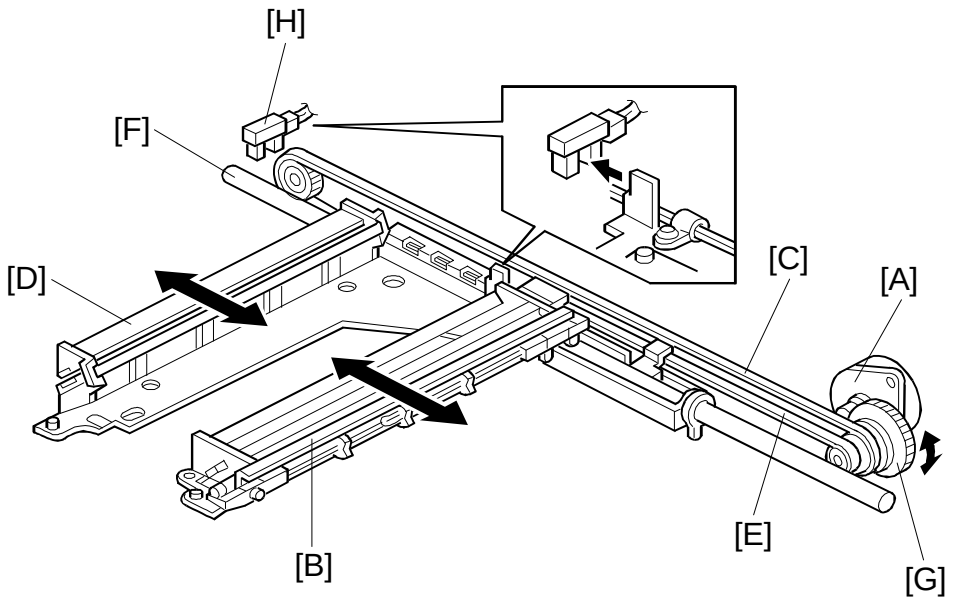

A184D505.wmf

A stepper motor [A] is used to drive the scanners.

The first scanner [B], which consists of the exposure lamp and the first mirror, is connected to the first scanner belt [C]. The second scanner [D], which consists of the second and third mirrors, is connected to the second scanner belt [E]. Both the scanners move along the guide rail [F].

The pulley [G] drives both the first and second scanner belts. The 2nd scanner moves at half the speed of the first scanner. This maintains the focal distance between the original and the lens during scanning.

The scanner home position is detected by the home position sensor [H]. The scanner return position is determined by counting the scanner motor drive pulses.

3.3 LENS AND 4TH/5TH MIRROR DRIVE (A184 copier only)

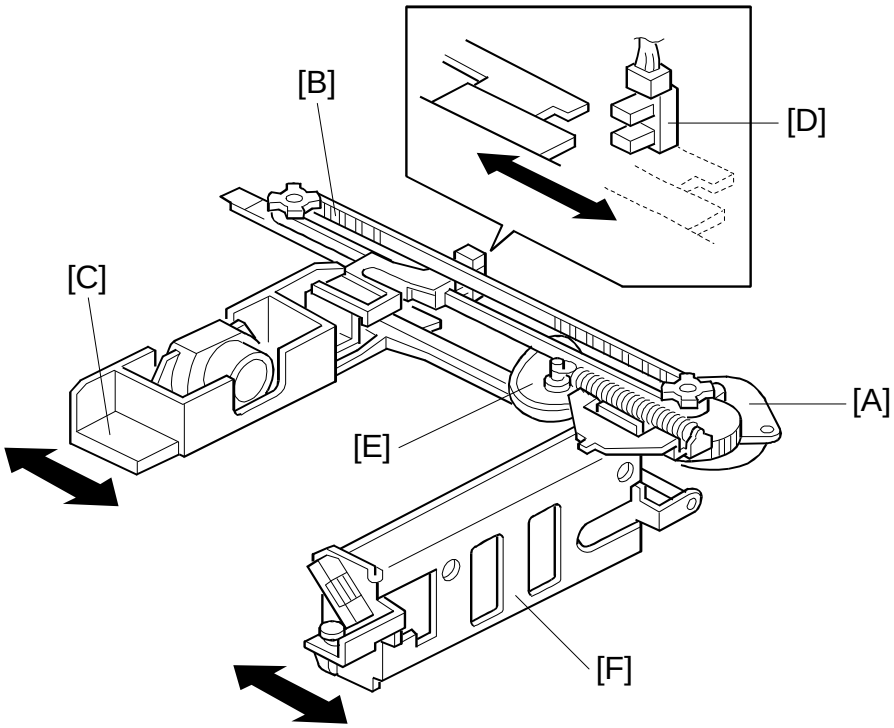

A184D506.wmf

Drive from the lens & mirror motor [A] is transmitted to the timing belt [B] on which the lens unit [C] is clamped. The lens position is changed to provide the proper optical distance between the lens and the drum surface corresponding to the selected reproduction ratio. The home position of the lens is detected by the home position sensor [D]. The main board keeps track of the lens position based on the number of pulses sent to the lens motor.

Drive from the lens & mirror motor is also transmitted to the 4th/5th mirror drive cam [E]. As the lens unit position is changed, the cam rotates to change the 4th/5th mirror [F] position to provide proper the focal distance between the lens and the drum.

3.4 AUTOMATIC IMAGE DENSITY SENSOR

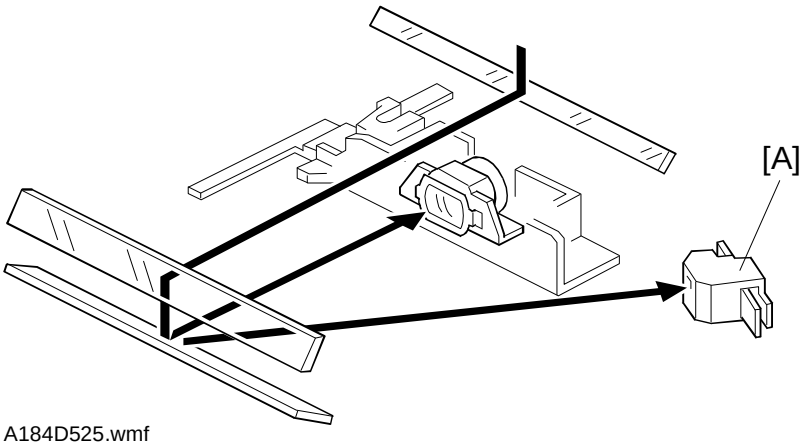

A184D525.wmf

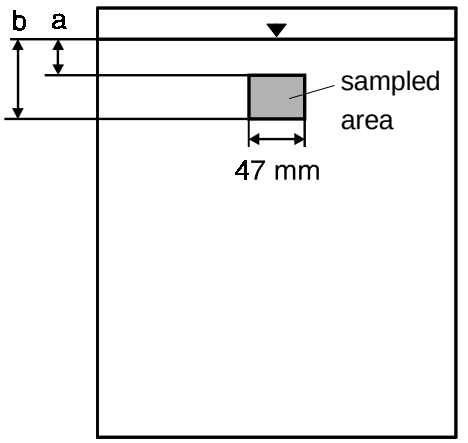

A184D529.wmf

The auto ID sensor [A], a photodiode, is mounted on the upper front frame. The sensor cover has a hole in it to allow light to fall directly onto the sensor.

Sampling starts 6 millimeters from the leading edge of the original and continues for 11.5 millimeters from the leading edge of original in full size mode. These lengths "a" and "b" will vary depending on the selected reproduction ratio (A184 copier only). The lengths "a" and "b" for each reproduction ratio are calculated as follows:

$$a = \frac{6\text{ mm}}{\text{Reproduction Ratio (\%)}} \times 100 \qquad b = \frac{11.5\text{ mm}}{\text{Reproduction Ratio (\%)}} \times 100$$

The photosensor circuit converts the light intensity to a voltage. The detected voltage is amplified and sent to the main board. If less light is reflected from the original (the image is darker), the sensor outputs a lower voltage. The CPU compares the maximum detected voltage with the standard voltage and compensates the copy image density by changing the development bias voltage.

3.5 EXPOSURE LAMP VOLTAGE CONTROL

The main board controls the exposure lamp voltage through the ac drive/dc power supply board.

The exposure lamp voltage is determined by the following factors:

Lamp Voltage = Base Lamp Voltage Setting (SP48)
+
Image Density Adjustment Factor (SP34)
+
Manual Image Density Setting Factor (SP35)
+
V_L Correction Factor (SP62)
+
Reproduction Ratio Correction Factor

1) Base Lamp Voltage Setting

The lamp voltage is determined by the SP48 setting.

Base Lamp Voltage = SP48 setting x 0.5 (120 V machines)
SP48 setting x 1.0 (230 V machines)

The default setting is: 137 = 68.5 V (120 V machines)
128 = 128 V (230 V machines)

The current lamp voltage can be viewed with SP 51.

2) Image Density Adjustment Factor (SP34)

Depending on the SP34 setting, the development bias and the exposure lamp data are increased or decreased for both ADS and manual ID modes.

SP34 Setting	Setting	Dev. Bias	Exposure Lamp
0	Normal	0	0
1	Light	–40 V	0
2	Dark	+40 V	0
3	Lighter	–40 V	+3 steps
4	Darker	+40 V	–3 steps
5	Lightest	–40 V	+7 steps
6	Darkest	+40 V	–7 steps

3) Manual Image Density Setting Factor

Depending on the manual image density setting on the operation panel, the exposure lamp voltage is changed as shown in the table below:

Darker ⟷ Lighter

Manual ID Level	1	2	ADS (3)	4	5
Base Development Bias Voltage (Volts)	–200	–200	(–200)	–200	–240 (SP36)
Manual Image Setting Factor (Volts)	V_0 – 6 steps (SP35)	V_0 – 3 steps	V_0	V_0 + 3 steps	V_0 + 7 steps

V0: Base lamp voltage setting (SP48)

1 step = 0.5 V (120 V machines) or 1.0 V (230 V machines)

The manual setting factor for ID level 1 can be changed using SP35.

SP35 Setting	Image Adjustment at ID Level 1
0	–6 steps
1	–8 steps
2	–10 steps

4) V_L Correction Factor

The light intensity may decrease because of dust accumulated on the optics parts. Additionally, the drum sensitivity gradually decreases during the drum's life. This may cause dirty background on copies. To compensate this, V_L correction is done.

The exposure lamp voltage is increased by +1.0 V (230 V machines), or +0.5 V (120 V machines) at the set copy count interval. The table below shows the relationship between the SP setting and the interval.

SP62 Setting	V_L Correction Interval
0	1 step/1500 copies
1	1 step/1000 copies
2	1 step/2000 copies
3	1 step/500 copies
4	1 step/2500 copies
5	1 step/250 copies
6	1 step/3000 copies
7	1 step/4000 copies
8	No Correction

(Default setting: 0)

5) Reproduction Ratio Correction Factor

The exposure lamp voltage is increased depending on the selected magnification ratio in order to compensate for the change in concentration of light on the drum.

Magnification Ratio	Reproduction Ratio Correction Factor
70% to 72%	+4 steps
73% to 78%	+2 steps
79% to 119%	0
120% to 129%	+4 steps
130% to 141%	+8 steps

4. ERASE

4.1 OVERVIEW

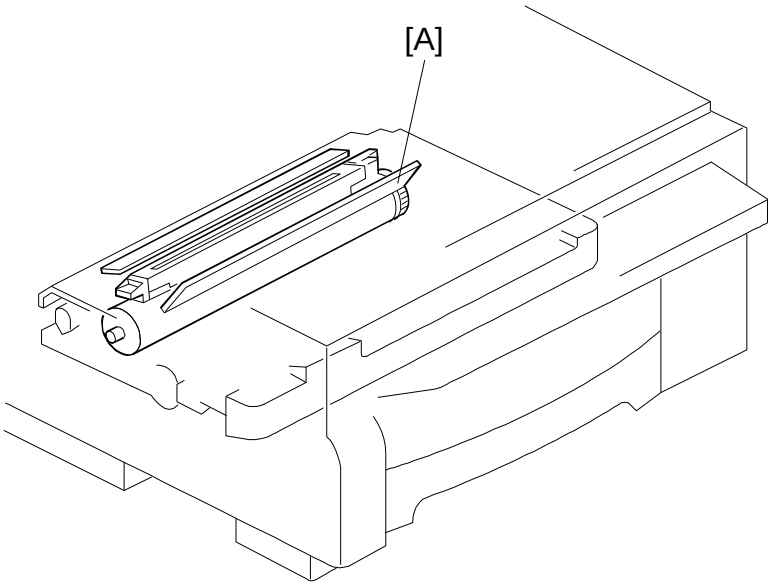

A184D507.wmf

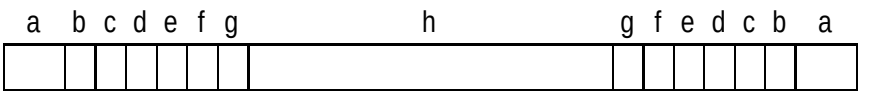

A184D508.wmf

The erase lamp [A], which is installed in the upper unit, consists of a single row of LEDs extended across the full width of the drum. The erase lamp has the following functions: leading edge erase, side erase (A184 copier only), and trail edge erase.

4.2 LEAD EDGE ERASE

The entire line of LEDs turn on when the main motor turns on. They stay on until the erase margin slightly overlaps the lead edge of the original image area on the drum (Lead Edge Erase Margin). This prevents the shadow of the original edge from being developed on the copy. At this point, side erase starts (A184 copier only). The width of the leading erase margin can be adjusted using SP41.

4.3 SIDE ERASE (A184 COPIER ONLY)

Based on the reproduction ratio, the LEDs turn on in blocks (labeled "a" - "h" on the previous page). This reduces toner consumption and drum cleaning load.

The CPU determines which blocks to turn on based on the selected reproduction ratio as follows:

Reproduction Ratio (%)	Blocks ON
70 to 72	a - g
73 and 74	a - f
75 to 77	a - e
78 and 79	a - d
80 and 81	a - c
82 to 84	a - b
85 to 141	a

4.4 TRAILING EDGE ERASE

This minimizes toner consumption.

The entire line of LEDs turns on after the trailing edge of the latent image has passed 10 mm from the erase lamp. The length of the latent image is determined by the paper length which is checked by the registration sensor. The LEDs stay on to erase the leading edge of the latent image in the next copy cycle. After the final copy, the erase lamps turn off at the same time as the main motor.

5. DEVELOPMENT

5.1 OVERVIEW

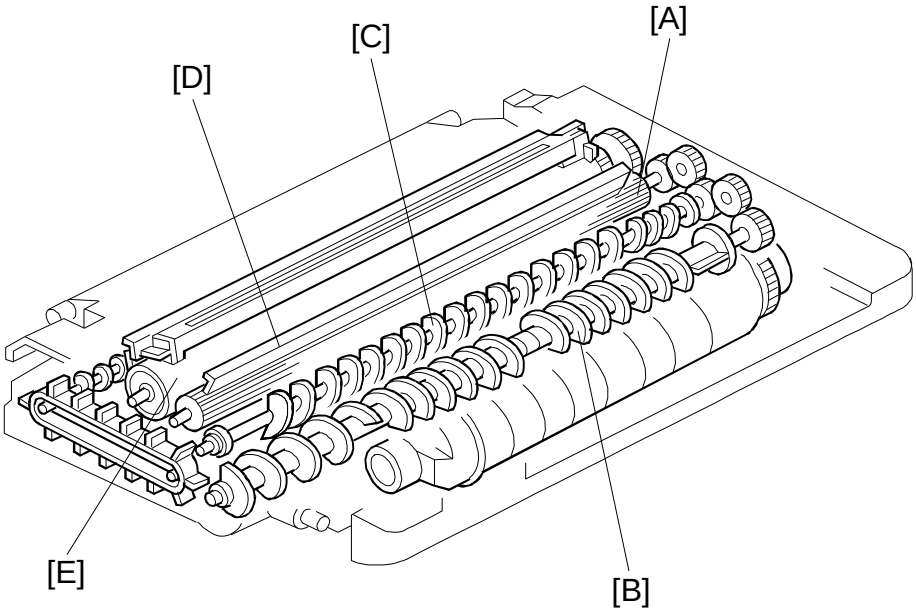

A184D509.wmf

When the main motor turns on, the development roller [A] and two agitators [B] and [C] start turning.

There are permanent magnets in the development roller which attract the developer (which is about 50 μm in diameter) to the roller. The turning sleeve of the development roller carries the developer past the doctor blade [D] which trims the developer to the desired thickness.

The development roller sleeve continues to turn, carrying the developer to the drum [E]. When the developer brush contacts the drum surface, the negatively charged areas of the drum surface attract and hold the positively charged toner. In this way, the latent image is developed.

The development roller is given a suitable negative bias for preventing toner from being attracted to the non-image areas on the drum which may have a residual negative charge. The bias also controls image density.

5.2 DRIVE MECHANISM

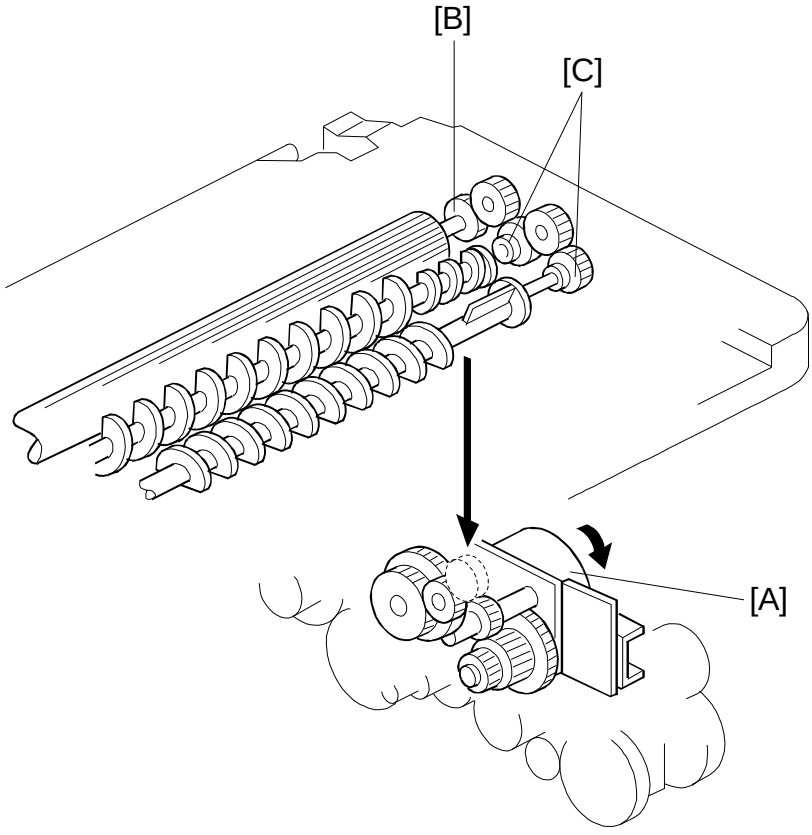

A184D510.wmf

When the main motor [A] turns on, the drive is transmitted to the development roller gear [B] through idle gears. The rotation of the development roller gear is transmitted to the agitator gears [C] through idle gears.

5.3 CROSS-MIXING

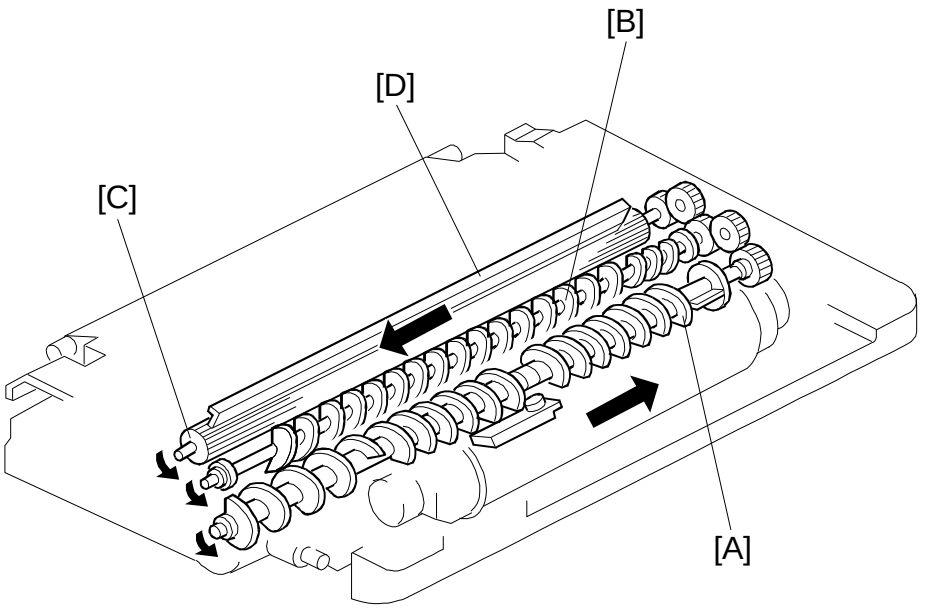

A184D511.wmf

A cross-mixing mechanism is used to keep the toner and developer evenly mixed. It also helps agitate the developer to prevent developer clumps from forming and helps create the triboelectric charge.

Two agitators (helical coils) [A] and [B] are used for the cross-mixing. The 1st agitator [A] moves the developer from left to right. The toner supplied from the cutout in the toner cartridge holder is mixed with the developer by the 1st agitator. The 2nd agitator [B] rotates in the opposite direction and moves the developer back from right to left. In this way, the developer is evenly distributed in the development unit.

The magnets in the development roller [C] attract the developer, and the development roller sleeve rotates to carry the developer to the drum. The doctor blade [D] trims the developer on the development roller to the desired thickness.

5.4 DEVELOPMENT BIAS FOR IMAGE DENSITY CONTROL

The image density is controlled by changing two items: the amount of bias voltage applied to the development roller sleeve, and the amount of voltage applied to the exposure lamp.

Applying a bias voltage to the development sleeve reduces the potential between the development roller and the drum, thereby reducing the amount of toner transferred. As the bias voltage becomes greater, the copy becomes lighter.

The method of control depends on whether the image density is manually selected or auto image density is used.

The development bias voltage applied to the development roller sleeve has the following factors:

Development bias voltage = Base bias voltage factor
(Manual ID level 5: SP 36)
+
Image density adjustment factor
(SP34)
+
Drum residual voltage (V_R) correction factor

The base bias voltage for non-image areas (between copies) is –200 volts. The above correction factors are also applied.

NOTE: SP34 (Image Density Adjustment) is applied for both ADS and manual ID modes. SP36 is for manual ID level 5 only.

5.4.1 Base Bias Voltage Factor In Manual Image Density Mode

Manual ID Level	1	2	ADS (3)	4	5
Base Bias Voltage (Volts)	–200	–200	(–200)	–200	–240 (SP36)
Base Exposure Lamp Voltage (Volts)	V_0 – 6 steps (SP35)	V_0 – 6 steps	V_0	V_0 + 3 steps	V_0 + 7 steps

V_0: Depends on the setting of SP48

The base voltage applied at each ID level is shown in the above table. Normally, notch 3 is used for the ADS mode. If SP mode 19 is changed from 0 to 1, ADS mode is disabled and notch 3 is used for the center setting of the manual ID level. The base exposure lamp voltage also varies depending on the manual ID level as shown.

Adjustment factor for manual ID level 5 (SP36)

The base bias voltage at manual ID level 5 can be changed using SP36 as follows:

Image Density	SP36 Setting	Base Bias Voltage Change for Level 5 (Volts)
Normal	0	–40
Lighter	1	–80
Lightest	2	–120

(Default setting: 0)

5.4.2 Base Bias Voltage Factor In Automatic Image Density (ADS) Mode

In ADS mode, the base exposure lamp voltage is fixed at V_0 (this value is determined by SP48). Image density is controlled by changing only the base bias voltage.

The base bias voltage for ADS mode depends on the background image density of the original which is measured by the ADS sensor. (See page 2-8 for more information about the ADS sensor).

The CPU checks the voltage output from the automatic ID circuit. This circuit has a peak hold function. The peak hold voltage corresponds to the maximum reflectivity of the original. The CPU then determines the proper base bias level with reference to the peak hold voltage.

The table below shows the relationship between the original background density (ADS voltage ratio) and the base bias voltage.

ADS Voltage Ratio [α] (%)	Base Bias Voltage
80 to 100 (light)	–200 V
75 to 79	–240 V
70 to 74	–280 V
60 to 69	–320 V
29 to 59	–360 V
0 to 28 (dark)	–380 V

$$\alpha = \frac{\text{ADS Output Voltage}}{V_{ADS0} + (\text{Total } V_L \text{ Correction Steps so far} + \text{Reproduction Correction Steps}) \times 0.5}$$

V_{ADS0}: ADS Reference Voltage

5.4.3 Image Density Adjustment Factor

Using SP 34, the base bias voltage and the exposure lamp data can be increased or decreased for both ADS mode and all manual ID levels as follows:

SP34 Setting	Setting	Dev. Bias	Exposure Lamp
0	Normal	0	0
1	Light	–40 V	0
2	Dark	+40 V	0
3	Lighter	–40 V	+3 steps
4	Darker	+40 V	–3 steps
5	Lightest	–40 V	+7 steps
6	Darkest	+40 V	–7 steps

(Default setting: 0)

5.4.4 Drum Residual Voltage (V_R) Correction Factor

During the drum's life, drum residual voltage (V_R) will gradually increase. To compensate for this, the bias voltage is increased by –10 V every 5 k copies.

The V_R correction is done up to 20 k copies. The V_R correction will not change after 20 k copies.

5.5 DEVELOPMENT BIAS CIRCUIT

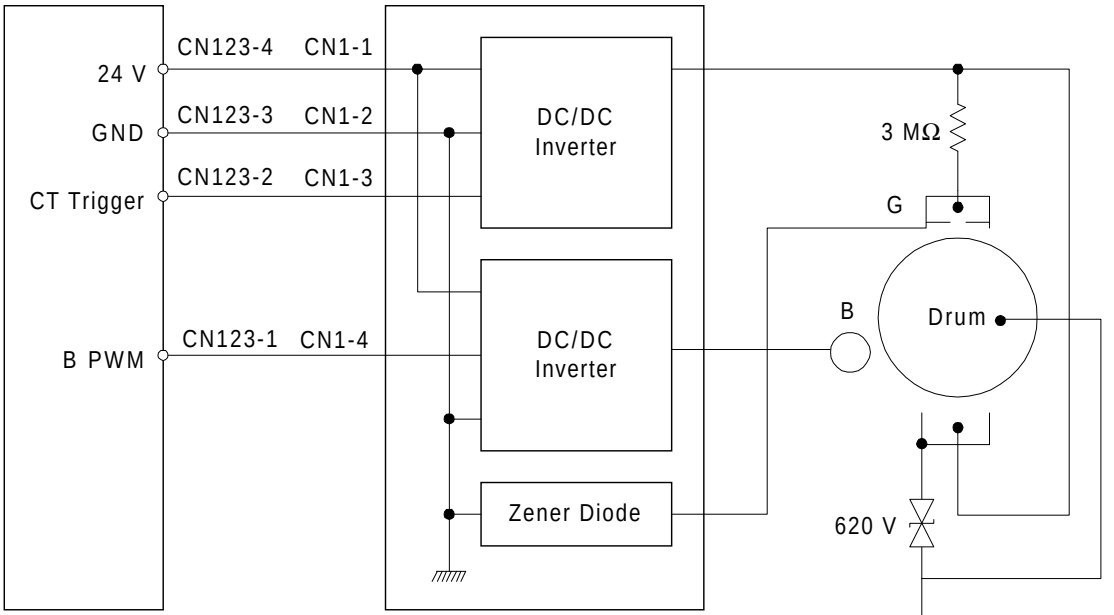

A184D503-2.wmf

The main board supplies +24 volts to the high voltage supply board at CN1-1. When the Start key is pressed, the CPU starts sending the bias trigger pulses to CN1-4. This energizes the development bias circuit within the high voltage supply board which applies a high negative voltage to the development roller. The development bias is applied whenever the drum is rotating.

6. TONER SUPPLY

6.1 TONER SUPPLY MECHANISM

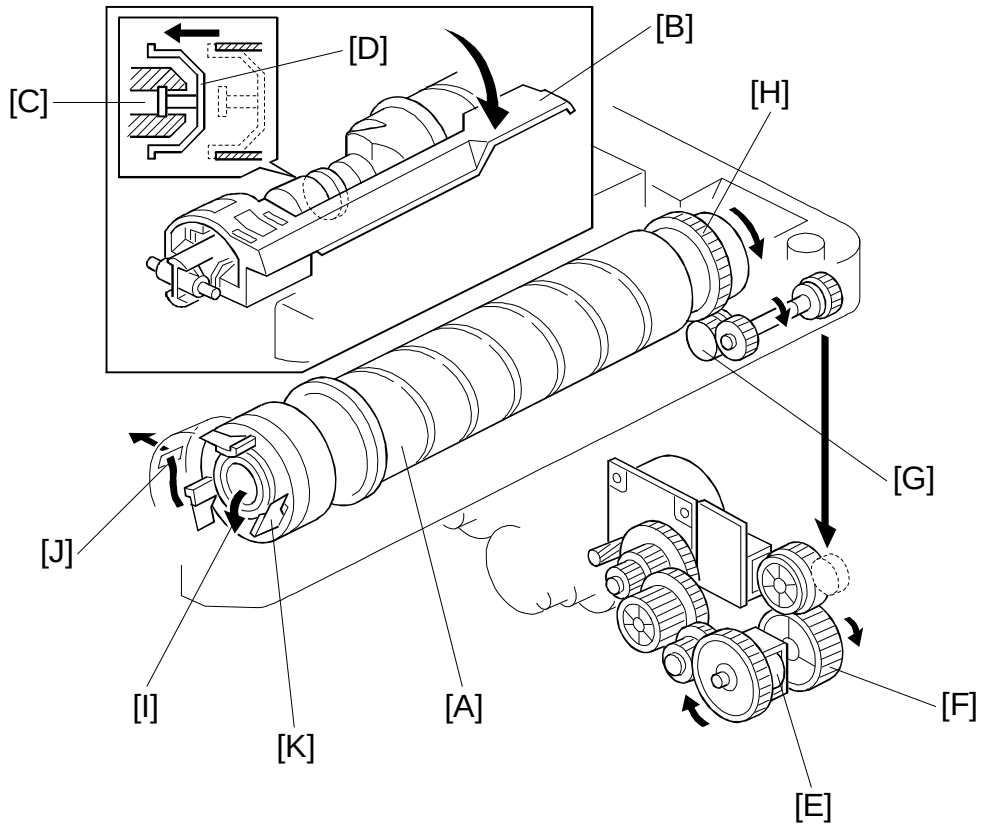

A184D512.wmf

When the toner bottle [A] is set and the lever [B] is pushed down, the chuck [C] pulls out the cap [D], and the toner bottle is opened.

While the TD (toner density) sensor detects enough toner in the developer, the toner supply clutch [E] is off, and the main motor drive is not transmitted to the gear [F]. When the TD sensor detects a low toner condition, the toner supply clutch is energized and the drive is transmitted to the gear [G] through idle gears. The gear [G] drives the toner bottle gear [H], and the toner bottle rotates in the direction of the arrow.

The toner bottle has a spiral groove that helps move toner to the toner bottle opening [I]. Then the toner is carried up to the opening [J] of the toner bottle holder by the rotating fins [K], to be supplied into the development unit.

6.2 TONER DENSITY DETECTION

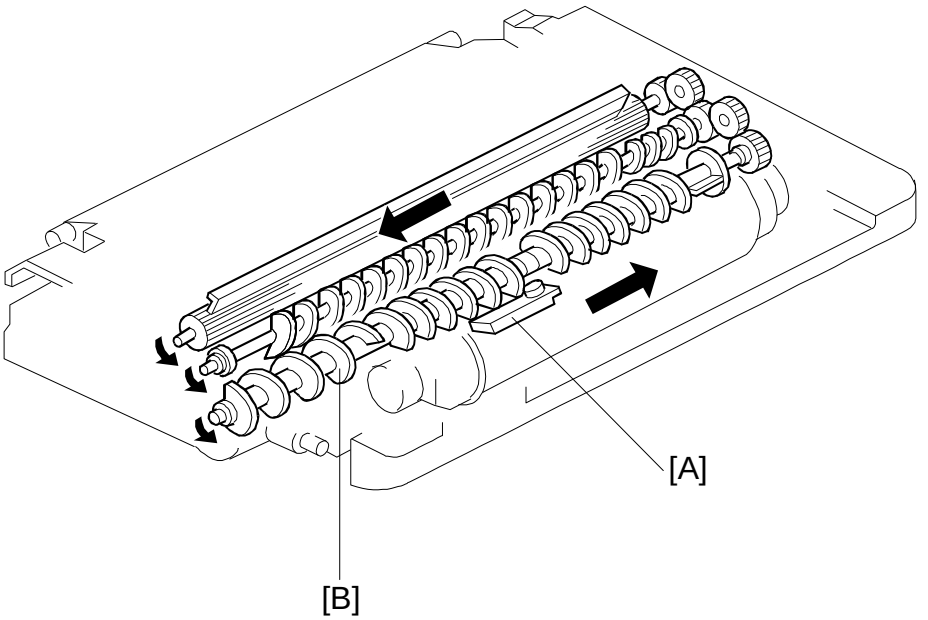

A184D511-2.wmf

A toner density sensor (TD sensor) [A] is used for toner density control.

The TD sensor is located under the 1st agitator [B]. The developer being conveyed by the 1st agitator passes over the top of the sensor. As the toner in the developer is consumed during development, the toner to carrier ratio changes resulting in a change in the magnetic permeability of the developer. This in turn is converted to a corresponding voltage. The CPU monitors the voltage to control the toner supply mechanism.

When a new imaging unit is installed, the machine starts idling for developer initialization. During the developer initialization, the CPU adjusts the TD sensor control voltage so that the TD sensor outputs 1.9 ± 0.1 volts for the toner to carrier ratio of new developer (4.0% by weight). This voltage is used as the standard TD sensor voltage.

6.3 TONER SUPPLY CONTROL

6.3.1 Modes Available

SP30 Setting	Toner Supply Mode	Target Toner Sensor Voltage	Toner Supply Amount	Toner Near/End Detection
0	Detect Supply Mode	Depends on the initial TD sensor setting.	Depends on the TD sensor output.	❍
1		Depends on SP53.	Depends on the TD sensor output.	❍
2		Depends on the initial TD sensor setting.	Fixed	✗
3		Depends on SP53.	Fixed	✗
4	Fixed Supply Mode	None	Fixed	✗

Default setting: 0

Depending on the SP30 setting, Detect Supply mode or Fixed Supply mode is selected. If 0, 1, 2, or 3 is selected in SP30, Detect Supply mode is used. If 4 is selected, Fixed Supply mode is used.
Note that when 2, 3, or 4 is selected, the machine will not perform the toner near/end detection. Normally, SP30 should always be kept at the default setting. The following pages describes in detail of each toner supply mode settings.

6.3.2 Detect Supply Mode

In Detect Supply mode, the CPU monitors the TD sensor voltage, which depends on the toner to carrier ratio in the developer. As the toner in the developer is consumed, the TD sensor output voltage increases.

The TD sensor voltage is compared with the standard voltage (known as the Target Toner Sensor Voltage), and toner is supplied when the TD sensor output is higher than this target voltage.

The machine has two ways of calculating the target toner sensor voltage; the method used depends on SP30. The toner supply amount can also be changed using SP31 or 32.

1) Target Toner Sensor Voltage

– Method 1 –
Normally (if 0 or 2 is selected in SP30) the voltage is determined by the following factors:

Target Toner Sensor Voltage (V_{TS}) = Initial Developer Setting Voltage (V_{T0}) + Toner Density Adjustment Factor

a) Initial Developer Setting Voltage (V_{T0})

This voltage is adjusted to 1.9 ± 0.1 V during the developer initialization (refer to section 6.2).

b) Toner Density Adjustment Factor

The target toner density can be changed by customers or service engineers using SP mode 38 or user tool No. 4.

SP 38 Setting	User Tool 4 Setting	Toner Density	Toner Density Adjustment Factor (β)
0	0	Normal	0
1	1	Higher	–S x 1/2
2	2	Lower	+S x 1/2
3		Highest	–S
4		Lowest	+S

S: TD Sensor Sensitivity (SP24) Default: Normal

The sensor sensitivity is stored in SP24.

TD Sensor Sensitivity (S) [V/wt%] =

Change of TD sensor output [V]/Change of toner density [wt%] =

SP24 setting x 0.05 [V] (Default: SP24 = 8)

– Method 2 –
If 1 or 3 is selected in SP30, the setting of SP53 is used as the target toner sensor voltage. In this case, the target toner sensor voltage is determined by the following formula:

Target Toner Sensor Voltage = SP53 setting x 0.02 [V] (Default: 97 = 1.94 V)

2) Toner Supply Amount

– Method 1 –

Normally (if 0 or 1 is selected in SP30), the toner supply amount is determined by the difference between the TD sensor voltage (V_T) and the target toner sensor voltage (V_{TS}). The following table shows the relationship between the sensor output and the toner supply clutch on time for each copy.

Toner Supply Level	TD Sensor Voltage Level [V_T]	Toner Supply Clutch On Time
1	$V_{TS} < V_T \leq V_{TS} + S/16$	t
2	$V_{TS} + S/16 < V_T \leq V_{TS} + S/8$	2 x t
3	$V_{TS} + S/8 < V_T \leq V_{TS} + S/4$	4 x t
4	$V_{TS} + S/4 < V_T \leq V_{TS} + S/2$	8 x t
5	$V_{TS} + S/2 < V_T \leq V_{TS} + 4S/5$	13 x t
6 (Near End Level)	$V_T \geq V_{TS} + 4S/5$	16 x t
7 (Toner End Level)	$V_T \geq V_{TS} + S$	16 x t

The toner supply time step "t" can be changed using SP31.
t = SP31 setting x 0.1 [second] (Default: 1 = 0.1 second)
S: TD Sensor Sensitivity (SP24)

In the toner supply level 6 and 7, after a copy job is finished, the main motor continuously rotates, and the toner supply clutch is energized intermittently for T seconds (repeatedly 2 seconds on and 2 seconds off during this T-second interval).

The interval "T " can be changed using SP23.

– Method 2 –

If 2 or 3 is selected in SP30, a fixed amount of toner is supplied when the TD sensor voltage becomes higher than the target toner sensor voltage. The amount of toner can be selected using SP32.

SP32 Setting	Toner Supply Clutch On Time (seconds)	Corresponding image area ratio (%)
0	0.3	3.5
1	0.6	7
2	1.2	15
3	2.4	30
4	3.6	45
5	4.8	60
6	Stays on until the TD sensor voltage becomes lower than the target voltage.	
7	0 (No toner supply)	0

Example: Set SP32 to 2 if the customer's originals are typically 15% black.

6.3.3 Fixed Supply Mode

If 4 is selected in SP30, the TD sensor is not used for toner supply control. A fixed amount of toner is supplied at every copy cycle. The toner supply amount is determined by the SP32 setting.

6.3.4 TD Sensor Check and Toner Supply Timing

During every copy cycle, the TD sensor voltage is monitored for three seconds after the machine starts developing the image on the drum. The CPU checks the voltage every 40 ms and stores the second highest voltage of every 250 ms period. Then the stored voltages during the three seconds are averaged, and the average is used as the TD sensor value for the copy. The toner supply clutch on time for detect supply mode using TD sensor output depends on this value.

If the machine determines that toner needs to be added, the toner supply clutch turns on just after the trailing edge of the copy paper passes the transfer corona unit. If the copy paper is shorter than A4/LT size, the clutch is energized for 3 seconds after the machine starts developing the latent image.

6.3.5 Abnormal Condition in Toner Density Detection

If the calculated value of the TD sensor goes below 0.2 volts, the CPU determines that the toner density detection is abnormal. The CPU changes from the detect supply mode to the fixed supply mode. At the same time, either the Auto ID indicator or the selected manual ID level starts blinking, and the machine can be operated. Under this condition, the machine will not perform the toner end detection.

If the value recovers above 0.2 volts, or the main switch is turned off and on, this condition is canceled and the toner density detection will recover to the previous settings.

6.4 TONER END CONDITION

6.4.1 Toner Near End

If the CPU detects toner supply level 6 ($V_T \geq V_{TS} + 4S/5$) five times consecutively, the toner end indicator blinks and the machine goes to the toner near end condition. In this condition, the toner supply clutch is energized for 16t seconds for every copy. If a toner sensor voltage lower than $V_{TS} + 4S/5$ is detected twice consecutively during the copy cycle, the machine recovers from the toner near end condition. (As explained before, t depends on SP31.)

If the toner sensor voltage does not recover from level 6 during the copy cycle, the main motor continuously rotates after the copy job is finished, and the toner supply clutch is energized intermittently for T seconds (T can be changed using SP23). The CPU monitors the TD sensor voltage during this T seconds. If the toner sensor voltage returns to level 5 or less in this period, the machine recovers from the toner near end condition and the main motor stops.

6.4.2 Toner End

If TD sensor level 6 is detected, the machine supplies toner for T seconds after the copy job is finished. During this T seconds, if the CPU detects TD sensor level 7 ($V_T \geq V_{TS} + S$) three times consecutively, a toner end condition is detected and copier operation is disabled.

If the toner sensor voltage stays in level 6 during the T seconds, the machine keeps the toner near end condition and 50 more copies can be made. After 50 copies, the toner end indicator lights and copying is disabled.

6.4.3 Toner End Recovery

If the main switch is turned off and on, or the upper unit is opened and closed during a toner end condition, the main motor turns on and the toner supply clutch is intermittently energized. If the TD sensor voltage does not recover from level 7 within 40 seconds, the machine stops, keeping the toner end condition. If the TD sensor voltage level recovers to level 6 or less in this period, the toner supply clutch on time is reduced and the main motor continuously rotates for 40 seconds to evenly distribute toner inside the development unit. The on/off timing of the clutch is set using SP25 and 26. (These settings should not be changed.)

7. IMAGE TRANSFER

7.1 OVERALL

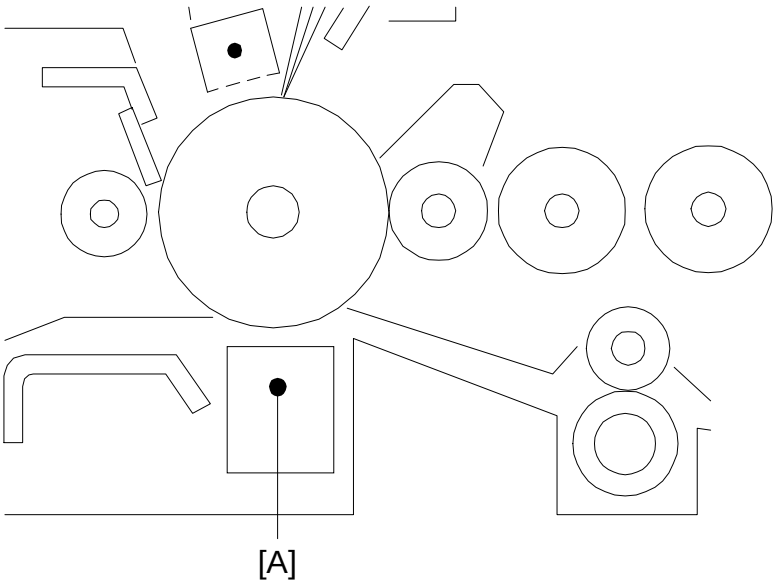

A184D513.wmf

A high negative voltage (approximately –6 kV) is applied to the transfer corona wire [A], and the corona wire generates negative ions. These negative ions are applied to the back side of the copy paper. This negative charge forces the paper against the drum and attracts the positively charged toner onto the paper.

7.2 TRANSFER CORONA CIRCUIT

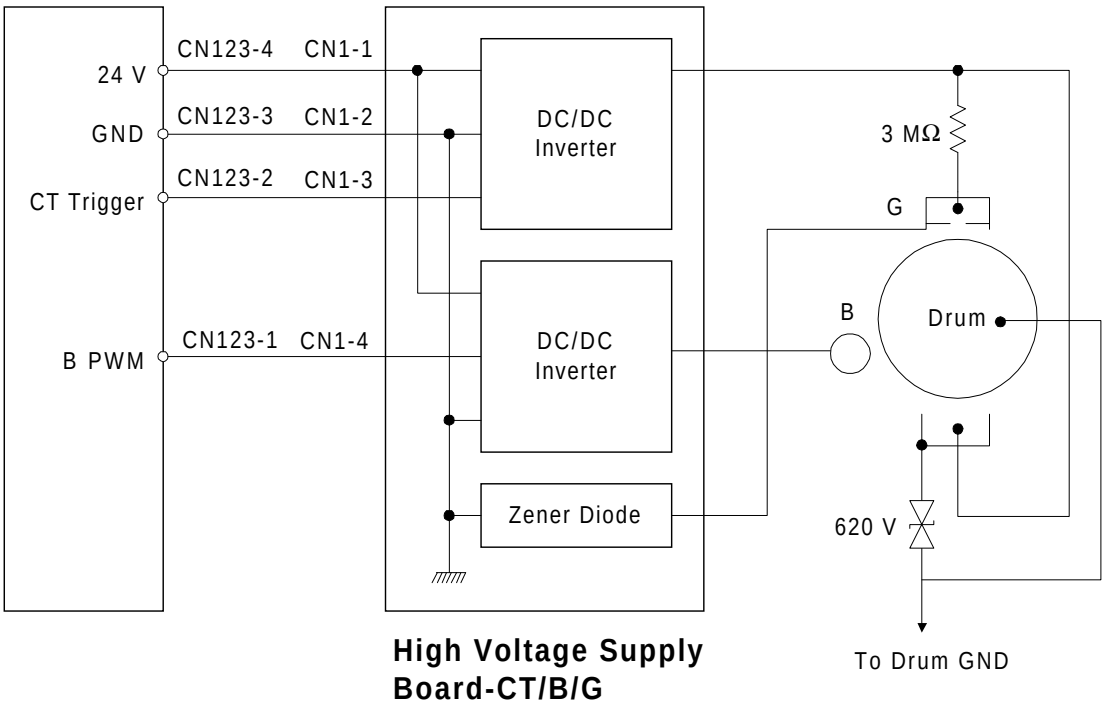

A184D503-3.wmf]

The terminal which applies high negative voltage to the transfer corona is the same as the terminal for the charge corona. So when the CPU drops CN123-2 from +24 V to 0 V, both the transfer corona and charge corona are applied to the drum at the same time. To apply the proper transfer current to the drum, the transfer corona casing is connected to ground through a varistor. This keeps the potential of the casing at –620 volts to prevent excess corona current from flowing into the casing.

8. DRUM CLEANING

8.1 OVERVIEW

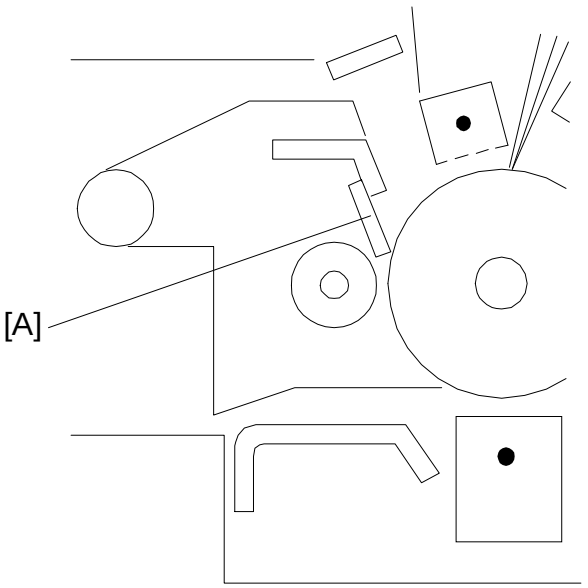

A184D514.wmf

A counter blade system is used for drum cleaning. The cleaning blade [A] scrapes off any toner remaining on the drum after the image is transferred to the paper.

The removed toner is transported into the developer to be recycled.

8.2 TONER RECYCLING MECHANISM

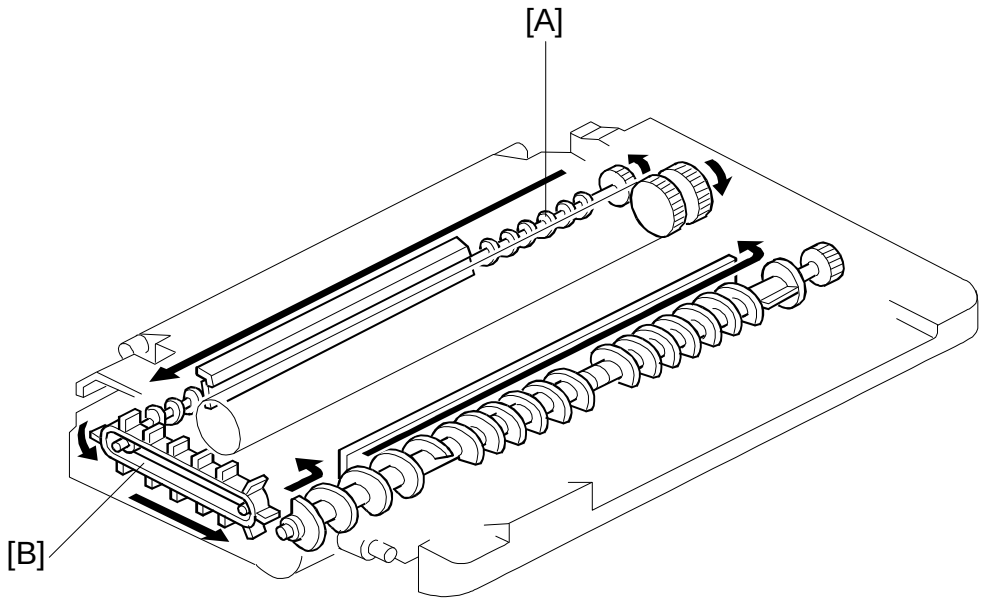

A184D515.wmf

The toner removed from the drum falls onto the toner collection coil [A]. The drum gear rotation is directly transmitted to the gear of the toner collection coil.

As the coil rotates, the toner moves from left to right to be transported to the toner recycling belt [B]. The paddles of the belt, which is driven by the toner collection coil shaft, transports the toner into the developer, and the toner is recycled.

9. QUENCHING

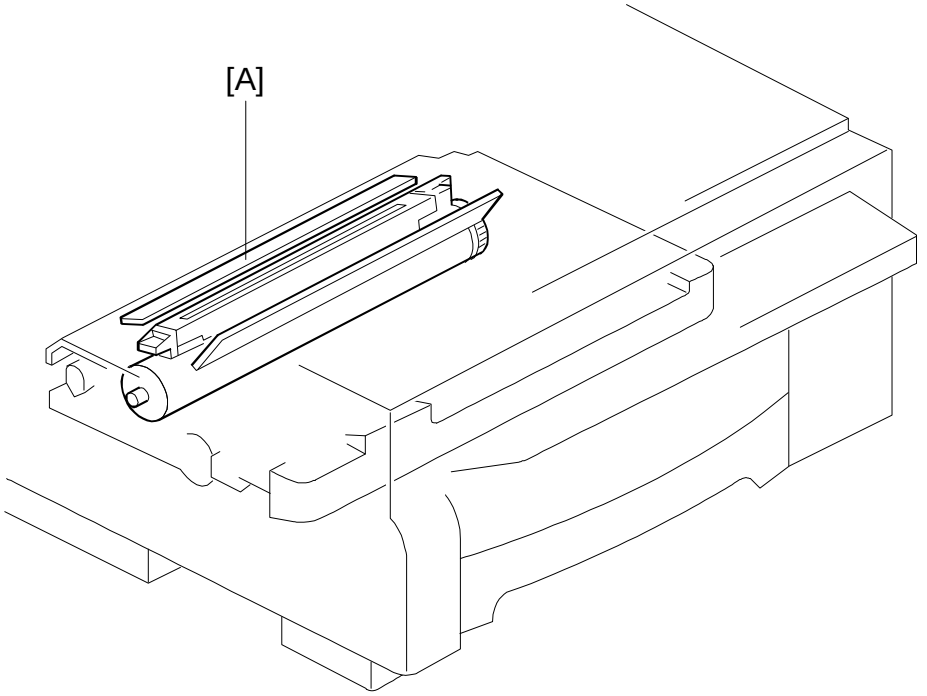

A184D507-2.wmf

In preparation for the next copy cycle, light from the quenching lamp (QL) [A], which is installed in the upper unit, neutralizes any charge remaining on the drum.

LEDs are used for quenching and the lamp is turned on whenever the main motor rotates.

10. PAPER FEED AND REGISTRATION

10.1 OVERVIEW

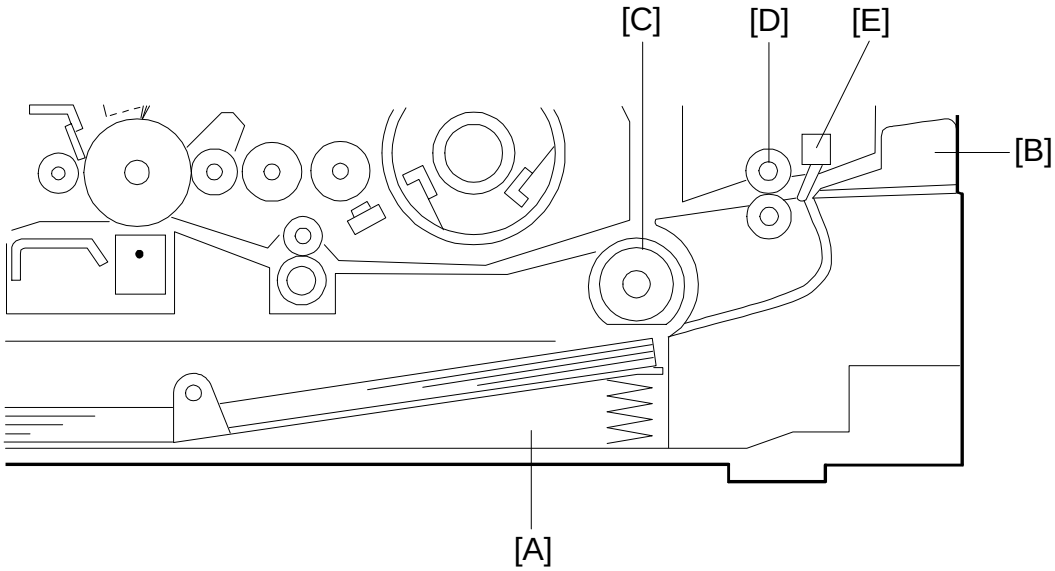

A184D516.wmf

This copier has one paper feed station and a by-pass feed table.

The paper feed station uses a paper tray [A] which can hold 250 sheets. The by-pass feed table [B] can hold 1 sheet.

The paper tray uses two semicircular feed rollers [C] and a corner separator. The semicircular feed rollers make one rotation to drive the top sheet of the paper stack to the relay rollers [D].

The paper tray has two corner separators, which allow only one sheet to feed. They also serve to hold the paper stack.

If a sheet of paper is set on the by-pass feed table, the registration sensor [E] is actuated and the machine goes to by-pass feed mode.

10.2 PAPER FEED MECHANISM

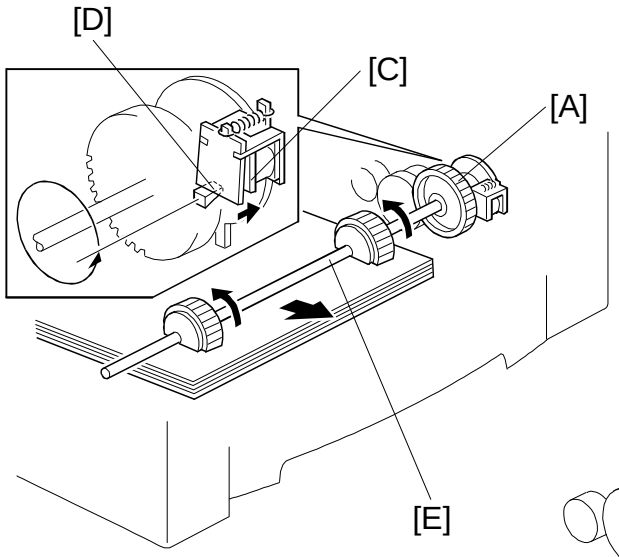

A184D517.wmf

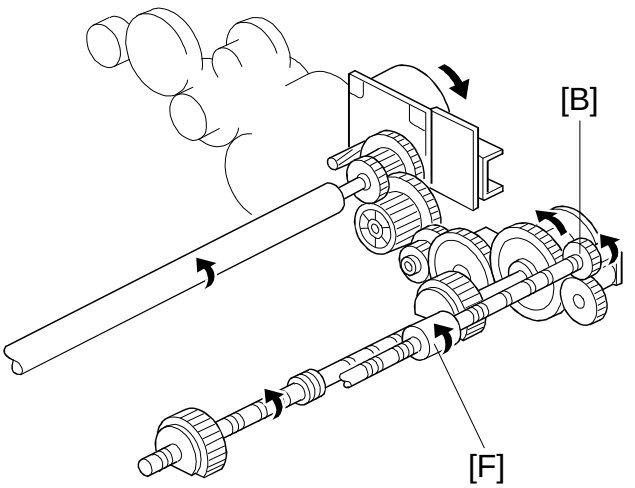

A184D518.wmf

Through several gears, main motor rotation is transmitted to the paper feed clutch gear [A]. The rotation of the paper feed clutch gear is transmitted to the relay roller gear [B] through an idle gear.

After the Start key is pressed, the solenoid [C] of the paper feed clutch is energized to release the stopper [D], and the rotation of the relay roller gear is transmitted to the feed roller shaft [E]. The solenoid stays on for 250 milliseconds and then turns off. The feed rollers stop when they complete one rotation.

Before the feed rollers stop, the leading edge of the paper is caught by the relay rollers [F].

10.3 REGISTRATION MECHANISM

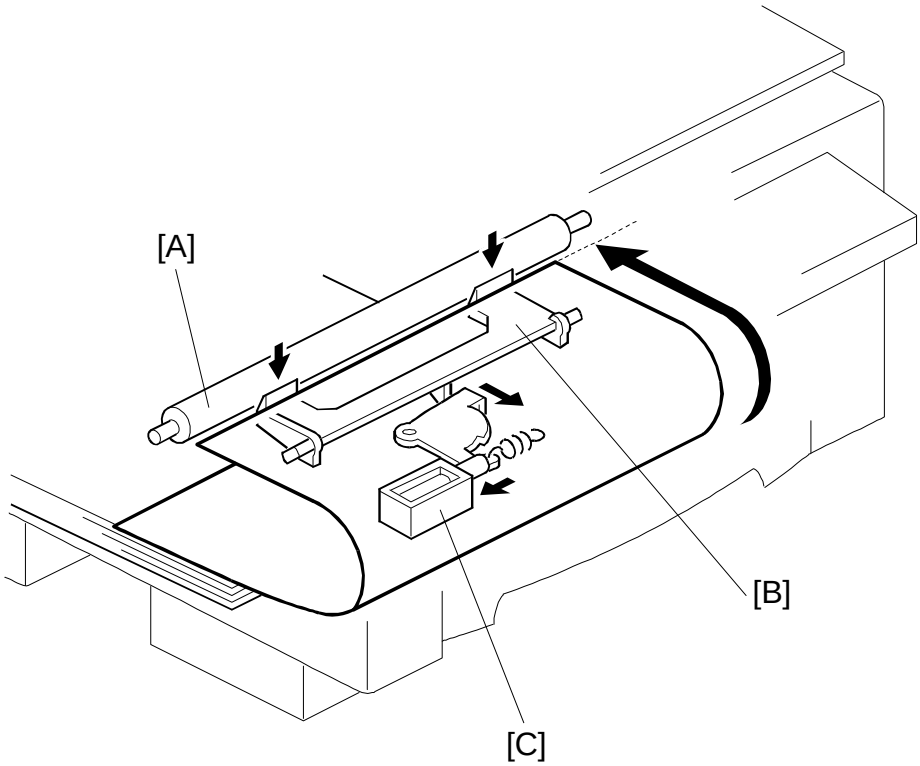

A184D524.wmf

The relay rollers always rotate while the main motor rotates. They transport the paper to the registration roller [A]. The registration roller is also driven by the main motor through idle gears.

There is a paper stopper [B] between the relay roller and the registration roller. After the leading edge of the paper reaches the stopper, a small buckle is made between the relay roller and the registration roller. 2.7 seconds after the paper feed clutch is turned on, the registration solenoid [C] is energized to release the stopper, synchronizing the paper feeding with the image on the drum.

After 0.5 second, the registration solenoid is de-energized.

The registration sensor detects paper length and paper end.

10.4 BY-PASS FEED

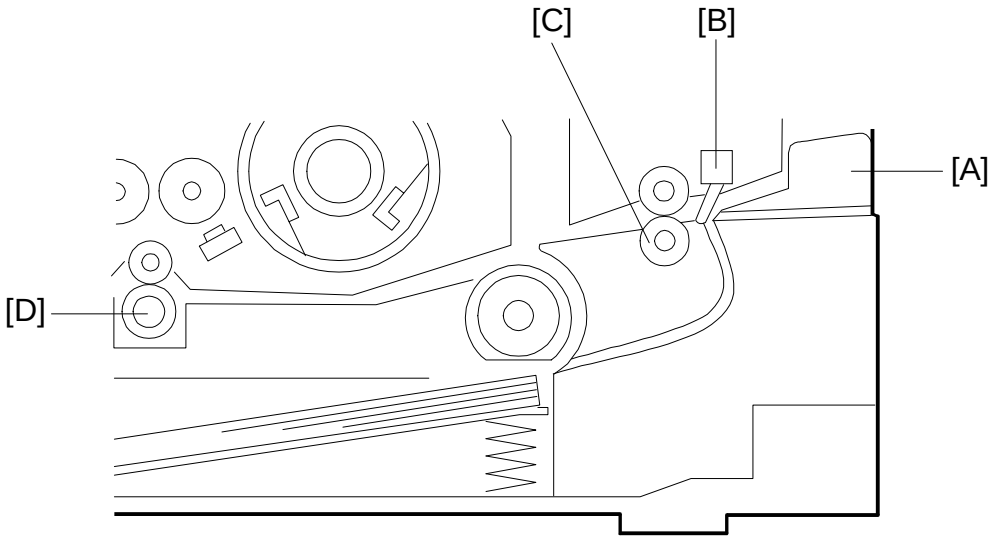

A184D522.wmf

If a sheet of paper is inserted in the by-pass feed table [A], the registration sensor [B] is actuated and the machine goes to by-pass feed mode. 500 milliseconds after the registration sensor is actuated, the main motor turns on for 222 milliseconds to drive the relay roller [C] to catch the leading edge of the paper. After the Start key is pressed, the main motor starts again to transport the paper to the registration roller [D]. The registration solenoid is energized 1912 milliseconds after the main motor started rotating.

10.5 PAPER FEED AND MISFEED DETECTION TIMING

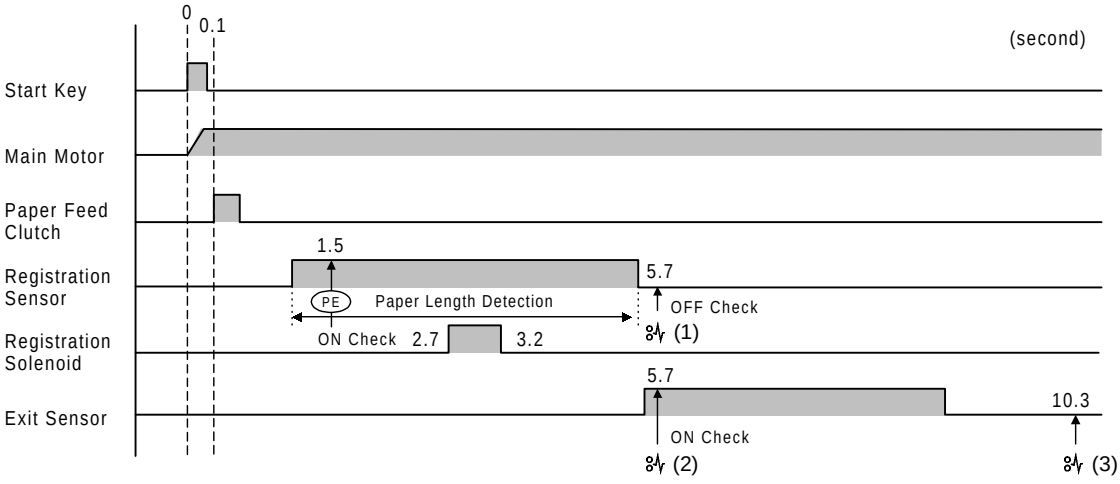

A184D527.wmf

The registration sensor and the exit sensor are used for misfeed detection. If the CPU detects a misfeed, the Check Paper Path or the Add Paper indicator turns on.

When the main switch is turned on, the CPU checks these sensors for initial misfeed.

During the copy cycle, the CPU performs four kinds of misfeed detection:

(PE) : Checks whether the registration sensor is actuated within 1.5 seconds after the Start key is pressed. Since this machine has no indicator or sensor to detect paper end, the PE indicator is lit in the paper end condition as well.

(1): Checks whether the copy paper has passed through the registration sensor 5.7 seconds after the Start key is pressed.

(2): Checks whether the exit sensor is actuated within 5.7 seconds after the Start key is pressed.

(3): Checks whether the copy paper has passed through the exit sensor 10.3 seconds after the Start key is pressed.

11. IMAGE FUSING

11.1 OVERVIEW

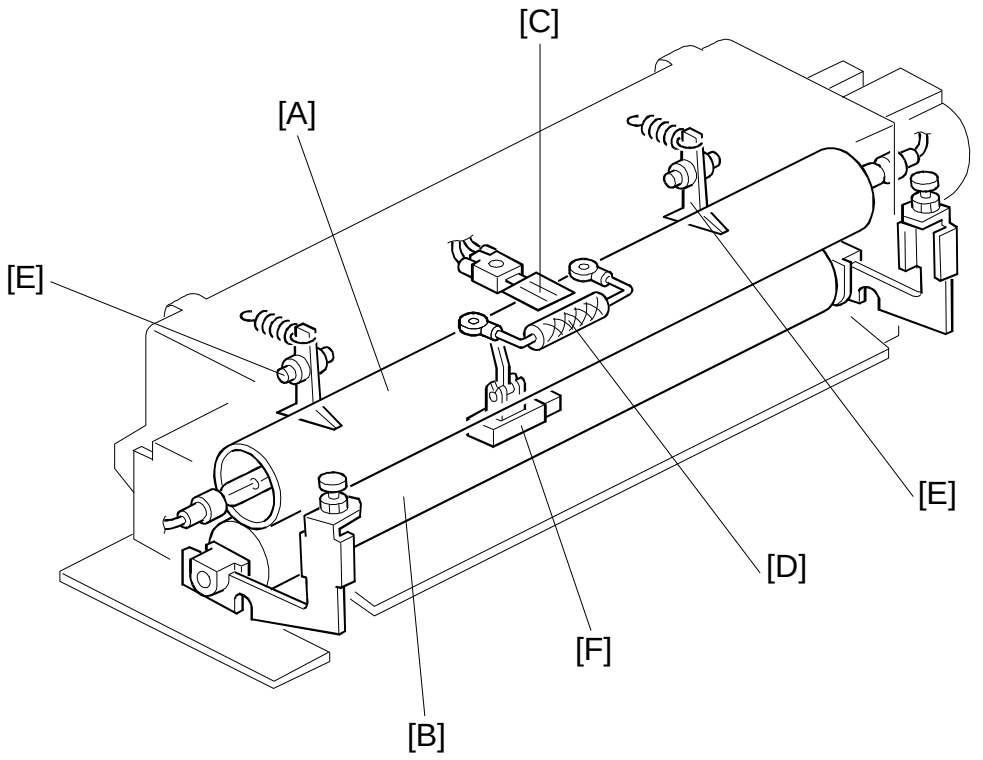

A184D520.wmf

After the image is transferred, the copy paper enters the fusing unit. The image is fused to the copy paper by the process of heat and pressure through the use of a hot roller [A] and pressure roller [B].

The CPU monitors the hot roller temperature through a thermistor [C] which is in contact with the hot roller surface. A thermofuse [D] protects the fusing unit from overheating.

The hot roller strippers [E] separate the copy paper from the hot roller and direct it to the exit rollers. The exit sensor [F] monitors the progress of the copy paper through the fusing unit and acts as a misfeed detector. The exit rollers drive the copy paper to the copy tray.

11.2 FUSING DRIVE MECHANISM

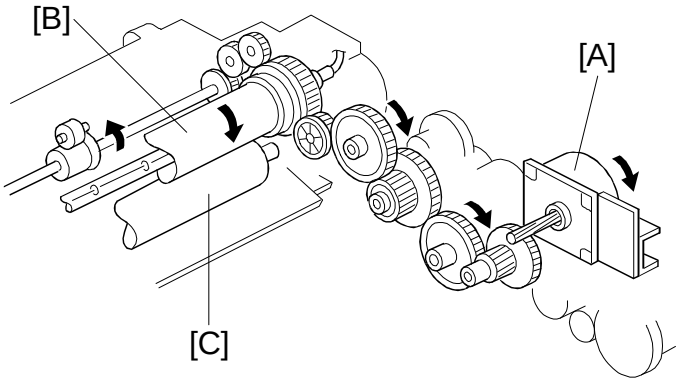

A184D521.wmf

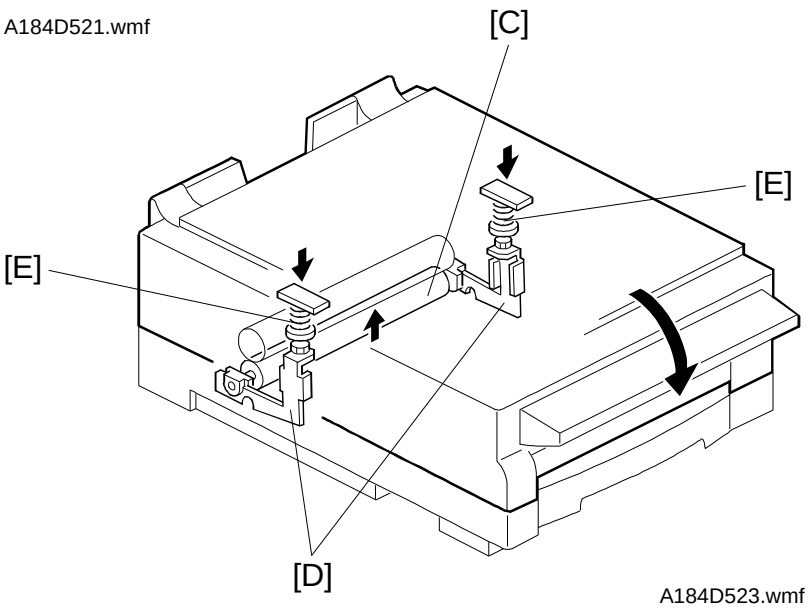

A184D523.wmf

The main motor [A] drive is transmitted to the hot roller [B] through idle gears. The hot roller always rotates while the main motor rotates. While the upper unit is open, the pressure roller [C] is not in contact with the hot roller. This enables easy misfed paper removal at the fusing area.

When the upper unit is closed, the pressure roller is pushed up by the arms [D]. The two springs [E] apply the proper fusing pressure between the hot roller and the pressure roller.

11.3 FUSING LAMP CONTROL

The CPU monitors the temperature of the hot roller surface using a thermistor. The fusing lamp is turned on and off to keep the hot roller surface at the target temperature. The target temperature depends on the machine condition as follows:

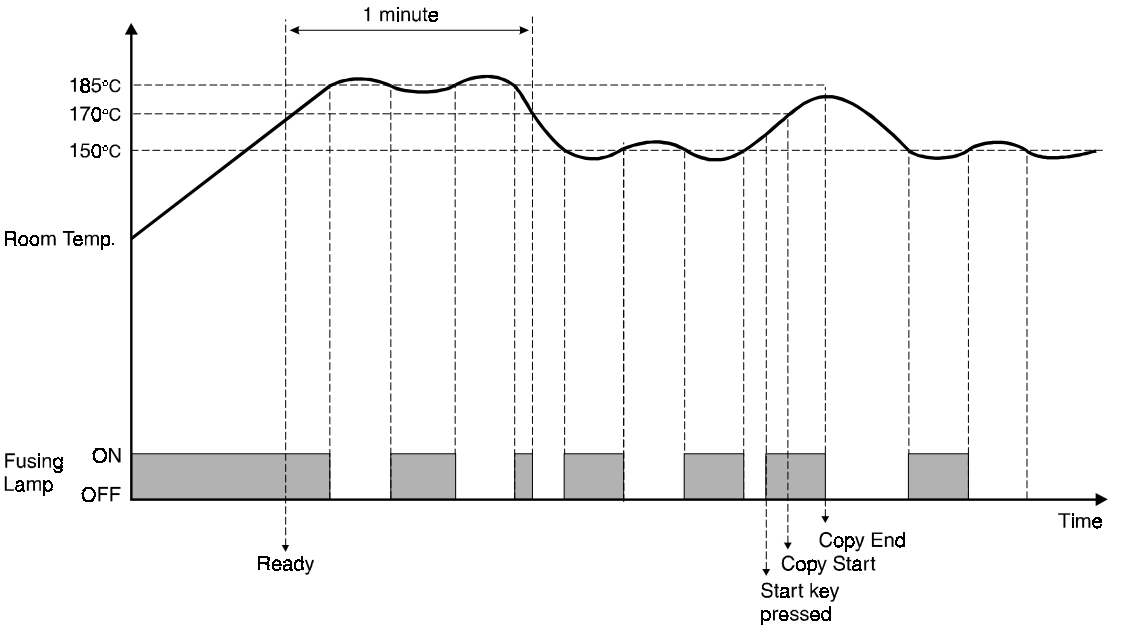

A184D528.wmf

Machine Condition	Fusing Lamp ON/OFF Threshold	Remarks
After the main switch is turned on until one minute has past after the fusing temperature reaches 170°C.	185°C	After the fusing temperature reaches 170°C (ready temperature), the fusing lamp is kept on until it reaches 185°C.
After the above time period	150°C	When the Start key is pressed, the red indicator blinks and copying starts after the fusing temperature reaches 170°C.
During copying	185°C	
After copying is finished	150°C	

When the main switch is turned on, the CPU turns on the fusing lamp. When the fusing thermistor detects 170°C, the machine enters the ready condition. After the ready temperature is detected, the CPU keeps the fusing temperature at 185°C for one minute, then the target temperature is changed to 150°C.

When the Start key is pressed, if the fusing temperature is higher than 170°C, the machine starts copying immediately. If the temperature is lower, the fusing lamp is turned on and the red start indicator blinks. Copying starts after the fusing temperature reaches 170°C, and the fusing temperature is controlled at 185°C during copying.

After copying is finished, the fusing temperature is controlled at 150°C.

To prevent any copy quality problem caused by exposure lamp intensity fluctuation, the fusing lamp does not turn on while the exposure lamp is on, even if the fusing temperature drops below 185°C.

11.4 FUSING LAMP CONTROL CIRCUIT

11.4.1 Overview

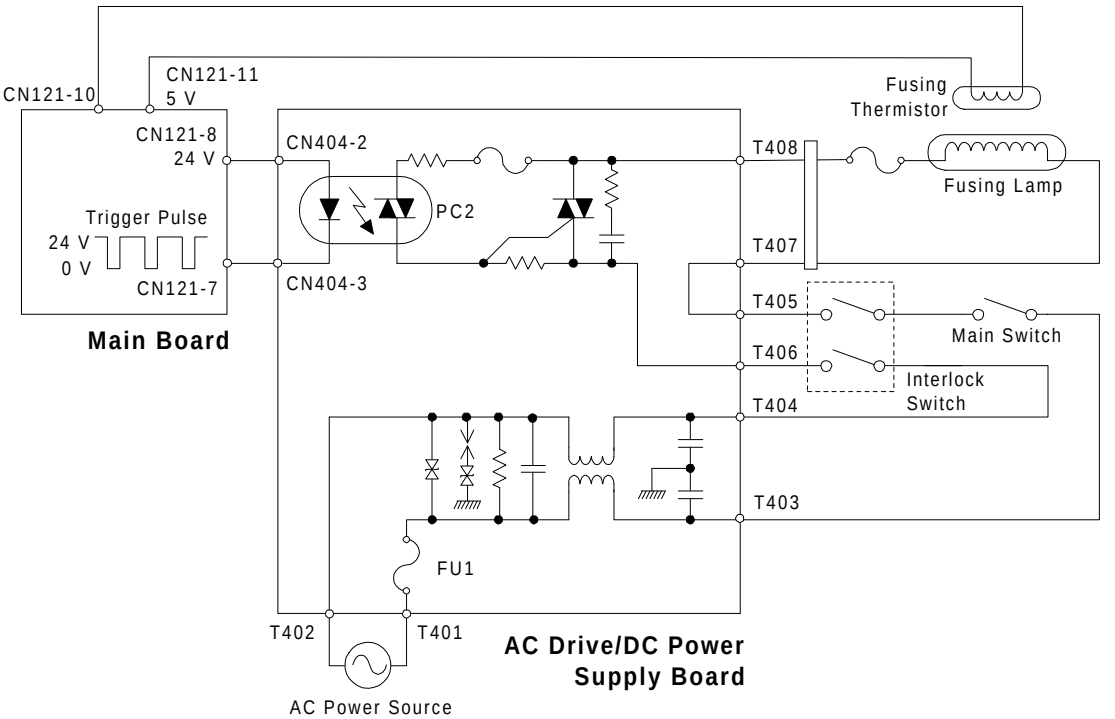

A184D519.wmf

The main board monitors the fusing temperature through a thermistor. It uses the zero cross signal generated by the ac drive/dc power supply board to control the applied power accurately.

Normally, the voltage applied to the lamp is the full duty cycle of the ac waveform. However, through SP29, fusing power can be set to phase control mode. (Phase control is used only if the customer has a problem with electrical noise or interference.)

11.4.2 On/Off Control

When the main switch is turned on, the main board starts to output a trigger pulse, which has the same timing as the zero cross signal, to the ac drive/dc power supply board. This trigger pulse allows maximum ac power to be applied to the fusing lamp. When the operating temperature is reached, the CPU stops outputting the trigger pulse (the trigger stays HIGH) and the fusing lamp turns off.

11.4.3 Phase Control Mode

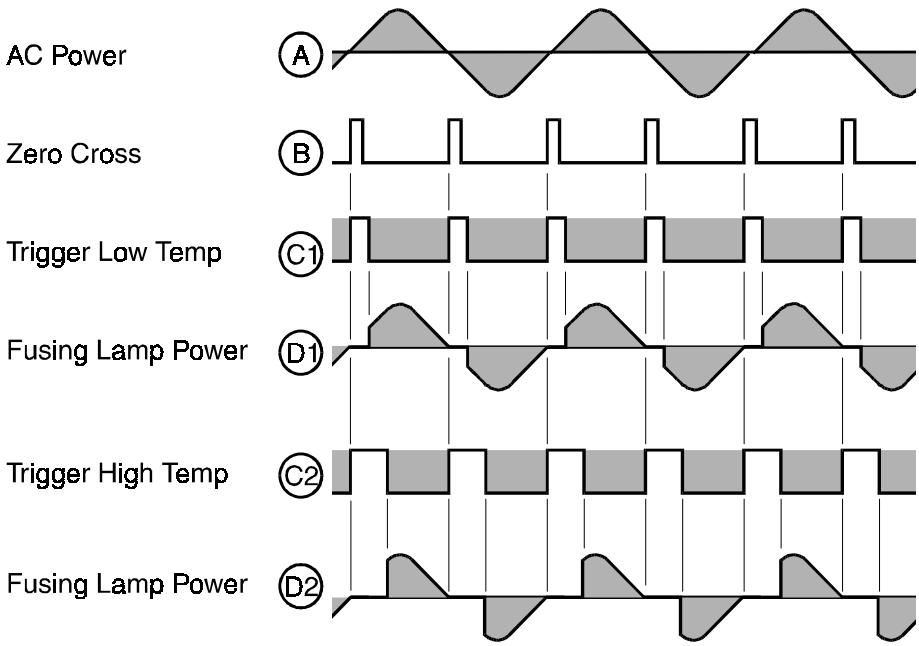

A184D526.wmf

The main board sends the fusing lamp trigger pulse (LOW active) to the ac drive/dc power supply board, which provides ac power to the fusing lamp at the falling edge of each trigger pulse. The trigger pulse goes HIGH when the main board receives the zero cross signal.

The amount of time that power is applied to the fusing lamp depends on the temperature of the hot roller.

The trigger pulse (LOW part) is wider [C1] and power is supplied for longer [D1] when the hot roller temperature is lower. It is narrower [C2] and power is supplied for a shorter time [D2] when the hot roller is near the operating temperature.

11.4.4 Overheat Protection

There is an overheat protection circuit in the main board. If the hot roller temperature reaches 230°C, the resistance of the thermistor (between CN121-10 and CN121-11) becomes too low. If the main board detects this condition, "E-53" lights on the operation panel and power to the fusing lamp is cut.

Even if the thermistor overheat protection fails, the thermofuse opens when it reaches 169°C, removing power from the fusing lamp.

SECTION 3

INSTALLATION

1. INSTALLATION REQUIREMENTS

1.1 ENVIRONMENT

1. Temperature Range: 10°C to 30°C (50°F to 87°F)
2. Humidity Range: 15% to 90% RH
3. Ambient Illumination: Less than 1,500 lux (Do not exposure to direct sunlight.)
4. Ventilation: Minimum space 20 m^3.
   Room air should turn over at least 3 times per hour
5. Ambient Dust: Less than 0.15 mg/m^3 (4×10^{-3} oz/yd^3)
6. If the place of installation is air-conditioned or heated, do not place the machine:
   a) Where it will not be subjected to sudden temperature changes.
   b) Where it will not be directly exposed to cool air from an air-conditioner.
   c) Where it will not be directly exposed to heat from a heater.
7. Do not place the machine where it will be exposed to corrosive gasses.
8. Do not install the machine at any location over 2,000 m (6,500 feet) above sea level.
9. Place the copier on a strong and level base.
10. Do not place the machine where it may be subjected to strong vibrations.

1.2 MACHINE LEVEL

1. Front to back: Within 3 mm (0.12") of level
2. Right to left: Within 3 mm (0.12") of level

1.3 MINIMUM SPACE REQUIREMENTS

Place the copier near the power source, providing clearance as shown:

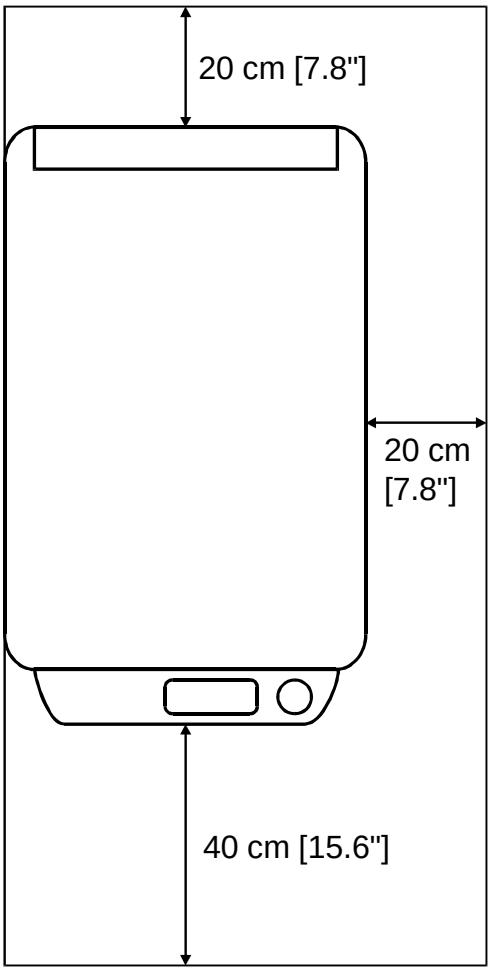

A184I516.wmf

1.4 POWER REQUIREMENTS

1. Input voltage level: 120 V/60 Hz: More than 10 A
   220 ~ 240 V, 50/60 Hz: More than 6 A
2. Permissible voltage fluctuation: 10%
3. Do not set anything on the power cord.

   NOTE: a) Make sure the plug is firmly inserted in the outlet.
   b) Avoid multi-wiring.

2. INSTALLATION

2.1 ACCESSORY CHECK

Check the quantity and condition of the accessories in the box against the following list:

1. Imaging Unit
2. Paper Feed Tray
3. Error Code Decal - English
4. Error Code Decal - Multi-language (-10, -22, -26, -27 machines)
5. Operating Instructions - English (-10, -17, -22, -26, -29, -57 machines)
6. Operating Instructions - Spanish (-17, -22, -26, -57 machines)
7. Operating Instructions - German (-26 machines)
8. Operating Instructions - French (-26 machines)
9. Operating Instructions - Italian (-26 machines)
10. Operating Instructions - Portuguese (-57 machines)
11. Model Name Decal (-10, -22, machines)
12. NECR - English (-57 machines)
13. NECR - Multi-language (-27, -29 machines)
14. Warranty Card (-17 machines)
15. User Registration Card (-17 machines)

2.2 INSTALLATION PROCEDURE

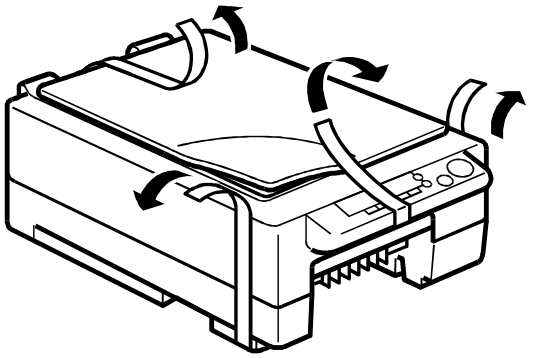

A184I500.wmf

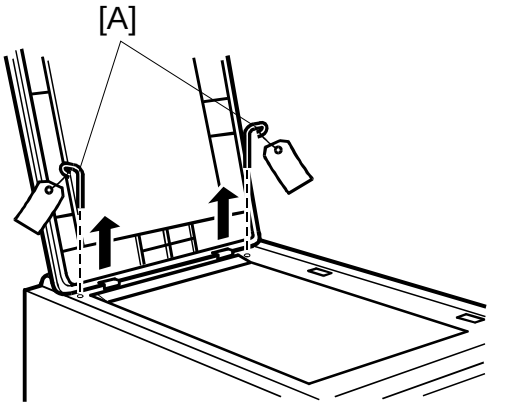

A184I503.wmf

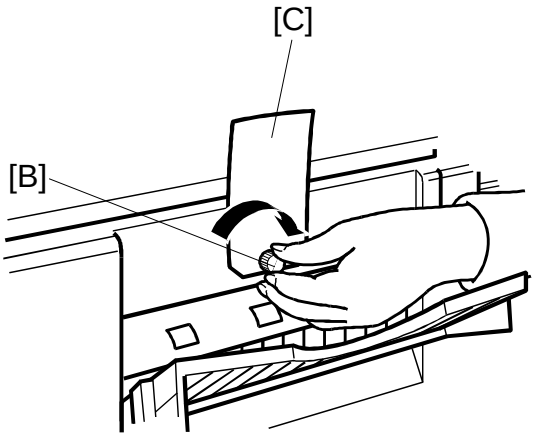

A184I501.wmf

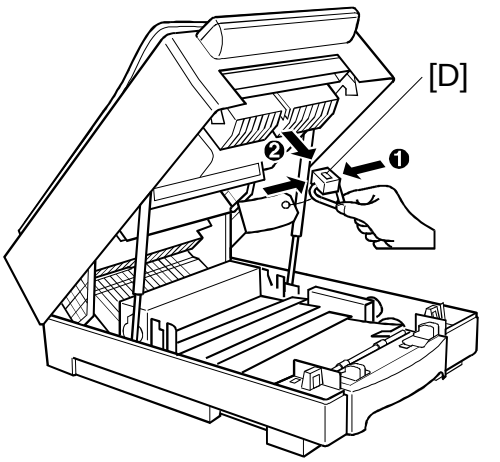

A184I506.wmf

1. Remove the tape securing the platen cover, copy tray and power cord.
2. Open the platen cover and remove the two scanner locking pins [A] from both sides of the exposure glass.

   NOTE: Save the lock pins for future shipping use.
3. Take off the tape covering the screw and remove the knob screw [B] and red tag [C] as shown.

   NOTE: Save the knob screw for future shipping use.
4. Open the top unit and remove the 4th/5th mirror lock tool [D].

   NOTE: Save the shipping retainer for future shipping use.

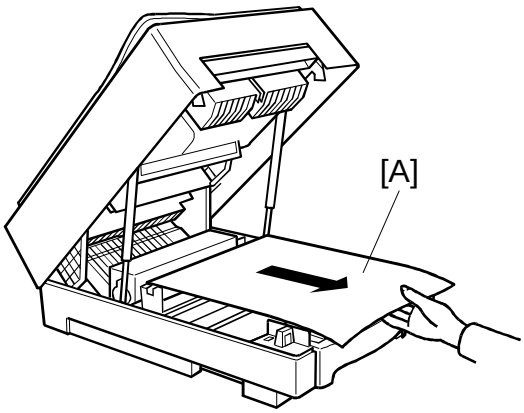

A184I508.wmf

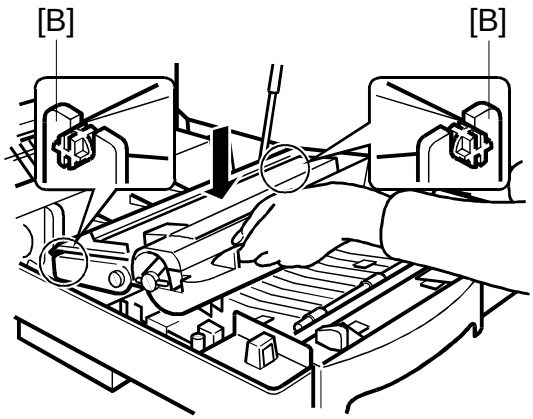

A184I509.wmf

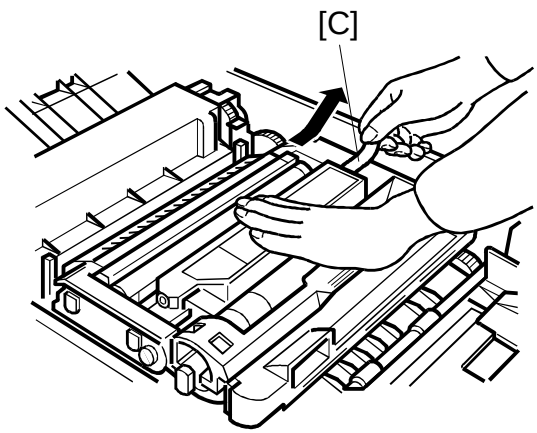

A184I510.wmf

5. Take out the imaging unit from the cardboard box. Then remove the protective sheet and the tape fixing the lever.

   NOTE: 1) Do not touch the drum surface with bare hands.

   2) Do not expose the drum to direct sunlight.

6. Remove the paper [A] from the inside of the copier (this paper contains the installation procedure for the imaging unit).

7. Fit the imaging unit onto both hinges [B], as shown. Then, set the unit on the guide plate, as shown.

8. Pull out horizontally and remove the tape [C] inside the imaging unit, as shown.

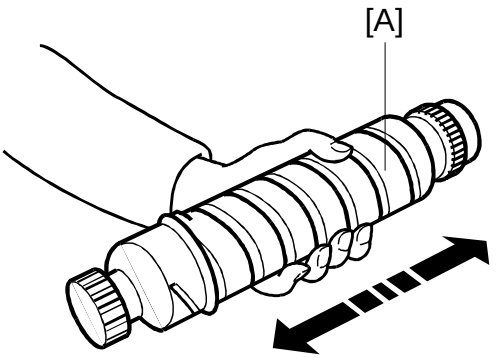

A184I512.wmf

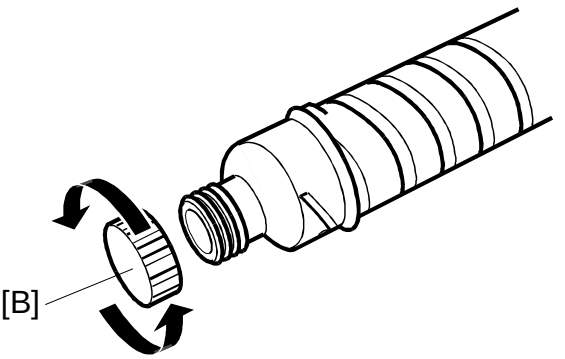

A184I513.wmf

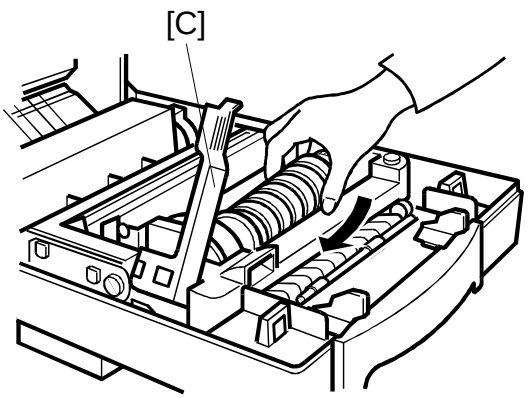

A184I514.wmf

9. Shake the toner bottle [A] well 5 or 6 times.
10. Remove the black cap [B] from the toner bottle.

    NOTE: Remove the black cap carefully so as not to spill any toner.
11. Open the lever [C] and put the cap side of the toner bottle under the lever.
12. Push the other side of the toner bottle in until it locks in position.
13. Close the lever [C].
14. Close the top unit.

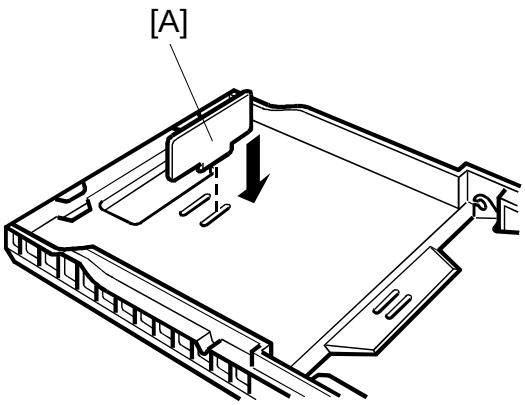

A184I502.wmf

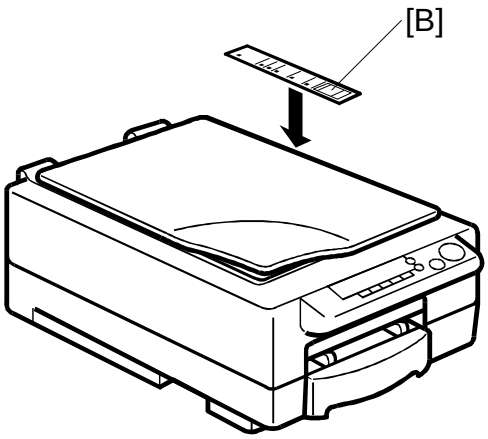

A184I511.wmf

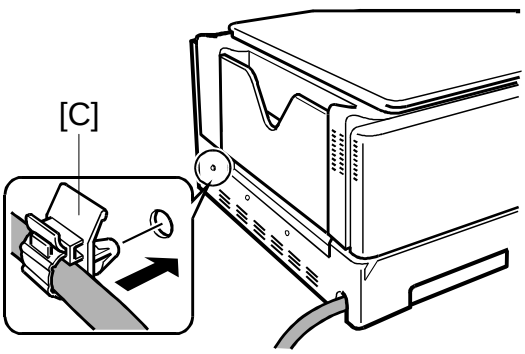

A184I507.wmf

15. Take out the paper cassette from the clear wrapper and remove the tape stuck on the center of the cassette. Then remove the two pieces of cardboard beside the side guides.
16. Change the end plate [A] for the paper size the customer requests.
17. Load paper and set the paper cassette in the machine.
18. Paste the Error Code decal [B] next to the exposure glass if needed.
19. Put the cord clamp [C] in the hole that is opposite side of the entrance of the cord, if necessary.
20. Insert the power plug and turn the main switch on.

    NOTE: When the main switch is turned on, the machine automatically starts developer initialization.

SECTION 4

SERVICE TABLES

1. SERVICE REMARKS

1.1 GENERAL CAUTIONS

1. To prevent physical injury, keep hands away from the mechanical drive components when the main switch is on (especially during the warm-up cycle).
   If the Start key is pressed before the copier finishes the warm-up cycle, the Start indicator starts blinking and the copier starts making copies as soon as the warm-up cycle is completed.
2. Before disassembling or assembling any parts of the copier, make sure that the power cord is unplugged.
3. To avoid possible injury or machine damage, always hold the upper unit firmly with your other hand when opening the upper unit.
4. Keep all the shipping retainers for future shipping use.

1.2 IMAGING UNIT

1. Always make sure of the following when removing the imaging unit from the copier.
   - Do not touch the drum surface with bare hands. When the drum surface is touched with fingers or becomes dirty, wipe it with a dry cloth.
   - Place the imaging unit on a clean and level place. Take care not to scratch the drum from under the unit as there is no cover to protect it.
   - Cover the imaging unit with sheets of paper to prevent the drum from being exposed to light.
   - Do not turn the imaging unit upside down. Toner and developer may fall out from the unit.
2. Always cover the imaging unit with sheets of paper when the upper unit is opened.
3. Never use alcohol to clean the drum; alcohol dissolves the drum surface.
4. Take care not to scratch the drum as the photoconductive layer is thin and is easily damaged.
5. Never expose the drum to corrosive gases such as ammonia gas.
6. When placing the imaging unit onto the copier, do not push it down forcibely. This unit is set only to put it on the guide plate. (The imaging unit is shaky if you push it — this is not a problem.)

7. Do not touch the charge corona wire and the grid plate with bare hands. Oil stains may cause uneven image density on copies.
8. Clean the charge corona wire by sliding the wire cleaning tool from right to left.
9. Clean the charge grid with a blower brush (not with a cloth).
10. Be careful not to damage the edge of the cleaning blade.
11. After installing a new cleaning blade, be sure to apply setting powder evenly on the surface and edge of the blade.

1.3 OPTICS

1. Clean the exposure glass with glass cleaner and a dry cloth to reduce the amount of static electricity on the glass surface.
2. Only use a clean soft cloth to clean the mirrors and reflectors.
3. Only use a blower brush to clean the 6th mirror and the lens.
4. Do not touch the following parts with bare hands:
   a) Reflectors
   b) Exposure Lamp
   c) Mirrors and Lens
5. Do not change the cutout position of the reflectors as they are adjusted at the factory.
6. Always replace the 1st scanner unit as an assembly, as the matching of each set of exposure lamp and reflectors is performed at the factory.
7. Whenever cleaning the optics, all the following actions must be done in order.
   a) Optics cleaning
   b) SP95 (V_L Correction Reset)
   c) SP48 (Light Intensity Adjustment) – see the SP mode table for details
   d) SP56 (ADS Reference Voltage Adjustment) – see the SP mode table for details

1.4 TRANSFER CORONA

1. Clean the corona wire by sliding the wire cleaning tool from right to left.

1.5 FUSING UNIT

1. Be careful not to damage the edges of the hot roller strippers or their tension springs.
2. Do not touch the fusing lamp with bare hands.
3. Make sure that both fusing lamp insulators are properly set in the holders.
4. The two C-rings securing the hot roller are not interchangeable. Make sure to place them properly when reinstalling.
   For more details, see section 6 (Replacements and Adjustments).

1.6 PAPER FEED

1. Do not touch the feed rollers with bare hands.
2. The side fences and the end fence of the paper tray should be positioned correctly so that they securely hold the paper. Otherwise, paper misfeeds may occur. Also when using 8 1/2" x 14" paper, make sure that the trailing edges of the paper are under the two guides of the cassette.
3. Avoid storing paper for a long time.
   At high temperature and high humidity, or at low temperature and low humidity, store paper in a plastic bag. This is especially important to decrease the amount of curls or waves that would lead to paper misfeeds.

1.7 OTHERS

1. When replacing the main board, remove the EEPROM (IC106) from the old main board and place it on the new main board. Then install the new main board in the copier.
2. After installing a new main board with a new EEPROM (IC106), the Clear All Memory (SP99) procedure must be performed. (Do not perform SP99 if you have placed the old EEPROM on the new main board.)
3. Never perform SP99 (Clear All Memory) except for the following two cases:

   a) When the copier malfunctions due to a damaged EEPROM.

   b) When replacing the EEPROM.
4. Whenever SP99 (Clear All Memory) is performed, the imaging unit must be replaced with a new one. Otherwise, copy quality might be seriously affected.
5. Tighten securely the screws used for grounding the following PCBs when reinstalling them.
   - Main Control Board
   - Scanner Drive Board
   - AC Drive/DC Power Supply Board
   - High Voltage Supply Board-CT/B/G

2. PROGRAM MODES

2.1 BASIC OPERATION

1. Component

This copier is equipped with two program modes. One is the Service Program (SP) Mode for factory and field technician usage, and the other is the User Program (UP) mode for user usage. Both program modes have a different access procedure, but all the UP mode functions can be accessed from the SP mode.

To be able to reset a service call (E5) condition using SP mode, the SP mode can be accessed while the error condition exists. The error code will not be displayed in the copy counter during these conditions.

2. Operation

To access these program modes, a certain key must be held down while turning on the main switch. After accessing, select the required mode number and perform the necessary procedures needed for that function. It is possible to move on to the next required mode without exiting each time.

To leave from these modes, turn the main switch off/on.

3. Display

To achieve the same operation for the two models (A183 and A184), the Magnification Ratio display, the +Zoom key and the –Zoom key are not used. To display and to distinguish various conditions using the copy counter, the appearance of the copy counter and the dot (•) which appears in the top left corner of the Copy Counter is different.

When the **Copy Counter is blinking**, and the **dot is lit**, the machine is ready to **accept a program mode number**. (The program mode number is displayed when you input it.)

When the **Copy Counter stops blinking**, and the **dot starts blinking**, the machine is ready to **accept an adjustment value**, and it may be displaying the current adjustment value.

4. Notes

1. **With the exception of SP57, all copies made inside the program modes are made with ID level 3 (center value).**
2. Since the Darker/Lighter keys are used during the program modes, image density cannot be changed using the Darker/Lighter keys while in the program modes.
3. Since the Copy Counter is used to display the adjustment values and data, the copy counter can not be displayed.

2.2 SP MODE

1. Service Program Mode Access Procedure

1. Turn off the main switch.
2. While pressing the Darker key and the Clear/Stop key together, turn on the main switch.
3. A dot (•) will appear in the top left corner of the Copy Counter.
4. Release the Darker key and the Clear/Stop key, and within 5 seconds, press the Lighter key (if not pressed within 5 seconds, the machine will return to the copy mode). The copier is ready to accept the program number.

NOTE: To access the UP mode, turn on the main switch while pressing the Clear/Stop key.

2. How to Select the Program Number

1. By using the Increase or Decrease Quantity ("+" or "–") keys, enter the required program number. At this point, the Copy Counter will be blinking, and the dot (•) will be lit.
2. When the Lighter key is pressed, the number which is currently blinking in the Copy Counter will be entered as the selected program number.

3. Changing the Value of an SP Mode

1. Enter the desired value or setting using the Increase or Decrease Quantity ("+" or "–") key. For some modes, since the Copy Counter has only 2 digits, the first digit is displayed in the Manual Image Density indicator as shown below.

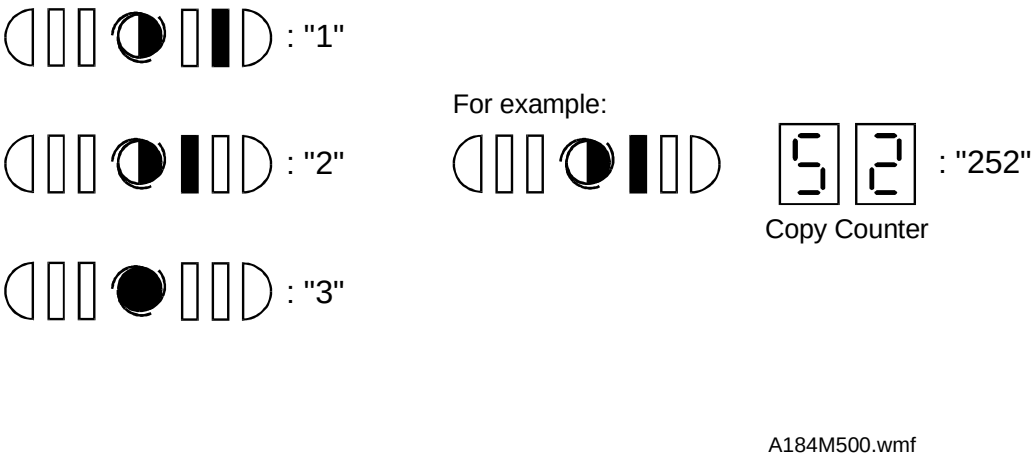

NOTE: After changing the value (setting), the previous value (setting) can be recalled again if the Clear/Stop key is pressed at this point.

2. When the Lighter key is pressed, the number which is currently displayed in the Copy Counter will be entered as the new value or setting, and will be stored in memory.
3. The copier is ready to accept the new program number. Repeat from step 1 or leave SP mode by turning the main switch off/on.

2.3 SP MODE QUICK REFERENCE TABLE

SP Mode No.	Function	SP Mode No.	Function
3	Destination Setting	*48	Light Intensity Adjustment
4	Forced Start	49	Fusing Temperature Adjustment
5	Free Run with Exposure Lamp Off	51	Exposure Lamp Voltage Display
6	Misfeed Detection Off	52	Fusing Temperature Display
7	Free Run	53	TD Sensor Target Control Voltage Adjustment
8	Input Check	54	TD Sensor Gain Adjustment
9	Output Check	55	TD Sensor Output Display
10	Scanner Free Run	56	ADS Reference Voltage Adjustment
11	All Indicators On	57	ADS Output Voltage Display
14	Auto Shut Off Time Setting	59	Optics Temperature Display
15	Auto Reset Time Setting	60	Drum Potential Measurement (With Paper)
16	Count Up/Down Selection	61	Drum Potential Measurement (Without Paper)
19	Function of Manual ID Level 3	62	V_L Correction Interval
21	A4 Lengthwise Erase Selection	63	Forced Toner Supply
23	Total Toner Supply On Time During Toner Near/End Condition	64	V_R Correction Value
24	TD Sensor Sensitivity Setting	66	Imaging Unit Check Mode
25	Toner Supply ON Time During Toner Near/End Recovery	67	TD Sensor Initial Output Display
26	Toner Supply OFF Time During Toner Near/End Recovery	69	Imaging Unit Counter Display
29	Fusing Temperature Control Selection	77	Auto Shut Off (Energy Star) Selection
30	Toner Supply Mode Selection	81	Factory Initialization
31	Toner Supply Amount (TD Sensor Mode)	82	Data Communication
32	Toner Supply Amount (Fixed Supply Mode)	88	Total Copy Counter Display
34	Image Density Adjustment	90	Factory Data and Counter Clear
35	Image Adjustment at ID Level 1	91	Optics Cooling Fan Operation (120 V (NA) machines only)
36	Image Bias Adjustment at ID Level 5	92	Imaging Unit Initialization Selection
38	Toner Density Adjustment	95	V_L Correction Reset
*41	Lead Edge Erase Margin Adjustment	96	Toner End Force Cancel
*42	Registration Adjustment	97	Service Call (E5) Reset
*43	Vertical Magnification Adjustment	98	Total Counter Clear
*44	Horizontal Magnification Adjustment	99	Clear All Memory

* Items Listed On The Factory Setting Data Sheet

2.4 UP MODE AND SP MODE CROSS REFERENCE TABLE

UP Mode No.	SP Mode No.	Function
1	34	Image Density Adjustment
2	35	Image Adjustment at ID Level 1
3	36	Image Bias Adjustment at ID Level 5
4	38	Toner Density Adjustment
5	14	Auto Shut Off Time Setting
6	15	Auto Reset Time Setting
7	16	Count Up/Down Selection
8	88	Total Copy Counter Display
9	69	Imaging Unit Counter Display
10	62	V_L Correction Interval

2.5 SERVICE PROGRAM MODE TABLE

1. In the *Function* column, comments (extra information) are in italics.
2. In the ***Settings*** column, the default value is printed in bold letters.
3. If there is a † mark in the Mode No. column, copies can be made within this SP Mode.

<table>
<tr><th colspan="2">Mode No.</th><th>Function</th><th>Settings</th></tr>
<tr><td rowspan="2">3</td><td rowspan="2">Destination Setting</td><td>The setting can be changed depending on the paper size being used.
<table>
<tr><th>No.</th><th>Measurement</th><th>Copy Count (SP16 Setting)</th><th>Note</th></tr>
<tr><td>0</td><td>—</td><td>—</td><td>—</td></tr>
<tr><td>1</td><td>Inch</td><td>UP</td><td>Factory setting for 120 V copiers</td></tr>
<tr><td>2</td><td>Metric</td><td>UP</td><td>Factory setting for 230 V copiers</td></tr>
</table></td><td>Default = 0</td></tr>
<tr><td>This mode does not have any relationship to the electrical power supply. The erase and magnification ratio mechanism is changed. For example, by changing this mode, North American (inch size) machines can use metric size paper for normal usage.</td><td></td></tr>
<tr><td rowspan="2">4</td><td rowspan="2">Forced Start</td><td>Selects whether forced start is on or off.
Copy quality and paper transport are not guaranteed.</td><td rowspan="2"></td></tr>
<tr><td>If forced start is switched on, the copier enters the ready condition even if the fusing temperature has not reached the required value yet. <u>Perform this mode using blank originals only.</u></td></tr>
<tr><td rowspan="2">5</td><td rowspan="2">Free Run with Exposure Lamp Off †</td><td>A free run is performed without exposure. This mode can be performed before the fusing unit reaches the ready temperature.
Press the Start key to start the free run. Press the C/S key to stop the free run.</td><td rowspan="2"></td></tr>
<tr><td>This mode is performed with the normal copy process for LG paper size without the paper feed clutch, exposure lamp, and total counter increment. Normally, use SP7 to save toner.</td></tr>
<tr><td rowspan="2">6</td><td rowspan="2">Misfeed Detection Off †</td><td>Copies are made without misfeed detection by the registration and exit sensors.
Press the Start key to make a copy. It stops when reaching the set count, or when the C/S key is pressed.</td><td rowspan="2"></td></tr>
<tr><td>Use this mode to check whether the paper misfeed was caused by a sensor malfunction.
<u>The total counter increments when copies are made in this mode.</u></td></tr>
</table>

<table>
<tr><th>Mode No.</th><th>Function</th><th>Settings</th></tr>
<tr><td>7</td><td>Free Run</td><td>Performs a free run with the exposure lamp on. Press the Start key to start the free run. Press the C/S key to stop the free run.

This mode is performed with the normal copy process for LG paper size without the paper feed clutch and total counter increment.
Before starting, close the platen cover to minimize toner consumption.</td><td></td></tr>
<tr><td>8</td><td>Input Check †</td><td>The Manual Image Density indicator is used to display the input data from the sensors while making a normal copy.
Press the Start key to perform this mode.

<table>
<tr><th>Sensor</th><th>Manual ID Level Indication</th><th>Display: Condition</th></tr>
<tr><td>Registration</td><td>ID Level 1</td><td>ON: Paper Present</td></tr>
<tr><td>Exit</td><td>ID Level 2</td><td>ON: Paper Present</td></tr>
<tr><td>—</td><td>ID Level 3</td><td>—</td></tr>
<tr><td>Scanner HP</td><td>ID Level 4</td><td>ON: Home Position</td></tr>
<tr><td>*Lens/Mirror HP</td><td>ID Level 5</td><td>ON: Actuator inside sensor</td></tr>
</table>
*A184 copier only</td><td></td></tr>
<tr><td>9</td><td>Output Check</td><td>Use to turn on individual electrical components.
Enter the desired number given in the following table.
Press the Start key to turn on the electrical component. Press the C/S key to turn off the electrical component.

<table>
<tr><th>Component No.</th><th>Electrical Component</th><th>Note</th></tr>
<tr><td>1</td><td>Main Motor + Quenching Lamp + Exhaust Fan Motor (High Speed)</td><td></td></tr>
<tr><td>2</td><td>Charge Corona + Transfer Corona + Development Bias Voltage</td><td>Dev. bias is the standard voltage for manual ID level 3 without corrections.</td></tr>
<tr><td>3</td><td>Erase Lamp</td><td>All LEDs on</td></tr>
<tr><td>4</td><td>Toner Supply Clutch</td><td></td></tr>
<tr><td>5</td><td>Registration Solenoid</td><td></td></tr>
<tr><td>6</td><td>Paper Feed Clutch</td><td></td></tr>
<tr><td>7</td><td>Main Switch</td><td>Main switch will turn off when performed.</td></tr>
<tr><td>8</td><td>Optics Cooling Fan</td><td></td></tr>
<tr><td>9</td><td>Exposure Lamp + Optics Cooling Fan</td><td>Standard voltage for manual ID level 3 without corrections.</td></tr>
<tr><td>10</td><td>Exhaust Fan Motor (High Speed)</td><td></td></tr>
</table></td><td></td></tr>
</table>

Mode No.		Function	Settings
10	Scanner Free Run	Starts a scanner free run.	
		Press the Start key to start the free run. Press the C/S key to stop the free run.	
11	All Indicators ON	Turns on all the indicators on the operation panel for 30 seconds. It will turn off automatically after 30 seconds.	
		To turn off the indicators, press the Lighter key.	
14	Auto Shut Off Time Setting	Selects the auto shut off time in 5 minute steps.	0: 5 min. **1: 10 min.** 2: 15 min. 3: 20 min. 4: 25 min. 5: 30 min.
		The copier main switch is shut off automatically after the selected auto shut off time if SP77 is at "0".	
15	Auto Reset Time Setting	Selects an auto reset time of 1 or 3 minutes, or cancels this mode.	**0: 1 min.** 1: 3 min. 2: None
16	Count Up/Down Selection	Selects count up or count down.	**0: Up** 1: Down
		The default setting depends on the setting of SP3. The setting can be changed after SP3 is set, but if the setting of SP3 is changed again, the SP16 setting will also change accordingly.	
19	Function of Manual ID Level 3	Specifies whether the center notch of the manual density indicator is used as the ADS function, or as the manual ID level 3.	**0: ADS** 1: Manual ID Level 3
		This mode is used to perform the light intensity adjustment of the copy quality adjustment. Always change the setting to 1 at this time, in order to achieve the center of the manual image density level to adjust the standard copy quality. Do not forget to change it back to 0 after adjustment.	
21	A4 Lengthwise Erase Selection	Selects the trailing edge erase timing to A4 lengthwise on a machine in which the setting of SP3 (Destination Setting) is set to 1 (inch).	**0: LT** 1: A4
		Set this to 1 for customers that takes copies of A4 paper occasionally without changing the magnification ratio.	
23	Total Toner Supply On Time During Toner Near/End Condition	Selects the toner supply clutch on time performed after every copy job under the toner near/end condition.	0: 5 s. **1: 10 s.** 2: 15 s. 3: 20 s. 4: 25 s. 5: 30 s.

<table>
<tr><th colspan="2">Mode No.</th><th>Function</th><th>Settings</th></tr>
<tr><td>24</td><td>TD Sensor Sensitivity Setting</td><td>Adjusts the sensitivity of the TD sensor.
<table>
<tr><th>SP Setting</th><th>Sensitivity (V/wt%)</th><th>Note</th></tr>
<tr><td>0</td><td>0</td><td></td></tr>
<tr><td>1</td><td>0.05</td><td></td></tr>
<tr><td>2</td><td>0.10</td><td></td></tr>
<tr><td>↓</td><td>↓</td><td>0.05 per step</td></tr>
<tr><td>7</td><td>0.35</td><td></td></tr>
<tr><td>8</td><td>0.40</td><td>Default</td></tr>
<tr><td>9</td><td>0.45</td><td></td></tr>
<tr><td>10</td><td>0.50</td><td></td></tr>
<tr><td>11</td><td>0.55</td><td></td></tr>
<tr><td>↓</td><td>↓</td><td>0.05 per step</td></tr>
<tr><td>19</td><td>0.95</td><td></td></tr>
<tr><td>20</td><td>1.00</td><td></td></tr>
</table>
The toner supply clutch on time and/or the toner density are changed by this setting. See "Detailed Descriptions - Toner Supply Control" for more details.</td><td>Default = 8</td></tr>
<tr><td>25</td><td>Toner Supply ON Time During Toner Near/End Recovery</td><td>The ON/OFF movement of the toner supply clutch is changed after the TD sensor voltage level recovers to level 6 or less. This mode changes the ON time.
(0.1 second per step [range: 0 to 4 seconds])
Normally, this value should not be changed.</td><td>0 ~ 40
Default = 7</td></tr>
<tr><td>26</td><td>Toner Supply OFF Time During Toner Near/End Recovery</td><td>The ON/OFF movement of the toner supply clutch is changed after the TD sensor voltage level recovers to level 6 or less. This mode changes the OFF time.
(0.1 second per step [range: 0 to 4 seconds])
Normally, this value should not be changed.</td><td>0 ~ 40
Default = 33</td></tr>
<tr><td>29</td><td>Fusing Temperature Control Selection</td><td>Selects the fusing temperature control mode.
After selecting the control mode and turning the main switch off/on, the fusing temperature control mode is changed.</td><td>0: ON/OFF control
1: Phase control</td></tr>
</table>

<table>
<tr><th colspan="2">Mode No.</th><th>Function</th><th>Settings</th></tr>
<tr><td>30</td><td>Toner Supply Mode Selection</td><td>Selects the toner supply system.
Normally, this value should not be changed.

<table><tr><th>SP Setting</th><th>Toner Supply System</th><th>Note</th></tr><tr><td>0</td><td>Detect supply mode using the initial TD sensor setting.</td><td>Default</td></tr><tr><td>1</td><td>Detect supply mode using the target TD sensor voltage set with SP53.</td><td></td></tr><tr><td>2</td><td>Detect supply mode (fixed amount) using the initial TD sensor setting.</td><td></td></tr><tr><td>3</td><td>Detect supply mode (fixed amount) using the target TD sensor voltage set with SP53.</td><td></td></tr><tr><td>4</td><td>Fixed supply mode.</td><td>Use only in abnormal TD sensor conditions.</td></tr></table>
See SP31/SP32 for the toner supply amount.</td><td>Default = 0</td></tr>
<tr><td>31</td><td>Toner Supply Amount (TD Sensor Mode)</td><td>Determines how much toner is supplied in detect supply mode.
Select the base unit for toner supply time from 0.1 s to 5.0 s in 0.1 s steps. The multiple of this unit that is used depends on current TD sensor output.
See "Detailed Descriptions-Toner Supply Control" for more details.</td><td>1 ~ 50
Default = 1
(0.1 s)</td></tr>
<tr><td>32</td><td>Toner Supply Amount (Fixed Supply Mode)</td><td>Determines how much toner is supplied in fixed supply mode and in detect supply (fixed amount) mode.
For example, if the user normally makes copies of A4 originals that are about 7% black, select the 7% setting for best results.

<table><tr><th>SP Setting</th><th>Ratio</th><th>Supply Time</th><th>Note</th></tr><tr><td>0</td><td>3.5%</td><td>0.3 s</td><td>Default</td></tr><tr><td>1</td><td>7.0%</td><td>0.6 s</td><td></td></tr><tr><td>2</td><td>15%</td><td>1.2 s</td><td></td></tr><tr><td>3</td><td>30%</td><td>2.4 s</td><td></td></tr><tr><td>4</td><td>45%</td><td>3.6 s</td><td></td></tr><tr><td>5</td><td>60%</td><td>4.8 s</td><td></td></tr><tr><td>6</td><td>—</td><td>∞</td><td>Continuous supply</td></tr><tr><td>7</td><td>0%</td><td>0</td><td>No toner supply</td></tr></table>
See "Detailed Descriptions-Toner Supply Control" for more details.</td><td>0 ~ 7
Default =0</td></tr>
</table>

<table>
<tr><th colspan="2">Mode No.</th><th>Function</th><th>Settings</th></tr>
<tr><td>34</td><td>Image Density Adjustment †</td><td>Selects the image density level in ADS and manual ID mode.
The development bias and the exposure lamp data are increased or decreased. This adjustment affects ADS mode and all manual ID settings.

<table><tr><th>SP Setting</th><th>Setting</th><th>Dev. Bias</th><th>Exposure Lamp</th></tr><tr><td>0</td><td>Normal</td><td>0</td><td>0</td></tr><tr><td>1</td><td>Light</td><td>–40 V</td><td>0</td></tr><tr><td>2</td><td>Dark</td><td>+40 V</td><td>0</td></tr><tr><td>3</td><td>Lighter</td><td>–40 V</td><td>+3 steps</td></tr><tr><td>4</td><td>Darker</td><td>+40 V</td><td>–3 steps</td></tr><tr><td>5</td><td>Lightest</td><td>–40 V</td><td>+7 steps</td></tr><tr><td>6</td><td>Darkest</td><td>+40 V</td><td>–7 steps</td></tr></table>
The exposure lamp setting specifies the change relative to the base exposure lamp voltage (Vo) in SP48, 1 step of the lamp voltage equals 0.5 V for 120 V (NA), and 1.0 V for 230 V (EU) machines.</td><td>0: Normal
1: Light
2: Dark
3: Lighter
4: Darker
5: Lightest
6: Darkest</td></tr>
<tr><td>35</td><td>Image Adjustment at ID Level 1 †</td><td>Adjusts the image density at ID level 1 by changing the exposure lamp voltage.

<table><tr><th>SP Setting</th><th>Setting</th><th>Exposure Lamp</th><th>Note</th></tr><tr><td>0</td><td>Normal</td><td>–6 steps</td><td>Default</td></tr><tr><td>1</td><td>Darker</td><td>–8 steps</td><td></td></tr><tr><td>2</td><td>Darkest</td><td>–10 steps</td><td></td></tr></table>
This setting specifies the change relative to the base exposure lamp voltage Vo (SP48). 1 step of the lamp voltage equals 0.5 V for 120 V (NA), and 1.0 V for 230 V (EU) machines.</td><td>0: Normal
1: Darker
2: Darkest</td></tr>
<tr><td>36</td><td>Image Bias Adjustment at ID Level 5 †</td><td>Adjusts the development bias voltage used at ID level 5

0: Bias –40 V
1: Bias –80 V
2: Bias –120 V</td><td>0: Normal
1: Lighter
2: Lightest</td></tr>
<tr><td>38</td><td>Toner Density Adjustment †</td><td>Adjusts copy quality by changing the toner concentration inside the development unit.</td><td>0: Normal
1: Darker
2: Lighter
3: Darkest
4: Lightest</td></tr>
<tr><td>41</td><td>Lead Edge Erase Margin Adjustment †</td><td>Adjusts the lead edge erase margin.

0.5 mm per step (–4.0 mm to +3.5 mm).
See "Replacement and Adjustment - Copy Quality Adjustment" for details.</td><td>0 ~ 15
Default = 8
(2.5 mm from the leading edge)</td></tr>
</table>

<table>
<tr><th colspan="2">Mode No.</th><th>Function</th><th>Settings</th></tr>
<tr><td rowspan="2">42</td><td rowspan="2">Registration Adjustment †</td><td>Adjusts the registration.</td><td rowspan="2">0 ~ 15
Default = 8</td></tr>
<tr><td>0.5 mm per step (–4.0 mm to +3.5 mm). See "Replacement and Adjustment - Copy Quality Adjustment" for details.</td></tr>
<tr><td rowspan="2">43</td><td rowspan="2">Vertical Magnification Adjustment †</td><td>Adjusts magnification in the paper travel direction by changing the scanner speed.</td><td rowspan="2">0 ~ 31
Default = 16</td></tr>
<tr><td>0.2% per step (–3.2% to +3.0%). See "Replacement and Adjustment - Copy Quality Adjustment" for details.</td></tr>
<tr><td rowspan="2">44</td><td rowspan="2">Horizontal Magnification Adjustment (A184 copier only) †</td><td>Adjusts magnification perpendicular to the direction of paper travel, by changing the home position of the lens and mirrors.</td><td rowspan="2">0 ~ 31
Default = 16</td></tr>
<tr><td>0.2% per step (–3.2% to +3.0%). See "Replacement and Adjustment - Copy Quality Adjustment" for details.</td></tr>
<tr><td rowspan="2">48</td><td rowspan="2">Light Intensity Adjustment †</td><td>Adjusts the exposure lamp voltage.
<table>
<tr><th rowspan="2">SP Setting</th><th colspan="2">Lamp Voltage (V)</th></tr>
<tr><th>120 V (NA) Version</th><th>230 V (EU) Version</th></tr>
<tr><td>100</td><td>50.0</td><td>100</td></tr>
<tr><td>101</td><td>50.5</td><td>101</td></tr>
<tr><td>102</td><td>51.0</td><td>102</td></tr>
<tr><td>↓</td><td>↓</td><td>↓</td></tr>
<tr><td>150</td><td>75.0</td><td>150</td></tr>
<tr><td>↓</td><td>↓</td><td>↓</td></tr>
<tr><td>180</td><td>90.0</td><td>180 Max</td></tr>
<tr><td>↓</td><td>↓</td><td>—</td></tr>
<tr><td>193</td><td>96.5</td><td>—</td></tr>
<tr><td>194</td><td>97.0 Max</td><td>—</td></tr>
</table>
</td><td rowspan="2">120 V Machines
100~194
Default = 137

230 V Machines
100~180
Default = 128</td></tr>
<tr><td>Before performing this mode, clean the optics and clear the V_L correction (SP95). Open SP34 and return the setting to the normal value if it has been changed. Then adjust the light intensity using an OS-A4 Test Chart with the platen cover placed over it. After adjusting the light intensity, adjust the ADS Reference Voltage Adjustment (SP56).
See "Replacement and Adjustment - Copy Quality" for details on how to do this adjustment.</td></tr>
<tr><td rowspan="2">49</td><td rowspan="2">Fusing Temperature Adjustment</td><td>Adjusts the control temperature of the hot roller during copying.</td><td rowspan="2">175 ~ 195°C
Default=185°C</td></tr>
<tr><td>175°C to 195°C in 1°C steps.</td></tr>
</table>

Mode No.		Function	Settings
51	Exposure Lamp Voltage Display	Displays the current exposure lamp voltage. For 120V machines, the actual applied voltage = displayed value/2	0 ~ 225 V
		The exposure lamp turns on for 10 seconds when this mode is selected. Do not repeat more than 5 times, to avoid overheating the optics cavity. ***The Manual Image Density indicator is used to display the first digit.***	
52	Fusing Temperature Display †	Displays the fusing temperature detected by the fusing thermistor. Press the Start key to monitor the temperature during the normal copy cycle.	
		The Manual Image Density indicator is used to display the first digit.	
53	TD Sensor Target Control Voltage Adjustment	If the setting of SP30 (Toner Supply Mode Selection) is 1 or 3, this value is used for the TD sensor target voltage.	1 ~ 200 **Default = 97 (0.02 V per step)**
54	TD Sensor Gain Adjustment	When the TD Sensor initial setting is performed, this mode is adjusted automatically.	0 ~ 255 **Default = 153 (0.04 V per step)**
		Normally, this value should not be changed.	
55	TD Sensor Output Display †	Displays the TD sensor output voltage. Press the Start key to monitor the output voltage during the normal copy cycle. The output voltage will display "0" when this mode is accessed after turning on the main switch without making any copies.	**(0.02 V per step)**
		The Manual Image Density indicator is used to display the first digit.	
56	ADS Reference Voltage Adjustment	Adjusts the ADS reference voltage.	
		After adjusting the light intensity (SP48), place 5 sheets of A4 (LT) white paper on the exposure glass and select this mode. Adjust the ADS voltage to 2.5 ± 0.2 V using VR100 on the main control board. ***The Manual Image Density indicator is used to display the first digit.*** *See "Replacement and Adjustment - Copy Quality Adjustment" for details.*	
57	ADS Output Voltage Display †	Displays the ADS output voltage. Press the Start key to monitor the output voltage during the normal copy cycle.	
		For only this SP mode, the copies are made with the ADS mode (other SP modes use the manual ID level 3). ***The Manual Image Density indicator is used to display the first digit.***	

<table>
<tr><th colspan="2">Mode No.</th><th>Function</th><th>Settings</th></tr>
<tr><td rowspan="2">59</td><td rowspan="2">Optics Temperature Display †</td><td>Displays the optics temperature detected by the optics thermistor.</td><td rowspan="2"></td></tr>
<tr><td>Press the Start key to monitor the temperature during the normal copy cycle.</td></tr>
<tr><td>60</td><td>Drum Potential Measurement (With Paper)</td><td>Factory use only.</td><td></td></tr>
<tr><td>61</td><td>Drum Potential Measurement (Without Paper)</td><td>Factory use only.</td><td></td></tr>
<tr><td>62</td><td>VL Correction Interval</td><td>Sets the interval for VL correction. The exposure lamp voltage (SP48) is increased by 1 step at the set copy count interval.
<table>
<tr><th>SP Setting</th><th>Exposure Lamp</th><th>Note</th></tr>
<tr><td>0</td><td>+1 step/1500 copies</td><td>Default</td></tr>
<tr><td>1</td><td>+1 step/1000 copies</td><td></td></tr>
<tr><td>2</td><td>+1 step/2000 copies</td><td></td></tr>
<tr><td>3</td><td>+1 step/500 copies</td><td></td></tr>
<tr><td>4</td><td>+1 step/2500 copies</td><td></td></tr>
<tr><td>5</td><td>+1 step/250 copies</td><td></td></tr>
<tr><td>6</td><td>+1 step/3000 copies</td><td></td></tr>
<tr><td>7</td><td>+1 step/4000 copies</td><td></td></tr>
<tr><td>8</td><td>No Correction</td><td></td></tr>
</table>
1 step of the lamp voltage equals 0.5 V for N-American, and 1.0 V for European machines.</td><td>0 ~ 8
Default = 0</td></tr>
<tr><td rowspan="2">63</td><td rowspan="2">Forced Toner Supply</td><td>Forces the toner bottle to supply toner to the development unit.</td><td rowspan="2">0: 6 seconds
1: 3 seconds</td></tr>
<tr><td>This mode starts when the Start key is pressed, and stops automatically after the selected time. Use this mode to achieve standard image density when copy quality problems indicate low toner.</td></tr>
<tr><td>64</td><td>VR Correction Value</td><td>Sets the VR correction value.
Keep this at the default setting.</td><td>Default = 0</td></tr>
<tr><td>66</td><td>Imaging Unit Check Mode</td><td>Factory use only.</td><td></td></tr>
<tr><td rowspan="2">67</td><td rowspan="2">TD Sensor Initial Output Display</td><td>Displays the TD sensor initial setting output.</td><td rowspan="2">(0.02 V per step)</td></tr>
<tr><td>The Manual Image Density indicator is used to display the first digit.</td></tr>
</table>

Mode No.		Function	Settings
69	Imaging Unit Counter Display	Shows the total number of copies made by the Imaging Unit installed in the machine. *The counter is displayed as shown in the example below. To view the next two digits, press the Darker key.* For example: The copy count is 21548 Manual ID Indicator Copy Counter 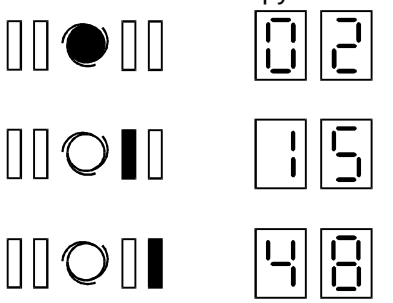	
77	Auto Shut Off (Energy Star) Selection	Selects the "Automatic Shut Off" mode. *The copier automatically shuts itself off at the auto shut off time selected (SP14).*	**0: Yes** 1: No
81	Factory Initialization	Factory use only.	
82	Data Communication	Factory use only.	
88	Total Copy Counter Display	Displays the total (electrical) copy counter. *The counter is displayed as shown in the example below. To view the next two digits, press the Darker key.* For example: The total copy count is 1087 Manual ID Indicator Copy Counter 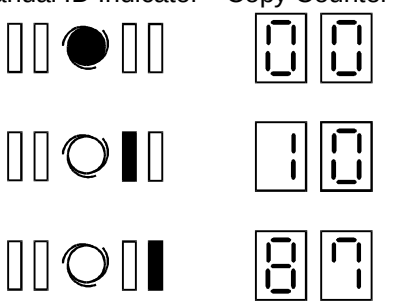 ***The mechanical total counter and the electrical total counter may not always display the same value, because of initial differences in the counter values.***	

Mode No.		Function	Settings
90	Factory Data and Counter Clear	Factory use only.	
91	Optics Cooling Fan Operation: 120 V (NA) machines only	**Not used. Keep the default setting.**	**0: No** 1: Yes
92	Imaging Unit Initialization Selection	For testing purposes only: Selects whether the Imaging Unit initialization procedure is performed when a new Imaging Unit is installed. ***Set this mode to 1 when you wish to check the copier condition with a new Imaging Unit, without the settings being changed by the Imaging Unit initialization procedure. After using this mode, do not forget to change the setting back to YES.*** ***If the setting was not changed before the SP mode was closed, the ID indicator will blink.***	**0: Yes** 1: No
95	V_L Correction Reset	Resets the exposure lamp data and counter for the V_L correction. To clear, enter "1" and press the Lighter key and the Darker key at the same time. *Before performing this mode, clean the optics parts. After performing this mode, do SP48 then SP56. See page 4-2 for details.*	**0: No** 1: Yes
96	Toner End Force Cancel	The Toner End condition is canceled forcibly. *By pressing the Lighter key to enter this SP mode, the toner end condition is canceled.*	
97	Service Call (E5) Condition Reset	Resets a service call (E5) condition. *Turn the main switch off and on to check if the service call condition is reset.*	
98	Total Counter Clear	Clears the total (electrical) counter. **Normally, this SP mode should not be performed.** *To clear, enter "1" and press the Lighter key and the Darker key at the same time.* *To avoid resetting the counter by mistake, the counter is reset only when the Lighter key and the Darker key are pressed at the same time.*	0: No 1: Yes
99	Clear All Memory	Clears all counters and returns all modes to the default settings. See the Clear All Memory Procedure in this section for more details. **Normally, this SP mode should not be performed.** This SP mode is required only when replacing the EEPROM, or when the copier malfunctions due to a damaged EEPROM. *To clear, enter "1" and press the Lighter key and the Darker key at the same time.* *To avoid resetting the memory by mistake, the memory is reset only when the Lighter key and the Darker key are pressed at the same time.*	**0: No** 1: Yes

2.6 CLEAR ALL MEMORY PROCEDURE

⚠ CAUTION

The Clear All Memory procedure (SP99) resets all the correction data for copy process control and all the software counters, and returns all modes and adjustments to the default settings.
Normally, this SP mode should not be performed.
This procedure is required only when replacing the EEPROM or when the copier malfunctions due to a damaged EEPROM.

1. Enter SP99.
2. Enter "1".
3. Press the Darker key and the Lighter key at the same time.

   NOTE: To avoid resetting the memory by mistake, the memory is reset only when the Darker key and the Lighter key are pressed at the same time.
4. Turn the main switch off and on.

– Recovering the machine after a memory reset –

⚠ CAUTION

If SP99 is performed, all the software counters for process control and the TD sensor initial setting data are reset. As a result, the old drum and the old developer cannot be used any more. Otherwise, dirty background and/or toner scattering will appear on copies sooner or later because proper process control will not be applied to the drum. After doing SP99, execute the following procedure to return the machine to its normal operating condition.

1. Clean the optics and inside the copier if necessary.
2. Install a new imaging unit and turn on the main switch. (The machine will perform the TD sensor initial setting automatically.)
3. Refer to the "SP MODE FACTORY SETTING DATA" sheet located behind the sub operation panel cover and enter the data that were stored in the following SP modes at the factory.
   - SP41: Lead Edge Erase Margin
   - SP42: Registration Adjustment
   - SP43: Vertical Magnification Adjustment
   - SP44: Horizontal Magnification Adjustment
   - SP48: Light Intensity Adjustment

4. Open SP3 (Destination Setting), and enter the setting according to the customer's environment.
5. Check the copy quality and the paper path and do any necessary adjustment (see Replacement and Adjustment - Copy Quality Adjustments).

3. SERVICE TABLES

3.1 TEST POINTS (Main Control Board)

Number	Label	Monitored Signal
TP101	(T. OUT)	Toner density sensor output

3.2 VARIABLE RESISTORS

Number	Location	Function
VR100	Main Control Board	Change the ADS voltage (2.5 ± 0.2 volts)
VRT	High Voltage Supply Board - CT/B/G	Change the charge and transfer corona voltage
VRB	High Voltage Supply Board - CT/B/G	Changes the standard development bias voltage
VRG	High Voltage Supply Board - CT/B/G	Changes the charge grid voltage

SECTION 5

PREVENTIVE MAINTENANCE

1. PREVENTIVE MAINTENANCE SCHEDULE

1.1 PM TABLE

NOTE: The amounts mentioned as the PM interval indicate the number of copies.

Symbol key: L: Lubricate R: Replace C: Clean I: Inspect A: Adjust

	EM	30 k	60 k	90 k	120 k	Notes
Optics						
Reflector		C	C	C	C	Silicone cloth
1st to 5th Mirrors		C	C	C	C	Silicone cloth
6th Mirror		C	C	C	C	Blower brush
Lens		C	C	C	C	Blower brush
Exposure Glass	C	C	C	C	C	Soft cloth dampened with alcohol or water
Platen Cover Sheet	C	C	C	C	C	Soft cloth dampened with water
Scanner Guide Rod		L	L	L	L	Launa oil
Scanner Guide Rail		L	L	L	L	G501
4th/5th Mirror Guide Rod	L					G501 (Lubricate if necessary)
4th/5th Mirror Guide Rail		L	L	L	L	G501
Around Drum						
Transfer Corona Unit	C	C	R	C	R	Cleaning tool
Transfer Guide Plate	C	C	C	C	C	Cleaning tool
End Blocks and Casings		C	C	C	C	Blower brush or dry cloth
Erase Lamp		C	C	C	C	Blower brush or dry cloth
QL		C	C	C	C	Blower brush or dry cloth
Paper Feed						
Pick-up Roller	C	C	C	R	C	Soft cloth dampened with water
Bottom Plate Pad		C	C	C	C	Soft cloth dampened with water
Relay Roller	C	C	C	C	C	Soft cloth dampened with water
Registration Roller	C	C	C	C	C	Soft cloth dampened with water
Paper Feed Guide		C	C	C	C	Soft cloth dampened with water
Fusing						
Hot Roller			R		R	
Pressure Roller			R		R	
Stripper Pawls		C	C	C	R	Suitable solvent

	EM	30 k	60 k	90 k	120 k	Notes
Fusing Entrance and Exit Guide Plates		C	C	C	C	Suitable solvent
Fusing Thermistor		C	C	C	C	Suitable solvent
Others						
ADS	A					Adjust when the lamp voltage is changed.
Exit and Registration Sensors			I		I	
Bearings			I		I	
Ozone Filter		R	R	R	R	

1.2 REGULAR PM PROCEDURE

Every 30 k → Every 60 k

1. Make a copy

Change the setting of SP19 from 0 to 1. Then make a copy of your test chart at manual image density level 3.

2. Optics (every 30 k)

1. Clean the reflector and 1st to 5th mirrors with a silicone cloth.
2. Clean the 6th mirror and lens with a blower brush.
3. Clean the exposure glass with a soft cloth dampened with alcohol or water.
4. Clear the platen cover sheet with a soft cloth dampened with water.
5. Lubricate the scanner guide rod with Launa oil.
6. Lubricate the scanner guide rail and the 4th/5th mirror guide rail with G501.

3. Around the drum (every 30 k)

1. Clean the corona wires and the transfer guide plate using the cleaning tool.
2. Clean the end blocks and casings with a blower brush or dry cloth.
3. Clean the erase lamp with a blower brush or dry cloth.
4. Clean the quenching lamp with a blower brush or dry cloth.

Replace the corona wires (every 60 k)



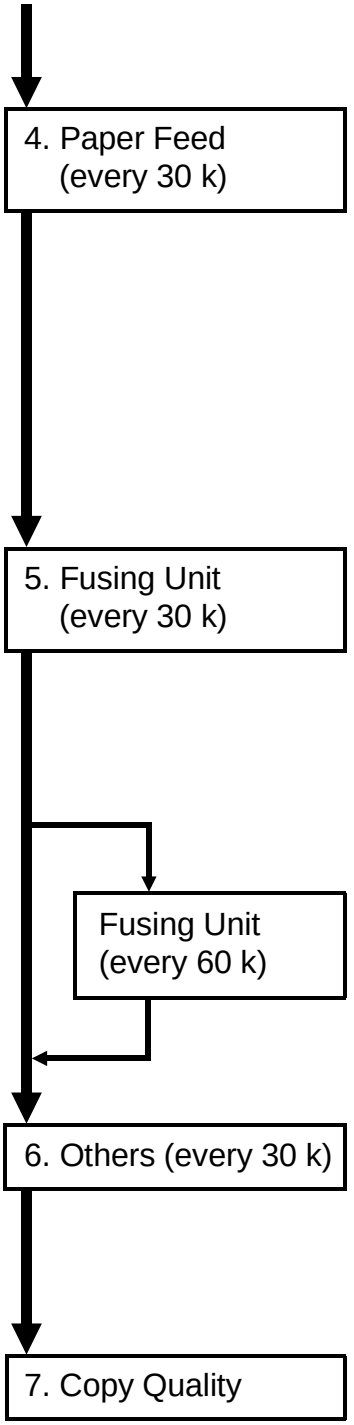

4. Paper Feed (every 30 k)

1. Clean the pick-up rollers with a soft cloth dampened with water. (Replace at every 90 k.)
2. Clean the bottom plate pad with a soft cloth dampened with water.
3. Clean the relay roller and the registration roller with a soft cloth dampened with water.
4. Clean the paper feed guide with a soft cloth dampened with water.

5. Fusing Unit (every 30 k)

1. Clean the stripper pawls with a suitable solvent. (Replace at every 120 k.)
2. Clean the fusing entrance and exit guide plates with a suitable solvent.
3. Clean the fusing thermistor with a suitable solvent.

Fusing Unit (every 60 k)

1. Replace the hot roller.
2. Replace the pressure roller.

6. Others (every 30 k)

1. Replace the ozone filter.
2. Inspect the exit and registration sensors.
3. Inspect the bearings.

7. Copy Quality

1. Reset the V_L correction (SP95).
2. Make a copy of a test chart at manual image density level 3. Perform the light intensity adjustment (SP48) if necessary.
3. Return the setting of SP19 from 1 to 0.
4. Perform the ADS reference voltage adjustment (SP56).

2. SPECIAL TOOLS AND LUBRICANTS

Part Number	Description	Q'ty
A184 9501	Scanner Positioning Pin (2 pcs/set)	1
5214 9500	Test Chart - OS-A4 (10 pcs/set)	1
5442 9103	Launa OIl	1
5203 9501	Silicone Grease G-510	1
5420 9507	Digital Multimeter	1
5442 9101	Setting Powder	1



SECTION 6

REPLACEMENT AND ADJUSTMENT

1. EXTERIOR

1.1 OPERATION PANEL POSITION CHANGE

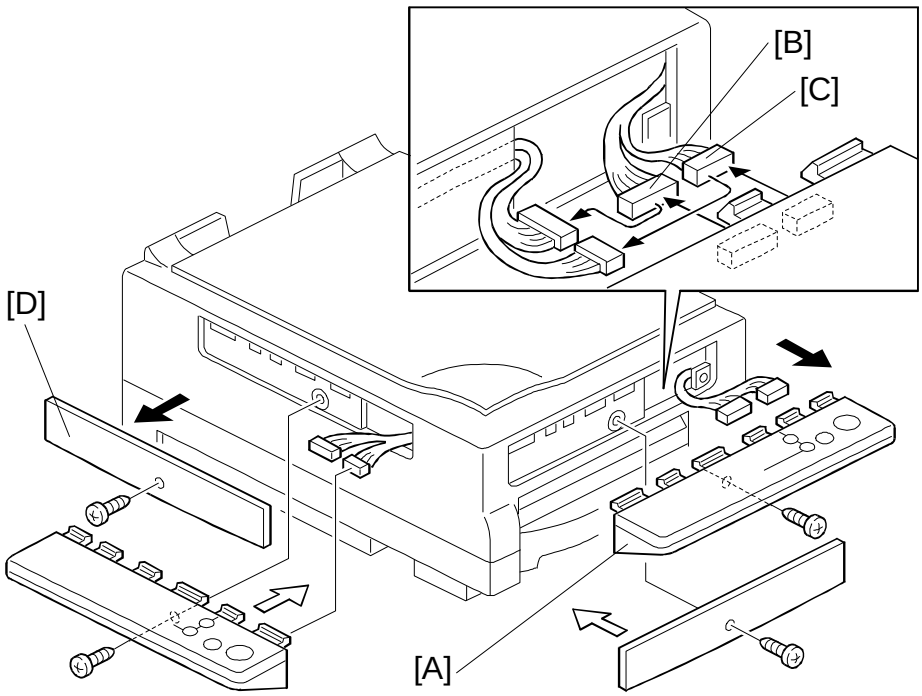

A184R500.wmf

1. Remove the operation panel [A] (1 screw and 2 connectors).
2. Connect the 2 connectors [B] and [C].
3. Remove the side cover [D] (1 screw).
4. Install the side cover [D] at the other position (1 screw).
5. Connect the two connectors of the operation panel, then set the operation panel and secure it with the screw removed in step 1.

1.2 PLATEN COVER POSITION CHANGE

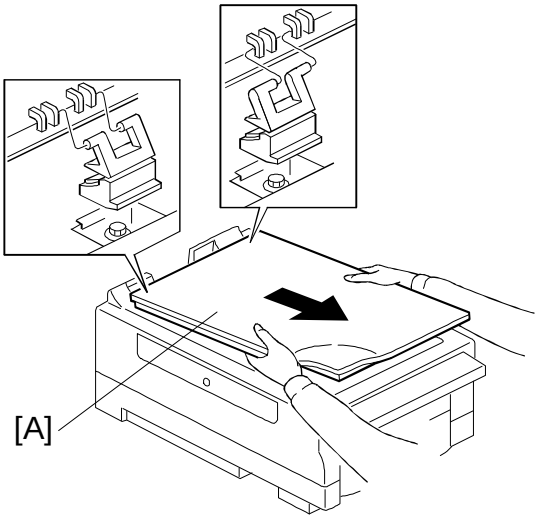

A184R536.wmf

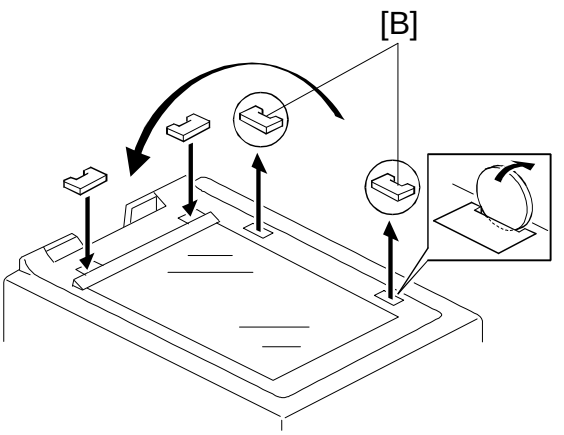

A184R537.wmf

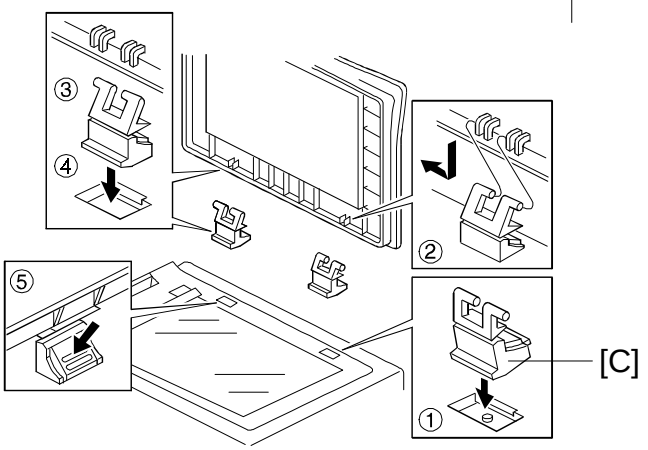

A184R538.wmf

1. Hold the platen cover [A] as shown and pull it in the direction of the arrow.
2. Remove the two caps [B] from the main body. Then fix the caps over the slots where the platen cover was set.
3. Put one of the hinges [C] into one of the openings in the copier. Then fix the hinge to the platen cover and lean the cover back until it clicks.
4. Attach the other hinge to the platen cover. Hold the platen cover and lower the hinge into the opening. Then push the hinge into the opening with your finger until it locks in position.

1.3 EXTERIOR COVER/EXPOSURE GLASS REMOVAL

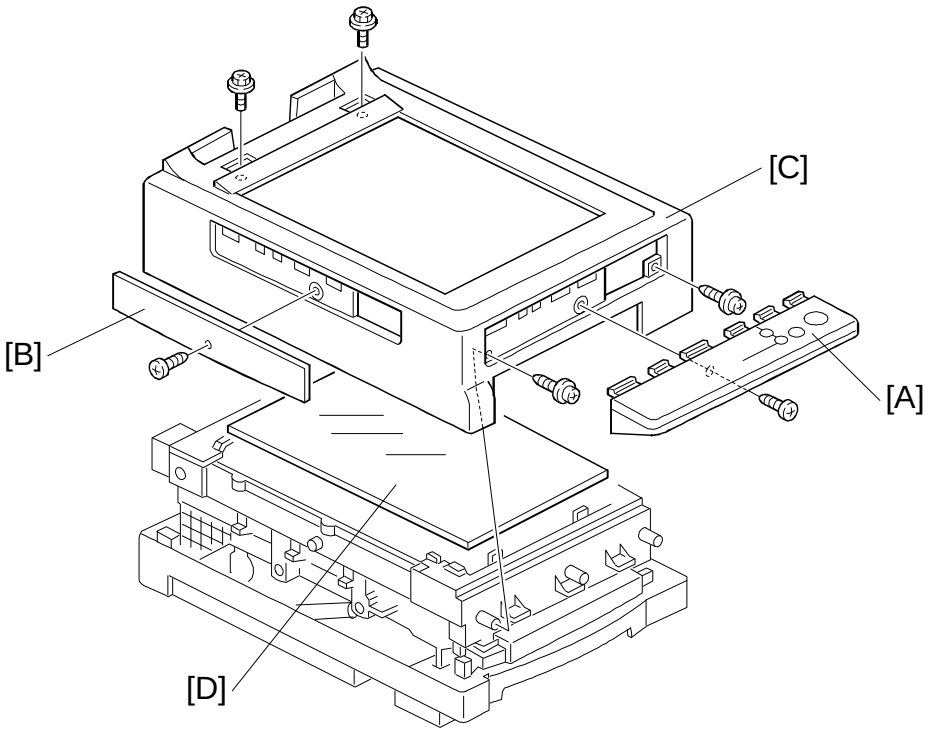

A184R501.wmf

1. Remove the operation panel [A] (1 screw and 2 connectors), side cover [B], and the platen cover.
2. Remove the upper cover [C] (4 screws).
3. Remove the exposure glass [D].

NOTE: When removing or reinstalling the upper cover, take care not to hook the harness onto the projections inside the cover.

1.4 UPPER UNIT STOPPER RELEASE

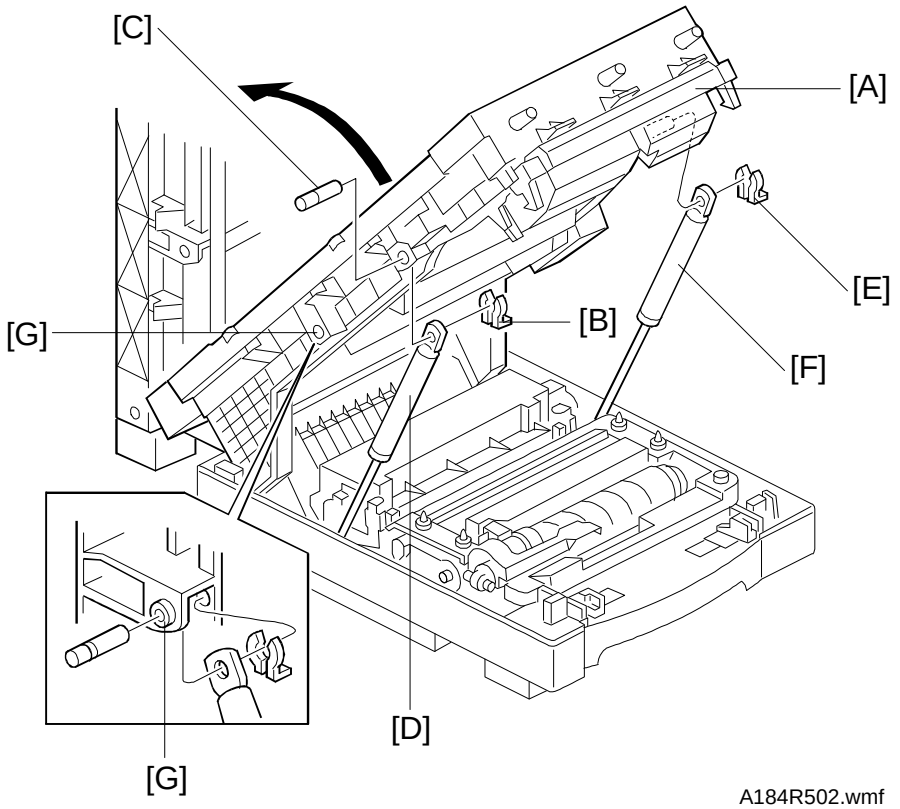

1. Remove the upper cover. (See Exterior Cover/Exposure Glass Removal.)
2. Remove the exposure glass.
3. Release the stopper and open the upper unit [A].
4. Remove the snap ring [B] and remove the pin [C] to release the arm [D].
5. While holding the upper unit, remove the snap ring [E] and release the arm [F] from the pin.

   NOTE: If the upper unit is opened more than 90 degrees, the exterior cover of the lower unit might be damaged.
6. To keep the position of the upper unit, fix the arm [D] to position [G] with the pin and snap ring removed in step 4.

2. OPTICS

2.1 1ST SCANNER REMOVAL

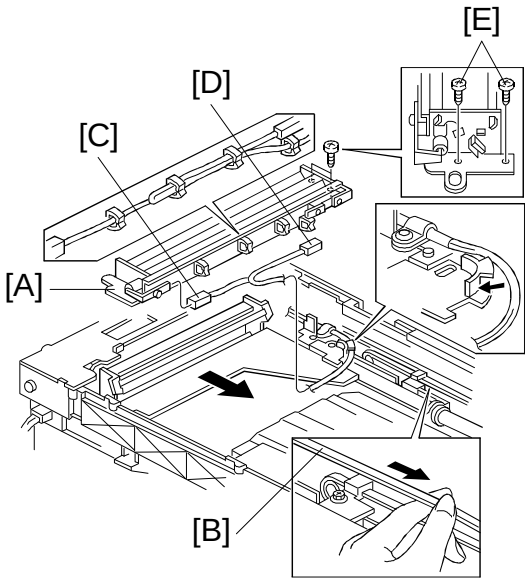

A184R503.wmf

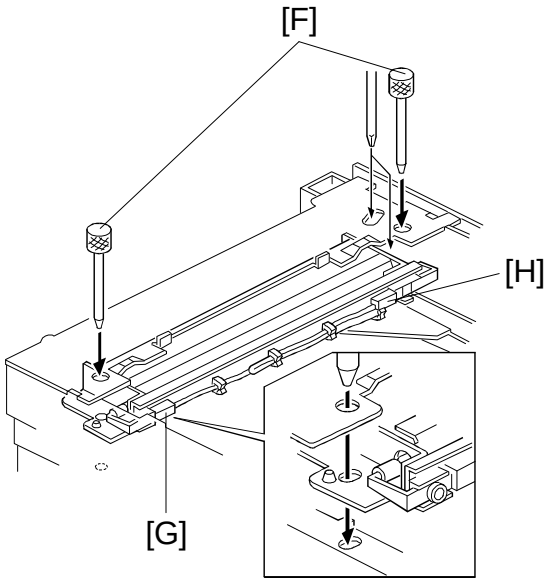

A184R504.wmf

1. Remove the upper cover and the exposure glass. (See Exterior Cover/Exposure Glass Removal.)
2. Slide the 1st scanner [A] about 100 mm towards the direction of the arrow.

   NOTE: Move the 1st scanner by holding the scanner belt [B]. Handling the 1st scanner will deform the frame.
3. Disconnect the connectors [C] and [D] and the clamps.
4. Remove the 1st scanner (2 screws [E]).

- Reinstallation -

1. Set the 1st scanner with 2 screws [E]. (Do not fully tighten the screws.)
2. Slide the 1st scanner to the home position and insert the two positioning pins [F].

   NOTE: Scanner positioning pins are available as a service part. P/N: A184 9501 (See the parts catalog.)
3. Connect the two connectors [G] and [H] and secure the harness to the clamps.
4. Tighten the two screws [E] to secure the 1st scanner.
5. Install the exposure glass and exterior covers. Then, check the image quality.

2.2 2ND MIRROR REPLACEMENT

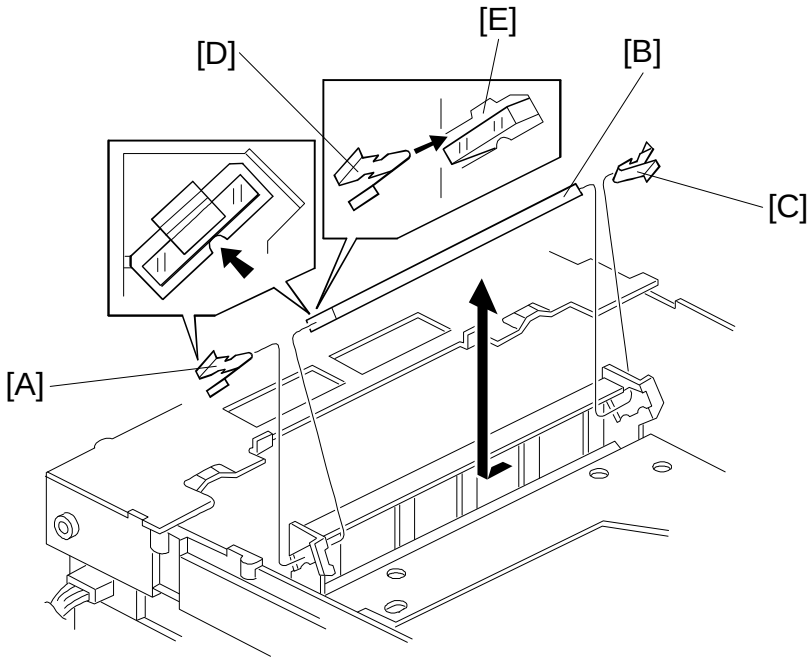

A184R505.wmf

1. Remove the upper cover and the exposure glass. (See Exterior Cover/Exposure Glass Removal.)
2. Slide the 1st scanner about 200 mm from the home position.

   NOTE: Move the 1st scanner by holding the scanner belt. Handling the 1st scanner will deform the frame.
3. Remove the spring plate [A] securing the 2nd mirror [B].
4. Slide the 2nd mirror and remove the spring plate [C].
5. Remove the 2nd mirror.

- Reinstallation -

1. Cut off both ends of the protection sheet covering the new 2nd mirror.
2. Put the ends of the 2nd mirror into the cutouts in the 2nd scanner bracket.

   NOTE: Make sure that the reflecting surface faces the lens.
3. While holding the mirror, set one spring plate [C]. Then set the other spring plate [A].

NOTE: 1) Make sure that the notches [D] in the spring plates are correctly set at position [E].

2) Do not touch the reflecting surface with bare hands.

2.3 3RD MIRROR REPLACEMENT

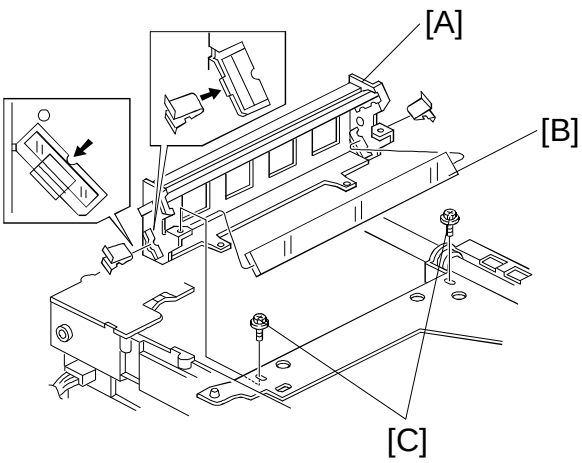

A184R506.wmf

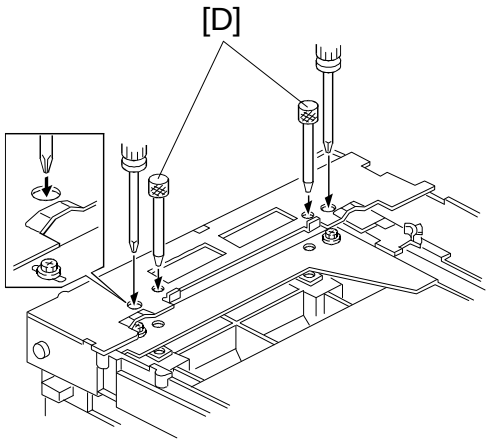

A184R507.wmf

1. Remove the upper cover and the exposure glass. (See Exterior Cover/Exposure Glass Removal.)
2. Slide the 1st scanner about 200 mm from the home position.

   NOTE: Move the 1st scanner by holding the scanner belt. Handling the 1st scanner will deform the frame.
3. Remove the 1st scanner. (See 1st Scanner Removal.)
4. Remove the 2nd scanner [A] (2 screws [C]).
5. Remove the 3rd mirror [B]. (Refer to steps 3 to 5 of 2nd Mirror Removal.)

- Reinstallation -

1. Install the 3rd mirror on the 2nd scanner unit. (Refer to - Reinstallation - of 2nd Mirror Replacement.)
2. Put back the two screws [C]. (Do not fully tighten the screws.)
3. Slide the 2nd scanner unit to the home position and insert the two positioning pins [D].

   NOTE: Scanner positioning pins are available as a service part. P/N: A184 9501 (See the parts catalog.)
4. Tighten the 2 screws to fix the 2nd scanner position.
5. Install the 1st scanner. (Refer to 1st Scanner Removal.)
6. Install the exposure glass and exterior covers. Then, check the image quality.

2.4 LENS AND 4TH/5TH MIRROR POSITION ADJUSTMENT (A184 model only)

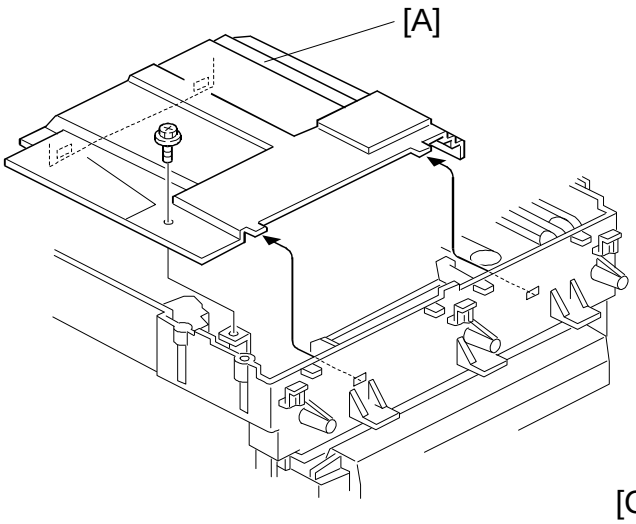

A184R547.wmf

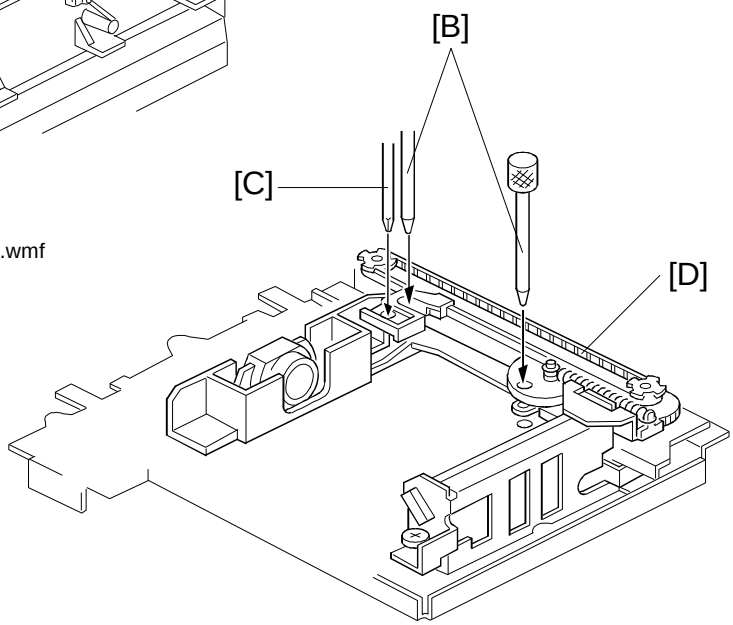

A184R509.wmf

1. Remove the exterior covers and the exposure glass. (See Exterior Cover/Exposure Glass Removal.)
2. Remove the lens cover [A] (1 screw).
3. Insert the two positioning pins [B]. If the pins cannot be inserted, loosen the screw [C] and adjust the lens unit position.

   NOTE: 1) Use the timing belt [D] to move the lens unit.

   2) Scanner positioning pins are available as a service part. P/N: A184 9501 (See the parts catalog.)

2.5 4TH MIRROR REMOVAL

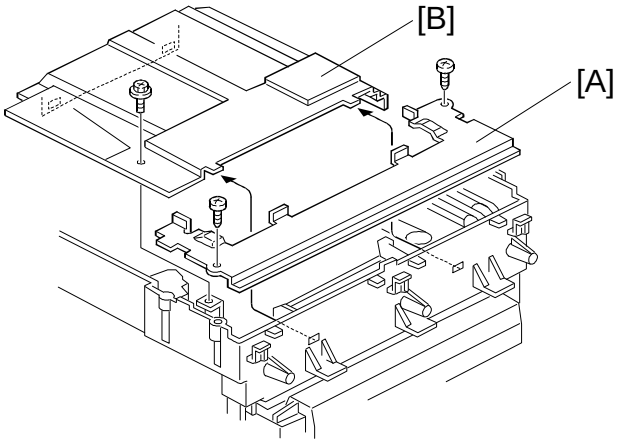

A184R508.wmf

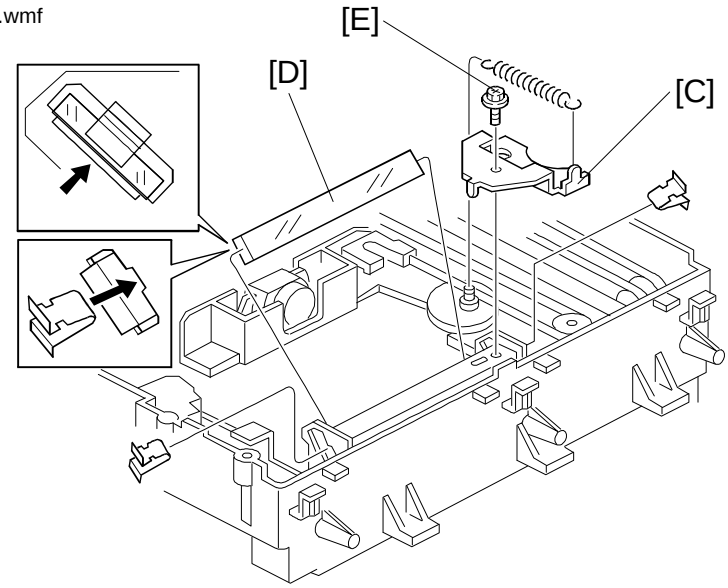

A184R510.wmf

1. Remove the exterior covers. (See Exterior Cover/Exposure Glass Removal.)
2. Remove the support plate [A] (2 screws).
3. Remove the lens cover [B] (1 screw).
4. Remove the 4th mirror bracket [C] (1 spring and 1 screw).
5. Remove the 4th mirror [D]. (Refer to steps 3 to 5 of 2nd Mirror Removal.)

NOTE: When reinstalling the screw [E], do not tighten it strongly. Otherwise, the frame will bend.

2.6 5TH MIRROR REMOVAL

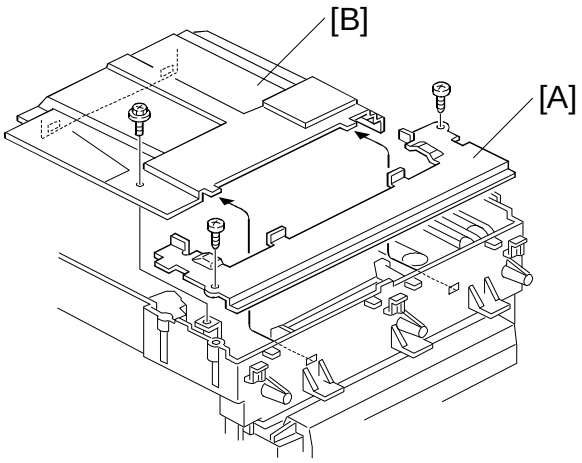

A184R508-2.wmf

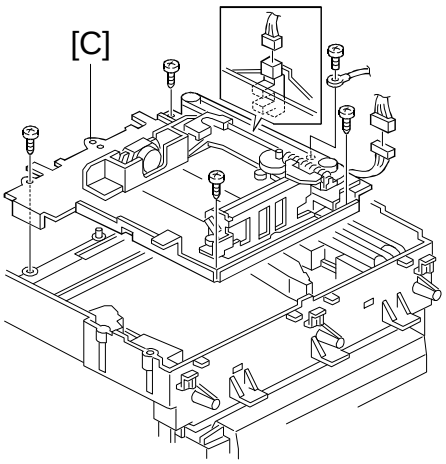

A184R511.wmf

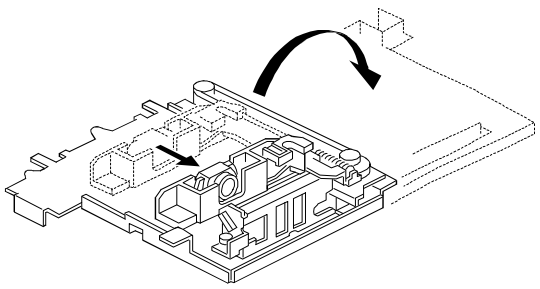

A184R512.wmf

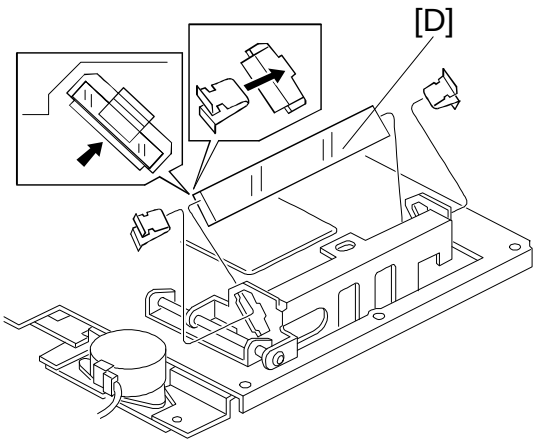

A184R513.wmf

1. Remove the exterior covers. (See Exterior Cover/Exposure Glass Removal.)
2. Remove the support plate [A] (2 screws).
3. Remove the lens cover [B] (1 screw).
4. Remove the lens unit base [C] (5 screws and 2 connectors).

   NOTE: 1) Do not touch the mirror surface or lens with bare hands.
   2) Place the lens unit base on a soft cloth, so as not to damage the 6th mirror.
5. Turn the lens unit base upside down. Then remove the 5th mirror [D]. (Refer to steps 3 to 5 of 2nd Mirror Removal.)

   NOTE: Before turning the lens unit base over, confirm that the lens unit is in the home position. Otherwise, the lens unit will drop.

2.7 LENS AND MIRROR MOTOR REMOVAL

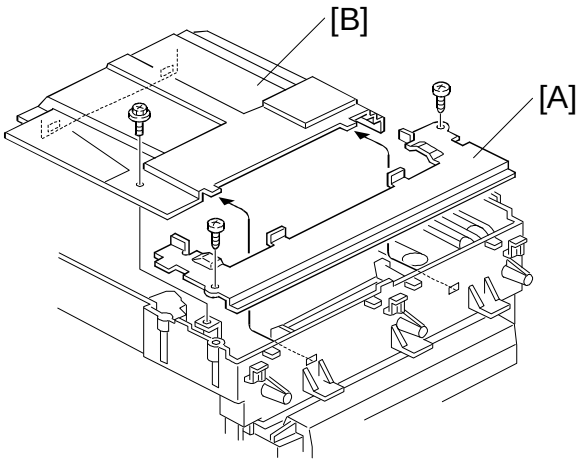

A184R508-3.wmf

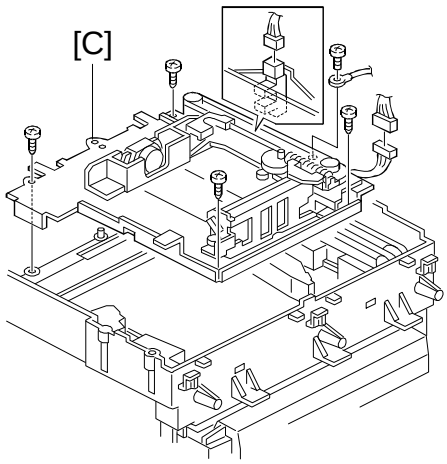

A184R511-2.wmf

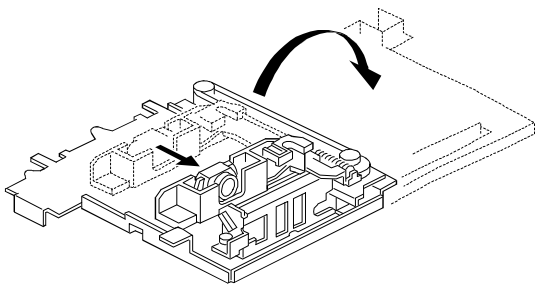

A184R512-2.wmf

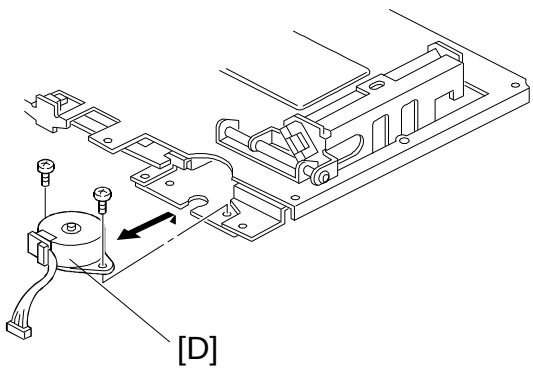

A184R539.wmf

1. Remove the exterior covers. (See Exterior Cover/Exposure Glass Removal.)
2. Remove the support plate [A] (2 screws).
3. Remove the lens cover [B] (1 screw).
4. Remove the lens unit base [C] (5 screws and 2 connectors).

   NOTE: 1) Do not touch the mirror surface or lens with bare hands.
   2) Place the lens unit base on a soft cloth, so as not to damage the 6th mirror.
5. Turn the lens unit base upside down. Then remove the lens and mirror motor [D] (2 screws).

   NOTE: Before turning the lens unit base over, confirm that the lens unit is in the home position. Otherwise, the lens unit will drop.

3. IMAGING UNIT

3.1 IMAGING UNIT REMOVAL

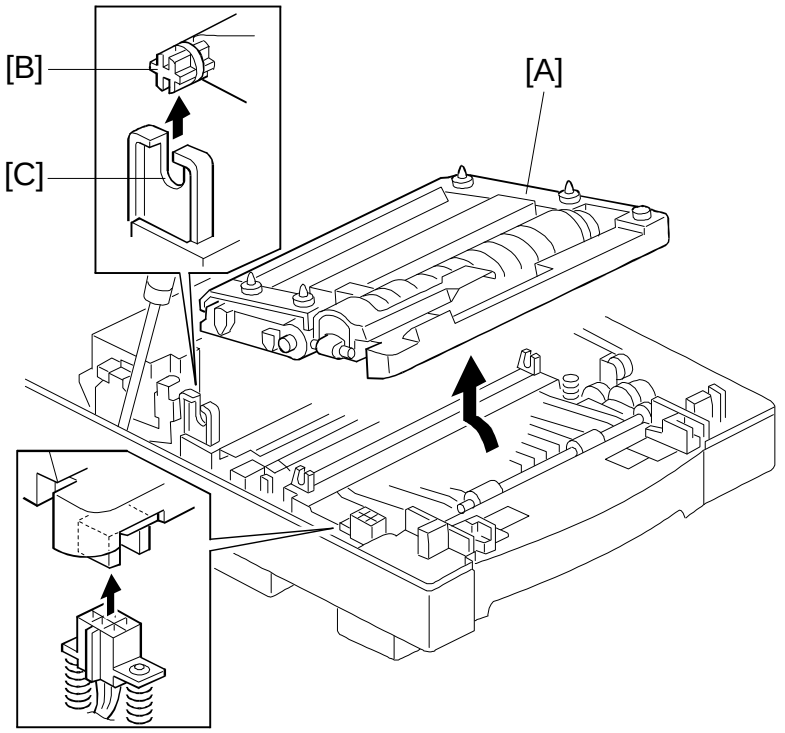

A184R515.wmf

1. Open the upper unit.
2. Pull up the imaging unit [A], releasing the projections [B] from the hooks [C].

   NOTE: 1) Be careful not to damage the drum surface.

   2) Do not touch the drum surface with bare hands.
3. After removing the imaging unit from the main body, cover the unit with sheets of paper to prevent the drum from being exposed.

3.2 CHARGE CORONA UNIT REMOVAL

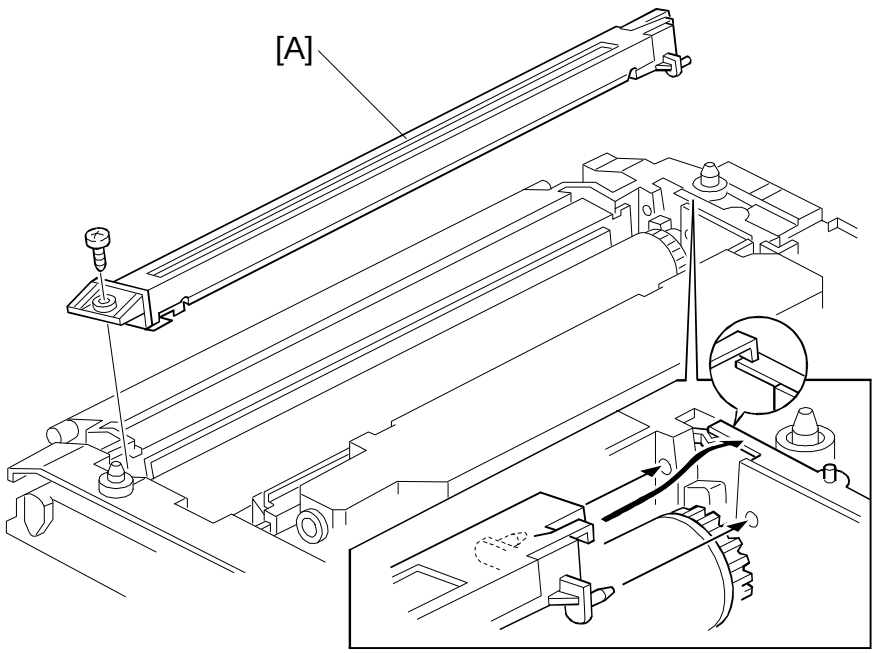

A184R516.wmf

1. Remove the imaging unit. (See Imaging Unit Removal.)
2. Remove the charge corona unit [A] (1 screw).

NOTE: When removing the charge corona unit, be careful not to scratch the drum surface.

3.3 CLEANING BLADE REPLACEMENT

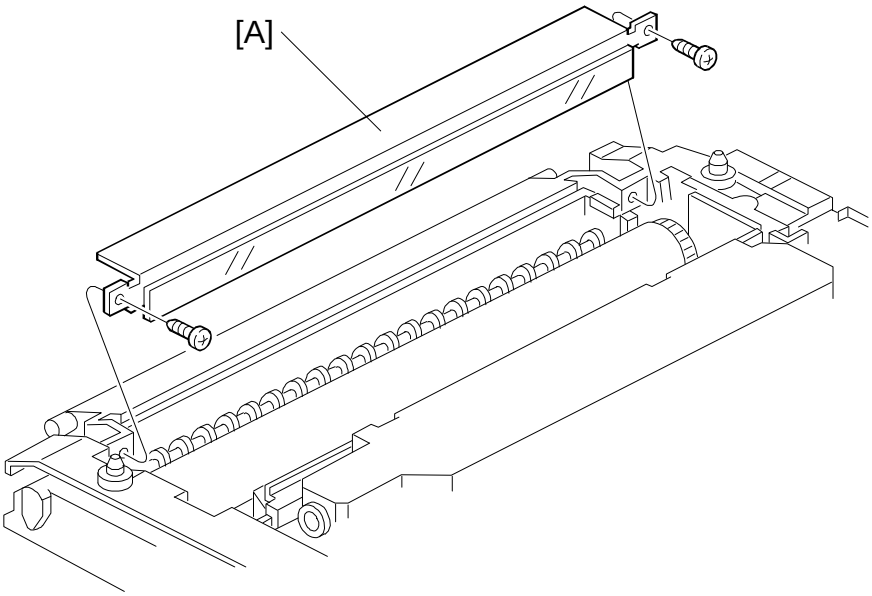

A184R535.wmf

1. Remove the imaging unit. (See Imaging Unit Removal.)
2. Remove the charge corona unit. (See Charge Corona Unit Removal.)
3. Replace the cleaning blade [A] (2 screws).

NOTE: 1) When removing the cleaning blade, be careful not to scratch the drum surface.

2) When installing a new cleaning blade, apply setting powder on the edge of the cleaning blade.

4. PAPER FEED

4.1 PAPER FEED CLUTCH REPLACEMENT

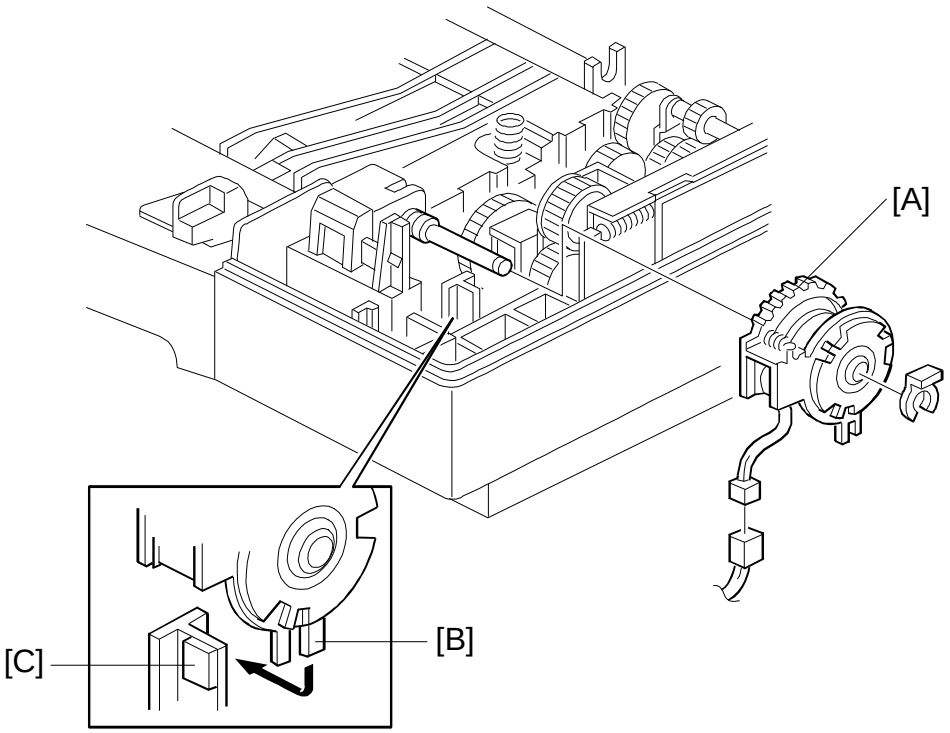

A184R517.wmf

1. Open the upper unit.
2. Remove the imaging unit. (See Imaging Unit Removal.)
3. Replace the paper feed clutch [A] (1 connector, 1 snap ring, and a spring).

   NOTE: When reinstalling a new clutch, engage the notch [B] with the stopper [C].

4.2 PAPER FEED ROLLER REMOVAL

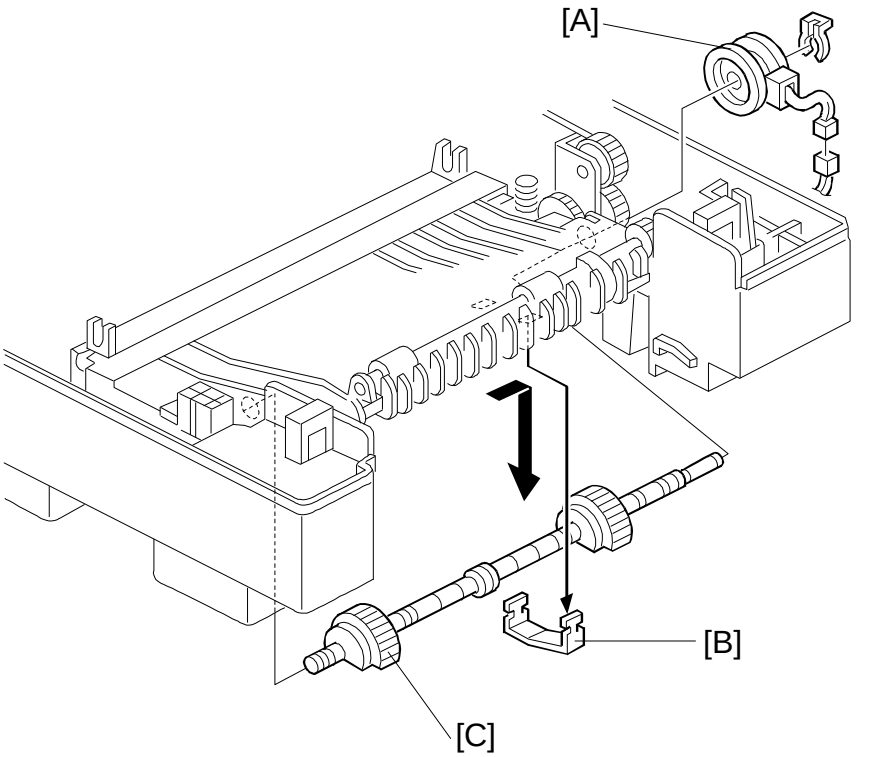

A184R518.wmf

1. Open the upper unit.
2. Remove the imaging unit. (See Imaging Unit Removal.)
3. Remove the paper feed tray.
4. Remove the paper feed clutch [A]. (See Paper Feed Clutch Removal.)
5. Remove the securing spring plate [B].
6. Slide the paper feed roller assembly [C] to the rear side, then pull down to remove it (arrow direction).

   NOTE: Do not touch the roller with bare hands.

- Reinstallation -

1. Set the paper feed roller assembly so that the flat side of the semicircular feed rollers faces down.
2. Slide the paper feed roller assembly to the front side until it clicks.

4.3 REGISTRATION SOLENOID REPLACEMENT

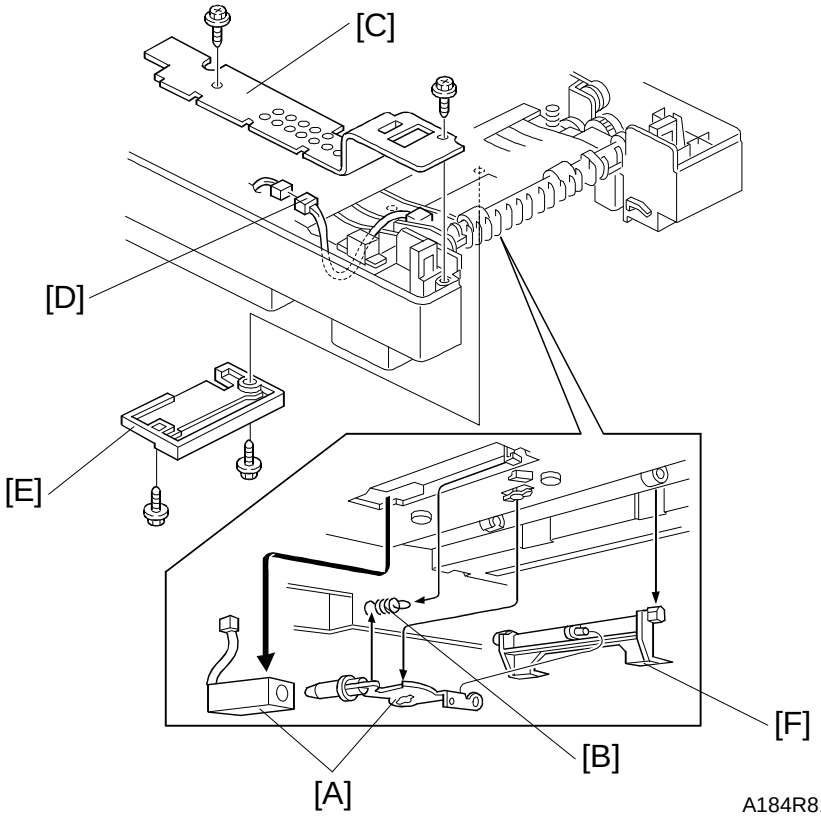

NOTE: When replacing the registration solenoid [A], the plunger spring [B] should be replaced.

1. Open the upper unit.
2. Remove the imaging unit. (See Imaging Unit Removal.)
3. Remove the paper feed tray.
4. Remove the harness cover [C] (2 screws).
5. Disconnect the connector [D].
6. Remove the registration solenoid cover [E] (2 screws).
7. Remove the stopper [F].
8. Replace the registration solenoid and the plunger spring.

   NOTE: 1) When reinstalling the registration solenoid, make sure that the harness side of the solenoid is facing upwards.

   2) When reinstalling the new plunger spring, make sure not to stretch it by more than 21.0 mm.

5. FUSING

5.1 FUSING UNIT REMOVAL

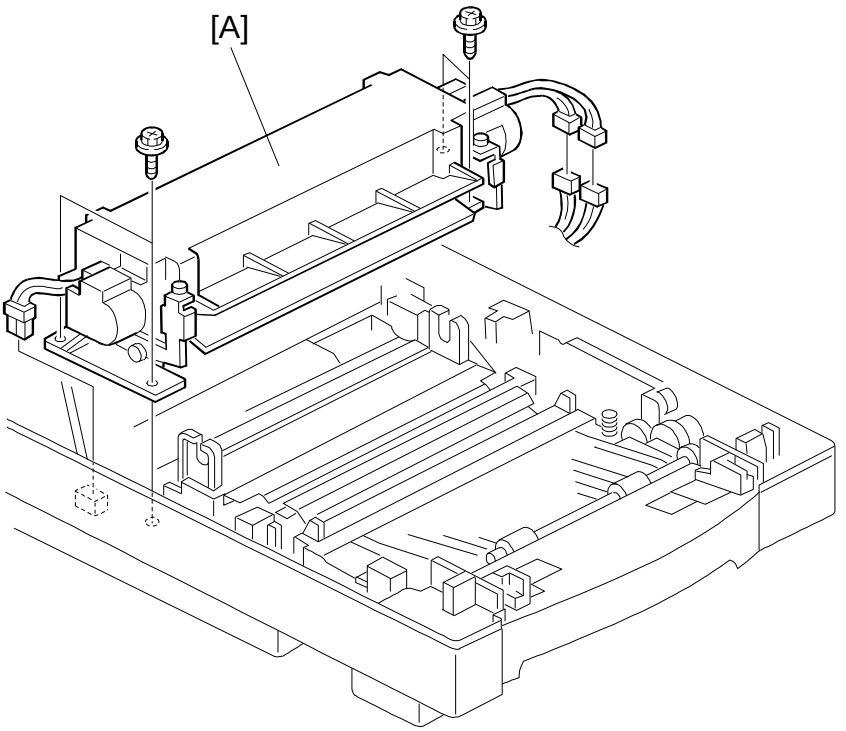

A184R520.wmf

1. Remove the upper cover and the exposure glass. (See Exterior Cover/Exposure Glass Removal.)
2. Release the upper unit stopper. (See Upper Unit Stopper Release.)
3. Remove the fusing unit [A] (4 screws and 3 connectors).

5.2 PRESSURE ROLLER REPLACEMENT

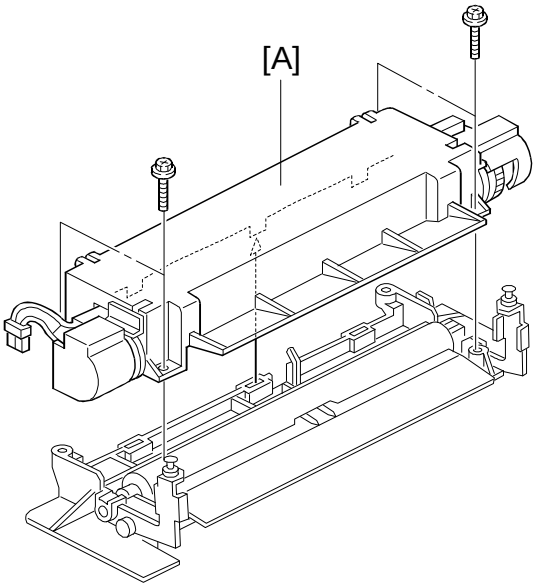

A184R521.wmf

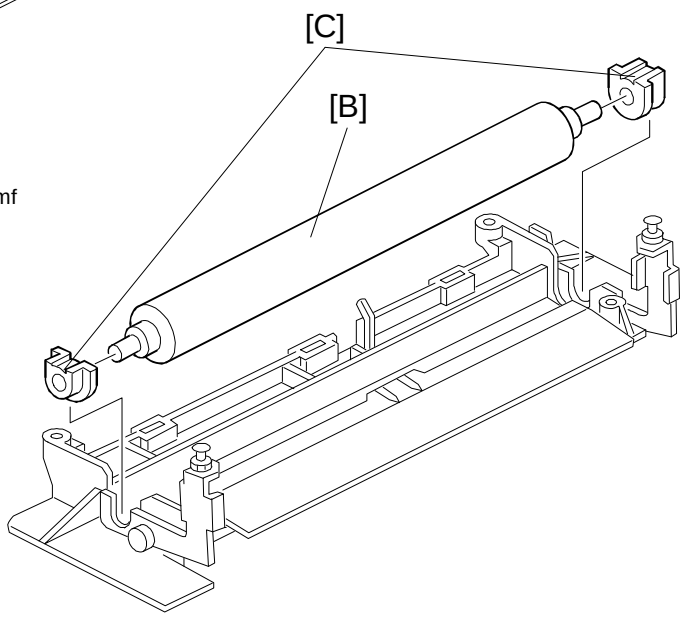

A184R522.wmf

NOTE: When reinstalling, make sure both right and left fusing arms are positioned correctly as shown above.

1. Release the upper unit stopper. (See Upper Unit Stopper Release.)
2. Remove the fusing upper unit [A] (4 screws).
3. Remove the pressure roller [B] with the two bearings [C].
4. Replace the pressure roller.

   NOTE: Do not touch the pressure roller surface with bare hands.

5.3 FUSING LAMP REPLACEMENT

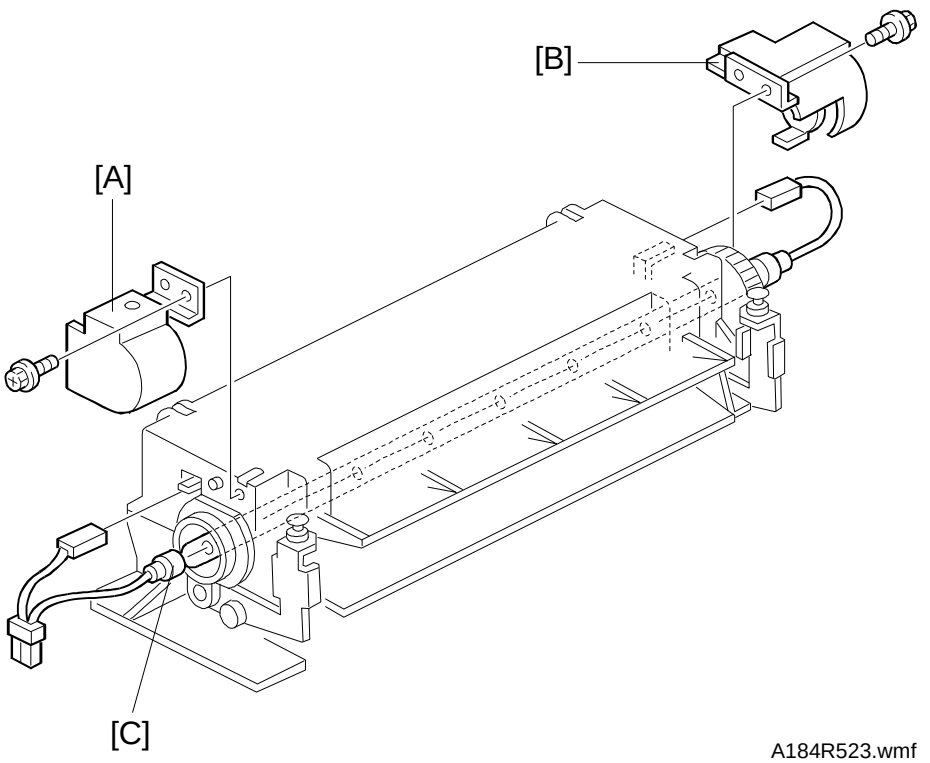

1. Open the upper unit.
2. Remove the front and rear lamp holders [A] and [B] (1 screw each).
3. Disconnect the three connectors, and replace the fusing lamp [C].

NOTE: 1) Do not touch the fusing lamp with bare hands.
2) When installing a new fusing lamp, set the fusing lamp connectors correctly as shown in the illustration.
3) Make sure that both fusing lamp insulators are properly set in the holders.

5.4 FUSING EXIT PAWL REPLACEMENT

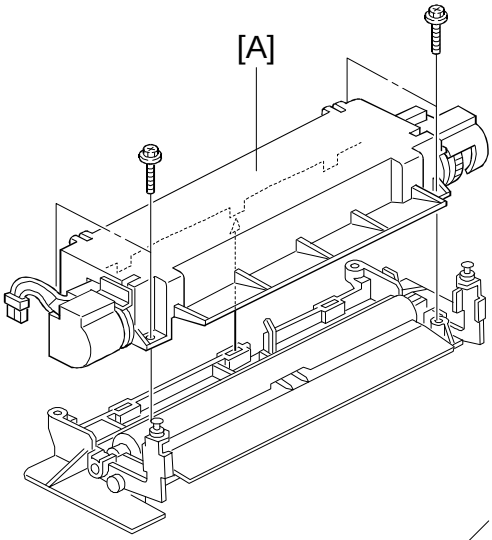

A184R521.wmf

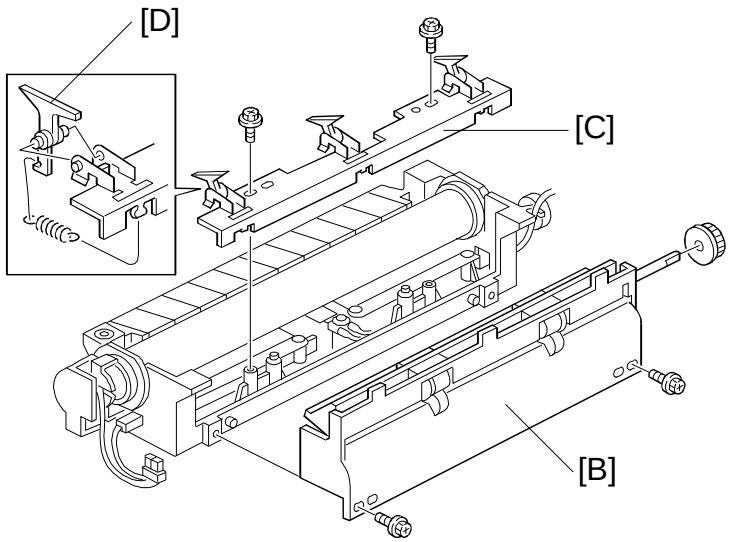

A184R524.wmf

1. Release the upper unit stopper. (See Upper Unit Stopper Release.)
2. Remove the fusing upper unit [A] (4 screws and 2 connectors).
3. Remove the fusing exit guide [B] (2 screws).
4. Remove the fusing exit pawl bracket [C] (2 screws).
5. Replace the fusing exit pawls [D] (1 spring each).

5.5 HOT ROLLER REPLACEMENT

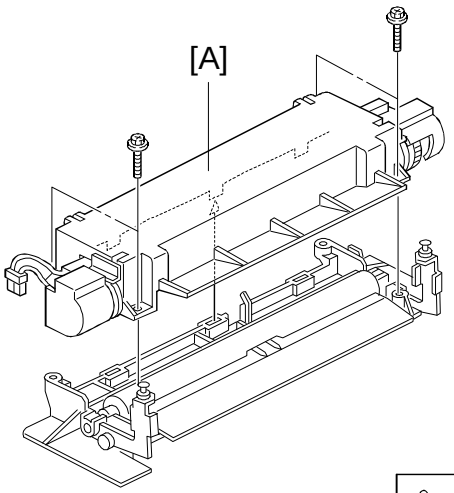

A184R521.wmf

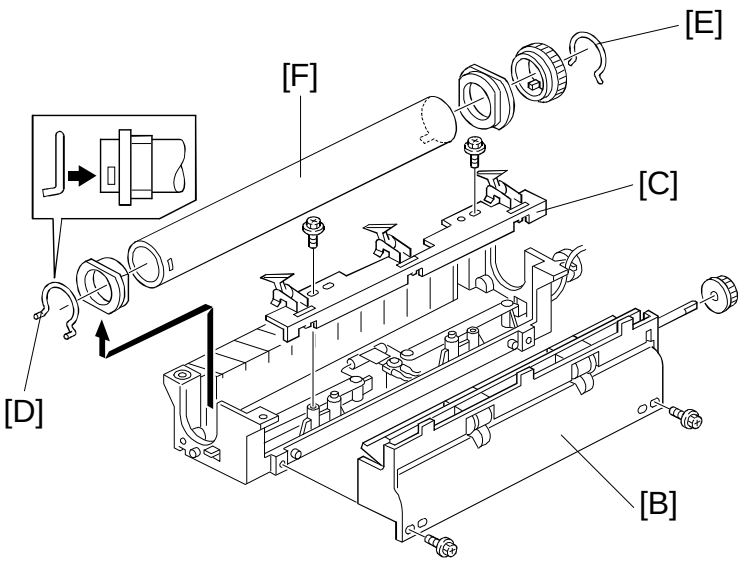

A184R525.wmf

1. Release the upper unit stopper. (See Fusing Unit Removal.)
2. Remove the fusing upper unit [A] (4 screws and 2 connectors).
3. Remove the fusing lamp. (See Fusing Lamp Replacement.)
4. Remove the fusing exit guide [B] (2 screws).
5. Remove the fusing exit pawl bracket [C] (2 screws).
6. Remove the front [D] and rear [E] C-rings. Then replace the hot roller [F].

NOTE: 1) The shape of the left C-ring [D] is different from the right C-ring [E]. The ends of the left C-ring are bent as shown.

2) When reinstalling the exit pawls, be careful not to scratch the hot roller surface.

3) When reinstalling the fusing exit guide, be careful not to damage the exit sensor.

4) Do not touch the hot roller surface with bare hands.

5.6 FUSING THERMISTOR REPLACEMENT

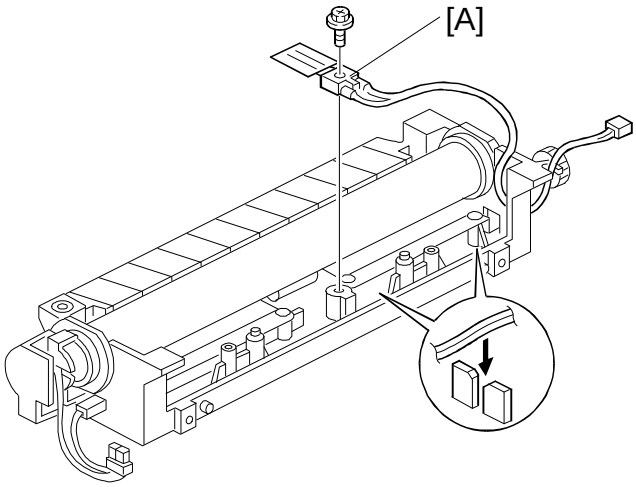

A184R526.wmf

1. Remove the fusing exit pawl bracket (2 screws). (Follow to steps 1 to 4 of Fusing Exit Pawl Replacement.)
2. Replace the fusing thermistor [A] (1 screw).

5.7 FUSING THERMOFUSE REPLACEMENT

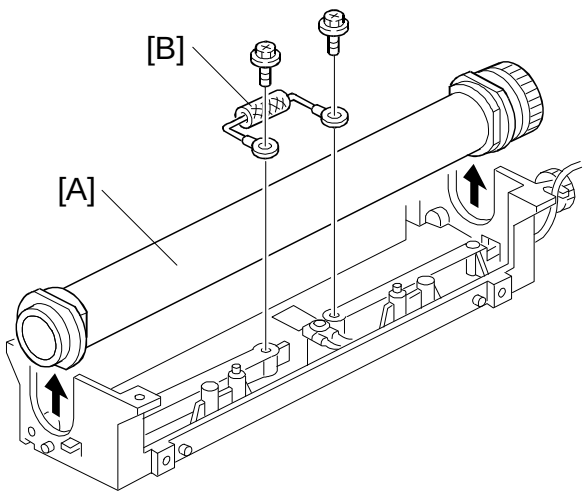

A184R527.wmf

1. Remove the fusing unit. (See Fusing Unit Removal.)
2. Remove the hot roller [A]. (See Hot Roller Replacement.)
3. Remove the fusing thermofuse [B] (2 screws).

6. OTHERS

6.1 TRANSFER CORONA UNIT REMOVAL

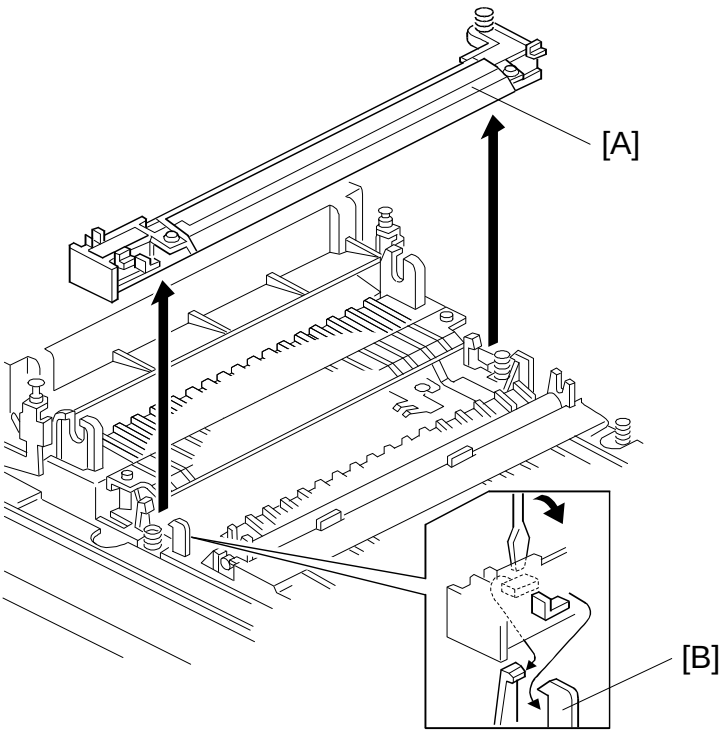

A184R528.wmf

1. Remove the imaging unit. (See Imaging Unit Removal.)
2. Push down both ends of the transfer corona unit [A]. Then release the front and rear hooks [B].
3. Remove the transfer corona unit.

6.2 MAIN DRIVE UNIT REMOVAL

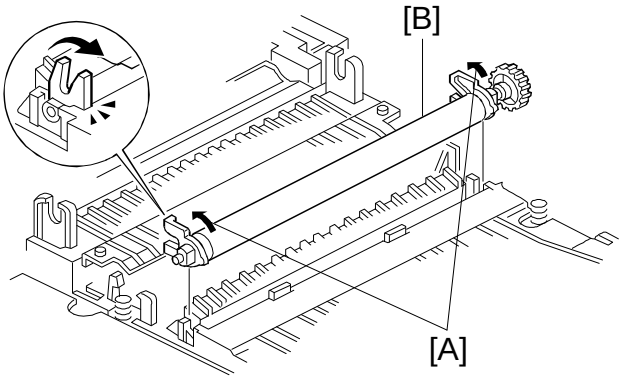

A184R529.wmf

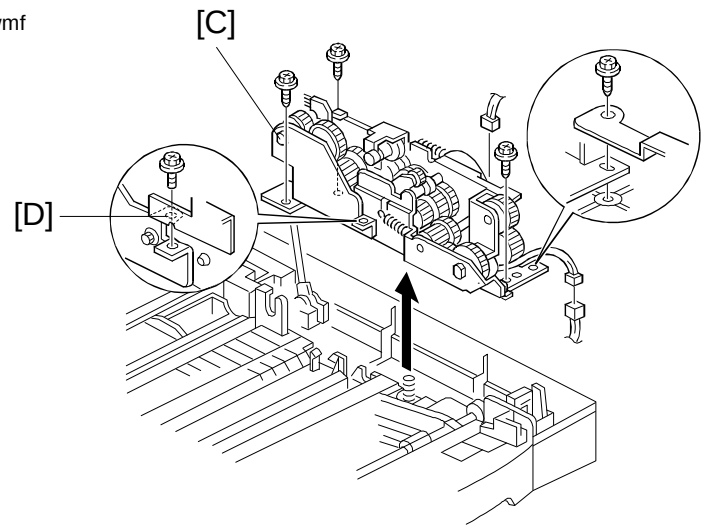

A184R530.wmf

1. Remove the exterior covers. (See Exterior Cover/Exposure Glass Removal.)
2. Release the upper unit stopper. (See Upper Unit Stopper Release.)
3. Remove the imaging unit. (See Imaging Unit Removal.)
4. Remove the fusing unit. (See Fusing Unit Removal.)
5. Remove the transfer corona unit. (See Transfer Corona Unit Removal.)
6. Turn the front and rear bearings of the relay roller in the direction of the arrows [A]. Then remove the relay roller [B].

   NOTE: When reinstalling the relay roller, turn each bearing until it clicks.
7. Remove the main drive unit [C] (2 connectors and 5 screws).

   NOTE: When reinstalling, set the main drive unit so that the spring plate [D] is on the main motor bracket.

6.3 MAIN MOTOR REMOVAL

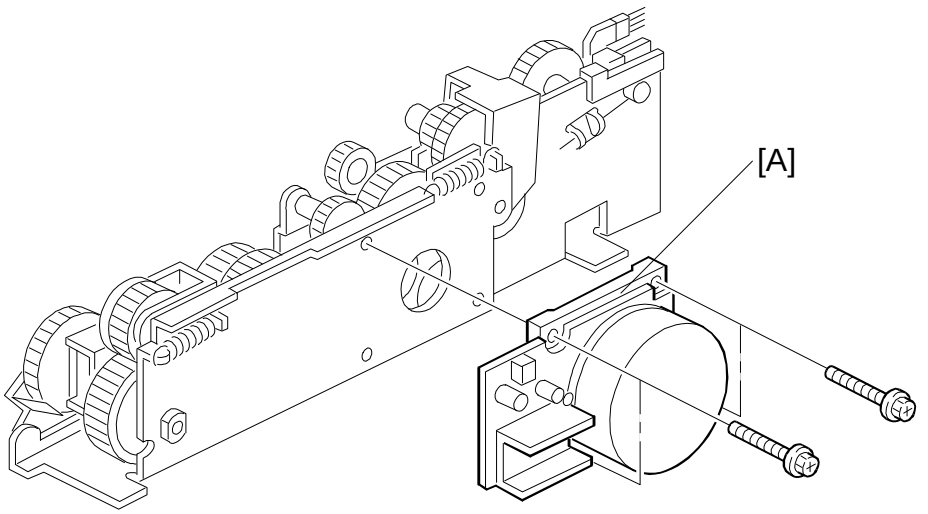

A184R531.wmf

1. Remove the main drive unit. (See Main Drive Unit Removal.)
2. Remove the main motor [A] (4 screws).

6.4 TONER SUPPLY CLUTCH REMOVAL

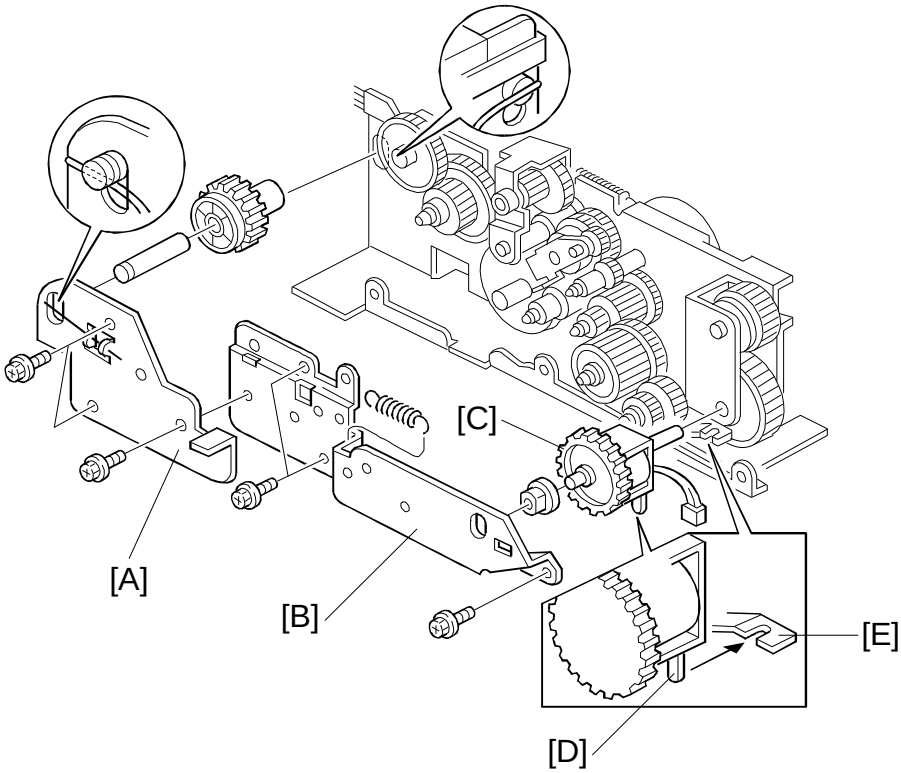

A184R532.wmf

1. Remove the main drive unit. (See Main Drive Unit Removal.)
2. Remove the brackets [A] and [B] (6 screws and 1 spring).

   NOTE: Be careful not to drop the gears.
3. Remove the toner supply clutch [C].

   NOTE: When reinstalling the clutch, engage the pin [D] with the stopper [E] as shown.

6.5 ERASE LAMP REMOVAL

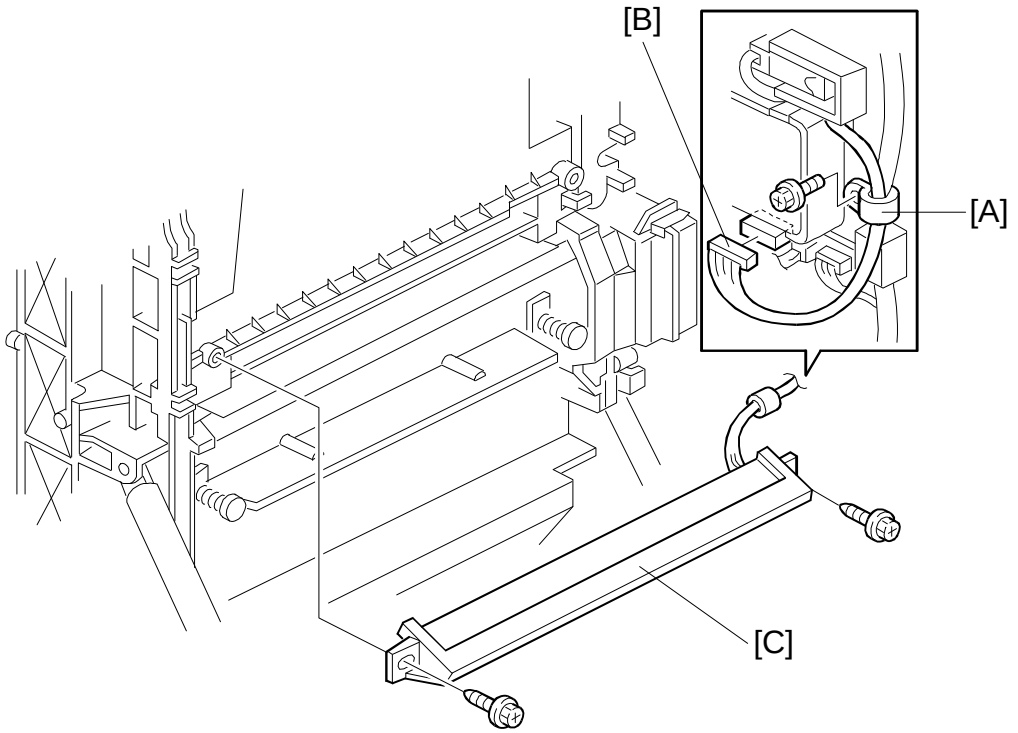

A184R533.wmf

1. Remove the exterior covers and the exposure glass. (See Exterior Cover/Exposure Glass Removal.)
2. Open the upper unit.
3. Remove the harness clamper [A] (1 screw).
4. Disconnect the connector (CN103) [B] from the main board.
5. Remove the erase lamp [C] (2 screws).

6.6 QUENCHING LAMP REMOVAL

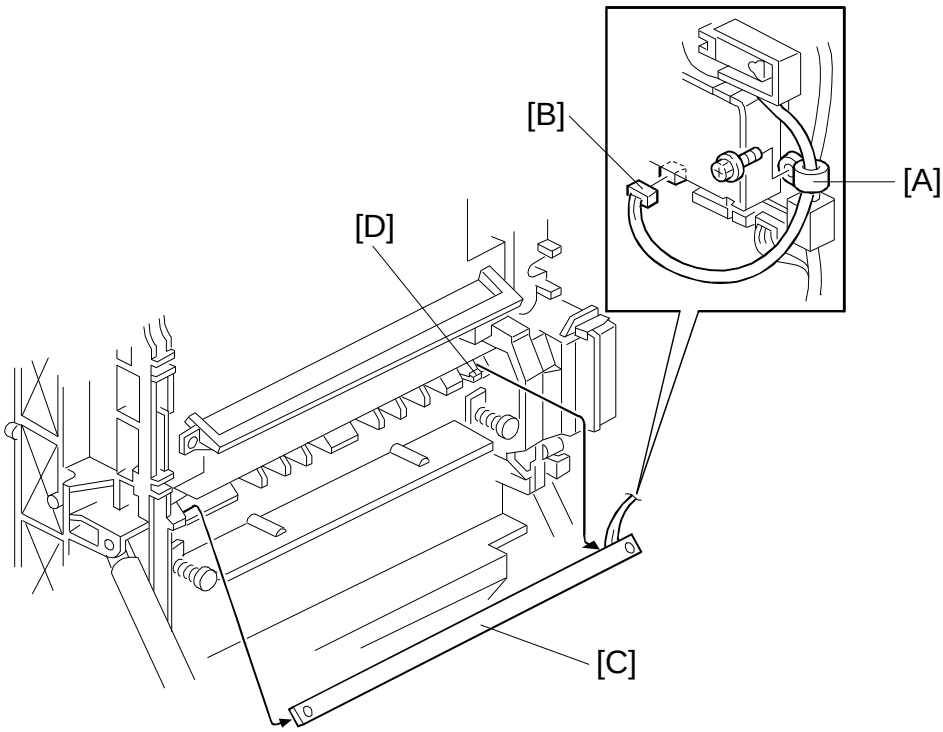

A184R534.wmf

1. Remove the exterior covers and the exposure glass. (See Exterior Cover/Exposure Glass Removal.)
2. Open the upper unit.
3. Remove the harness clamper [A] (1 screw).
4. Disconnect the connector (CN119) [B] from the main board.
5. Remove the quenching lamp [C] (2 screws).

NOTE: When reinstalling, make sure that the quenching lamp is secured firmly by the hook [D].

6.7 OZONE FILTER REPLACEMENT

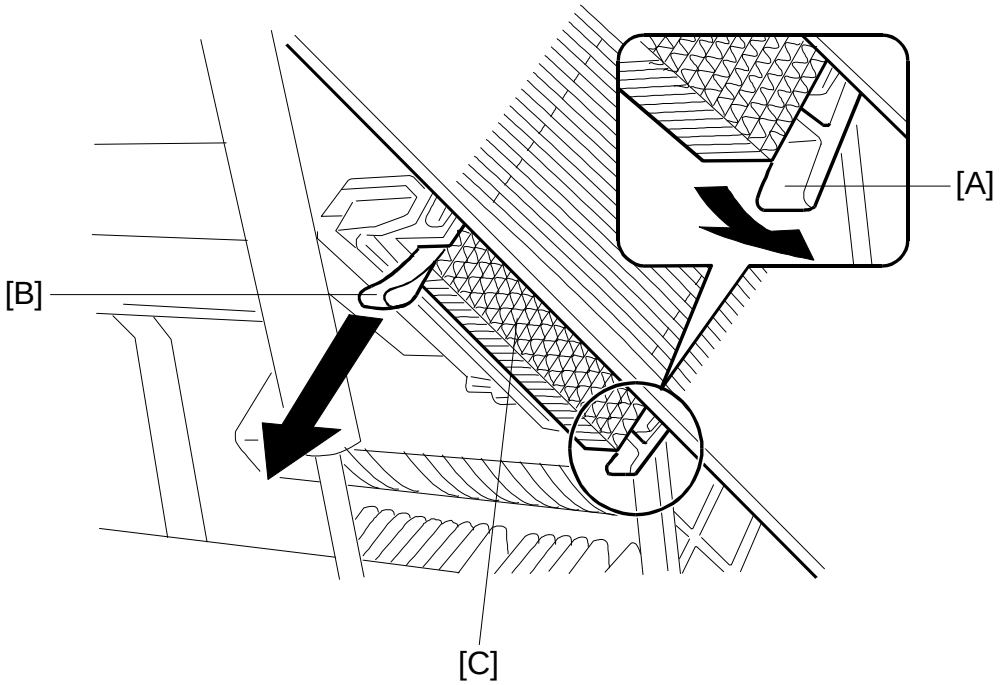

A184R546.wmf

1. Open the upper unit.
2. Move the lever [A] in the direction of the arrow, while pulling down on the tape edge [B] as shown.
3. Replace the ozone filter [C].

6.8 AC DRIVE/DC POWER SUPPLY BOARD/TRANSFORMER REPLACEMENT

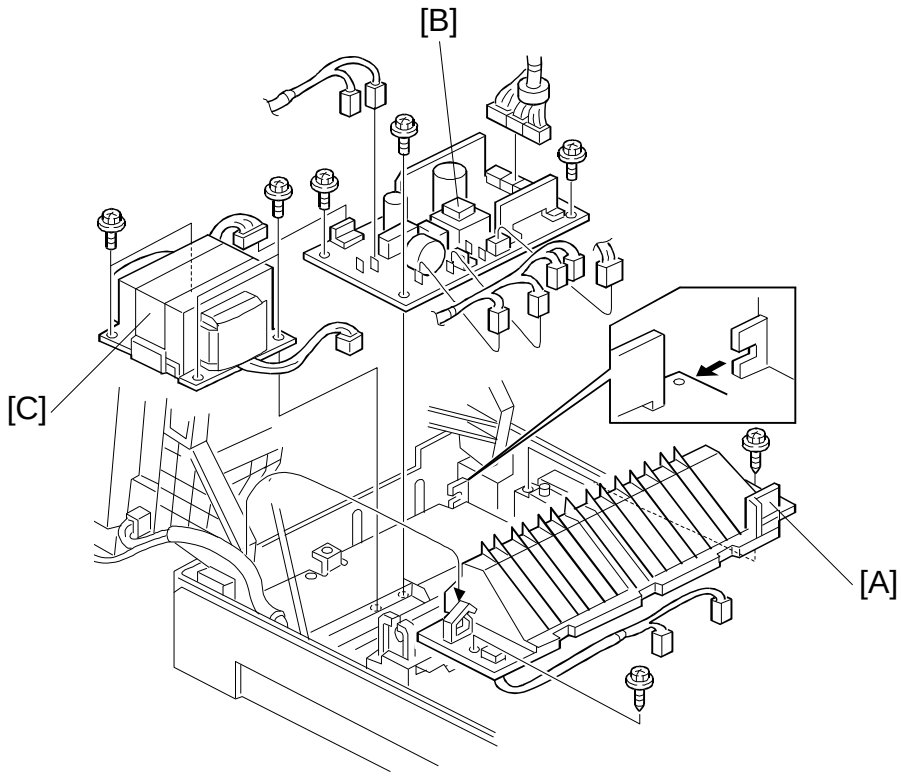

A184R545.wmf

NOTE: Check the fuses on the board before determining that the ac drive/dc power supply board is defective.

1. Turn off the main switch and unplug the machine.
2. Remove the fusing unit. (See Fusing Unit Removal.)
3. Remove the exit cover [A] (2 screws and 1 harness clamp).
4. Replace the ac drive/dc power supply board [B] (3 screws and all connectors) or the transformer [C] (4 screws and 2 connectors).

6.9 MAIN CONTROL BOARD REPLACEMENT

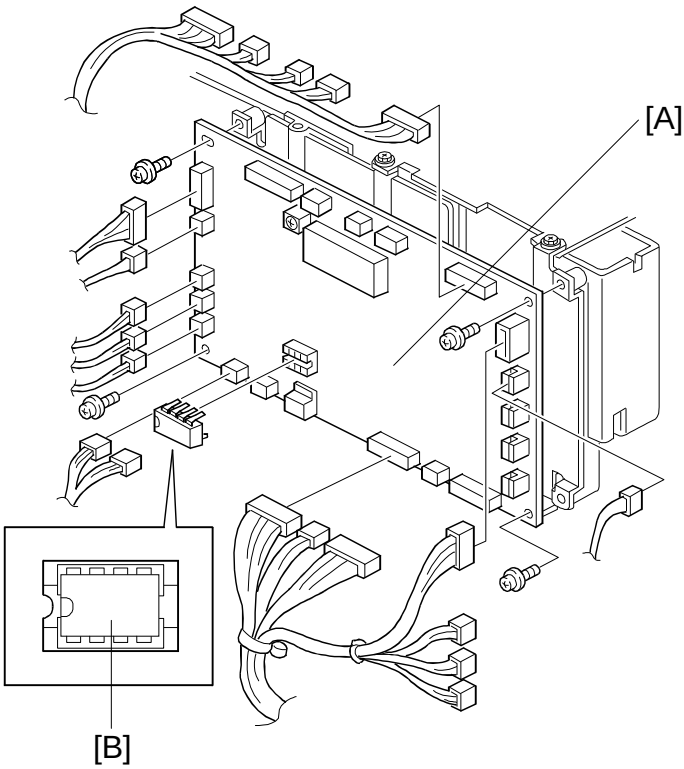

A184R544.wmf

1. Turn off the main switch and unplug the machine.
2. Remove the upper cover. (See Exterior Cover/Exposure Glass Removal.)
3. Remove the main control board [A] (4 screws and all connectors).
4. Remove the EEPROM [B] from the old main board and install it on the new board.

7. COPY QUALITY ADJUSTMENT

Image density is affected by the following factors:

(1) Light Intensity
(2) Development Bias Voltage
(3) Toner Density
(4) Grid Voltage/Drum Current

The items listed above must be kept in balance to maintain the correct image density.

In the field, image density should be adjusted first by changing the exposure lamp voltage. If the results are unsatisfactory, the development bias voltage can be changed. Also, if requested by the customer, the overall image density can be changed by changing the toner density. However, the effects of adjusting this are small compared to adjusting the exposure lamp and development bias voltages.

The grid voltage and drum current are carefully adjusted at the factory. Any adjustment out of standard will result in overtoning, toner scattering, dirty background, or light image density problems. The grid voltage and charge corona current adjustment should be done to correct certain problems with image density after checking the other possible causes.

7.1 LIGHT INTENSITY ADJUSTMENT

7.1.1 Base Exposure Lamp Voltage Adjustment

When:	Every call
Purpose:	To maintain the correct light intensity
Adjustment Standard:	Level 2 of the gray scale on the OS-A4 chart should be just visible on the copy when the 3rd manual image density level is selected.
Method:	SP48
How it works:	Changes the ac drive board output voltage.

1. Unplug the power cord.
2. Clean the following parts.

Item No.	Section	Method
(1)	Optics (mirrors, lens, reflectors, exposure glass)	Damp cotton, silicone cloth, and blower brush
(2)	Corona wires and casings (charge, transfer)	Wire: Cleaning tool Casing: Blower brush
(3)	Quenching lamp, erase lamp	Dry cloth

3. Reset the V_L correction using SP95.

   NOTE: SP95 should be reset every time the optics are cleaned.
4. Open SP34 and return the setting to the normal value if it has been changed.
5. Place an OS-A4 chart on the exposure glass. Place the platen cover over the chart, and make a full size copy at manual image density level 3 (center).
6. Check if level 2 of the gray scale is just visible on the copy. If the image density is not correct, proceed to the following steps.
7. Enter the lamp voltage adjustment mode (SP48).
8. Change the setting with the "+" or "–" key as follows:
   If the copy image is too dark: Increase the value
   If the copy image is too light: Decrease the value
9. Confirm that the image density is within the adjustment standard.
10. Perform the ADS adjustment (SP56).

7.1.2 SP Image Density Adjustment

When:	1. The customer requires the image density to be either darker or lighter. 2. The customer requires a darker image when manual ID level 1 is selected.
Purpose:	To get proper image density.
Method:	SP34 (for case 1) and SP35 (for case 2)
How it works:	Changes the ac drive board output voltage.

NOTE: SP34 and SP35 settings can be changed by customers.

- SP34 (Image Density Adjustment) -

Setting	0	1	2	3	4	5	6
Bias Voltage Change [V]	±0	–40	+40	–40	+40	–40	+40
Exposure Lamp Change	±0	±0	±0	+3 steps	–3 steps	+7 steps	–7 steps
Image Density	Normal	Light	Dark	Lighter	Darker	Lightest	Darkest

- SP35 (Image Adjustment at ID level 1) -

Setting	0	1	2
Exposure Lamp Change	–6 steps	–8 steps	–10 steps
Image Density of ID Level 1	Normal	Darker	Darkest

7.2 DEVELOPMENT BIAS VOLTAGE ADJUSTMENT

7.2.1 Base Bias Voltage Adjustment

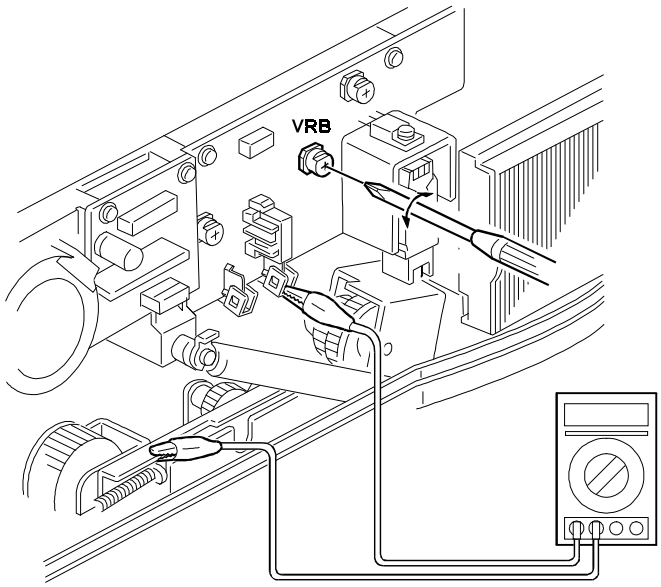

A184R540.wmf

ADJUSTMENT STANDARD	Adjusting VR	SP Mode
DC –200 ± 4 V	VRB	SP9-2

NOTE: Normally, each High Voltage Supply Board spare part is adjusted in the factory before shipment. This adjustment is not required when the board is replaced.

⚠ WARNING

Very high voltage is applied from the high voltage supply unit terminals. Pay extreme attention when adjusting the bias voltage. Make sure that the machine is unplugged before connecting the multimeter.

1. Remove the upper cover and the exposure glass. (See Exterior Cover/Exposure Glass Removal.)
2. Set the multimeter range to dc 1500 V, and connect the multimeter leads as shown.
3. Close the upper unit.
4. Turn on the development bias using SP9-2.
5. Adjust the development bias voltage by turning VRB on the high voltage supply unit.

7.2.2 SP Bias Settings

When:	1. The image is blurred in ADS mode, even though the image density in black solid areas is acceptable. 2. Dirty background in ADS mode. The problem is not caused by excess toner and cannot be solved by adjusting the light intensity. 3. The customer requires a lighter image when manual ID level 5 is selected.
Purpose:	To get the proper image density
Method:	VRB on the high voltage supply board, SP34 (for cases 1 and 2), SP36 (for case 3)
How it works:	Changes the bias voltage while the image area on the drum is being developed.

NOTE: SP34 and SP36 settings can be changed by customers.

- SP34 (Image Density Adjustment) -

Setting	0	1	2	3	4	5	6
Bias Voltage Change [V]	±0	–40	+40	–40	+40	–40	+40
Exposure Lamp Change	±0	±0	±0	+3 steps	–3 steps	+7 steps	–7 steps
Image Density	Normal	Lighter	Darker	Lighter	Darker	Lightest	Darkest

- SP36 (Image Bias Adjustment at ID level 5) -

Setting	0	1	2
Bias Voltage Change	–40 V	–80 V	–120 V
Image Density of ID Level 1	Normal	Lighter	Lightest

7.3 TONER DENSITY ADJUSTMENT

When:	The customer wants to change the overall image density of the copies.
Purpose:	To change the toner concentration inside the development unit.
Method:	SP38
How it works:	Changes the toner supply threshold. As a result, toner density increases.

7.4 GRID VOLTAGE ADJUSTMENT

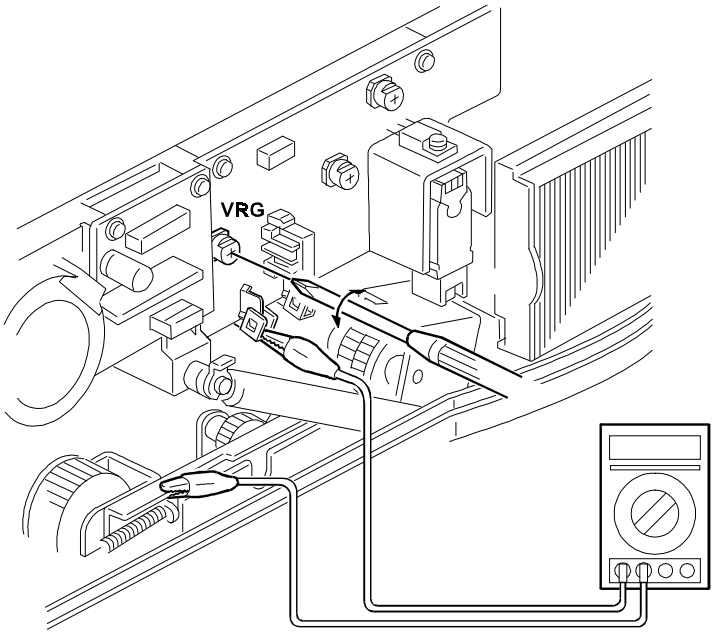

A184R543.wmf

ADJUSTMENT STANDARD	Adjusting VR	SP Mode
DC –850 ± 15 V	VRG	SP9-2

NOTE: Normally, each High Voltage Supply Board spare part is adjusted in the factory before shipment. This adjustment is not required when the board is replaced.

⚠ WARNING

Very high voltage is applied from the high voltage supply unit terminals. Pay extreme attention when adjusting the grid voltage. Make sure that the machine is unplugged before connecting the multimeter.

1. Remove the upper cover and the exposure glass. (See Exterior Cover/Exposure Glass Removal.)
2. Set the multimeter range to dc 1500 V, and connect the multimeter leads as shown.
3. Close the upper unit.
4. Turn on the charge and transfer corona using SP9-2.
5. Adjust the grid voltage by turning VRG on the high voltage supply unit.

7.5 DRUM CURRENT ADJUSTMENT

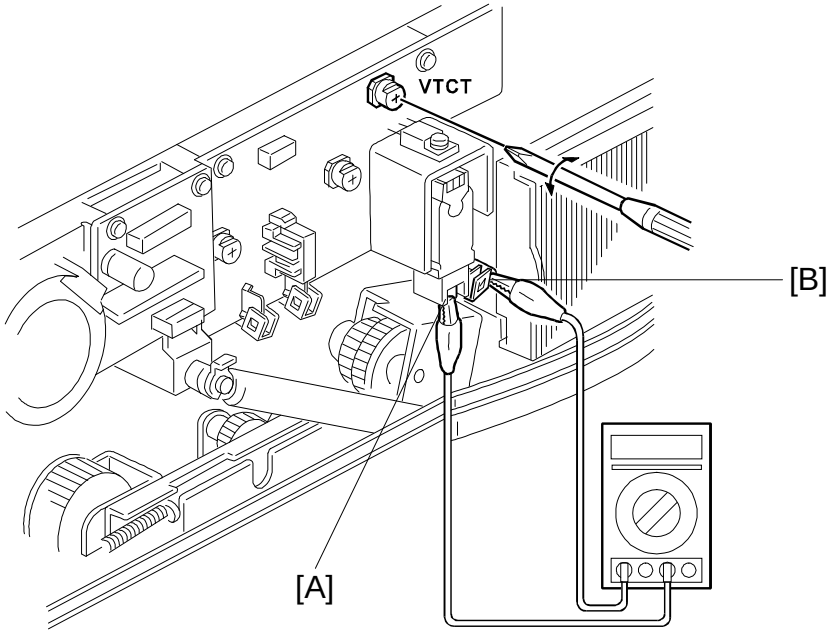

A184R542.wmf

ADJUSTMENT STANDARD	Adjusting VR	SP Mode
DC –750 ± 2 μA	VTCT	SP9-2

NOTE: Normally, each High Voltage Supply Board spare part is adjusted in the factory before shipment. This adjustment is not required when the board is replaced.

⚠ WARNING

Very high voltage is applied from the high voltage supply unit terminals. Pay extreme attention when adjusting the drum current. Make sure that the machine is unplugged before connecting the multimeter.

1. Remove the upper cover and the exposure glass. (See Exterior Cover/Exposure Glass Removal.)
2. Disconnect the connector from the CT corona current terminal [A]. Then connect the ground terminal of the multimeter to the connector [B], and connect the other terminal to the CT terminal of the high voltage supply board as shown in the illustration.

   NOTE: Make sure that the connector [B] is not in contact with the CT terminal [A].

3. Set the multimeter range to dc 2 mA.
4. Connect the operation panel connectors.
5. Close the upper unit.
6. Turn on the charge and transfer corona using SP9-2.
7. Adjust the drum current by turning VRCT on the high voltage supply board.
8. Perform the Grid Voltage Adjustment after changing the drum current.

7.6 ADS ADJUSTMENT

When:	1. After light intensity is changed 2. Image density in ADS mode is too light or too dark
Purpose:	To maintain correct ADS mode operation.
Adjustment Standard:	ADS Voltage = 2.5 + –0.2 V
Method:	SP56 and VR101 on the main board
How it works:	The bias voltage thresholds which correspond to image density will all change.

1. Place 5 sheets of A4 paper on the exposure glass.
2. Access SP56 and press the Start key. The ADS sensor output is displayed.
3. If the voltage is out of standard, adjust by turning VR101 on the main board.

7.7 VERTICAL MAGNIFICATION ADJUSTMENT

When:	The vertical magnification is not within the adjustment standard.
Purpose:	To maintain proper vertical magnification.
Adjustment Standard:	Less than ±0.5% difference between original and copy.
Method:	SP43 (0.2%/step, 31 steps)
How it works:	Changes the scanner speed compensation.

7.8 HORIZONTAL MAGNIFICATION ADJUSTMENT (A184 only)

When:	The horizontal magnification is not within the adjustment standard.
Purpose:	To maintain proper horizontal magnification.
Adjustment Standard:	Less than ±0.5% difference between original and copy.
Method:	SP44 (0.2%/step, 31 steps)
How it works:	Changes the lens home position.

7.9 REGISTRATION ADJUSTMENT

When:	Registration is not within the adjustment standard.
Purpose:	To maintain proper registration
Adjustment Standard:	Paper tray: 0 ± 2.0 mm By-pass feed: 0^{+3}_{-2}
Method:	SP42 (0.5 mm/step, 15 steps)
How it works:	Changes the registration solenoid on timing.

1. Place a 150 mm scale perpendicular to the left scale on the exposure glass.
2. Adjust the registration using SP42. Make copies and check the registration.

7.10 ERASE MARGIN ADJUSTMENT

When:	The leading edge margin is not within the adjustment standard.
Purpose:	To maintain the correct leading erase margin.
Adjustment Standard:	2.5 ± 2.0 mm
Method:	SP41 (0.5 mm/step, 15 steps)
How it works:	Changes the erase lamp on period.

1. Place a 150 mm scale perpendicular to the left scale on the exposure glass.
2. Adjust the leading edge erase margin using SP41. Make copies and check the registration.

7.11 FOCUS ADJUSTMENT

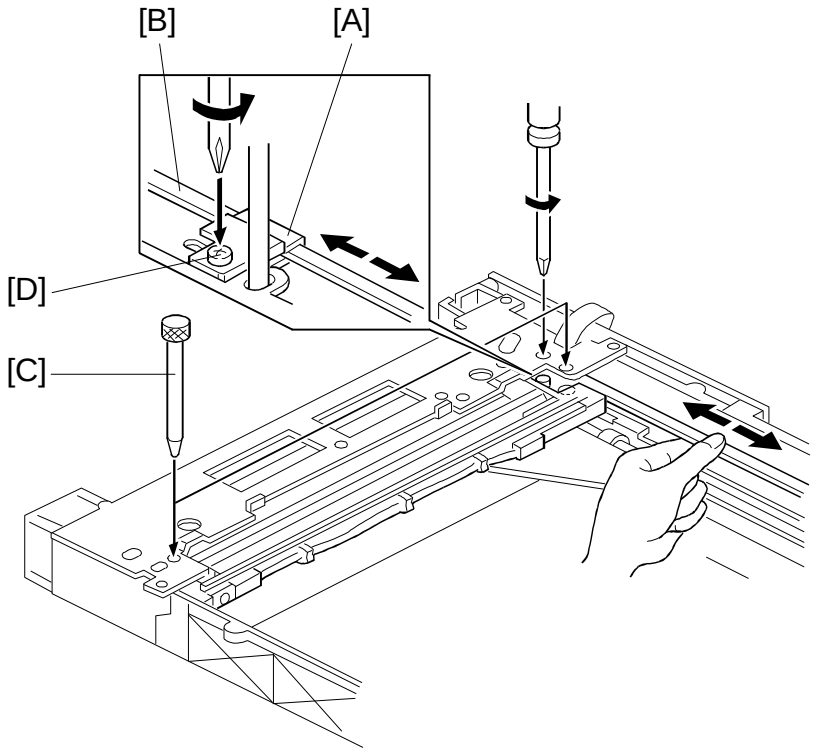

A184R541.wmf

1. Remove the upper cover and the exposure glass. (See Exterior Cover/Exposure Glass Removal.)
2. Mark the position of the 1st scanner belt clamper [A] on the belt [B].
3. Set the 1st scanner at the home position, and insert the two positioning pins [C].

   NOTE: Scanner positioning pins are available as a service part. P/N: A184 9501 (See the parts catalog.)
4. Loosen the screw [D] securing the 1st scanner belt clamper.
5. Move the 1st scanner timing belt to change the optical distance between the 1st scanner and the 2nd scanner.
6. Reinstall the exterior covers and make a copy to check the image quality.
7. If the focus is still no good, repeat steps 1 to 5.

SECTION 7

TROUBLESHOOTING

1. COPY QUALITY

1.1 BLANK COPY (WHITE COPY)

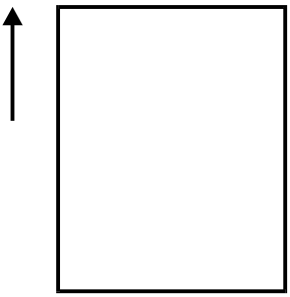

A184T503.wmf

- Problem -

White or almost white copy.

- Possible Causes -

1. Charge is not applied.
   - High voltage supply board (charge or grid) failure
   - Poor contact of metal plates
   - Broken charge corona wire
   - Leak in insulator or endblock
2. Copy image is not transferred to the paper.
   - High voltage supply board (transfer) failure
   - Poor contact of metal plates
   - Broken transfer corona wire
   - Leak in the insulator or endblocks
3. Poor drum sensitivity.
   - The drum was exposed to fluorescent light or direct sunlight for a long period of time.
   - The drum was exposed to ammonia gas or corrosive fumes for a long period of time.
4. The imaging unit does not rotate.
   - Broken drive gear

- Action -

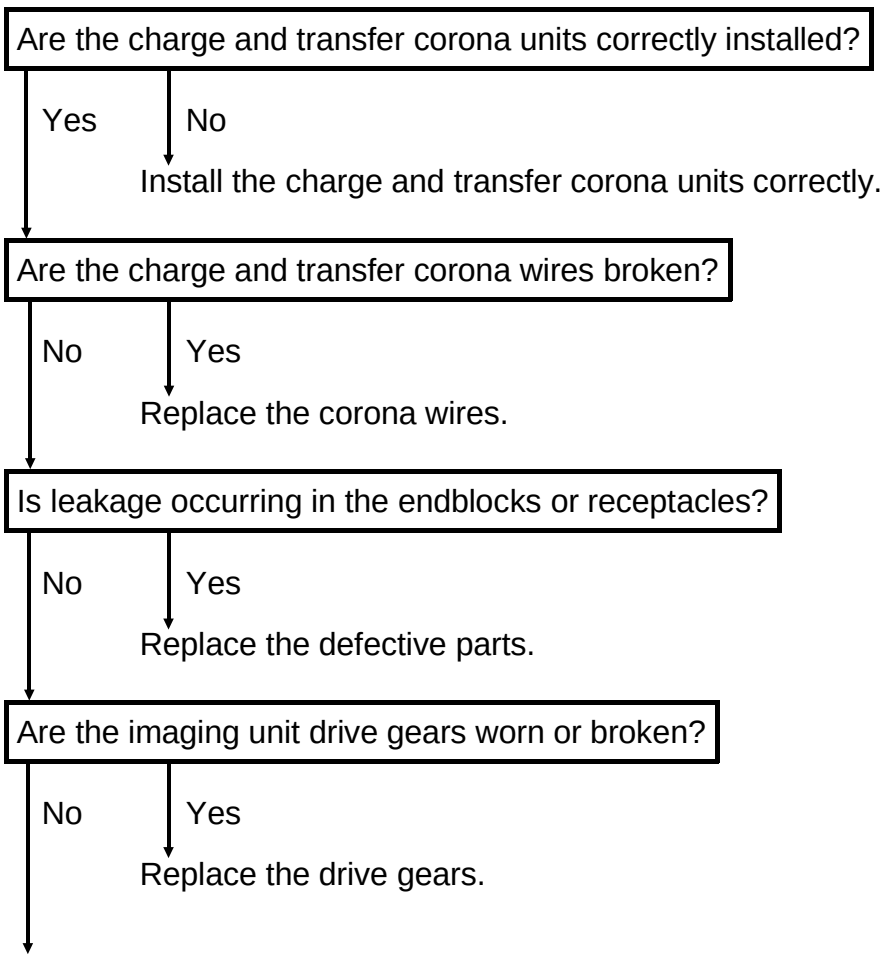

Check CN123-2 (Charge/Transfer trigger line)

1) If the signal stays HIGH after the Start key is pressed, replace the main board.
2) If the charge or transfer corona does not turn on even if the signal changes to LOW, replace the high voltage supply board.

If there is no problem with the signal lines, replace the imaging unit if the sensitivity does not recover even when the drum is not exposed to light.

1.2 DIRTY BACKGROUND

- Problem -

1. Dirty background at image density level 4 (manual setting).
2. When newspapers are copied, the background is dirty even at level 5.
3. ADS copies have a dirty background.

- Possible Causes -

1. Dirty optics
2. Toner scattering
   - High toner density
   - The inlet seal of the development unit is stripped off.
   - User/SP mode setting error
3. The exposure lamp is not bright enough. This may be caused by deterioration of the exposure lamp or low lamp voltage.
4. In ADS mode, light reflected from the original is too intense.
5. The ADS optical fiber is cut or bent.
6. The development bias is grounded.

- Action -

Make a copy in reduction mode at manual image density level 4.

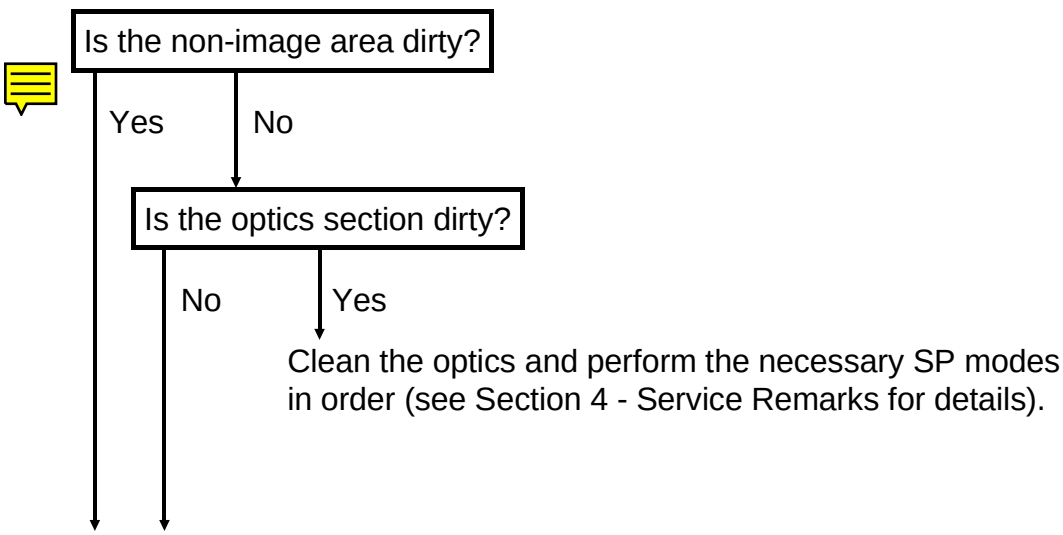

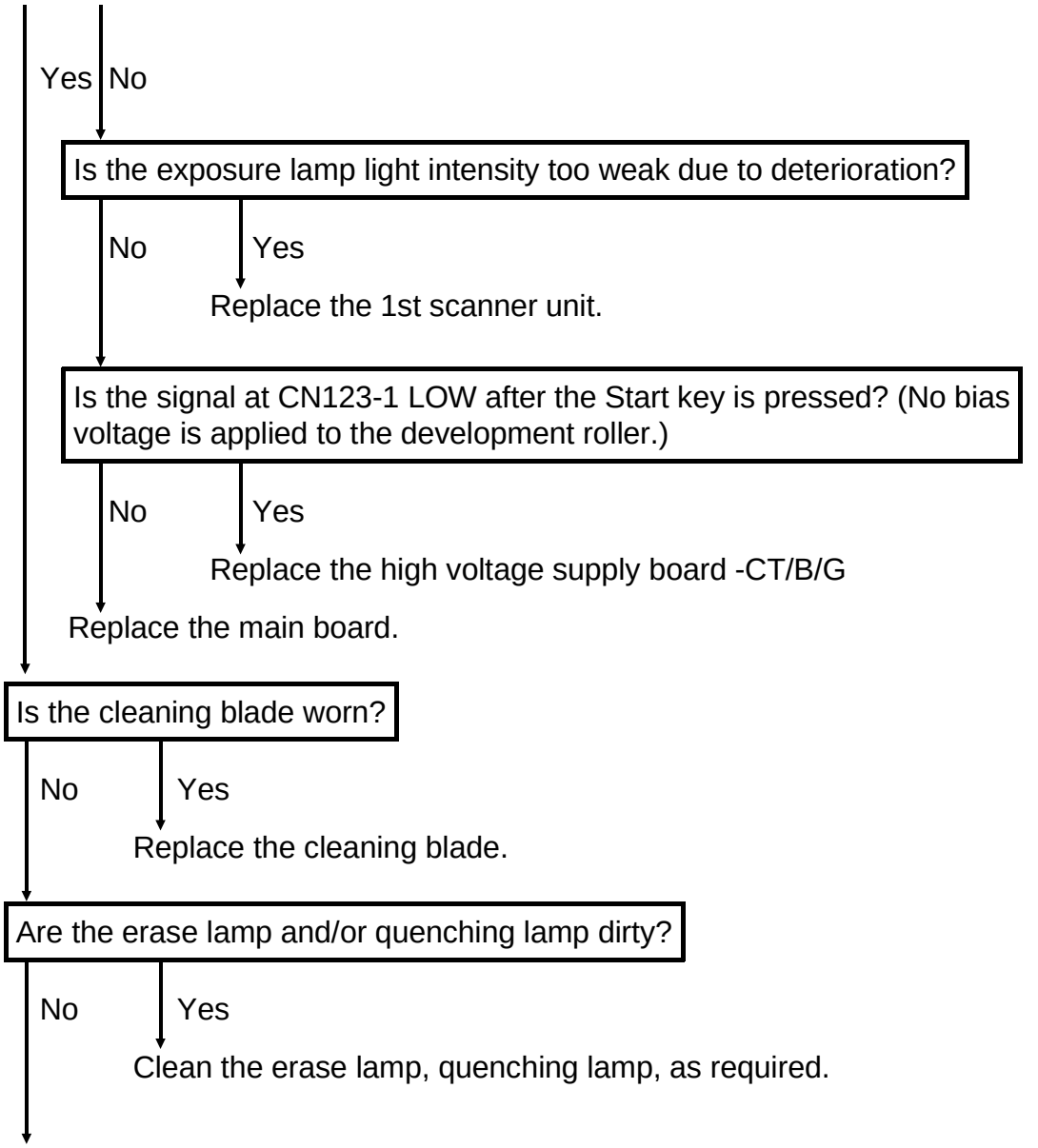

If toner scattering occurs, see ‘Toner Density Too High’.
If dirty background occurs only in ADS mode, do the following:

- If the ADS voltage is not within ± 0.2 volts of the standard voltage (2.5 V), readjust the ADS voltage.
- If the signal at CN112-3 stays HIGH, check the harness and sensor, and replace any defective parts.
- If the signal at CN112-2 stays LOW, replace the main board.

1.3 UNEVEN IMAGE DENSITY

- Problem -

Uneven image density appears on the copies.

- Possible Cause -

1. Dirty optics
2. Uneven cutout position of the reflectors
3. Dirty corona wires or grid
4. Uneven height of the charge corona wire

- Action -

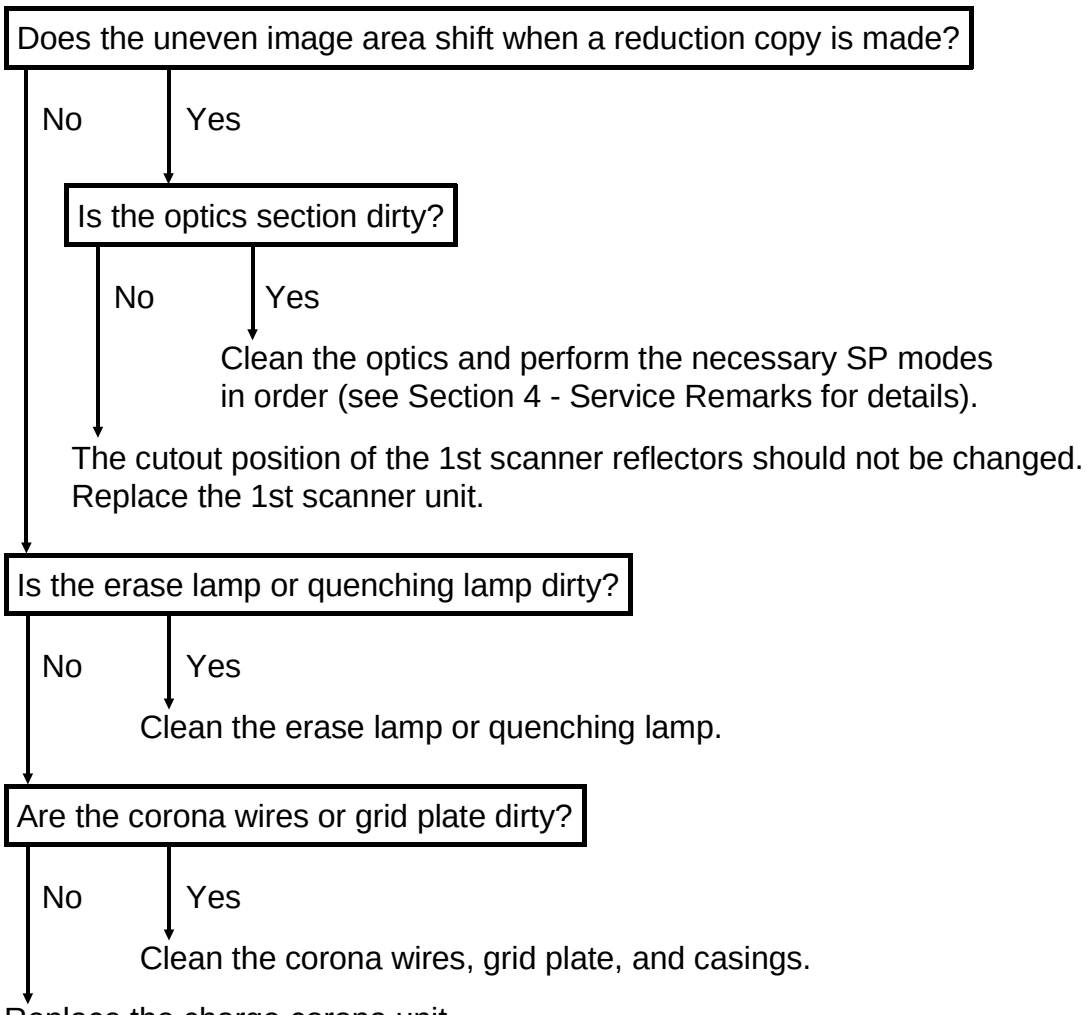

1.4 VERTICAL BLACK BANDS

- Problem -

Vertical black bands appear on the copy.

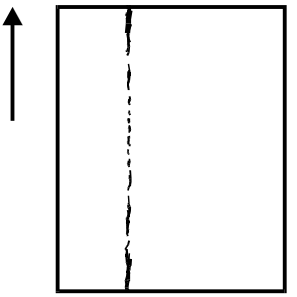

A184T504.wmf

- Possible Causes -

1. Dirty optics
2. Dust between the cleaning blade and drum
3. Edge of the cleaning blade deformed
4. Deformed inlet seal on the development unit

- Action -

Do the black bands shift when a reduction copy is made?

No

Yes

Check and clean the optics section. After cleaning the optics, perform the necessary SP modes in order (see Section 4 - Service Remarks for details).

Remove the cleaning blade and clean the edge of the cleaning blade. Then check if the edge of the cleaning blade is deformed or not.

No

Yes

Replace the cleaning blade.

Replace the imaging unit.

1.5 VERTICAL BLACK LINES

- Problem -

Thin black lines appear on the copy.

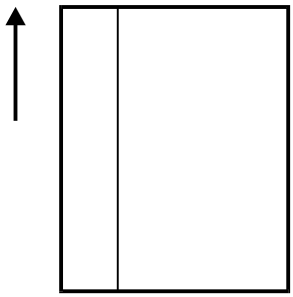

A184T505.wmf

- Possible Causes -

1. Scratched cleaning blade
2. Dirty or scratched exposure glass or dirty or scratched mirrors
3. Scratched or dirty drum
4. Scratched hot roller

- Action -

Do the black lines shift when a reduction copy is made?

No

Yes

Clean or replace the exposure glass or mirrors. After cleaning the optics, perform the necessary SP modes in order (see Section 4 - Service Remarks for details).

Is the edge of the cleaning blade scratched?

No

Yes

Replace the cleaning blade.

Is the hot roller scratched?

No

Yes

Check whether black lines appear on the copy by stopping the copy paper in the transport section. If no black lines appear, replace the hot roller.

Check whether the drum is scratched or toner is built-up on the drum. Replace the imaging unit if necessary.

1.6 VERTICAL WHITE LINES OR BANDS-1 (DULL OR BLURRED)

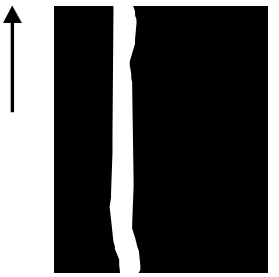

A184T506.wmf

- Problem -

Dull or blurred white lines appear on the copy.

- Possible Causes -

1. Dirty or deteriorated charge corona wire
2. Dirty or deformed grid plate
3. Damp or deformed inlet seal on the development unit

- Action -

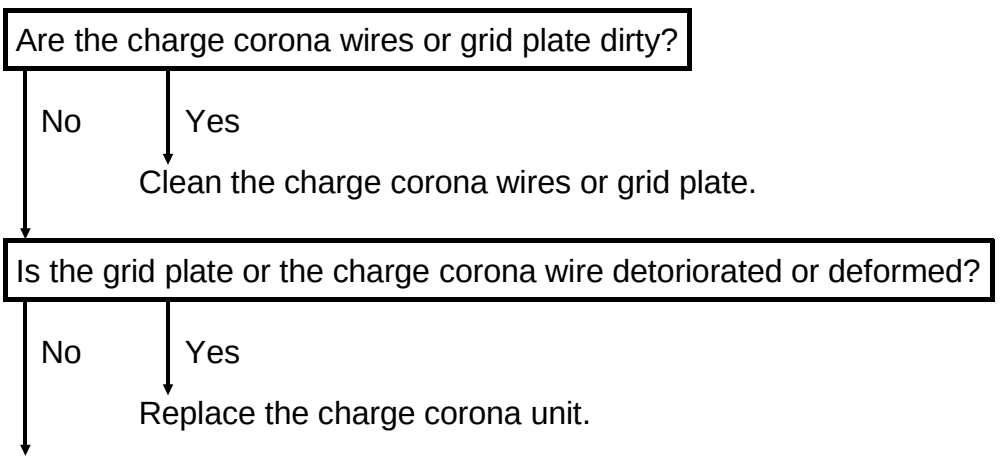

1.7 VERTICAL WHITE LINES OR BANDS-2 (THIN, DISTINCT)

- Problem -

Vertical white lines appear on the copy.

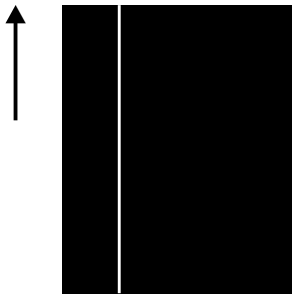

A184T507.wmf

- Possible Causes -

1. Paper dust on the edge of the cleaning blade
2. Scratched drum
3. Scratched hot roller

- Action -

Remove the cleaning blade. Clean and inspect the edge of the blade. Is the edge of the cleaning blade deformed?

No

Yes

Replace the cleaning blade.

Make a copy and stop the machine when the paper reaches the transport section. Do white lines appear on the copy?

No

Yes

Replace the imaging unit.

Replace the hot roller if it is scratched.

1.8 HORIZONTAL BLACK/WHITE LINES

- Problem -

Black or white lines perpendicular to the paper feed direction appear on the copy image.

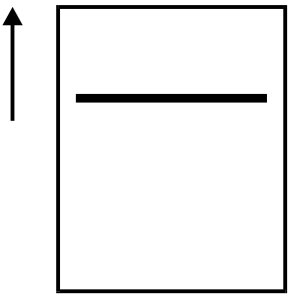

A184T508.wmf

- Possible Causes -

1. Drum or hot roller is scratched.
   If black lines appear at 94.2 mm intervals, the cause is a scratched drum, scratched hot roller, or toner build up.
2. Toner adheres to the drum surface.
   Due to insufficient cleaning, foreign matter may accumulate on the blade, causing toner to stick to the drum surface when the drum stops.

- Action -

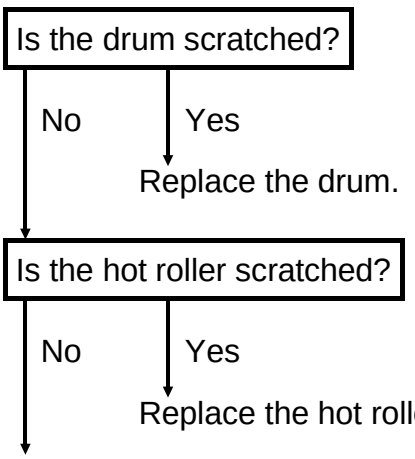

If toner adheres to the drum surface, clean the drum with water. Also clean or replace the cleaning blade.

1.9 JITTER

- Problem -

Jitter appears on the copy.

- Possible Causes -

1. Drum not turning smoothly
2. Scanner not moving smoothly

- Action -

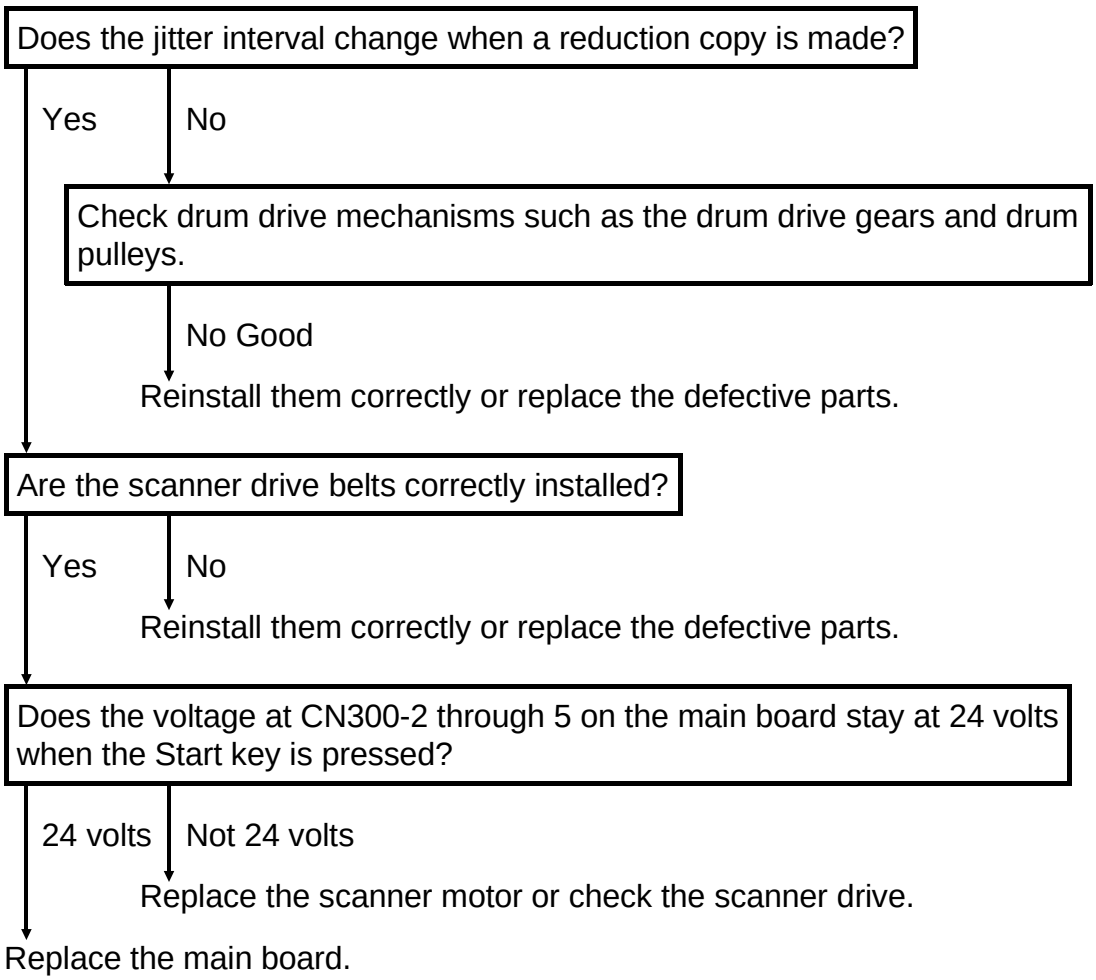

1.10 BLACK SPOTS ON THE COPY IMAGE

- Problem -

The grid voltage is not applied correctly.

- Poor contact between the charge corona casing and grid plate
- Main control board defective
- High voltage supply board -CT/B/G defective

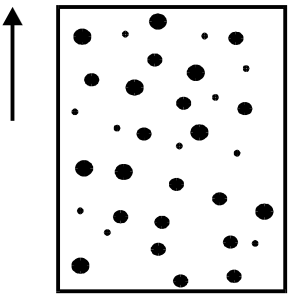

A184T509.wmf

- Action -

Is there good electrical contact between the charge corona casing and the grid plate?

Yes

No

Repair the poor contact or replace the charge corona unit if needed.

Check the voltage at CN123-3 on the main board.

0 volts

Not 0 volts

Replace the main control board.

Replace the high voltage supply board -CT/B/G.

1.11 SKEWED (OPTICAL) COPY IMAGE

- Problem -

The copy image is skewed (parallelogram shape).

The sides of the copy image are straight, but the leading and trailing edges are skewed.
(This differs from skewing originating in the paper path.)

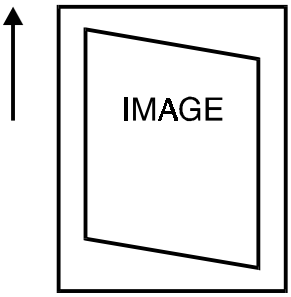

A184T510.wmf

- Possible Causes -

1. The 4th/5th mirror assembly is not parallel with the 1st and 2nd scanners.
2. The mirrors are in the wrong position.

- Action -

Is each mirror positioned correctly on its scanner and on the 4th/5th mirror assembly?

Yes

No

Reposition the mirror correctly. If the spring plates are defective, replace them.

Readjust the height of 4th/5th mirror assembly by turning the adjusting screw.

1.12 TONER DENSITY TOO HIGH

- Problem -

1. Dirty background appears on the copy.
2. The image density of black solid areas is too high.

- Possible Causes -

1. The toner supply clutch keeps on turning continuously.
2. SP30 (Toner Supply Mode Selection) has changed from the default setting.
3. The main control board is defective.
4. The charge corona current is too low.
5. Some SP or UP modes have been changed that would lead to this problem.
6. TD sensor defective.

- Action -

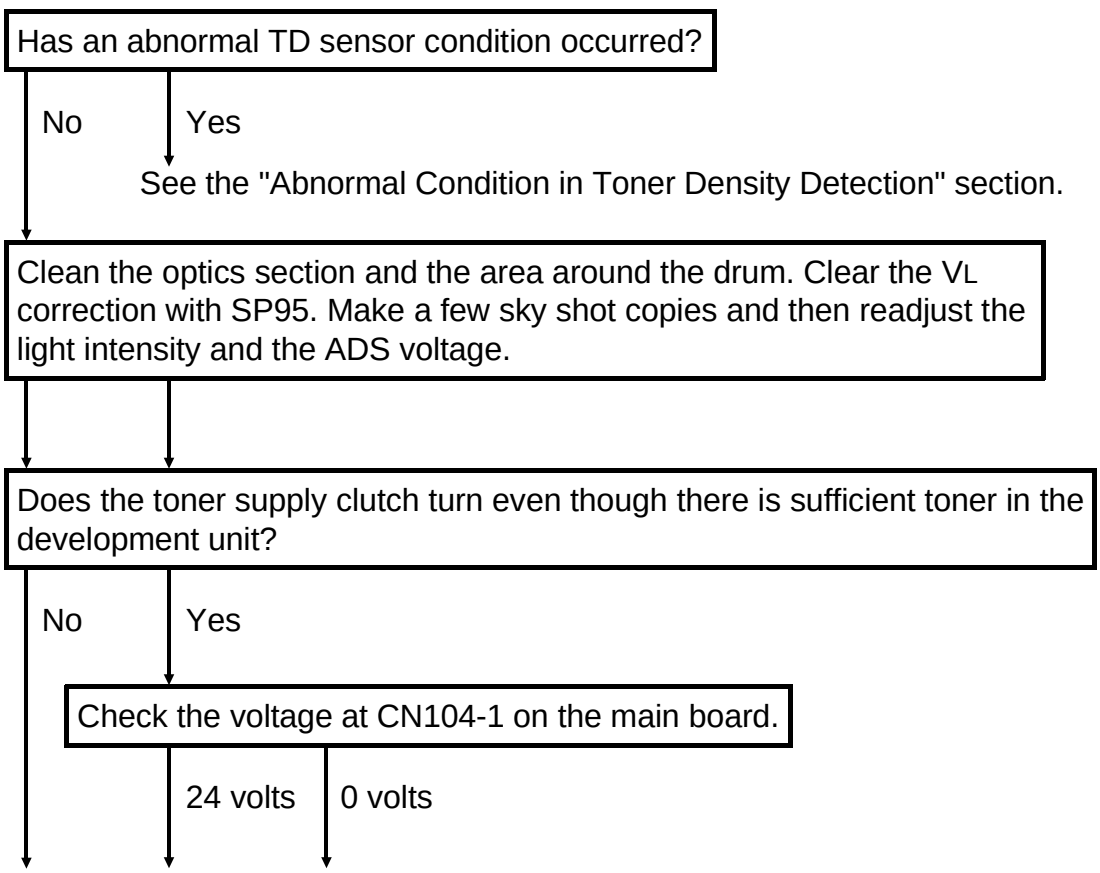

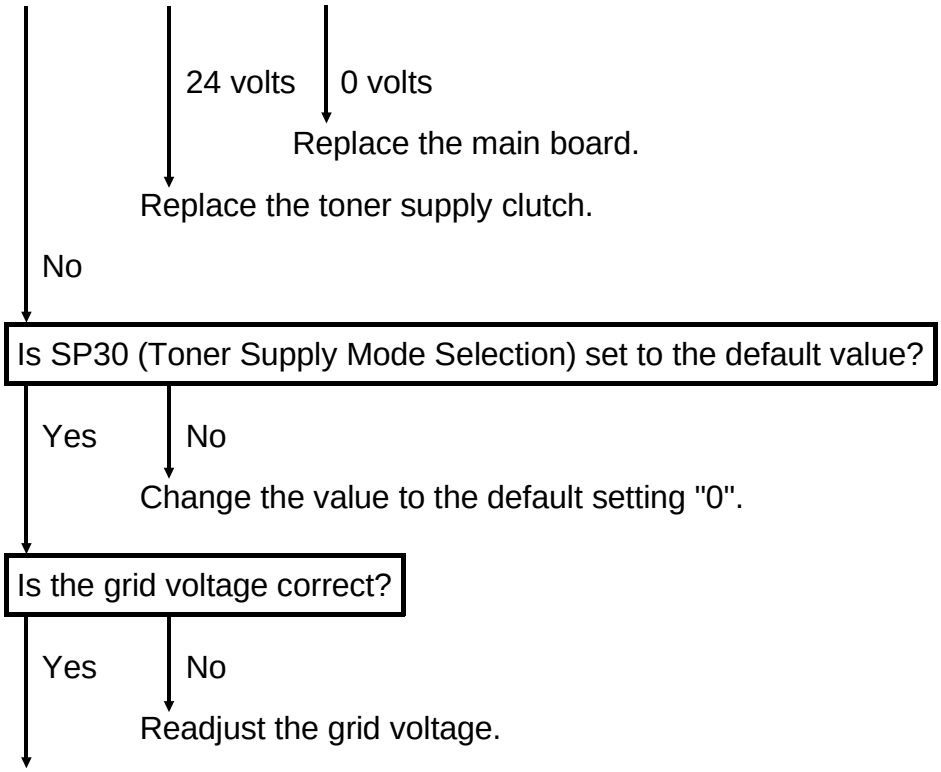

Check the related SP mode settings (SP 23, 24, 25, 26, 30, 31, 32, 34, 35, 36, 38, 48, 53, 54 and 62).
Change the settings to lean towards the lighter side.

1.13 TONER DENSITY TOO LOW

- Problem -

1. Light copy
2. Carrier on the copy.
3. Light spots appear in black solid areas.

- Possible Causes -

1. The toner supply clutch does not rotate.
2. SP30 (Toner Supply Mode Selection) has been changed from the default setting.
3. The main control board is defective.
4. The charge corona current is too high.
5. Some SP or UP modes have been changed that would lead to this problem.
6. TD sensor defective.

- Action -

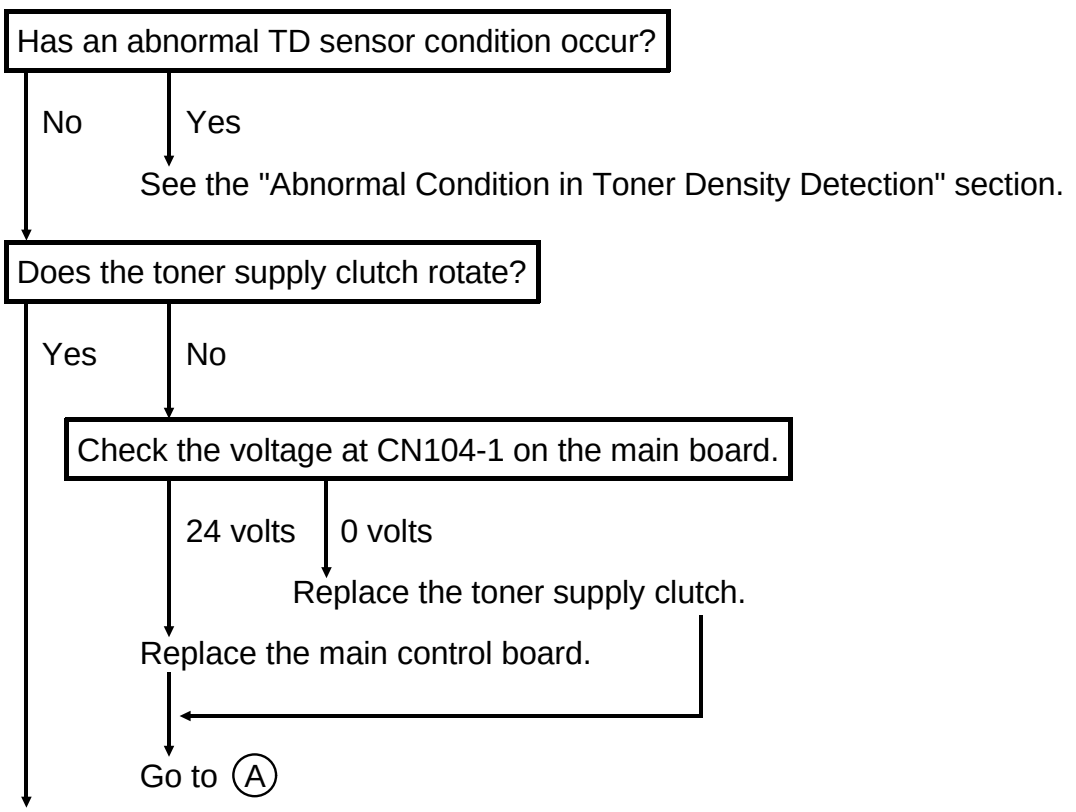

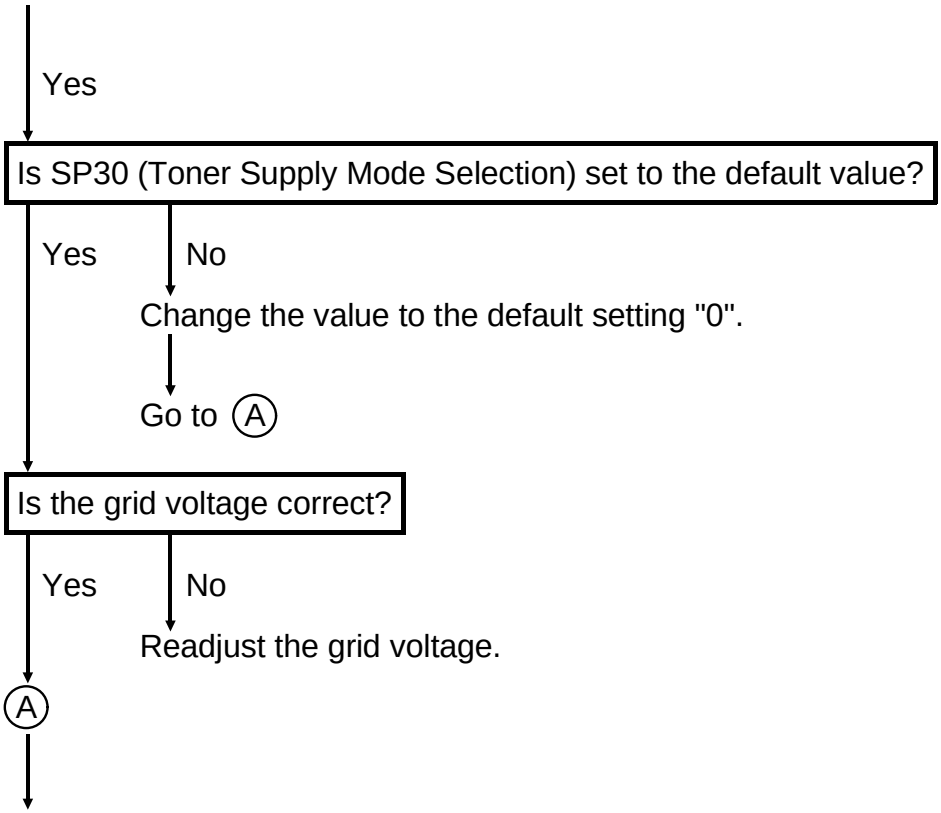

Clean the optics section and around the imaging unit.
Perform the necessary SP modes in order (SP95, 48 and 56).

1.14 UNFUSED COPY IMAGE

- Problem -

Solid images rub off easily.

- Possible Causes -

1. The fusing temperature is too low.
2. The thermistor is malfunctioning.

- Action -

Increase the fusing temperature using SP49.

No good

Check the thermistor. If the thermistor is malfunctioning, replace it.

1.15 CREASING PAPER AFTER FUSING

- Problem -

The copy paper is creased.

- Possible Causes -

1. The fusing temperature is too high.
2. The thermistor is malfunctioning.

- Action -

Decrease the fusing temperature using SP49.

No good

Check the thermistor. If the thermistor is malfunctioning, replace it.

1.16 PAPER MISFEED

- Problem -

1. The Check Paper Path indicator turns on when the main switch is turned on, even if there is no paper in the copier.
2. The Check Paper Path or Add Paper indicator always turns on at the same location when copies are made.

- Possible Causes -

1. Defective sensor
2. Mechanical or electrical malfunction

- Action 1 (Initial misfeed) -

Check which sensor (registration sensor or exit sensor) is defective. Replace the defective sensor. If no sensors are defective, replace the main board.

- Action 2 (Misfeed during copy cycle) -

If the Add Paper indicator turns on after the Start key is pressed, check whether the paper tray has run out of paper or not.

No

Yes

Load paper into the paper tray

Set the Misfeed Detection OFF mode (SP6) to on and make a copy to see whether a misfeed occurs.

Misfeed

No misfeed

Check which sensor (registration sensor or exit sensor) is defective. If sensors are not defective, replace the main board.

Check whether a mechanical or electrical malfunction occurs. Replace the defective parts.

1.17 ABNORMAL CONDITION IN TONER DENSITY DETECTION

- Problem -

The Auto ID indicator or the selected manual ID level blinks. (No SC Code is indicated.)

- Definition -

If the detected TD sensor output goes below 0.2 volts or SP90 (Factory Data and Counter Clear) has not been performed at the factory.

- Possible Causes -

- Defective TD sensor
- Defective main control board
- Loose connector
- Poor connection between the imaging unit and the main copier

- Action -

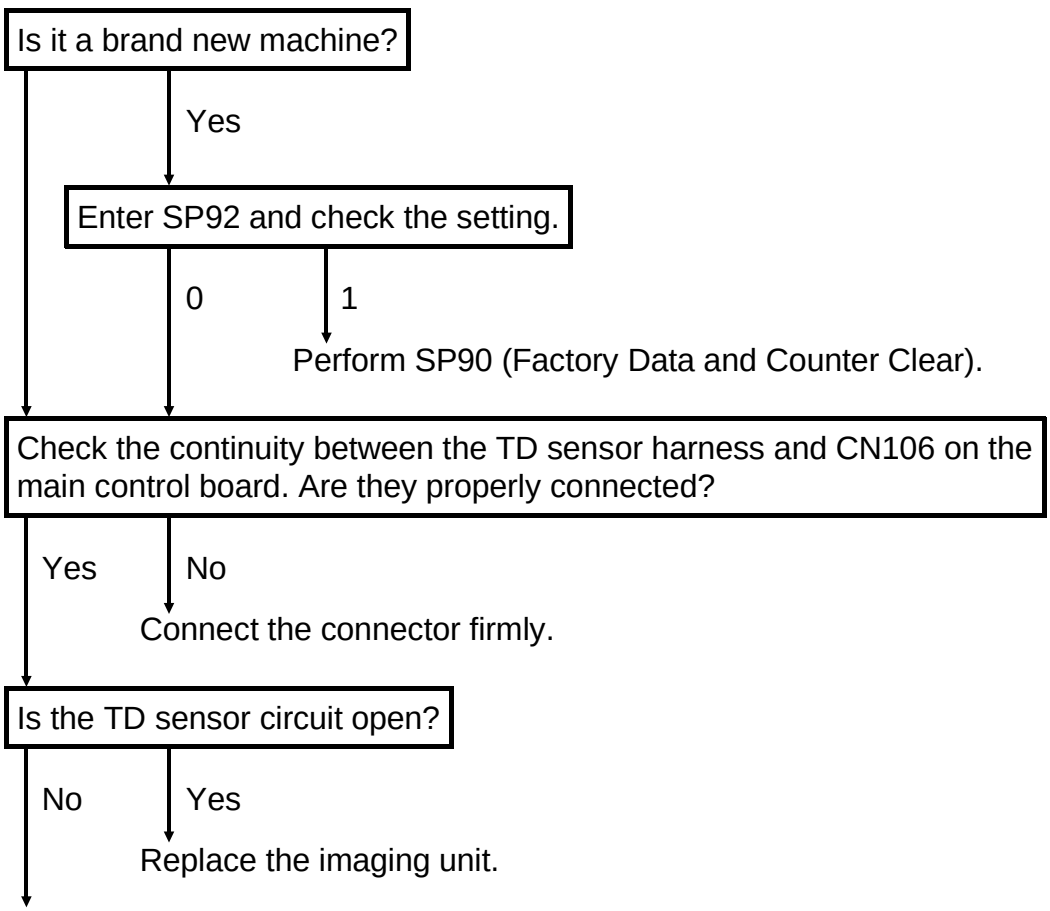

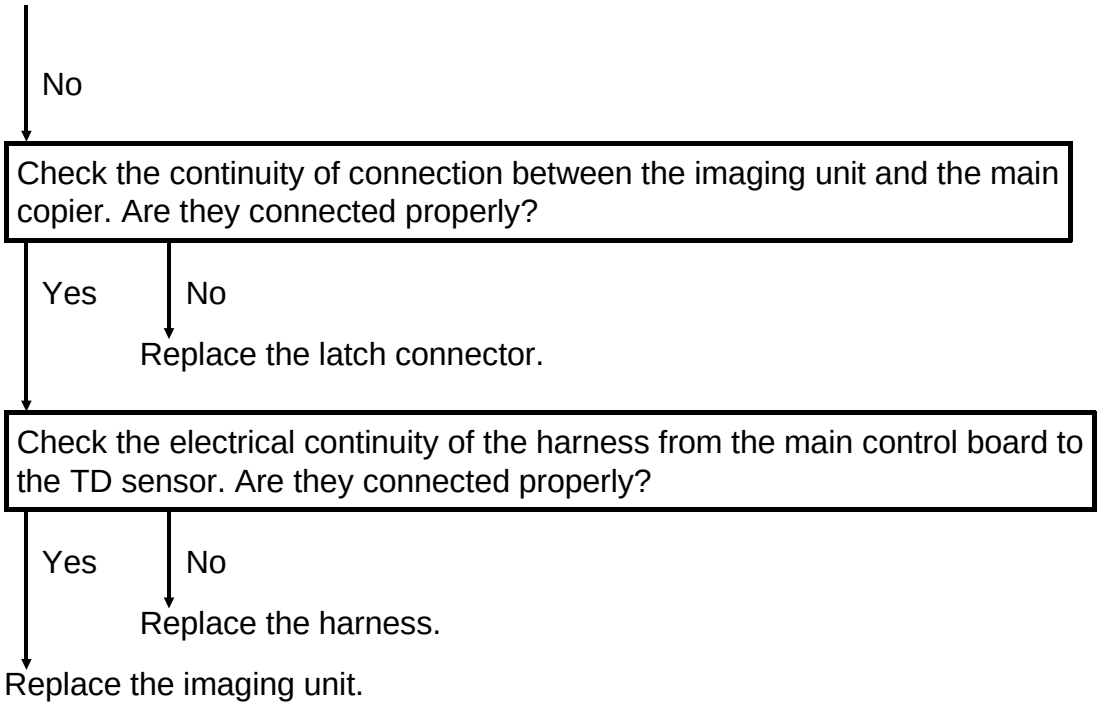
No
Check the continuity of connection between the imaging unit and the main copier. Are they connected properly?
Yes
No
Replace the latch connector.
Check the electrical continuity of the harness from the main control board to the TD sensor. Are they connected properly?
Yes
No
Replace the harness.
Replace the imaging unit.

1.18 OPTICS OVERHEAT PROTECTION

- Problem -

The Start key turns red during copying. (No SC code is indicated.)

- Definition -

The optics thermistor has detected a high temperature condition as shown below. Copying is disabled until the temperature drops to the starting temperature.

	120 V machine (without fan)	230 V machine (with fan)
Stopping temp.	40°C	43°C
Starting temp.	37°C	40°C

- Possible Case -

- Optics thermistor short circuit.
- Excessive continuous copy jobs.

- Action -

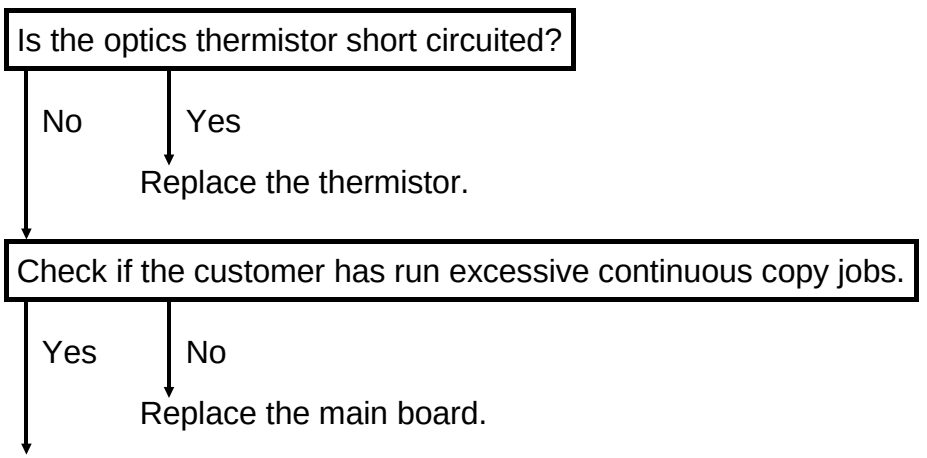

Notify the customer that the machine may stop when excessive continuous copy jobs are performed.

2. SERVICE CALL CONDITIONS

NOTE: 1) E-codes are displayed in the copy counter. The "E" and the "code number" are displayed alternatively.

2) To clear the service call condition, turn the main switch off and on.

3) When E5 service call conditions occur, for safety reasons they cannot be cleared by turning the main switch off/on. The following procedure must be performed to clear these service call conditions.
   1. Turn on the main switch.
   2. Enter SP mode 97.
   3. Turn the main switch off and on.

CODE #11 — EXPOSURE LAMP ERROR 1

- Definition -

- The feedback signal becomes higher than 4.0 volts (rms) for 1.0 second when the exposure lamp is on.
- The feedback signal becomes higher than 1.0 volt (rms) for 1.0 second when the exposure lamp is off.

- Possible Causes -

- Triac short circuit
- Exposure lamp open
- Thermofuse open

CODE #12 — EXPOSURE LAMP ERROR 2

- Definition -

- The feedback signal falls below 0.5 volt (rms) for 1.0 second when the exposure lamp is on.
- The exposure lamp stays on for longer than 25 seconds.

- Possible Causes -

- Defective ac drive/dc power supply board
- Defective main control board
- Defective power supply circuit

CODE #13 — ZERO CROSS SIGNAL ERROR 1

- Definition -

The CPU does not receive the zero cross signal within 2.0 seconds, or the interval between zero cross signals is more than 2.0 seconds.

- Possible Causes -

- Defective main control board
- Defective ac drive/dc power supply board
- Zero cross line open
- CN121 on the main control board or CN404 on the ac drive/dc power supply board is not correctly connected.

CODE #14 — ZERO CROSS SIGNAL ERROR 2

- Definition -

The detected current is not 50 or 60 Hz.

- Possible Causes -

- Defective main control board
- Defective ac drive/dc power supply board
- Zero cross line open
- CN121 on the main control board or CN404 on the ac drive/dc power supply board is not correctly connected.
- Power line not stable

CODE #15 — ZERO CROSS SIGNAL ERROR 3

- Definition -

The detected current is 50 Hz on a 60 Hz machine, or SP3 (Destination Setting) error.

- Possible Causes -

- Wrong power line connection
- SP3 is set to "0"
- SP3 input error

CODE #21 — SCANNER HOME POSITION ERROR 1

- Definition -

The scanner home position sensor's output remains LOW (de-actuated) for 10 seconds after the main switch is turned on, or the output remains LOW (de-actuated) after the scanner returns during the copy process.

- Possible Causes -

- Defective home position sensor
- Defective scanner drive motor
- Defective main control board
- Defective ac drive/dc power supply board
- Defective scanner drive circuit

CODE #22 — SCANNER HOME POSITION ERROR 2

- Definition -

The scanner home position sensor's output remains HIGH (actuated) for 4.0 seconds after the main switch is turned on, or the output remains HIGH (actuated) for 0.3 second after the scanner starts.

- Possible Causes -

- Defective home position sensor
- Defective scanner drive motor
- Defective main control board
- Defective ac drive/dc power supply board
- Defective scanner drive circuit
- F2 on the ac drive/dc power supply board open (blown fuse).

CODE #28 — LENS/MIRROR HOME POSITION ERROR 1 (A184 COPIER ONLY)

- Definition -

The lens/mirror home position sensor's output remains LOW (de-actuated) for 10 seconds after the unit moves to the home position.

- Possible Causes -

- Defective lens/mirror home position sensor
- Defective lens/mirror drive motor
- Defective main control board
- Defective lens/mirror drive mechanism

CODE #29 — LENS/MIRROR HOME POSITION ERROR 2 (A184 COPIER ONLY)

- Definition -

The lens home position sensor's output remains HIGH (actuated) for 10 seconds after the unit leaves the home position.

- Possible Causes -

- Defective lens/mirror home position sensor
- Defective lens/mirror drive motor
- Defective main control board
- Defective lens/mirror drive mechanism

CODE #40 – OPTICS THERMISTOR ERROR

-Definition-

The optics thermistor is open.

- Possible Cause -

- Defective optics thermistor
- Defective main control board
- CN111 on the main control board is not correctly connected.

CODE #52 — FUSING ERROR 1

- Definition -

The temperature detected by the thermistor does not reach 160°C within 45 seconds after the main switch is turned on.

To clear this error, refer to note 3 at the beginning of this chapter.

- Possible Causes -

- Defective fusing thermistor
- Fusing lamp open
- Defective ac drive/dc power supply board
- Defective main control board
- CN121 on the main control board or CN404 on the ac drive/dc power supply board is not correctly connected.

CODE #53 — FUSING ERROR 2

- Definition -

The temperature detected by the thermistor becomes higher than 230°C for more than 3.0 seconds.
To clear this error, refer to note 3 at the beginning of this chapter.

- Possible Causes -

- Thermistor short
- Defective ac drive/dc power supply board
- Defective main control board
- Fusing harness shorted
- Triac short

CODE #54 — FUSING ERROR 3

- Definition -

The temperature detected by the thermistor does not rise for more than 15°C within 15 seconds after the fusing lamp is turned on during stand-by.
To clear this error, refer to note 3 at the beginning of this chapter.

- Possible Causes -

- Poor thermistor connection
- Defective thermistor

CODE #55 — FUSING ERROR 4

- Definition -

- The temperature value output by the thermistor does not change at all after 20 seconds after the main switch is turned on.
- The temperature change detected by the thermistor is more than 20°C within any one second after the 20 seconds warm up time after the main switch is turned on.
  To clear this error, refer to note 3 at the beginning of this chapter.

- Possible Causes -

- Thermistor open
- Defective main control board
- Defective ac drive/dc power supply board
- Fusing lamp open
- Poor thermistor connection



3. ELECTRICAL COMPONENT DEFECTS

3.1 SENSORS

Component	Condition	Symptom
ADS Sensor (S1)	Stays HIGH (CN112-3)	The image density will be abnormal. (Dirty background)
	Stays LOW (CN112-3)	The image density will be abnormal. (Light copies)
Registration Sensor (S2)	Stays HIGH (CN108-2)	The "Add Paper" indicator lights when a copy is made.
	Stays LOW (CN108-2)	The "Paper Misfeed" indicator lights when a copy is made.
Lens and Mirror H.P. Sensor (S3) (A184 machines only)	Stays HIGH (CN113-2)	Service code E29 is displayed.
	Stays LOW (CN113-2)	Service code E28 is displayed.
Scanner H.P. Sensor (S4)	Stays HIGH (CN110-2)	Service code E22 is displayed.
	Stays LOW (CN110-2)	Service code E21 is displayed.
Toner Density Sensor (S5)	Stays HIGH (CN106-3)	The toner near/end condition will not be cleared even if new toner is added.
	Stays LOW (CN106-3)	User code U2 is displayed when installing a new imaging unit. During normal usage, the Manual Image Density or the ADS indicators start blinking.
Exit Sensor (S6)	Stays HIGH (CN115-2)	The "Paper Misfeed" indicator lights when a copy is made.
	Stays LOW (CN115-2)	The "Paper Misfeed" indicator stays on when the main switch is turned on.

3.2 SWITCHES

Component	Condition	Symptom
Main Switch (SW1)	OPEN	The copier does not turn on.
	SHORT	The copier does not turn off.
Interlock Switch (SW2)	OPEN	The copier does not turn on.
	SHORT	The copier does not turn off when the upper unit is opened.

4. BLOWN FUSE CONDITIONS

FUSE	Rating		Symptom when turning on the Main Switch
	120 V	230 V	
AC Drive/DC Power Supply Board			
F1	10 A/125 V	T5 A/250 V	No response
F2	8 A/125 V	T6.3 A/250 V	E22 lights
F3	2 A/125 V	T2 A/250 V	No response

5. USER CODES

U - code	Contents
U1 (Blinking)	Imaging unit life near end condition
U1 (Lit)	Imaging unit life end condition
U11 (Lit)	Imaging unit not installed
U12 (Lit)	Developer not installed

COPIER ELCTRICAL COMPONENT LAYOUT

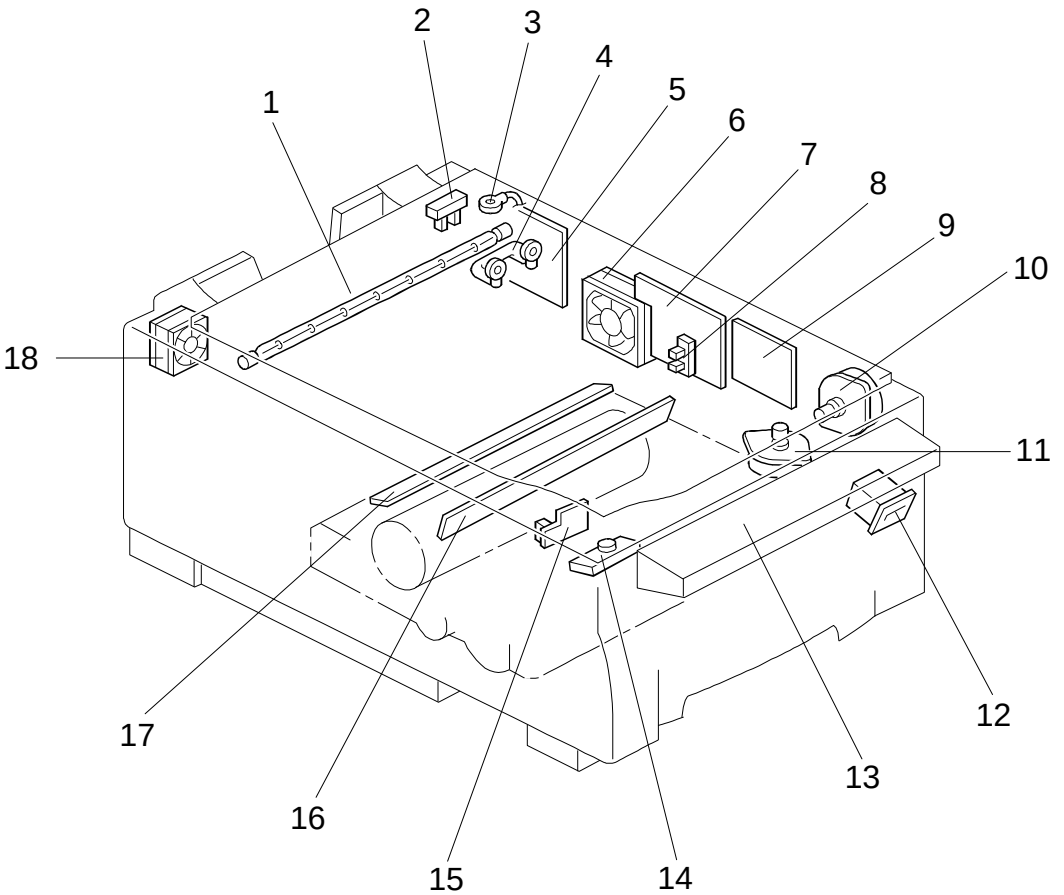

A184S500.wmf

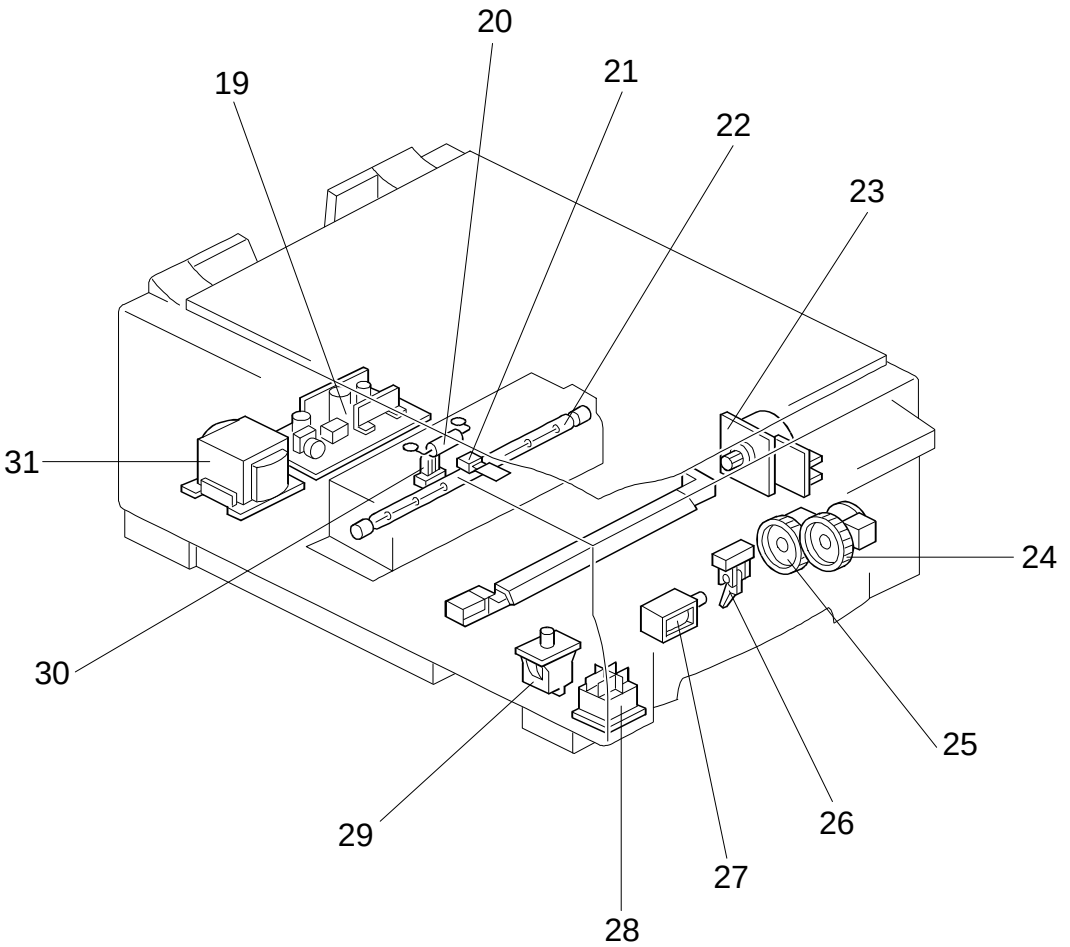

A184S501.wmf

Description	Index No.	P-to-P Location
Exposure Lamp (L1)	1	B4
Scanner H. P. Sensor (S4)	2	G1
Optics Thermistor (TH1)	3	E1
Exposure Lamp Thermofuse (TF1)	4	B4
Main Control Board (PCB1)	5	E3
Exhaust Fan Motor (M2)	6	D1
High Voltage Supply Board - CT/B/G (PCB3)	7	A3
Lens and Mirror H. P. Sensor (A184 machines only) (S3)	8	G1
Scanner Drive Board (PCB2)	9	A3
Scanner Drive Motor (M3)	10	A1
Lens and Mirror Motor (A184 machines only) (M4)	11	C4
Total Counter (except for -17 machines) (CO)	12	E4
Operation Panel Board (PCB5)	13	D1
Toner Density (TD) Sensor (S5)	14	F6
ADS Sensor (S1)	15	E1
Erase Lamp (L4)	16	C4, D4
Quenching Lamp (QL) (L3)	17	F1
Optics Cooling Fan Motor (220 ~ 240 V machines only) (M5)	18	C1
AC Drive / DC Power Supply Board (PCB4)	19	C6
Fusing Thermofuse (TF2)	20	B5
Fusing Thermistor (TH2)	21	F6
Fusing Lamp (L2)	22	C5
Main Motor (M1)	23	E7
Paper Feed Clutch (CL2)	24	D6
Toner Supply Clutch (CL1)	25	D6
Registration Sensor (S2)	26	F1
Registration Solenoid (SOL1)	27	E6
Main Switch (SW1)	28	A7
Interlock Switch (SW2)	29	A7
Exit Sensor (S6)	30	F6
Transformer (TR)	31	B8

COPIER TIMING CHART

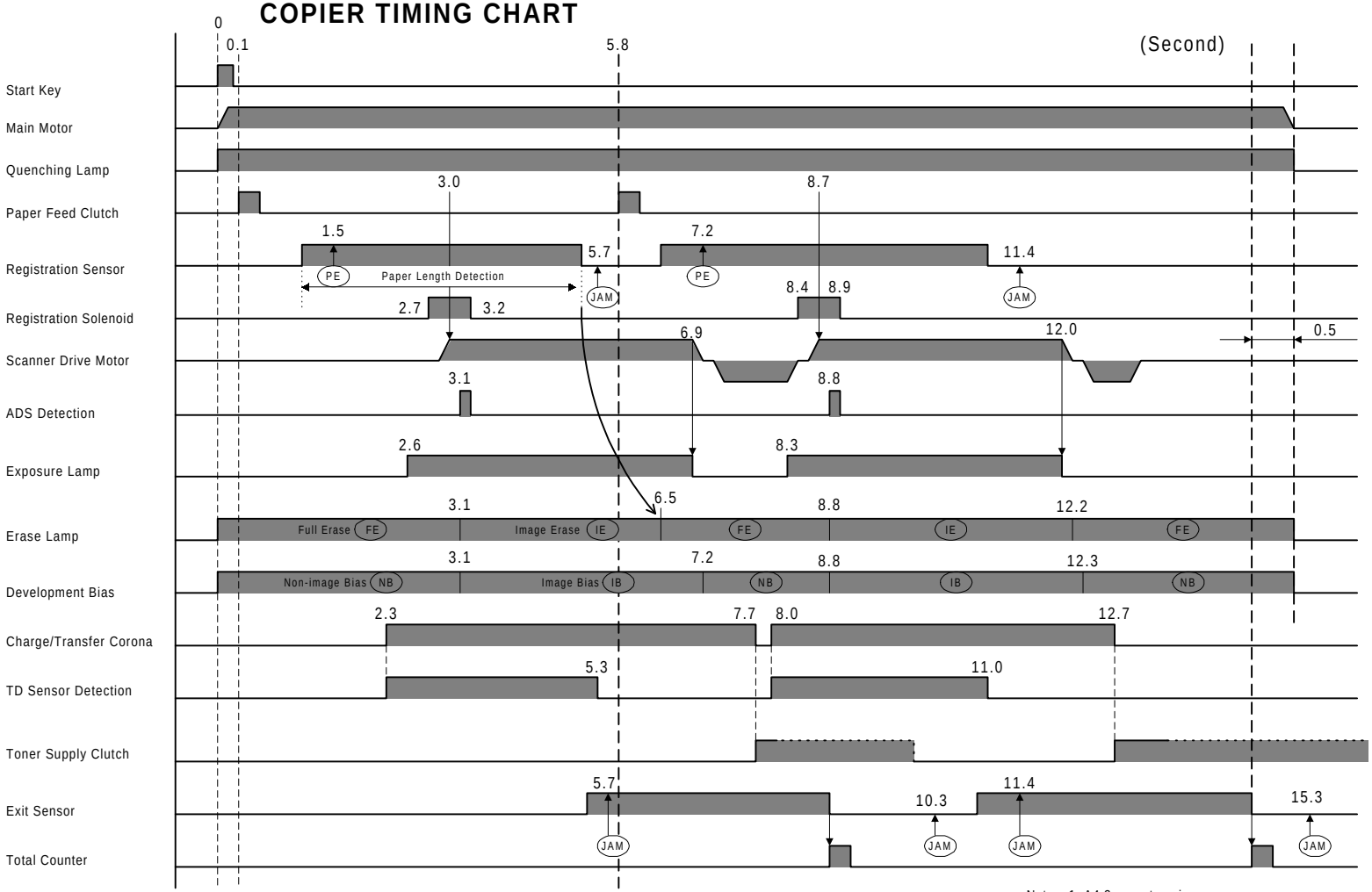

Note: 1. A4 2 repeat copies
2. 100%
3. ADS mode
4. Paper Tray

* For the 1st copy cycle, the CPU determines the copy paper to be the maximum (LG) paper size, except for the erase mechanism.

A183/A184

POINT-TO-POINT DIAGRAM A183/184 COPIER

May 24,1996

SCANNER DRIVE MOTOR
M3
SCANNER DRIVE BOARD (PCB2)
HIGH VOLTAGE SUPPLY BOARD-CT/B/G (PCB3)
OPTICS COOLING FAN MOTOR
M5
OPERATION PANEL BOARD (PCB5)
EXAUST FAN MOTOR
M2
OPTICS THERMISTOR (TH1)
ADS SENSOR (S1)
QL (L3)
REGIST. SENSOR (S2)
LENS &MIRROR H.P. SENSOR (A184 ONLY) (S3)
SCANNER H.P. SENSOR (S4)
MAIN CONTROL BOARD (PCB1)
LENS & MIRROR MOTOR (A184 ONLY)
M4
ERASE LAMP (L4) A184
ERASE LAMP (L4) A183
TOTAL COUNTER (EU ONLY)
EXPOSURE LAMP THERMOFUSE(TF1)
EXPOSURE LAMP (L1)
FUSING THERMOFUSE (TF1)
FUSING LAMP (L2)
AC DRIVE / DC POWER SUPPLY BOARD (PCB4)
TONER SUPPLY CLUTCH
CL1
PAPER FEED CLUTCH
CL2
REGISTRATION SOL.
SOL1
EXIT SENSOR (S6)
FUSING THERMISTOR (TH2)
DRAWER CONNECTOR
TD SENSOR (S5)
OPC DETECT
to MAIN SW
DRUM GND
MAIN MOTOR
M1
MAIN SW (SW1)
INTERLOCK SW (SW2)
SW-2
RY1
FUSE 1
AC POWER CORD
TRANSFORMER (TR)
DC POWER SUPPLY
3MΩ
DRUM
620V
to DRUM GND
EXPOSURE LAMP DRIVE CIRCUIT
FUSING LAMP DRIVE CIRCUIT
UPPER SIDE
LOWER SIDE

Symbol Table
- DC Line
- AC Line
- Pulse Signal
- Signal Direction
- Active High
- Active Low
- [ ] Voltage