RICOH

RICOH FT2050/2070

FIELD SERVICE MANUAL

RICOH COMPANY LTD.

CONTENTS

SECTION 1 : INSTALLATION REQUIREMENTS

SECTION 2: UNPACKING AND INSTALLATION

SECTION 3: PREPARATIONS FOR TRANSPORTING THE COPIER

SECTION 4: SERVICE TABLES AND REMARKS

SECTION 5: REPLACEMENT AND ADJUSTMENT

SECTION 6: SORTER CS1040

SECTION 7: DOCUMENT FEEDER DF36

SECTION 8: TROUBLE SHOOTING

SECTION 9: ELECTRICAL DATA

CAUTIONS

1. Before installing the machine, make sure that there is a suitable ground (earth) available.
2. Since some parts of the copier are supplied with high voltage, make sure the main switch is off and the power supply cord is unpluged before working on the copier.
3. When working on the fusing section, make sure that the fusing unit is cold.
4. When standing the clamshell straight up, place a block that has a height of approximately 80 mm (approx. 3") in front of the exit cover.
5. Do not turn on the safety switch when the clamshell is open.

SECTION 1

INSTALLATION REQUIREMENTS

1-1. Environment

1. **Temperature Range : 10°C to 30°C (50°F to 86°F)**
2. **Humidity Range : 15% to 90% RR**
3. **Ambient Illumination : Less than 1,500 luxs (Do not expose to direct sunlight)**
4. **Ventilation : Room air should turn over at least 3 times/hour.**
5. **Ambient Dust : Less than 0.1 5mg/m^3 (4×10^{-3} oz/yd^3)**
6. **Room Size : More than 10m^3 (13.4 yd^3)**
7. **If the installation place is air-conditioned or heated, place the machine:**
   a. **Where it will not be subjected to sudden temperature changes from low to high, or vice versa.**
   b. **Where it will not be directly exposed to cool air from an air conditioner in the summer.**
   c. **Where it will not be directly exposed to reflected heat from a space heater in winter.**
8. **Avoid placing the copier in an area filled with corrosive gas.**
9. **Avoid any area higher than 2,000m (6,500 feet) above sea level.**
10. **Place the copier on a strong and level base.**
11. **Avoid any area where the copier may be subjected to frequent strong vibration.**

1-2. Minimum Space Requirements

1. Front :70 cm (27-1/2")
2. Back :12 cm (4-3/4")
3. Right :70 cm (27-1/2")
4. Left :70 cm (27-1 /2")

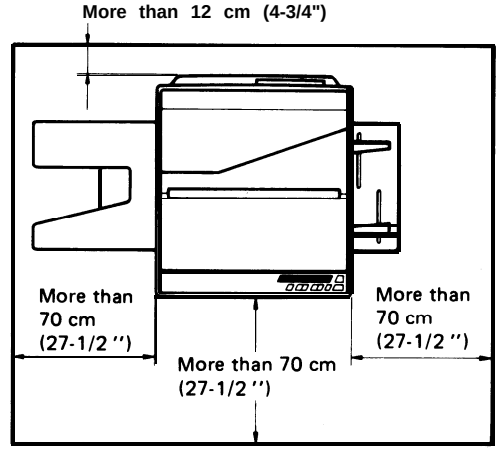

1-3. Power Source

1. Input voltage level
   - 110V/60Hz : More than 12A
   - 115V/60Hz : More than 12A
   - 220V/50Hz : More than 6A
   - 240V/50Hz : More than 6A
2. Permissible voltage fluctuation: ±10%
3. Permissible extension cord:
   At least 300V, 30A capacity and less than 5m (16.4") long.

Note:
1. Be sure to ground the machine. (Do not connect the grounding wire to a gas pipe.
2. Make sure the plug is firmly inserted in the outlet.
3. Avoid multi-wiring.
4. Do not set anything on the power cord.

SECTION 2

UNPACKING AND INSTALLATION

2-1. Unpacking Procedure

1. Take out the accessory box and the machine.
2. Remove the two cushion blocks.
3. Open the vinyl bag and take out the machine.

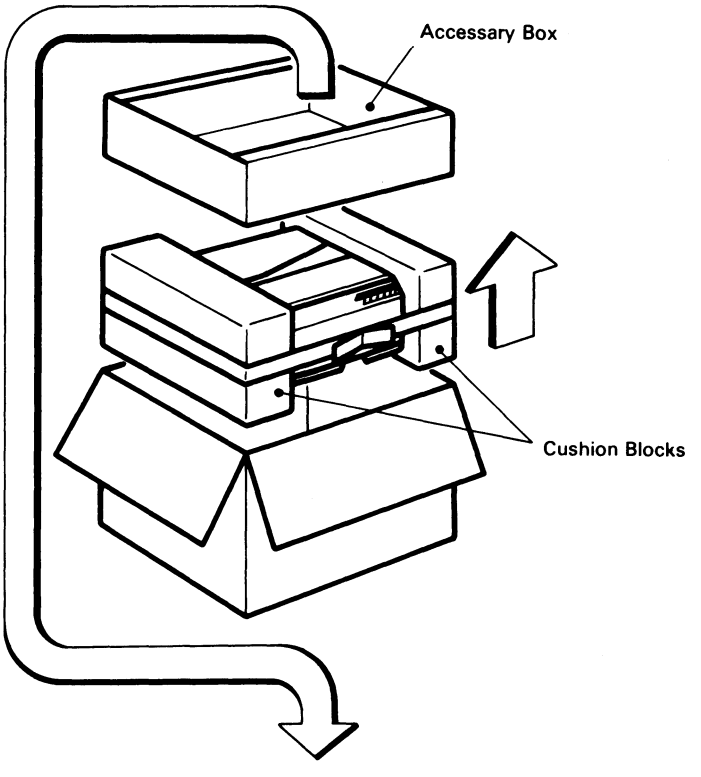

4. Check that the accessories are in the quantities according to the following list.

① Cassette . . . . . 2 pcs.
(One is in the machine.)

② Cassette Cover . . . .1 pc

③ Copy Tray . . . . . 1 pc

④ Manual Feed Guide . . . . . 1 pc

⑤ Master Unit . . . . . 1 pc

NOTE: Keep it in the box until installing it in the copier.

⑥ Toner . . . . . 1 cartridge (Black)

⑦ Operating instructions . . . . . 1 pc

⑧ N.E.C.R . . . . . 1 pc

⑨ Envelope for N.E.C.R. (115Vonly) . . . . . 1 pc

⑩ Multi-lingualDecal(220/240Vonly) . . . . . 1 pc

⑪ Paper Size Decal . . . . . 1 pc

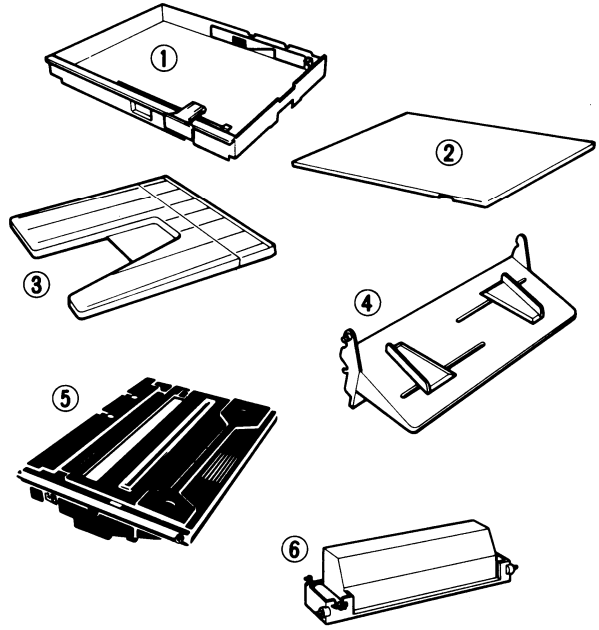

2-2. Installation Procedure

1. **Remove the two strips of tape.**

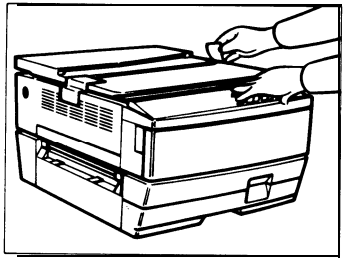

2. **Open the front cover.**

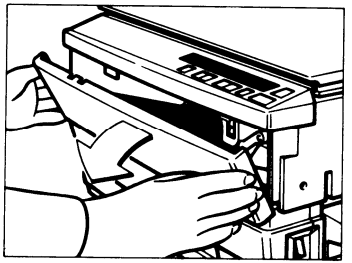

3. **Move the slider to the center and push down the release lever to open the top unit.**

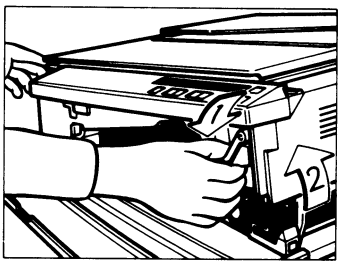

4. Remove the roller retainer.

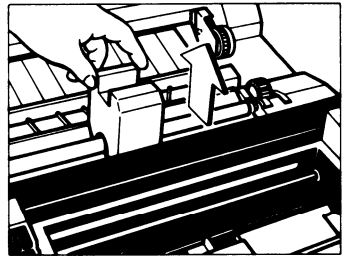

5. Remove the two strips of tape.

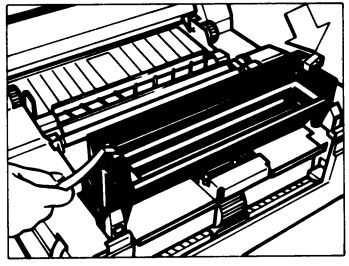

6. Remove the three wedges from the new master unit.
   Note: Do not touch the master (purple material) and avoid exposing it to light.

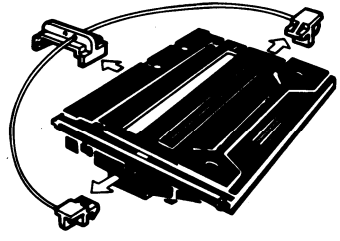

7. Insert the master unit into the copier.

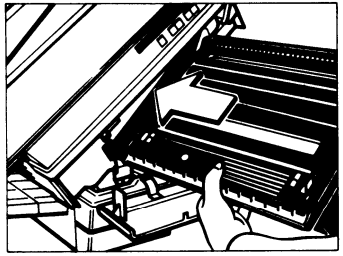

8. Peel off the polyester cover that protects the master.

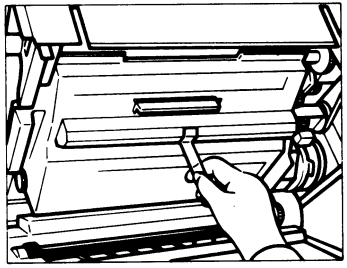

9. Push the master unit up until it locks in place.

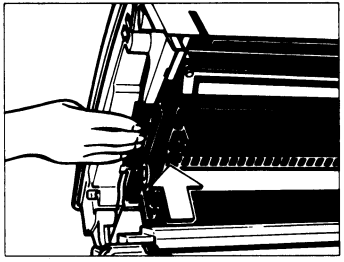

10. Install the manual feed guide on the right side of the machine.

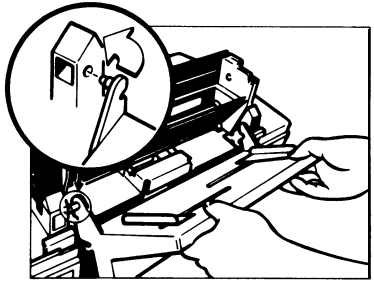

11. Shake the new cartridge of toner well.

12. Set the pins of the toner cartridge into the slots on the development unit. Then, turn the cartridge counterclockwise.

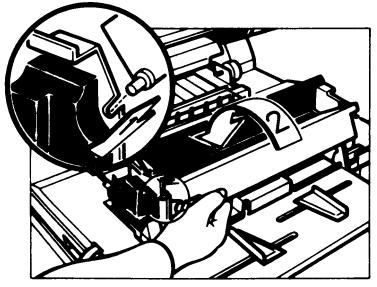

13. Install the cartridge crank onto the shaft and turn the cartridge crank clockwise to strip off the cartridge seal.
    Then, remove the cartridge crank and lower the top unit.
    Note: At installation, it is recommended to load two cartridges of toner.

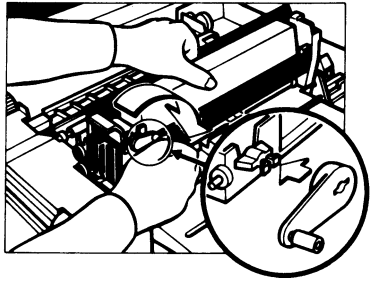

14. Lower the top unit.

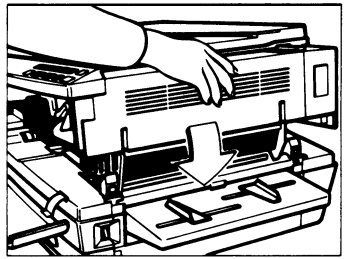

15. Close the front cover.

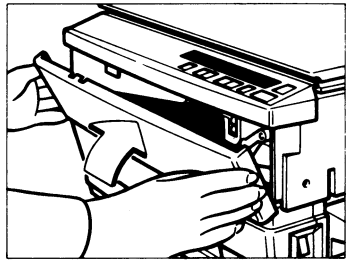

16. Pull out the cassette tray unit it stops

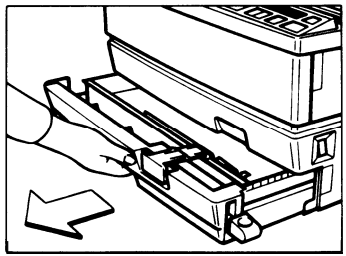

17. Remove the strip of tape and the silica gel.

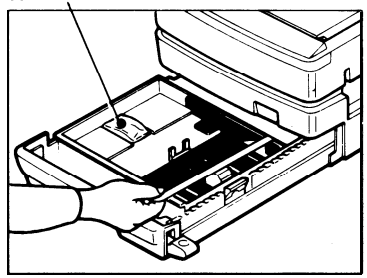

18. Take out the cassette and the two cushion blocks.

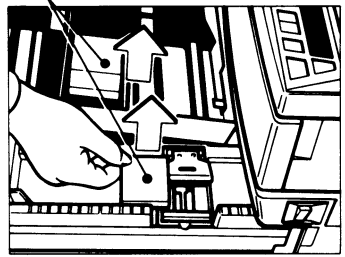

19. Load paper into the cassette so that it is flush with the front and side fences.

NOTE: The cassette holds approximately 250 sheets.

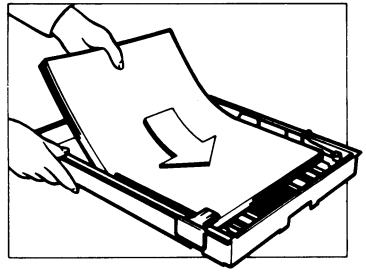

20. **Press down the corners of the paper stack so that they catch underneath the corner separators.**

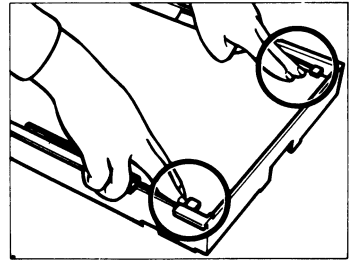

21. **Set the cassette on the cassette tray.**

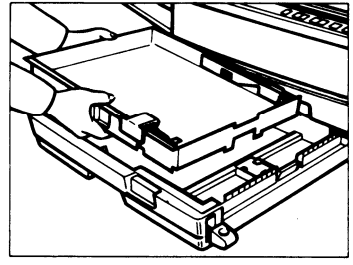

22. **Set the paper size flap.**

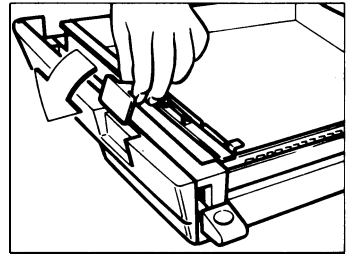

23. Push in the cassette tray until it stops.

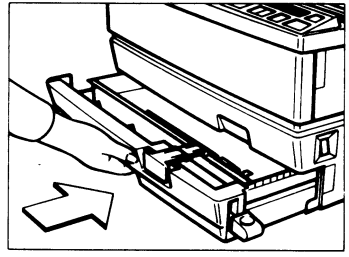

24. Install the copy tray on the left side of the machine.

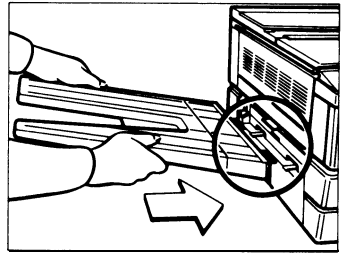

25. When not using this instruction booklet, place it in the holder on the back of the copier.

26. Check machine operation and copy quality. Fill out the New Equipment Condition Report.

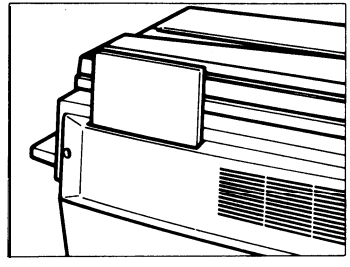

This completes machine installation.

2-3. Cassette Modification

1. **Remove the side fences and the rear fence (1 screw each).**

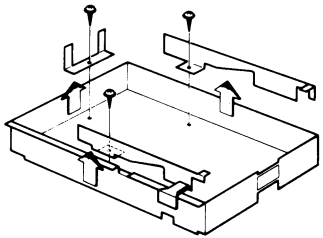

2. **Reposition the fences to the desired paper size position.**
3. **Insert the actuators in the proper slots on the front of the cassette.**
4. **Attach the proper paper size decal on the paper size flap.**

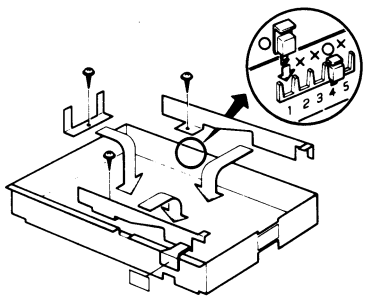

	(mm)	1	2	3	4	5
HLT (5½×8½)	138.7×215.8	○	○	×	×	×
UK (8×10)	203.2×254	×	×	○	×	×
GT (8×10½)	203.2×266.7	○	×	○	×	×
8×13	203.2×330.2	×	○	○	×	×
8¼×13(14)	209.6×330.2(355.6)	○	○	○	×	×
HLT (8½×5½)	215.9×139.7	×	×	×	○	×
LT (8½×11)	215.9×278.4	○	×	×	○	×
8½×13	215.9×330.2	×	○	×	○	×
LG (8½×14)	215.9×355.6	○	○	×	○	×
10×14	254 ×355.6	×	×	○	○	×
10×15	254 ×381	○	×	○	○	×
LT (11×8½)	279.4×215.9	×	○	○	○	×
DLT (11×17)	279.4×431.8	○	○	○	○	×
A6 (P.C.)	105 ×148	×	○	×	×	○
B6	128 ×182	×	×	○	×	○
A5	148 ×210	×	○	○	×	○
A5	210 ×148	○	○	○	×	○
B5	182 ×257	×	×	×	○	○
B5	257 ×182	○	×	×	○	○
A4	210 ×297	×	○	×	○	○
A4	297 ×210	○	○	×	○	○
B4	257 ×364	×	×	○	○	○
A3	297 ×420	×	○	○	○	○
11.8×9.8	300 ×250	○	×	×	×	×
10.8×8.8	276 ×225	×	○	×	×	×
A5	148 ×210	○	○	×	×	○

2-4. Main Transformer Conversion (220 to 240V only)

1. Open the top unit and remove the development unit.
2. Swing up the upper feed guide (1 screw).
3. Remove the lower feed guide (4 screw).
4. Uncouple the 220V connector and couple the 240V connector.

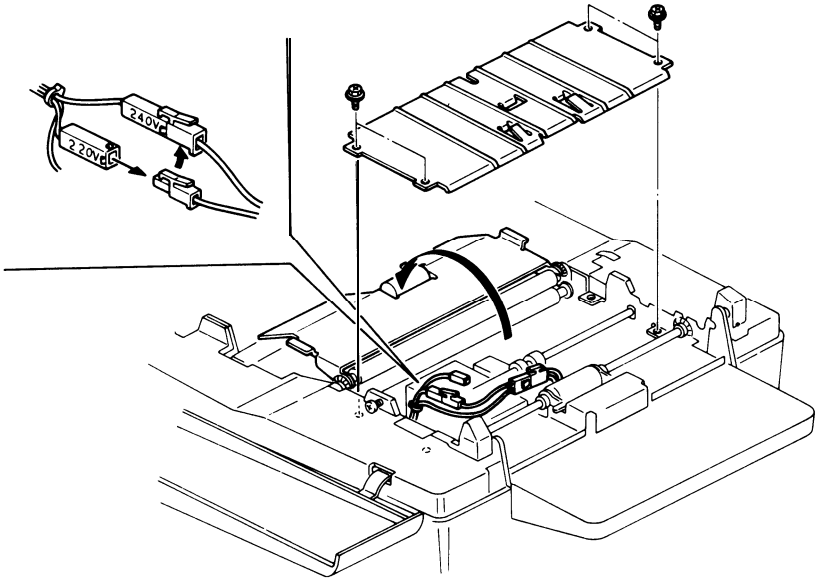

2-5. Key Counter Holder Installation

Note: Three types of counters are recommended for this copier (Ricoh, Hecon, and Hengstler key counters).

1. Remove the upper right cover (4 screws.)
2. Remove the key counter cover and fixing plate from the key counter bracket (2 screws).
3. Hold the fixing plate on the inside of the key counter bracket and insert the key holder.

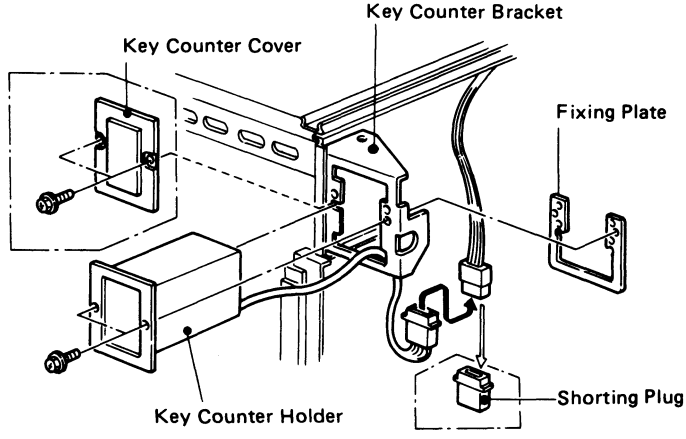

4. **Align the holes in the fixing plate with the mounting holes of the key counter holder and secure the key counter holder.**
   Note: The fixing plate has three sets of holes. Make sure to use the holes that match the type of counter when installing.
5. **Remove the shorting plug from the key counter connector.**
   Note: This shorting plug is usually on the harness.
6. **Plug in the key counter harness.**
7. **Reassemble the copier. Insert the key counter and check its operation.**

2-6. Unpacking Procedure

1. Take out the accessory box and the machine.
2. Remove the two cushion blocks.
3. Open the vinyl bag and take out the machine.

1) Accessory Box
2) Cushion Blocks

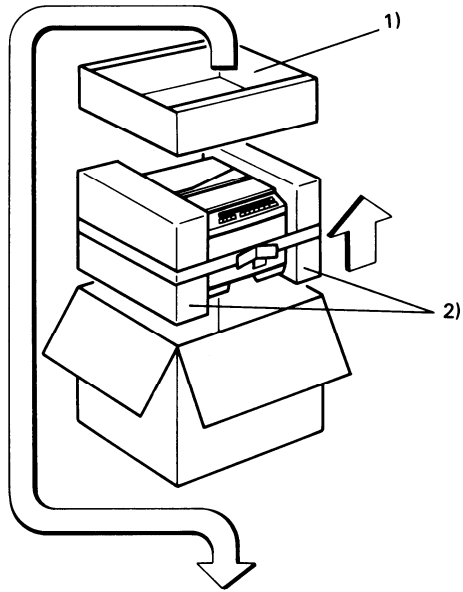

4. Check that the accessories are in the quantities according to the following list.

1] Cassette . . . . . 2 pcs.

. . . . . 3 pcs. (Asia)

(One is in the machine.)

2) Cassette Cover . . . . . 1 pc

3) Copy Tray . . . . . 1 pc

4) Paper Tray . . . . . 1 pc

5) Master Unit . . . . . 1 pc

NOTE: Keep it in the box until installing it in the copier.

6) Toner . . . . . 1 cartridge (Black)

7) Operating Instructions . . . . . 1 pc

8) N.E.C.R . . . . . 1 pc

9) Envelope for N.E.C.R. (USA only) . . . . . 1 pc

10) Multi-lingualDecal(220/240V only) . . . . . 1 pc

11) Paper Size Decal . . . . . 1 pc

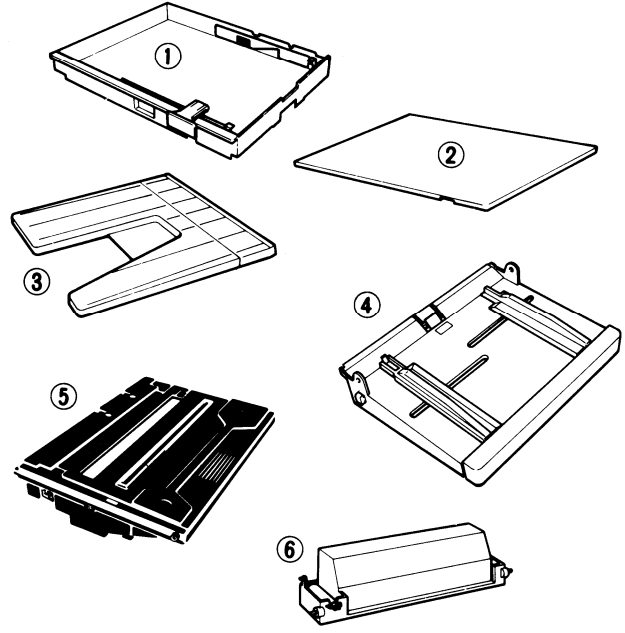

2-7. Installation Procedure

1. **Remove the two strips of tape.**

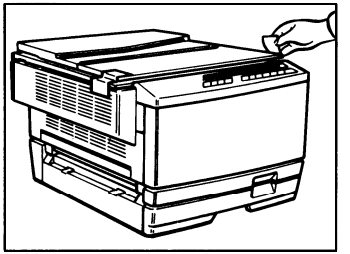

2. **Open the front cover.**



3. **Move the slider to the center and push down the release lever to open the top unit.**

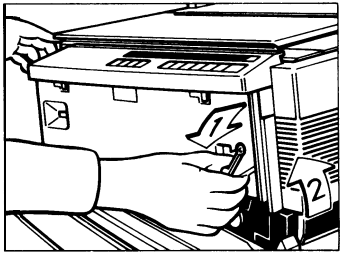

4. Remove the roller retainer.

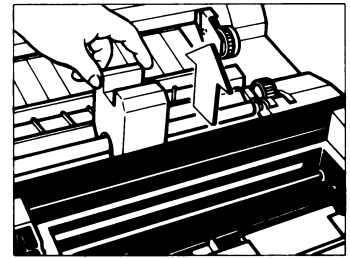

5. Remove the two strips of tape.

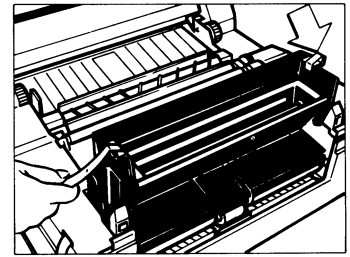

6. Remove the three wedges from the new master unit.

   Note: Do not touch the master (purple material) and avoid exposing it to light.

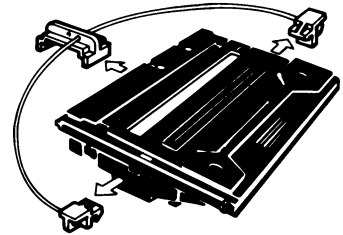

7. Insert the master unit into the copier,

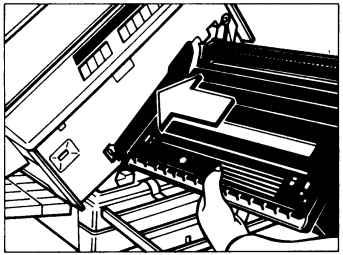

8. Peel off the polyester cover that protects the master.

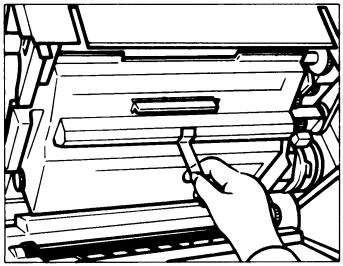

9. Push the master unit up until it locks in place.

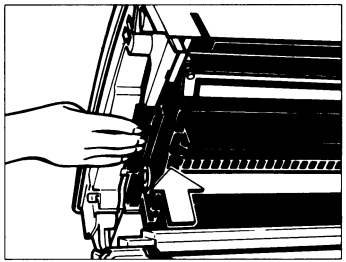

10. Remove the two strips of tape and one cushion block from the paper tray.

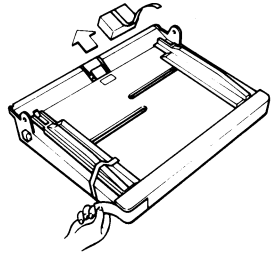

11. Install the paper tray on the right side of the machine.

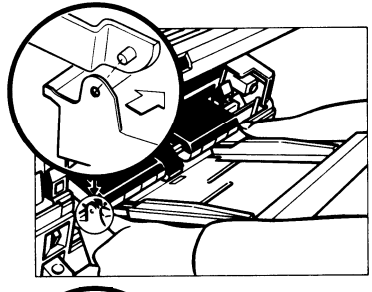

12. Shake the new cartridge of toner well.

13. Set the pins of the toner cartridge into the slots on the development unit. Then, turn the cartridge counterclockwise

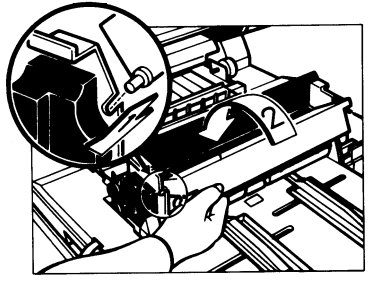

14. Install the cartridge crank onto the shaft and turn the cartridge crank clockwise to strip off the cartridge seal.
    Then, remove the cartridge crank and lower the top unit.
    Note: At installation, it is recommended to load two cartridges of toner.

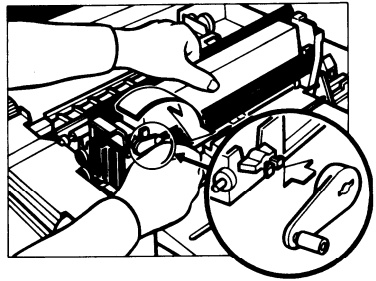

15. Lower the top u-nit.

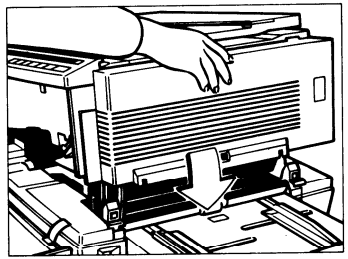

16. Close the front cover.

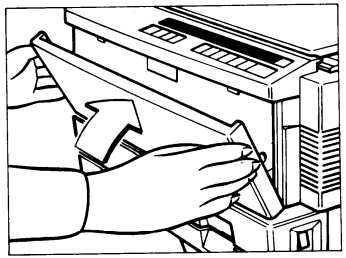

17. Pull out the cassette tray unit it stops.

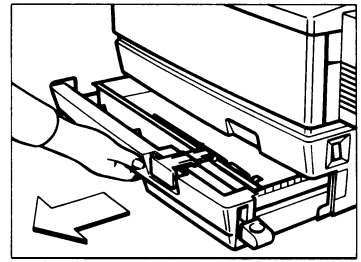

18. Remove the strip of tape and the silica gel.

1) Silica Gel

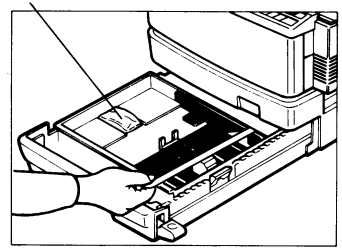

19. Take out the cassette and the two cushion blocks.

1) Cushion Blocks

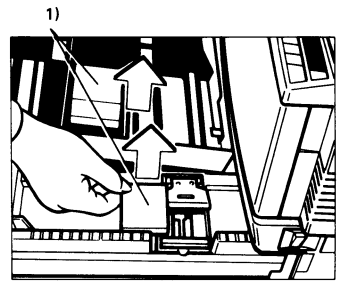

20. Load paper into the cassette so that it is flush with the front and side fences.
    Note: The cassette holds approximately 250 sheets.

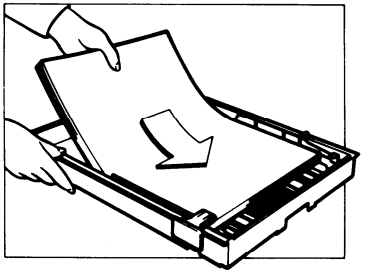

21. Press down the corners of the paper stack so that they catch underneath the corner separators.

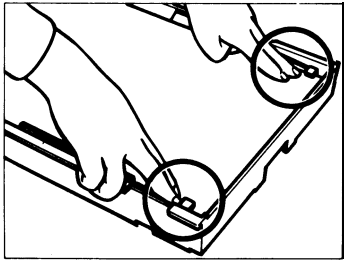

22. Set the cassette on the cassette tray.

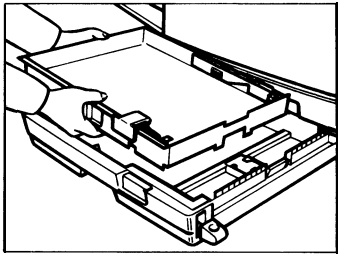

23. Set the paper size flap.

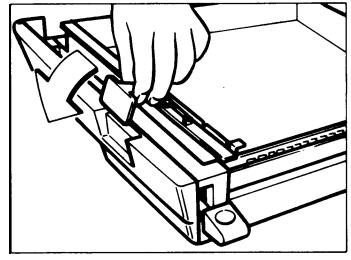

24. Push in the cassette tray until it stops.

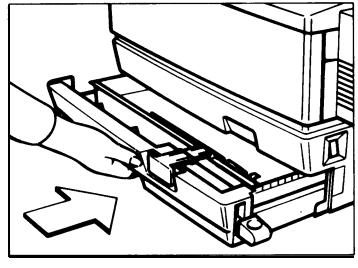

25. Slide the drawer tray to the position of the paper size.

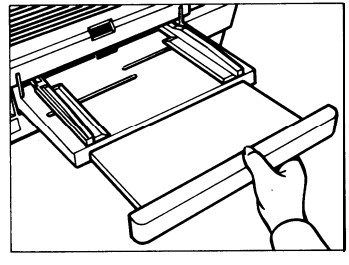

26. Load paper into the paper tray.

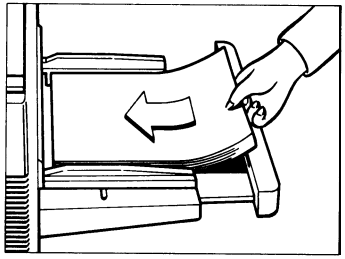

27. Adjust the paper guides so that they contact both sides of the stack firmly.

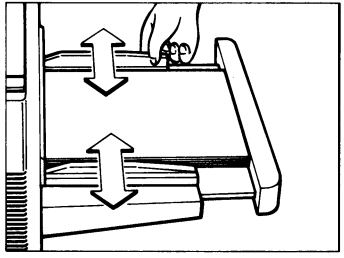

28. Install the copy tray on the left side of the machine.

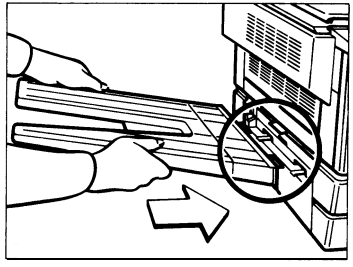

29. When not using this instruction booklet, place it in the holder on the back of the copier.

30. Check machine operation and copy quality. Fill out the New Equipment Condition Report.

This completes machine installation.

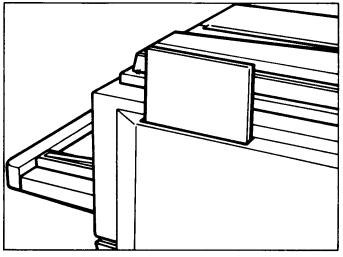

2-8, Main Transformer Conversion (220 to 240V only)

1. Open the top unit and remove the development unit.
2. Swing up the upper feed guide (1 screw).
3. Remove the lower feed guide (4 screw).
4. Uncouple the 220V connector and couple the 240V connector.
5. Remove the upper rear cover (2 screws).
6. Shift the jumper wire (JP401) on the AC drive board from T401 to T402.

Note: Slide the terminal lock up to release the jumper wire and slide it down to secure the wire in position.

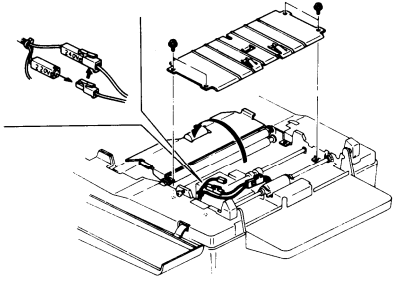

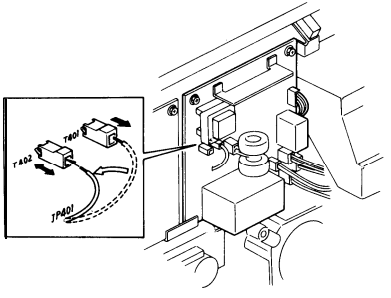

SECTION 3

PREPARATIONS FOR TRANSPORTING THE COPIER

Before moving the copier from its place of installation, be sure to prepare it for transportation as follows. The copier may be badly damaged if it is moved without proper preparation.

Note: * If the copier is installed with the DF or sorter, remove them first.
(See the DF or Sorter Installation procedure.)

3-1. Short Distance (Room to Room)

1. **Remove the copy tray and manual feed guide/paper tray.**
2. **Remove the cassette tray.**
3. **Secure the slider with strips of tape.**

CAUTION: When transporting the copier, always use the grips on the front and rear to handle the copier. Never grip the bottom plate of the copier.

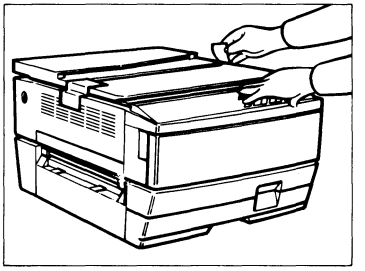

(FT2050)

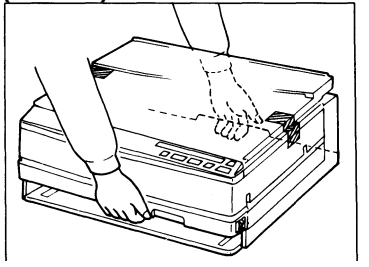

(FT2070)

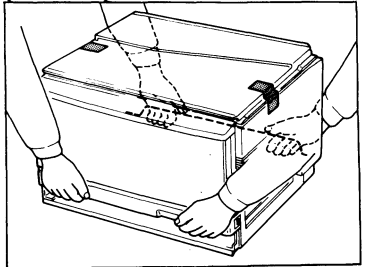

3-2. Long Distance (by vehicle)

1. Remove the copy tray and manual feed guide/paper tray.
2. Remove the cassette tray.
3. Open the clamshell and secure the development unit with strips of tape.
4. Secure the slider with strips of tape.

CAUTION : * While transporting the copier, always cover the copier to avoid direct sunshine.
* When the copier is in a vehicle, do not expose it to extreme hot or cold conditions.
* When transporting the copier, always use the grips on the front and rear to handle the copier.
Never grip the bottom plate of the copier.

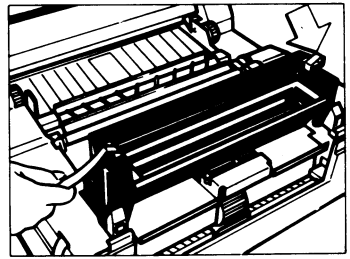

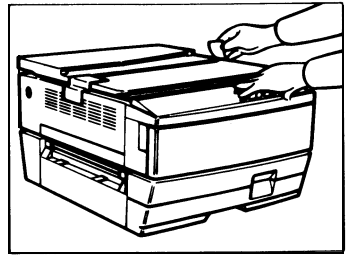

(FT2050)

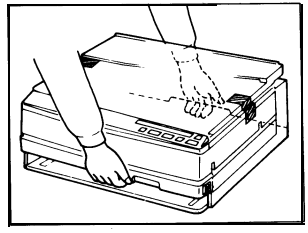

(FT2070)

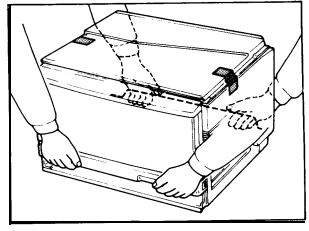

SECTION 4

SERVICE TABLES AND REMARKS

4-1. Maintenance Guide

Note: This guide shows the items to be cleaned and their effect on the copies if they are not clean. Clean these items as per the maintenance table.

[FT2050]

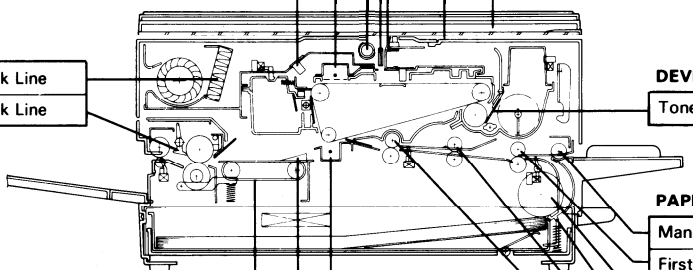

CHARGE CORONA

Charge Corona Wire	White Stripes

QUENCHING

Quenching Lamp	Dirty Copies

FUSING

Thermistor (Fusing)	Black Line
Hot Roller Strippers	Black Line

TRANSPORT

Transport Belt	Dirty Copies
Transport Guide Plate	Dirty Copies

TRANSFER CORONA

Transfer Corona Wire	Faint Copies

OPTICS & EXPOSURE

Exposure Lamp	Dirty Copies
Fiber Optics	Faint Copies
Reflector	Dirty Copies
Exposure Glass	Dirty Copies
Platen Cover Sheet	Dirty Copies

DEVELOPMENT

Toner Metering Blade	White Stripes

PAPER FEED

Manual Feed Roller	Misfeed
First Relay Roller	Misfeed
Paper Feed Roller	Misfeed
Friction Pad	Double Feed
Second Relay Roller	Misfeed
Registration Roller	Registration Bad

[FT2070]

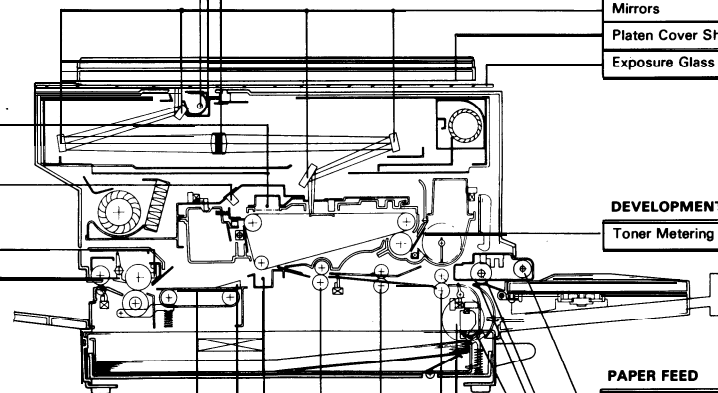

OPTICS & EXPOSURE

Exposure Lamp	Dirty Copies
Reflector	Dirty Copies
Lens	Dirty Copies
Mirrors	Dirty Copies
Platen Cover Sheet	Dirty Copies
Exposure Glass	Dirty Copies

CHARGE CORONA

Charge Corona Wire	White Stripes

QUENCHING

Quenching Lamp	Dirty Copies

FUSING

Thermistor (Fusing)	Black Line
Hot Roller Strippers	Black Line

DEVELOPMENT

Toner Metering Blade	White Stripes

PAPER FEED

Pick-up Roller	Misfeed
Tray Feed Roller	Misfeed
Tray Friction Pad	Double Feed
Friction Pad	Double Feed
Paper Feed Roller	Misfeed
First Relay Roller	Misfeed
Second Relay Roller	Misfeed
Registration Roller	Registration Bad

TRANSPORT

Transport Belt	Dirty Copies
Transport Guide Plate	Dirty Copies

TRANSFER CORONA

Transfer Corona Wire	Faint Copies

4-2. Maintenance Table

NOTE: When you visit the customer for a service call, perform the following.

SECTION	ITEM TO BE CLEANED	MATERIAL TO BE USED
Erase and Optics	1. Erase Lamp/Master Sensor	Soft Cloth (Water) or Blower Brush
	2. Fiber Optics (FT2050)	Fiber Optics/Corona Wire Cleaner or Silicone Cloth
	3. Exposure Glass	Soft Cloth (Glass Cleaner)
	4. Platen Cover Sheet	Soft Cloth (Water or Alcohol)
	5. Exposure Lamp	Wet Soft Cloth, then Dry Soft Cloth
	6. Reflector	Silicone Cloth
	7. Exposure Sensor (FT2050)	Blower Brush
	8. Auto ID Sensor	Blower Brush
	9. Lens/Mirrors (FT2070)	Silicone Cloth
Development and Quenching	1. Toner Metering Blade	Toner Agitator (when necessary)
	2. Quenching Lamp	Soft Cloth (Water) or Blower Brush

SECTION	ITEM TO BE CLEANED	MATERIAL TO BE USED
Paper Feed and Transport	1. Paper Feed Roller	Soft Cloth (Water)
	2. Friction Pad	Soft Cloth (Water)
	3. 1st Relay Roller	Soft Cloth (Water)
	4. 2nd Relay Roller	Soft Cloth (Water)
	5. Registration Roller	Soft Cloth (Water)
	6. Cassette Pad	Soft Cloth (Water)
	7. Paper Guide Plates	Soft Cloth (Water)
	8. Transport Belt	Soft Cloth (Water)
	9. Paper Tray Pads (FT2070)	Soft Cloth (Water)
	10. Pick-up Roller (FT2070)	Soft Cloth (Water)
	11. Tray Feed Roller (FT2070)	Soft Cloth (Water)
Fusing	1. Hot Roller Strippers	Soft Cloth (Water)
	2. Thermistor	Soft Cloth (Alcohol)
	3. Paper Guide Plates	Soft Cloth (Water)
Corona	1. Charge Corona Wire	Fiber Optics/Corona Wire Cleaner or Blower Brush
	2. Transfer Corona Wire	Cotton Swabs or Soft Cloth (Alcohol)
	3. Corona Casings	Soft Cloth (Water)
	4. Transfer Guide Plate	Soft Cloth (Water)
Others	1. Grid Plate of Master Unit	Blower Brush

4-3. Lubrication Table

NOTE: Lubrication must be done within the number of copies indicated in the following table.

SECTION	ITEM TO BE LUBRICATED	NO. OF COPIES	LUBRICATING MATERIAL
Erase and Optics	1. Fiber Optics Holder (FT2050)	As Necessary	Grease-501
Paper Feed and Transport	1. Paper Feed Clutch Spring	60 K	Mobil Temp 78
	2. 1st Relay Clutch Spring	60 K	Mobil Temp 78
	3. Registration Clutch Spring	60 K	Mobil Temp 78
	4. Tray Feed Clutch Spring (FT2070)	60 K	Mobil Temp 78
	5. Pick-up Clutch Spring (FT2070)	60 K	Mobil Temp 78
Others	1. Master Clutch Spring	60 K	Mobil Temp 78

4-4. Expected Life of Parts

NOTE: Main parts have the following expected service life.

SECTION	PART DESCRIPTION	EXPECTED SERVICE LIFE
Development	1. Toner Metering Blade	60 K (Black) 6 K (Color)
Paper Feed and Transport	1. Friction Pad 2. Tray Friction Pad (FT2070)	60 K 60 K
Fusing	1. Hot Roller 2. Hot Roller Strippers 3. Pressure Roller	120K 120K 180K
Corona	1. Charge Corona Wire 2. Transfer Corona Wire	80 K 80 K

4-5. Special Tools and Lubricants

NO.	DESCRIPTION	PART NO.	REMARKS
1.	Positioning Ring	52169003	
2.	Test Chart OS-A3	54209502	100 sheets/set
3.	Digital Multimeter	54209507	BECKMAN RMS3030
4.	Deluxe Test Lead . Accessory Kit	54209508	BECKMAN DL241
5.	Grease - Mobil Temp 78	54479078	400 g/can
6.	Grease - Shin-etsu Silicon G-501	52039501	50 g/bottle

4-6. Points to Remember

Master Unit

1. Never touch the master belt and do not apply oil or an organic solvent to prevent the master belt from being deformed.
2. When the master unit is out of the machine or the upper clamshell is open, avoid exposing it to a bright light or direct sun light to prevent the master belt from being light fatigued.
3. Always store master unit in a cool and dry place.
4. Do not leave master units in vehicles during hot weather. It does not matter whether the master units are installed in machines or separate.
5. The variable resistor for adjusting the master sensor is factory preset and should not be adjusted in the field.
6. Keep the master unit level when it is out of the copier.

Charge

1. The variable resistor (VR-C) is factory preset and should not be adjusted in the field.
2. Do not touch the corona wire with oily hands.
3. Instruct the operator how and when to use the corona wire/fiber optics cleaner.
4. Clean the corona wire at every service call.
5. Clean the grid plate with a blower brush.

Optics

1. Clean the reflector, fiber optics/lens and mirrors, exposure lamp at every service call.
2. The variable resistor (VR - 1) on the exposure sensor board is factory preset and should not be adjusted in the field (FT2050).
3. The 2nd mirror positioning screws are factory preset and should not be adjusted in the field. (FT2070)
4. The exposure lamp position should be adjusted when the exposure lamp has been removed or replaced. (FT2070)
5. Check the copy image at every service call and adjust it if necessary. (FT2070)
6. The exposure glass has markings on every corner of its upper surface. When replacing the exposure glass, make sure that the markings are on the side facing upwards. (FT2070)

Development

1. When white vertical lines appear on the copy, use the toner agitator to clean the toner metering blade.
2. Do not use the toner agitator unless copy image problems occur. This is to prevent damaging the toner metering blade.
3. Be careful not to nick or scratch the development roller surface.
4. Be careful not to use a black development unit for color copying, or a color development unit for black copying.
5. Always store toner in a cool and dry place.
6. Instruct the operator to ensure that the appropriate color plate is attached to all color development units.

Transfer

1. The variable resistor (VR-T) on the transfer/bias power pack is factory preset and should not be adjusted in the field.
2. Do not touch the transfer corona wire with oily hands.
3. Clean the transfer corona wire with a soft cloth at every service call.

Paper Feed

1. Do not allow the paper feed rollers to become oily or dirty.
2. The improper installation of paper size actuators causes misfeeds and erase problems.
3. Instruct the operator to ensure that one sheet of OHP transparency is loaded at a time and that the OHP transparency lever is down when copying onto transparencies (FT2070).
4. The improper setting of side and rear fences of the paper tray may cause erase problems (FT2070).

Fusing

1. Be careful not to damage the hot roller strippers.
2. Do not touch the fusing lamp with your bare hands.
3. Make sure that the fusing lamp does not contact the hot roller.
4. Clean the fusing thermistor and hot roller strippers at every service call.

SECTION 5

REPLACEMEMT AND ADJUSTMENT

5-1. Exterior Removal

FT2050

Upper Clamshell 5-2

Lower Clamshell 5-3

FT2070

Upper Clamshell 5-4-1

Lower Clamshell 5-4-2

Upper Clamshell

(1) Platen cover (2 buttons)
1. Pull up both buttons and lift the platen cover slightly and slide it to the rear to remove.

(2) Copy Tray

(3) Upper Right Cover (4 screws)
1. Open the clamshell slowly.
2. Move the slider to the far left home position by pressing the slider lock lever.

(4) Upper Left Cover (4 screws)
1. Open the front cover.
2. Move the slider to the right, and loosen the slider stopper screw.

(5) Operation Panel (2 screws and 1 connector)
1. Open the front cover to remove the screws.

NOTE: * When installing the operation panel, the edge of the exposure glass must be in the groove of the operation panel.

(6) Upper Rear Cover (2 screws)

(7) Inner Cover (1 E-ring and 2 screws)
1. Remove the operation panel.
2. Open the clamshell and remove the release lever.

NOTE: * When installing the inner cover, be sure that the positioning tabs engage with the metal frame correctly.

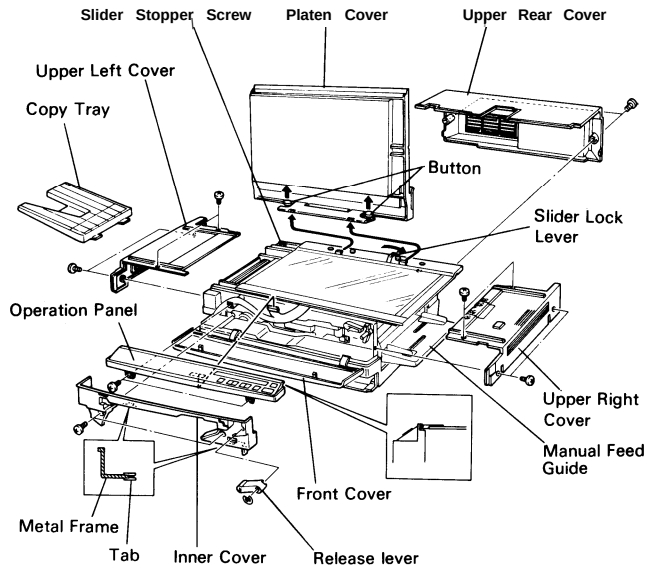

Lower Clamshell

(1) **Front Cover (2 screws)**

1. **Open the clamshell to remove the screws.**
2. **Pull out the cassette holder to remove the front cover.**

NOTE: * When installing the front cover, be sure that the tabs engage with the positioning notches.

(2) Manual Feed Guide

1. **Open the clamshell.**
2. **Lift the manual feed guide and remove.**

(3) Lower Right Cover (2 screws)

(4) Lower Rear Cover (4 screws)

1. **Remove the upper rear cover (2 screws).**
2. **Open the clamshell and remove.**

NOTE: * Remember that one screw is longer than the other three screws. The longer screw prevents the upper paper feed guide plate from being turned over.

(5) Lower Left Cover (2 screws)

1. **Remove the front cover (2 screws), the upper rear cover (2 screws), and lower rear cover (4 screws) to remove the lower left cover.**

(6) Exit Cover (2 screws)

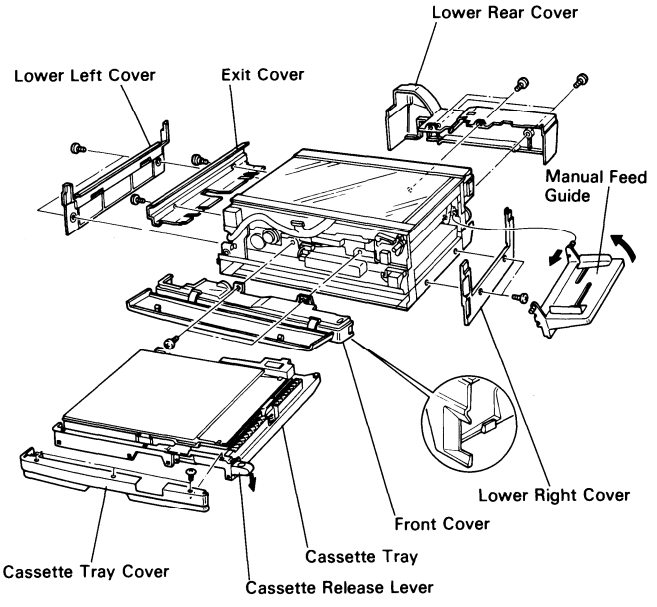

(7) Cassette Tray

1. Push down the cassette release lever.
2. Pull out the cassette tray.
3* Lift the front of the cassette tray slightly, and remove.

(8) Cassette Tray Cover (3 screws)

1. Pull out the cassette tray and remove.

Upper Clamshell (FT2070)

(1) Platen cover (2 pushlocks)
1. Pull up both pushlocks, lift the platen cover slightly and slide it to the rear to remove.

(2) Copy Tray

(3) Upper Right Cover (4 screws)
1. Open the front cover.
2. Move the slider to the far left.

(4) Upper Left Cover (4 screws)
1. Open the front cover.
2. Move the slider to the right.

(5) Inner Cover (1 E-ring and 2 screws)
1. Move the slider to the center and open the clamshell.
2. Remove the release lever (1 E-ring).

NOTE: When installing the inner cover, be sure that the positioning tabs engage with the metal frame correctly.

(6) Operation Panel (2 screws and 1 connector)
1. Remove the inner cover (1 E-ring and 2 screws).

NOTE: When installing the operation panel, the edge of the exposure glass must be in the groove of the operation panel.

(7) Upper Rear Cover (2 screws)

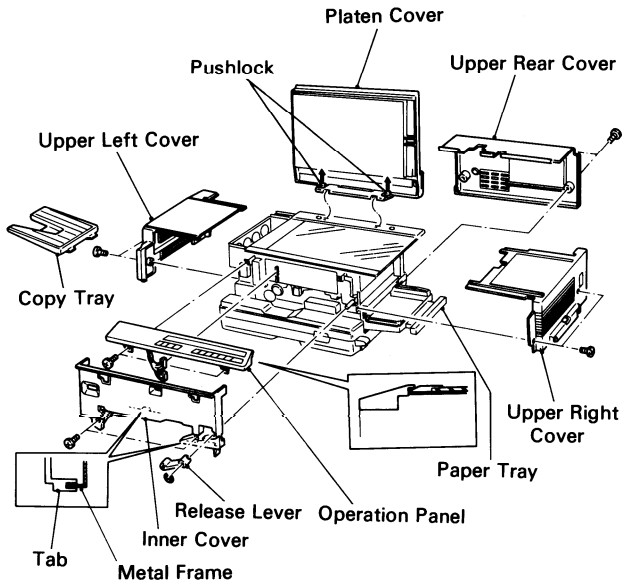

Lower Clamshell (FT2070)

(1) Front Cover (2 screws)

1. Open the clamshell to remove the screws.
2. Pull out the cassette holder to remove the front cover.

NOTE: * When installing the front cover, make sure that the tabs engage with the positioning notches. "

(2) Paper Tray

1. Open the clamshell.
2. Lift paper tray and remove.

(3) Lower Right Cover (2 screws)

(4) Lower Rear Cover (4 screws)

1. Remove the upper rear cover (2 screws).
2. Open the clamshell and remove,

NOTE: * Remember that one screw is longer than the other three screws. The longer screw prevents the upper paper feed guide plate from being turned over.

(5) Lower Left Cover (2 screws)

1. Remove the front cover (2 screws), the upper rear cover (2 screws), and lower rear cover (4 screws) to remove the lower left cover.

(6) Exit Cover (2 screws)

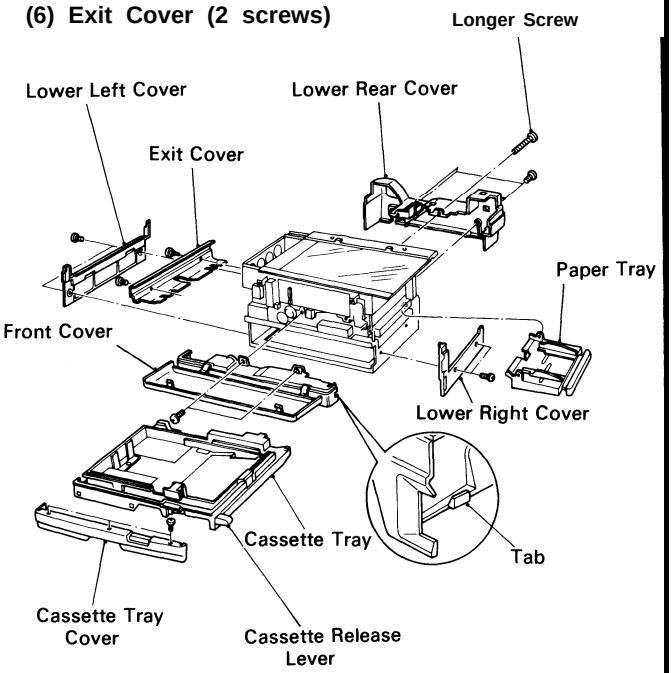

5-2. Erase and Optics

FT2050

Erase Lamp Replacement 5-6
Slider Removal 5-7
Slider Drive Wire Replacement 5-8
Fiber Optics Removal 5-9
Exposure Lamp Unit Replacement 5-10
Slider Clutch Removal 5-11
Fiber Optics Holder Lubrication 5-12

FT2070

Erase Lamp Replacement 5-12-1
Exposure Lamp Replacement. 5-12-2
Exposure Lamp Positioning 5-12-3
Slider Removal 5-12-4
Slider Drive Wire Replacement 5-12-5
Lens Drive Wire Replacement 5-12-7
Lens Drive Motor Replacement 5-12-9
Home Position Sensor Replacement 5-12-10

Erase Lamp Replacement

1. **Open the clamshell and remove the upper right cover.**

2. **Pull the master release hook and remove the master unit.**

CAUTION: * Do not touch the master belt (purple material), and avoid exposing it to light.

NOTE: * When installing the master unit, make sure that the master rides in the guide rails.

3. **Remove one screw and one connector.**

4. **Slide the erase lamp unit to the rear and remove by turning its front end counterclockwise.**

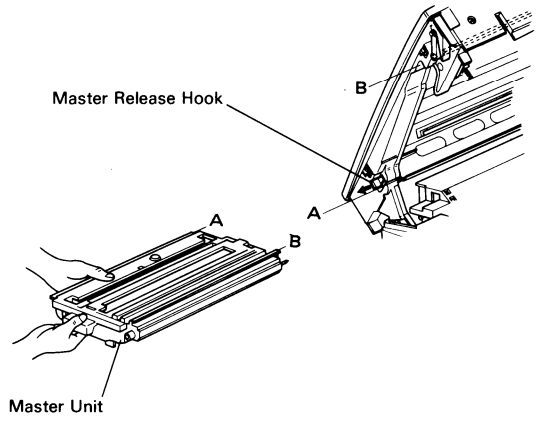

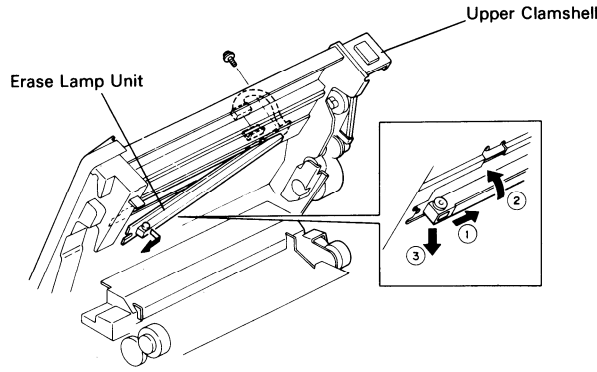

Slider Removal

1. Remove the platen cover.
2. Remove the upper rear cover,
3. Remove the harness from the 2 clamps.
4. Remove the drive wire bracket (1 screw and 1 connector) together with the slider lock lever, slider release lever, and slider lock spring.
5. Remove the slider drive wire together with the slider drive pulley (1 wire spring).

NOTE: * Position the slider lock notch just above the slider drive pulley so that the slider drive pulley can be removed.

6. Remove the slider stopper, move the slider to the left, and then remove.

NOTE: * For re-installation, see "Slider Drive Wire Replacement" section.
* Be careful not to damage the actuator of the home position switch when re-installing the slider.

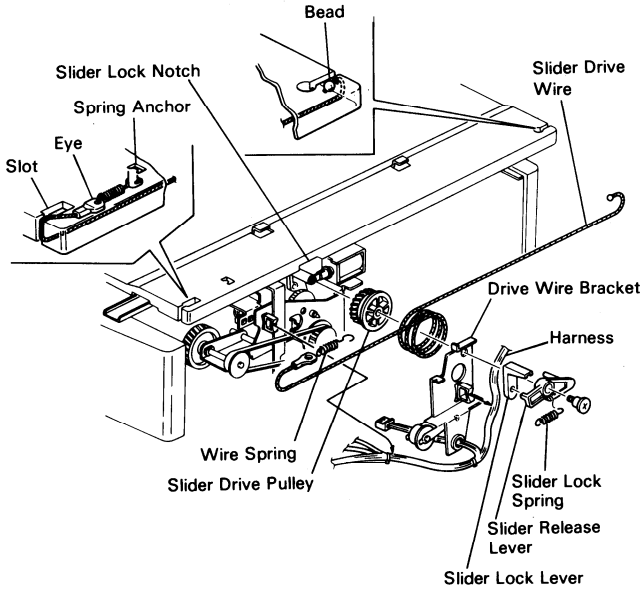

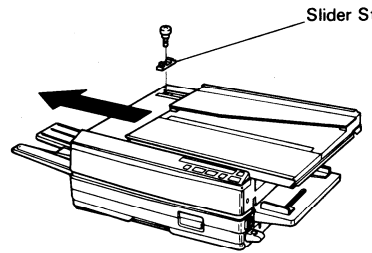

Slider Drive Wire Replacement

1. Remove the slider drive wire. (See step 1 to 5 of "Slider Removal" section.)
2. Position the slider lock notch just above the slider drive pulley.
3. Thread the bead on the drive wire into the round hole on the right side of the slider.
4. Wind the drive wire around the slider drive pulley three times as shown to the right.
5. Re-install the slider drive pulley,

NOTE: * Make sure the slider drive pulley engages properly.

6. Thread the eye of the drive wire into the slot on the left side of the slider.
7. Attach the end of the wire spring onto the eye and the another end onto the spring anchor.

NOTE: * Make sure that the slider moves smoothly and that the wire does not double over.

8. Re-install the drive wire bracket, slider lock lever, slider release lever, harness and slider rock spring 1 stud screw and 1 connector

NOTE: * When re-installing the slider, the front end of the slider must be in the groove of the operation panel, and rest on the fiber optics holder.

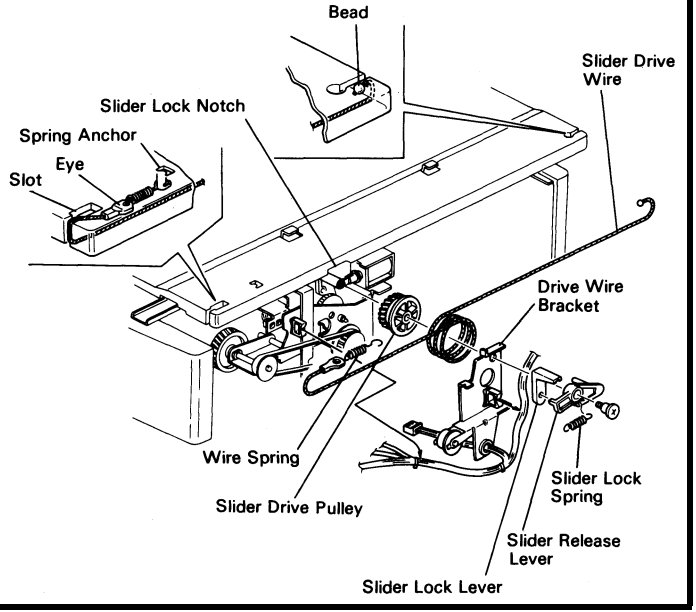

Fiber Optics Removal

1. Remove the slider. (See "Slider Removal" section.)
2. Remove the upper right cover (4 screws).
3. Close the clamshell.
4. Remove the reflector (2 screws).
5. Remove the two leaf springs (1 screw each).
6. Loosen the exposure sensor bracket (2 screws).
7. Pull out the fiber optics,

NOTE: * Do not touch the upper and lower surfaces of the fiber optics.
* Fiber optics must contact the fiber optics holders.

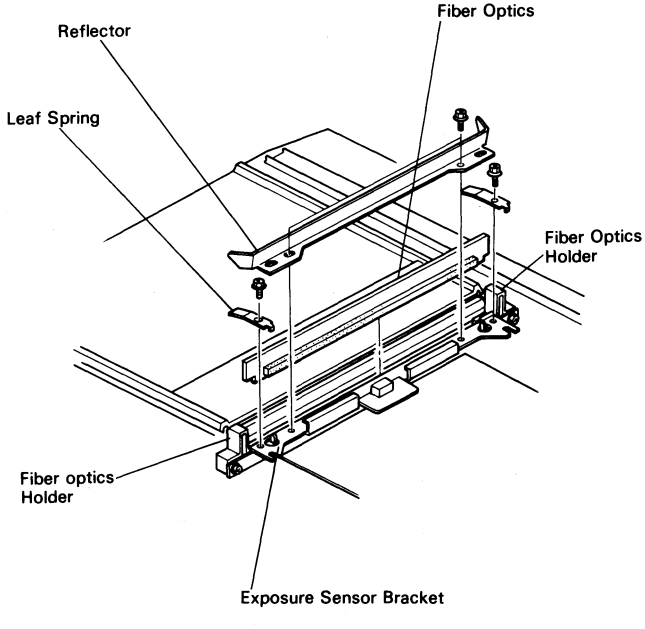

Exposure Lamp Unit Replacement

1. Remove the slider. (See "Slider Removal" section.)
2. Remove the operation panel (2 screws and 1 connector).
3. Remove the upper left cover and upper right cover.
4. Close the clamshell.
5. Remove the exposure lamp unit together with exposure lamp bracket (1 screw, 1 washer and 3 connectors).
6. Remove the exposure lamp unit from the exposure lamp bracket (1 screw).

NOTE: * Avoid touching the aperture of the exposure lamp.
* When re-installing the exposure lamp unit, make sure the aperture is facing up.

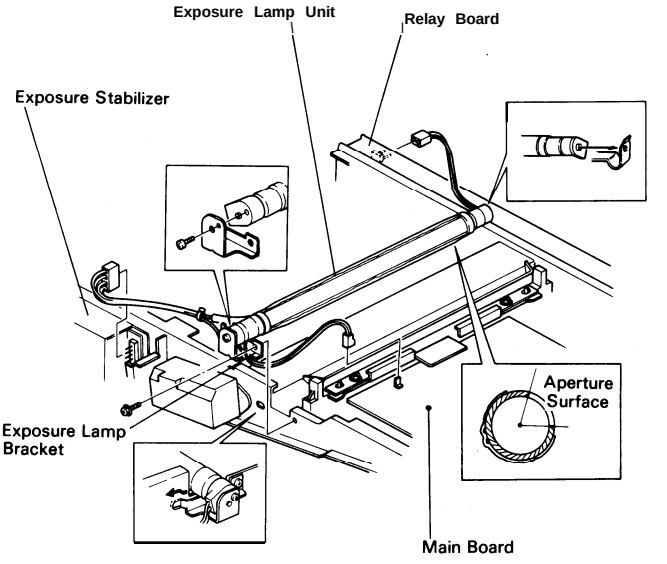

Slider Clutch Removal

1. **Remove the upper rear cover.**
2. **Remove the drive wire bracket. (See "Slider Removal" section.)**
3. **Remove the timing belt and the master/ development drive pulley (1 E-ring).**
4. **Remove the slider clutch bracket (3 screws).**
5. **Remove the slider drive gear and the slider reverse gear (1 E-ring and 1 spacer each), then remove the forward and the reverse clutch.**

NOTE: * When re-installing the spring clutch, be sure to insert the two projections of the clutch spring in the notches.

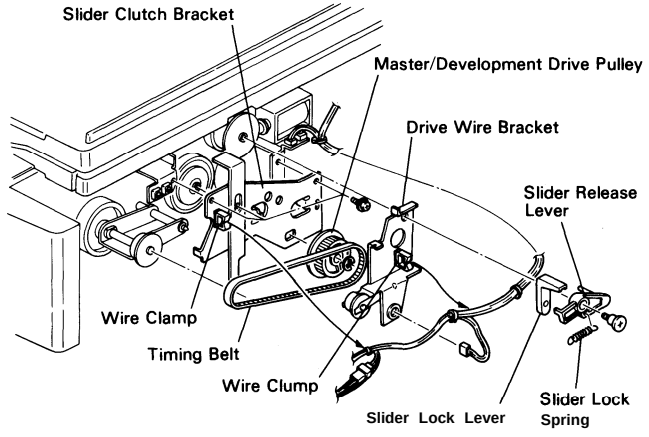

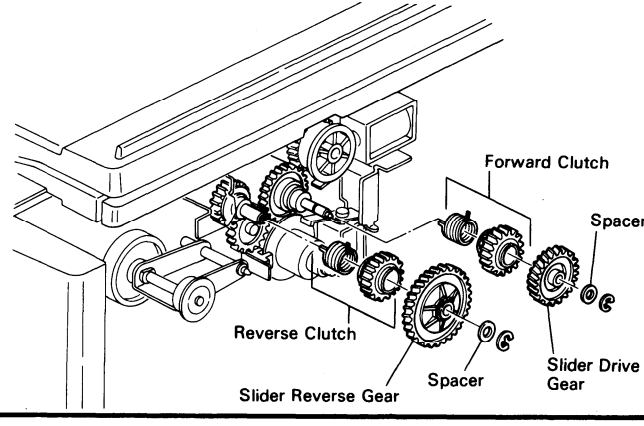

Fiber Optics Holder Lubrication

1. **Remove the slider. (See "Slider Removal" section.)**
2. **Apply Grease 501 to the top of the fiber optics holders.**

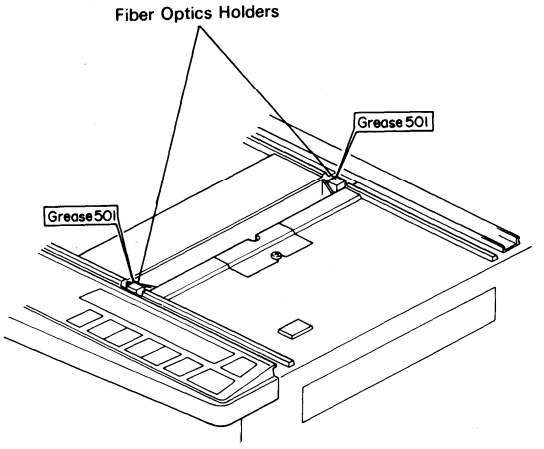

Erase Lamp Replacement (FT2070)

1. Unplug the copier.
2. Remove the upper right cover and upper rear cover.
3. Remove the ac drive board (2 screws).
4. Uncouple the 8 pin connector behind the ac drive board.
5. Open the clamshell while pressing down the release lock.

CAUTION: * Be careful not to damage the slider.

6. Pull the master release lever and remove the master unit.

CAUTION: * Do not touch the master belt (purple material), and avoid exposing it to light.

NOTE: * When installing the master unit, make sure that the master rides in the guide rails.

7. Remove the erase lamp unit by sliding it to the rear and then to the left (1 screw).

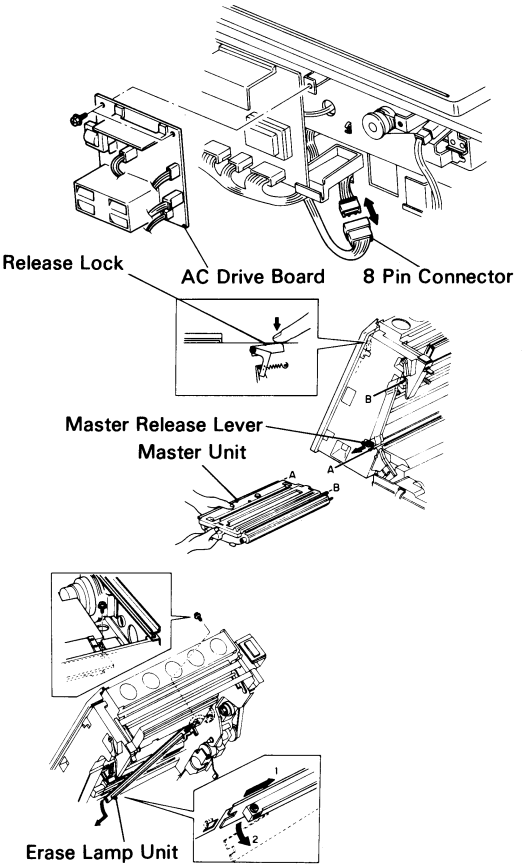

Exposure Lamp Replacement (FT2070)

1. Remove the platen cover and slider cover (5 screws).
2. Remove the upper right cover and the upper rear cover.
3. Remove the slider stopper (1 screw).
4. Move the slider to the far left, past the home position sensor.
5. Remove the exposure lamp cover (2 screws).
6. Rotate the lamp terminal as shown, and take out the lamp.

CAUTION: * Do not handle the exposure lamp with your bare hands. Use a strip of paper. Oil from your fingers will result in lamp discoloration.

7. Install a new exposure lamp.
8. Check the lamp position and the light intensity. (See "Exposure Lamp Positioning" and "Light Intensity Adjustment" sections.)

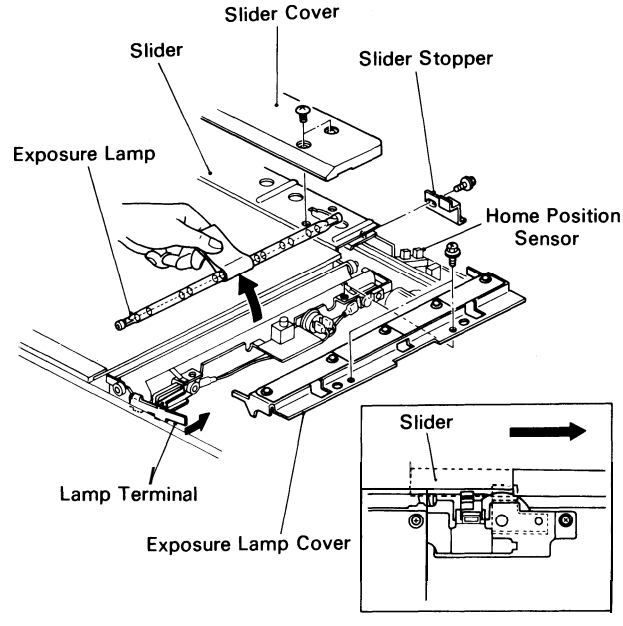

Exposure Lamp Positioning (FT2070)

1. Remove the upper right cover and the upper rear cover.
2. Remove the slider stopper (1 screw).
3. Move the slider to the far left, past the home position sensor. (See "Exposure Lamp Replacement" section.)

– Horizontal Positioning —

4. Slide the front and rear adjusting plates out of the way so that the sight holes can be seen (1 screw each).
5. View the lamp filament through the sight holes on the top of the exposure lamp cover. The filament should be directly beneath the sight holes.
6. To correct the position of the filament, turn the adjusting screws.

– Vertical Adjustment –

7. View the lamp filament from the right through the sight holes. The filament should be the level with the sight holes on the side of the reflector.
8. To correct the position of the filament, turn the adjusting knobs until the correct position is achieved.

NOTE: * Be sure to tighten the lock screw after adjusting the lamp position.

9. Check for uneven exposure and light intensity. (See “Uneven Image Density Adjustment” and “Light Intensity Adjustment” sections.)

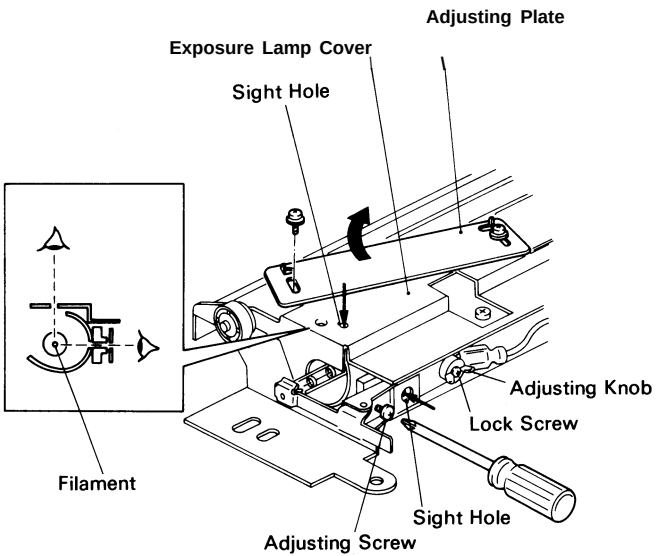

Slider Removal (FT2070)

1. Remove the platen cover and upper rear cover.
2. Remove the slider cover (5 screws).
3. Remove the ac drive board (2 screws).

NOTE: * It is not necessary to disconnect the connectors.

4. Remove the slider lock spring.
5. Remove the slider home position sensor assembly (2 screws).
6. Remove the slider lock lever and bracket.
7. Remove the slider wire tension spring.
8. Remove the slider drive wire.
9. Remove the slider by moving it to the far left.

NOTE: * For reinstallation, see "Slider Drive Wire Replacement" section.
* The exposure glass has markings on every corner of its upper surface. When replacing the exposure glass, make sure that the markings are on the side facing upwards.

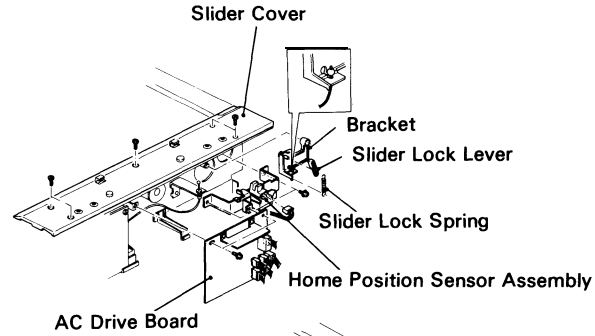

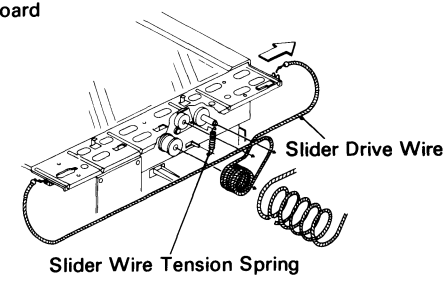

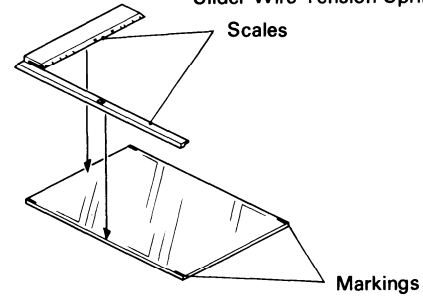

Slider Drive Wire Replacement (FT2070)

1. **Remove the slider drive wire. (See "Slider Removal" section.)**

– Installation –

2. **Insert one drive wire bead in the notch at the far right of the slider.**

3. **Draw the wire" over the slider pulley (inside track) and under the slider drive tension pulley.**

4. **Wind the drive wire around the slider drive pulley (five and a half turns) and around the slider pulley (half a turn).**

5. **Insert the other drive wire bead in the notch at the far left of the slider and connect the slider drive tension spring.**

NOTE: * Make sure that the slider moves smoothly and that the wire does not double over.

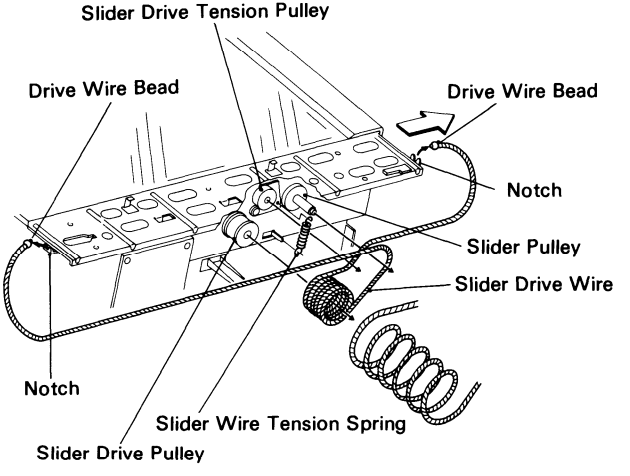

6. Seat the slider lock wire bead in its notch as shown to the right.

7. Reinstall the slider lock lever and bracket after seating the bead of the slider lock wire.

8. Reinstall the home position sensor assembly (2 screws) and the slider lock spring.

9. Reinstall the ac drive board (2 screws).

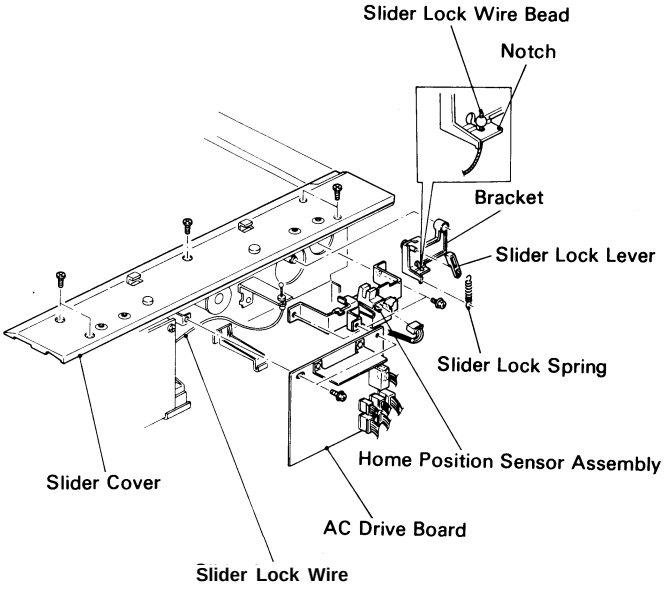

Lens Drive Wire Replacement (FT2070)

1. **Remove the upper right cover**
2. **Remove the slider. (See "Slider Removal" section.)**
3. **Remove the Auto ID sensor board from the exposure lamp assembly (2 screws and 1 harness clamp). .**
4. **Remove the exposure lamp assembly (2 screws and 1 connector).**
5. **Remove the 3rd mirror cover (2 screws).**
6. **Remove the lens home position sensor together with the bracket (1 screw).**
7. **Remove the 3rd mirror tension spring and slide the 3rd mirror assembly away from the lens drive pulley.**
8. **Remove the tension pulley stopper (1 screw).**
9. **Slide the lens drive tension pulley towards the lens drive pulley, and remove the lens drive wire.**

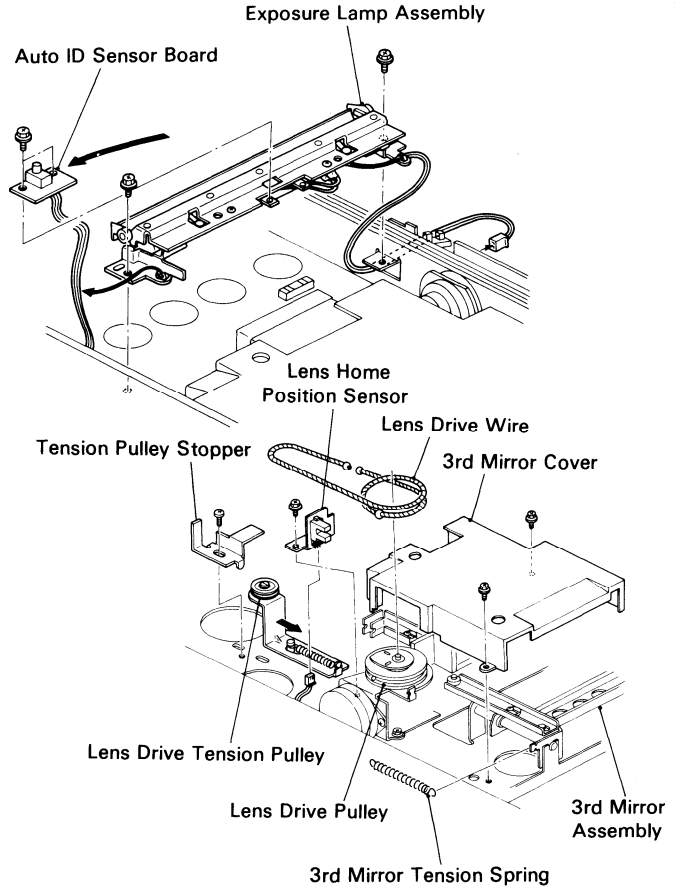

– Installation –

9. Place the short end bead of the new wire in the right slot of the lens housing assembly.

10. Loop the drive wire one and half turns around the lens drive pulley. Position the center bead in the cutout of the lens drive pulley.

11. Run the drive wire around the lens drive tension pulley.

12. Hook the long end bead in the left slot of the lens housing.

13. Reinstall the tension pulley stopper (1 screw). The gap between the lens drive tension pulley and the tension pulley stopper should be 0.3 ± 0.2 mm.

14. Reassemble.

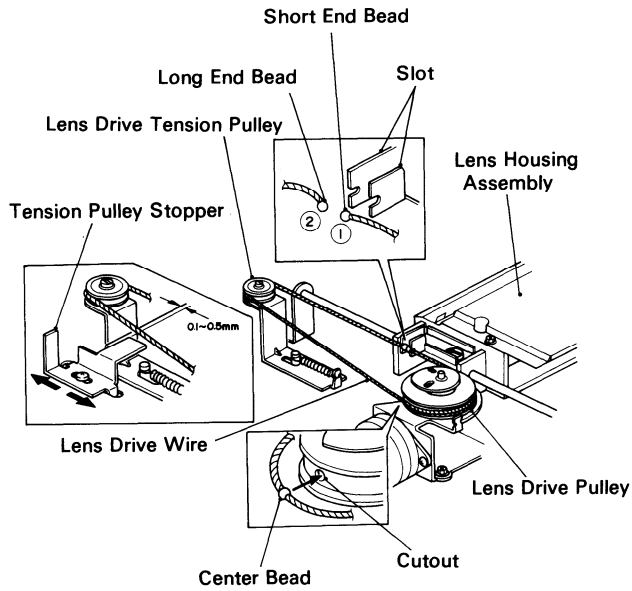

Lens Drive Motor Replacement (FT2070)

1. **Remove the inner cover.**
2. **Remove the main board (3 screws).**
3. **Uncouple the 6 pin connector behind the main board and remove the lens drive motor harness from the wire clamp.**
4. **Remove the lens drive wire. (See "Lens Drive Wire Replacement" section.)**
5. **Remove the lens drive motor assembly (2 screws).**
6. **Remove the lens drive motor unit from the assembly (2 screws).**
7. **Separate the lens drive motor from the output gear (1 allen set screw).**

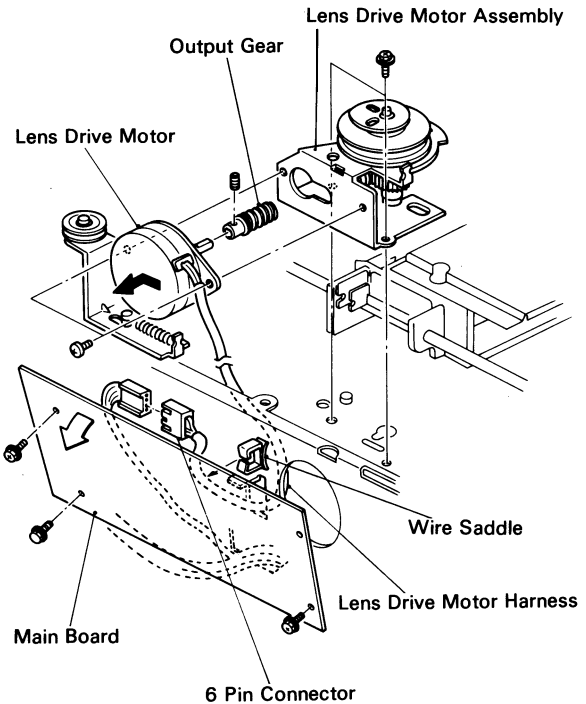

Home Position Sensor Replacement (FT2070)

1. Remove the upper rear cover.
2. Remove the ac drive board (2 screws).
3. Remove the home position sensor together with the bracket (2 screws).
4. Remove the home position sensor from the bracket (1 connector).

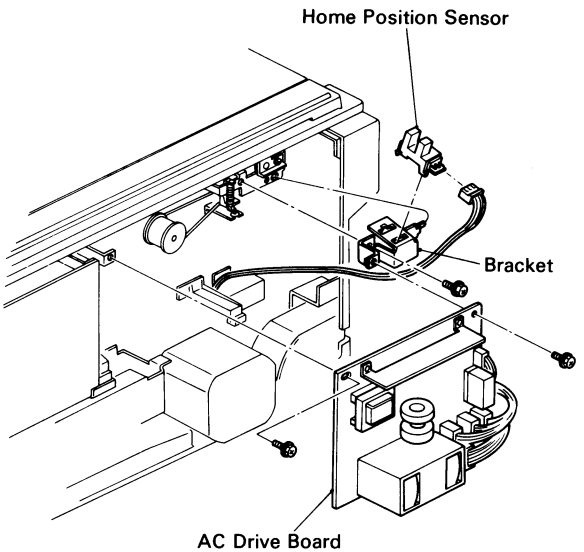

5-3. Development and Quenching

Toner Metering Blade Replacement 5-14

Quenching Lamp Replacement (FT2050) 5-15

Quenching Lamp Replacement (FT2070) 5-16

Toner Metering Blade Replacement

1. Open the clamshell and remove the development unit.
2. Remove the toner cartridge.
3. Remove the front cover of the development unit (2 screws).
4. Remove the roller cover bracket (1 screw), and take off the development roller cover.
5. Remove the toner metering blade (2 screws).

NOTE: * Avoid damaging or bending the metering blade.
* Do not touch the surface of the development roller.

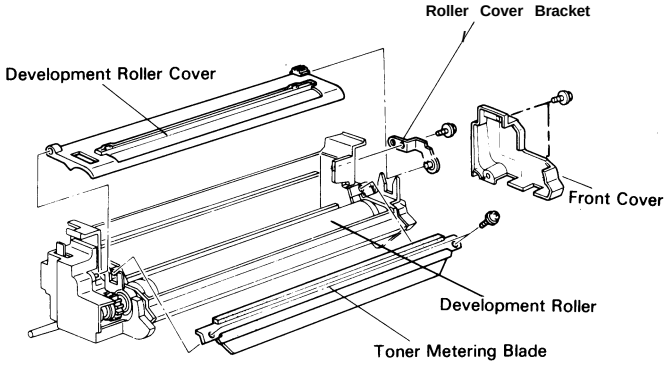

Quenching Lamp Replacement

1. **Remove the upper left cover.**

2. **Remove the quenching lamp (1 screw and 1 connector).**

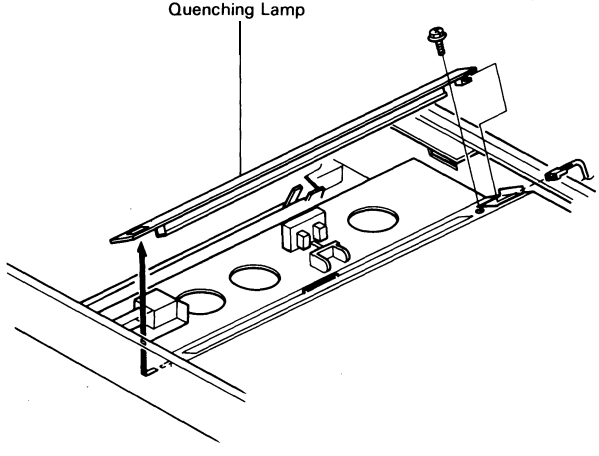

Quenching Lamp Replacement (FT2070)

1. Unplug the copier.
2. Remove the upper rear cover.
3. Remove the ac drive board (2 screws).
4. Uncouple the 2 pin connector behind the ac drive board.
5. Remove the toner overflow sensor assembly. (See "Toner Overflow Sensor Replacement.")
6. Remove the charge varistor (1 screw).
7. Remove the quenching lamp by sliding the quenching lamp unit in the direction of the arrows and lifting it out.

NOTE: * When reassembling, make sure that the quenching lamp unit is seated correctly.

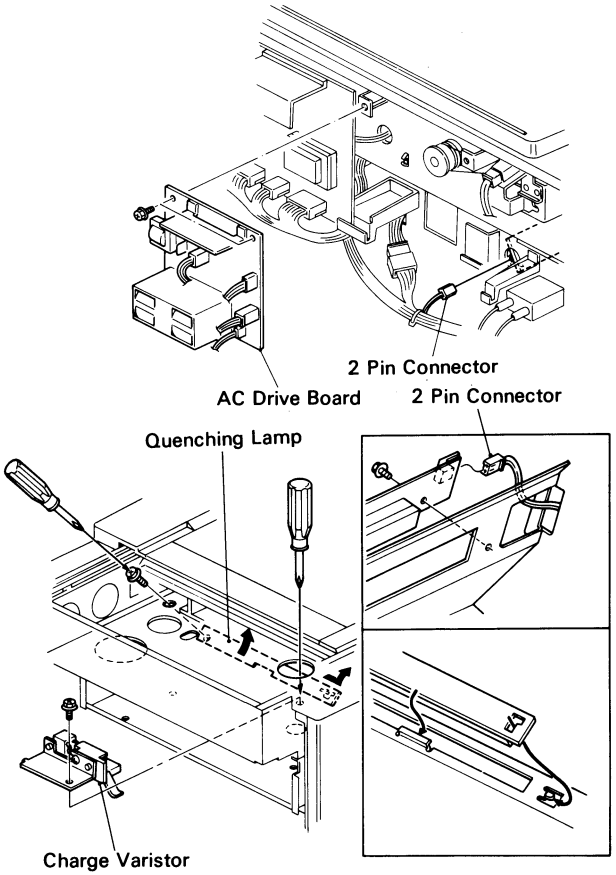

5-4. Paper Feed and Transport

Paper Feed Roller Replacement 5-18

Friction Pad Replacement 5-19

Paper Feed Clutch Lubrication 5-20

Registration Clutch Lubrication 5-21

Paper Size Switch Replacement 5-22

Paper Feed Sensor Replacement 5-23

Transport Belt Replacement.. 5-24

Paper End Sensor Replacement (FT2070) 5-24-1

Pick-up Roller Replacement (FT2070) 5-24-2

Tray Feed Roller Replacement (FT2070) 5-24-3

Pick-up and Tray Feed Clutches Lubrication (FT2070) 5-24-5

Paper Width Sensor Replacement (FT2070) 5-24-6

Paper Length Sensor Replacement (FT2070) 5-24-7

Paper Feed Roller Replacement

1. Pull out the cassette tray from the copier.
2. Open the clamshell and remove the manual feed guide.
4. Remove the paper feed roller (1 snap ring).

NOTE: * Be careful not to touch the paper feed roller with oily hands.

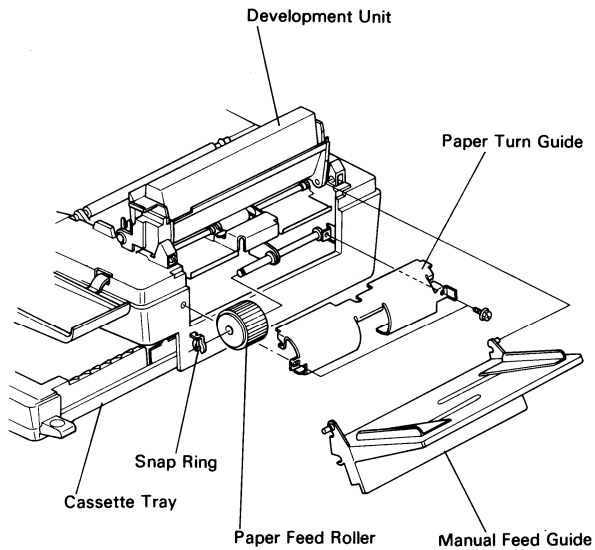

Friction Pad Replacement

1. **Pull out the cassette tray from the copier.**
2. **Peal off the friction pad from the friction pad holder.**
3. **Install new friction pad.**

NOTE: * Be careful not to touch the friction pad with oily hands.

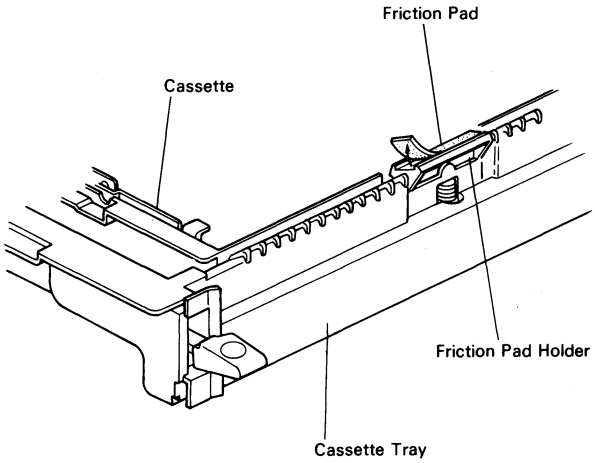

Paper Feed Clutch Lubrication

1. Open the clamshell and remove the lower rear cover.
2. Remove the paper feed clutch bracket (2 screws, 2 E-rings, and 2 bushings).
3. Remove the paper feed roller gear, clutch sleeve, and clutch spring.
4. Apply Mobil Temp 78 to the clutch spring and output hub.

NOTE: * The teeth of the clutches have one direction. Be careful not to install them incorrectly.

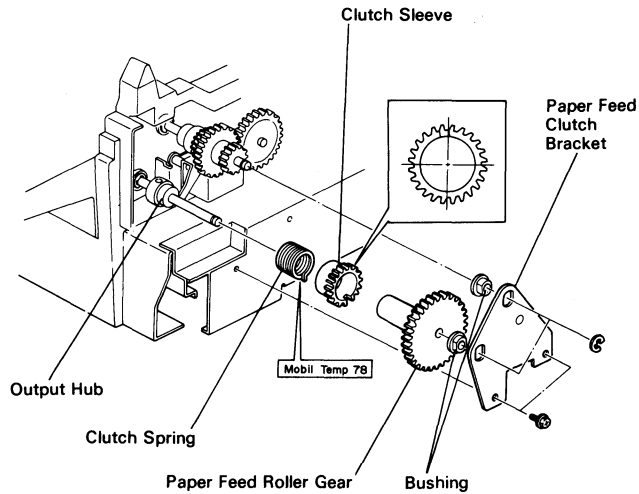

Registration Clutch Lubrication

1. Remove the upper rear cover and the lower rear cover.
2. Remove the registration clutch bracket (2 screws, 1 E-ring and 1 bushing).
3. Pull the engage gear bracket and move it to the upper right.
4. Remove the output hub, clutch sleeve, clutch spring and the input hub (1 allen set screw).
5. Apply Mobil Temp 78 to the clutch.
6. Re-install the clutch so that the radial end of the spring and the gear side of the clutch sleeve are facing the registration roller.
7. Position a 0.2mm thick gauge between the shaft shoulder and the idle gear.
8. Push the registration clutch towards the

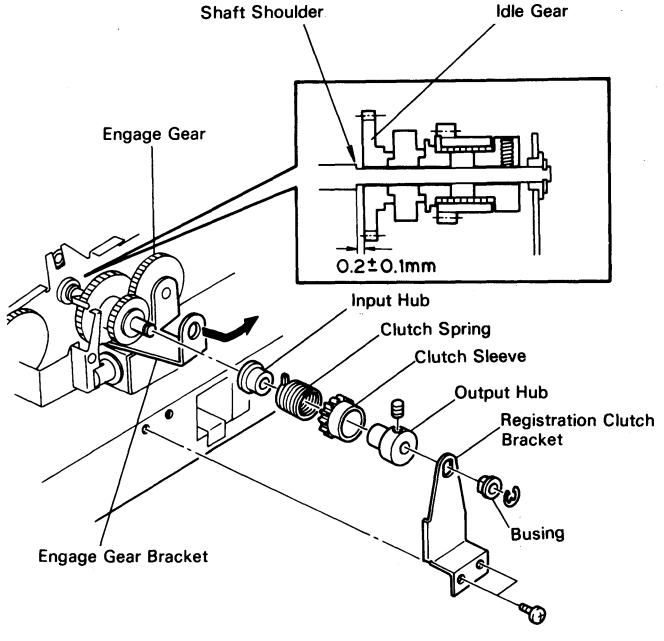

Paper Size Switch Replacement

1. Pull out the cassette tray.
2. Remove the lower rear cover.
3. Remove the paper size switch together with the bracket (3 screws).
4. Remove the paper size switch from the bracket (2 screws and 1 connector).

NOTE: * When installing the paper size switch in the bracket, be sure that the connector faces to the upper right hand side, as shown in the figure.

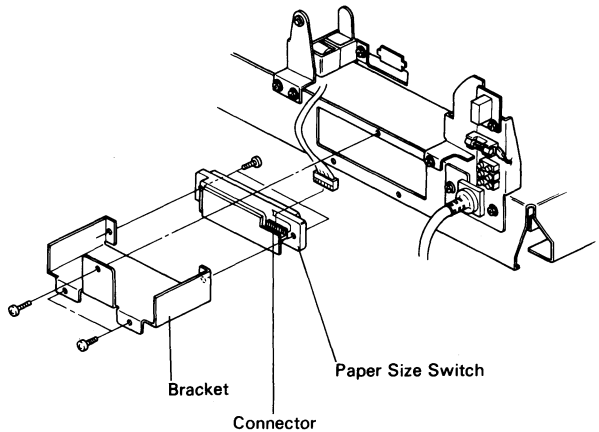

Paper Feed Sensor Replacement

1. Open the clamshell.
2. Remove the development unit.
3. Loosen the screw securing the lower rear cover.
4. Swing up the upper paper feed guide plate.
5. Remove the lower feed guide (4 screws).
6. Remove the paper feed sensor (1 screw and 1 connector).

NOTE: * When closing the clamshell, be sure to return the upper paper feed guide plate to its original position. Otherwise, the master will be damaged.
* Do not forget to tighten the screw securing the lower rear cover.

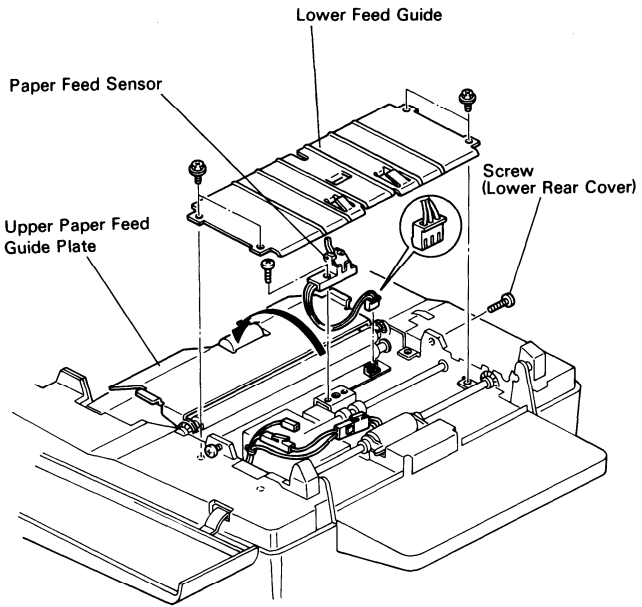

Transport Belt Replacement

1. Remove the copy tray.
2. Remove the front cover (2 screws), upper rear cover (2 screws), and lower rear cover (4 screws).
3. Remove the 2 clamshell stopper screws and stand the clamshell straight up.

NOTE: * When standing the clamshell straight up, place a block that has a height of approximately 80 mm (approx. 3") in front of exit cover as shown to the upper right.

4. Remove the transport guide plate (2 screws).
5. Remove the safety cover (1 screw).
6. Remove the transport belt gear bracket (2 screws).
7. Remove the idle gear (1 E-ring).
8. Remove the paper reverse gear (1 E-ring and bushing).
9. Remove the first transport pulley from the transport belt holder.
10. Remove the transport belt from the holder.

NOTE: * When reassembling, make sure that the 1st transport pulley rides in the small grooves of the transport belt holder.

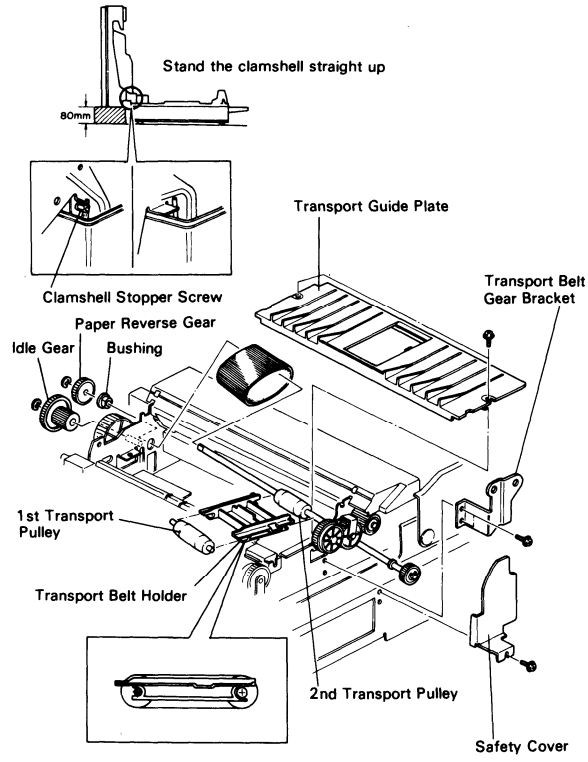

Paper End Sensor Replacement (FT2070)

1. Remove the paper tray.
2. Remove the paper turn guide by sliding it to the rear and pulling its front to the right (2 screws).
3. Remove the paper end sensor unit (1 screw and 1 connector).
4. Remove the paper end sensor actuator by flexing the paper end sensor bracket gently.
5. Separate the paper end sensor from the bracket (2 screws).

NOTE: * When reassembling, make sure that the paper end sensor unit is seated correctly.

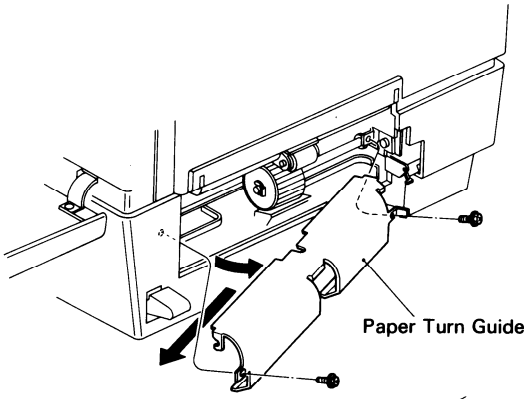

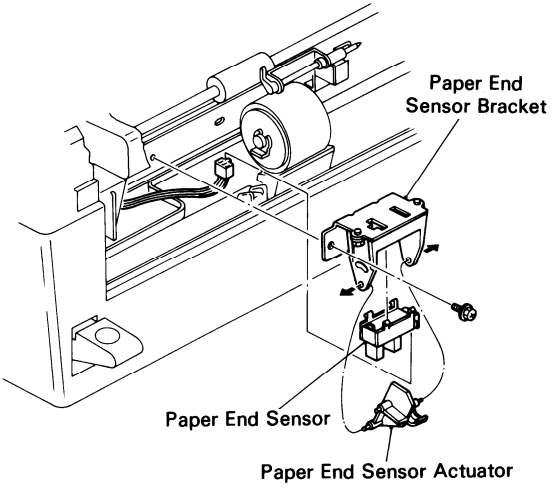

Pick-up Roller Replacement (FT2070)

1. Remove the paper tray.
2. Rotate the pick-up roller shaft so that the flat sides align with the shaft holder openings.
3. Pull the rear end of the roller shaft toward the right and slide it to the rear.
4. Remove the pick-up roller.

NOTE: * After reinstalling the pick-up roller, rotate the roller shaft so that the flat sides do not align with the shaft holder openings.

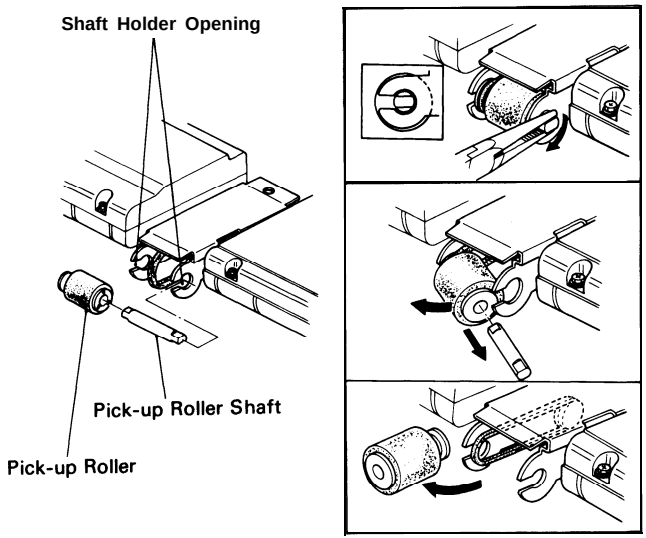

Tray Feed Roller Replacement (FT2070)

1. Remove the front cover, paper tray, and the lower rear cover.
2. Remove the development unit.
3. Remove the tray feed solenoid (2 screws and 2 harness clamps).
4. Unhook the sector gear spring and the tray feed solenoid spring.
5. Remove the paper feed clutch bracket (3 screws, 4 E-rings, and 4 bushings).
6. Remove the first relay roller (2 springs and 2 bushings).
7. Remove the rear development unit supports (2 screws).
8. Remove the safety switch assembly (1 screw).

NOTE: * It is not necessary to disconnect the safety switch.

9. Remove the front development unit support (2 screws).
10. Take off the width sensor cover (2 screws).

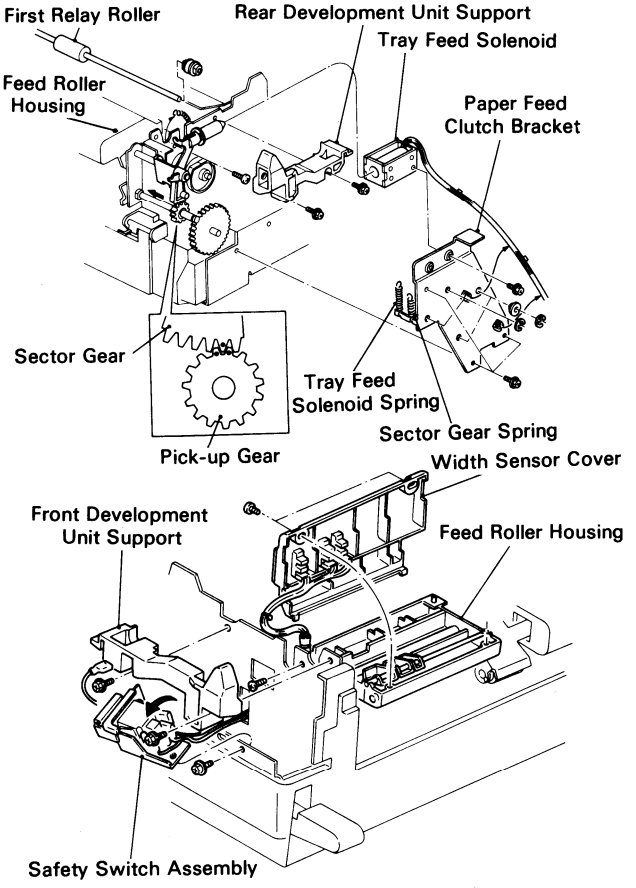

11. **Remove the front and rear screws securing the feed roller housing.**

12. **Remove the pick-up spring and the spring housing.**

13. **Remove the E-ring and bushing from the front of the tray feed shaft. Slide the shaft to the rear and lift the front of the tray feed shaft.**

14. **Remove the front feed roller housing by sliding it to the front.**

15. **Remove the tray feed roller by sliding the pick-up stay to the front (1 E-ring and 1 bushing).**

NOTE: * As the tray feed roller has a one-way clutch, it is important to mount the roller correctly. The pick-up roller drive belt should be towards the front.

*** When replacing the paper feed clutch bracket, secure it with the three screws, then slide the pick-up gear slightly to the front and align the sector gear and the pick-up gear as shown in the figure. (The marked tooth on the sector gear fits in between the marked teeth of the pick-up gear.)**

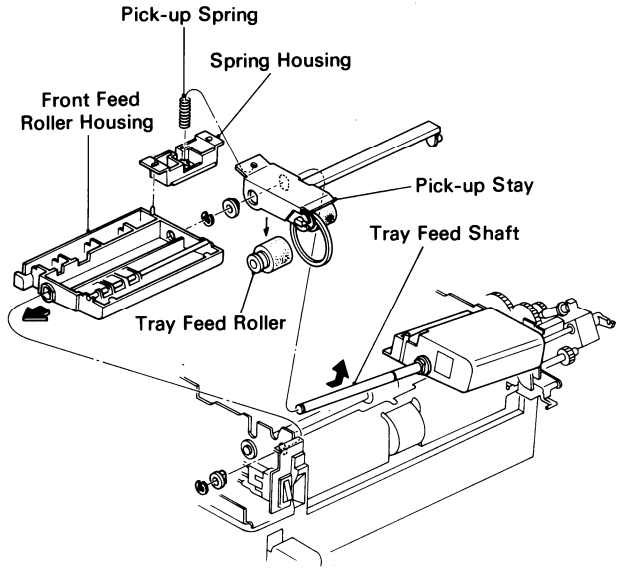

Pick-up and Tray Feed Clutch Lubrication (FT2070)

1. Remove the lower rear cover.
2. Remove the tray feed solenoid (2 screws and 2 harness clamps).
3. Unhook the sector gear spring and the tray feed solenoid spring.
4. Remove the paper feed clutch bracket (3 screws, 4 E-rings and 4 bushings).
5. Remove the sector gear.
6. Remove the pick-up clutch cam (1 E-ring).
7. Remove clutch pawl assembly (1 E-ring).
8. Remove the clutch assembly.
9. Disassemble and lubricate the pick-up clutch and tray feed clutch.

CAUTION: * Be careful not to loose the clutch drive pin.

NOTE: * When reinstalling the spring clutches, be sure to insert the projections of the clutch springs into the notches.

* When replacing the paper feed clutch bracket, secure it with the three screws, then slide the pick-up gear slightly to the front and align the sector gear and the pick-up gear. (The marked tooth on the sector gear fits between the marked teeth of the pick-up gear.)

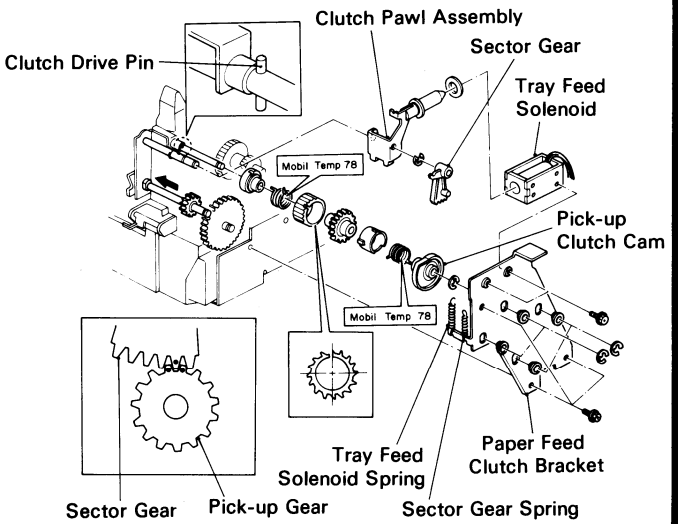

Paper Width Sensor Replacement (FT2070)

1. Open the clamshell.
2. Remove the development unit.
3. Remove the width sensor cover (2 screws).
4. Replace the paper width sensors (1 connector each).

NOTE: * When reinstalling the width sensor cover, first insert the positioning tabs into the positioning notches.

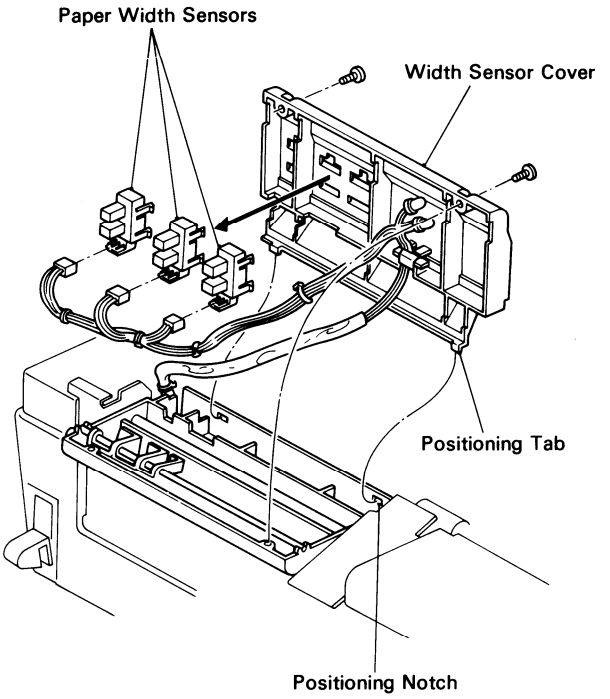

Paper Length Sensor Replacement (FT2070)

1. Remove the paper tray.
2. Remove the paper turn guide (2 screws).
3. Disconnect the length sensor connector.
4. Remove the screw securing the length sensor bracket.
5. While pushing in the length sensor interrupter, slide the length sensor bracket to the right.
6. Replace the paper length sensor (1 screw).

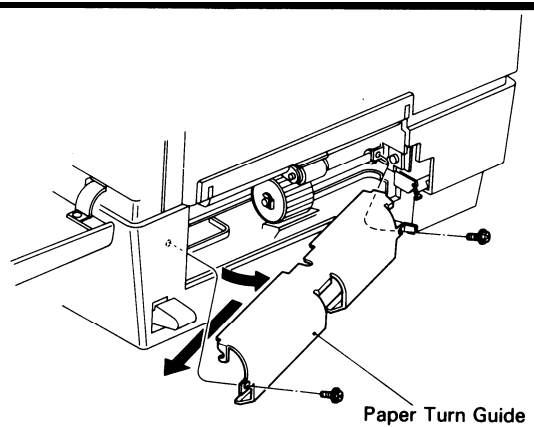

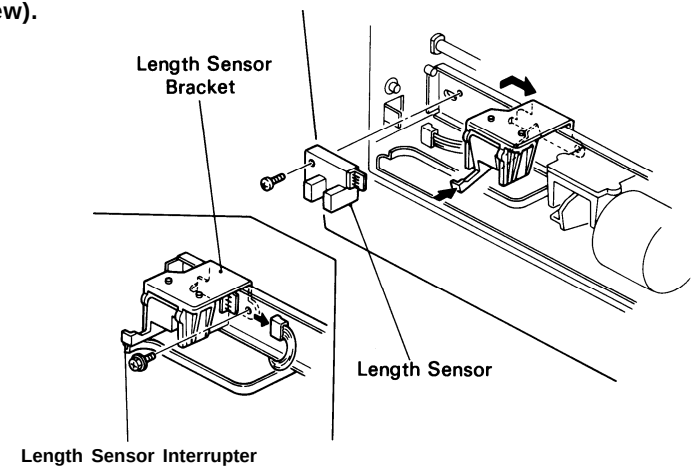

5-5. Image Fusing

Hot Roller Replacement 5-26

Pressure Roller Replacement 5-28

Thermistor Replacement 5-29

Thermofuse Replacement 5-30

Hot Roller Strippers Replacement 5-31

Exit Sensor Replacement 5-32

Hot Roller Replacement

1. Open the exit assembly. (See "Hot Rollers Strippers Replacement" section.)
2. Open the clamshell and stand it straight up. (See "Transport Belt Replacement" section.)
3. Remove the fusing unit cover (2 screws).
4. Remove the fusing stay (4 screws).
5. Holding the front end of the fusing lamp, remove the front terminal bracket (1 screw).
6. Pull out the fusing lamp gently.
7. Remove the rear terminal bracket (1 screw).
8. Remove the safety cover (1 screw).
9. Remove the front and rear pressure roller springs.

CAUTION: * Remove the springs carefully as the springs have high tension.

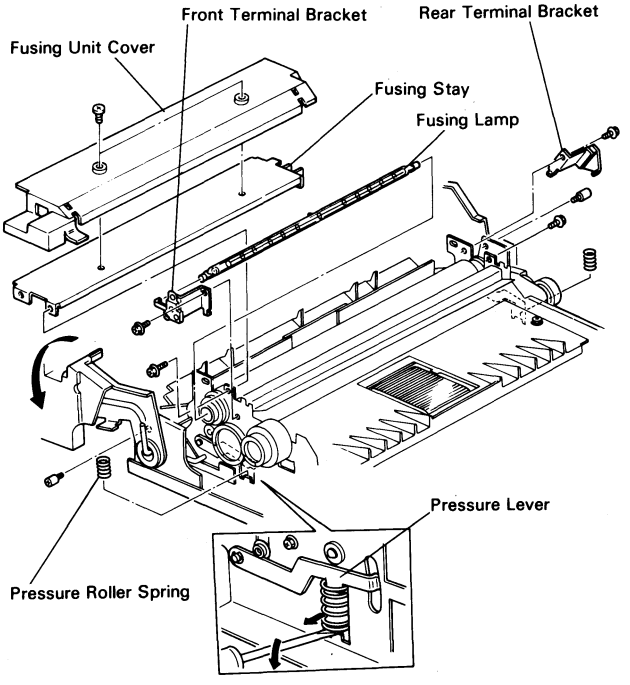

10. Remove the bearing from the front end of the hot roller (1 C-ring).

11. Remove the gear from the rear end of the hot roller (1 C-ring).

12. Remove the hot roller carefully.

NOTE: * Be careful not to damage the hot roller.
* When installing the fusing lamp, make sure both "end of the fusing lamp properly contact the terminals.
* After re-installing the pressure roller springs, check that the springs are mounted into the pressure lever properly.

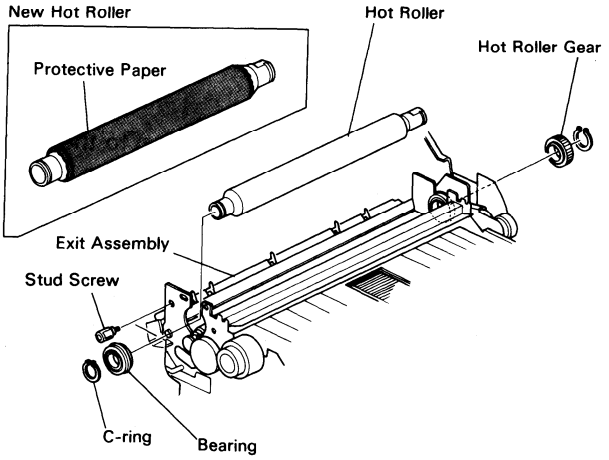

Pressure Roller Replacement

1. Remove the hot roller. (See "Hot Roller Replacement" section.)
2. Remove the transport belt gear bracket (2 screws).
3. Remove the 2 idle gears as shown to the right (1 E-ring each).
4. Remove the rear hot roller bearing.
5. Remove the transport guide plate (2 screws).
6. Swing the pressure roller cover away from the pressure roller (2 screws).
7. Remove the pressure roller.
8. Remove the front and rear bushings (1 E-ring each).

NOTE: * Be careful not to damage the pressure roller.

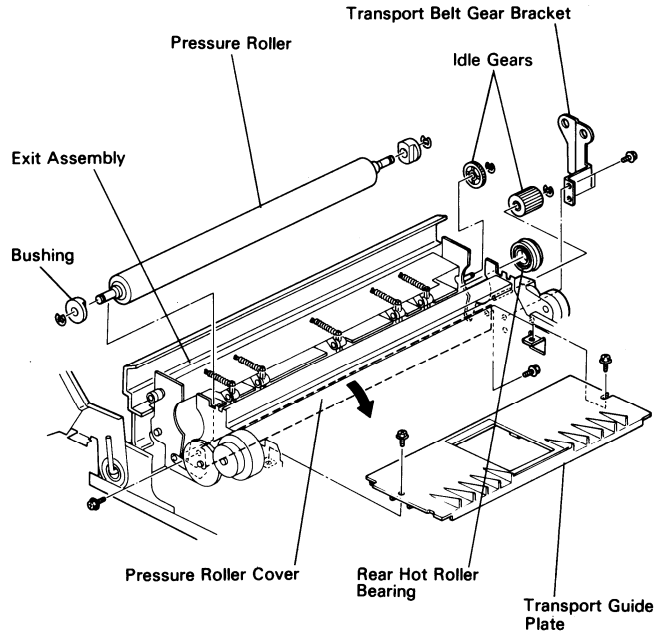

Thermistor Replacement

1. **Open the clamshell and stand it straight up. (See "Transport Belt Replacement" section.)**
2. **Remove the fusing unit cover (2 screws).**
3. **Remove the fusing stay (4screws). (See "Hot Roller Replacement" section.)**
4. **Remove the transport guide plate. (See "Transport Belt Replacement" section.)**
5. **Remove the thermistor (1 screw and 1 connector).**

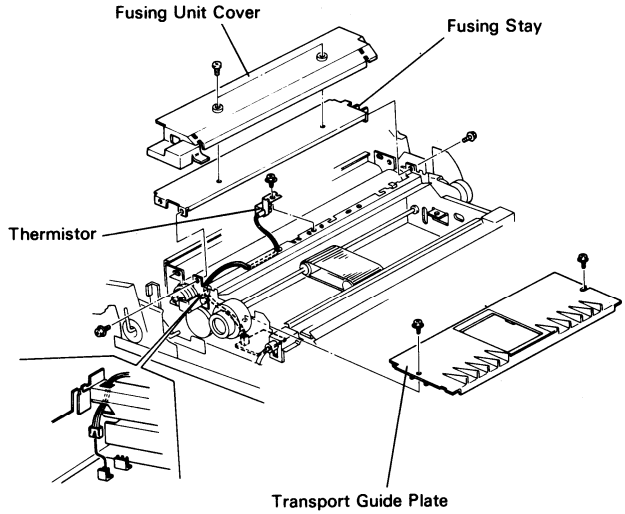

Thermofuse Replacement

1. Open the clamshell and stand it straight up. (See''Transport Belt Replacement" section.)
2. Remove the fusing unit cover (2 screws). (See "Hot Roller Replacement" section.)
3. Remove the fusing stay (4 screws).
4. Remove the transport guide plate (2 screws). (See "Transport Belt Replacement" section.)
5. Remove the rear fusing lamp terminal (1 screw).

CAUTION: * When removing the rear fusing lamp terminal, be careful not to damage the fusing lamp.

6. Remove the thermofuse harness from the rear fusing lamp terminal (1 screw).
7. Disconnect the thermofuse connector from the fusing power supply board.
8. Remove the screw securing the front end of the thermofuse stay.
9. Lift the thermofuse stay and disconnect the thermofuse connector from the stay.
10. Remove the thermofuse.

NOTE: * When installing the thermofuse, be sure to route the wire properly as shown in the figure.

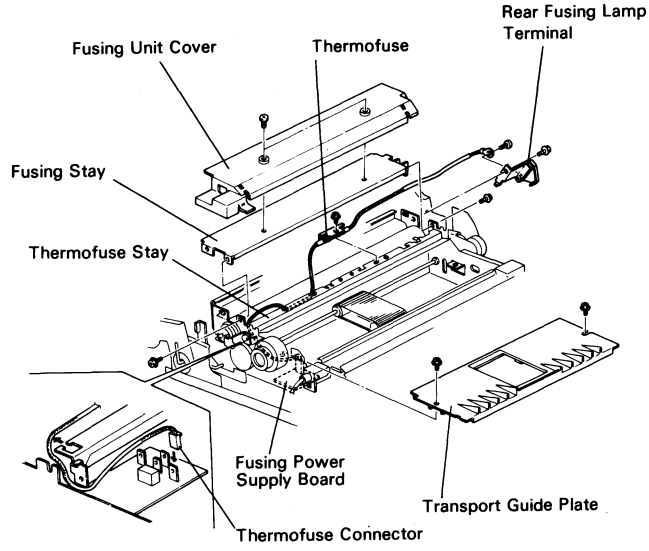

Hot Roller Strippers Replacement

1. **Open the front cover.**
2. **Remove the exit cover.**
3. **Open the exit assembly (2** screws)
4. **Remove the hot roller strippers together with springs.**

NOTE: * It is advisable to replace the hot roller strippers as a set.

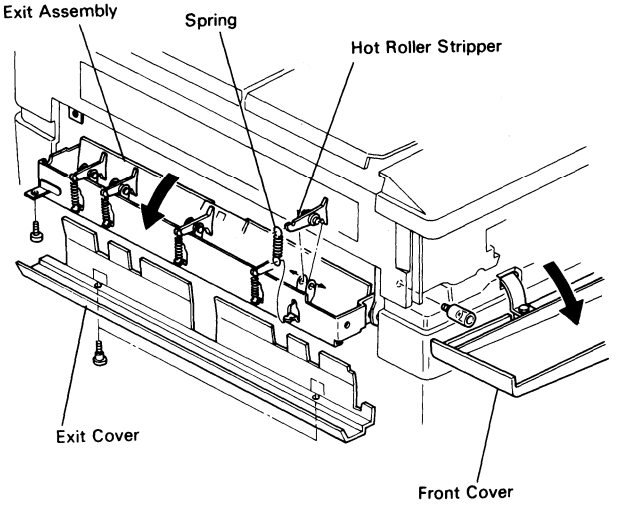

Exit Sensor Replacement

1. Remove the lower left cover (2 screws).
2. Open the front cover.
3. Remove the exit cover (2 screws).
4. Open the exit assembly and remove the exit assembly (2 screws).
5. Remove the transport guide plate (2 screws). (See "Transport Belt Replacement" section.)
6. Remove the exit sensor (1 screw, 1 connector and 2 clamps).

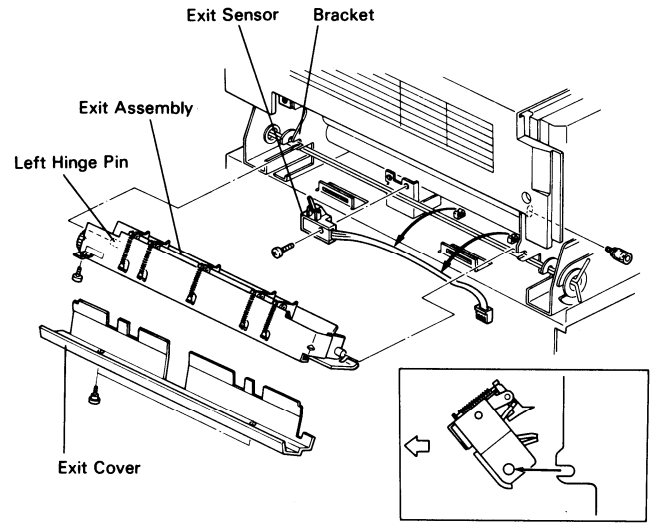

5-6. Corona

Charge Corona Wire Replacement 5-34

Transfer Corona Wire Replacement 5-35

Charge Corona Wire Replacement

1. Open the clamshell and remove the master unit. (See "Erase Lamp Replacement" section.)
2. Remove the charge corona unit (1 screw and 1 plug).
3. Remove the front endblock cover by sliding gently.
4. Remove the rear endblock cover by sliding gently together with the charge corona wire.
5. Remove the charge corona wire from the tension spring and front endblock.

NOTE: * Check the action of the tension spring after installation.

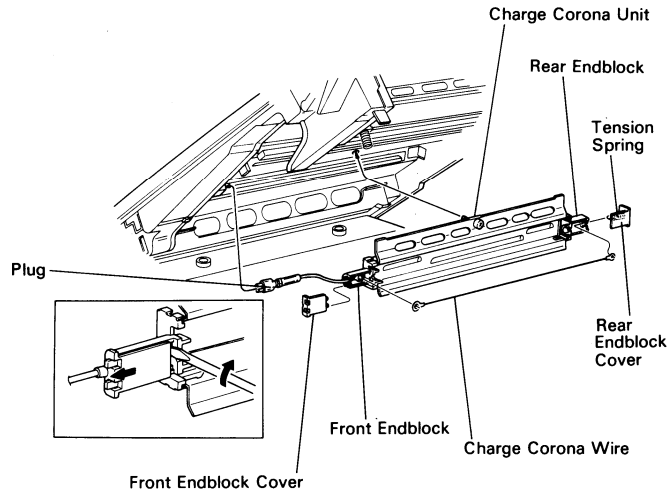

Transfer Corona Wire Replacement

1. Open the clamshell and remove both the lower rear cover and front cover.
2. Remove the transfer corona unit (1 stud screw and 1 plug).
3. Remove the front endblock cover gently.
4. Slide the rear endblock cover to the rear and then remove it together with the transfer corona wire.
5. Remove the transfer corona wire from the tension spring.

NOTE: * Check the action of the tension spring after installation.

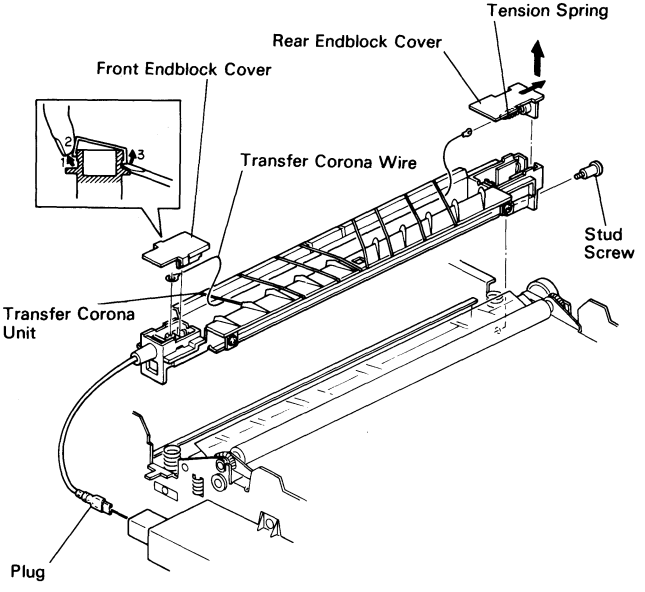

5-7. Copy Image

FT2050

Auto ID Sensor Adjustment 5-38

Leading Edge Registration Adjustment 5-39

FT2070

Light Intensity Adjustment 5-40

Auto ID Sensor Adjustment.. 5-40-1

Leading Edge Registration Adjustment 5-40-2

Leading Edge Erase Adjustment 5-40-3

Uneven image Density Adjustment 5-40-4

Horizontal Magnification Adjustment 5-40-5

Vertical Magnification Adjustment 5-40-6

Auto ID Sensor Adjustment

1. Turn off the main switch.
2. Remove the master unit. (See "Erase Lamp Replacement" section.)
3. Move the slider to the home position.

NOTE: * When the slider is at the home position, the sensor pattern is just above the auto ID sensor.

4. Remove the exposure sensor cover (1 screw).
5. Turn on DIP SW 4 (test mode).
6. Set meter to 20 Vdc setting.
7. Connect meter leads and V-ohm to TP-2, TP-1.
8. Turn on the main' switch.
9. Press the Copy Quantity key until 3 is displayed in the copy counter.
10. Press the Start key to start the test mode.
11. Adjust the VR2 so that the voltage is 1.7 ± 0.1 V.

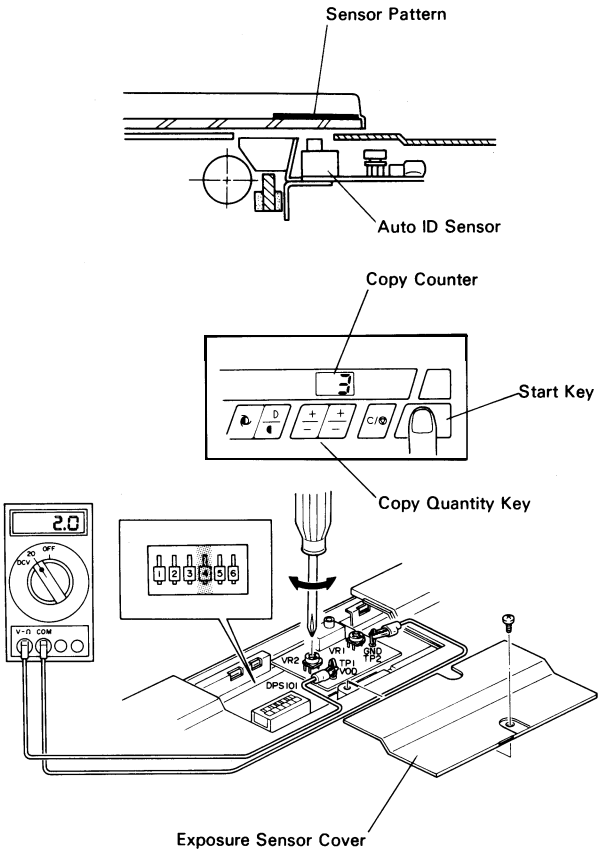

Leading Edge Registration Adjustment

1. Lay a ruler on the exposure glass as shown in the figure.

2. Make a few copies and check that the leading edge registration is within specifications.

   Leading Edge Registration Specifications.
   0 ± 2.0 mm (0 ± 0.08")

   [Blank Leading Edge 3.5 ± 3.0 mm (0.14 ± 0.12")]

3. If it is out of the specifications adjust it using DIP SW 1, 2, and 3 on the main board.

NOTE: * When adjusting the leading edge registration, move the slider to the home position and remove the exposure cover (1 screw).

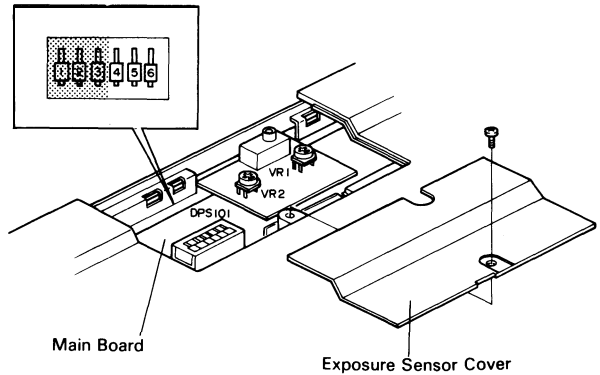

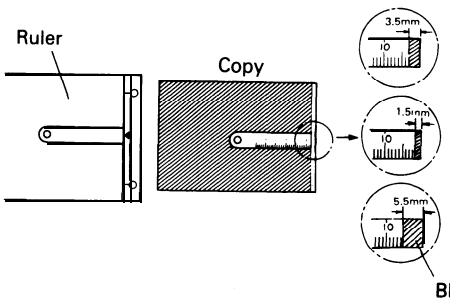

Leading Edge Registration
± 0mm

Leading Edge Registration
−2.0mm(−0.08")

Leading Edge Registration
+2.0mm(+0.08")

— Leading Edge Registration —

1 : SW ON 0 : SW OFF

No.1	No.2	NO.3	Registration
0	0	0	Decrease (–)
1	0	0	
0	1	0	
1	1	0	Variation per step: Approx. 1.3mm (0.051")
0	0	1	
1	0	1	
0	1	1	
1	1	1	Increase (+)

Light Intensity Adjustment (FT2070)

NOTE: * When the copier is set at the 3rd image density level, level 3 of the gray scale on the OS-A3 chart should be slightly visible and level 2 should be invisible on the copy. If the light intensity is not proper, adjust it as follows:

1. Turn off the main switch.
2. After removing the upper right cover, upper left cover, 3rd mirror cover and master unit, clean the optics (mirrors, lens, reflectors, and exposure glass).
3. Reassemble.
4. Open the front cover and remove the DIP switch cover (1 screw).
5. Close the front cover and turn on the main switch.
6. Select the 3rd image density level.
7. Make a few copies of the OS-A3 chart.
8. Adjust the light intensity by rotating VR101 so that level 3 of the gray scale on the OS-A3 chart is slightly visible on the copy.

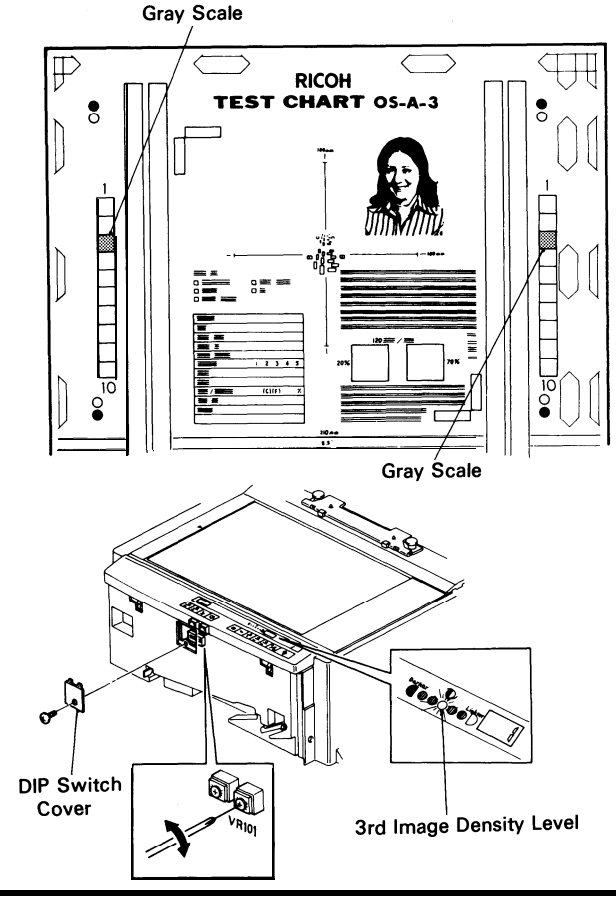

Auto ID Sensor Adjustment (FT2070)

1. Adjust the light intensity first. (See "Light Intensity Adjustment" section.)
2. Turn off the main switch.
3. Lay three sheets of white copy paper on the exposure glass and turn on DIP switch 101-4 (Test Mode) on the main board.
4. Close the front cover, turn on the main switch.
5. Press the Copy Quantity key until 5 is displayed in the Copy Counter.
6. Press the Start key.

NOTE: * Confirm that the first image density level is selected automatically.

7. Wait for a few seconds until the light intensity is stable.
8. Adjust VR102 until a hexadecimal number (base 16) between 7A and 7F is displayed in the Reproduction Ratio indicator.

NOTE: * Do this adjustment as quickly as possible. If it takes over one minute to adjust, the thermoswitch opens.

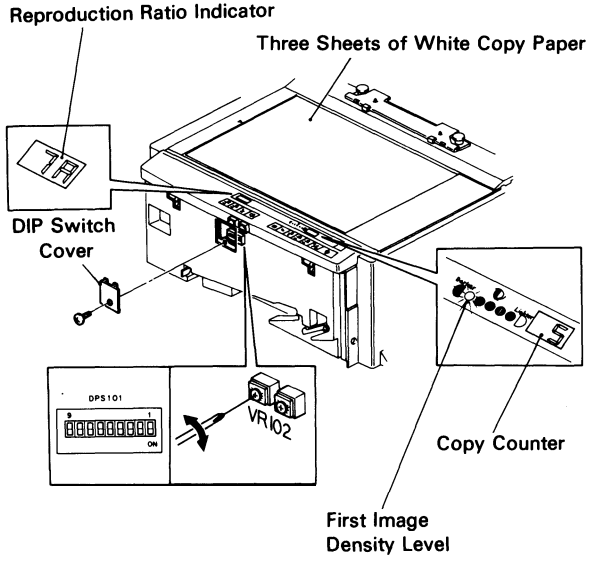

Leading Edge Registration Adjustment (FT2070)

1. Lay a scale on the exposure glass, aligning it with the original scale as shown to the right.

2. Make a few copies and check that the leading edge registration is within specification.

   Leading Edge Registration Specification: O ± 2.0 mm (0 ± 0.08")

NOTE: * Leading edge registration is the distance "R".
R =L - 10mm (L-0.4")
L : Distance between the edge of the paper and the 10 mm (0.4") mark on the scale.

3. If the registration is out of specification, remove the DIP switch cover (1 screw) and adjust it using DIP SW 101-1, 2 and 3 on the main board.

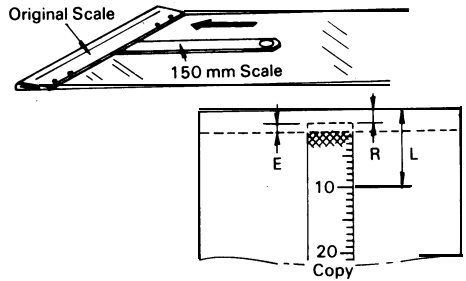

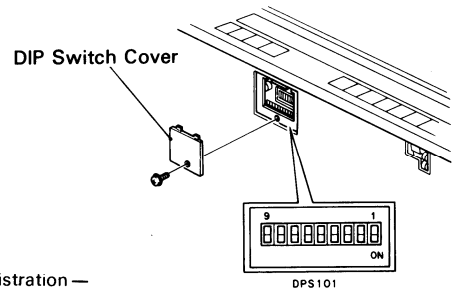

— Leading Edge Registration —

1 : SW ON O : SW OFF

No.1	No.2	NO.3	Registration
O	O	O	Decrease (–)
1	O	O	
O	1	O	
1	1	O	Variation per step: Approx. 1.3mm (0.051")
O	O	1	
1	O	1	
O	1	1	
1	1	1	Increase (+)

Leading Edge Erase Adjustment (FT2070)

1. **Lay a scale on the exposure glass, aligning it with the original scale as shown to the right.**

2. **Make a few copies and check that the leading edge erase is within specification.**

   Leading Edge Erase Specification
   3.5 ± 1 mm (0.14 ± 0.04")

NOTE: * Leading edge erase is the distance "E" in the figure (the length of scale that has been erased).

3. **If the leading edge erase is out of specification, adjust it using DIP SW 701-2, 3 and 4 on the optics board.**

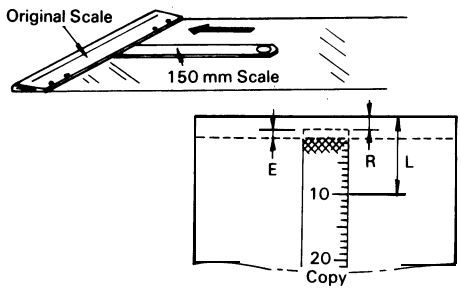

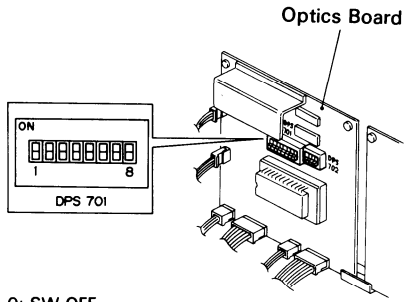

1: SW ON 0: SW OFF

No. 2	No. 3	No. 4	Erase
0	0	0	Decrease (–)
0	0	1	
0	1	0	Variation
0	1	1	per step:
1	0	0	Approx. 0.8 mm
1	0	1	(0.032")
1	1	0	
1	1	1	Increase (+)

Uneven Image Density Adjustment (FT2070)

1. **Adjust the exposure lamp position. (See "Exposure Lamp Positioning" section.)**

2. **Make a few copies of the OS-A3 chart and check that the difference in the image density between both sides is within specification.**

   Side-to-side Image Density Specification: Within one level difference between the two gray scales on the OS-A3 chart.

3. **If side-to-side image density is out of specification, adjust it using the uneven density adjusting plate.**

NOTE: * When adjusting the uneven density adjusting plate, remove the upper rear cover and the slider stopper (1 screw), then move the slider fully to the left.

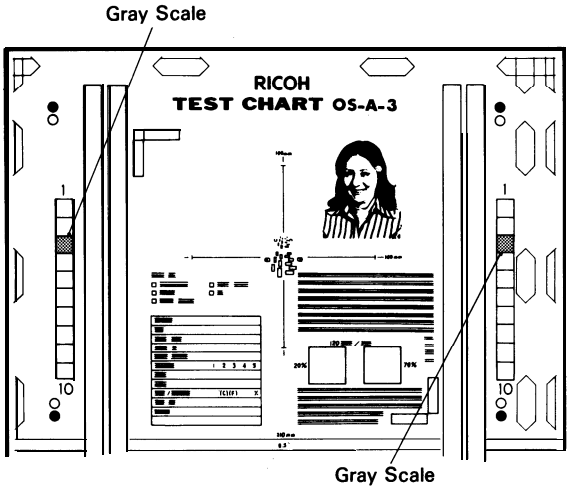

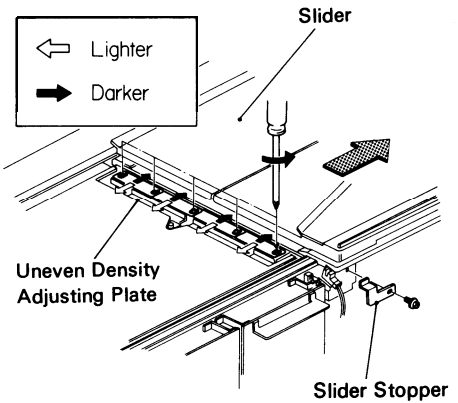

Horizontal Magnification Adjustment (FT2070)

– Resolution Adjustment –

1. **Make a few copies of the OS-A3 chart using the 1:1 reproduction ratio and check the resolution.**
2. **If the resolution is poor, adjust it by rotating the resolution cam to achieve optimum image.**

– Horizontal Magnification Adjustment –

3. **Make a few copies of the OS-A3 chart using the 1 :1 reproduction ratio and check that the horizontal magnification is within specification.**

   Horizontal Magnification Specification: ± 0.5%

NOTE: * The distance "H" on the copy of the OS-A3 chart should be 10030.5 mm (4 ± 0.02").

4. **If the horizontal magnification is out of specification, adjust it using the magnification cam.**

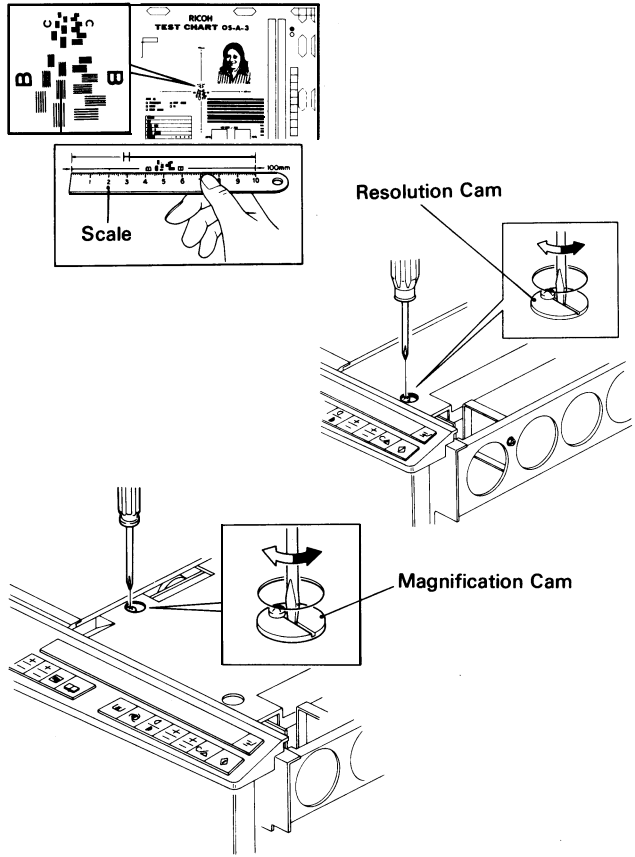

Vertical Magnification Adjustment (FT2070)

1. **Make a few copies of OS-A3 chart using the 1 : 1 reproduction ratio and check that the vertical magnification is within specification.**

   Vertical Magnification Specification: ± 1%

NOTE: * The distance "V" on the copy of the OS-A3 chart copy should be 100 ± 1 mm (4 ± 0.004").

2. **If Horizontal magnification is out of specification, adjust it using DIP SW 701-5, 6, 7, 8 (fine adjustment) and DIP SW 702-1, 2, 3, 4 (rough adjustment) on the optics board.**

RICOH
CHART OS-A-3

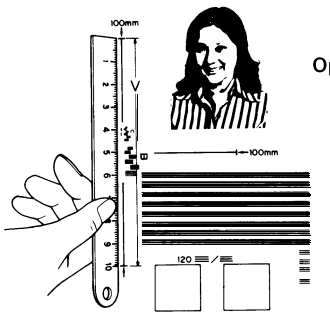

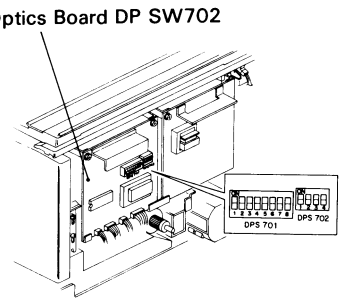

DIP SW 701

1: SW ON 0: SW OFF (Fine Adjustment)

5	6	7	8	
0	0	0	0	Slower (Larger)
0	0	0	1	
0	0	1	0	
0	0	1	1	
0	1	0	0	
0	1	0	1	
0	1	1	0	Variation
0	1	1	1	per step:
1	0	0	0	Approx. 0.2%
1	0	0	1	
1	0	1	0	
1	0	1	1	
1	1	0	0	
1	1	0	1	
1	1	1	0	
1	1	1	1	Faster (Smaller)

DIP SW 702

1: ON 0: OFF (Rough Adjustment)

1	2	3	4	
0	0	1	1	Slower (Larger)
0	0	1	0	
0	0	0	0	Variation per step: Approx. 1.4%
0	1	0	0	
1	0	0	0	Faster (Smaller)

5-8. Others

Master Clutch Lubrication (FT2050). 5-42

Slider Drive Assembly Removal (FT2050) 5-43

50Hz/60Hz Conversion 5-44

Master Clutch Lubrication (FT2070) 5-45

Master Drive Assembly Replacement (FT2070) 5-47

Toner Overflow Sensor Replacement (FT2070) 5-48

Master Clutch Lubrication

1. Remove the slider clutch bracket. (See "Slider Clutch Removal" section.)
2. Remove the 2 allen set screws from the master clutch.
3. Rotate the output hub counterclockwise and remove.

NOTE: * Do not pull the hub straight out or else damage to the spring may occur.

4. Remove the master clutch sleeve.
5. Rotate the clutch spring counterclockwise and remove.
6. Apply Mobil Temp 78 to the clutch.
7. Re-install the clutch so that the radial end of the spring and the smooth side of the clutch sleeve are facing the pulse generator gear.
8. Position a 0.2 mm (0.008") thickness gauge in between the pulse generator gear and bushing.
9. Push the master clutch towards the pulse generator gear. Tighten both allen set screws.

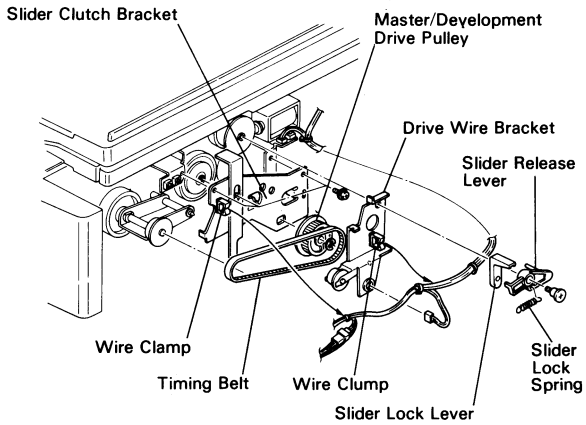

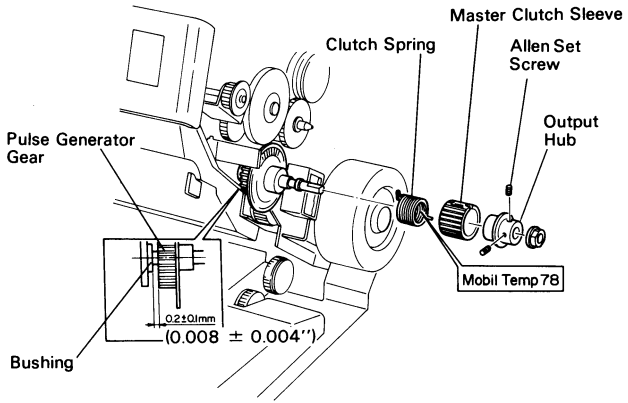

Slider Drive Assembly Removal

1. **Remove the Slider.** (See **"Slider Removal" section.)**
2. **Remove the pulse generator sensor bracket (1 screw and 1 connector).**
3. **Open the clamshell and remove the master unit. (See''Erase Lamp Replacement" section.)**
4. **Remove the slider drive assembly (3 screws, 5 connectors).**

NOTE: * When re-installing the slider drive assembly, set the positioning ring so it contacts the drive relay gear collar.

– Slider Drive Assembly Positioning –

When re-installing the slider drive assembly, the following positioning is necessary.

1. **Place the positioning ring (part number 52169003) on the pulse generator shaft.**
2. **Apply pressure to the slider drive assembly forcing it in the direction of the main motor, then tighten the screws. (This is to make sure that the drive relay gear collar and the positioning ring are firmly in contact.)**

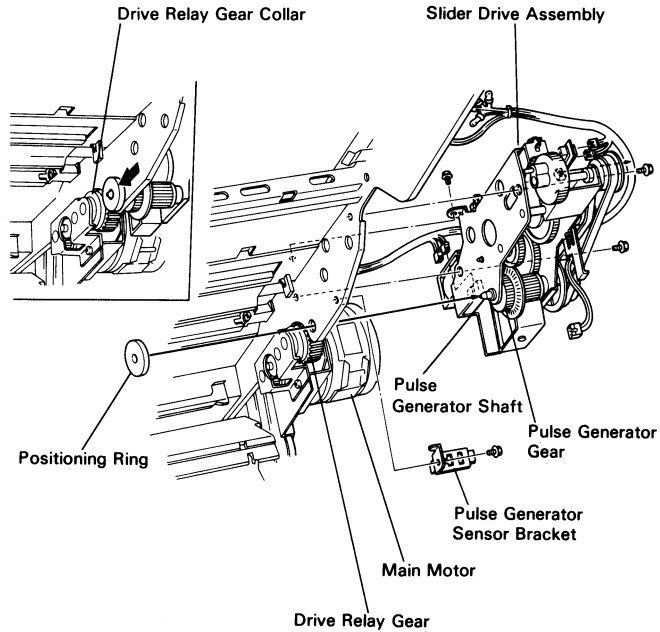

50Hz/60Hz Conversion

1. **Remove the 2 clamshell stopper screws and stand the clamshell straight up. (See "Transport Belt Replacement" section.)**

2. **Remove the main motor gear (part no. 52165860: 50Hz or 52165861: 60 Hz) (1 allen set screw) and set according to the desired electrical frequency as shown to the right.**

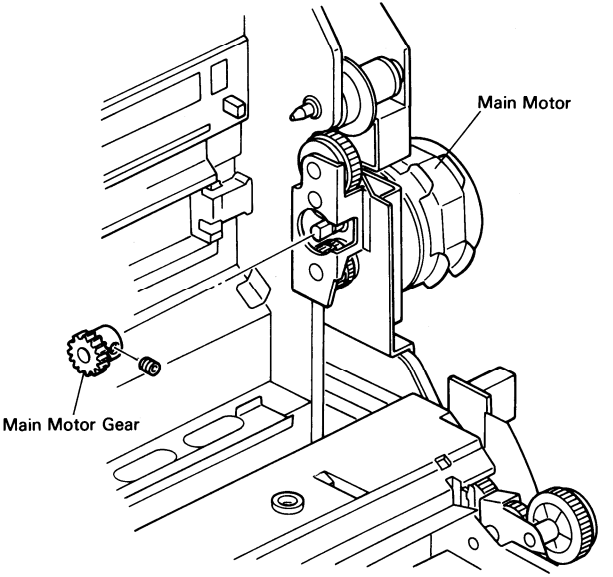

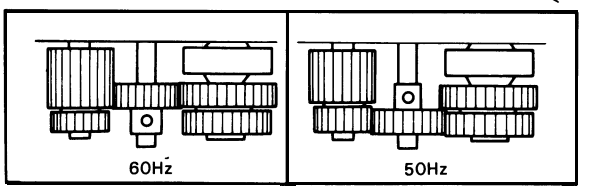

Master Clutch Lubrication (FT2070)

1. Remove the upper rear cover.
2. Open the clamshell.
3. Remove the optics board (2 screws and 6 connectors).
4. Remove the harness from the harness clamp.
5. Remove the pulse generator sensor connector.
6. Remove the timing belt tensioner (1 screw) and the timing belt.
7. Remove the master/development drive pulley (1 E-ring).
8. Remove the master clutch bracket (2 screws).
9. Remove the 2 Allen set screws from the master clutch.
10. Rotate the output hub counterclockwise and

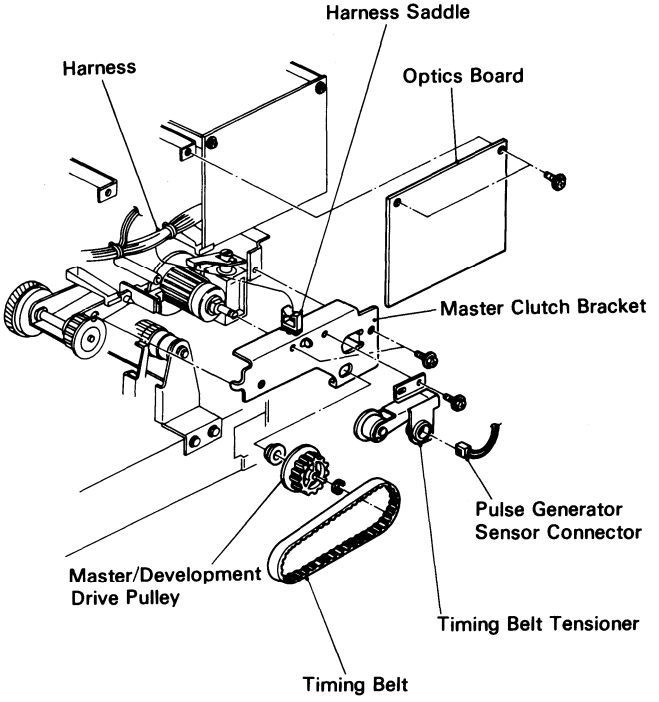

11. **Remove the master clutch sleeve.**

12. **Rotate the clutch spring counterclockwise and remove.**

13. **Apply Mobil Temp 78 to the clutch.**

14. **Re-install the clutch so that the radial end of the spring and the smooth side of the clutch sleeve are facing the pulse generator gear.**

15. **Position a 0.2 mm (0.008") thickness gauge between the pulse generator gear and bushing.**

16. **Push the master clutch towards the pulse generator gear. Tighten both Allen set screws.**

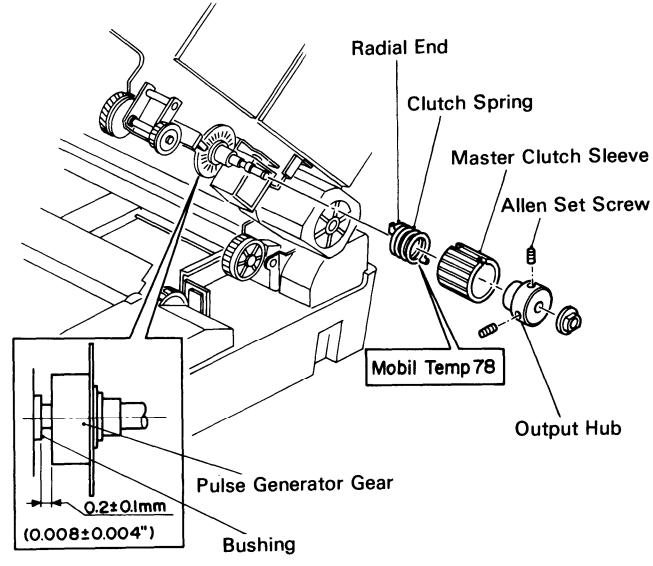

Master Drive Assembly Replacement (FT2070)

– Master Drive Assembly Removal –

1. Remove the upper rear cover.
2. Open the clamshell and remove the master unit. (See "Erase Lamp Replacement" section.)
3. Remove the optics board (2 screws and 6 connectors). (See "Master Clutch Lubrication" section.)
4. Remove the harness from the harness clamp.
5. Remove the pulse generator sensor assembly (1 screw and 1 connector).
6. Remove the master drive assembly (2 screws and 1 connector).

– Master Drive Assembly Positioning –

When reinstalling the master drive assembly, the following procedure is necessary:

7. Place the positioning ring (part number 52169003) on the pulse generator shaft.
8. Apply pressure to the slider drive assembly forcing it in the direction of the main motor, then tighten the screws.
   This is-to make sure that the drive relay gear collar and the positioning ring firmly in contact.

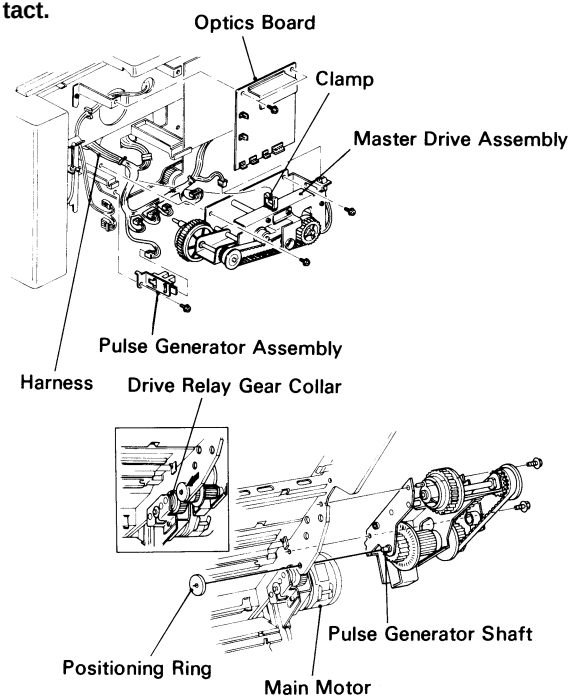

Toner Overflow Sensor Replacement (FT2070)

NOTE: * Make sure that the copier is in the full size mode (1 : 1) before starting the following procedure.

1. **Remove the upper left cover and the upper rear cover.**
2. **Remove the cooling fan (3 screws and 1 connector).**
3. **Remove the toner overflow sensor assembly (1 screw and 1 connector).**
4. **Remove the toner overflow sensor from the bracket (1 screw).**

NOTE: * When installing the toner overflow assembly, make sure that the positioning tab is seated correctly.

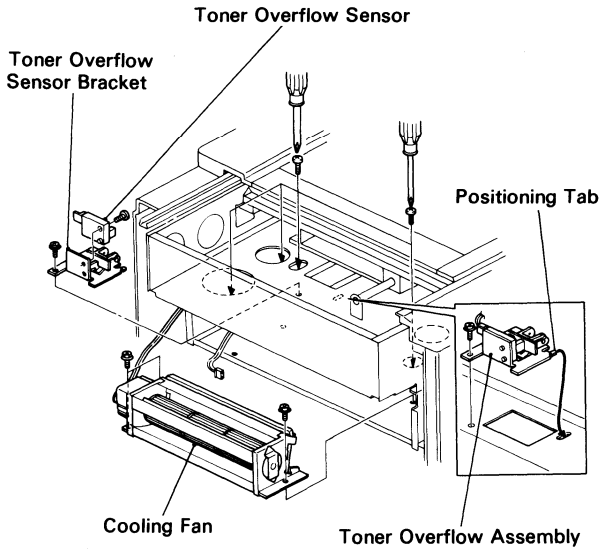

SECTION 6

SORTER CS1040

6-1. Unpacking Procedure

1. Open the shipping box.
2. Take out the mounting base; then, take out the sorter together with the cushion blocks.
3. Take off the cushion blocks and take the sorter out of the plastic bag.

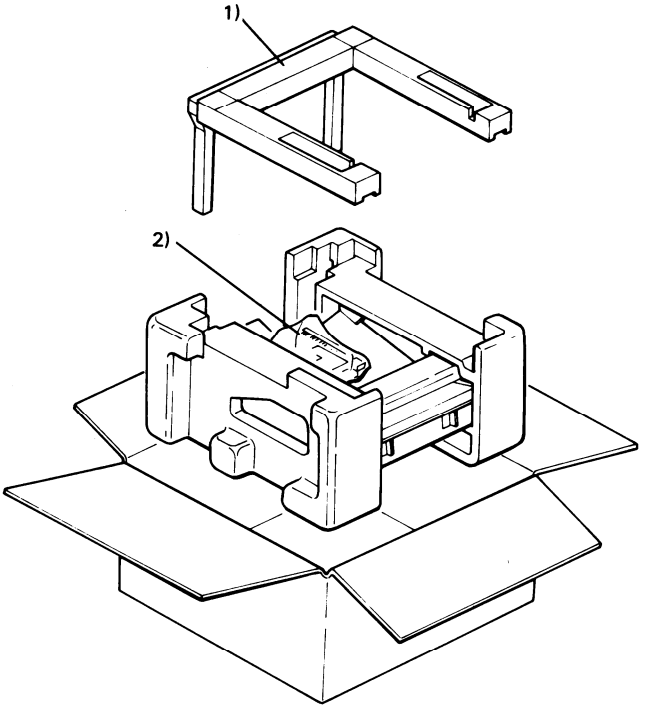

1) Mounting Base
2) Accessories

6-2. Accessory Check

Check the quantity and condition of the accessories in the box according to the New Equipment Condition Report.

1. **Mounting Base 1pc**
2. **Proof Tray 1pc**
3. **Antistatic Brush . . . . . 1 pc**
4. **Magnet 1pc**
5. **Harness Bracket . . . . . 1 pc**
6. **Mounting Lock 2pcs**
7. **Short Screw . . . . . 3 pcs**
   (Incl.1 Grounding Screw)
8. **Stepped Screw 1pc**
9. **Long Screw 2pcs**
   (Not used)
10. **Bushing 1pc**

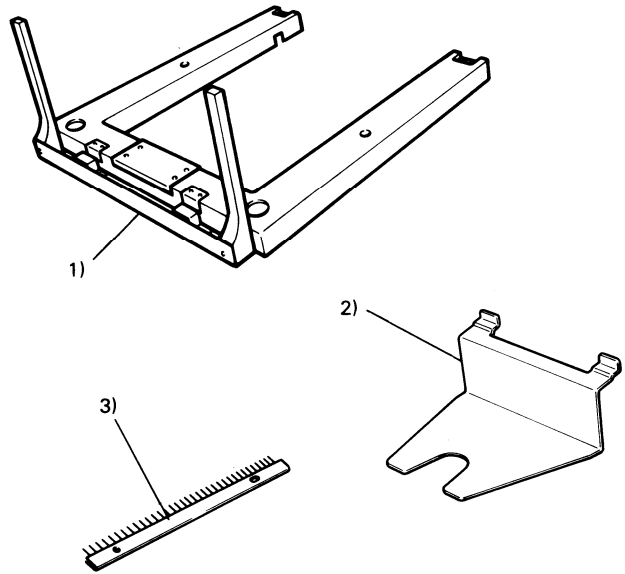

NOTE: To install the sorter on the FT2050 a sorter compatible main board must be obtained. These are available as options.

11) Interface Board Type C

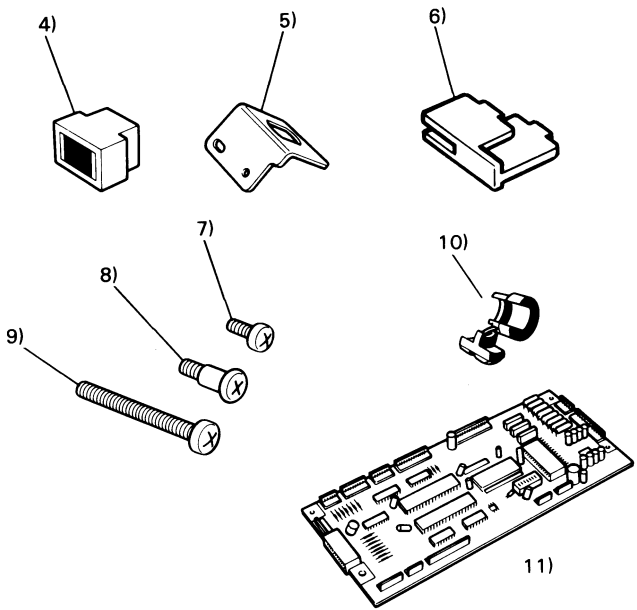

6-3. Installation procedure

1. Install the copier on the mounting base.

   NOTE: Make sure that the legs rest securely in the cutouts of the mounting base.

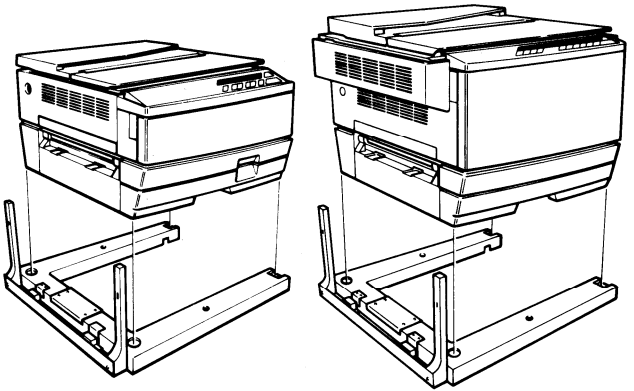

2. Install the magnet on the left cover as shown.

   NOTE: Place the magnet in the bottom right-hand corner of the cutout.

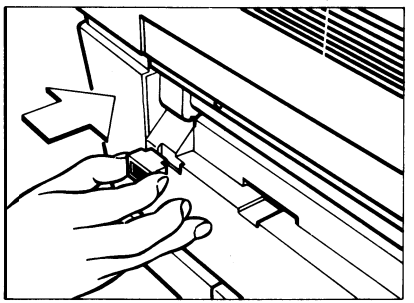

3. Remove the two screws on the exit cover.

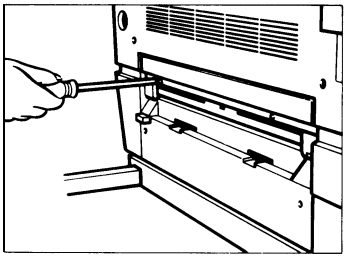

4. Install the antistatic brush.

NOTE: Use a screw from step 3 in the left side and the accessory stepped screw in the right side.

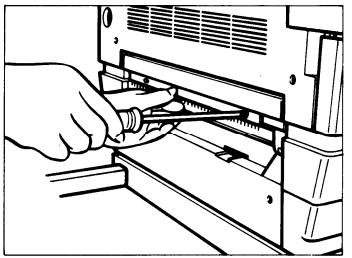

5. Install the proof tray where the copy tray normally fits.

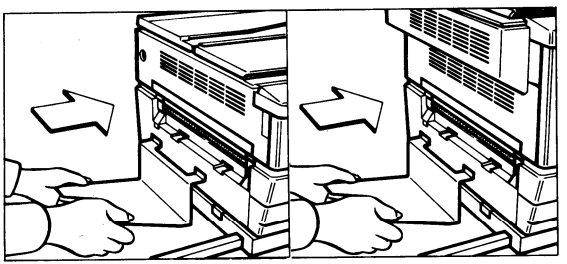

6. Insert the sorter hooks into the vertical posts of the mounting base.

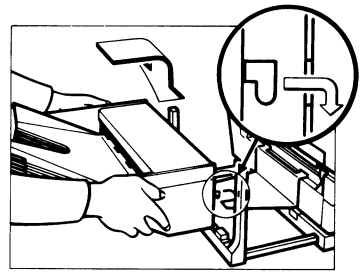

7. Secure the sorter hooks by installing the mounting locks.

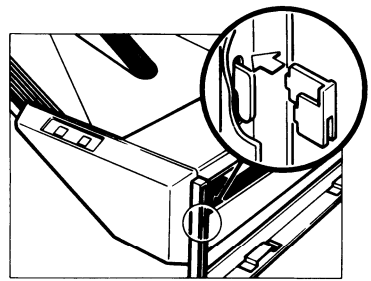

Separate procedures are needed to install the sorter on the FT2050 and the FT2070. Follow the procedure from step 8 when installing the sorter on the FT2050. Proceed to step 21 when installing the sorter on the FT2070.

8. Remove the rear cover (2 screws)

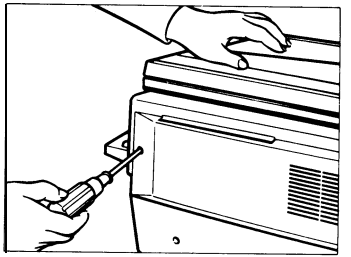

9. Move the slider to the left by pressing the slider lock release lever. Then, lower the

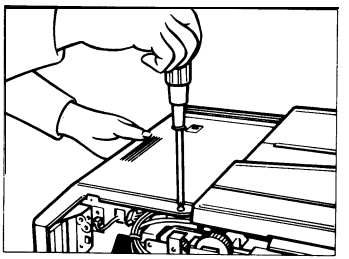

10. Replace the main board with the sorter compatible main board (3 screws and 8 connectors).

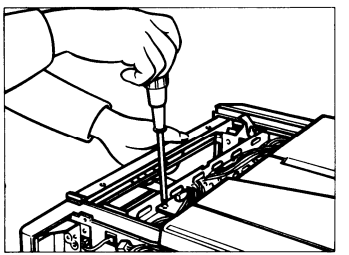

11. Remove the upper left cover (4 screws).

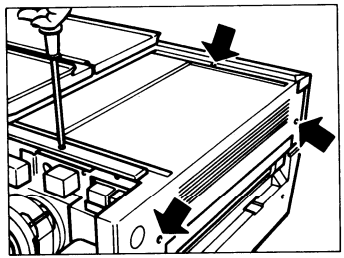

12. Remove the plastic cap from the docking hole of the upper left cover.

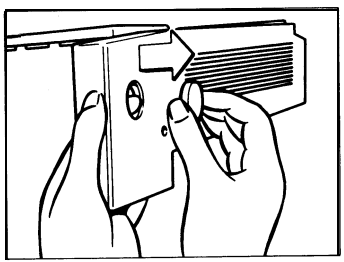

13. Install the harness bracket (2 screws).

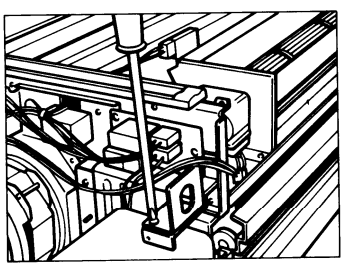

14. Thread the sorter harness through the docking hole and the harness bracket.

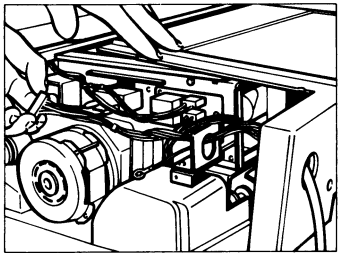

15. The sorter harness has two harness bands used as markers. Place the bushing on the sorter harness just behind the first harness band from the connector. Secure the bushing in the harness bracket.

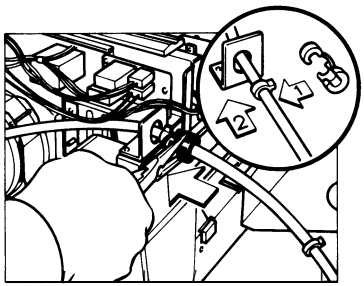

16. Secure both ground wires to the rear cover bracket(1screw).

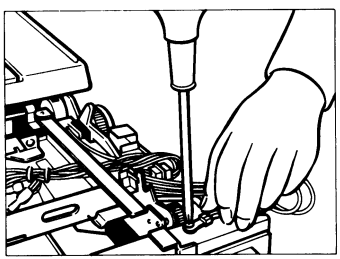

17. Couple the connector to CN114 on the main board.

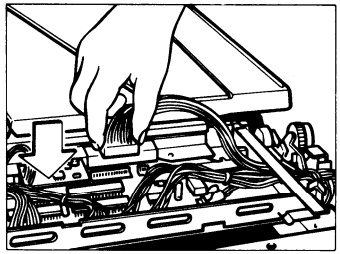

18. Reassemble the copier.
19. Slide the sorter to its normal position.

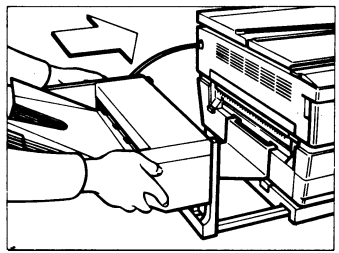

20. Check the operation in all modes.
    This completes the sorter installation on the FT2050

21. Open the front cover.

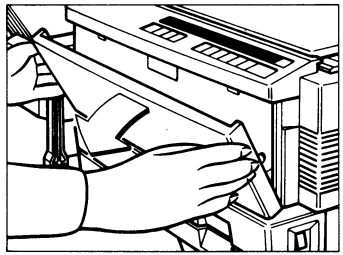

22. Move the slider to the center and push down the release lever to open the top unit.

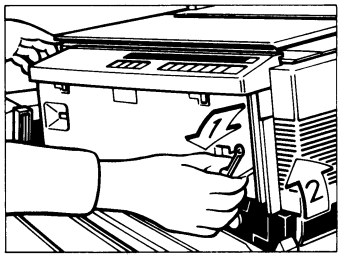

23. Remove the release lever (1 E-ring).

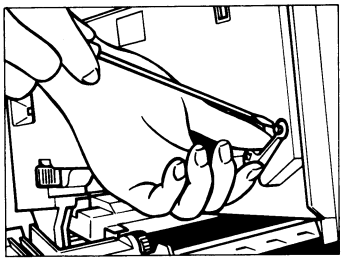

24. Remove the inner cover (2 screws).

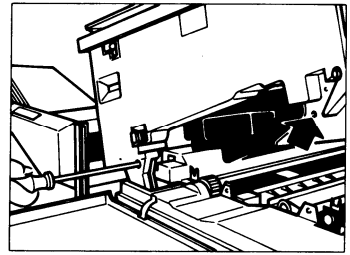

25. Lower the top unit.

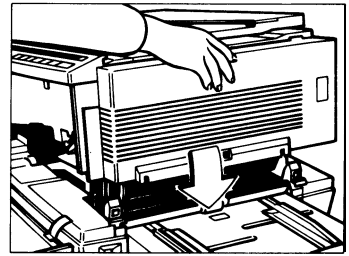

26. Move the slider fully to the right, then remove the upper left cover (4 screws).

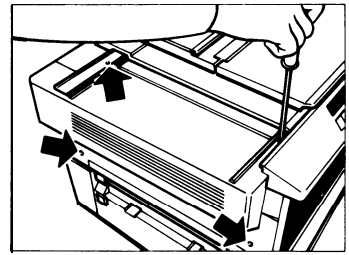

27. Remove the rear cover (2 screws).

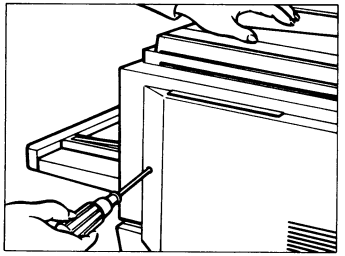

28. Install the harness bracket (2 screws).

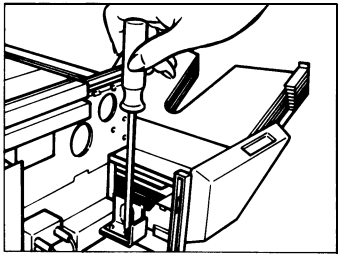

29. Remove the plastic cap from the docking hole of the upper left cover.

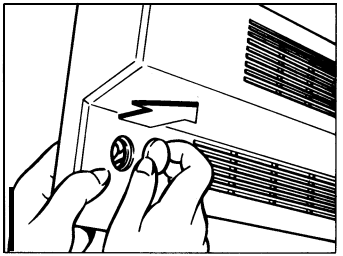

30. Thread the sorter harness through the docking hole and the harness bracket.

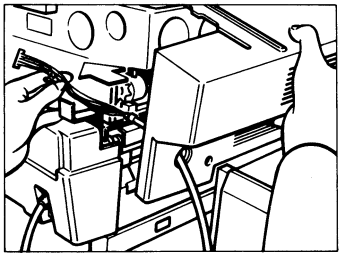

31. The sorter harness has two harness bands used as markers. Place the bushing on the sorter harness just behind the second harness band from the connector. Secure the bushing in the harness bracket.

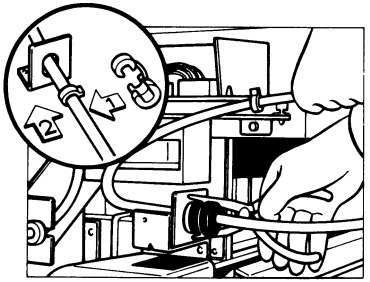

32. Secure the sorter harness into the three wire saddles which are mounted on the left underside of the optics unit.

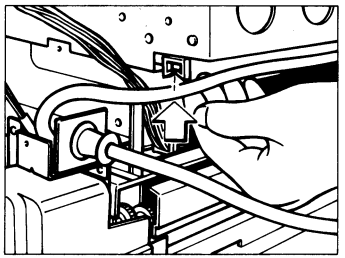

33. Run the sorter harness above the total counter bracket, and couple the connector to CN114 on the main board.

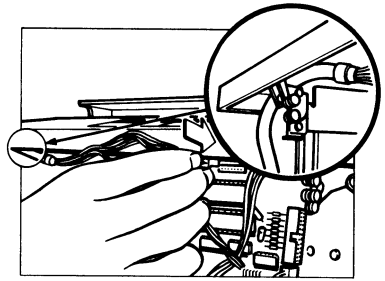

34. Secure the ground wire to the front machine plate.

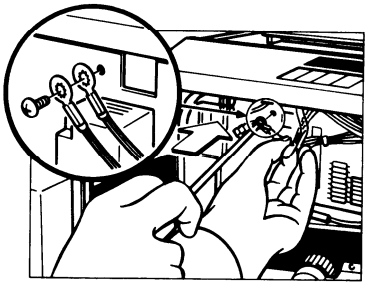

35. Reassemble the copier.

36. Slide the sorter to its normal position.

37. Check the operation in all modes.
This completes the sorter installation on the FT2070.

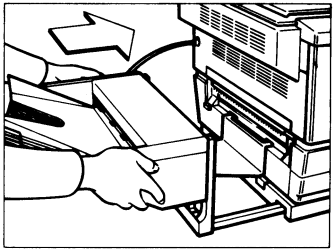

6-4. Preparation for Transporting the Sorter

Before moving the sorter from its place of installation, be sure to prepare it for transportation as follows. The sorter may be badly damaged if it is moved without proper preparation.

1. **If the bins are not at the home position, turn on the main switch of the copier to move the bins to the home position.**
2. **Secure the bins with strips of tape as shown to the right.**
3. **Remove the sorter from the copier. (Refer to the "installation Procedure (Sorter)" Section.)**

CAUTION: * When removing and transporting the sorter, be careful not to incline it to prevent the bins from being dislocated.

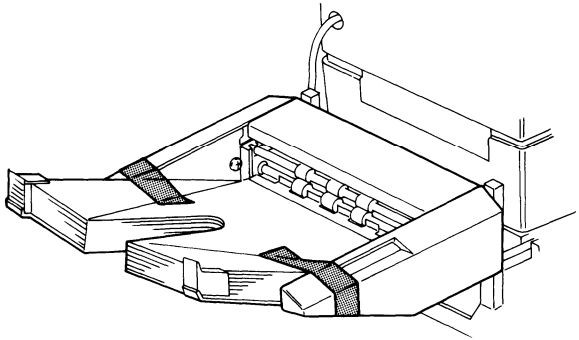

6-5. Roller Drive Belt Replacement

1. Loosen the screws, slide the front and rear covers toward exit end of the sorter, and then remove them.
2. Remove the top cover.
3. Remove the top stay.

NOTE: * Be sure that the short edge of the top stay is facing the exit side of the sorter when re-installing.

4. Lift the upper paper guide up and out of position.

NOTE: * Be careful not to damage the home position switch actuator when reassembling.

5. Lift the lower paper guide out of position and turn it over to remove the roller drive belt.
6. Remove the transfer wheel, spacer, pin and bushing (1 C-ring).
7. Slide the wheel shaft towards the front and remove the roller drive belt.

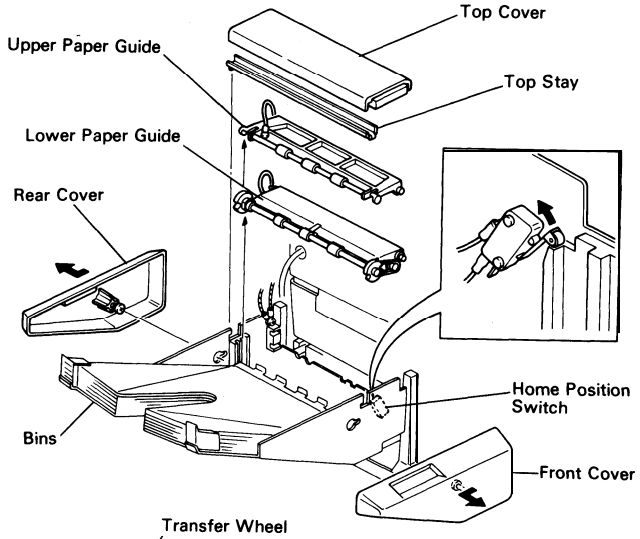

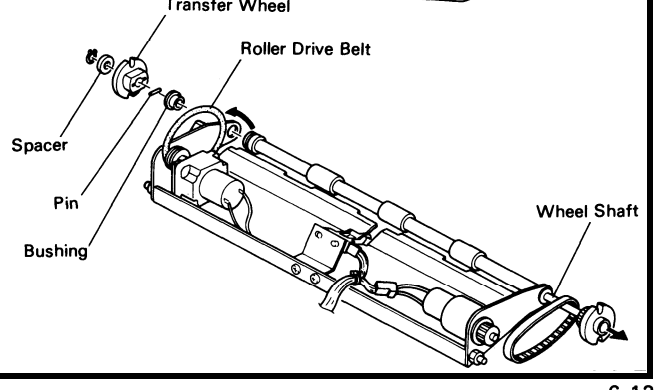

6-6. Bin Guide Lubrication

1. Remove the lower paper guide. (See "Roller Drive Belt Replacement" section.)
2. Remove all bins from the bin guides.
3. Apply Grease 501 to the grooves of the bin guides.

NOTE: * These are three-kinds of bin.
Therefore, when installing the bins, be sure that the bins are installed in the correct order.

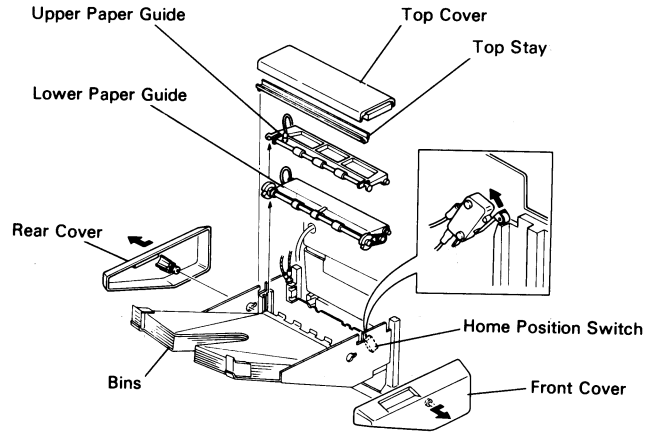

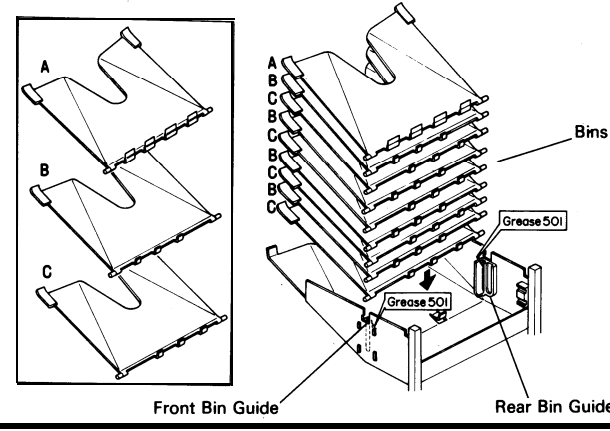

SECTION 7

DOCUMENT FEEDER

DF36

7-1. Unpacking Procedure

1. **Open the shipping box.**
2. **Take out the accessory boxes and the machine.**
3. **Take off the cushion blocks and take the document feeder out of the plastic bag.**

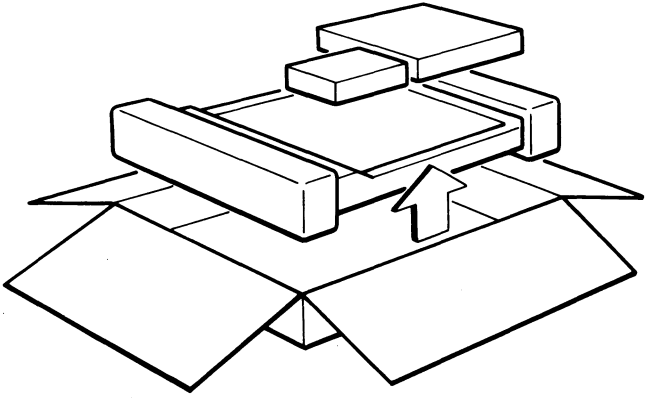

7-2. Accessory Check

Check the quantity and condition of the accessories in the boxes according to the New Equipment Condition Report.

1. **Original Table 1pc**
2. **AC Power Unit . . . . . 1 pc**
3. **Interface Cord . . . . . 1 pc**
4. **Bushing 1pc**
5. **DC Harness . . . . . 1 pc**
6. **Harness Hang Wire 1pc**
7. **Screw . . . . . 2 pcs**

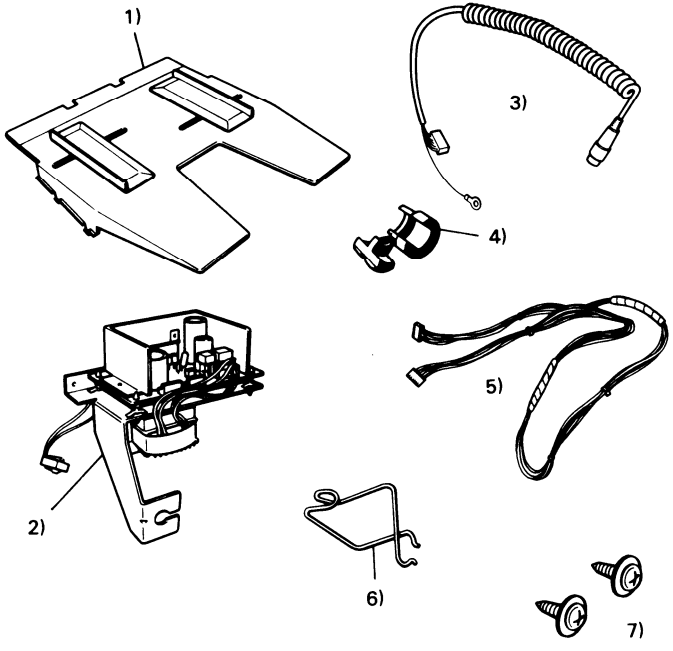

7-3. Installation Procedure

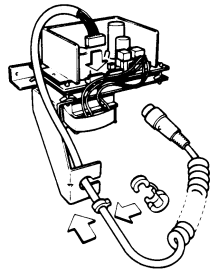

* **Before starting the installation, assemble the ac power unit.**

1) Connect the interface cord to CN110.

2) Place the bushing on the interface cord just behind the harness band.

3) Secure the bushing in the ac power unit bracket.

1. Open the front cover.

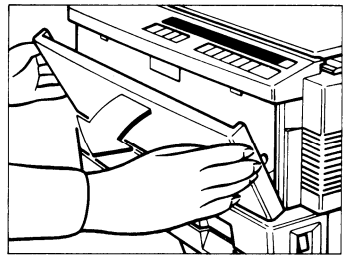

2. Move the slider to the center and push down the release lever to open the top unit.

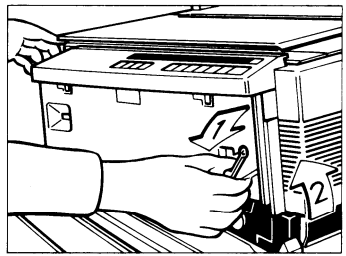

3. Remove the release lever (1E-ring).

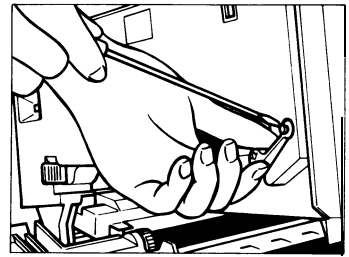

4. **Remove the inner cover (2 screws)**

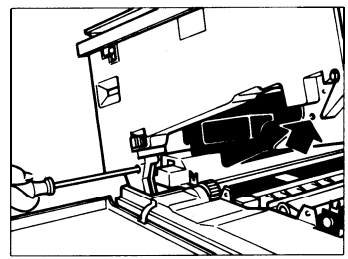

5. Lower the top unit.

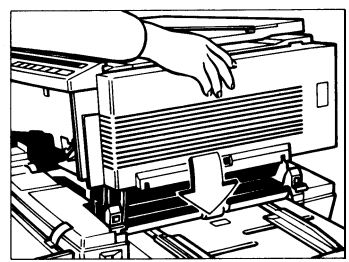

6. **Move the slider fully to the right, then remove the upper left cover (4 screws).**

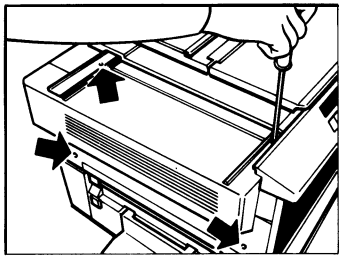

7. **Remove the rear cover (2 screws)**

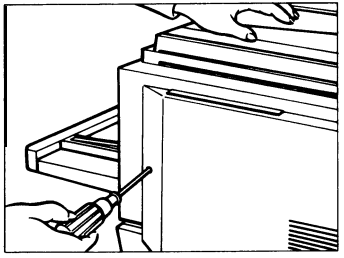

8. **Install the ac power unit and the grounding wire of the interface cord on the machine rear plate (2 screws).**

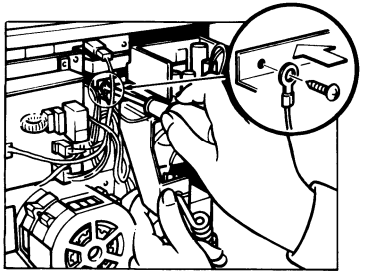

9. Connect the dc harness (red connector) to CN111 of the ac power unit.

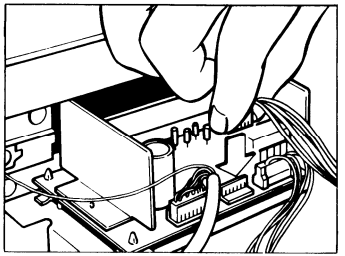

10. Secure the dc harness into the three wire saddles which are mounted on the left underside of the optics unit.

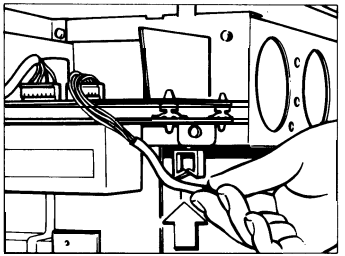

11. Run the dc harness above the total counter bracket, and couple the connector to CN116 on the main board.

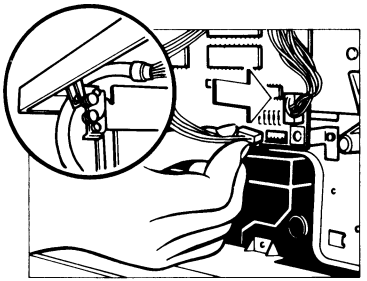

12. Couple the ac connectors.

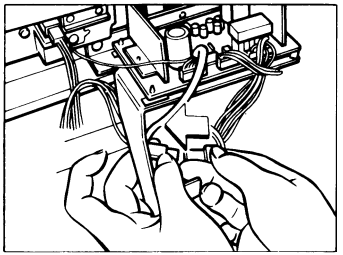

*** In 240V areas, uncouple the 220V connector (red harness) and couple the 240V connector (black harness):**

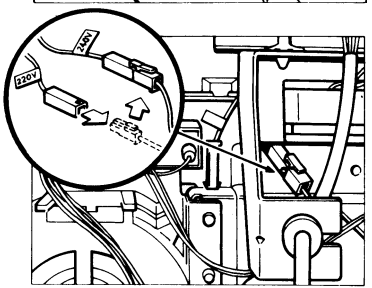

13. Remove the plastic cap from the docking hole on the rear cover.

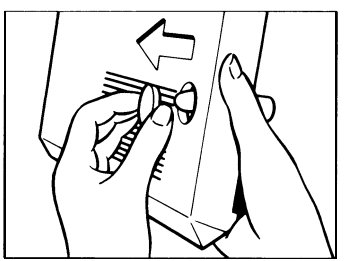

14. **Thread the interface cord through the docking hole.**

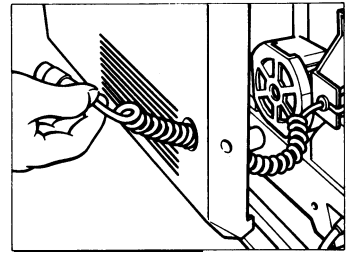

15. Reassemble the copier.

16. Pull out the two push-locks and remove the platen cover.

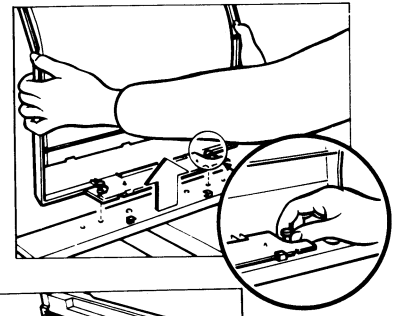

17. **Move the slider to the center of the copier, then mount the document feeder so that each of the two catches on the slider are placed between the positioning ridges on the document feeder.**

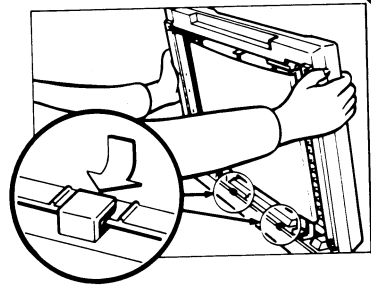

18. HOLDING THE DOCUMENT FEEDER, **press down the four push-locks until they lock.**

NOTE: **If the push-locks are hard to press down, the document feeder is not positioned correctly. Separate the document feeder, then remount it.**

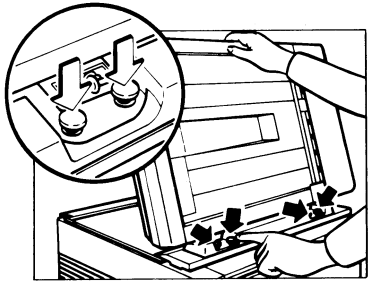

19. Attach the harness hang wire to the interface cord.

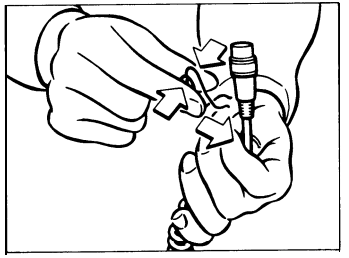

20. Connect the interface cord to the document feeder so that the black marks are aligned.

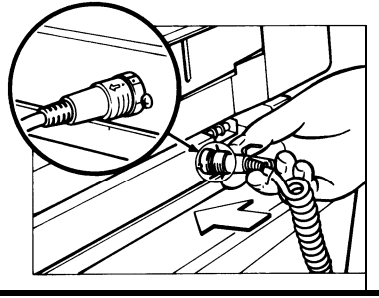

21. Close the document feeder and install the original table.

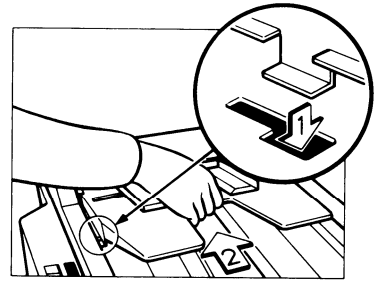

22. Check the feeder operation.

23. Check the feeder registration.
    Registration standard: 0 ± 3 mm

NOTE: The copier registration should have been adjusted to specifications.
Adjustment Standard: 0 ± 2 mm

24. If the feeder registration is out of specification, adjust it as follows:

(1) Turn off the copier main switch and remove the lower left cover of the document feeder (2 screws).

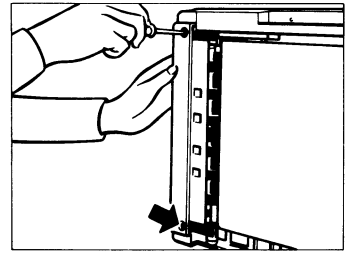

(2) Adjust the registration using DIP switch 101 on the DF main board according to the adjustment table.

NOTE: **When making copies, the lower left cover must be installed.**
Make sure that the DF main board is correctly mounted.

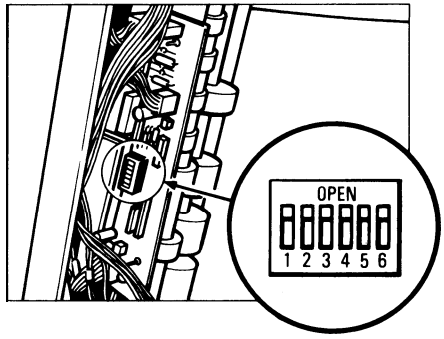

25. This completes the document feeder installation.

1) **Adjustment Table**
2) **Free Run**
3) **1.0 mm/step (0.04"/step)**

2)

1)

3	1	0	1	0	1	0	1	0	0	1	0	1	0	1	0	1
4	1	1	0	0	1	1	0	0	0	0	1	1	0	0	1	1
5	1	1	1	1	0	0	0	0	0	0	0	0	1	1	1	1
6	1	1	1	1	1	1	1	1	0	0	0	0	0	0	0	0

+ ← → –

3)

7-4. Preparation for Transporting the Document Feeder

* **Before moving the document feeder from its place of installation, be sure to prepare it for transportation as follows. The document feeder may be badly damaged if it is moved without proper preparation.**

1. **Remove the original table.**
2. **Raise the document feeder to the upright position and remove it from the copier.**
3. **Keep the document feeder flat to prevent it from being deformed.**
4. **Tape the interface cord to the copier.**
5. **Install the platen cover to protect the exposure glass.**

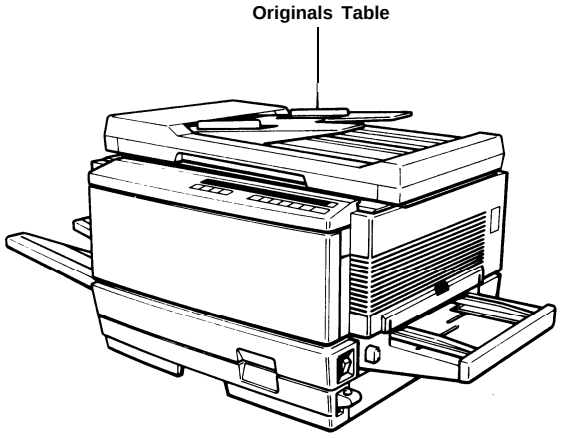

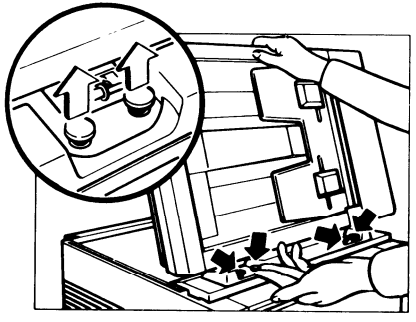

7-5. Feed Roller Replacement

1. **Remove the lower left cover (2 screws) and lower front cover (2 screws).**
2. **Remove the left front locking plate (original feed-in side) (1 screw).**
3. **Remove the front feed bracket (2 screws, bearings, and 2 E-rings).**
4. **Remove the three front feed support rollers, then remove the feed roller (7 E-rings).**

NOTE: * As the feed roller has a one-way clutch, make sure it is installed correctly. When viewing the feed roller from the front, it turns counterclockwise.

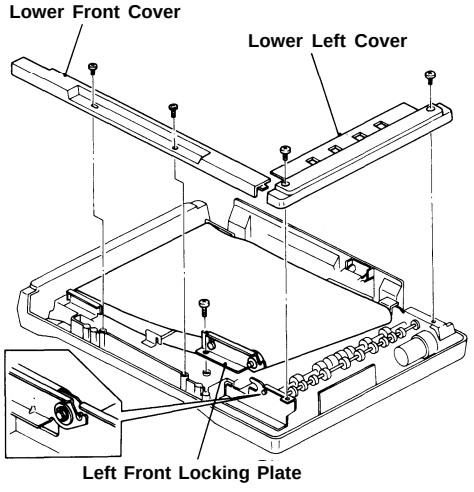

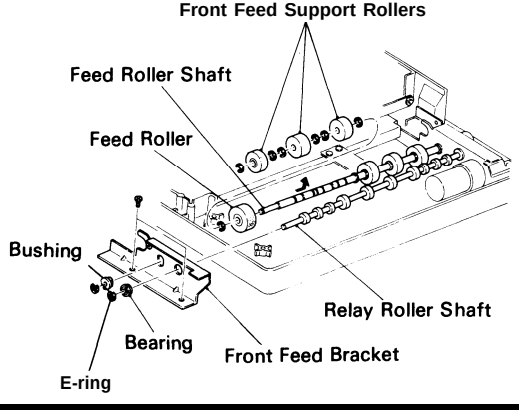

7-6. Friction Belt Replacement

1. **Remove the lower left cover (2 screws) and the lower front cover (2 screws).**
2. **Remove the front left and rear left locking plates (original feed-in side) from the frame (1 screw each) and swing the transport belt up and away from the feed roller.**
3. **Remove the gear cover (2 screws).**
4. **Lift out the feed roller assembly (4 screws and 3 connectors).**
5. **Disconnect the original set sensor.**
6. **Fold back the mylar and disconnect the friction belt spring.**
7. **Peel off the friction belt. When installing the friction belt, make sure that the positioning notch engages with the tab.**
8. **Remove the friction belt spring from the friction belt by sliding the pin for installation on the new belt.**

NOTE: * **Be careful not to deform the spring.**

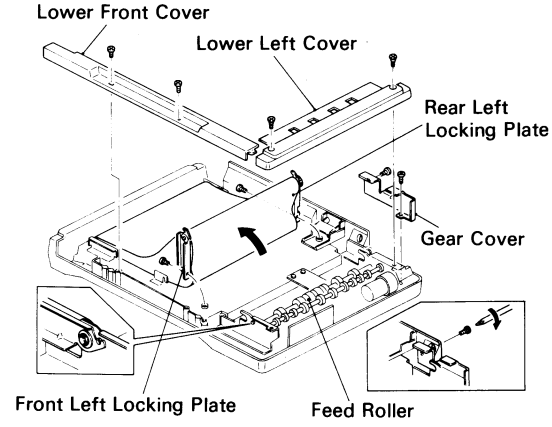

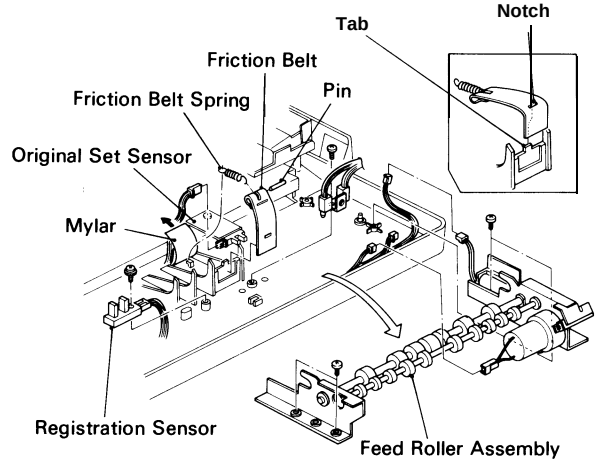

7-7. Feed Clutch Lubrication

1. **Remove the feed roller assembly. (See "Friction Belt Replacement.")**
2. **Remove the output hub (1 Allen set screw), the clutch sleeve, and the clutch spring.**
3. **Apply "Mobil Temp 78" to the clutch spring.**
4. **Re-install the clutch so that the radial end of the spring and the gear side of the clutch sleeve are facing the feed roller gear.**
5. **Position a 0.2 mm thickness gauge between the shaft shoulder and the feed roller gear.**
6. **Push the feed clutch towards the feed roller. Tighten the Allen set screw.**

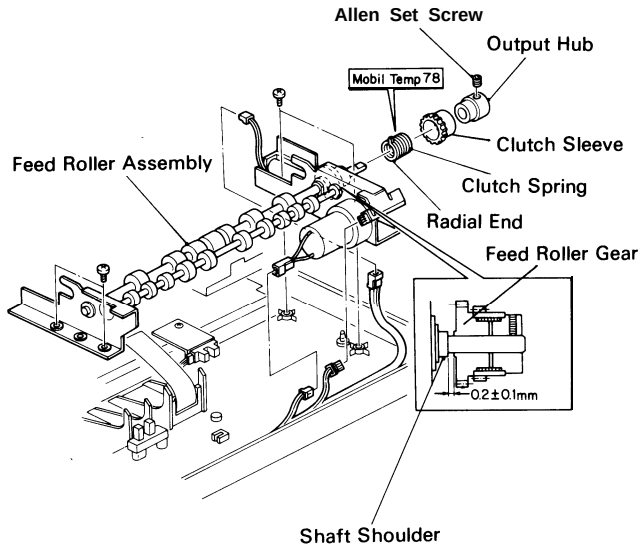

7-8, Transport Belt Replacement

1. **Remove the lower left cover (2 screws) and lower front cover (2 screws).**
2. **Remove the front left locking plate (1 screw).**
3. **Remove the front right locking plate by sliding the locking plate to the right and then lifting it.**
4. **Remove the front pressure roller bracket (1 screw).**
5. **Lift the front of the transport rollers and slide off the transport belt.**

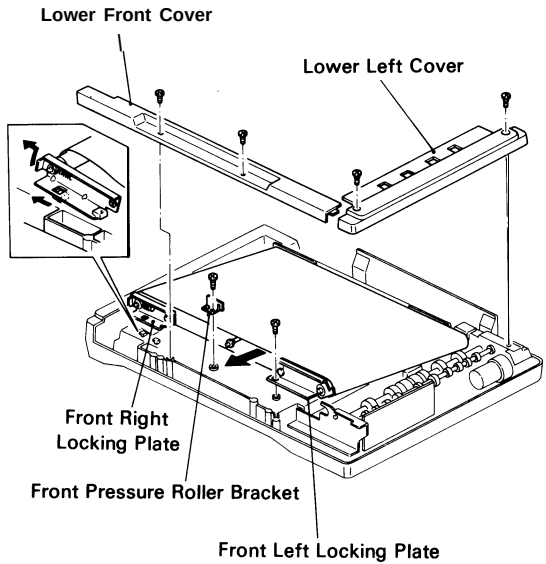

7-9. Leading Edge Registration Adjustment

1. **Adjust the copier leading edge registration before checking the DF leading edge registration. (See "Leading Edge Registration" [copied section.)**
2. **Draw a line 10 mm from the leading edge of a sheet of copy paper and make a few copies of it in the DF mode.**
3. **Check that the leading edge registration is within specification.**

   Leading Edge Registration Specification:
   0 ± 3 m m
4. **If the leading edge registration is out of the specification, adjust using DIP switches 101-3, 4, 5, and 6 on the DF main board. (Remove the lower left cover.)**

NOTE: * **When making copies after adjusting leading edge registration, make sure that the lower left cover is closed firmly.**

*** When DIP switches 101-3, 4, 5, and 6 are OFF, OFF, OFF, and ON, the DF moves in free run mode.**

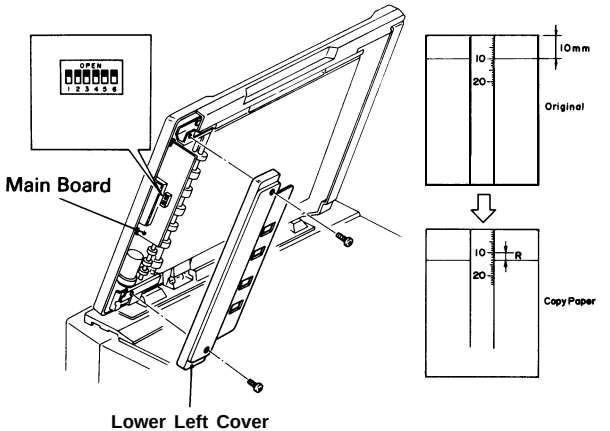

— Leading Edge Registration (DF) —

DIP SW101

1: ON 0: OFF

	3	4	5	6	Registration
	1	1	1	0	Decrease (–)
	0	1	1	0	
	1	0	1	0	
	0	0	1	0	
	1	1	0	0	
	0	1	0	0	
	1	0	0	0	Variation
	0	0	0	0	Per Step:
Free Run	0	0	0	1	Approx. 1.0 mm
	1	0	0	1	(0.04")
	0	1	0	1	
	1	1	0	1	
	0	0	1	1	
	1	0	1	1	
	0	1	1	1	
	1	1	1	1	Increase (+)

7-10. Lift Sensor Replacement

1. **Remove the lift sensor cover (2 screws).**
2. **Remove the lift sensor (1 screw and 1 connector).**

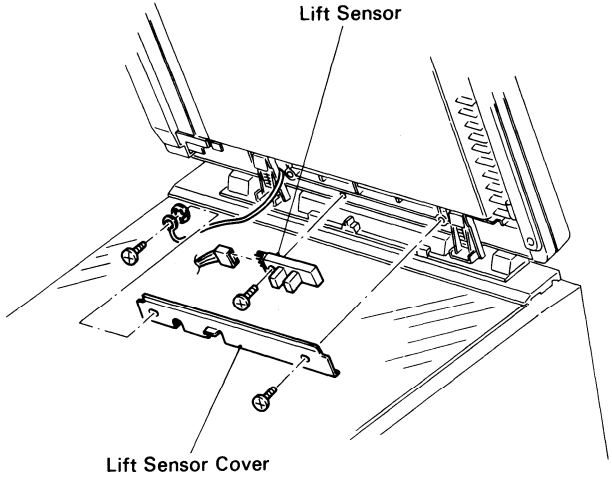

7-11. Service Remarks

1. **When removing the document feeder from the copier, always be sure that the document feeder is straight up.**
2. **When closing the document feeder, hold it until completely closed.**

SECTION 8

TROUBLESHOOTING

8-1. Copy Quality Problems

NO.	PHENOMENON	CAUSES	REPAIR (TREATMENTS)
1.	UNEVEN IMAGE DENSITY	(1) Fiber optics are dirty (FT2050). (2) Charge corona wire is dirty. (3) Charge corona wire is mounted incorrectly. (4) Quenching lamp is dirty. (5) Reflector is dirty. (6) Exposure lamp is dirty. (7) Mirrors/Lens are dirty (FT2070) (8) Lamp position incorrect (FT2070)	(1) Clean them with the cleaner. (2) Clean it with the cleaner. (3) Check the wire is in the V-slot. (4) Clean it with a soft cloth. (5) Clean it with a soft cloth. (6) Clean it with a soft cloth. (7) Clean them with a soft cloth. Correct uneven density using the adjusting plates. (8) Adjust the exposure lamp position.
2.	WHITE LINES OR STREAKS	(1) Toner blocking on the toner metering blade. (2) Insufficient toner in the development unit. (3) Grid plate is dirty. (4) Charge corona wire is dirty. (5) Mirrors/Lens are dirty (FT2070).	(1) Clean the blade with the toner agitator. (2) Replenish one toner cartridge and agitate the metering blade with the toner agitator. (3) Clean it with a blower brush. (4) Clean it with the cleaner. (5) Clean them with a soft cloth.
3.	FUZZY COPY	(1) Original is not flat on the exposure glass. (2) Fiber optics are dirty (FT2050). (3) Exposure glass is dirty. (4) Fiber optics are not installed securely (FT2050). (5) Mirrors/Lens are dirty (FT2070).	(1) Instruct operator to correct original curl. (2) Clean them with the cleaner. (3) Clean it with a soft cloth. (4) Install the fiber optics in the holder securely. (5) Clean them with a soft cloth.

NO.	PHENOMENON	CAUSES	REPAIR (TREATMENTS)
4.	DIRTY BACKGROUND	(1) Light fatigue of the master unit.	(1) Avoid exposing the master unit to light. (Do not leave the machine with the top unit opened for a long time)
		(2) Exposure glass is dirty.	(2) Clean it with a soft cloth.
		(3) Platen cover sheet is dirty.	(3) Clean it with a damp cloth.
		(4) Bias circuit failure.	(4) Check the circuit and replace the defective part.
		(5) Quenching lamp failure.	(5) Check the circuit and replace the defective part.
		(6) Mirrors/Lens are dirty (FT2070).	(6) Clean them with a soft cloth.
		(7) Weak light intensity (FT2070).	(7) Adjust it using VR101.
5.	DIRTY BACKSIDE OR LEADING EDGE	(1) Lower feed guide is dirty.	(1) Clean it with a damp cloth.
		(2) Transfer corona unit is dirty.	(2) Same as (1)
		(3) Transport guide plate is dirty.	(3) Same as (1)
		(4) Transport belt is dirty.	(4) Same as (1)
		(5) Registration roller is dirty.	(5) Clean it with a soft cloth.
6.	BLANK AREAS	(1) Paper is damp.	(1) Change the paper in the cassette. (Instruct operator how to store paper when it is not to be used for a long time.)
		(2) Paper is curled.	(2) Correct the paper curl. (Instruct operator how to correct the curl.)

NO.	PHENOMENON	CAUSES	REPAIR (TREATMENTS)
7.	INSUFFICIENT IMAGE DENSITY	(1) Transfer corona wire is dirty. (2) Transfer corona wire is broken. (3) Transfer power pack failure. (4) Master unit has exceeded service life. (5) Paper is damp. (6) Development roller does not rotate.	(1) Clean it with cotton swabs. (2) Replace the transfer corona wire. (3) Check the circuit and replace the defective part. (4) Replace the master unit. (5) Change the paper in the cassette. (6) Check the drive mechanism.
8.	WHITE COPY	(1) Charge corona wire is broken. (2) Charge power pack failure.	(1) Replace the charge corona wire. (2) Check the circuit and replace the defective part with a new one.
9.	FAINT COPY AT LEADING OR TRAILING EDGE	(1) Paper is curled. (2) Paper is damp.	(1) Correct the paper curl before making copies. (2) Change the paper in the cassette. O Instruct operator how to store paper when it is not to be used for a long time. O Thick and/or thin paper sometimes make faint copies due to paper quality. O Instruct the operator to use recommended paper.

NO.	PHENOMENON	CAUSES	REPAIR (TREATMENTS)
10.	WRINKLED COPY	(1) Paper is curled. (2) Paper is damp.	(1) Correct the paper curl. (2) Change the paper in the cassette.
11.	BLACK LINES	(1) Thermistor is dirty. (2) Hot roller strippers are dirty. (3) Deformed toner metering blade.	(1) Clean it with a damp cloth. (2) Clean them with a damp cloth. (3) Replace the blade with new one.
12.	JITTER	(1) Insufficient friction of the slider clutch (FT2050).	(1) Replace the clutch. (Forward or Reverse)
13.	MISFEED	(1) Paper is incorrectly loaded. (2) Paper stiffness. (3) Paper feed clutch failure. (4) Paper feed and registration solenoid failure. (5) Paper feed drive failure.	(1) Load the paper in the cassette correctly. (2) Use recommended paper. (3) Apply “Mobil Temp 78” to the clutch spring. (4) Check or replace the solenoid. (5) Check the paper feed drive mechanism.
14.	NOISE	(1) Lack of lubricant.	(1) Apply “Grease 501” to the gears. (2) Apply “Grease 501” to the fiber optics holders.

8-2. Defective Sensor/Switch Table

Sensor/switch	Opened	Shorted
Safety Switch	Copier can not be powered.	Safety function does not work.
Master Sensor	Self-diagnostic code "E7/E7-71"	Self-diagnostic code "E7/E7-71"
Home Position Switch (FT2050)	Self-diagnostic code "E2"	Self-diagnostic code "E2"
Slider Home Position Sensor (FT2070)	Self-diagnostic code "E2-21" "E2-22", or "E2-24"	Self-diagnostic code "E2-21" or "E2-24"
Lens Home Position Sensor (FT2070)	Self-diagnostic code "E2-29"	Self-diagnostic code "E2-28"
Pulse Generator	Self-diagnostic code "E6/E6-61"	Self-diagnostic code "E6/E6-61"
Exposure Sensor (FT2050)	Self-diagnostic code "El"	Self-diagnostic code "El"
Toner End Sensor	Toner End indicator does not turn on at toner end.	Toner End indicator turns on with sufficient toner present.
Toner Overflow Sensor	Replace Master Unit indicator is displayed at non-overflow.	Replace Master Unit indicator does not turn on at overflow.
Toner Near Overflow Sensor	Replace Master Unit indicator blinks when copier not in near overflow condition.	Replace Master Unit indicator does not blink at near overflow.

Sensor/switch	Opened	Shorted
Auto ID Sensor	Dark copy image	Light copy image
Manual Feed Guide Sensor (FT2050)	Even if the manual feed guide is open, copying is not inhibited.	Even if the manual feed guide is closed, copying is inhibited.
Paper Tray Sensor (FT2070)	Even if the paper tray is raised, copying is not inhibited.	Even if the paper tray is lowered copying is inhibited.
Manual Feed Sensor (FT2050) Relay Feed Sensor (FT2070)	Misfeed will occur.	Check Paper Path indicator is displayed at power on. (Initial Jam Check)
Paper Feed Sensor	Misfeed will occur.	Check Paper Path indicator is displayed at power on. (Initial Jam Check)
Exit Sensor	Misfeed will occur.	Check Paper Path indicator is displayed at power on. (Initial Jam Check)
Paper Size Switch	CPU may detect wrong paper size.	CPU may detect wrong paper size.
Paper Width Sensor/ Paper Length Sensor (FT2070)	CPU may detect wrong paper size.	CPU may detect wrong paper size.
Paper End Sensor (FT2070)	Even if there is no paper in the cassette, copying is not inhibited.	Even if there is paper in the cassette, copying is inhibited.

Sensor/switch	Opened	Shorted
Sorter Switch (Sorter)	Copying is inhibited, even when sorter is engaged with copier.	Copying is not inhibited, even when sorter is slid away from copier.
Paper Sensor (Sorter)	Misfeed will occur.	Check Sorter Paper Path indicator is displayed at power on. (Initial Jam Check)
Home Position Switch (Sorter)	Bin drive motor continues to rotate after power on.	Bins do not reset to home position at power on. (Only one bin is lowered.)
Wheel Switch (Sorter)	Bin drive motor continues to rotate after power on.	Bin drive motor continues to rotate after power on.
Lift Sensor (DF)	Even if the feeder is opened, the copier stays in the DF mode.	Even if the feeder is closed, the copier does not shift to the DF mode.
Original Set Sensor (DF)	The Insert Original indicator does not turn off even if an original is inserted.	The Insert Original indicator stays off even if no original is inserted.
Feed-in Sensor (DF)	Original misfeed will occur.	The Original Misfeed indicator turns on at power on. (Initial Jam Check)
Pulse Generator (DF)	Original misfeed will occur.	Original misfeed will occur.

8-3. Self-Diagnostic Code Troubleshooting (FT2050)

E 1 Exposure

Definition

1. Lights if the duty (T_1/T) is maximum and the exposure light intensity is too weak.
2. Lights if the duty (T_1/T) is minimum and the exposure light intensity is too strong.

Possible causes

1. Exposure sensor open or shorted
2. Exposure lamp stabilizer defective
3. Exposure lamp broken
4. Main board defective

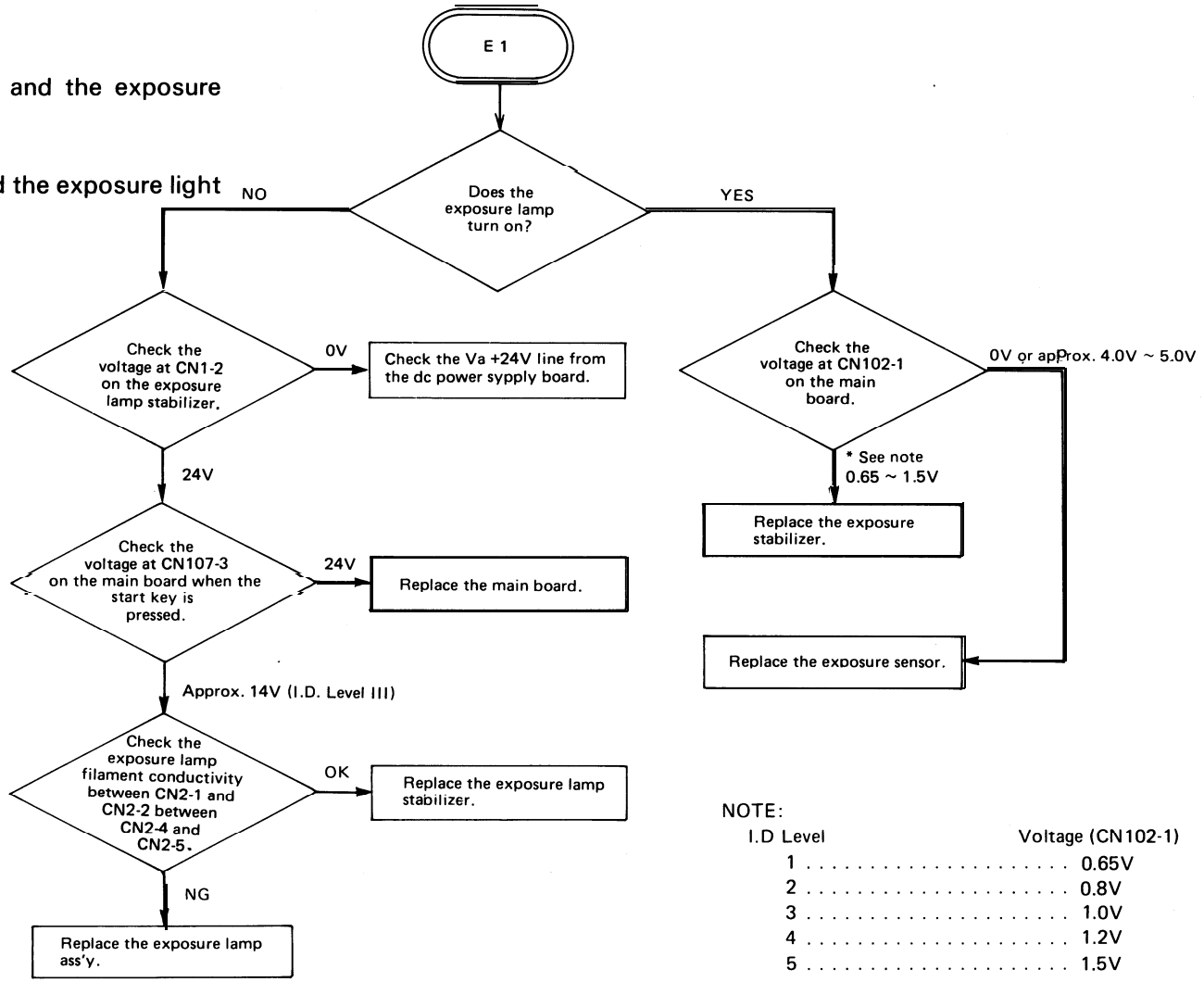

NOTE:

I.D Level	Voltage (CN102-1)
1	0.65V
2	0.8V
3	1.0V
4	1.2V
5	1.5V

E 2 Slider

Definition

1. **Lights if the home position SW does not turn on within 4 s after the start key is pressed.**
2. **Lights if the home position SW is off, when the slider starts forward drive.**
3. **Lights if home position SW does not turn off within 1 s after the slider starts.**

Possible causes

1. **Home position switch broken**
2. **Forward and/or reverse clutch malfunction**
3. **Slider solenoid defective**
4. **Main board defective**

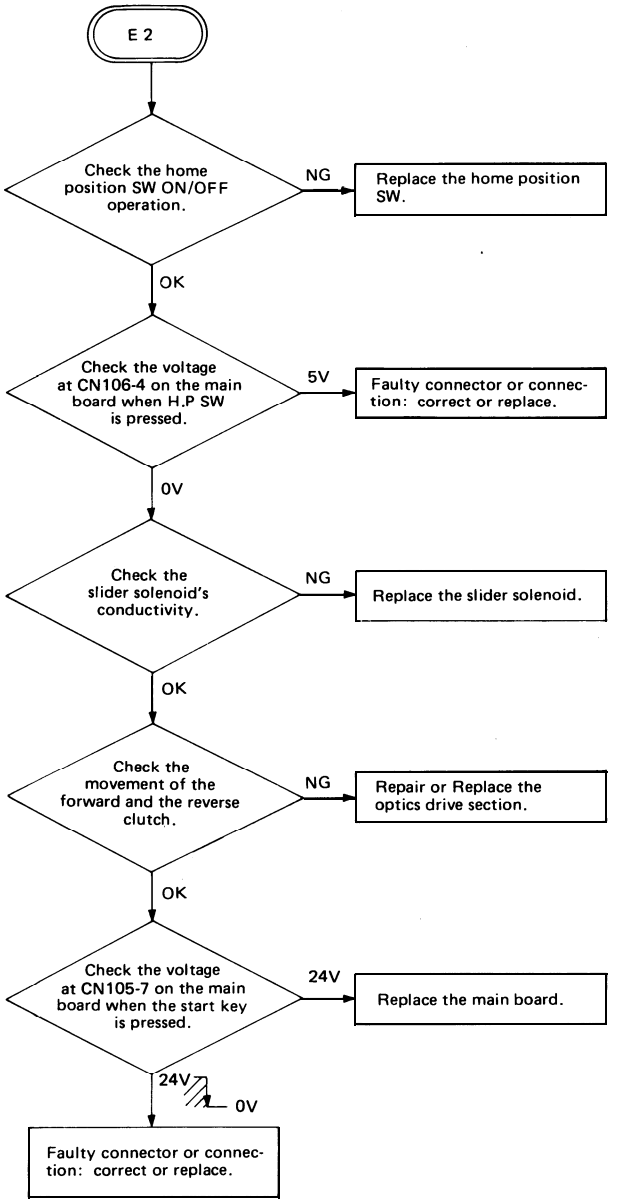

E 5 Fusing

Definition

1. Lights if the temperature detected by the TH does not reach 2°C within 5 s after the main switch turns on.
2. Lights if the temperature detected by the TH does not reach 125°C within 75 s after the main switch turns on.
3. Lights if the temperature detected by the TH is higher than 270°C.

Possible causes

1. Thermistor defective
2. Fusing power supply board defective
3. Triac failure
4. Thermofuse open
5. Fusing lamp burned out
6. Main board defective

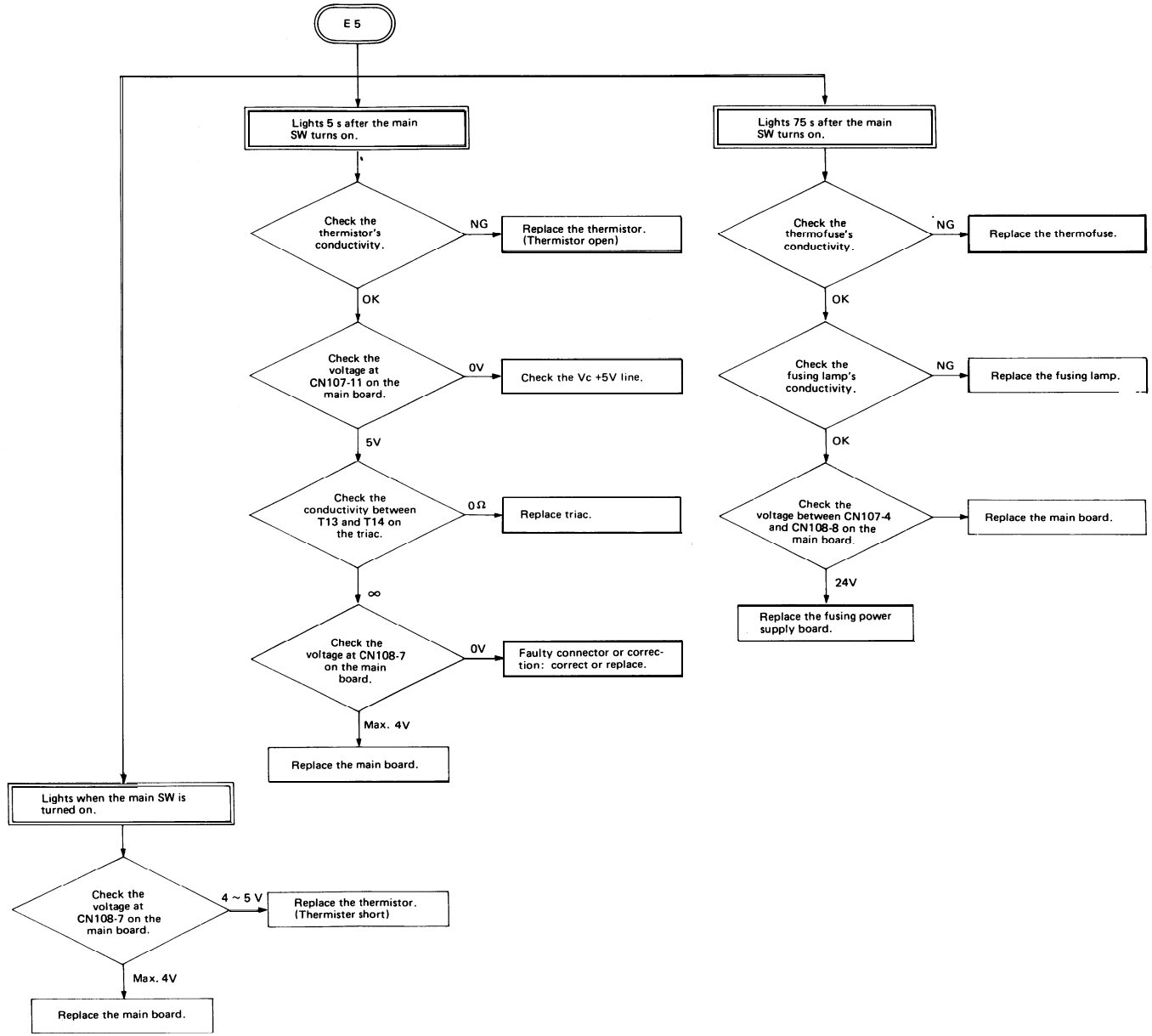

E 6 Functional Drive

Definition

1. **Lights if the CPU does not received a pulse from the pulse generator for 1.6 s during a copy cycle.**

Possible causes

1. **Main motor failure**
2. **Relay board defective**
3. **Timing belt broken or out of place**
4. **Main board defective**
5. **Pulse generator defective**

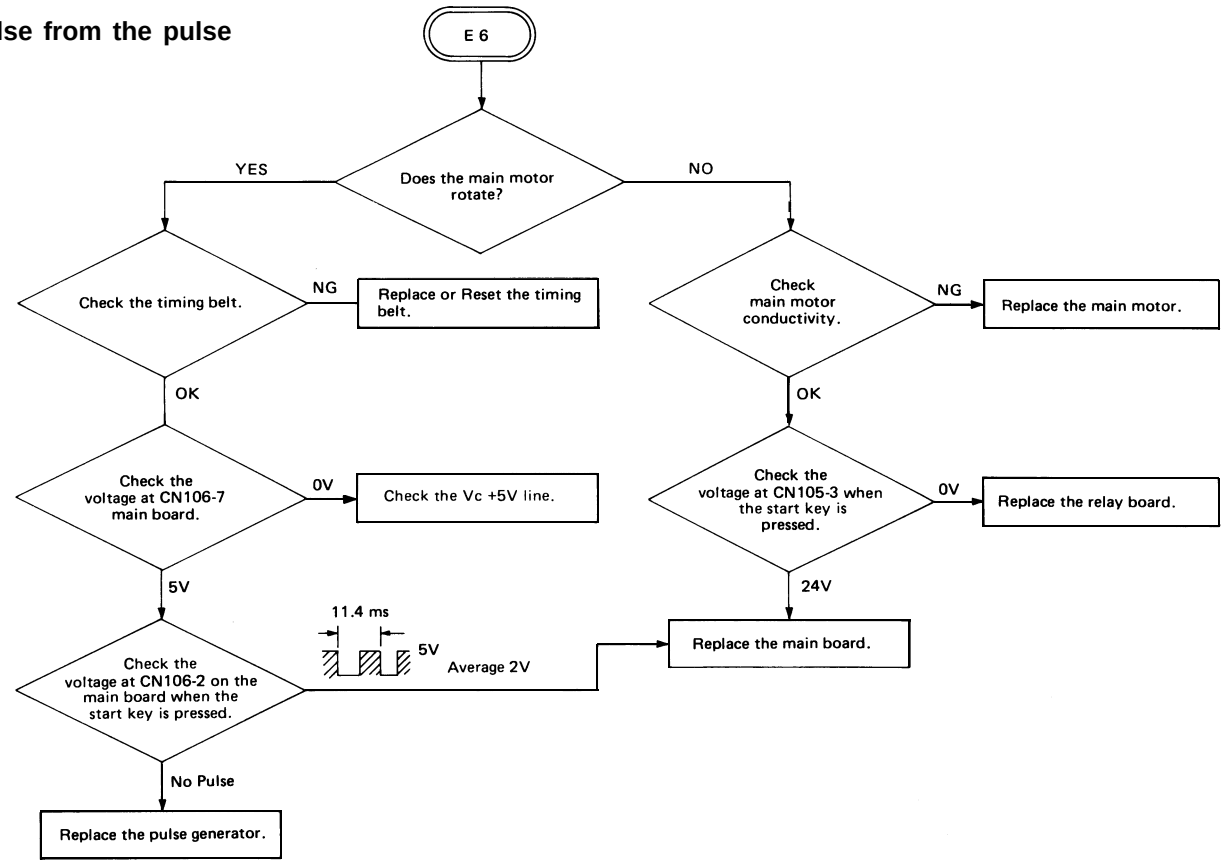

E 7 Master Unit

Definition

1. **Lights if the CPU does not detect the sensor plate within 6 s after belt rotation.**

Possible causes

1. **No master unit installed**
2. **Main board defective**
3. **Master sensor defective**
4. **Master unit defective**

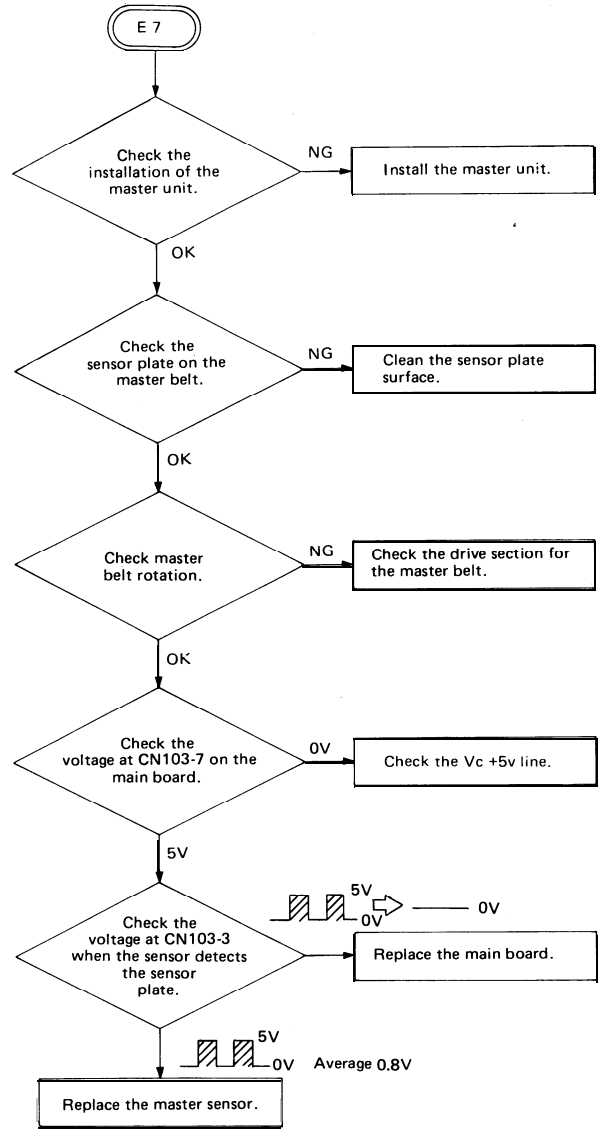

E 8 Exposure Lamp Heater

Definition

1. Lights if the thermistor circuit opens.
2. Lights if the thermistor detects less than 30°C after the warm-up period.

Possible causes

1. Exposure heater defective
2. Thermistor defective
3. Thermofuse blown
4. Relay Board defective

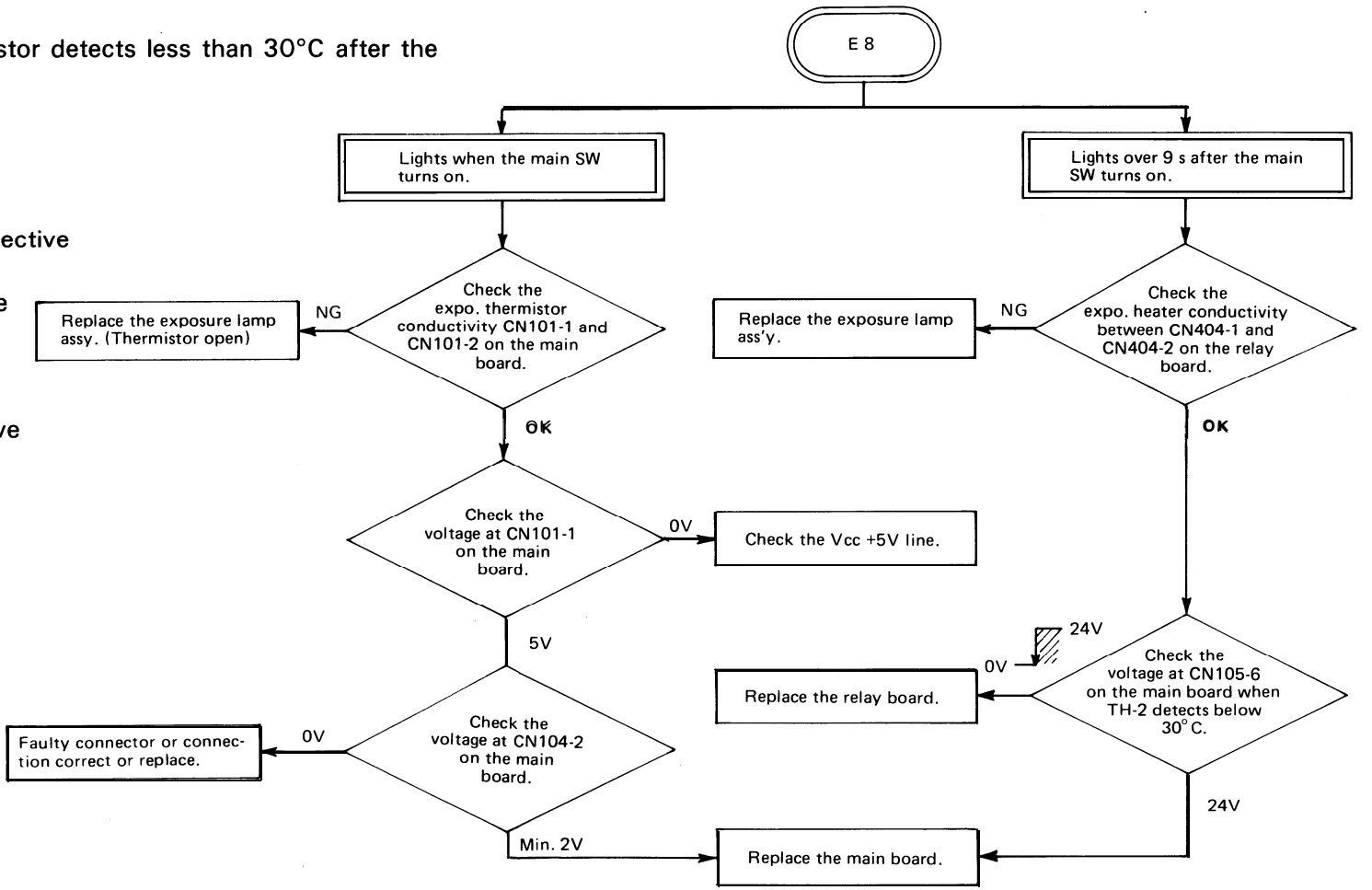

8-4. Self-Diagnostic Code Troubleshooting (FT2070)

E1 Exposure

Definition

<E1-12>

1. Lights if the feedback signal becomes higher than 4.2 volts or less than 0.5 volt when the exposure lamp is on.
2. Lights if the feedback signal becomes higher than 1 volt when the exposure lamp should be off.

<E1-13>

1. Lights if the CPU does not receive the zero cross signal within 0.56 second.

Possible causes

<E1-12>

1. Exposure lamp open
2. Thermoswitch open
3. Ac drive board defective
4. Main board defective

<E1-13>

1. Main board defective
2. Zero cross line open

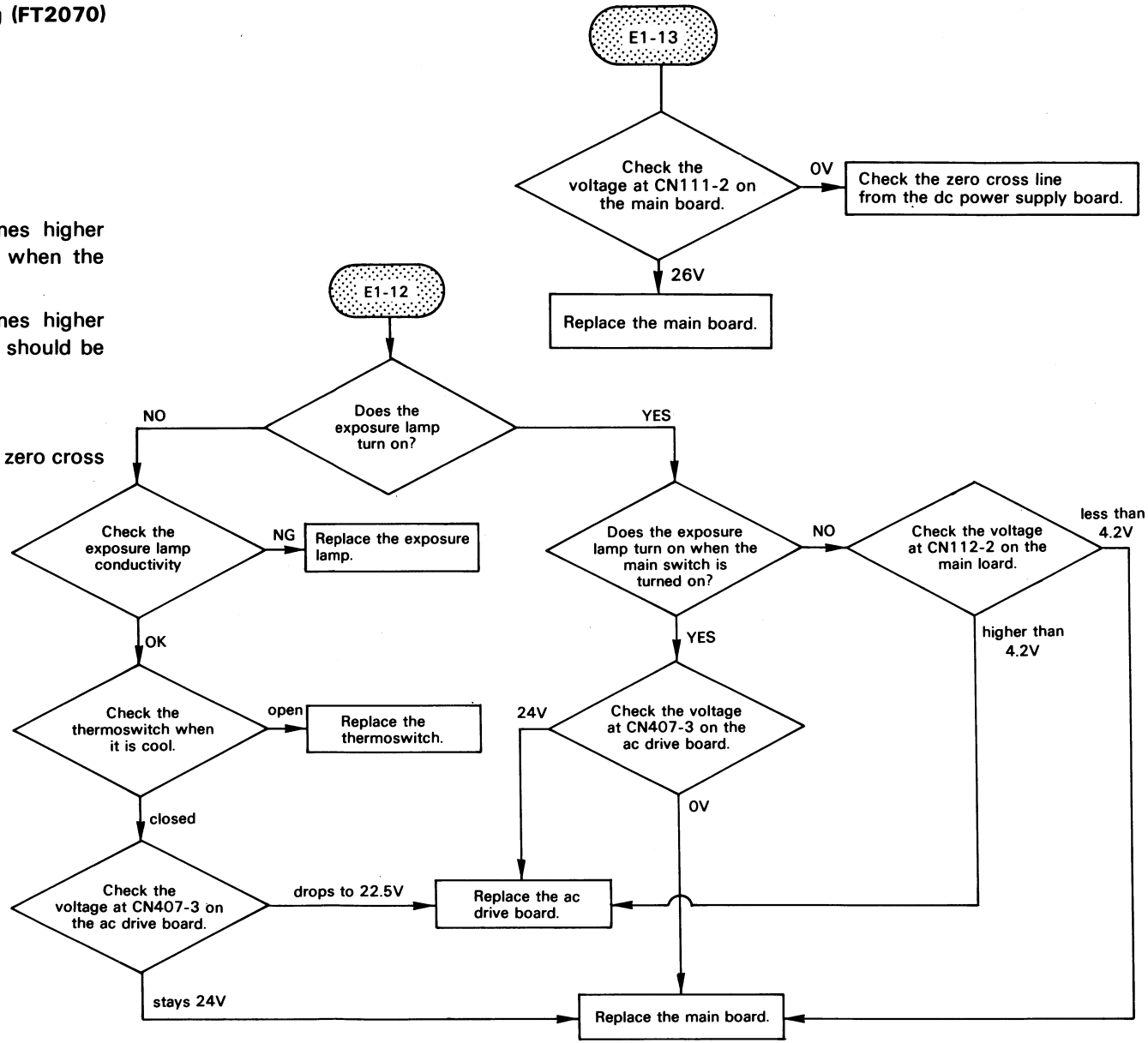

E2 Optics

Definition

<E2-20 > (main board **check)**

1. **Lights if the main CPU does not receive the ready signal from the optics CPU within 10 seconds after the main CPU sends the signal to change the reproduction ratio.**

<E2-21 > (optics board check)

1. **Lights if the slider home position sensor does not turn on within 7 seconds after the Start key is pressed.**
2. **Lights if the slider is more than 1 second late in returning to the home position when in a multi-copy run.**

<E2-22 > (optics board check)

1. **Lights if the slider home position sensor stays on for longer than the equivalent of 10 meters of slider travel (as measured by the servomotor encoder).**

<E2-24 > (main board check)

1. **Lights if the slider home position sensor does not turn on within 8.2 seconds after the Start key is pressed.**
2. **Lights if the slider home position sensor stays on for longer than 1.3 seconds after slider should start moving.**
3. **Lights if the slider home position sensor does not turn on before the next slider start time when in a multi-copy run.**

<E2-28 > (optics board checking)

1. **Lights if the lens home position sensor does not change from LOW to HIGH within 6 seconds when the lens moves from the reduction to the enlargement side.**

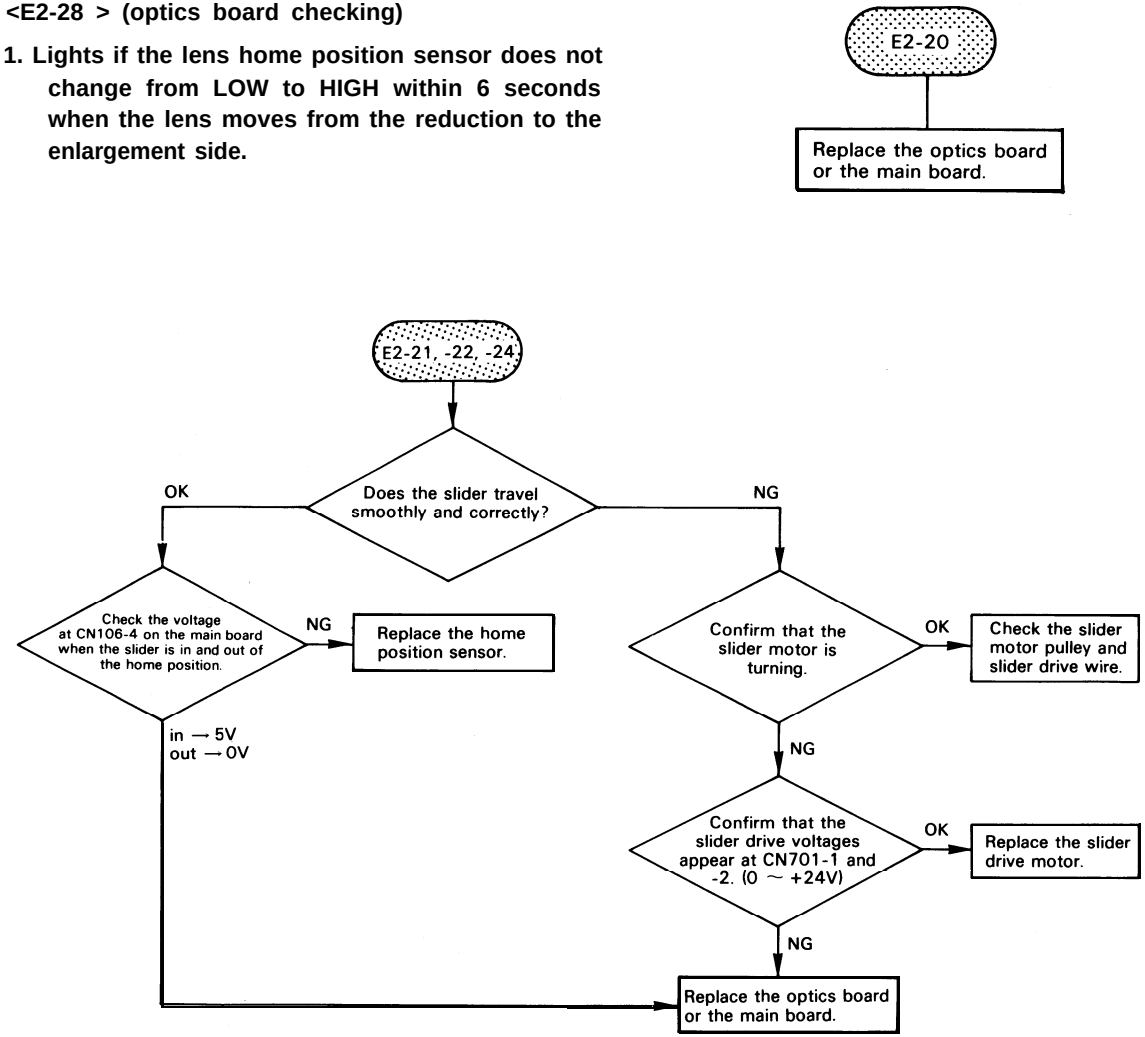

<E2-29 > (optics board checking)

1. Lights if the lens home position sensor does not change from HIGH to LOW within 6 seconds when the lens moves from the enlargement to the reduction side.

<E2-2E > (optics board checking)

1. Lights if no encoder pulse is received for 118 milliseconds during the copy cycle.

Possible causes

<E2-20 >

1. **Optics board defective**
2. **Main board defective**

<E2-21, -22, -24>

1. **Home position sensor defective**
2. **Slider motor pulley or slider drive wire oily or damaged**
3. **Slider drive motor failure**
4. **Optics board defective**
5. **Main board defective**

<E2-28, -29>

1. **Lens home position sensor defective**
2. **Lens drive mechanism broken**
3. **Optics board defective**
4. **Main board defective**

<E2-2E >

1. **Slider drive motor failure**
2. **Optics board failure**
3. **Main board failure**

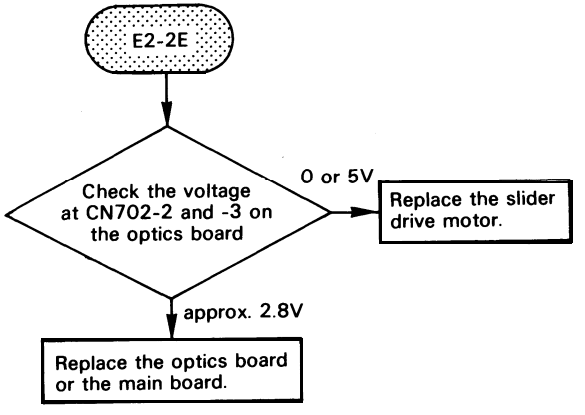

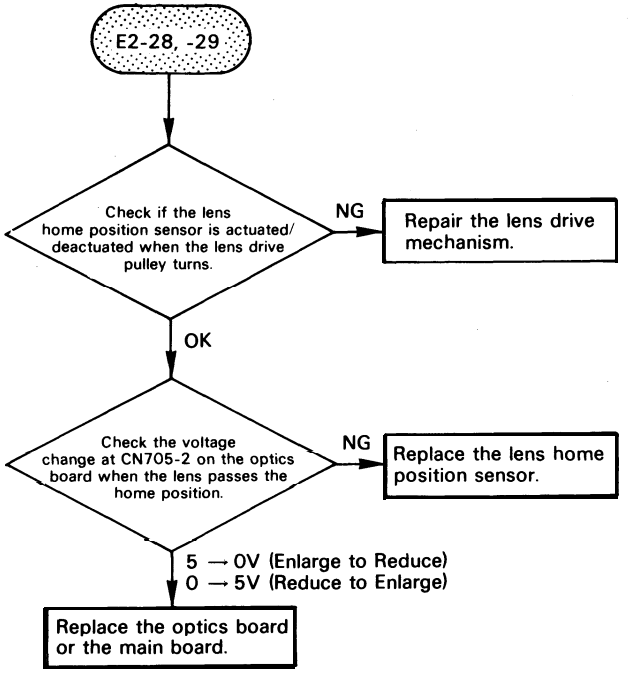

E5 Fusing

Definition

<E5-52 >

1. Lights if the temperature detected by the thermister does not reach 125°C within 75 seconds after the main switch turns on.

<E5-53 >

1. Lights if the temperature detected by the thermistor is higher than 270°C.

<E5-55 >

1. Lights if the temperature detected by the thermistor does not reach 2°C within 5 seconds after the main switch turns on.

Possible causes

<E5-52 >

1. Thermofuse open
2. Fusing lamp burned out
3. Fusing power supply board defective
4. Main board defective

<E5-53 >

1. Thermistor short
2. Main board defective

<E5-55 >

1. Thermistor open
2. Fusing triac failure
3. Main board defective

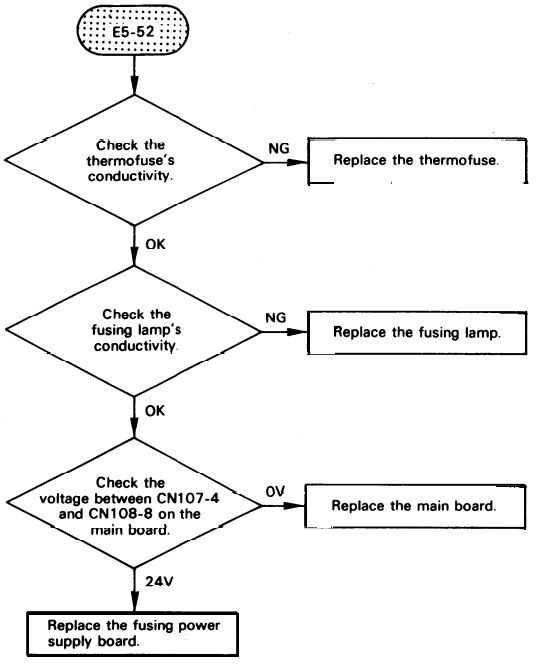

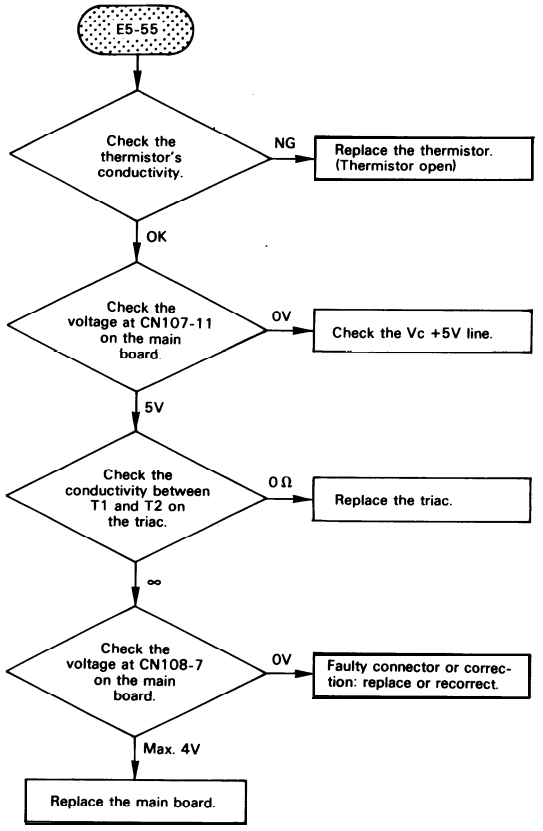

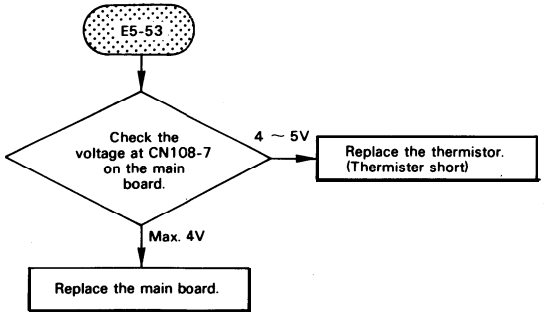

E6 Functional Drive

Definition

<E6-61 >

1. Lights if the CPU does not receive a pulse from the pulse generator for 1.6s during a copy cycle.

Possible causes

<E6-61 >

1. **Main motor failure**
2. **Ac drive board defective**
3. **Main board defective**
4. **Pulse generator sensor defective**

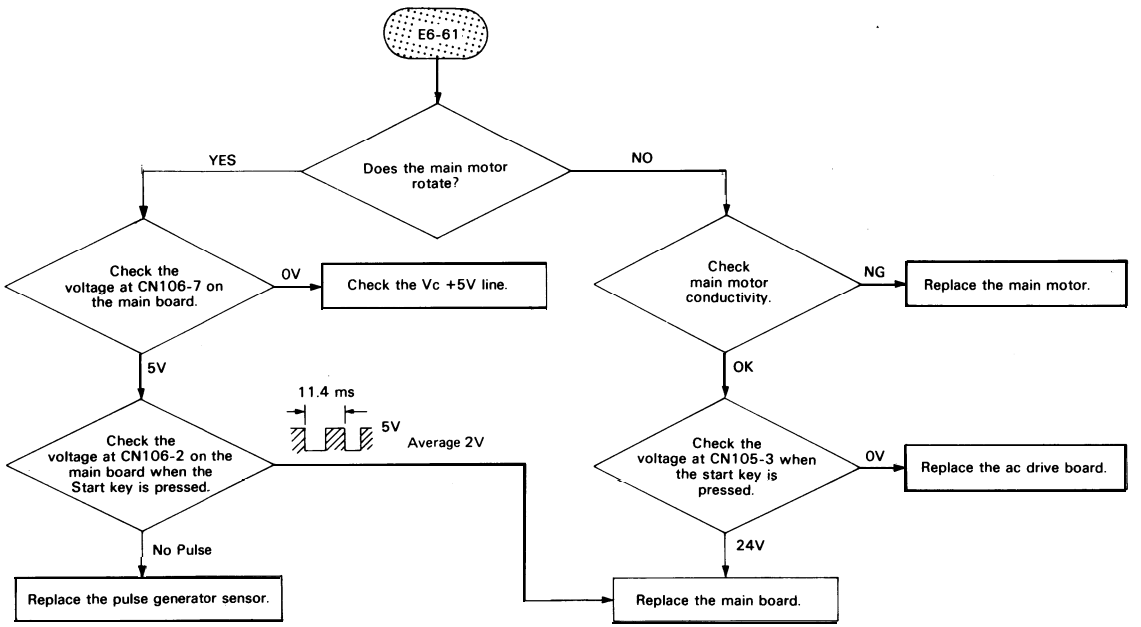

E7 Master Unit

Definition

<E7-71 >

1. **Lights if the CPU does not detect the sensor plate within 6s after belt rotation starts.**

Possible causes

<E7-71 >

1. **No master unit installed**
2. **Main board defective**
3. **Master sensor defective**
4. **Master unit defective**

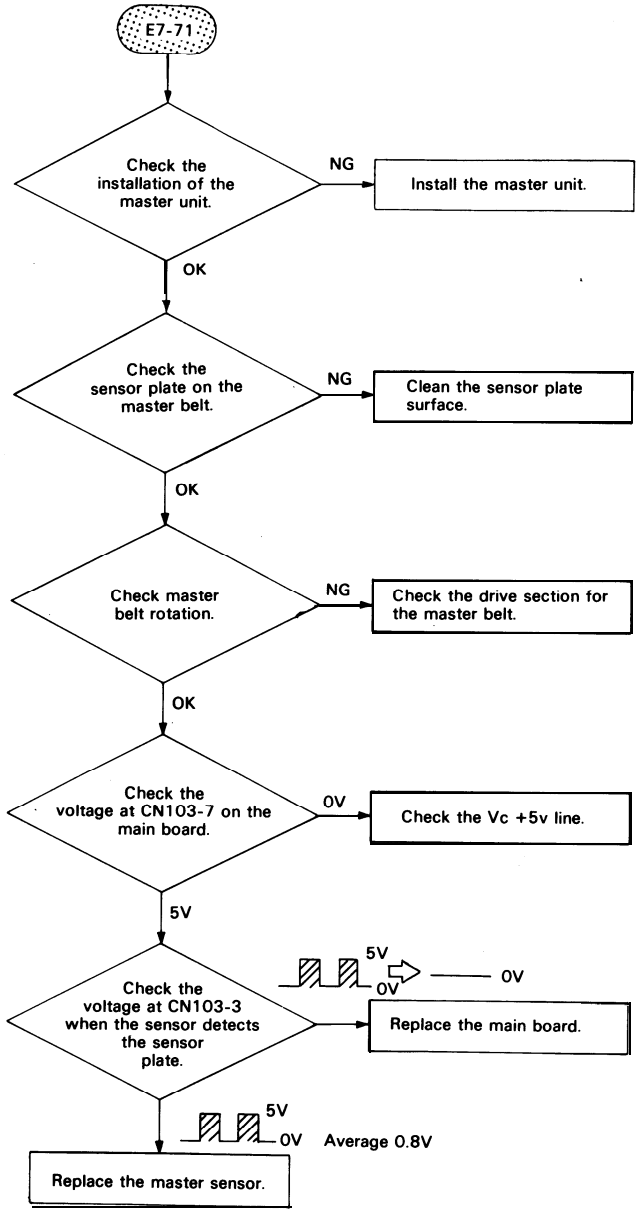

E9 Optics Board

Definition

<E9-93 >

1. **Lights if an irregular signal is sent from the optics board to the main board.**

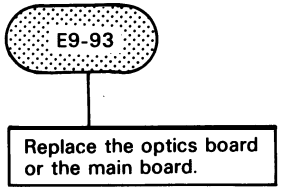

Possible causes

<E9-93 >

1. **Optics board defective**
2. **Main board defective**

EA Sorter

Definition

<EA-A 1>

1. Lights if the bin drive motor rotates for longer than 12 seconds.

Possible causes

<EA-A1>

1. Bins out of position
2. Home position switch open
3. Fuse (FU102) open
4. Bin drive motor failure
5. Sorter main board defective
6. Copier main board defective

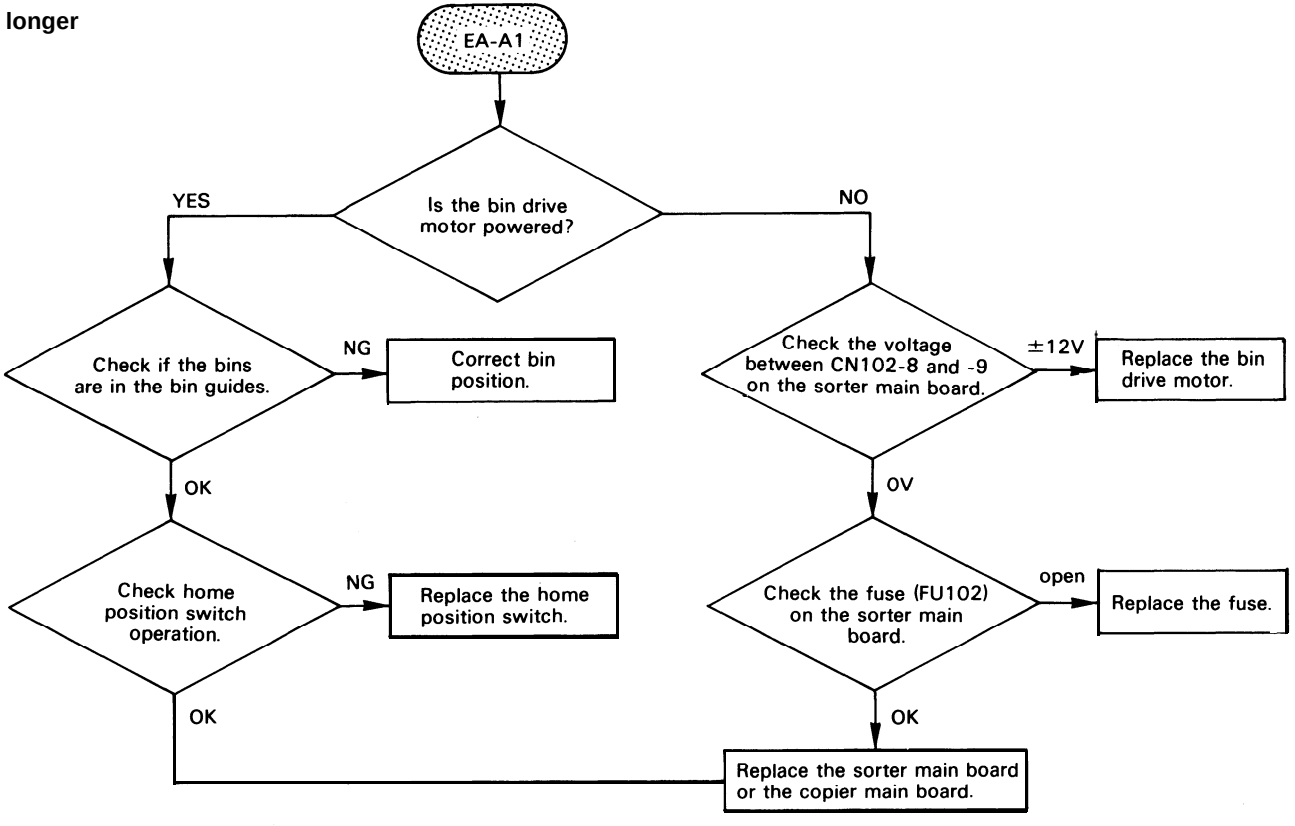

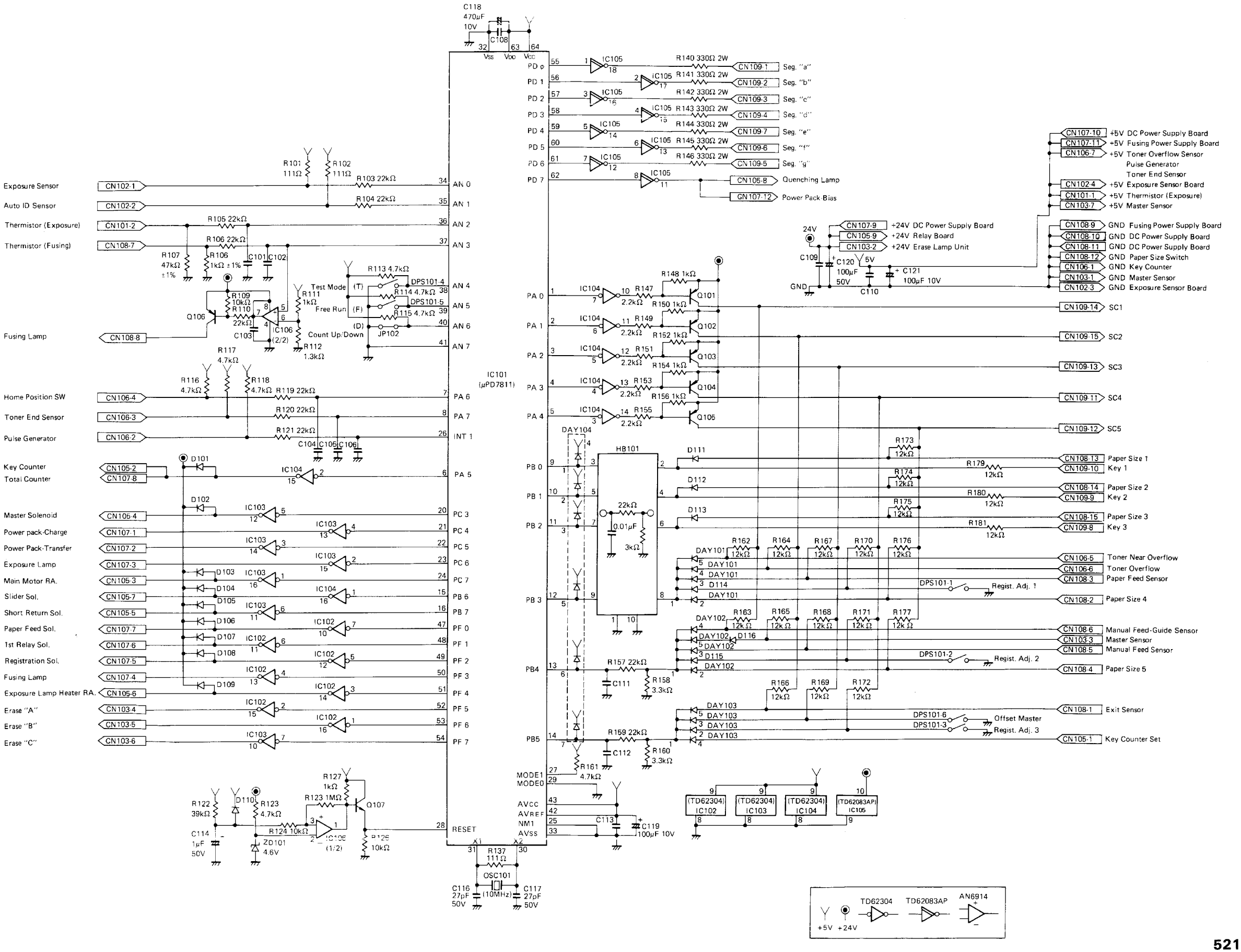
C118 470µF 10V
C108
IC101 (µPD7811)
Vss Vdd Vcc
Exposure Sensor CN102-1
Auto ID Sensor CN102-2
Thermistor (Exposure) CN101-2
Thermistor (Fusing) CN108-7
Fusing Lamp CN108-8
Home Position SW CN106-4
Toner End Sensor CN106-3
Pulse Generator CN106-2
Key Counter CN105-2
Total Counter CN107-8
Master Solenoid CN105-4
Power pack-Charge CN107-1
Power Pack-Transfer CN107-2
Exposure Lamp CN107-3
Main Motor RA. CN105-3
Slider Sol. CN105-7
Short Return Sol. CN105-5
Paper Feed Sol. CN107-7
1st Relay Sol. CN107-6
Registration Sol. CN107-5
Fusing Lamp CN107-4
Exposure Lamp Heater RA. CN105-6
Erase "A" CN103-4
Erase "B" CN103-5
Erase "C" CN103-6
Test Mode
Free Run
Count Up/Down
JP102
DPS101-4
DPS101-5
IC106 (2/2)
IC104 (1/2)
ZD101 4.6V
OSC101 (10MHz)
C116 27pF 50V
C117 27pF 50V
C114 1µF 50V
C119 100µF 10V
C120 100µF 50V
C121 100µF 10V
C110
C111
C112
C113
Seg. "a" CN109-1
Seg. "b" CN109-2
Seg. "c" CN109-3
Seg. "d" CN109-4
Seg. "e" CN109-7
Seg. "f" CN109-6
Seg. "g" CN109-5
Quenching Lamp CN105-8
Power Pack Bias GN107-12
+5V DC Power Supply Board CN107-10
+5V Fusing Power Supply Board CN107-11
+5V Toner Overflow Sensor Pulse Generator Toner End Sensor CN106-7
+5V Exposure Sensor Board CN102-4
+5V Thermistor (Exposure) CN101-1
+5V Master Sensor CN103-7
+24V DC Power Supply Board CN107-9
+24V Relay Board CN105-9
+24V Erase Lamp Unit CN103-2
GND Fusing Power Supply Board CN108-9
GND DC Power Supply Board CN108-10
GND DC Power Supply Board CN108-11
GND Paper Size Switch CN108-12
GND Key Counter CN106-1
GND Master Sensor CN103-1
GND Exposure Sensor Board CN102-3
SC1 CN109-14
SC2 CN109-15
SC3 CN109-13
SC4 CN109-11
SC5 CN109-12
Paper Size 1 CN108-13
Key 1 CN109-10
Paper Size 2 CN108-14
Key 2 CN109-9
Paper Size 3 CN108-15
Key 3 CN109-8
Toner Near Overflow CN106-5
Toner Overflow CN106-6
Paper Feed Sensor CN108-3
Regist. Adj. 1
Paper Size 4 CN108-2
Manual Feed-Guide Sensor CN108-6
Master Sensor CN103-3
Manual Feed Sensor CN108-5
Regist. Adj. 2
Paper Size 5 CN108-4
Exit Sensor CN108-1
Offset Master
Regist. Adj. 3
Key Counter Set CN105-1
(TD62304) IC102
(TD62304) IC103
(TD62304) IC104
(TD62083AP) IC105
TD62304
TD62083AP
AN6914
+5V +24V

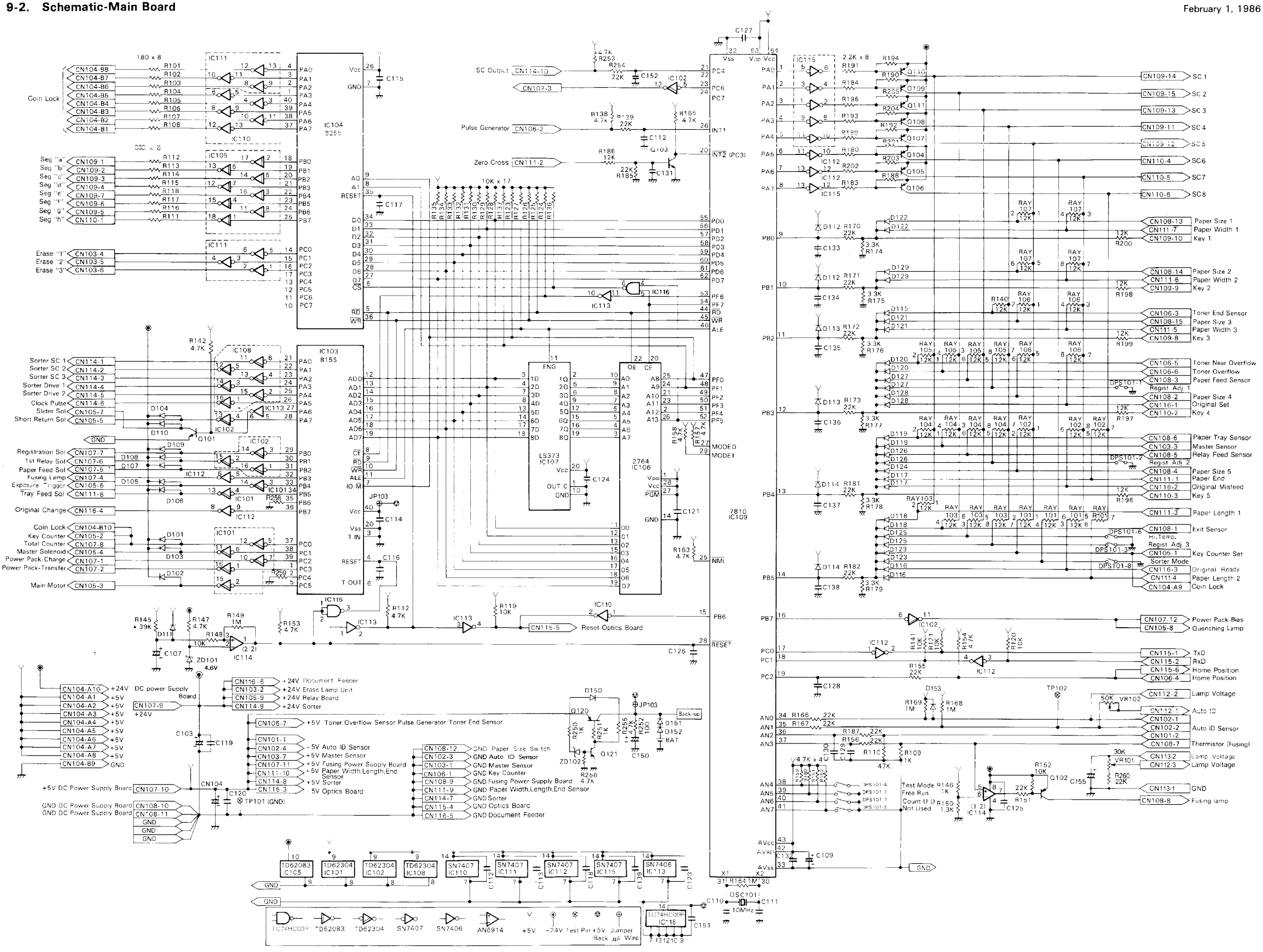
IC104 8255
IC103 8155
IC105
IC106 2764
IC107 LS373
IC108
IC109 7810
IC110
IC111
IC112
IC113
IC114
IC115
IC116
IC101
IC102
Coin Lock
Seg "a"
Seg "b"
Seg "c"
Seg "d"
Seg "e"
Seg "f"
Seg "g"
Seg "h"
Erase "1"
Erase "2"
Erase "3"
SC Output
Pulse Generator
Zero Cross
Sorter SC 1
Sorter SC 2
Sorter SC 3
Sorter Drive 1
Sorter Drive 2
Clock Pulse
Slider Sol
Short Return Sol
Registration Sol
1st Relay Sol
Paper Feed Sol
Fusing Lamp
Exposure Trigger
Tray Feed Sol
Original Change
Coin Lock
Key Counter
Total Counter
Master Solenoid
Power Pack-Charge
Power Pack-Transfer
Main Motor
Reset Optics Board
DC power Supply Board
+24V Document Feeder
+24V Erase Lamp Unit
+24V Relay Board
+24V Sorter
+5V Toner Overflow Sensor Pulse Generator Toner End Sensor
+5V Auto ID Sensor
+5V Master Sensor
+5V Fusing Power Supply Board
+5V Paper Width,Length,End Sensor
+5V Sorter
+5V Optics Board
GND Paper Size Switch
GND Auto ID Sensor
GND Master Sensor
GND Key Counter
GND Fusing Power Supply Board
GND Paper Width,Length,End Sensor
GND Sorter
GND Optics Board
GND Document Feeder
Paper Size 1
Paper Width 1
Key 1
Paper Size 2
Paper Width 2
Key 2
Toner End Sensor
Paper Size 3
Paper Width 3
Key 3
Toner Near Overflow
Toner Overflow
Paper Feed Sensor
Regist. Adj. 1
Paper Size 4
Original Set
Key 4
Paper Tray Sensor
Master Sensor
Relay Feed Sensor
Regist Adj 2
Paper Size 5
Paper End
Original Misfeed
Key 5
Paper Length 1
Exit Sensor
Hi.Temp.
Regist Adj 3
Key Counter Set
Sorter Mode
Original Ready
Paper Length 2
Coin Lock
Power Pack-Bias
Quenching Lamp
TxD
RxD
Home Position
Home Position
Lamp Voltage
Auto ID
Auto ID Sensor
Thermistor (Fusing)
Lamp Voltage
Lamp Voltage
GND
Fusing lamp
Test Mode
Free Run
Count U D
Not Used
TC74HC00P
TD62083
TD62304
SN7407
SN7406
AN6914
+5V
+24V Test Pin
+5V Jumper (Back up) Wire

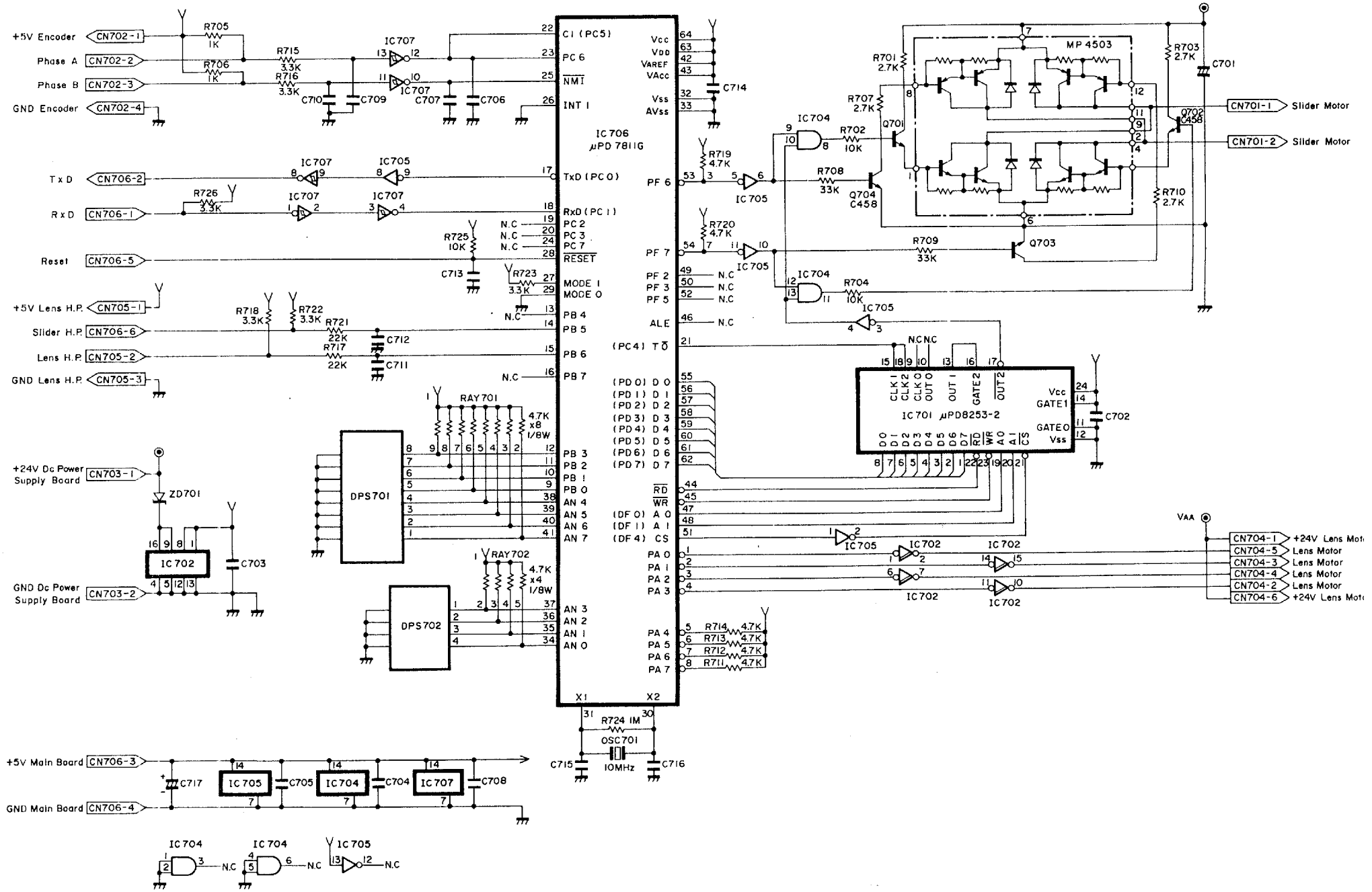
+5V Encoder
CN702-1
Phase A
CN702-2
Phase B
CN702-3
GND Encoder
CN702-4
R705 1K
R706 1K
R715 3.3K
R716 3.3K
IC707
C710
C709
C707
C706
IC706 μPD 7811G
C1 (PC5)
PC 6
NMI
INT 1
Vcc
VDD
VAREF
VAcc
Vss
AVss
C714
TxD
CN706-2
RxD
CN706-1
Reset
CN706-5
R726 3.3K
IC705
TxD (PC0)
RxD (PC1)
PC2
PC3
PC7
RESET
R725 10K
C713
R723 3.3K
MODE 1
MODE 0
PF 6
PF 7
PF 2
PF 3
PF 5
ALE
R719 4.7K
R720 4.7K
N.C
+5V Lens H.P.
CN705-1
Slider H.P.
CN706-6
Lens H.P.
CN705-2
GND Lens H.P.
CN705-3
R718 3.3K
R722 3.3K
R721 22K
R717 22K
C712
C711
PB 4
PB 5
PB 6
PB 7
(PC4) TO
(PD0) D0
(PD1) D1
(PD2) D2
(PD3) D3
(PD4) D4
(PD5) D5
(PD6) D6
(PD7) D7
RD
WR
(DF0) A0
(DF1) A1
(DF4) CS
RAY701
4.7K x8 1/8W
DPS701
PB 3
PB 2
PB 1
PB 0
AN 4
AN 5
AN 6
AN 7
RAY702
4.7K x4 1/8W
DPS702
AN 3
AN 2
AN 1
AN 0
PA 0
PA 1
PA 2
PA 3
PA 4
PA 5
PA 6
PA 7
R714 4.7K
R713 4.7K
R712 4.7K
R711 4.7K
+24V Dc Power Supply Board
CN703-1
GND Dc Power Supply Board
CN703-2
ZD701
IC702
C703
X1
X2
R724 1M
OSC701
10MHz
C715
C716
+5V Main Board
CN706-3
GND Main Board
CN706-4
C717
IC705
C705
IC704
C704
IC707
C708
IC704
IC704
IC705
N.C
MP 4503
R701 2.7K
R703 2.7K
C701
R707 2.7K
Q701
Q702 C458
R710 2.7K
IC704
R702 10K
R708 33K
Q704 C458
IC705
R709 33K
Q703
IC704
R704 10K
IC705
IC701 μPD8253-2
CLK1
CLK2
CLK0
OUT0
OUT1
GATE2
OUT2
Vcc
GATE1
GATE0
Vss
C702
VAA
IC705
IC702
IC702
IC702
IC702
CN701-1
Slider Motor
CN701-2
Slider Motor
CN704-1
+24V Lens Motor
CN704-5
Lens Motor
CN704-3
Lens Motor
CN704-4
Lens Motor
CN704-2
Lens Motor
CN704-6
+24V Lens Motor

9-4. Schematic-Interface Board Type C

August 1, 1985

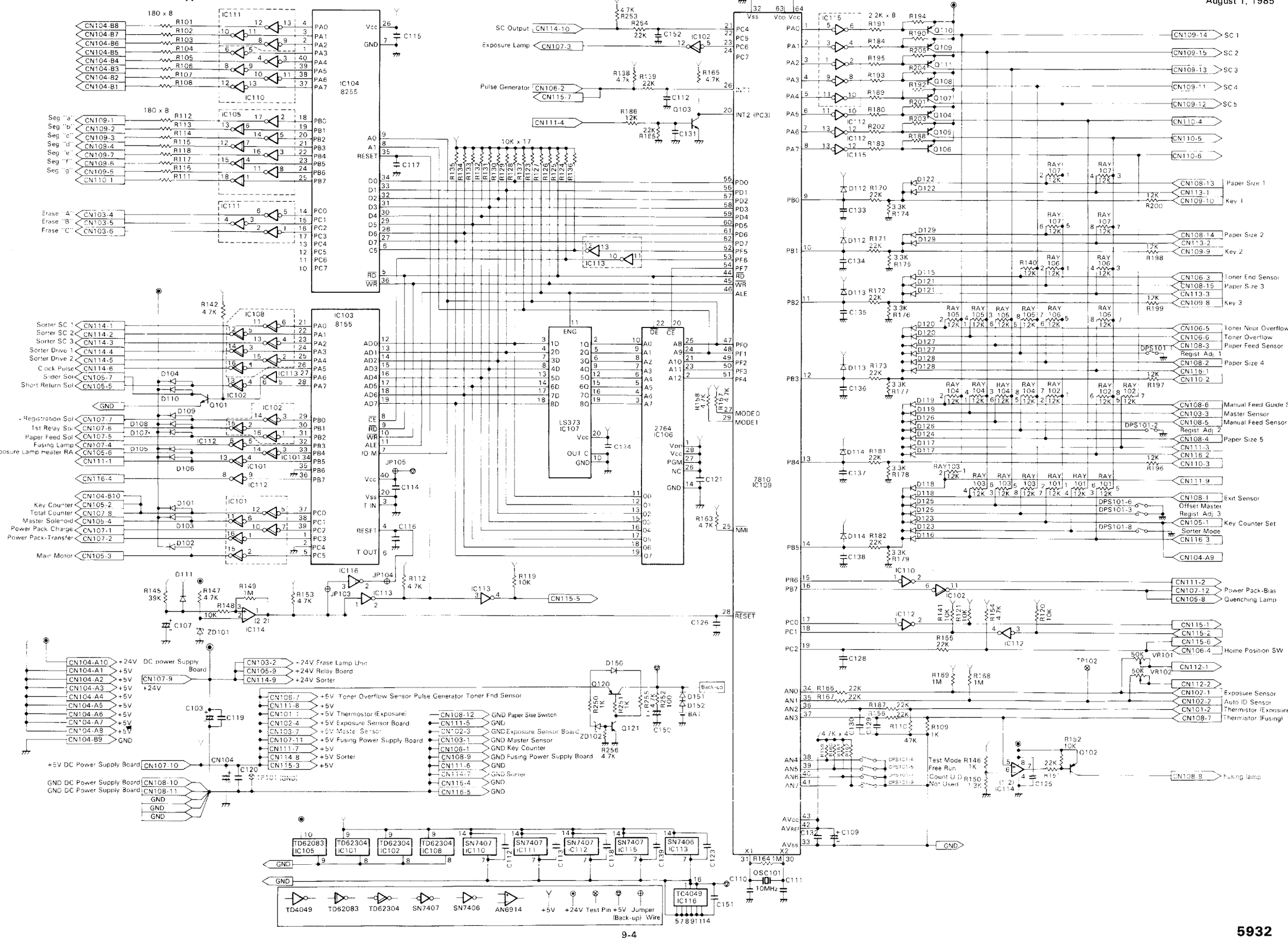

5932

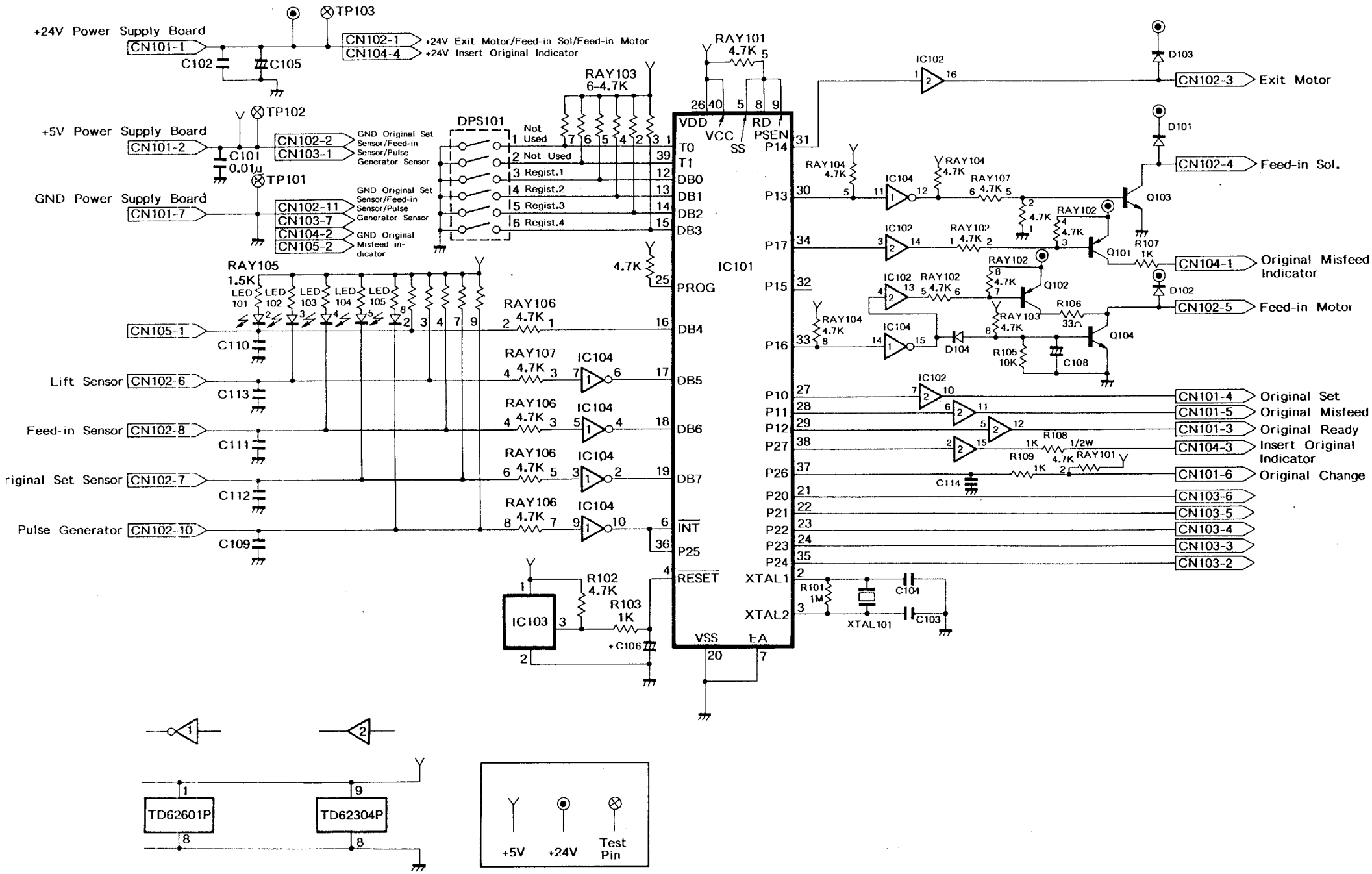
+24V Power Supply Board
CN101-1
C102
C105
TP103
CN102-1
+24V Exit Motor/Feed-in Sol/Feed-in Motor
CN104-4
+24V Insert Original Indicator
+5V Power Supply Board
CN101-2
C101
0.01μ
TP102
CN102-2
CN103-1
GND Original Set Sensor/Feed-in Sensor/Pulse Generator Sensor
GND Power Supply Board
CN101-7
TP101
CN102-11
CN103-7
CN104-2
CN105-2
GND Original Misfeed indicator
DPS101
Not Used
Not Used
Regist.1
Regist.2
Regist.3
Regist.4
RAY103 6-4.7K
RAY101 4.7K
RAY105 1.5K
LED 101
LED 102
LED 103
LED 104
LED 105
CN105-1
C110
Lift Sensor
CN102-6
C113
Feed-in Sensor
CN102-8
C111
riginal Set Sensor
CN102-7
C112
Pulse Generator
CN102-10
C109
RAY106 4.7K
RAY107 4.7K
IC104
R102 4.7K
R103 1K
+C106
IC103
4.7K
IC101
VDD
VCC
SS
RD
PSEN
T0
T1
DB0
DB1
DB2
DB3
PROG
DB4
DB5
DB6
DB7
INT
P25
RESET
VSS
EA
P14
P13
P17
P15
P16
P10
P11
P12
P27
P26
P20
P21
P22
P23
P24
XTAL1
XTAL2
IC102
D103
CN102-3
Exit Motor
D101
CN102-4
Feed-in Sol.
RAY104 4.7K
RAY107 4.7K
Q103
RAY102 4.7K
Q101
R107 1K
CN104-1
Original Misfeed Indicator
Q102
D102
CN102-5
Feed-in Motor
R106 33Ω
Q104
R105 10K
C108
D104
CN101-4
Original Set
CN101-5
Original Misfeed
CN101-3
Original Ready
R108 1K 1/2W
CN104-3
Insert Original Indicator
R109 4.7K
RAY101 1K
CN101-6
Original Change
C114
CN103-6
CN103-5
CN103-4
CN103-3
CN103-2
R101 1M
C104
C103
XTAL101
TD62601P
TD62304P
+5V
+24V
Test Pin

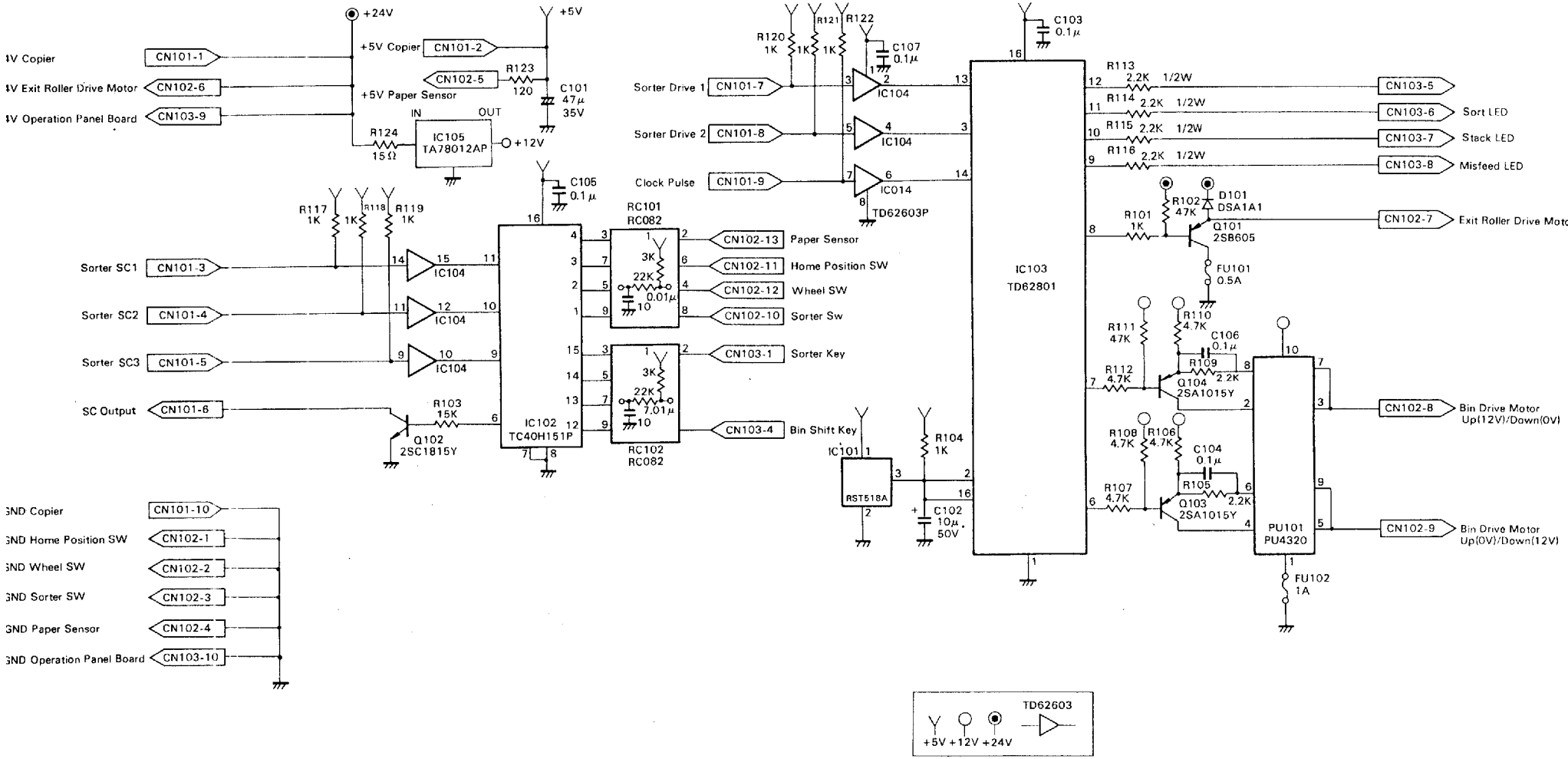
+24V
+5V
+5V Copier
CN101-1
CN101-2
+5V Exit Roller Drive Motor
CN102-6
CN102-5
R123
120
C101
47μ
35V
+5V Paper Sensor
+5V Operation Panel Board
CN103-9
IN
OUT
R124
15Ω
IC105
TA78012AP
+12V
C105
0.1μ
R117
1K
R118
1K
R119
1K
RC101
RC082
Sorter SC1
CN101-3
Sorter SC2
CN101-4
Sorter SC3
CN101-5
SC Output
CN101-6
IC104
IC102
TC40H151P
R103
15K
Q102
2SC1815Y
CN102-13
Paper Sensor
CN102-11
Home Position SW
CN102-12
Wheel SW
CN102-10
Sorter Sw
CN103-1
Sorter Key
CN103-4
Bin Shift Key
RC102
RC082
3K
22K
0.01μ
7.01μ
10
GND Copier
CN101-10
GND Home Position SW
CN102-1
GND Wheel SW
CN102-2
GND Sorter SW
CN102-3
GND Paper Sensor
CN102-4
GND Operation Panel Board
CN103-10
R120
1K
R121
1K
R122
1K
C107
0.1μ
Sorter Drive 1
CN101-7
Sorter Drive 2
CN101-8
Clock Pulse
CN101-9
IC014
TD62603P
IC101
RST518A
R104
1K
C102
10μ
50V
C103
0.1μ
IC103
TD62801
R113
2.2K
1/2W
R114
2.2K
1/2W
R115
2.2K
1/2W
R116
2.2K
1/2W
CN103-5
CN103-6
Sort LED
CN103-7
Stack LED
CN103-8
Misfeed LED
R102
4.7K
D101
DSA1A1
R101
1K
Q101
2SB605
CN102-7
Exit Roller Drive Moto
FU101
0.5A
R111
4.7K
R110
4.7K
C106
0.1μ
R109
2.2K
R112
4.7K
Q104
2SA1015Y
CN102-8
Bin Drive Motor
Up(12V)/Down(0V)
R108
4.7K
R106
4.7K
C104
0.1μ
R105
2.2K
R107
4.7K
Q103
2SA1015Y
PU101
PU4320
CN102-9
Bin Drive Motor
Up(0V)/Down(12V)
FU102
1A
TD62603
+5V +12V +24V

[11" x 8-1/2"/A4 Sideways]

Process Speed = 115 mm/sec.
1 Pulse = 1.3 mm, 11.4 ms

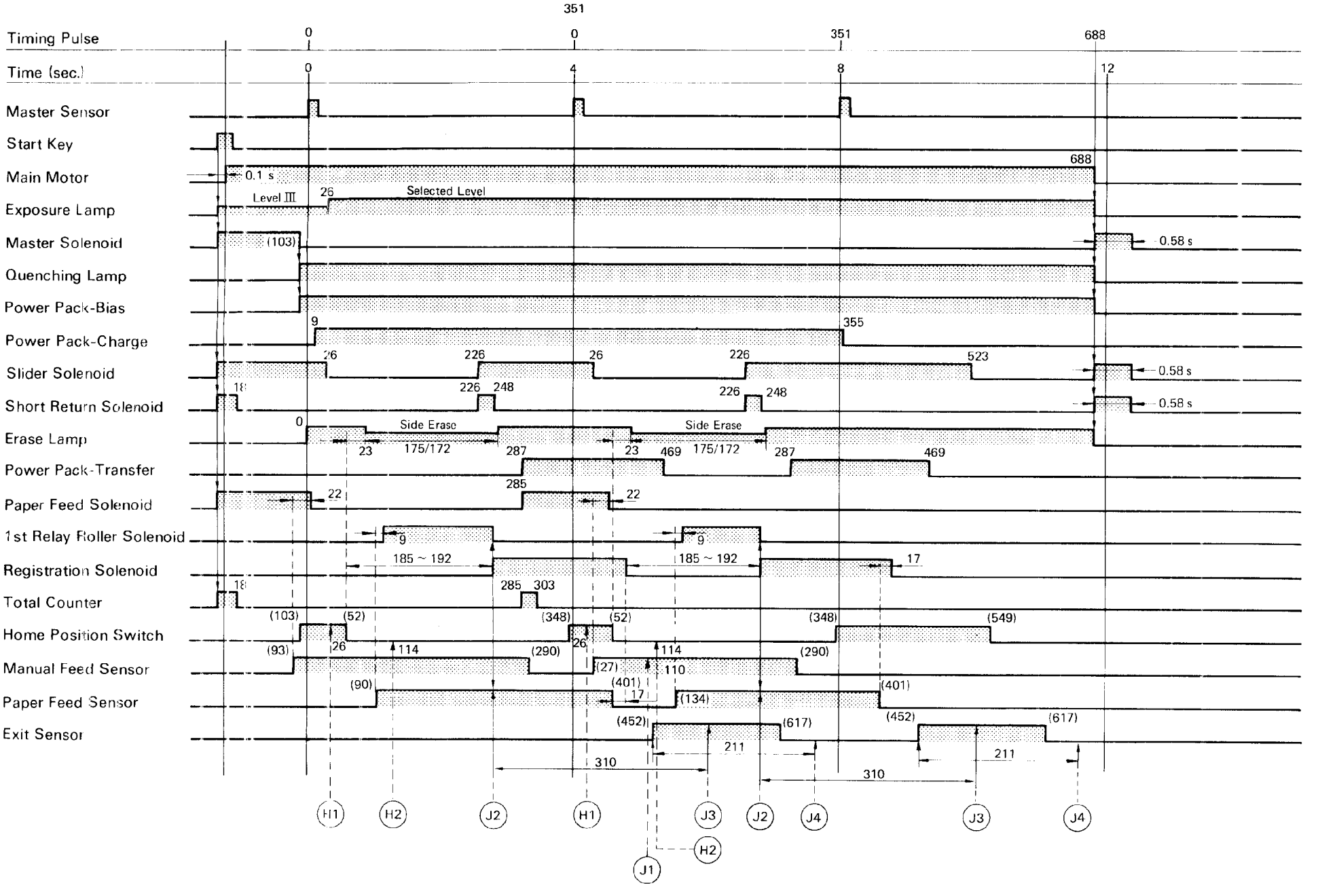

[11" x 17"/A3]

Process Speed = 115 mm/sec.
1 Pulse = 1.3 mm, 11.4 ms

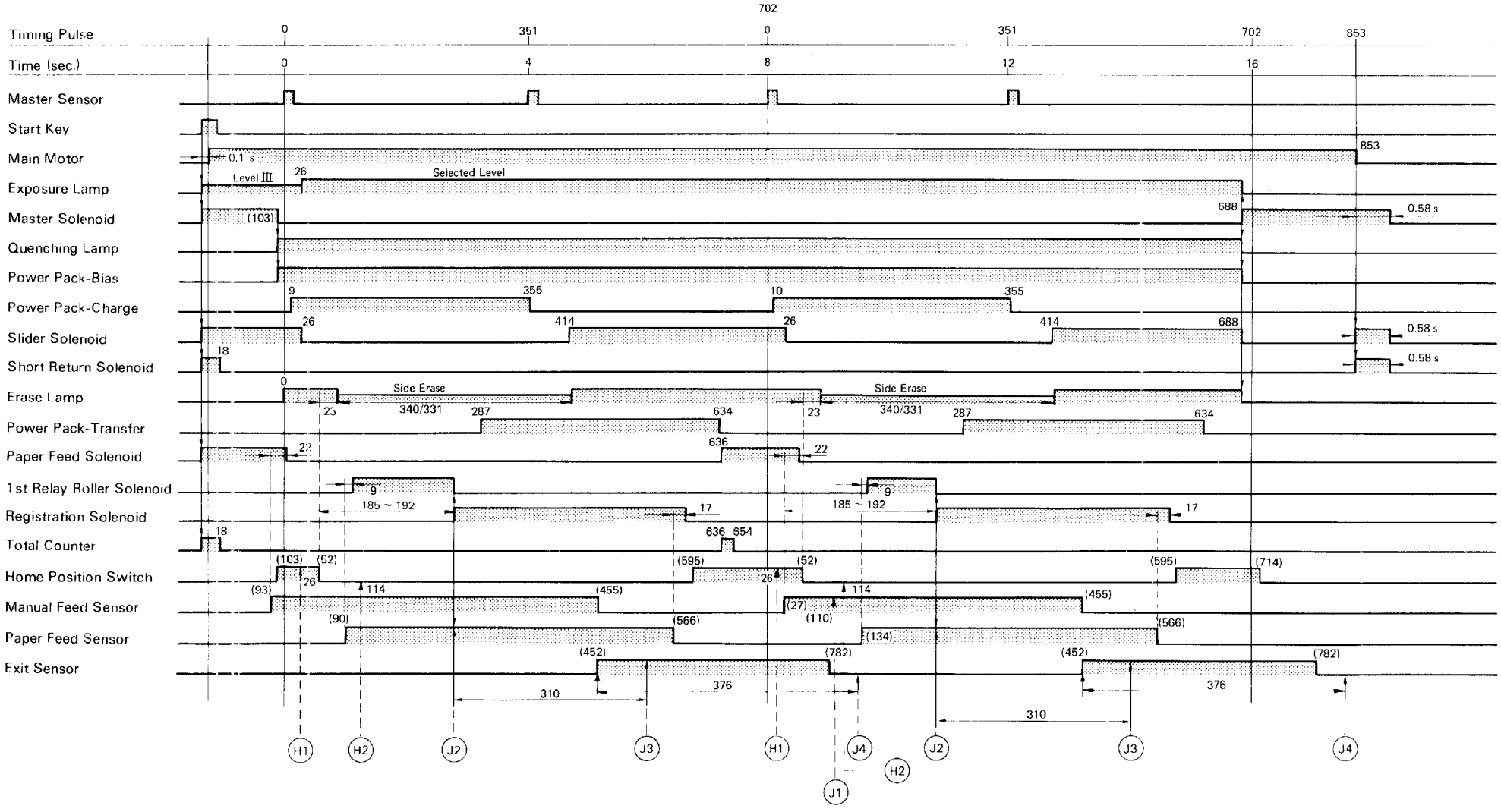

1. Side Erase Timing

Paper Size	Pulse Count
11" x 17"	340
A3	331
B4	288
8"(8-1/4") x 13"	262
A4 Lengthwise	237
8-1/2" x 11"	223
8" x 10-1/2"	214
B5 Lengthwise	206
11" x 8-1/2"	175
A4 Sideways	172
B5 Sideways	149
A5 Sideways	123

2. Registration Timing
(Adjustable by changing DPS101-1, -2, and -3)

DIP101-1	DIP101-2	DIP101-3	Pulse Count
OFF	OFF	OFF	192
ON	OFF	OFF	191
OFF	ON	OFF	190
ON	ON	OFF	189
OFF	OFF	ON	188
ON	OFF	ON	187
OFF	ON	ON	186
ON	ON	ON	185

JAM CHECK
- J1 : Manual Feed Sensor ON Check
- J2 : Paper Feed Sensor ON Check
- J3 : Exit Sensor ON Check
- J4 : Exit Sensor OFF Check

HOME POSITION CHECK
- H1 : Home Position Switch ON Check
- H2 : Home Position Switch OFF Check

[11" x 8-1/2"/A4 Sideways]

Process Speed = 115 mm/sec.
1 Pulse = 1.3 mm, 11.4 ms

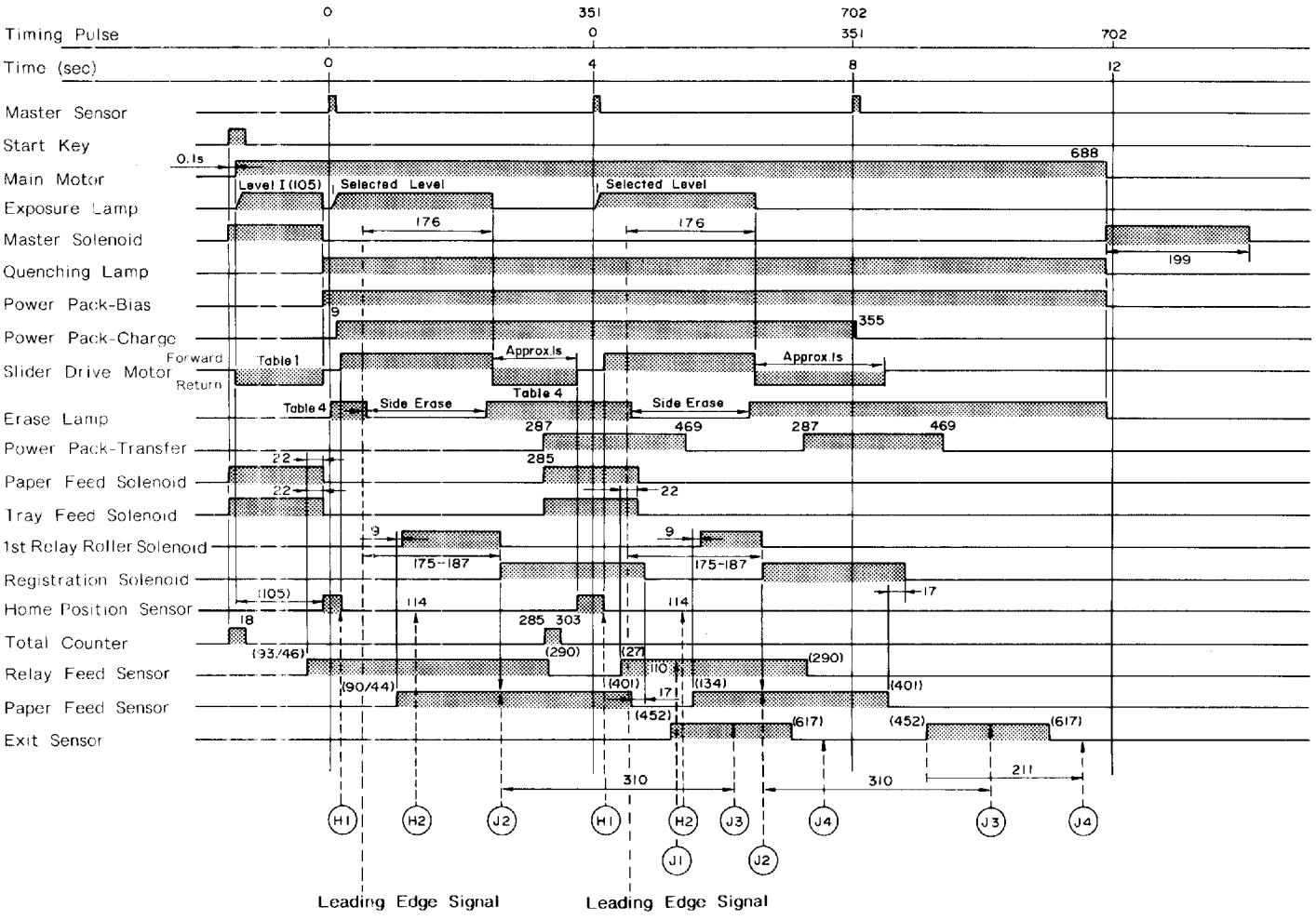

Table 5. Trailing Erase ON

(A4/11"x8-1/2")

Reproduction Ratio (%)	Pulse Count
65	222
66	225
67	229
68	232
69	235
70	238
71	242
72	245
73	248
74	251
75	255
76	258
77	261
78	265
79	268
80	271
81	274
82	278
83	281
84	284
85	288
86	291
87	294
88	297
89	301
90	304
91	307
92	311
93	314
94	317
95	320
96	324
97	327
98	330
99	334
100 - 141	337

From leading edge erase OFF

(A3/11"x17")

Reproduction Ratio (%)	Pulse Count
65	21
66	21
67	20
68	20
69	20
70	19
71	19
72	19
73	19
74	18
75	18
76	18
77	18
78	18
79	17
80	17
81	17
82	17
83	17
84	17
85	17
86 - 141	16

From slider return timing

Note: Between table 5

[11" x 17"/A3]

Process Speed = 115 mm/sec.
1 Pulse = 1.3 mm, 11.4 ms

Note : Between table 5 and 6, the earliest timing takes priority.

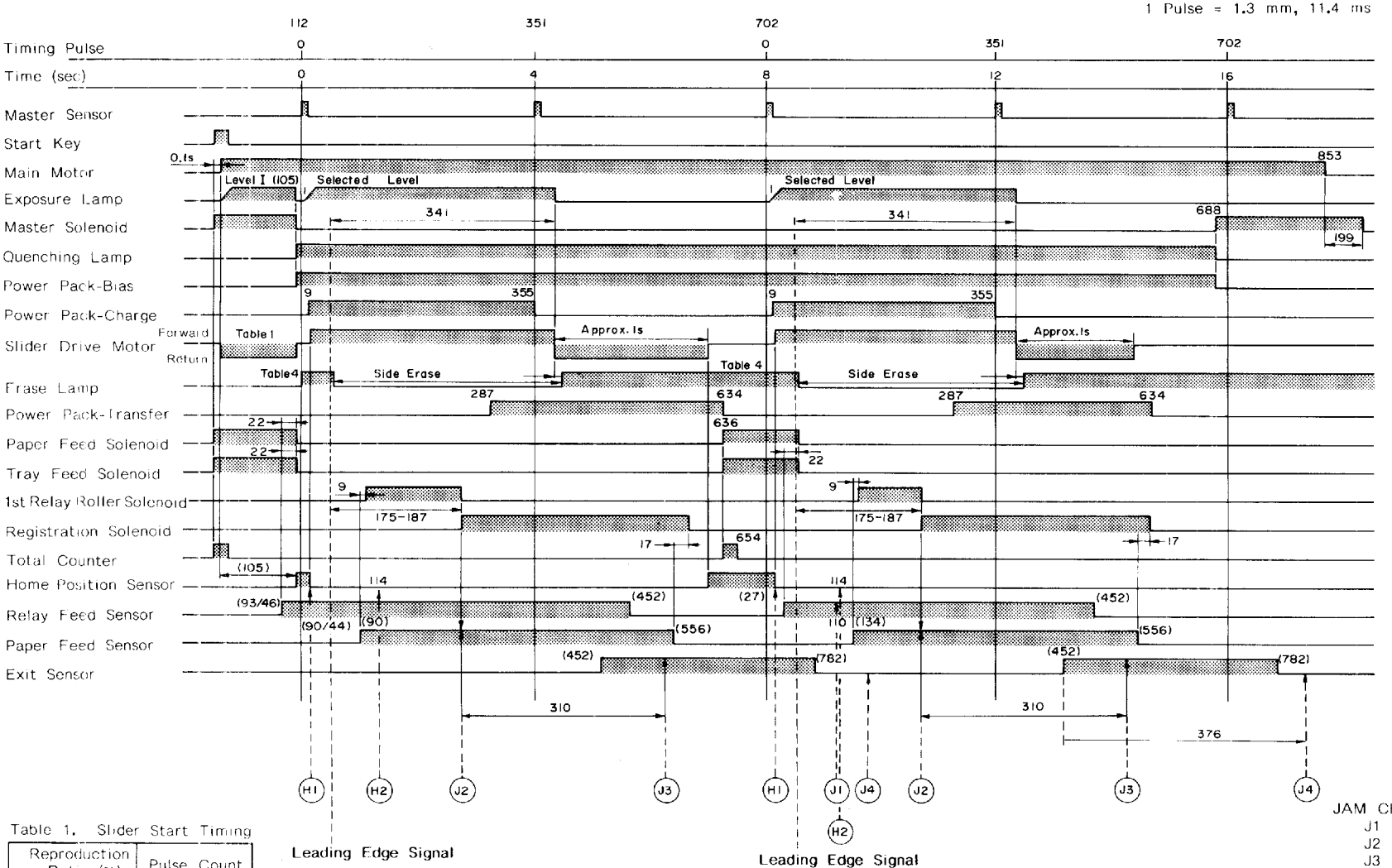

Table 6. Trailing Erase ON

Paper Size	Pulse Count
8"x13"	256
8-4/1"x13"	256
8-1/2"x11"	226
8-1/2"x13"	256
8-1/2"x14"	275
10"x14"	275
10"x15"	294
11"x17"	333
B5 Lengthwise	199
A4 Lengthwise	230
B4	281
A3	324
5-1/2"x8-1/2"	168
8-1/2"x5-1/2"	110
11"x8 1/2"	168
A6 Lengthwise	116
B6 Lengthwise	142
A5 Lengthwise	163
A5 Sideways	116
B5 Sideways	142
A4 Sideways	163

From leading edge erase OFF

JAM CHECK
J1 : Relay Feed Sensor ON Check
J2 : Paper Feed Sensor ON Check
J3 : Exit Sensor ON Check
J4 : Exit Sensor OFF Check

HOME POSITION CHECK
H1 : Home Position Sensor ON Check
H2 : Home Position Sensor OFF Check

Table 1. Slider Start Timing

Reproduction Ratio (%)	Pulse Count
65 - 67	30
68 - 74	29
75 - 84	28
85 - 91	27
92 - 96	26
97 - 100	25
101 - 104	24
105 - 107	23
108 - 110	22
111 - 115	21
116 - 117	20
118 - 119	19
120 - 122	18
123 - 125	17
126 - 127	16
128 - 130	15
131 - 132	14
133 - 135	13
136 - 137	12
138 - 139	11
140 - 141	10

From master sensor ON

Table 2. Registration Timing

Reproduction Ratio (%)	Pulse Count
65 - 66	187
67 - 69	186
70 - 74	185
75 - 81	184
82 - 89	183
90 - 119	182
120 - 127	183
128 - 135	184
136 - 141	185

From leading edge signal

Table 3. Registration Timing Adjustment (DPS101)

3	2	1	Pulse Count Change
OFF	OFF	OFF	0
OFF	OFF	ON	1
OFF	ON	OFF	2
OFF	ON	ON	3
ON	OFF	OFF	4
ON	OFF	ON	5
ON	ON	OFF	6
ON	ON	ON	7

Table 4. Leading Erase OFF (DPS701)

3	2	1	(ms)
ON	ON	ON	51
OFF	ON	ON	44
ON	OFF	ON	37
OFF	OFF	ON	30
ON	ON	OFF	23
OFF	ON	OFF	17
ON	OFF	OFF	10
OFF	OFF	OFF	3

From leading edge signal

Regist.Timing = Pulse Count(Table 2)-Pulse Count Change(Table 3)

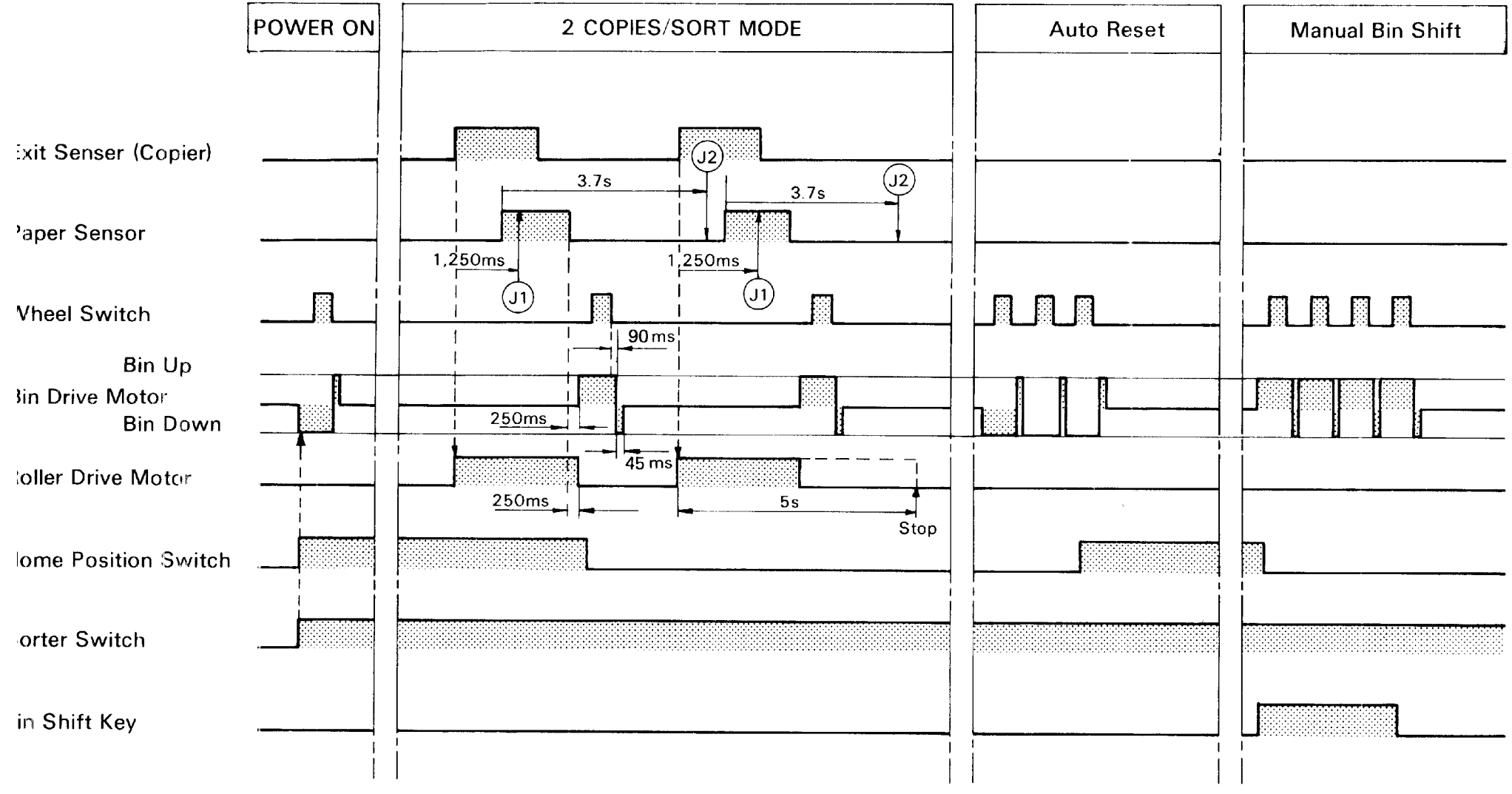

JAM CHECK
J1 : Paper Sensor ON Check
J2 : Paper Sensor OFF Check

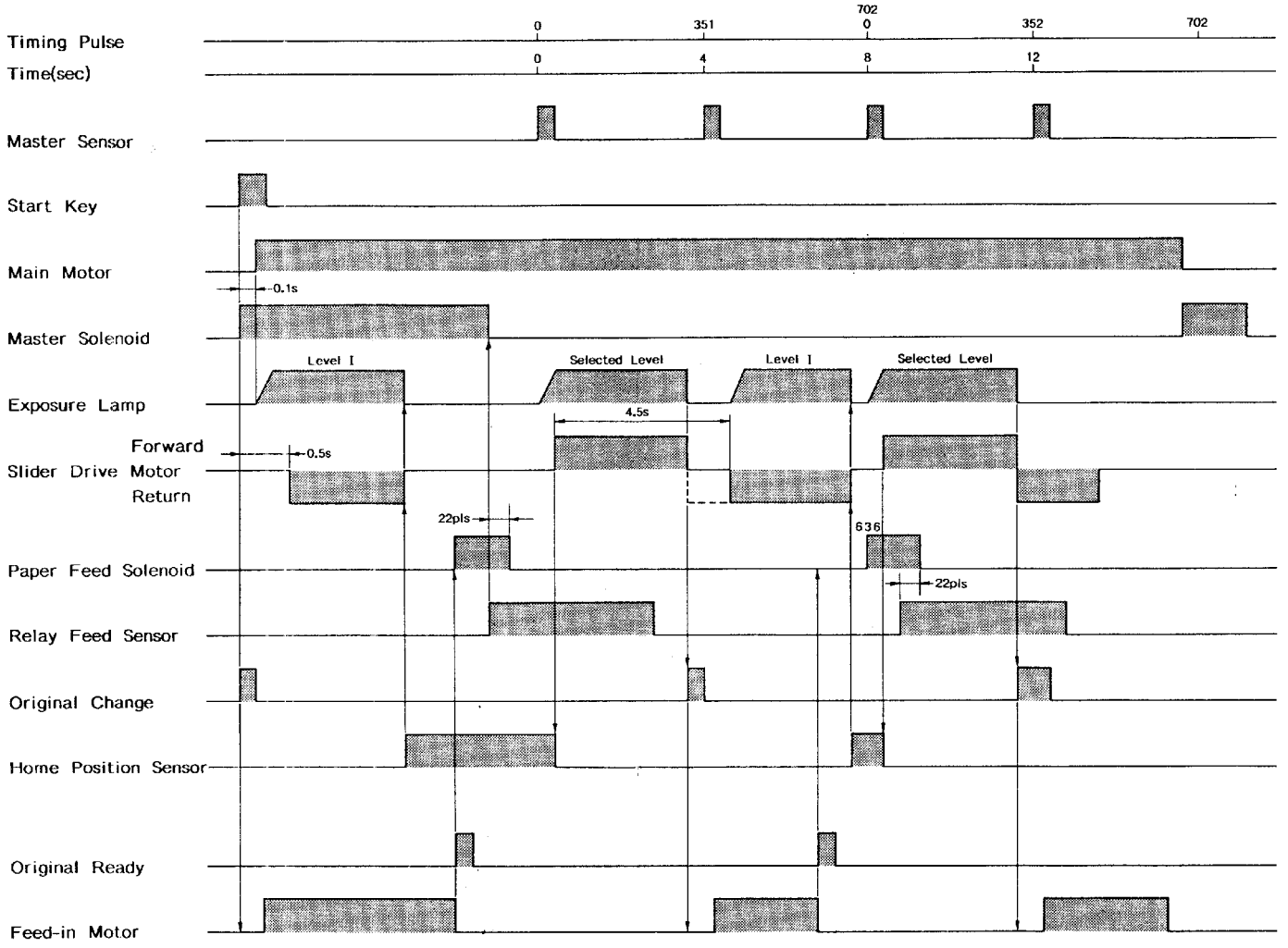

---- Full Return Mode

Feed Speed = 190mm/s

1 Pulse = 1.1mm,6ms

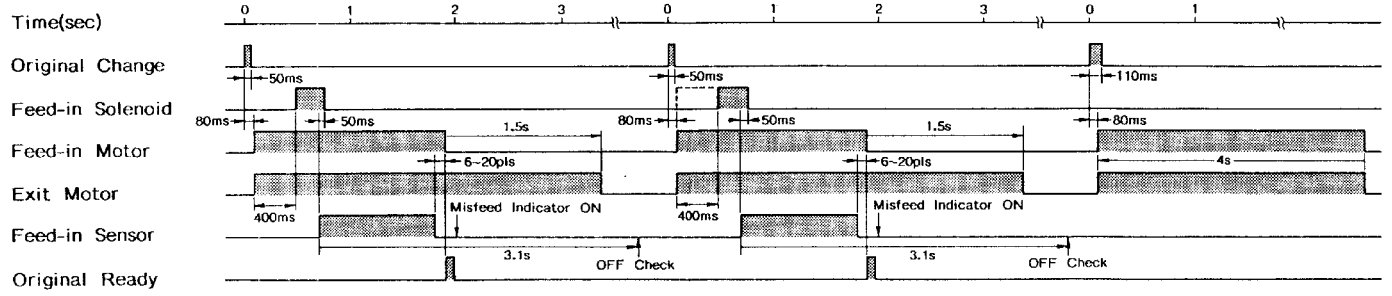

---- Long Original Mode

Registration Timing
(Adjustable by changing DPS101-3,-4,-5,and-6.)

3	0	1	0	1	0	1	0	1	0	1	0	1	0	1	0	1	
4	0	0	1	1	0	0	1	1	0	0	1	1	0	0	1	1	
5	0	0	0	0	1	1	1	1	0	0	0	0	1	1	1	1	
6	0	0	0	0	0	0	0	0	1	1	1	1	1	1	1	1	
Pls	13	12	11	10	9	8	7	6	F.R.	14	15	16	17	18	19	20	

0 : OFF
1 : ON

RICOH

RICOH FT2010/M100

FIELD SERVICE MANUAL

RICOH COMPANY LTD.

CONTENTS

SECTION 10: INSTALLATION REQUIREMENTS
SECTION 11: UNPACKING AND INSTALLATION
SECTION 12: PREPARATIONS FOR TRANSPORTING THE COPIER
SECTION 13: SERVICE TABLES AND REMARKS
SECTION 14: REPLACEMENT AND ADJUSTMENT
SECTION 15: TROUBLES-HOOTING
SECTION 16: ELECTRICAL DATA

SECTION 10

INSTALLATION REQUIREMENTS

10-1. Environment

1. **Temperature Range : 10°C to 30°C (50°F to 86°F)**
2. **Humidity Range : 15% to 90% RR**
3. **Ambient Illumination : Less than 1,500 luxs (Do not expose to direct sunlight)**
4. **Ventilation : Room air should turn over at least 3 times/hour.**
5. **Ambient Dust : Less than 0.15mg/m³ (4×10^{-3} oz/yd³)**
6. **Room Size : More than 10m³ (13.4 yd³)**
7. **If the installation place is air-conditioned or heated, place the machine:**
   a. **Where it will not be subjected to sudden temperature changes from low to high, or vice versa.**
   b. **Where it will not be directly exposed to cool air from an air conditioner in the summer.**
   c. **Where it will not be directly exposed to reflected heat from a space heater in winter.**
8. **Avoid placing the copier in an area filled with corrosive gas.**
9. **Avoid any area higher than 2,000m (6,500 feet) above sea level.**
10. **Place the copier on a strong and level base.**
11. **Avoid any area where the copier may be subjected to frequent strong vibration.**

10-2. Minimum Space Requirements

1. Front : 70cm (27-1/2")
2. Back : 12cm (4-3/4")
3. Right : 70cm (27-1/2")
4. Left : 70cm (27-1/2")

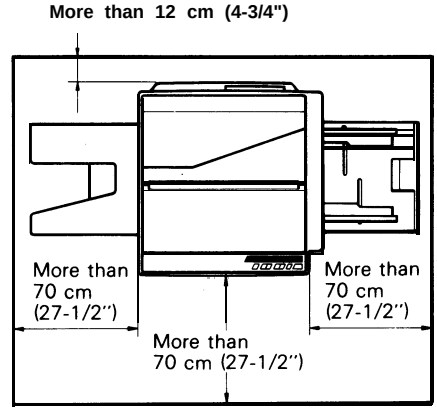

10-3. Power Source

1. Input voltage level

   110V/60Hz : More than 11A
   115V/60Hz : More than 11A
   220V/50Hz : More than 6A
   240V/50Hz : More than 6A

2. Permissible voltage fluctuation : ± 10%

3. Permissible extension cord:

   At least 300V, 30A capacity and less than 5m (16.4") long.

Note: 1. Be sure to ground the machine. (Do not connect the grounding wire to a gas pipe.
2. Make sure the plug is firmly inserted in the outlet.
3. Avoid multi-wiring.
4. Do not set any thing on the power cord.

SECTION 11

UNPACKING AND INSTALLATION

11-1. Unpacking Procedure

1. **Take out the accessory box and the machine.**
2. **Remove the two cushion blocks.**
3. **Open the vinyl bag and take out the machine.**

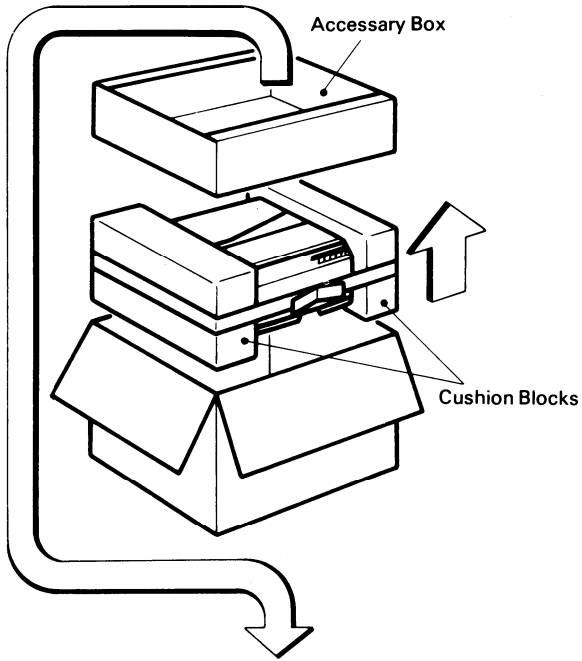

4. Check that the accessories are in the quantities according to the following list.

1) Copy Tray 1pc

2) **PaperTray 1pc**

3) **Master Unit 1pc**

Note: Keep it in the box until installing it in the copier.

4) **Toner . . . . . 1 cartridge (Black)**

5) Operating Instructions . . . . . 1 pc

6) N.E.C.R 1pc

7) Envelope for N.E.C.R. (USA only) . . . . . 1 pc

8) Multi-lingual Decal (220/240V only) . . 1 pc

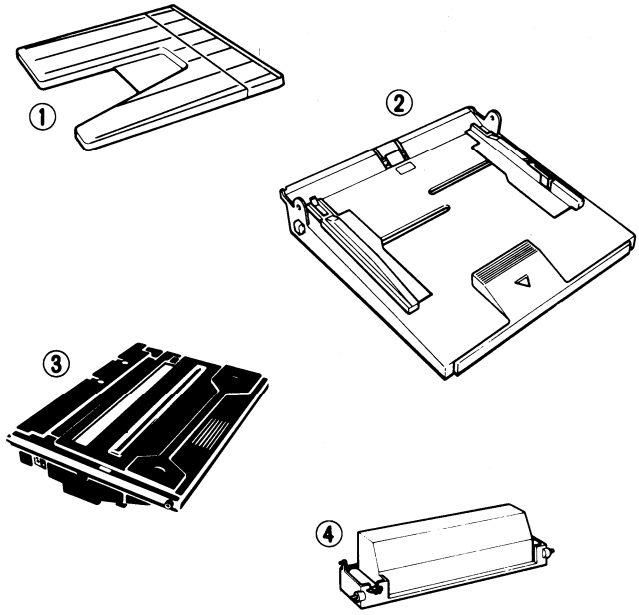

11-2. Installation Procedure

1. **Remove the three strips of tape.**

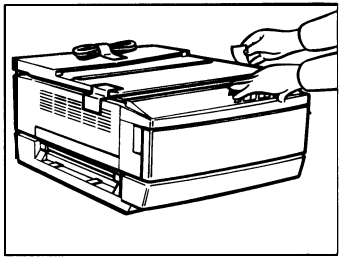

2. **Open the front 'cover.**

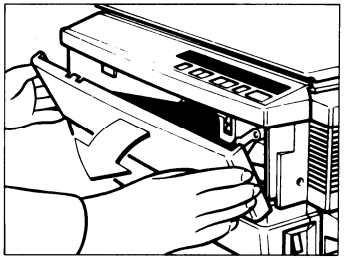

3. **Move the slider to the center and push down the release lever to open the top unit.**

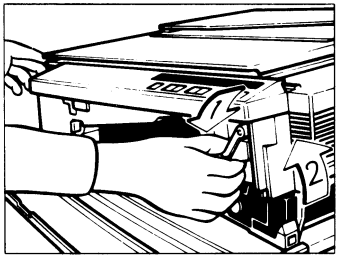

4. Remove the roller retainer.

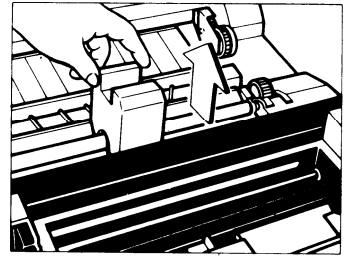

5. Remove the silica gel.

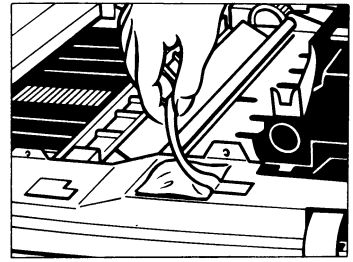

6. **Remove the toner tank cover and the two strips of tape.**

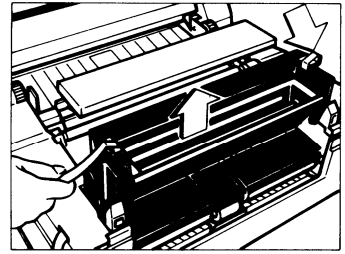

7. Remove the three wedges from the new master unit.

Note: **Do not touch the master (purple material) and avoid exposing it to light.**

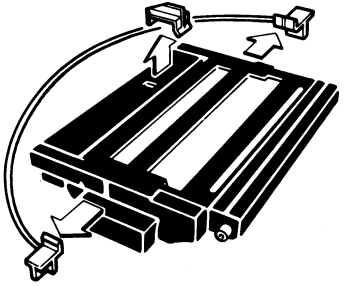

8. **Insert the master unit into the copier.**

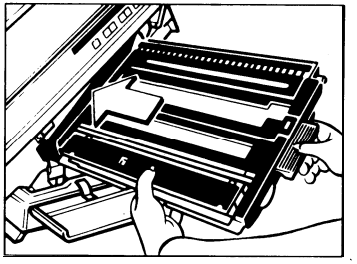

9. Peel off the polyester cover that protects the master.

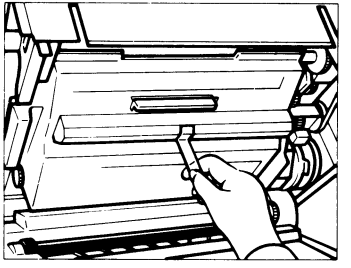

10. Push the master unit up until it locks in place.

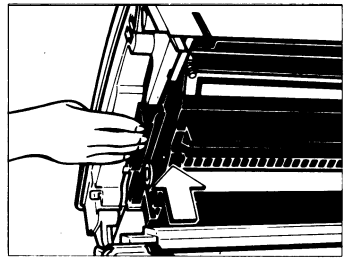

11. Remove the cushion block, the friction pad cover, and two strips of tape from the paper tray.

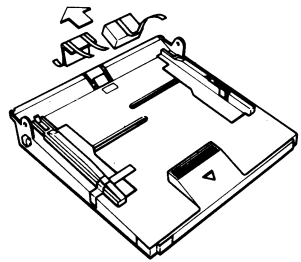

12. Install the paper tray on the right side of the machine.

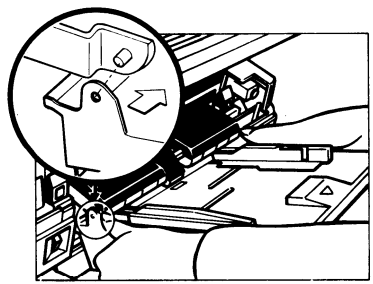

13. **Shake the new cartridge of toner well.**

14. **Set the pins of the toner cartridge into the slots on the development unit. Then, turn the cartridge counterclockwise.**

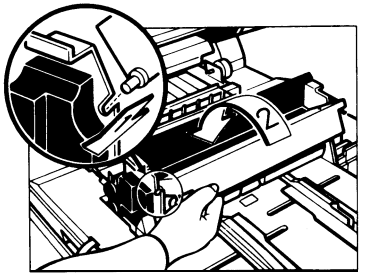

15. **Install the cartridge crank onto the shaft and turn the cartridge crank clockwise to strip off the cartridge seal.**
    Then, remove the cartridge crank and lower the top unit.

Note: **At installation, it is recommended to load two cartridges of toner.**

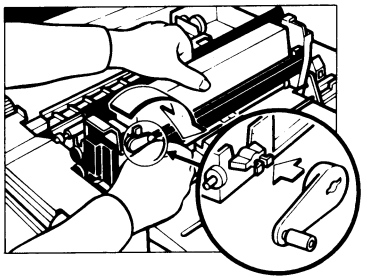

16. **Lower the top unit.**

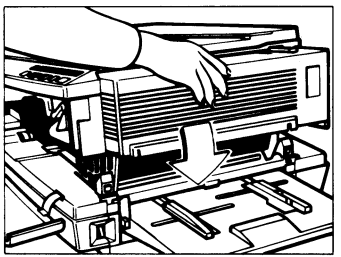

17. Close the front cover.

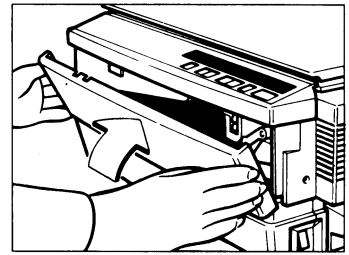

18. Install the copy tray on the left side of the machine.

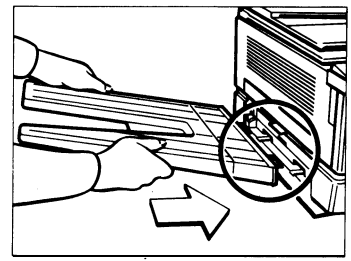

19. When not using this instruction booklet, place it in the holder on the back of the copier.

20. Check machine operation and copy quality. Fill out the New Equipment Condition Report.

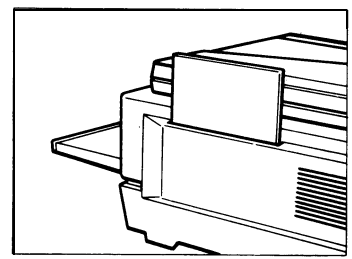

This completes machine installation.

11-3. Main Transformer Conversion (220 to 240V only)

1. **Open the top unit and remove the development unit.**
2. **Swing up the upper feed guide (1 screw).**
3. **Remove the lower feed guide (4 screw).**
4. **Uncouple the 220V connector and couple the 240V connector.**

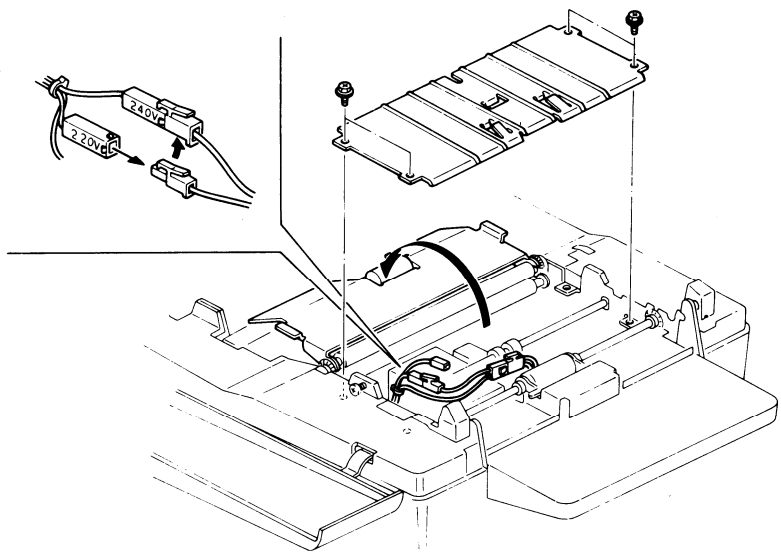

11-4. Key Counter Holder Installation

Note:
Three types of counters are recommended for this copier (Ricoh, Hecon, and Hengstler key counters).

1. **Remove the upper right cover (4 screws.)**
2. **Remove the key counter cover and fixing plate from the key counter bracket (2 screws).**
3. **Hold the fixing plate on the inside of the key counter bracket and insert the key holder.**
4. **Align the holes in the fixing plate with the mounting holes of the key counter holder and secure the key counter holder.**

Note: **The fixing plate has three sets of holes. Make sure to use the holes that match the type of counter when installing.**

5. **Remove the shorting plug from the key counter connector.**

Note: **This shorting plug is usually on the harness.**

6. **Plug in the key counter harness.**
7. **Reassemble the copier. Insert the key counter and check its operation.**

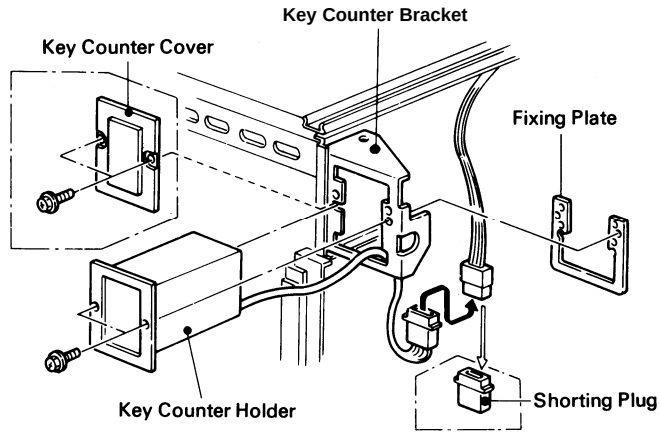

SECTION 12

PREPARATIONS FOR TRANSPORTING THE COPIER

Before moving the copier from its place of installation, be sure to prepare it for transportation as follows. The copier may be badly damaged if it is moved without proper preparation.

12-1. Short Distance (Room to Room)

1. **Remove the copy tray and paper tray.**
2. **Secure the slider and power supply cord with strips of tape.**

CAUTION: * When transporting the copier, always use the grips on the front and rear to handle the copier.

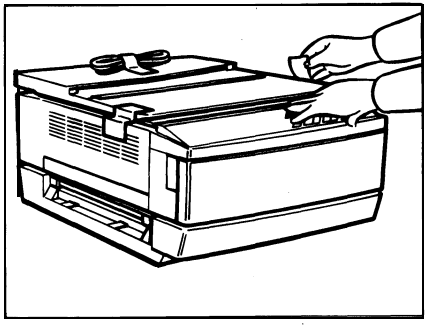

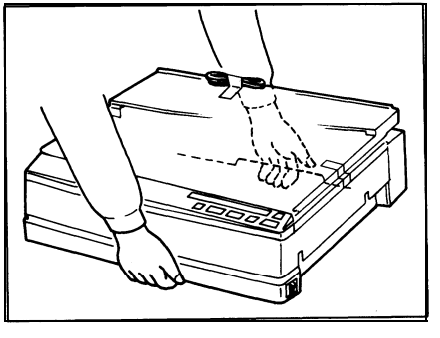

12-2. Long Distance (by vehicle)

1. Remove the copy tray and paper tray.
2. Open the clamshell and secure the development unit with strips of tape.
3. Secure the slider and power supply cord with strips of tape.

CAUTION : * While transporting the copier, always cover the copier to avoid direct sunshine.
* When the copier is in a vehicle,do not expose it to extreme hot or cold conditions.
* When transporting the copier, always use the grips on the front and rear to handle the copier.

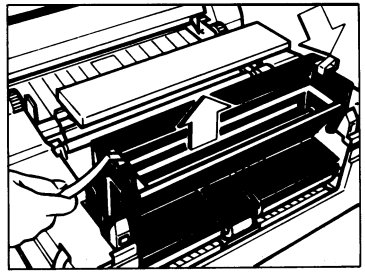

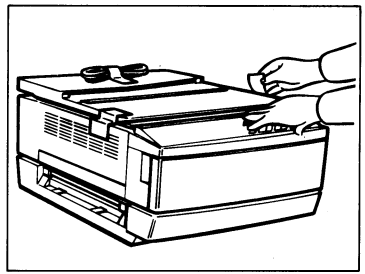

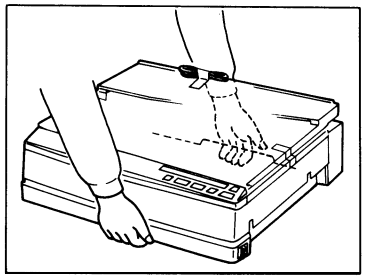

SECTION 13

SERVICE TABLES AND REMARKS

13-1. Maintenance Guide

NOTE: This guide shows the items to be cleaned and their effect on the copies if they are not clean. Clean these items as per the maintenance table.

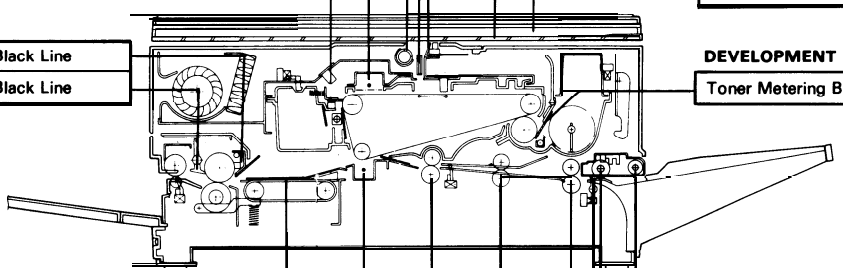

CHARGE CORONA

Charge Corona Wire	White Stripes

QUENCHING

Quenching Lamp	Dirty Copies

FUSING

Thermistor (Fusing)	Black Line
Hot Roller Strippers	Black Line

TRANSPORT

Upper Transport Guide Plate	Dirty Copies

TRANSFER CORONA

Transfer Corona Wire	Faint Copies

OPTICS & EXPOSURE

Exposure Lamp	Dirty Copies
Fiber Optics	Faint Copies
Reflector	Dirty Copies
Exposure Glass	Dirty Copies
Platen Cover Sheet	Dirty Copies

DEVELOPMENT

Toner Metering Blade	White Stripes

PAPER FEED

Pick-up Roller	Misfeed
Tray Feed Roller	Misfeed
Tray Friction Pad	Double Feed
First Relay Roller	Misfeed
Second Relay Roller	Misfeed
Registration Roller	Registration Bad

13-2. Maintenance Table

NOTE: When you visit the customer for a service call, perform the following.

SECTION	ITEM TO BE CLEANED	MATERIAL TO BE USED
Erase and Optics	1. Erase Lamp/Master Sensor	Soft Cloth (Water) or Blower Brush
	2. Fiber Optics	Fiber Optics/Corona Wire Cleaner or Silicone Cloth
	3. Exposure Glass	Soft Cloth (Glass Cleaner)
	4. Platen Cover Sheet	Soft Cloth (Water or Alcohol)
	5. Exposure Lamp	Wet Soft Cloth, then Dry Soft Cloth
	6. Reflector	Silicone Cloth
	7. Exposure Sensor/Auto ID Sensor	Blower Brush
Development and Quenching	1. Toner Metering Blade	Toner Agitator (when necessary)
	2. Quenching Lamp	Soft Cloth (Water) or Blower Brush

SECTION	ITEM TO BE CLEANED	MATERIAL TO BE USED
Paper Feed and Transport	1. 1st Relay Roller	Soft Cloth (Water)
	2. 2nd Relay Roller	Soft Cloth (Water)
	3. Registration Roller	Soft Cloth (Water)
	4. Paper Guide Plates	Soft Cloth (Water)
	5. Transport Belt	Soft Cloth (Water)
	6. Paper Tray Pads	Soft Cloth (Water)
	7. Pick-up Roller	Soft Cloth (Water)
	8. Tray Feed Roller	Soft Cloth (Water)
	9. Transport Guide Plates	Soft Cloth (Water)
Fusing	1. Hot Roller Strippers	Soft Cloth (Water)
	2. Thermistor	Soft Cloth (Alcohol)
	3. Paper Guide Plates	Soft Cloth (Water)
Corona	1. Charge Corona Wire	Fiber Optics/Corona Wire Cleaner or Blower Brush
	2. Transfer Corona Wire	Cotton Swabs or Soft Cloth (Alcohol)
	3. Corona Casings	Soft Cloth (Water)
	4. Transfer Guide Plate	Soft Cloth (Water)
Others	1. Grid Plate of Master Unit	Blower Brush

13-3. Lubrication Table

NOTE: Lubrication must be done within the number of copies indicated in the following table.

SECTION	ITEM TO BE LUBRICATED	NO. OF COPIES	LUBRICATING MATERIAL
Erase and Optics	1. Fiber Optics Holder	As Necessary	Grease-501
Paper Feed and Transport	1. 1st Relay Clutch Spring	60 K	Mobil Temp 78
	2. Registration Clutch Spring	60 K	Mobil Temp 78
	3. Tray Feed Clutch Spring	60 K	Mobil Temp 78
	4. Pick-up Clutch Spring	60 K	Mobil Temp 78
Others	1. Master Clutch Spring	60 K	Mobil Temp 78

13-4. Expected Life of Parts

NOTE: Main parts have the following expected service life.

SECTION	PART DESCRIPTION	EXPECTED SERVICE LIFE
Development	1. Toner Metering Blade	60 K (Black) 6 K (Color)
Paper Feed and Transport	1. Tray Friction Pad	60 K
Fusing	1. Hot Roller 2. Hot Roller Strippers 3. Pressure Roller	120K 120K 180K
Corona	1. Charge Corona Wire 2. Transfer Corona Wire	80 K 80 K

13-5. Special Tools and Lubricants

NO.	DESCRIPTION	PART NO.	REMARKS
1.	Positioning Ring	52169003	
2*	Test Chart OS-A3	54209502	100 sheets/set
3.	Digital Multimeter	54209507	BECKMAN RMS3030
4.	Deluxe Test Lead Accessory Kit	54209508	BECKMAN DL241
5.	Grease - Mobil Temp 78	54479078	400 g/can
6.	Grease - Shin-etsu Silicon G-501	52039502	80 g/tube

13-6. Points to Remember

Master Unit

1. Never touch the master belt and do not apply oil or an organic solvent to prevent the master belt from being deformed.
2. When the master unit is out of the machine or the upper clamshell is open, avoid exposing it to a bright light-or direct sun light to prevent the master belt from being light fatigued.
3. Always store master unit in a cool and dry place.
4. Do not leave master units in vehicles during hot weather. It does not matter whether the master units are installed in machines or separate.
5. The variable resistor for adjusting the master sensor is factory preset and should not be adjusted in the field.
6. Keep the master unit level when it is out of the copier.

Charge

1. The variable resistor (VR-C) is factory preset and should not be adjusted in the field.
2. Do not touch the corona wire with oily hands.
3. Instruct the operator how and when to use the corona wire/fiber optics cleaner.
4. Clean the corona wire at every service call.
5. Clean the grid plate with a blower brush.

Optics

1. Clean the reflector, exposure lamp, and fiber optics at every service call.
2. The variable resistor (VR - 1) on the exposure sensor board is factory preset and should not be adjusted in the field.
4. When making copy on small size paper, the paper should be slightly pushed by the small-paper holder.

Development

1. When white vertical lines appear on the copy, use the toner agitator to clean the toner metering blade.
2. Do not use the toner agitator unless copy image problems occur. This is to prevent damaging the toner metering blade.
3. Be careful not to nick or scratch the development roller surface.
4. Be careful not to use a black development unit for color copying, or a color development unit for black copying.
5. Always store toner in a cool and dry place.

Transfer

1. The variable resistor (VR-T) on the transfer/bias power pack is factory preset and should not be adjusted in the field.
2. Do not touch the transfer corona wire with oily hands.
3. Clean the transfer corona wire with a soft cloth at every service call.

Paper Feed

1. Do not allow the paper feed rollers to become oily or dirty.
2. Instruct the operator to ensure that one sheet of OHP transparency is loaded at a time and that the OHP transparency lever is down when copying onto transparencies.
3. The improper setting of side and rear fences of the paper tray may cause erase problems.

Fusing

1. Be careful not to damage the hot roller strippers.
2. Do not touch the fusing lamp with your bare hands.
3. Make sure that the fusing lamp does not contact the hot roller.
4. Clean the fusing thermistor and hot roller strippers at every service call.

SECTION 14

REPLACEMENT AND ADJUSTMENT

14-1. Exterior Removal

Upper Clamshell (refer to FT2050) 5-2

Lower Clamshell 14-2

Lower Clamshell

(1) **Front Cover (2 screws)**

1. **Open the clamshell to remove the screws.**

NOTE: * **When installing the front cover, be sure that the tabs engage with the positioning notches.**

(2) Paper Tray

1. **Open the clamshell.**
2. **Lift the paper tray and remove.**

(3) Lower Rear Cover (4 screws)

1. **Remove the upper rear cover (2 screws).**
2. **Open the clamshell and remove.**

NOTE: * **Remember that one screw is longer than the other three screws. The longer screw prevents the upper paper feed guide plate from being turned over.**

(4) Lower Left Cover (2 screws)

1. **Remove the front cover (2 screws), the upper rear cover (2 screws), and lower rear cover (4 screws) to remove the lower left cover.**

(5) **Exit Cover (2 screws)**

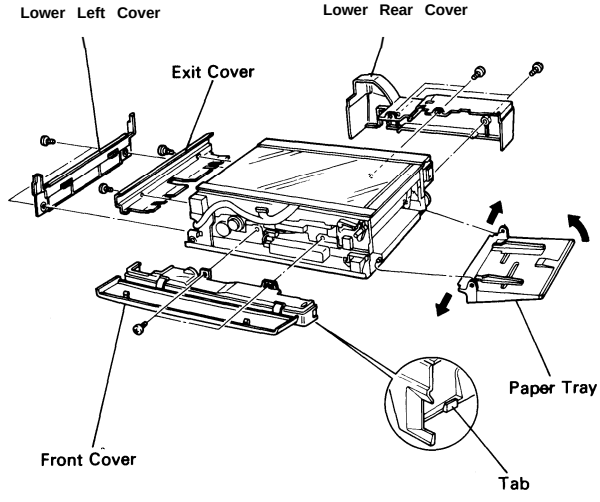

14-2. Erase and Optics

Erase Lamp Replacement (refer to FT2050) 5-6

Slider Removal (refer to FT2050). 5-7

Slider Drive Wire Replacement (refer to FT2050) 5-8

Fiber Optics Removal (refer to FT2050) 5-9

Exposure Lamp Unit Replacement 14-4

Slider Clutch Removal 14-5

Fiber Optics Holder Lubrication (refer to FT2050) 5-12

Exposure Lamp Unit Replacement

1. **Remove the upper rear cover and move the slider to the right.**
2. **Open the front cover and remove the operation panel (2 screws and 1 connector).**
3. **Remove the upper left cover.**
4. **Remove the exposure. lamp unit together with exposure lamp bracket (1 screw).**
5. **Remove the exposure lamp unit from the exposure lamp bracket and the terminal (1 connector).**

NOTE: * **Avoid touching the aperture of the exposure lamp.**
* **When re-installing the exposure lamp unit, make sure the aperture is facing up.**

CAUTION: * **When installing the exposure lamp unit, be careful not to damage the unit.**

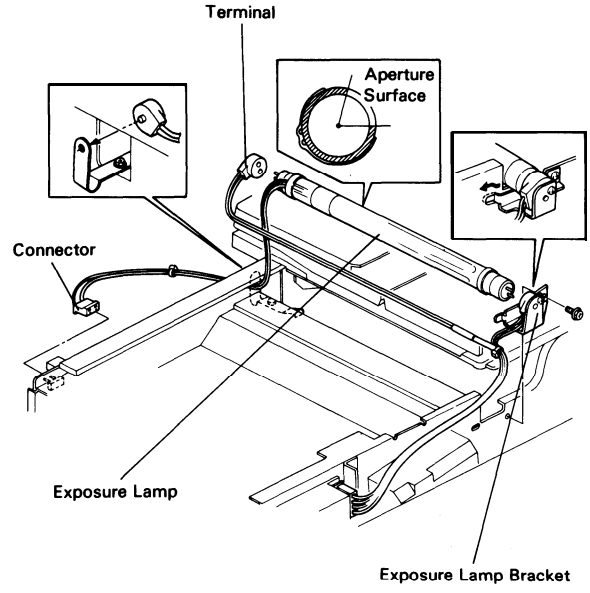

Slider Clutch Removal

1. **Remove the slider drive assembly. (See "Slider Drive Assembly Removal" section.)**
2. **Remove the timing belt and master/development drive pulley (1 E-ring).**
3. **Remove the slider clutch bracket (3 screws).**

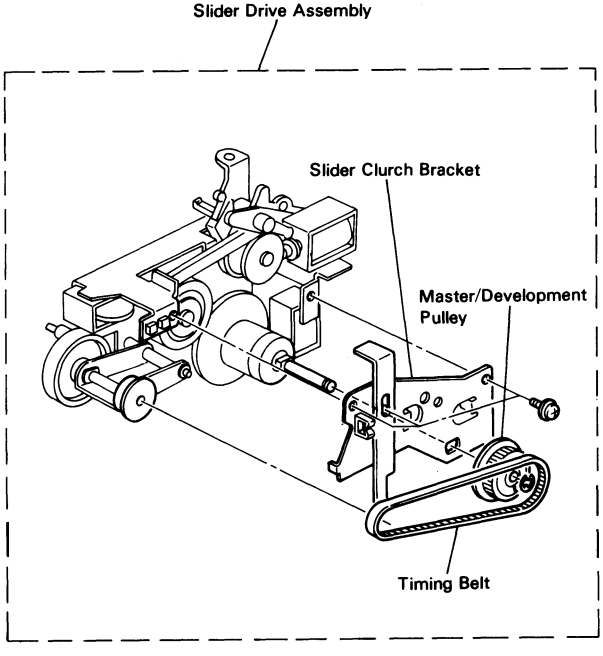

4. **Remove the slider reverse gear with the rubber damper and the output hub (1 washer and 1 E-ring).**

5. **Remove the reverse clutch assembly from the reverse gear shaft.**

6. **Remove the slider drive gear (1 E-ring and 1 washer).**

7. **Remove the master clutch solenoid (1 spring and 2 screws).**

8. **Remove the slider solenoid (2 screws).**

NOTE: * **The solenoid plunger is not removed with the solenoide.**

9. **Remove the pawl assembly (1 E-ring and 1 spring).**

10. **Remove the master clutch assembly (1 E-ring and 1 bushing).**

11. **Remove the forward clutch assembly.**

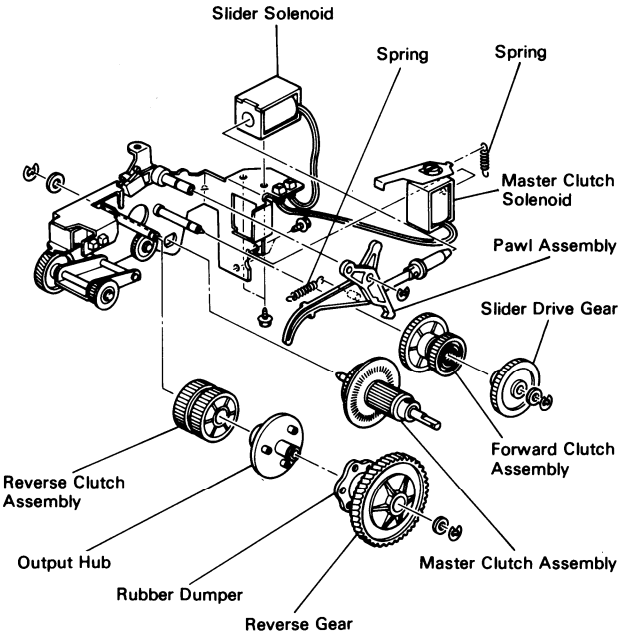

14-3. Development and Quenching

Toner Metering Blade Replacement (refer to FT2050) 5-14

Quenching Lamp Replacement (refer to FT2050) 5-15

14-4. Paper Feed and Transport

Registration Clutch Lubrication 14-10

Paper Feed Sensor Replacement 14-11

Transport Belt Replacement. 14-12

Pick-up Roller Replacement (refer to FT2070) 5-24-2

Tray Feed Roller Replacement 14-13

Pick-up and Tray Feed Clutches Lubrication 14-15

Paper Width Sensor Replacement (refer to FT2070) 5-24-6

Paper Length Sensor Replacement 14-16

Registration Clutch Lubrication

1. Remove the upper rear cover and the lower rear cover.
2. Remove the registration clutch bracket (2 screws, 1 E-ring and 1 bushing).
3. Remove the registration solenoid assembly (1 screw), and slide it to the left.
4. Remove the engage gear bracket spring.
5. Turn the engage gear bracket clockwise and pull it with the registration clutch assembly (1 allen set screw).
6. Separate the clutch assembly into the output hub, clutch sleeve, clutch spring, input hub and idle gear.
7. Apply Mobil Temp 78 to the clutch.
8. Re-install the clutch so that the radial end of the spring and the gear side of the clutch sleeve are facing the registration roller.
9. Position a 0.2-mm thickness gauge between the shaft shoulder and the idle gear.
10. Push the registration clutch towards the registration roller. Tighten the allen set screw.

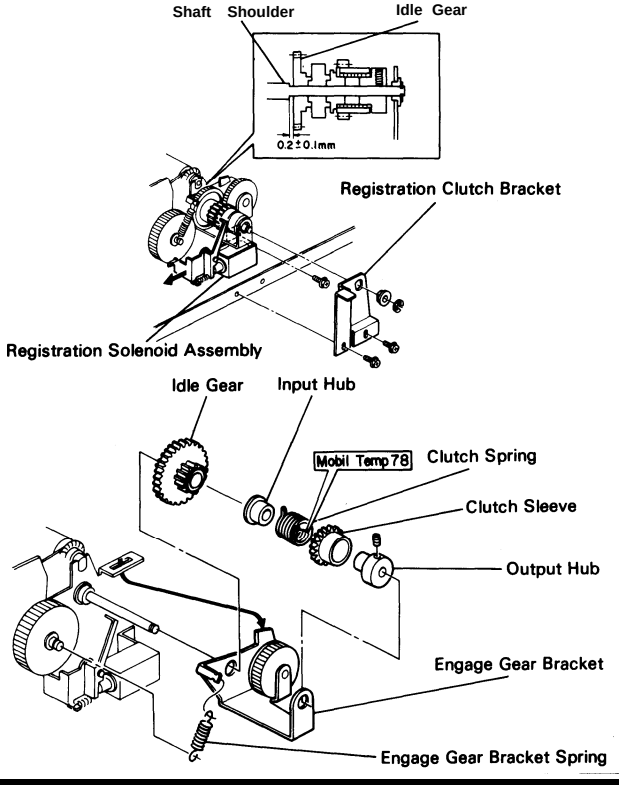

Paper Feed Sensor Replacement

1. **Open the clamshell.**
2. **Remove the development unit.**
3. **Loosen the screw securing the lower rear cover.**
4. **Swing up the upper paper feed guide plate.**
5. **Remove the lower feed guide (4 screws and 1 connector).**
6. **Remove the paper feed sensor bracket with paper feed sensor from the lower feed guide (2 screws).**
7. **Remove the paper feed sensor from the bracket (1 screw).**

NOTE: * **When closing the clamshell, be sure to return the upper paper feed guide plate to its original position. Otherwise, the master will be damaged.**

* **Do not forget to tighten the screw securing the lower rear cover.**

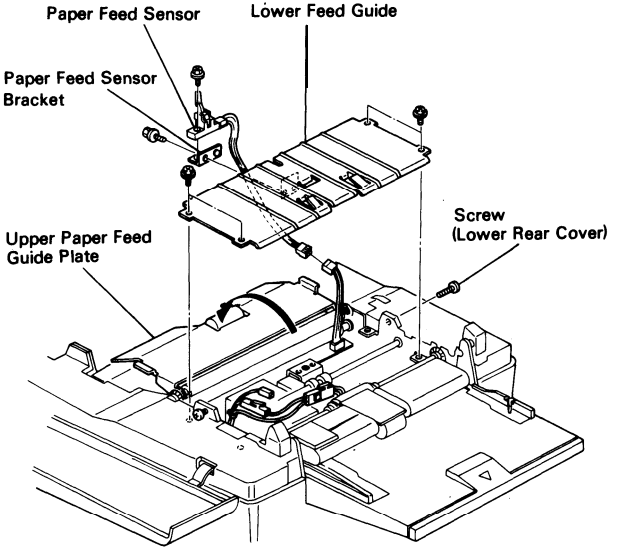

Transport Belt Replacement

1. **Remove the copy tray.**
2. **Remove the front cover (2 screws), upper rear cover (2 screws), and lower rear cover (4 screws).**
3. **Remove the safety cover (1 screw).**
4. **Remove the 2 clamshell stopper screws and stand the clamshell straight up.**

NOTE: * **When standing the clamshell straight up, place a block that has a height of approximately 30 mm (approx. 1.14") in front of exit cover as shown to the upper right.**

5. **Remove the upper transport guide plate (2 push locks).**
6. **Remove the lower transport guide plate (2 stud screws).**
7. **Remove the transport belt gear bracket (2 screws).**
8. **Remove the idle gear (1 E-ring).**
9. **Remove the paper reverse gear (1 E-ring and 1 bushing).**
10. **Remove the 1st transport pulley from the transport belt holder.**
11. **Remove the transport belt from the holder.**

NOTE: * **When reassembling, make sure that the 1st transport pulley rides in the small grooves of the transport belt holder.**

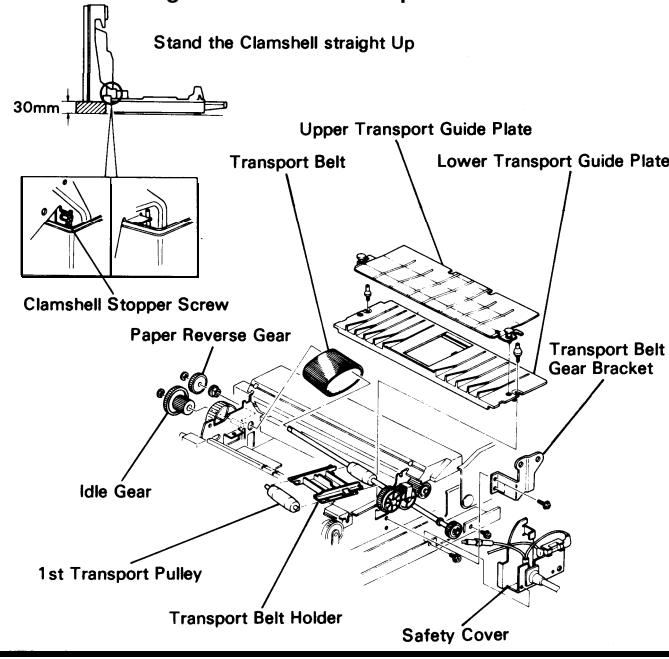

Tray Feed Roller Replacement

1. **Remove the front cover, paper tray, and the lower rear cover.**
2. **Remove the development unit.**
3. **Remove the tray feed solenoid (2 screws and 2 harness clamps).**
4. **Unhook the sector gear spring and the tray feed solenoid spring.**
5. **Remove the paper feed clutch bracket (3 screws, 3 E-rings and 3 bushings).**
6. **Remove the first relay roller (2 springs and 2 bushings).**
7. **Remove the rear development unit support (2 screws).**
8. **Remove the safety switch assembly (1 screw).**

NOTE: * **It is not necessary to disconnect the safety switch.**

9. **Remove the front development unit support (2 screws).**
10. **Take off the width sensor cover (2 screws).**

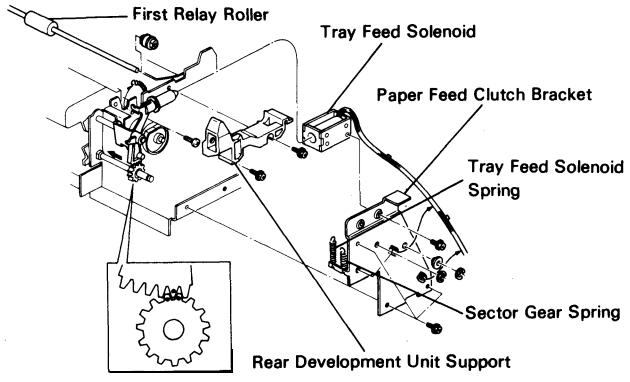

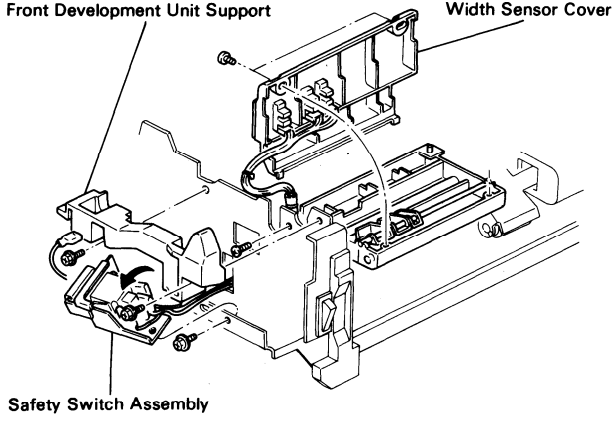

11. **Unhook the pick-up stay spring.**

12. **Remove the front and rear screws securing the front and rear feed roller housing.**

13. **Remove the housing stay and the pick-up stay cover.**

14. **Remove the E-ring and bushing from the front of the tray feed shaft. Slide the shaft to the rear and lift the front of the tray feed shaft.**

15. **Remove the front feed roller housing by sliding it to the front.**

16. **Remove the tray feed roller by sliding the pick-up stay to the front (1 E-ring and 1 bushing).**

NOTE: * **As the tray feed roller has a one-way clutch, it is important to mount the roller correctly. The pick-up roller drive belt should be towards the front.**

* **When replacing the paper feed clutch bracket, secure it with the three screws, then slide the pick-up gear slightly to the front and align the sector gear and the pick-up gear as shown in the figure. (The marked tooth on the sector gear fits in between the marked teeth of the pick-up gear.)**

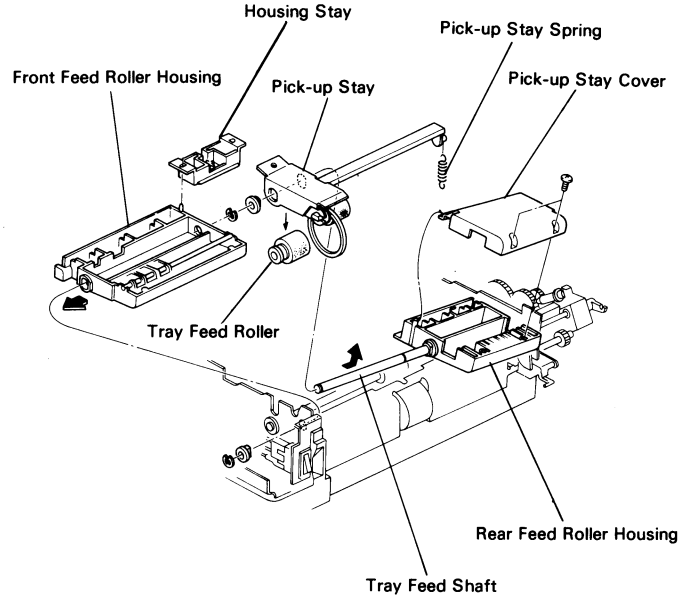

Pick-up and Tray Feed Clutches Lubrication

1. **Remove the lower rear cover.**
2. **Remove the tray feed solenoid (2 screws and 2 harness clamps).**
3. **Unhook the sector gear spring and the tray feed solenoid spring.**
4. **Remove the paper feed clutch bracket (3 screws, 3 E-rings and 3 bushings).**
5. **Remove the sector gear and pawl assembly (1 E-ring).**
6. **Remove the pick-up clutch cam (1 E-ring).**
7. **Remove the clutch assembly.**
8. **Disassemble and lubricate the pick-up clutch and tray feed clutch.**

CAUTION: * **Be careful not to loose the clutch drive pin.**

NOTE: * **When reinstalling the spring clutches, be sure to insert the projections of the clutch springs into the notches.**

* **When replacing the paper feed clutch bracket, secure it with the three screws, then slide the pick-up gear slightly to the front and align the sector gear and the pick-up gear. (The marked tooth on the sector gear fits between the marked teeth of the pick-up gear.)**

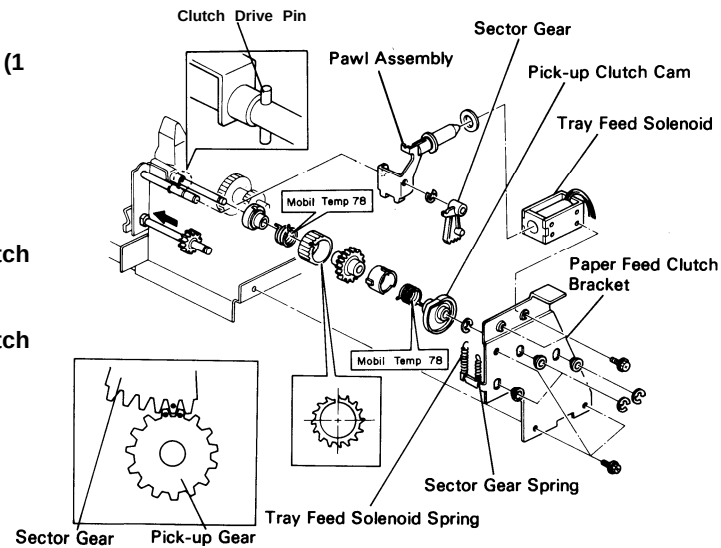

Paper Length Sensor Replacement

1. **Open the clamshell.**
2. **Remove the development unit.**
3. **Remove the paper tray.**
4. **Remove the length sensor cover (2 screws).**
5. **Remove the screw securing the length sensor bracket and slide the bracket to the right.**
6. **Remove the length sensor (1 screw and 1 connector).**

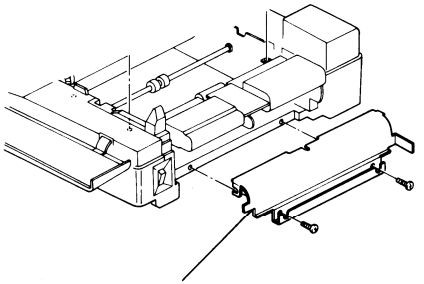

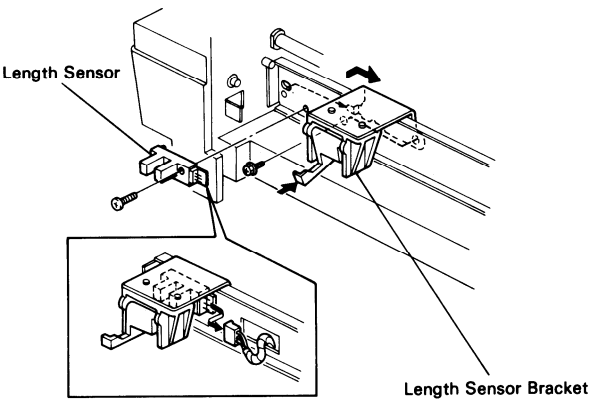

14-5. Image Fusing

Hot Roller Replacement (refer to FT2050) 5-26

Pressure Roller Replacement. 14-18

Thermistor Replacement 14-19

Thermofuse Replacement 14-20

Hot Roller Strippers Replacement 14-21

Exit Sensor Replacement 14-22

Pressure Roller Replacement

1. **Remove the hot roller. (See "Hot Roller Replacement" section.)**
2. **Remove the transport belt gear bracket (2 screws).**
3. **Remove the 2 idle gears as shown to the right (1 E-ring each).**
4. **Remove the rear hot roller bearing.**
5. **Remove the upper transport guide plate (2 push-locks) and lower transport guide plate (2 stud screws).**
6. **Swing the pressure roller cover away from the pressure roller (2 screws).**
7. **Remove the pressure roller.**
8. **Remove the front and rear bushings (1 E-ring each).**

NOTE: * **Be careful not to damage the pressure roller.**

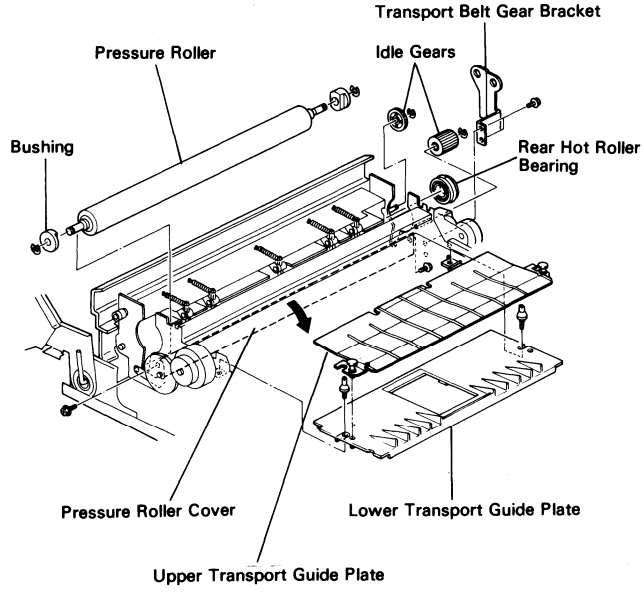

Thermistor Replacement

1. **Open the clamshell and stand it straight up. (See "Transport Belt Replacement" section.)**
2. **Remove the fusing unit cover (2 screws).**
3. **Remove the fusing stay (4 screws). (See "Hot Roller Replacement" section.)**
4. **Remove the upper transport guide plate (2 push-locks) and lower transport guide plate (2 stud screws).**
5. **Remove the screw securing the front end of the thermofuse stay.**
6. **Lift the thermofuse stay and remove the thermistor harness from the stay.**
7. **Remove the thermistor (1 screw and 1 connector).**

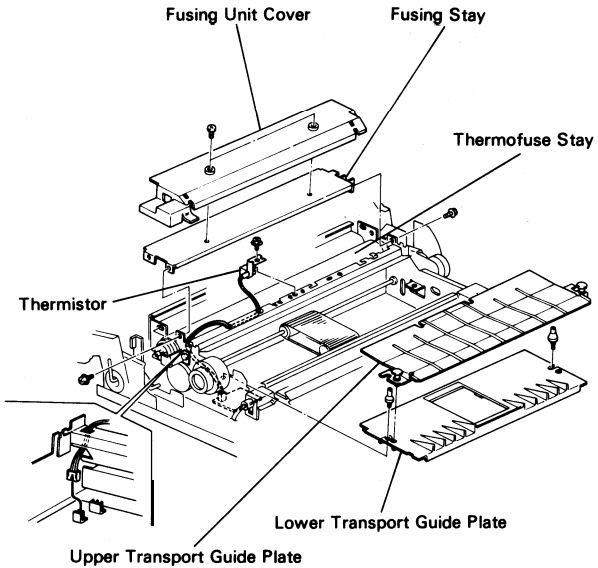

Thermofuse Replacement

1. **Open the clamshell and stand it straight up. (See "Transport Belt Replacement" section.)**
2. **Remove the fusing unit cover (2 screws). (See "Hot Roller Replacement" section.)**
3. **Remove the fusing stay (4 screws).**
4. **Remove the upper transport guide plate (2 push-locks) and the lower transport guide plate (2 stud screws).**
5. **Remove the rear fusing lamp terminal (1 screw).**

CAUTION: * **When removing the rear fusing lamp terminal, be careful not to damage the fusing lamp.**

6. **Remove the thermofuse harness from the rear fusing lamp terminal (1 screw).**
7. **Disconnect the thermofuse connector from the fusing power supply board.**
8. **Remove the screw securing the front end of the thermofuse stay.**
9. **Lift the thermofuse stay and remove the thermofuse harness from the stay.**
10. **Remove the thermofuse.**

NOTE: * **When installing the thermofuse, be sure to route the wire properly as shown in the figure.**

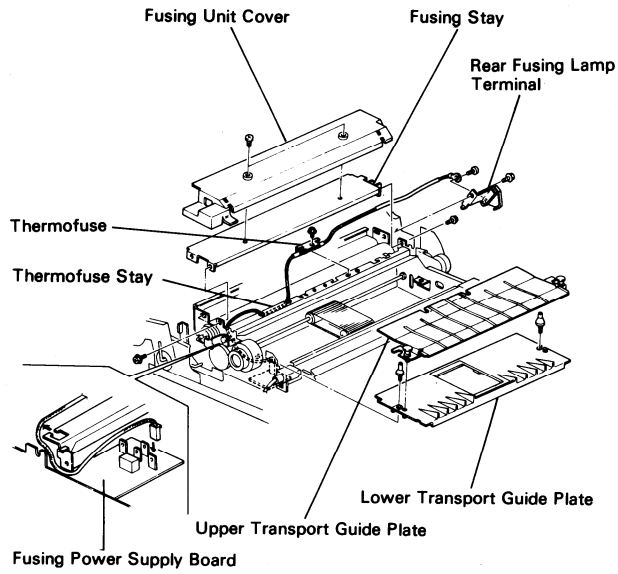

Hot Roller Strippers Replacement

1. **Remove the exit cover (2 screws).**
2. **Open the exit assembly (2 screws).**
3. **Remove the hot roller strippers together with springs.**

NOTE: * **It is advisable to replace the hot roller strippers as a set.**

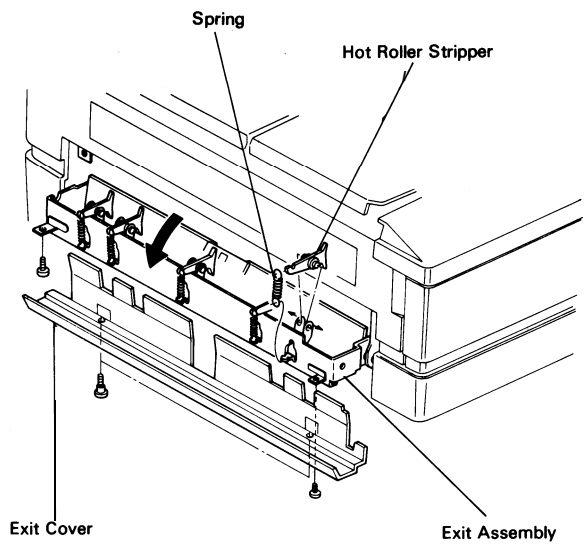

Exit Sensor Replacement

1. **Remove the exit cover (2 screws).**
2. **Open the exit assembly and remove the exit assembly (2 screws).**
3. **Remove the upper transport guide plate (2 push-locks) and lower transport guide plate (2 stud screws). (See "Transport Belt Replacement" section.)**
4. **Remove the exit sensor (1 screw, 1 connector and 2 clamps).**

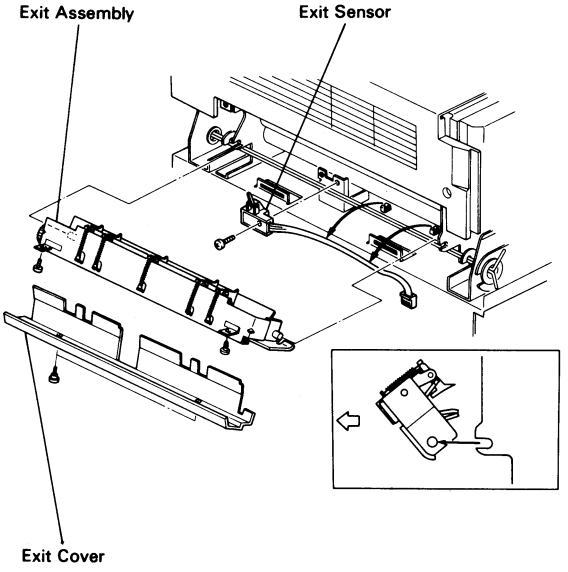

14-6. Corona

Charge Corona Wire Replacement (refer to FT2050) 5-34

Transfer Corona Wire Replacement (refer to FT2050) 5-35

14-7. Copy Image

Auto ID Sensor Adjustment 14-26

Leading Edge Registration Adjustment 14-27

Leading Edge Erase adjustment 14-28

Auto ID Sensor Adjustment

1. **Turn off the main switch.**
2. **Remove the master unit. (See "Erase Lamp Replacement" section.)**
3. **Move the slider to the home position.**

NOTE: * **When the slider is at the home position, the sensor pattern is just above the auto ID sensor.**

4. **Remove the exposure sensor cover (1 screw).**
5. **Turn on DIP SW 4 (test mode).**
6. **Set meter to 20 Vdc setting.**
7. **Connect meter leads and V-ohm to the pins and 2 of the connector on the exposure sensor board.**
8. **Turn on the main switch.**
9. **Press the Copy Quantity key until 3 is displayed in the copy counter.**
10. **Press the Start key to start the test mode.**
11. **Adjust VR2 so that the voltage is 1.7 ± 0.1 V.**

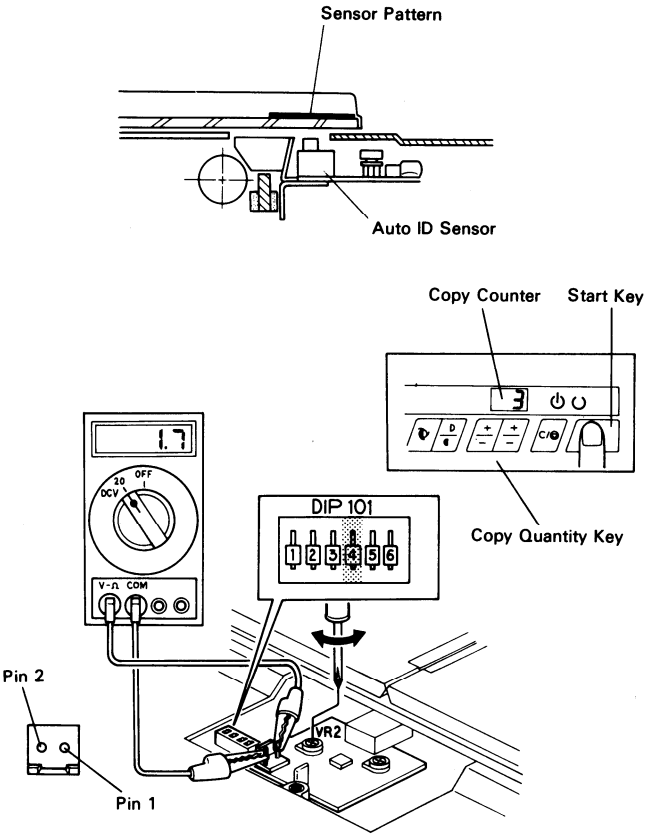

Leading Edge Registration Adjustment

1. **Lay a scale on the exposure glass as shown in the figure.**

2. **Make a few copies and check that the leading edge registration is within specifications.**

   Leading Edge Registration Specifications.
   0 ± 2.0 mm (0 ± 0.08")
   [Blank Leading Edge 2.1 ± 3.0 mm (0.083 ± 0.12")]

3. **If it is out of the specifications adjust it using DIP SW 1, 2, and 3 on the main board.**

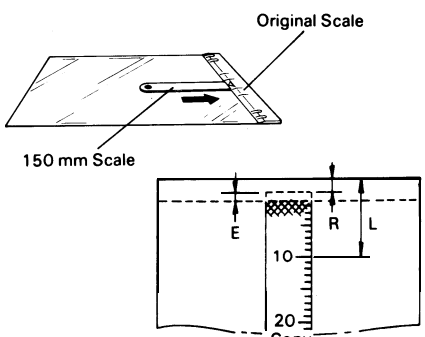

E : Erase
R : Registration

NOTE: * **When adjusting the leading edge registration, move the slider to the home position and remove the exposure sensor cover (1 screw).**

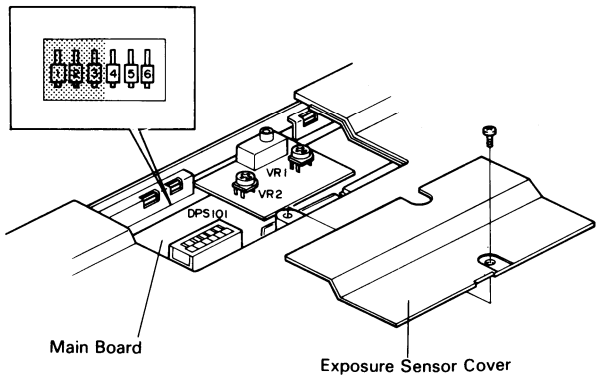

– Leading Edge Registration –

1 : SW ON 0 : SW OFF

No.1	No.2	NO.3	Registration
0	0	0	Decrease (–)
1	0	0	
0	1	0	
1	1	0	Variation per step: Approx. 1.3mm (0.051")
0	0	1	
1	0	1	
0	1	1	
1	1	1	Increase (+)

Leading Edge Erase Adjustment

1. **Lay a scale on the exposure glass, aligning it with the original scale as shown to the right.**

2. **Make a few copies and check that the leading edge erase is within specification.**

   Leading Edge Erase Specification
   2.1 ± 1mm (0.083 ±0.04")

NOTE: * Leading edge erase is the distance "E" in the figure (the length of scale that has been erased).

3. **If the leading edge erase is out of specification, adjust it using JP103 on the main board and JP1 on the dc power supply board as shown to the right table.**

NOTE: 1. When connecting or cutting JP103 on the main board:
(1) Remove the upper right cover.
(2) Connect or cut JP103.

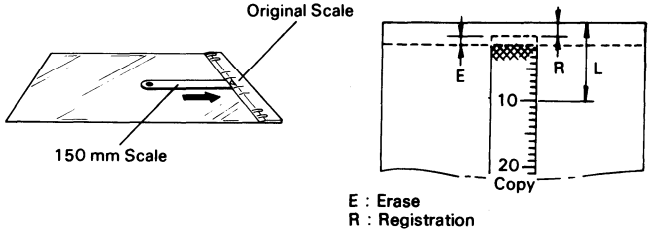

1: Connect 0: Cut

JP103	JP1	Erase
1	1	Increase (+)
1 (0	0 1)	Variation per step: Approx 2.6mm (0.1")
0	0	Decrease (–)

JP103: On the main board JP1 : On the dc power supply board

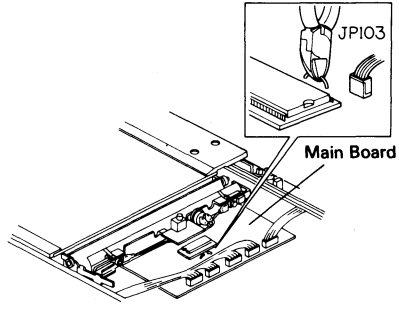

2. When connecting or cutting JP1 on the dc power supply board.
   (1) Open the clamshell.
   (2) Stand the clamshell straight up. (See "Transport Belt Replacement" section.)
   (3) Loosen the screw securing the transfer guide plate.
   (4) Remove the transfer guide plate (2 springs).
   (5) Remove the transfer corona unit (1 stud screw).
   (6) Remove the front and rear pressure springs and insulating sheet.
   (7) Connect or cut JP1 on the dc power supply board.

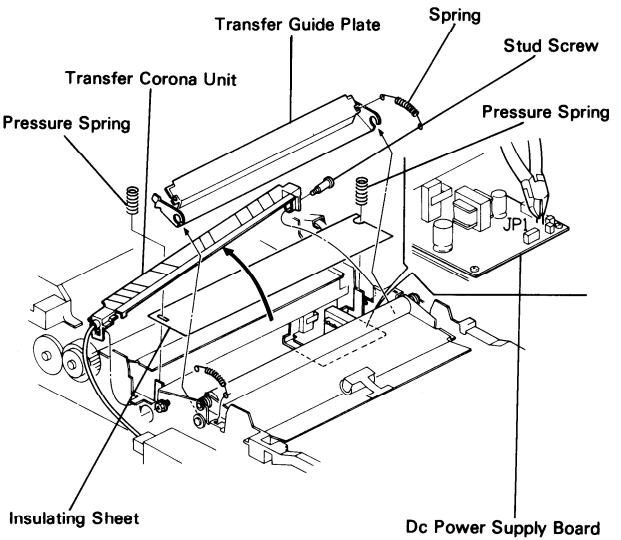

14-8. Others

Master Clutch Lubrication (refer to FT2050) 5-42

Slider Drive Assembly Removal (refer to FT2050) 5-43

50Hz/60Hz Conversion (refertoFT2050) 5-44

Paper Size Sensor Check 14-32

Paper Size Sensor Check

1. **Turn off the main switch.**
2. **Remove the exposure sensor cover (1 screw).**
3. **Turn on DIP SW 4 (test mode).**
4. **Turn on the main switch.**
5. **Repeatedly press the Copy Quantity key until 6 is displayed in the copy counter.**
6. **Press the Start key to start the test mode.**
7. **Move the side or rear fences on the paper tray and check the paper size sensors according to the right table.**

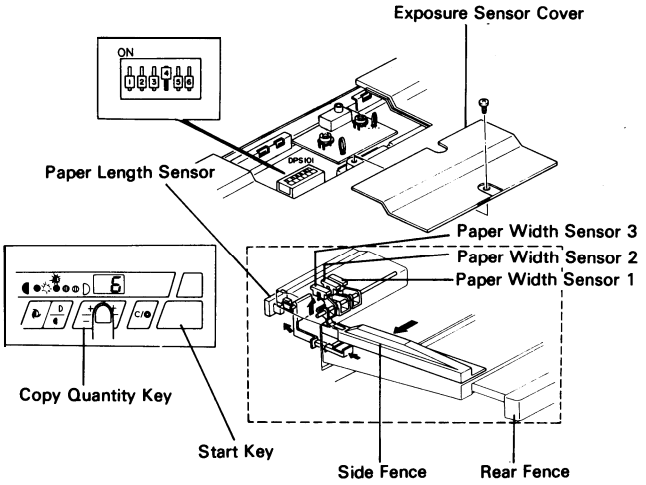

Sensor	ON	OFF
Paper length sensor	Auto ID Indicator Light ON	Auto ID Indicator Light OFF
Paper width sensor 1	Image Density Indicator Level 3 : Light ON	Image Density Indicator Level 3 : Light OFF
Paper width sensor 2	Image Density Indicator Level 2 : Light ON	Image Density Indicator Level 2 : Light OFF
Paper width sensor 3	Image Density Indicator Level 1 : Light ON	Image Density Indicator Level 1 : Light OFF

SECTION 15

TROUBLESHOOTING

15-1. Copy Quality Problems

No.	PHENOMENON	CAUSES	REPAIR (TREATMENTS)
1.	UNEVEN IMAGE DENSITY	(1) Fiber optics are dirty. (2) Charge corona wire is dirty. (3) Charge corona wire is mounted incorrectly. (4) Quenching lamp is dirty. (5) Reflector is dirty. (6) Exposure lamp is dirty.	(1) Clean them with the cleaner. (2) Clean it with the cleaner. (3) Check the wire is in the V-slot. (4) Clean it with a soft cloth. (5) Clean it with a soft cloth. (6) Clean it with a soft cloth.
2.	WHITE LINES OR STREAKS	(1) Toner blocking on the toner metering blade. (2) Insufficient toner in the development unit. (3) Grid plate is dirty. (4) Charge corona wire is dirty.	(1) Clean the blade with the toner agitator. (2) Replenish one toner cartridge and agitate the metering blade with the toner agitator. (3) Clean it with a blower brush. (4) Clean it with the cleaner.
3.	FUZZY COPY	(1) Original is not flat on the exposure glass. (2) Fiber optics are dirty. (3) Exposure glass is dirty. (4) Fiber optics are not installed securely.	(1) Instruct operator to correct original curl. (2) Clean them with the cleaner. (3) Clean it with a soft cloth. (4) Install the fiber optics in the holder securely.

NO.	PHENOMENON	CAUSES	REPAIR (TREATMENTS)
4.	DIRTY BACKGROUND	(1) Light fatigue of the master unit.	(1) Avoid exposing the master unit to light. (Do not leave the machine with the top unit opened for a long time)
		(2) Exposure glass is dirty.	(2) Clean it with a soft cloth.
		(3) Platen cover sheet is dirty.	(3) Clean it with a damp cloth.
		(4) Bias circuit failure.	(4) Check the circuit and replace the defective part.
		(5) Quenching lamp failure.	(5) Check the circuit and replace the defective part.
5.	DIRTY BACKSIDE OR LEADING EDGE	(1) Lower feed guide is dirty.	(1) Clean it with a damp cloth.
		(2) Transfer corona unit is dirty.	(2) Same as (1)
		(3) Transport guide plate is dirty.	(3) Same as (1)
		(4) Transport belt is dirty.	(4) Same as (1)
		(5) Registration roller is dirty.	(5) Clean it with a soft cloth.
6.	BLANK AREAS	(1) Paper is damp.	(1) Change the paper on the paper tray. (Instruct operator how to store paper when it is not to be used for a long time.)
		(2) Paper is curled.	(2) Correct the paper curl. (Instruct operator how to correct the curl.)

NO.	PHENOMENON	CAUSES	REPAIR (TREATMENTS)
7.	INSUFFICIENT IMAGE DENSITY	(1) Transfer corona wire is dirty. (2) Transfer corona wire is broken. (3) Transfer power pack failure. (4) Master unit has exceeded service life. (5) Paper is damp. (6) Development roller does not rotate.	(1) Clean it with cotton swabs. (2) Replace the transfer corona wire. (3) Check the circuit and replace the defective part. (4) Replace the master unit. (5) Change the paper on the paper tray. (6) Check the drive mechanism.
8.	WHITE COPY	(1) Charge corona wire is broken. (2) Charge power pack failure.	(1) Replace the charge corona wire. (2) Check the circuit and replace the defective part with a new one.
9.	FAINT COPY AT LEADING OR TRAILING EDGE	(1) Paper is curled. (2) Paper is damp.	(1) Correct the paper curl before making copies. (2) Change the paper on the paper tray. O Instruct operator how to store paper when it is not to be used for a long time. O Thick and/or thin paper sometimes make faint copies due to paper quality. O Instruct the operator to use recommended paper.

No.	PHENOMENON	CAUSES	REPAIR (TREATMENTS)
10.	WRINKLED COPY	(1) Paper is curled. (2) Paper is damp.	(1) Correct the paper curl. (2) Change the paper on the paper tray.
11.	BLACK LINES	(1) Thermistor is dirty. (2) Hot roller strippers are dirty. (3) Deformed toner metering blade.	(1) Clean it with a damp cloth. (2) Clean them with a damp cloth. (3) Replace the blade with new one.
12.	JITTER	(1) Insufficient friction of the slider clutch.	(1) Replace the clutch. (Forward or Reverse)
13.	MISFEED	(1) Paper incorrectly loaded. (2) Paper stiffness. (3) Tray feed clutch failure. (4) Paper feed and registration solenoid failure. (5) Paper feed drive failure.	(1) Load the paper on the paper tray correctly. (2) Use recommended paper. (3) Apply "Mobil Temp 78" to the clutch spring. (4) Check or replace the solenoid. (5) Check the paper feed drive mechanism.
14.	NOISE	(1) Lack of lubricant.	(1) Apply "Grease 501" to the gears. (2) Apply "Grease 501" to the fiber optics holders.

15-2. Defective Sensor/Switch Table

Sensor/switch	Opened	Shorted
Safety Switch	Copier can not be powered.	Safety function does not work.
Master Sensor	Self-diagnostic code "E7"	Self-diagnostic code "E7"
Home Position Switch	Self-diagnostic code "E2"	Self-diagnostic code "E2"
Pulse Generator	Self-diagnostic code "E6"	Self-diagnostic code "E6"
Exposure Sensor	Self-diagnostic code "E1"	Self-diagnostic code "El"
Toner End Sensor	Toner End indicator does not turn on at toner end.	Toner End indicator turns on with sufficient toner present.
Toner Overflow Sensor	Replace Toner Collection Unit indicator is displayed at non-overflow.	Replace Toner Collection Unit indicator does not turn on at overflow.
Auto ID Sensor	Dark copy image	Light copy image
Relay Feed Sensor	Misfeed will occur.	Check Paper Path indicator is displayed at power on. (Initial Jam Check)
Paper Feed Sensor	Misfeed will occur.	Check Paper Path indicator is displayed at power on. (Initial Jam Check)

Sensor/switch	Opened	Shorted
Exit Sensor	Misfeed will occur.	Check Paper Path indicator is displayed at power on. (Initial Jam Check)
Paper Width Sensors	CPU may detect wrong paper size.	CPU may detect wrong paper size.
Paper Length Sensor	CPU may detect wrong paper size.	CPU may detect wrong paper size.

15-3. Self Diagnostic Code Troubleshooting

E 1 Exposure

Definition

1. Lights if the duty (T_1/T) is maximum and the exposure light intensity is too weak.
2. Lights if the duty (T_1/T) is minimum and the exposure light intensity is too strong.

Possible causes

1. **Exposure sensor open or shorted**
2. **Exposure lamp stabilizer defective**
3. **Exposure lamp broken**
4. **Main board defective**

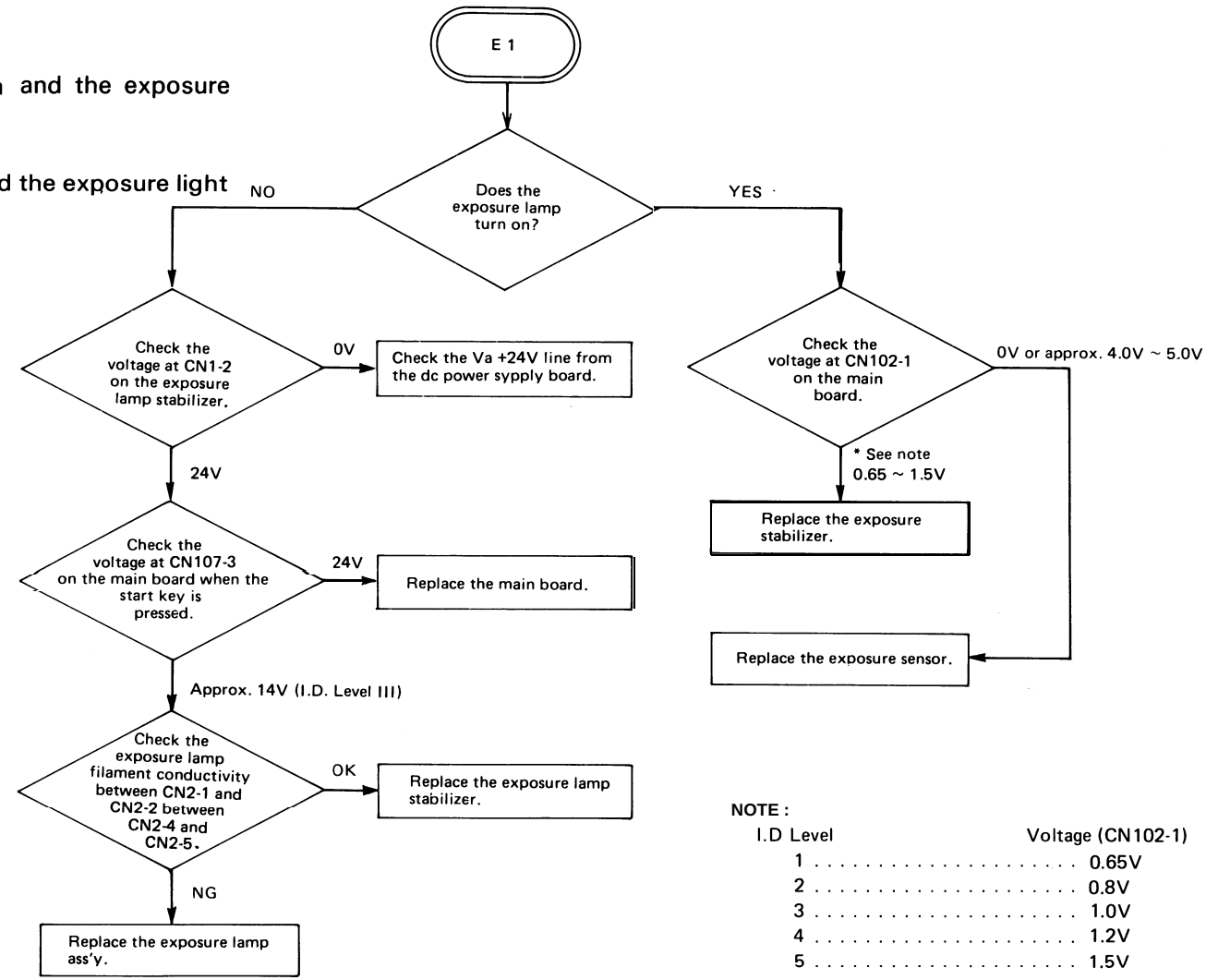

NOTE :

I.D Level	Voltage (CN102-1)
1	0.65V
2	0.8V
3	1.0V
4	1.2V
5	1.5V

E 2 Slider

Definition

1. **Lights if the home position SW does not turn on within 4 s after the start key is pressed.**
2. **Lights if the home position SW is off, when the slider starts forward drive.**
3. **Lights if home position SW does not turn off within 1 s after the slider starts.**

Possible causes

1. **Home position switch broken**
2. **Forward and/or reverse clutch malfunction**
3. **Slider solenoid defective**
4. **Main board defective**

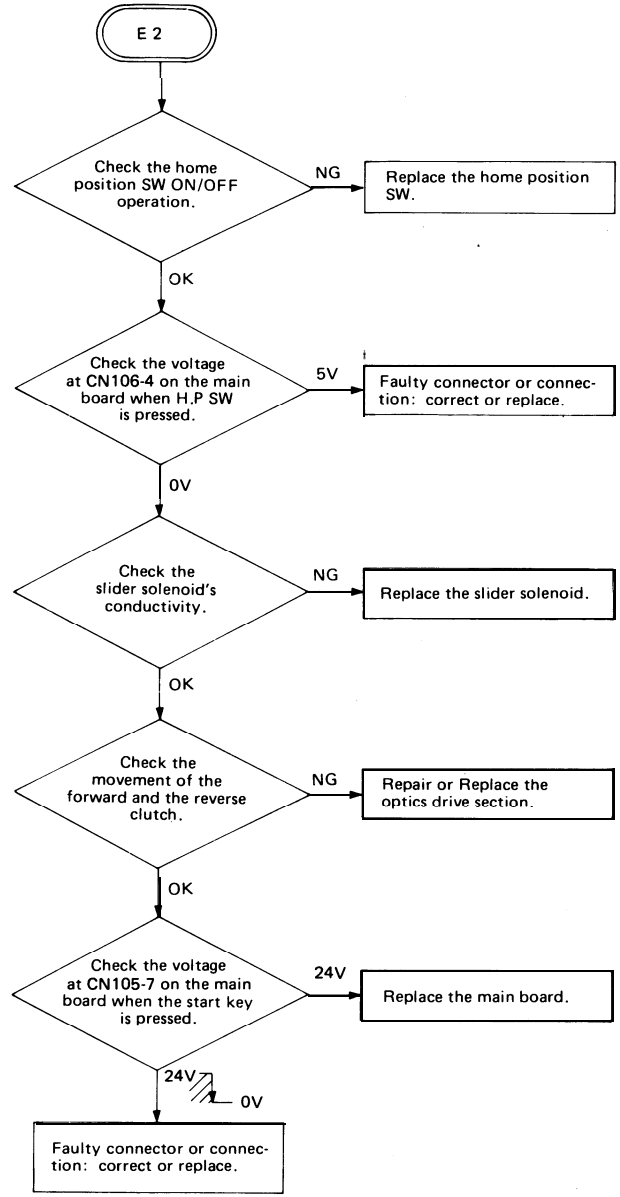

E 2 Slider

Definition

1. **Lights if the home position SW does not turn on within 4 s after the start key is pressed.**
2. **Lights if the home position SW is off, when the slider starts forward drive.**
3. **Lights if home position SW does not turn off within 1 s after the slider starts.**

Possible causes

1. **Home position switch broken**
2. **Forward and/or reverse clutch malfunction**
3. **Slider solenoid defective**
4. **Main board defective**

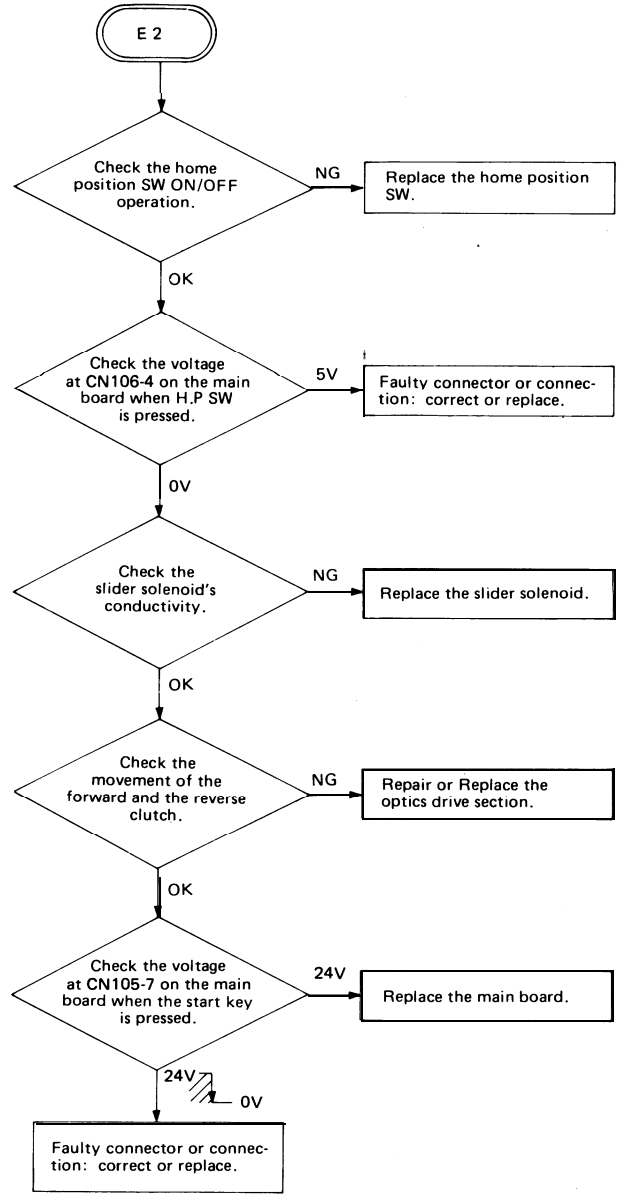

E 6 Functional Drive

Definition

1. **Lights if the CPU does not received a pulse from the pulse generator for 1.6 s during a copy cycle.**

Possible causes

1. **Main motor failure**
2. **Relay board defective**
3. **Timing belt broken or out of place**
4. **Main board defective**
5. **Pulse generator defective**

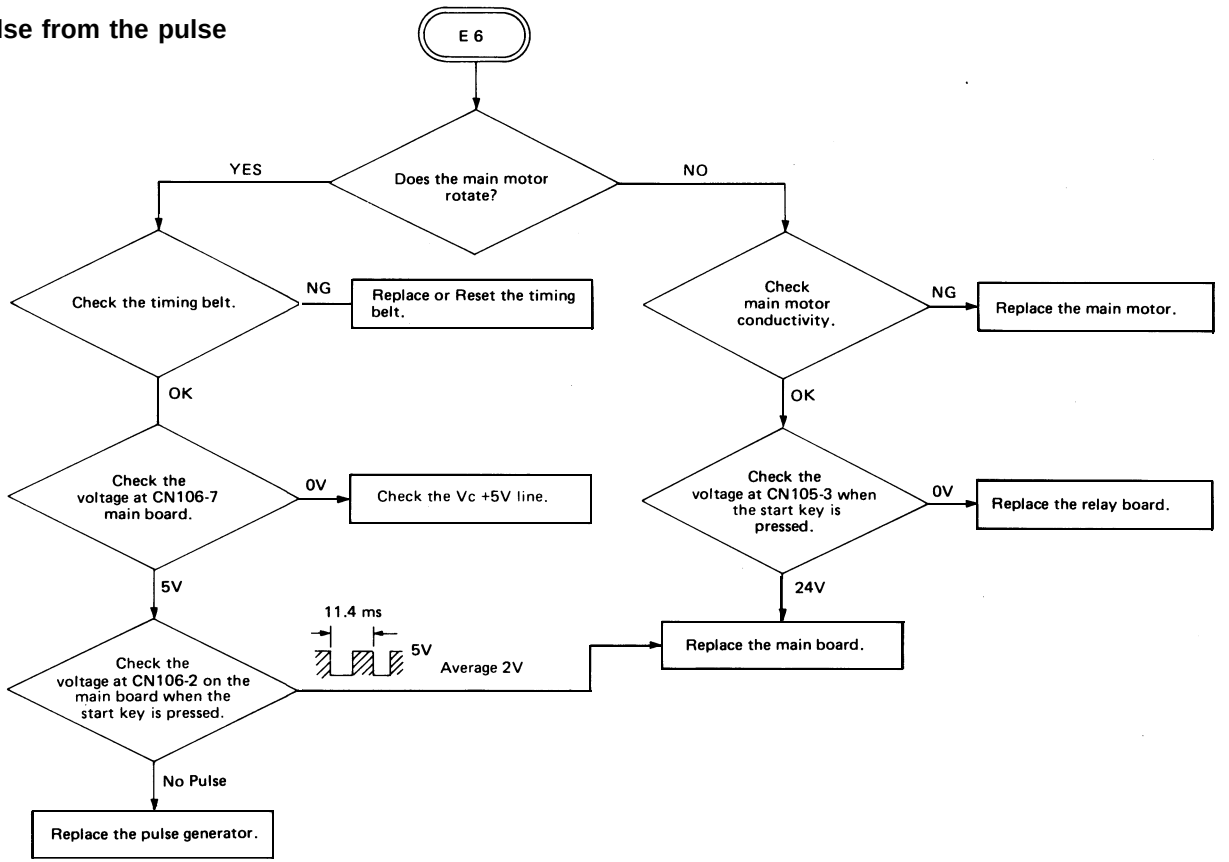

E 7 Master Unit

Definition

1. **Lights if the CPU does not detect the sensor plate within 6 s after belt rotation.**

Possible causes

1. No **master unit installed**
2. **Main board defective**
3. **Master sensor defective**
4. **Master unit defective**

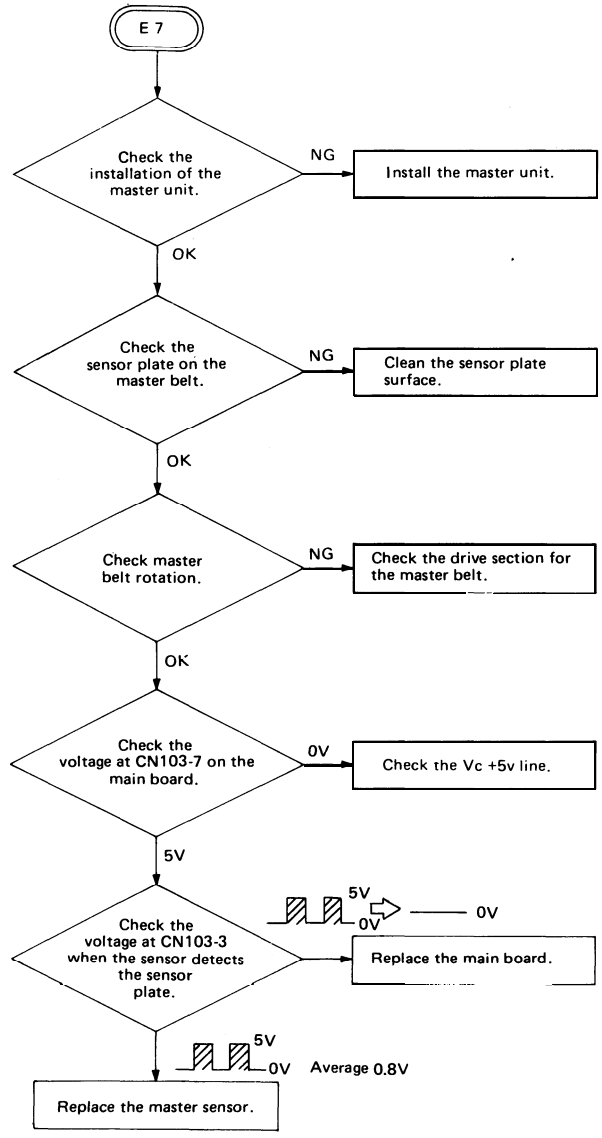

16-1. Schematic - Main Board

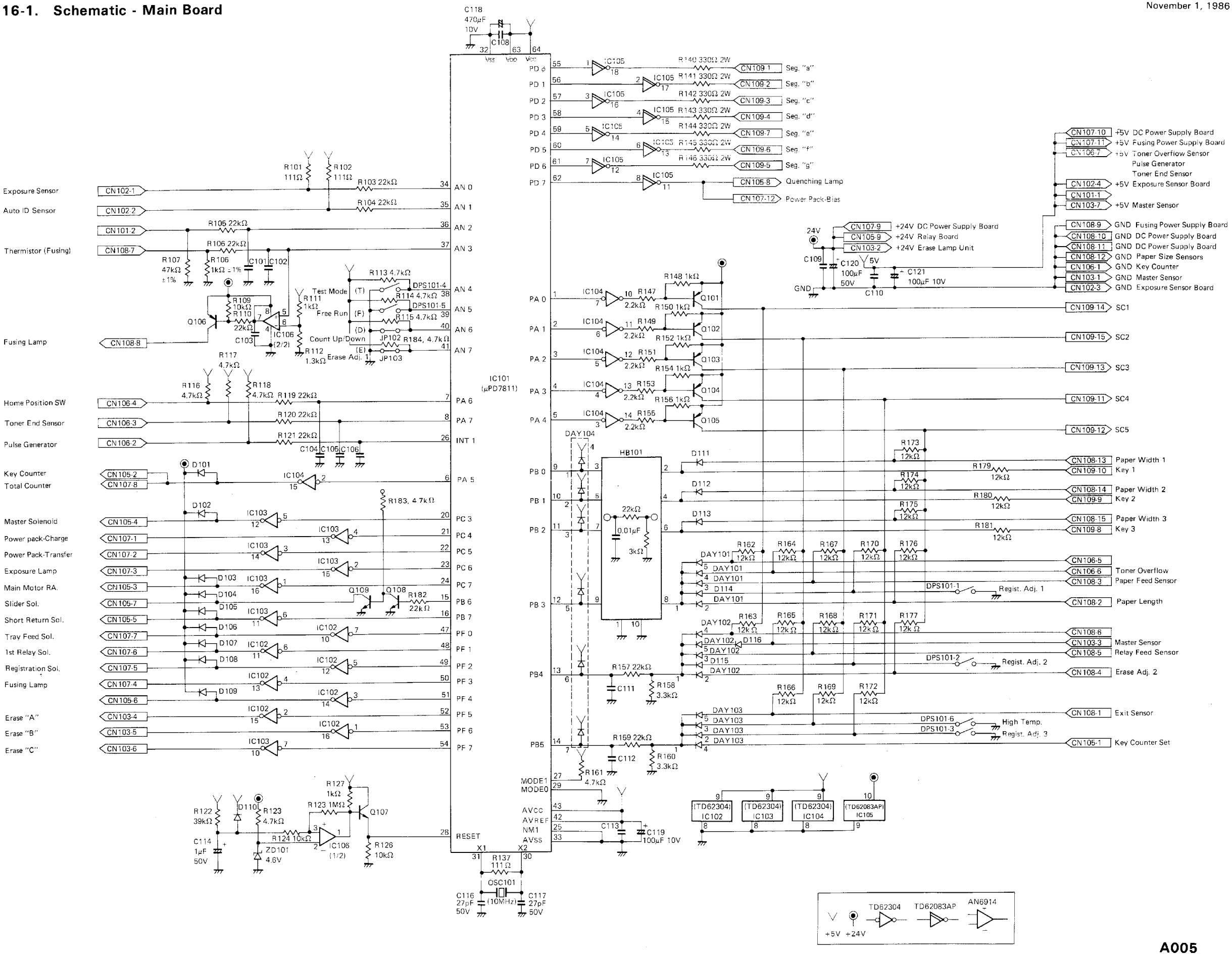

A005

[11" x 8-1/2"/A4 Sideways]

Process Speed = 115 mm/sec.
1 Pulse = 1.3 mm, 11.4 ms

