IMPORTANT SAFETY NOTICES

PREVENTION OF PHYSICAL INJURY

1. Before disassembling or assembling parts of the copier and peripherals, make sure that the copier power cord is unplugged.
2. The wall outlet should be near the copier and easily accessible.
3. Note that some components of the copier and the paper tray unit are supplied with electrical voltage even if the main switch is turned off.
4. If any adjustment or operation check has to be made with exterior covers off or open while the main switch is turned on, keep hands away from electrified or mechanically driven components.
5. The inside and the metal parts of the fusing unit become extremely hot while the copier is operating. Be careful to avoid touching those components with your bare hands.

HEALTH SAFETY CONDITIONS

1. Never operate the copier without the ozone filter installed.
2. Always replace the ozone filter with the specified one at the specified interval.
3. Toner and developer are non-toxic, but if you get either of them in your eyes by accident, it may cause temporary eye discomfort. Try to remove with eye drops or flush with water as first aid. If unsuccessful, get medical attention.

OBSERVANCE OF ELECTRICAL SAFETY STANDARDS

1. The copier and its peripheral must be installed and maintained by a customer service representative who has completed the training course on those models.
2. The RAM pack has a lithium battery which can explode if handled incorrectly, replace only with same RAM pack. Do not recharge, or burn this battery. Used RAM pack must be handled in accordance with local regulations.

SAFETY AND ECOLOGICAL NOTES FOR DISPOSAL

1. Do not incinerate the toner cartridge or the used toner. Toner dust may ignite suddenly when exposed to open flame.
2. Dispose of used toner, developer, and organic photoconductors according to local regulations. (These are non-toxic supplies.)
3. Dispose of replaced parts in accordance with local regulations.

SECTION 1

OVERALL MACHINE INFORMATION

1. SPECIFICATIONS

Configuration: Desk top

Copy Process: Dry electrostatic transfer system

Originals: Sheet/Book

Original Size: Maximum A3/11" x 17" – A077/A078 copiers
B4/10" x 14" – A076 copier

Copy Paper Size: Maximum – B4/10" x 14"
Minimum – A5 (lengthwise)/5 1/2" x 8 1/2"

Copy Paper Weight: Paper tray feed – 52 to 90 g/m^2 (14 to 24 lb)
Manual feed – 52 to 157 g/m^2 (14 to 42 lb)

Reproduction Ratios: 2 Enlargement and 3 Reduction
(A077/A078 copiers only)

	A4 Version	Letter Version
Enlargement	141% 122%	129% 121%
Full size	100%	100%
Reduction	93% 82% 71%	93% 74% 65%

Zoom: From 61% to 141% in 1% steps
(A077/A078 copiers only)

Copying Speed: 13 copies/minute (A4 lengthwise/8 1/2" x 11")
10 copies/minute (B4/10" x 14")

Warm-Up Time: 30 seconds (at 20°C/68°F)

First Copy Time: 9 seconds (A4 lengthwise/8 1/2" x 11")

Copy Number Input: Quantity keys, 1 to 99 (count up)

Manual Image Density Selection: 7 steps

Automatic Reset: 1 minute standard setting; can also be set to 3 minutes or no auto reset.

Automatic Start: When the Start key is pressed before the copier finishes the warm-up cycle, the copier starts making copies as soon as the warm-up cycle is completed.

Paper Capacity: Paper tray – 250 sheets
Manual feed table – 1 sheet

Toner Replenishment: Cartridge exchange (320 g/cartridge)

Copy Tray Capacity: 100 sheets (B4/10" x 14" or smaller)

Power Source: 110V/ 60Hz/ 15A (for Taiwan)
115V/ 60Hz/ 15A (for North America)
220~230V/ 50Hz/ 8A (for Europe)
220V/ 60Hz/ 8A (for Middle East)
240V/ 50Hz/ 8A (for Europe)
(Refer to the serial number plate (rating plate) to determine the power source required by the machine.)

Power Consumption:

	Copier Only	With DF
Maximum	1.4 kVA	1.5 kVA
Warm-up	0.60 kVA (average)	0.62 kVA (average)
Copy cycle	0.81 kVA (average)	0.86 kVA (average)
Stand-by	0.16 kVA (average)	0.18 kVA (average)

Noise Emission:

	Copier Only	With DF
Maximum	58 db	60 db
Warm-up	Less than 40 db	Less than 40 db
Copy cycle	Less than 55 db	Less than 55 db

Dimensions:

		Width	Depth	Height
Copier only	A076/A077 copiers	830 mm (32.7")	582 mm (23.0")	403 mm (15.9")
	A078 copier	830 mm (32.7")	582 mm (23.0")	503 mm (19.9")
With DF	A077 copier	830 mm (32.7")	582 mm (23.0")	463 mm (18.3")
	A078 copier	830 mm (32.7")	582 mm (23.0")	563 mm (22.2")

Weight:

Copier only	– A076/A077 Copiers	43 kg (94.8 lb)
	A078 Copier	51 kg (112.5 lb)
With DF	– A077 Copier	50 kg (110.3 lb)
	A078 Copier	58 kg (127.9 lb)

Optional Equipment:

Document feeder
Key counter
Drum anti-condensation heater
Optics anti-condensation heater

- Specifications are subject to change without notice.

2. COPY PROCESSES AROUND THE DRUM

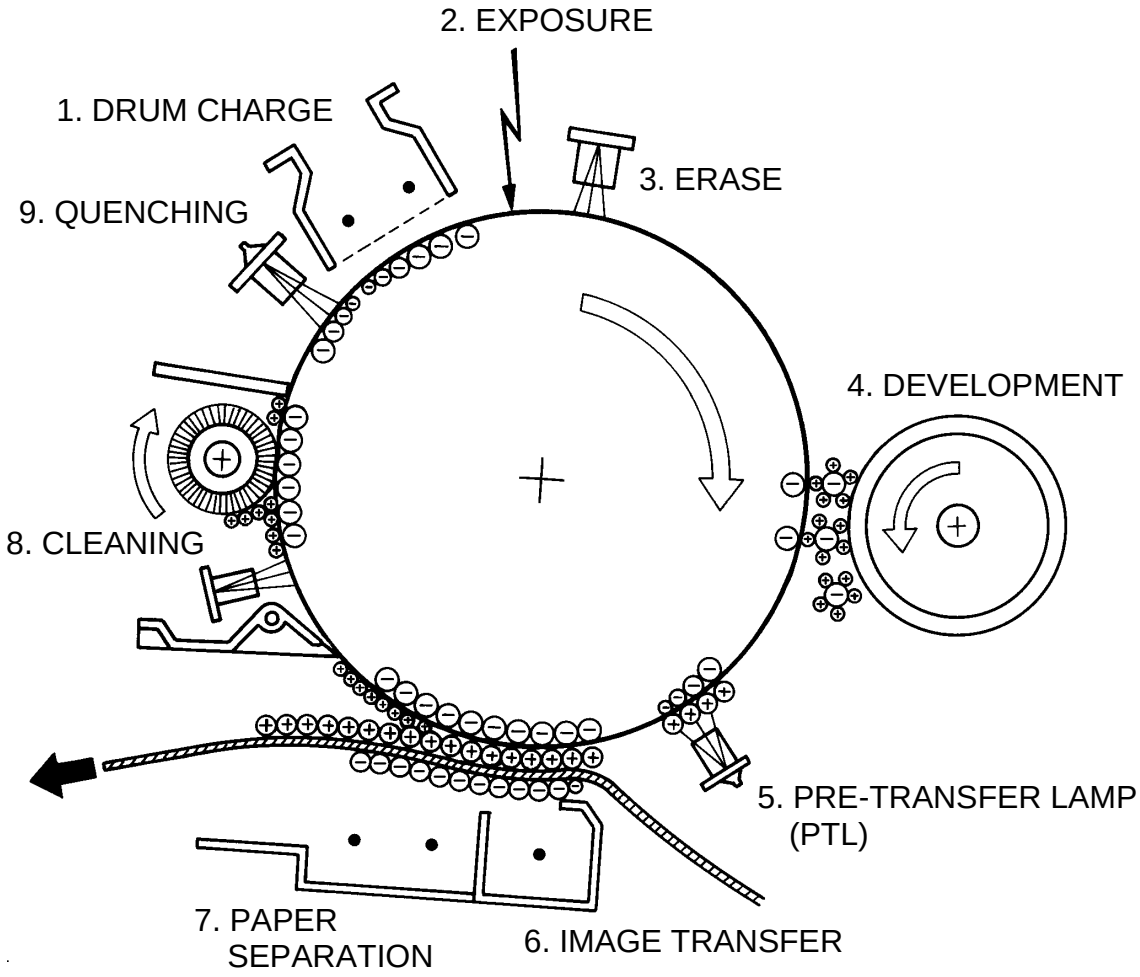

1. DRUM CHARGE

In the dark, the charge corona unit gives a uniform negative charge to the organic photoconductive (OPC) drum. The charge remains on the surface of the drum because the OPC drum has a high electrical resistance in the dark.

2. EXPOSURE

An image of the original is reflected to the OPC drum surface via the optics assembly. The charge on the drum surface is dissipated in direct proportion to the intensity of the reflected light, thus producing an electrical latent image on the drum surface.

3. ERASE

The erase lamp illuminates the areas of the charged drum surface that will not be used for the copy image. The resistance of the drum in the illuminated areas drops and the charge on those areas dissipates.

4. DEVELOPMENT

Positively charged toner is attracted to the negatively charged areas of the drum, thus developing the latent image. (The positive triboelectric charge is caused by friction between the carrier and toner particles.)

5. PRE-TRANSFER LAMP (PTL)

The PTL illuminates the drum to remove all negative charge from the exposed areas of the drum. This prevents the toner particles from being reattracted to the drum surface during paper separation and makes paper separation easier.

6. IMAGE TRANSFER

Paper is fed to the drum surface at the proper time so as to align the copy paper and the developed image on the drum surface. Then, a strong negative charge is applied to the back side of the copy paper, producing an electrical force which pulls the toner particles from the drum surface to the copy paper. At the same time, the copy paper is electrically attracted to the drum surface.

7. PAPER SEPARATION

A strong ac corona discharge is applied to the back side of the copy paper, reducing the negative charge on the copy paper and breaking the electrical attraction between the paper and the drum. Then, the stiffness of the copy paper causes it to separate from the drum surface. The pick-off pawls help to separate paper.

8. CLEANING

The cleaning brush removes most of the toner on the drum and loosens the remainder. Then the cleaning blade scrapes off the loosened toner.

9. QUENCHING

Light from the quenching lamp electrically neutralizes the surface of the drum.

3. COPY PROCESS CONTROL

	Grid Voltage	Exposure Lamp Voltage	Development Bias Voltage	Erase Lamp
Image Density Control	**1. Manual image density mode** Standard image density grid voltage + Manual image density level factor + Drum residual voltage (Vr) correction factor + Drum temperature correction factor **2. Auto image density mode** Standard image density grid voltage + [Auto image density level factor (SP34)] + Drum residual voltage (Vr) correction factor + Drum temperature correction factor	[Base exposure lamp voltage **(Manual or ADS mode) (SP48)**] + Reproduction ratio correction factor (A077/A078 copiers only) + Drum temperature correction factor + Drum residual voltage (Vr) correction factor	[Base bias voltage factor **(Manual or ADS mode [SP34])**] + [Image bias voltage adjustment factor (SP37)] + Drum residual voltage (Vr) correction factor + Drum temperature correction factor Note: Base bias voltage at manual ID level 7 can be adjusted by SP50.	Depends on paper size and reproduction ratio.
Toner Density Detection	Standard ID sensor grid voltage + Drum wear correction factor (SP57)	Same as image density control	[Depends on ID sensor bias setting (SP33)] Note: For initial 499 copies bias voltage is increased by –20 volts.	ID sensor pattern erase (Vsg detection: Full erase)
Residual Voltage (Vr) Detection	Standard ID sensor grid voltage + Drum wear correction factor (SP57)	Same as image density control	0 volts (Fixed)	Full erase (All LEDs ON)
Between Copies	0 volts (Fixed)	Exposure lamp turns off.	–160 volts (Fixed) + [Base bias voltage adjustment factor (SP37)] + Drum residual voltage (Vr) correction factor + Drum temperature correction factor	Full erase (All LEDs ON)

NOTE: The boxed item can be adjusted by SP mode.

4. MECHANICAL COMPONENT LAYOUT

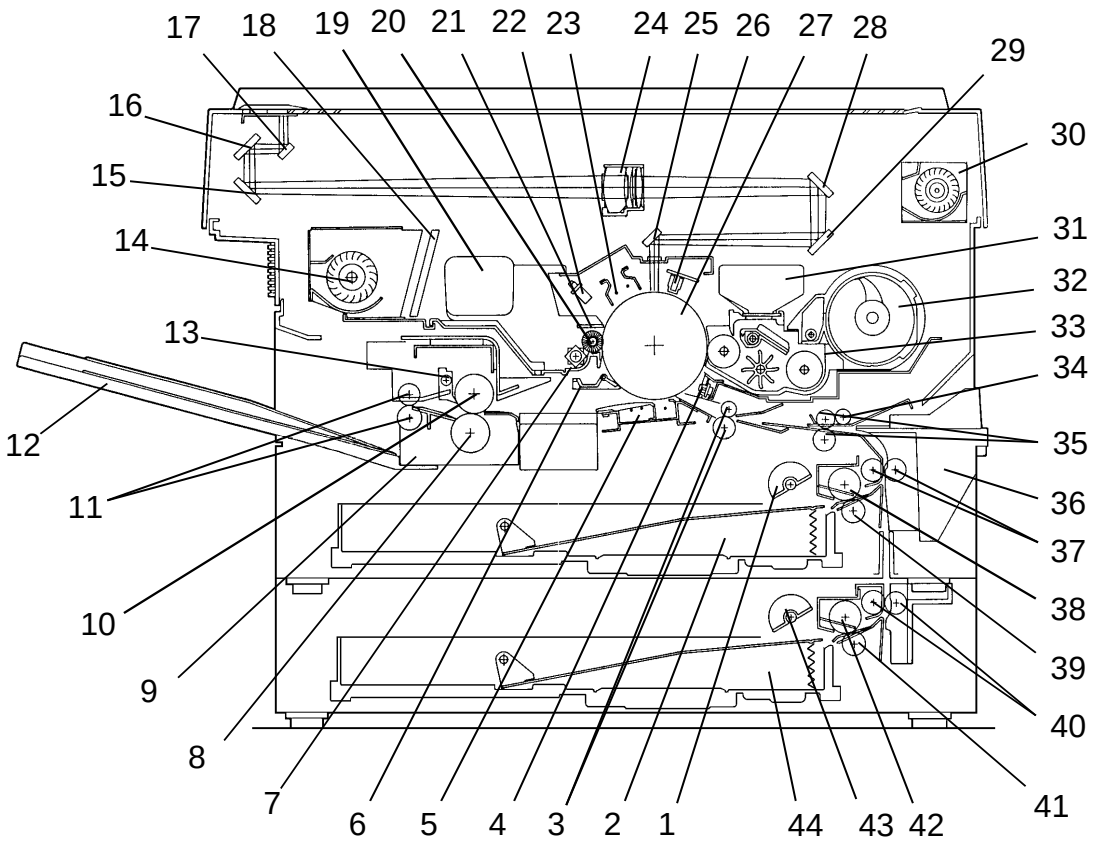

1. 1st Semicircular Pick-up rollers
2. 1st Paper Tray
3. Registration Rollers
4. Pre-transfer Lamp (PTL)
5. Transfer and Separation Corona Unit
6. Pick-off Pawls
7. Cleaning Unit
8. Pressure Roller
9. Fusing Unit
10. Hot Roller
11. Exit Rollers
12. Copy Tray
13. Hot Roller Strippers
14. Exhaust Blower Motor
15. 3rd Mirror
16. 2nd Mirror
17. 1st Mirror
18. Ozone Filter
19. Used Toner Tank
20. Cleaning Brush
21. Cleaning Blade
22. Quenching Lamp
23. Charge Corona Unit
24. Lens
25. 6th Mirror
26. Erase Lamp
27. Drum
28. 4th Mirror
29. 5th Mirror
30. Optics Cooling Fan
31. Developer Tank
32. Toner Supply Unit
33. Development Unit
34. Manual Feed Roller
35. 1st Relay Rollers
36. Manual Feed Table
37. 2nd Relay Rollers
38. 1st Paper Feed Roller
39. 1st Torque Roller
40. 2nd Feed Relay Rollers (A078 copier only)
41. 2nd Torque Roller (A078 copier only)
42. 2nd Paper Feed Roller (A078 copier only)
43. 2nd Semicircular Pick-up Rollers (A078 copier only)
44. 2nd Paper Tray (A078 copier only)

5. ELECTRICAL COMPONENT LAYOUT

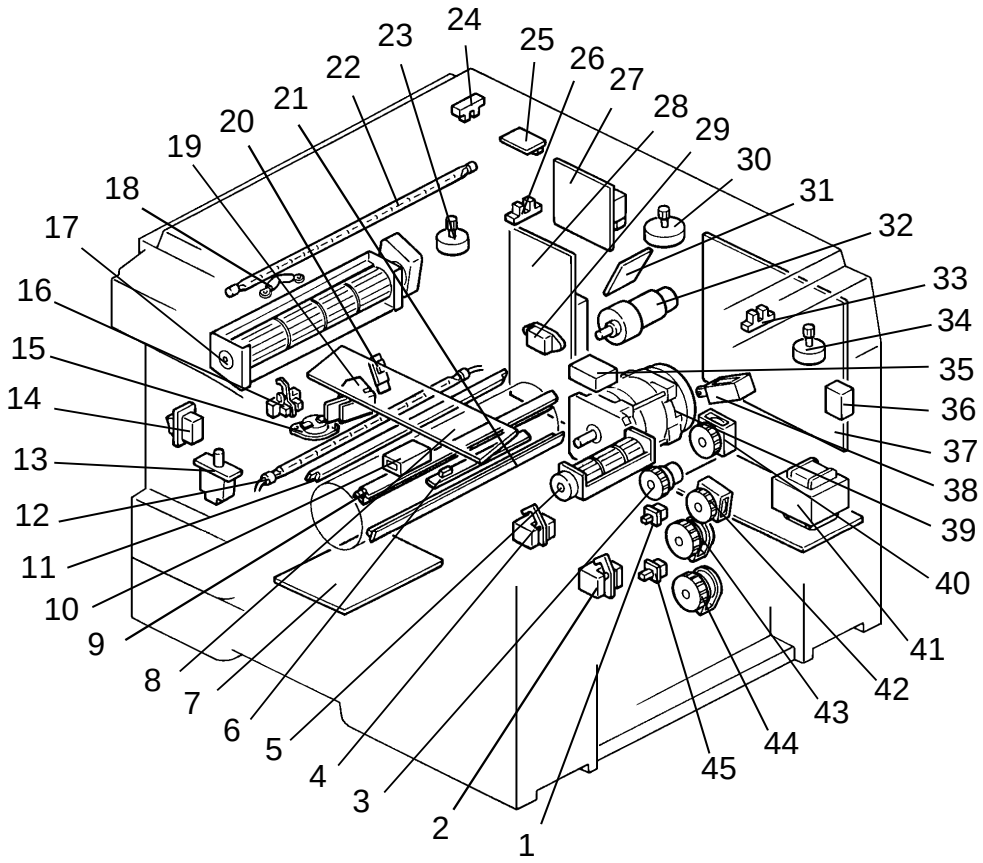

1. 1st Paper Tray Switch
2. Relay Sensor
3. Registration Clutch
4. Registration Sensor
5. Optics Cooling Fan Motor
6. Image Density Sensor (with drum thermistor)
7. Power Pack-TC/SC
8. Operation Panel Board
9. Erase Lamp
10. Total Counter
11. Quenching Lamp
12. Fusing Lamp
13. Front Cover Safety Switch
14. Main Switch
15. Fusing Thermoswitch
16. Exit Sensor
17. Exhaust Blower Motor
18. Optics Thermofuse
19. Auto Image Density Sensor
20. Fusing Thermistor
21. Pre-transfer Lamp
22. Exposure Lamp
23. Lens Motor (A077/A078 copiers only)
24. Scanner Home Position Sensor
25. DF Interface Board (A077/A078 copiers only)
26. Lens Home Position Sensor (A077/A078 copiers only)
27. Power Pack-CC/Grid/Bias
28. AC Drive Board
29. Fusing Triac (115 V only)
30. Scanner Motor
31. Drum Motor Board
32. Drum Motor
33. 4th/5th Mirror Home Position Sensor (A077/A078 copiers only)
34. 4th/5th Mirror Motor (A077/A078 copiers only)
35. Main Motor Capacitor
36. Key Counter (Option)
37. Main Board
38. Development Clutch Solenoid
39. Main Motor
40. Toner Supply Clutch
41. DC Power Supply Board
42. Relay Roller Clutch
43. 1st Paper Feed Clutch
44. 2nd Paper Feed Clutch (A078 copier only)
45. 2nd Paper Tray Switch (A078 copier only)

6. ELECTRICAL COMPONENT DESCRIPTIONS

Motors

SYMBOL	NAME	FUNCTION	INDEX NO.
M1	Main Motor	Drives all the main unit components except for the optics unit, drum unit and fans. (115/220–230/240 Vac [ac synchronous])	39
M2	Scanner Motor	Drives the scanners (1st and 2nd). (dc stepper)	30
M3	Lens Motor	Moves the lens position according to the selected magnification. (dc stepper) … A077/A078 copiers only	23
M4	4th/5th Mirror Motor	Positions the 4th/5th mirrors according to the selected magnification. (dc stepper) … A077/A078 copiers only	34
M5	Optics Cooling Fan Motor	Prevents built up of hot air in the optics cavity. (24 Vdc)	5
M6	Exhaust Blower Motor	Removes heat from around the fusing unit and moves the ozone built up around the charge section to the ozone filter. (115/220–230/240 Vac)	17
M7	Drum Motor	Drives the drum. (dc servo)	32

Magnetic Clutch

SYMBOL	NAME	FUNCTION	INDEX NO.
MC1	Registration Clutch	Drives the registration rollers.	3

Magnetic Spring Clutches

SYMBOL	NAME	FUNCTION	INDEX NO.
MSC1	Toner Supply Clutch	Drives the toner supply roller.	40
MSC2	Relay Roller Clutch	Drives the 1st and 2nd relay rollers.	42
MSC3	1st Paper Feed Clutch	Starts paper feed from the 1st paper feed station.	43
MSC4	2nd Paper Feed Clutch	Starts paper feed from the 2nd paper feed station. … A078 copier only	44

Solenoid

SYMBOL	NAME	FUNCTION	INDEX NO.
SOL1	Development Clutch Solenoid	Transmits the main motor drive to the development drive gears.	38

Switches

SYMBOL	NAME	FUNCTION	INDEX NO.
SW1	Main Switch	Supplies power to the copier.	14
SW2	Front Cover Safety Switch	Cuts the ac power line, when the front cover is open.	13
SW3	1st Paper Tray Switch	Detects when the 1st paper tray is set.	1
SW4	2nd Paper Tray Switch	Detects when the 2nd paper tray is set. … A078 copier only	45

Sensors

SYMBOL	NAME	FUNCTION	INDEX NO.
S1	Scanner Home Position Sensor	Informs the CPU when the 1st scanner is at the home position.	24
S2	Lens Home Position Sensor	Informs the CPU when the lens is at the home position (full size position). … A077/A078 copiers only	26
S3	4th/5th Mirror Home Position Sensor	Informs the CPU when 4th/5th mirrors assembly is at the home position (full size position). … A077/A078 copiers only	33
S4	Registration Sensor	1) Detects misfeeds. 2) Controls the relay roller clutch stop timing.	4
S5	Exit Sensor	Detects misfeeds.	16
S6	Relay Sensor	1) Detects when the copy paper is set in the manual feed table. 2) Detects misfeeds.	2
S7	Image Density (ID) Sensor	Detects the density of the image on the drum to control the toner density.	6
S8	Auto Image Density Sensor (ADS)	Senses the background density of the original.	19

Printed Circuit Boards

SYMBOL	NAME	FUNCTION	INDEX NO.
PCB1	Main Board	Controls all copier functions both directly and through the other PCBs.	37
PCB2	AC Drive Board	Drives all ac motors, the exposure lamp, fusing lamp, quenching lamp, exhaust blower motor.	28
PCB3	DC Power Supply Board	1) Steps down the wall voltage to 28 Vac. 2) Rectifies 28Vac input and outputs dc voltages. (30 volts, 24 volts, 5 volts)	41
PCB4	DF Interface Board	Interfaces between the copier main board and DF. … A077/A078 copiers only	25
PCB5	Operation Panel Board	Informs the CPU of the selected modes and displays the situations on the panel.	8

SYMBOL	NAME	FUNCTION	INDEX NO.
PCB6	Drum Motor Board	Controls the drum motor speed.	31

Lamps

SYMBOL	NAME	FUNCTION	INDEX NO.
L1	Exposure Lamp	Applies high intensity light to the original for exposure.	22
L2	Fusing Lamp	Provides heat to the hot roller.	12
L3	Quenching Lamp	Neutralizes any charge remaining on the drum surface after cleaning.	11
L4	Erase Lamp	Discharge the drum outside of the image area. Provides leading/trailing edge and side erases.	9
L5	Pre-transfer Lamp	Reduces charge on the drum surface before transfer.	21

Power Packs

SYMBOL	NAME	FUNCTION	INDEX NO.
P1	Power Pack –CC/Grid/Bias	Provides high voltage for the charge corona, grid, and the development roller bias.	27
P2	Power Pack –TC/SC	Provides high voltage for the transfer and separation corona.	7

Heaters

SYMBOL	NAME	FUNCTION	INDEX NO.
H1	Drum Anti-condensation Heater (Option)	Prevents moisture around the drum. When the main switch is turned on (off) the heater turns off (on).	N/A
H2	Optics Anti-condensation Heater (Option)	Prevents moisture from forming on the optics. When the main switch is turned on (off) the heater turns off (on).	N/A

Counters

SYMBOL	NAME	FUNCTION	INDEX NO.
CO1	Total Counter	Keeps track of the total number of copies made.	10
CO2	Key Counter (Option)	Used for control of authorized use. Copier will not operate until installed.	36

Others

SYMBOL	NAME	FUNCTION	INDEX NO.
TH1	Fusing Thermistor	Monitors the fusing temperature.	20
TH2	Drum Thermistor	Monitors the temperature around the drum.	6
TS	Fusing Thermoswitch	Provides back-up overheat protection in the fusing unit.	15
TF	Optics Thermofuse	Provides back-up overheat protection around the exposure lamp.	18
C	Main Motor Capacitor	Start capacitor.	35
TR	Fusing Triac	Switches the fusing lamp on and off. (115 V only) Note: In the 220V-230V/240V version, the triac is built-in the ac drive board	29

7. DRIVE LAYOUT

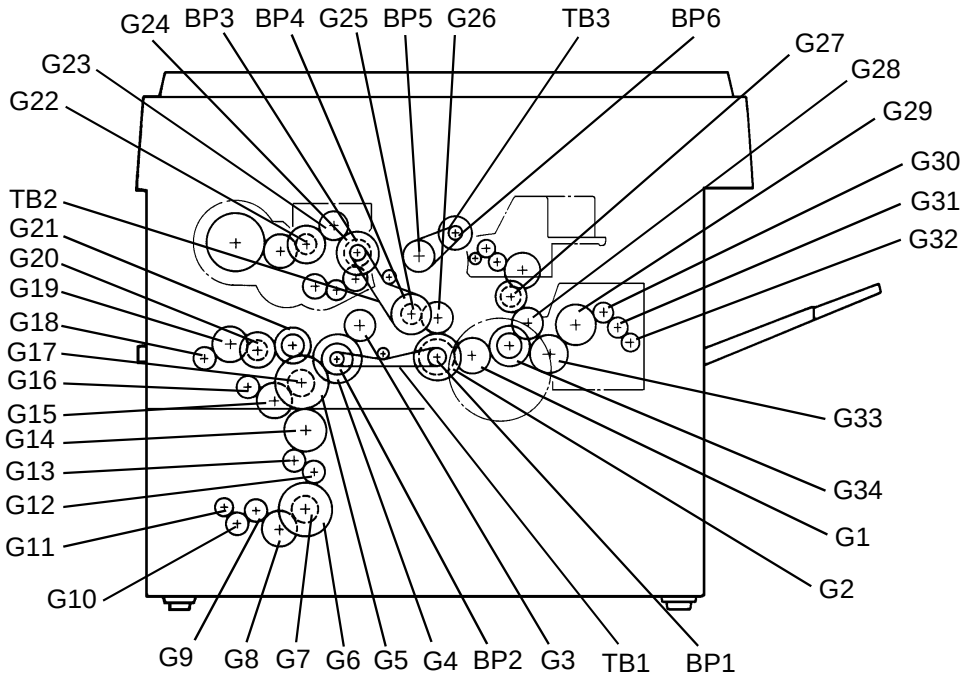

G1: Main Motor Gear → G34: Relay Gear

G34: Relay Gear
↓
G28: Relay Gear
↓
G27: Cleaning Drive Gear
↓
Cleaning Unit

G1: Main Motor Gear
↓
G2: Timing Belt Drive Gear → G26 Relay gear
↓
BP1: Timing Belt Pulley
↓
TB1: Timing Belt
↓
A

G26 Relay gear
↓
G25: Timing Belt Drive Gear
↓
BP4: Timing Belt Pulley
↓
TB2: Timing Belt
↓
Development Section
↓
BP3: Timing Belt Pulley
↓
G24: Development CL Gear
↓
Development CL → Development Unit
↓
G23: Relay Gear
↓
G22: Toner Supply CL Gear
↓
Toner Supply CL → Toner Supply Unit

G34: Relay Gear
↓
G33: Fusing Drive Gear
↓
Fusing and Exit Unit
↓
G29: Hot Roller Gear
↓
G30: Relay Gear
↓
G31: Relay Gear
↓
G32: Exit Roller Gear

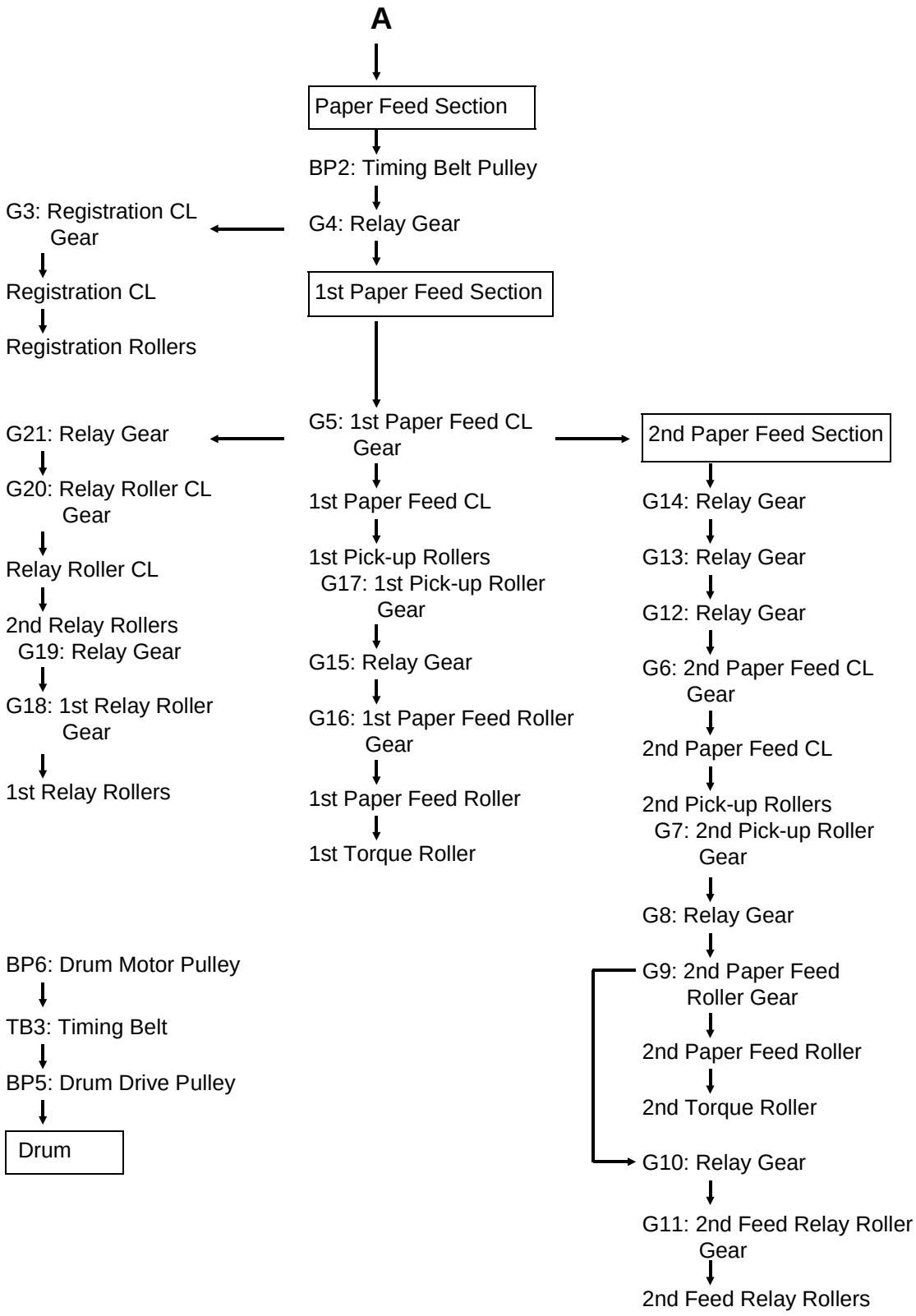
A
Paper Feed Section
BP2: Timing Belt Pulley
G4: Relay Gear
G3: Registration CL Gear
Registration CL
Registration Rollers
1st Paper Feed Section
G5: 1st Paper Feed CL Gear
G21: Relay Gear
G20: Relay Roller CL Gear
Relay Roller CL
2nd Relay Rollers
G19: Relay Gear
G18: 1st Relay Roller Gear
1st Relay Rollers
1st Paper Feed CL
1st Pick-up Rollers
G17: 1st Pick-up Roller Gear
G15: Relay Gear
G16: 1st Paper Feed Roller Gear
1st Paper Feed Roller
1st Torque Roller
2nd Paper Feed Section
G14: Relay Gear
G13: Relay Gear
G12: Relay Gear
G6: 2nd Paper Feed CL Gear
2nd Paper Feed CL
2nd Pick-up Rollers
G7: 2nd Pick-up Roller Gear
G8: Relay Gear
G9: 2nd Paper Feed Roller Gear
2nd Paper Feed Roller
2nd Torque Roller
G10: Relay Gear
G11: 2nd Feed Relay Roller Gear
2nd Feed Relay Rollers
BP6: Drum Motor Pulley
TB3: Timing Belt
BP5: Drum Drive Pulley
Drum

8. POWER DISTRIBUTION

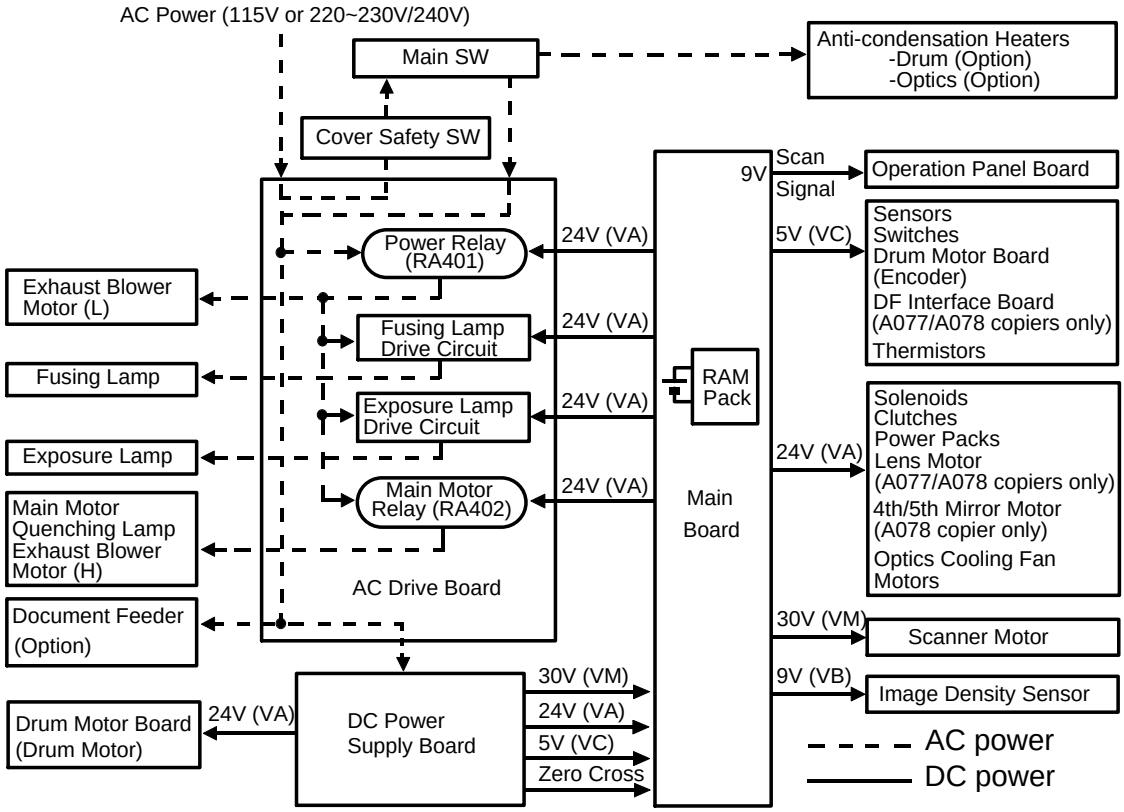

When this copier is plugged in and the main switch is turned off, ac power is supplied via the ac drive board to the anti-condensation heaters. When the front cover and/or the exit cover is open, the cover safety switch completely cuts off power to all ac and dc components. The RAM pack has a back up power supply (dc battery) for the service program mode data and misfeed job recovery.

When the main switch is turned on, the ac power supply to the anti-condensation heater is cut off and ac power is supplied to the ac drive board. The dc power supply board receives wall outlet ac power through the ac drive board.

The dc power supply board converts the wall outlet ac power input to +5 volts, +24 volts, +30 volts and a zero cross signal.

The +24 volts is supplied to both the main board and the drum motor board. The +5 volts, +30 volts and the zero cross signal are supplied to the main board.

The main board supplies dc power to all copier dc components except for the drum motor. All sensors (except for the ID sensor), switches, thermistors, the drum motor encoder, plus the DF interface board operate on +5 volts. The image density sensor as well as the operation panel operates on +9 volts, supplied by the main board. The scanner motor operates on +30 volts. All other dc components including the power relay (RA401) and the main motor relay (RA402) operate on +24 volts. The document feeder has a separate dc power supply.

When the main board receives power, it activates the power relay (RA401) which then supplies ac power to the fusing lamp drive circuit, and the exposure lamp drive circuit on the ac drive board. The exhaust blower motor begins rotating at low speed. The fusing lamp drive circuit receives a trigger signal from the main board and the fusing lamp lights. The exposure lamp does not turn on until the main board send a trigger pulse to the exposure lamp drive circuit.

When the Start key is pressed, the main board energizes the main motor relay (RA402). Then, the main motor and the quenching lamp turn on and the exhaust blower starts rotating at high speed.

When the main switch is turned off, power is cut off to the main board and to RA401, and the optional drum and optics anti-condensation heaters are turned on.

SECTION 2

DETAILED SECTION DESCRIPTIONS

1. DRUM

1.1 DRUM CHARACTERISTICS

The drum has the characteristics of:

1. Being able to accept a high negative electrical charge in the dark. (The electrical resistance of a photoconductor is high in the absence of light.)
2. Dissipating the electrical charge when exposed to light. (Exposure to light greatly increases the conductivity of a photoconductor.)
3. Dissipating an amount of charge in direct proportion to the intensity of the light. That is, where stronger light is directed to the photoconductor surface, a smaller voltage remains on the drum.
4. Under low temperatures, drum photosensitivity drops and residual voltage increases. This makes it necessary to monitor the drum temperature and some compensation is required.
5. During the drum's life, drum residual voltage gradually increases and the photoconductive surface becomes worn.
   Therefore, some compensation for these characteristics is required.

1.2 DRUM UNIT

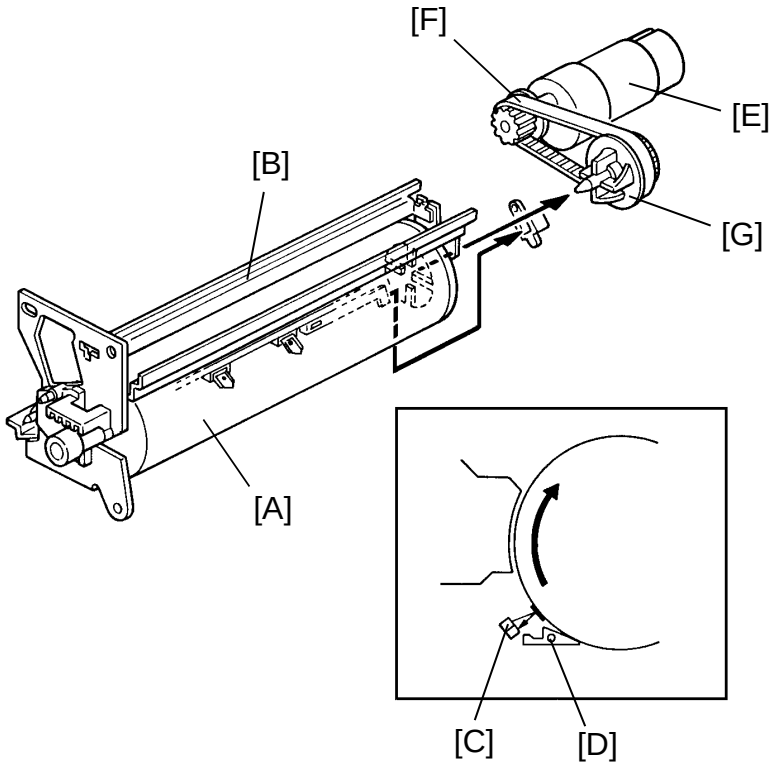

An organic photoconductor (OPC) drum [A] is used in this model.

A drum unit [B] holds the drum and prevents stress on the drum. The drum unit consists of an OPC drum, ID sensor board [C] and pick-off pawls [D]. When the drum, the pick-off pawls, or the ID sensor is replaced or cleaned, the drum unit must be removed from the copier.

The drum is driven by an independent drum motor [E] through a timing belt [F] and the drum drive pulley [G].

The pick-off pawls are always in contact with the drum surface.

The ID sensor board consists of the ID sensor and the drum thermistor.

1.3 DRUM MOTOR CONTROL

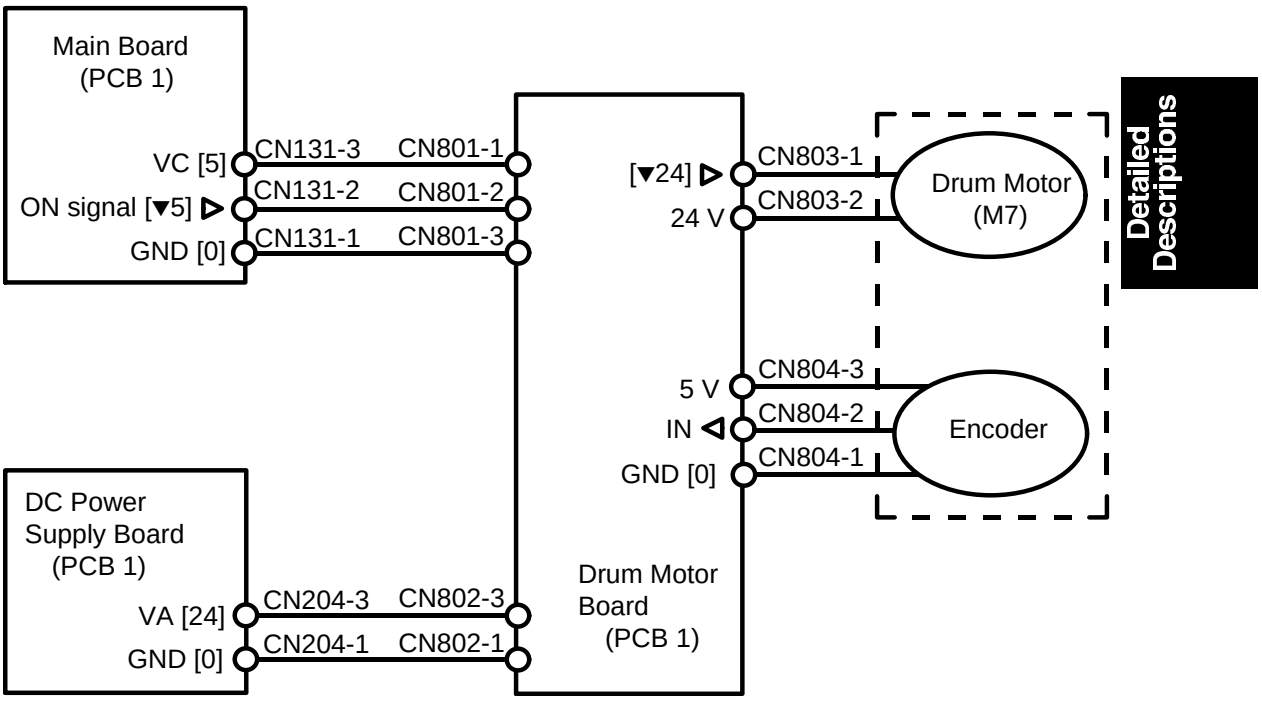

The drum motor is a dc servomotor. The drum motor board controls the speed of this servomotor.

When the Start key is pressed, the main board sends an "ON signal" to the drum motor board (CN131-2) to energize the drum motor.

The encoder on the servomotor has a photointerrupter that generates a series of pulse signals. The drum motor board monitors these pulse signals to regulate the motor speed (100 mm/second).

2. DRUM CHARGE

2.1 OVERVIEW

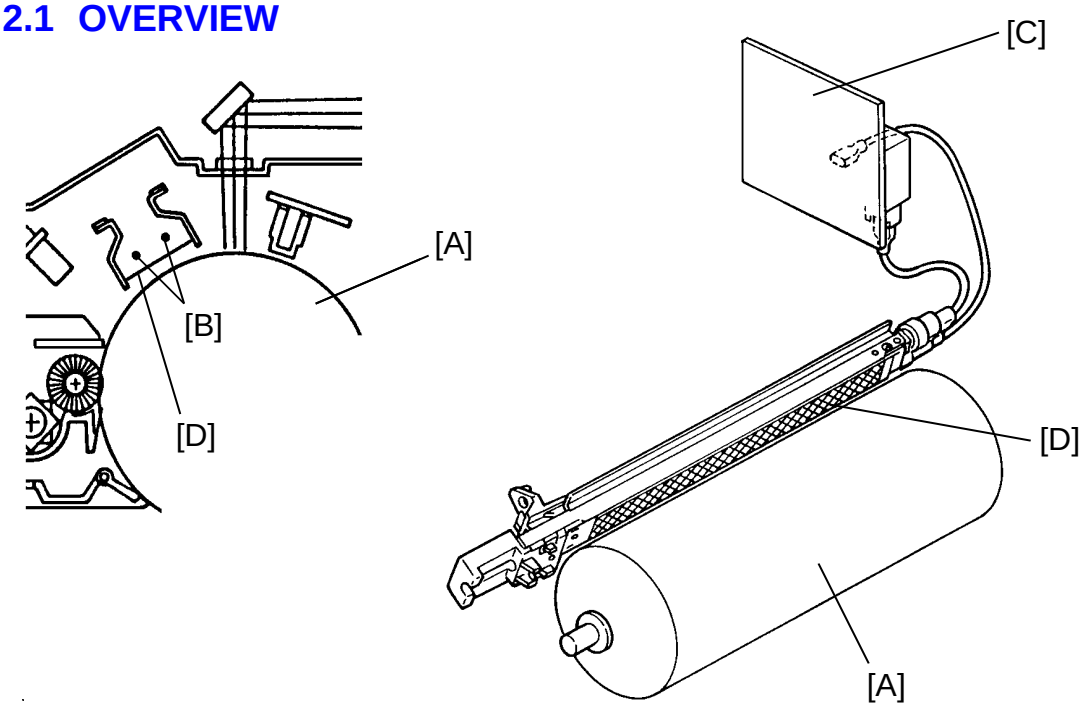

This copier uses a double wire scorotron and a highly sensitive OPC drum [A]. The corona wires [B] generate a corona of negative ions when the CC/Grid/Bias power pack [C] applies a high voltage. The CC/Grid/Bias power pack also applies a negative high voltage to a stainless steel grid plate [D]. This insures that the drum coating receives a uniform negative charge as it rotates past the corona unit.

The exhaust fan, located above the copy exit, causes a flow of air from the upper area of the development unit through the charge corona unit. This prevents an uneven build-up of negative ions that can cause uneven image density. The exhaust fan runs at half speed when in the stand-by condition and at full speed while copying.

The exhaust fan has an ozone filter (active carbon) which adsorbs ozone (O_3) generated by the corona charge. The ozone filter decreases in efficiency over time as it adsorbs ozone. The ozone filter should be replaced at every 80000 copies.

The flow of air around the charge corona wires may deposit paper dust or toner particles on the corona wire. These particles may interfere with charging and cause low density bands on copies. The wire cleaner cleans the corona wire when the operator slides the corona unit out and in.

2.2 CHARGE CORONA WIRE CLEANER MECHANISM

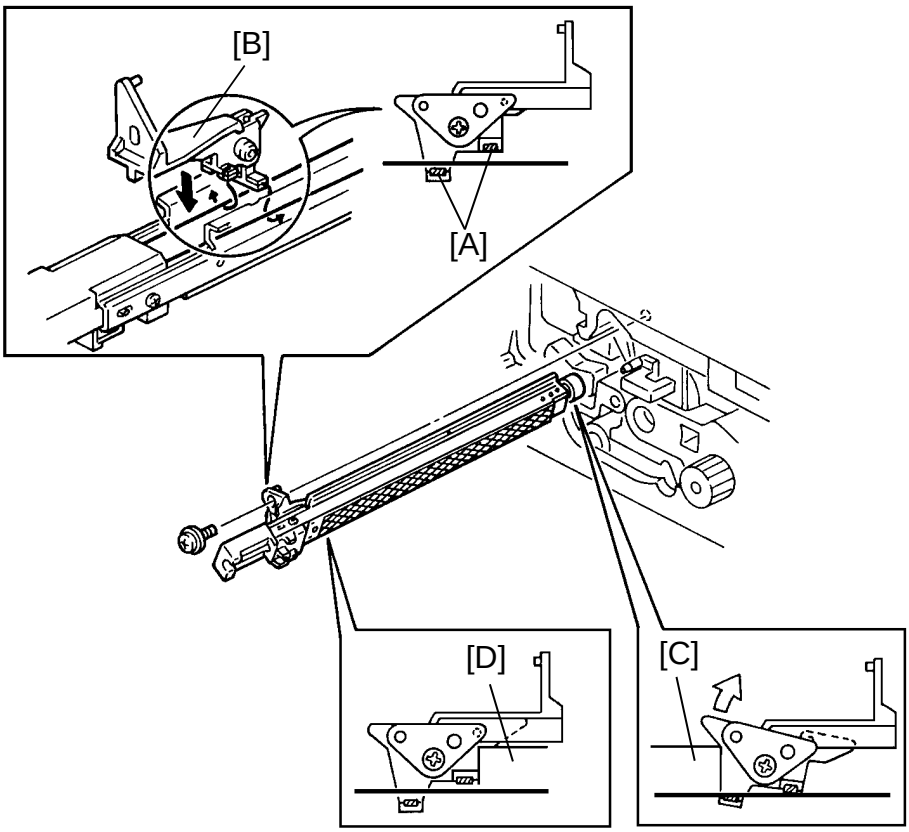

Pads [A] above and below the charge corona wires clean the wires as the charge unit is manually slid in and out.

The cleaner pad bracket [B] rotates when the charge unit is fully extended and the bracket is pulled up against the rear endblock [C]. This moves the pads against the corona wires (see illustration). If the charge unit is not fully extended, the pads do not touch the corona wires.

The pads move away from the wires when the charge unit is fully inserted and the cleaning bracket is pushed against the front endblock [D].

After copier installation the key operator should be instructed to use this mechanism when copies exhibit low image density bands.

2.3 CHARGE CORONA CIRCUIT

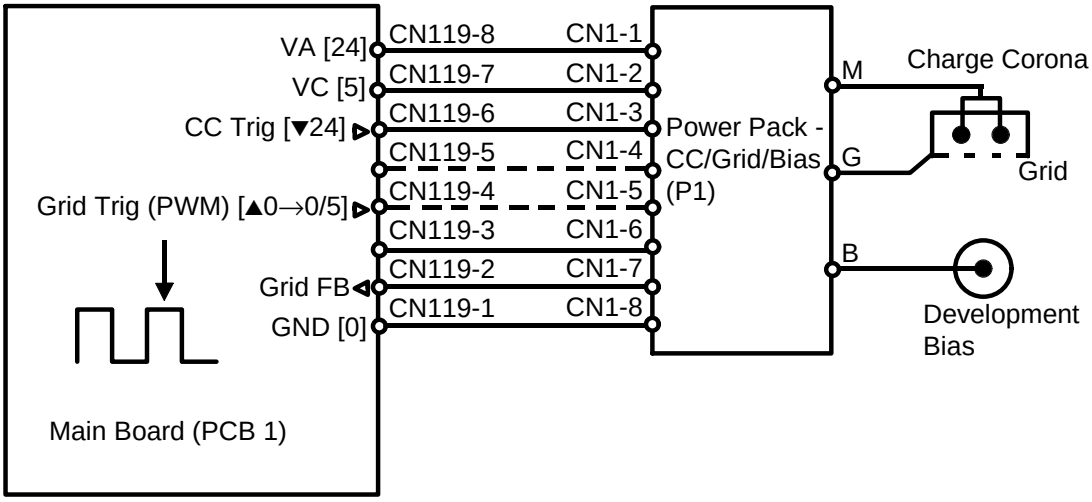

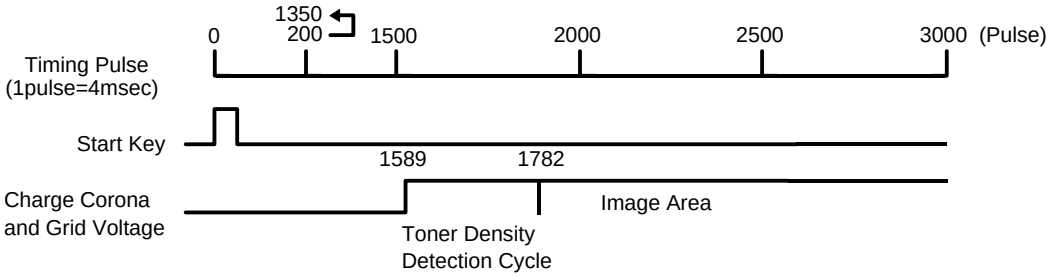

The main board supplies +24 volts to the CC/Grid/Bias power pack at CN1-1 as the power supply source. About 2.5 seconds after the Start key is pressed (during the toner density detection cycle about 1.8 seconds), the CPU drops CN1-3 from +24 volts to 0 volts. This energizes the charge corona circuit within the CC/Grid/Bias power pack, which applies a high negative voltage of approximately –7.0 K volts to the charge corona wires. The corona wires then generate a negative corona charge.

The grid plate limits the charge voltage to ensure that the charge does not fluctuate and that an even charge is applied to the drum surface.

The grid trigger pulse applied to CN1-5 is a pulse width modulated signal (PWM signal). This signal is not only a trigger signal, it also changes the voltage level of the grid. As the width of the pulse applied increases, the voltage of the grid also increases. The CPU monitors the grid voltage at CN119-2 and controls the width of the grid trigger pulses based on this feedback.

2.4 GRID VOLTAGE CORRECTION

To maintain good copy quality over the drum's life, the grid voltage is changed by the following:

- Drum residual voltage correction (Vr correction)
- Drum temperature correction
- Drum wear correction

2.4.1 Drum Residual Voltage Correction (Vr correction)

During the drum's life, the drum may fatigue electrically and residual voltage (Vr) on the drum may gradually increase. When this happens, the corona charged voltage on the drum is not discharged enough in the quenching and exposure processes. Even if the development bias is applied in the development process, the background area of the original on the drum may attract some toner. This may cause dirty background on copies. The Vr correction prevents this phenomenon as follows:

A pattern (Vr pattern) is developed on the drum every 1000 copies and its reflectivity is detected by the ID sensor to measure the residual voltage. This is called residual voltage detection. (If the reflectivity is low, the residual voltage will be high.) When the Vr pattern is developed, all blocks of the erase lamp turn on, and the development bias voltage is 0 volt.

The CPU determines what level of Vr correction is necessary depending on the output (Vr ratio [L]) from the ID sensor.

$$L = \frac{Vrp}{Vsg} \times 100\ (\%)$$

Vrp: ID sensor output for Vr pattern
Vsg: ID sensor output for bare drum

The current Vr ratio is displayed by SP67.

The CPU increases the development bias voltage depending on the Vr ratio to prevent dirty background on copies, (See page 2-33 for more information.) The CPU also increases the grid voltage to ensure proper image density depending on the Vr ratio. (See page 2-11.)

Because the grid voltage is increased, the charge voltage on the drum's surface is also increased. To compensate for the charge voltage increase, the exposure lamp voltage is also increased. (See page 2-21.)

2.4.2 Drum Temperature Correction

During a low drum temperature condition, the drum's residual voltage increases and drum photosensitivity drops due to the characteristics of the drum. This may cause dirty background on copies.
A drum temperature correction is made to compensate for this phenomenon as follows:

A drum thermistor on the ID sensor board monitors the temperature around the drum. When the drum temperature is less than 20°C, the CPU increases the development bias voltage to prevent dirty background on copies. (See page 2-33.) The CPU also increases the grid voltage to ensure proper image density. (See page 2-11.) The exposure lamp voltage is also increased to compensate for the drum photosensitivity drop. (See page 2-20.) When the drum temperature is 20°C or higher, the drum temperature correction is not made.

2.4.3 Drum Wear Correction

During the drum's life, the photoconductive surface of the drum becomes worn by contact with the cleaning brush. This effects ability of the drum to hold a charge. This characteristic especially affects developing of the ID sensor pattern. The ID sensor pattern developed on the drum becomes lighter causing higher toner concentration in the developer. The drum wear correction is made to prevent this phenomenon and is as follows:

The CPU keeps track of the drum motor rotation time that corresponds to the wear of the photoconductive layer. The grid voltage for the toner density detection increases at set interval. The grid voltage for the residual voltage (Vr) detection also increases at the same interval. (See page 2-12.) The drum motor rotation time is displayed by SP57.

2.5 GRID VOLTAGE FOR IMAGE DENSITY CONTROL

The main board controls the grid voltage for a copy image through the CC/Grid/Bias power pack. As the grid voltage becomes less, the copy image becomes lighter and vice versa. The grid voltage is based on the standard image grid voltage (Vg) and various correction factors.

The method of control is different depending on whether the image density is manually selected, or the auto image density mode is used.

The grid voltage for non-image areas (between copies) is 0 volt (Fixed).

The grid voltage while copying consists of the following factors:

1. Manual image density mode

Grid voltage = Standard image density grid voltage
(Vg = –680 volts [SP60=4])
+
Manual image density level factor
+
Drum residual voltage (Vr) correction factor
+
Drum temperature correction factor

2. Auto image density mode

Grid voltage = Standard image density grid voltage
(Vg = –680 volts [SP60=4])
+
Auto image density level factor (SP34)
+
Drum residual voltage (Vr) correction factor
+
Drum temperature correction factor

2.5.1 Manual Image Density Level Factor

Darker ⟷ Lighter

Manual ID level	1	2	3	4	5	6	7
Change of grid voltage (volts)	±0	±0	±0	±0	±0	+50	+50

The grid voltage does not change for manual image density levels 1 through 5. However, the exposure lamp voltage and the development bias voltage does vary depending on the manual image density level. (See page 2-19 and 2-31.)

The grid voltage at the manual image density level 6 is the same as the one at level 7, however, the exposure lamp voltage and the development bias voltage are different. (See page 2-19 and 2-31.)

2.5.2 Auto Image Density Level Factor (SP34)

Auto image density level	Data (SP34)	Change of grid voltage (volts)
Normal	0	±0
Darker	1	–50
Lighter	2	±0

The grid voltage and the exposure lamp voltage are constant regardless of the output from the auto image density sensor. Only the development bias voltage varies depending on the output from the auto image density sensor.

When the auto image density level data is set to lighter, the change of the grid voltage is 0 volt. However, the development bias voltage is changed –40 volts.

2.5.3 Drum Residual Voltage (Vr) Correction Factor

Vr ratio (L) (%) (SP67)	Change of grid voltage (volts)
100 to 84	±0
83 to 58	–40
57 to 41	–80
40 to 28	–120
27 to 0	–160

L = Vrp/Vsg x 100 (%)
Vrp: ID sensor output for Vr pattern
Vsg: ID sensor output for bare drum

During the drum's life, drum residual voltage (Vr) may gradually increase. Vr correction compensates for the residual voltage on the drum. The Vr correction is done every 1000 copies. The CPU increases the development bias voltage, the grid voltage, and the exposure lamp voltage. The above table shows how the grid voltage changes depending on the Vr ratio.

2.5.4 Drum Temperature Correction Factor

Drum Temperature	Change of grid voltage (volts)
20°C or higher	±0
Lower than 20°C	–40

2.6 GRID VOLTAGE FOR TONER DENSITY DETECTION AND RESIDUAL VOLTAGE (Vr) DETECTION

2.6.1 Grid Voltage for Toner Density Detection

Grid voltage = Standard ID sensor grid voltage (–460 volts [SP62=4])
+
Drum wear correction factor (SP57)

Drum Wear Correction Factor (SP57)

Drum motor rotation time (SP57)	Change of grid voltage (volts)
0 to 2H	±0
2 to 65H	–20
65 to 112H	–40
112 to 157H	–60
More than 157H	–80

2.6.2 Grid Voltage for Residual Voltage (Vr) Detection

Grid voltage = Standard ID sensor grid voltage (–460 volts [SP62=4])
+
Drum wear correction factor
(SP57 [See the above table.])

The grid voltage for the toner density detection is the same as the one for the residual voltage (Vr) detection, however, the development bias voltage is different. (See page 2-33 and 2-39.)

3. OPTICS

3.1 OVERVIEW

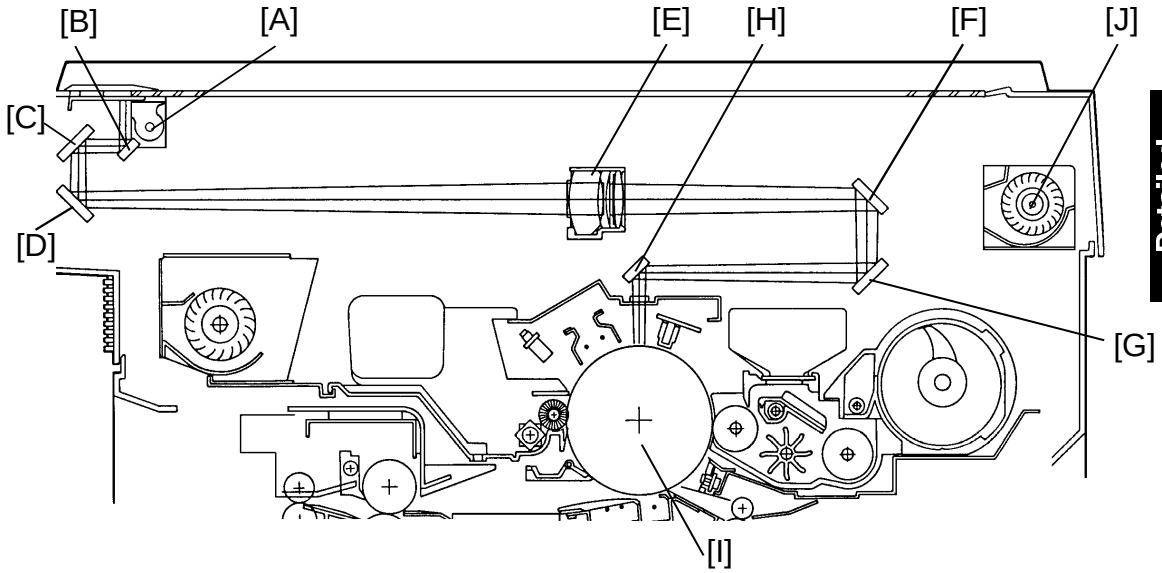

During the copy cycle, an image of the original is reflected onto the drum surface through the optics assembly as follows.

Light Path:

Exposure Lamp [A] → Original → First Mirror [B] → Second Mirror [C] → Third Mirror [D] → Lens [E] → Fourth Mirror [F]→ Fifth Mirror [G] → Sixth Mirror [H] → Drum [I]

The optics cooling fan [J] draws cool air into the optics cavity. The air flows from the right to the left in the optics cavity and exhausts through the vents in the left side of the upper cover. This fan operates during the copy cycle.

This copier has six standard reproduction ratios (A077/A078 copiers only), three reduction ratios, two enlargement ratios, and full size. It also has a zoom function. The operator can change the reproduction ratio in one percent steps from 61% to 141%.

Stepper motors are used to change the positions of the lens and mirrors (A077/A078 copiers only). Separate motors are used because the wide range of reproduction ratios makes it mechanically difficult for one motor to position both the lens and mirrors. A stepper motor is also used to drive the scanner. This motor changes the scanner speed according to the reproduction ratio.

The thermofuse opens at 126°C and removes ac power to the exposure lamp to prevent overheating.

3.2 SCANNER DRIVE

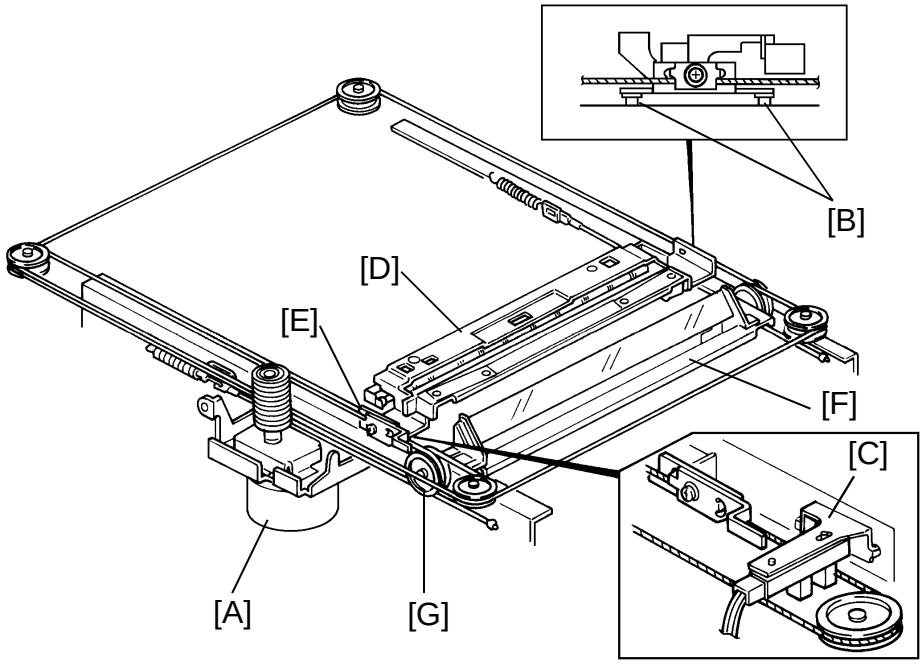

3.2.1 1st and 2nd Scanner Drive Mechanism

This model uses a stepper motor [A] to drive the scanners. Both ends of each scanner are driven to prevent skewing. The scanners have sliders [B], which ride on guide rails.

The scanner home position is detected by the home position sensor [C]. The scanner return position is determined by counting the scanner motor drive pulses.

The first scanner [D], which consists of the exposure lamp and the first mirror, is connected to the scanner drive wire by the wire clamps [E]. The second scanner [F], which consists of the second and third mirrors, is connected to the scanner drive wire by movable pulleys (the second scanner pulleys [G]). The pulleys move the second scanner at half the velocity of the first scanner. This maintains the focal distance between the original and the lens during scanning. This relationship can be expressed as:

V1r	= 2 (V2r) = VD/r
where r	= Reproduction ratio
V1r	= First scanner velocity (when the reproduction ratio is "r")
V2r	= Second scanner velocity (when the reproduction ratio is "r")
VD	= Drum peripheral velocity (100 mm/s)

3.3 LENS DRIVE (A077/A078 copiers only)

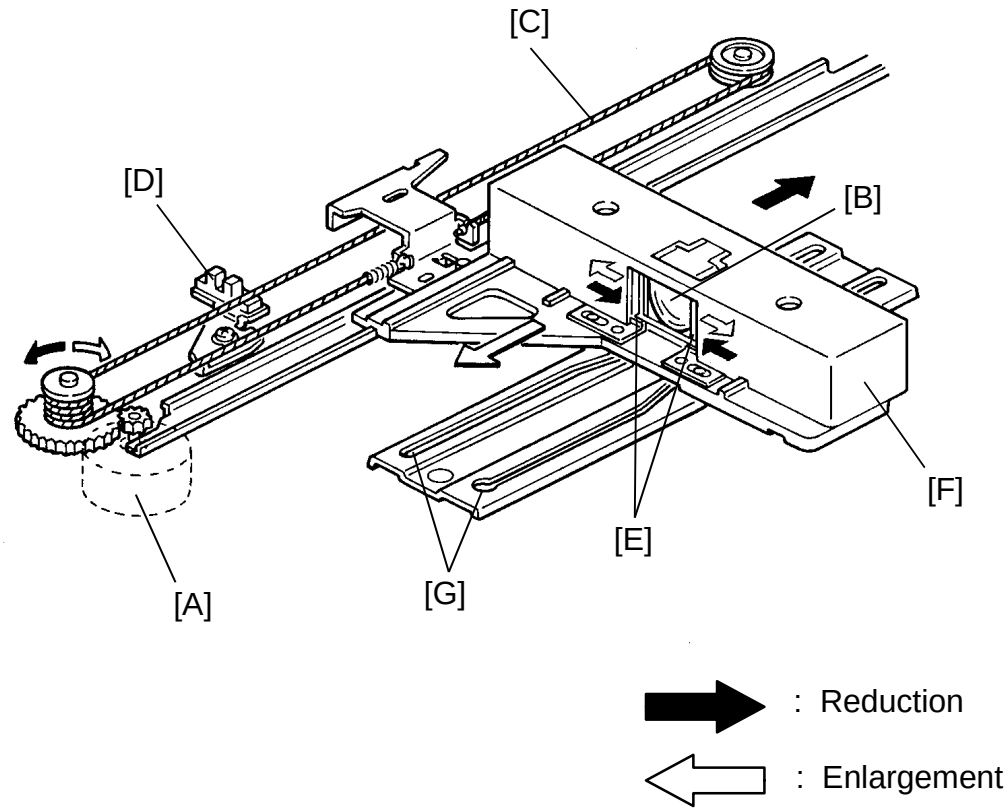

3.3.1 Lens Drive

The lens motor [A] (stepper motor) changes the lens [B] position through the lens drive wire [C] in accordance with the selected reproduction ratio to provide the proper optical distance between the lens and the drum surface.

The rotation of the lens drive pulley moves the lens back and forth in discrete steps. The home position of the lens is detected by the home position sensor [D]. The main board keeps track of the lens position based on the number of pulses sent to the lens motor.

3.3.2 Shading Mechanism

The shading plates [E] are installed on the lens housing [F] and are slid open and shut by the groove cams [G]. When the lens moves in the reduction direction, the groove cams move the shading plates closer together. The plate blocks part of the light passing through the lens to keep the intensity of the light on the drum even.

3.3.3 Lens Positioning

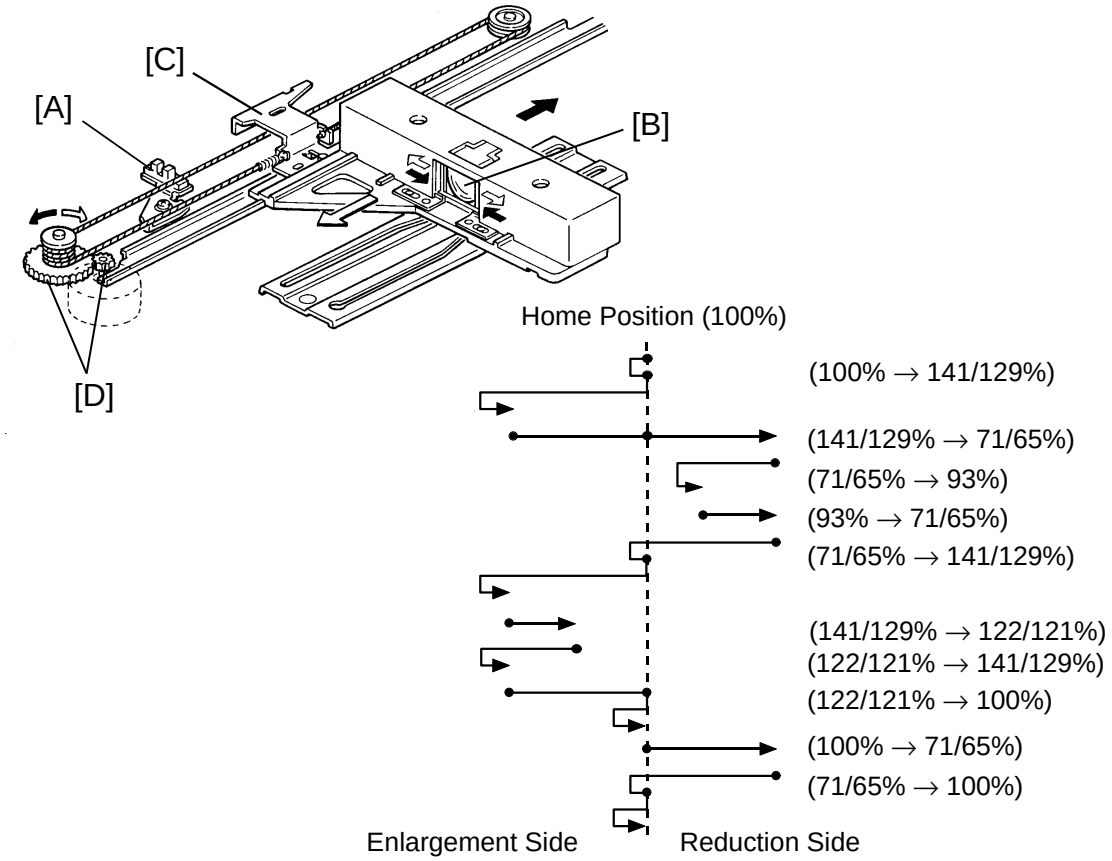

The lens home position sensor [A] informs the main board when the lens is at full size position (home position). The main board determines the lens stop position in reduction and enlargement modes by counting the number of steps the motor makes with reference to the lens home position. When a new reproduction ratio is selected, the lens [B] moves directly to the selected magnification position.

The lens home position is registered each time the lens starts from or passes through the lens home position sensor. As the lens moves from the enlargement side to the reduction side, the sensor registers the home position. This occurs when the actuator plate [C] enters the lens home position sensor.

A small vibration can be observed when the lens moves through home position from the reduction side to the enlargement side because the lens is going in the wrong direction to register the home position. The lens overshoots the home position by only one pulse before going back to register the home position.

The lens always stops while moving from left to right (as viewed from the front) to minimize the error caused by mechanical play in the drive gears [D].

3.4 4TH/5TH MIRROR DRIVE (A077/A078 copiers only)

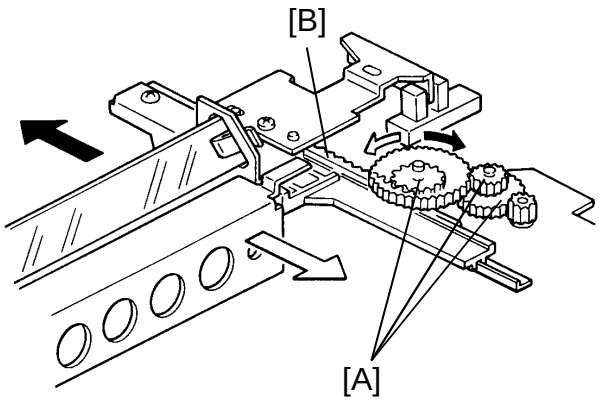

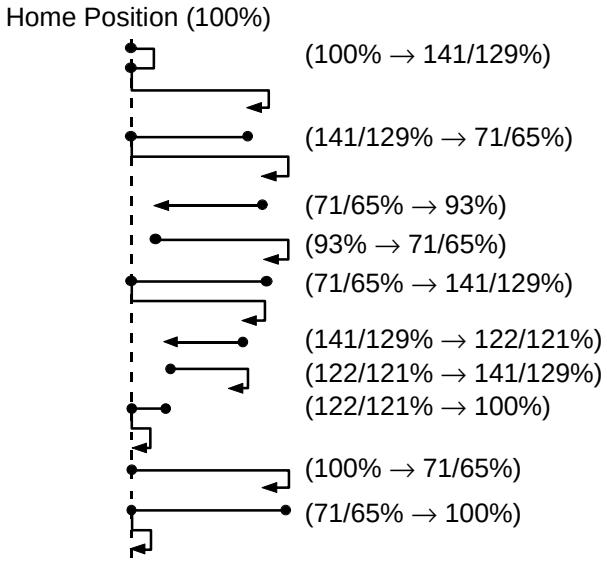

3.4.1 Drive

The 4th/5th mirror drive motor (stepper motor) changes the 4th/5th mirror assembly position through the pinion gears [A] and the rack gear [B] in accordance with the selected reproduction ratio to provide the proper optical distance between the lens and drum surface.

3.4.2 Positioning

The positioning mechanism is similar to that of lens positioning, as shown in the above positioning chart. The 4th/5th mirror assembly always stops while moving from right to left (as viewed from the front).

3.5 AUTOMATIC IMAGE DENSITY SENSING

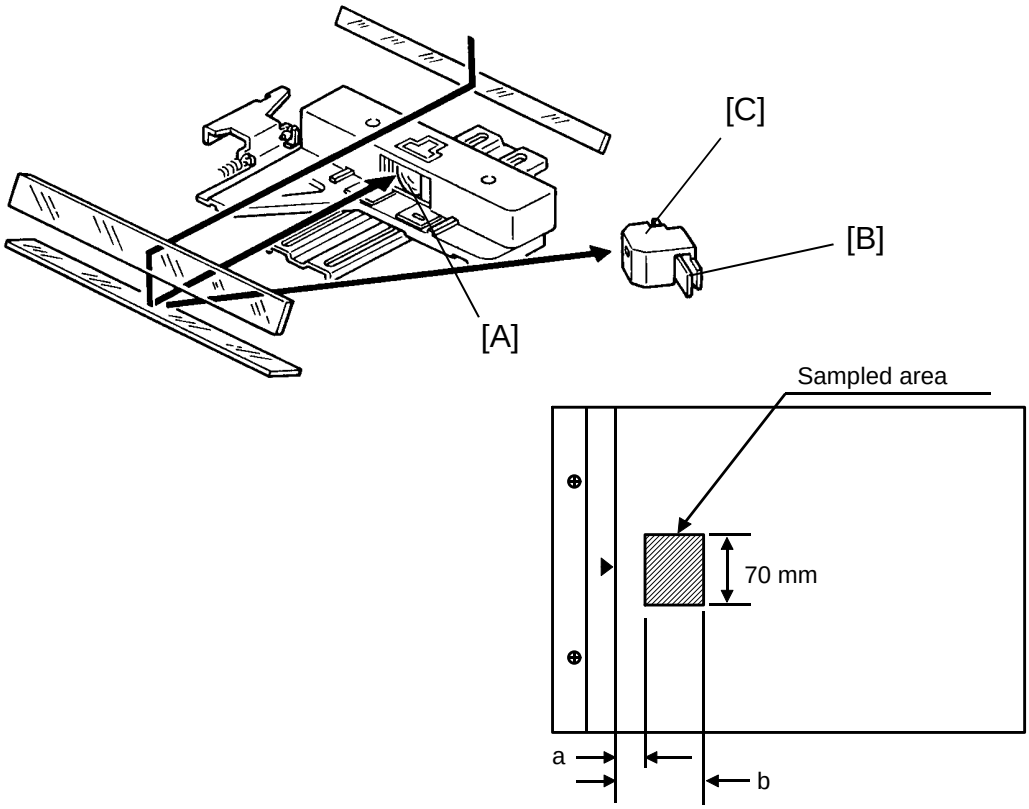

Light from the exposure lamp is reflected from the original and travels to the lens [A] via the mirrors. The auto ID sensor [B], a photodiode, is mounted on the upper front frame. The sensor cover [C] has a hole in it to allow light to fall directly onto the sensor. Sampling starts 10 millimeters from the leading edge of the original and continues for 40 millimeters from the leading edge of original in full size mode. The length of "a" and "b" will vary depending on the selected reproduction ratio (A077/A078 copiers only).

The lengths "a" and "b" in each reproduction ratio are calculated as follows:

$$a = \frac{10\ mm}{Reproduction Ratio\ (\%)} \times 100 \qquad b = \frac{40\ mm}{Reproduction Ratio\ (\%)} \times 100$$

The photosensor circuit converts the light intensity to a voltage. The detected voltage is amplified and sent to the main PCB. The CPU stores the voltage of each sampled point in RAM. It then computes the image density of the original from the maximum sample voltage and changes the development bias accordingly. (See page 2-31 for details.) The exposure lamp voltage is constant regardless of the image density of the original.

3.6 EXPOSURE LAMP VOLTAGE CONTROL

The main board controls the exposure lamp voltage through the ac drive board. The exposure lamp voltage is based on the base lamp voltage and various correction factors.

The exposure lamp voltage consists of the following four factors:

Exposure lamp voltage =
Base exposure lamp voltage factor
(Manual or auto image density mode)
+
Reproduction ratio correction factor
(A077/A078 copiers only)
+
Drum temperature correction factor
+
Drum residual voltage (Vr) correction factor

3.6.1 Base Lamp Voltage Factor In Manual Image Density Mode

Darker ⟷ Lighter

Manual ID Level	1	2	3	4	5	6	7
Exposure Lamp Data	Vo –4	Vo –4	Vo –2	Vo ±0	Vo+2	Vo+2	Vo+4

The above table shows changes in the exposure lamp data in the manual image density mode.

SP48 sets the exposure lamp data for level 4 (Vo) of manual image density mode. A value from 100 to 150 can be selected.

3.6.2 Base Lamp Voltage Factor In Auto Image Density Mode

In the auto ID mode, the CPU selects the level 4 (Vo) exposure lamp data (SP48) regardless of the input from the auto image density sensor.

3.6.3 Reproduction Ratio Correction Factor (A077/A078 copiers only)

Reproduction ratio (%)	Change of exposure lamp data
61 to 62	–2
63 to 119	±0
120 to 129	+2
130 to 141	+4

The exposure lamp data is increased or decreased depending on the selected magnification ratio in order to compensate for the change in the concentration of light on the drum.

3.6.4 Drum Temperature Correction Factor

Drum temperature	Change of exposure lamp data
20°C or higher	±0
Lower than 20°C	+2

The exposure lamp data is increased to compensate for the drum photosensitivity drop under low temperature.

If the temperature is lower than 20°C when the main switch is turned on, the CPU increases the exposure lamp data by +2 as shown in the above table.

When the temperature goes to 20°C or higher, this correction is canceled.

3.6.5 Drum Residual Voltage (Vr) Correction Factor

During the drum's life, drum residual voltage (Vr) may gradually increase. Vr correction compensates for the residual voltage on the drum. The Vr correction is done every 1,000 copies. Depending on the Vr ratio (SP67), the CPU increases the development bias voltage, the grid voltage and the exposure lamp voltage. The following table shows how the lamp data changes depending on the Vr ratio.

Vr ratio (L) (%) (SP67)	Change of exposure lamp data
100 to 84	±0
83 to 58	+2
57 to 41	+4
40 to 28	+6
27 to 0	+8

L = Vrp/Vsg x 100 (%)
Vrp: ID sensor output for Vr pattern
Vsg: ID sensor output for bare drum

3.7 EXPOSURE LAMP CONTROL CIRCUIT

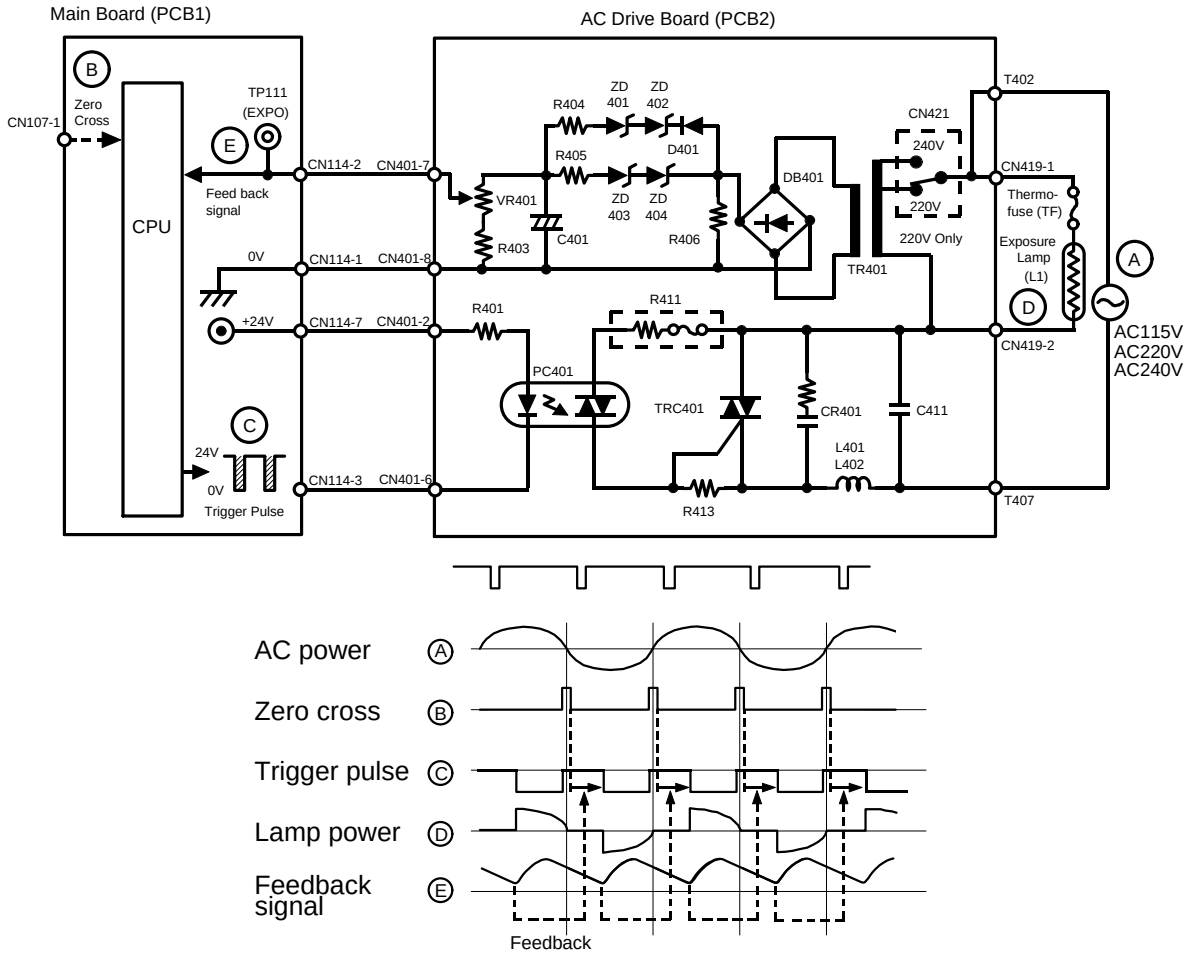

The main board sends lamp trigger (LOW signal) pulses to the ac drive board from CN114-3. PC401 activates TRC401, which provides ac power to the exposure lamp, at the lead edge of each trigger pulse.

The voltage applied to the exposure lamp is also provided to the feedback circuit. The feedback circuit steps down (TR401), rectifies (DB401), and smoothes (sensor diodes and capacitors) the lamp voltage. The CPU monitors the lowest point of the smoothed wave (feedback signal), which is directly proportional to the actual lamp voltage.

The CPU changes the timing of the trigger pulses in response to the feedback voltage. If the lamp voltage is too low, the CPU sends the trigger pulses earlier so that more ac power is applied to the exposure lamp. This feedback control is performed instantly; so, the lamp voltage is always stable even under fluctuating ac power conditions.

The voltage applied to the exposure lamp can be changed with SP48 (Light Intensity Adjustment). The ADS voltage adjustment (SP56) must be done whenever the light intensity adjustment is done.

3.8 OPTICS COMPONENT CONTROL TIMING

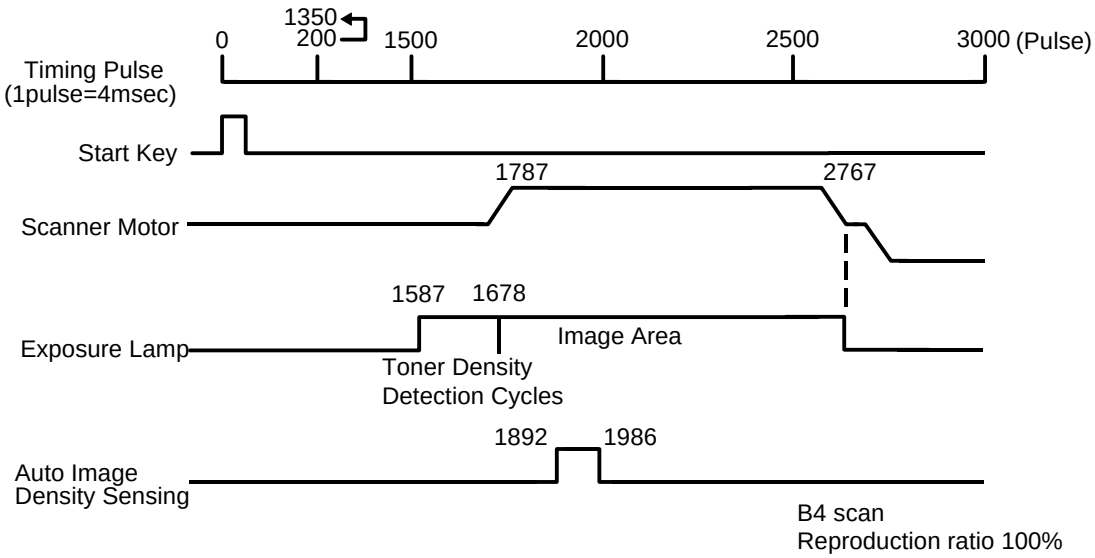

The exposure lamp turns on about 2.1 seconds (on toner density detection cycles about 1.7 seconds) and the scanner motor energizes about 2.5 seconds for the forward scan after the Start key is pressed.

About 6.5 seconds after (B4 scan) the Start key is pressed, the exposure lamp turns off and the scanner motor de-energizes and reverses for the returns scan.

In the auto image density mode, the auto image density sensor senses the original background density between about 3 seconds and 3.3 seconds after the Start key is pressed.

4. ERASE

4.1 OVERVIEW

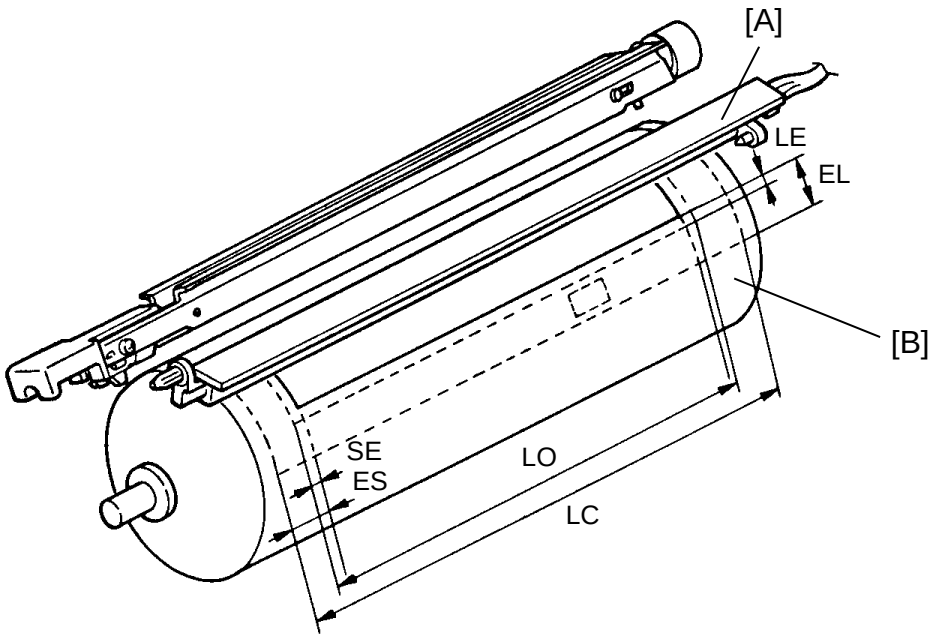

LE: Lead edge erase margin	2.5 ±1.5 mm
SE: Side erase margin	2.0 ±2.0 mm on each side; total of both sides 4 mm or less
LO: Original width	
LC: Charged width of drum	
EL: Lead edge erase	
ES: Side erase	

The erase lamp [A] consists of a single row of LEDs (29 LEDs) extending across the full width of the drum [B].

The erase lamp has three functions: lead edge erase, side erase, and trail edge erase. Trail edge erase begins after the trailing edge of the copy paper; therefore, the trailing edge of the copy will not be erased.

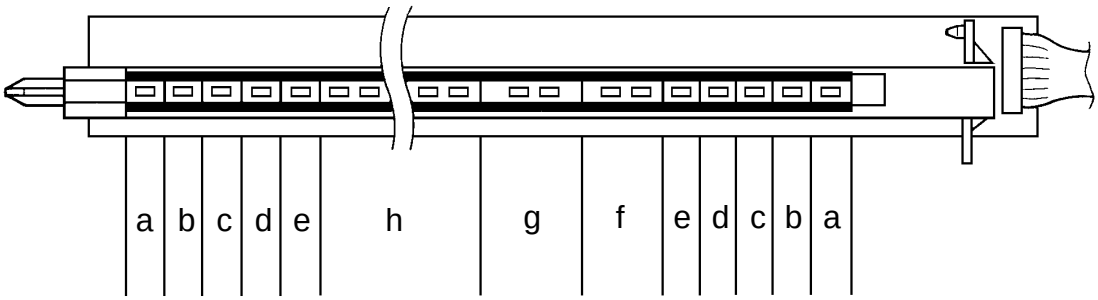

4.1.1 Lead Edge Erase

The entire line of LEDs turn on when the main motor turns on. They stay on until the erase margin slightly overlaps the lead edge of the original image area on the drum (Lead Edge Erase Margin). This prevents the toner density sensor pattern from being developed every copy cycle and the shadow of the original edge from being developed on the paper. At this point, side erase starts. The width of the lead edge erase margin can be adjusted using SP41.

During the toner density detection cycle (once every ten copy cycles), a block of erase lamps (labeled "g" above) turns off long enough for the sensor pattern to be developed.

The entire line of LEDs turn on when the residual voltage on the OPC drum is being detected (Vr detection).

4.1.2 Side Erase

This machine has no sensors or switches to detect the copy paper size. Instead, the CPU measures the copy paper length using the registration sensor during the first copy cycle. Based on this length data, the CPU determines which copy paper size is used in the paper tray. (See page 2-57 for more information.)

The LEDs turn on in blocks as labeled "a" – "h" above.

In the full size copy mode, the CPU determines which blocks turn on based on the copy paper length data as follows:

Paper length	Paper size	Blocks ON
364 mm and 356 mm	B4, 10" x 14", 8 1/2" x 14", 8 1/4" x 14"	None
330 mm and 279 mm	8 1/2" x 13", 8 1/4" x 13" (F4), 8" x 13", 8 1/2" x 11"	a – b
297 mm, 267 mm, and 254 mm	A4R, 8" x 10 1/2", 8" x 10"	a – c
257 mm, 216 mm, and 210 mm	B5R, 5 1/2" x 8 1/2", A5R	a – e
For toner density detection cycles.		a – f, h
For residual voltage (Vr) detection cycles.		All

NOTE: Since the CPU cannot distinguish the different paper width, the CPU will determine the size to be the larger standard width based on the measured length.
(EX: 10" x 14", 8 1/2" x 14" → The CPU recognizes as 10" x 14".)

In the reduction or enlargement copy mode (A077/A078 copiers only), the CPU determines which blocks turn on based on the selected reproduction ratio as follows:

Reproduction ratio (%) (A077/A078 copiers only)	Blocks ON
83 – 99, 101 – 141	None
78 – 82	a
73 – 77	a – b
68 – 72	a – c
64 – 67	a – d
61 – 63	a – e

4.1.3 Trailing Edge Erase

The entire line of LEDs turns on after the trailing edge of the latent image has passed. Therefore, a trailing erase margin cannot be observed on the copy. The LEDs stay on to erase the leading edge of the latent image in the next copy cycle. After the final copy, the erase lamps turn off at the same time as the main motor.

5. DEVELOPMENT

5.1 OVERVIEW

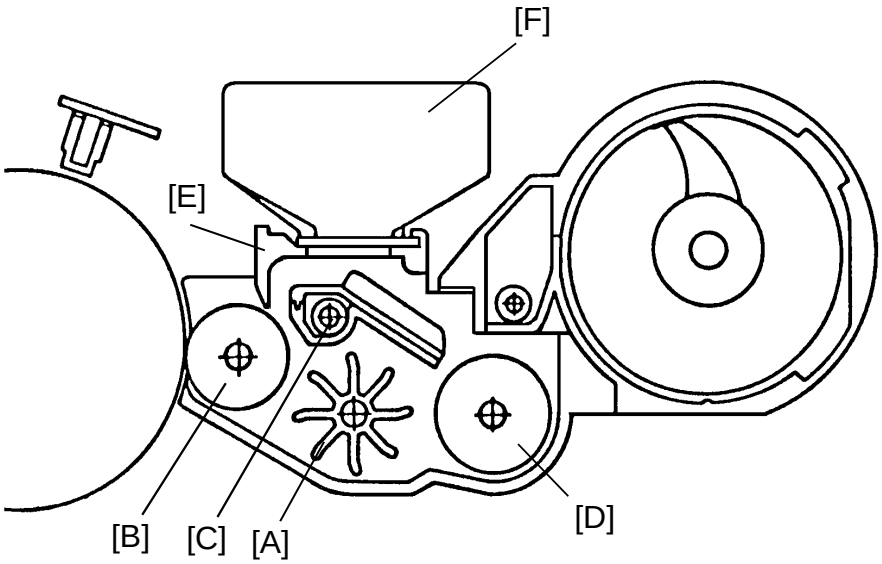

When the main motor turns on, and the development clutch solenoid is de-energized, the paddle roller [A], development roller [B], auger [C], and the agitator [D] start turning. The paddle roller picks up developer in its paddles and transports it to the development roller. Internal permanent magnets in the development roller attract the developer to the development roller sleeve.

The turning sleeve of the development roller then carries the developer past the doctor blade [E]. The doctor blade trims the developer to the desired thickness and creates a developer backspill to the cross-mixing mechanism.

The development roller continues to turn, carrying the developer to the OPC drum. When the developer brush contacts the drum surface, the negatively charged areas of the drum surface attract and hold the positively charged toner. In this way, the latent image is developed.

The development roller is given a negative bias to prevent toner from being attracted to the non-image areas on the drum which may have a residual negative charge. The bias also controls image density.

After turning about 100 degrees more, the development roller releases the developer to the development unit. The developer is agitated by the paddle roller, agitator, and the cross-mixing mechanism.

The developer is installed in the machine in advance. When installing the machine, you must load the developer into the development unit from the developer tank [F] by pulling out the seal. Then, use SP65 to agitate the developer.

5.2 DRIVE MECHANISM

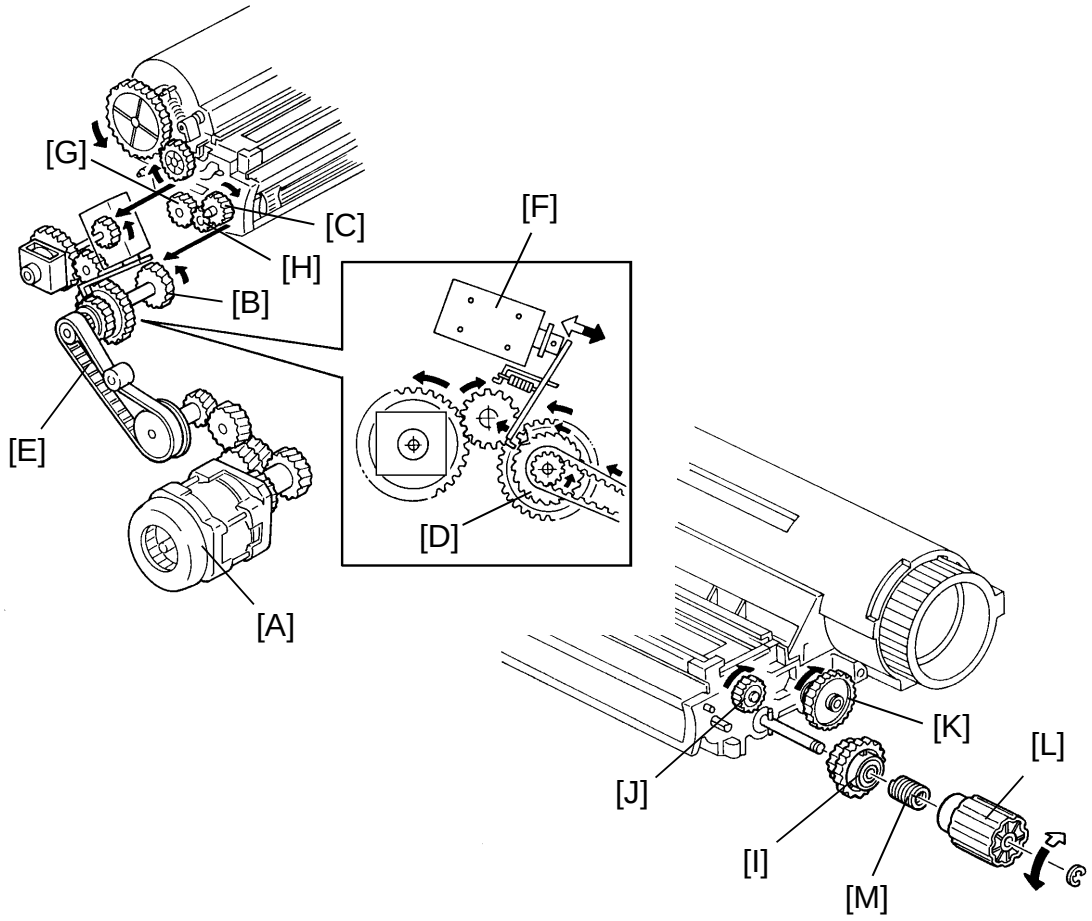

When the main motor [A] turns, the rotation is transmitted from the development drive gear [B] to the development roller gear [C] through the development clutch [D], timing belt [E] and relay gears. (The rotation is transmitted to the development drive gear when the development clutch solenoid [F] is de-energized.) Then, the rotation is transmitted from the development roller gear to the paddle roller gear [G] through the idler gear [H].

A gear [I] on the front end of the paddle roller shaft drives the auger gear [J] and the agitator gear [K]. The paddle roller shaft has a knob [L] on the front end so that it can be turned manually to exchange toner. The knob has a spring clutch [M] inside. The spring clutch prevents the development roller from being turned in the wrong direction.

The development clutch solenoid energizes after image development during the last copy cycle is completed. This stops the rollers, thereby reducing developer fatigue.

5.3 CROSS-MIXING

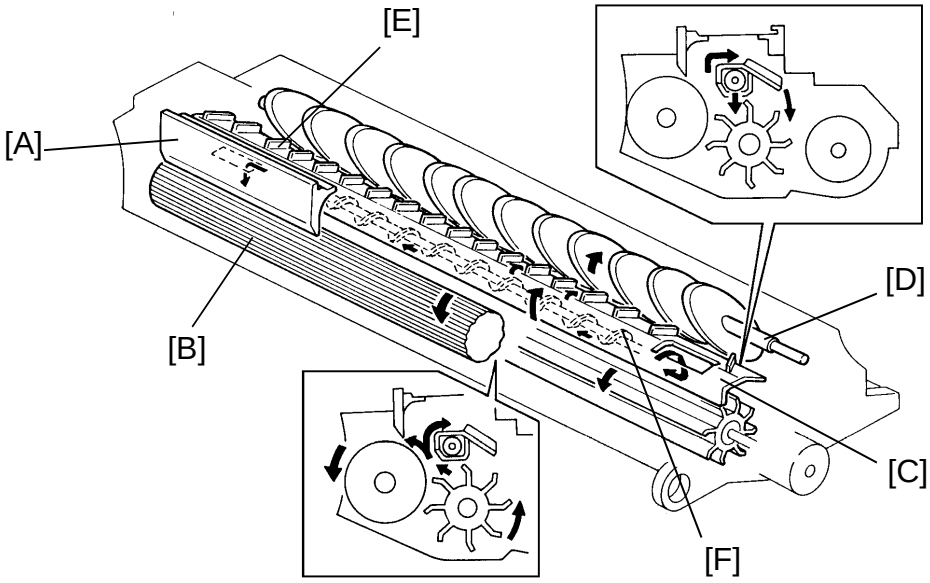

This copier uses a standard cross-mixing mechanism to keep the toner and developer evenly mixed. It also helps agitate the developer to prevent developer clumps from forming and helps create the triboelectric charge.

The developer on the turning development roller is split into two parts by the doctor blade [A]. The developer that stays on the development roller [B] forms the magnetic brush and develops the latent image on the drum. The remaining developer that is trimmed off by the doctor blade goes to the backspill plate [C].

As the developer slides down the backspill plate to the agitator [D], the mixing vanes [E] move it slightly toward the rear of the unit. Part of the developer falls into the auger inlet and is transported to the front of the unit by the auger [F].

5.4 DEVELOPMENT BIAS FOR IMAGE DENSITY CONTROL

Image density is controlled by changing three items: (1) the amount of bias voltage applied to the development roller sleeve, (2) the amount of voltage applied to the exposure lamp, and (3) the amount of voltage applied to the grid plate.

Applying a bias voltage to the development sleeve reduces the potential between the development roller and the drum, thereby reducing the amount of toner transferred. As the bias voltage becomes greater, the copy image becomes lighter and vice versa.

The method of control is different depending on whether the image density is manually selected or the auto image density mode is used.

The development bias voltage applied to the development roller sleeve has the following four factors:

Development bias voltage =
Base bias voltage factor
(Manual or auto image density mode)
+
Image bias voltage adjustment factor (SP37)
+
Drum residual voltage (Vr) correction factor
+
Drum temperature correction factor

The base bias voltage for non-image areas (between copies) is –160 volts. The above correction factors are also applied.

5.4.1 Base Bias Voltage Factor In Manual Image Density Mode

Darker ⟷ Lighter

Manual ID Level	1	2	3	4	5	6	7
Base Bias Voltage (volts)	–120	–160	–160	–160	–200	–200	–240 *Note
Exposure Lamp Data	Vo –4	Vo –4	Vo –2	Vo ±0	Vo +2	Vo+2	Vo+4
Grid Voltage (volts)	Vg ±0	Vg ±0	Vg ±0	Vg ±0	Vg ±0	Vg +50	Vg +50

Vo: Exposure Lamp Data for ID level 4 (SP48)
Vg: Standard Image Grid Voltage (–680 volts)

In manual ID mode, the base bias voltage depends on the manually selected ID level. The voltage applied at each ID level is shown in the above table. The base exposure lamp voltage and the grid voltage also vary depending on the manual ID level as shown in the table.

***Note:** The base bias voltage at ID level 7 can be changed using SP50 as follows.

Image density	Data (SP50)	Bias voltage (volts)
Normal	0	–240
Darker	1	–200
Lighter	2	–280
Lightest	3	–320

(Factory Setting: –240 volts)

5.4.2 Base Bias Voltage Factor In Automatic Image Density Mode

In auto image density mode, the base exposure lamp voltage is fixed to Vo (SP48). Image density is controlled by changing only the base bias voltage.

The base bias voltage depends on the background image density of the original, which is measured using the auto ID sensor. (See page 2-18 for more information.)

The CPU checks the voltage output from the automatic ID circuit. This circuit has a peak hold function. The peak hold voltage corresponds to the maximum reflectivity of the original. The CPU then determines the proper base bias level with reference to the peak hold voltage.

The table on the following page gives the base bias voltages at each ADS output level.

When the automatic density level is set to lighter by SP34, the base bias voltage shifts –40 volts as shown in the following table.

K	Base Bias Voltage (volts)	
	Normal or Darker (SP34 = 0 or 1)	Lighter (SP34 = 2)
K ≥ TL1	–160	–200
TL1 > K ≥ TL2	–220	–260
TL2 > K ≥ TL3	–280	–320
TL3 > K	–340	–380

$$K = \frac{\text{ADS Output Voltage (Peak Hold Voltage)}}{\text{ADS Reference Voltage (SP56)}}$$

TL1 to TL3: Threshold level (See the following table.)

To maintain the correct image density, the exposure lamp data is incremented when the reproduction ratio is changed or drum temperature correction or drum residual voltage correction is done. This increment in the lamp data increases the intensity of light reflected from the original. Therefore, the auto ID sensor output voltage also changes. In order to maintain a constant voltage for the same original when the lamp data is incremented, the threshold levels are shifted up with each increment in the lamp data as shown in the following table.

Increase of exposure lamp data	+0	+1	+2	+3	+4	+5	+6	+7	+8	+9
TL1	0.70	0.75	0.80	0.85	0.89	0.94	0.98	1.03	1.08	1.12
TL2	0.66	0.70	0.74	0.78	0.83	0.87	0.91	0.96	1.00	1.04
TL3	0.29	0.31	0.33	0.35	0.37	0.39	0.41	0.43	0.45	0.48

5.4.3 Image Bias Voltage Adjustment Factor

Image Bias Adjustment (SP37)

Image density	Data (SP37)	Change of bias voltage (volts)
Normal	0	±0
Darkest	1	+40
Darker	2	+20
Lighter	3	–20
Lightest	4	–40

The image bias voltage can be changed by SP37 to adjust the image density level. The above table gives the image bias voltage for SP mode setting. This adjustment should be done only if the exposure lamp voltage adjustment (SP48) fails to achieve the desired image density.

5.4.4 Drum Residual Voltage (Vr) Correction Factor

During the drum's life, drum residual voltage (Vr) may gradually increase. The Vr correction compensates for the residual voltage on the drum. The Vr correction is done every 1,000 copies. The following table shows how the development bias voltage changes depending on the Vr ratio.

Vr ratio (L) (%) (SP67)	Change of bias voltage (volts)
100 to 84	±0
83 to 58	–40
57 to 41	–80
40 to 28	–120
27 to 0	–160

L = Vrp/Vsg x 100 (%)
Vrp: ID sensor output for Vr correction pattern
Vsg: ID sensor output for bare drum

When the Vr correction is made (every 1,000 copies), all blocks of erase lamps turn on and the development bias becomes 0 volt to develop the Vr pattern.

5.4.5 Drum Temperature Correction Factor

Drum temperature	Change of bias voltage (volts)
20°C or higher	±0
Lower than 20°C	–40

To compensate for the drum photosensitivity drop under low temperature, the development bias voltage is increased.

If the temperature is lower than 20°C when the main switch is turned on, the CPU increases the development bias voltage by –40 volts as shown in the above table.

When the temperature goes to 20°C or higher, this correction is canceled.

5.5 DEVELOPMENT BIAS CIRCUIT

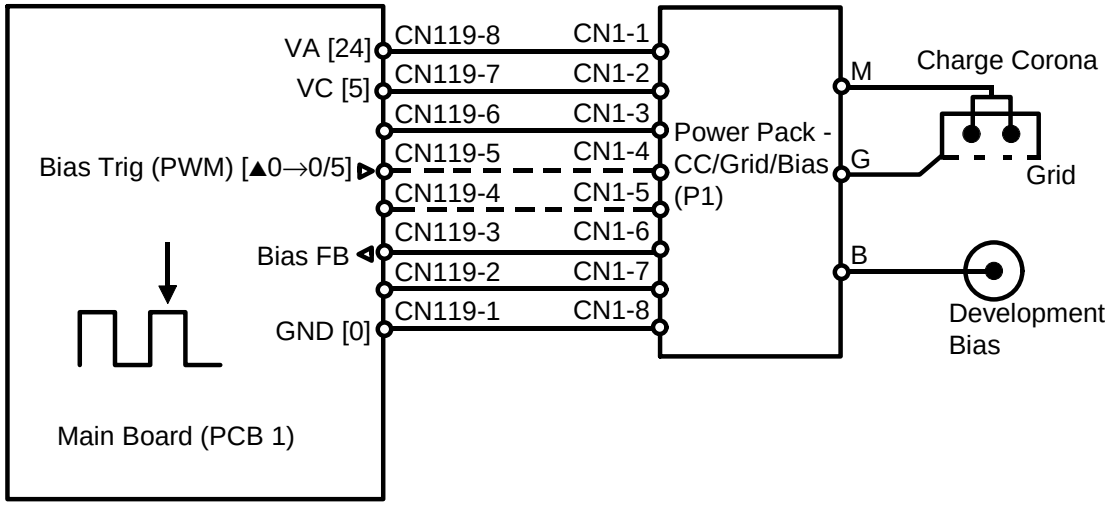

The main board supplies +24 volts to the CC/Grid/Bias power pack at CN1-1. When the Start key is pressed, the CPU starts sending the bias trigger pulses to CN1-4. This energizes the development bias circuit within the CC/Grid/Bias power pack, which applies a high negative voltage to the development roller. The development bias is applied whenever the drum is rotating except when the Vr pattern is developed.

The bias trigger pulse applied to CN1-4 is a pulse width modulated signal (PWM signal). The width of the pulses controls the voltage level of the development roller. As the width of the trigger pulses increase, the voltage to the development roller also increases. The CPU monitors the development bias voltage at CN119-3 and controls the width of the bias trigger pulses based on this feedback.

5.6 DEVELOPMENT COMPONENT CONTROL TIMING

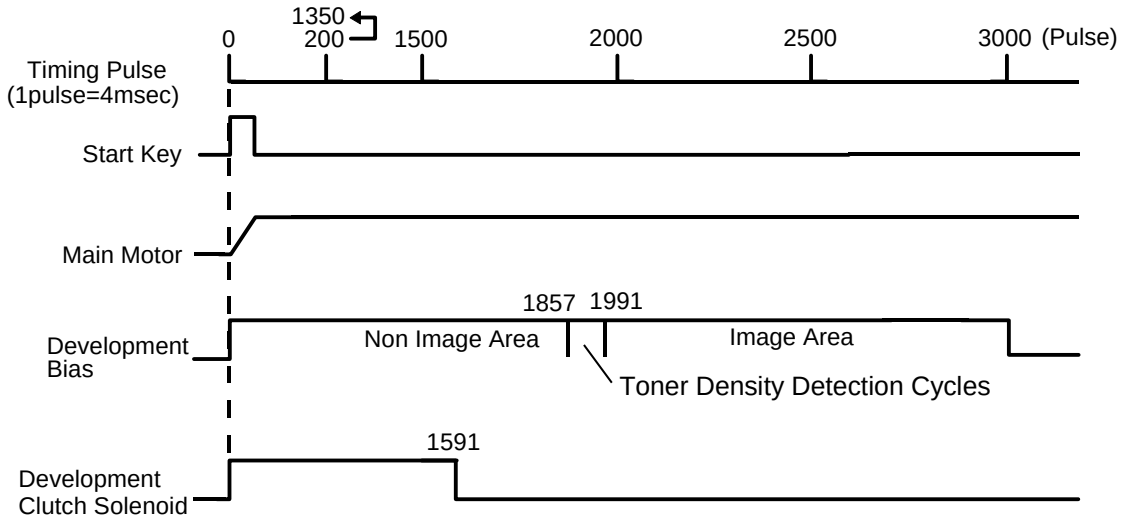

When the Start key is pressed, the main motor starts rotating and the development clutch solenoid is energized. At this time, the rotation from the main motor is not transmitted to the rollers in the development unit. The development clutch solenoid is de-energized about 1.8 seconds after the Start key is pressed. At this time, the rollers in the development unit start rotating.

When the Start key is pressed, the development bias circuit in the CC/Grid/Bias power pack is energized to apply the negative voltage for the non image areas to the development roller. The value of the bias voltage will be different for the image areas. The shift to the image area bias voltage occurs about 3.4 seconds after the Start key is pressed on normal copy cycles. During on toner density detection cycles it occurs about 2.8 seconds after the Start key is pressed. This is necessary since the value of the bias voltage is also changed for toner density detection.

6. TONER DENSITY DETECTION AND TONER SUPPLY

6.1 OVERVIEW

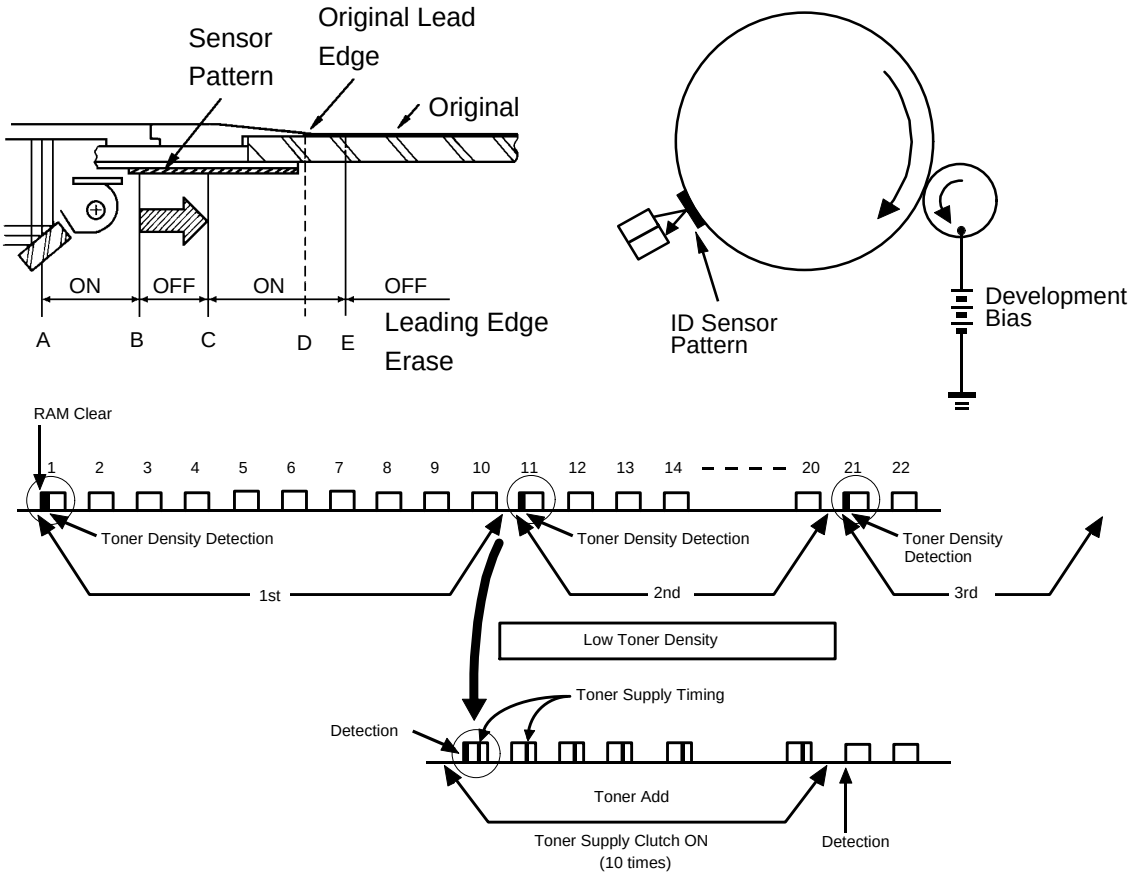

The CPU checks toner density by directly sensing the image density every 10 copy cycles. If the RAM is cleared (SP99), or a new RAM is installed, the CPU checks the image density at the beginning of the first copy cycle.

During the check cycles, the sensor pattern is exposed prior to the exposure of the original. After the sensor pattern is developed, its reflectivity is checked by the image density sensor (a photosensor). The CPU notes the reflectivity and if the reflected light is too strong, indicating a too low toner density condition, toner is added to the development unit.

The toner is not added all at once. The CPU will energize the toner supply clutch for the proper amount of time in order to add a selected amount of toner over the next 10 cycles.

When the free run mode (turn DIP switch 101-1 ON) is selected, the CPU checks the toner density every copy cycle.

6.2 ID SENSOR FUNCTION

6.2.1 Detect Supply Mode

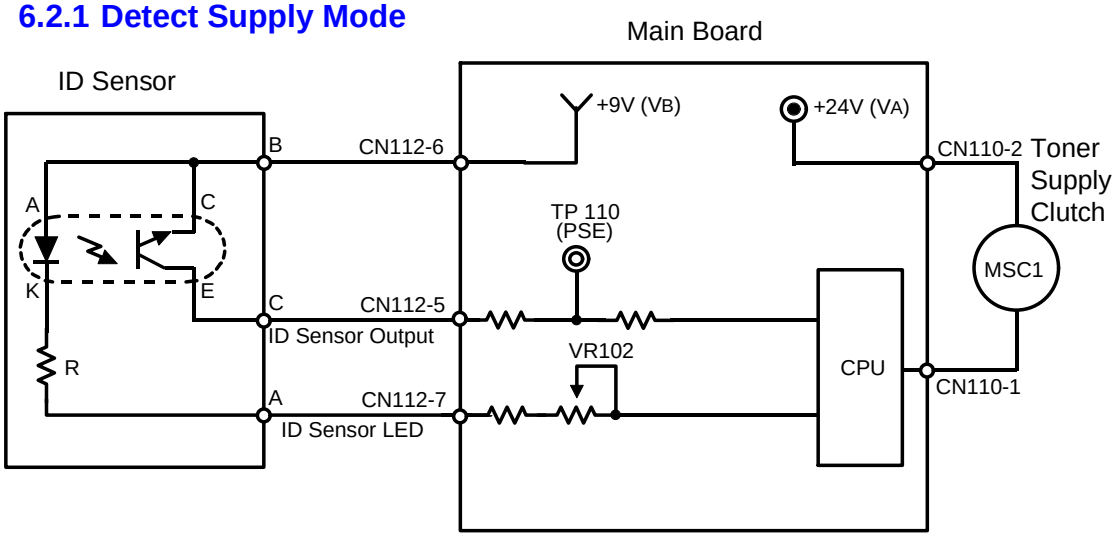

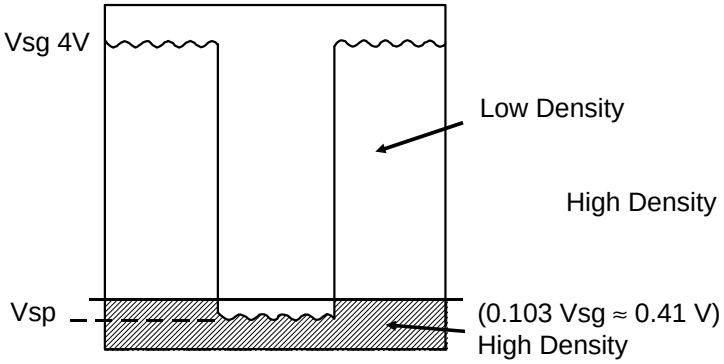

The image density sensor checks the density of the sensor pattern image once every 10 copy cycles. The CPU receives two voltage values directly from the sensor: the value for the bare drum (Vsg) and the value for the sensor pattern (Vsp). These two values are then compared to determine whether more toner should be added.

1. $\frac{Vsp}{Vsg} \times 100 < 10.3$ ..... No toner is added. (High density)
2. $\frac{Vsp}{Vsg} \times 100 \geq 10.3$ ..... Toner is added. (Low density)

When the image density is too low, the CPU activates the toner supply clutch to add toner over the next 10 copy cycles. The amount of toner added depends on the value of Vsp, the selected toner supply ratio (SP31) and ID sensor data. (See page 2-41 for more information.)

When the data of SP35 is set to "1" (factory setting = "0"), the CPU changes the interval of the toner density detection from every 10 copies to every 5 copies.

6.2.2 Fixed Supply Mode

When SP30 is set to "1" (factory setting = "0"), the fixed supply mode is selected. In this case, a fixed amount of toner is added every copy cycle depending on the selected toner supply ratio (SP32) and the paper size in use. (See page 2-43 for more information.) However, the toner supply clutch is de-energized to prevent over-toning when Vsp is lower than 0.103 Vsg. (≈ 0.41 volts when Vsg = 4.0 volts).

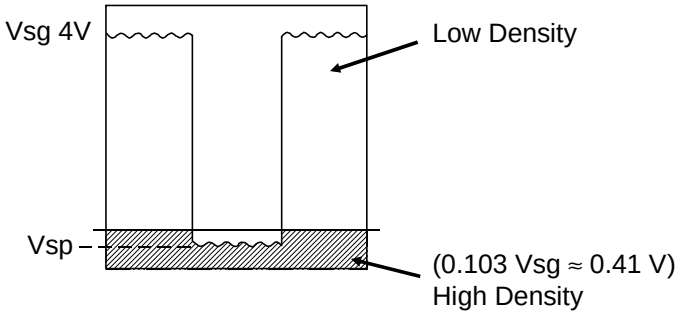

6.3 ABNORMAL CONDITION IN TONER DENSITY DETECTION

If Vsg goes below 2.5 volts (LOW Vsg) or Vsp goes above 2.5 volts (HIGH Vsp) 5 consecutive toner density detection cycles, the CPU determines that the toner density detection is abnormal. The CPU changes from the detect supply mode to the fixed supply mode. At the same time either the Auto ID indicator or the selected manual ID level starts blinking, and the machine can be operated.

Abnormal Condition In Toner Density Detection

SP55 display		Conditions
Vsp	Vsg	
varies	0.00	Vsg ≤ 2.5 (LOW Vsg)
varies	5.00	Vsp ≥ 2.5 (HIGH Vsp)

6.4 DEVELOPMENT BIAS VOLTAGE FOR TONER DENSITY DETECTION

The development bias for toner density detection can be adjusted by SP33 in order to change the toner density level. The following table shows the development bias voltage corresponding to setting of SP33. This SP mode should be used only when the exposure lamp intensity adjustment (SP48) and the base bias adjustment (SP37) for copy image can not achieve the desired image density.

Toner density	SP data (SP33)	Development bias voltage (volts)	
		0 to 499 copies	More than 500 copies
Normal	0	–240	–220
Low	1	–200	–180
High	2	–260	–240
Higher	3	–280	–260

After the developer initial setting (SP65) is performed, the triboelectric charge is still low. In this condition, the ID sensor pattern density is higher than it should be. This will cause the toner concentration in the developer to become too low.

To compensate for this phenomenon, the development bias voltage for the initial 499 copies is increased by –20 volts automatically as shown in the above table.

6.5 TONER SUPPLY AND AGITATOR DRIVE MECHANISM

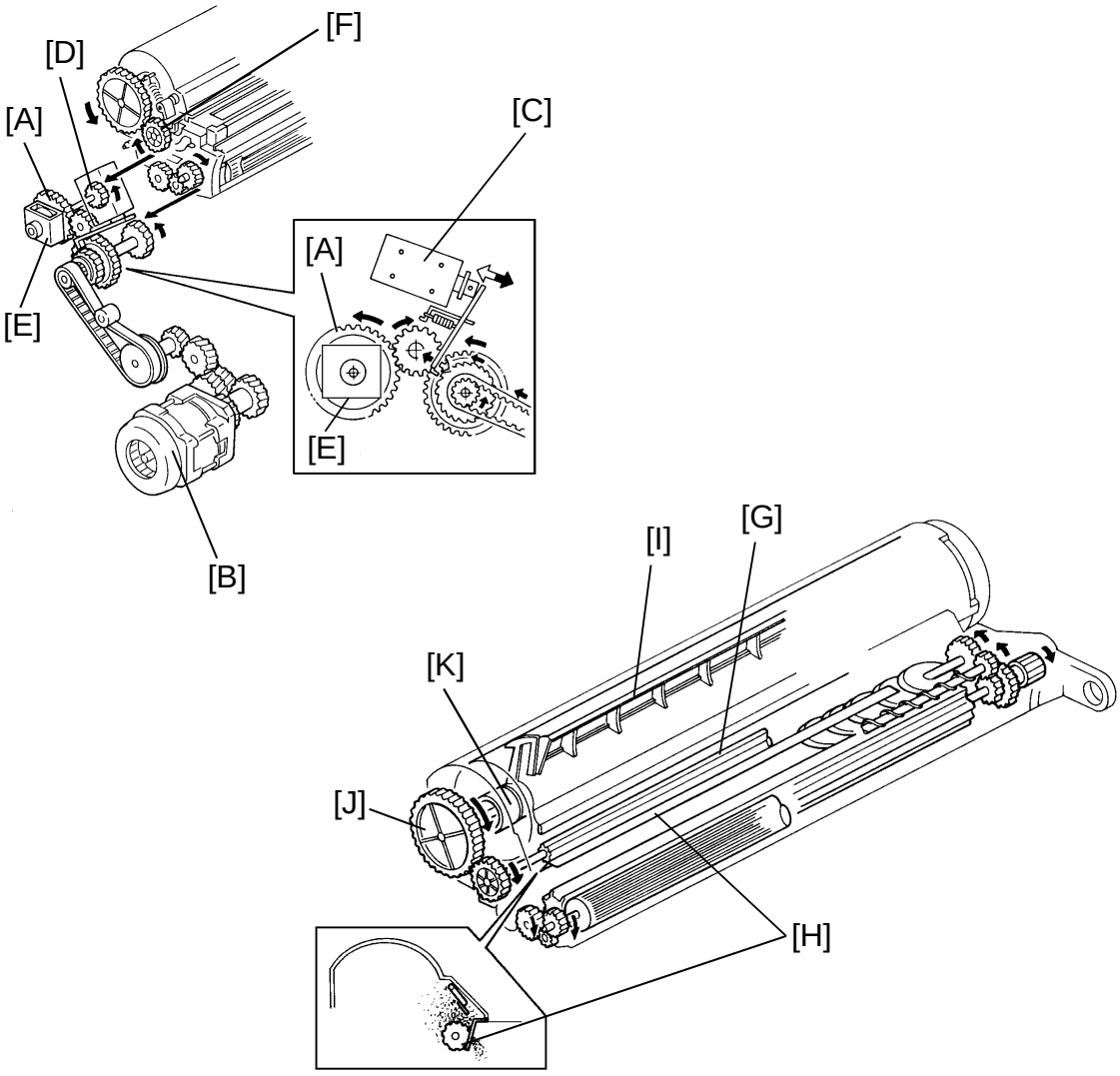

The toner supply clutch gear [A] turns when the main motor [B] is on and the development clutch solenoid [C] is de-energized. The transmission of this rotation to the toner supply drive gear [D] is controlled by the toner supply clutch [E].

When the toner supply clutch energizes, the toner supply drive gear starts turning, then the toner supply roller gear [F] turns. Toner catches in the grooves on the toner supply roller [G]. Then, as the grooves turn past the pin hole plate [H], the toner drops into the development unit through the pin holes.

The toner agitator [I] mechanism, which is contained in the toner cartridge, prevents toner from clumping. The toner agitator gear [J] turns whenever the toner supply clutch energizes. Rotation passes through the toner cartridge casing to the agitator junction [K].

6.6 TONER SUPPLY AMOUNT

This copier has two different ways of controlling the amount of toner supplied. Normally, the detect supply mode controls toner supply; however, a fixed supply mode also can be selected by SP30.

6.6.1 Detect Supply Mode (SP30 = 0)

The amount of toner supplied depends on the ID sensor data and the detect toner supply ratio data. The toner supply clutch on time in each copy cycle is calculated as follows:

Toner Supply Clutch ON Time = I x T (pulses)

Where : I = ID Sensor Data
T = Detect Toner Supply Ratio Data (SP31)

For example: Vsp = 0.45 volts, which means the toner supply level is "2" and the ID sensor data is 49.

The data of SP31 is set to "0".
The toner supply ratio is 15% and the toner supply data is 2.

Toner Supply Clutch ON Time = I x T
= 49 x 2
= 98 (pulses)
= 392 (msec.) (1 pulse = 4.0 msec.)

ID Sensor Data

Vsp/Vsg x 100 (Vsp, if Vsg = 4.0 volts)	Toner supply level (Toner supply ratio, SP31 = 0)	ID sensor data
0 to 10.3% (0 to 0.41 volts)	No toner supply (0%)	0
10.3 to 10.8% (0.41 to 0.43 volts)	1 (3.75%)	27
10.8 to 11.8% (0.43 to 0.47 volts)	2 (7.5%)	49
11.8 to 15.2% (0.47 to 0.61 volts)	3 (15%)	92
15.2 to 62.5% (0.61 to 2.5 volts) (See note below.)	4 (30%)	184 (Toner End level)
62.5 to more than 100% (2.5 to 5.0 volts)	Fixed supply mode	N/A (Abnormal Condition)

NOTE: If this condition is detected two times consecutively, the toner supply ratio rises to 60% (ID Sensor Data = 368), which is double that at toner supply level 4.

Detect Toner Supply Ratio Data (SP31)

Data (SP31)	Toner supply ratio at toner supply level 3	Toner supply ratio data
0	15%	2
1	7%	1
2	30%	4
3	60%	8

6.6.2 Fixed Supply Mode (SP30 = 1)

The amount of toner supplied depends on the fixed toner supply ratio data and the paper size data. The toner supply clutch on time in each copy cycle is calculated as follows:

Toner Supply Clutch ON Time = T x P x 2 (pulses)

Where: T = Fixed Toner Supply Ratio Data (SP32)
P = Paper Size Data

For example: The data of SP32 is set to "0".
The toner supply ratio is 7.0% and the toner supply data is 2.

Paper size is A4R. The paper size data is 29.

Toner Supply Clutch ON Time = T x P x 2
= 2 x 29 x 2
=116 (pulses)
= 464 (msec.) (1 pulse = 4.0 msec.)

Fixed Toner Supply Ratio Data (SP32)

Data (SP32)	Toner supply ratio	Toner supply ratio data
0	7.0%	2
1	3.5%	1
2	10.5%	3
3	14.0%	4

Paper Size Data

Paper size	Paper size data
B4	43
A4R	29
B5R	23
A5R	15
10" x 14", 8 1/2" x 14", 8 1/4" x 14"	43
8 1/2" x 13", 8 1/4" x 13" (F4), 8" x 13"	33
8 1/2" x 11", 8" x 10 1/2"	29
8" x 10"	27
5 1/2" x 8 1/2"	14

6.7 TONER END CONDITION

The image density sensor is used to detect a toner end condition in both detect and fixed supply modes.

6.7.1 Near Toner End Condition

When the Vsp/Vsg x 100 becomes greater than 15.2 for two consecutive toner detection cycles, the toner supply ratio becomes two times the amount of toner supply level 4 (Toner supply ratio = 60%, ID sensor data = 368) and the ID sensor detection cycle changes from every 10 copies to 5 copies. Then, when this condition is detected five times consecutively, the CPU determines that it is near toner end condition and starts blinking the Add Toner indicator.

6.7.2 Toner End Condition

After the Add Toner indicator starts blinking (Near Toner End Condition), the operator can make 50 copies. If a new toner cartridge is not added within that 50 copies interval, copying is inhibited and a toner end condition is determined. In this condition, the Add Toner indicator lights and the Start indicator turns red.

Example:

Copy number	Toner density detection cycle	Vsp/Vsg x 100	Toner supply ratio (If SP31=0)	Indicator
1st~10th copies	1st copy	15.3	30%	
11th~15th copies	11th copy	15.3	60%	
16th~20th copies	16th copy	15.3	60%	
21st~25th copies	21st copy	15.3	60%	
26th~30th copies	26th copy	15.3	60%	Add Toner indicator starts blinking. (Near toner end condition)
• • • •	• • • •	• • • •	• • • •	Add Toner indicator blinks. (Near toner end condition)
76th copy	—	—	—	Add Toner indicator lights. (Toner end condition)

When the Vsp/Vsg x 100 becomes greater than 28.0 for two consecutive toner detection cycles, the CPU determines immediately that there is a toner end condition and copying is inhibited. This causes the Add Toner indicator to light and the Start indicator turns red.

Example:

Copy number	Toner density detection cycle	Vsp/Vsg x 100	Toner supply ratio (If SP31=0)	Indicator
1st~10th copies	1st copy	18.3	30%	
11th~15th copies	11th copy	28.3	60%	
15th copy	15th copy	28.3	—	Add Toner indicator lights. (Toner end condition)

6.7.3 Toner End Recovery

After the toner cartridge is replaced and the front cover is closed, the CPU turns on the main motor, de-energizes the development clutch solenoid, and turns on the toner supply clutch for approximately 9 seconds to supply toner to the empty toner supply unit from the toner cartridge. Toner end detection is also done during this 9 second period. When the Vsp/Vsg x 100 becomes less than 15.2, the toner end or near end condition is cleared.

If the Vsp/Vsg x 100 stays greater than 15.2 (when the toner cartridge is not replaced), the toner end or near end condition is not cleared. In the near end condition, the remaining copies, maximum 50 copies, up to the toner end condition can be made. In toner end condition, only one copy can be made. However, if the Vsp/Vsg x 100 becomes greater than 28.0 in toner end condition, copying is inhibited. This prevents the customer from making many copies with the toner end condition by opening and closing the front cover.

7. IMAGE TRANSFER AND PAPER SEPARATION

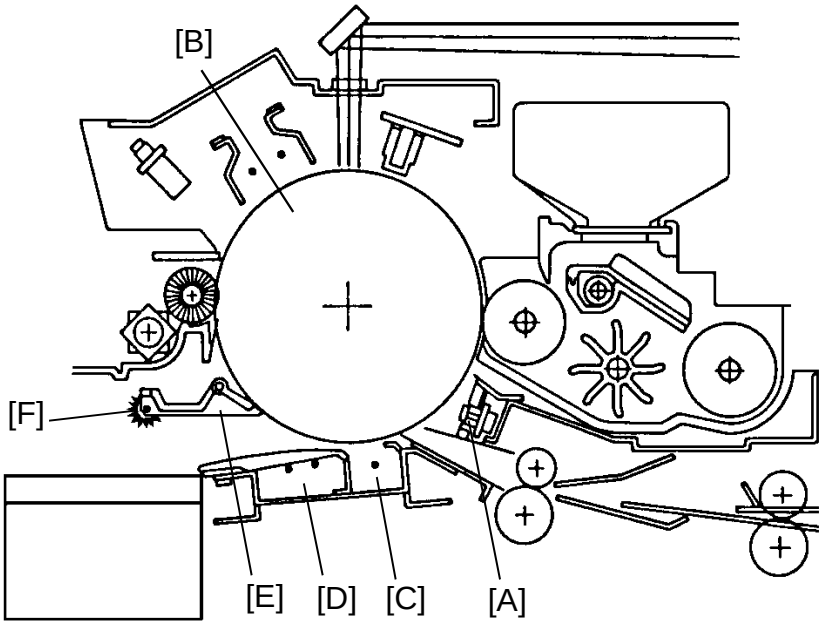

7.1 PRE-TRANSFER LAMP (PTL)

After the latent image is developed but before the image is transferred to the copy paper, the drum surface is illuminated by the pre-transfer lamp [A]. This illumination reduces the negative potential on the drum surface [B]. This prevents the toner particles from being re-attracted to the negatively charged drum during the paper separation process. It also makes image transfer and paper separation easier.

7.2 IMAGE TRANSFER

A high negative voltage (–4.8 kilovolts) is applied to the transfer corona wire [C], and the corona wire generates negative ions. These negative ions are applied to the back side of the copy paper. This negative charge forces the paper against the drum and attracts the positively charged toner onto the paper.

7.3 PAPER SEPARATION

After image transfer the copy must be separated from the drum. In order to break the attraction between the paper and the drum, the separation corona wire [D] applies an ac charge to the reverse side of the paper. The stiffness and weight of the paper causes it to separate from the drum.

The negative charge on the paper (from the transfer corona) is not completely discharged until the paper is far enough from the drum that the toner will not be reattracted to the drum. The two pick-off pawls [E] ensure that thin, low stiffness paper and upward curled paper separate completely. The spurs [F] prevent the unfused toner on the paper from being smeared by the pick-off pawls.

7.4 PRE-TRANSFER LAMP AND TRANSFER/SEPARATION CORONA CIRCUIT

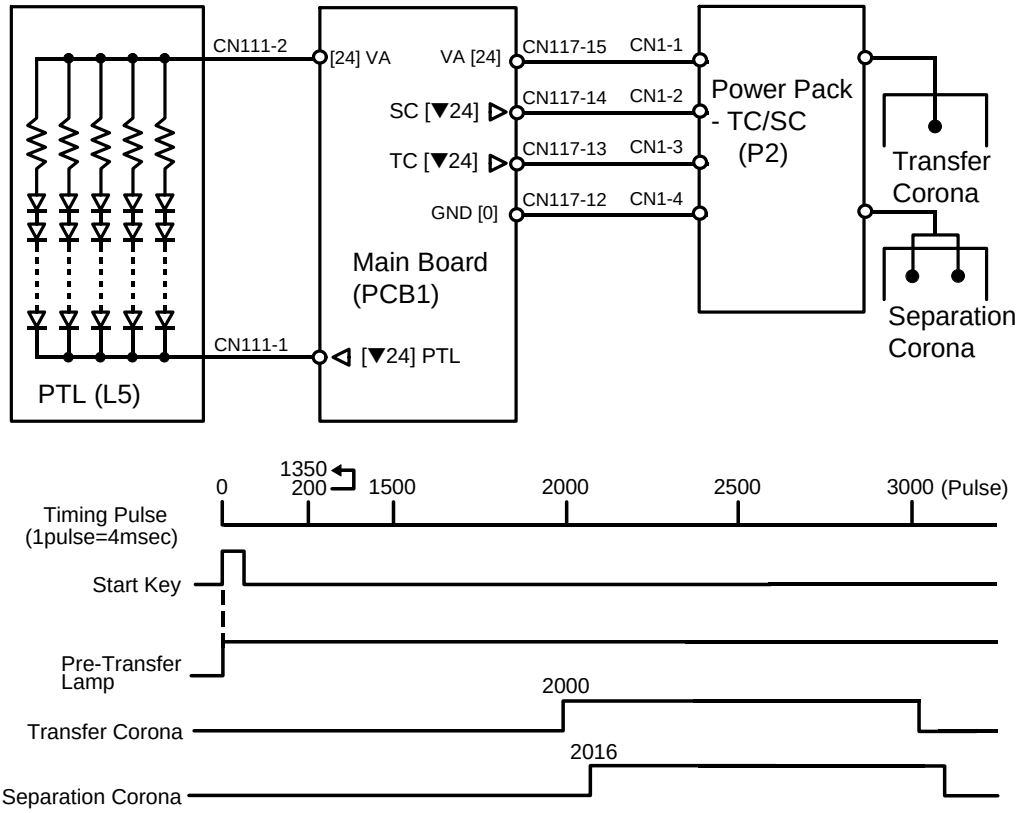

When the Start key is pressed, the main board outputs a LOW signal (CN111-1) to turn on the pre-transfer lamp (PTL). The pre-transfer lamp is composed of 50 LEDs.

To apply the negative charge for the transfer corona, the main board outputs a LOW signal (CN117-13) 3.4 seconds after the Start key is pressed.
To apply an ac charge for the separation corona, the main board outputs a low signal (CN117-14) about 3.5 seconds after the Start key is pressed.

The TC/SC power pack has a dc to dc converter and a dc to ac inverter. The dc to dc converter changes +24 volts to –4.8 kilovolts for the transfer corona. The inverter changes +24 volts to the 5.0 kilovolts ac (500 Hz) for the separation corona.

The separation corona circuit in the TC/SC power pack has a current leak detection circuit for safety. When this circuit detects that more than 2.2 milliamperes is being supplied to the separation corona, the separation corona turns off immediately. When the main switch is turned off and on, or the front cover or the exit cover is opened and closed, this condition is cleared.

8. DRUM CLEANING

8.1 OVERVIEW

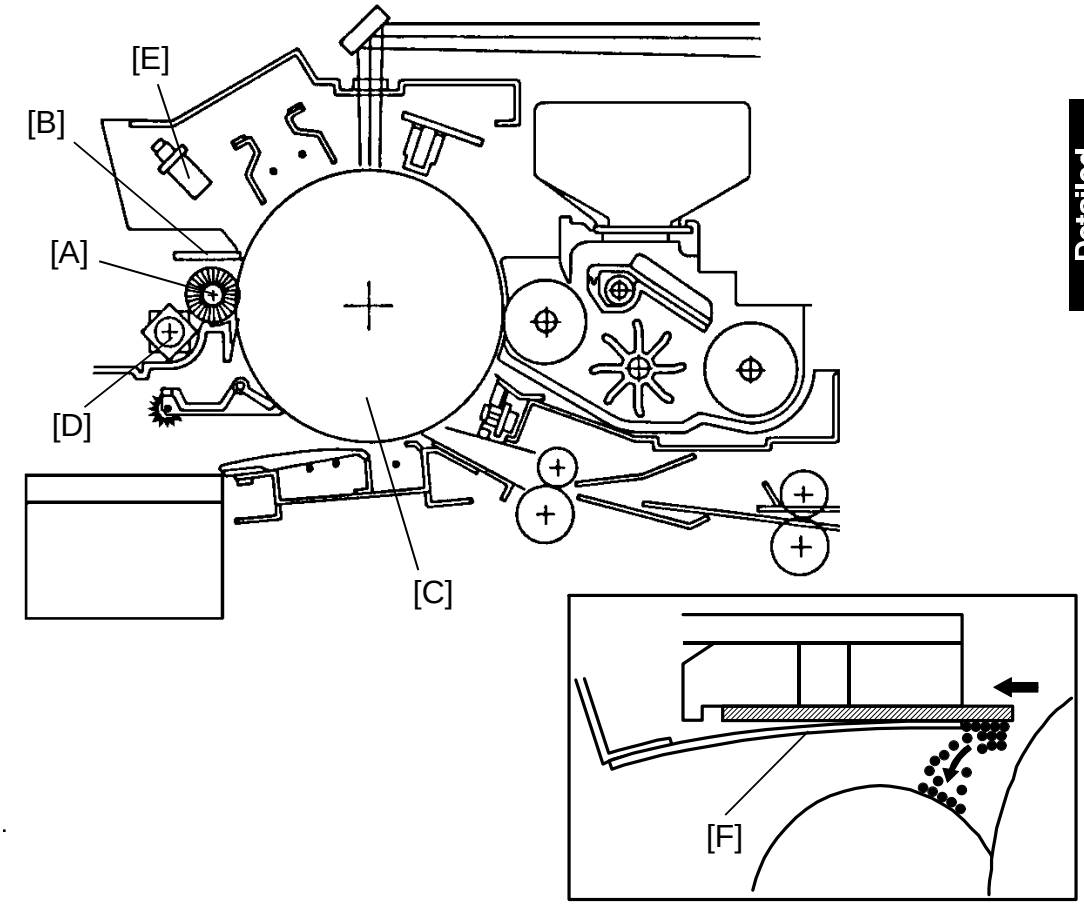

The cleaning brush [A] and cleaning blade [B] will remove any toner remaining on the drum [C] after the image is transferred to the paper.

The cleaning brush and drum move in opposite directions at their point of contact. The cleaning brush removes paper dust and nearly half of the toner from the drum surface to reduce the cleaning load placed on the blade.

The cleaning blade removes the remaining toner. The falling toner catches in the fibers of the cleaning brush and is carried inside the cleaning unit. The toner collection roller [D] carries the used toner to the used toner tank. The quenching lamp [E] neutralizes any charge remaining on the drum in preparation for the next copy cycle.

The cleaning blade releases when the release knob is pressed. This cleans the edge of the cleaning blade using the blade scraper [F], which is mounted under the cleaning blade.

8.2 DRIVE MECHANISM

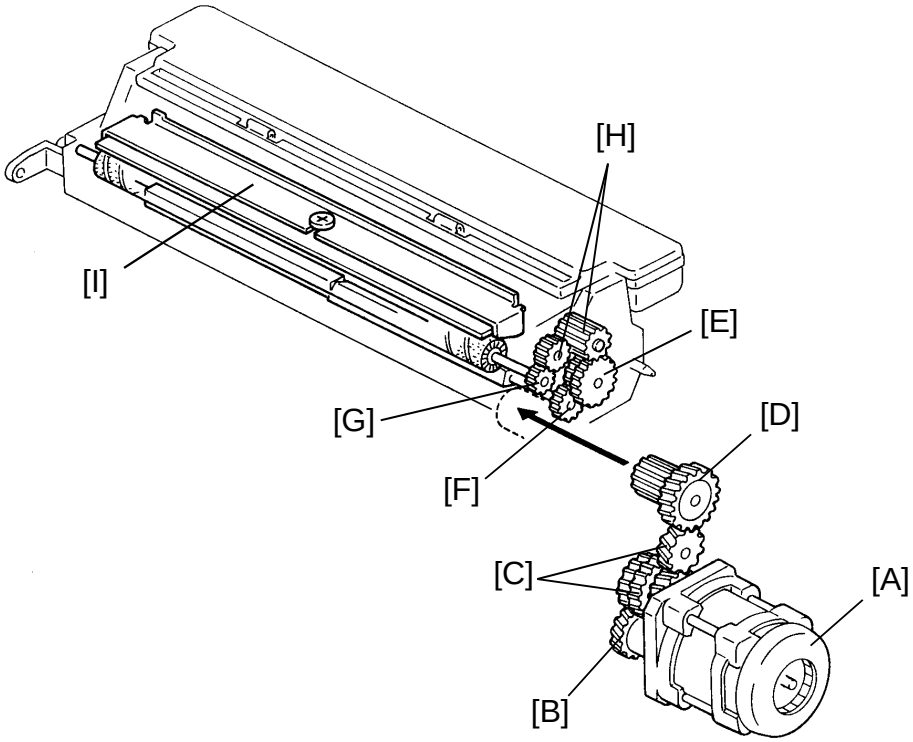

The rotation of the main motor [A] is transmitted to the cleaning unit through the main motor gear [B], the relay gears [C], and the cleaning drive gear [D].

The gear [E] driven by the cleaning drive gear passes the rotation to the toner collection roller gear [F] and to the cleaning brush gear [G] through the idler gears [H].

The cleaning blade [I] is mounted in the center of the blade and is tilted to apply even pressure.

8.3 USED TONER OVERFLOW DETECTION

The CPU uses the copy quantity or the number of toner end condition to detect the used toner overflow.

A used toner overflow condition is detected when either of the following conditions occur.

(1) When the copy quantity reaches 80000 copies.

When the copy quantity reaches 80000 copies, the CPU starts to blink "E70" on the operation panel. An additional 250 copies can be made before the Start indicator turns red and copying is inhibited.

(2) When the number of toner end condition reaches 11.

When the number of the toner end condition reaches 11, the following number of copies can be made before the "E70" starts to blink.
This number is determined by the copy quantity when the 11th toner end condition was detected.

N: Copy Quantity

78K < N < 80K	The remaining copies to reach 80000 copies can be made.
75K < N ≤ 78K	2000 copies can be made
50K < N ≤ 75K	3000 copies can be made
40K < N ≤ 50K	1000 copies can be made
less than 40K	No copy

After the above number of copies is made, the CPU starts to blink "E70". Up to an additional 250 copies can be made after this. Then, the Start key turns red and copying is inhibited.

After disposing of the toner in the used toner tank, SP83 should be done to clear the memory counter for the number of toner end condition and copy quantity.

Toner end counter clear (SP83)

Data (SP83)	Memory counter
0	Not clear
1	Clear

SP58 shows the number of toner end condition. When "1" is input in SP83, the data of SP58 is cleared. There is no SP mode to display the copy quantity between toner end counter clearings.

9. QUENCHING

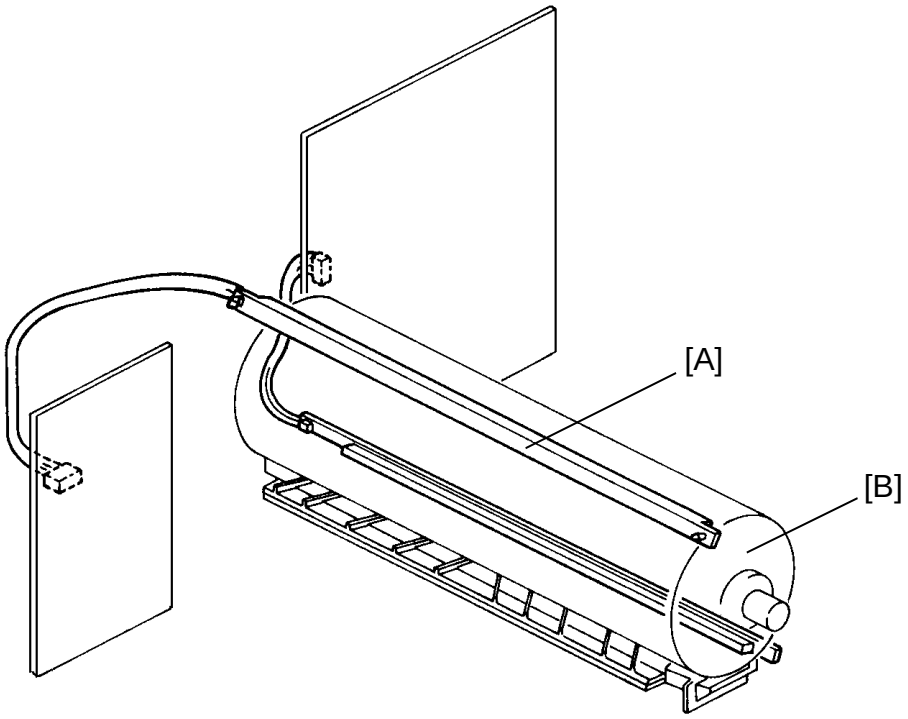

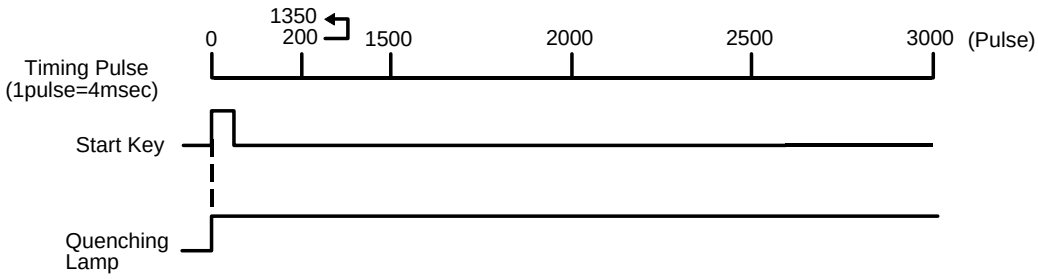

In preparation for the next copy cycle, light from the quenching lamp [A] neutralizes any charge remaining on the drum [B].

A neon lamp is used for quenching. It is turned on when the Start key is pressed.

10. PAPER FEED AND REGISTRATION

10.1 OVERVIEW

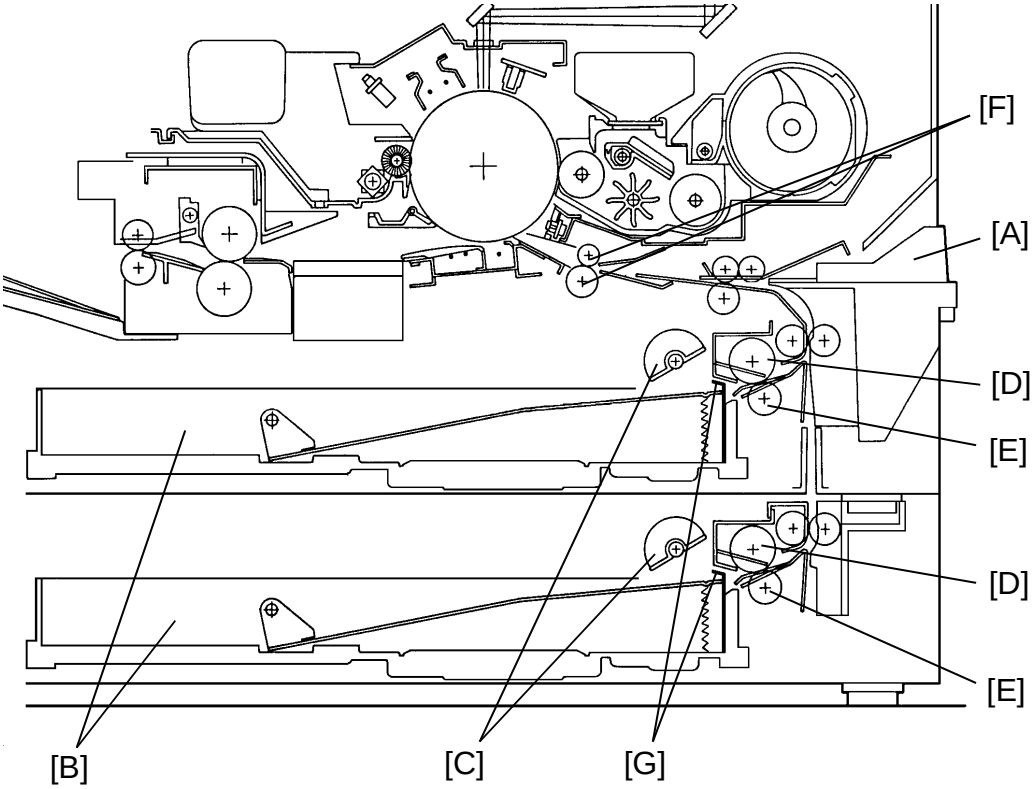

A076/A077 copiers has one paper feed station and manual feed table [A]
A078 copier has two paper feed stations and manual feed table.

The first and second feed stations use a paper tray [B] which can load 250 sheets. The manual feed table can load 1 sheet.

The first and second feed stations utilize an FTR (Feed + Torque Roller) feed system. Rotation of the semicircular pick-up rollers (six rollers) [C] drives the top sheet of paper from the paper tray to the feed [D] and torque [E] rollers. The feed and torque rollers then take over the paper drive. If more than one sheet is fed by the pick-up rollers, the toque roller stops rotating due to a slip clutch (torque limiter clutch) which prevents all but the top sheet from passing through to the registration rollers [F].

The paper tray has two corner separators [G], which help to allow only one sheet to feed. They also serve to set the height of the paper stack.

When the paper tray is closed after the paper is loaded, the paper tray pushes the tray set switch. This informs the CPU that the paper tray is set.

This machine has no sensors or switches to detect the paper size.

10.2 TORQUE ROLLER FEED SYSTEM

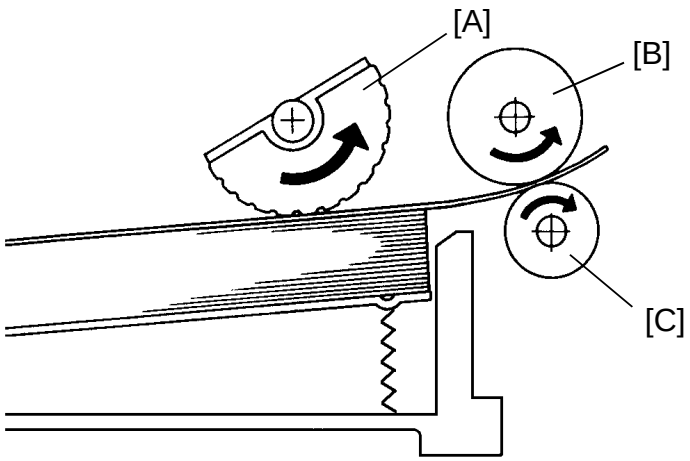

This copier uses an FTR (Feed + Torque Roller) paper feed system which utilizes three rollers.

10.2.1 Pick-up Roller

The semicircular pick-up rollers [A] are not in contact with the paper stack before it starts feeding paper.

Shortly after the Start key is pressed, the semicircular pick-up roller rotates to feed the top sheet to the feed [B] and torque [C] rollers.

At almost the same time that the paper's leading edge arrives at the feed roller, the semicircular pick-up rollers rotate off of the paper stack. Therefore, the pick-up rollers do not interfere with the operation of the feed and torque rollers. The feed and torque rollers then take over the paper feed process.

10.2.2 Feed and Torque Rollers

There is a one-way bearing inside the feed roller so it can turn only in one direction. The torque roller is driven by the feed roller and can turn in the opposite direction to the feed roller. As the torque roller is only driven by the feed roller, the torque roller can not turn in the same direction.

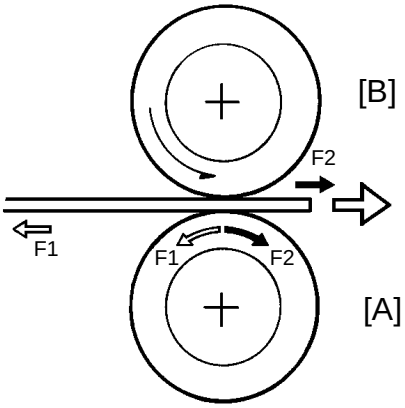

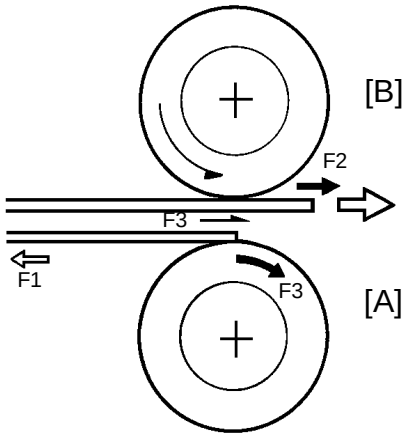

The slip clutch (torque limiter clutch) is located on the shaft of the torque roller [A]. The slip clutch applies a constant counterclockwise force (F1). When there is a single sheet of paper being driven between the rollers, the force of friction between the feed roller [B] and the paper (F2) is greater than F1. So, the torque roller turns clockwise.

When two or more sheets are fed between the rollers, the forward force on the second sheet (F3), is less than F1 because the coefficient of friction between the two sheets is small. So, the torque roller stops rotating and the second sheet cannot be fed.

10.3 PAPER LIFT MECHANISM

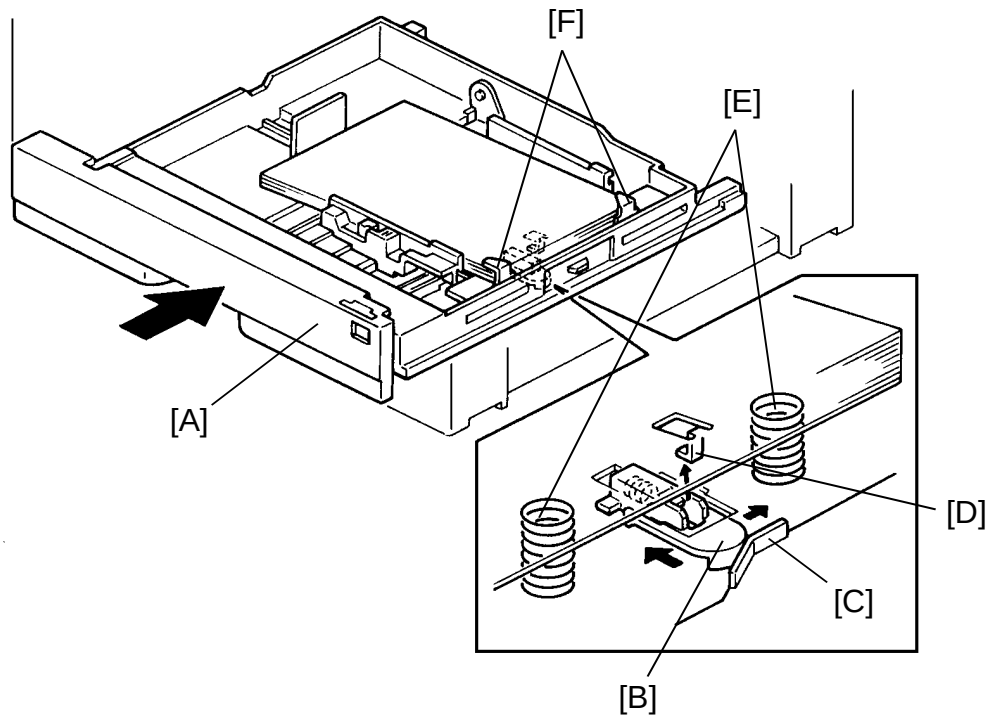

When the paper tray [A] is closed after paper is loaded, the plate release slider [B], which is mounted on the bottom part of the paper tray, is pushed by the projection [C] of the copier frame and the release slider comes off the bottom plate hook [D]

Once the release slider comes off, the bottom plate is raised by the pressure springs [E] and the top sheet pushes up the corner separators [F]. This keeps the stack of paper at the correct height.

10.4 PAPER LENGTH DETECTION

The paper length is measured by the registration sensor and is stored in memory while paper is fed through the registration sensor. This is performed only during the first copy after the following actions:

1. When the main switch is turned on.
2. When the front cover is opened and closed.
3. When the paper tray is opened and closed.

The previous paper length memory is also cleared by the above actions.

According to the following table, the CPU determines the size of the paper in the paper tray based on the paper length measured by the registration sensor.

Paper length (mm)	Paper size
364	B4
356	10" x 14"
330	8 1/2" x 13"
297	A4R
279	8 1/2" x 11"
267	8" x 10 1/2"
257	B5R
254	8" x 10"
216	5 1/2" x 8 1/2"
210	A5R

Since the CPU does not have the paper length in memory for the first copy cycle, the CPU controls the machine for the maximum paper size of B4 (257 mm x 364 mm).

From the second copy cycle on, the CPU controls the machine for the correct paper size based on the data stored during the first paper cycle.

Whenever the manual feed table is used, the CPU determines the paper size to be B4 (257 mm x 364 mm).

10.5 PAPER FEED DRIVE MECHANISM

10.5.1 1st Feed Station

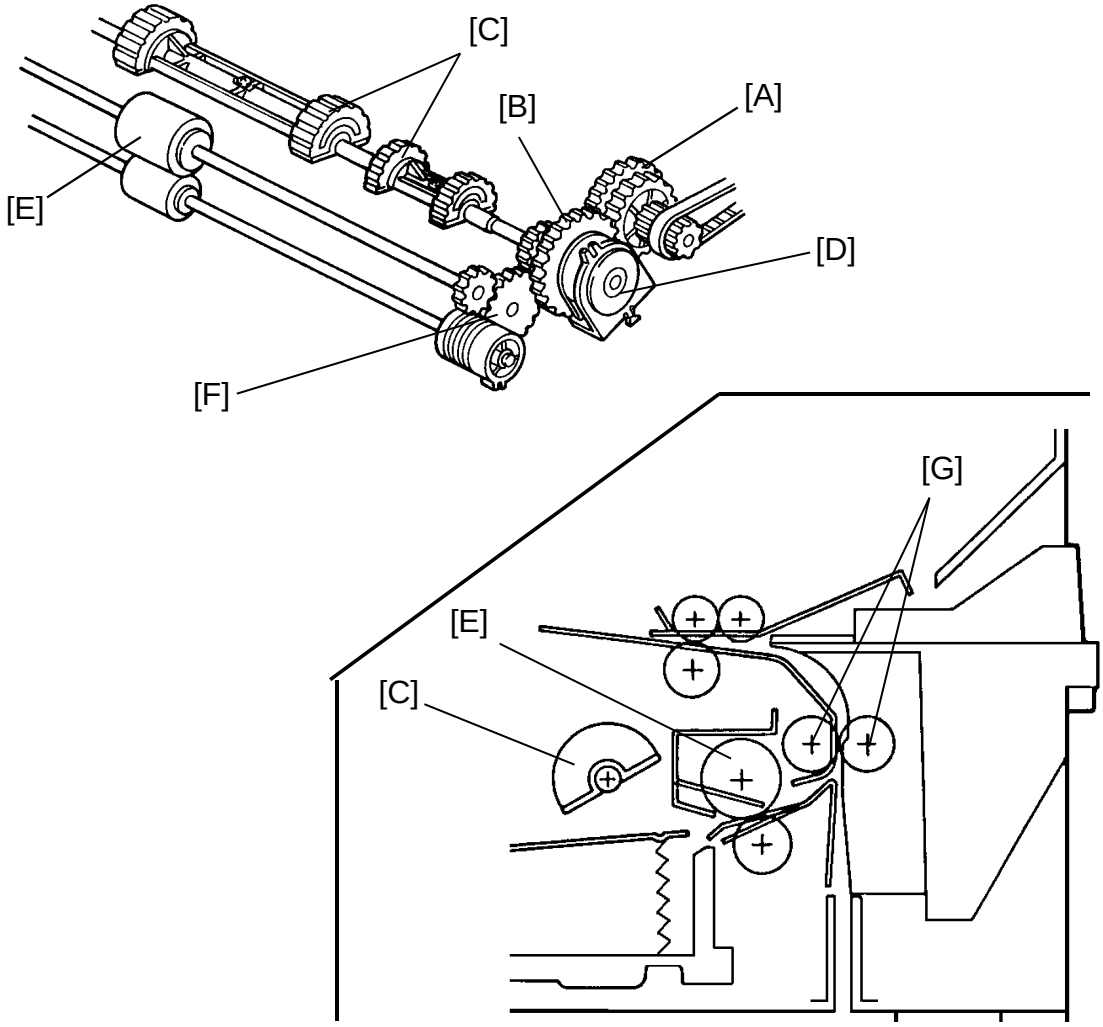

Through several gears and a timing belt, main motor rotation is transmitted to the relay gear [A] and then the 1st paper feed clutch gear [B]. The 1st paper feed clutch gear is secured on the shaft of the semicircular pick-up rollers [C].

The CPU energizes the 1st paper feed clutch [D] 800 milliseconds after the Start key is pressed. At this time, the semicircular pick-up rollers start rotating and this drive is transmitted to the feed rollers [E] by the relay gear [F], then paper starts to feed.

The 1st paper feed clutch stays on for 440 milliseconds. This allows that the semicircular pick-up rollers rotate only one revolution. The feed roller also rotates while the pick-up rollers are rotating.

The leading edge of the copy paper reaches to the 2nd relay rollers [G] when the 1st paper clutch de-energizes.

10.5.2 1st and 2nd Relay Rollers

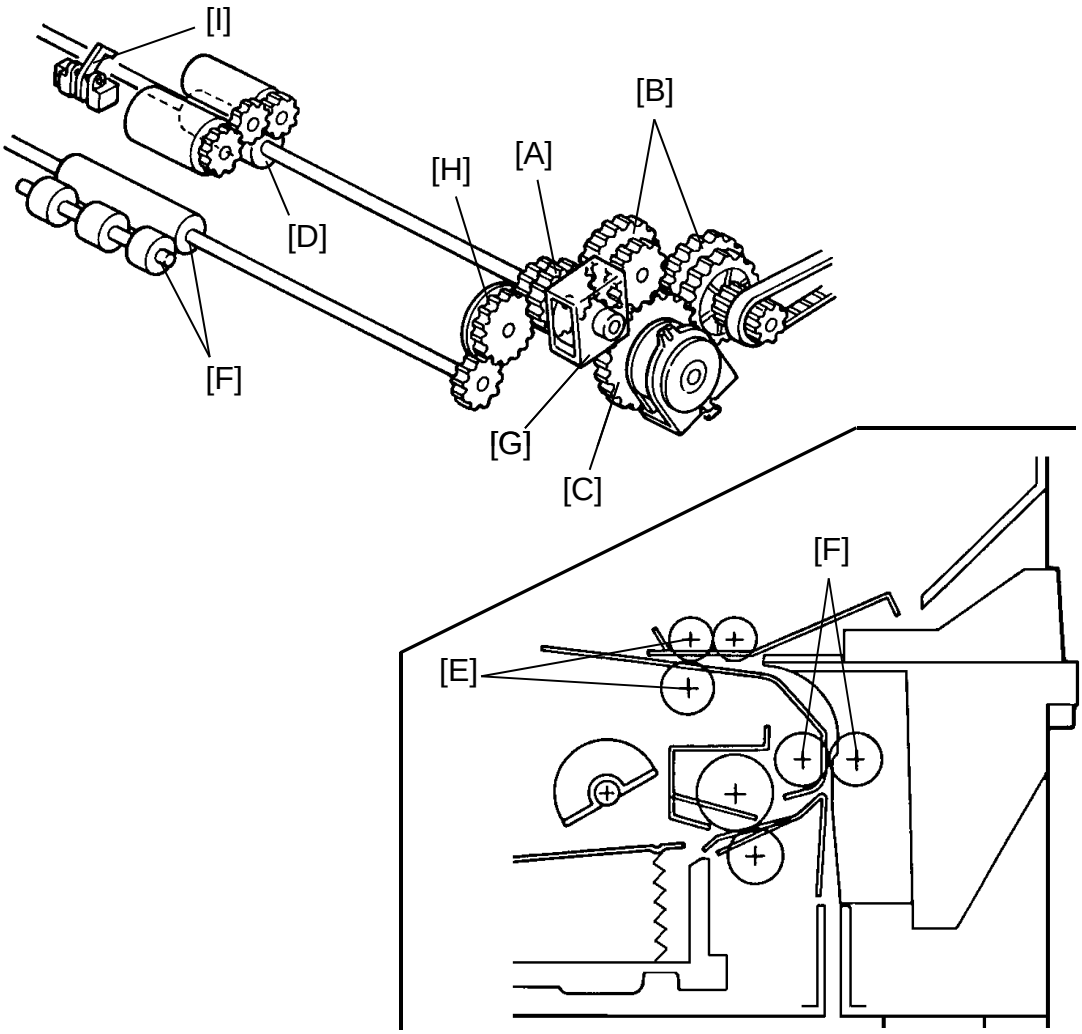

The main motor rotation is transmitted to the relay roller clutch gear [A] through the timing belt, the relay gears [B], and the 1st paper feed clutch gear [C]. The relay roller clutch gear is secured on the shaft of the lower 1st relay roller [D]. The rotation timing for the 1st relay rollers [E] and 2nd relay rollers [F] is controlled by the relay roller clutch [G].

The CPU energizes the relay roller clutch when the 1st or 2nd feed clutch de-energizes. (1.24 seconds after the Start key is pressed.)
At this time, the 1st relay roller starts rotating. This drive is transmitted to the 2nd relay rollers through the relay gear [H]. Then, the leading edge of the copy paper reaches to the 2nd relay rollers. Paper is fed from the 2nd and 1st relay rollers to the registration roller.

The relay sensor [I] is located just before the 1st relay rollers. This sensor is used for paper misfeed detection.

10.5.3 2nd Feed Station (A078 copier only)

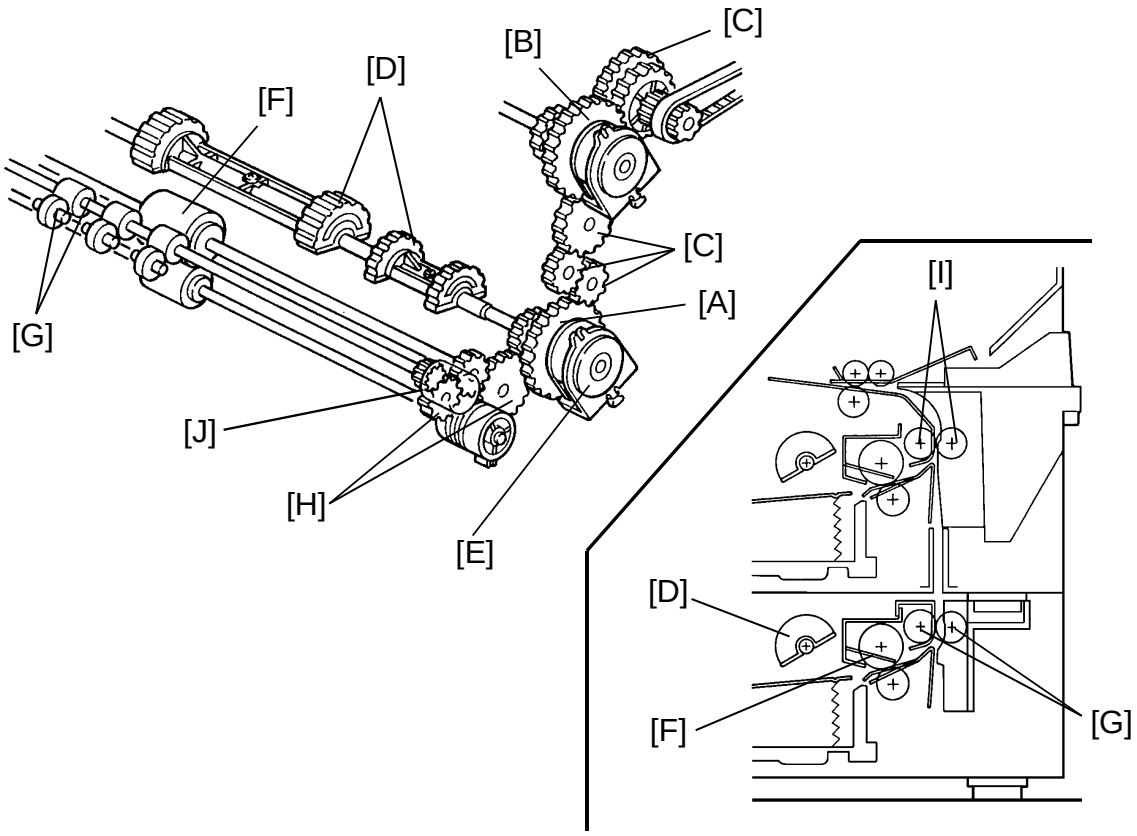

The main motor rotation is transmitted to the 2nd feed clutch gear [A] through a timing belt, 1st paper feed clutch gear [B], and the relay gears [C]. The 2nd feed clutch gear is secured on the shaft of the semi-circular pick-up rollers [D].

The CPU energizes the 2nd paper feed clutch [E] 800 milliseconds after the Start key is pressed. At this time, the semicircular pick-up rollers start rotating and this drive is transmitted to the feed roller [F], and 2nd feed relay rollers [G] through the relay gears [H]. Then paper starts to feed.

The 2nd paper feed clutch turns on twice, one for 600 milliseconds and once for 1140 milliseconds. This allows that the semicircular pick-up rollers will rotate for two revolutions. The feed roller and the feed relay rollers also rotate during the pick-up rollers rotation. This allows the leading edge of the paper to reach the 2nd relay rollers [I]. Then, the 2nd relay rollers take over paper transport.

The second feed relay roller shaft has a one-way bearing [J] located on the end of the shaft. Therefore, the second feed relay rollers can rotate freely when a misfed paper is removed.

10.6 SLIP CLUTCH MECHANISM

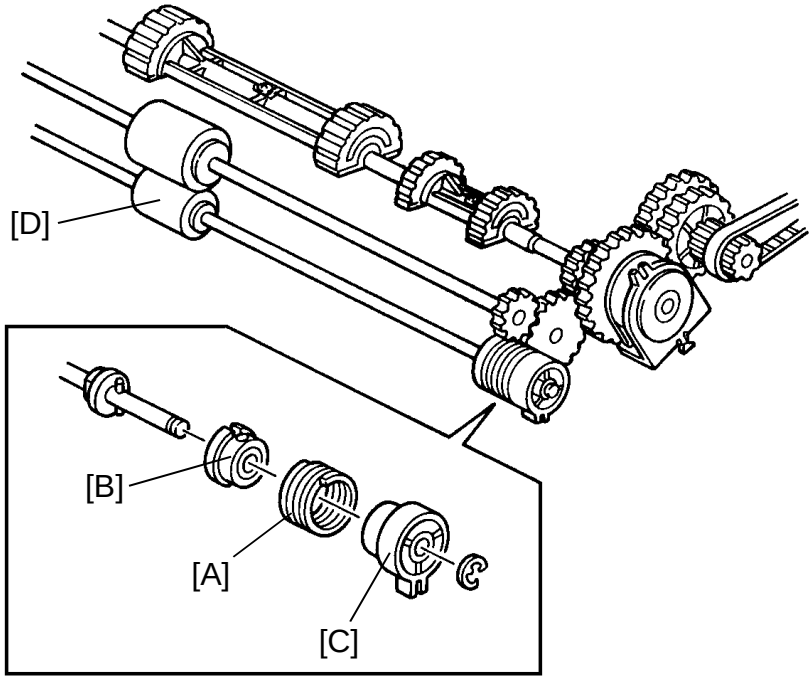

The slip clutch consists of two hubs connected by a drive spring [A]. The spring grips the input hub [B] loosely and grips the output hub [C] tightly. It will slip if the resistance to rotation is too great. The hubs and spring are precisely machined, and the output hub and spring slip when a single sheet of paper feeds between the feed roller and torque roller [D].

10.7 MANUAL FEED TABLE

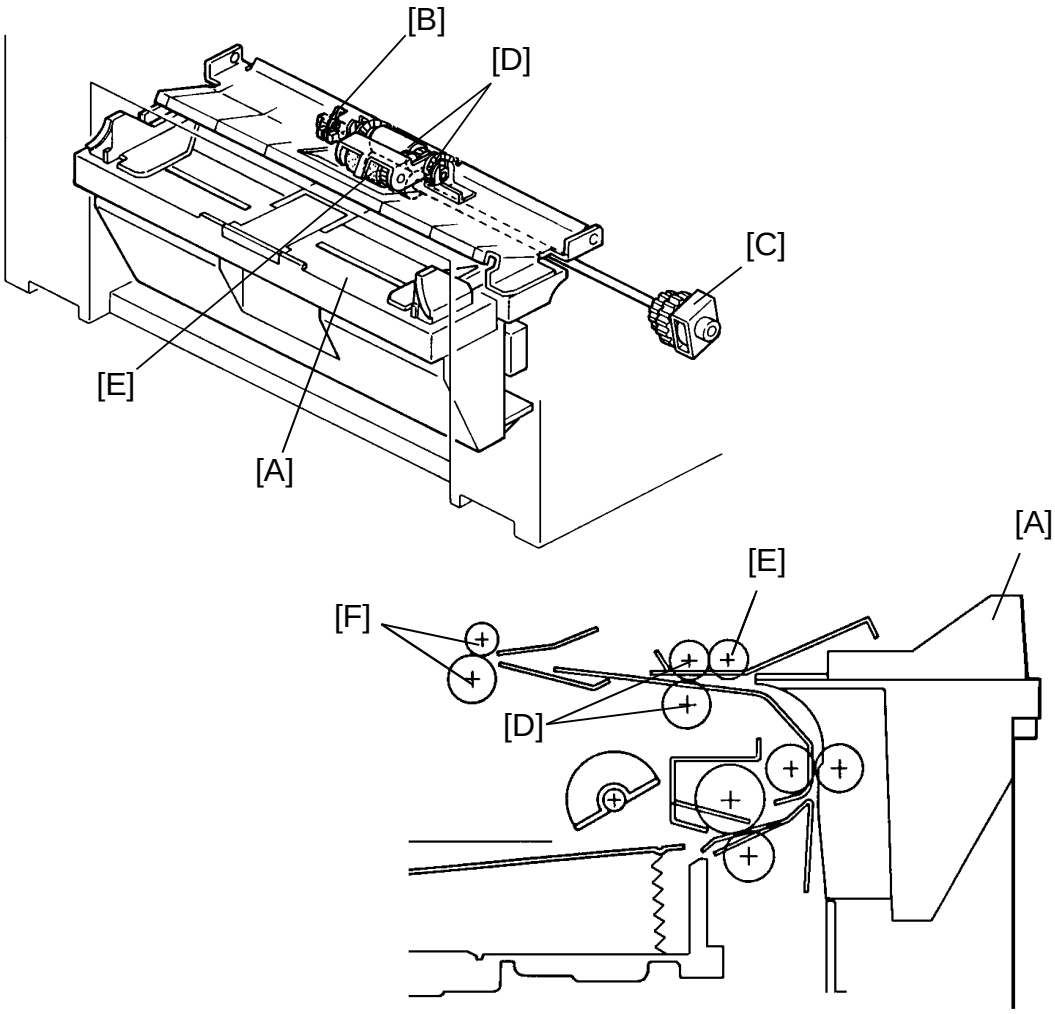

The manual feed table [A] can load only one sheet of paper.

When the copy paper is set in the manual feed table and the leading edge of copy paper activates the relay sensor [B], the sensor sends a low signal to the main board so that the Interrupt indicator turns on. At this time, the CPU places the copier in the manual feed mode.

After the Start key is pressed, the CPU energizes the relay roller clutch [C], (the paper feed clutch does not energized) and the 1st relay rollers [D] starts rotating.

The 1st relay roller drive is transmitted to the manual feed roller [E]. Then, copy paper is fed from the manual feed rollers to the registration rollers [F].

The relay sensor is also used for paper misfeed detection.

10.8 PAPER REGISTRATION

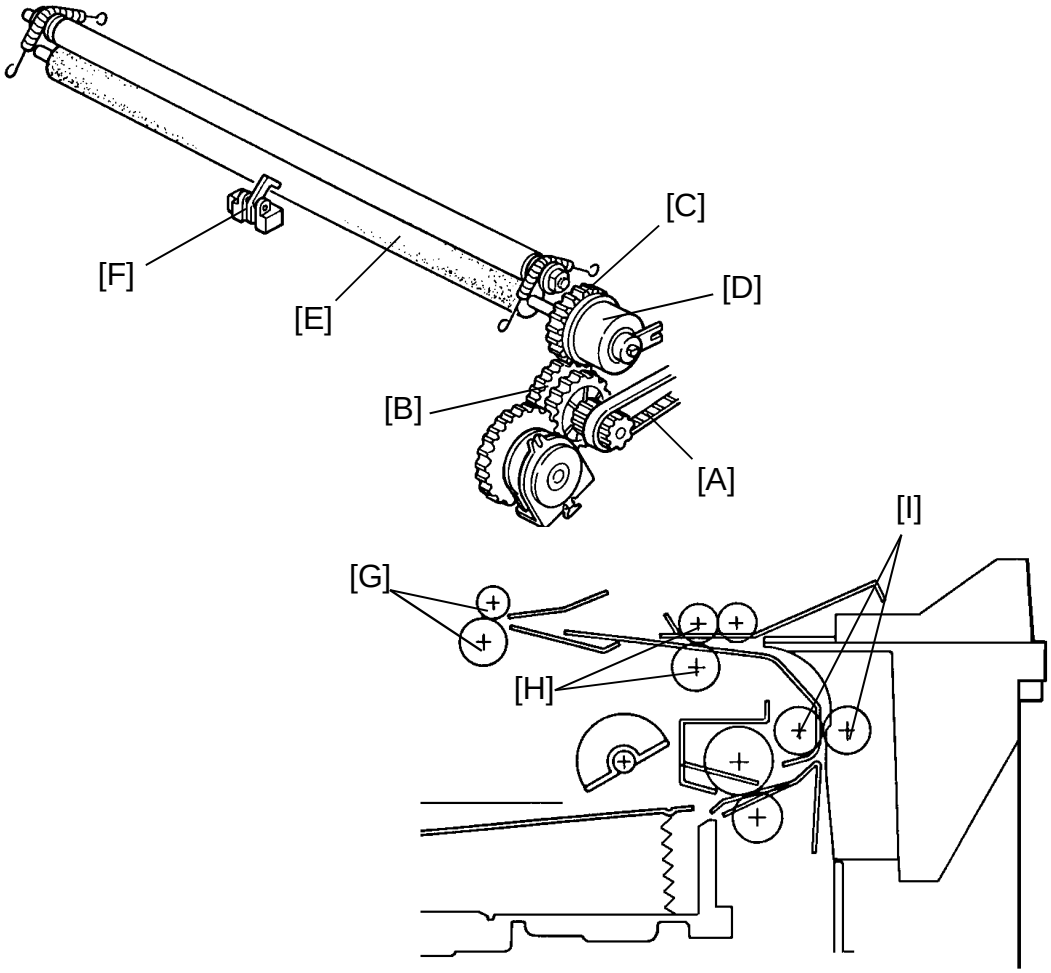

Main motor rotation is transmitted to the timing belt [A] through a series of gears. The timing belt rotate the relay gear [B] and then the registration roller clutch gear [C]. When the registration clutch [D] is energized, the rotation of the clutch gear is transmitted to the lower registration roller [E].

The registration sensor [F], which is positioned just before the registration rollers [G], controls the relay roller clutch stop timing. The relay roller clutch stays on for 180 milliseconds after the leading edge of paper actuates the registration sensor. At the end of the period, the CPU turns off the relay roller clutch. This delay allows time for the paper to press against the registration rollers and buckle slightly to correct skew.

The CPU energizes the registration clutch and re-energizes the relay roller clutch 3.4 seconds after the Start key is pressed. The registration, 1st [H] and 2nd [I] relay rollers then feed the paper to the image transfer section.

The registration sensor is also used for paper misfeed detection.

10.9 PAPER FEED AND MISFEED DETECTION TIMING

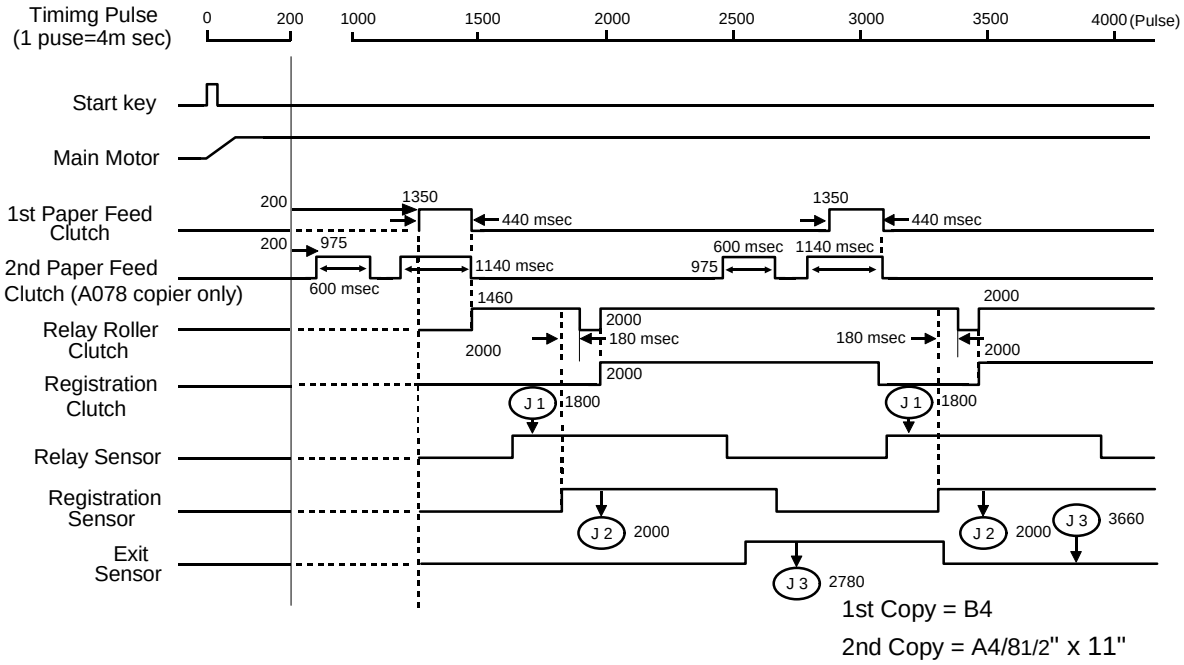

The relay sensor, registration sensor and exit sensor monitor the movement of the paper through the paper path. If the CPU determines that a misfeed exists, the Check Paper Path and the Misfeed Location Number (J1, J2, J3) indicators turn on. When the main switch is turned on, the CPU checks these three sensors for initial misfeed.

During the copy cycle, the CPU performs three kinds of misfeed detection:

J1: This machine has no indicator and sensor to detect the paper end. J1 indicator is used for the paper misfeed and paper end.
Although the paper tray runs out paper, the Start indicator turns green. After the Start key is pressed, the CPU checks whether the relay sensor is actuated within 1800 pulses (2.6 seconds) (only J1 indicator turns on).

J2: Checks whether the registration sensor is actuated within 2000 pulses (3.4 seconds) after the Start key is pressed. (J2 and Check Paper Path indicators turn on).

J3: Check whether the exit sensor is actuated within 2780 pulses (6.52 seconds) after the Start key is pressed, or whether the copy paper has passed through the exit sensor 1060 pulses (4.24 seconds) (B4 size) after the exit sensor has been actuated. (J3 and Check Paper Path indicators turn on.)

11. IMAGE FUSING

11.1 OVERVIEW

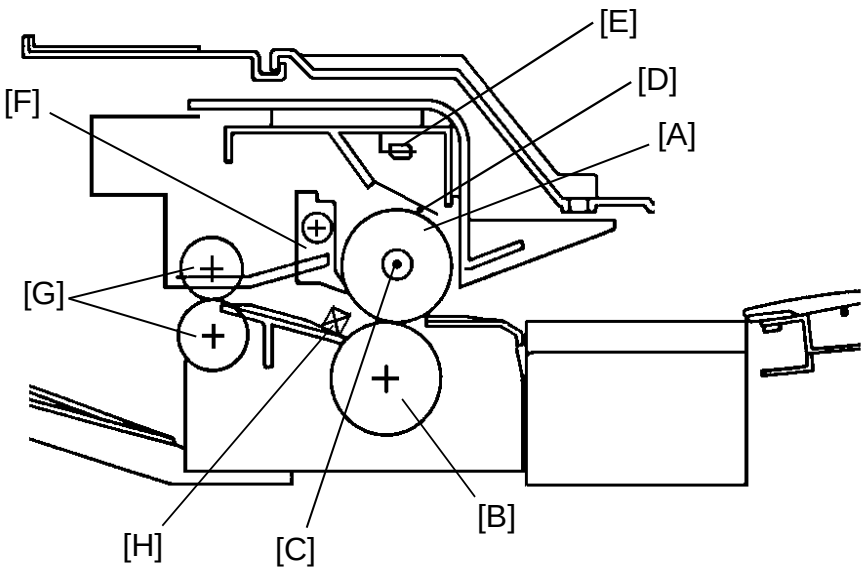

After the image is transferred, the copy paper enters the fusing unit. The image is fused to the copy paper by the process of heat and pressure through the use of a hot roller [A] and pressure roller [B].

The fusing lamp [C] is turned on and off to maintain the operating temperature of 185°C. The CPU monitors the hot roller surface temperature through a thermistor [D] which is in contact with the hot roller's surface. A thermoswitch [E] protects the fusing unit from overheating.

The hot roller strippers [F] separate the copy paper from the hot roller and direct it to the exit rollers [G]. The exit sensor [H] monitors the movement of the copy paper through the fusing unit and acts as a misfeed detector. While the exit rollers drive the copy paper to the copy tray.

11.2 FUSING DRIVE MECHANISM AND COVER SAFETY SWITCH

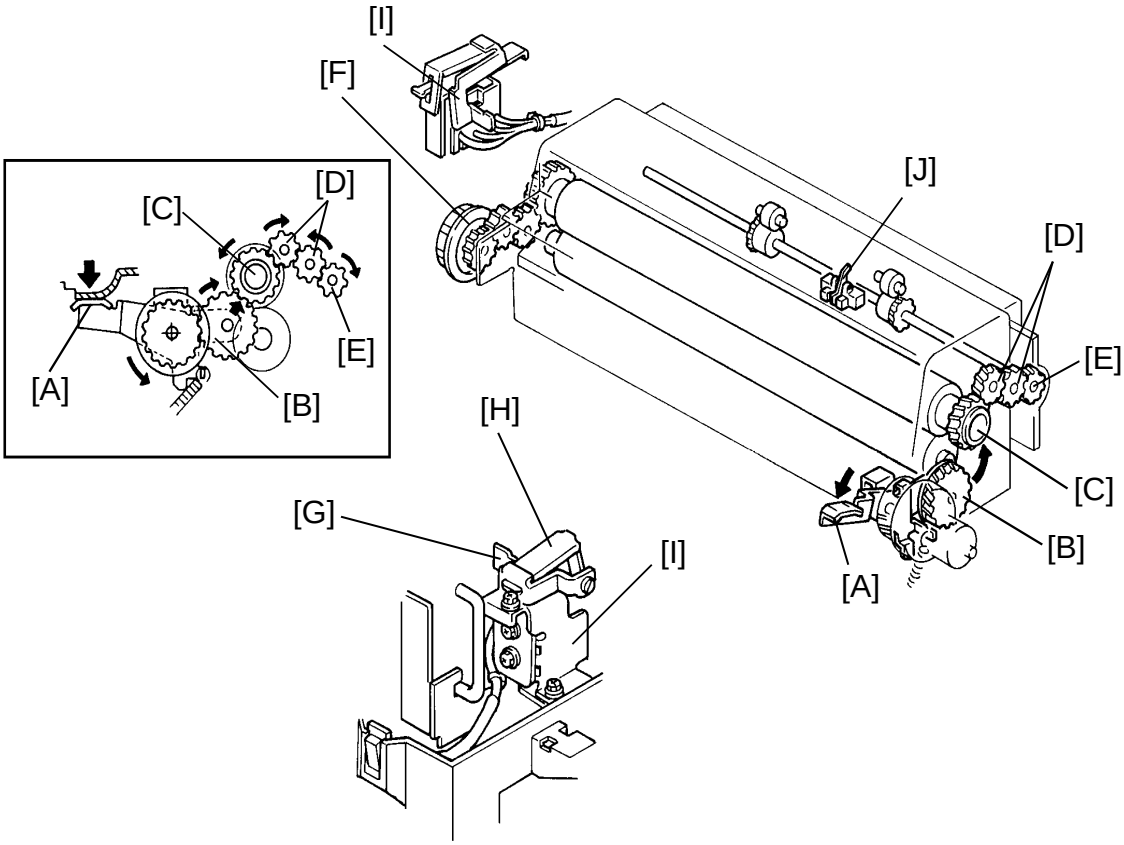

When the upper unit is closed and the lever [A] of fusing drive gear [B] is pushed, the main motor drive is transmitted to the fusing drive gear through a series of gears. The fusing drive gear turns the hot roller gear [C] and rotation passes from the hot roller gear through the idle gears [D] to the exit roller gear [E].

The fusing unit drive release mechanism automatically disengages the fusing drive gear when the upper unit is opened. This allows the fusing drive gear to rotate freely so that misfeed paper can be easily removed by rotation the fusing knob [F].

When the exit cover and/or the front cover is opened, the switch lever [G] and/or the switch arm [H] release the cover safety switch [I] to remove all power from the copier.

The exit sensor [J] is used for paper misfeed detection.

11.3 FUSING LAMP CONTROL

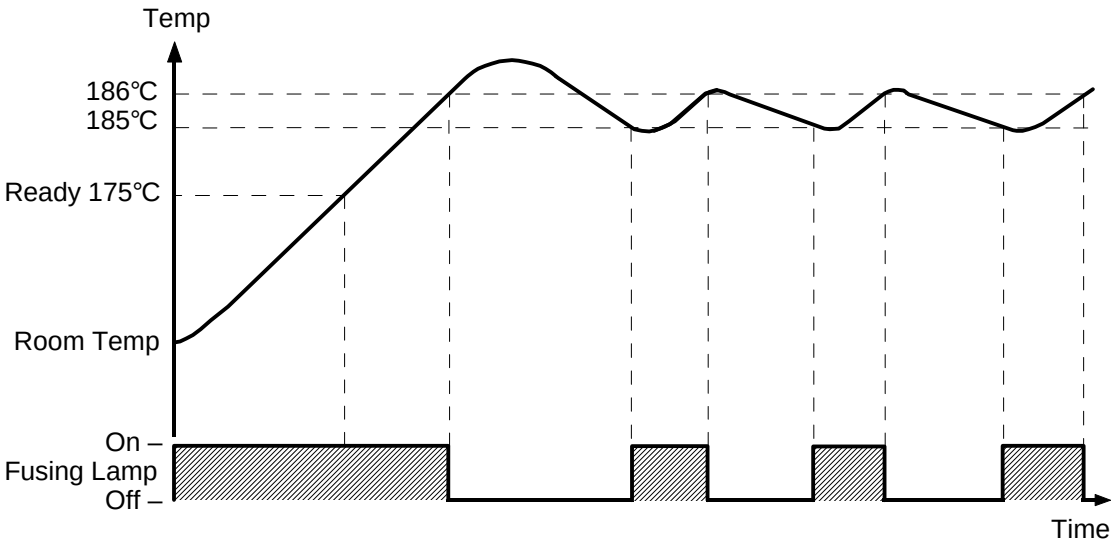

When the main switch is turned on, the CPU starts sending a trigger pulse to the fusing control circuit. The fusing control circuit then applies power to the fusing lamp. The power is applied until the CPU detects the ready temperature of 175°C through the fusing thermistor. This should take less than 30 seconds. Once the CPU detects the ready temperature, the CPU changes the timing of the fusing lamp on/off check (checks whether the fusing lamp should be turned on or off) from every 1 second to every 2 seconds.

During warm-up, the thermistor's temperature lags behind the hot roller's actual temperature. As a result, when the thermistor senses the ready temperature, the hot roller is already at or near the operating temperature. At this time the Start indicator turns green.

After that, the trigger pulse is turned on constantly when thermistor detects a temperature less than 185°C, and is turned off when the thermistor detects 186°C.

If the fusing lamp (900 W) is turned on or off when the exposure lamp is on, the power supplied to the exposure lamp will fluctuate, possibly degrading the copy image. To prevent this, the fusing lamp does not switch during scanning; it stays either on or off.

11.4 FUSING LAMP CONTROL CIRCUIT

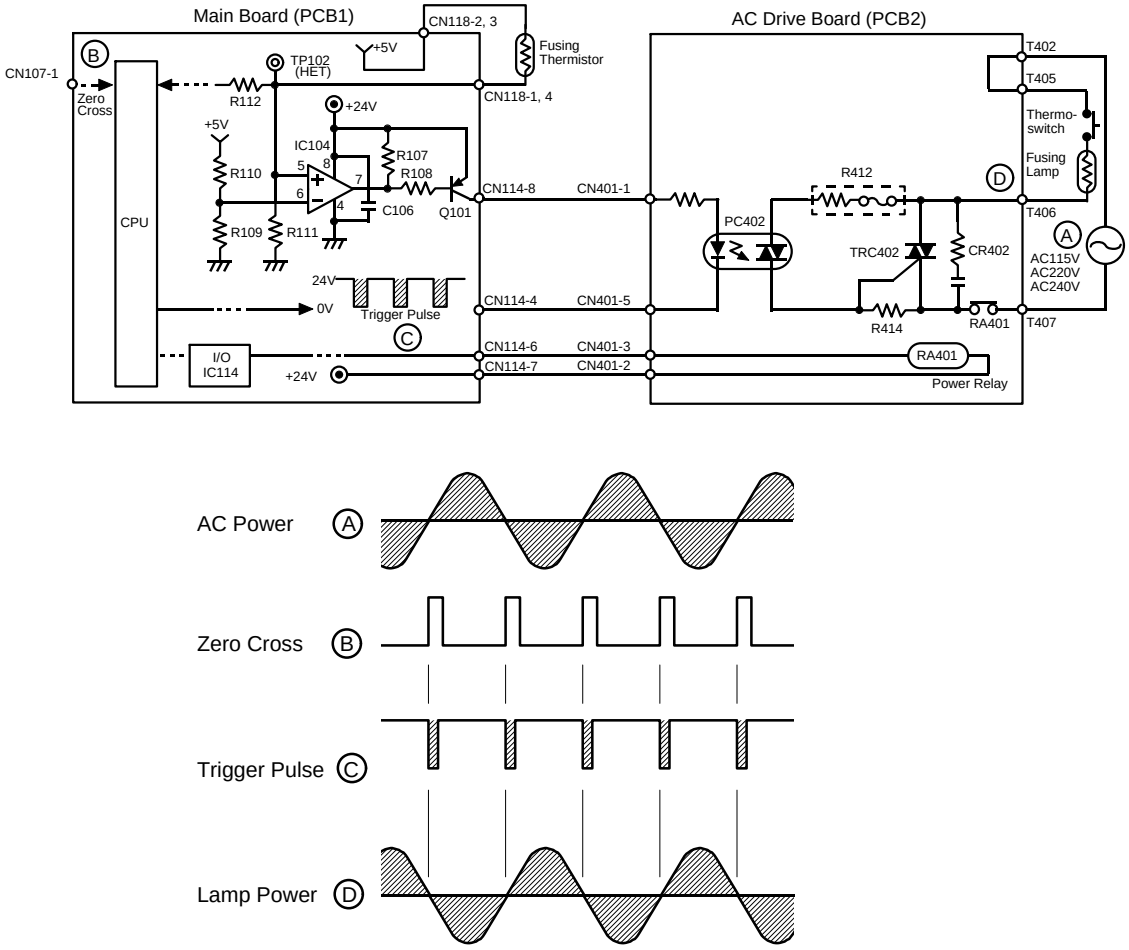

The main board monitors the fusing temperature through a thermistor. It also uses the zero cross signal generated by the dc power supply board to accurately control the applied power.

Normally, the voltage applied to the lamp is a full ac waveform. However, through SP29, fusing power can be phase controlled. (Normally, phase control is used only if the customer has a problem with electrical noise or interference.)

When the main switch is turned on, the main board starts to output a trigger pulse (C), which has the same timing as the zero cross signal (B), to the ac drive board. This trigger pulse allows maximum ac power to be applied to the fusing lamp. When the operating temperature is reached, the CPU stops outputting the trigger pulse (trigger goes HIGH) and the fusing lamp turns off.

11.4.1 Phase Control Mode

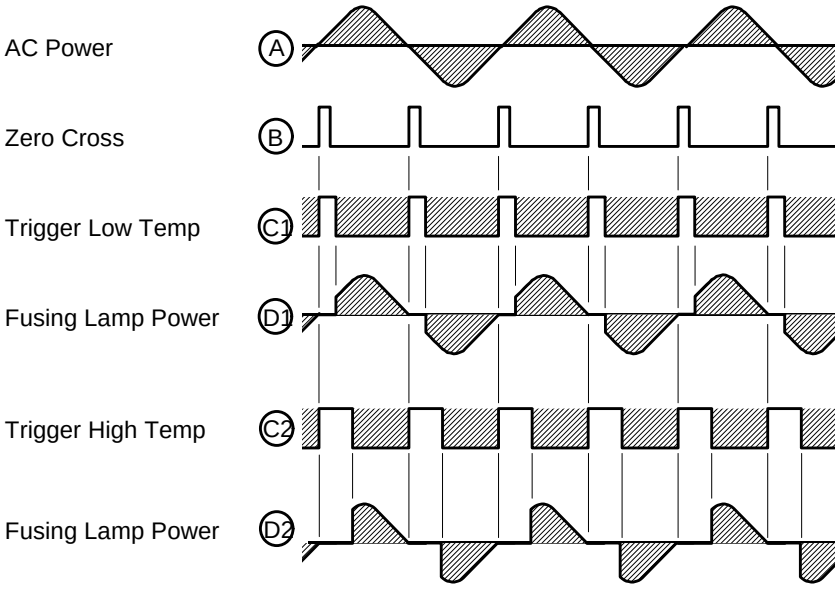

The main board sends the fusing lamp trigger pulse (LOW active) (C) to the ac drive board. PC402 activates TRC402, which provides ac power to the fusing lamp at the trailing edge of each trigger pulses. The trigger pulse goes HIGH when the main board receives the zero cross signal.

The amount of time that power is applied to the fusing lamp (D) depends on the temperature of the hot roller.

The trigger pulse (LOW part) is wider (C1) when the hot roller temperature is lower, and it is narrower (C2) when the hot roller is near the operating temperature.

11.4.2 Overheat Protection

IC104 and Q101 form an overheat protection circuit. When the fusing lamp is controlled within the normal range, pin 7 of IC104 stays LOW; therefore, Q101 stays on, allowing PC402 to operate. If the hot roller temperature reaches 240°C, the resistance of the thermistor becomes too low. At that time, pin 7 of IC104 becomes HIGH, turning off Q101 and stopping PC402. At the same time "E53" lights on the operation panel and the power relay (RA401) turns off.

Even if the thermistor overheat protection fails, a thermoswitch is installed in series with the fusing lamp. If the thermoswitch temperature reaches 170°C, the thermoswitch opens, removing power from the fusing lamp.

SECTION 3

INSTALLATION

1. INSTALLATION REQUIREMENTS

1.1 ENVIRONMENT

1. Temperature Range: 10°C to 30°C (50°F to 86°F)
2. Humidity Range: 15% to 90% RH
3. Ambient Illumination: Less than 1500 lux (do not exposure to direct sunlight)
4. Ventilation: Room of more than 20 m^3. Room air should turn over at least 30 m^3/hour/person.
5. Ambient Dust: Less than 0.15 mg/m^3 (4×10^{-3} oz/yd^3)
6. If the installation place is air-conditioned or heated, place the machine as follows:
   a) Where it will not be subjected to sudden temperature changes.
   b) Where it will not be directly exposed to cool air from an air-conditioner in the summer.
   c) Where it will not be directly exposed to reflected heat from a space heater in winter.
7. Avoid placing the machine in an area filled with corrosive gas.
8. Avoid any places higher than 2000 meters (6500 feet) above sea level.
9. Place the machine on a strong and level base.
10. Avoid any area where the machine may be subjected to frequent strong vibration.

1.2 MACHINE LEVEL

1. Front to back: Within 5 mm (0.2") of level
2. Right to left: Within 5 mm (0.2") of level

1.3 MINIMUM SPACE REQUIREMENTS

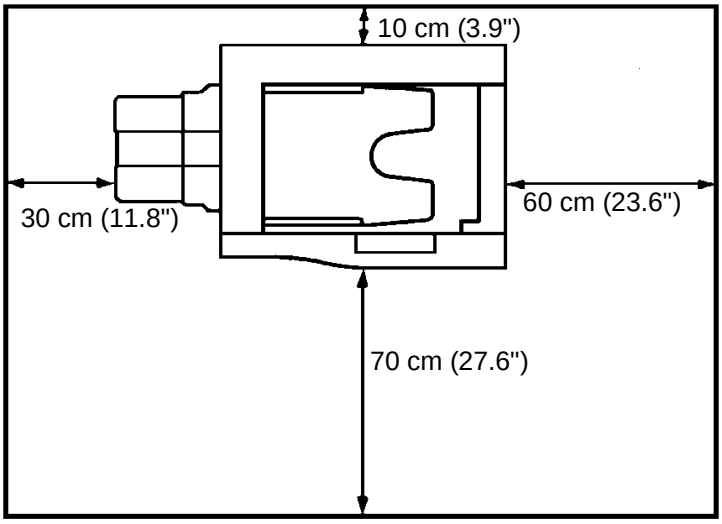

1. Front: 70 cm (27.6")
2. Back: 10 cm (3.9")
3. Right: 60 cm (23.6")
4. Left: 30 cm (11.8")

1.4 POWER REQUIREMENTS

1. Input voltage level:

110 V/60 Hz : More than 15 A
115 V/60 Hz : More than 15 A
220~230 V/50 Hz : More than 8 A
220 V/60 Hz : More than 8 A
240 V/50 Hz : More than 8 A

2. Permissible voltage fluctuation: ±10%
3. Do not set anything on the power cord.

NOTE: a) Be sure to ground the machine. (Do not connect the grounding wire to a gas pipe.)
b) Make sure the plug is firmly inserted in the outlet.
c) Avoid multi-wiring.

2. INSTALLATION PROCEDURE

2.1 COPIER INSTALLATION PROCEDURE

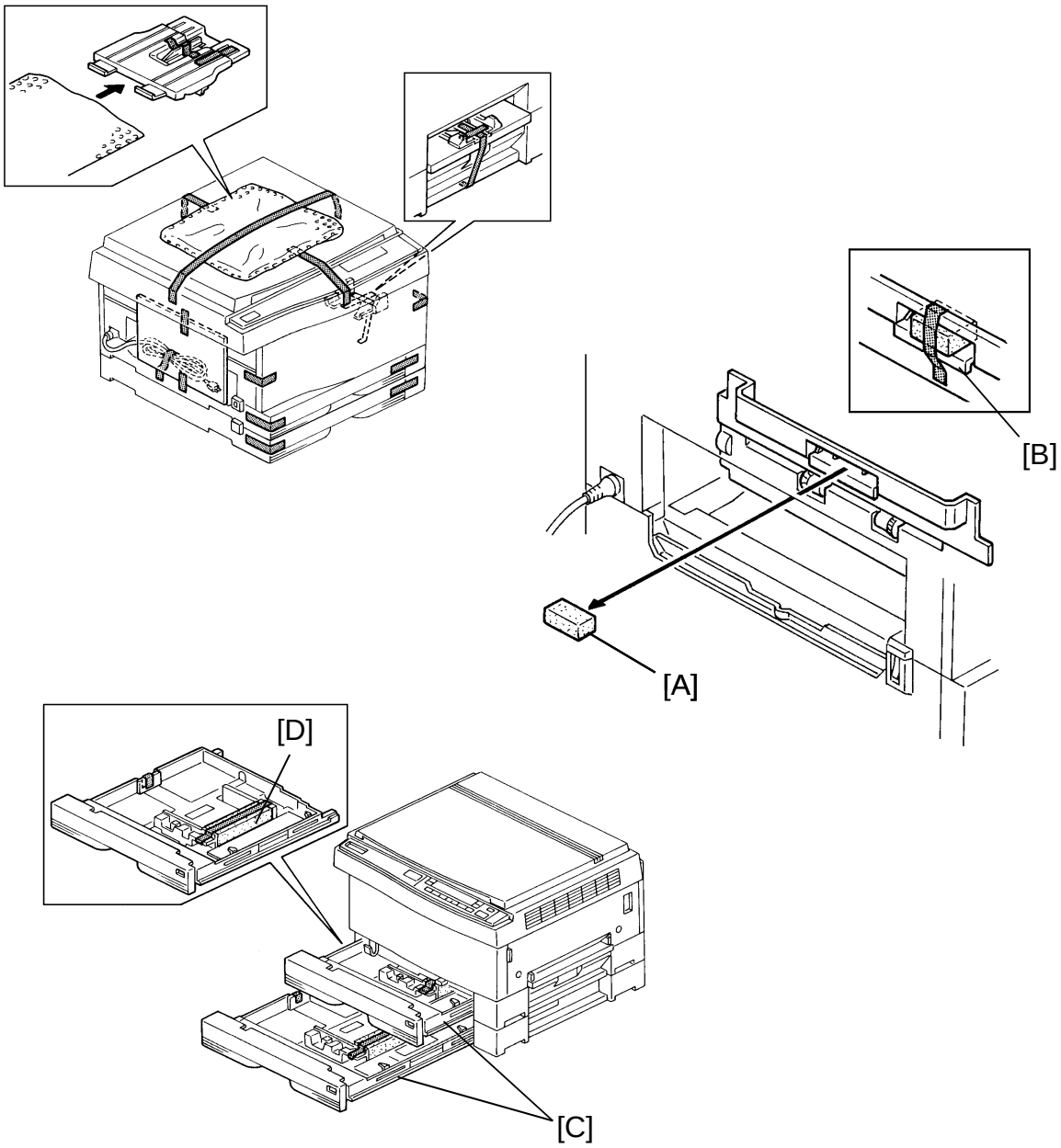

1. Remove the strips of tape from the copier as shown.
2. Remove the tape and foam block [A] from the exit release lever [B].
3. Pull out the paper trays [C]; then remove the foam block [D] and tapes. Close the paper trays.

   NOTE: A076 and A077 copiers have one paper tray.

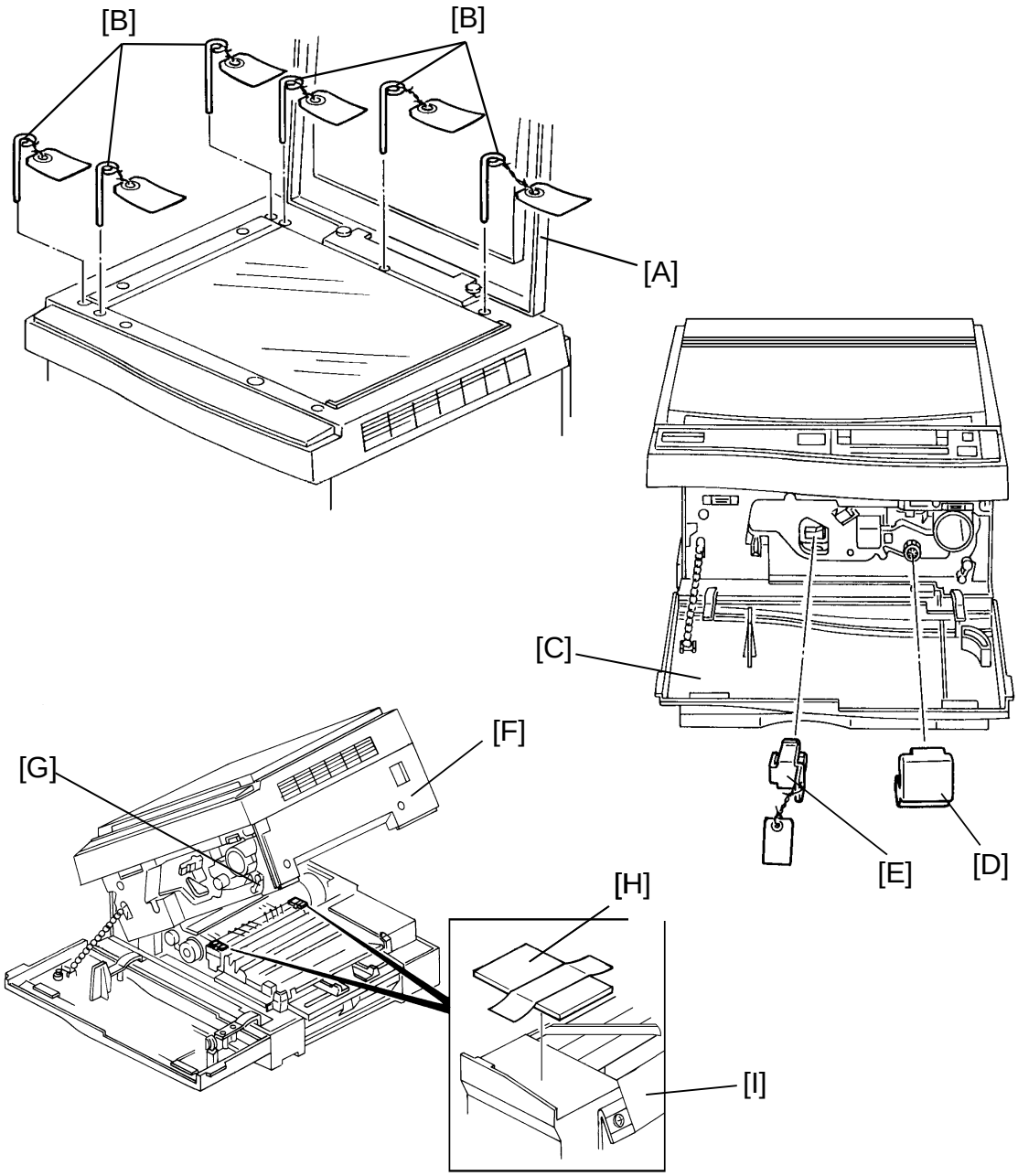

4. Open the platen cover [A] and remove the lock pins [B].
   (A076 copier: 4 pins, A077 and A078 copiers: 6 pins)

   NOTE: Save the lock pins for future shipping.

5. Open the front cover [C], and remove the foam block [D].

6. Remove the shipping retainer [E].

   NOTE: Save the shipping retainer for future shipping.

7. Open the upper unit [F] by pressing the release lever [G]. Remove the shipping spacers [H] from the transfer/separation corona unit [I].
   Close the upper unit.

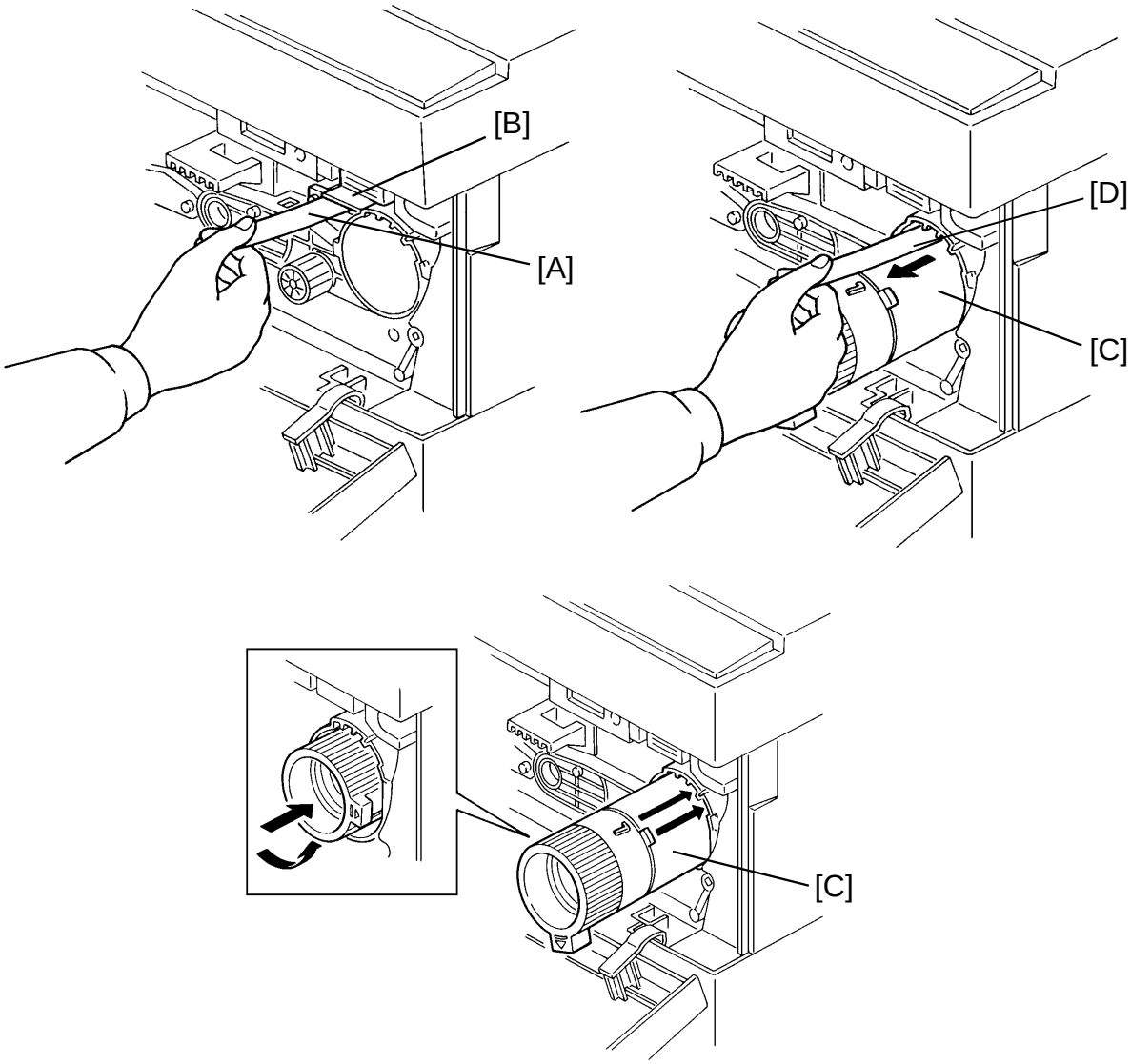

8. Pull off the seal [A] from the developer tank [B] to load the developer into the development unit.
9. Shake the toner cartridge [C] well and insert the cartridge while pulling off the seal [D]. Then, install the cartridge as shown.
10. Close the front cover.

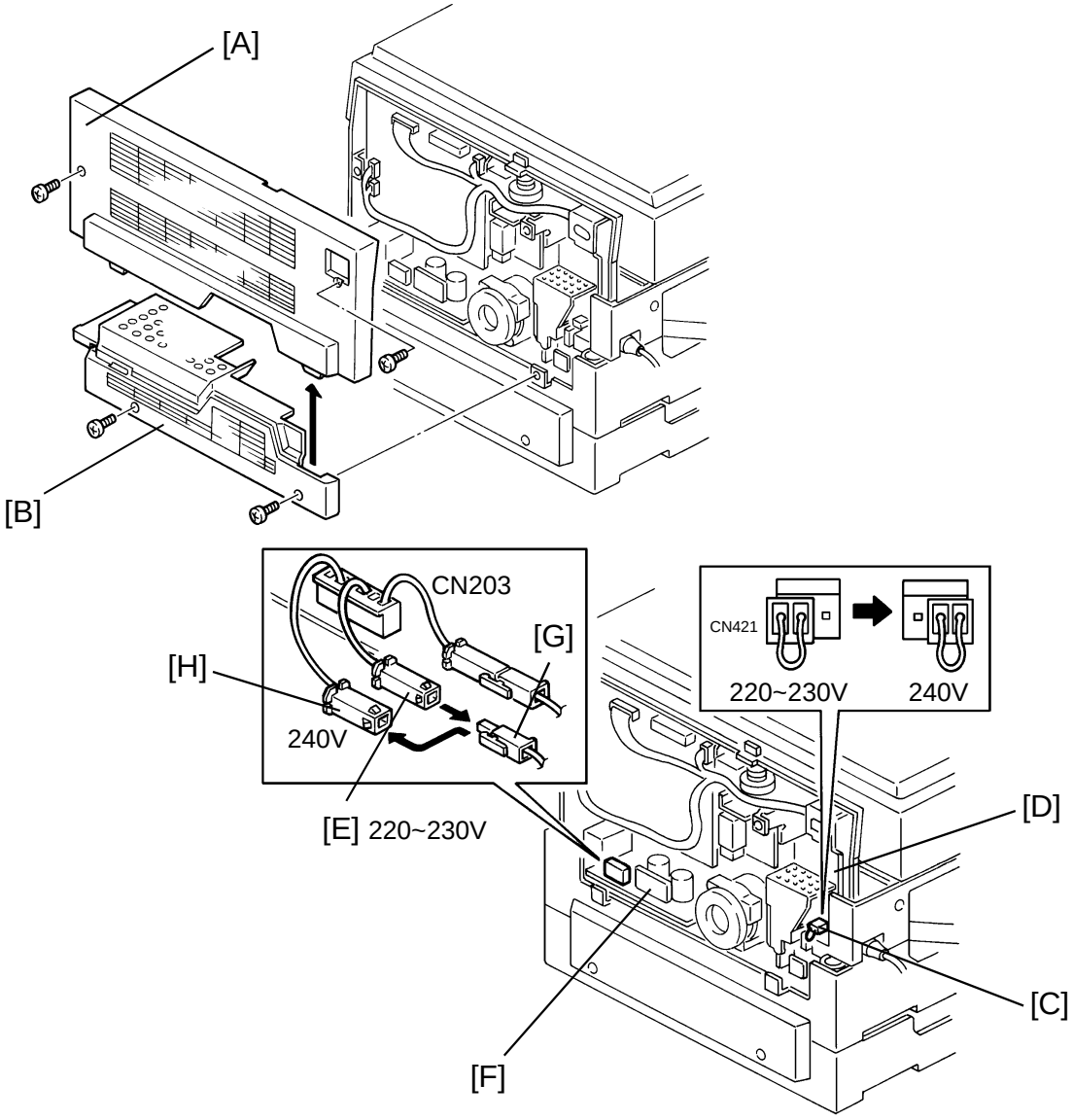

CAUTION: This procedure (step 11) must be done only in 240 volt areas.

11. Perform the conversion from 220~230 V to 240 V as follows:
    1) Remove the upper rear cover [A] (2 screws).
    2) Remove the lower rear cover [B] (2 screws).
    3) Disconnect the short connector [C] (2P/White) on the ac drive board [D] from CN421 and reconnect it to CN421 as shown in the illustration.
    4) Disconnect the connector (1P/White) for 220~230 V [E] (Red Wire) on the dc power supply PCB [F] from the ac harness connector [G] and reconnect the connector (1P/White) for 240 V [H] (White Wire) to the ac harness connector.
    5) Reinstall the rear covers.

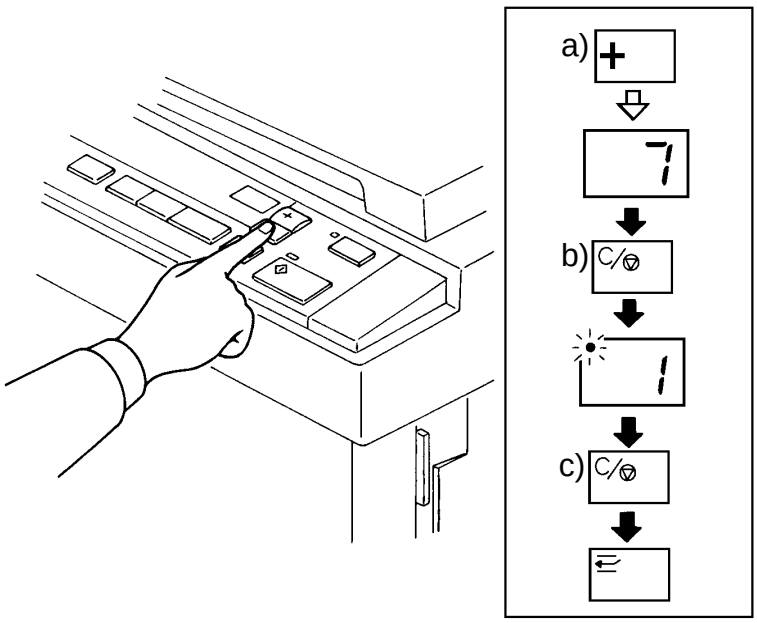

6) Plug in the machine and turn on the main switch, then lower the platen cover.

7) Enter the SP mode as follows:

a) Enter "7" using the Quantity Increase (+) key.

b) Press and hold the Clear/Stop key until a dot (•) appears in the top left corner of the copy counter.

c) Press the Clear/Stop key, and then press the Interrupt key. "5" will start blinking.

8) Perform SP12 in the following sequence:

SP Mode Number		Procedure
12	Conversion from 220~230V to 240V.	Enter "12" using the Quantity Increase (+) key. Then, press the Auto Image Density key. Change the data from "0" to "1" using Quantity Increase (+) key. Then, press the Auto Image Density key. "12" will start blinking. Go to the step 12. 3).

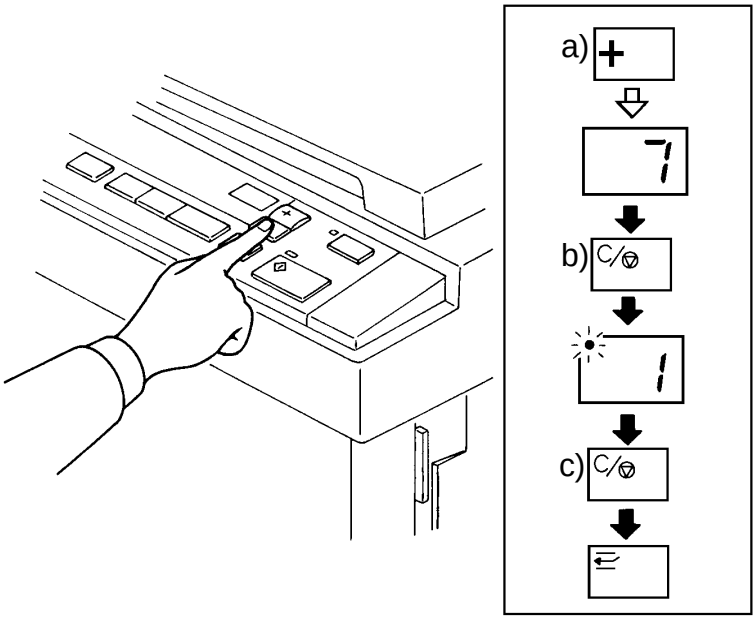

12. Perform the developer initial setting.
    1) Plug in the machine and turn on the main switch, then lower the platen cover.
    2) Enter the SP mode as follows:
        a) Enter "7" using the Quantity Increase (+) key.
        b) Press and hold the Clear/Stop key until a dot (•) appears in the top left corner of the copy counter.
        c) Press the Clear/Stop key, and then press the Interrupt key. "5" will start blinking.

    3) Perform SP65 in the following sequence to agitate the developer.

SP Mode Number		Procedure
65	Developer Initial Setting	Enter "65" using the Quantity Decrease (–) key and press the Auto Image Density key. "50" will be displayed in the copy counter. Press the Start key for initial setting.

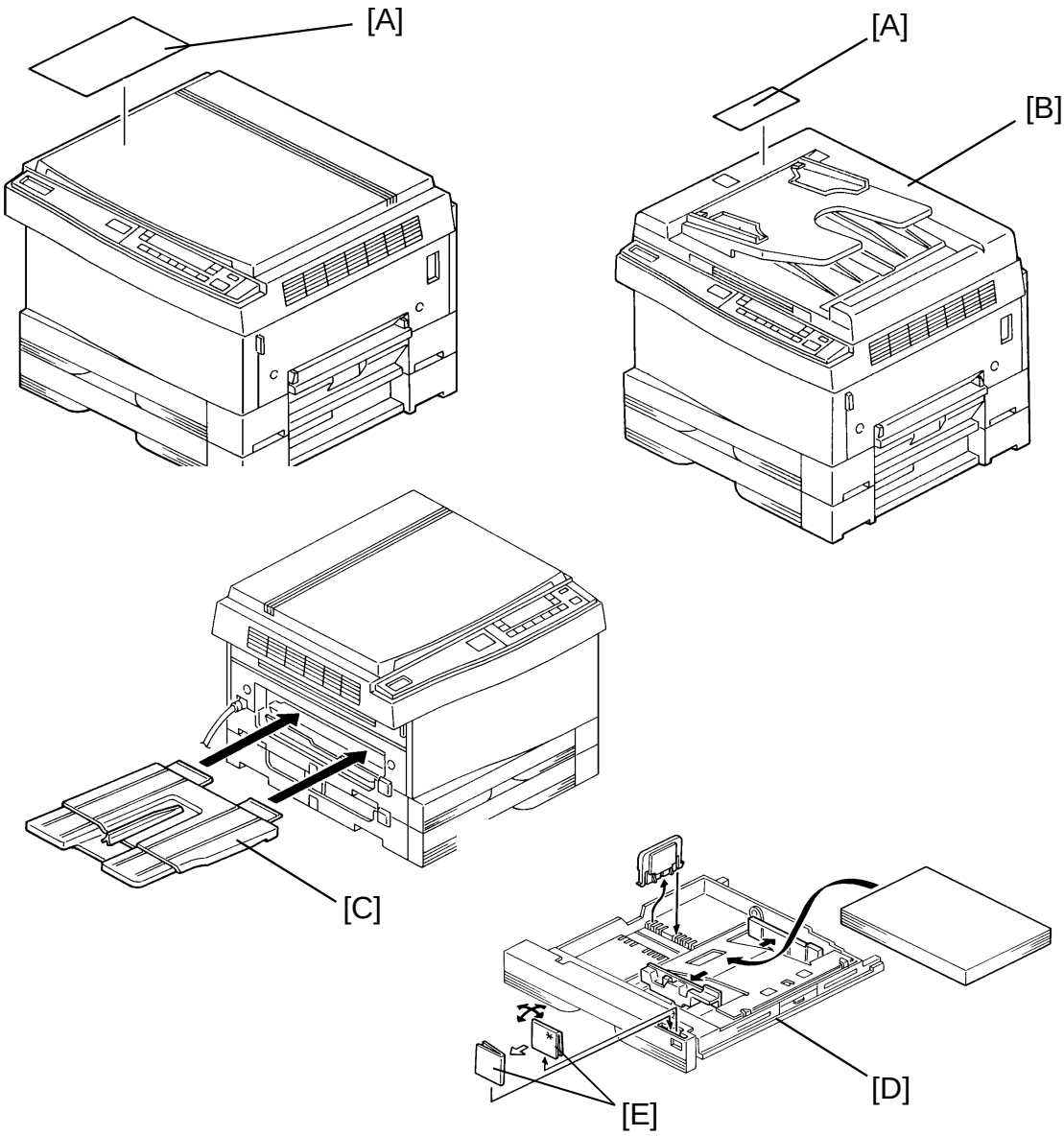

13. Place the decal [A] (symbol explanation) on the platen cover as shown, or when the DF [B] is installed on the machine, place the decal on the DF as shown.
14. Install the copy tray [C].
15. Load paper into the paper tray [D] according to the instruction decal on the paper tray.
16. Change the paper size plate [E] to display the correct paper size.
17. Check the machine operation and copy quality.

2.2 220~230/240V CONVERSION

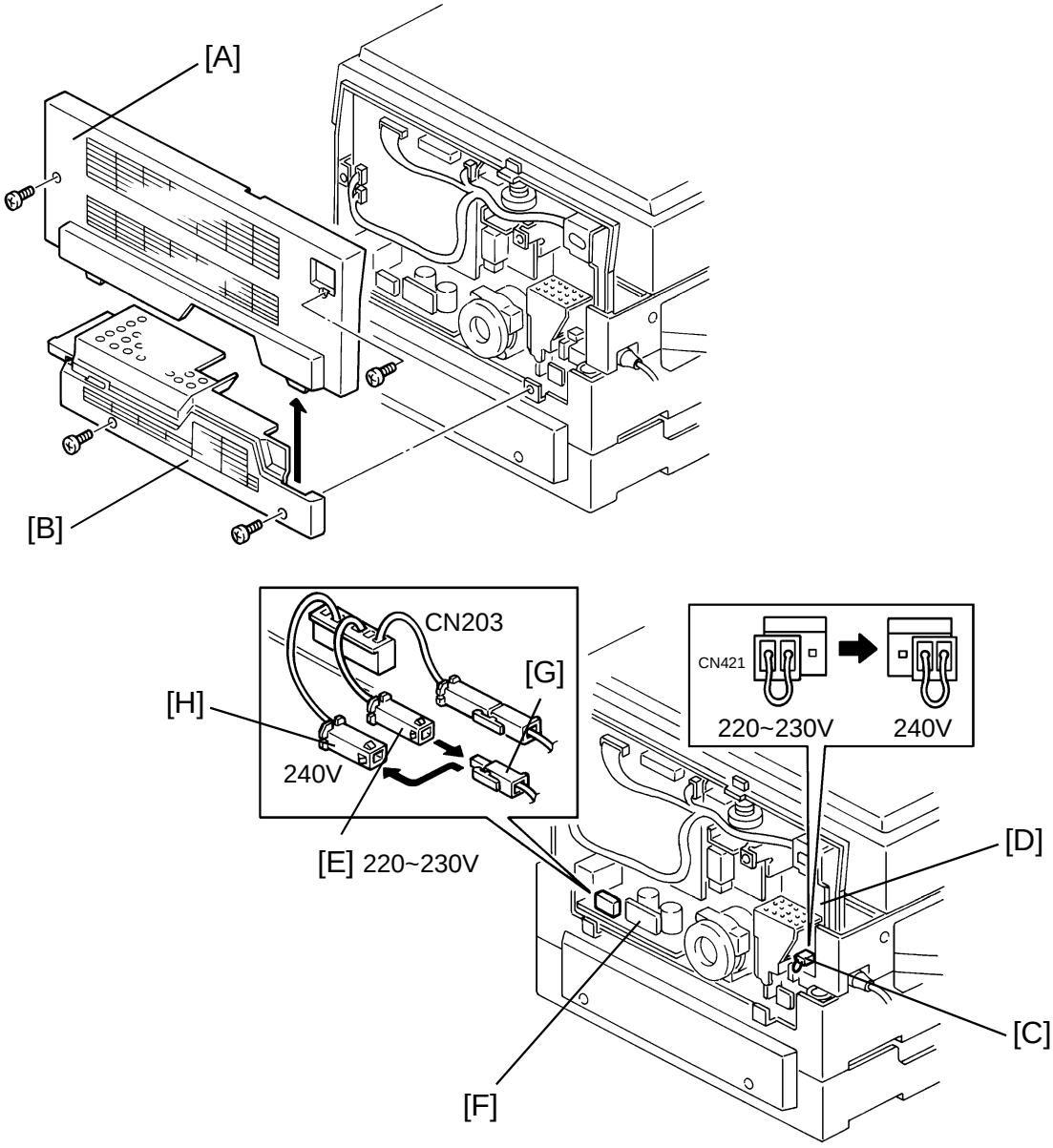

1. Remove the upper rear cover [A] (2 screws).
2. Remove the lower rear cover [B] (2 screws).
3. Disconnect the short connector [C] (2P/White) on the ac drive board [D] from CN421 and reconnect it to CN421 as shown in the illustration.
4. Disconnect the connector (1P/White) for 220~230 V [E] (Red Wire) on the dc power supply PCB [F] from the ac harness connector [G] and reconnect the connector (1P/White) for 240 V [H] (White Wire) to the ac harness connector.
5. Reinstall the rear covers.

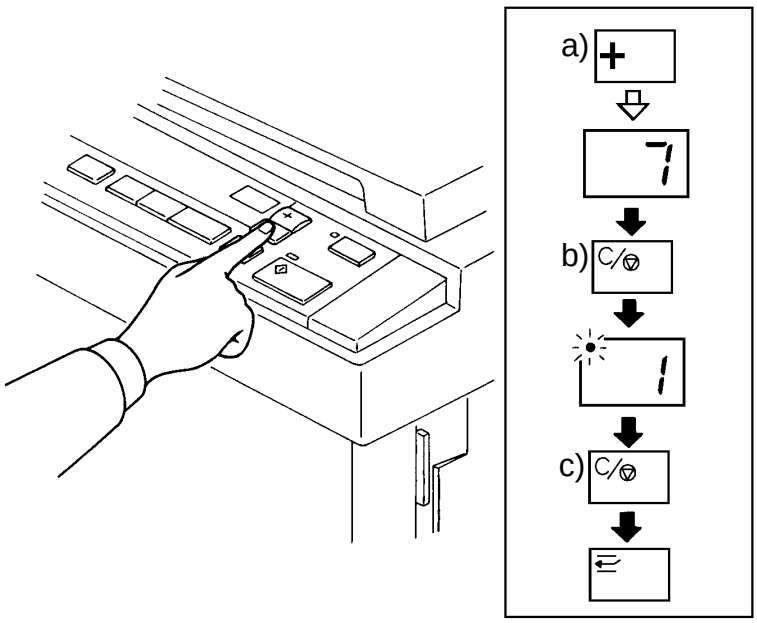

6. Plug in the machine and turn on the main switch, then lower the platen cover.

7. Enter the SP mode as follows:
   a) Enter "7" using the Quantity Increase (+) key.
   b) Press and hold the Clear/Stop key until a dot (•) appears in the top left corner of the copy counter.
   c) Press the Clear/Stop key, and then press the Interrupt key. "5" will start blinking.

8. Perform SP12 in the following sequence:

SP Mode Number		Procedure
12	Conversion from 220~230V to 240V.	Enter "12" using the Quantity Increase (+) key. Then, press the Auto Image Density key. Change the data from "0" to "1" using Quantity Increase (+) key. Then, press the Auto Image Density key. "12" will start blinking. Press the Interrupt key to exit the SP mode.

2.3 KEY COUNTER HOLDER INSTALLATION (OPTION)

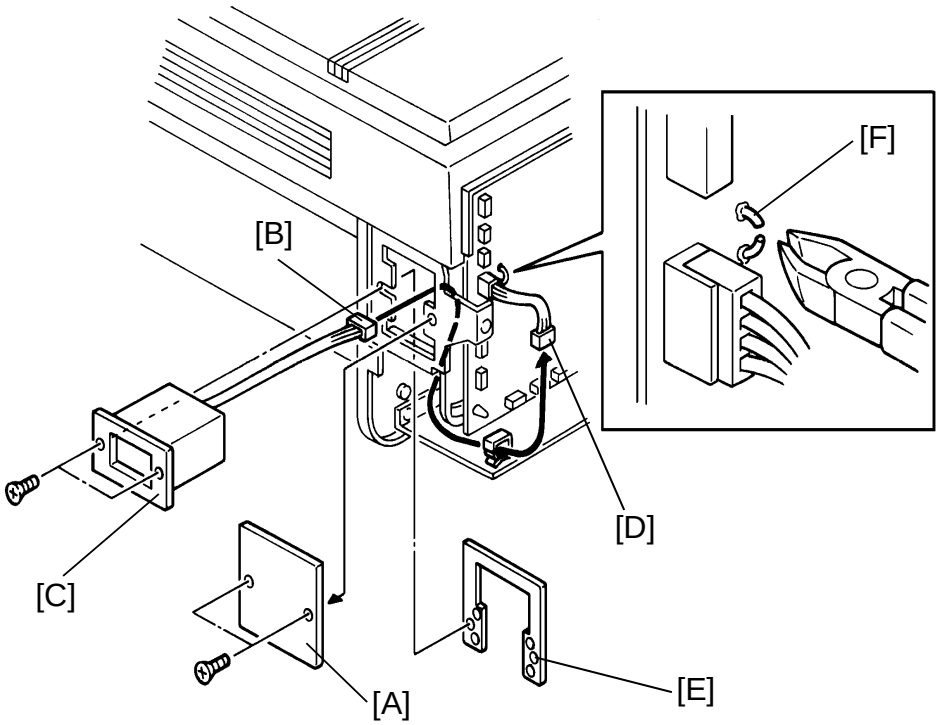

1. Turn off the main switch.
2. Open the front cover.
3. Open the upper cover by pressing the release lever.
4. Remove the right cover (2 screws).
5. Remove the upper rear cover (2 screws).
6. Remove the key counter cover [A] (2 screws).
7. Connect the 4P connector [B] of the key counter holder [C] to the key counter harness [D] through the key counter access hole (1 harness clamp).
8. Position the fixing plate [E] as shown in the illustration and insert the key counter holder.
9. Align the holes in the fixing plate with the mounting holes of the key counter holder and secure the key counter holder (2 screws).

   NOTE: The fixing plate has three different hole sizes. Use the holes that match those on the counter that you are installing.
10. Cut the jumper wire (JP101) [F] with a pair of pliers.
11. Reinstall all covers.

2.4 OPTICS ANTI-CONDENSATION HEATER INSTALLATION (OPTION)

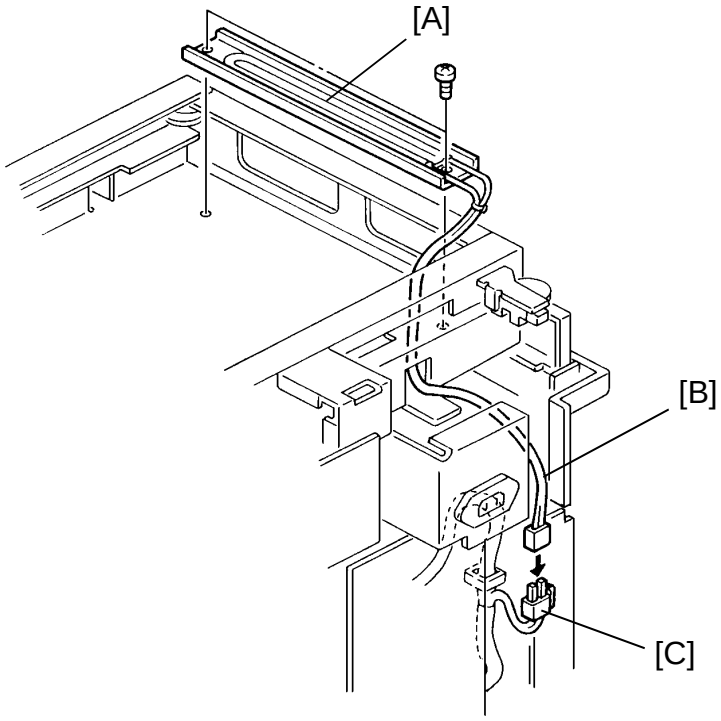

1. Turn off the main switch.
2. Remove the upper rear cover (2 screws).
3. Remove the exposure glass. (See Exposure Glass Removal.)
4. Install the optics heater [A] in the optics cavity as shown (2 screws).
5. Wire the heater harness [B] and connect the connector [C] as shown.

2.5 DRUM ANTI-CONDENSATION HEATER INSTALLATION (OPTION)

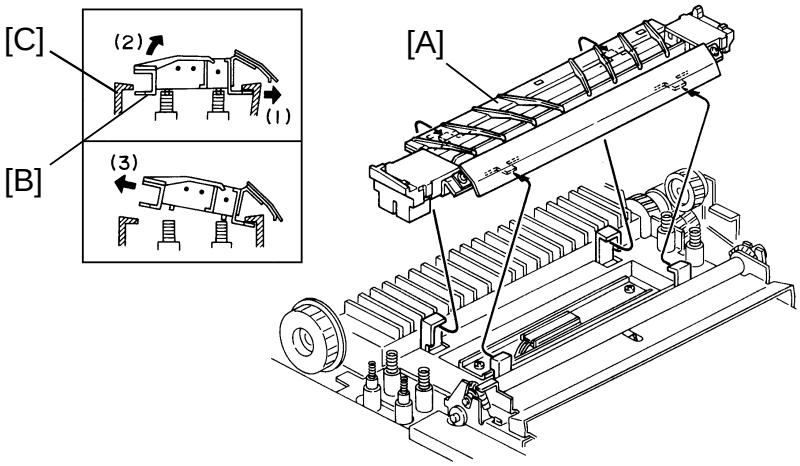

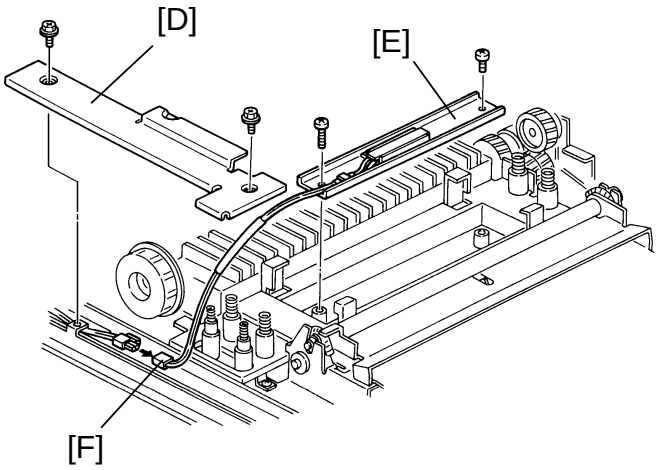

1. Open the front cover.
2. Open the upper unit by pushing release lever.
3. Pull the transfer /separation (TC/SC) corona unit [A] toward the registration roller side (1) and release the left positioning tabs [B] of the TC/SC corona unit from the holders [C] of the transport unit (2). Then, take out the TC/SC corona unit (3).
4. Remove the harness cover [D] (2 screws).
5. Install the anti-condensation heater [E] (2 screws) and set the heater connector [F].

SECTION 4

SERVICE TABLES

1. SERVICE TABLES

1.1 TEST POINTS

Copier Main Board

NUMBER	FUNCTION
TP101	GND
TP102	HET (Fusing Thermistor)
TP103	GND
TP104	GIN (Grid Voltage Feed Back)
TP105	BIN (Development Bias Feed Back)
TP106	ADS (Auto Image Density Sensor) Adjust the voltage to +2.5 ± 0.1 volts by VR101.
TP107	AVSS (GND)
TP108	EXP (Exposure Lamp Voltage Feed Back)
TP109	VCC (+5 volts)
TP110	PSE (ID Sensor Voltage) Adjust the voltage to +4.0 ± 0.2 volts by VR102.
TP112	+9 volts (ID Sensor Power)
JP101	Key Counter (Cut this jumper wire when installing the key counter on the machine.)

DF Main Board

NUMBER	FUNCTION
TP1	Factory use
TP2	Factory use
TP3	GND
TP4	+5 volts
TP5	GND
TP6	+24 volts

1.2 DIP SWITCHES AND JUMPER SWITCHES

Copier Main Board

DIP SWITCH	NORMAL	FUNCTION
DPS101-1	OFF	Free run
DPS101-2	OFF	Service program mode access
JUMPER SWITCH	**NORMAL**	**FUNCTION**
JPS101-R (Upper)	Open	Ready temp. bypassed (Factory use)
JPS101-C (Lower)	Open	To clear counters by SP98 or to clear all memory by SP99

DF Main Board

SW1				FUNCTION	
1	2	3	4		
OFF	OFF	OFF	OFF	Normal (Factory setting)	Lift Switch must be ON
ON	OFF	OFF	ON	Free run (Insert paper)	
OFF	OFF	ON	ON	Solenoid test	
ON	ON	OFF	ON	Motor test	
ON	ON	ON	ON	All indicators ON	

1.3 VARIABLE RESISTORS

Copier Main Board

NUMBER	FUNCTION
VR101	Adjusts ADS voltage (+2.5 ± 0.1 volts)
VR102	Adjusts ID sensor voltage (+4.0 ± 0.2 volts)

CC/Grid/Bias Power Pack

NUMBER	FUNCTION
VRM	Adjusts charge corona current
VRG	Adjusts standard grid voltage
VRB	Adjusts standard development bias voltage (Factory use)

TC/SC Power Pack

NUMBER	FUNCTION
VRT	Adjusts transfer corona current
VRD	Adjusts separation corona current

AC Drive Board

NUMBER	FUNCTION
VR401	Adjusts base exposure lamp voltage (Factory use)

DF Main Board

NUMBER	FUNCTION
VR1	Adjusts original stop position (Factory use)

2. SERVICE PROGRAM MODE

2.1 SERVICE PROGRAM MODE OPERATION

The service program (SP) mode is used to check electrical data and change modes or adjustment values.

2.1.1 Service Program Access Procedure

There are two ways to access an SP mode.

(1) By key operation
(2) By turning on DPS101-2 on the main board

All SP modes except for SP98, and SP99 can be accessed by key operation. When accessing SP98, and SP99, JPS101-C must be short-circuited.

Access Procedure 1 - Key Operation

1. Turn on the main switch.
2. Enter "71" by the Increase or Decrease Quantity ("+" or "–") key.

   NOTE: The following SP mode can be accessed by entering "7" instead of "71".
   SP mode numbers: 11, 12, 15, 16, 17, 18, 19, 34, 65, 66, and 93
3. Press and hold the Clear/Stop key until "•1" is displayed in the Copy Counter and then release it.
4. Press the Clear/Stop key again and then press the Interrupt key.

   NOTE: "5" will blink in the Copy Counter to show that the SP mode has been accessed.
5. Enter the desired SP mode number using the Increase or Decrease Quantity ("+" or "–") key. The SP mode numbers are given in the Service Program Mode Table.

   NOTE: "•" is displayed instead of "1" in the Copy Counter when the SP mode numbers over "100" are entered. The maximum number is "127".
6. Press the Auto Image Density key to view data.

   NOTE: To cancel an already entered SP mode number, press the Auto Image Density key.
7. To leave SP mode, press the Interrupt key.

Access Procedure 2 - DPS101-2

1. Turn the main switch off.
2. Remove the upper rear cover and turn on DPS101-2, then turn on the main switch. 5" will blink in the Copy Counter.
3. Enter the desired SP mode number by the Increase or Decrease Quantity ("+" or "–") key. SP mode numbers are given in the Service Program Mode Table.
4. Press the Auto Image Density key to view data.
5. To leave SP mode, turn off DPS101-2.

NOTE: To cancel an already entered SP mode, press the Auto Image Density key.

2.1.2 Change Adjustment Values or Modes

1. Follow the steps from 1 to 6 in Access Procedure 1 or the steps from 1 to 4 in access procedure 2.
2. The factory-set or the default setting will be displayed in the Magnification indicator (A077/A078 copiers) or in the Copy Counter (A076 copier).
3. Enter the desired value or mode using the Increase or Decrease Quantity ("+" or "–") key and then press the Auto Image Density key. (SP mode data are given in the Service Program Mode Table.)
4. To leave SP mode, press the Interrupt key (Access Procedure 1) or turn off DPS 101-2 (Access Procedure 2).

2.1.3 Memory Clear Procedure

– Clear Counters (SP98) –

NOTE: This SP mode clears the following counters:
- SP88: PM Counter Display
- SP100: Manual Feed Copies
- SP101: 1st Paper Tray Copies
- SP102: 2nd Paper Tray Copies
- SP103: Total Copies
- SP106: DF Originals
- SP110: Total Misfeeds
- SP111: Number of Misfeeds by Location
- SP120: Total Service Calls
- SP121: Optics Section Service Calls
- SP122: Exposure Lamp Service Calls
- SP124: Fusing Section Service Calls
- SP125: DF Communication Service Service Calls

1. Turn off the main switch.
2. Turn on DPS101-2 and short-circuit JPS101-C (Lower).
3. Turn on the main switch.
4. Enter "98" by the Decrease Quantity ("–") key and then press the Auto Image Density key to view data.
5. Enter "1" by the Increase Quantity ("+") key and then press the Auto Image Density key.

   NOTE: The data "1" blinks 4 times when the above procedure is completed.
6. Turn off the main switch.
7. Turn off DPS101-2 and open-circuit JPS101-C (Lower).

– Clear All Memory (SP99) –

CAUTION: Memory all clear mode (SP99) clears all the correction data for process control and software counters, and returns all the modes to the default settings. Normally, this mode should not be performed.

This procedure is required only when the copier malfunctions due to a damaged RAM Pack or when replacing the RAM Pack by any reason.

1. Turn off the main switch.
2. Turn on DPS101-2 and short-circuit JPS101-C (Lower).
3. Turn on the main switch.
4. Enter "99" by the Decrease Quantity ("–") key and then press the Auto Image Density key to view data.
5. Enter "1" by the Increase Quantity ("+") key and then press the Auto Image Density key.

   NOTE: The data "1" blinks 5 times when the above procedure is completed.
6. Clean the used toner tank since the toner end counter has been cleared.

CAUTION: Skipping this step will cause the used toner overflow condition not to be detected properly.

7. Replace the OPC drum with a new one.

CAUTION: Since the drum motor rotation time (SP57) for the drum wear correction has been cleared, the old drum cannot be used. If the old drum is used after all memory is cleared, dirty background may occur.

8. Clean the optics, sensors, and inside of the copier if necessary.
9. Refer to the "FACTORY SETTING" table located on the upper inner cover and enter the data for:
   (1) SP60: Standard Image Grid Voltage Setting
   (2) SP62: Standard ID Sensor Grid Voltage Setting

10. Perform the following SP modes in sequence:
    (1) SP66: Drum Initial Setting
    (2) SP54: Vsg Adjustment
    (3) SP48: Light Intensity Adjustment
    (4) SP56: ADS Voltage Adjustment
    (5) SP42: Registration Adjustment
    (6) SP41: Leading Edge Erase Margin Adjustment
    (7) SP43: Vertical Magnification Adjustment
    (8) SP44: Horizontal Magnification Adjustment (A077/A078 copiers only)
    (9) SP47: Focus Adjustment (A077/A078 copiers only)

11. Turn off the main switch.

12. Turn off DPS101-2 and open-circuit JPS101-C (Lower).

2.1.4 Others

In the following SP modes, copies can be made by pressing the Start key after pressing the Auto Image Density key:

SP Mode numbers: 5, 6, 8, 37, 41, 42, 43, 44, 45, 46, 47, 48, 50, and 55.

2.2 SERVICE PROGRAM MODE TABLE

1. A "❒" after the mode name means that copies can be made in the SP mode. (Refer to NOTE 1 in page 4-15.)
2. A "°" before the mode number means that the mode can be accessed by sales representatives.
3. In the *Function* column, comments (extra information) are in italics.
4. In the *Data* column, the default value is printed in bold letters.

Mode No.		Function	Data
5	Exposure Lamp OFF ❒	Exposure lamp OFF Turn on DPS101-1, then press the Start key to start free run. Press the C/S key to stop free run. Press the Auto Image Density key in Ready mode to turn off this mode. *Use this mode for the scanner movement check. To save toner, remove the development unit.*	
6	Misfeed Detection Off ❒	Copies are made without misfeed detection. Press the Start key to make a copy. Press the Auto Image Density key in Ready mode to turn off this mode. *Use this mode to check whether the paper misfeed was caused by a sensor malfunction. The total counter increments when copies are made in this mode.*	
7	Aging Mode	Factory use.	
8	Input Check ❒	Displays the input data from sensors and switches.	For data, see page 4-17.
9	Output Check	Electrical components turns on.	For data, see page 4-18.
°11	All Indicators ON	Turns on all the indicators on the operation panel. *To turn off the indicators, press the Auto Image Density key.*	
°12	220-230V/240V Conversion	Selects 220-230 or 240 volts. *If the rated voltage is 240V, this data must be changed to "1". **Refer to NOTE 2.***	**0: 220-230V** 1:240V
°15	Auto Reset Time	Selects auto reset time of 1 or 3 minutes, or cancels this mode.	**0: 1 min.** 1: 3 min. 2: None
°16	Count Up/Down	Selects count up or count down.	**0: Up** 1: Down
°17	Increase/ Decrease Quantity Key Function	Changes the function of the Increase/Decrease Quantity keys. Acceleration / Recycle 0: ON / ON (1-99-1) 1: OFF / ON (1-99-1) 2: ON / OFF (1-99) 3: OFF / OFF (1-99)	**0**–3

Service Tables

Mode No.		Function	Data
°18	Reduce/Enlarge Key Function	Specifies whether reduction or enlargement is selected first when the Reduce/Enlarge key is pressed.	**0: Reduction** 1: Enlargement
°19	ADS Priority	Specifies whether the copier defaults to ADS or manual mode when the main switch is turned on.	**0: ADS** 1: Manual
29	Fusing Temperature Control	Selects fusing temperature control mode. *After selecting the control mode and turning the main switch off/on, the fusing temperature control is changed.*	**0: ON/OFF control** 1: Phase control
30	Toner Supply Mode	Selects toner supply system. *See SP31/SP32 for toner supply amount.*	**0: Detect Mode** 1: Fixed Mode
31	Toner Supply Ratio (Detect Mode)	Determines how much toner is supplied in detect mode.	**0: 15%** 1: 7% 2: 30% 3: 60%
32	Toner Supply Ratio (Fixed Mode)	Determines how much toner is supplied in fixed mode.	**0: 7.0%** 1: 3.5% 2: 10.5% 3: 14.0%
33	ID Sensor Bias	Sets the bias voltage applied to the development roller for the ID Sensor Pattern. *0: Vo* *1: Vo+40V* *2: Vo–20V* *3: Vo–40V*	Toner Density **0: Normal (Vo)** 1: Low 2: High 3: Higher
°34	ADS Level	Selects the image density level in ADS mode. *Data: 1* *Increases grid voltage (–50V). Development bias voltage is not changed.* *Data: 2* *Increases development bias voltage (–40V). Grid voltage is not changed.*	**0: Normal** 1: Darker 2: Lighter
35	ID Detection Interval	ID sensor check is performed every 5 copies or 10 copies. *If low image density occurs in the near end condition, change the data to "1".*	**0: 10 copies** 1: 5 copies
37	Image Bias Adjustment ❒	Adjusts image bias output if the image density at level 4 cannot be adjusted by Light Intensity adjustment (SP48). *0: Vo* *1: Vo+40V* *2: Vo+20V* *3: Vo–20V* *4: Vo–40V*	**0: Normal (Vo)** 1: Darkest 2: Darker 3: Lighter 4: Lightest
39	Exposure Lamp ON	Factory use.	
41	Lead Edge Erase Margin Adjustment ❒	Adjusts the lead edge erase margin. *0.4 mm per step. (max. –3.2 mm to +2.8 mm)*	0–15 **Default = 8**

Mode No.		Function	Data
42	Registration Adjustment ❒	Adjusts registration. *0.4 mm per step. (max. +2.8 mm to –3.2 mm)*	0–15 **Default = 8**
43	Vertical Magnification Adjustment ❒	Adjusts magnification in the paper travel direction. *0.2% per step. (max. –1.6% to +1.4%)*	0–15 **Default = 8**
44	Horizontal Magnification Adjustment (A077/A078 copiers only) ❒	Adjusts magnification perpendicular to the direction of paper travel. *0.2% per step. (max. –4% to +6%)*	0–50 **Default = 20**
45	Registration Buckle – 1st Feed ❒	Adjust the amount of paper buckle in registration area. *0.4 mm per step. (Max –3.2 mm to +2.8 mm)*	0–15 **Default = 8**
46	Registration Buckle – 2nd Feed (A078 copier only) ❒		
47	Focus Adjustment (A077/A078 copiers only) ❒	Adjusts the 4th/5th mirror position to correct focus. *This mode must be done after horizontal magnification adjustment (SP44).*	0–100 **Default = 40**
48	Light Intensity Adjustment ❒	Adjusts the exposure lamp voltage. *The exposure lamp voltage is adjusted on the production line.* ***Refer to NOTE 3 for A076 copier.***	100–150 **Default = 126**
49	Fusing Temperature Adjustment	Adjusts fusing temperature. *175 to 190°C in 1°C steps.* ***Refer to NOTE 3 for A076 copier.***	175 – 190°C **Default = 185°C**
50	Image Bias Adjustment at ID Level 7 ❒	Adjusts image bias voltage at ID level 7. *0: Vo* *1: Vo+40V* *2: Vo–40V* *3: Vo–80V*	**0: Normal (Vo)** 1: Darker 2: Lighter 3: Lightest
51	Exposure Lamp Data Display	Displays the exposure lamp data with a reference number. *The exposure lamp, and optics cooling fans turn on for 10 seconds when the Auto Image Density key is pressed. Press the C/S key to turn this mode off. Do not repeat more than 5 times to avoid overheating the optics cavity.*	100–150
52	Fusing Temperature Display (❒ A077/A078 copiers only)	Displays the fusing temperature. ***Refer to NOTE 3 for A076 copier.***	

Mode No.		Function	Data
54	Vsg Adjustment	Adjusts Vsg. *Adjust Vsg to 4.0 ± 0.2 V using VR102 on the main board. The main motor, the drum motor, and the ID sensor LED turn on when the Auto Image Density key is pressed.* ***Refer to NOTE 4 for A076 copier.***	
55	Vsg & Vsp Display ❒	Display the Vsg and Vsp readings. The Vsg reading is displayed while the Quantity Decrease "–" key is held down. A076 copier displays the Vsp reading while the Quantity Increase "+" key is held down. To stop this mode, press the C/S key. *The Vsp and Vsg voltage readings are updated every 10 or 5 copies depending on SP35 selection. In free run mode, the Vsg and Vsp readings are updated every copy cycle.* ***Refer to NOTE 4 for A076 copier.***	
56	ADS Reference Voltage Adjustment	Adjusts ADS. *After adjusting the light intensity, place 6 or more sheets of A3 (LDG) white paper on the exposure glass and select this mode.* *Adjust ADS voltage to 2.5 ± 0.1 V using VR101 on the main board.* ***Refer to NOTE 4 for A076 copier.***	
57	Drum Motor Rotation Time	Displays the total time that the drum motor has rotated. *"Minute" is displayed first. Press and hold the Lighter key to display "Hour".*	
58	Toner End Counter	Displays the number of toner end condition. *The counter counts up 200 copies after replacing the toner cartridge.*	
59	Open	No function.	
60	Standard Image Grid Voltage Setting	Factory use. Do not change data. ***Refer to NOTE 6.***	0–8 **Default = 4**
61	Standard ID Sensor Bias Voltage Setting	Factory use. Do not change data.	0–8 **Default = 2**
62	Standard ID Sensor Grid Voltage Setting	Factory use. Do not change data. ***Refer to NOTE 6.***	0–8 **Default = 4**
63	Open	No function.	

Mode No.		Function	Data
64	Toner Density Level Display	Displays the toner density level detected by initial setting (SP65). *Data Vsp/Vsg(%)* *0: 12–15* *1: 0–7* *2: 8–11* *3: 16–21* *4: 22–100*	**0**–4
°65	Developer Initial Setting	Agitates new developer for about 5 minutes. "50" is displayed on the copy counter when the Auto Image Density key is held down. Press the Start key to start the initial setting. ***Initial setting must be done when new developer is installed.*** *The copier automatically returns to normal mode after initial setting is completed.*	
°66	Drum Initial Setting	Used to set new drum condition. ***Initial setting must be done when a new drum is installed.*** *The Drum Motor Rotation Time (SP57) and the OPC counter (SP69) are cleared.*	**0: No** 1: Yes
67	Vr Ratio Display	Displays the present Vr ratio. *L = Vrp/Vsg x 100* *L (%) Grid voltage* *100 to 84 Vo* *83 to 58 Vo–40V* *57 to 41 Vo–80V* *40 to 28 Vo–120V* *27 to 0 Vo–160V* ***Refer to NOTE 3 for A076 copier.***	**0**–100
68	Vr Forced Detection	Detects Vrp and perform Vr correction. *1. Turn off the DPS 101-2 after pressing the Auto Image Density key if it is on.* *2. Make 5 copies.*	**0: No** 1: Yes
69	OPC Counter	Shows the total number of copies made with the drum installed on the machine. ***Refer to NOTE 5.***	
83	Toner End Counter Clear	Clears the toner end counter (SP58). Resets the used toner overflow condition (E70) if it is detected. ***This mode must be performed when the used toner tank is cleaned.***	**0: No** 1: Yes
87	PM Interval Setting	Sets the interval of the PM counter.	**0: No PM** 1: 40K 2: 60K 3: 80K 4: 100K

Service Tables

Mode No.		Function	Data
88	PM Counter Display	Displays contents of the PM counter.	
		Refer to NOTE 5. *When the PM counter is exceeded, the Magnification indicator (A077/A078 copiers) or the Copy Counter (A076 copier) blinks.*	
89	PM Counter Clear	Resets the PM counter.	**0: No** 1: Yes
		Use this mode after performing PM.	
°93	Maximum Copy Quantity	Limits the maximum copy quantity that can be entered.	1–**99**
98	Clear Counters	Clear the following counters: • Copy Counters • SC Counters • Misfeed Counters • PM Counter	**0: No** 1: Yes
		To clear, turn on DPS101-2 and short-circuit JPS101-C (Lower).	
99	Clear All Memory	Clear all counters and returns all modes to the default setting.	**0: No** 1: Yes
		To clear, turn on DPS101-2 and short-circuit JPS101-C (Lower).	
100	Manual Feed Copies	Displays the total number of copies fed from the manual feed table.	
		Refer to NOTE 5.	
101	1st Paper Tray Copies	Displays the total number of copies fed from the upper paper tray.	
		Refer to NOTE 5.	
102	2nd Paper Tray Copies (A078 copier only)	Displays the total number of copies fed from the lower paper tray.	
		Refer to NOTE 5.	
103	Total Copies	Displays the total number of copies.	
		Refer to NOTE 5.	
106	DF Originals	Displays the total number of originals fed from the DF.	
		Refer to NOTE 5.	
110	Misfeeds (total)	Displays the total number of paper misfeeds.	
		Refer to NOTE 5.	
111	Number of Misfeeds by Location	Displays the total number of paper misfeeds in each area. Press the Quantity Increase or Decrease ("+" or "–") key to select the desired number.	
		Refer to NOTE 5. *"1" will be selected when the Auto Image Density key is pressed.* *1: Paper Feed* *2: Exit* *3: (Open)* *4: DF*	
120	Total Service Calls	Displays the total number of times the service call indicator has turned on.	

Mode No.		Function	Data
121	Optics Section Service Calls	Displays the total number of "optics section" service calls.	
122	Exposure Lamp Service Calls	Displays the total number of "exposure lamp" service calls.	
123	Open	No function.	
124	Fusing Section Service Calls	Displays the total number of "fusing section" service calls.	
125	DF Timing Pulse Service Calls	Displays the total number of "DF Timing Pulse Error" service calls.	
126	Open	No function.	
127	Open	No function.	

NOTE 1: 1) After the following SP mode numbers are entered, the copier goes automatically into copy mode when the Auto Image Density key is pressed:
SP mode numbers: 5, 6, 52, and 55

2) After the following SP mode numbers are entered and the Auto Image Density key is pressed. Select the desired input numbers or SP mode data and press the Auto Image Density key.
SP mode numbers: 8, 37, 41, 42, 43, 44, 45, 46, 47, 48, and 50

NOTE 2: When the data in SP mode 12 is changed from "0" to "1", CN93 and CN92 must be switched and the CN421 must be repositioned.

NOTE 3: A076 copier displays the SP mode data in the Copy Counter. Since the Copy Counter has only 2 digits, "•" is displayed instead of "1" in the Copy Counter when the data exceeds "99".

NOTE 4: Make copies or perform free run to display the SP mode data. A076 copier displays the SP mode data in the Copy Counter. Since the Copy Counter has only 2 digits, the first digit is displayed in the Manual Image Density indicator as shown below (the decimal place is displayed in the Copy Counter):


: "0"


: "4"

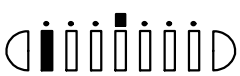
: "1"


: "5"


: "2"

For example:


: "3.83"

Copy Counter


: "3"

Service Tables

NOTE 5: – A076 copier –
The A076 copier displays the SP mode data in the Copy Counter. The first two digits are displayed first. Press the Lighter key once to display the next two digits and press the Lighter key one more time to display the last two digits (six digits in total).
– A077/A078 copiers –
The first three digits are displayed in the Magnification Indicator. Press and hold the Lighter key to display the last three digits (six digits in total).

NOTE 6: Data will vary depending on factory setting. Refer to "FACTORY SETTING" table located on the upper inner cover.

2.3 SP MODE 8 INPUT CHECK

– How to check sensor/switch data –

1. Enter "8" by the Increase or Decrease Quantity ("+" or "–") key, then press the Auto Image Density key.
2. Enter the desired number by the Increase or Decrease Quantity ("+" or "–") key. The numbers are given in the following table.
3. Press the Auto Image Density key again.
4. Enter the number of copies and press the Start key.

NOTE: – A077/A078 copiers –
The data ("0" or "1") is displayed in the Magnification Indicator.
– A076 copier –
The data ("None" or "•") is displayed in the Copy Counter.

Number	Sensor/Switch/Signal	Data	
		"0" (A077/A078 copiers) or "None" (A076 copier)	"1" (A077/A078 copiers) or "•" (A076 copier)
1	Registration Sensor	Paper not detected (HIGH)	Paper detected (LOW)
2	Exit Sensor		
3	1st Paper Tray Switch	Paper tray opened (HIGH)	Paper tray closed (LOW)
4	2nd Paper Tray Switch (A078 copier only)		
7	Relay Sensor	Paper not detected (HIGH)	Paper detected (LOW)
8	Product Identification	A077/A078 copiers	A076 copier
9	Drum Temperature	≥ 20°C	< 20°C
13	Scanner HP Sensor	Sensor actuated (HIGH)	Sensor not actuated (LOW)
14	Lens HP Sensor (A078 copier only)		
15	4th/5th Mirror HP Sensor (A078 copier only)		

2.4 SP MODE 9 OUTPUT CHECK

– How to turn electrical components on/off –

1. Enter "9" by the Increase or Decrease Quantity ("+" or "–") key, then press the Auto Image Density key.
2. Enter the desired number by the Increase or Decrease Quantity ("+" or "–") key. The numbers are given in the following table.
3. Press the Start key to turn on the electrical component.
4. Press the Clear/Stop key to turn off the electrical component.

Number	Electrical Component
1	Main Motor + PTL + Quenching Lamp + Drum Motor
2	Charge Corona + Standard Image Grid
3	Charge Corona + Standard ID Sensor Grid
4	Charge Corona + Standard Vrp Grid
5	Transfer Corona
6	Separation Corona
8	Erase Lamp
9	ID Sensor LED
10	Development Clutch Solenoid
11	Toner Supply Clutch + Main Motor (Development Clutch Solenoid OFF) Note: Press and hold the Darker key to turn the toner supply clutch on and the development clutch solenoid off.
12	Registration Clutch
13	1st Paper Feed Clutch
14	2nd Paper Feed Clutch (A078 copier only)
15	Relay Roller Clutch
19	Optics Cooling Fan
20	Exposure Lamp + Optics Cooling Fan
22	Charge Corona + Image Grid with correction + Transfer Corona + Separation Corona
23	Charge Corona + ID Sensor Grid with correction + Transfer Corona + Separation Corona
24	Charge Corona + Vrp Grid with correction + Transfer Corona + Separation Corona
25	Charge Corona + Image Grid with correction
26	Charge Corona + ID Sensor Grid with correction
27	Charge Corona + Vrp Grid with correction
30–37	Development Bias Voltage in 40 volts steps starting at –120 volts
38	Development Bias Voltage = –500 volts
40–48	Grid Voltage in 60 volts steps starting at –400 volts

2.5 SERVICE CALL AND USER CODE TABLE

Service Call Code

E-code	Contents	SP Mode No. (SC Counter)
11	**Exposure Lamp Error** The feed back signal becomes higher than 4.2 volts (r.m.s) for 1.0 second when the exposure lamp is on, or it becomes higher than 1.0 volt (r.m.s) for 1.0 second when the exposure lamp is off.	SP122 (Exposure Lamp)
12	**Exposure Lamp Error** The feed back signal falls below 0.5 volt (r.m.s) for 1.0 second when the exposure lamp is on, or the exposure lamp stays on for longer than 10 seconds.	
13	**Zero Cross Signal Error** The CPU does not receive the zero cross signal within 0.56 second.	–
21	**Scanner Home Position Error** The scanner home position sensor's output remains LOW (de-actuated) for 9 seconds after the main switch is turned on.	SP121 (Optics)
22	**Scanner Home Position Error** The scanner home position sensor's output remains HIGH (actuated) for 1.0 second after the scanner starts.	
28	**Lens Home Position Error** (A077/A078 copiers only) The lens home position sensor's output remains LOW (de-actuated) for 6.0 seconds after the lens move to the home position.	
29	**Lens Home Position Error** (A077/A078 copiers only) The lens home position sensor's output remains HIGH (actuated) for 3.5 seconds after the lens leaves the home position.	
2A	**4th/5th Mirror Home Position Error** (A077/A078 copiers only) The 4th/5th mirror home position sensor's output remains LOW (de-actuated) for 2.5 seconds after the 4th/5th mirror assembly moves to the home position.	
2B	**4th/5th Mirror Home Position Error** (A077/A078 copiers only) The 4th/5th mirror home position sensor's output remains HIGH (actuated) for 2.5 seconds after the 4th/5th mirror assembly leaves the home position.	

E-code	Contents	SP Mode No. (SC Counter)
52	**Fusing Warm-up Error** The temperature detected by the thermistor does not reach 150°C within 30 seconds after the main switch is turned on.	SP124 (Fusing Section) **Refer to NOTE.**
53	**Fusing Overheat** The temperature detected by the thermistor becomes higher than 240°C.	
55	**Fusing Thermistor Open** The temperature detected by the thermistor does not reach 2°C within 20 seconds after the main switch is turned on.	
70	**Used Toner Overflow** When the used toner overflow condition is detected, E70 blinks. An additional 250 copies can be made before the Start indicator turns red and copying is inhibited.	–
96	**DF Timing Pulse Error** The DF CPU does not receive a DF timing pulse within 100 milliseconds.	SP125 (DF Timing Pulse)

NOTE: When the service call (E52, 53, 55) conditions occur, for safety reason they cannot be cleared by turning off and on the main switch. The following procedure must be performed to clear these service call conditions:

1. Turn on the main switch.
2. Turn DPS 101-1 on and off.
3. Turn the main switch off and on.

User Code

U-code	Contents
2	Key Counter Not Set

3. SERVICE REMARKS

3.1 GENERAL CAUTION

To prevent physical injury, keep hands away from the mechanical drive components in the following case:

If the Start key is pressed before the copier finishes the warm-up cycle, (Start indicator starts blinking) the copier starts making copies as soon as the warm-up cycle is completed.

3.2 DRUM

The organic photoconductor drum is comparatively more sensitive to light and ammonia gas than a selenium drum.

1. Never expose the drum to direct sunlight.
2. Never expose the drum to direct light of more than 1,000 Lux for more than a minute.
3. Never touch the drum surface with bare hands. When the drum surface is touched with a finger or becomes dirty, wipe with a dry cloth or clean with wet cotton. Wipe with a dry cloth after cleaning with wet cotton.
4. Never use alcohol to clean the drum; alcohol dissolves the drum surface.
5. Store the drum in a cool, dry place away from heat.
6. Take care not to scratch the drum as the drum layer is thin and is easily damaged.
7. Never expose the drum to corrosive gases such as ammonia gas.
8. Always keep the drum in the protective sheet when inserting or pulling the drum unit out of the copier to avoid exposing it to bright light or direct sunlight. This will protect the drum from light fatigue.
9. Before pulling out the drum unit, place a sheet of paper under the drum to catch any dropped toner.
10. Drum initial setting (SP66) must be performed when a new drum is installed.

    NOTE: This is not necessary at installation of a new machine as the drum initial setting is performed at the factory.
11. Dispose of used drums according to local regulations.
12. Do not adjust VR801 on the drum motor board.

3.3 CHARGE CORONA

1. Clean the corona wire by sliding the corona unit in and out. (The cleaner pads come into contact with the corona wire when the corona unit is slid all the way out.) The wire and casing can also be cleaned with water or dry cloth. Do not use sandpaper or a solvent.
2. Do not touch the corona wire and the grid plate with oily hands. Oil stains may cause uneven image density on copies.
3. Make sure that the corona wire is correctly positioned between the cleaner pads and that there is no foreign material (iron filings, etc.) on the casing.
4. When adjusting the charge corona current, always make sure that the axis of the drum shoe is aligned with the middle of the corona wires.
5. Clean the grid plate with a blower brush (not with a cloth).
6. The corona height should only be adjusted in the following two cases:
   a) When the front end block is replaced
   b) When the drum charge current is uneven

3.4 OPTICS

1. The following parts are very difficult to adjust. Do not adjust them.
   a) 4th/5th Mirror Home Position Sensor
   b) Lens Home Position Sensor
   c) Lens and 4th/5th Mirror Guide Rails
2. Before removing a sensor bracket to replace a sensor, mark the position of the bracket. Check the copy image (magnification and focus) to determine the exact location of the sensor.
3. Clean the following parts with a silicone cloth:

   Lens and 4th/5th Mirror Guide Rails
   Scanner Guide Plates
4. Clean the exposure glass with glass cleaner and a dry cloth to reduce the amount of static electricity on the glass surface.
5. Use water or a silicone cloth to clean the mirrors.
6. After adjusting the light intensity (SP48), adjust the ADS voltage (SP56).
7. Do not adjust VR401 on the AC drive board.

3.5 DEVELOPMENT

1. Be careful not to nick or scratch the development roller.
2. Place the development unit on a sheet of paper after removing it from the copier.
3. Never loosen two screws securing the bias terminal block. The position of the terminal block is set with a special tool and instrument at factory to ensure the proper gap between the drum and the development roller.
4. Never loosen three screws securing the doctor plate and four screws securing the doctor plate mounting bracket. The position of the doctor plate is set with a special tool and instrument at factory to ensure the proper gap between the doctor blade and the development roller.
5. Clean the drive gears after removing used developer.
6. Developer initial setting (SP65) is necessary when the developer is replaced.
7. Dispose of used developer according to local regulations.

3.6 TONER SUPPLY

1. Clean the image density sensor with a blower brush.
2. Do not touch the sensor pattern with bare hands.
3. Image density sensor adjustment is required in the following cases:
   a) When the image density sensor is replaced
   b) When the main board is replaced
   c) When the drum has been replaced and Vsg is out of specification
   d) When there have been problems with toner supply and Vsg is out of specification

3.7 TRANSFER AND SEPARATION

1. Clean the corona wires and casing with water or dry cloth.
2. When adjusting the corona current, always make sure that the axis of the drum shoe is aligned with the corona wire.

3.8 CLEANING UNIT

1. Be careful not to damage the edge of the cleaning blade.
2. Do not touch the cleaning brush with bare hands.
3. When inserting the cleaning unit into the copier, be sure that the cleaning unit rail is properly engaged with the unit guide rail on the copier.
4. Empty the used toner tank every service call and clear the toner end counter (SP58) by SP83 (toner end counter clear). Do not perform toner end counter clear (SP83) without emptying the used toner tank.
5. Dispose of used toner according to local regulations.

3.9 FUSING UNIT

1. Be careful not to damage the edges of the hot roller strippers or their tension springs.
2. Do not touch the fusing lamp with bare hands.
3. Make sure that the fusing lamp does not touch the hot roller.

3.10 PAPER FEED

1. Do not touch the pick-up, feed, and torque rollers with oily hands.
2. A worn out registration roller causes paper to crease. It should be replaced.

3.11 DOCUMENT FEEDER

1. When installing or removing the document feeder, make sure that the document feeder is in the open position.
2. The red mark on the edge of the exposure glass faces up. This side is smoother and it generates less static electricity when the DF is used.
3. A build-up of static electricity on the exposure glass can cause originals to misfeed. Apply silicon oil to the glass to reduce the amount of friction.

3.12 OTHERS

1. If the RAM on the old main board is still usable, remove and place it on the new main board. Then, install the new main board in the copier.

2. After installing the new main board with the new RAM, clear the RAM memory using SP99. (Do not clear RAM memory if you have placed the old RAM on the new main board.) Then, perform the following procedure:
   (1) Clean the used toner tank since the toner end counter has been cleared.

   CAUTION: Skipping this step will cause the used toner overflow condition not to be detected properly.

   (2) Replace the OPC drum with a new one.

   CAUTION: Since the drum motor rotation time (SP57) for the drum wear correction has been cleared, the old drum cannot be used. If the old drum is used after all memory is cleared, dirty background may occur.

   (3) Clean the optics, sensors, and inside of the copier if necessary.
   (4) Refer to the "FACTORY SETTING" table and enter the data for:
      (a) SP60: Standard Image Grid Voltage Setting
      (b) SP62: Standard ID Sensor Grid Voltage Setting
   (5) Perform the following SP modes in sequence:
      (a) SP66: Drum Initial Setting
      (b) SP54: Vsg Adjustment
      (c) SP48: Light Intensity Adjustment
      (d) SP56: ADS Voltage Adjustment
      (e) SP42: Registration Adjustment
      (f) SP41: Leading Edge Erase Margin Adjustment
      (g) SP43: Vertical Magnification Adjustment
      (h) SP44: Horizontal Magnification Adjustment (A077/A078 copiers only)
      (i) SP47: Focus Adjustment (A077/A078 copiers only)
3. When replacing a sensor, do not overtighten the screws. This may damage the sensor.
4. If a customer reports that red image areas on the original do not appear on the copy, instruct the customer to select the desired image density by the Manual Image Density key.
5. Tighten securely the screws used for grounding the following PCBs when reinstalling them.
   - AC Drive Board
   - DC Power Supply Board
   - TC/SC Power Pack
   - CC/Grid/Bias Power Pack
6. The RAM pack must be handled as follows:

WARNING: The RAM pack has a lithium battery which can explode if handled incorrectly, replace only with same RAM pack. Do not recharge, or burn this battery. Used RAM pack must be handled in accordance with local regulations.

4. SPECIAL TOOLS AND LUBRICANTS

Part Number	Description	Q'ty
A0069105	Drum Shoe Shaft	1
A0069103	Scanner Wire Clamp (Omega Clamp)	1
A0069104	Scanner Positioning Pin (4 pcs)	1 set
A0089502	Grease G-40M	1
52039501	Grease (Shinetsu Silicone G-501)	1
54429106	Drum Shoe	1
54479104	Shoe Adapter	1
54209507	Digital Multimeter	1
54479078	Heat Resistance Grease (MT-78)	1
52149500	Test Chart OS-A4 (10 pcs/set)	
52149501	Test Chart OS-A4 (100 pcs/set)	
A0779505	Drum Shoe Shaft Adapter	1

5. PREVENTIVE MAINTENANCE SCHEDULE

After performing preventive maintenance, perform the following procedure:

1. Adjust the exposure lamp intensity (SP48). (See Light Intensity Adjustment.)
2. Select SP56 and adjust the ADS voltage to +2.5 ± 0.1 volts by VR101.
3. Select SP54 and adjust Vsg to +4.0 ± 0.2 volts by VR102.
4. Make a sample copy.

NOTE: 1) Drum Initial Setting (SP66) must be done after the old drum is replaced.
2) Developer Initial Setting (SP65) must be done after the old developer is replaced.
3) Toner End Counter Clear (SP83) must be done after the used toner tank is cleared.

5.1 PM TABLE

L = Lubricate R = Replace C = Clean I = Inspection

	EM	80K	160K	NOTES
OPTICS				
Mirrors, Lens, Reflectors, Toner Shield Glass	C	C	C	Silicone cloth, cotton pad with water, or blower brush **Refer to NOTE 1 to clean 6th mirror.**
Exposure Glass	C	C	C	Alcohol or water
Exposure Lamp		I	I	Replace if necessary.
Scanner Guide Rail		C	C	Dry cloth
Magnification Guide Rail		C	C	Dry cloth
Platen Cover Sheet	C	R	R	Alcohol or water (Replace if necessary.)
Optics Cooling Fan Filter		C	C	
AROUND DRUM				
ID Sensor	C	C	C	Blower brush
Pick-off Pawls	C	C	C	Dry cloth
Quenching Lamp	C	C	C	Dry cloth, discharge any static before installation.
Pre-Transfer Lamp	C	C	C	Dry cloth, discharge any static before installation.
Erase Lamp	C	C	C	Dry cloth
End Blocks and Casing	C	C	C	Water or dry cloth
Transfer Guide Plate	C	C	C	Dry cloth
Corona Wires	C	R	R	Water or dry cloth
Wire Cleaner		R	R	
Grid Plate		C	R	Blower brush
CLEANING UNIT				
Used Toner Tank	C	C	C	Empty used toner.
Cleaning Seal		C	C	Replace if necessary.
Cleaning Blade			R	
Cleaning Brush			R	
DEVELOPMENT UNIT				
Developer		R	R	Replace if necessary.
Entrance Seal		C	C	
Drive Gears		C	C	

	EM	80K	160K	NOTES
PAPER FEED				
Registration Roller		C	C	Water
Relay Roller		C	C	Water
Registration Sensor		C	C	Blower brush
Paper Guide Plate		C	C	Dry cloth
Torque Roller Slip Clutch			L	Mobil Temp 78 **Refer to NOTE 2.**
Paper Feed Roller	C	C	R	Water
Pick-up Roller	C	C	R	Water
Torque Roller	C	C	R	Water
Paper Tray Bottom Plate Pad		C	R	Water
FUSING UNIT				
Hot Roller			R	
Pressure Roller			R	
Stripper Pawls		C	C	Suitable solvent
Fusing Entrance And Exit Guides		C	C	Suitable solvent
Fusing Thermistor		I	I	Suitable solvent (Clean if necessary.)
OTHERS				
Exit Roller		C	C	Water
Exit Sensor		C	C	Blower brush
Ozone Filter		R	R	
DOCUMENT FEEDER		PM intervals: number of originals fed (SP106)		
Transport Belt	C	C	C	Belt cleaner
Friction Belt	C	C	R	Water
Pick-up Roller	C	C	C	Water
Feed Roller	C	C	C	Water

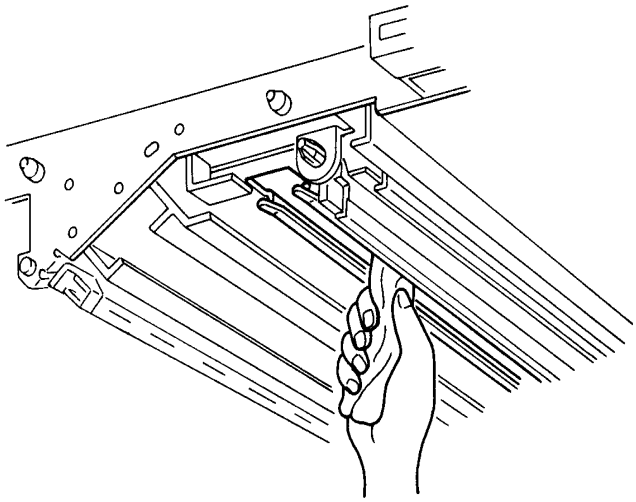

NOTE 1: Clean the 6th mirror with silicone cloth as shown.

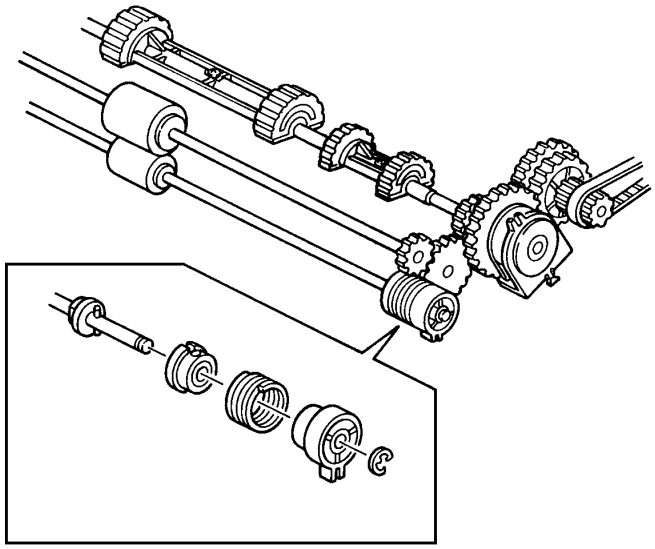

NOTE 2: Clean and lubricate the torque roller slip clutch at every 160 K copies.

5.2 EXPLANATION OF REGULAR PM

Item		Explanation
Optics Unit	Mirrors, Lens, Reflector, Exposure Glass, Platen Cover	Stains on any part of the optics unit result in a dirty background, black lines, black spots, or areas of decreased sharpness on the copy image. Periodic cleaning is required. The exposure glass and the platen cover must also be cleaned. If stains on the platen cover cannot be removed, it must be replaced.
	Exposure Lamp	Deterioration of the exposure lamp affects the copy image. Inspect the lamp at regular intervals and replace if discolored.
Paper Feed, and Registration	Paper Feed Roller, Pick-up Roller, Torque Roller	If paper powder or dust adheres to the paper feed rollers and/or rollers are worn out, paper may not feed correctly and/or skewing may result. Cleaning or replacement is required at regular intervals.
	Registration Roller	A dirty registration roller can cause paper to register incorrectly, skew, or misfeed. Cleaning is required at regular intervals.
Transport	Transfer Guide Plate	If the transfer guide plate is dirty, the back sides of the copy may become dirty. Clean the plate at regular intervals.
Around Drum	Charge Wires	Dirty charge wires may cause uneven image density. They should be cleaned or replaced at regular intervals.
	End Blocks	Toner tends to accumulate on the corona end blocks, and this can result in poor copy quality or even a high voltage leak. Clean end blocks at regular intervals.
	QL	If toner accumulates on the QL, a dirty background or a repeating negative image may result. Clean the QL at regular intervals.
	PTL	If paper dust or toner accumulates on the PTL, its efficiency may be reduced. This can cause toner to be reattracted to the drum during transfer, reducing image density. Clean the PTL at regular intervals.
	ID Sensor	If paper dust or toner accumulates on the ID sensor, the toner density cannot be controlled correctly. This results in light copy or overtorning. Clean this sensor at regular intervals.
	Erase Lamp	If toner accumulates on the erase lamp, a dirty background may occur that becomes progressively worse in long copy runs. Clean this lamp at regular intervals.
Cleaning Unit	Cleaning Blade	A dirty or worn out cleaning blade will cause black lines on copies and/or scratches on the drum. The blade must be replaced or cleaned at regular intervals.
	Cleaning Brush	A worn out cleaning brush will not clean effectively, resulting in a dirty background and damage to the cleaning blade. Replace at regular intervals.

Item		Explanation
Fusing Unit	Thermistor	If toner accumulates on the thermistor, fusing temperature control may not be accurate. Inspect the thermistor at regular intervals.
	Stripper Pawls	Toner or dust adhering to the stripper pawls can cause a paper jam. Clean or replace the pawls at regular intervals.
	Fusing Entrance and Exit Guides	Toner piling up on the guide plate will cause a dirty background on the copy. Clean the guide plate at regular intervals.
DF	Transport Belt	A dirty transport belt can leave stains on copies. Clean or replace the belt at regular intervals.
	Pick-up Roller, Separation Roller, Separation Belt	When dirty, these rollers and this belt can leave stains on the copy paper. Clean or replace these parts at regular intervals.

5.3 REGULAR PM PROCEDURE

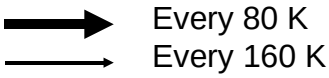

1. Make a Copy

Make a copy of OS-A4 test chart at manual image density level 4.

2. Optics (every 80 K)

1. Clean the mirrors, lens, reflectors and toner shield glass by using silicone cloth, cotton pad with water, or blower brush.
2. Clean the exposure glass with alcohol or water.
3. Inspect the exposure lamp.
4. Clean the scanner guide rail with dry cloth.
5. Clean the magnification guide rail with dry cloth.
6. Replace the platen cover sheet.
7. Clean the optics cooling fan filter.

3. Around Drum (every 80 K)

Note: After remove the drum, wrap the drum in clean sheets of paper to protect it.

1. Clean the ID sensor with blower brush.
2. Clean the pick-off pawls.
3. Clean the quenching lamp, pre-transfer lamp and erase lamp unit with dry cloth, discharge any static before installation.
4. Clean the end blocks, casing and transfer guide plate with water or dry cloth.
5. Replace the corona wires and wire cleaner.
6. Clean the grid plate with blower brush.

Replace the grid plate (every 160 K)

4. Cleaning Unit (every 80 K)

1. Empty used toner tank.
2. Clean the cleaning seal.

Cleaning unit (every 160 K)

1. Replace the cleaning blade and brush.

Service Tables

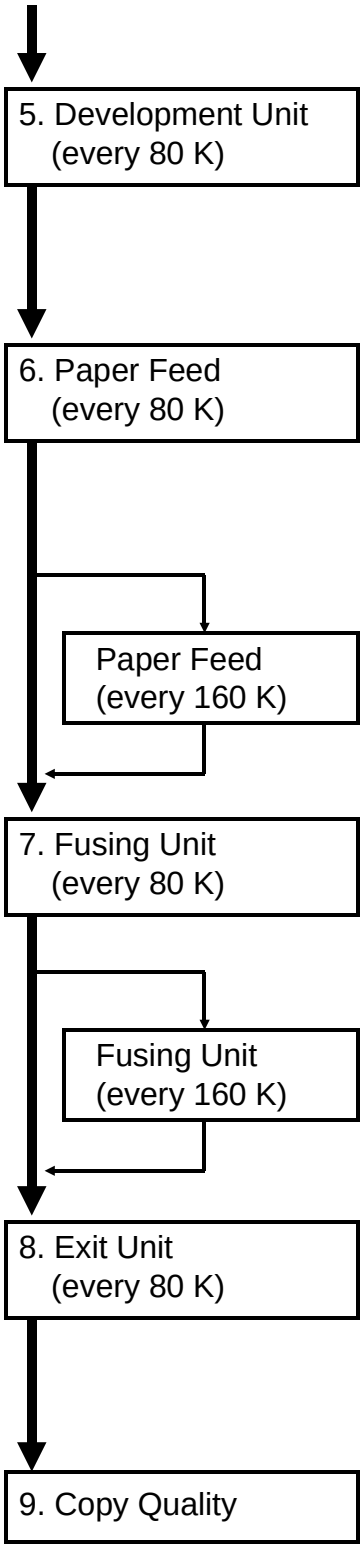

1. Remove the old developer.
2. Clean the entrance seal.
3. Clean the drive gears on the development unit.
4. Install the new developer.

1. Clean the registration roller, relay roller and registration sensor.
2. Clean the paper guide plate.
3. Lubricate the slip clutch for torque roller.
4. Clean the paper feed roller, pick-up roller, torque roller, and paper tray bottom plate pad.

1. Replace the paper feed roller, pick-up roller, torque roller, and paper tray bottom plate pad.

1. Clean the entrance and exit guide.
2. Inspect the thermistor.
3. Clean the stripper pawls.

1. Clean the thermistor.
2. Replace the hot roller, pressure roller.

1. Clean the exit roller and exit sensor.
2. Replace the ozone filter.

1. adjust the exposure lamp intensity by SP48.
2. Adjust the ADS voltage by SP56.
3. Adjust the Vsg by SP55.
4. Reset the toner end counter (SP58) by SP83.

SECTION 5

REPLACEMENT AND ADJUSTMENT

1. EXTERIOR AND INNER COVERS

1.1 EXTERIOR COVER REMOVAL

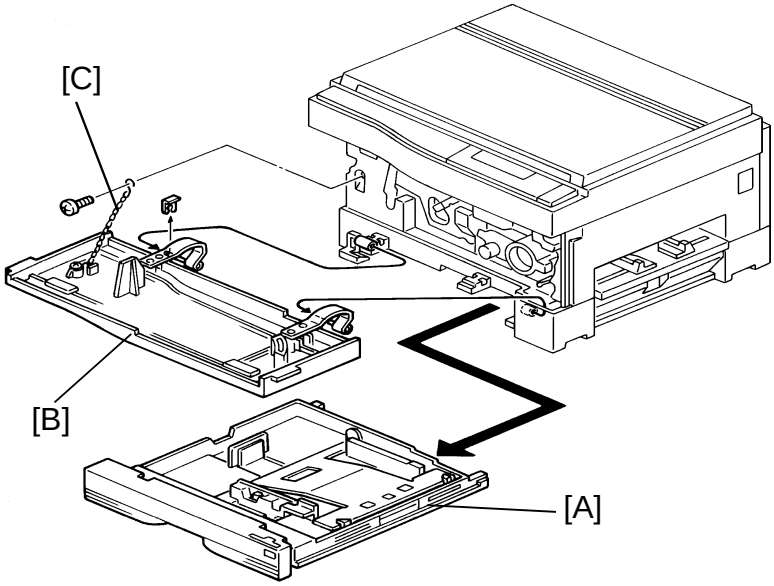

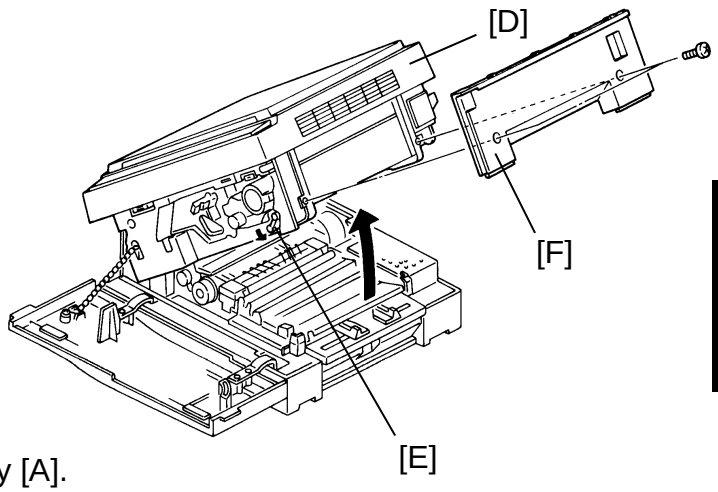

1.1.1 Front Cover

1. Pull out the 1st paper tray [A].
2. Open the front cover [B].
3. Remove the chain [C] from the lower inner cover (1 screw).
4. Remove the front cover (1 snap ring).

1.1.2 Right Cover

1. Open the front cover.
2. Open the upper unit [D] by pushing the release lever [E].
3. Remove the right cover [F] (2 screws).

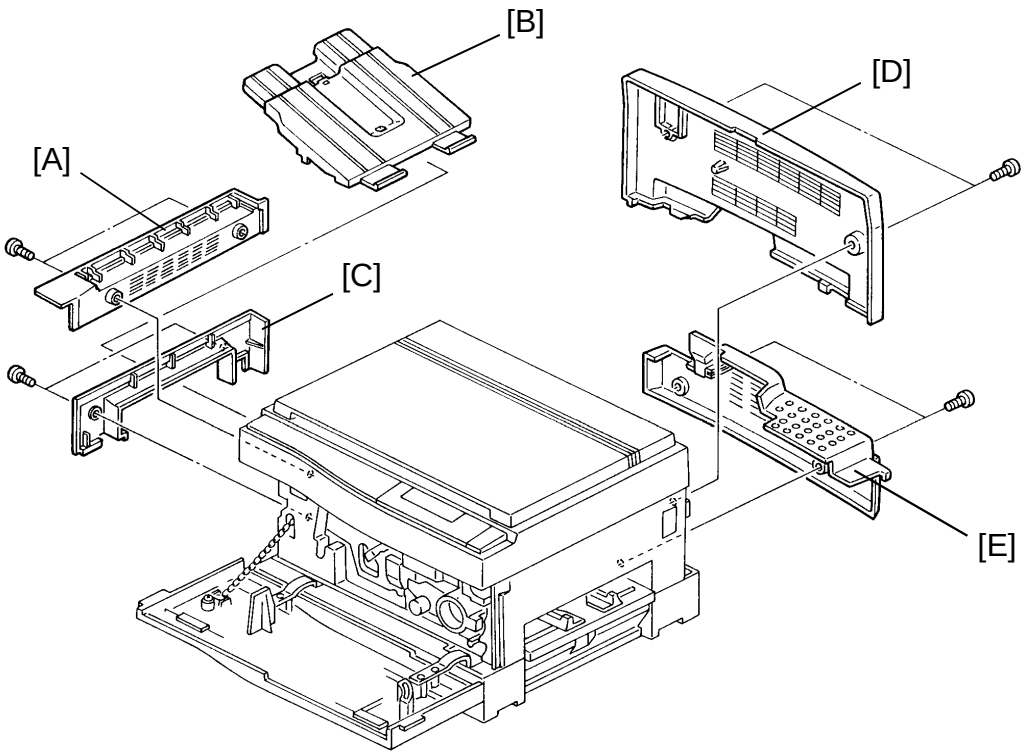

1.1.3 Upper Left Cover

1. Open the front cover.
2. Remove the upper left cover [A] (2 screws).

1.1.4 Lower Left Cover

1. Open the front cover.
2. Take out the copy tray [B].
3. Remove the lower left cover [C] (2 screws).

1.1.5 Upper Rear Cover

1. Remove the upper rear cover [D] (2 screws).

1.1.6 Lower Rear Cover

1. Remove the upper rear cover (2 screws).
2. Remove the lower rear cover [E] (2 screws).

1.1.7 Upper Cover

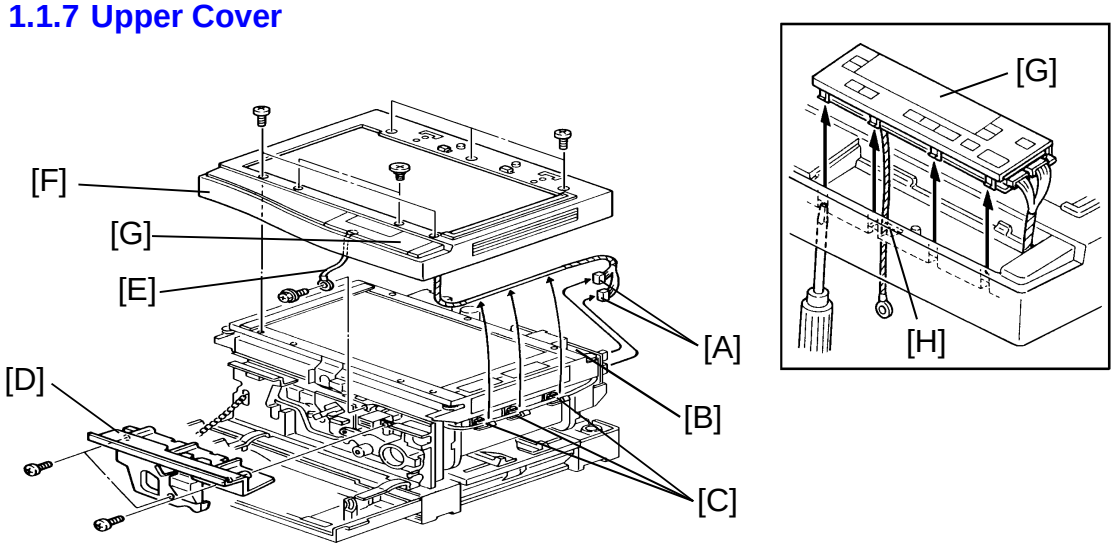

1. Remove the platen cover or DF.
2. Remove the left side scale (2 screws).
3. Remove the exposure glass. (See Exposure Glass Removal.)
4. Remove the upper rear cover (2 screws).
5. Open the upper unit by pushing the release lever.
6. Remove the right cover (2 screws).
7. Close the upper unit.
8. Disconnect two connectors [A] from the main board [B] (CN123 and CN124) and remove the operation panel harness from the three wire clamps [C].
9. Open the front cover.
10. Remove the upper inner cover [D] (3 screws).
11. Remove the operation panel wire [E] (1 screw).
12. Remove the upper cover [F] with operation panel [G] (7 screws).
13. Remove the operation panel from the upper cover using a slotted screwdriver as shown (4 hooks).

NOTE: 1. Before reinstalling the operation panel to the upper cover, pass the operation panel wire through the hole [H].
2. When reinstalling the operation panel, at first insert the rear side of the operation panel in the upper cover, and then push the front side of the operation panel.

1.2 INNER COVER REMOVAL

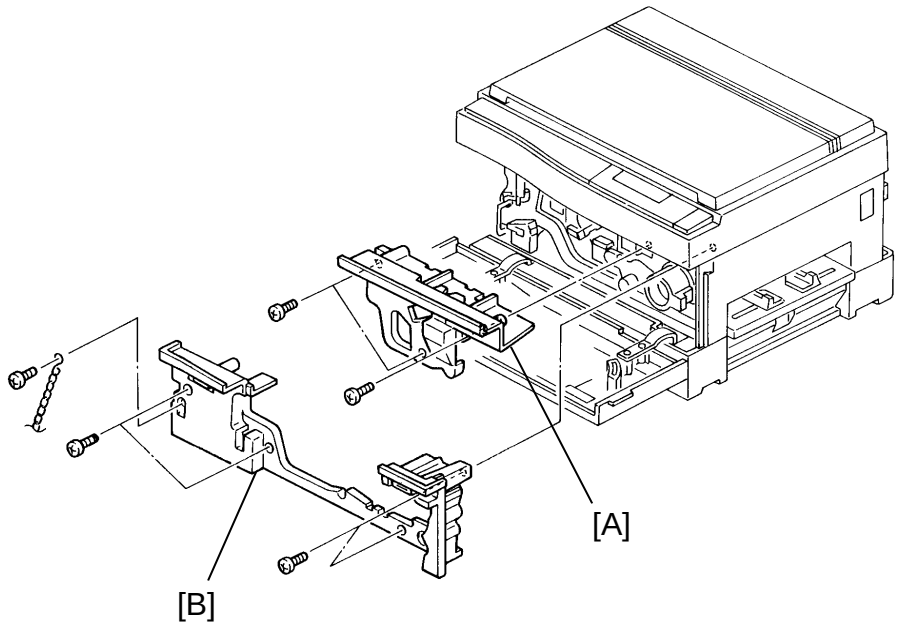

1.2.1 Upper Inner Cover

1. Open the front cover.
2. Remove the upper inner cover [A] (3 screws).

1.2.2 Lower Inner Cover

1. Open the front cover.
2. Remove the upper inner cover (3 screws).
3. Remove the lower inner cover [B] (5 screws).

2. OPTICS

2.1 EXPOSURE GLASS REMOVAL

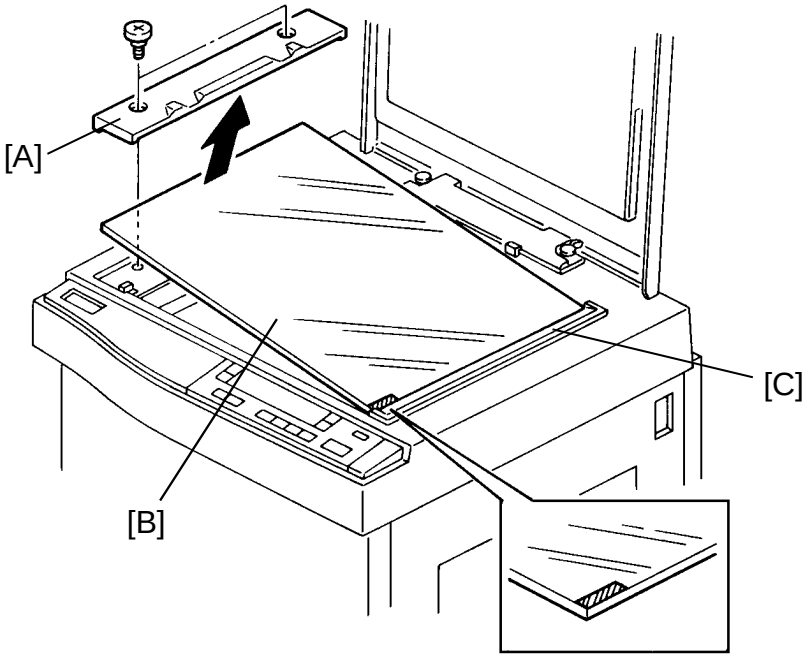

1. Take off the left scale [A] (2 shoulder screws).
2. Grasp the left edge of the exposure glass [B] and lift up slightly. Slide the other edge out from under the right glass holder [C]. Remove the exposure glass.

   NOTE: When reinstalling the exposure glass, make sure of the following:

   a) The left edge of the glass is flush with the tab to the left of the scale plate, and the right glass holder firmly secures the exposure glass.

   b) The red mark is positioned on the right hand side facing upwards. This side is smoother and generates less static electricity when the DF is used.

2.2 1ST MIRROR REMOVAL

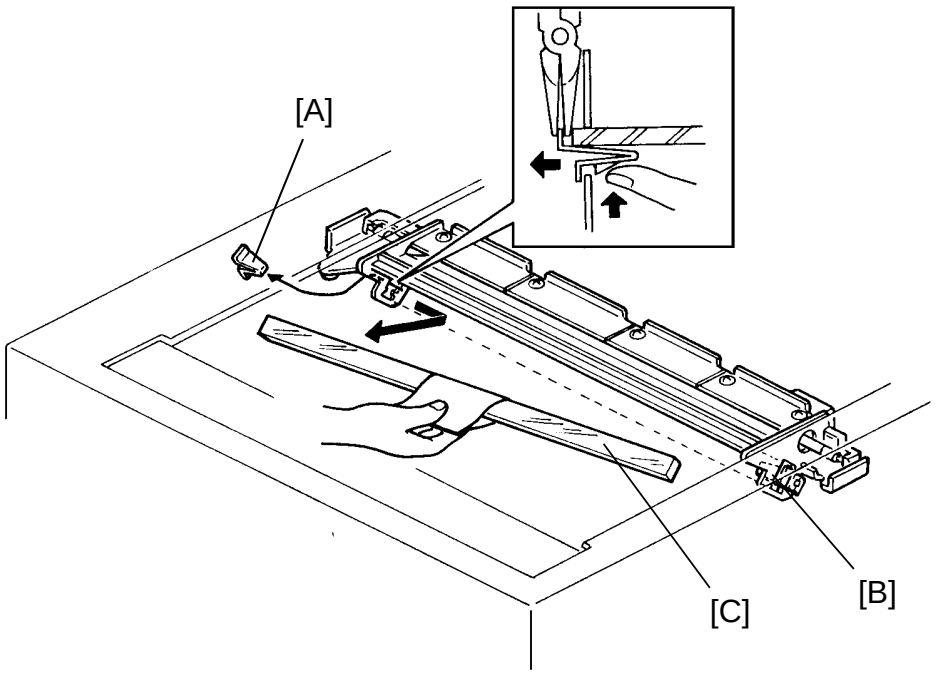

1. Turn off the main switch.
2. Remove the exposure glass. (See Exposure Glass Removal.)
3. Move the first scanner to the cutout position (150 mm from the left scale).
4. Move the 1st scanner to the front side. Then, while holding the scanner, press up on the rear spring plate [A] with finger and remove the plate with a pair of pliers. Leave the front spring plate [B] in position in the rear side plate cutout.
5. Carefully slide the 1st mirror [C] toward the front of the machine and lift the mirror out of the machine rear side first.

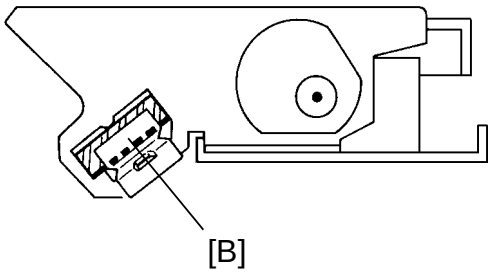

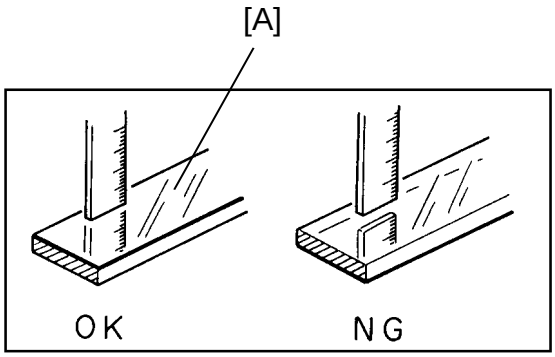

– To install –

1. Insert the 1st mirror into the rear side plate cutout. Then insert the front side of the mirror into the front spring plate.

   NOTE: Make sure when installing the mirror that the reflecting surface [A] is on the upper side as shown.

2. Insert the rear spring plate between the mirror and the rear side plate cutout.

   NOTE: Make sure that spring plate [B] must be positioned correctly as shown.

2.3 2ND AND 3RD MIRROR REMOVAL

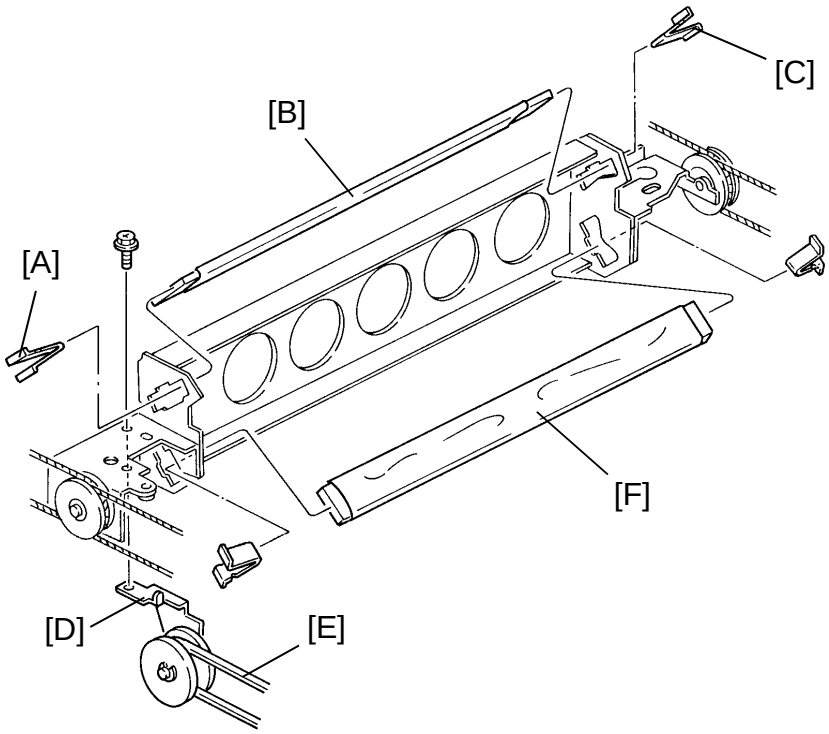

1. Turn off the main switch.
2. Remove the exposure glass. (See exposure glass removal.)
3. Slide the 1st scanner 2/3 of the way to the right.
4. Remove the front spring plate [A] of the 2nd mirror [B].
5. Carefully shift the 2nd mirror toward the front of the machine to remove the rear spring plate [C].
6. Lift the 2nd mirror out of the machine.
7. Remove the pulley bracket [D] of the exposure lamp harness [E] (1 screw).
8. Remove the 3rd mirror [F] in the same way of the 2nd mirror.

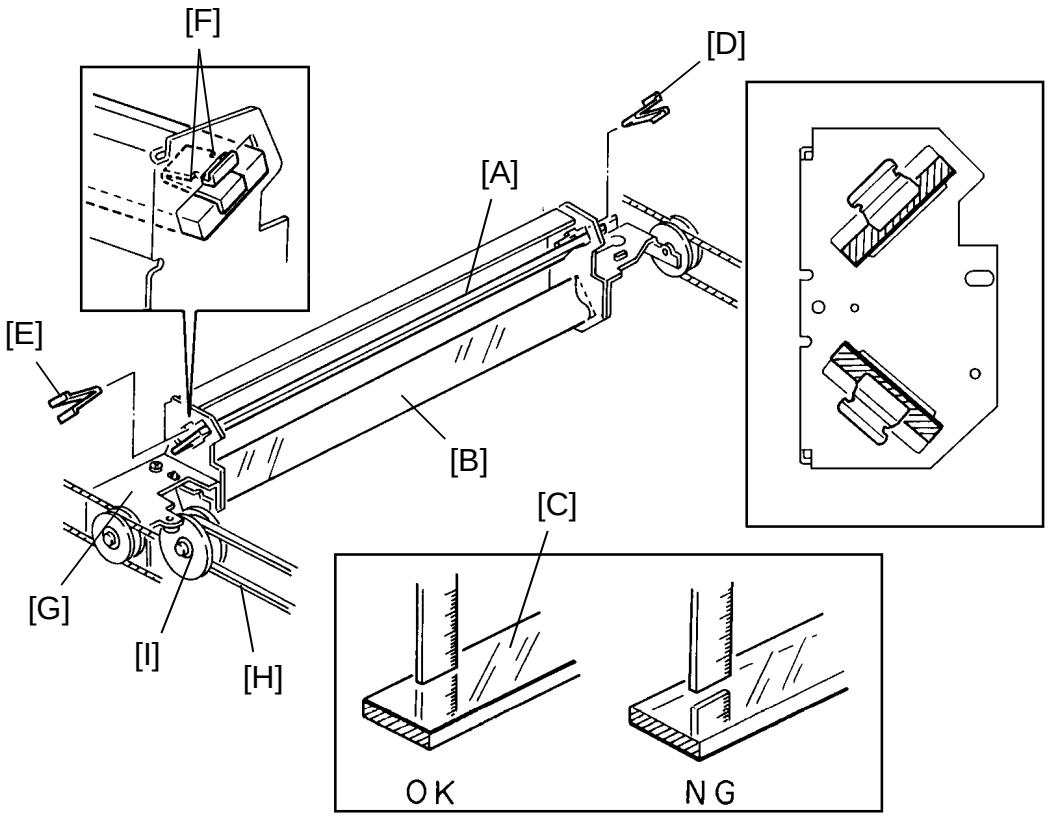

– To reinstall –

1. Position the 2nd mirror [A]/3rd mirror [B] in the front and rear side plate cutouts.

   NOTE: Make sure that the reflecting surface [C] faces the lens.

2. Set the rear spring plate [D] in the rear side plate cutout while holding the mirror and set the front spring plate [E] in the front side plate cutout.

   NOTE: a) Make sure that the cutout [F] of the spring plate is positioned as shown.

   b) Do not touch the reflecting surface with bare hands.

   c) When reinstalling the pulley bracket [G] while winding the exposure lamp harness [H] around the pulley [I], do not bend are break off the exposure lamp harness.

2.4 4TH AND 5TH MIRROR REPLACEMENT

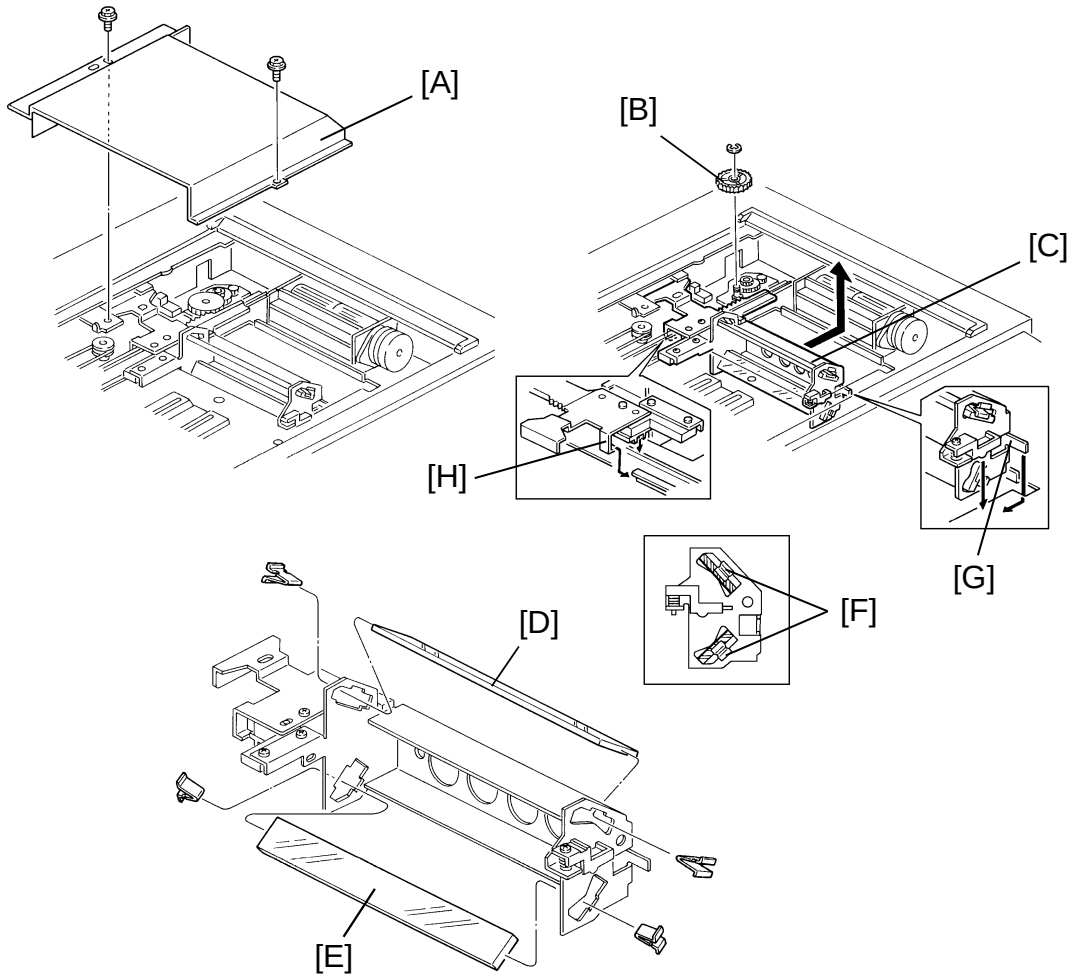

1. Turn off the main switch.
2. Remove the exposure glass. (See Exposure Glass Removal.)
3. Remove the lens cover [A] (2 screws).
4. Remove the 4th and 5th mirror assembly drive gear [B] (1 E-ring).
5. Slide the mirror assembly [C] all the way to the right and remove it.
6. Replace the fourth [D] and fifth [E] mirrors. (The procedure for removing the mirrors from their brackets is the same as with the second and third mirrors.)

   NOTE: a) make sure that the reflecting surface faces lens.
   b) Position the spring plates [F] as shown.
   c) When reinstalling the 4th and 5th mirror assembly, make sure that the hooks [G and H] are properly positioned as shown.

2.5 EXPOSURE LAMP REPLACEMENT

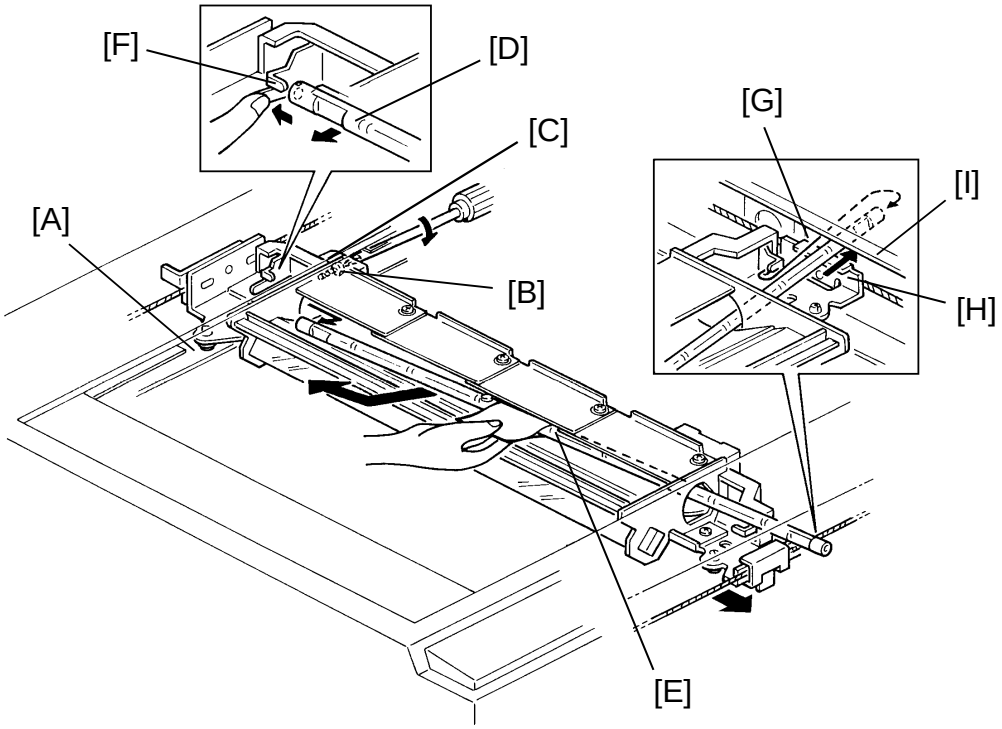

1. Turn off the main switch and unplug the copier.
2. Remove the exposure glass. (See Exposure Glass Removal.)
3. Move the first scanner to the cutout position at the rear frame [A] and move the first scanner toward front side as shown.
4. Loosen a screw [B] of the rear lamp terminal bracket [C].
5. Take off the rear side [D] of the exposure lamp [E] from the rear lamp terminal [F] while pressing the rear terminal.
6. Slide the exposure lamp toward the front side and pass the front side of the exposure lamp through the space [G] between the front scanner clamp [H] and front copier frame [I] while lifting the rear side of the exposure lamp.
7. Take out the exposure lamp.

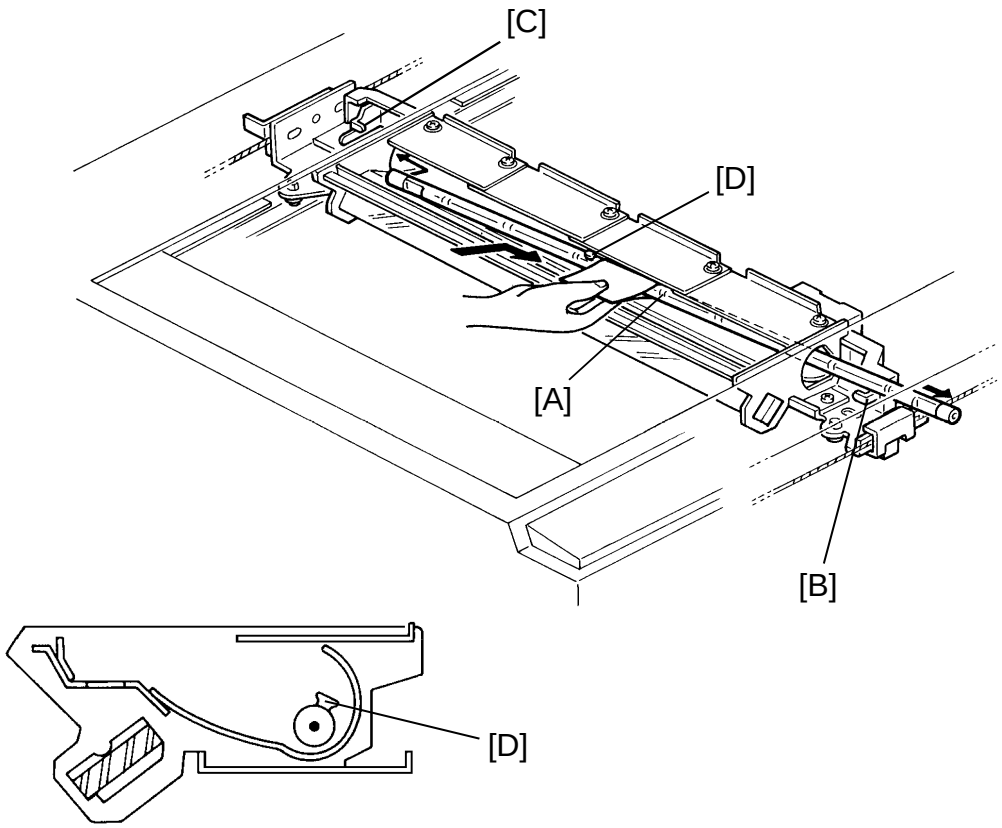

8. Install a new lamp [A]. Use a strip of paper as shown to hold the lamp. Set the front terminal [B] first.

NOTE: a) Make sure that the exposure lamp is properly positioned at the front and rear [C] terminals.

b) Make sure that the blister [D] on the lamp is positioned upward as shown.

c) Return the first scanner to the original position and make sure that the first scanner moves smoothly.

d) Check the light intensity (SP48) and ADS adjustment (SP56). (See Light Intensity Adjustment and ADS Adjustment.)

2.6 THERMOFUSE REPLACEMENT

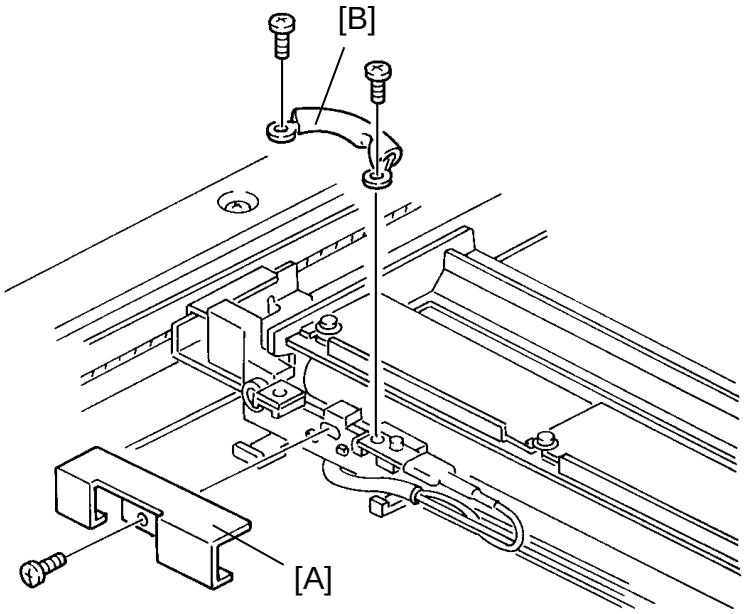

1. Turn off the main switch and unplug the copier.
2. Remove the exposure glass. (See Exposure Glass Removal.)
3. Remove the thermofuse bracket [A] (1 screw).
4. Remove the thermofuse [B] (2 screws).

2.7 SCANNER DRIVE WIRE REPLACEMENT

2.7.1 Wire Removal

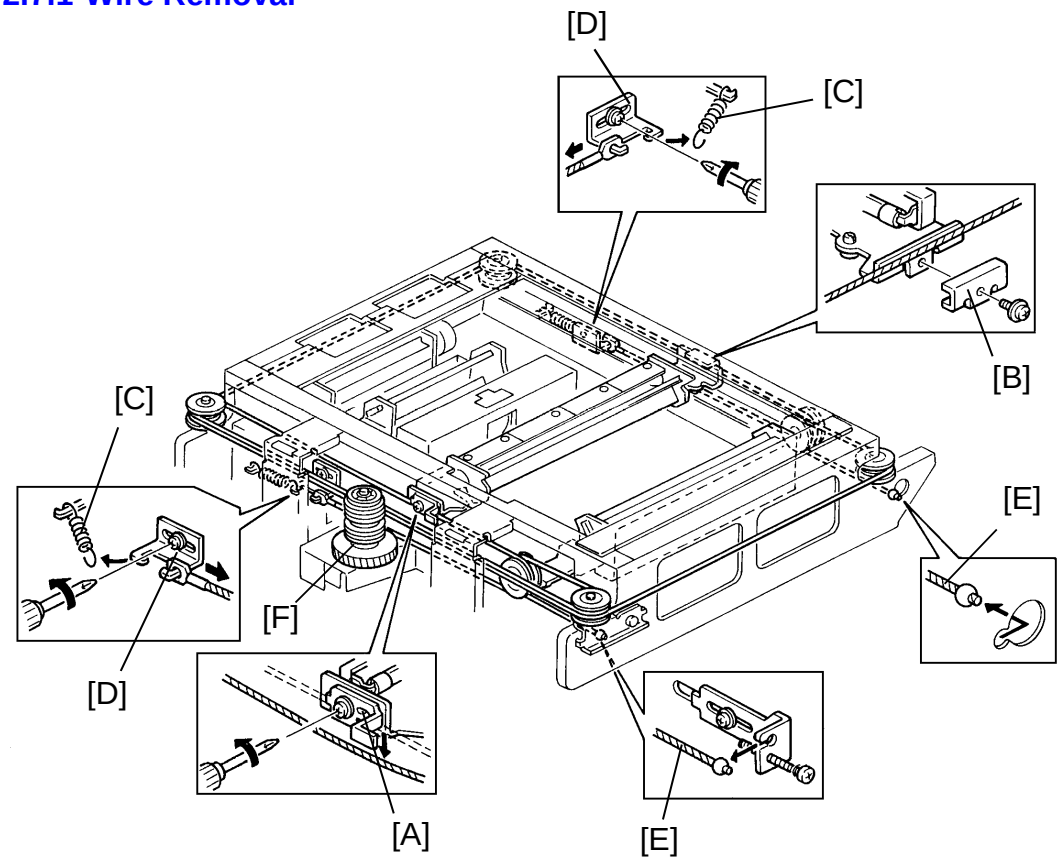

1. Remove the following covers and parts.

Platen cover (if installed)	Document feeder (if installed)
Upper rear cover	Upper cover
Operation panel	Exposure glass

2. Loosen the screws securing rear first scanner wire clamp [A].
3. Remove the front first scanner wire clamp [B].
4. Remove the front and rear wire tightened springs [C].
5. Loosen the screws securing the front and rear wire fixing plates [D].
6. Remove scanner wires [E] from the left side plate.
7. Remove scanner wires (four wires) from the drive pulley [F].
8. Remove the drive pulley (1 E-ring).

2.7.2 Wire Installation

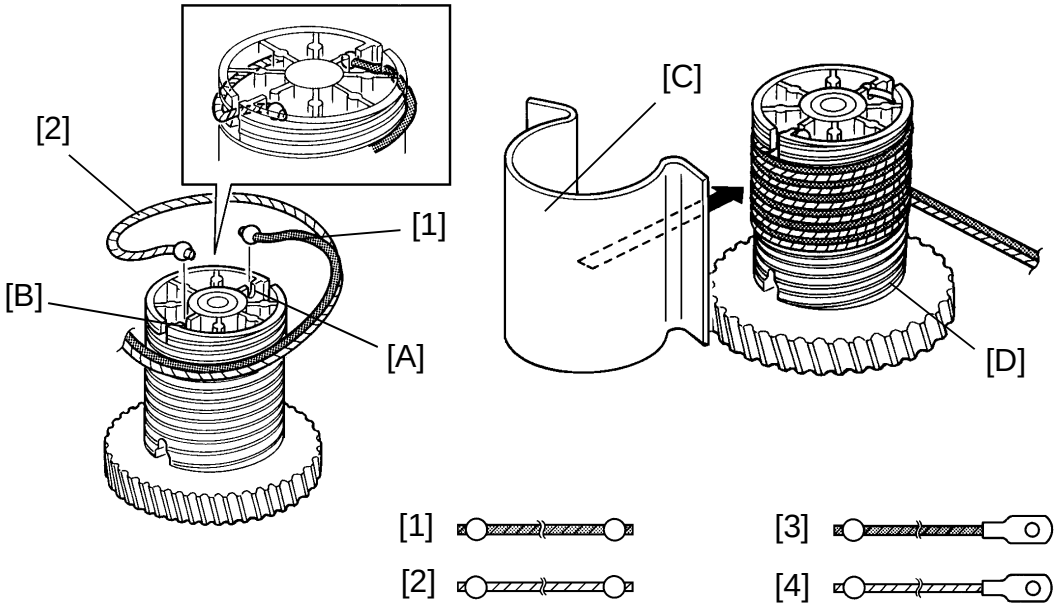

1. Put the bead at the end of the dark silver wire [1] in slot [A].
2. Put the bead of the light silver wire [2] in slot [B].
3. Wind the dark silver wire [1] clockwise halfway around the pulley. Wind the light silver wire [2] clockwise one complete turn around the pulley.
4. Wind the dark and light silver wires together five and a half times around the pulley. Make sure that the dark silver wire is wound six times and the light silver wire is wound six and a half times in total.
5. Set the omega clamp [C] over the wires on the drive pulley [D] as shown.

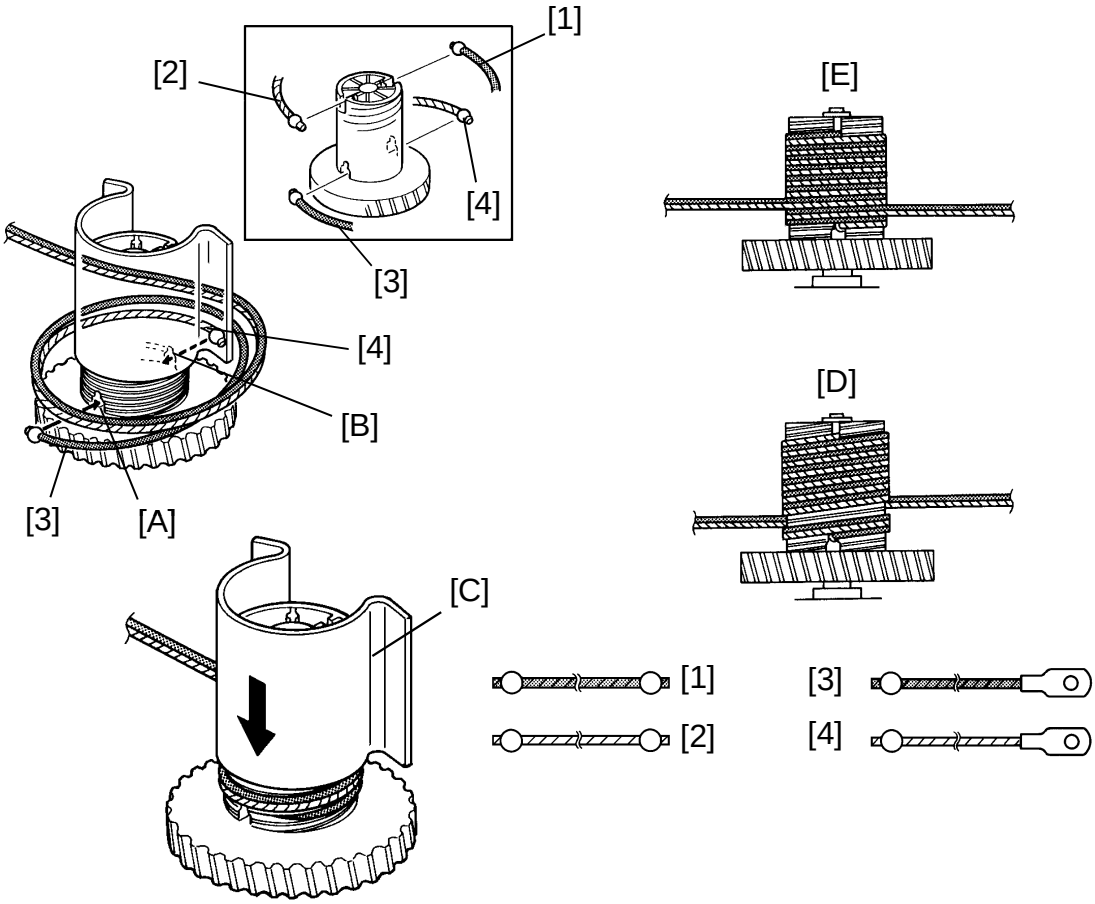

6. Put the bead of the dark silver wire [3] in slot [A] on the light silver wire [2] side.
7. Put the bead of the light silver wire [4] in the other slot [B] on the dark silver wire [1] side.
8. Wind the dark silver wire [3] clockwise one and a half times around the pulley. Wind the light silver wire [4] once clockwise around the pulley.
9. Slide the omega clamp [C] down to secure all the wires as shown.

   NOTE: a) The dark and light silver wires alternate on the pulley with the dark silver wire uppermost.

   b) Wires are not wound around the two grooves shown in the illustration (rear view [D]).

   c) Wires are wound around all the grooves shown in the illustration (front view [E]).

10. Set the pulley on the drive shaft (1 E-ring).

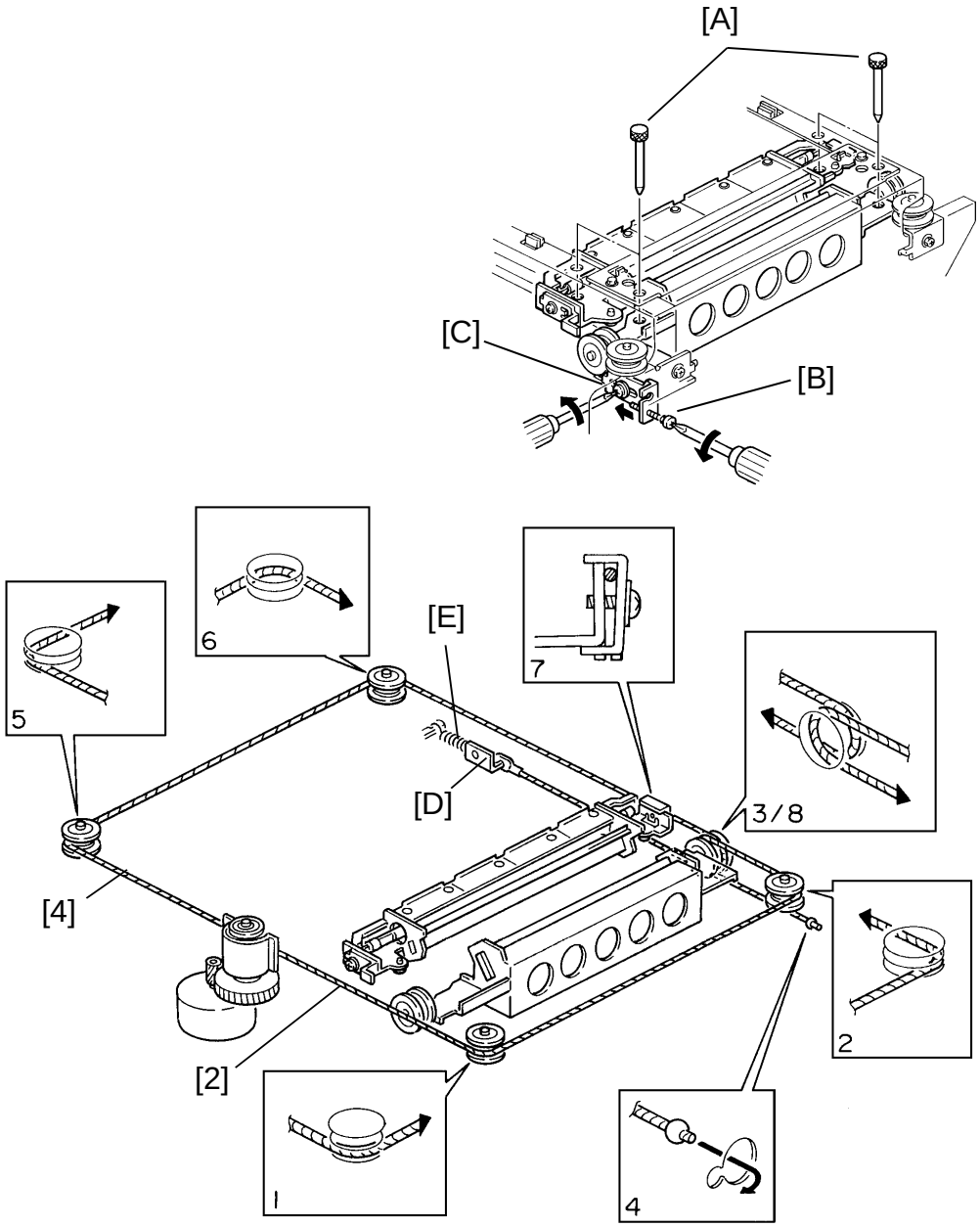

11. Manually move the first and second scanners to home position.
12. Insert the four positioning pins [A] in the holes on the scanner guide rails to secure the first and second scanners.
13. Loosen the wire tension bracket fixing screw [B] and the wire tension adjusting screws [C].
14. Loosen the screw securing the front fixing plate [D]. Place wires ([2] and [4]) on the pulleys as shown.
15. Hook the light silver wire [4] onto the front fixing plate and hook the wire tension spring [E] onto the front fixing plate and the frame projection.

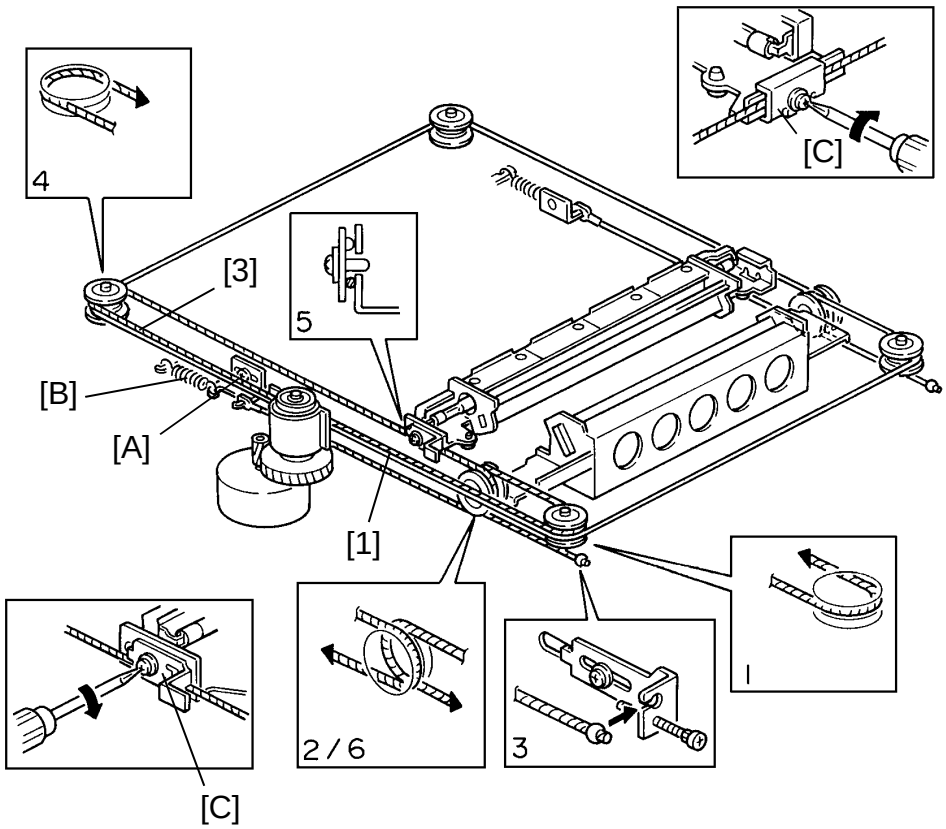

16. Place dark silver wires ([1] and [3]) around the pulleys as shown.
17. Attach wire [3] to the rear wire fixing plate [A], then hook one end of tension spring [B] to the fixing plate and the other end to the frame projection.
18. Reinstall and tighten the first scanner clamps [C] (front and rear) and remove the four positioning pins and the omega clamp.
19. Perform free run (turn DIP switch 101-1 ON) for 10 minutes and make sure that the scanners operate smoothly.

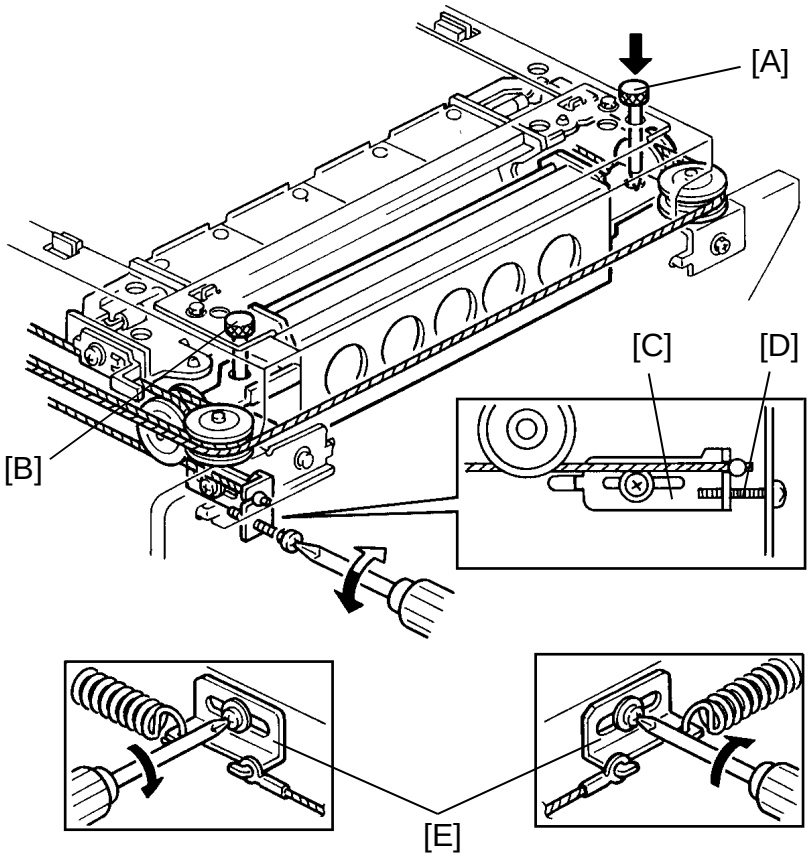

20. Adjust the tension in the second scanner wire.
    (1) Insert positioning pin [A] in the hole at the front end of the second scanner.
    (2) Loosely insert positioning pin [B] in the hole at the rear end of the second scanner.
    (3) Loosen the two screws securing the wire tension bracket [C], then turn the 2nd scanner positioning screw [D] clockwise until the rear positioning pin drops and locks in position.
    (4) Tighten the two screws securing the wire tension bracket [C].
    (5) Make sure the positioning pin [B] slides in and out smoothly. If not, repeat step (3).
    (6) Tighten the screws securing the front and rear wire fixing plates [E].

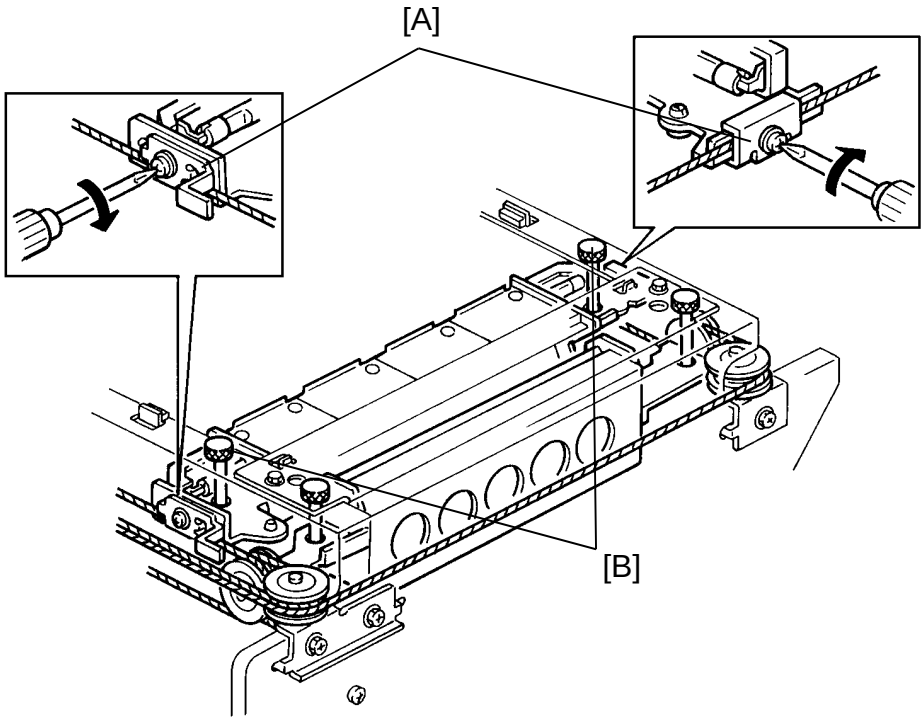

21. Adjust the first scanner wire clamps.
    (1) Loosen the front and rear first scanner wire clamps [A].
    (2) Insert the front and rear positioning pins [B] (2 pcs).
    (3) Tighten the wire clamps.

22. Reassemble.

    NOTE: Always adjust the first scanner wire clamps after adjusting the tension in the second scanner wire.

2.8 SCANNER MOTOR REPLACEMENT

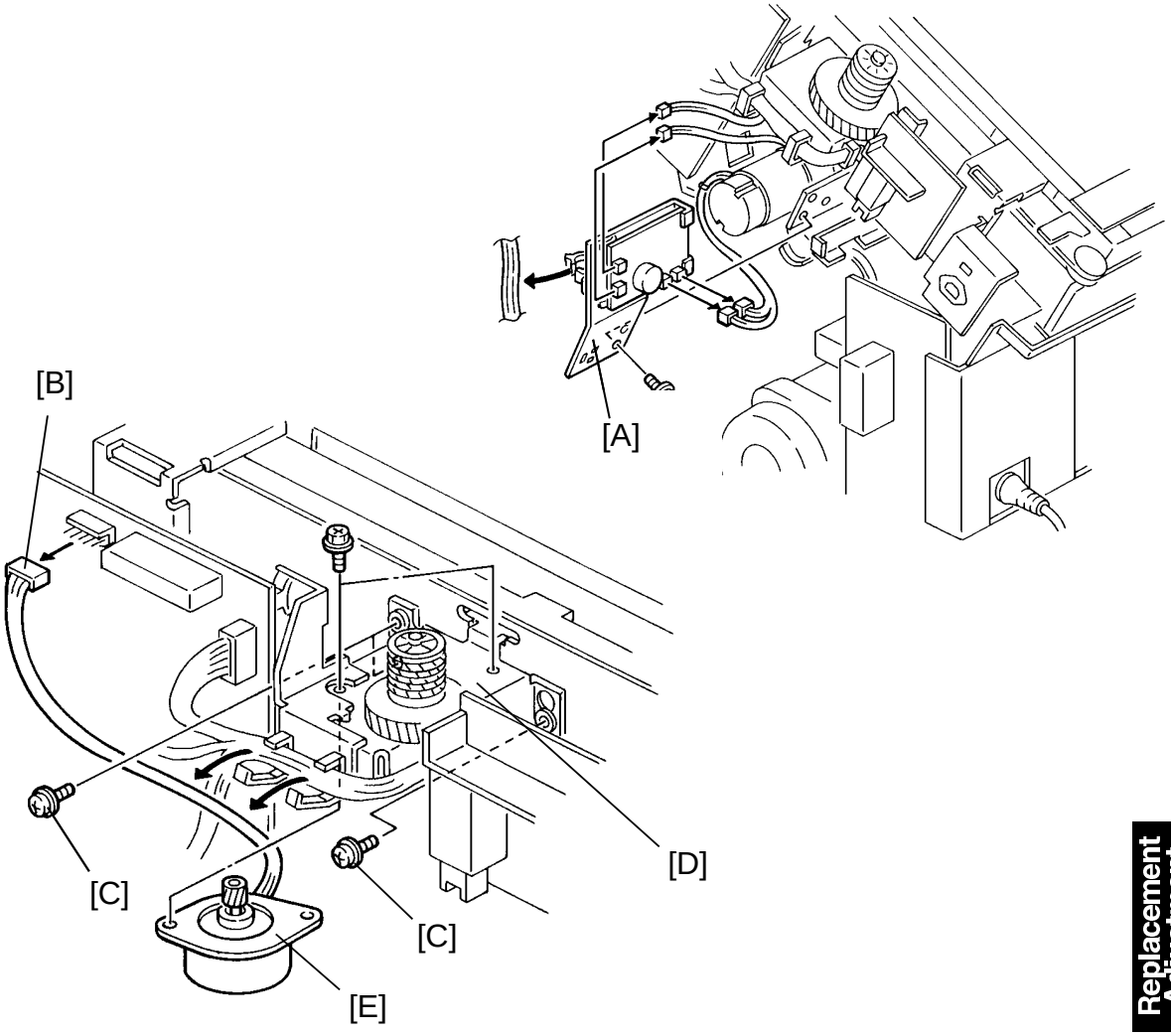

1. Turn off the main switch.
2. Remove the platen cover or DF.
3. Remove the upper rear cover and the upper cover.
4. Open the upper unit by pressing the release lever.
5. Remove the drum motor board bracket [A] (1 screw, 4 connectors and 1 harness clamp).
6. Close the upper unit.
7. Remove the 6P connector [B] from the main board (CN 105) and remove the scanner motor harness from the harness clamps.
8. Remove three screws [C] of the scanner motor bracket [D] and replace the scanner motor [E] (2 screws).

2.9 LENS DRIVE MOTOR REPLACEMENT (A077/A078 Copiers only)

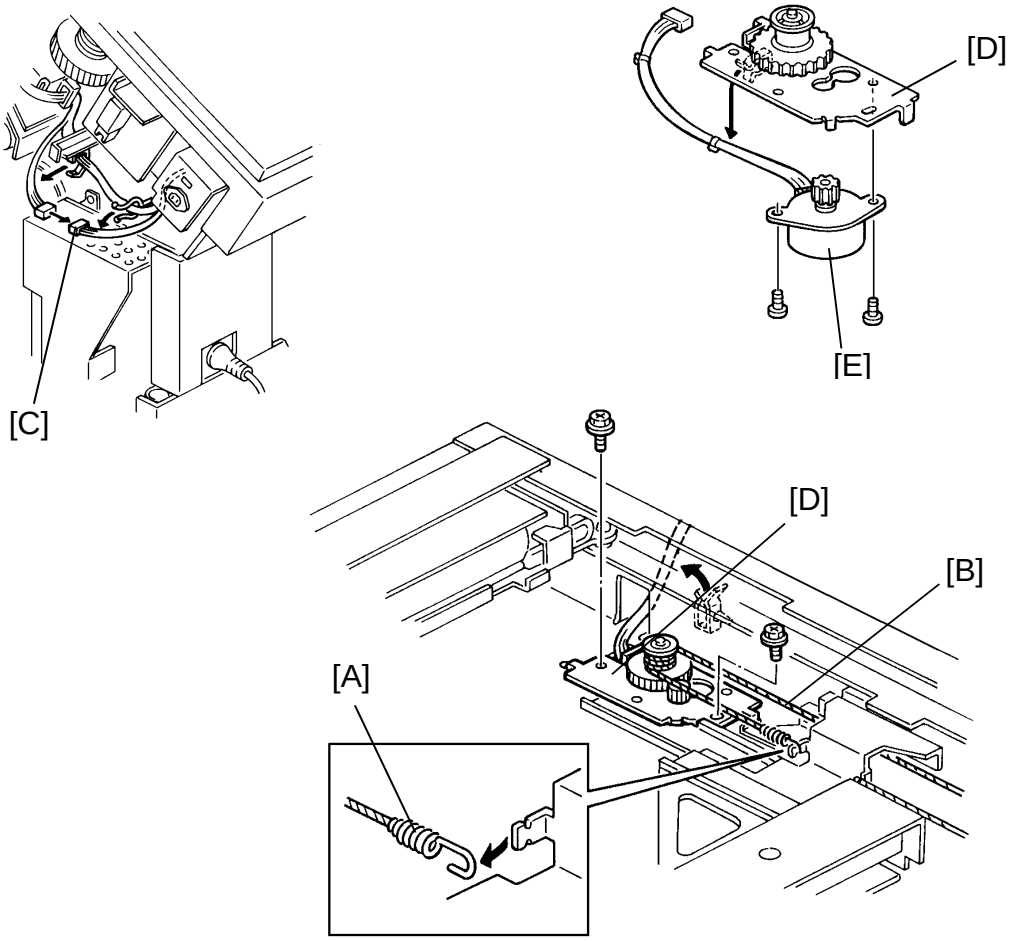

1. Turn off the main switch.
2. Remove the exposure glass and the lens cover.
3. Remove the tension spring [A] and the lens drive wire [B].
4. Remove the upper rear cover (2 screws).
5. Open the front cover.
6. Open the upper unit by pushing the release lever.
7. Remove the lens motor 6P connector [C].
8. Close the upper unit.
9. Remove the lens motor bracket [D] (2 screws).
10. Remove the motor [E] from the bracket (2 screws), and replace the motor.
11. Reassemble.

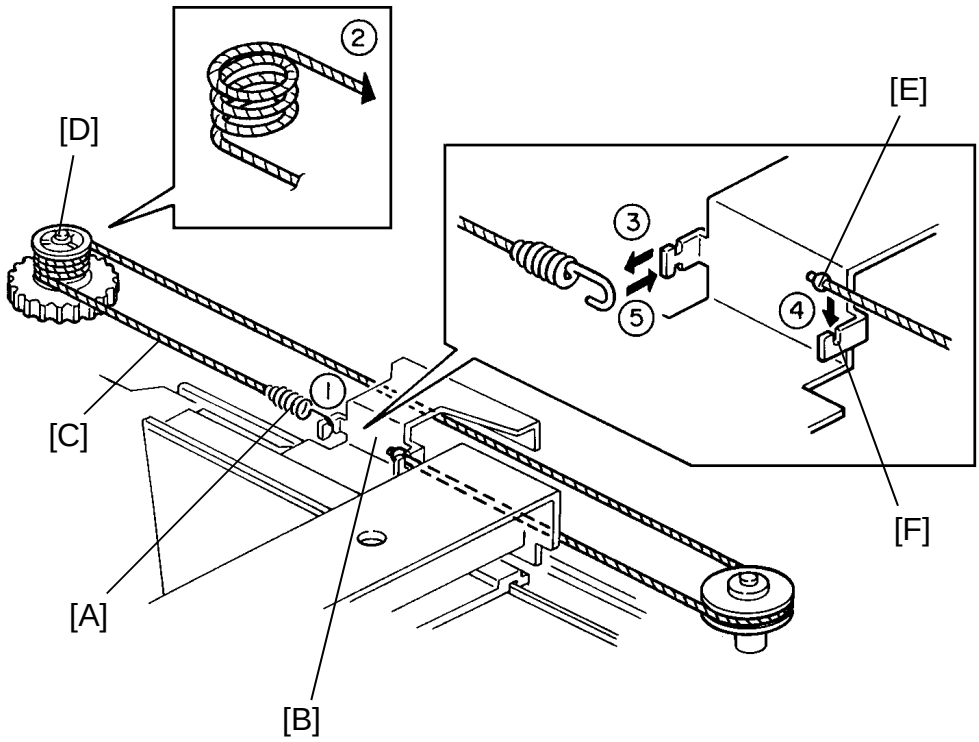

- Lens Drive Wire Installation -

1. Hook the spring [A] to the sensor actuator bracket [B].
2. Wind the lens drive wire [C] three and half times around the pulley [D].
3. Unhook the spring and place the bead [E] at the other end of the wire in slot [F] on the sensor actuator bracket.
4. Reattach the spring to the bracket.

   NOTE: Rotate the lens drive pulley and make sure that the lens drive wire moves smoothly.

2.10 4TH/5TH MIRROR MOTOR REPLACEMENT (A077/A078 Copiers Only)

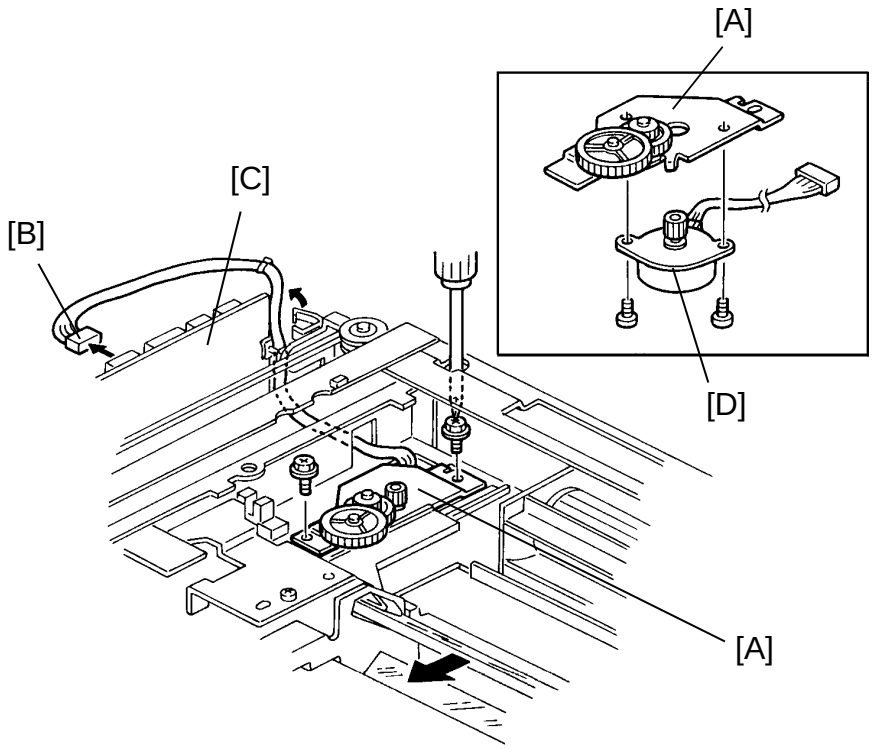

1. Turn off the main switch.
2. Remove the exposure glass, upper cover (with the operation panel), lens cover, and upper rear cover.
3. Move the 4th/5th mirror assembly to the left (viewed from the front).
4. Remove the motor bracket [A] (2 screws).
5. Remove the motor 6P connector [B] from the main board [C] (CN 104).
6. Separate the 4th/5th mirror motor [D] from the bracket (2 screws) and replace it.
7. Reassemble

3. DEVELOPMENT AND TONER SUPPLY

3.1 DEVELOPMENT UNIT REMOVAL

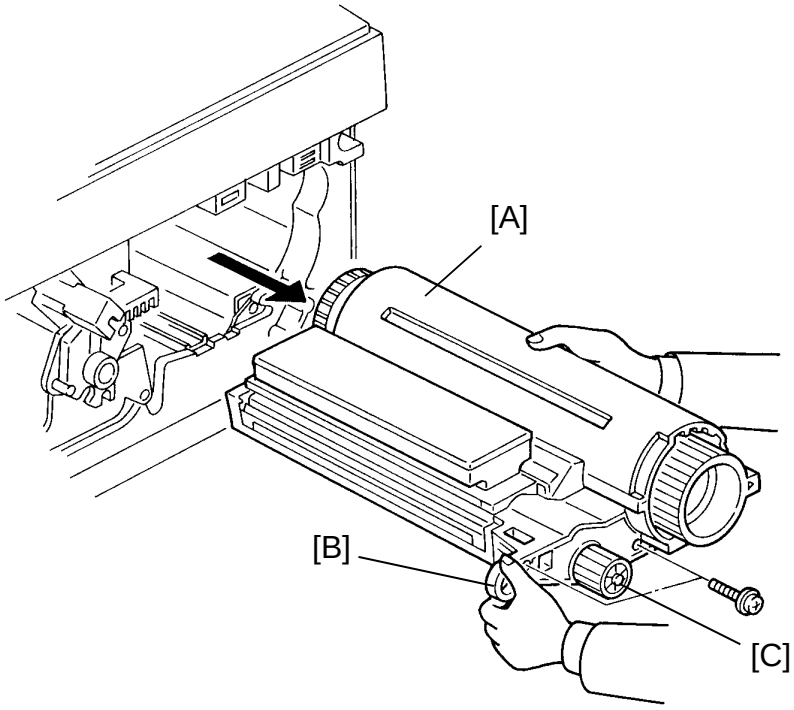

1. Open the front cover.
2. Remove the upper inner cover. (See Upper Inner Cover Removal.)
3. Take out the development unit [A] while pulling the left side of the development cover [B] (2 screws).

   NOTE: Do not hold the development knob [C].

3.2 TONER SUPPLY UNIT REMOVAL

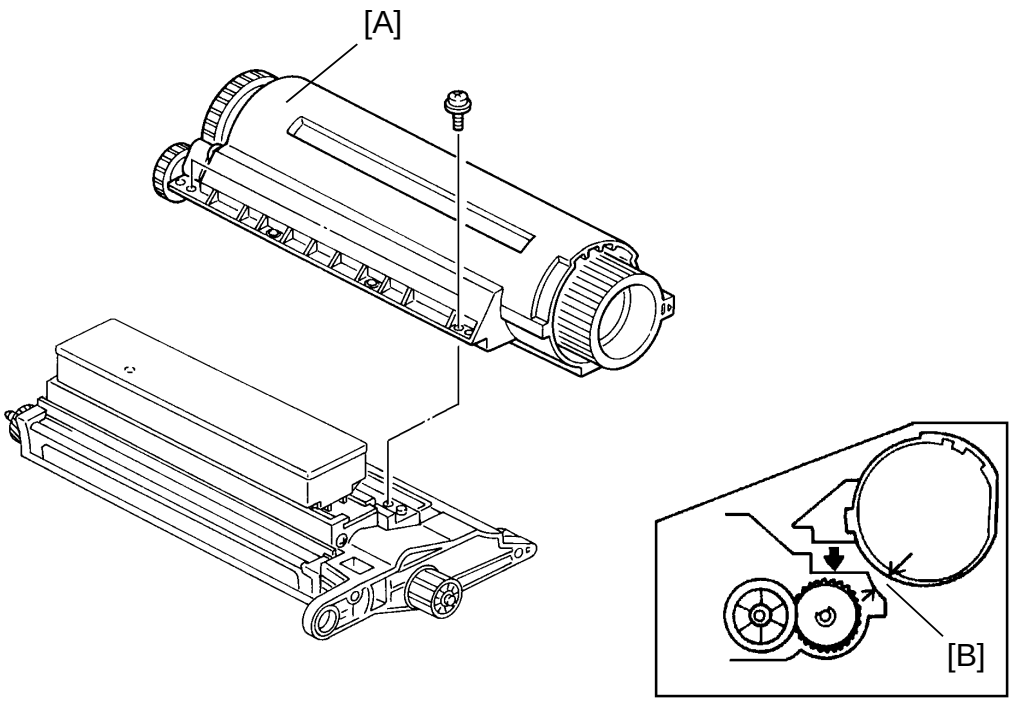

1. Take out the development unit. (See Development Unit Removal.)
2. Remove the toner supply unit [A] (2 screws).

   NOTE: Make sure that there is no gap [B] between the toner supply unit and the development unit. (See Illustration.)

3.3 DEVELOPER REPLACEMENT

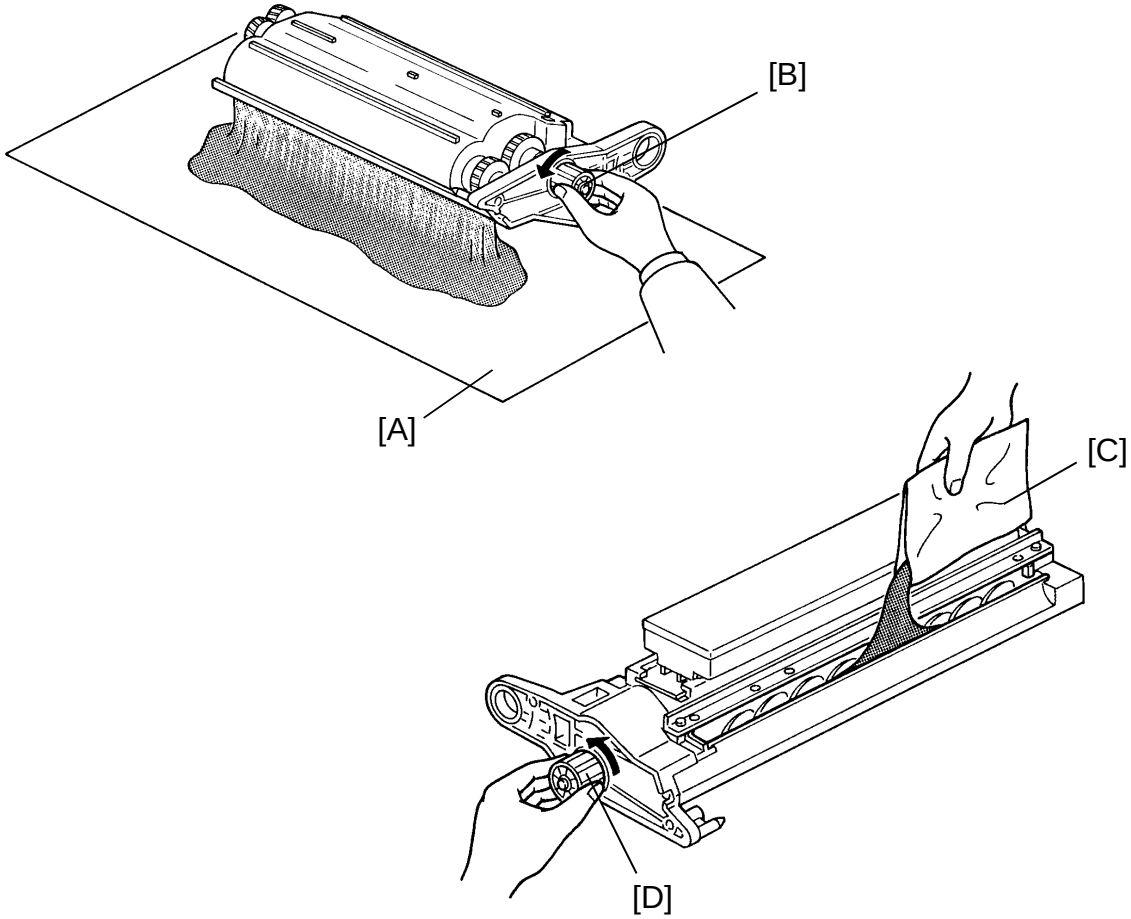

1. Take out the development unit (2 screws).
2. Set the development unit on a large sheet of paper [A].
3. Remove the toner supply unit (2 screws). (See Toner Supply Unit Removal.)
4. Turn the paddle roller knob [B] counterclockwise to empty developer onto the paper.

   NOTE: Dispose of the used toner according to local regulations.
5. Make sure that no developer remains on the development roller or in the development unit.
6. Pour one pack of developer [C] into the development unit while turning the paddle roller knob [D].
7. Reinstall the toner supply unit and set the development unit in the machine.
8. Perform initial setting for new developer using SP65.

3.4 INLET SEAL REMOVAL

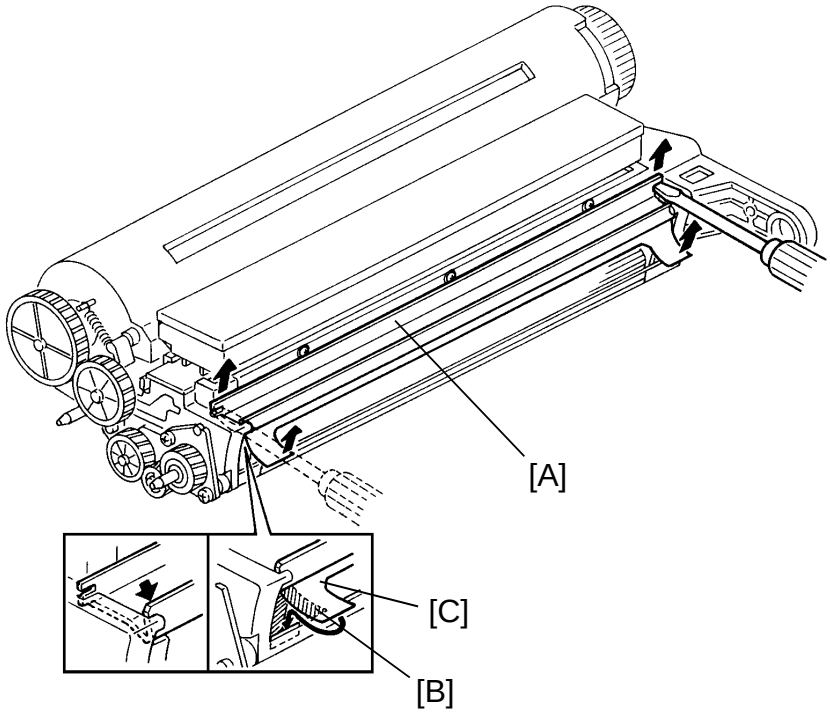

1. Take out the development unit.
2. Remove the inlet seal plate [A] by working a small slotted screwdriver as shown.

   NOTE: To install a new inlet seal plate, remove the covering from the 2-sided tape [B] and affix the inlet seal [C] to the development unit lower casing. Tuck both ends of the seal inside the lower casing as shown.

3.5 TONER SUPPLY CLUTCH REPLACEMENT

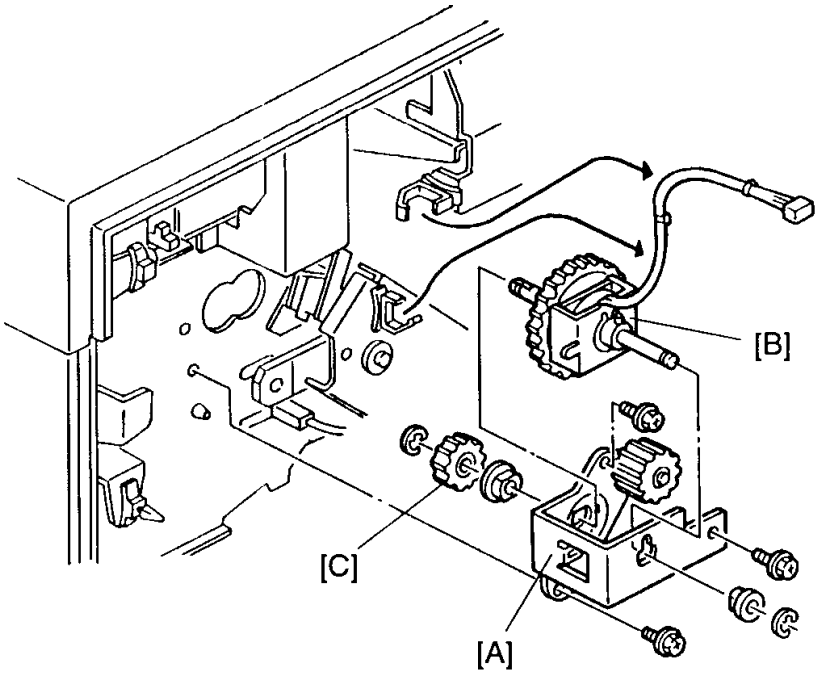

1. Turn off the main switch.
2. Remove the upper rear cover and main board (all connectors and 3 locking supports).
3. Remove the toner supply clutch bracket [A] (3 screws).
4. Remove the clutch [B] from the clutch bracket (2 E-rings, 2 bushing, and 1 gear [C]).

3.6 DEVELOPMENT CLUTCH SOLENOID REPLACEMENT

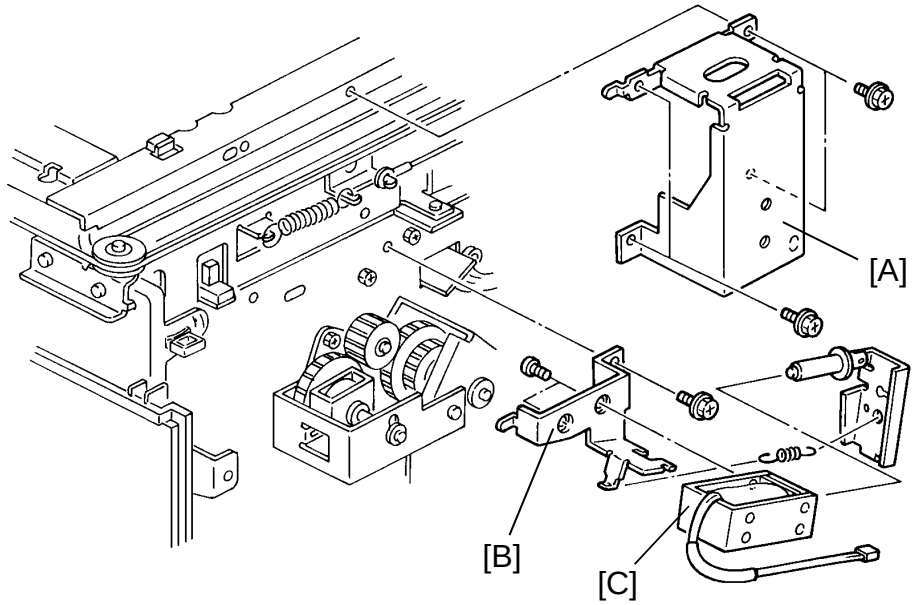

1. Turn off the main switch.
2. Remove the following covers and parts.

   Platen cover (if installed) Document feeder (if installed)
   Upper rear cover Upper cover
   Operation panel
   Main board (all connectors and 3 locking supports)
3. Remove the DF mounting bracket [A] (4 screws).
4. Remove the clutch solenoid bracket [B] (1 screw).
5. Replace the solenoid [C] (2 screws).

   NOTE: Reinstall the solenoid on the bracket [B] so that the harness is positioned on the upper side as shown.

3.7 DEVELOPMENT BIAS VOLTAGE ADJUSTMENT (SP9-38)

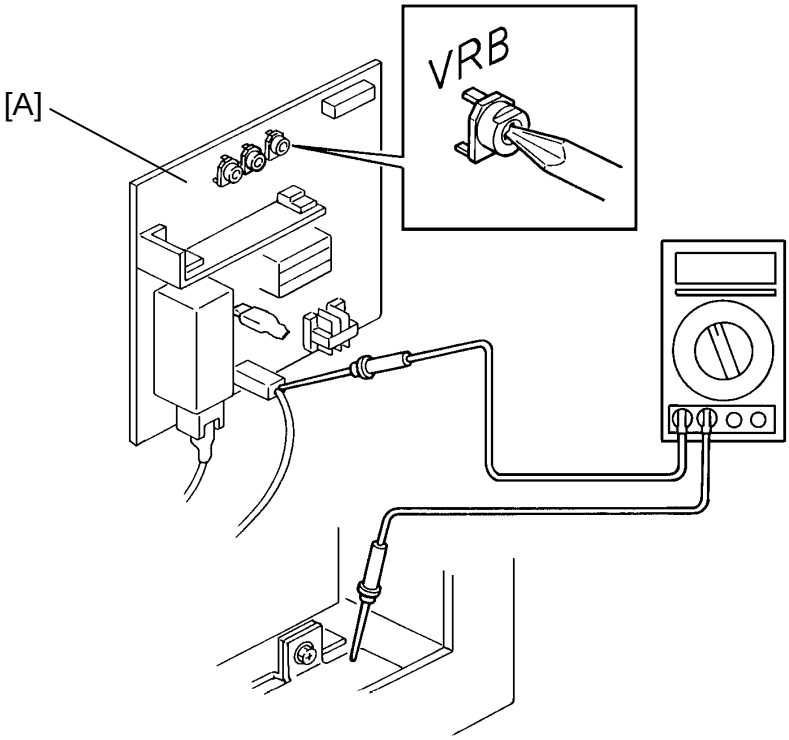

ADJUSTMENT STANDARD	Adjusting VR	
DC –500 ± 10 V	VRB	SP9-38

NOTE: VRB on the spare parts CC/Grid/Bias power pack is pre-adjusted. Usually it is not necessary to adjust VRB when the CC/Grid/Bias power pack is replaced.

1. Set the multimeter range to dc 1500 V and connect the multimeter leads as shown.

   NOTE: Keep the multimeter leads away from the main board.

2. Turn on the main switch, front cover safety switch, and grid using SP9-38.
3. Adjust the grid voltage to –500 ± 10 V by turning VRB on the CC/Grid/Bias power pack [A].
4. Press the Clear/Stop key and turn off the main switch.

4. CLEANING

4.1 CLEANING UNIT REMOVAL

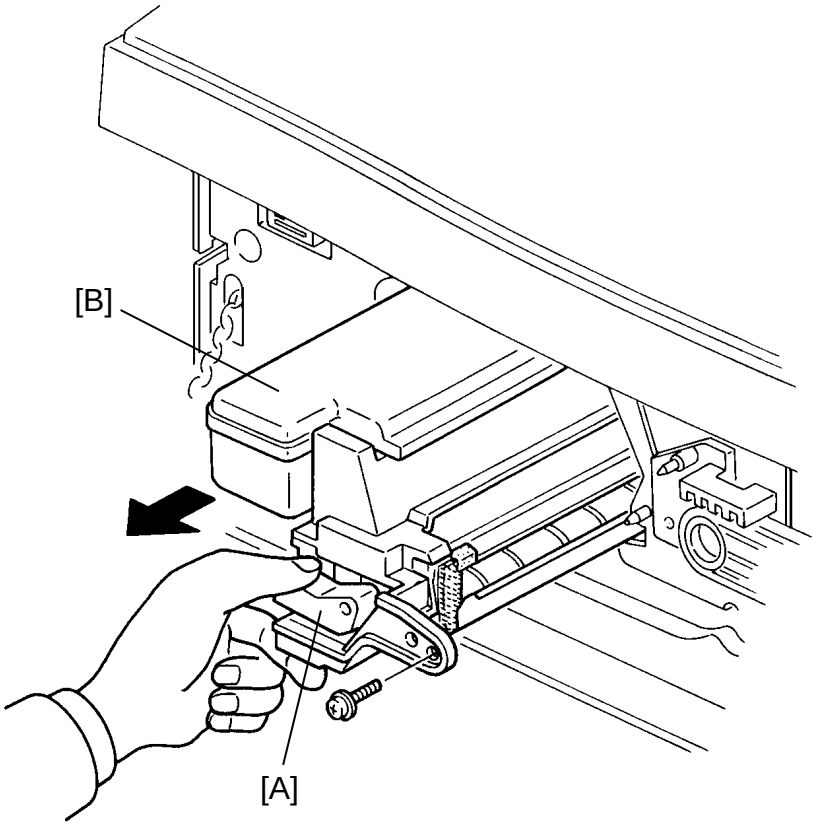

1. Open the front cover.
2. Remove the upper inner cover (3 screws).
3. While holding down the cleaning blade release lever [A], remove the cleaning unit [B] (1 screw).

4.2 CLEANING BLADE REPLACEMENT

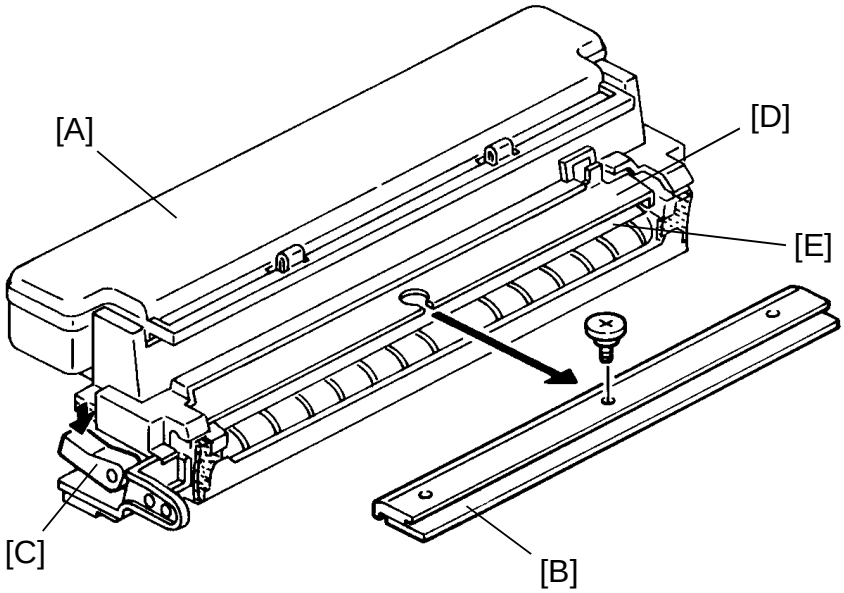

1. Remove the cleaning unit [A]. (See Cleaning Unit Removal.)
2. Remove the cleaning blade [B] (1 shoulder screw).
3. While holding down the cleaning blade release lever [C], install the new cleaning blade between the blade bracket [D] and the blade scraper [E] (1 shoulder screw).

   NOTE: a) Do not touch the edge of a new cleaning blade, as it is damaged easily.

   b) After installing a new cleaning blade, make sure it swivels.

4.3 CLEANING BRUSH REPLACEMENT

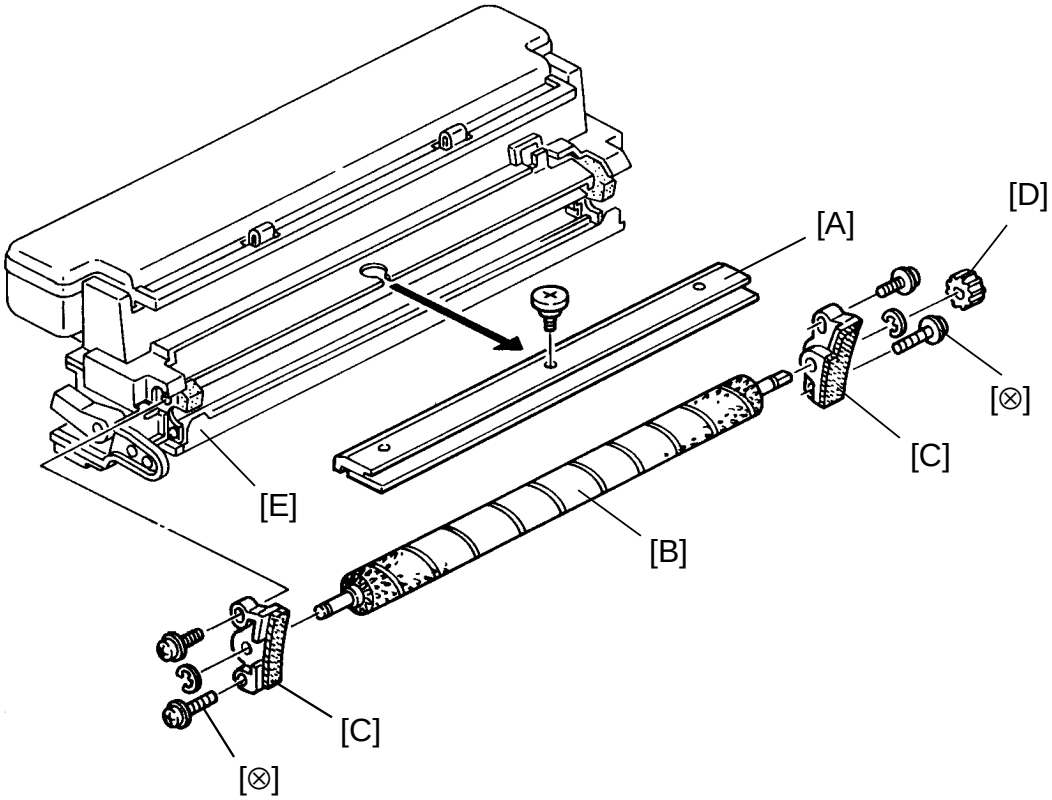

1. Remove the cleaning unit. (See Cleaning Unit Removal.)
2. Remove the cleaning blade [A]. (See Cleaning Blade Replacement.)
3. Remove the cleaning brush bracket screws (4); then, remove the cleaning brush [B] together with the cleaning side brackets [C] and gear [D].
4. Remove the side brackets, the gear and the two E-rings, and replace the cleaning brush.

   NOTE: a) Do not touch the cleaning brush surface. Handle only the shaft-ends.

   b) Do not bend or damage the entrance seal [E].

   c) These screws [⊗] are self-tapping screws. Do not tighten them too much as this will strip the resin threads.

4.4 BLADE SCRAPER REPLACEMENT

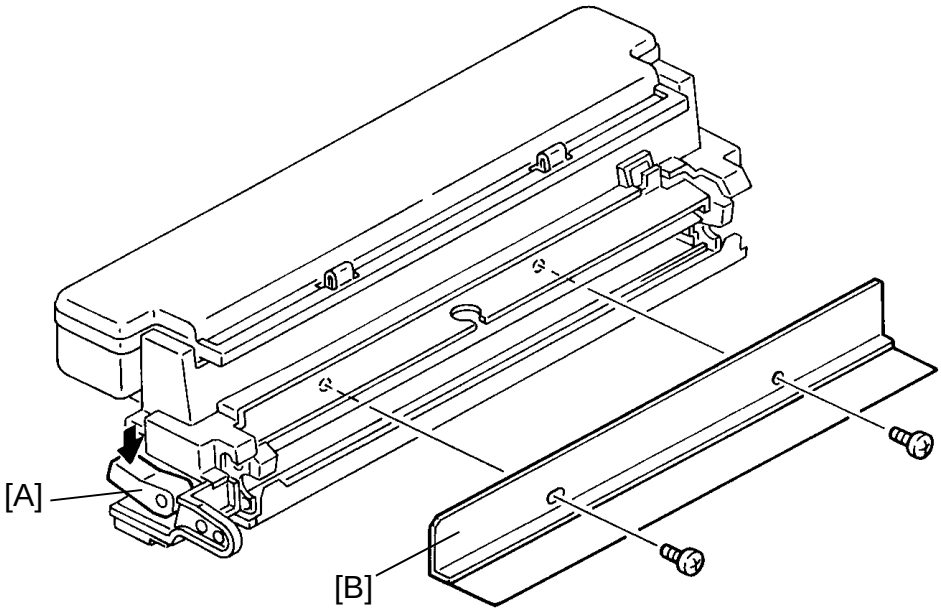

1. Remove the cleaning unit. (See Cleaning Unit Removal.)
2. Remove the cleaning blade and brush. (See Cleaning Blade and Brush Replacement.)
3. While holding down the cleaning blade release lever [A], remove the blade scraper [B] (2 screws).

4.5 USED TONER COLLECTION

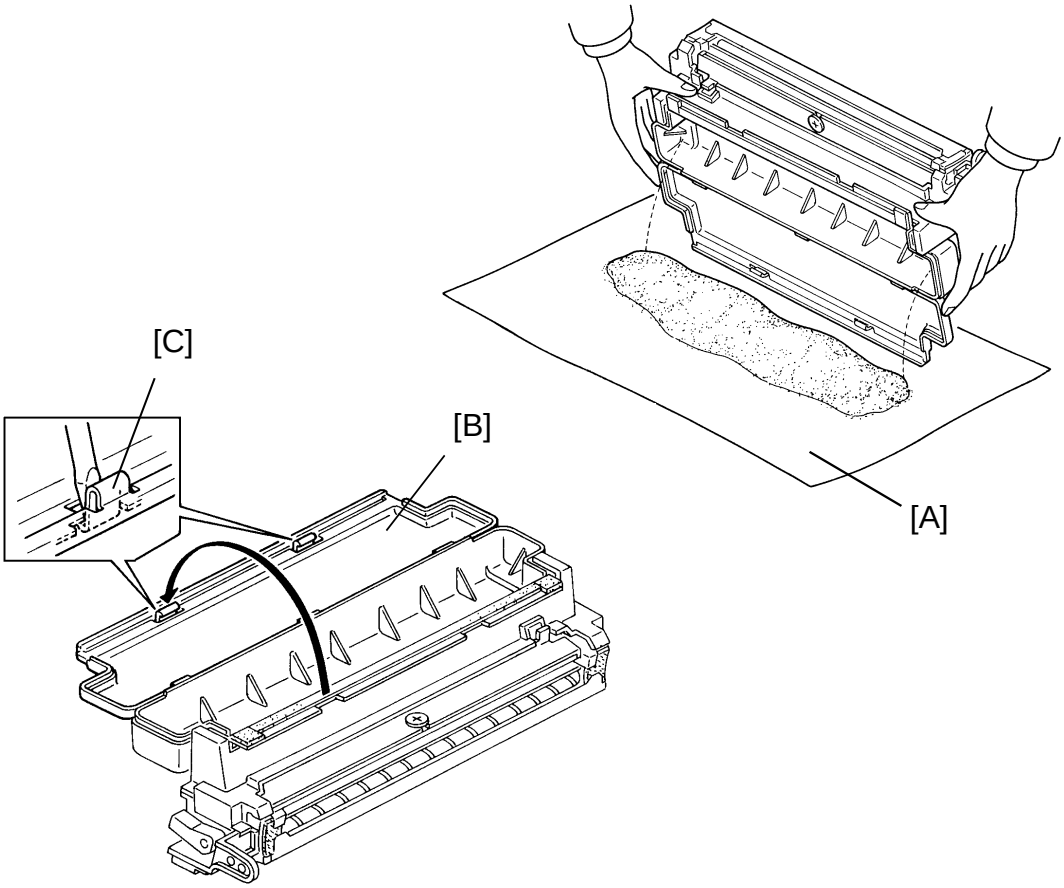

CAUTION: After disposing of the toner in the used toner tank, SP83 must be done to clear the memory counter (SP58).

1. Remove the cleaning unit. (See Cleaning Unit Removal.)
2. Set the cleaning unit on a large sheet of paper [A].
3. Open the toner collection cover [B] while removing the hooks [C].

   NOTE: Do not peel off the tape on the toner collection cover.
4. Pour the used toner slowly onto the paper sheet so that the toner does not scatter.
5. Place the paper sheet with the used toner into a plastic bag.

   NOTE: Dispose according to local regulations.
6. Reinstall the cleaning unit.
7. Perform the SP83 to clear the memory counter.

4.6 ENTRANCE SEAL REPLACEMENT

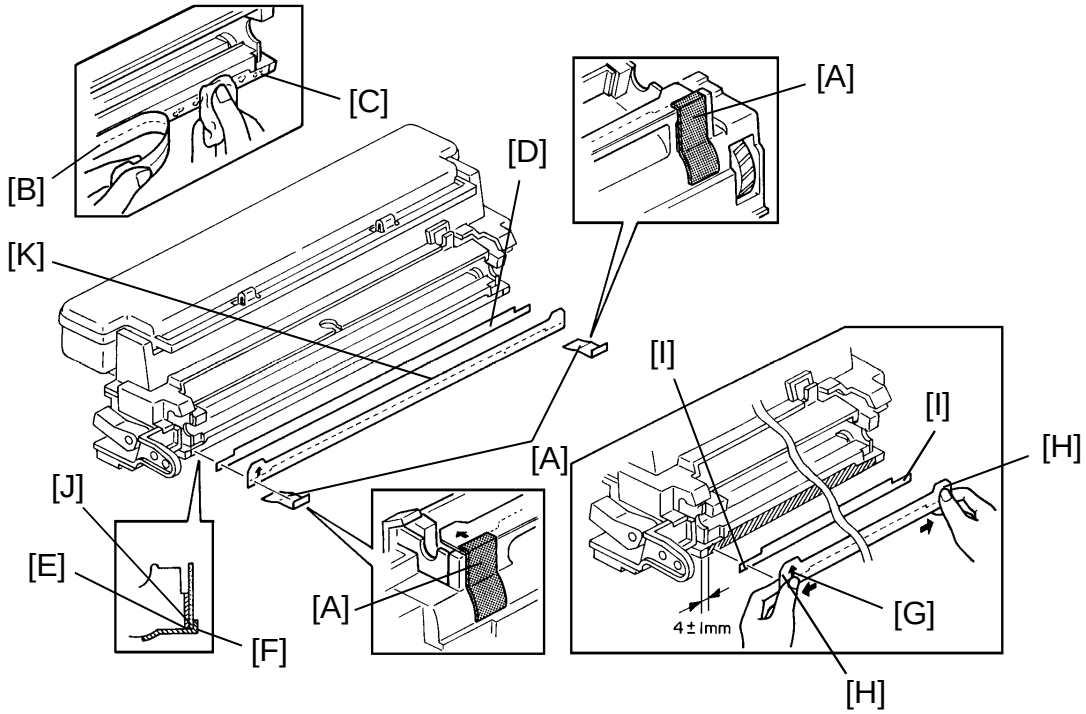

1. Remove the cleaning unit, and take off the cleaning blade and cleaning brush.
2. Remove the used toner. (See Used Toner Collection.)
3. Clean the cleaning unit with a vacuum cleaner.
4. Remove the two seals [A] and the entrance seal [B] together with the strip of 2-sided tape securing it to the lower casing [C].
5. Clean the lower casing with alcohol; make sure that no tape remains on the casing surface.
6. Place a new strip of 2-sided tape [D] on the lower casing surface. The lower edge [E] of the tape must be flush with the edge [F] of the projection as shown in the illustration.
7. Place the new entrance seal on the 2-sided tape (blue slow mark [G] is front side). Extend the seal so that both edges [H] align with the edges [I] of the tape.

   NOTE: a) The lower edge [J] of the entrance seal must be aligned with the edge [F] of the projection on the lower casing.

   b) Make sure that there are no waves in the upper edge [K] of the entrance seal.
8. Place the two seals [A] on both sides of the entrance seal as shown.

5. 1ST PAPER FEED

5.1 1ST PAPER FEED ROLLER AND TORQUE ROLLER REPLACEMENT

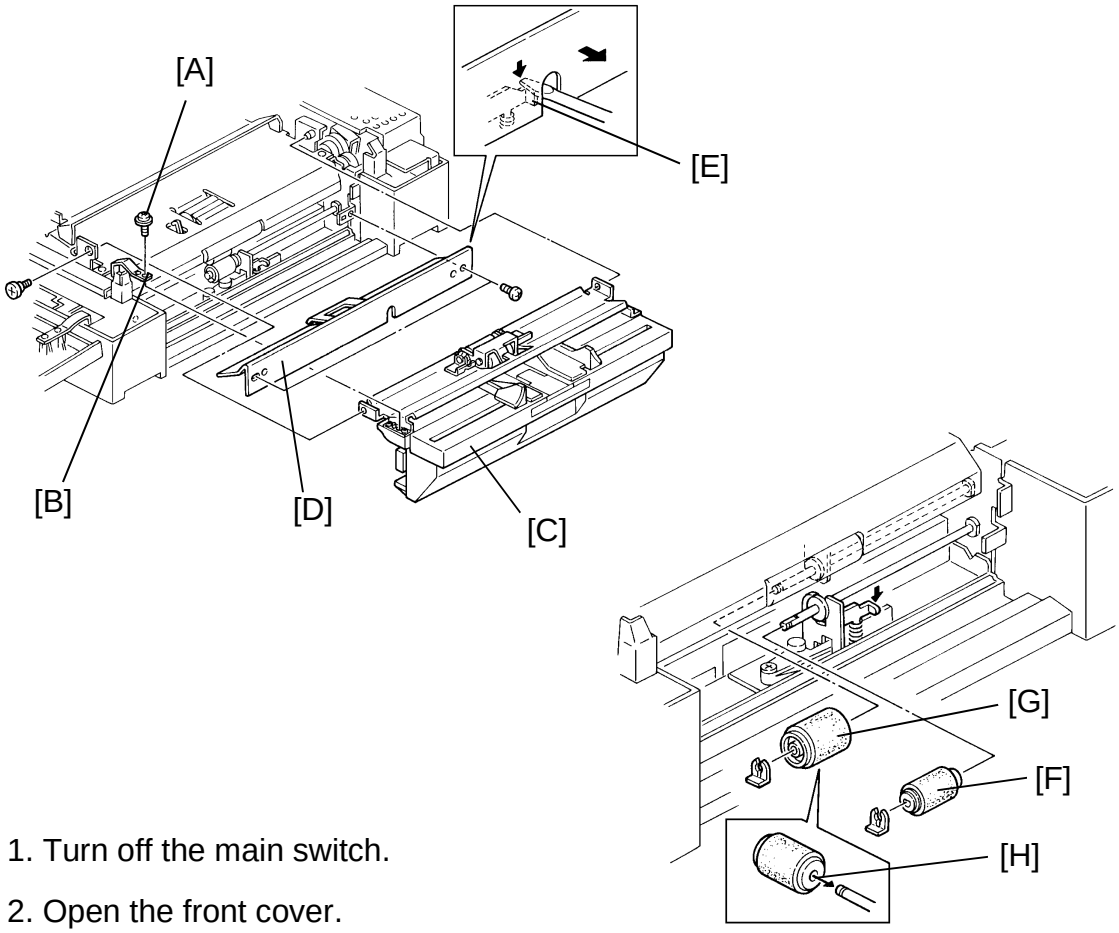

1. Turn off the main switch.
2. Open the front cover.
3. Open the upper unit by pushing the release lever.
4. Remove screw [A] of the manual feed table band [B].
5. Remove the manual feed table [C] (1 shoulder screw).
6. Remove the feed guide plate [D] while pushing the release lever [E] down as shown (2 screws).
7. Remove the torque roller [F] while pushing the release lever down (1 snap ring).
8. Remove the paper feed roller [G] (1 snap ring).

   NOTE: When reinstalling the paper feed roller, make sure that the flat surface [H] of the paper feed roller is positioned to the rear side as shown.

5.2 1ST PICK-UP ROLLER REPLACEMENT

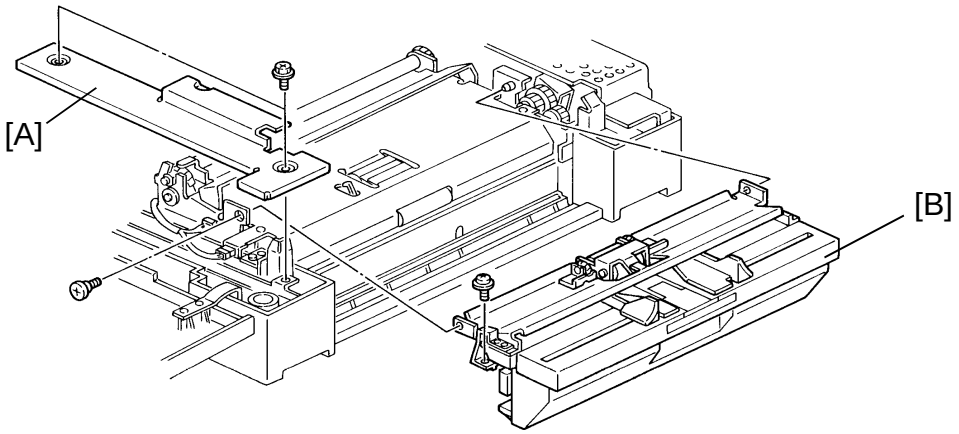

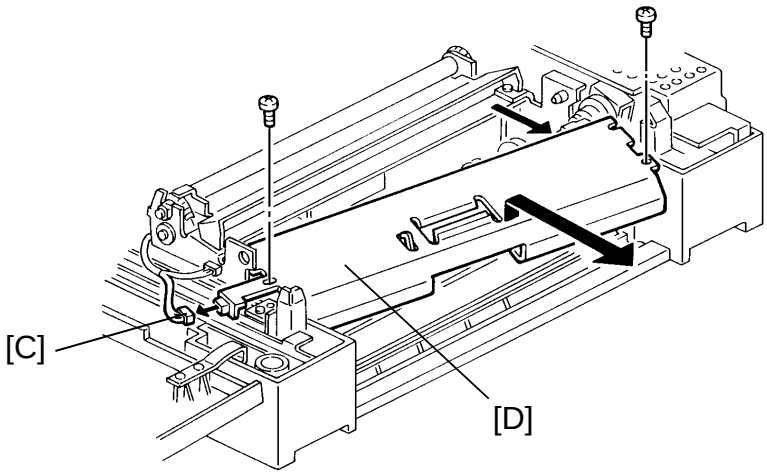

1. Turn off the main switch.
2. Remove the 1st paper tray.
3. Open the front cover.
4. Open the upper unit by pushing the release lever.
5. Remove the harness cover [A] (2 screws).
6. Remove the manual feed table [B] (1 screw and 1 shoulder screw).
7. Remove the relay sensor connector [C].
8. Remove the relay roller guide plate [D] as shown (2 screws).

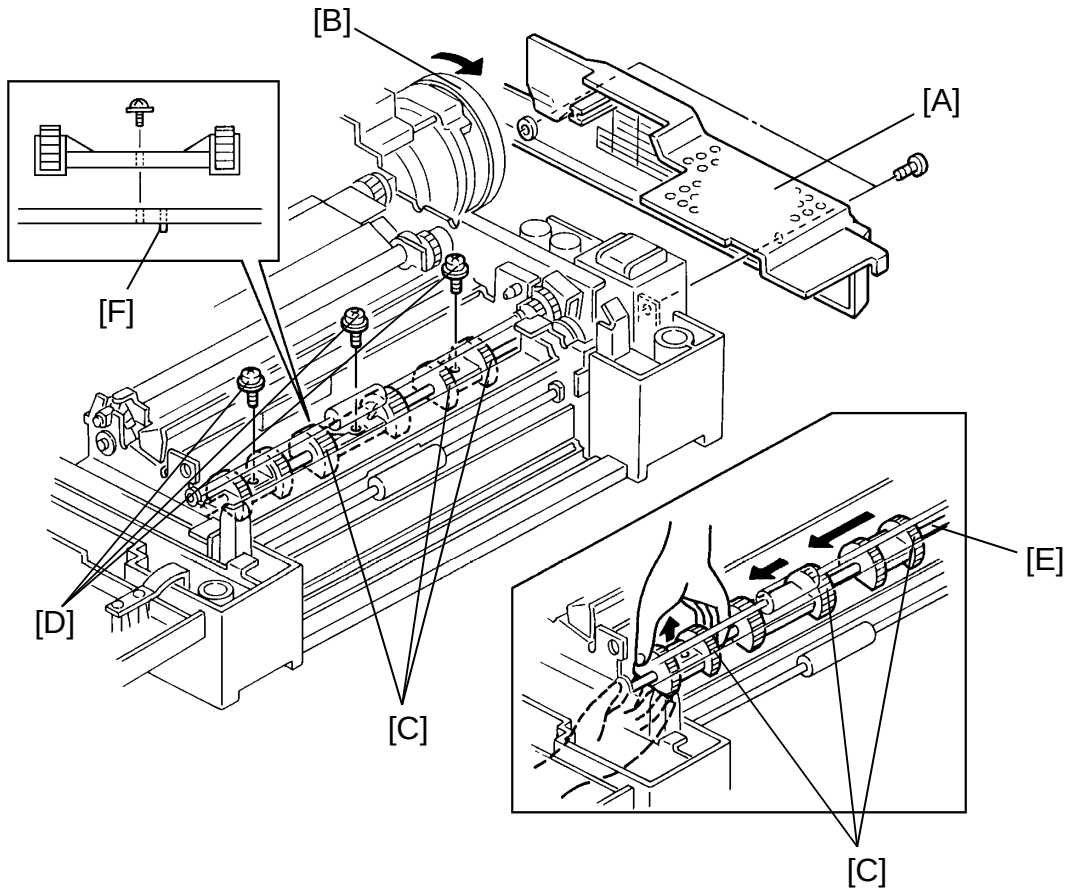

9. Remove the lower rear cover [A] (2 screws).
10. While turning the main motor [B] clockwise (from front view), turn the pick-up rollers [C] until the position which can remove the screws [D] of the pick-up rollers.
11. Remove three screws of the pick-up rollers (each 1 screw).
12. Remove the pick-up rollers from the shaft [E] while pushing them up with your hands as shown.

    NOTE: When reinstalling the pick-up rollers, make sure that the pick-up rollers are positioned on the opposite side of the spring pin [F] as shown. Otherwise, the six pick-up rollers will be positioned incorrectly.

5.3 1ST PAPER TRAY SWITCH REPLACEMENT

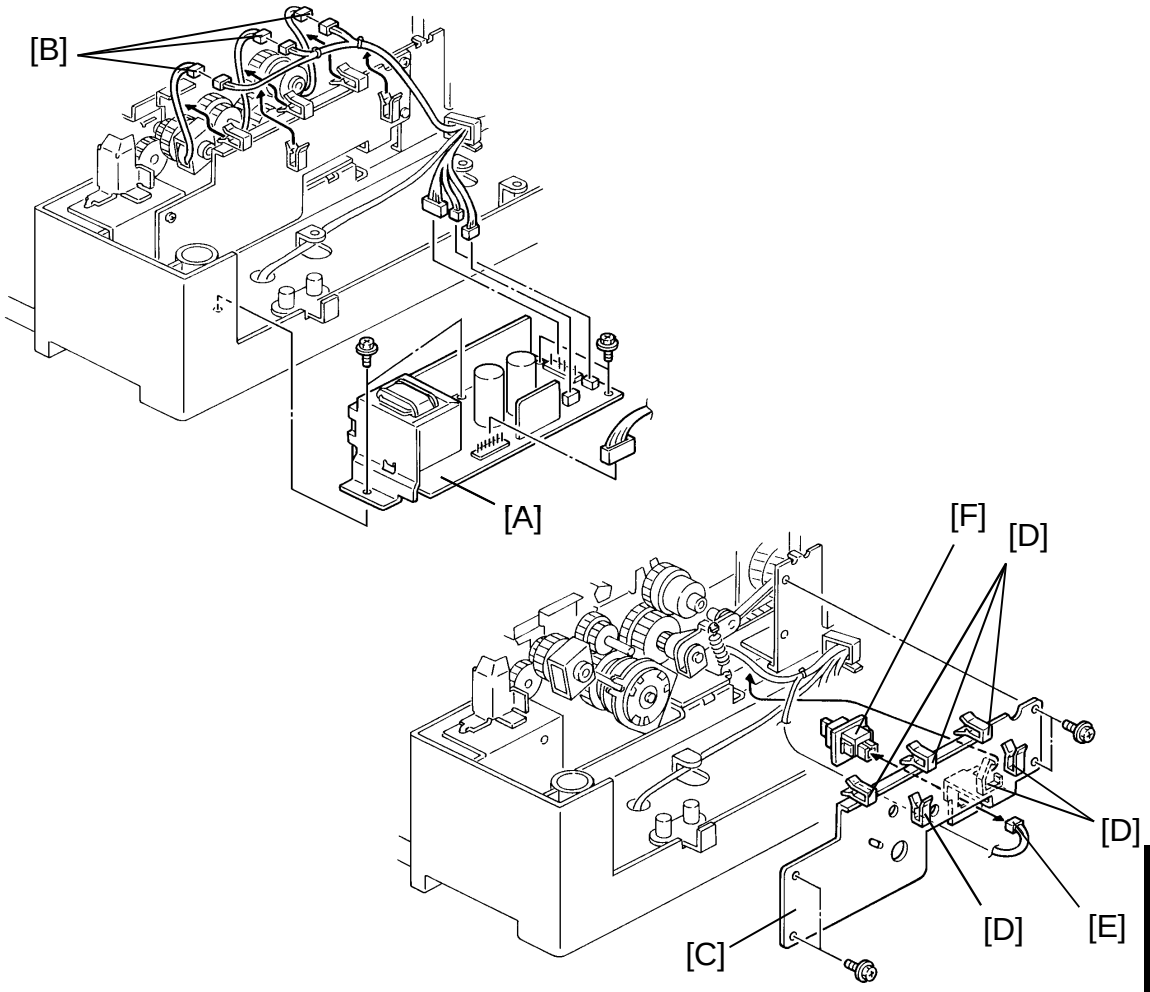

1. Turn off the main switch.
2. Remove the 1st paper tray.
3. Open the front cover.
4. Open the upper unit by pushing the release lever.
5. Remove the lower rear cover (2 screws).
6. Remove the DC power supply unit [A] (4 screws and all connectors).
7. Remove three clutch connectors [B].
8. Remove the rear side plate [C] (4 screws, 6 wire clamps [D] and 1 connector [E]).
9. Remove the paper tray switch [F] from the rear side plate.

5.4 RELAY SENSOR AND REGISTRATION SENSOR REPLACEMENT

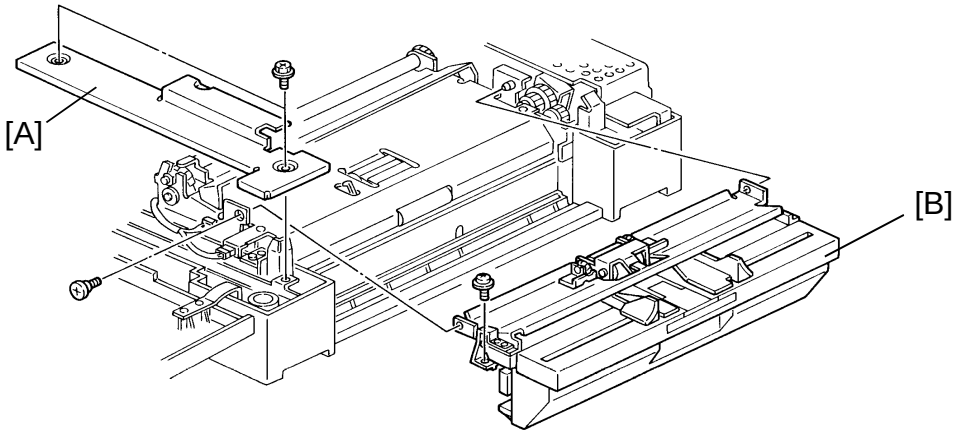

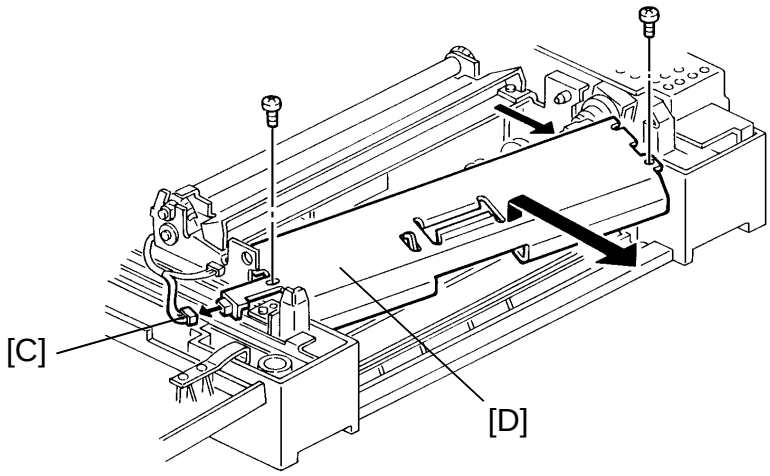

1. Turn off the main switch.
2. Open the front cover.
3. Open the upper unit by pushing the release lever.
4. Remove the harness cover [A] (2 screws).
5. Remove the manual feed table [B] (1 screw and 1 shoulder screw).
6. Remove the relay sensor connector [C].
7. Remove relay roller guide plate [D] as shown (2 screws).

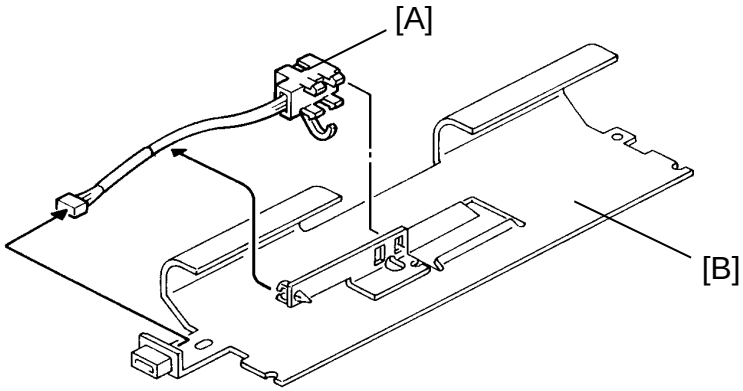

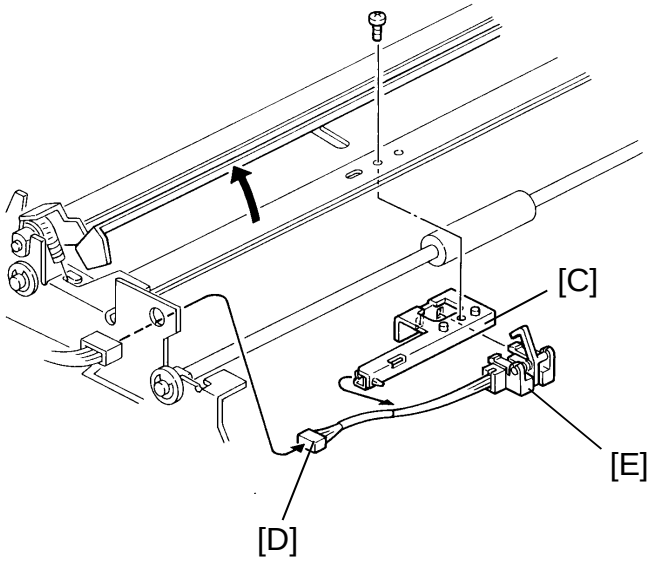

8. Remove the relay sensor [A] from the guide plate [B] as shown.
9. Remove the registration sensor bracket [C] (1 screw and 1 connector [D]).
10. Remove the registration sensor [E] from the bracket as shown.

5.5 RELAY ROLLER CLUTCH, 1ST PAPER FEED CLUTCH AND REGISTRATION CLUTCH REPLACEMENT

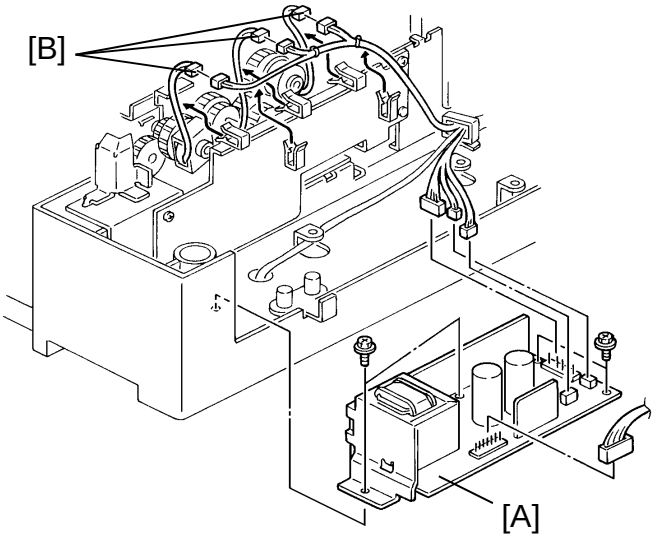

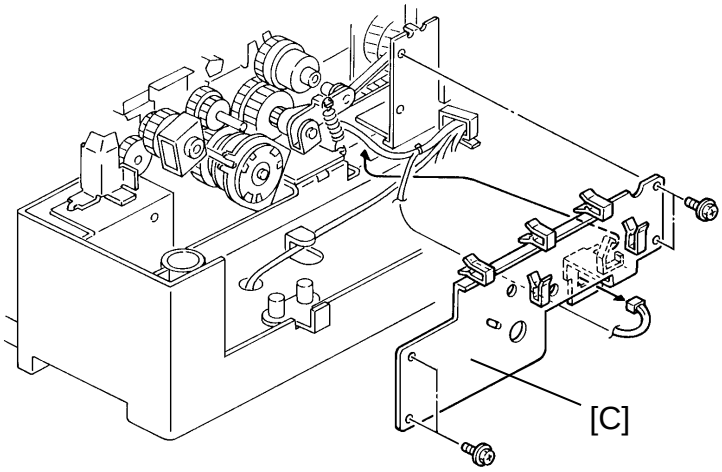

1. Turn off the main switch.
2. Open the front cover.
3. Open the upper unit by pushing the release lever.
4. Remove the lower rear cover (2 screws).
5. Remove the DC power supply unit [A] (4 screws and all connectors).
6. Remove three clutch connectors [B].
7. Remove the rear side plate [C] (4 screws, 6 wire clamps and 1 connector).

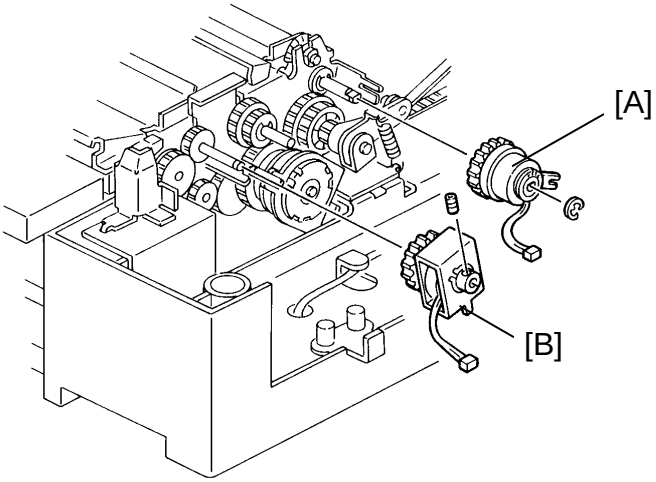

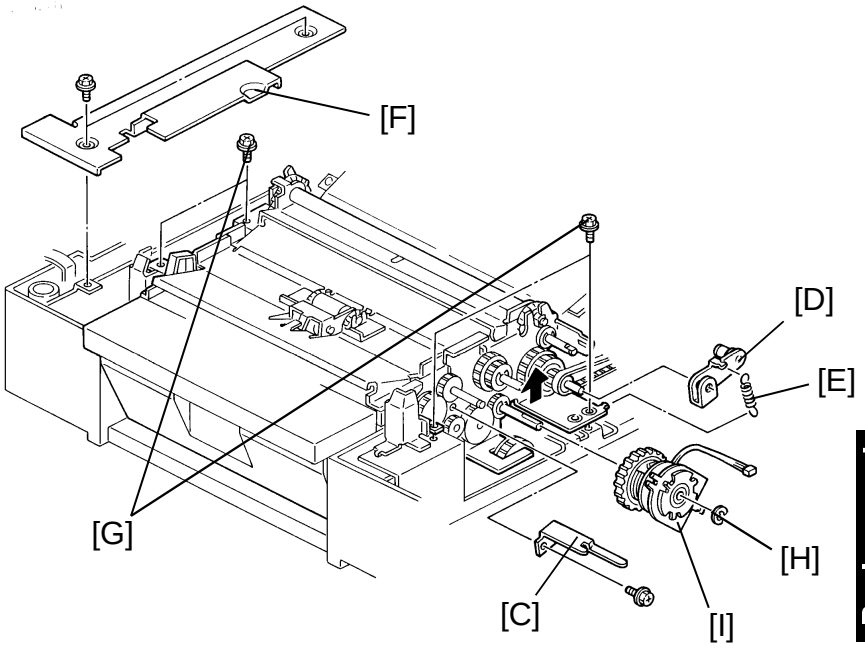

8. Remove the registration clutch [A] (1 E-ring).
9. Remove the relay roller clutch [B] (1 allen screw).
10. Remove the clutch stopper [C] (1 screw).
11. Remove the timing belt tightener [D] (1 spring [E]).
12. Remove the harness cover [F] (2 screws).
13. Remove three screws [G] securing the 1st paper feed unit.
14. Remove an E-ring [H] securing the paper feed clutch [I].
15. Remove the paper feed clutch while lifting the 1st paper feed unit.

NOTE: When reinstalling the clutches, make sure that the clutch stopper locks the clutch.

6. AROUND THE DRUM

6.1 DRUM REPLACEMENT

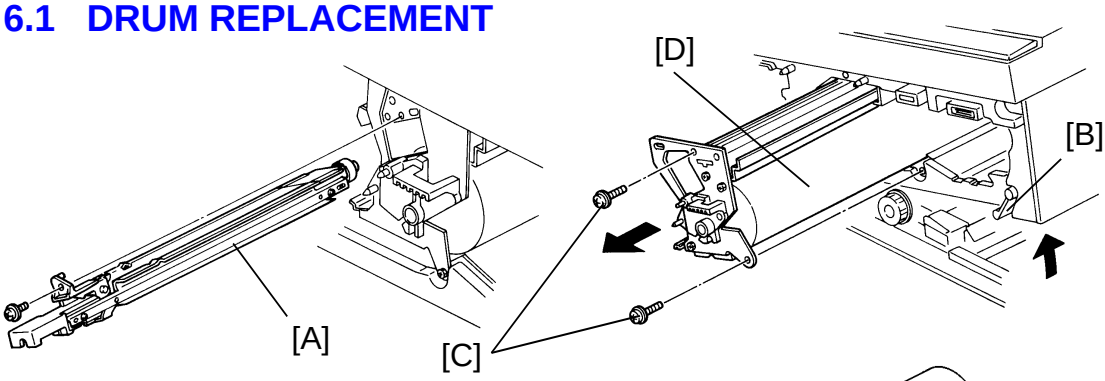

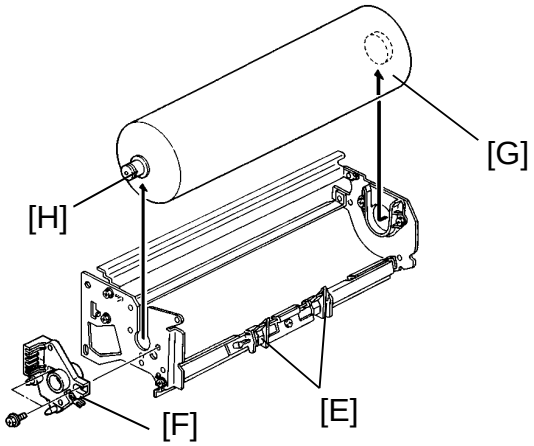

1. Open the front cover
2. Remove the upper inner cover (3 screws).
3. Remove the following units:
   - Development unit (See Development Unit Removal.)
   - Cleaning unit (See Cleaning Unit Removal.)
   - Charge corona unit [A] and wire cleaner (1 screw)
4. Hold down the top of upper unit and open the upper unit by pushing the release lever [B].
5. Remove two fixing screws [C] securing the drum stay and pull out the drum unit [D] gently along the rail.
6. Place the drum unit on a sheet of paper so that the leading edge of the pick-off pawls [E] are upward as shown.
7. Remove the front drum holder [F] (2 screws).
8. Remove the drum [G] by holding the drum unit rail and pulling out and up on the drum knob [H].

   NOTE: When removing the drum, take care not to strike it against any objects.

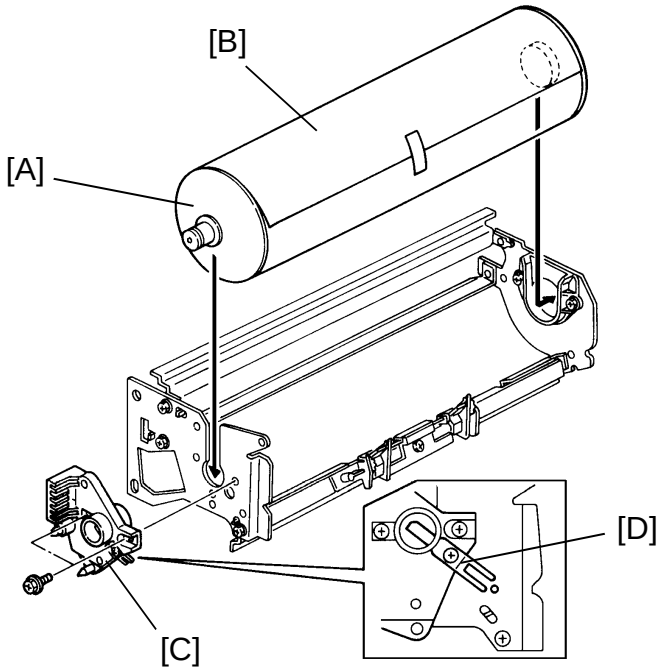

9. Set the new OPC drum [A] with the protective sheet [B] in the unit.

   NOTE: a) When setting the drum in the unit, be careful not to strike it against the rail.

   b) Do not remove the protective sheet from the new drum.

10. Reinstall the front drum holder [C] (2 screws).

    NOTE: Do not bend the grounding plate [D]. Make sure that the grounding plate is in contact with the drum unit frame to ground the drum. If it is not in contact, solid black copies may occur.

11. Set the drum unit in the machine and remove the drum protective sheet.

12. Reinstall the other units around the drum unit.

13. Reset the drum counter using SP66.

    NOTE: The drum counter must be reset by SP66 whenever an OPC drum is replaced.

14. Perform the ID sensor (Vsg) adjustment using SP54. (See ID Sensor Adjustment.)

15. Perform the light intensity adjustment (SP48) and ADS adjustment (SP56). (See Light Intensity Adjustment and ADS Adjustment.)

6.2 PRE-TRANSFER LAMP REPLACEMENT

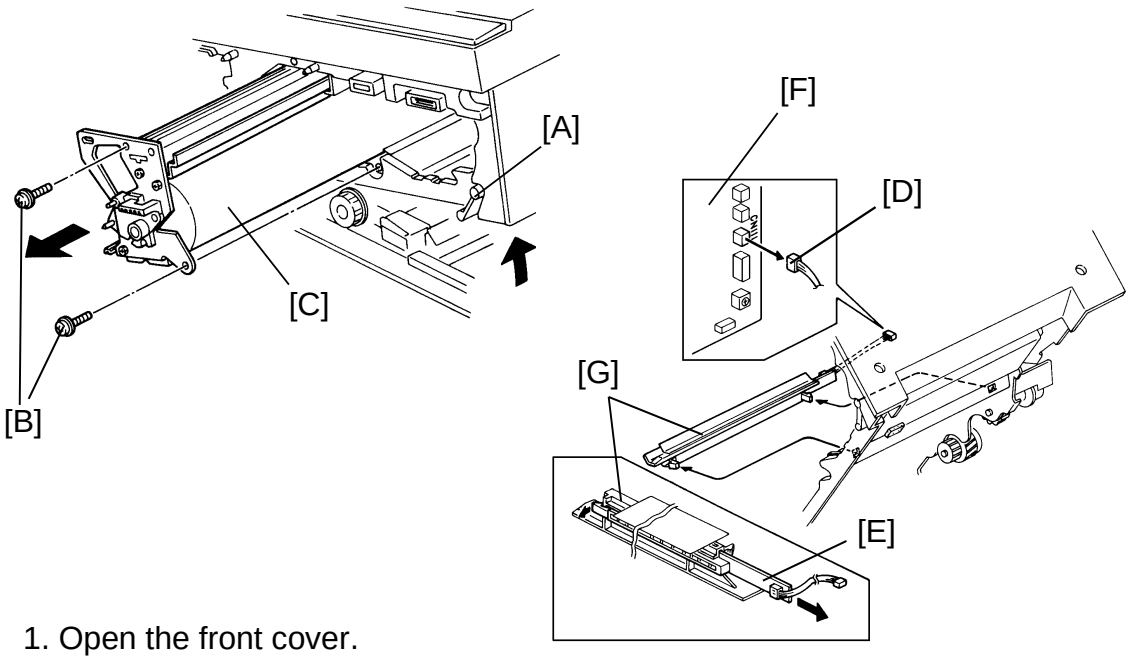

1. Open the front cover.
2. Remove the upper inner cover (3 screws).
3. Remove the upper rear cover (2 screws).
4. Remove the following units:
   - Development unit (See Development Unit Removal.)
   - Cleaning unit (See Cleaning Unit Removal.)
   - Charge corona unit and wire cleaner (1 screw)
5. Hold down the top of upper unit and open the upper unit by pushing the release lever [A].
6. Remove two fixing screws [B] securing the drum stay and pull out the drum unit [C] gently along the rail.

   NOTE: Cover the drum with some papers to prevent the drum from being exposed to light.
7. Remove the 2P connector [D] of the pre-transfer lamp [E] from the CN111 on the main board [F] (2 wire clamps).
8. Remove the PTL guide [G] with pre-transfer lamp from the copier (2 hooks).
9. Remove the pre-transfer lamp from the guide as shown.

   NOTE: Do not use alcohol to clean the pre-transfer lamp. This damages the resin in the LED cover.

6.3 QUENCHING LAMP REPLACEMENT

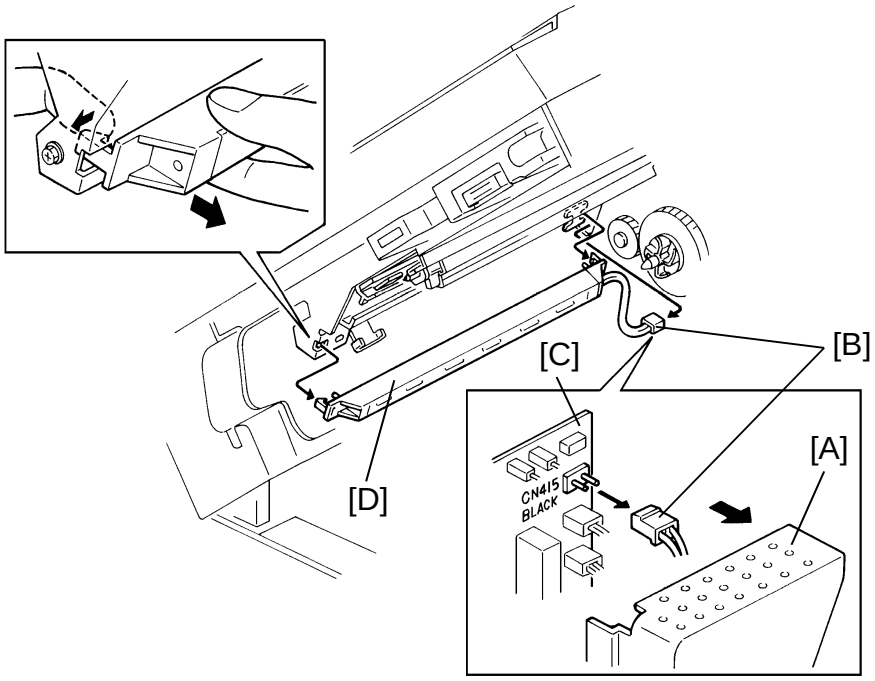

1. Open the front cover.
2. Remove the following parts:
   - Upper inner cover
   - Development unit
   - Cleaning unit
   - Charge corona unit
   - Upper rear cover
3. Hold down the top of upper unit and open the upper unit by pushing the release lever.
4. Remove the drum unit (2 screws).

   NOTE: Cover the drum with some papers to prevent the drum from being exposed to light.
5. Remove the ac drive board cover [A] (2 screws).
6. Disconnect the connector [B] (CN415) from the ac drive board [C] (2 wire clamps).
7. Remove the quenching lamp [D] from the copier frame as shown.

   NOTE: Do not use alcohol to clean the quenching lamp. This damages the resin in the LED cover.

6.4 ERASE LAMP REPLACEMENT

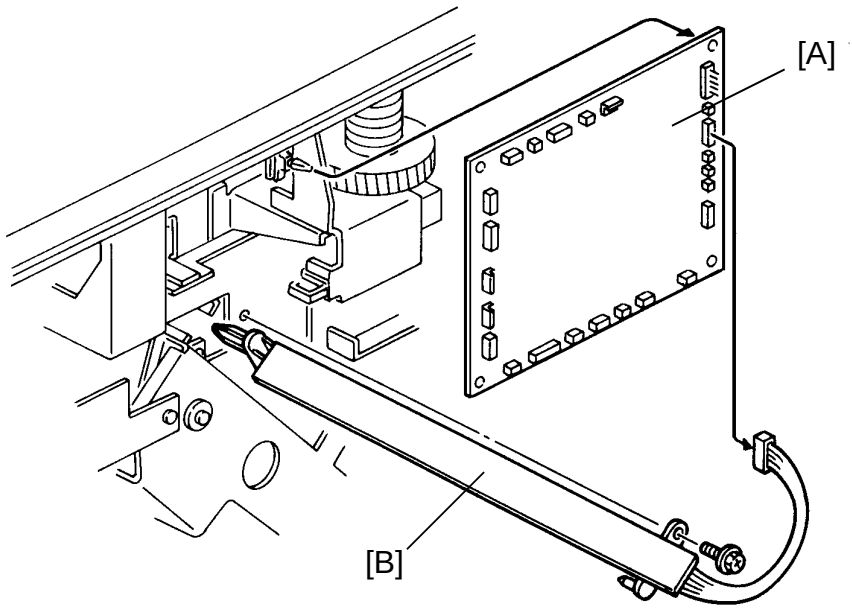

1. Remove the upper rear cover (2 screws).
2. Remove the main board [A] (all Connectors and 3 locking supports).
3. Remove the erase lamp [B] (1 screw).

NOTE: Do not use alcohol to clean the erase lamp. This damages the resin in the LED cover.

6.5 CHARGE CORONA WIRE REPLACEMENT

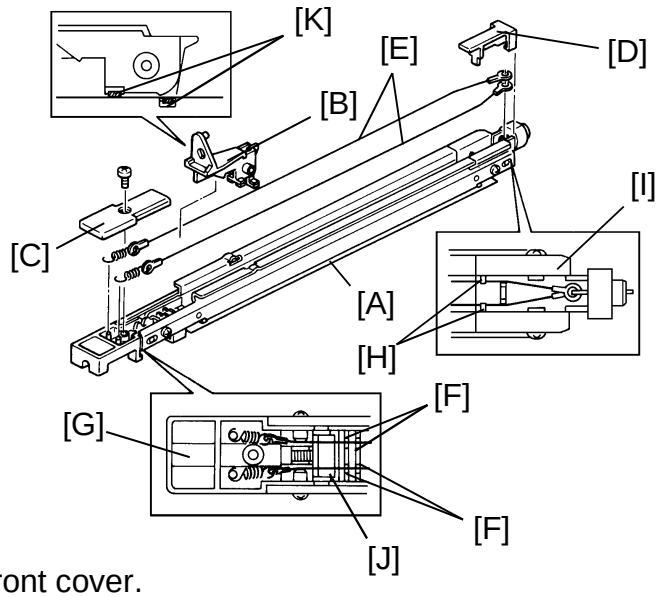

1. Open the front cover.
2. Remove the upper inner cover (3 screws).
3. Remove the charge corona unit [A] together with the wire cleaner [B] (1 screw).
4. Remove the wire cleaner from the charge corona unit.
5. Remove the front endblock cover [C] (1 screw) and the rear endblock cover [D].
6. Unhook the spring from the corona wires [E] and replace the wires.

NOTE: a) The new corona wires must be in the grooves [F] of the front endblock [G] and must be underneath the projection [H] of the rear endblock [I] as shown.

b) The height adjuster [J] must be positioned underneath the corona wires.

c) Do not handle the new corona wires with bare hands. Oil on the wire may cause uneven charge on the drum.

d) Do not rub the corona wires with rough material (sandpaper, etc.) as this will damage the corona wires.

e) When removing the endblock covers, be careful not to break off the side hooks.

f) Do not use any solvents to clean the wires as this will cause uneven charge on the drum.

g) Do not damage the grid plate when replacing the corona wires.

h) When installing the charge corona unit, make sure that the wires are positioned between the cleaner pads [K].

6.6 CHARGE CORONA GRID PLATE REPLACEMENT

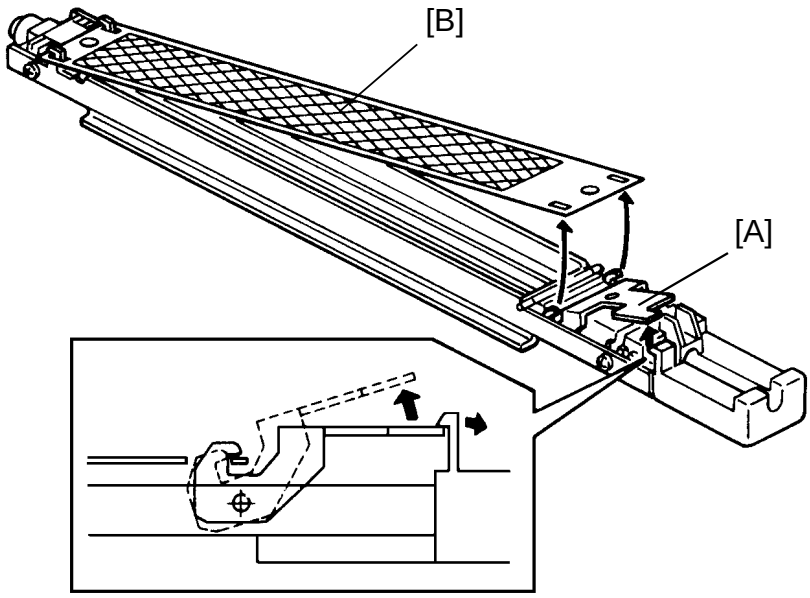

1. Open the front cover.
2. Remove the upper inner cover (3 screws).
3. Remove the charge corona unit together with wire cleaner (1 screw).
4. Unhook the grid plate anchor [A].
5. Remove the grid plate [B] as shown.

NOTE: a) Oils and chemicals from your hands will deteriorate the grid plate.
b) Do not bend the grid plate. This can result in an uneven charge.
c) When installing the charge corona unit, make sure that the corona wires are positioned between the cleaner pads.

6.7 TRANSFER/SEPARATION CORONA WIRE REPLACEMENT

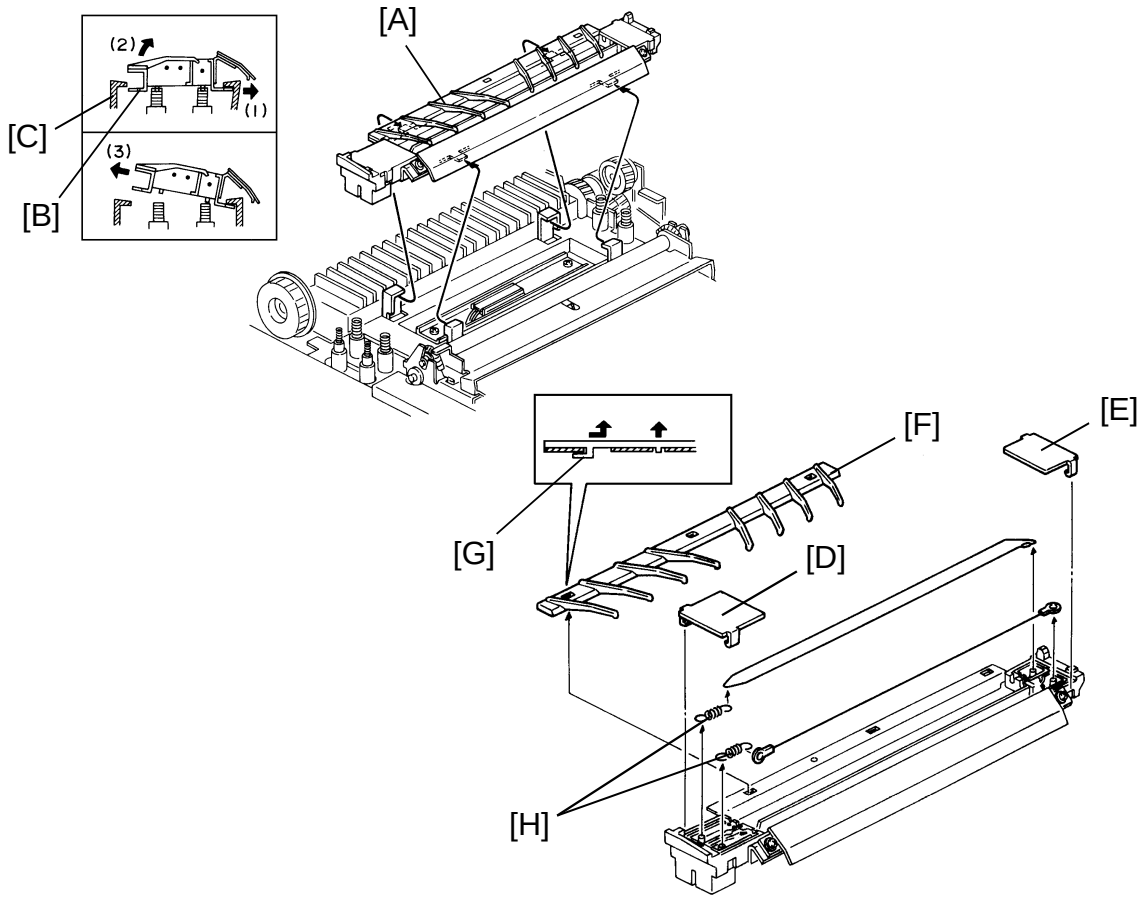

1. Open the front cover.
2. Open the upper unit by pushing the release lever.
3. Pull the transfer/separation (TC/SC) corona unit [A] toward the registration roller side (1) and release the left positioning tabs [B] of the TC/SC unit from the left holders [C] of the transport unit (2). Then, take out the TC/SC unit (3) as shown.
4. Remove the following parts:
   - TC/SC unit front endblock cover [D]
   - TC/SC unit rear endblock cover [E]
   - TC/SC unit paper guide [F]

   NOTE: When reinstalling the TC/SC unit paper guide, verify that all three tabs [G] are properly latched in place.
5. Unhook the springs [H] from the wires.

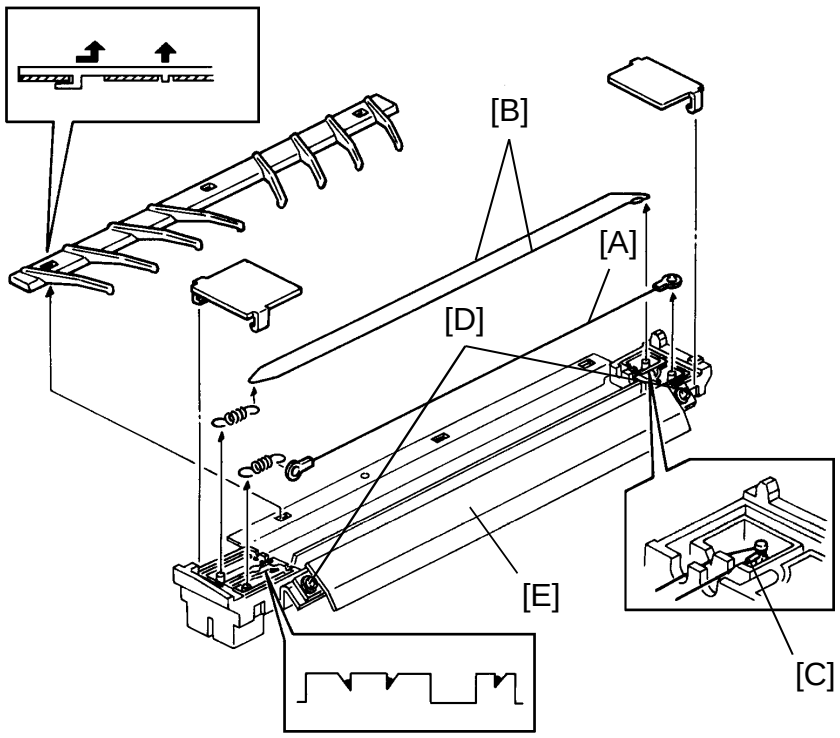

6. Replace the transfer corona wire [A] and the separation corona wire [B].

NOTE: a) When installing the separation corona wire, make sure that the wire junction [C] is positioned inside the rear endblock.

b) The transfer and separation corona wires must be in the grooves of the front and rear endblock as shown.

c) Do not handle new corona wire with bare hands. Oil on the wire may cause an uneven charge on the drum.

d) Rubbing the corona wires with a rough material (sandpaper, etc.) will damage the corona wires.

e) When removing the endblock covers, be careful not to break off the side hooks.

f) Do not use any solvents to clean the wires as this will cause uneven charge on the drum.

g) Do not loosen the screws [D] of the transfer entrance guide [E]. This is because that the transfer entrance guide is positioned with a special tool at the factory.

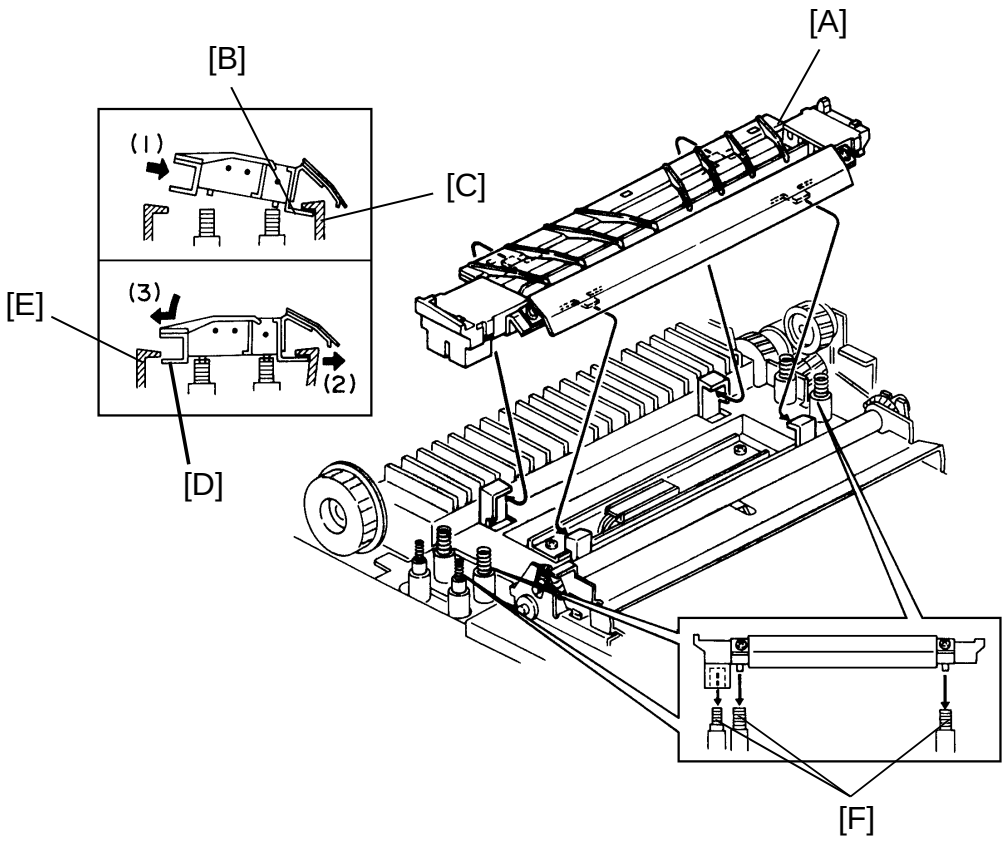

7. Reinstall the TC/SC corona unit [A].

NOTE: a) When reinstalling the TC/SC corona unit, firstly set the right positioning tabs [B] of the TC/SC corona unit into the right holders [C] of the transport unit, then set the left positioning tabs [D] into the left holders [E] by pulling the TC/SC corona unit toward to the registration roller side.

b) Make sure that the four positioning tabs of the TC/SC corona unit fit into the holders of the transport unit as shown.

c) Make sure that six springs [F] are correctly positioned underneath the TC/SC corona unit as shown.

6.8 ID SENSOR REPLACEMENT

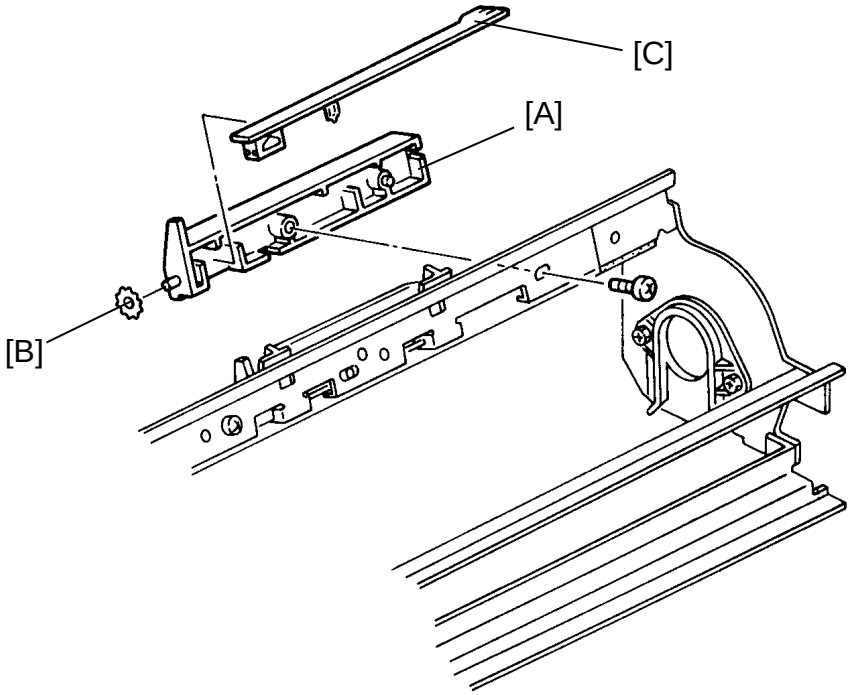

1. Remove the drum unit, then remove the drum from the unit.
   (See Drum Replacement.)

   NOTE: Cover the drum with paper to prevent the drum from being exposed to light.

2. Remove the ID sensor holder [A] (1 screw).

   NOTE: Do not lose the spur [B] on the ID sensor holder.

3. Replace the ID sensor board [C].

4. Reinstall the drum unit.

5. Perform the ID sensor (Vsg) adjustment (SP54).
   (See ID Sensor Adjustment.)

6.9 PICK-OFF PAWL REPLACEMENT

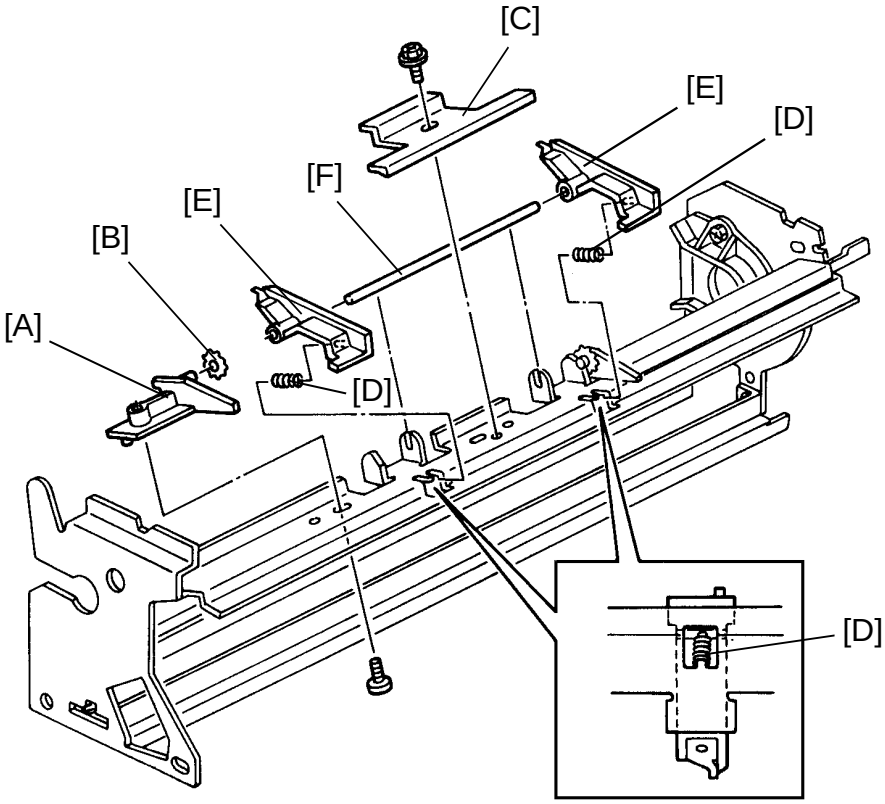

1. Remove the drum unit, then separate the drum from the unit. (See the Drum Replacement.)

   NOTE: Cover the drum with paper after removing it from the drum unit. This prevents the drum from being exposed to light.

2. Remove the pick-off pawl guide [A] with the spar [B] (1 screw).

3. Remove the pick-off pawl bracket [C] (1 screw).

4. Remove the springs [D], then remove the pick-off pawls [E] from the shaft [F].

   NOTE: When replacing the new pick-off pawls, make sure that the springs are positioned correctly as shown in the illustration.

6.10 TRANSFER/SEPARATION POWER PACK REPLACEMENT

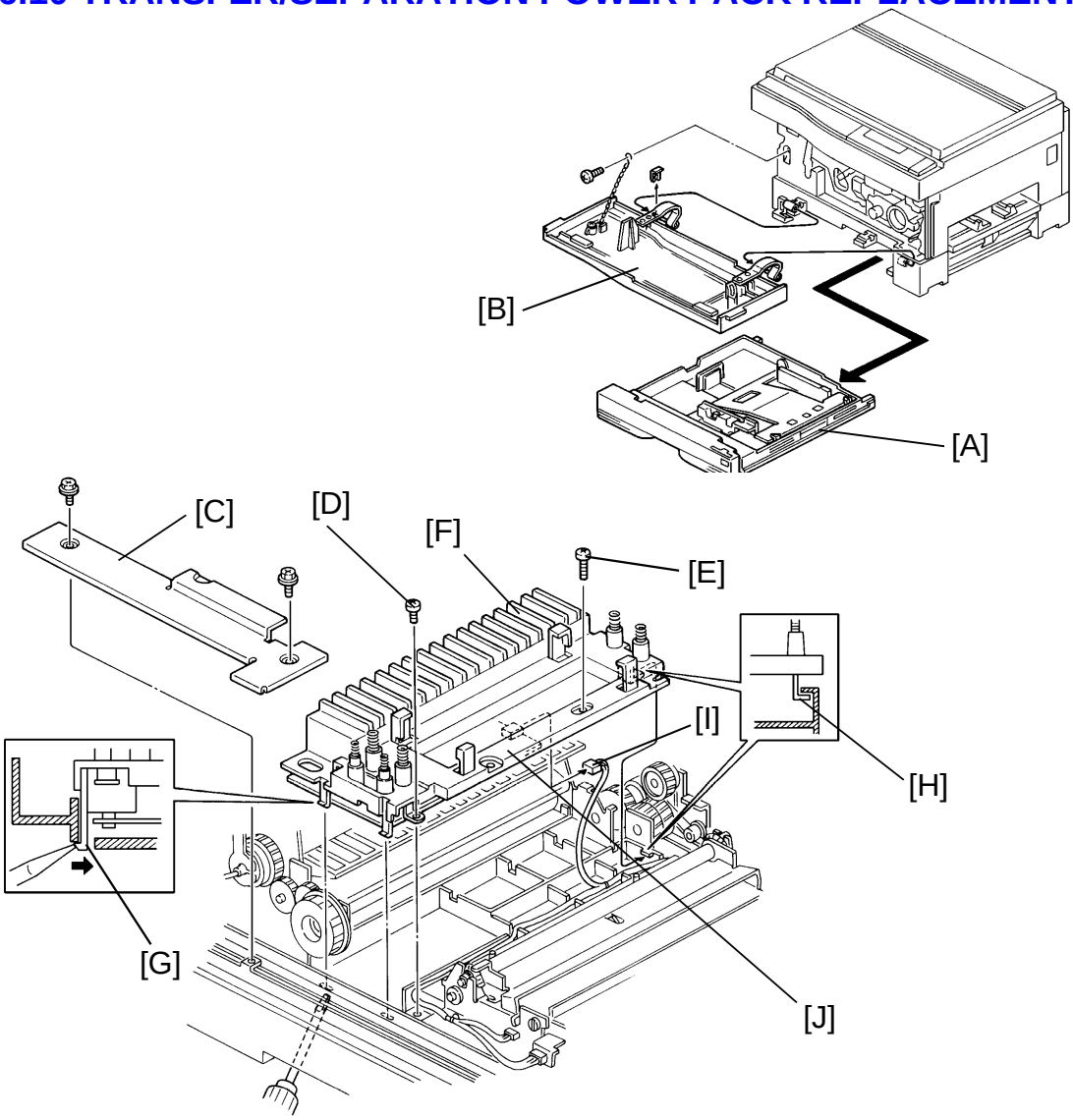

1. Remove the 1st paper tray [A].
2. Remove the front cover [B] (1 screw, 1 snap ring).
3. Remove the drum unit. (See Drum Replacement.)
4. Remove the transfer/separation corona unit. (See Transfer/Separation Corona Wire Replacement.)
5. Remove the harness cover [C] (2 screws).
6. Remove 2 screws (1 grounding screw [D], 1 screw [E]).
7. Lift the transport unit [F] by removing the front [G] and rear [H] hooks and remove the 4P connector [I] from the transfer/separation (T/S) power pack [J]. Then, take out the transport unit.

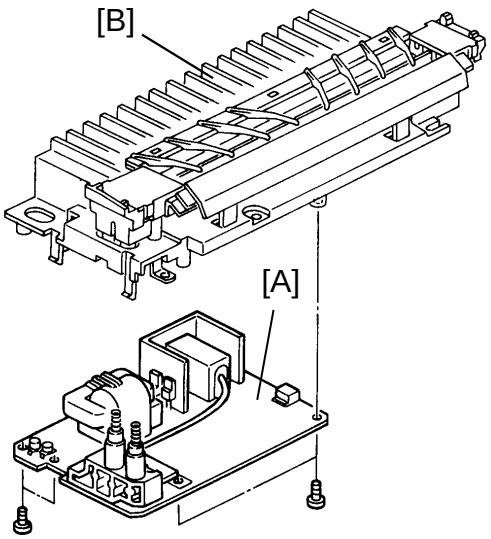

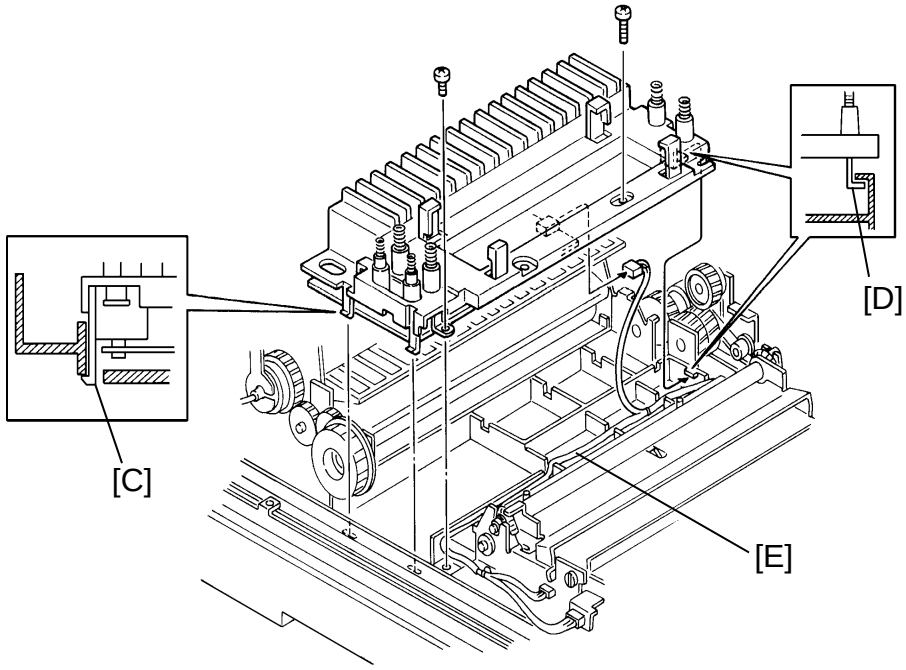

8. Remove the T/S power pack [A] from the transport unit [B] (4 screws).

   NOTE: a) When reinstalling the transport unit to the copier, make sure the front [C] and rear [D] hooks are positioned correctly as shown.

   b) When reinstalling the transport unit, make sure that the relay harness [E] does not catch in the transport unit and is positioned correctly as shown.

9. Adjust the transfer and separation corona currents. (See Transfer Corona Current Adjustment and Separation Corona Current Adjustment.)

6.11 DRUM MOTOR UNIT REPLACEMENT

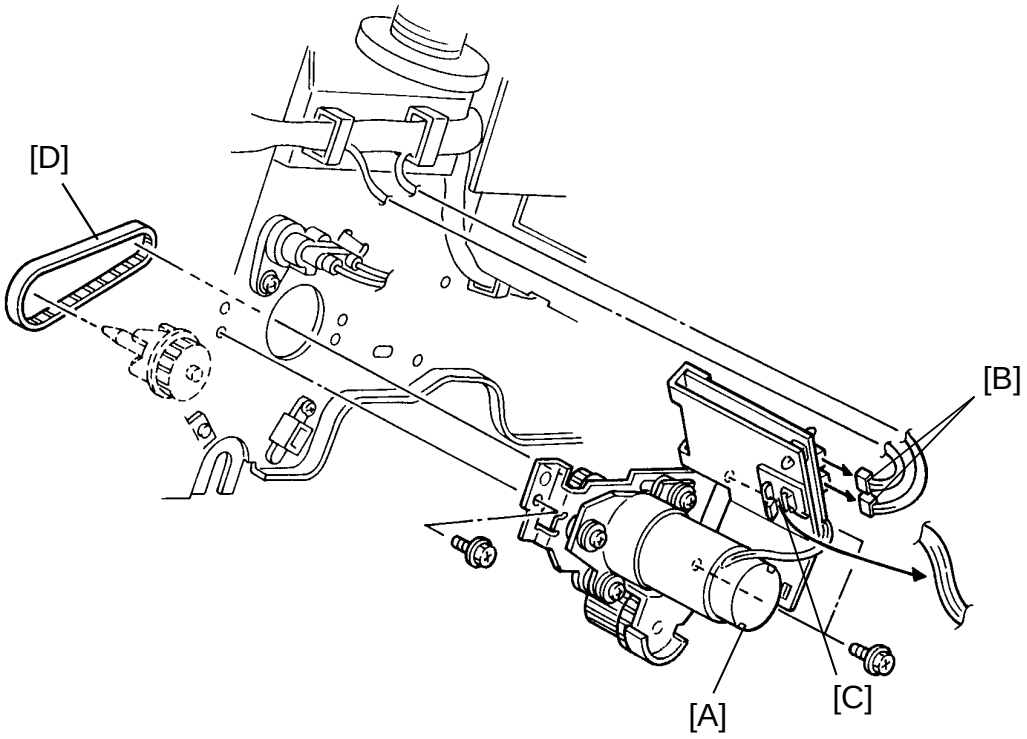

1. Turn off the main switch.
2. Open the front cover.
3. Remove the following covers and units.
    - Upper inner cover
    - Development unit
    - Cleaning unit
    - Charge corona unit and wire cleaner (1 screw)
    - Upper rear cover
4. Hold down top of upper unit and open the upper unit by pushing the release lever.
5. Pull out the drum unit (2 screws).

    NOTE: Cover the drum with some papers to prevent the drum from being exposed to light.
6. Remove the drum motor unit [A] (3 screws, 2 connectors [B], 1 harness clamp [C] and 1 timing belt [D]).

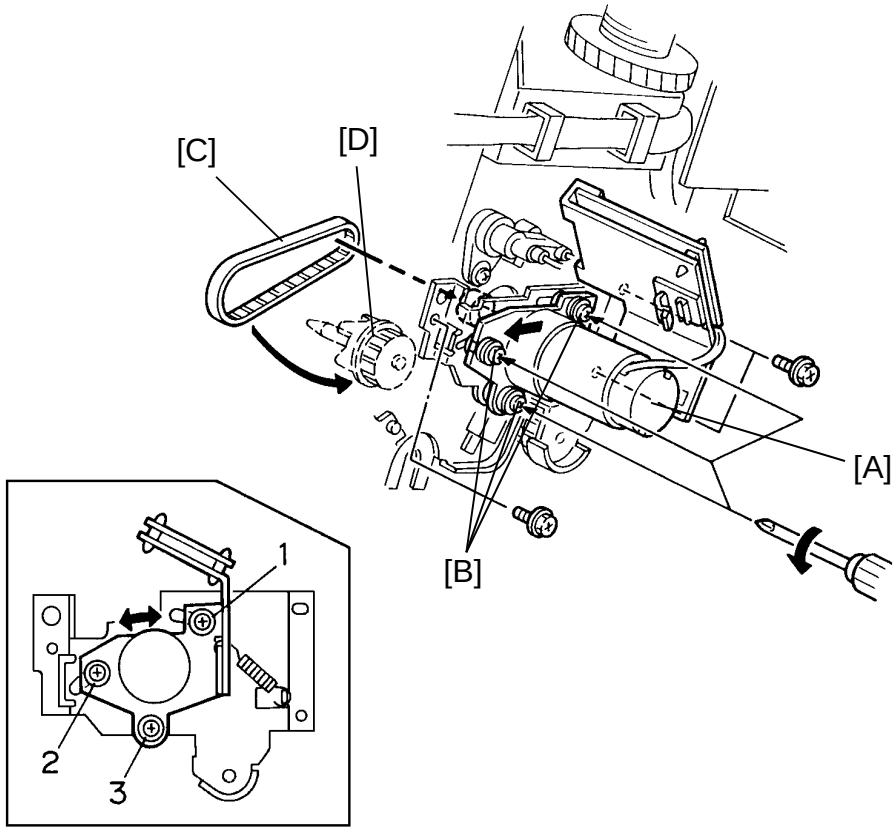

– Drum Motor Unit Installation –

1. Reinstall the drum motor unit [A] (3 screws).
2. Loosen three screws [B] of the drum motor.

   NOTE: Make sure that the drum motor moves as shown.
3. Reinstall the timing belt [C] to the motor pulley and drum pulley [D].
4. Tighten three screws of the drum motor in order as shown in the illustration.
5. Reassemble.

6.12 CORONA CURRENT ADJUSTMENT

NOTE: The corona current varies with environmental conditions such as humidity and atmospheric pressure. The corona current is adjusted at the factory and is suitable under a wide range of environmental conditions. Corona current adjustment is necessary whenever the power packs are replaced; adjustment may also be necessary to correct problems with paper separation, toner transfer, or image density.

CAUTION: – Make sure that SP9 is cleared before you change the range on the digital multimeter. If not, the multimeter may be damaged.
– High voltage is applied to the corona wires. Be careful.

– Preparation –

1. Turn off the main switch and remove the following parts:
   - Upper Inner Cover
   - Development Unit
   - Cleaning Unit
   - Charge Corona Unit
   - TC/SC Corona Unit
   - Drum Unit

   NOTE: Hold down the top of upper unit and open the upper unit by pushing the release lever.
2. Clean or replace each corona wire and clean the corona units with water or alcohol.
3. Remove the upper rear cover (2 screws).

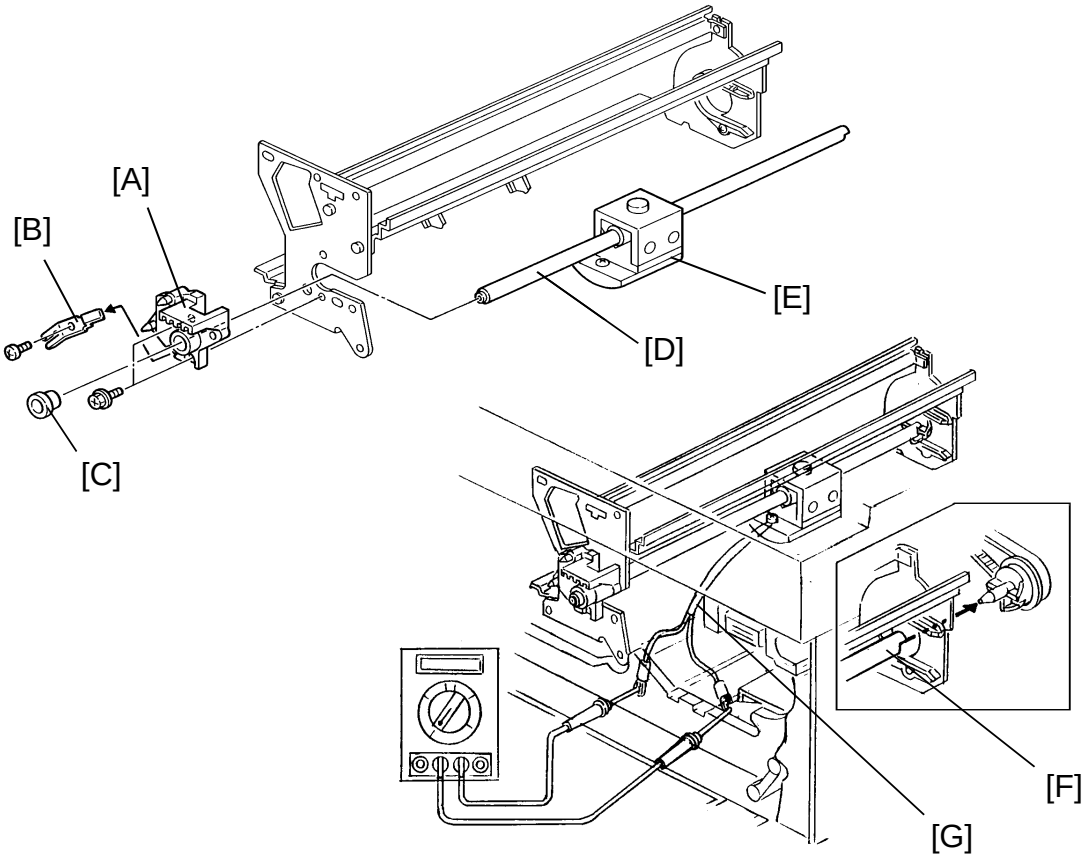

NOTE: Do steps 4 – 10 before adjusting the transfer corona current, separation corona current or charge wires height:

4. Remove the drum from the drum unit. Cover the drum with paper. (See Drum Replacement.)
5. Remove the drum holder [A] (2 screws) and the grounding plate [B] (1 screw).
6. Install the drum shoe shaft adapter [C] to the drum holder.
7. Set the drum shaft [D] and drum shoe [E] on the drum unit as shown.

   NOTE: Be careful not to injure your hand on the edge of the pick-off pawls.
8. Reinstall the drum unit with the shaft rear end [F] positioned as shown in the illustration. Pass the harness [G] down into the development unit opening.
9. Secure the drum unit (2 screws).
10. Connect the negative harness lead to the copier frame, then connect both multimeter leads as shown to the harness leads.

6.12.1 Charge Corona Current Adjustment (SP9-2)

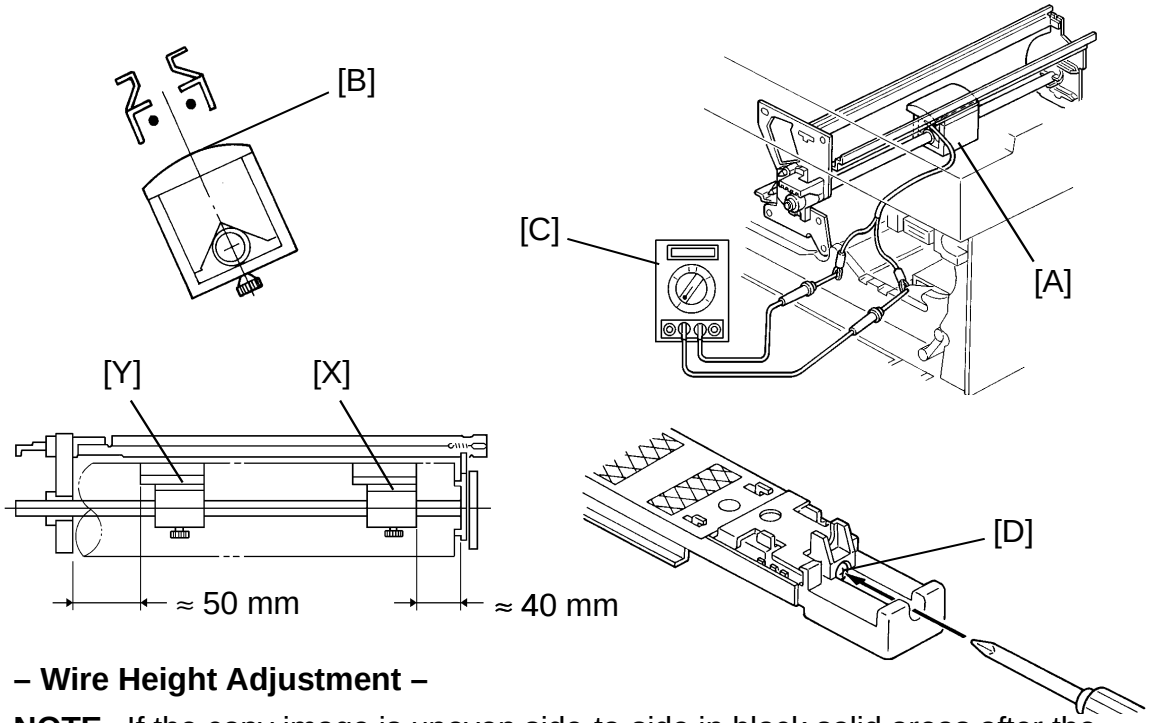

– Wire Height Adjustment –

NOTE: If the copy image is uneven side-to-side in black solid areas after the front end block of the charge corona unit is replaced, check and adjust the wires height as follows:

1. Set the drum shaft and drum shoe on the drum unit and install the drum unit in the machine. (See Drum Current Adjustment Preparation.)
2. Slide the the drum shoe [A] to the rear limit [X] as shown.
3. Position the drum shoe so that the axis of the current sensing plate [B] is aligned with the charge corona wires as shown.
4. Reinstall the charge corona unit on the drum unit.
5. Select the dc 200 μA range on the digital multimeter [C].
6. Turn on the main switch and front cover safety switch.
7. Turn on the charge corona using SP9-2.
8. Note the reading. (Wait at least 30 seconds for the current to stabilize.)
9. Press the Clear/Stop key to turn off the charge corona, then move the drum shoe to the front limit [Y] as shown and repeat steps 2 to 8.
10. Adjust the front corona wires height by turning the adjusting screw [D] if the two readings are different.
11. Repeat steps 2 to 10 until the difference between the front and rear readings is no more than 4%.

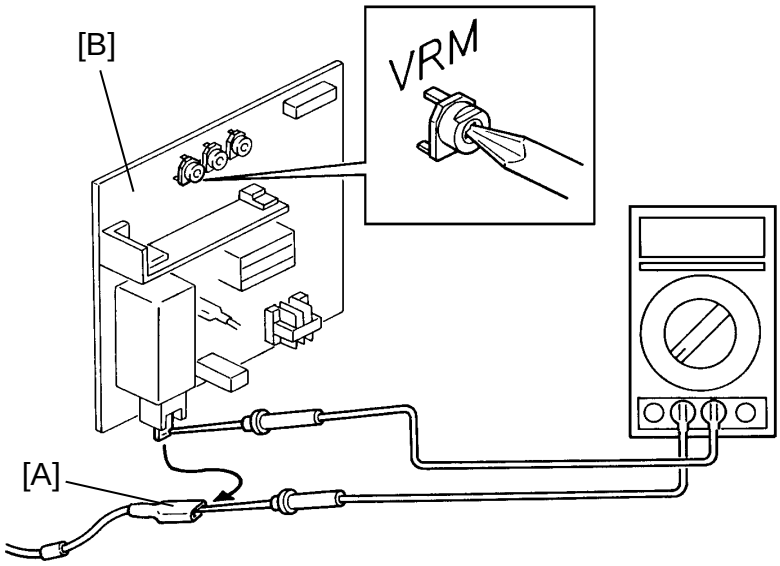

– Charge Corona Current Adjustment –

ADJUSTMENT STANDARD	Adjusting VR	
DC – 400 ± 3 μA	VRM	SP9-2

NOTE: 1) VRM on the spare parts CC/Grid/Bias power pack is pre-adjusted. Usually it is not necessary to adjust VRM when the CC/Grid/Bias power pack is replaced.

2) Keep the high voltage wire terminal [A] away from the copier frame. Otherwise, electrical leakage may interfere with current measurement.

1. Turn off the main switch.
2. Disconnect the charge corona terminal [A] from the CC/Grid/Bias power pack [B].
3. Select the dc 2mA range on the digital multimeter.
4. Connect the multimeter leads as shown, then measure the charge corona current.

   NOTE: Keep the multimeter leads away from the main board.
5. Turn on the main switch, front cover safety switch and the charge corona using SP9-2.
6. Adjust the charge corona current to –400 ± 3 μA by turning VRM on the CC/Grid/Bias power pack.
7. Press the Clear/Stop key and turn off the main switch.

6.12.2 Grid Voltage Adjustment (SP9-48)

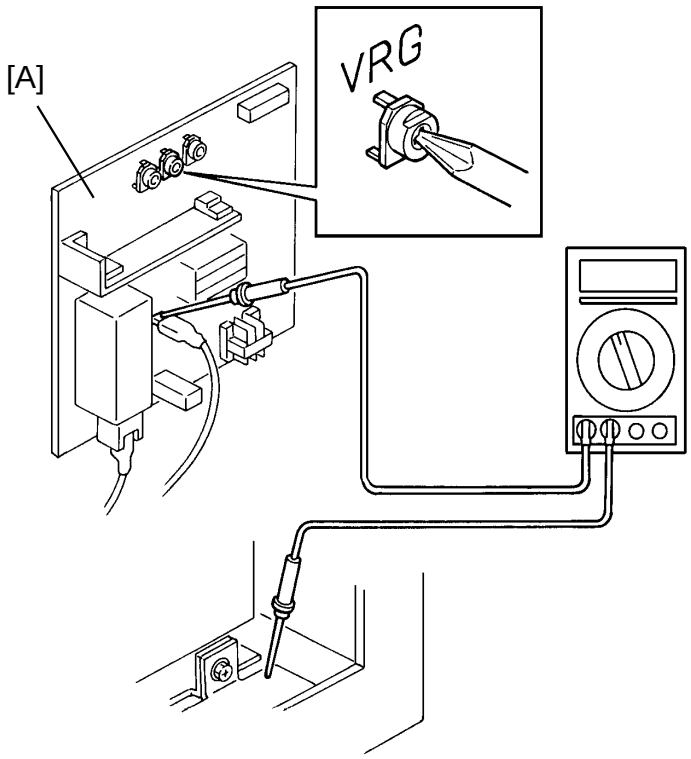

ADJUSTMENT STANDARD	Adjusting VR	
DC –880 ± 10 V	VRG	SP9-48

NOTE: VRG on the spare parts CC/Grid/Bias power pack is pre-adjusted. Usually it is not necessary to adjust VRG when the CC/Grid/Bias power pack is replaced.

1. Set the multimeter range to dc 1500 V and connect the multimeter leads as shown.

   NOTE: Keep the multimeter leads away from the main board.

2. Turn on the main switch, front cover safety switch, and grid using SP9-48.
3. Adjust the grid voltage to –880 ± 10 V by turning VRG on the CC/Grid/Bias power pack [A].
4. Press the Clear/Stop key and turn off the main switch.

6.12.3 Transfer Corona Current Adjustment (SP9-5)

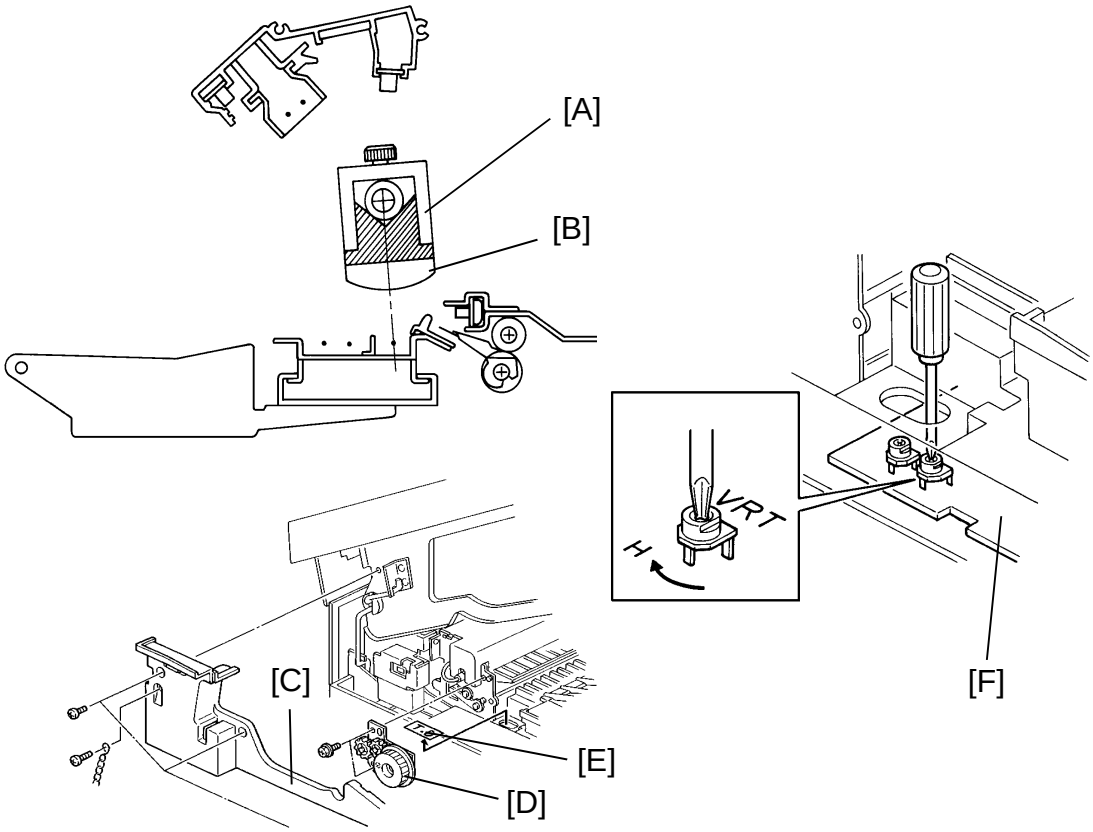

ADJUSTMENT STANDARD	Adjusting VR	
DC –20.0 ± 0.5 µA	VRT	SP9-5

1. Reinstall the TC/SC corona unit and position the drum shoe [A] on the center of the shaft so that the axis of the current sensing plate [B] is aligned with the transfer corona wire as shown.
2. Remove the lower inner cover [C] (5 screws) and the fusing knob bracket [D] (2 screws).
3. Remove the seal [E] from the transport unit.
4. Select the dc 200 µA range on the digital multimeter.
5. Turn on the main switch, front cover safety switch, and transfer corona using SP9-5.
6. Adjust the transfer corona current to dc –20.0 ± 0.5 µA using VRT on the TC/SC power pack [F].
7. Press the Clear/Stop key and turn off the main switch.

6.12.4 Separation Corona Current Adjustment (SP9-6)

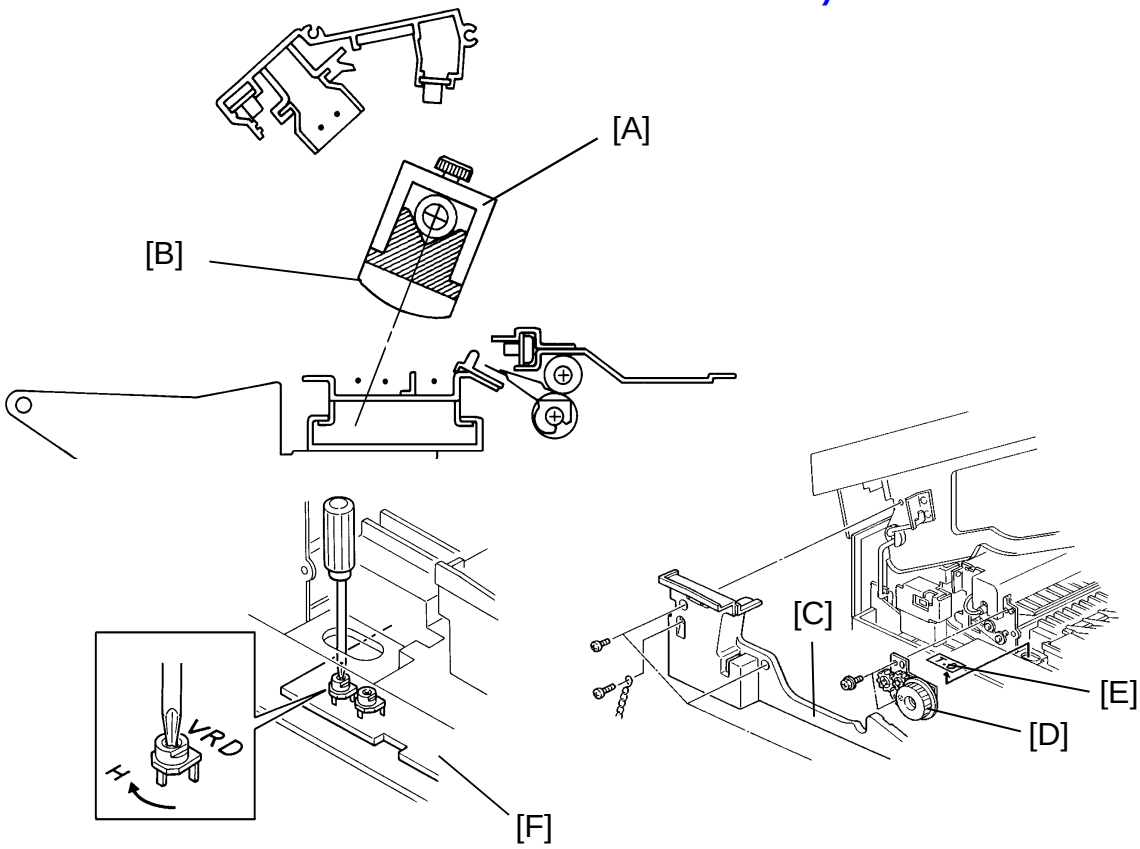

ADJUSTMENT STANDARD	Adjusting VR	
AC 49 ± 1.0 µA	VRD	SP9-6

1. Reinstall the TC/SC corona unit and position the drum shoe [A] on the center of the shaft so that the axis of the current sensing plate [B] is aligned with the separation corona wire as shown.

   NOTE: Make sure that the drum shoe does not touch the pick-off pawls.

2. Remove the lower inner cover [C] (5 screws) and the fusing knob bracket [D] (2 screws).

3. Remove the seal [E] from the transport unit.

4 Select the ac 200 µA range on the digital multimeter.

5. Turn on the main switch, the front cover safety switch, and the separation corona using SP9-6.

6. Adjust the separation corona current to ac 49 ± 1.0 µA using VRD on the TC/SC power pack [F].

7. Press the Clear/Stop key and turn off the main switch.

7. FUSING

7.1 EXIT UNIT REMOVAL

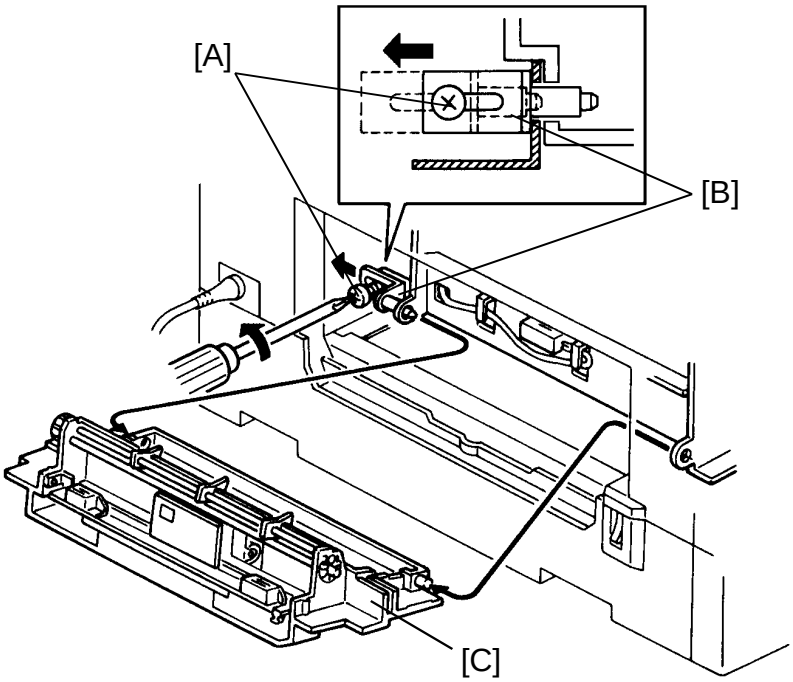

1. Remove the copy tray.
2. Loosen the screw [A] of the rear holder [B].
3. Slide the rear holder toward to the rear side and remove the exit unit [C].

7.2 FUSING UNIT REMOVAL

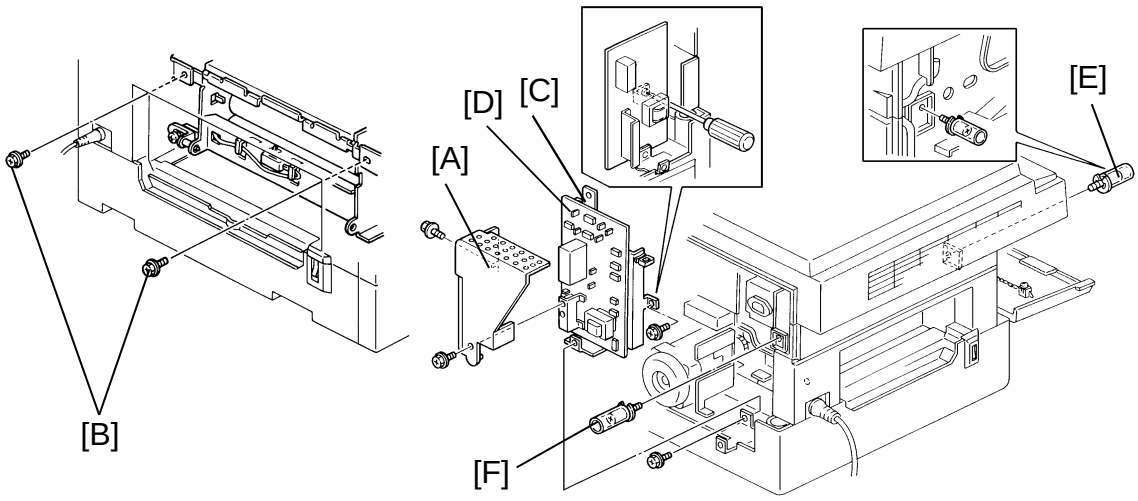

1. Make sure that the main switch is turned off and the power supply cord is unplugged.
2. Remove exit unit. (See Exit Unit Removal.)
3. Remove the platen cover or DF.
4. Open the front cover.
5. Remove the following covers and units.

   Upper inner cover
   Development unit
   Charge corona unit and wire cleaner
   Lower left cover
   Lower rear cover
   AC drive board cover [A] (2 screws)
   Lower inner cover
   Cleaning unit
   Upper left cover
   Upper rear cover

6. Remove the two fixing screws [B] securing the fusing unit.
7. Hold down the top of upper unit and open the upper unit by pushing the release lever.
8. Pull out the drum unit (2 screws).

   NOTE: Cover the drum with some papers to prevent the drum from being exposed to light.
9. Close the upper unit.
10. Remove the ac drive board bracket [C] with the ac drive board [D] (2 screws and all ac harness connectors).
11. Remove the front [E] and rear [F] stopper screws.

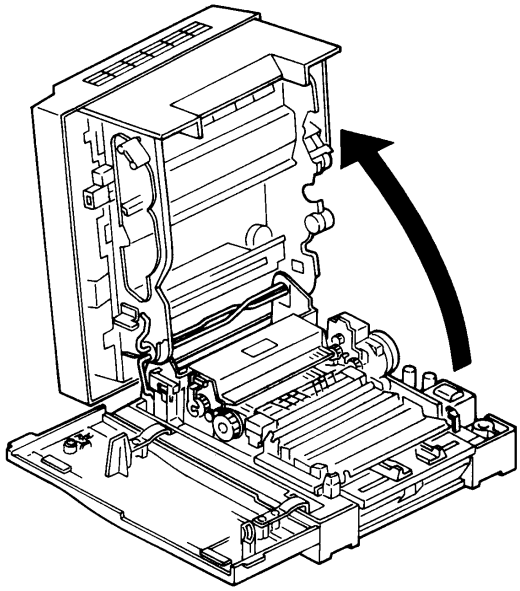

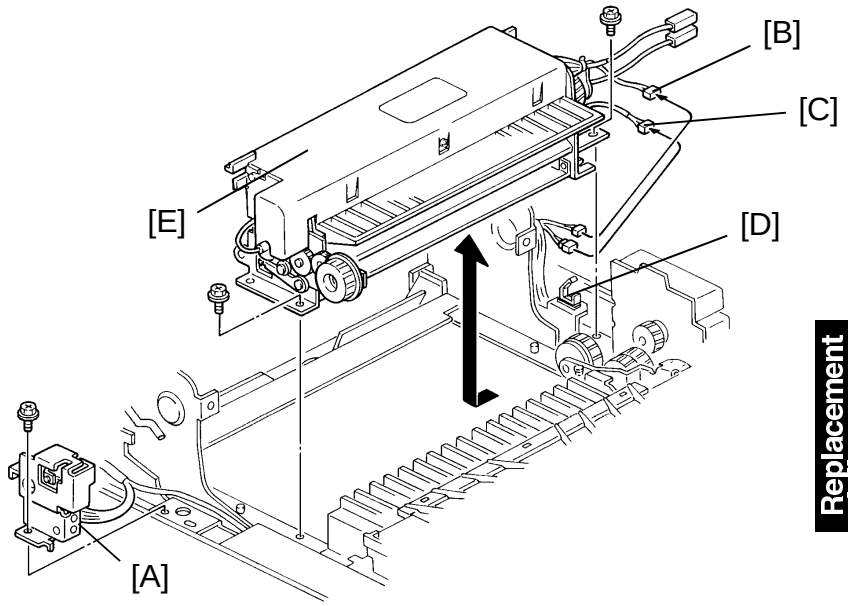

12. Open the upper unit gently while holding it until the upper unit stops at 90° position as shown.
13. Remove the front safety switch bracket [A] (1 screw).
14. Remove the two fusing connectors (3P [B] and 4P [C]) and remove the harness from the wire clamp [D].
15. Remove the fusing unit [E] as shown (2 screws).

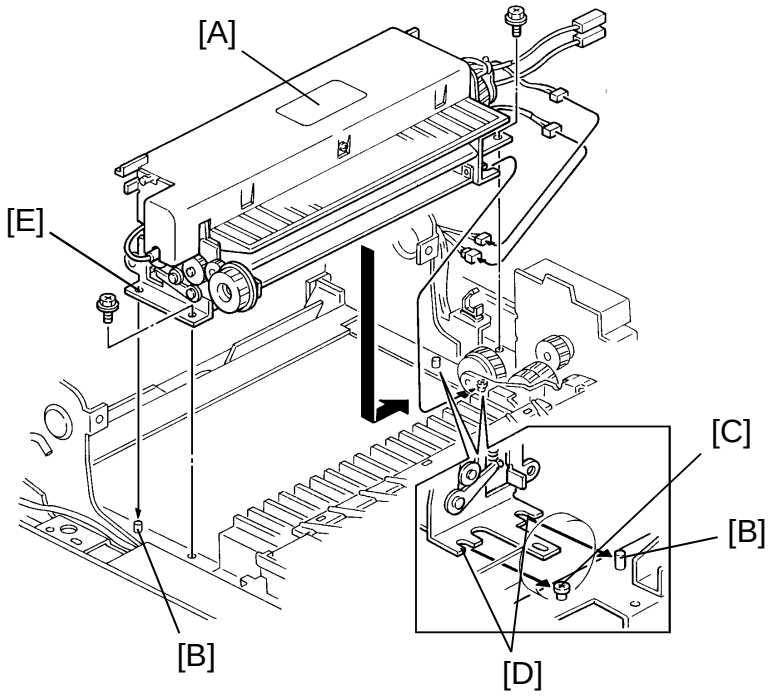

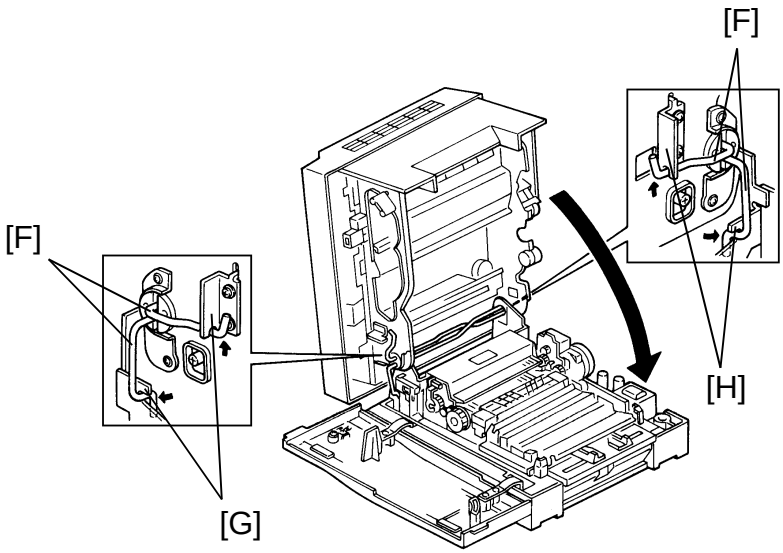

16. Reassemble.

NOTE: 1) When reinstalling the fusing unit [A], make sure that two positioning pins [B] and the positioning screw [C] fit through two cutouts [D] and a hole [E] of the fusing frame.

2) When closing the upper unit, make sure that the torsion bars [F] are positioned on the front [G] and rear [H] brackets as shown.

7.3 HOT ROLLER REPLACEMENT

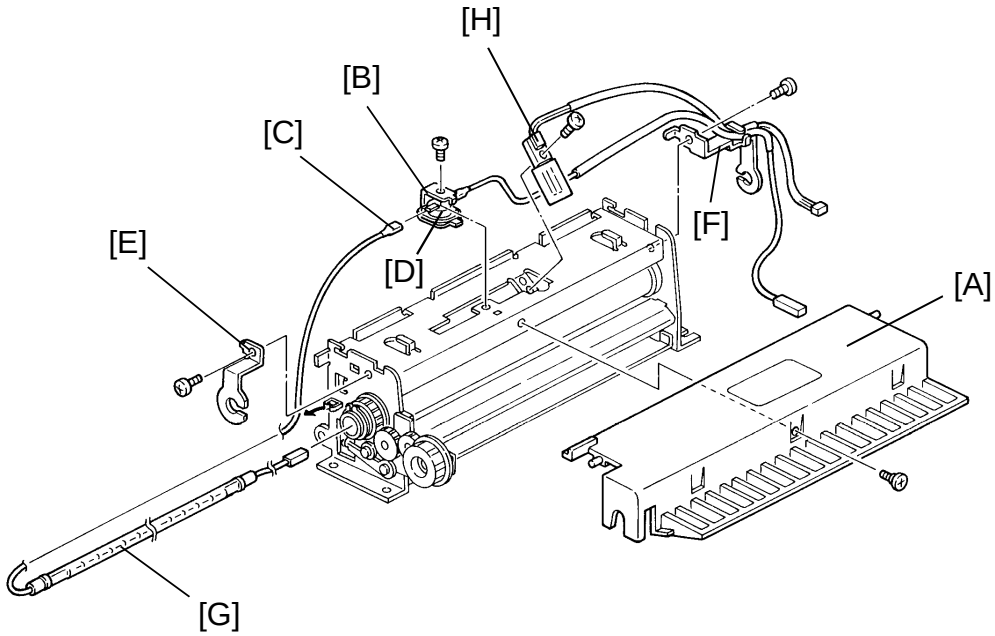

1. Remove the exit unit. (See Exit Unit Removal.)
2. Remove the fusing unit. (See Fusing Unit Removal.)
3. Remove the fusing cover [A] (1 screw).
4. Remove the thermoswitch bracket [B] (1 screw).
5. Disconnect the connector [C] of the fusing lamp from the thermoswitch [D].
6. Remove the front [E] and rear [F] support brackets of the fusing lamp (1 screw each).
7. Pull the fusing lamp [G] out the front end of the hot roller.
8. Remove the thermistor [H] (1 screw).

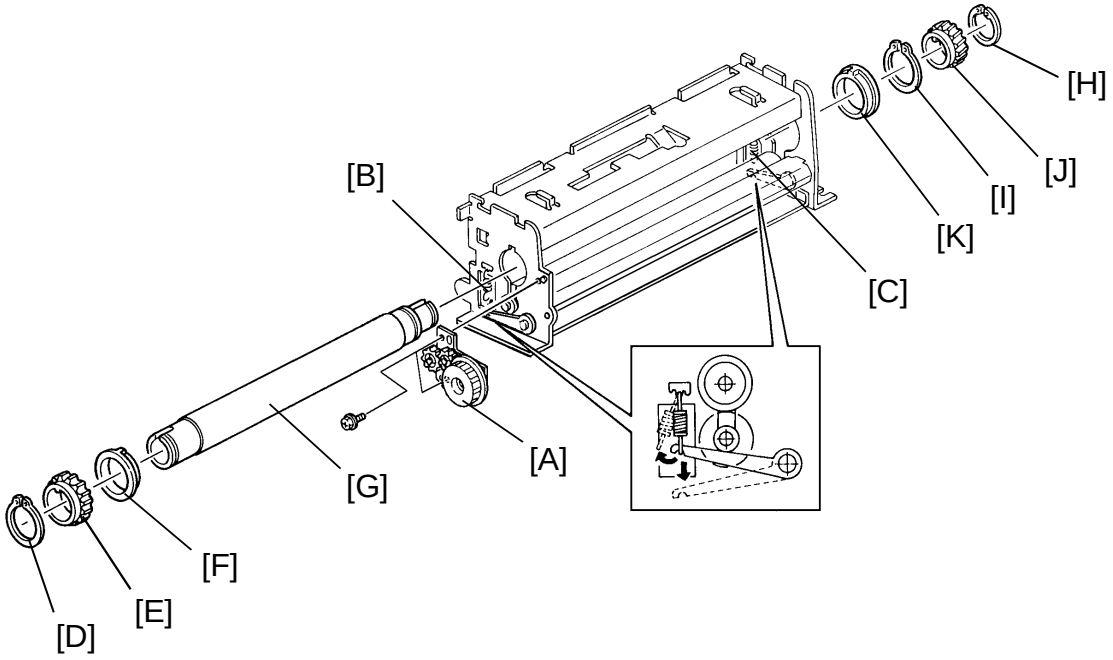

9. Remove the fusing knob bracket [A] at the front side (2 screws).
10. Remove the front [B] and rear [C] pressure springs.
11. Remove 1 C-ring [H], 1 gear [K] and 1 bearing [F] (Front side).
12. Slide the hot roller [G] to the front side.
13. Replace the hot roller (2 C-rings [H, I], 1 gear [J], 1 bearing [K]).
14. Install the new hot roller.

NOTE: a) Peel off 3 cm (1 inch) from both ends of the protective sheet before installing a new hot roller.

b) Before setting the pressure springs, remove the rest of the protective sheet.

c) Before reinstalling the pressure springs, refer to the Fusing Pressure Adjustment Section.

7.4 PRESSURE ROLLER REPLACEMENT

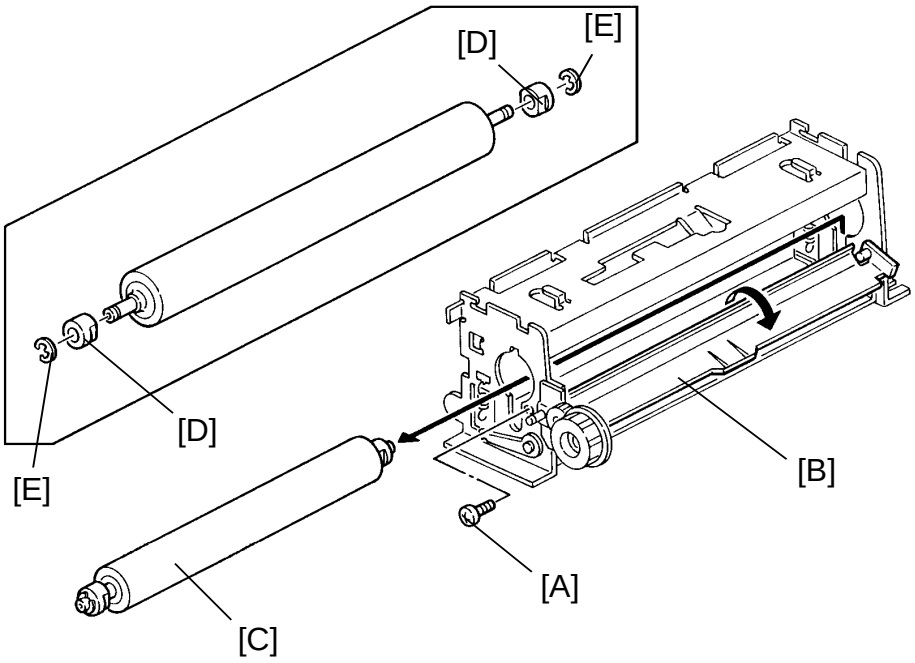

1. Remove the hot roller. (See Hot Roller Replacement.)
2. Remove screw [A] securing the fusing entrance guide [B].
3. Turn the entrance guide clockwise as shown.
4. Remove the pressure roller [C].
5. Remove the bearings [D] and E-rings [E] from the pressure roller.

NOTE: Before installing the pressure springs, refer to the Fusing Pressure Adjustment Section.

7.5 FUSING LAMP REPLACEMENT

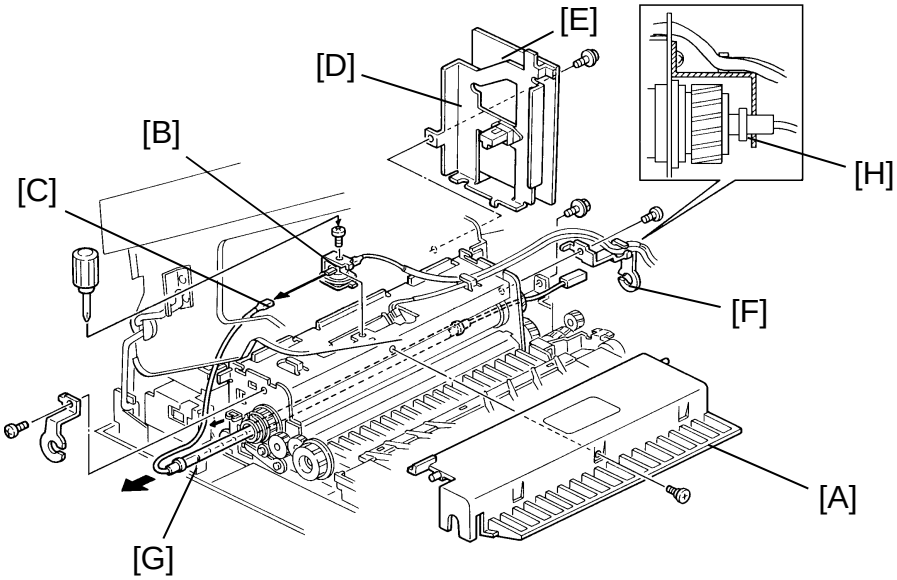

1. Make sure that the main switch is turned off and the power supply cord is unplugged.
2. Open the front cover and remove the upper inner cover (3 screws).
3. Remove the cleaning unit. (See Cleaning Unit Removal.)
4. Open the upper unit by pushing release lever.
5. Remove the lower inner cover (5 screws).
6. Remove the fusing cover [A] (1 screw).
7. Remove the thermoswitch bracket [B] (1 screw).
8. Disconnect the connector [C] of the fusing lamp from the thermoswitch.
9. Remove the upper rear cover (2 screws) and lower rear cover (2 screws).
10. Remove the ac drive board cover (2 screws).
11. Remove the ac drive board bracket [D] with the ac drive board [E] (2 screws and all ac harness connectors).
12. Remove the rear support bracket [F] (1 screw).
13. Pull the fusing lamp [G] out the front end of the hot roller.

NOTE: a) Do not touch the fusing lamp with bare hands.
b) Slide the new fusing lamp into the hot roller through the opening at the front of the roller.
c) Make sure that the fusing lamp insulators [H] (front and rear) are properly set in the holders as shown.

7.6 FUSING THERMOSWITCH REPLACEMENT

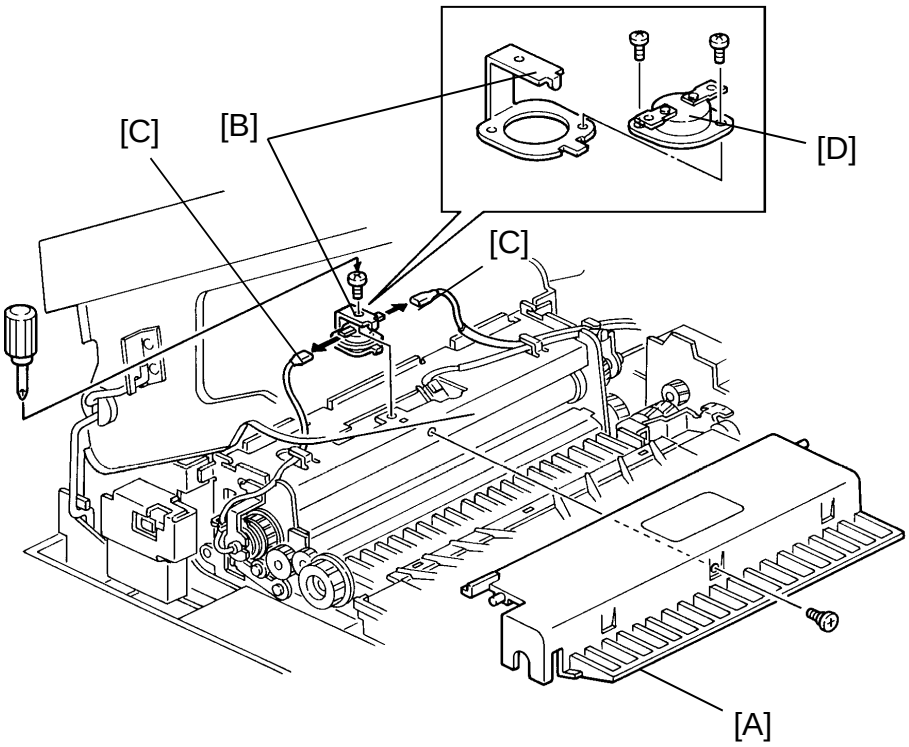

1. Turn off the main switch and unplug the power supply cord.
2. Open the front cover.
3. Remove the upper inner cover (3 screws).
4. Remove the drum unit. (See Drum Replacement.)
5. Hold down the top of upper unit and open the upper unit by pushing the release lever.
6. Remove the fusing cover [A] (1 screw).
7. Remove the thermoswitch bracket [B] (1 screw).
8. Disconnect two thermoswitch connectors [C].
9. Remove the thermoswitch [D] from the bracket (2 screws).

7.7 FUSING THERMISTOR REPLACEMENT

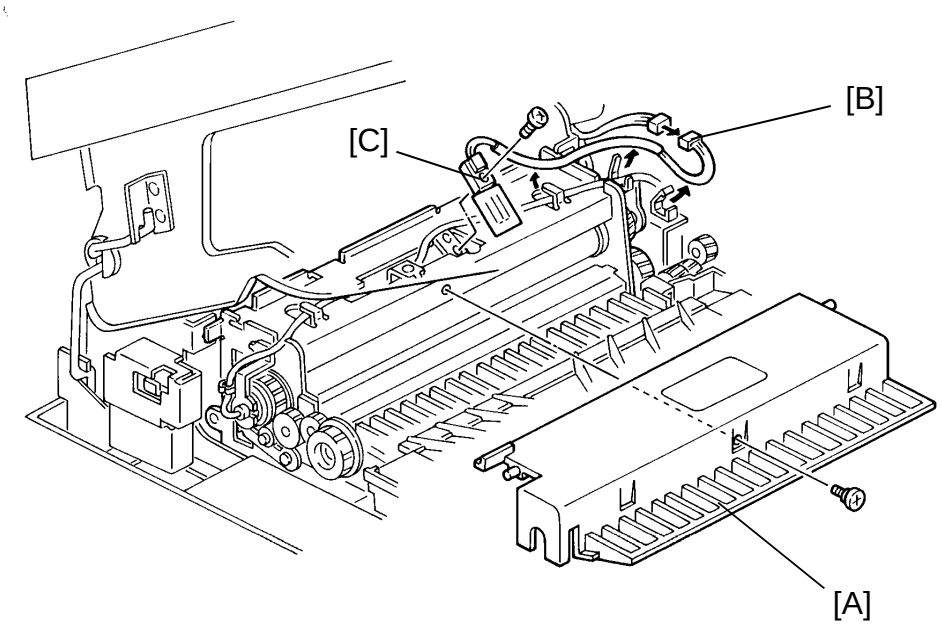

1. Turn off the main switch and unplug the power supply cord.
2. Open the front cover.
3. Remove the upper inner cover (3 screws).
4. Remove the drum unit. (See Drum Replacement.)
5. Hold down the top of upper unit and open the upper unit by pushing the release lever.
6. Remove the fusing cover [A] (1 screw).
7. Remove the upper rear cover (2 screws).
8. Remove lower rear cover (2 screws).
9. Remove the ac drive board cover (2 screws).
10. Remove ac drive board bracket with ac drive board (2 screws and all ac harness connector).
11. Disconnect the thermistor connector [B] (3 harness clamps).
12. Remove the thermistor [C] (1 screw).

7.8 FUSING PRESSURE ADJUSTMENT

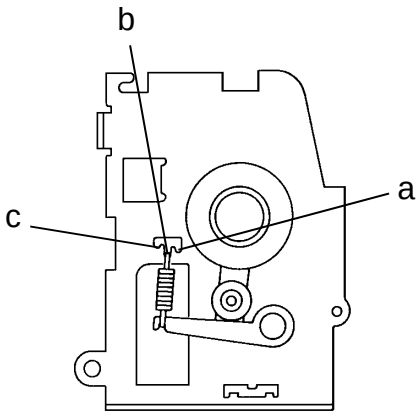

1. Turn off the main switch and unplug the power supply cord.
2. Open the front cover.
3. Remove the upper inner cover (3 screws).
4. Open the upper unit by pushing the release lever.
5. Remove the lower inner cover (5 screws).
6. Remove the front safety switch bracket (1 screw).
7. Remove the upper rear cover (2 screws).
8. Remove the lower rear cover (2 screws).
9. Remove the ac drive board cover (2 screws).
10. Remove the ac drive board bracket with the ac drive board (2 screws and all ac harness connectors).
11. Adjust the fusing pressure spring position as follows:

<Fusing Pressure adjustment combinations>

Spring position setting	
a	Stronger
b	Factory setting
c	Strongest

The fusing pressure can be set at three different levels. Adjust the pressure spring position if poor fusing occurs.

8. OTHERS

8.1 OZONE FILTER REPLACEMENT

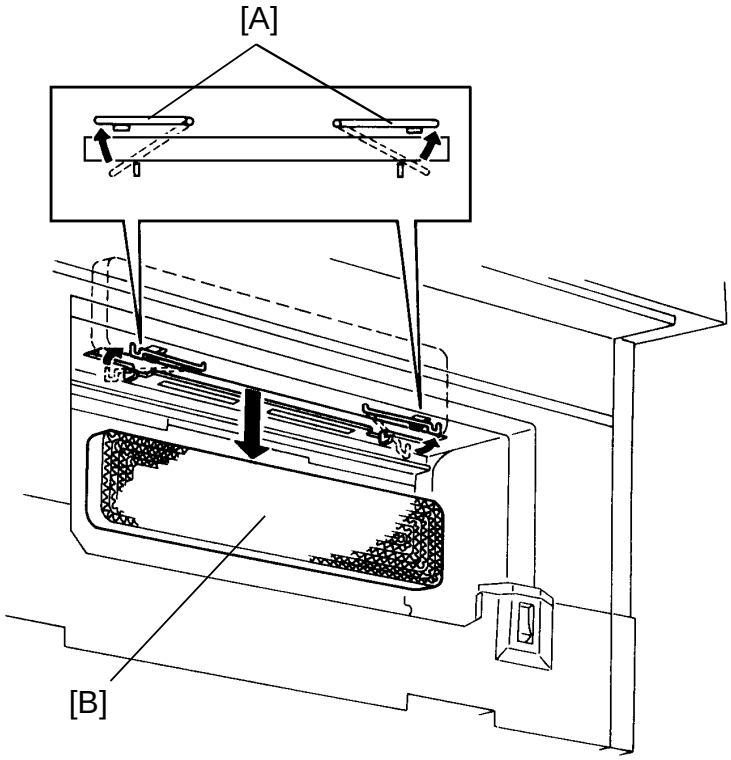

1. Remove the copy tray.
2. Remove the exit unit (1 screw).
3. Unhook the front and rear support levers [A].
4. Replace the ozone filter [B].

9. COPY QUALITY ADJUSTMENT

– General Information –

Image density is affected by the following factors:

(1) Light Intensity
(2) Bias Voltage
(3) Toner Density
(4) Grid Voltage
(5) Charge Corona Current

The items listed above must be kept in balance to maintain correct image density.

In the field, image density should be adjusted first by changing the exposure lamp voltage. If results are unsatisfactory, the bias voltage can be changed. Also, if requested from the customer, the overall image density can be changed by changing the toner density. Normally, this should be kept at the normal position (factory setting).

The grid voltage and charge corona current are carefully adjusted at the factory. Any adjustment out of the adjustment standard will result in over toning, toner scattering, dirty background, or light image density problems. The grid voltage and charge corona current adjustment should be done only when replacing the CC/Grid/Bias power pack or to correct certain problems with image density after checking all other possible causes.

9.1 LIGHT INTENSITY ADJUSTMENT

When:	1. Every Call 2. When replacing the following parts Exposure Lamp AC Drive Board Main Board Drum Auto Image Density Sensor
Purpose:	To maintain the correct light intensity.
Adjustment Standard:	Level 2 (E0.2) of the gray scale on the OS-A4 chart should be slightly visible on the copy when the 4th manual image density level is selected.
Perform:	SP48
How:	Change the exposure lamp voltage by SP48.

1. Turn off the main switch.
2. Clean the following parts:

Item No.	Section	Method
(1)	Optics (mirrors, lens, reflectors, shield glass, exposure glass)	Damp cotton, silicone cloth, and blower brush
(2)	ID sensor	Blower brush
(3)	Corona wires (charge, transfer, and separation) and casing.	Water or dry cloth
(4)	QL, PTL, Erase Lamp	Dry cloth

3. Place the OS-A4 test chart on the exposure glass and make a full size copy at manual image density level 4 (center).

   NOTE: Make sure that the data in SP37 is set to "0" (standard value).
4. Confirm that level 2 (E0.2) of the gray scale is slightly visible on the copy. If the image density is not correct, proceed to the following steps.
5. Enter the lamp voltage setting mode (SP48).
6. Change the data with the Increase or Decrease Quantity ("+" or "–") key as follows:
   If the image density is too dark: Increase the data number
   If the image density is too light: Decrease the data number
7. Confirm that the image density is within the adjustment standard.
8. Perform the ADS adjustment. (See ADS Adjustment.)

9.2 SIDE-TO-SIDE EXPOSURE ADJUSTMENT

When:	The exposure is uneven side-to-side.
Purpose:	To maintain even exposure.
Adjustment Standard:	The side-to-side variation of the gray scales on the test chart should be less than one level.
Perform:	Move the exposure adjustment plates.
How:	Change the position of the adjustment plates to make the light intensity from the exposure lamp even across its length.

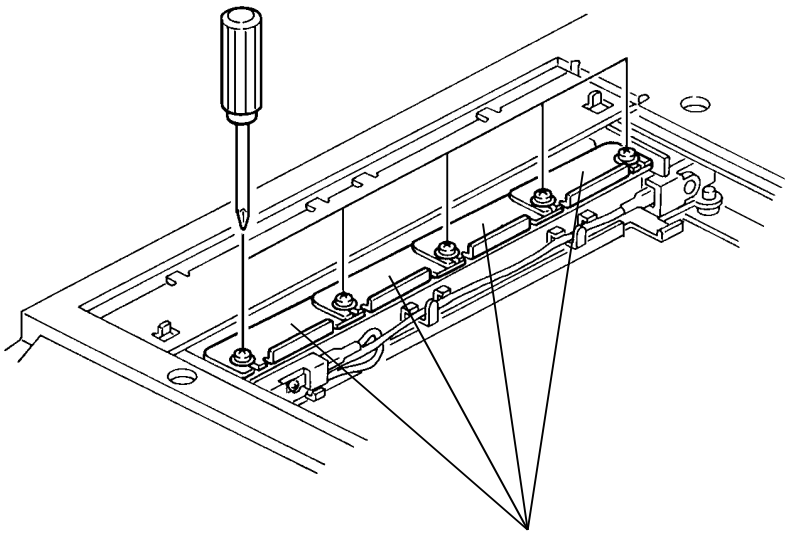

[A]

CAUTION: Do not adjust the charge corona wire height to correct for uneven image density on the copy.
When adjusting the wire height, use the drum shoe. (See Charge Corona Current Adjustment.)

1. Clean the optics components and the charge corona wires.
2. Place the OS-A4 test chart on the exposure glass and make a copy.
3. If the side-to-side variations of the gray scales are not within the adjustment standard, turn off the main switch and remove the exposure glass. (See Exposure Glass Removal.)
4. Position the adjusting plates [A] so that the copy image meets the adjustment standard.

9.3 IMAGE BIAS ADJUSTMENT

When:	1. The image is blurred even though the image density in black solid areas is acceptable. 2. Dirty background. The problem is not caused by excess toner and cannot be solved by adjusting the light intensity.
Purpose:	To improve the copy image.
Perform:	SP37
How:	Change the development bias voltage for image density control by SP37.

Data (SP37)	0	1	2	3	4
Change of bias voltage (volts)	±0	+40	+20	– 20	– 40
Image Density	Normal	Darkest	Darker	Lighter	Lightest

1. Make a copy after adjusting the light intensity.
2. If the image is blurred:
   Decrease bias voltage by one step and readjust light intensity.

   If the background is dirty:
   Increase bias voltage by one step and readjust light intensity.

9.4 TONER DENSITY ADJUSTMENT

When:	Customer wants to change the overall image density of the copies.
Purpose:	To change toner concentration inside development unit.
Perform:	SP33
How:	Change the development bias voltage for toner density detection by SP33.

9.5 FIXED TONER SUPPLY MODE SELECTION

When:	A problem with the ID sensing system cannot be corrected during a service call. (Detect supply mode does not function.)
Purpose:	To switch the toner supply system from Detect mode to Fixed mode.
Perform:	SP30
How:	Turn on the toner supply clutch for a fixed time in each copy cycle by SP30.

9.6 TONER SUPPLY RATIO SELECTION

When:	The factory setting for toner supply amount is not appropriate for the type of original in use.
Purpose:	To adjust the toner supply amount.
Adjustment Standard:	Detect Mode : 15% (Factory Setting) Fixed Mode : 7% (Factory Setting)
Perform:	Detect Mode : SP31 Fixed Mode : SP32
How:	Change the toner supply clutch on period by SP31 or 32.

9.7 ID SENSOR (Vsg) ADJUSTMENT

When:	1. Check Vsg at every call, and adjust Vsg if it is out of adjustment standard. 2. At replacement of the following parts: • ID sensor • Main board • Drum 3. A toner supply problem occurs.
Purpose:	To make sure that ID sensor works correctly.
Adjustment Standard:	Vsg = 4.0 ± 0.2 volts
Perform:	SP54
How:	Change the light intensity of the ID sensor LED by VR102. The Vsg voltage is displayed in the operation panel.

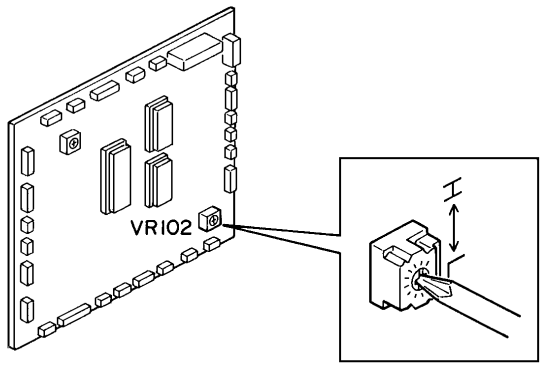

1. Turn off the main switch and clean the following parts:

Item No.	Section	Method
(1)	Optics (mirrors, lens, reflectors, shield glass, exposure glass)	Damp cotton, silicone cloth, and blower brush
(2)	ID sensor	Blower brush
(3)	Corona wires (charge, transfer, and separation) and casing	Alcohol or water
(4)	QL, PTL, Erase Lamp	Dry cloth

2. Reinstall all the parts.
3. Check Vsg using SP54. Adjust Vsg by turning VR102 (main board) if Vsg is out of adjustment standard.

9.8 ADS (Auto Image Density Sensor) ADJUSTMENT

When:	1. After light intensity adjustment 2. ADS voltage is not within the adjustment standard.
Purpose:	To maintain correct ADS mode operation.
Adjustment Standard:	ADS Reference Voltage = 2.5 ± 0.1 volts
Perform:	SP56
How:	Change the ADS reference voltage by VR101. The voltage reading is displayed in the operation panel.

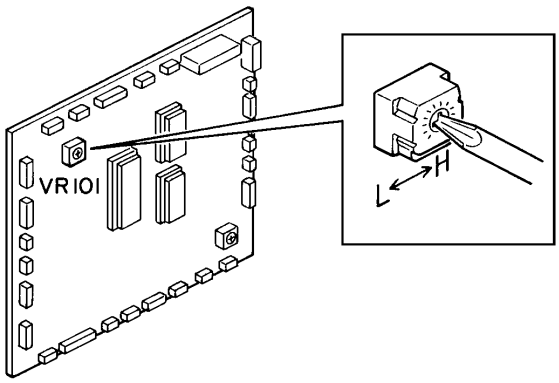

1. Clean the optics (mirrors, lens, reflectors, shield glass, and exposure glass).
2. Place five sheets of A3 (11" x 17") paper on the exposure glass.
3. Select SP56 and press the Start key.
4. If the voltage is not within the adjustment standard, adjust it by turning VR101 on the main board.

9.9 HORIZONTAL MAGNIFICATION ADJUSTMENT

When:	The horizontal magnification is not within the adjustment standard. After loosening the first scanner wire clamps.
Purpose:	To maintain proper horizontal magnification.
Adjustment Standard:	Less than ± 0.8% difference between original and copy.
Perform:	1. Loosen a screw and move the lens position ... A076 copier 2. SP44 (0.2%/step, 51 steps) ... A077/A078 copiers
How:	Adjust the lens home position changing the distance between the original and the drum.

– A076 copier –

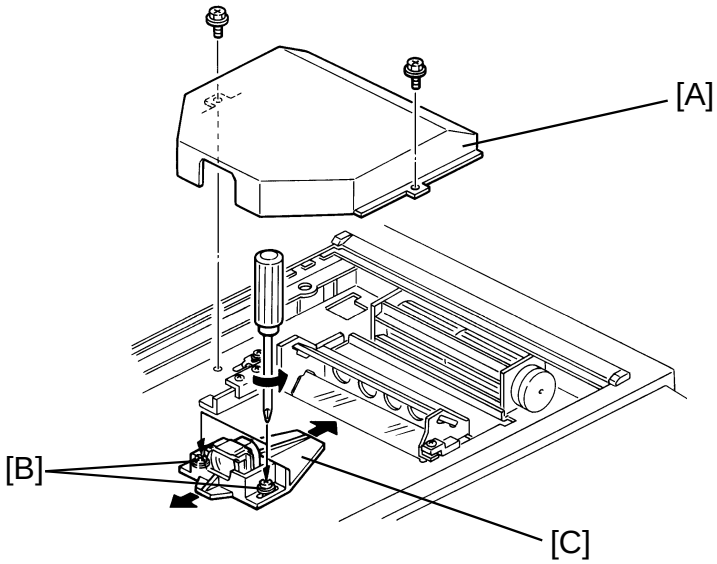

1. Place a 150 mm scale parallel to the left scale on the exposure glass.
2. Make three copies to check the horizontal magnification.
3. Confirm that the scanner wire clamps are positioned correctly using the scanner positioning pins. (See Scanner Wire Installation.)
4. Remove the lens cover [A] (2 screws).
5. Loosen a screw [B] and move the lens [C] to adjust the magnification.

– A077/A078 copiers –

1. Change the data of SP44 to 20 (default value).
2. Confirm that the scanner wire clamps are positioned correctly using the scanner positioning pins. (See Scanner Wire Installation.)
3. Place a 150 mm scale parallel to the left scale on the exposure glass.
4. Adjust the horizontal magnification using SP44. Make three copies to check the magnification.

9.10 VERTICAL MAGNIFICATION ADJUSTMENT

When:	The vertical magnification is not within the adjustment standard.
Purpose:	To maintain proper vertical magnification.
Adjustment Standard:	Less than ± 0.8% difference between original and copy.
Perform:	SP43 (0.2%/step, 16 steps)
How:	Change the scanner speed by SP43.

1. Place a 150 mm scale perpendicular to the left scale on the exposure glass.
2. Adjust the vertical magnification using SP43. Make three copies to check the magnification.

9.11 FOCUS ADJUSTMENT

When:	The copy image is out of focus. After adjusting the horizontal magnification.
Purpose:	To maintain proper focus.
Adjustment Standard:	Copy image in focus.
Perform:	1. Loosen a screw and move the 4th/5th mirror assembly position ... A076 copier 2. SP47 (101 steps) ... A077/A078 copiers
How:	Adjust the 4th/5th mirror assembly home position, changing the the distance between the original and the drum surface.

– A076 copier –

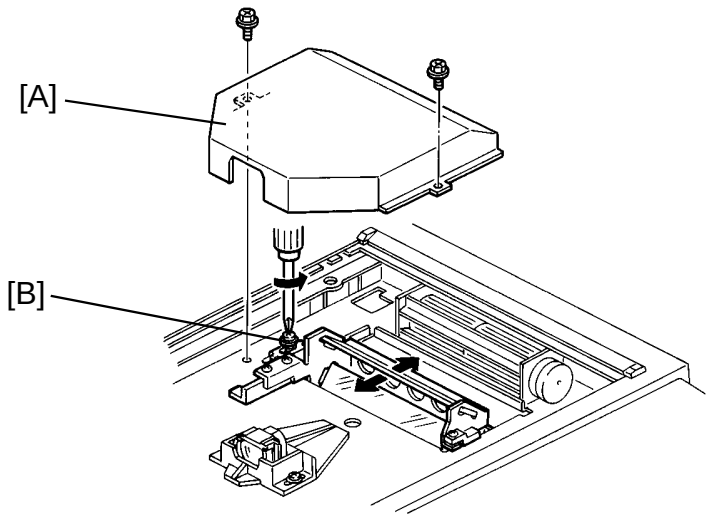

1. Make three copies with the test chart to check the focus.
2. Turn off the main switch and remove the exposure glass. (See Exposure Glass Removal.)
3. Remove the lens cover [A] (2 screws).
4. Loosen a screw [B] and move the 4th/5th mirror assembly to adjust the focus.

– A077/A078 copiers –

1. Make three copies with the test chart.
2. Adjust the focus using SP47. Check the text on the copies.

9.12 LEADING EDGE ERASE MARGIN ADJUSTMENT

When:	The leading edge erase margin is not within the adjustment standard.
Purpose:	To maintain the correct leading erase margin.
Adjustment Standard:	2.5 ± 1.5 mm (0.1 ± 0.06")
Perform:	SP41 (0.4mm/step, 16 steps)
How:	Change the erase lamp on period by SP41.

1. Place a 150 mm scale perpendicular to the left scale on the exposure glass.
2. Adjust the leading edge erase margin using SP41. Make three copies and check the erase margin.

9.13 REGISTRATION ADJUSTMENT

When:	Registration is not within the adjustment standard.
Purpose:	To maintain proper registration.
Adjustment Standard:	0 ± 2 mm (0 ± 0.08")
Perform:	SP42 (0.5mm/step, 16 steps)
How:	Change the registration roller start timing by SP42.

1. Place a 150 mm scale perpendicular to the left scale on the exposure glass.
2. Adjust the registration using SP42. Make three copies and check the registration.

9.14 SIDE-TO-SIDE REGISTRATION ADJUSTMENT

When:	Side-to-side registration is out of the adjustment standard.
Purpose:	To maintain the proper side-to-side registration
Adjustment Standard:	0 ± 2 mm (0 ± 0.08")
Perform:	1. Change the lens position. 2. Change the side fence position in the paper tray.
How:	Shift the copy image by changing the lens position or the side fence position side-to-side.

NOTE: a) When side-to-side registration is out of the adjustment standard only for the paper tray, adjust the side fence position in the paper tray.

b) When side-to-side registration is out of the adjustment standard for both the paper tray and manual feed table, adjust the lens position. Check the adjustment by making a copy from the manual feed table. Then, make a copy from the paper tray and adjust the side fence position in the paper tray if necessary.

– Side Fence Adjustment (Paper Tray) –

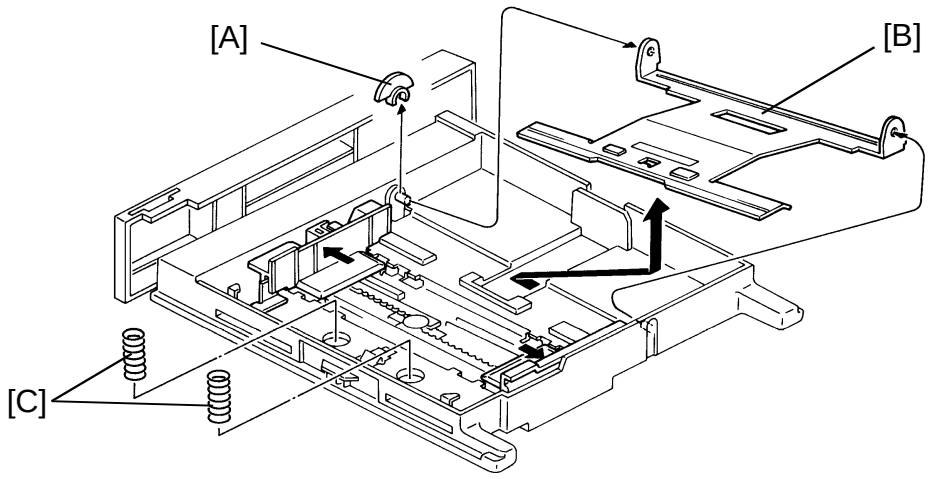

1. Pull the paper tray out.
2. Move the side fences to the widest position.
3. Remove the bottom plate spacer [A].
4. Slide the bottom plate [B] to the front side and remove it.
5. Remove two springs [C].

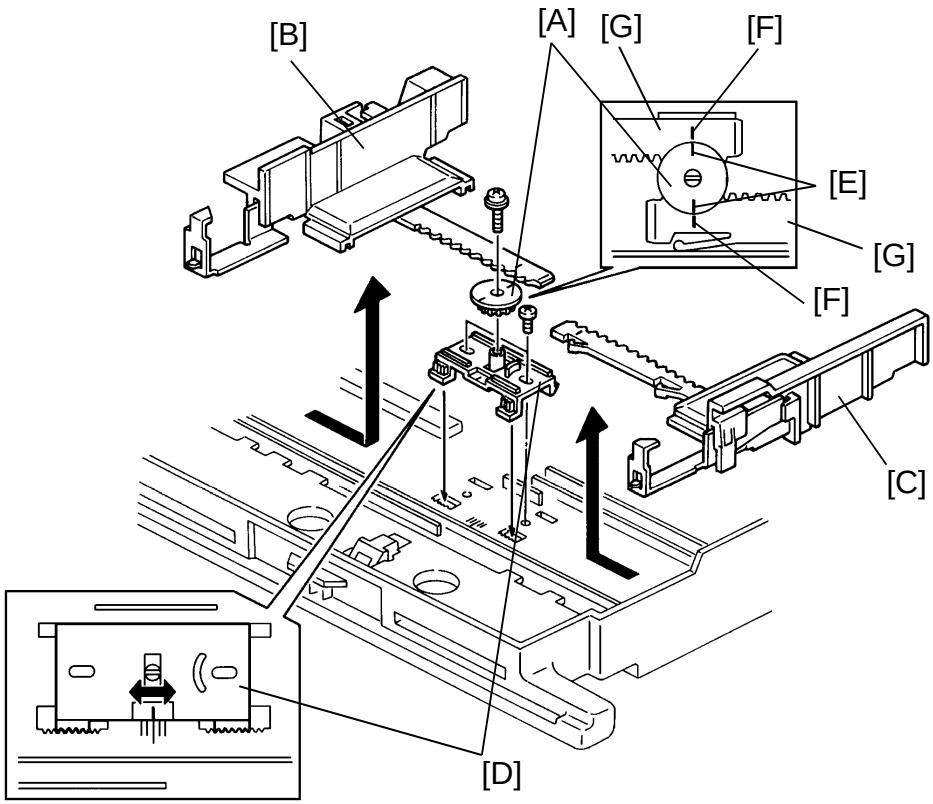

6. Remove the gear [A] (1 screw).
7. Remove the front [B] and rear [C] side fences.
8. Remove the registration adjustment plate [D] (2 screws) and set it to the desired position.

   NOTE: When reinstalling the gear [A], the lines [E] on the gear fit the lines [F] of the side fence gears [G].

– Lens Position Adjustment –

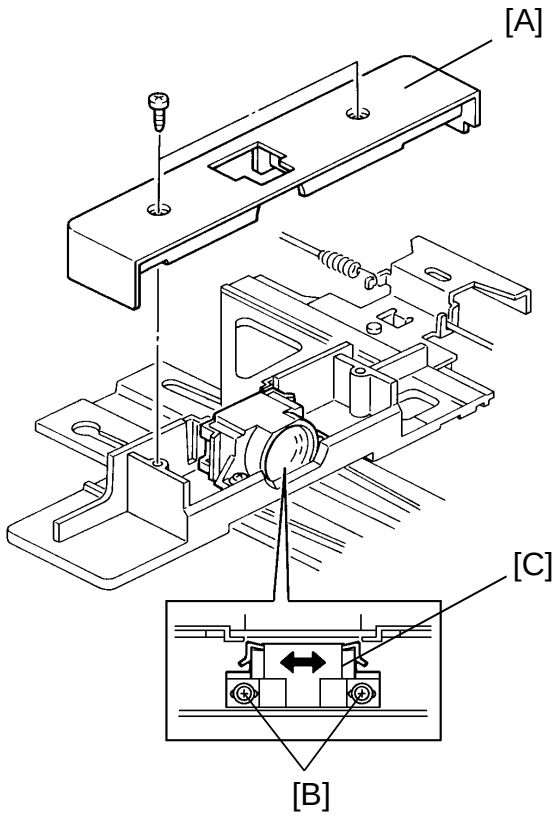

1. Turn off the main switch and remove the exposure glass. (See Exposure Glass Removal.)
2. Remove the lens cover (2 screws) and lens housing cover (A077/A078 copiers only) [A] (2 screws).
3. Loosen two screws [B] and shift the lens [C] to adjust the side-to-side registration.

9.15 4TH/5TH MIRROR HEIGHT ADJUSTMENT

When:	Parallelogram (skewed) image appears.
Purpose:	To maintain the proper copy image.
Perform:	Turn 4th/5th mirror height adjustment screw.
How:	Change the 4th/5th mirror height by turning the adjustment screw.

CAUTION: Never perform this adjustment until you have positively verified that the source of the skewing is optical and not in the paper path.

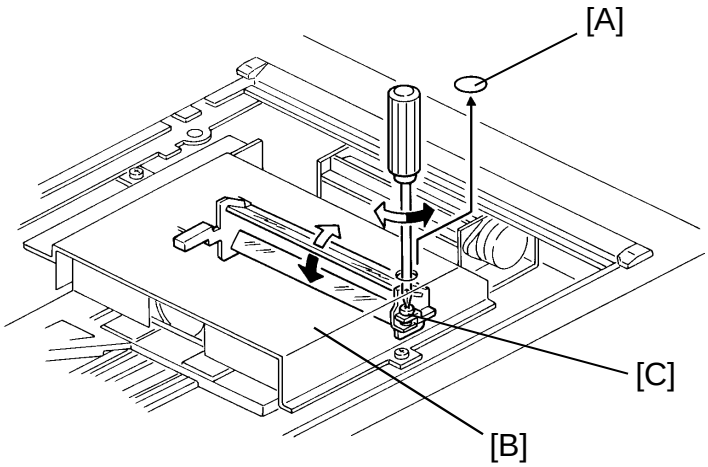

1. Turn off the main switch and remove the exposure glass. (See Exposure Glass Removal.)
2. Remove the seal [A] from the lens cover [B].
3. Adjust the 4th/5th mirror height by turning the screw [C]. Refer to the arrows in the illustration.

10. 2ND PAPER FEED (A078 Copier Only)

10.1 2ND PAPER FEED ROLLER AND TORQUE ROLLER REPLACEMENT

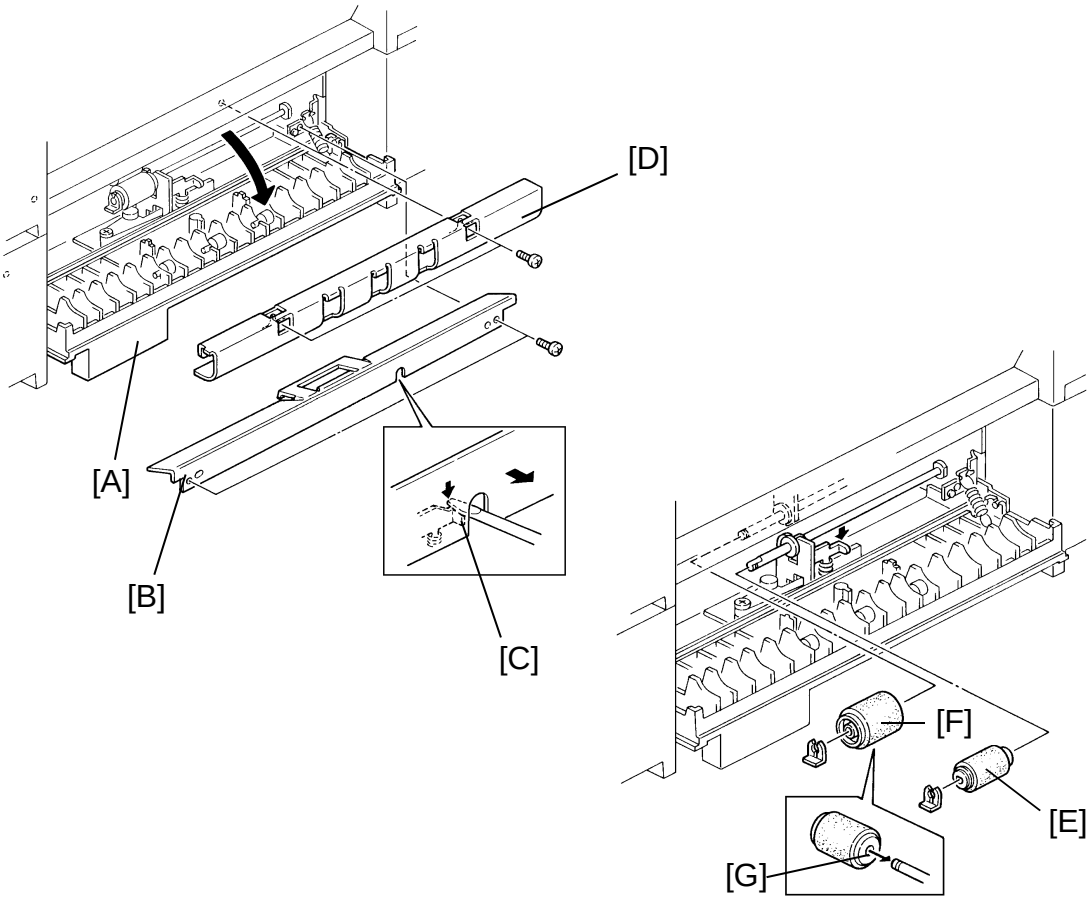

1. Turn off the main switch.
2. Open the 2nd paper feed cover [A].
3. Remove the feed guide plate [B] while pressing the release lever [C] down as shown (2 screws).
4. Remove the relay roller guide plate [D] (2 screws).
5. Remove the torque roller [E] while pressing the release lever down (1 snap ring).
6. Remove the paper feed roller [F] (1 snap ring).

   NOTE: When reinstalling the paper feed roller, make sure that the flat surface [G] of the paper feed roller must be positioned at rear side as shown.

10.2 2ND PICK-UP ROLLER REPLACEMENT

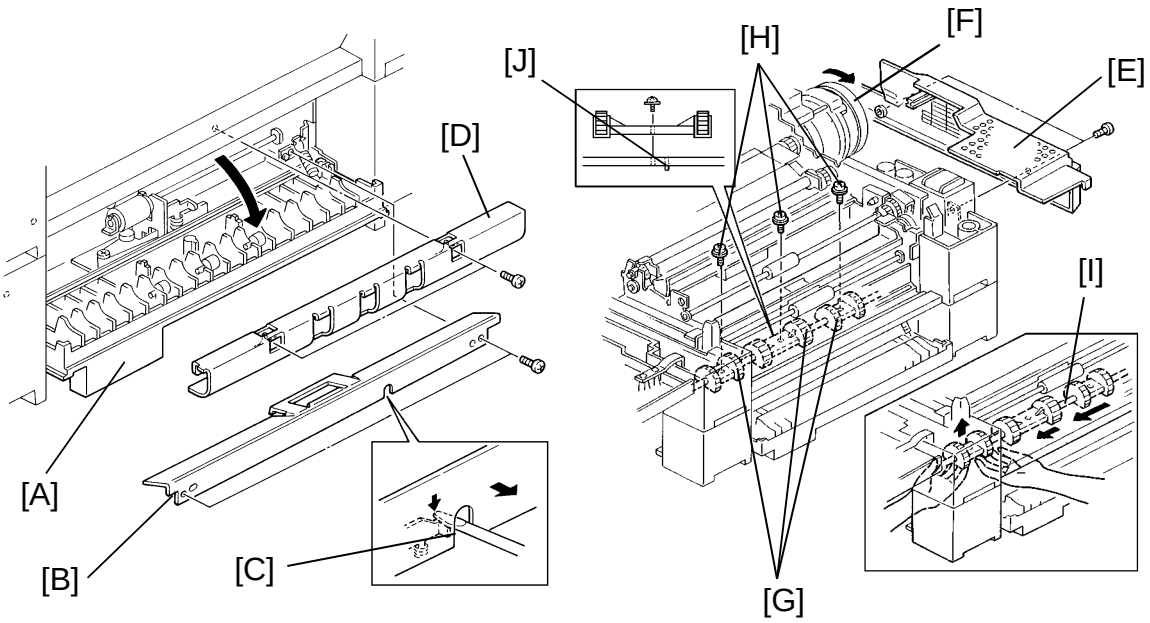

1. Remove the pick-up rollers of the 1st paper feed. (See 1st Pick-up Roller Replacement.)
2. Remove the 2nd paper tray.
3. Open the 2nd feed cover [A].
4. Remove the feed guide plate [B] while pressing the release lever [C] down as shown.
5. Remove the relay roller guide plate [D] (2 screws).
6. Remove the lower rear cover [E] (2 screws).
7. While turning the main motor [F] clockwise (from front view), turn the pick-up rollers [G] until the position which can remove the screws [H] of the pick-up rollers.
8. Remove three screws of the pick-up rollers (each 1 screw).
9. Remove the pick-up rollers from the shaft [I] while pushing them up with your hands as shown.

NOTE: 1) When securing the screws to the pick-up rollers, use the magnetized driver.

2) When reinstalling the pick-up rollers, make sure that the pick-up rollers are positioned on the other side of the spring pin [J] as shown. Otherwise, the six pick-up rollers are positioned at the same direction.

10.3 2ND PAPER TRAY SWITCH REPLACEMENT

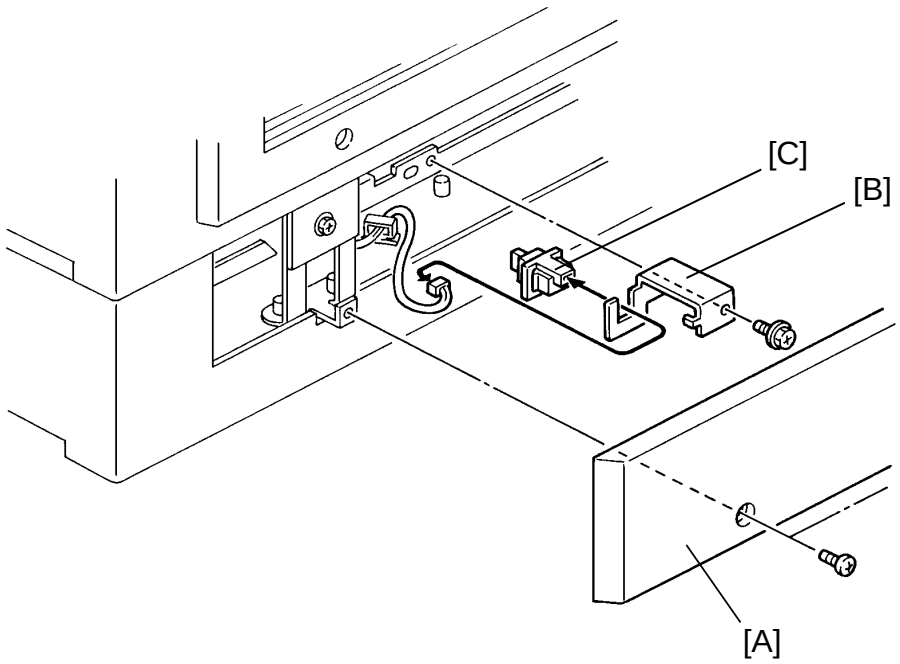

1. Turn off the main switch.
2. Remove the 2nd paper tray.
3. Remove the 2nd feed rear cover [A] (2 screws).
4. Remove the tray switch bracket [B] (1 screw and 1 connector).
5. Remove the 2nd paper tray switch [C] from the bracket.

10.4 2ND PAPER FEED CLUTCH REPLACEMENT

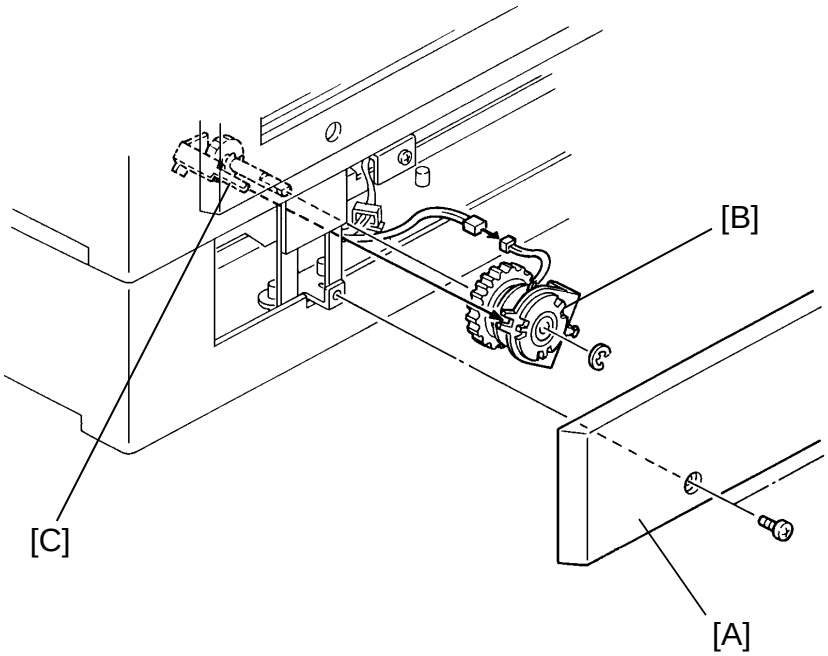

1. Turn off the main switch.
2. Remove the 2nd feed rear cover [A] (2 screws).
3. Remove the 2nd paper feed clutch [B] (1 E-ring and 1 connector).

NOTE: When reinstalling the clutch, make sure that the clutch stopper [C] locks the clutch.

10.5 2ND PAPER FEED STATION REMOVAL

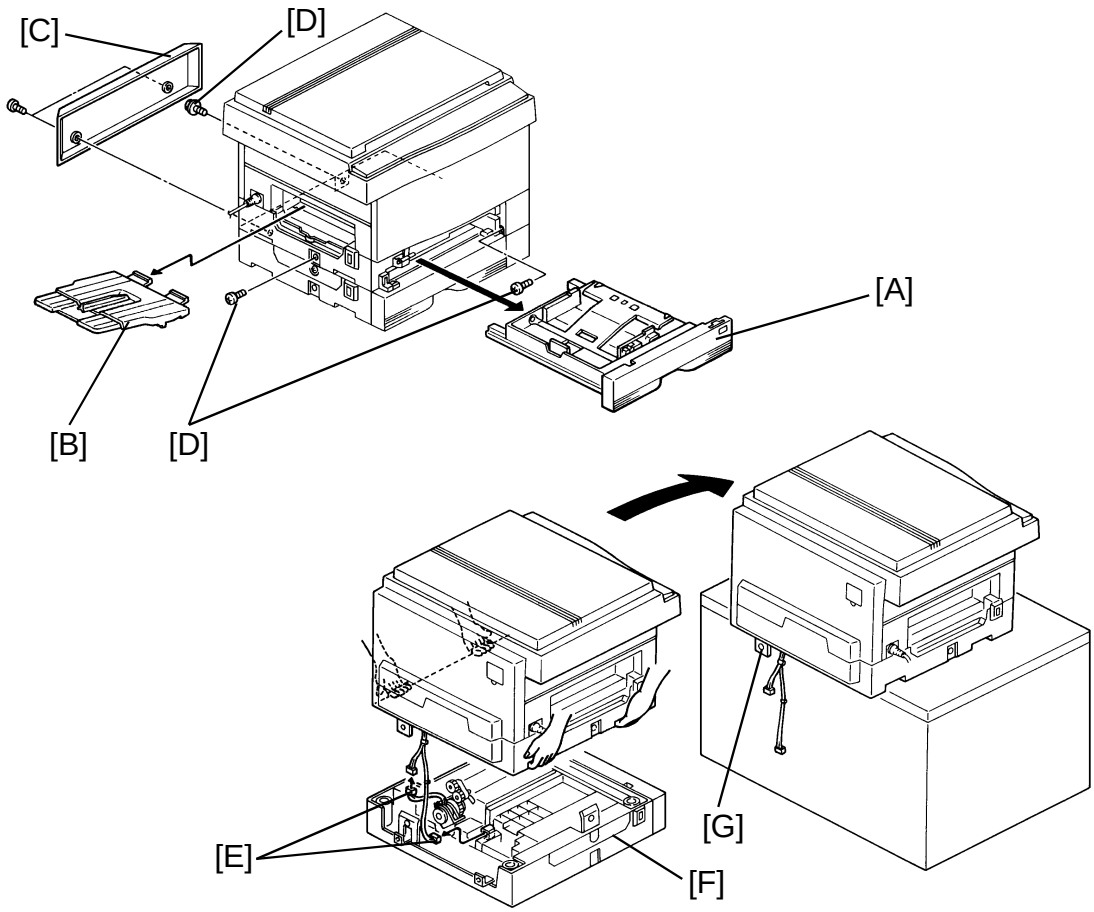

NOTE: This procedure must be performed by two field technicians.

1. Turn off the main switch and unplug the power supply cord.
2. Pull out the 1st paper tray [A].
3. Remove the copy tray [B].
4. Remove the 2nd feed rear cover [C] (2 screws).
5. Remove three screws [D] securing the 2nd paper feed station.
6. Disconnect two connectors [E].
7. Remove the main copier from the 2nd paper feed station [F] and place the main copier on a table as shown, making sure that the connecting plate [G] does not bear the weight of the machine.

WARNING: When reinstalling the main copier on the 2nd paper feed station, be careful not to injure your hands.

SECTION 6

TROUBLESHOOTING

1. COPY QUALITY

1.1 BLANK COPY (WHITE COPY)

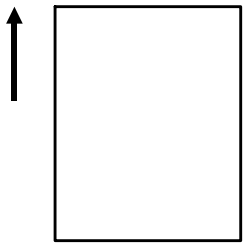

- Symptom -

White or almost white copy.

- Possible Causes -

1. Charge is not applied.
   - CC/Grid/bias power pack (charge or grid) failure
   - Poor contact of power pack lead wires
   - Broken charge corona wire
   - Leak in insulator or endblock

2. Copy image is not transferred to the paper.
   - TC/SC power pack (transfer) failure
   - Poor contact of power pack lead wires
   - Poor contact of transfer corona wire
   - Leak in insulator or endblocks

3. Development roller does not rotate.
   - Broken drive gear
   - Defective development clutch solenoid

4. The development roller is not properly grounded.

5. Poor drum sensitivity.
   - Drum exposed to fluorescent light or direct sunlight for long period of time.
   - Drum exposed to ammonia gas or fumes for a long period of time.

6. Drum does not rotate.

- Action -

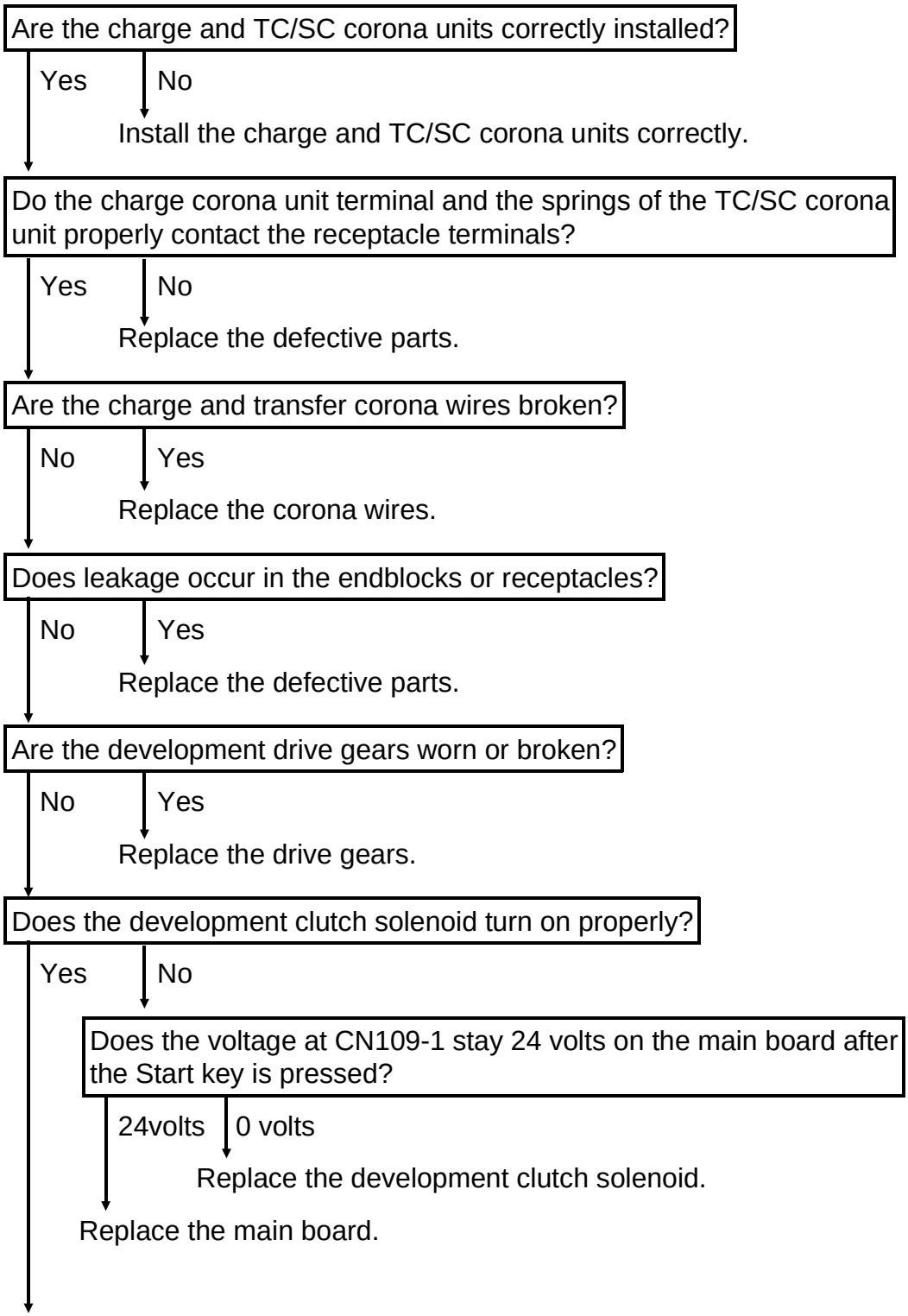
Are the charge and TC/SC corona units correctly installed?
Yes
No
Install the charge and TC/SC corona units correctly.
Do the charge corona unit terminal and the springs of the TC/SC corona unit properly contact the receptacle terminals?
Yes
No
Replace the defective parts.
Are the charge and transfer corona wires broken?
No
Yes
Replace the corona wires.
Does leakage occur in the endblocks or receptacles?
No
Yes
Replace the defective parts.
Are the development drive gears worn or broken?
No
Yes
Replace the drive gears.
Does the development clutch solenoid turn on properly?
Yes
No
Does the voltage at CN109-1 stay 24 volts on the main board after the Start key is pressed?
24volts
0 volts
Replace the development clutch solenoid.
Replace the main board.

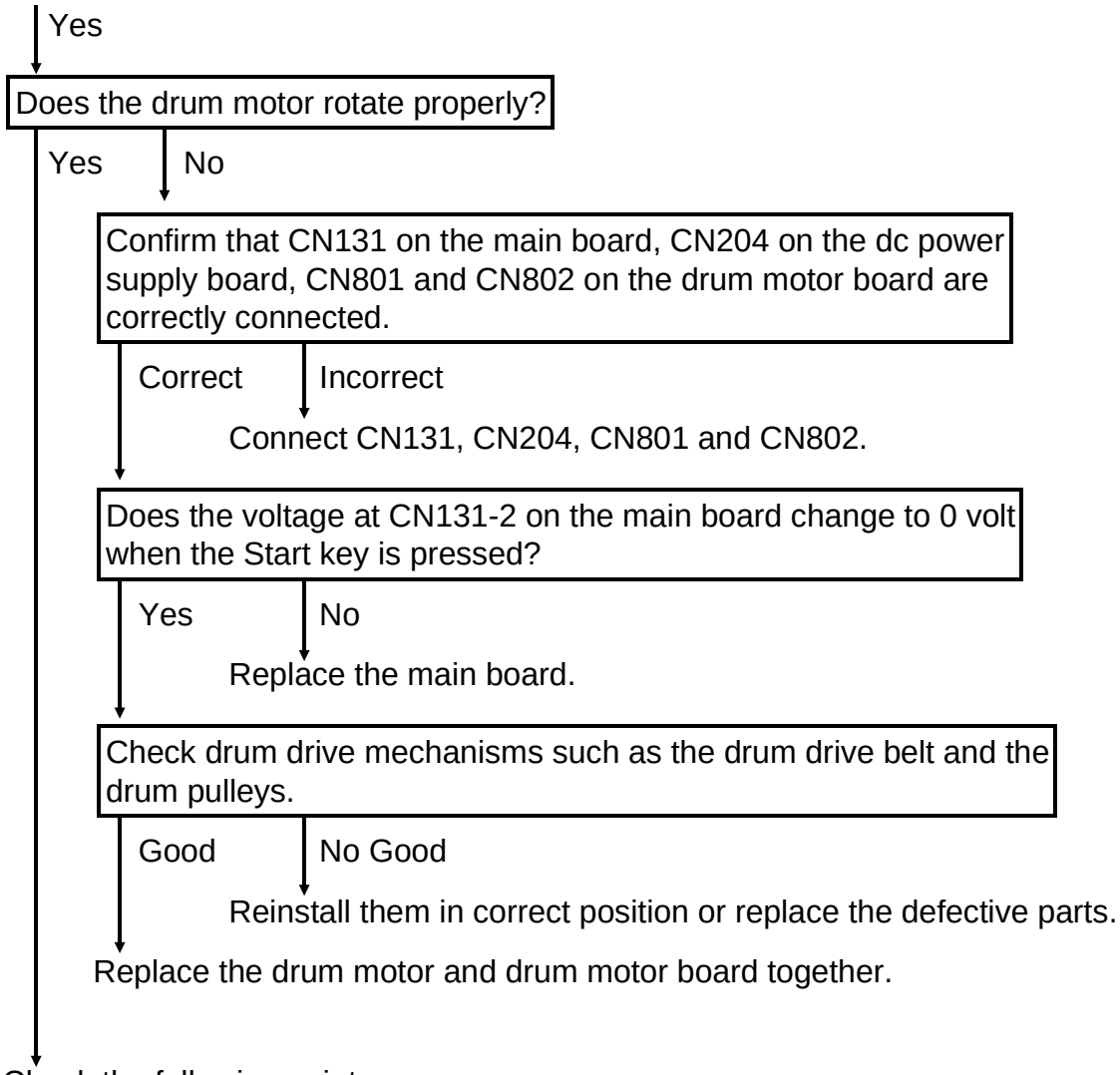

Check the following points:

- CN119-6 (Charge trigger line) and CN119-4 (Grid trigger line)
  (1) If the signal stays HIGH after the Start key is pressed, replace the main board.

  (2) If the charge corona does not turn on even if the signal changes to LOW, replace the CC/Grid/Bias power pack.

- CN117-13 (Transfer trigger line)
  (1) If the signal stays HIGH after the Start key is pressed, replace the main board.

  (2) If the transfer corona does not turn on even if the signal changes to LOW, replace the TC/SC power pack.

If there is no problem with the signal lines, replace the drum if the sensitivity does not recover even when the drum is not exposed to light.

1.2 DIRTY BACKGROUND

- Symptom -

1. Dirty background at image density level 4 (manual setting).
2. When newspapers are copied, the background is dirty even at level 7.
3. ADS copies have a dirty background.

- Possible Causes -

1. Dirty optics
2. Toner scattering
   - High toner density
   - The inlet seal of the development unit is stripped off.
   - The doctor gap is too wide.
3. The exposure lamp is not bright enough. This may be caused by deterioration of the exposure lamp or low lamp voltage.
4. In ADS mode, reflected light from the original is too high.
5. The ADS optical fiber is cut or bent.
6. The development bias is grounded.

- Action -

Make a copy in reduction mode at manual image density level 4.

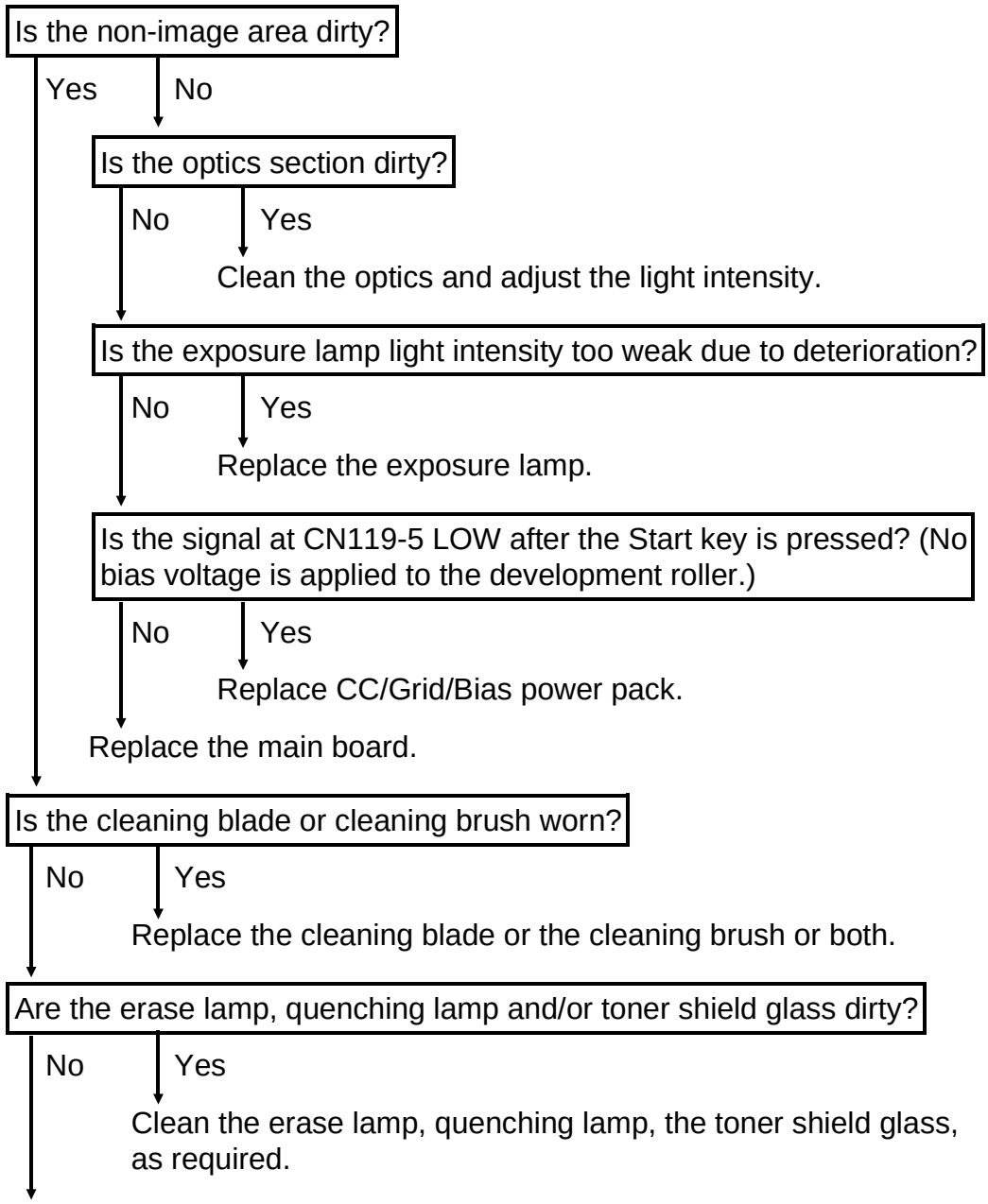

If toner scattering occurs, see the toner scattering section of the manual.

Trouble-shooting

If dirty background occurs only in ADS mode, do the following:

- If the ADS voltage is not within 2.5 ± 0.1 volts standard voltage, readjust the ADS voltage.
- If the signal at CN101-5 stays HIGH, check the harness and sensor, and replace defective parts.
- If the signal at CN101-4 stays LOW, replace the main board.

NOTE: After the light intensity is adjusted, check and, if needed, adjust the ADS voltage using SP56.

1.3 UNEVEN IMAGE DENSITY

- Symptom -

Uneven image density appears on the copies.

- Possible Cause -

1. Dirty optics
2. Uneven exposure adjustment plates
3. Dirty corona wires or grid
4. Uneven height of charge corona wire

- Action -

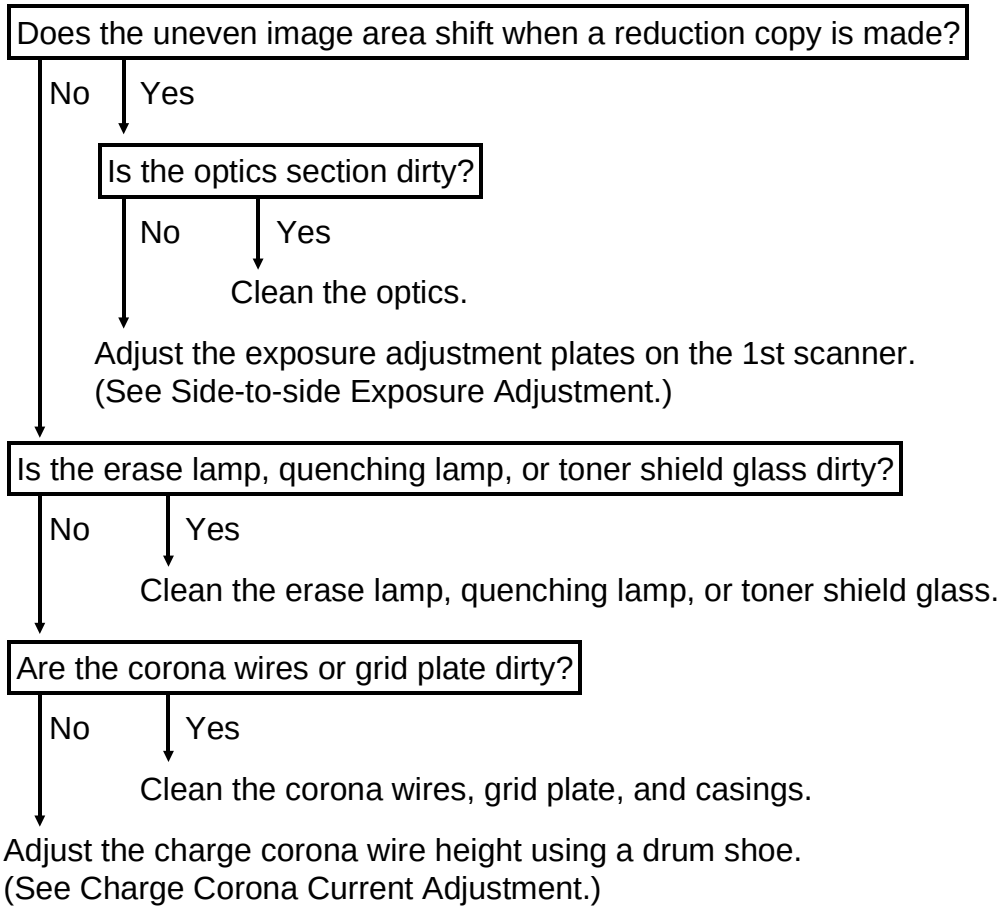

1.4 VERTICAL BLACK BANDS

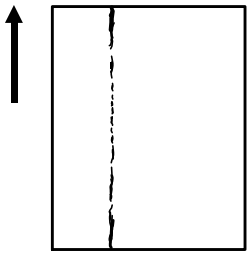

- Symptom -

Vertical black bands appear on the copy.

- Possible Causes -

1. Dirty optics
2. Dust between the cleaning blade and drum
3. Edge of the cleaning blade deformed
4. Deformed cleaning brush
5. Deformed inlet seal on the development unit

- Action -

Do the black bands shift when a reduction copy is made?

No

Yes → Check and clean the optics section (including the toner shield glass).

Press the blade release lever down two or three times to clean the edge of the cleaning blade. If black bands still appear, go to the next step.

Is the edge of the cleaning blade deformed?

No

Yes → Replace the cleaning blade.

Is the cleaning brush deformed?

No

Yes → Replace the cleaning brush.

If the inlet seal on the development unit is deformed, replace the inlet seal plate and the seal as a set.

1.5 VERTICAL BLACK LINES

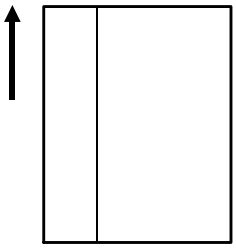

- Symptom -

Thin black lines appear on the copy.

- Possible Causes -

1. Scratched cleaning blade
2. Dirty or scratched exposure glass or dirty or scratched mirrors
3. Scratched or dirty drum
4. Scratched hot roller

- Action -

Do the black lines shift when a reduction copy is made?

No

Yes → Clean or replace the exposure glass or mirrors.

Is the toner shield glass scratched?

No

Yes → Replace the toner shield glass.

Is the edge of the cleaning blade scratched?

No

Yes → Replace the cleaning blade.

Is the hot roller scratched?

No

Yes → Check whether black lines appear on the copy by stopping the copy paper in the transport section. If no black lines appear, replace the hot roller.

Check whether the drum is scratched or toner is built-up on the drum.

- If toner is built-up on the drum, clean the drum with a damp cloth.
- If the drum is scratched, replace the drum.

NOTE: When replacing the drum, perform drum initial setting using SP66.

1.6 VERTICAL WHITE LINES OR BANDS—1 (DULL OR BLURRED)

- Symptom -

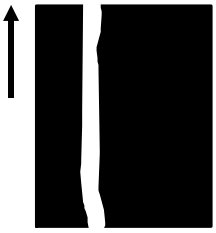

Dull or blurred white lines appear on the copy.

- Possible Causes -

1. Dirty or deteriorated charge corona wire
2. Dirty or deformed grid plate
3. Damp or deformed inlet seal on the development unit

- Action -

Are the charge corona wires or grid plate dirty?

No

Yes → Clean the charge corona wires or grid plate.

Is the inlet seal damp or deformed.

No

Yes → Clean the inlet seal with a dry cloth. If the problem is not corrected, replace the inlet seal plate and the seal as a set.

Is the grid plate deformed?

No

Yes → Replace the grid plate.

Replace the charge corona wire.

1.7 VERTICAL WHITE LINES OR BANDS—2 (THIN, DISTINCT)

- Symptom -

Vertical white lines appear on the copy.

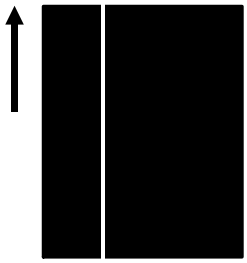

- Possible Causes -

1. Paper dust on the edge of the cleaning blade
2. Scratched drum
3. Scratched hot roller

- Action -

Press the cleaning blade release lever down several times. Make a copy and if white lines still appear, go to the next step.

↓

Make a copy and stop the machine when the paper reaches the transport section. Do white lines appear on the copy?

No ↓

Replace the hot roller if it is scratched.

Yes ↓

Replace the drum if it is scratched.

NOTE: If the drum is scratched, find out what caused the scratches on the drum and correct the problem.

- Paper Misfeed
- Incorrect positioning of the pick-off pawls
- Foreign substances on the cleaning brush or blade
- Carrier leakage

When replacing the drum, perform the drum initial setting using SP66.

1.8 HORIZONTAL BLACK/WHITE LINES

- Symptom -

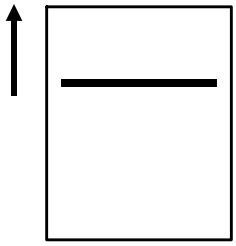

Black or white lines perpendicular to the paper feed direction appear on the copy image.

- Possible Causes -

1. Drum is scratched.
   If black lines appear at 251 mm intervals, the cause is a scratched drum or toner build up.
2. Hot roller is scratched.
   If black lines appear at 91 mm intervals, the cause is a scratched hot roller.
3. Toner adheres to the drum surface.
   Due to insufficient cleaning, foreign matter may accumulate on the blade, causing toner to stick to the drum surface when the drum stops.

- Action -

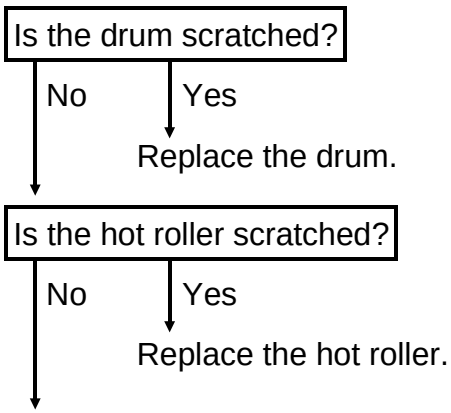

If toner adheres to the drum surface, clean the drum with water. Also clean or replace the cleaning blade and/or cleaning brush.

1.9 JITTER

- Symptom -

Jitter appears on the copy.

- Possible Causes -

1. Drum not turning smoothly
2. Scanner not moving smoothly

- Action -

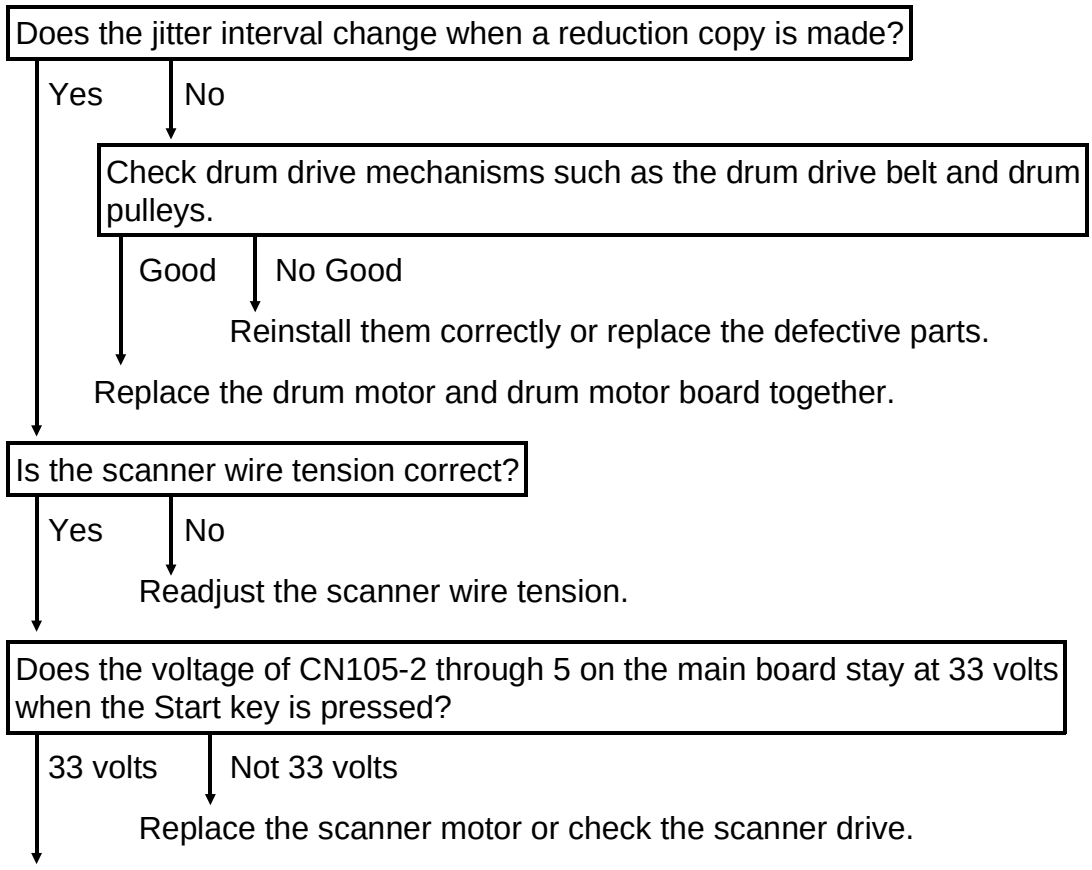

1.10 BLACK SPOTS ON THE COPY IMAGE

- Symptom -

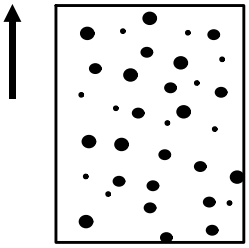

The grid voltage is not applied correctly.

- Poor contact between the charge corona casing and grid plate
- CC/G/B power pack defective
- Main board defective

- Action -

Is there good electrical contact between the charge corona casing and the grid plate?

Yes

No → Repair the poor contact and replace any parts if needed.

Check the voltage at CN119-1 on the main board.

0 volt

Not 0 volt → Replace the main board.

Replace the CC/G/B power pack.

1.11 SKEWED (OPTICAL) COPY IMAGE

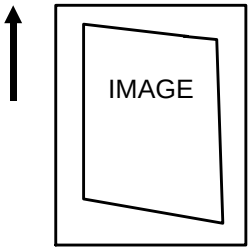

- Symptom -

The copy image is skewed (parallelogram shape).

The sides of the copy image are straight, but the leading and trailing edges are skewed.
(This differs from skewing originating in the paper path type of skewing.)

- Possible Causes -

1. 4th/5th mirror assembly is not parallel with the 1st and 2nd scanners.
2. Mirrors are in the wrong position.
3. The stubs of the 4th/5th mirror assembly are off the rails.

- Action -

Is each mirror positioned correctly on its scanner and on the 4th/5th mirror assembly?

Yes

No → Reposition the mirror correctly. If the spring plates are defective, replace them.

Are the stubs of the 4th/5th mirror assembly off the rails?

No

Yes → Put the mirror assembly stubs back on the rails.

Readjust the height of 4th/5th mirror assembly by turning the adjusting screw.

1.12 TONER DENSITY TOO HIGH

- Symptom -

1. Dirty background appears on the copy.
2. The image density of black solid areas is too high.
3. Toner has built up on the endblock cover of the TC/SC corona unit and also on the upper cover of the development unit.

- Possible Causes -

1. Light intensity of the exposure lamp is too high.
2. Toner supply clutch keeps on turning continuously.
3. Copier is in fixed toner supply mode.
4. Main board is defective.
5. ID sensor bias voltage (modules) is too low.
6. Charge corona current is too low.
7. ID sensor grid voltage is too low.

- Action -

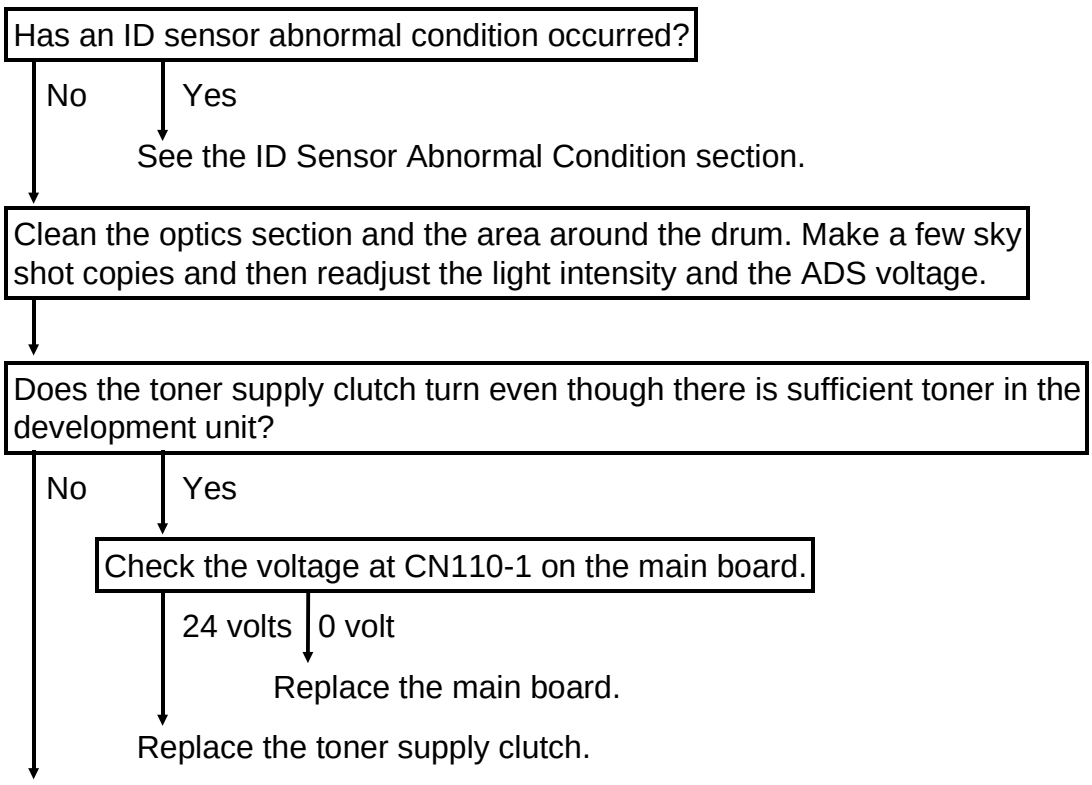

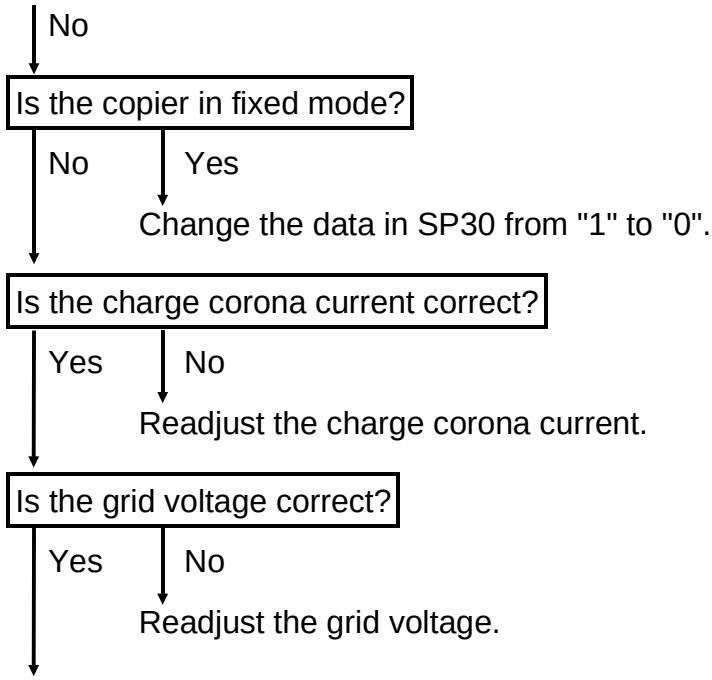

Check SP33. If the setting is greater than "2", reset the data to "0".

1.13 TONER DENSITY TOO LOW

- Symptom -

1. Light copy
2. Carrier is on the copy.
3. Light spots appear in black solid areas.

- Possible Causes -

1. Light intensity of the exposure lamp is too low.
2. Toner supply clutch does not rotate.
3. Copier is in the fixed toner supply mode.
4. Main board is defective.
5. ID sensor voltage is too high.
6. Charge corona current is too high.
7. ID sensor grid voltage is too high.

- Action -

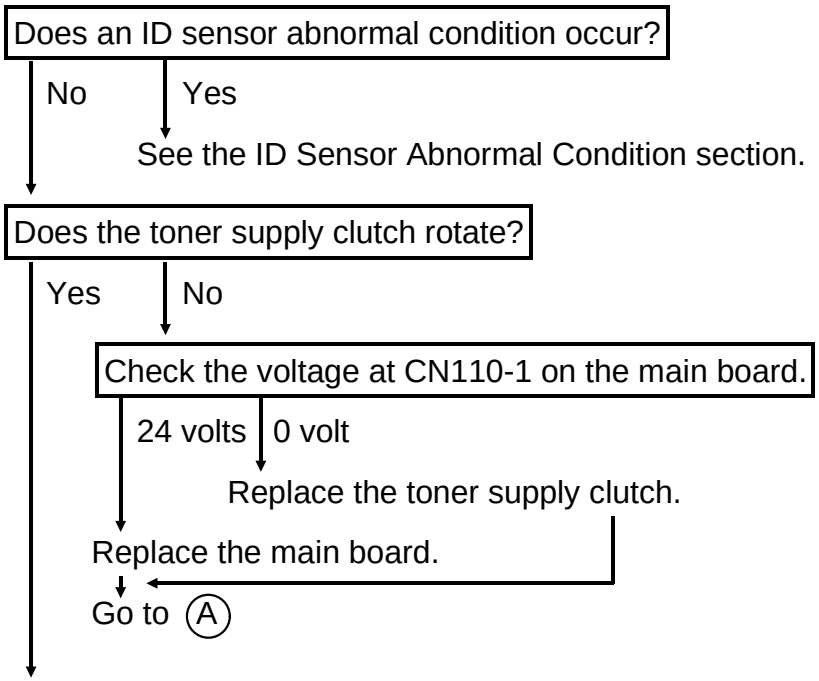

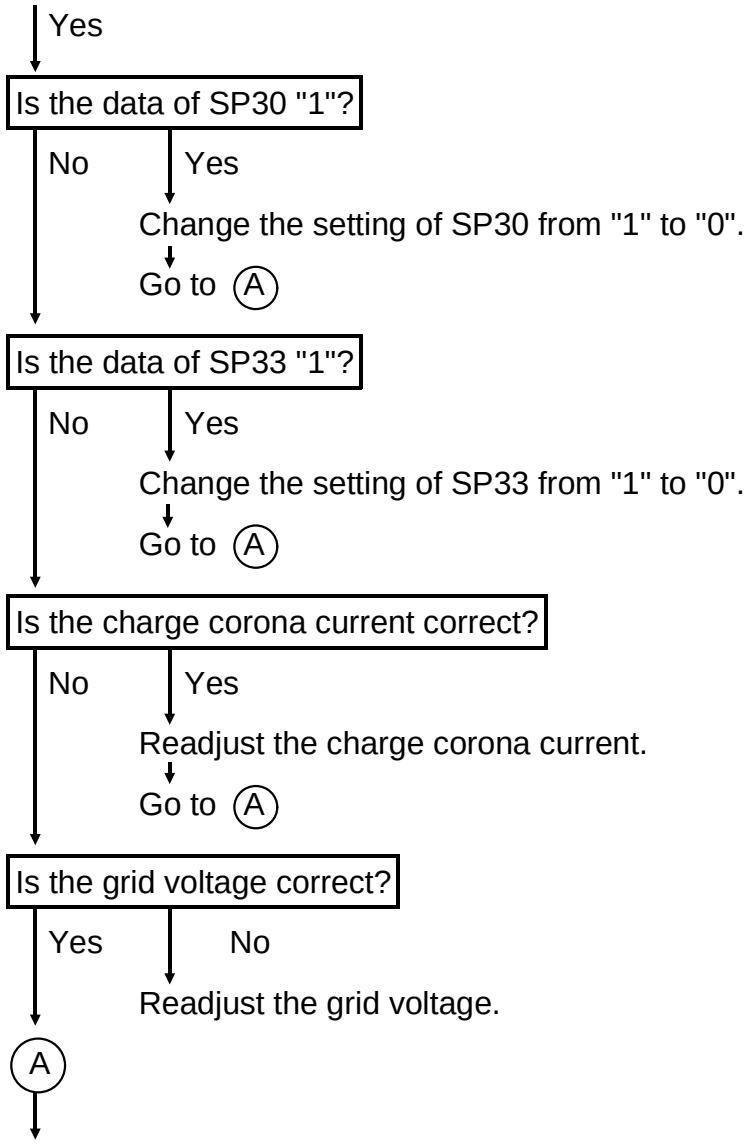

Clean the optics section and around the drum.
Turn on DIP switch 101-1 and 101-2 on the main board. Enter SP55. Repeat the free run until Vsp becomes lower than 0.103 Vsg.

Adjust the light intensity, ADS voltage, or Vsg voltage.

1.14 TONER SCATTERING

- Symptom -

Toner scatters from the development unit.

- Possible Causes -

1. Toner density is too high.
2. Inlet seal on the development unit is out of position.
3. Developer has deteriorated.

- Action -

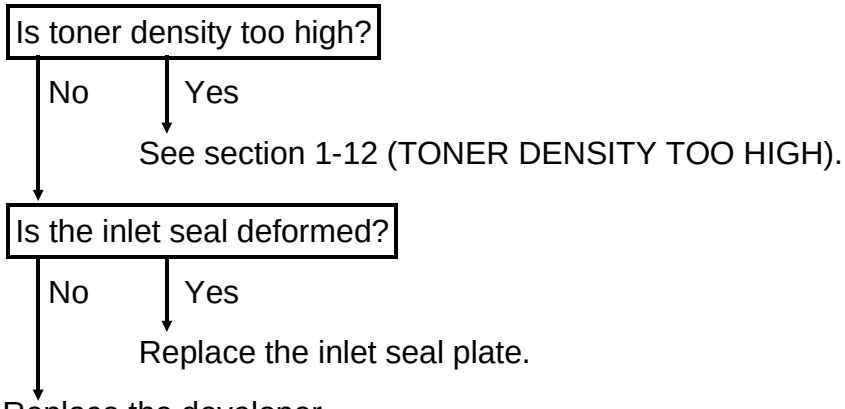

1.15 UNFUSED COPY IMAGE

- Symptom -

Solid image rubs off easily.

- Possible Causes -

1. Fusing pressure is too weak.
2. Fusing temperature is too low.
3. Thermistor is malfunctioning.

- Action -

Adjust the position of the pressure springs to increase the fusing pressure.

↓ No good

Increase fusing temperature using SP49.

↓ No good

Check the thermistor. If the thermistor is malfunctioning, replace it.

1.16 PAPER MISFEED

- Symptom -

1. Misfeed location number indicator (J1, J2, J3) turns on when the main switch is turned on, even if there is no paper in the copier.
2. Misfeed location number indicator (J1, J2, J3) always turns on at the same location when copies are made.

- Possible Causes -

1. Sensor defective
2. Mechanical or electrical malfunction

- Action 1 (Initial Misfeed) -

Check which sensor (relay sensor, registration sensor or exit sensor) is defective. Replace the defective sensor. If no sensors are defective, replace the main board.

- Action 2 (Misfeed during copy cycle) -

If the J1 indicator turns on after the Start key is pressed, check whether the paper tray has run out of paper or not.

No

Yes

Load the paper into the paper tray

Set jam Detection OFF mode (SP6) to on and make a copy to see whether a misfeed occurs.

Misfeed

No misfeed

Check which sensor (relay sensor, registration sensor or exit sensor) is defective. If sensors are not defective, replace the main board.

Check whether a mechanical or electrical malfunction occurs. Replace the defective parts.

1.17 DF ORIGINAL MISFEED OR SKEW

- Symptom -

When the DF is in use, the original stops on the exposure glass or is skewed even if the electrical components are functioning normally.

- Possible Causes -

1. Exposure glass upside-down
2. Friction between the exposure glass and the transport belt

- Action -

Is the red mark on the exposure glass positioned on the right hand side facing upwards.

Yes

No

Reinstall the exposure glass so that the red mark is positioned on the right hand side facing upwards.

Clean the exposure glass surface with alcohol or water. Pour a small amount of silicone oil on the exposure glass and wipe the exposure glass with a dry cloth to reduce the friction between the exposure glass and the transport belt.

2. SERVICE CALL CONDITIONS

2.1 CODE #11 — EXPOSURE LAMP ERROR

- Definition -

- The feedback signal becomes higher than 4.2 volts (r.m.s.) for 1.0 second when the exposure lamp is on.
- The feedback signal becomes higher than 1.0 volt (r.m.s.) for 1.0 second when the exposure lamp is off.

- Possible Causes -

- Exposure lamp open
- Thermofuse open
- Defective ac drive board
- Main board defective
- Defective dc harness
- CN114 on the main board or CN401 on the ac drive board is not correctly connected.

- Action -

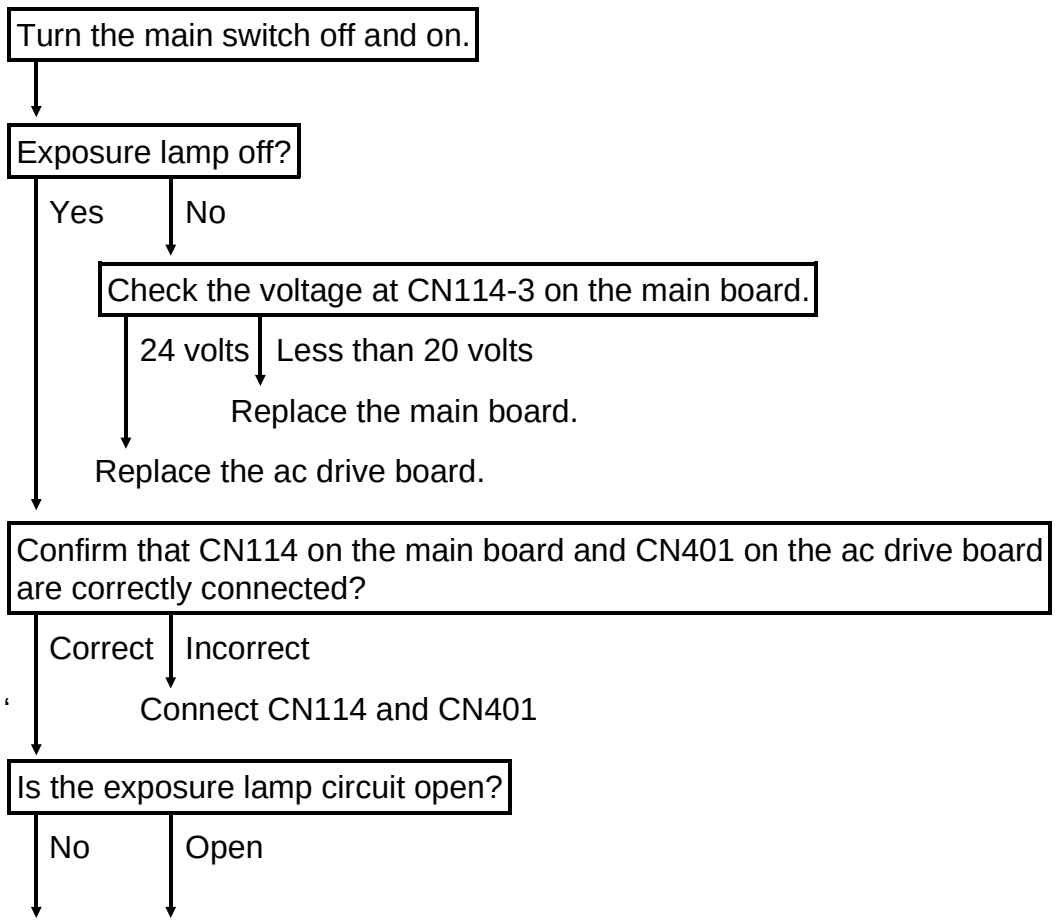

No → Open → Replace the exposure lamp.

Is the thermofuse open?

No → Open → Replace the thermofuse.

Is the exposure lamp harness defective?

No → Yes → Replace the exposure lamp harness.

Is the voltage at TP108 on the main board higher than 4.2 volts in copy mode?

No → Yes → Replace the ac drive board.

Replace the main board.

2.2 CODE #12 — EXPOSURE LAMP ERROR

- Definition -

- The feedback signal falls below 0.5 volt (r.m.s.) for 1.0 second when the exposure lamp is on.
- The exposure stays on for longer than 10 seconds.

- Possible Causes -

- Defective ac drive board
- Main board defective

- Action -

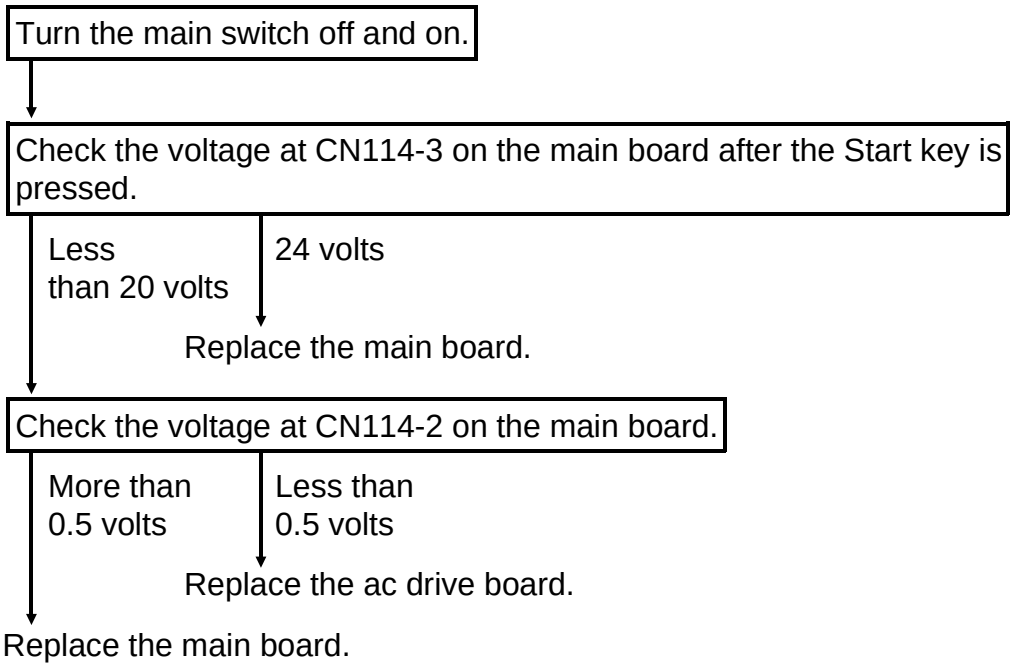

2.3 CODE #13 — ZERO CROSS SIGNAL ERROR

- Definition -

The CPU does not receive the zero cross signal within 0.56 second.

- Possible Causes -

- Main board defective
- Defective dc power supply board
- Zero cross line open
- CN107 on the main board or CN202 on the dc power supply board is not correctly connected.

- Action -

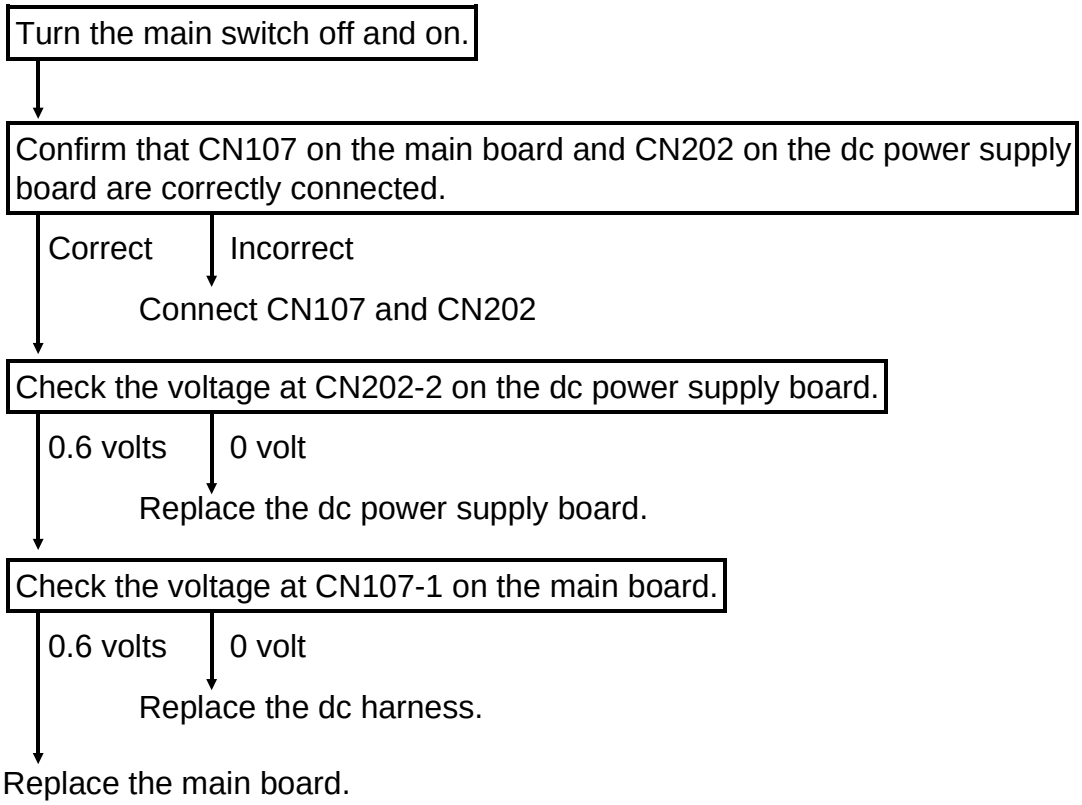

2.4 CODE #21 — SCANNER HOME POSITION ERROR

- Definition -

The scanner home position sensor's output remains LOW (de-actuated) for 9 seconds after the main switch is turned on.

- Possible Causes -

- Scanner home position sensor failure
- Scanner motor defective
- Main board defective
- Defective dc power supply board
- Incorrect scanner drive wire position

- Action -

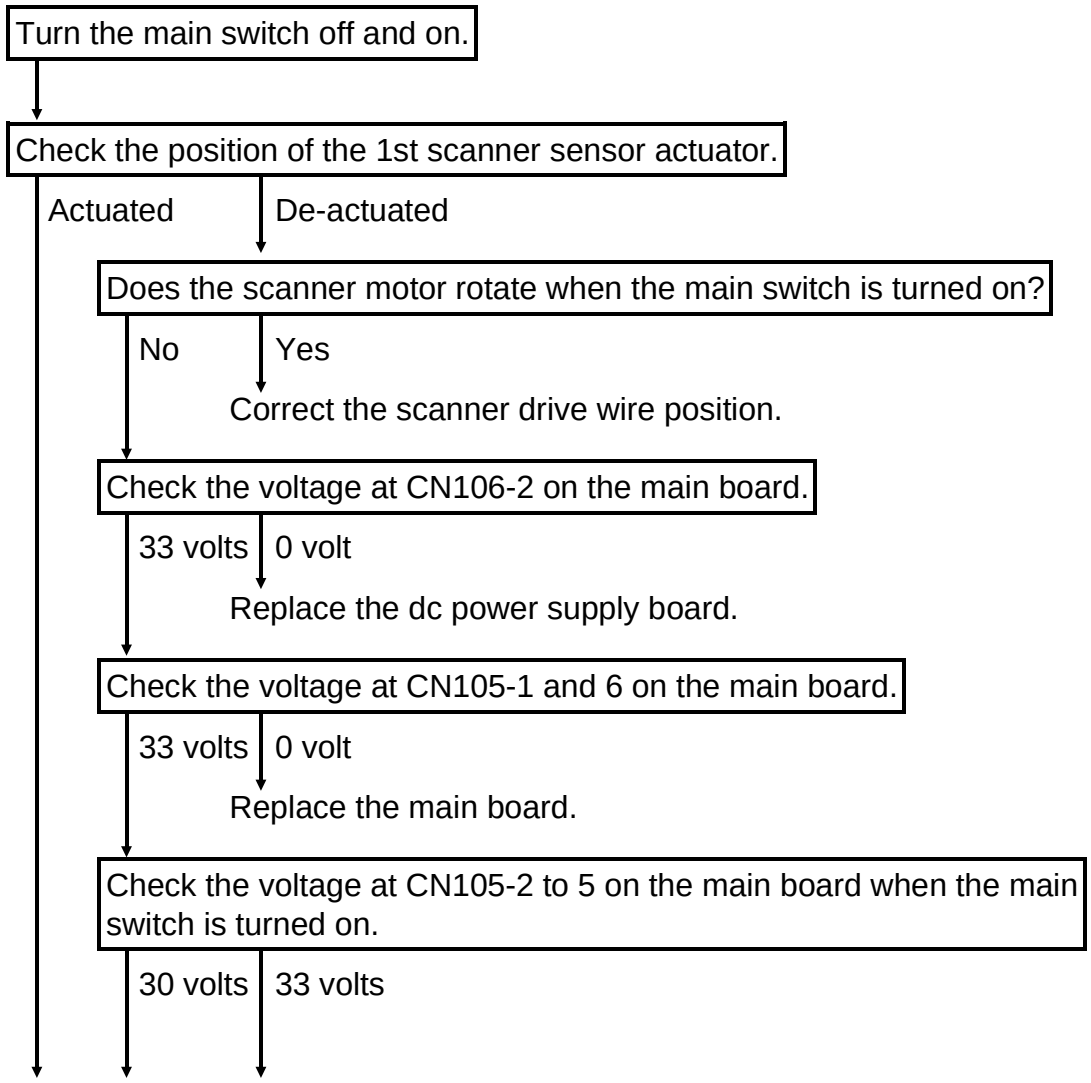

30 volts

33 volts

Replace the main board.

Replace the scanner motor.

Is there 5 volts at CN103-11 on the main board when the scanner H.P. sensor is actuated.

Yes

No

Replace the scanner H.P. sensor.

Replace the main board.

2.5 CODE #22 — SCANNER HOME POSITION ERROR

- Definition -

The scanner home position sensor's output remains HIGH (actuated) for 1.0 second after the scanner starts.

- Possible Causes -

- Scanner home position sensor failure
- Scanner motor defective
- Main Motor defective
- Defective dc power supply board
- Incorrect scanner drive wire position
- Defective dc harness
- CN103 or CN105 on the main board is not correctly connected.

- Action -

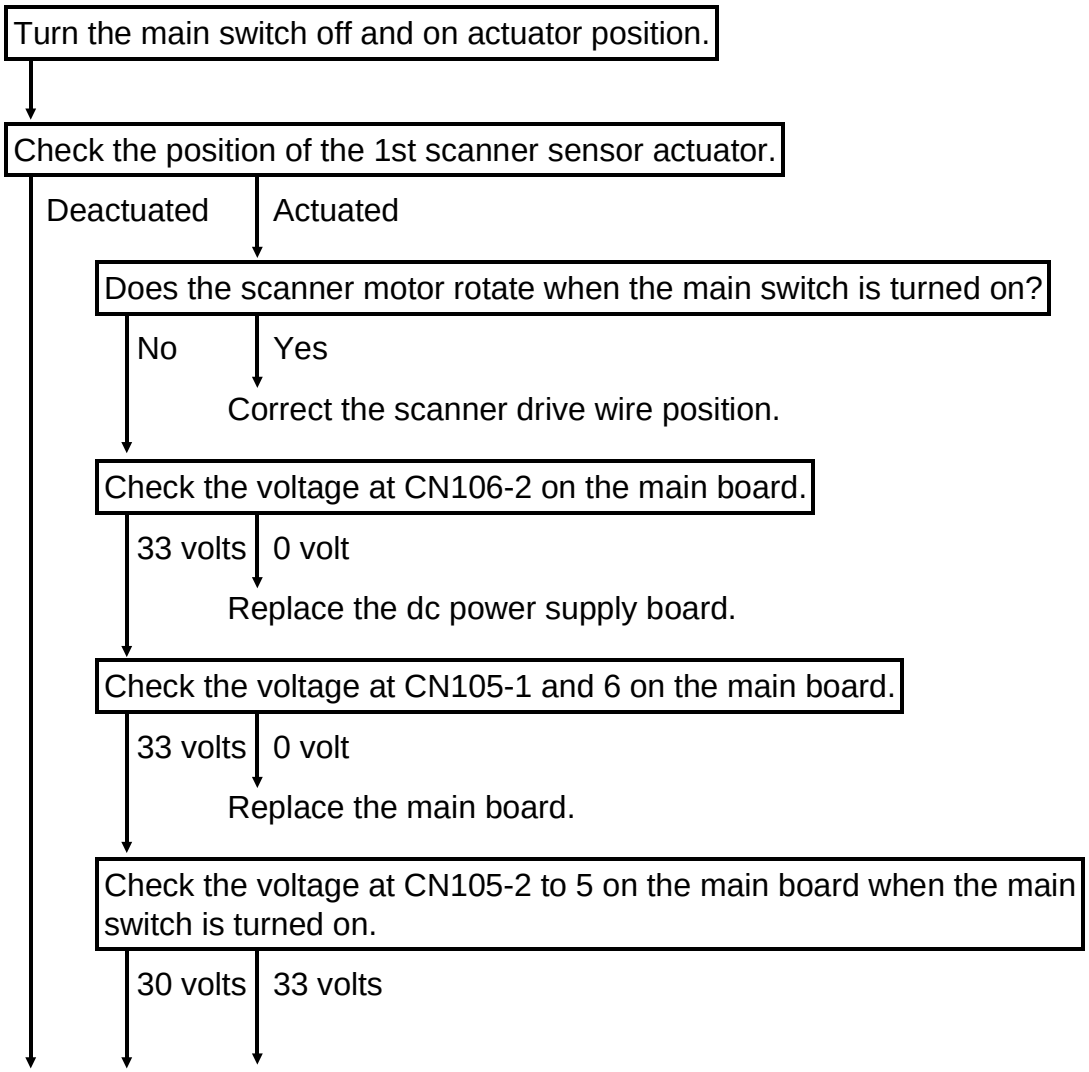

30 volts | 33 volts

Replace the main board.

Replace the scanner motor.

Confirm that CN103 and CN105 on the main board are correctly connected.

Correct | Incorrect

Connect CN103 and CN105

Is there 0 volt at CN103-11 on the main board when the scanner H.P. sensor is deactuated?

No | Yes

Replace the main hoard

Check if the dc harness (signal line) for the sensor is defective.

No | Defective

Replace the dc harness.

Replace the scanner H.P. sensor

2.6 CODE #28 — LENS HOME POSITION ERROR (A077/A078 COPIERS ONLY)

- Definition -

The lens home position sensor's output remains LOW (de-actuated) for 6.0 seconds after the lens moves to the home position.

- Possible Causes -

- Lens home position sensor failure
- Lens drive motor defective
- Main board defective
- Lens drive mechanism defective

- Action -

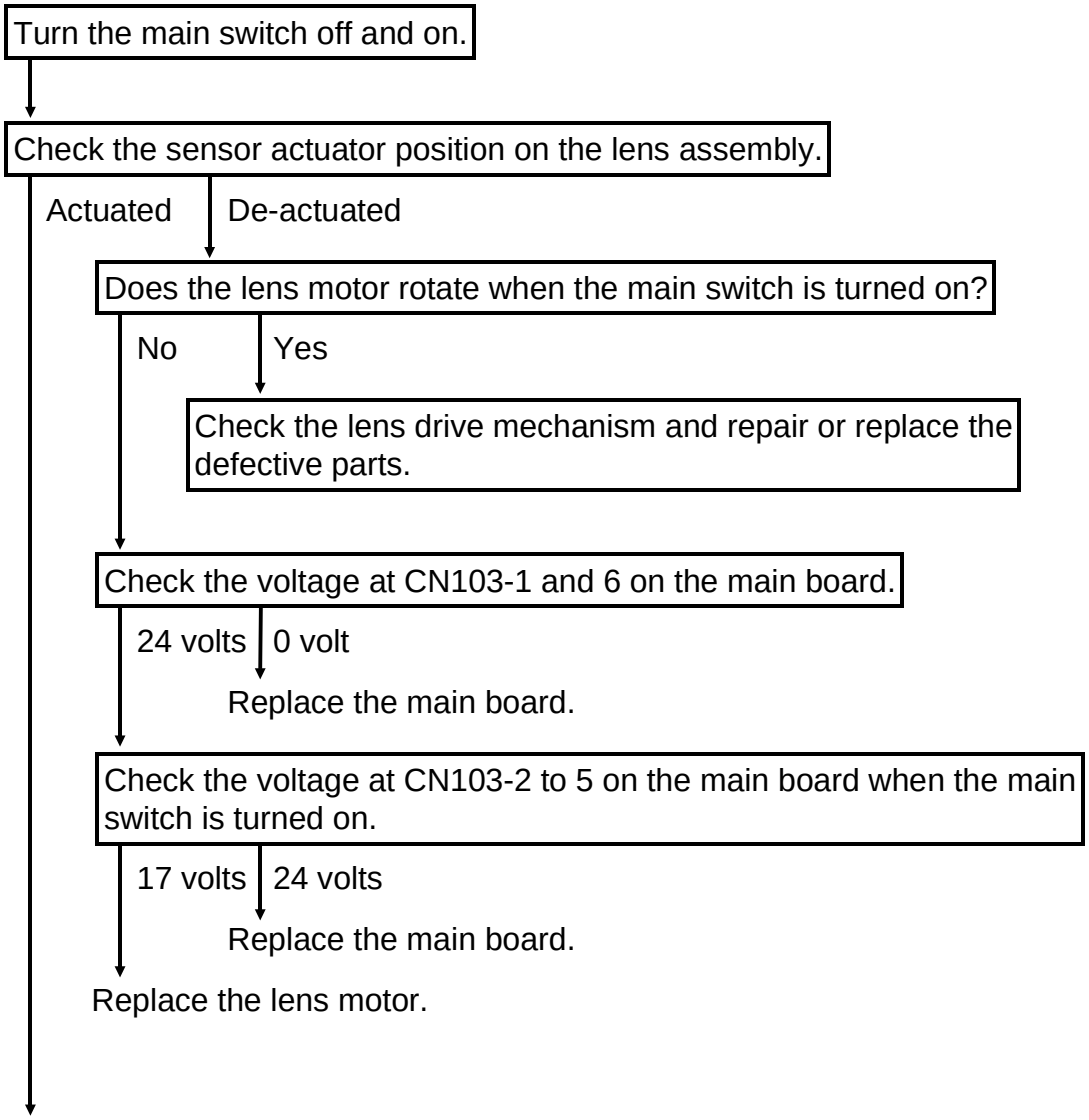

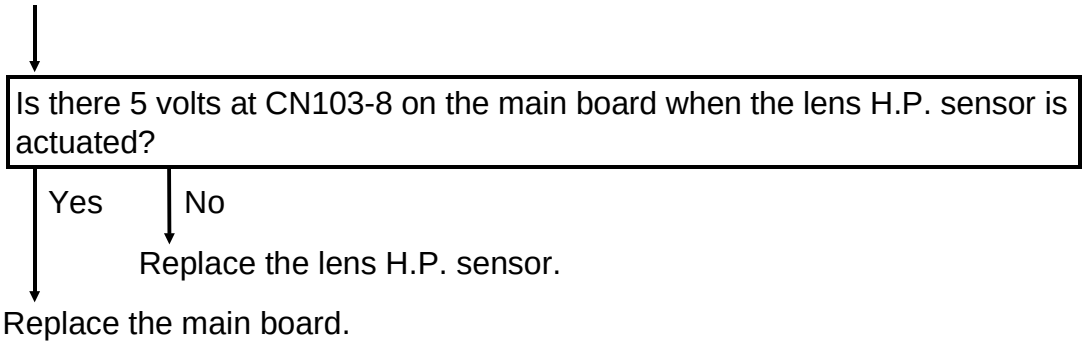
Is there 5 volts at CN103-8 on the main board when the lens H.P. sensor is actuated?
Yes
No
Replace the lens H.P. sensor.
Replace the main board.

2.7 CODE #29 — LENS HOME POSITION ERROR (A077/A078 COPIERS ONLY)

- Definition -

The lens home position sensor's output remains HIGH (actuated) for 3.5 seconds after the lens leaves the home position.

- Possible Causes -

- Lens home position sensor failure
- Lens drive motor defective
- Main board defective
- Lens drive mechanism defective
- Defective dc harness
- CN103 on the main board is not correctly connected.

- Action -

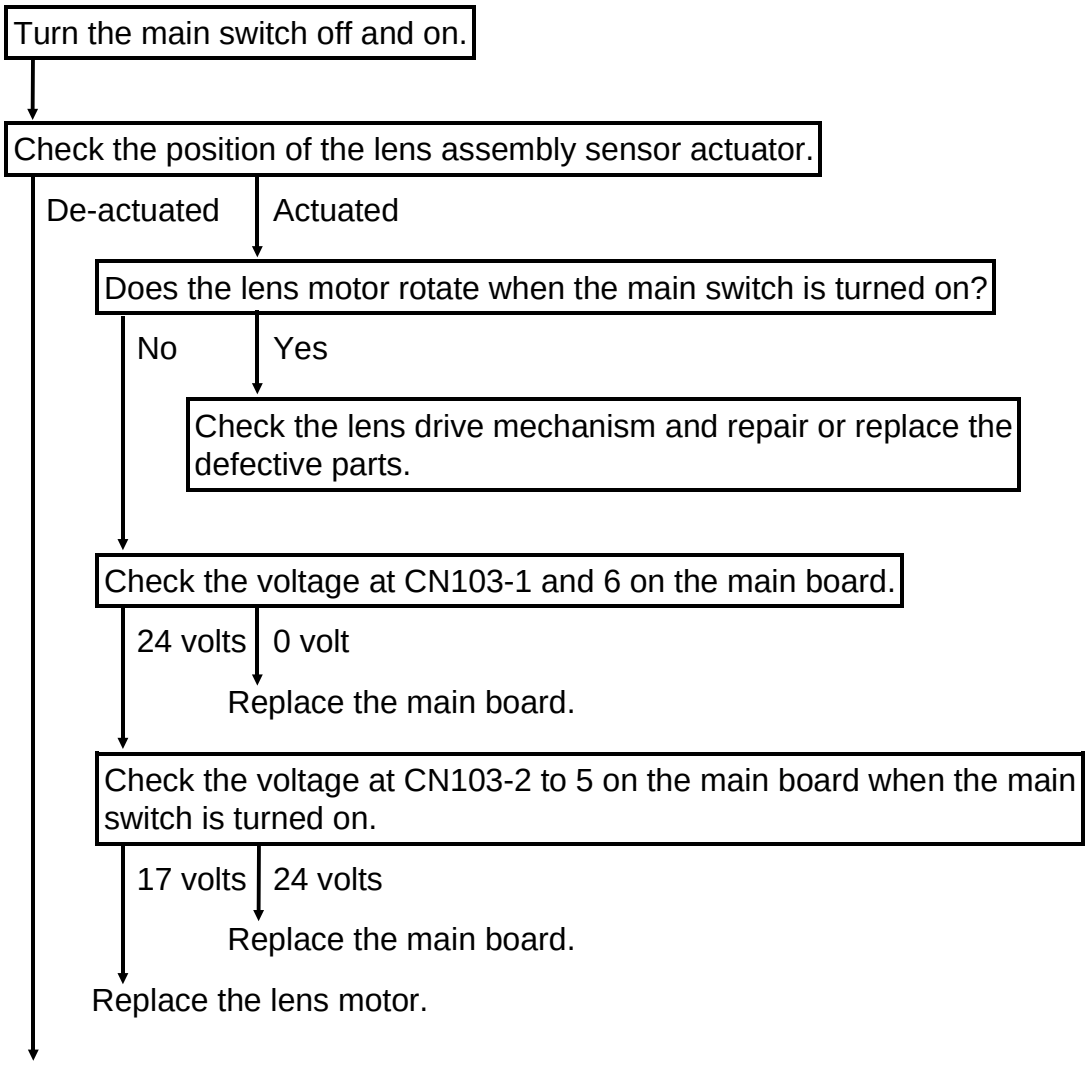

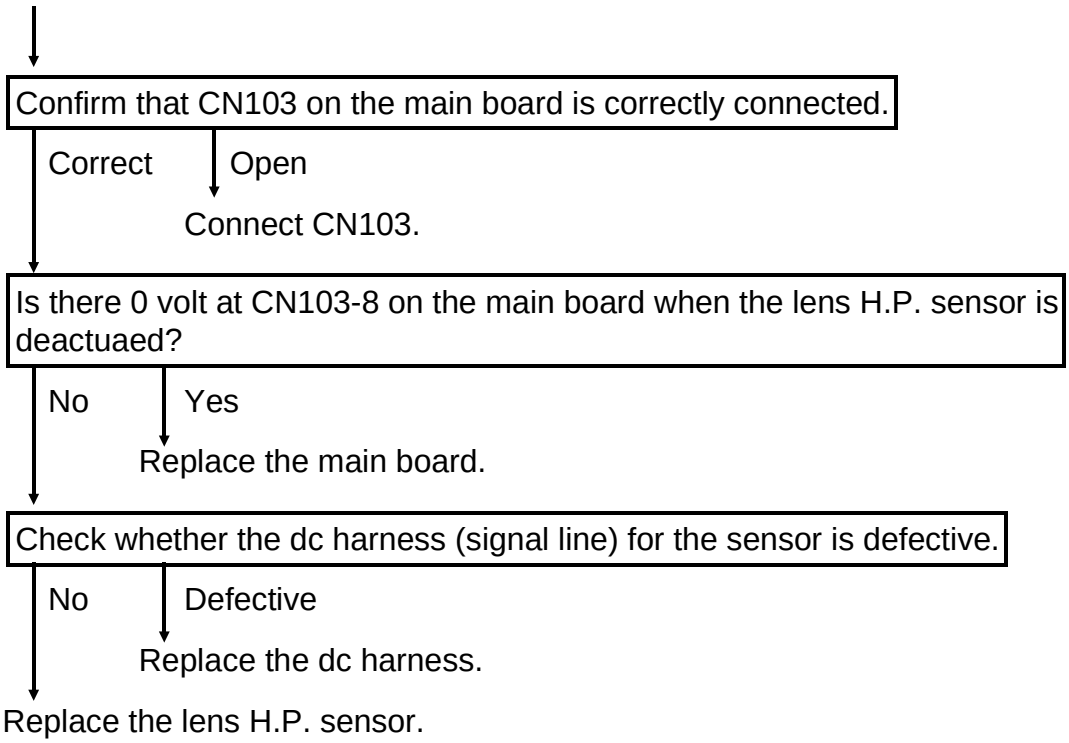
Confirm that CN103 on the main board is correctly connected.
Correct
Open
Connect CN103.
Is there 0 volt at CN103-8 on the main board when the lens H.P. sensor is deactuaed?
No
Yes
Replace the main board.
Check whether the dc harness (signal line) for the sensor is defective.
No
Defective
Replace the dc harness.
Replace the lens H.P. sensor.

2.8 CODE #2A — 4TH/5TH MIRROR HOME POSITION ERROR (A077/A078 COPIERS ONLY)

- Definition -

The 4th/5th mirror home position sensor's output remains LOW (de-actuated) for 2.5 seconds after the 4th/5th mirror assembly moves to the home position.

- Possible Causes -

- 4th/5th mirror home position sensor failure
- 4th/5th mirror motor defective
- Main board defective
- 4th/5th mirror drive mechanism defective

- Action -

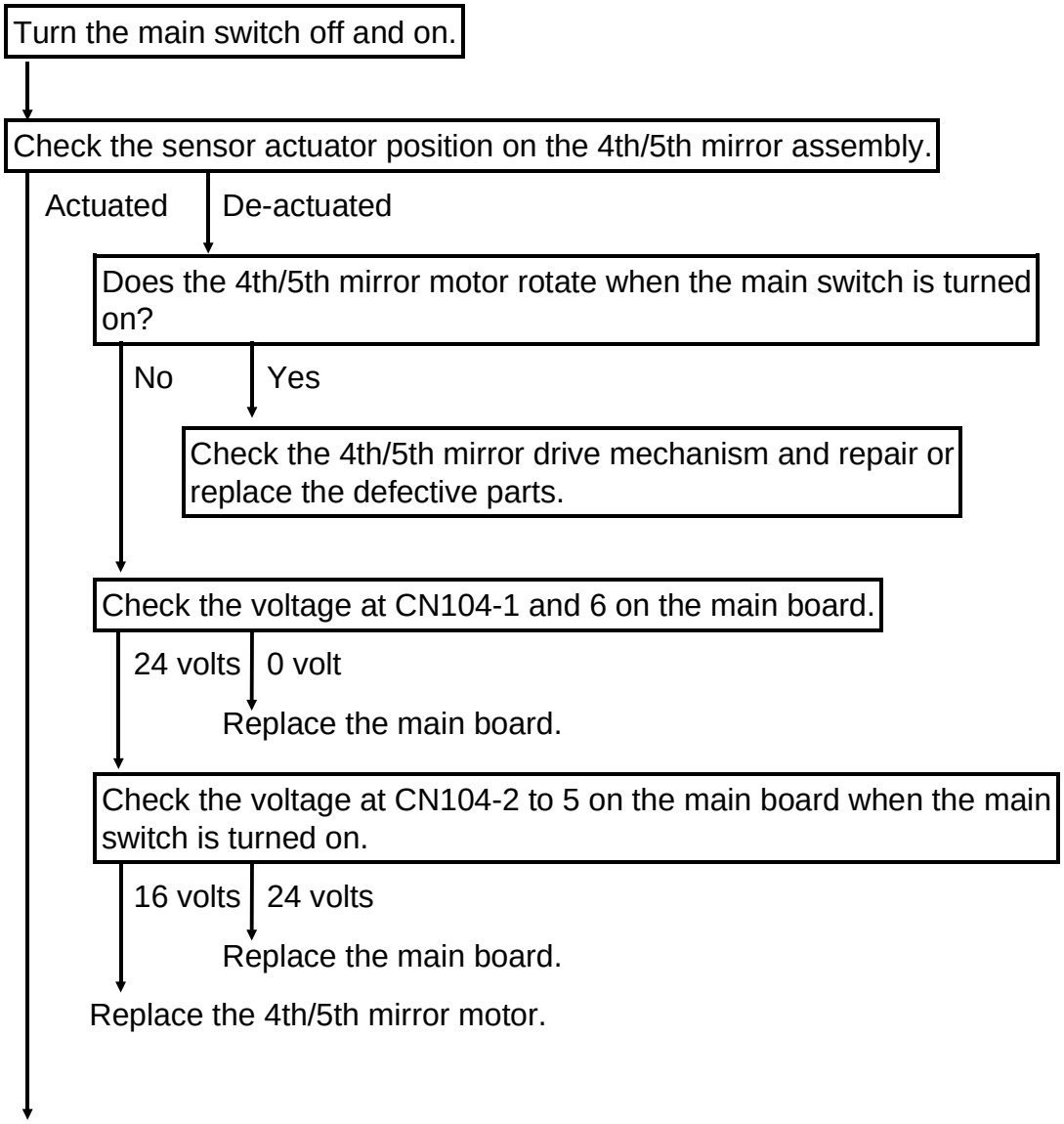

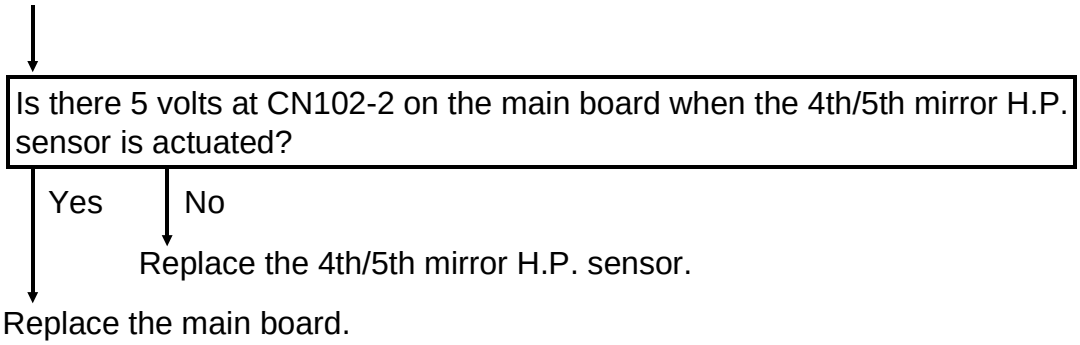
Is there 5 volts at CN102-2 on the main board when the 4th/5th mirror H.P. sensor is actuated?
Yes
No
Replace the 4th/5th mirror H.P. sensor.
Replace the main board.

2.9 CODE #2B — 4TH/5TH MIRROR HOME POSITION ERROR (A077/A078 COPIERS ONLY)

- Definition -

The 4th/5th mirror home position sensor's output remains HIGH (actuated) for 2.5 seconds after the 4th/5th mirror assembly leaves the home position.

- Possible Causes -

- 4th/5th mirror home position sensor failure
- 4th/5th mirror motor defective
- Main board defective
- 4th/5th mirror drive mechanism defective
- Defective dc harness
- CN102 or CN104 on the main board is not correctly connected.

- Action -

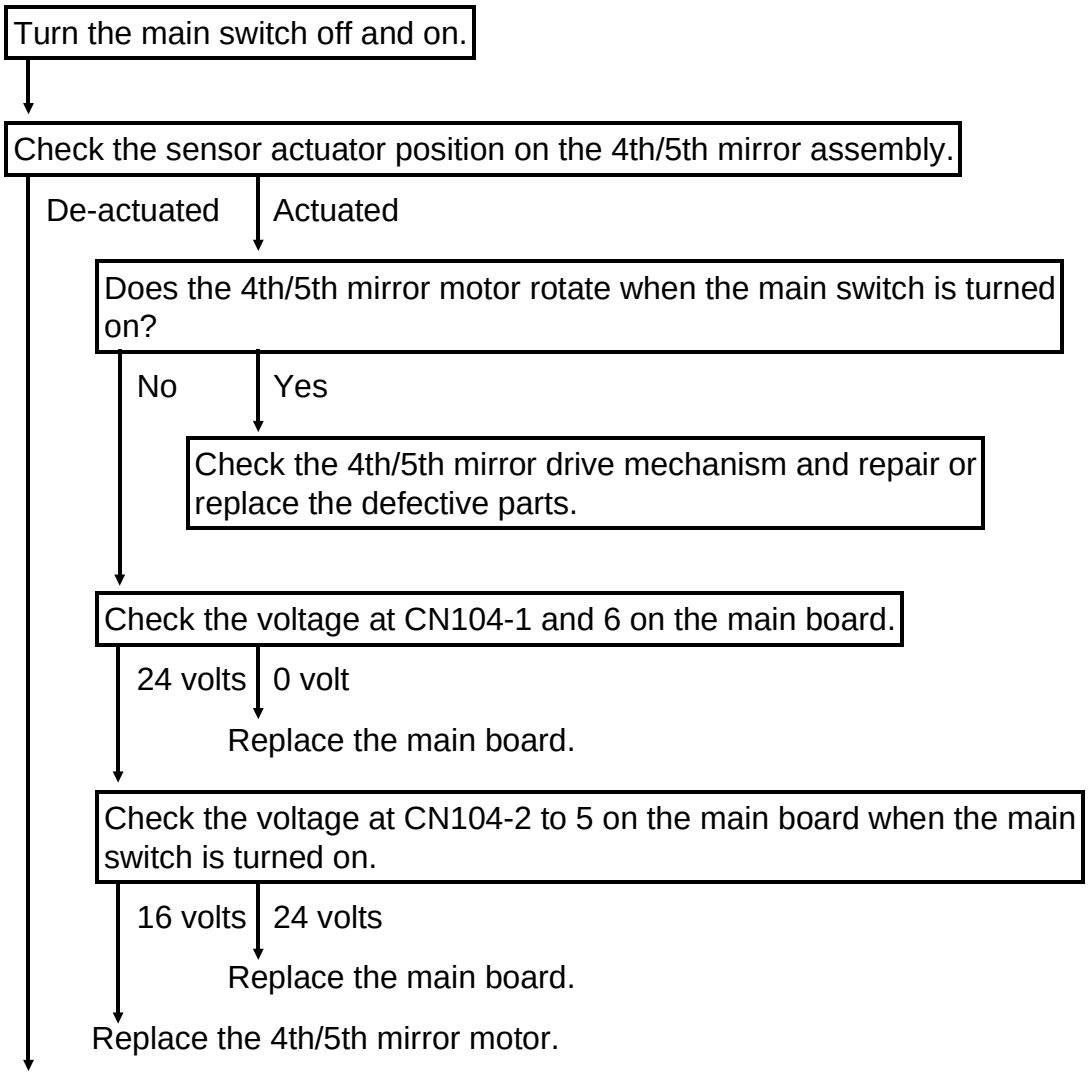

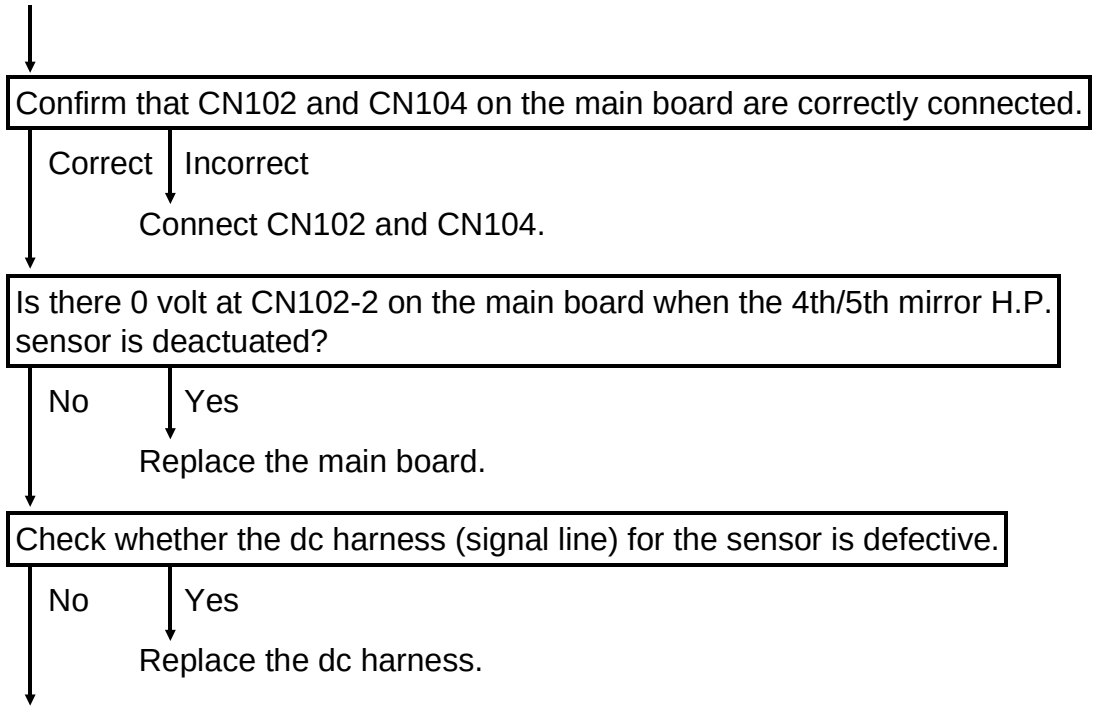
Confirm that CN102 and CN104 on the main board are correctly connected.
Correct
Incorrect
Connect CN102 and CN104.
Is there 0 volt at CN102-2 on the main board when the 4th/5th mirror H.P. sensor is deactuated?
No
Yes
Replace the main board.
Check whether the dc harness (signal line) for the sensor is defective.
No
Yes
Replace the dc harness.
Replace the 4th/5th mirror H.P. sensor.

2.10 CODE #52 — FUSING WARM-UP ERROR

- Definition -

The temperature detected by the thermistor does not reach 150°C within 30 seconds after the main switch is turned on.

- Possible Causes -

- Thermistor position error
- Fusing lamp open
- Thermoswitch open
- Defective ac drive board
- Main board defective
- Defective ac harness
- CN114 on the main board or CN401 on the ac drive board is not correctly connected.

- Action -

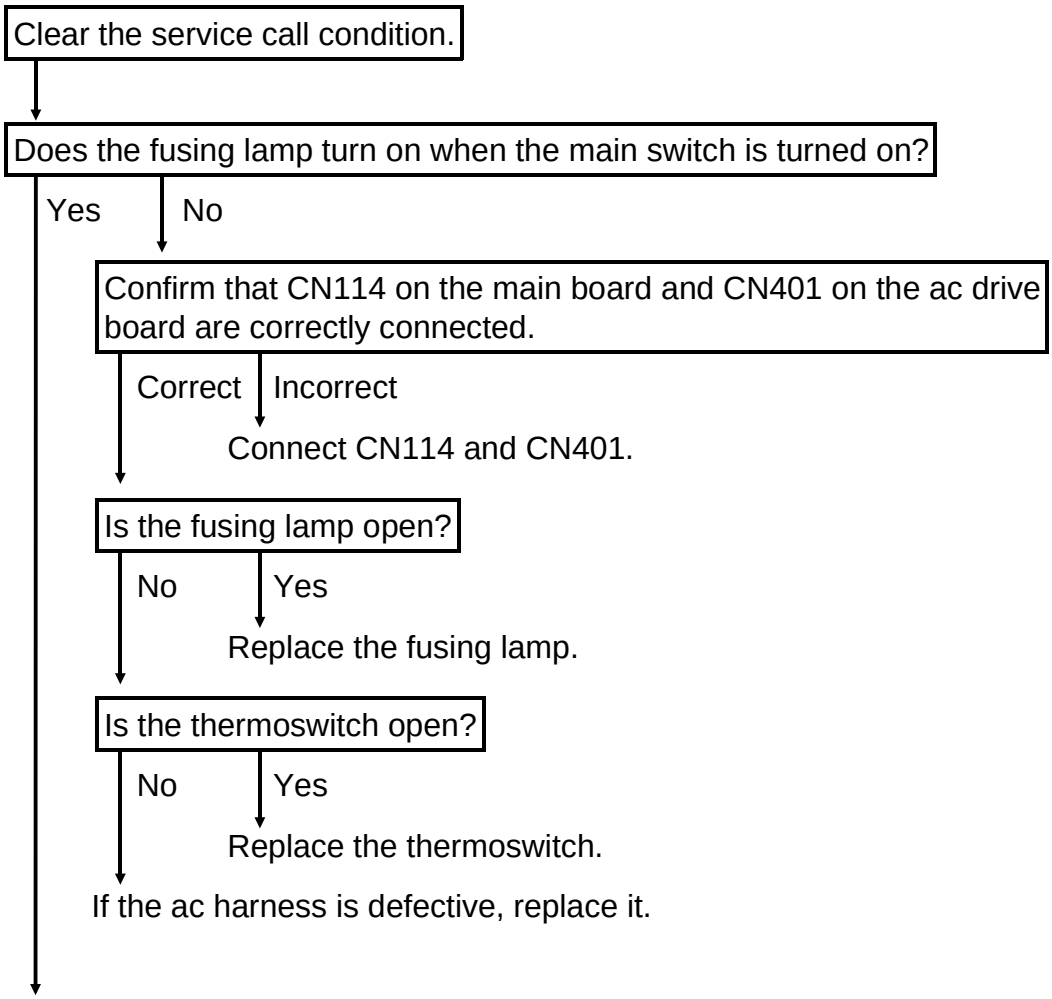

Yes

Check the voltage at CN114-6 on the main board.

0 volt

24 volts

Replace the main board.

Check the voltage at CN114-4 on the main board.

0 volt

24 volts

Replace the main board.

Check the voltage at CN114-8 on the main board.

24 volts

0 volt

Replace the main board.

Does the thermistor properly contact the hot roller?

Yes

No

Correctly position the thermistor.

Does the voltage at TP102 on the main board increase after the main switch is turned on?

Yes

No

Replace the thermistor.

Replace the ac drive board.

2.11 CODE #53 — FUSING OVERHEAT

- Definition -

The temperature detected by the thermistor becomes higher than 240°C

- Possible Causes -

- Thermistor short
- Defective ac drive board
- Main board defective
- Fusing harness shorted

- Action -

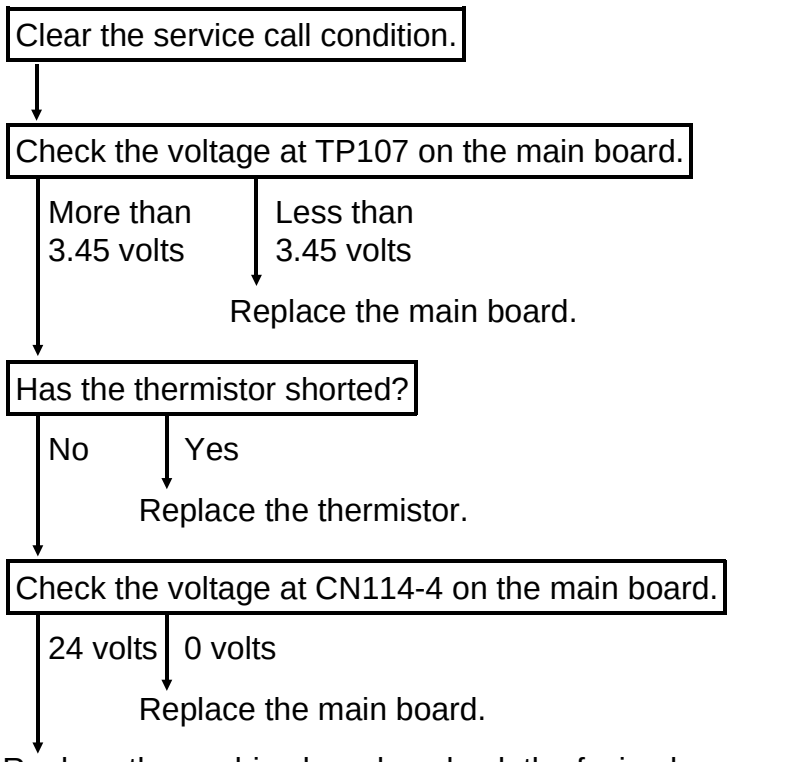

2.12 CODE #55 — FUSING THERMISTOR OPEN

- Definition -

The temperature detected by the thermistor does not reach 2°C within 20 seconds after the main switch is turned on.

- Possible Causes -

- Thermistor open
- Main board defective
- Defective ac drive board
- Fusing lamp open
- Thermoswitch open
- Defective ac harness

- Action -

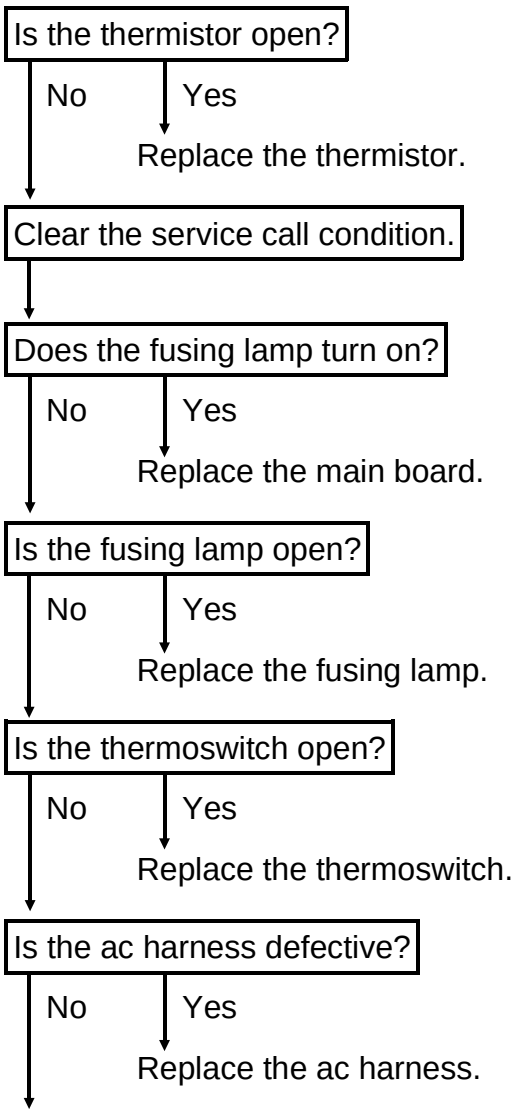

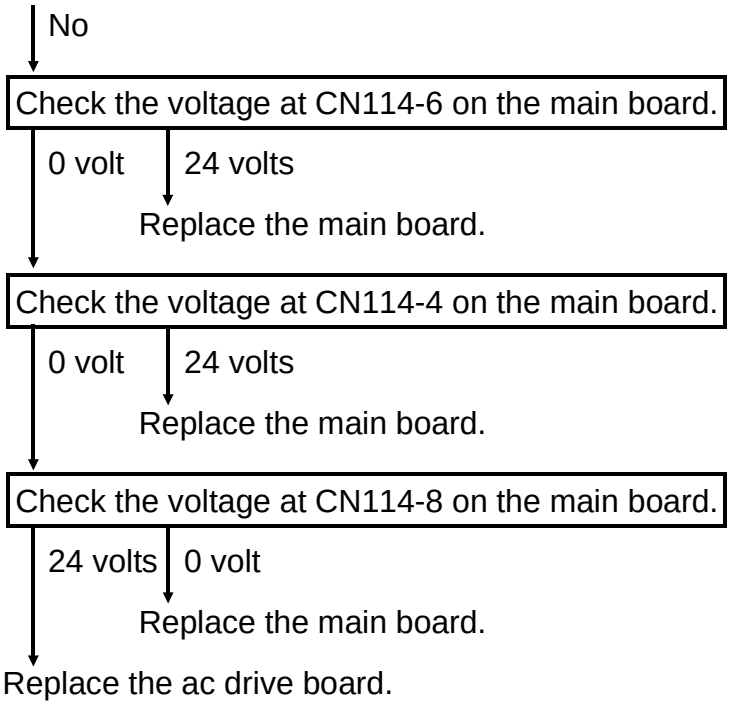
No
Check the voltage at CN114-6 on the main board.
0 volt
24 volts
Replace the main board.
Check the voltage at CN114-4 on the main board.
0 volt
24 volts
Replace the main board.
Check the voltage at CN114-8 on the main board.
24 volts
0 volt
Replace the main board.
Replace the ac drive board.

2.13 CODE #96 — DF TIMING PULSE ERROR

- Definition -

The DF CPU does not receive a DF timing pulse within 100 milliseconds.

- Possible Causes -

- DF main board defective
- DF motor defective
- Pulse generator sensor failure
- Feed-in or transport mechanism defective
- CN113 or CN117 on the DF main board or CN121 on the pulse generator sensor is not correctly connected.

- Action -

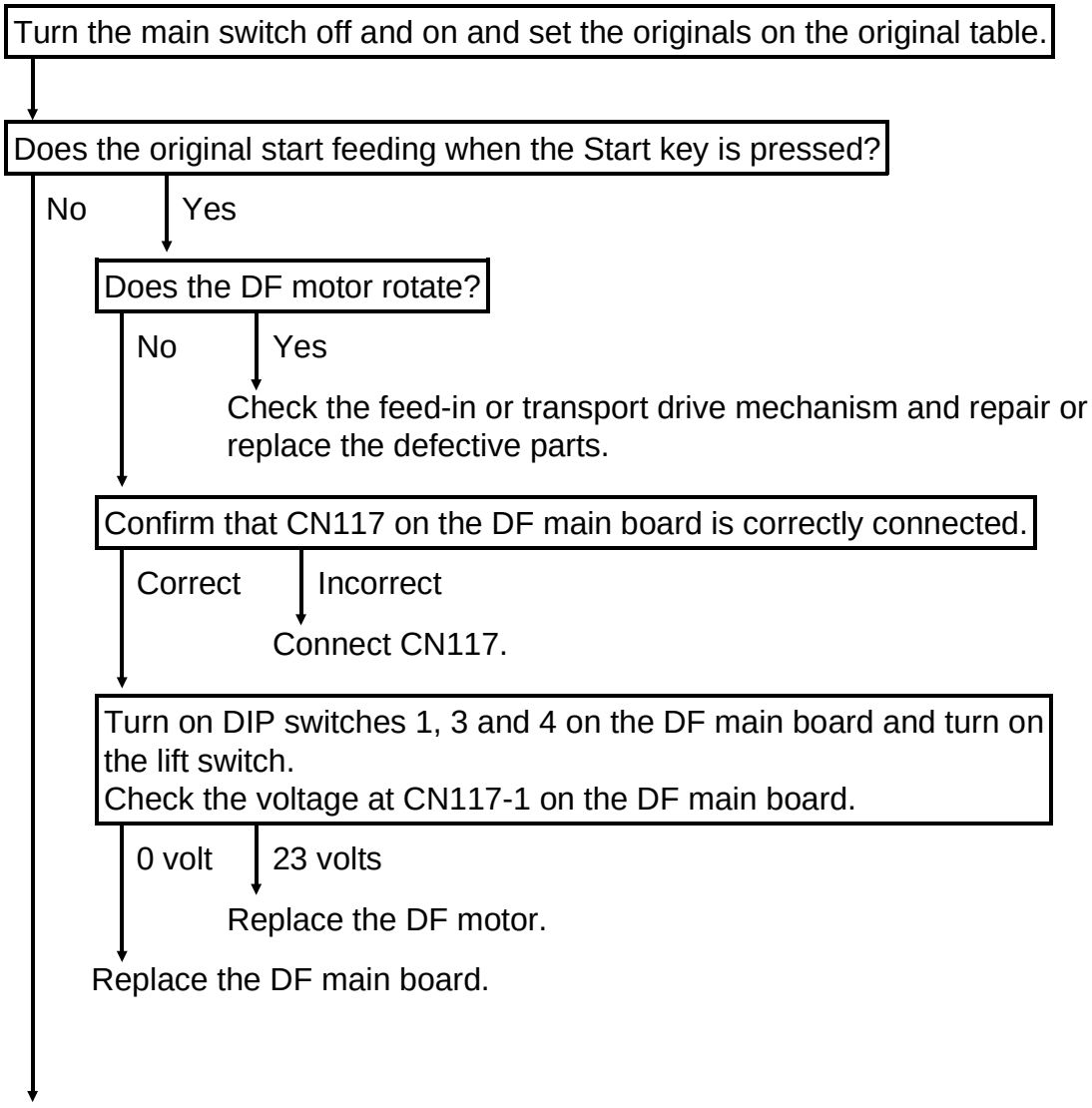

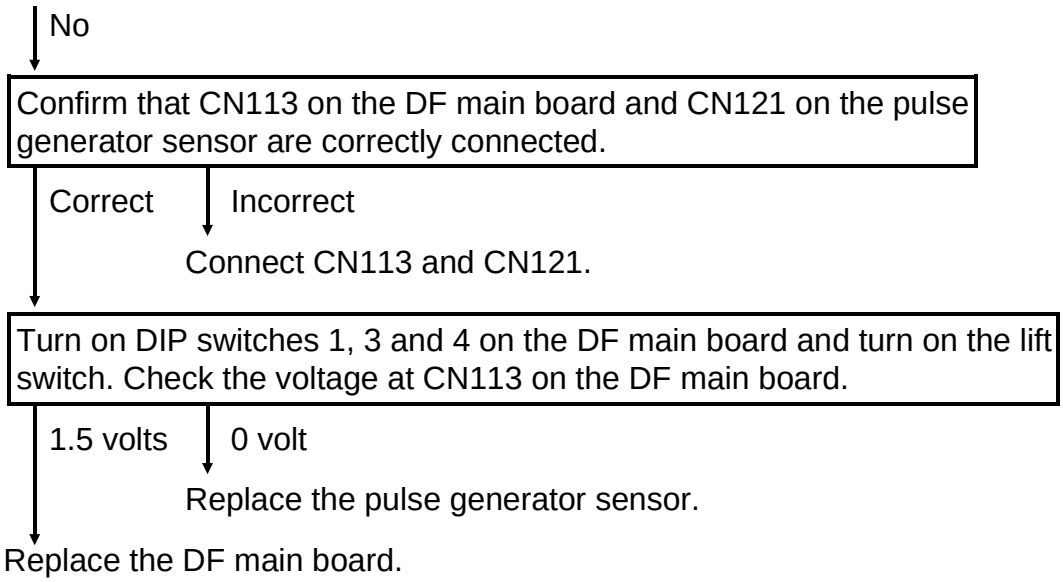
No
Confirm that CN113 on the DF main board and CN121 on the pulse generator sensor are correctly connected.
Correct
Incorrect
Connect CN113 and CN121.
Turn on DIP switches 1, 3 and 4 on the DF main board and turn on the lift switch. Check the voltage at CN113 on the DF main board.
1.5 volts
0 volt
Replace the pulse generator sensor.
Replace the DF main board.

2.14 DF COMMUNICATION ERROR

- Symptom -

The original misfeed indicator blinks (no SC code is indicated).

- Definition -

The DF CPU does not receive the "DF confirmed" signal from the copier CPU when the main switch is turned on.

- Possible Causes -

- Optical fiber cable is not correctly connected to the DF main board or DF interface board.
- CN2 on the DF interface board or CN120 on the main board is not correctly connected.
- Optics fiber cable defective
- Main board defective
- DF main board defective
- DF interface board defective
- Defective dc harness between CN2 and CN120

2.15 ABNORMAL CONDITION IN TONER DENSITY DETECTION

- Symptom -

The Auto ID indicator or the selected manual ID level blinks. (No SC Code is indicated.)

- Definition -

If Vsg goes below 2.5 volts or Vsp goes above 2.5 volts 5 times in a row.

- Possible Causes -

- Incorrect Vsg voltage
- Dirty ID sensor
- Low toner density
- ID sensor defective
- Main board defective

- Action -

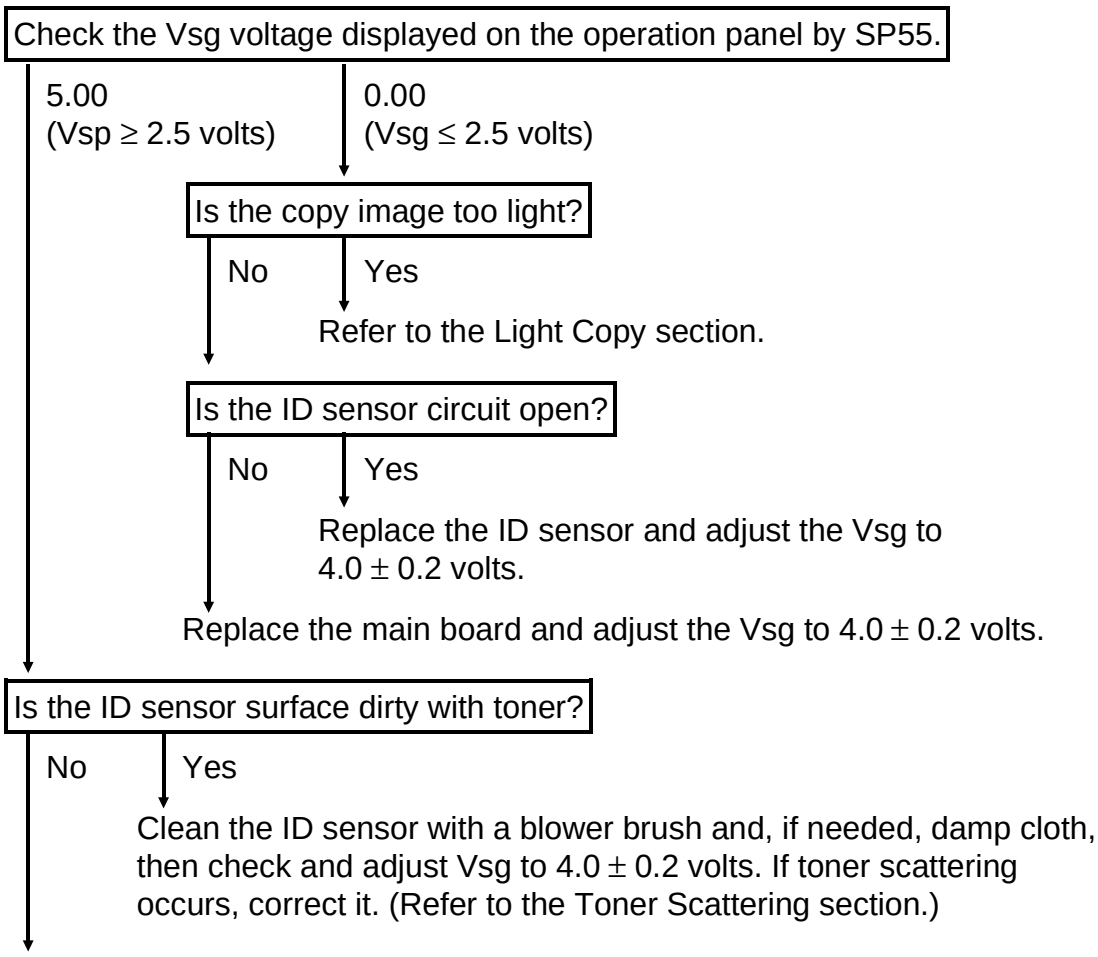

No

Is Vsg less than 2.5 volts when checking TP110 on the main board by SP 54?

No

Yes

Readjust the Vsg to 4.0 ± 0.2 volts.

Check whether the ID sensor has a short.

No Short

Short

Replace the ID sensor.

Replace the main board.

3. ELECTRICAL COMPONENT DEFECTS

3.1 SENSORS

Component	Condition	Symptom
Scanner Home Position Sensor (S1)	Stays HIGH (CN103-11)	SC code (E22) is displayed.
	Stays LOW (CN103-11)	SC code (E21) is displayed.
Lens Home Position Sensor (S2) (A077/A078 copiers only)	Stays HIGH (CN103-8)	SC code (E29) is displayed.
	Stays LOW (CN103-8)	SC code (E28) is displayed.
4th/5th Mirror Home Position Sensor (S3) (A077/A078 copiers only)	Stays HIGH (CN102-2)	SC code (E2B) is displayed.
	Stays LOW (CN102-2)	SC code (E2A) is displayed.
Registration Sensor (S4)	Stays HIGH (CN117-2)	"Check Paper Path" indicator and "J2" indicator light when a copy is made.
	Stays LOW (CN117-2)	"Check Paper Path" indicator and "J2" indicator light when the main switch is turned on.
Exit Sensor (S5)	Stays HIGH (CN116-2)	"Check Paper Path" indicator and "J3" indicator light when a copy is made.
	Stays LOW (CN116-2)	"Check Paper Path" indicator and "J3" indicator light when the main switch is turned on.
Relay Sensor (S6)	Stays HIGH (CN117-6)	"J1" indicator lights when a copy is made.
	Stays LOW (CN117-6)	"Interrupt" indicator stays on although the copy paper is not placed on the manual feed table when the main switch is turned on.
Image Density (ID Sensor) (S7)	Stays HIGH (CN112-5)	The CPU detects an ID sensor abnormal condition. The ADS or Manual Image Density indicator starts blinking.
	Stays LOW (CN112-5)	

3.2 SWITCHES & OTHER ELECTRICAL COMPONENTS

Component	Condition	Symptom
Main Switch (SW1)	OPEN	The copier does not turn on.
	SHORTED	The copier does not turn off.
Front Cover Safety Switch (SW2)	OPEN	The copier does not turn on.
	SHORTED	The copier does not turn off when the front or exit cover is opened.
1st Paper Tray SW (SW3)	OPEN	The Start key stays red even when the 1st paper tray is closed.
	SHORTED	The Start key stays green even when the 1st paper tray is open, and "J1" indicator lights after the Start key is pressed.
2nd Paper Tray SW (SW4) (A078 copier only)	OPEN	The Start key stays red even when the 2nd paper tray is closed.
	SHORTED	The Start key stays green even when the 2nd paper tray is open, and "J1" indicator lights after the Start key is pressed.
Exposure Lamp (L1)	OPEN	SC Code (E11) is displayed.
Fusing Lamp (L2)	OPEN	SC Code (E52) is displayed.
Fusing Thermistor (TH1)	OPEN	SC Code (E55) is displayed.
	SHORTED	SC Code (E53) is displayed.
Fusing Thermoswitch (TS)	OPEN	SC Code (E52) is displayed.
Optics Thermofuse (TF)	OPEN	SC Code (E11) is displayed.

3.3 FUSES & CIRCUIT BREAKERS

Component	Condition	Symptom
FU201 (250 V/6.3 A) (dc power supply board)	OPEN	The copier does not turn on even when the main switch is turned on.
FU401 (125 V/15 A) (ac drive board) ... 115 V machine only	OPEN	The copier does not turn on even when the main switch is turned on.
F1 (250 V/2 A) (DF main board)	OPEN	The DF does not turn on even when the main switch is turned on.
FU101 (250 V/2 A) (Between CN418 on the ac drive board and CN1 of the DF connector) ... 220~230 V/240 V machine only	OPEN	The DF does not turn on even when the main switch is turned on.
Circuit Breaker ... 220~230 V/240 V machine only	OPEN	The copier does not turn on even when the main switch is turned on.