POINT-TO-POINT DIAGRAM A219 COPIER

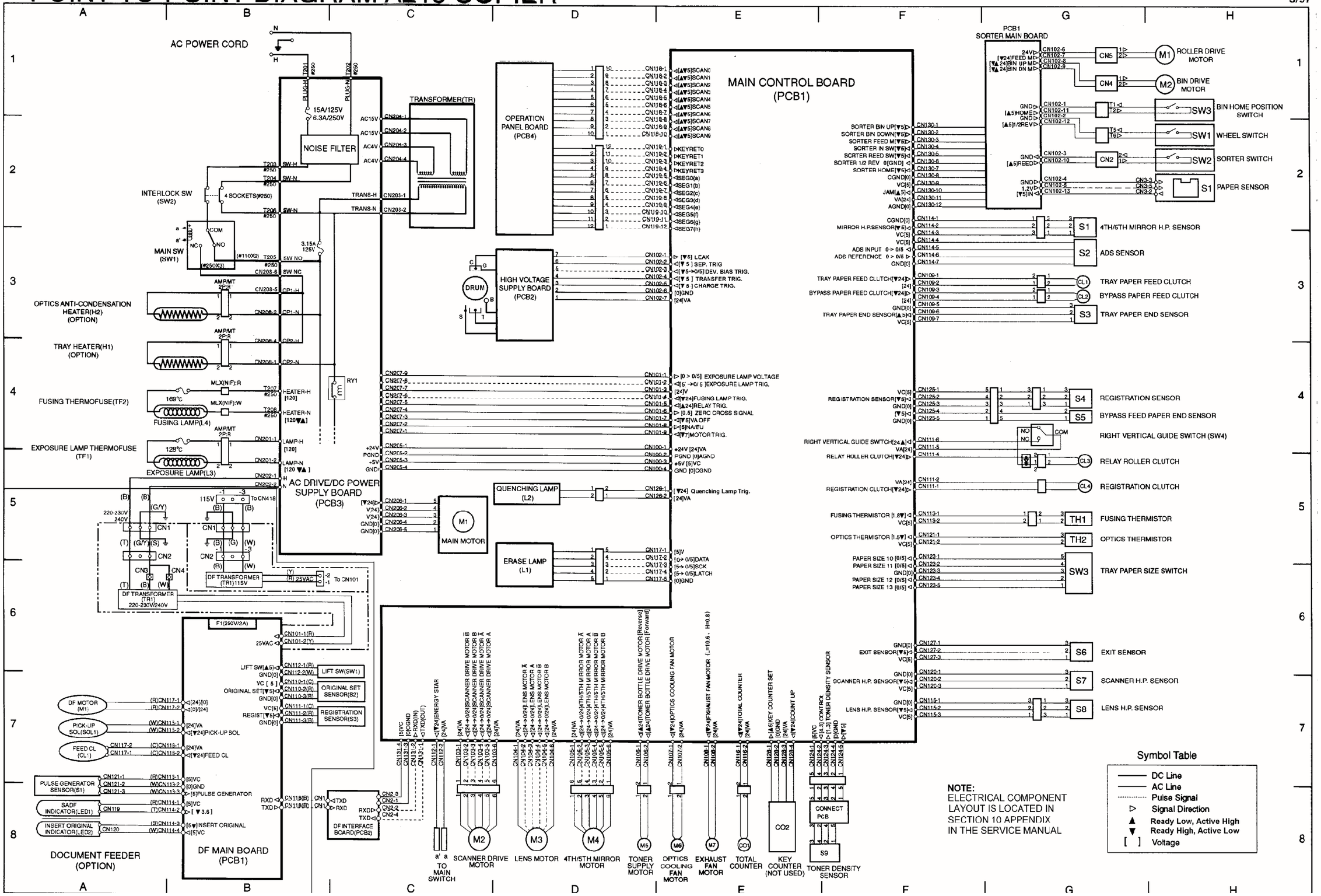

POINT-TO-POINT DIAGRAM A245 COPIER

Aug ,25,1997

AC POWER CORD
N
H
PLUG-H
T201
#250
PLUG-N
T202
#250
15A/125V
6.3A/250V
NOISE FILTER
TRANSFORMER(TR)
AC30V
AC30V
AC8V
AC8V
CN204-1
CN204-2
CN204-3
CN204-4
MAIN SW
(SW1)
(#250X3)
NC
COM
NO
(#110X2)
a'
a
INTERLOCK SW
(SW2)
4 SOCKETS(#250)
T203
#250
SW-H
T204
#250
SW-N
T206
#250
SW-N
T205
#250
SW-NO
CN208-6
SW-NC
TRANS-H
TRANS-N
CN203-1
CN203-2
3.15A
125V
OPTICS ANTI-CONDENSATION
HEATER(H2)
(OPTION)
AMP/MT
2P:R
CN208-5
OP1-H
CN208-2
OP1-N
UPPER TRAY HEATER(H1)
(OPTION)
CN208-4
OP2-H
CN208-1
OP2-N
LOWER TRAY HEATER(H3)
(OPTION)
FUSING THERMOFUSE(TF2)
MLX(NIF):R
169℃
MLX(NIF):W
T207
#250
HEATER-H
T208
#250
HEATER-N
FUSING LAMP(L4)
EXPOSURE LAMP THERMOFUSE
(TF1)
128℃
CN201-1
LAMP-H
CN201-2
LAMP-N
EXPOSURE LAMP(L3)
CN202-1
CN202-2
220-230V
240V
115V
To CN418
CN1
CN2
CN3
CN4
DF TRANSFORMER
(TR1)115V
DF TRANSFORMER
(TR1)
220-230V/240V
(Y)
(R) 25VAC
To CN101
F1(250V/2A)
CN101-1(R)
CN101-2(Y)
25VAC
LIFT SW[▲5]
GND[0]
CN112-1(R)
CN112-2(W)
LIFT SW(SW1)
VC[5]
ORIGINAL SET[▼5]
GND[0]
CN110-1(C)
CN110-2(R)
CN110-3(B)
ORIGINAL SET
SENSOR(S2)
VC[5]
REGIST[▼5]
GND[0]
CN111-1(C)
CN111-2(R)
CN111-3(B)
REGISTRATION
SENSOR(S3)
DF MOTOR
(M1)
(R)CN117-1
(B)CN117-2
◁[24]/[0]
◁[0]/[24]
PICK-UP
SOL(SOL1)
(W)CN115-1
(W)CN115-2
[24]VA
◁[▼24]PICK-UP SOL
FEED CL
(CL1)
CN117-2
CN117-1
(C)CN116-1
(C)CN116-2
[24]VA
◁[▼24]FEED CL
PULSE GENERATOR
SENSOR(S1)
CN121-1
CN121-2
CN121-3
(R)CN113-1
(W)CN113-2
(W)CN113-3
[5]VC
[0]GND
▷[5]PULSE GENERATOR
SADF
INDICATOR(LED1)
CN119
(R)CN114-1
(T)CN114-2
[5]VC
▷[▼5]MISFEED
INSERT ORIGINAL
INDICATOR(LED2)
CN120
(S)CN114-3
(W)CN114-4
[▼5]INSERT ORIGINAL
[5]VC
DOCUMENT FEEDER
(OPTION)
DF MAIN BOARD
(PCB1)
RXD
TXD
CN118(B)
CN1
TXD
RXD
CN2-3
CN2-1
CN2-2
CN2-4
DF INTERFACE
BOARD(PCB2)
LAMP-RMS
LAMP-TRG
HEATER-24V
HEATER-TRG
RELAY-TRG
Z-CROSS
24V ON/OFF
NA/EU
MOTOR-TRG
CN207-9
CN207-8
CN207-7
CN207-6
CN207-5
CN207-4
CN207-3
CN207-2
CN207-1
+24V
PGND
+5V
GND
CN205-1
CN205-2
CN205-3
CN205-4
AC DRIVE/DC POWER
SUPPLY BOARD
(PCB3)
[▼24]
V[24]
V[24]
GND[0]
GND[0]
CN206-1
CN206-2
CN206-3
CN206-4
CN206-5
M1
MAIN MOTOR
QUENCHING LAMP
(L2)
CN126-1
CN126-2
[▼24]
[24]VA
OPERATION
PANEL BOARD
(PCB4)
CN118-1
CN118-2
CN118-3
CN118-4
CN118-5
CN118-6
CN118-7
CN118-8
CN118-9
CN118-10
◁[▲▼5]SCAN0
◁[▲▼5]SCAN1
◁[▲▼5]SCAN2
◁[▲▼5]SCAN3
◁[▲▼5]SCAN4
◁[▲▼5]SCAN5
◁[▲▼5]SCAN6
◁[▲▼5]SCAN7
◁[▲▼5]SCAN8
◁[▲▼5]SCAN9
CN119-1
CN119-2
CN119-3
CN119-4
CN119-5
CN119-6
CN119-7
CN119-8
CN119-9
CN119-10
CN119-11
CN119-12
▷KEYRET0
▷KEYRET1
▷KEYRET2
▷KEYRET3
◁SEG0(a)
◁SEG1(b)
◁SEG2(c)
◁SEG3(d)
◁SEG4(e)
◁SEG5(f)
◁SEG6(g)
◁SEG7(h)
HIGH VOLTAGE
SUPPLY BOARD
(PCB2)
CN102-1
CN102-2
CN102-3
CN102-4
CN102-5
CN102-6
CN102-7
▷LEAK
◁[▼24]S TRIG.
◁[▲0→0/5]B
◁[▼24]T TRIG.
◁[▼24]C TRIG.
[0]GND
[24]VA
ERASE LAMP
(L1)
CN117-1
CN117-2
CN117-3
CN117-4
CN117-5
[5]V
[5→ 0/5]DATA
[5→ 0/5]SCK
[5→ 0/5]LATCH
[0]GND
MAIN CONTROL BOARD
(PCB1)
CN101-1
CN101-2
CN101-3
CN101-4
CN101-5
CN101-6
CN101-7
CN101-8
CN101-9
▷EXPOSURE LAMP VOLTAGE
◁[24→0/24]EXPOSURE LAMP TRIG.
[24]V
◁[0/24]FUSING LAMP TRIG.
◁[▼24]RELAY TRIG.
▷ZERO CROSS SIGNAL
◁[▼5]VA OFF
▷[0/5]NA/EU
◁[▼24]MOTOR TRIG.
CN100-1
CN100-2
CN100-3
CN100-4
+24V [24]VA
PGND [0]AGND
+5V [5]VC
GND [0]CGND
PCB1
SORTER MAIN BOARD
24V▷
[▼24]FEED M▷
[▼▲ 24]BIN M▷
[▼▲ 24]BIN M▷
CN1-6
CN1-7
CN1-8
CN1-9
CN5
M1
ROLLER DRIVE
MOTOR
CN4
M2
BIN DRIVE
MOTOR
GND▷
[▼5]HOME▷
GND▷
[▼5]1/2REV▷
CN1-1
CN1-11
CN1-2
CN1-12
T1◁
T2▷
SW3
BIN HOME POSITION
SWITCH
T5◁
T6▷
SW1
WHEEL SWITCH
GND◁
[▼5]REED▷
CN1-3
CN1-10
2◁
1▷
CN2
SW2
SORTER SWITCH
GND▷
SV▷
[▼5]IN▷
CN1-4
CN1-5
CN1-13
CN3-3
CN3-5
CN3-2
S1
PAPER SENSOR
SORTER BIN UP[▼5]▷
SORTER BIN DOWN[▼5]▷
SORTER FEED M[▼5]▷
SORTER IN SW[▼5]◁
SORTER REED SW[▼5]◁
SORTER 1/2 REV[▼5]◁
SORTER HOME[▼5]◁
CGND[0]
VC[5]
JAM[▼5]◁
VA[24]
AGND[0]
CN130-1
CN130-2
CN130-3
CN130-4
CN130-5
CN130-6
CN130-7
CN130-8
CN130-9
CN130-10
CN130-11
CN130-12
CGND[0]
MIRROR H.P.SENSOR[▼5]◁
VC[5]
VC[5]
ADS INPUT ◁
ADS REFERENCE▷
GND[0]
CN114-1
CN114-2
CN114-3
CN114-4
CN114-5
CN114-6
CN114-7
S1
4TH/5TH MIRROR H.P. SENSOR
S2
ADS SENSOR
UPPER TRAY PAPER FEED CLUTCH[▼24]▷
[24]
BYPASS PAPER FEED CLUTCH[▼24]▷
[24]
GND[0]
UPPER TRAY PAPER END SENSOR[▼5]◁
VC[5]
CN109-1
CN109-2
CN109-3
CN109-4
CN109-5
CN109-6
CN109-7
CL1
UPPER TRAY PAPER FEED CLUTCH
CL2
BYPASS PAPER FEED CLUTCH
S3
UPPER TRAY PAPER END SENSOR
LOWER TRAY PAPER FEED CLUTCH[▼24]▷
[24]
REGISTRATION CLUTCH[▼24]▷
[24]
GND[0]
LOWER TRAY PAPER END SENSOR[▼5]◁
VC[5]
CN110-1
CN110-2
CN110-3
CN110-4
CN110-5
CN110-6
CN110-7
CL3
LOWER TRAY PAPER FEED CLUTCH
CL4
REGISTRATION CLUTCH
S10
LOWER TRAY PAPER END SENSOR
VC[5]
REGISTRATION SENSOR[▼5]◁
GND[0]
[5]
GND[0]
CN125-1
CN125-2
CN125-3
CN125-4
CN125-5
S4
REGISTRATION SENSOR
S5
BYPASS FEED PAPER END SENSOR
RIGHT VERTICAL GUIDE SWITCH[▲24]◁
VA[24]
UPPER RELAY ROLLER CLUTCH[▼24]▷
LOWER RELAY ROLLER CLUTCH[▼24]▷
CN111-6
CN111-5
CN111-4
CN111-3
NO
NC
COM
CL5
UPPER RELAY ROLLER CLUTCH
CL6
LOWER RELAY ROLLER CLUTCH
RIGHT VERTICAL GUIDE SWITCH (SW4)
FUSING THERMISTOR◁
VC[5]
OPTICS THERMISTOR◁
VC[5]
CN113-1
CN113-2
CN121-1
CN121-2
TH1
FUSING THERMISTOR
TH2
OPTICS THERMISTOR
PAPER SIZE 10◁
PAPER SIZE 11◁
GND[0]
PAPER SIZE 12◁
PAPER SIZE 13◁
CN123-1
CN123-2
CN123-3
CN123-4
CN123-5
SW3
UPPER TRAY PAPER SIZE SWITCH
PAPER SIZE 20◁
PAPER SIZE 21◁
GND[0]
PAPER SIZE 22◁
PAPER SIZE 23◁
CN122-1
CN122-2
CN122-3
CN122-4
CN122-5
SW5
LOWER TRAY PAPER SIZE SWITCH
GND[0]
EXIT SENSOR[▼5]◁
VC[5]
CN127-1
CN127-2
CN127-3
S6
EXIT SENSOR
GND[0]
SCANNER H.P. SENSOR[▼5]◁
VC[5]
CN120-1
CN120-2
CN120-3
S7
SCANNER H.P. SENSOR
GND[0]
LENS H.P. SENSOR[▼5]◁
VC[5]
CN115-1
CN115-2
CN115-3
S8
LENS H.P. SENSOR
[5]VC
[0]CGND
▷RXD(IN)
◁TXD(OUT)
CN131-4
CN131-3
CN131-2
CN131-1
◁[▼24]ENERGY STAR
[24]VA
CN112-1
CN112-2
a'
a
TO
MAIN
SWITCH
[24]VA
◁[24→0/24]SCANNER DRIVE MOTOR B̄
◁[24→0/24]SCANNER DRIVE MOTOR B
◁[24→0/24]SCANNER DRIVE MOTOR Ā
◁[24→0/24]SCANNER DRIVE MOTOR A
CN103-1
CN103-2
CN103-3
CN103-4
CN103-5
CN103-6
M2
SCANNER DRIVE
MOTOR
[24]VA
◁[24→0/24]LENS MOTOR Ā
◁[24→0/24]LENS MOTOR A
◁[24→0/24]LENS MOTOR B̄
◁[24→0/24]LENS MOTOR B
CN104-1
CN104-2
CN104-3
CN104-4
CN104-5
CN104-6
M3
LENS MOTOR
[24]VA
◁[24→0/24]4TH/5TH MIRROR MOTOR Ā
◁[24→0/24]4TH/5TH MIRROR MOTOR A
◁[24→0/24]4TH/5TH MIRROR MOTOR B̄
◁[24→0/24]4TH/5TH MIRROR MOTOR B
CN105-1
CN105-2
CN105-3
CN105-4
CN105-5
CN105-6
M4
4TH/5TH MIRROR
MOTOR
◁[▼24]TONER BOTTLE DRIVE MOTOR
[24]VA
CN106-1
CN106-2
M5
TONER
SUPPLY
MOTOR
◁[▼24]OPTICS COOLING FAN MOTOR
[24]VA
CN107-1
CN107-2
M6
OPTICS
COOLING
FAN
MOTOR
◁[▼24]EXHAUST FAN MOTOR
[24]VA
CN108-1
CN108-2
M7
EXHAUST
FAN
MOTOR
◁[▼24]TOTAL COUNTER
[24]VA
CN116-1
CN116-2
CO1
TOTAL
COUNTER
▷[▲5]KEY COUNTER SET
[0]GND
[24]VA
◁[▼24]COUNT UP
CN128-1
CN128-2
CN128-3
CN128-4
CO2
KEY
COUNTER
(NOT USED)
[5]VC
◁CONTROL
▷TONER DENSITY SENSOR
[0]GND
▷[▼5]
CN124-1
CN124-2
CN124-3
CN124-4
CN124-5
CONNECT
PCB
S9
TONER DENSITY
SENSOR
Symbol Table
DC Line
AC Line
Pulse Signal
▷ Signal Direction
▲ Active High
▼ Active Low
[ ] Voltage