Gestetner® RICOH® savin®

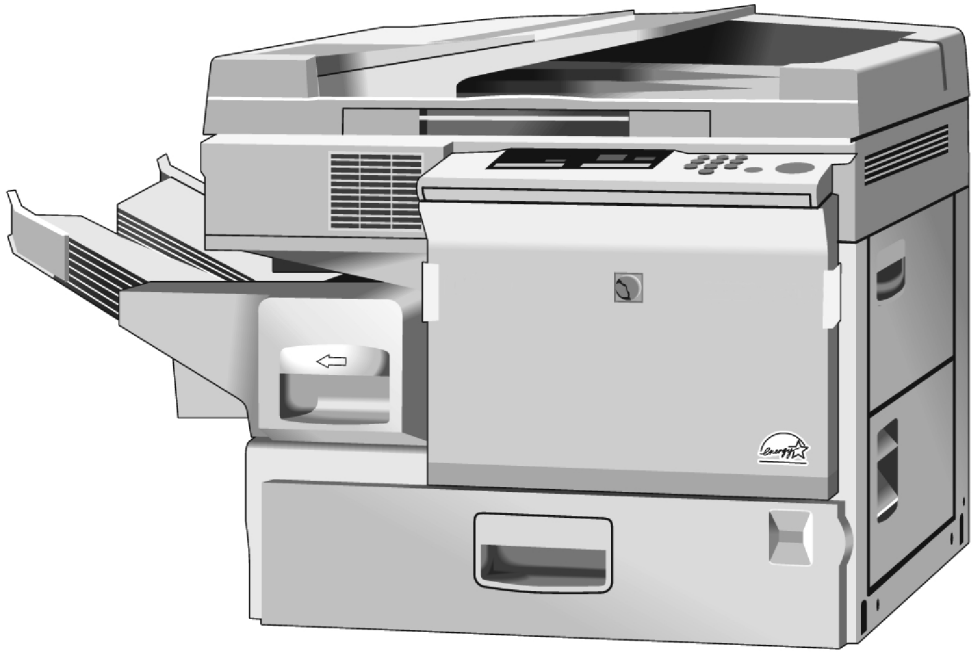

A219/A245/B019

SERVICE MANUAL

000917MIU

RICOH GROUP COMPANIES

Gestetner®

RICOH®

savin®

A219/A245/B019
SERVICE MANUAL

RICOH GROUP COMPANIES

Gestetner® RICOH® savin®

A219/A245/B019
SERVICE MANUAL

000917MIU

It is the reader's responsibility when discussing the information contained within this document to maintain a level of confidentiality that is in the best interest of Ricoh Corporation and its member companies.

NO PART OF THIS DOCUMENT MAY BE REPRODUCED IN ANY FASHION AND DISTRIBUTED WITHOUT THE PRIOR PERMISSION OF RICOH CORPORATION.

All product names, domain names or product illustrations, including desktop images, used in this document are trademarks, registered trademarks or the property of their respective companies.

They are used throughout this book in an informational or editorial fashion only and for the benefit of such companies. No such use, or the use of any trade name, or web site is intended to convey endorsement or other affiliation with Ricoh products.

© 2000 RICOH Corporation. All rights reserved.

WARNING

The Service Manual contains information regarding service techniques, procedures, processes and spare parts of office equipment distributed by Ricoh Corporation. Users of this manual should be either service trained or certified by successfully completing a Ricoh Technical Training Program.

Untrained and uncertified users utilizing information contained in this service manual to repair or modify Ricoh equipment risk personal injury, damage to property or loss of warranty protection.

Ricoh Corporation

LEGEND

PRODUCT CODE	COMPANY		
	GESTETNER	RICOH	SAVIN
A219	2715X	FT4015	9115
A245	2718	FT4018	---
B019	2913Z	FT3813	2013Z

DOCUMENTATION HISTORY

REV. NO.	DATE	COMMENTS
*	3/97	Original Printing
2	7/98	Reprint
3	2/99	A245 Addition
4	3/2000	B019 Addition

Table of Contents

OVERALL MACHINE INFORMATION

1. SPECIFICATIONS 1-1

2. COPY PROCESS AROUND THE DRUM. 1-4

3. MECHANICAL COMPONENT LAYOUT 1-6

4. DRIVE LAYOUT 1-7

5. PAPER PATH 1-8

6. ELECTRICAL COMPONENT DESCRIPTIONS 1-9

DETAILED DESCRIPTIONS

1. DRUM 2-1

1.1 OPC DRUM CHARACTERISTICS 2-1

1.2 DRIVE MECHANISM 2-2

2. CHARGE 2-3

2.1 OVERVIEW. 2-3

2.2 CHARGE CORONA WIRE CLEANER MECHANISM 2-4

2.3 CHARGE CORONA CIRCUIT 2-5

3. OPTICS 2-6

3.1 OVERVIEW. 2-6

3.2 SCANNER DRIVE 2-7

3.3 LENS DRIVE. 2-8

3.4 4TH/5TH MIRROR DRIVE 2-9

3.5 AUTOMATIC IMAGE DENSITY SENSOR 2-10

3.6 EXPOSURE LAMP VOLTAGE CONTROL 2-11

4. ERASE 2-15

4.1 OVERVIEW. 2-15

4.2 LEAD EDGE ERASE 2-16

4.3 SIDE ERASE 2-16

4.4 TRAILING EDGE ERASE 2-17
5. DEVELOPMENT 2-18
5.1 OVERVIEW 2-18
5.2 DRIVE MECHANISM 2-19
5.3 CROSS-MIXING 2-20
5.4 DEVELOPMENT BIAS FOR IMAGE DENSITY CONTROL 2-21
5.4.1 Base Bias Voltage Factor in Manual Image Density Mode 2-22
5.4.2 Base Bias Voltage Factor in Automatic Image Density (ADS) Mode . . . 2-23
5.4.3 Drum Residual Voltage (V_R) Correction Factor 2-23
5.5 DEVELOPMENT BIAS CIRCUIT 2-24
6. TONER SUPPLY 2-25
6.1 TONER BOTTLE REPLENISHMENT MECHANISM 2-25
6.2 TONER SUPPLY MECHANISM 2-26
6.3 TONER DENSITY DETECTION MECHANISM 2-27
6.4 TD SENSOR CHECK AND TONER SUPPLY TIMING 2-28
6.5 TONER SUPPLY CONTROL 2-29
6.5.1 Modes Available 2-29
6.5.2 Detect Supply Mode 2-29
6.5.3 Fixed Supply Mode 2-32
6.5.4 Abnormal Condition in Toner Density Detection 2-32
6.6 TONER END 2-33
6.6.1 Toner Near End 2-33
6.6.2 Toner End 2-33
6.6.3 Toner End Recovery 2-34
7. IMAGE TRANSFER AND PAPER SEPARATION 2-35
7.1 OVERALL 2-35
7.2 TRANSFER CORONA AND DISCHARGE PLATE CIRCUIT 2-36
8. DRUM CLEANING 2-37
8.1 OVERVIEW 2-37
8.2 TONER RECYCLING MECHANISM 2-38
9. QUENCHING 2-39

10. PAPER FEED AND REGISTRATION 2-40

10.1 OVERVIEW. 2-40

10.2 PAPER TRAY FEED. 2-41

10.2.1 Paper Lift Mechanism 2-41

10.2.2 Paper Feed Mechanism 2-42

10.3 BY-PASS FEED 2-43

10.3.1 Overview 2-43

10.3.2 Paper Feed Mechanism and Paper End Detection 2-44

10.4 PAPER REGISTRATION 2-45

10.5 SIDE FENCE DOUBLE STOPPER MECHANISM 2-46

10.6 PAPER END DETECTION 2-47

10.7 PAPER FEED AND MISFEED DETECTION TIMING 2-48

10.8 OTHERS 2-49

10.8.1 Paper Size Detection 2-49

10.8.2 Shock Absorber. 2-49

11. IMAGE FUSING 2-50

11.1 OVERVIEW. 2-50

11.2 FUSING DRIVE MECHANISM 2-51

11.3 FUSING LAMP CONTROL 2-52

11.4 FUSING LAMP CONTROL CIRCUIT 2-54

11.4.1 Overview 2-54

11.4.2 On/Off Control 2-55

11.4.3 Phase Control Mode 2-55

11.4.4 Overheat Protection 2-56

3. INSTALLATION

1. INSTALLATION REQUIREMENTS 3-1

1.1 ENVIRONMENT 3-1

1.2 MACHINE LEVEL 3-1

1.3 MINIMUM SPACE REQUIREMENTS 3-2

1.4 POWER REQUIREMENTS 3-2

2. COPIER (A219) 3-3

2.1 ACCESSORY CHECK 3-3

2.2 INSTALLATION PROCEDURE 3-4

3. DOCUMENT FEEDER (A662) 3-8

3.1 ACCESSORY CHECK 3-8

3.2 INSTALLATION PROCEDURE 3-9

4. SORTER (A657) 3-12

4.1 ACCESSORY CHECK 3-12

4.2 INSTALLATION PROCEDURE 3-13

5. OTHERS 3-16

5.1 OPTICS ANTI-CONDENSATION HEATER INSTALLATION (OPTION) 3-16

5.2 TRAY HEATER INSTALLATION (OPTION) 3-18

SERVICE TABLES

1. SERVICE REMARKS 4-1

1.1 GENERAL CAUTIONS 4-1

1.2 IMAGING UNIT 4-1

1.3 OPTICS 4-2

1.4 TRANSFER CORONA 4-3

1.5 FUSING UNIT 4-3

1.6 PAPER FEED 4-4

1.7 OTHERS 4-4

2. PROGRAM MODES 4-6

2.1 BASIC OPERATION 4-6

2.2 SP MODE 4-7

2.3 SP MODE QUICK REFERENCE TABLE 4-8

2.4 UP MODE AND SP MODE CROSS REFERENCE TABLE 4-9

2.5 SERVICE PROGRAM MODE TABLE 4-10

2.6 CLEAR ALL MEMORY PROCEDURE 4-24

3. PRACTICAL SP MODE USE TABLE 4-26

4. SERVICE TABLES 4-27

4.1 TEST POINTS (Main Control Board) 4-27

4.2 VARIABLE RESISTORS. 4-27

PREVENTIVE MAINTENANCE

1. PREVENTIVE MAINTENANCE SCHEDULE 5-1

1.1 PM TABLE 5-1

1.2 REGULAR PM PROCEDURE 5-4

2. SPECIAL TOOLS AND LUBRICANTS 5-7

REPLACEMENT AND ADJUSTMENT

1. EXTERIOR AND INNER COVERS. 6-1

1.1 EXTERIOR COVER REMOVAL 6-1

1.1.1 Front Cover 6-1

1.1.2 Front Right Cover 6-1

1.1.3 Rear Right Cover 6-1

1.1.4 Lower Right Cover 6-2

1.1.5 Lower Left Cover. 6-2

1.1.6 Upper Left Cover. 6-2

1.1.7 Rear Cover 6-2

1.1.8 Upper Cover 6-3

1.2 INNER COVER REMOVAL 6-4

2. OPTICS 6-5

2.1 EXPOSURE GLASS REMOVAL 6-5

2.2 1ST SCANNER/EXPOSURE LAMP REMOVAL 6-6

2.3 SCANNER BELT REMOVAL 6-8

2.4 1ST AND 2ND SCANNER POSITION ADJUSTMENT 6-9

2.5 SCANNER DRIVE MOTOR REMOVAL 6-10

2.6 LENS DRIVE MOTOR REMOVAL 6-11

2.7 4TH/5TH MIRROR DRIVE MOTOR REMOVAL. 6-12

2.8 2ND MIRROR REPLACEMENT 6-13
2.9 3RD MIRROR REPLACEMENT 6-14
2.10 4TH AND 5TH MIRROR REPLACEMENT 6-15
2.11 ADS SENSOR REPLACEMENT 6-17
3. AROUND THE DRUM 6-18
3.1 IMAGING UNIT REMOVAL AND TONER BOTTLE REMOVAL 6-18
3.2 CHARGE CORONA WIRE AND CHARGE CORONA GRID REPLACEMENT 6-19
3.3 CLEANING BLADE REPLACEMENT 6-20
3.4 DRUM REPLACEMENT 6-21
3.5 TONER COLLECTION COIL AND TONER RECYCLING BELT REPLACEMENT 6-22
3.6 DEVELOPER REPLACEMENT 6-23
3.7 REPLACEMENT THE TONER DENSITY SENSOR (TD SENSOR) 6-24
3.8 AGITATOR REPLACEMENT 6-25
3.9 TONER SUPPLY MOTOR ASS'Y REPLACEMENT 6-26
3.10 ERASE LAMP REPLACEMENT 6-27
3.11 QUENCHING LAMP REPLACEMENT 6-28
4. PAPER FEED 6-29
4.1 PAPER TRAY REMOVAL 6-29
4.2 TRAY FEED ROLLER REPLACEMENT 6-30
4.3 TRAY PAPER FEED ROLLER ADJUSTMENT 6-31
4.4 BY-PASS FEED ROLLER AND FRICTION PAD REPLACEMENT 6-32
4.5 BY-PASS PAPER FEED CLUTCH, HIGH VOLTAGE SUPPLY BOARD, AND REGISTRATION CLUTCH REPLACEMENT 6-34
4.6 RIGHT VERTICAL GUIDE SWITCH REPLACEMENT 6-35
4.7 RELAY ROLLER CLUTCH AND PAPER FEED CLUTCH REPLACEMENT 6-36
4.8 PAPER SIZE SWITCH REPLACEMENT 6-37
4.9 BY-PASS PAPER END SENSOR AND REGISTRATION SENSOR REPLACEMENT 6-38
5. FUSING 6-39
5.1 FUSING UNIT REMOVAL 6-39
5.2 HOT ROLLER REPLACEMENT 6-40

5.3 PRESSURE ROLLER REPLACEMENT 6-41
5.4 HOT ROLLER STRIPPER REPLACEMENT 6-42
5.5 FUSING ENTRANCE GUIDE ADJUSTMENT 6-43
5.6 FUSING PRESSURE ADJUSTMENT 6-44
6. TRANSFER/SEPARATION 6-45
6.1 TRANSFER CORONA WIRE REPLACEMENT 6-45
6.2 DISCHARGE PLATE REPLACEMENT 6-46
7. OTHERS 6-47
7.1 OZONE FILTER REPLACEMENT 6-47
7.2 MAIN CONTROL BOARD REPLACEMENT 6-48
8. COPY QUALITY ADJUSTMENT 6-49
8.1 LIGHT INTENSITY ADJUSTMENT 6-50
8.1.1 Base Exposure Lamp Voltage Adjustment 6-50
8.1.2 Image Density Adjustment 6-51
8.2 DEVELOPMENT BIAS VOLTAGE ADJUSTMENT 6-52
8.2.1 Base Bias Voltage Adjustment 6-52
8.2.2 SP Bias Settings 6-53
8.3 TONER DENSITY ADJUSTMENT 6-54
8.4 TONER SUPPLY RATIO SELECTION 6-54
8.5 GRID VOLTAGE ADJUSTMENT 6-55
8.6 TRANSFER CURRENT ADJUSTMENT 6-56
8.7 CHARGE CURRENT ADJUSTMENT 6-57
8.8 HORIZONTAL MAGNIFICATION ADJUSTMENT 6-58
8.9 VERTICAL MAGNIFICATION ADJUSTMENT 6-58
8.10 FOCUS ADJUSTMENT 6-59
8.11 LEADING EDGE ERASE MARGIN ADJUSTMENT 6-59
8.12 REGISTRATION ADJUSTMENT 6-59
8.13 4TH/5TH MIRROR HEIGHT ADJUSTMENT 6-60
8.14 ADS (Auto Image Density Sensor) ADJUSTMENT 6-61
8.15 SIDE-TO -SIDE REGISTRATION ADJUSTMENT 6-62

TROUBLESHOOTING

1. COPY QUALITY 7-1

1.1 BLANK COPY (WHITE COPY) 7-1

1.2 DIRTY BACKGROUND 7-3

1.3 UNEVEN IMAGE DENSITY 7-5

1.4 VERTICAL BLACK BANDS 7-6

1.5 VERTICAL BLACK LINES 7-7

1.6 VERTICAL WHITE LINES OR BANDS-1 (DULL OR BLURRED) 7-8

1.7 VERTICAL WHITE LINES OR BANDS-2 (THIN, DISTINCT) 7-9

1.8 HORIZONTAL BLACK/WHITE LINES 7-10

1.9 JITTER 7-11

1.10 BLACK SPOTS ON THE COPY IMAGE 7-12

1.11 SKEWED (OPTICAL) COPY IMAGE 7-13

1.12 TONER DENSITY ON COPIES TOO HIGH 7-14

1.13 TONER DENSITY ON COPIES TOO LOW 7-16

1.14 UNFUSED COPY IMAGE 7-18

1.15 CREASING PAPER AFTER FUSING 7-19

1.16 PAPER MISFEED 7-20

1.17 ABNORMAL CONDITION IN TONER DENSITY DETECTION 7-21

2. SERVICE CALL CONDITIONS 7-23

3. ELECTRICAL COMPONENT DEFECTS 7-29

3.1 SENSORS 7-29

3.2 SWITCHES 7-30

4. BLOWN FUSE CONDITIONS 7-31

5. USER CODES 7-31

DOCUMENT FEEDER A662

– DOCUMENT FEEDER (A662) –

1. SPECIFICATIONS 8-1

2. COMPONENT LAYOUT 8-2

2.1 MECHANICAL COMPONENTS 8-2

2.2 ELECTRICAL COMPONENTS 8-2

3. ELECTRICAL COMPONENT DESCRIPTIONS 8-3

4. POWER DISTRIBUTION 8-4

5. BASIC OPERATION 8-5

6. INTERFACE CIRCUIT 8-6

7. ORIGINAL FEED 8-7

7.1 ORIGINAL PICK-UP MECHANISM 8-7

7.2 ORIGINAL SEPARATION MECHANISM 8-8

7.3 ORIGINAL FEED-IN MECHANISM 8-9

7.4 ORIGINAL FEED-OUT MECHANISM 8-10

7.5 DF MOTOR CIRCUIT 8-11

7.6 ORIGINAL FEED AND MISFEED DETECTION TIMING 8-12

8. SERVICE TABLES 8-13

8.1 DIP SWITCHES 8-13

8.2 VARIABLE RESISTORS 8-13

8.3 FUSE 8-13

9. REPLACEMENT AND ADJUSTMENT 8-14

9.1 TRANSPORT BELT REPLACEMENT 8-14

9.2 FEED-IN UNIT REMOVAL 8-16

9.3 PICK-UP ROLLER REPLACEMENT 8-17

9.4 FEED ROLLER REPLACEMENT 8-18

9.5 FRICTION BELT REPLACEMENT 8-19

9.6 PICK-UP SOLENOID ADJUSTMENT 8-20

SORTER A657

1. SPECIFICATIONS 9-1

2. COMPONENT LAYOUT 9-2

3. ELECTRICAL COMPONENT DESCRIPTIONS 9-3

4. BASIC OPERATION 9-4

5. EXIT ROLLER DRIVE MECHANISM 9-5

6. BIN DRIVE MECHANISM 9-6

7. MISFEED DETECTION 9-8

8. SERVICE TABLES 9-8

8.1 FUSE 9-8

9. PREPARATION FOR TRANSPORTATION 9-9

10. ROLLER DRIVE BELT REPLACEMENT 9-10

11. BIN GUIDE LUBRICATION 9-11

APPENDIX

ELECTRICAL COMPONENT LAYOUT (A219) (A662) (A657) 10-1

COPIER TIMING CHART (A219) 10-6

A245 SERVICE MANUAL

1. SPECIFICATIONS 11-1

2. MECHANICAL COMPONENT LAYOUT 11-4

3. DRIVE LAUOUT 11-5

4. PAPER PATH 11-6

5. ELECTRICAL COMPONENT DESCRIPTIONS 11-7

6. PAPER FEED 11-10

6.1 OVERVIEW 11-10

6.2 PAPER LIFT MECHANISM 11-11

6.3 PAPER FEED AND DRIVE MECHANISM 11-12
6.4 PAPER FEED AND MISFEED DETECTION TIMING 11-13
7. IMAGE FUSING 11-14
8. INSTALLATION 11-15
8.1 COPIER ACCESSORY CHECK 11-15
8.2 COPIER INSTALLATION PROCEDURE 11-16
8.3 UPPER AND LOWER TRAY HEATER INSTALLATION (OPTION) 11-20
9. PROGRAM MODE 11-22
9.1 SP MODE QUICK REFERENCE TABLE 11-22
9.2 UP MODE AND SP MODE CROSS REFERENCE TABLE 11-23
9.3 SERVICE PROGRAM MODE TABLE 11-24
10. PREVENTIVE MAINTENANCE SCHEDULE 11-39
10.1 MODIFIES PM TABLE 11-39
11. REPLACEMENT AND ADJUSTMENT 11-42
11.1 PAPER FEED ROLLER REPLACEMENT 11-42
11.2 RELAY ROLLER CLUTCH AND PAPER FEED CLUTCH REPLACEMENT 11-43
11.3 PAPER SIZE SWITCH REPLACEMENT 11-44
11.4 PAPER END SENSORS 11-45
12. REGULAR PM PROCEDURE 11-46
13. SERVICE CALL CONDITIONS 11-49

B019 SERVICE MANUAL

1. SPECIFICATIONS 12-1
2. ELECTRICAL COMPONENTS DESCRIPTION 12-2
3. INSTALLATION PROCEDURES 12-2
3.1 COPIER ACCESSORY CHECK LIST 12-2
4. SERVICE TABLES 12-2
4.1 SERVICE PROGRAM MODES 12-2
5. PM TABLE 12-6

OVERALL MACHINE INFORMATION

SORTER A657

A245 SERVICE MANUAL

TAB POSITION 1

DETAILED DESCRIPTIONS

ELECTRICAL COMPONENTS &TIMING CHART

B019 SERVICE MANUAL

TAB POSITION 2

INSTALLATION

TAB POSITION 3

SERVICE TABLES

TAB POSITION 4

PREVENTIVE MAINTENANCE

TAB POSITION 5

REPLACEMENT & ADJUSTMENT

TAB POSITION 6

TROUBLESHOOTING

TAB POSITION 7

DOCUMENT FEEDER A662

TAB POSITION 8

A219

SERVICE MANUAL

OVERALL
MACHINE INFORMATION

1. SPECIFICATIONS

Configuration: Desk Top

Copy Process: Dry electrostatic transfer system

Originals: Sheet/Book

Original Size: Maximum: A3/11" x 17"

Copy Paper Size: Maximum: A3/11" x 17"
Minimum:
A5/5 1/2" x 8 1/2" sideways (Paper tray feed)
A6/5 1/2" x 8 1/2" lengthwise (By-pass feed)
Non-standard sizes:
Vertical 45 mm ~ 308 mm, 1.8" ~ 12"
Horizontal 148 mm ~ 432 mm, 5.8" ~ 17"

Copy Paper Weight: Paper tray feed: 64 to 90 g/m^2, 17 to 24 lb
By-pass feed: 52 to 157 g/m^2, 14 to 42 lb

Reproduction Ratios:

	Metric Version	Inch Version
Enlargement	200% 141% 122%	200% 155% 129%
Full Size	100%	100%
Reduction	93% 82% 71% 50%	93% 74% 65% 50%

Zoom: From 50% to 200% in 1% steps

Copying Speed: 15 copies/minute (A4/8.5" x 11" sideways)
9 copies/minute (A3/11" x 17")

Warm-up Time: 120 V machines: Less than 30 seconds (at 23°C)
230 V machines: Less than 45 seconds (at 23°C)

First Copy Time: Less than 6.9 seconds (A4/8.5" x 11" sideways)

Copy Number Input: Number keys, 1 to 99

Manual Image Density Selection: 7 steps

Automatic Reset: 1 minute standard setting; can also be set to 3 minutes or no auto reset

Paper Capacity: Paper tray: 500 sheets or less than 56 mm stack height

By-pass feed entrance:

Standard paper	80 sheets
OHP	10 sheets
Others	1 sheet

Toner Replenishment: Bottle exchange (215 g/bottle)

Copy Tray Capacity: 100 sheets

Power Source:
120 V/60 Hz: More than 15 A (for North America)
220 ~ 240 V/50 Hz: More than 8 A (for Europe)
220 V/50 Hz: More than 8 A (for Asia)
220 V/60 Hz: More than 8 A (for Middle East/Asia)
110 V/60 Hz: More than 15 A (for Taiwan)
127 V/60 Hz: More than 15 A (for Middle East)

Power Consumption:

	Copier only	**Full system***
Maximum	1.4 kW (120 V machines)	1.5 kW (120 V machines)
	0.9 kW (230 V machines)	1.0 kW (230 V machines)
Copy cycle	0.71 kW	0.74 kW
Warm-up	0.95 kW	0.95 kW
Stand-by	0.25 kW	0.25 kW
Energy saver	0.2 kW	0.2 kW

*Full system: Copier with document feeder and 10-bin sorter

Dimensions:

	Width	**Depth**	**Height**
Copier	579 mm (22.8")	560 mm (22.1")	420 mm (16.6")
Full system*	775 mm (30.2")	560 mm (22.1")	508 mm (19.8")

*Full system: Copier with document feeder and 10-bin sorter

Noise Emissions:

Sound pressure level (the measurements are made in accordance with ISO 7779 at the operator position.)

	Copier only	Full system*
Copying	Less than 57 dB	Less than 61 dB

*Full system: Copier with document feeder and 10-bin sorter

Sound power level (the measurements are made in accordance with ISO 7779)

	Copier only	Full system*
Stand-by	Less than 40 dB	Less than 40 dB
Copy cycle	Less than 63 dB	Less than 67 dB

*Full system: Copier with document feeder and 10-bin sorter

Weight:

Copier only	42 kg (93.0 lb)
Full system*	55 kg (121 lb)

*Full system: Copier with document feeder and 10-bin sorter

Optional Equipment: (Sales items)

Document feeder (A662)
10-bin sorter (A657)

Optional Equipment: (Service items)

Optics anti-condensation heater
Tray heater

- Specifications are subject to change without notice.

Toner Yield:

6K / Bottle.

Dev. Yield:

45K / Bag.

2. COPY PROCESS AROUND THE DRUM

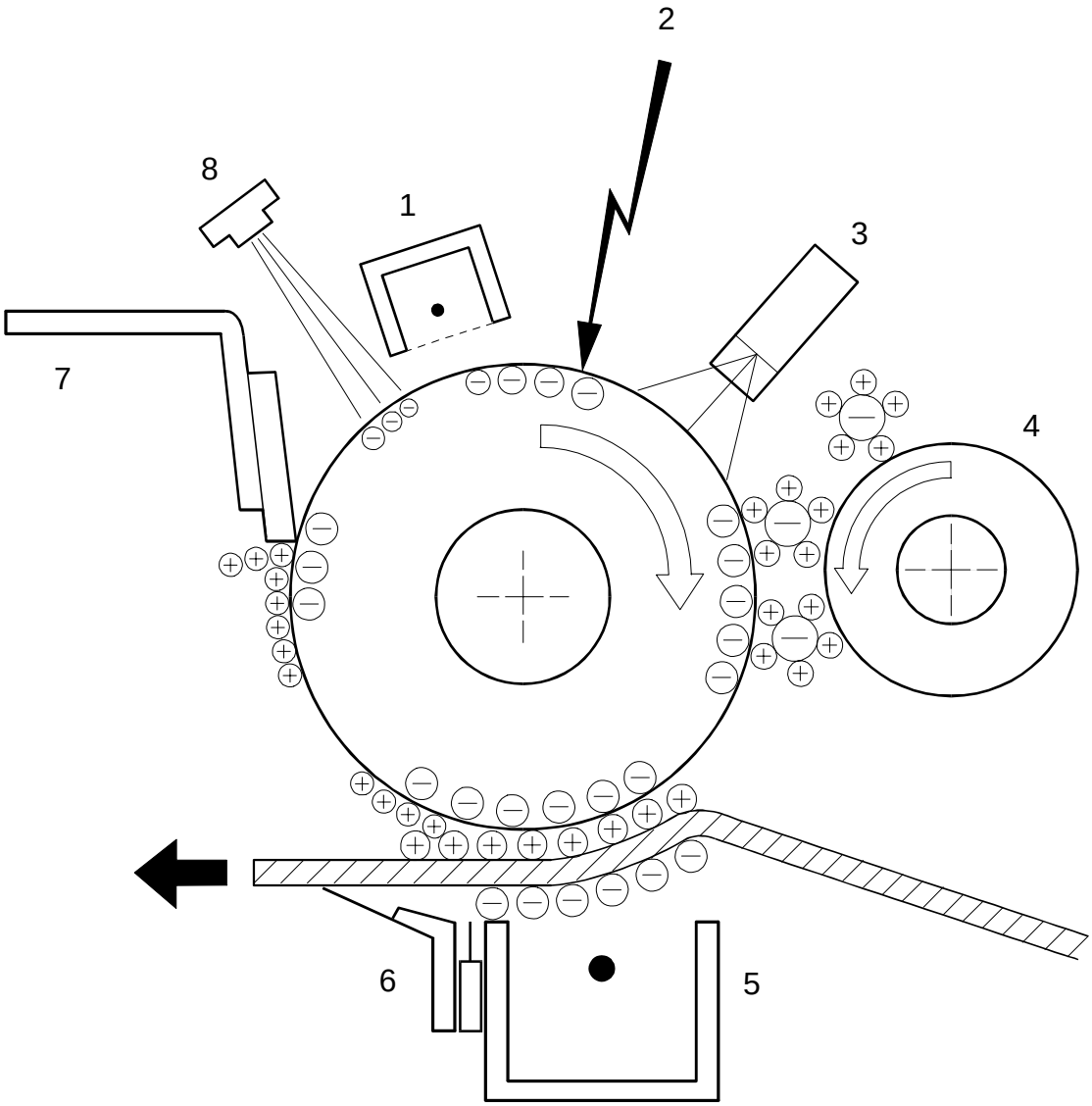

1. DRUM CHARGE

In the dark, the charge corona unit gives a uniform negative charge to the organic photoconductive (OPC) drum. The charge remains on the surface of the drum because the OPC drum has a high electrical resistance in the dark.

2. EXPOSURE

An image of the original is reflected to the drum surface via the optics assembly. The charge on the drum surface is dissipated in direct proportion to the intensity of the reflected light, thus producing an electrical latent image on the drum surface.

3. ERASE

The erase lamp illuminates the area of the charged drum surface that will not be used for the copy image. The resistance of the drum in the illuminated areas drops and the charge on those areas dissipates.

4. DEVELOPMENT

Positively charged toner is attached to the negatively charged areas of the drum, thus developing the latent image. (The positive triboelectric charge is caused by friction between the carrier and toner particles.)

5. IMAGE TRANSFER

Paper is fed to the drum surface at the proper time so as to align the copy paper and the developed image on the drum surface. Then, a strong negative charge is applied to the back side of the copy paper, producing an electrical force which pulls the toner particles from the drum surface to the copy paper. At the same time, the copy paper is electrically attracted to the drum surface.

6. PAPER SEPARATION

A strong positive dc charge is applied to the back side of the copy paper via a discharge plate, reducing the negative charge on the copy paper and breaking the electrical attraction between the paper and the drum. Then, the stiffness of the copy paper causes the paper to separate from the drum surface.

7. CLEANING

The cleaning blade scrapes the toner off the drum. The collected toner is recycled.

8. QUENCHING

Light from the quenching lamp electrically neutralizes the drum surface.

3. MECHANICAL COMPONENT LAYOUT

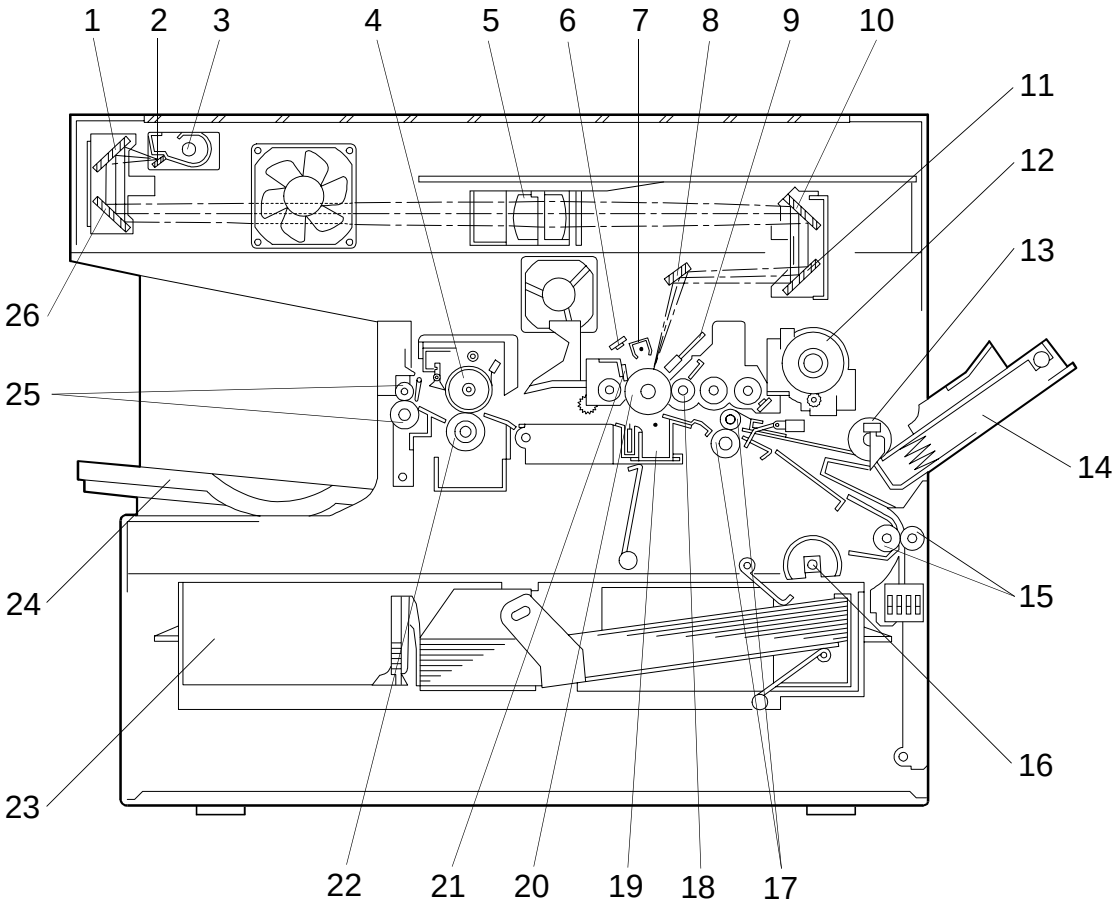

1. 2nd Mirror
2. 1st Mirror
3. Exposure Lamp
4. Hot Roller
5. Lens
6. Quenching Lamp
7. Charge Corona Unit
8. 6th Mirror
9. Erase Lamp
10. 4th Mirror
11. 5th Mirror
12. Toner Bottle Holder
13. By-pass Feed Roller
14. By-pass Feed Table
15. Relay Rollers
16. Tray Paper Feed Rollers
17. Registration Rollers
18. Development Roller
19. Transfer/Separation Unit
20. Drum
21. Cleaning Blade
22. Pressure Roller
23. Paper Tray
24. Copy Tray
25. Exit Rollers
26. 3rd Mirror

4. DRIVE LAYOUT

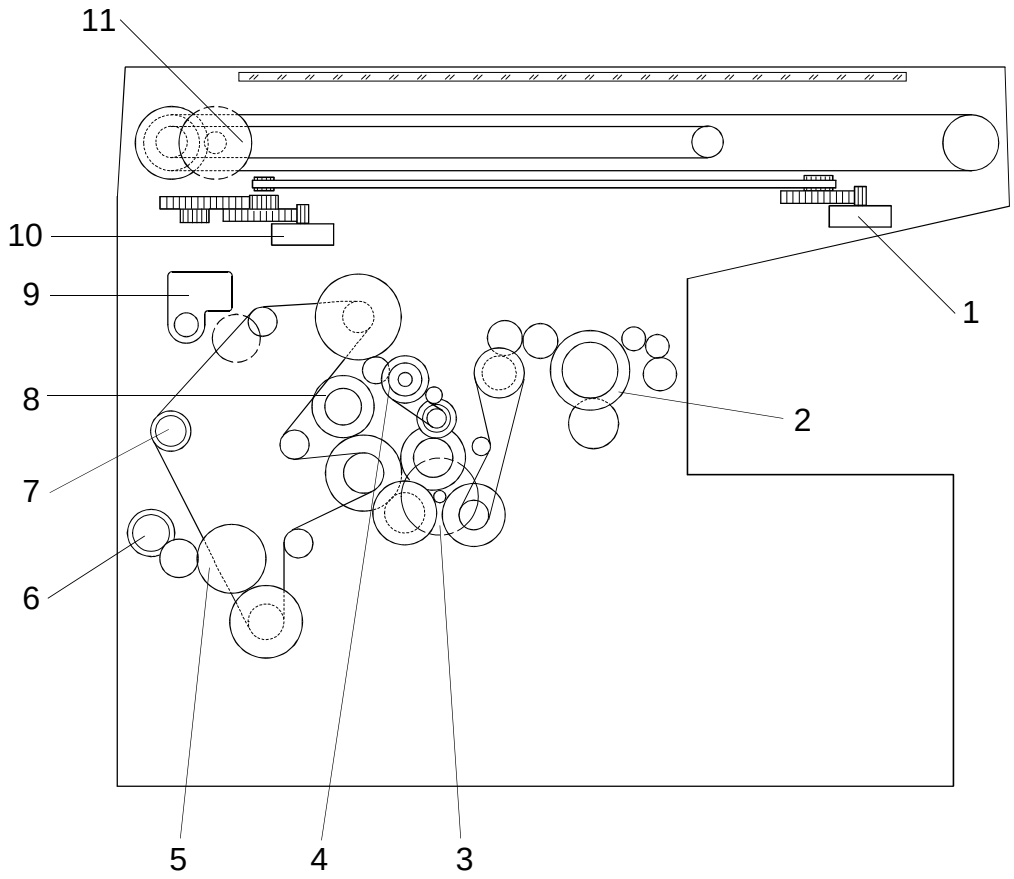

1. Lens Motor
2. Fusing Unit Drive Gear
3. Main Motor
4. Drum Drive Gear
5. Tray Paper Feed Clutch Gear
6. Relay Roller Clutch Gear
7. By-pass Paper Feed Clutch
8. Registration Clutch Gear
9. Toner Supply Motor
10. 4th/5th Mirror Motor
11. Scanner Drive Motor

5. PAPER PATH

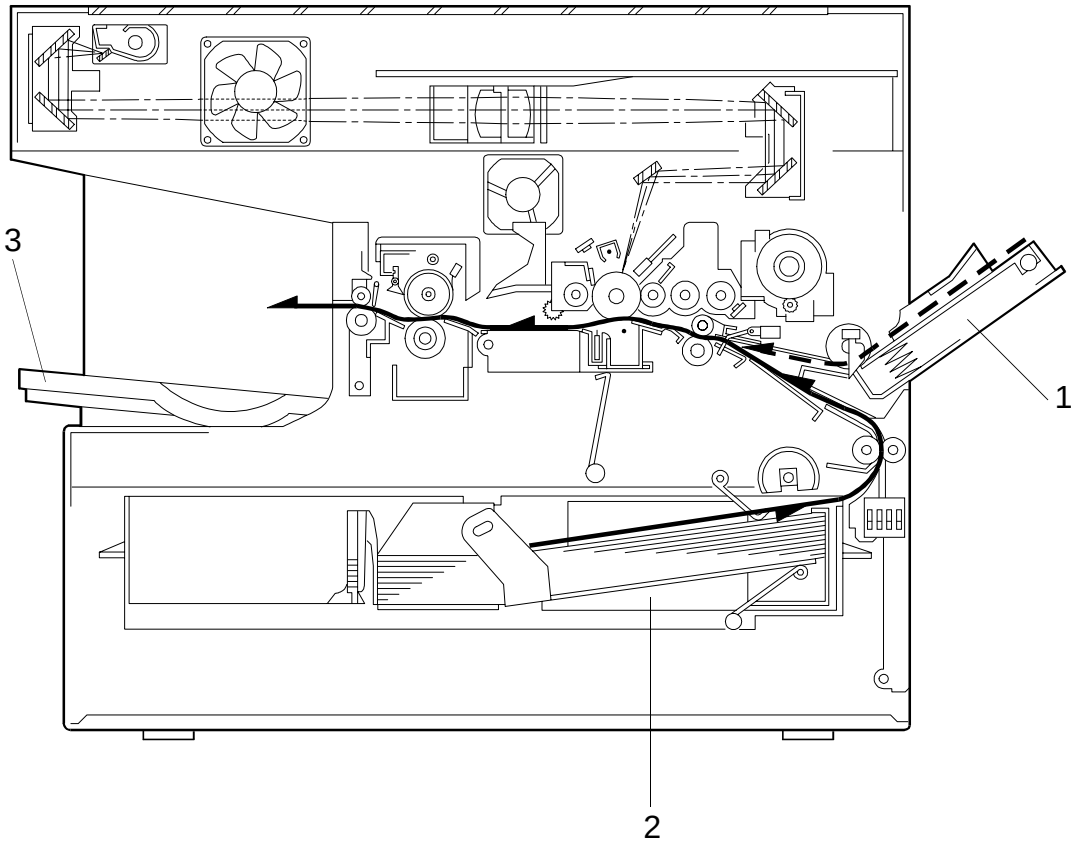

1. By-pass Feed
2. Paper Tray Feed
3. Copy Tray

6. ELECTRICAL COMPONENT DESCRIPTIONS

Refer to the electrical component layout and the point-to-point diagram on the waterproof paper in the pocket for symbols and index numbers.

Symbol	Name	Function	Index No.
Motors			
M1	Main Motor	Drives all the main unit components except for the optics unit, fans and toner supply.	8
M2	Scanner Drive Motor	Drives the scanners (1st and 2nd).	9
M3	Lens Motor	Moves the lens position in accordance with the selected magnification.	18
M4	4th/5th Mirror Motor	Moves the 4th/5th mirror position in accordance with the selected magnification.	16
M5	Toner Supply Motor	Rotates the toner bottle to supply toner to the development unit.	10
M6	Optics Cooling Fan Motor	Prevents build-up of hot air in the optics cavity.	17
M7	Exhaust Fan Motor	Removes heat from around the fusing unit and blows the ozone built up around the charge corona unit towards the ozone filter.	7
Clutches			
CL1	Tray Paper Feed Clutch	Transfers main motor drive to the paper feed roller.	14
CL2	By-pass Paper Feed Clutch	Starts paper feed from the by-pass feed table.	12
CL3	Relay Roller Clutch	Drives the relay rollers for paper tray feed.	13
CL4	Registration Clutch	Drives the registration rollers.	11
Switches			
SW1	Main Switch	Supplies power to the copier.	38
SW2	Interlock Switch	Cuts all power when the front cover is opened.	37
SW3	Tray Paper Size Switch	Determines what size of paper is in the paper tray.	31
SW4	Right Vertical Guide Switch	Cuts the +24 V dc power line of the relay roller clutch.	27
Sensors			
S1	4th/5th Mirror Home Position Sensor	Informs the CPU when the 4th/5th mirror assembly is at the home position (full size position).	33
S2	ADS Sensor	Detects the background density of the original.	24

Symbol	Name	Function	Index No.
S3	Tray Paper End Sensor	Informs the CPU when the paper tray runs out of paper.	28
S4	Registration Sensor	Detects the leading edge of the copy paper to determine the stop timing of the relay roller clutch, and detects misfeeds.	30
S5	By-pass Feed Paper End Sensor	Informs the CPU when there is no paper in the by-pass tray.	29
S6	Exit Sensor	Detects misfeeds.	23
S7	Scanner Home Position Sensor	Informs the CPU when the 1st scanner is at the home position.	40
S8	Lens Home Position Sensor	Informs the CPU when the lens is at the home position.	22
S9	Toner Density (TD) Sensor	Detects the ratio of toner to carrier in the developer.	26
Printed Circuit Boards			
PCB1	Main Control Board	Controls all copier functions.	1
PCB2	High Voltage Supply Board - C/G/B/T/S	Provides high voltage to the charge corona, grid, development bias, transfer corona, and discharge plate.	2
PCB3	AC Drive/DC Power Supply Board	Drives the exposure lamp, fusing lamp, and main motor. Rectifies 30 Vac and 8 Vac input and outputs 5 Vdc and 24 Vdc.	3
PCB4	Operation Panel Board	Informs the CPU of the selected modes and displays the situation on the panel.	6
Lamps			
L1	Erase Lamp	Discharges the drum outside of the image area. (Provides leading/trailing edge and side erases.)	4
L2	Quenching Lamp	Neutralizes any charge remaining on the drum surface after cleaning.	5
L3	Exposure Lamp	Applies high intensity light to the original for exposure.	20
L4	Fusing Lamp	Provides heat to the hot roller.	25
Others			
CO1	Total Counter	Keeps track of the total number of copies made.	34
H1	Tray Heater (Option)	Turns on when the main switch is off to keep paper in the paper tray dry.	32
H2	Optics Anti-condensation Heater (Option)	Turns on when the main switch is off to prevent moisture from accumulating in the optics.	39
TF1	Exposure Lamp Thermofuse	Provide back-up overheat protection around the exposure lamp.	21

Symbol	Name	Function	Index No.
TF2	Fusing Thermofuse	Provide back-up overheat protection in the fusing unit.	36
TH1	Fusing Thermistor	Monitors the temperature around the exposure lamp for overheat protection.	35
TH2	Optics Thermistor	Monitors the temperature around the exposure lamp for overheat protection.	19
TR	Transformer	Steps down the wall voltage to 30 Vac and 8 Vac.	15

DETAILED DESCRIPTIONS

1. DRUM

1.1 OPC DRUM CHARACTERISTICS

The OPC (Organic Photoconductor) drum used in this copier is small in diameter (30 mm), ensuring good paper separation. An OPC drum has the following characteristics.

1. The drum is able to accept a high negative electrical charge in the dark. (The electrical resistance of a photoconductor is high in the absence of light.)
2. It dissipates the electrical charge when exposed to light. (Exposure to light greatly increases the conductivity of a photoconductor.)
3. The amount of charge dissipated is in direct proportion to the intensity of the light. That is, where stronger light is directed to the photoconductor surface, a smaller voltage remains on the drum.
4. An OPC drum is less sensitive to changes in temperature (when compared to selenium F type drums).
5. During the drum's life, drum residual voltage gradually increases and the photoconductive surface becomes worn. Therefore, some compensation for these characteristics is required.

1.2 DRIVE MECHANISM

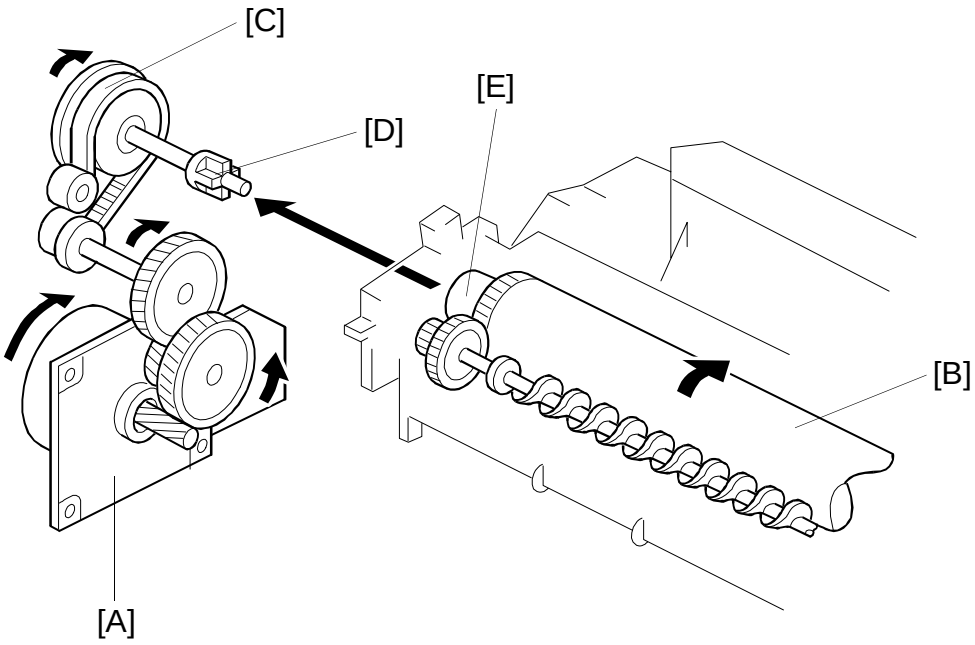

The drive from the main motor [A] is transmitted to the drum [B] through a series of gears, a timing belt [C], and the drum drive shaft [D].

When the imaging unit is installed in the copier, the drum drive shaft engages inside the drum's flange [E] as shown.

2. CHARGE

2.1 OVERVIEW

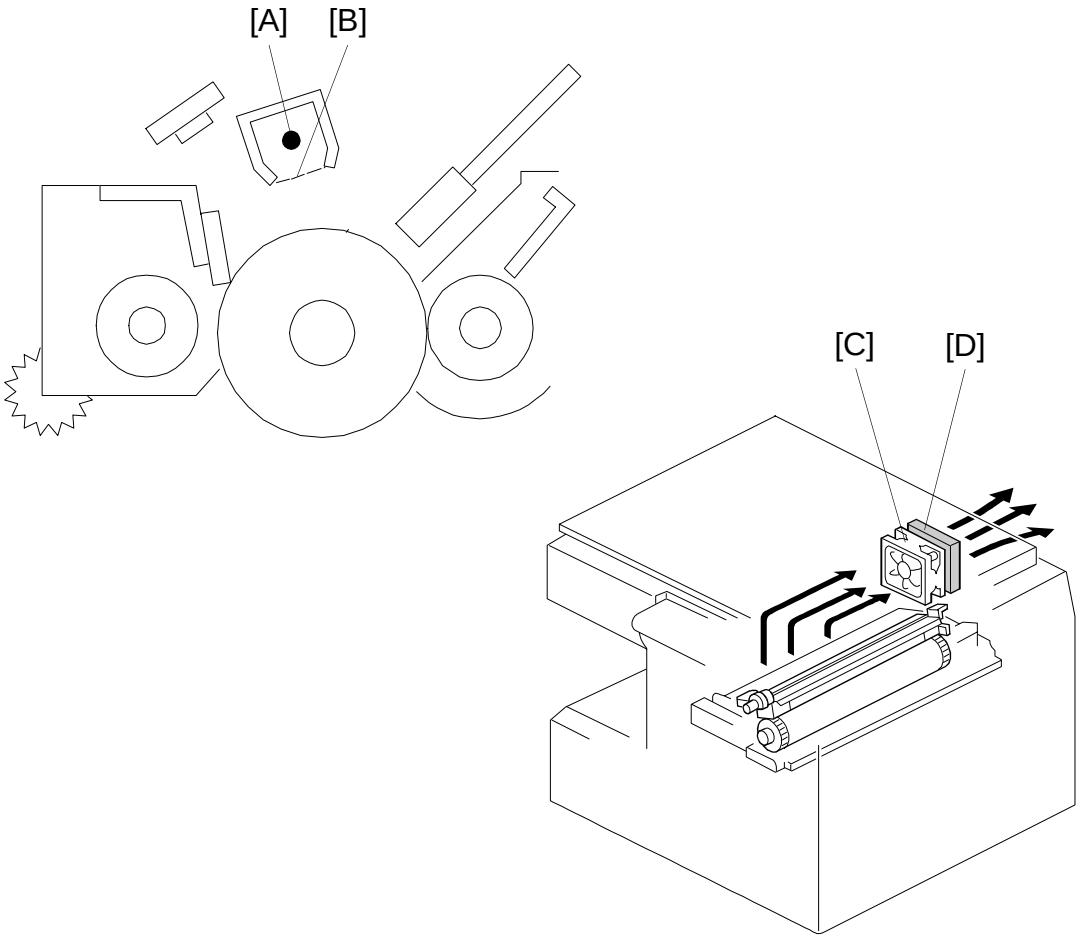

This copier uses a single wire scorotron to charge the drum. The corona wire [A] generates a corona of negative ions when the high voltage supply unit applies a negative voltage. The stainless steel grid plate [B] ensures that the drum coating receives a uniform negative charge as it rotates past the corona unit.

The exhaust fan [C] causes a flow of air above and through the charge corona section. This prevents an uneven build-up of negative ions that can cause uneven image density.

An ozone filter [D], which absorbs ozone (O_3) generated by the charge corona, is located beside the exhaust fan. The ozone filter decreases in efficiency over time as it absorbs ozone. The ozone filter should be replaced every PM cycle (45 k copies).

2.2 CHARGE CORONA WIRE CLEANER MECHANISM

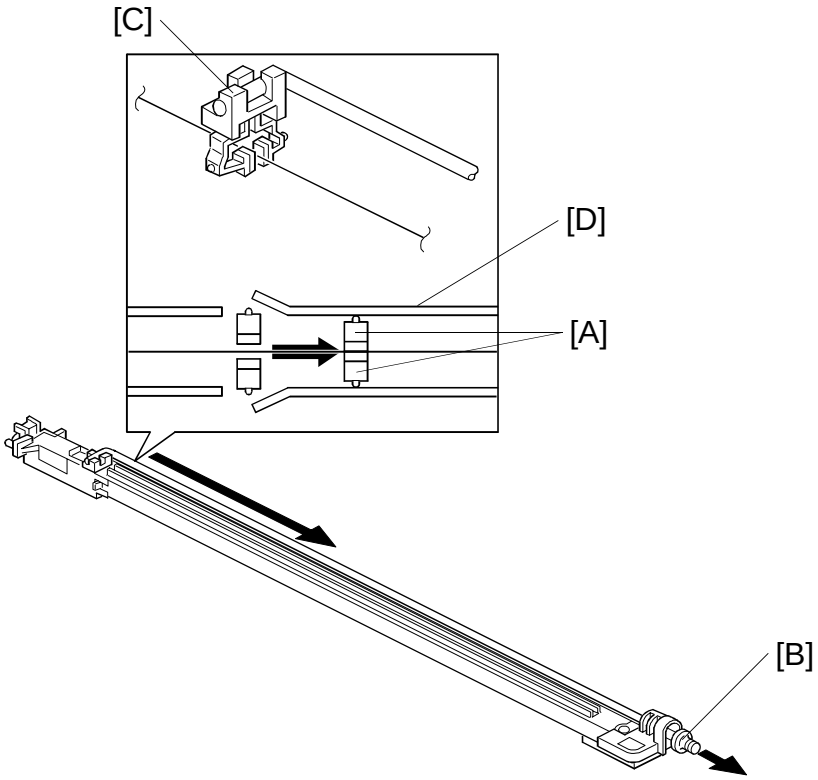

Pads [A] move along the charge corona wire as the wire cleaner knob [B] is manually slid in and out.

The cleaner pad bracket [C] is connected to the wire cleaner knob. When the knob is pulled out, the pads move into contact with the corona wire as shown, since the casing [D] is narrower away from the home position.

The pads move away from the wire when the wire cleaner knob is fully inserted and the pad bracket is pushed back to the home position.

After copier installation, the key operator should be instructed to use this mechanism when copies have white streaks or uneven image density. Instruct the operator to firmly push the pad bracket into the home position. Poor copy quality will result if the cleaning pads remain in contact with the charge corona wire.

2.3 CHARGE CORONA CIRCUIT

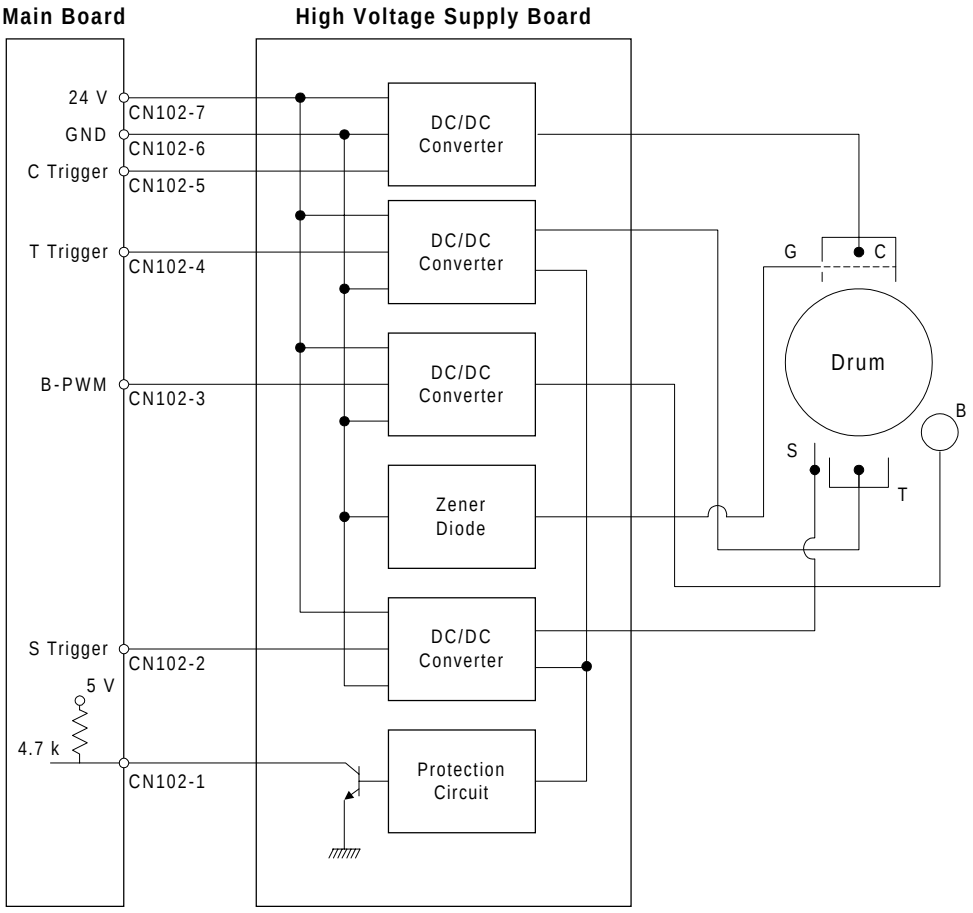

The main board supplies +24 V to the high voltage supply board at CN102-7. After the ⏀ key is pressed, the CPU drops CN102-5 from +5V to LOW. This activates the charge corona circuit which applies a high negative voltage of approximately –5 k volts to the charge corona wire. The corona wire then generates a negative corona charge.

The grid plate limits the charge voltage to ensure that the charge does not fluctuate and that an even charge is applied to the entire drum surface. The grid plate is connected to ground through a zener diode in the high voltage supply unit. The grid plate drains any charge in excess of –910 V, which is discharged to ground through the zener diode.

3. OPTICS

3.1 OVERVIEW

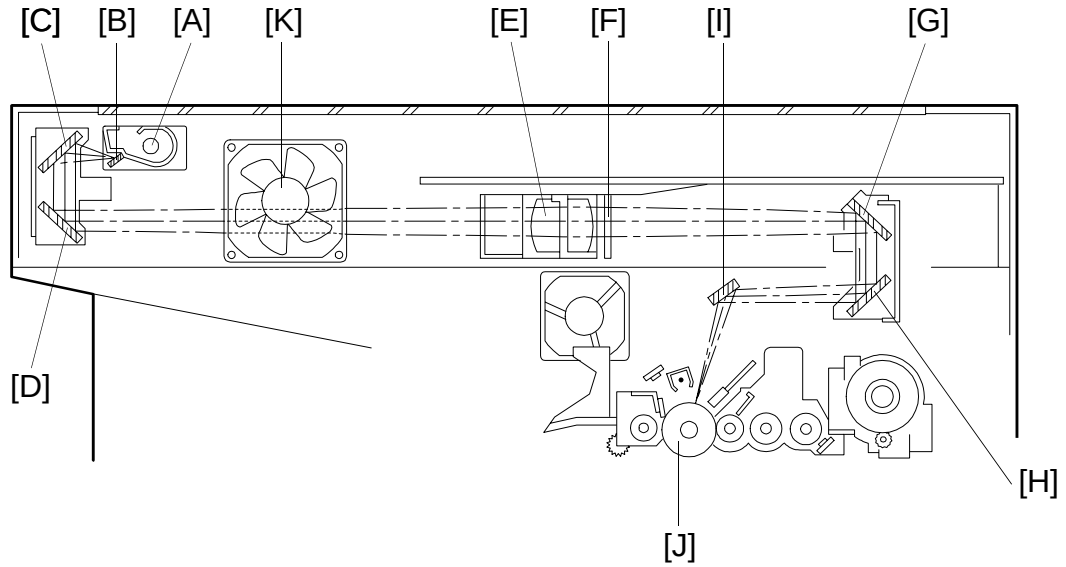

During the copy cycle, an image of the original is reflected onto the drum surface through the optics assembly as follows:

Light path:
Exposure Lamp [A] → Original → First Mirror [B] → Second Mirror [C] → Third Mirror [D] → Lens [E] → Blue Filter [F] → Fourth Mirror [G] → Fifth Mirror [H] → Sixth Mirror [I] → Drum [J]

This copier has eight standard reproduction ratios and a zoom function. The operator can also change the reproduction ratio in one-percent steps from 50% to 200%. Stepper motors are used to change the positions of the lens and 4th/5th mirrors to enlarge/reduce the image across the page. Changes in reproduction ratio down the page are achieved by changing the scanner speed.

The CPU monitors the temperature around the optics through a thermistor which is located on the scanner frame. When the temperature reaches 40°C, the optics cooling fan [K] starts rotating to draw cool air into the optics cavity. The fan operates until the temperature drops below 38°C.

Additionally, a thermofuse on the 1st scanner provides back-up overheat protection. It opens when the temperature reaches 128°C and cuts ac power to the exposure lamp.

A blue filter is located just after the lens to improve the reproduction of red areas of the original on copies.

3.2 SCANNER DRIVE

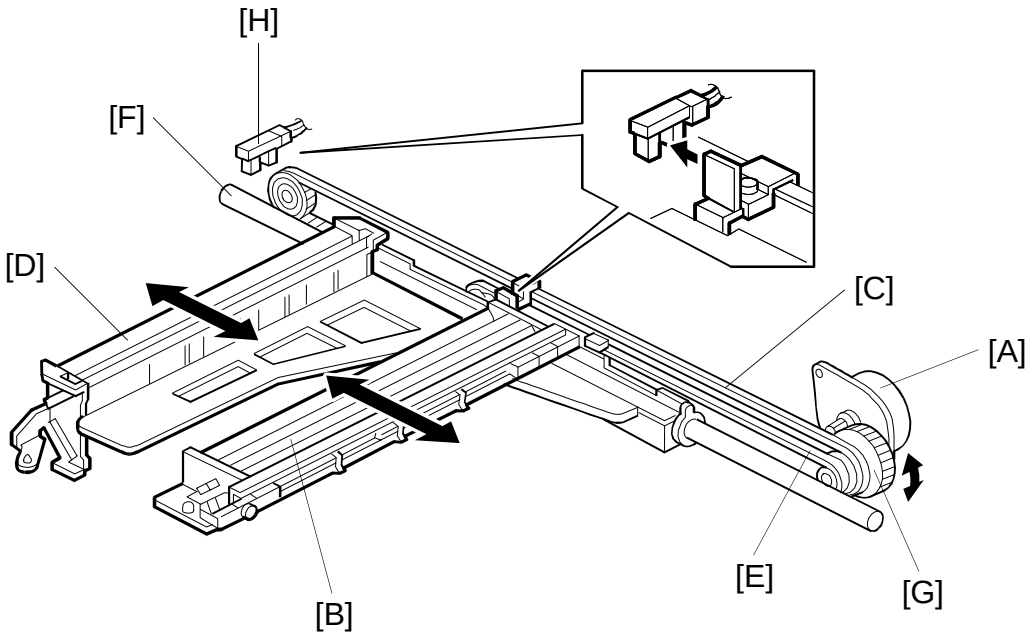

A stepper motor [A] is used to drive the scanners.

The first scanner [B], which consists of the exposure lamp and the first mirror, is connected to the first scanner belt [C]. The second scanner [D], which consists of the second and third mirrors, is connected to the second scanner belt [E]. Both the scanners move along the guide rod [F].

There are no scanner drive wires, and only one side of the scanner is supported (by a rod and guide rail). Therefore, the scanners should be moved by moving the timing belt, and never by moving the scanners directly.

The pulley [G] drives both the first and second scanner belts. The 2nd scanner moves at half the speed of the first scanner. This maintains the focal distance between the original and the lens during scanning.

The scanner home position is detected by a home position sensor [H]. The scanner return position is determined by counting the scanner motor drive pulses.

3.3 LENS DRIVE

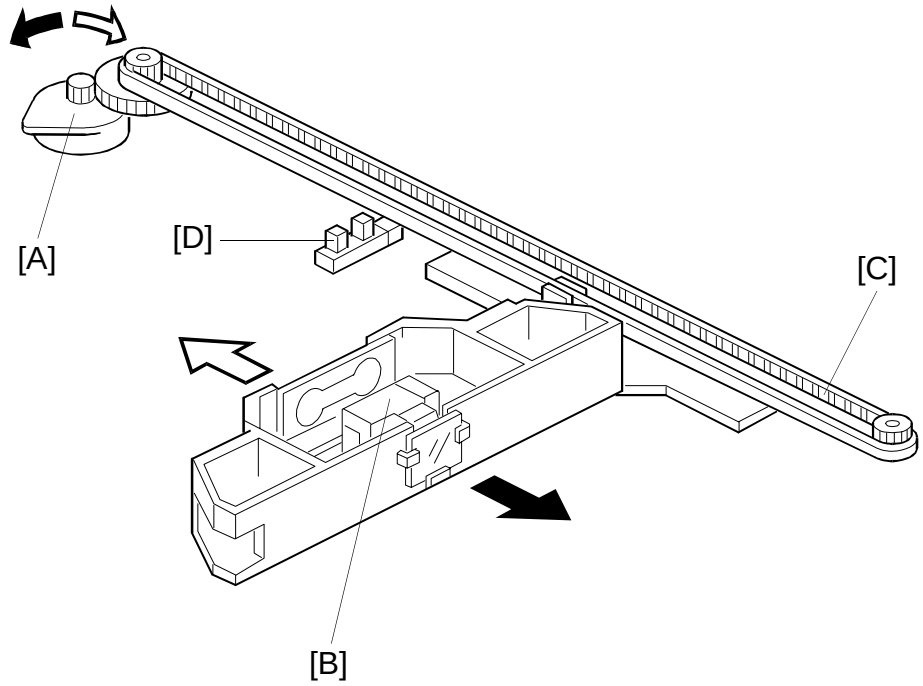

: Reduction

: Enlargement

The lens motor [A] (stepper motor) changes the lens [B] position through the timing belt [C] in accordance with the selected reproduction ratio to provide the proper optical distance between the lens and the drum surface.

The rotation of the lens drive pulley moves the lens back and forth in discrete steps. The home position of the lens is detected by a home position sensor [D]. The main board keeps track of the lens position based on the number of pulses sent to the lens motor.

3.4 4TH/5TH MIRROR DRIVE

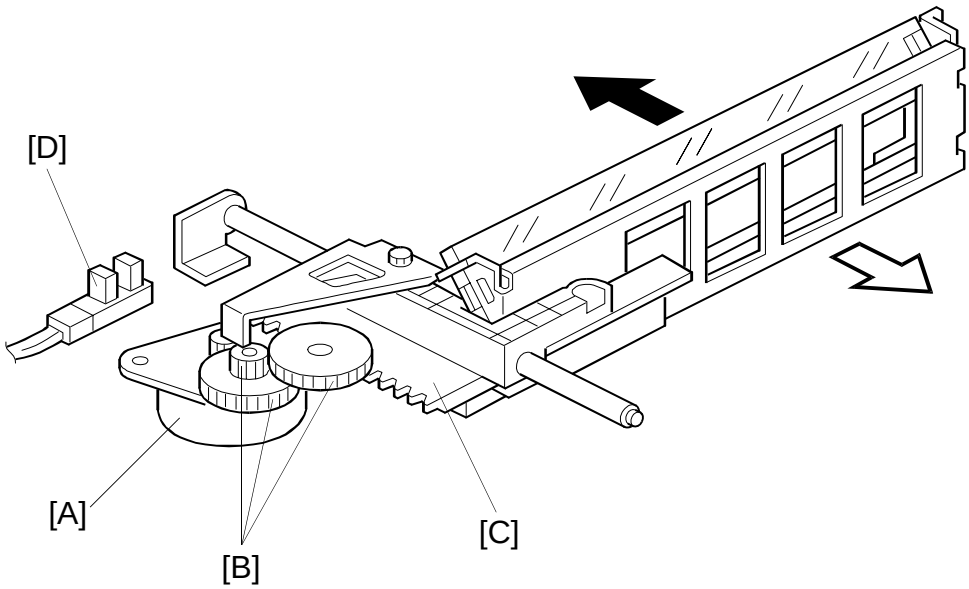

The 4th/5th mirror drive motor [A] (stepper motor) changes the 4th/5th mirror assembly position through the pinion gears [B] and the rack gear [C] in accordance with the selected reproduction ratio to provide the proper optical distance between the lens and drum surface.

The home position of the 4th/5th mirror assembly is detected by a home position sensor [D]. The main board keeps track of the lens position based on the number of pulses sent to the 4th/5th mirror motor.

3.5 AUTOMATIC IMAGE DENSITY SENSOR

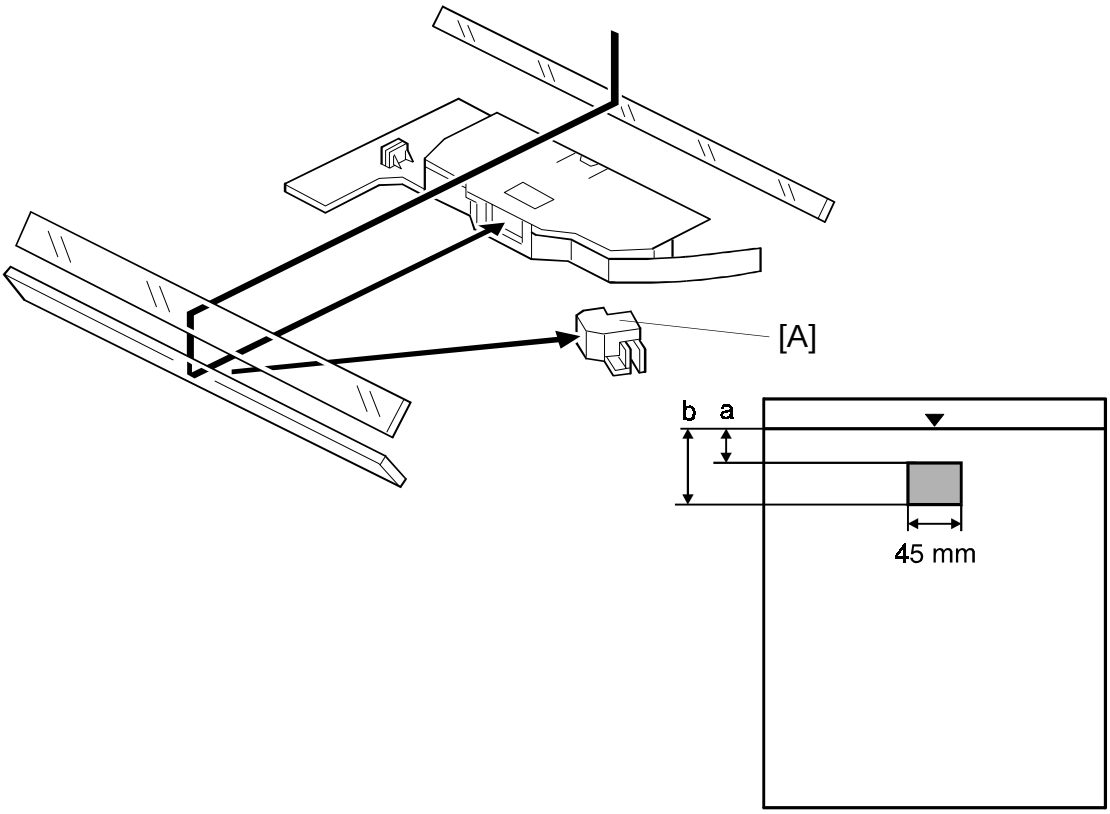

The auto image density (ADS) sensor [A], a photodiode, is mounted on the upper front frame. The sensor cover has a hole in it to allow light to fall directly onto the sensor.

Sampling starts 6 millimeters from the leading edge of the original and continues for 11.5 millimeters from the leading edge of original in full size mode. These lengths "a" and "b" will vary depending on the selected reproduction ratio. The lengths "a" and "b" for each reproduction ratio are calculated as follows:

$$a = \frac{6\ \text{mm}}{\text{Reproduction Ratio (\%)}} \times 100 \qquad b = \frac{11.5\ \text{mm}}{\text{Reproduction Ratio (\%)}} \times 100$$

For every original in ADS mode, the photosensor circuit converts the light intensity into a voltage. The detected voltage is amplified and sent to the main board. If less light is reflected from the original (the image is darker), the sensor outputs a lower voltage. The CPU compares the maximum ADS output voltage with the standard ADS reference voltage and compensates the copy image density by changing the development bias voltage in accordance with the difference. The standard ADS reference voltage (2.5 ± 0.1 V) is generated by SP 56. Details about changes to the development bias voltage are explained in "Development Bias for Image Density Control".

3.6 EXPOSURE LAMP VOLTAGE CONTROL

The main board controls the exposure lamp voltage through the ac drive/dc power supply board. The exposure lamp voltage is based on the base lamp voltage and various correction factors. The method of control is different depending on whether the image density is manually selected or the auto image density mode is selected.

The exposure lamp voltage is determined by the following factors:

Lamp Voltage = Base Lamp Voltage Setting (SP48)
+
*Image Density Adjustment Factor (SP34)
+
*Manual Image Density Setting Factor
+
V_L Correction 1 Factor (SP62)
+
V_L Correction 2 Factor
+
Reproduction Ratio Correction Factor

***NOTE:** SP34 (Image Density Adjustment Factor) is applied for ADS mode only.
The "Manual Image Density Factor" is applied for manual ID mode only.

1) Base Lamp Voltage Setting

The lamp voltage is determined by the SP48 setting.

Base Lamp Voltage = SP48 setting x 0.5 (120 V machines)
SP48 setting x 1.0 (230 V machines)

The default setting is: 140 = 70 V (120 V machines)
140 = 140 V (230 V machines)

The current lamp voltage (after all correction factors are included) can be viewed with SP 51.

2) Image Density Adjustment Factor (SP34)

Depending on the SP34 setting, the development bias and the exposure lamp settings are increased or decreased during ADS mode.

SP34 Setting	Setting	Dev. Bias	Exposure Lamp
0	Normal	0	0
1	Light	–40 V	0
2	Dark	+40 V	0
3	Lightest	–40 V	+4 steps
4	Darkest	+40 V	–4 steps

1 step = 0.5 V (120 V machines) or 1.0 V (230 V machines)

3) Manual Image Density Setting Factor

Depending on the manual image density setting on the operation panel, the exposure lamp voltage is changed as shown in the table below:

Darker ⟷ Lighter

Manual ID Level	1	2	3	4	5	6	7
Exposure Lamp Voltage Factor	**V_0 – 6 steps**	**V_0 – 4 steps**	**V_0 – 2 steps**	**V_0**	**V_0 + 2 steps**	**V_0 + 6 steps**	**V_0 + 12 steps**
Development Bias Voltage (Volts)	–200	–200	–200	–200	–200	–240	–240

V_0: Base lamp voltage setting (SP48)

1 step = 0.5 V (120 V machines) or 1.0 V (230 V machines)

4) V_L Correction 1 Factor

The light intensity may decrease because of dust accumulated on the optical parts. Additionally, the drum sensitivity gradually decreases during the drum's life. This may cause dirty background on copies. To compensate for this, V_L corrections 1 and 2 are done.

The exposure lamp voltage is increased by two steps at the set copy count interval (a step is +2.0 V for 230 V machines, and +1 V for 120 V machines). The table below shows the relationship between the SP setting and the copy interval.

SP62 Setting	V_L Correction Interval
0	2 steps/8,000 copies
1	2 steps/6,000 copies
2	2 steps/4,000 copies
3	2 steps/2,000 copies
4	2 steps/1,000 copies
5	No correction

(Default setting: 2)

V_L correction 1 compensates for the decrease of drum sensitivity and the decrease in reflectivity of the 4th, 5th, and 6th mirrors due to dust.

5) V_L Correction 2 Factor

V_L correction 2 compensates for dust on the lens and mirrors 1 to 3, but is independent of the drum condition.

The ADS sensor receives the light reflected through the 1st, 2nd and 3rd mirrors from the white plate located under the middle of the left scale. The photosensor circuit converts this light intensity into a voltage. The CPU stores this voltage in memory as the white plate reference voltage. This is done every time SP56 (ADS reference voltage adjustment) is done, before sampling starts for the ADS sensor adjustment.

Every 500 copies, the machine reads the intensity of light reflected from the white plate and compares it with the white plate reference voltage.

If the measured voltage difference is more than 0.1 volt, +2 steps will be added to the exposure lamp setting as the V_L correction 2 factor.

The sum of V_L correction factors 1 and 2 cannot exceed +40 steps.

V_L correction factors 1 and 2 are automatically reset every time the light intensity is adjusted with SP48. (SP56 must be done immediately after SP48; see Service Remarks for details.)

6) Reproduction Ratio Correction Factor

The exposure lamp voltage is increased depending on the selected magnification ratio in order to compensate for the change in concentration of light on the drum.

Magnification Ratio	Reproduction Ratio Correction Factor
50% to 61%	+2 steps
62% to 119%	0
120% to 139%	+2 steps
140% to 159%	+4 steps
160% to 179%	+8 steps
180% to 200%	+12 steps

1 step = 0.5 V (120 V machines) or 1.0 V (230 V machines)

4. ERASE

4.1 OVERVIEW

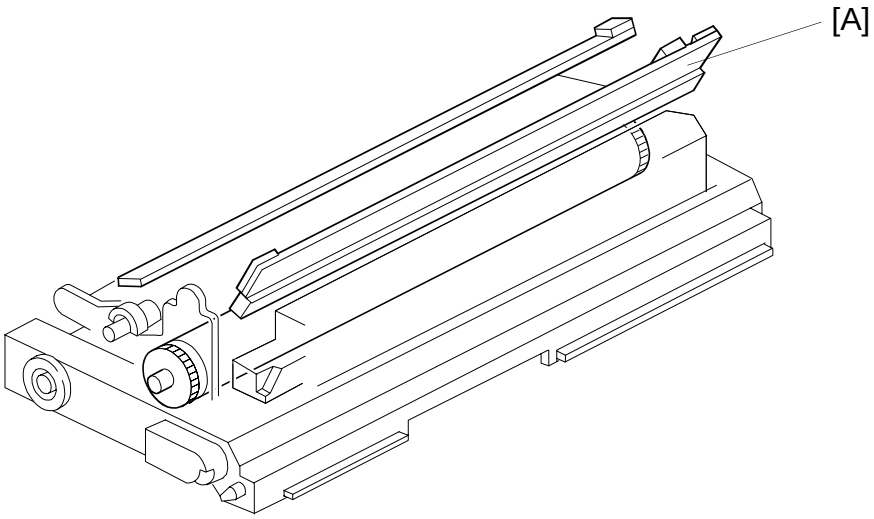

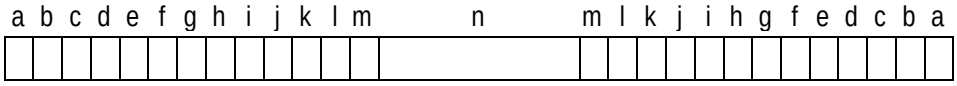

The erase lamp [A], which is installed in the copier main frame, consists of a single row of white LEDs (38 LEDs) extended across the full width of the drum. The erase lamp has the following functions: leading edge erase, side erase and trail edge erase. (Trail edge erase begins after the trailing edge of the copy paper; therefore, the trailing edge of the copy will not be erased.) In side erase mode, the appropriate LEDs turn on in accordance with the modes selected by the user.

4.2 LEAD EDGE ERASE

The entire line of LEDs turn on when the main motor turns on. They stay on until the erase margin slightly overlaps the lead edge of the original image area on the drum (Lead Edge Erase Margin). This prevents the shadow of the original edge from being developed on the copy. At this point, side erase starts. The width of the leading erase margin can be adjusted using SP41.

4.3 SIDE ERASE

Based on the combination of copy paper size and the reproduction ratio data, the LEDs turn on in blocks (labeled "a" to "n" on the previous page). This reduces drum cleaning load.

Also, to prevent horizontal black lines from appearing on the edge of copies as a result of light leaking under the edge of the DF belt, the side erase combination is changed between platen mode and DF mode; in DF mode, more of the image is erased at the sides. (The setting of SP24 must be 0.)

-Platen Mode-

Blocks On	Paper Size	Reproduction Ratio (%)
None		99% to 200%
a to b		95% to 98%
a to c	11" x 17", 11" x 8 1/2"	92% to 94%
a to d		88% to 91%
a to e	B4, B5 sideways	84% to 87%
a to f		80% to 83%
a to g		75% to 79%
a to h	8 1/2" x 11", 8 1/2" x 5 1/2"	72% to 74%
a to i	A4 Lengthwise	68% to 71%
a to j		63% to 67%
a to k	B5	59% to 62%
a to l		54% to 58%
a to m		50% to 53%
All (a to n)	Lead Edge and Trail Edge Erase	

-DF Mode-

Blocks On	Paper Size	Reproduction Ratio (%)
None		99% to 200%
a to b		97% to 98%
a to c	11" x 17", 11" x 8 1/2"	93% to 96%
a to d		90% to 92%
a to e	B4, B5 sideways	86% to 89%
a to f		81% to 85%
a to g		77% to 80%
a to h	8 1/2" x 11", 8 1/2" x 5 1/2"	73% to 76%
a to i	A4 Lengthwise	70% to 72%
a to j		65% to 69%
a to k	B5	61% to 64%
a to l		56% to 60%
a to m		50% to 55%
All (a to n)	Lead Edge and Trail Edge Erase	

4.4 TRAILING EDGE ERASE

This minimizes toner consumption.

The entire line of LEDs turns on when the drum has turned 9 mm at the end of scanning (about 100 ms). The LEDs stay on to erase the leading edge of the latent image in the next copy cycle. After the final copy, the erase lamps turn off at the same time as the main motor.

5. DEVELOPMENT

5.1 OVERVIEW

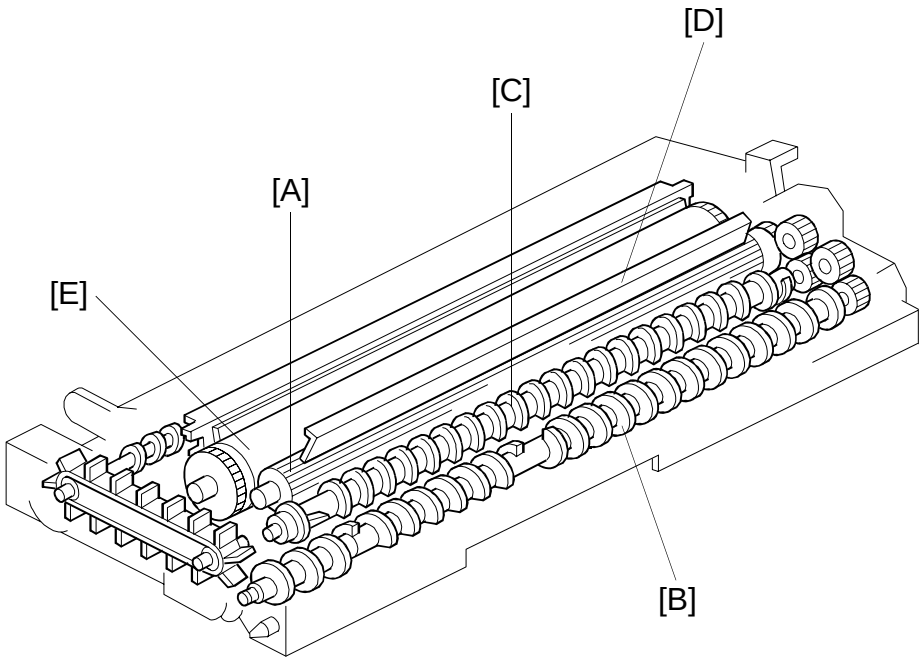

When the main motor turns on, the development roller [A] and two agitators [B] and [C] start turning.

There are permanent magnets in the development roller which attract the developer particles (which are about 50 μm in diameter) to the roller. The turning sleeve of the development roller carries the developer past the doctor blade [D] which trims the developer to the desired thickness.

The development roller sleeve continues to turn, carrying the developer to the drum [E]. When the developer brush contacts the drum surface, the negatively charged areas of the drum surface attract and hold the positively charged toner. In this way, the latent image is developed.

The development roller is given a suitable negative bias to prevent toner from being attracted to the non-image areas on the drum which may have a residual negative charge. The bias also controls image density.

5.2 DRIVE MECHANISM

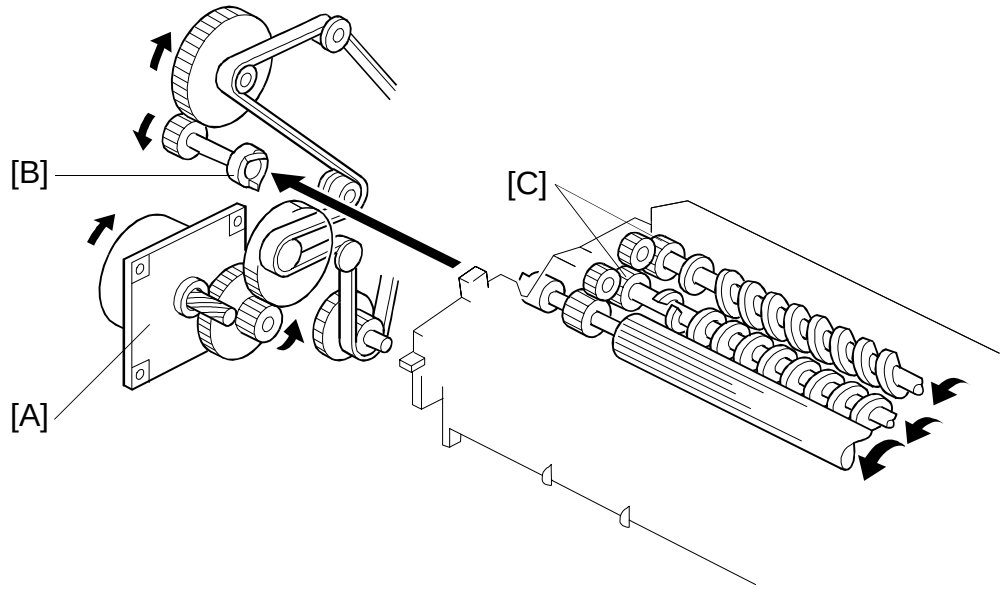

When the main motor [A] turns on, the drive is transmitted to the development drive shaft [B] through gears and a timing belt. The rotation of the development roller gear is transmitted to the agitator gears [C] through other gears.

5.3 CROSS-MIXING

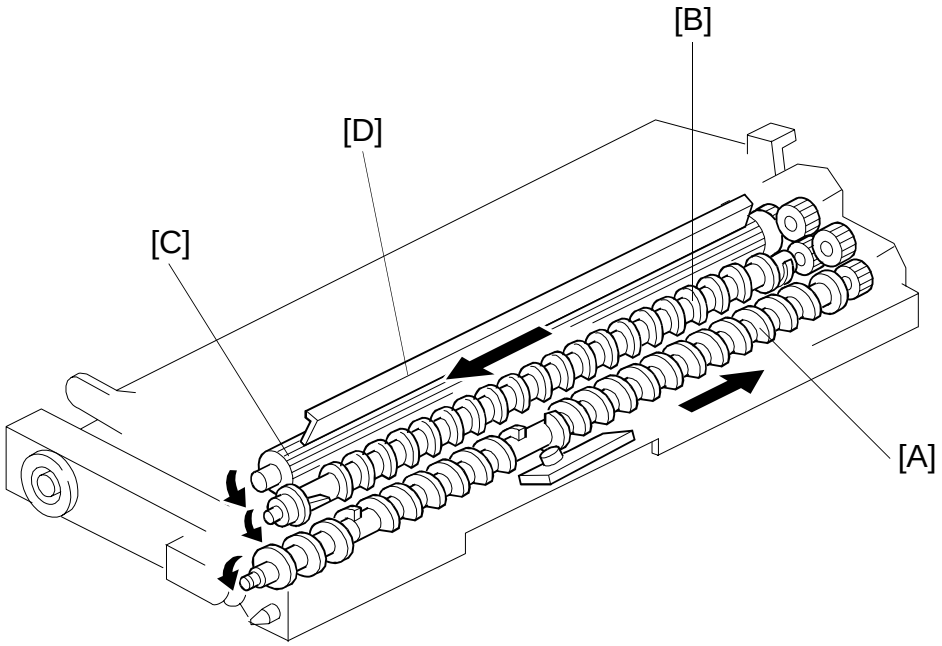

A cross-mixing mechanism is used to keep the toner and developer evenly mixed. It also helps agitate the developer to prevent developer clumps from forming and helps create the triboelectric charge.

Two agitators (helical coils) [A] and [B] are used for cross-mixing. The 1st agitator [A] moves the developer from left to right. The toner supplied from the cutout in the toner cartridge holder is mixed with the developer by the 1st agitator. The 2nd agitator [B] rotates to move the developer back from right to left. In this way, the developer is evenly distributed in the development unit.

The magnets in the development roller [C] attract the developer, and the development roller sleeve rotates to carry the developer to the drum. The doctor blade [D] trims the developer on the development roller to the desired thickness.

5.4 DEVELOPMENT BIAS FOR IMAGE DENSITY CONTROL

The image density is controlled by changing two items: the amount of bias voltage applied to the development roller sleeve, and the amount of voltage applied to the exposure lamp.

Applying a bias voltage to the development sleeve reduces the potential between the development roller and the drum, thereby reducing the amount of toner transferred. As the bias voltage becomes greater, the copy becomes lighter.

The method of control depends on whether the image density is manually selected or auto image density is used.

The development bias voltage applied to the development roller sleeve has the following factors:

Development bias voltage = Base Bias Voltage
(Manual or auto image density mode)
+
*Image Bias Adjustment Factor (SP33)
+
*Image Density Adjustment Factor (SP34)
+
Drum Residual Voltage (V_R) Correction Factor

***NOTE:** Image Bias Adjustment Factor (SP33) is applied for manual ID mode only.
Image Density Adjustment Factor (SP34) is applied for ADS mode only.

5.4.1 Base Bias Voltage Factor in Manual Image Density Mode

Darker ⟷ Lighter

Manual ID Level	1	2	3	4	5	6	7
Exposure Lamp Voltage Factor	V_0 – 6 steps	V_0 – 4 steps	V_0 – 2 steps	V_0	V_0 + 2 steps	V_0 + 6 steps	V_0 + 12 steps
Development Bias Voltage (Volts)	**–200**	**–200**	**–200**	**–200**	**–200**	**–240**	**–240**

V_0: Depends on the setting of SP48

When manual ID level 6 or 7 is selected, –40 V is added to the base bias voltage.

Using SP33 (Image Bias Adjustment), the base bias voltage can be increased or decreased for all manual ID levels as follows:

SP Setting	Setting	Dev. Bias	Note
0	Normal	0	Default
1	Darkest	+40 V	
2	Darker	+20 V	
3	Lighter	–20 V	
4	Lightest	–40 V	

5.4.2 Base Bias Voltage Factor in Automatic Image Density (ADS) Mode

The bias voltage for ADS mode depends on the background image density of the original which is measured by the ADS sensor. (See "Automatic Image Density Sensor" for more information about the ADS sensor.)

The CPU checks the voltage output from the automatic ID circuit. This circuit has a peak hold function. The peak hold voltage is the maximum ADS sensor output voltage, which corresponds to the maximum reflectivity of the original. The CPU then determines the proper base bias level by comparing this voltage (read from the original) with the standard ADS reference voltage.

The table below shows the relationship between the original background density (ADS voltage ratio) and the base bias voltage.

ADS Voltage Ratio [α] (%)	Bias Voltage
80 to 100 (light)	–200 V
75 to 79	–240 V
70 to 74	–280 V
60 to 69	–320 V
29 to 59	–360 V
0 to 28 (dark)	–380 V

$$\text{ADS Voltage Ratio } [\alpha] = \frac{\text{Maximum ADS Output Voltage}}{V_{ADS0}}$$

V_{ADS0}: Standard ADS Reference Voltage (2.5 $\pm$ 0.1 V)

Using SP34, the base bias voltage and the exposure lamp setting can be increased or decreased for the ADS mode as follows:

SP Setting	Setting	Dev. Bias	Exposure Lamp
0	Normal	0	0
1	Lighter	–40 V	0
2	Darker	+40 V	0
3	Lightest	–40 V	+4 steps
4	Darkest	+40 V	–4 steps

(Default Setting: 0)

5.4.3 Drum Residual Voltage (V_R) Correction Factor

During the drum's life, drum residual voltage (V_R) will gradually increase. To compensate for this, the bias voltage is increased by –20 V every 5 k copies.

The V_R correction is done up to 20 k copies. The V_R correction will not change after 20 k copies.

5.5 DEVELOPMENT BIAS CIRCUIT

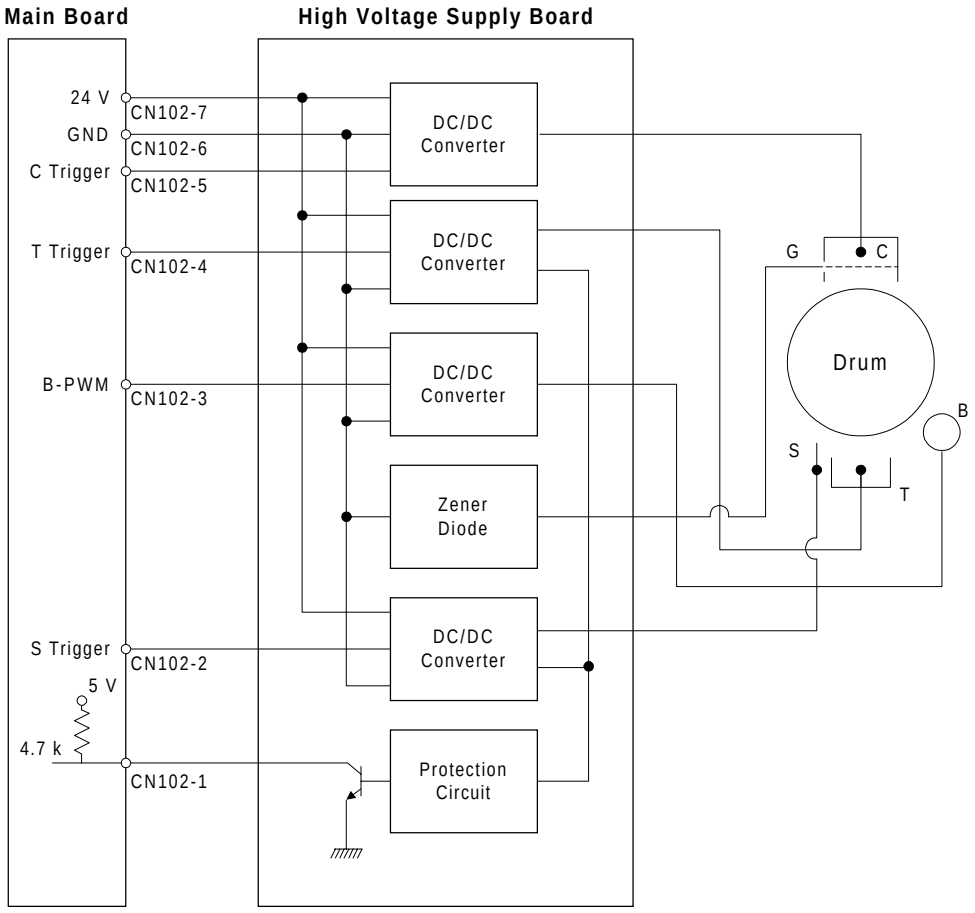

The main board supplies +24 volts to the high voltage supply board from CN102-7. When the ⏎ key is pressed, the CPU starts sending the bias trigger pulses from CN102-3. This energizes the development bias circuit within the high voltage supply board, which applies a high negative voltage to the development roller. The development bias is applied whenever the drum is rotating.

6. TONER SUPPLY

6.1 TONER BOTTLE REPLENISHMENT MECHANISM

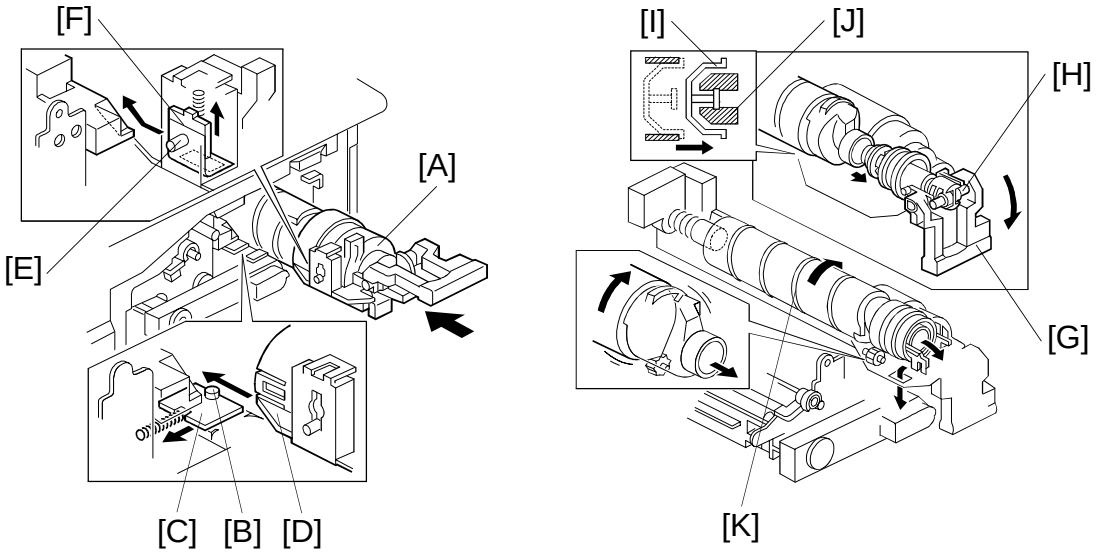

When a toner bottle is placed on the bottle holder unit [A] and pushed back in completely, the following happens automatically.

- The pin [B] on the imaging unit toner shutter [C] is pushed out (shutter opened) by the projection [D].
- The pin [E] on the toner shutter [F] is pulled up (shutter opened) as a result of the shape of the developer cartridge.

When the toner bottle holder lever [G] is pushed down to the operation position, the following happens automatically to allow toner to be supplied to the development unit.

- The shaft [H] is pushed out from the machine by the curved rail behind the toner bottle holder lever, and this pulls out the cap [I] into the chuck [J], where it is held.

The toner end detection system determines when to drive the toner bottle replenishment mechanism (see Toner End Detection). The toner supply mechanism transports toner from the bottle to the development unit. The toner bottle has a spiral groove [K] that helps move toner to the development unit.

When the bottle holder unit is pulled out to add new toner, the following happens automatically to prevent toner from scattering.

- The chuck releases the toner bottle cap into its proper position.
- Both shutters close as a result of pressure from their springs.

6.2 TONER SUPPLY MECHANISM

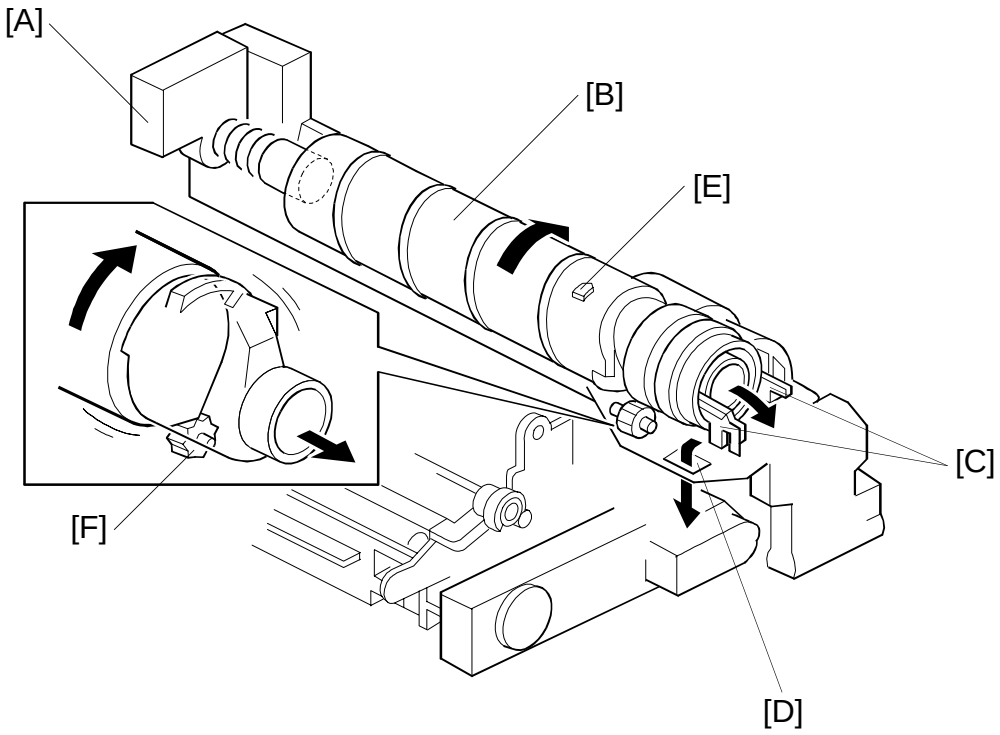

The toner supply motor [A] drives the toner bottle [B] and the mylar blades [C]. First, the toner falls down into the toner holder. The two toner supply mylar blades transfer the toner to the opening [D], then the toner falls down into the development unit.

There is a notch [E] on the toner bottle, and a roller [F] located under the toner bottle. They both shake the toner bottle to prevent toner clumps from forming. They also help to transport the toner inside the toner bottle when the amount of toner inside is low.

6.3 TONER DENSITY DETECTION MECHANISM

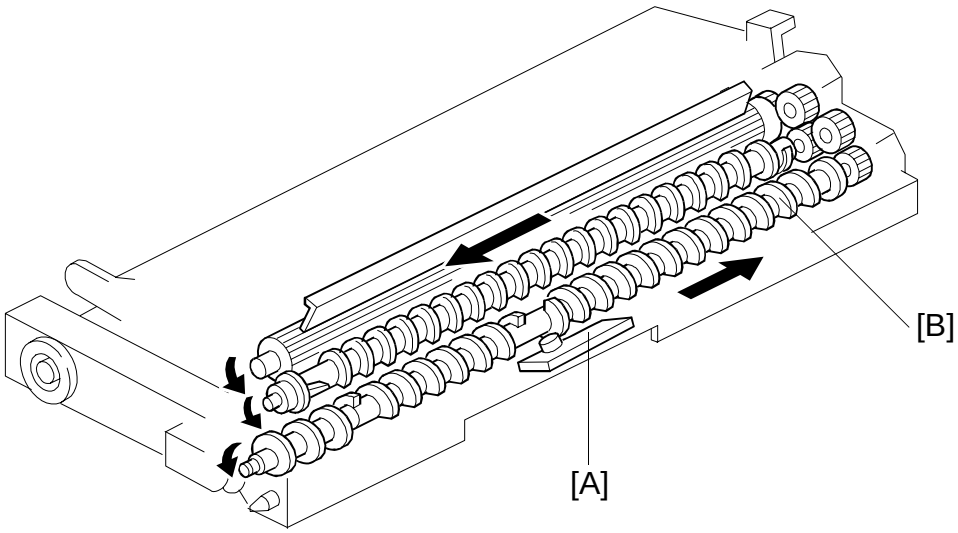

A toner density sensor (TD sensor) [A] is used for toner density control.

The TD sensor is located under the 1st agitator [B]. The developer being conveyed by the 1st agitator passes over the top of the sensor. As the toner in the developer is consumed during development, the toner to carrier ratio changes, resulting in a change in the magnetic permeability of the developer. This in turn is converted to a corresponding voltage. The CPU monitors the voltage to control the toner supply mechanism.

When new developer is installed, and SP66 (TD Sensor Initial Setting) is done, the machine starts idling for developer initialization. During developer initialization, the CPU adjusts the TD sensor control voltage so that the TD sensor outputs 1.9 $\pm$ 0.1 V for the toner to carrier ratio of new developer (4.0% by weight). This voltage is used as the standard TD sensor voltage.

6.4 TD SENSOR CHECK AND TONER SUPPLY TIMING

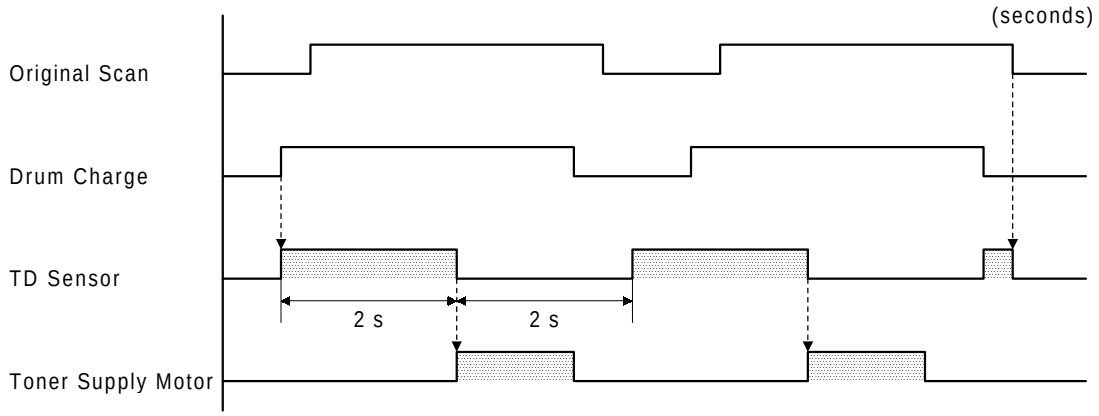

When a copy job begins the TD sensor voltage is monitored for two seconds when the 1st copy drum charge starts. The CPU checks the voltage every 40 ms and stores the second highest voltage of every 240 ms period. The voltages stored during the two seconds are averaged, and then the average is used as the TD sensor output value for that detection period. The TD sensor output value is used to determine the toner supply clutch on time. Then an appropriate amount of toner is added by the toner supply motor (as described in Toner Supply Amount). The TD sensor is monitored for two-second intervals until the last original scan is finished. Unlike a toner supply clutch mechanism, with a toner supply motor, the copier can add toner during image development.

6.5 TONER SUPPLY CONTROL

6.5.1 Modes Available

NOTE: The following pages explain how the various settings control the toner supply mechanism. They should not be adjusted in the field, unless instructed to do so as a countermeasure for a specific problem that may occur in the future.

SP30 Setting	Toner Supply Mode	Target Toner Sensor Voltage	Toner Supply Amount	Toner Near/End Detection
0	Detect Supply Mode	Depends on the initial TD sensor setting (1.9 ± 0.1 V).	Depends on the TD sensor output. SP31	Yes
1		Depends on SP53 (input manually).	Depends on the TD sensor output. SP31	Yes
2		Depends on the initial TD sensor setting (1.9 ± 0.1 V).	Fixed SP31	No
3		Depends on SP53 (input manually).	Fixed SP31	No
4	Fixed Supply Mode	None	Fixed SP31	No

Default setting: 0

Depending on the SP30 setting, Detect Supply mode or Fixed Supply mode is selected. If 0, 1, 2, or 3 is selected with SP30, Detect Supply mode is used. If 4 is selected, Fixed Supply mode is used.

Note that when 2, 3, or 4 is selected, the machine will not perform the toner near-end/or toner end detection. Normally, SP30 should always be kept at the default setting. The following pages describe the toner supply mode settings in detail.

6.5.2 Detect Supply Mode

In Detect Supply mode, the CPU monitors the TD sensor voltage, which depends on the toner to carrier ratio in new developer. As the toner in the developer is consumed, the TD sensor output voltage increases.

The TD sensor voltage is compared with the standard voltage (known as the Target Toner Sensor Voltage), and toner is supplied when the TD sensor output is higher than this target voltage.

The machine has two ways of calculating the target toner sensor voltage (either the initial TD sensor setting is used, or a value can be input using SP53); the method used depends on SP30. The toner supply amount can also be changed using SP31 or 32.

1) Target Toner Sensor Voltage

- Method 1 -

Normally (if 0 or 2 is selected with SP30) the voltage is determined by the following factors:

Target Toner Sensor Voltage (V_{TS}) = Initial Developer Setting Voltage (V_{T0})
+
Toner Density Adjustment Factor

a) Initial Developer Setting Voltage (V_{T0})
This voltage is adjusted to 1.9 ± 0.1 V during developer initialization (refer to Toner Density Detection).

b) Toner Density Adjustment Factor
The target toner density can be changed by customers or service engineers using SP mode 38 or user tool No. 6.

SP 38 Setting	User Tool 6 Setting	Toner Density	Toner Density Adjustment Factor (β)
0	0	Normal	0
1	1	Darker	–S x 1/2
2	2	Lighter	+S x 1/2
3		Darkest	–S
4		Lightest	+S

S: TD Sensor Sensitivity (SP36) Default: Normal

The sensor sensitivity is stored in SP36.

TD Sensor Sensitivity (S) [V/wt%] =

Change of TD sensor output [V]/Change of toner density [wt%] =

SP36 setting x 0.05 [V] (Default: SP36 = 15)

- Method 2 -

If 1 or 3 is selected with SP30, the setting of SP53 is used as the target toner sensor voltage. In this case, the target toner sensor voltage is determined by the following formula:

Target Toner Sensor Voltage = SP53 setting x 0.02 [V] (Default: 97 = 1.94 V)

The TD sensor initial setting is not changed by this SP mode. However, it is ignored if method 2 is selected.

2) Toner Supply Amount

- Method 1 -

Normally (if 0 or 1 is selected with SP30), the toner supply amount is determined by the difference between the actual TD sensor voltage (V_T) and the target toner sensor voltage (V_{TS}). The following table shows the relationship between the sensor output and the toner supply motor on time for each copy.

Toner Supply Level	TD Sensor Voltage Level [V_T]	Toner Supply Motor On Time
1	$V_{TS} < V_T \leq V_{TS} + S/16$	t
2	$V_{TS} + S/16 < V_T \leq V_{TS} + S/8$	2 x t
3	$V_{TS} + S/8 < V_T \leq V_{TS} + S/4$	4 x t
4	$V_{TS} + S/4 < V_T \leq V_{TS} + S/2$	8 x t
5	$V_{TS} + S/2 < V_T \leq V_{TS} + 4S/5$	16 x t
6 (Near End Level)	$V_T \geq V_{TS} + 4S/5$	*10 seconds
7 (Toner End Level)	$V_T \geq V_{TS} + S$	*10 seconds

The toner supply time unit "t" can be changed using SP31.
t = SP31 setting x 0.1 [second] (Default: 4 = 0.4 second)
S: TD Sensor Sensitivity (SP36)
* This value can be changed using SP35.

- Method 2 -

If 2 or 3 is selected with SP30, a fixed amount of toner is supplied when the TD sensor voltage becomes higher than the target toner sensor voltage. The amount of toner can be selected using SP32.

SP32 Setting	Toner Supply Motor On Time (seconds)	Corresponding image area ratio (%)
0	0.3	3.5
1	0.6	7
2	1.2	15
3	2.4	30
4	3.6	45
5	4.8	60
6	Stays on until the TD sensor voltage becomes lower than the target voltage.	
7	0 (No toner supply)	0

6.5.3 Fixed Supply Mode

If 4 is selected with SP30, the TD sensor is not used for toner supply control. A fixed amount of toner is supplied every copy cycle. The toner supply amount is determined by the SP32 setting.

6.5.4 Abnormal Condition in Toner Density Detection

If the output of the TD sensor goes below 0.2 volts (indicating far too much toner), the CPU determines that the toner density supply is abnormal. The CPU changes from the detect supply mode to the fixed supply mode. At the same time, either the Auto ID indicator or the selected manual ID level starts blinking, and the machine can be used. No SC code is generated. Under this condition, the machine will not perform the toner end detection.

If the value recovers above 0.2 volts, or the main switch is turned off and on, this condition is canceled and the toner density detection will recover to the toner supply mode that was in use immediately before the abnormal condition occurred.

6.6 TONER END

Toner Supply Level	TD Sensor Voltage Level [V_T]	Toner Supply Motor On Time
1	$V_{TS} < V_T \leq V_{TS} + S/16$	t
2	$V_{TS} + S/16 < V_T \leq V_{TS} + S/8$	2 x t
3	$V_{TS} + S/8 < V_T \leq V_{TS} + S/4$	4 x t
4	$V_{TS} + S/4 < V_T \leq V_{TS} + S/2$	8 x t
5	$V_{TS} + S/2 < V_T \leq V_{TS} + 4S/5$	16 x t
6 (Near End Level)	$V_T \geq V_{TS} + 4S/5$	*10 seconds
7 (Toner End Level)	$V_T \geq V_{TS} + S$	*10 seconds

The toner supply time unit "t" can be changed using SP31.
t = SP31 setting x 0.1 [second] (Default: 4 = 0.4 second)
S: TD Sensor Sensitivity (SP36)
* This value can be changed using SP35.

6.6.1 Toner Near End

If the CPU detects toner supply level 6 ($V_T \geq V_{TS} + 4S/5$) five times consecutively, the toner end indicator blinks and the machine goes to the toner near end condition.

In this condition, the toner supply motor is energized for 10 seconds for every copy (this time can be changed using SP35). Also, the toner supply motor stays on continuously between pages of a multi-copy job.

If a toner sensor voltage lower than $V_{TS} + 4S/5$ is detected twice consecutively while the toner supply motor is on, the machine recovers from the toner near end condition. Also, if this condition is detected during the normal copy cycle, the toner near end is canceled.

6.6.2 Toner End

If toner supply level 6 is detected, the machine supplies toner between copies and for 10 seconds after the copy job is finished (as explained above). While the toner supply motor is on, if the CPU detects toner supply level 7 ($V_T \geq V_{TS} + S$) three times consecutively, a toner end condition is detected and copier operation is disabled.

If the toner sensor voltage stays at level 6 after the toner near end condition is detected, 50 more copies can be made. After 50 copies, the toner end indicator lights and copying is disabled.

6.6.3 Toner End Recovery

If the main switch is turned off and on, or the front door is opened and closed during a toner end condition, the machine checks the toner bottle for replacement. The main motor turns on and the toner supply motor is intermittently energized. If the TD sensor voltage does not recover from level 7 within 40 seconds, the machine stops, keeping the toner end condition. If the TD sensor voltage becomes lower than V_{TS} +3S/5 in this period, the machine recovers from the toner end condition. Then the toner supply motor stops, but the main motor continuously rotates for 40 seconds to distribute toner evenly inside the development unit.

7. IMAGE TRANSFER AND PAPER SEPARATION

7.1 OVERALL

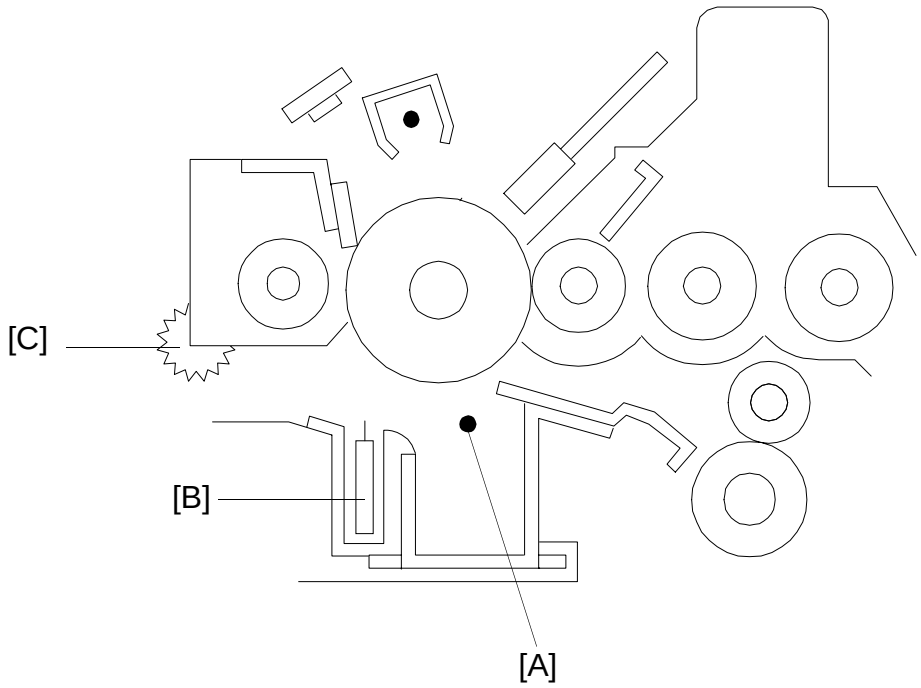

A high negative voltage (approximately –5 kV) is applied to the transfer corona wire [A], and the corona wire generates negative ions. These negative ions are applied to the back side of the copy paper. This negative charge forces the paper against the drum and attracts the positively charged toner onto the paper.

A high positive voltage (approximately +2.2 kV) is applied to the discharge plate [B]. The negative charge on the copy paper is discharged after image transfer by this discharge plate to ensure paper separation from the drum.

The spurs [C] prevent unfused toner on the paper from being smeared by the bottom surface of the imaging unit.

7.2 TRANSFER CORONA AND DISCHARGE PLATE CIRCUIT

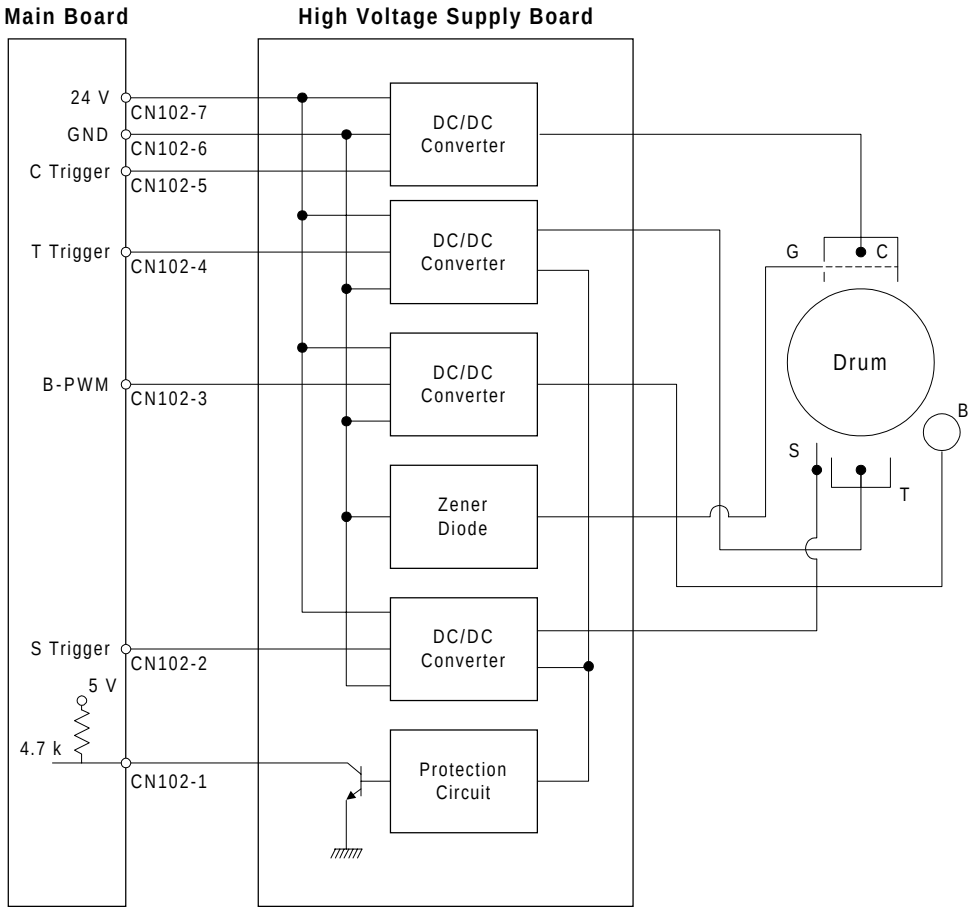

When the CPU drops CN102-4 from +24 V to 0 V, the transfer corona (-5kv) is applied to the back of the copy paper and the drum. When the CPU drops CN102-2 from 5V to LOW, a high positive voltage (+2.2 kV) is applied to the discharge plate.

8. DRUM CLEANING

8.1 OVERVIEW

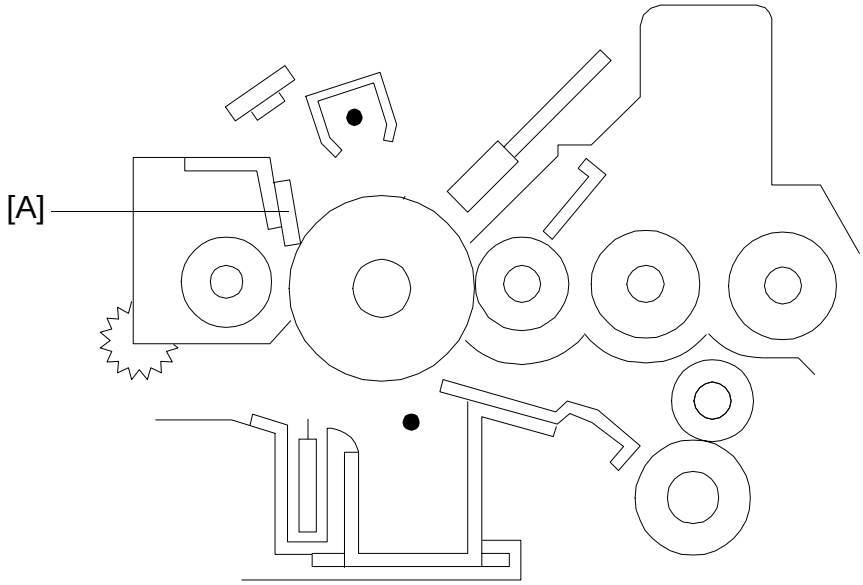

A counter blade system is used for drum cleaning. The cleaning blade [A] scrapes off any toner remaining on the drum after the image is transferred to the paper.

The removed toner is transported into the developer to be recycled.

8.2 TONER RECYCLING MECHANISM

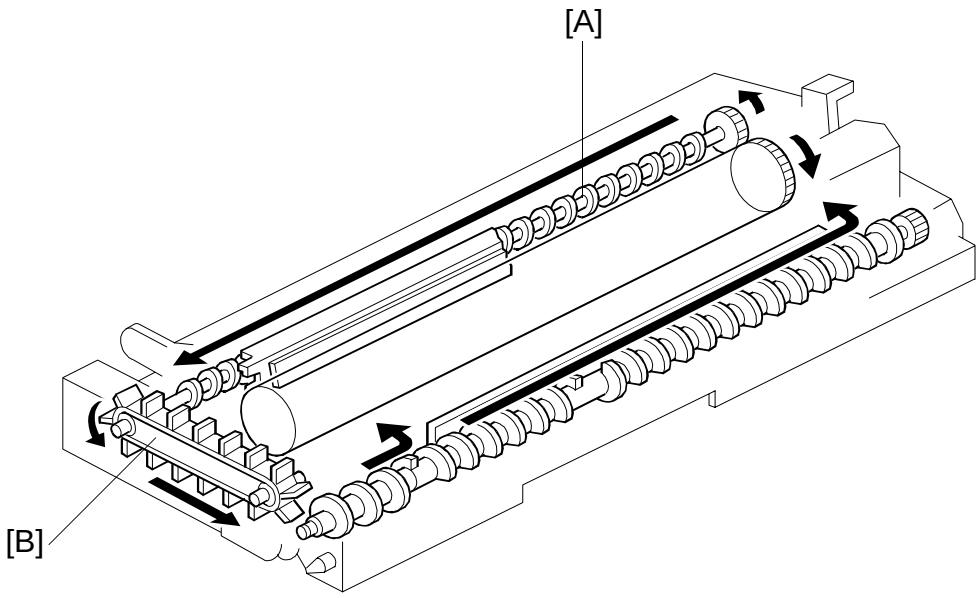

The toner removed from the drum falls onto the toner collection coil [A]. The drum gear rotation is directly transmitted to the toner collection coil drive gear.

As the coil rotates, the toner moves from rear to front until it reaches the toner recycling belt [B]. The paddles of the belt, which is driven by the toner collection coil shaft, transports the toner into the developer, and the toner is recycled.

9. QUENCHING

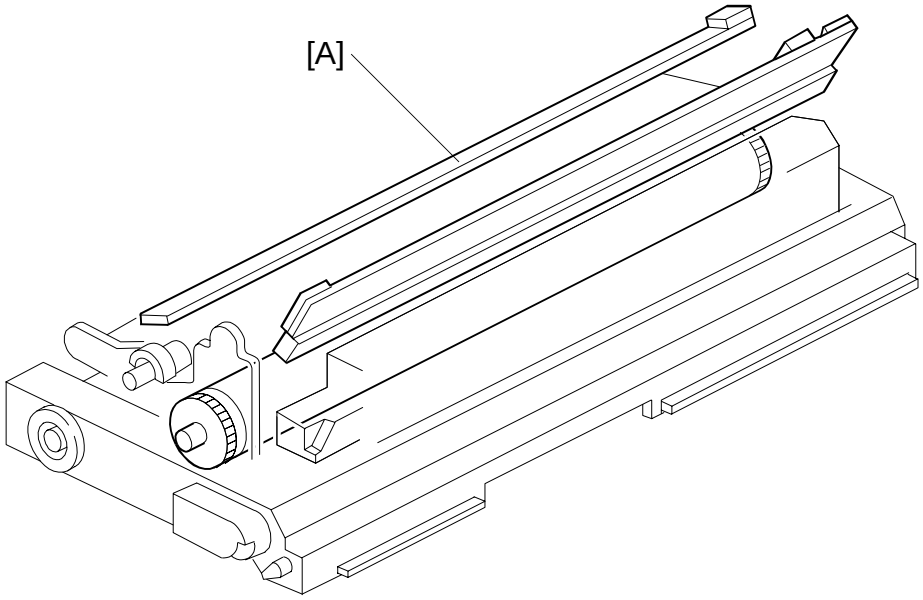

In preparation for the next copy cycle, light from the quenching lamp (QL) [A], which is installed in the upper unit, neutralizes any charge remaining on the drum.

LEDs are used for quenching and the lamp is turned on whenever the main motor rotates.

10. PAPER FEED AND REGISTRATION

10.1 OVERVIEW

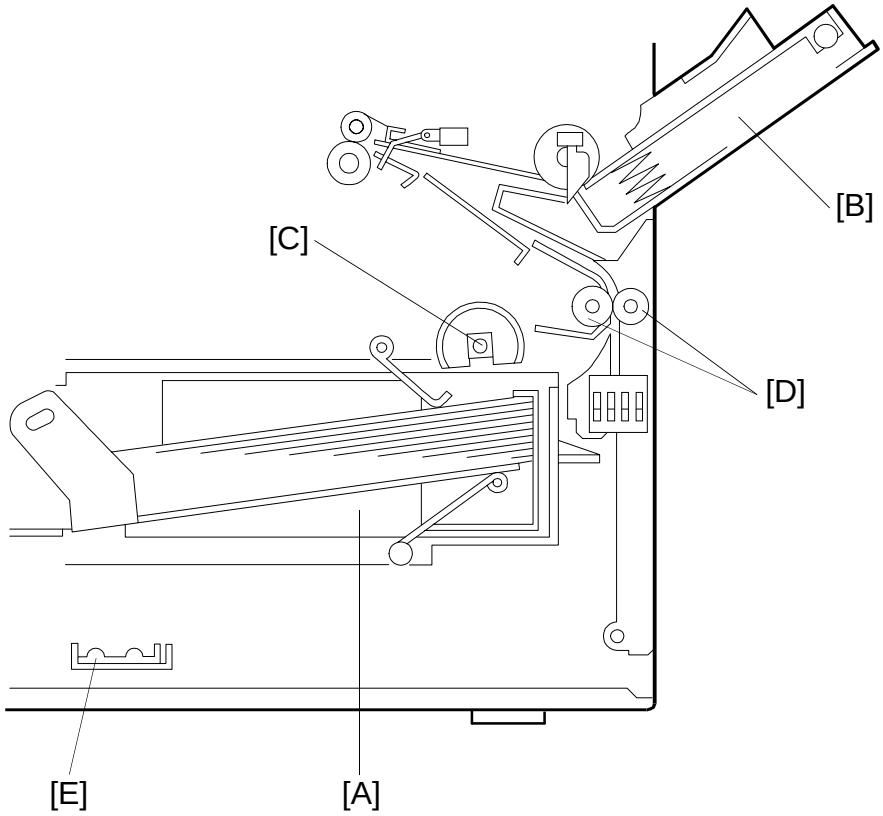

This copier has one paper feed station and a by-pass feed table.

The paper feed station uses a paper tray [A] which can hold 500 sheets. The by-pass feed table [B] can hold 80 sheets.

The paper tray uses two semicircular feed rollers [C] and corner separators. The semicircular feed rollers make one rotation to drive the top sheet of the paper stack to the relay rollers [D]. The paper tray has two corner separators, which allow only one sheet to feed. They also hold the paper stack. When the paper tray is drawn out of the machine, the spring pressure is released, and the tray bottom plate drops. In addition, there is no need to press the bottom plate down when putting the tray back in.

The by-pass feed table uses a feed roller and friction pad system to feed the top sheet of paper to the registration rollers.

In humid environments, copy paper may crease as it comes out of the fusing unit. The optional tray heater [E] is available as a service part to keep copy paper dry.

10.2 PAPER TRAY FEED

10.2.1 Paper Lift Mechanism

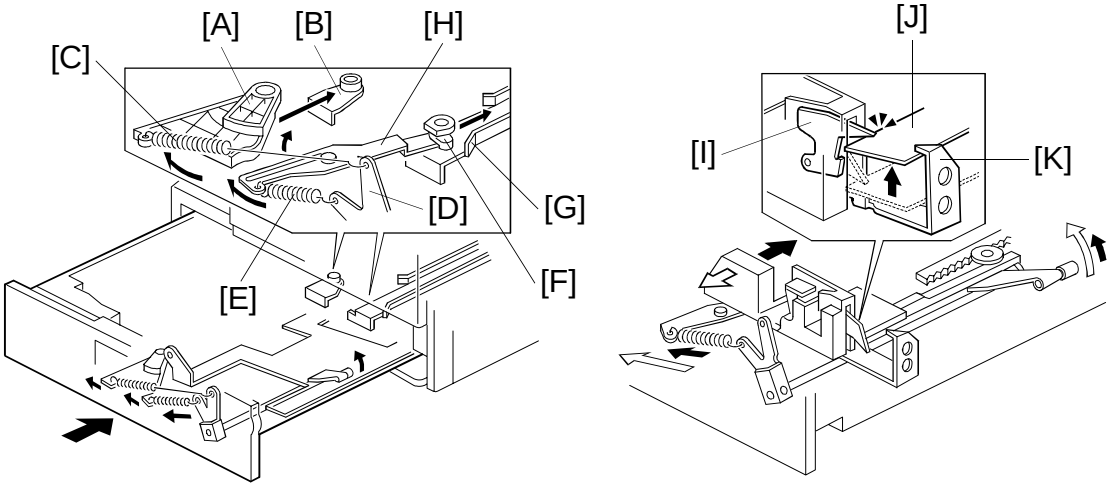

The capacity of this tray is higher than usual for a corner separator type. Because of this, there are two springs to lift the bottom plate.

As the tray is pushed into the machine, shutter [A] under the tray pushes against projection [B]. As the shutter slides past the projection, the shutter rotates, which forces the main lift spring [C] to pull the bottom plate lever [D]. The secondary lift spring [E] also pulls the bottom plate lever (this is described below).

The tension applied to the main lift spring is always the same. However, the secondary spring is only used when wider paper is installed, to lift the extra weight of the paper stack. The tension applied to the secondary lift spring depends on the paper width. Below a certain threshold width, tension is not applied. Above this width, the wider the paper, the more tension is applied. To apply spring tension for wider paper, projection [F] stops against the end of rail [G]. When this happens, lever [H] swings out in the direction shown above, which stretches the spring as the tray is pushed in. The side fence position affects the orientation of [F]; wider paper causes [F] to contact [G] earlier, leading to greater spring tension when the tray has been pushed all the way in.
For narrow paper, the secondary lift spring is not needed. The side fence orients projection [F] so that it slides past the rail as the tray is pushed into the machine, and the spring stays slack.

The bottom plate stopper [I] rests on the bottom plate [J]. It stops the bottom plate at the maximum height. When the tray is getting empty, the corner separators [K] start to rise, and continue to rise as the amount of paper in the tray decreases, so that the paper is always at the correct height.

10.2.2 Paper Feed Mechanism

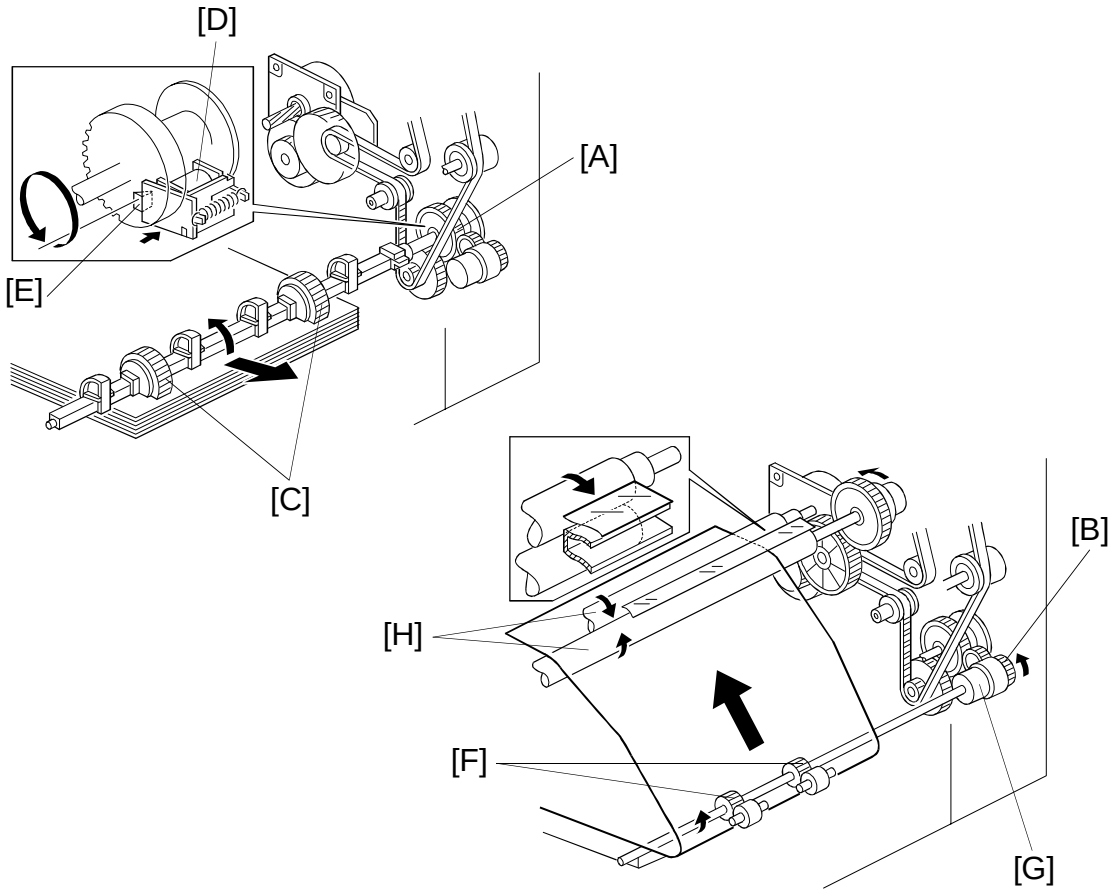

Through several gears and a timing belt, main motor rotation is transmitted to the tray paper feed clutch gear [A] and the relay roller clutch gear [B].

-Feed rollers-

The tray paper feed clutch gear is on the same shaft as the semicircular feed rollers [C]. After the ⎆ key is pressed, the tray paper feed clutch [D] is energized for 250 milliseconds to release the stopper [E]. Then the drive of the main motor is transmitted, and the feed rollers make one complete rotation to feed the top sheet of paper which is enough for the leading edge of the paper to be caught by the relay rollers [F]. The feed rollers stop when the stopper drops back into the notch at the end of one complete turn.

-Relay rollers-

The relay roller clutch gear is on the same shaft as the relay rollers. The rotation timing of the relay rollers is controlled by the relay roller clutch [G]. The CPU energizes the relay roller clutch after the ⎆ key is pressed (at the same time as the tray paper feed clutch). Paper is fed from the relay rollers to the registration rollers [H].

10.3 BY-PASS FEED

10.3.1 Overview

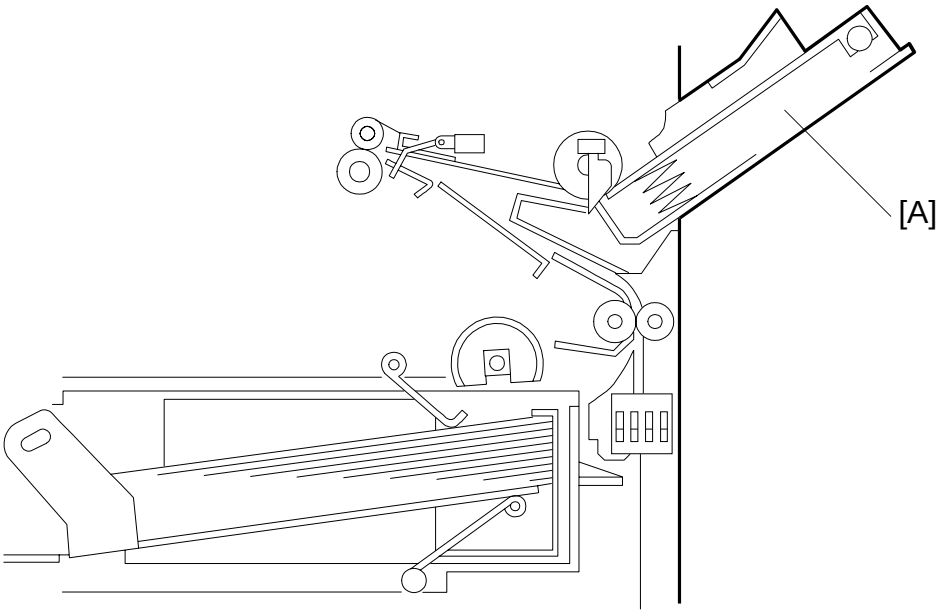

The by-pass feed table [A] can hold 80 sheets of paper.

This machine does not have a by-pass feed cover sensor. The by-pass feed indicator is always displayed on the operation panel. The Add Paper indicator will light when the user selects by-pass feed while the by-pass feed table is closed or if there is no paper on the by-pass feed table.

After the ◇ key is pressed, the cpu energizes the by-pass feed clutch and the by-pass feed roller starts to feed paper to the registration roller.

This machine does not have any sensor or switch to determine the paper size for by-pass feed. The machine will perform a full scan for all copies.

10.3.2 Paper Feed Mechanism and Paper End Detection

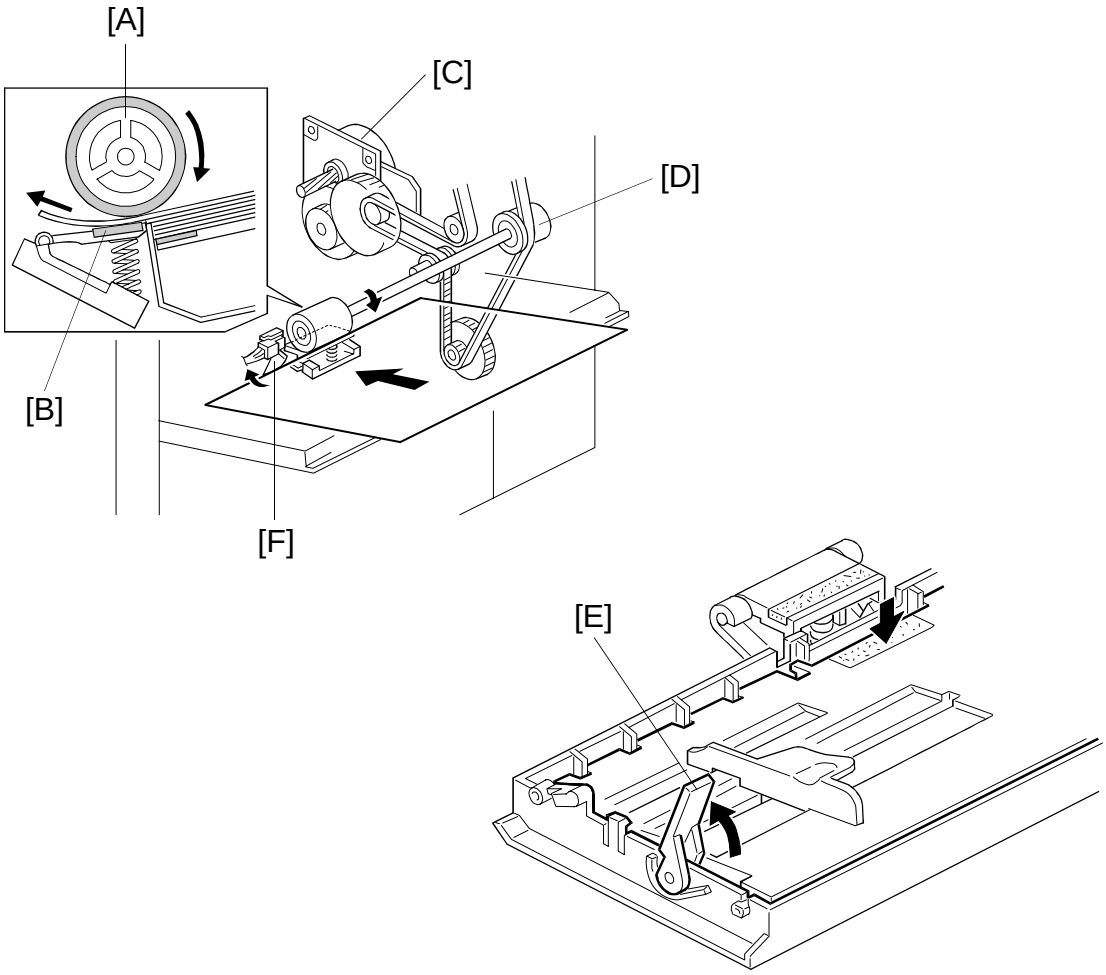

This machine uses a feed roller [A] and friction pad [B] mechanism, with drive from the main motor [C] transmitted when the by-pass feed clutch [D] turns on. The friction pad prevents all but the top sheet from feeding. Therefore, during paper feed, the top sheet of paper is separated from the stack and fed to the registration rollers.

Before placing paper on the by-pass feed table, the user must lower the by-pass feed table by using the lever [E]. This is to ensure that the paper is placed between the friction pad and the feed roller. Then, before starting to copy, it must be put back up to move the paper stack into contact with the feed roller.

When there is no paper on the by-pass feed table, the paper end feeler [F] drops into the cutout in the by-pass feed table and the by-pass feed paper end sensor is activated.

10.4 PAPER REGISTRATION

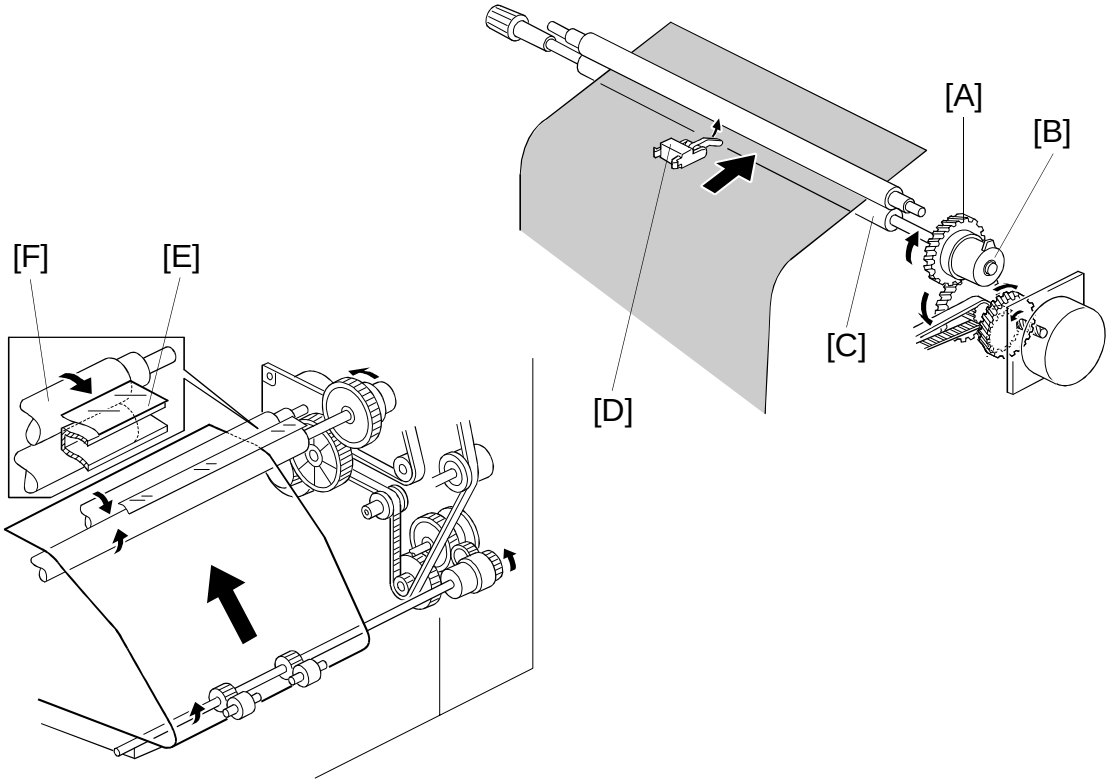

Main motor rotation is transmitted to the registration roller clutch gear [A] through several gears and a timing belt. When the registration clutch [B] is energized, the rotation of the clutch gear is transmitted to the lower registration roller [C].

The registration sensor [D], which is positioned just before the registration rollers, controls the relay roller clutch stop timing. The relay roller clutch stays on for 130 milliseconds after the leading edge of the paper actuates the registration sensor. The CPU then turns off the relay roller clutch. This delay allows time for the paper to press against the registration rollers and buckle slightly to correct skew.

The CPU energizes the registration clutch at the proper time to align the paper with the image on the drum.

The registration sensor is also used for paper misfeed detection.

The paper dust mylar [E] on the upper registration roller [F] removes paper dust before the paper reaches the transfer/separation unit.

10.5 SIDE FENCE DOUBLE STOPPER MECHANISM

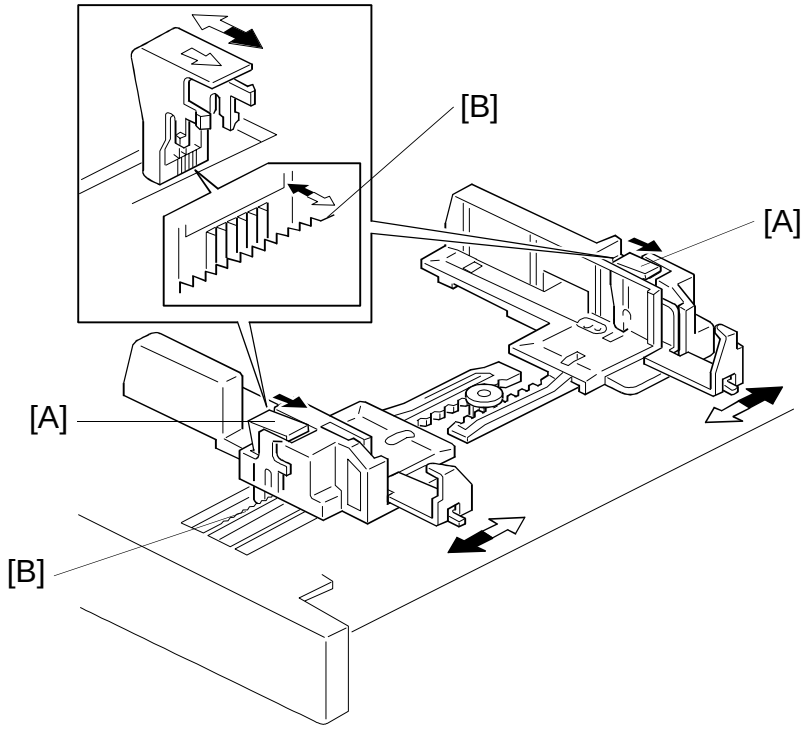

There is a side fence stopper mechanism for both the front and rear side fences.

If the tray is closed with excessive force after loading paper, paper may come over the rear side fence, because the fence is deformed by the weight of the paper leaning against it. As a result, skewing or paper jams may occur. To prevent this, a side fence stopper mechanism has been added to the rear side fence.

The release levers [A] each have a stopper which contains teeth like those on a gear. The guide rails [B] also have teeth. When the release lever is pushed, the gear teeth release each other and the side fences can be moved.

10.6 PAPER END DETECTION

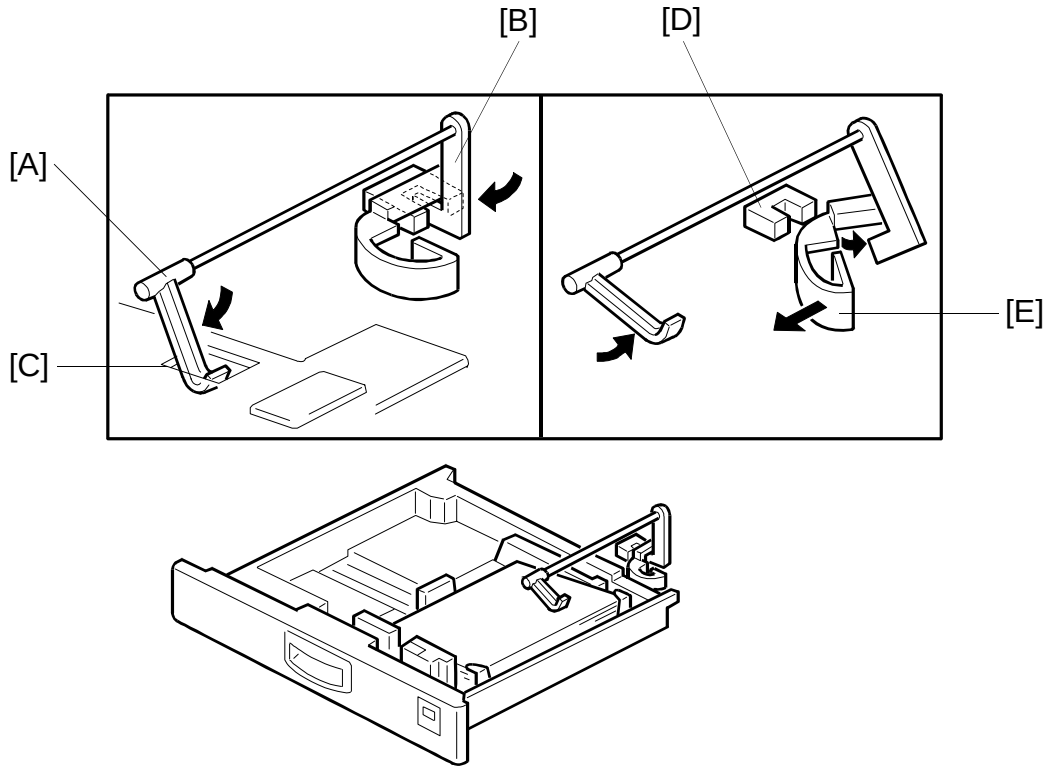

The paper end feeler [A] is on the same shaft as the paper end actuator [B]. When the paper tray runs out of paper, the paper end feeler drops into the cutout [C] in the tray bottom plate. The paper end actuator activates the paper end sensor [D].

The paper end actuator is in contact with the lever [E]. When the tray is drawn out, the lever turns as shown by the arrow in the diagram. Then the lever pushes up the actuator. As a result, the feeler rotates upwards. This mechanism is necessary to prevent the feeler from getting damaged by the paper tray body.

10.7 PAPER FEED AND MISFEED DETECTION TIMING

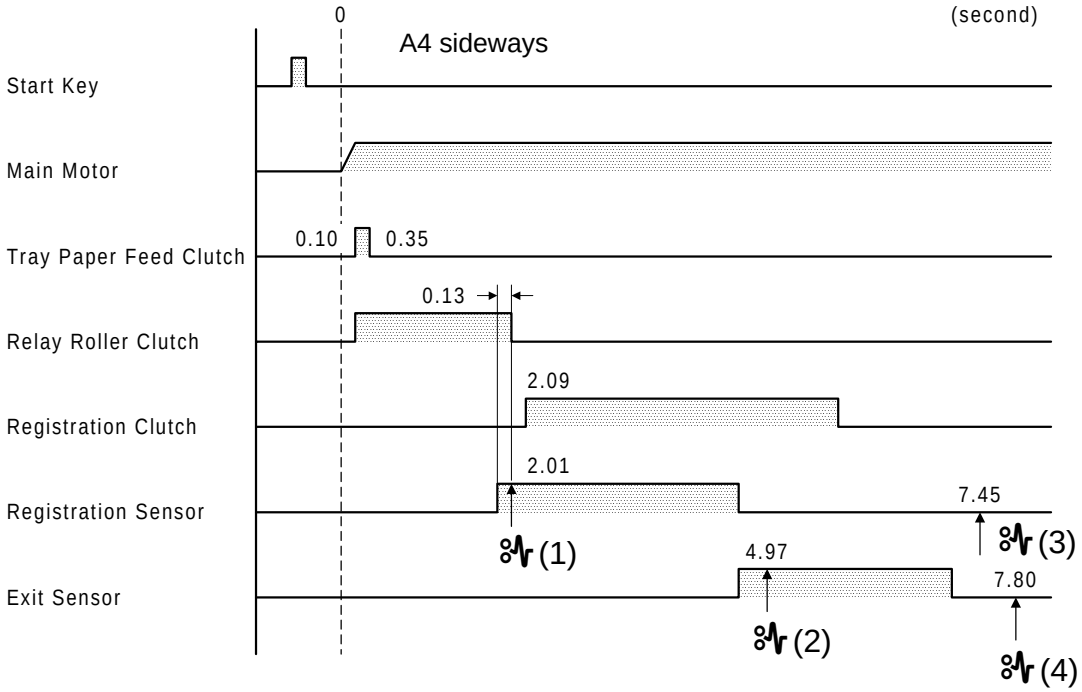

The registration sensor and the exit sensor are used for misfeed detection. If the CPU detects a misfeed, the Check Paper Path and the Location indicators turn on.

Just after the main switch is turned on, the CPU checks these sensors for any jammed paper.

During the copy cycle, the CPU performs four kinds of misfeed detection. The following explains jam detection timing for copying A4 sideways paper.

(1): Checks whether the registration sensor is actuated within 2.01 seconds after the ◇ key is pressed.
(2): Checks whether the exit sensor is actuated within 4.97 seconds after the ◇ key is pressed.
(3): Checks whether the copy paper has passed through the registration sensor 7.45 seconds after the ◇ key is pressed.
(4): Checks whether the copy paper has passed through the exit sensor 7.80 seconds after the ◇ key is pressed.

NOTE: (1) and (2) are detected from the lead edge of the copy paper. (3) and (4) are detected from the trail edge of the copy paper. The detection timing for (3) and (4) will vary with the copy paper size in use.

10.8 OTHERS

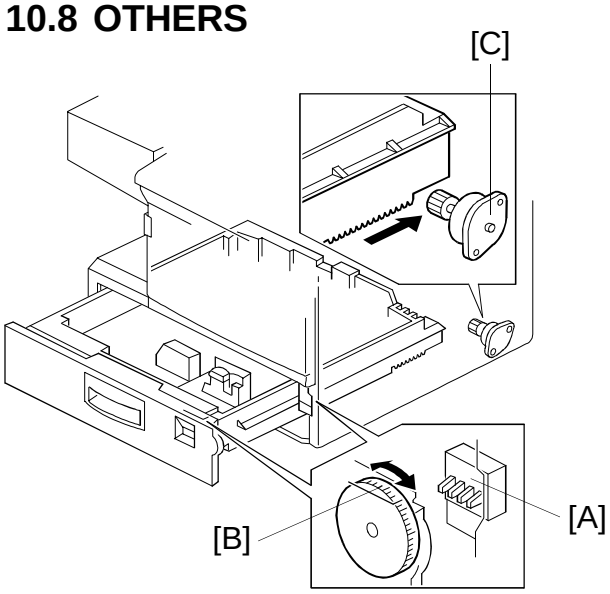

SW (from right to left) / Size	1	2	3	4
A3, F(8 1/2"x13")	●	●	●	❍
A4 Lengthwise	●	❍	●	❍
A4 Sideways	●	●	❍	❍
A5 Sideways, 11"x17"	●	❍	❍	❍
B4, 8 1/2"x14"	❍	●	❍	❍
B5 Sideways, 8 1/2"x11"	❍	❍	❍	❍
B5 Lengthwise, 11"x8 1/2"	❍	❍	●	❍
* (Asterisk)	❍	❍	●	●

●: ON (Not pushed) ❍: OFF (Pushed)

10.8.1 Paper Size Detection

There are four microswitches [A] on the front right plate of the main frame. The sensors are actuated by a paper size actuator [B] behind the paper size indicator plate on the front right of the tray. Each paper size has its own actuator, with a unique combination of notches. To determine which size tray has been installed, the cpu reads which switches have been pressed. The cpu disables paper feed if the paper size cannot be detected. If the paper size actuator is broken, or if there is no tray, the Add Paper indicator will light.

When the paper size actuator is at the "*" mark, the paper tray can be set up to accommodate one of a wider range of paper sizes. The setting for this mode is performed with SP74. Paper length will be taken from this setting, and not from the registration sensor readings.

Because of the limited space on the operation panel, not all the paper sizes possible with the paper size actuator can be displayed on the operation panel. In some cases, the " * " mark will be displayed, but the machine will operate in accordance with the selected paper size.
The paper size switch also acts as a tray open sensor.

10.8.2 Shock Absorber

At the position shown, a damper [C] is installed to reduce the shock to the paper tray when it is pushed back into the copier. This is to prevent the stack of paper inside the paper tray from coming over the corner separators, which will cause double feeding or image skew on copies.

11. IMAGE FUSING

11.1 OVERVIEW

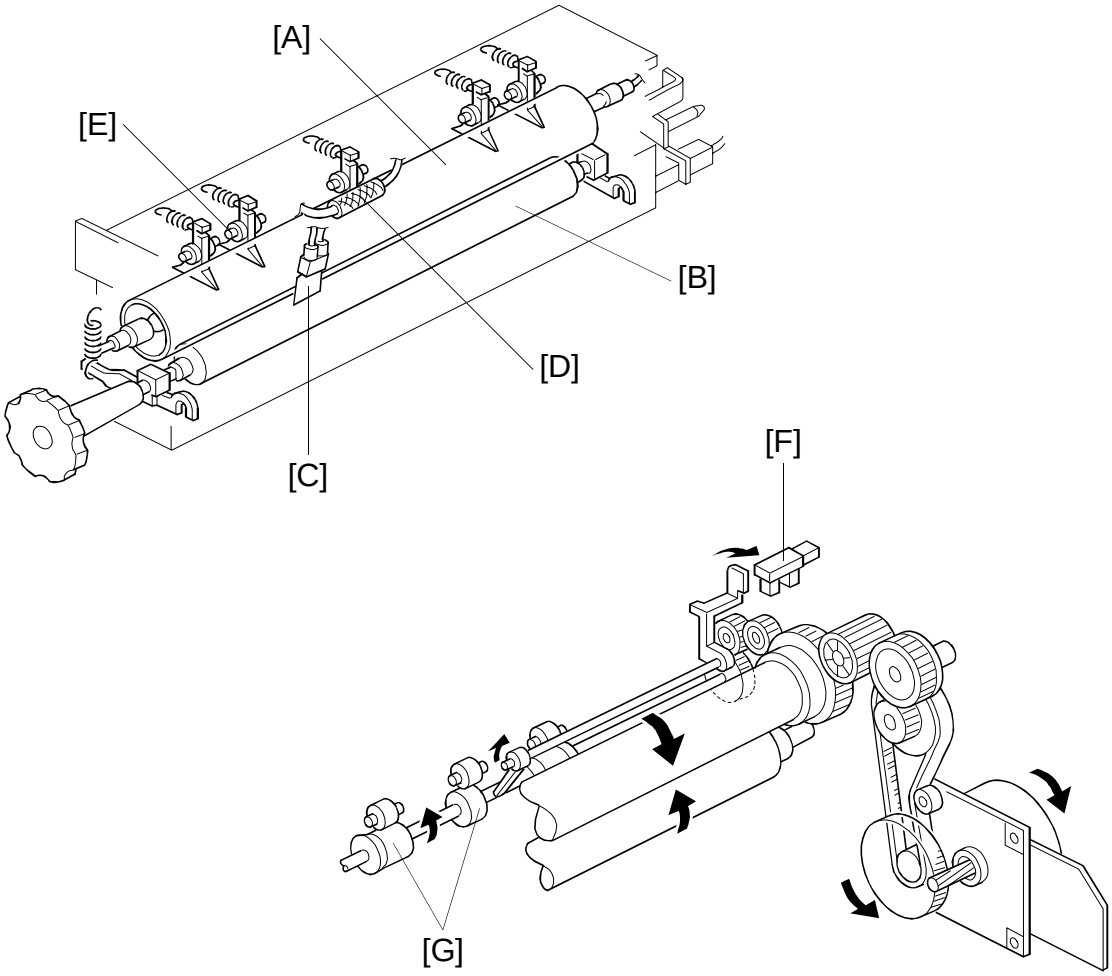

After the image is transferred, the copy paper enters the fusing unit. The image is fused to the copy paper by heat and pressure using a hot roller [A] and a pressure roller [B].

The CPU monitors the hot roller temperature through a thermistor [C] which is in contact with the hot roller surface. A thermofuse [D] prevents the fusing unit from overheating.

The hot roller strippers [E] separate the copy paper from the hot roller and direct it to the exit rollers. The exit sensor [F] monitors the progress of the copy paper through the fusing unit and acts as a misfeed detector. The exit rollers [G] drive the copy paper to the copy tray.

11.2 FUSING DRIVE MECHANISM

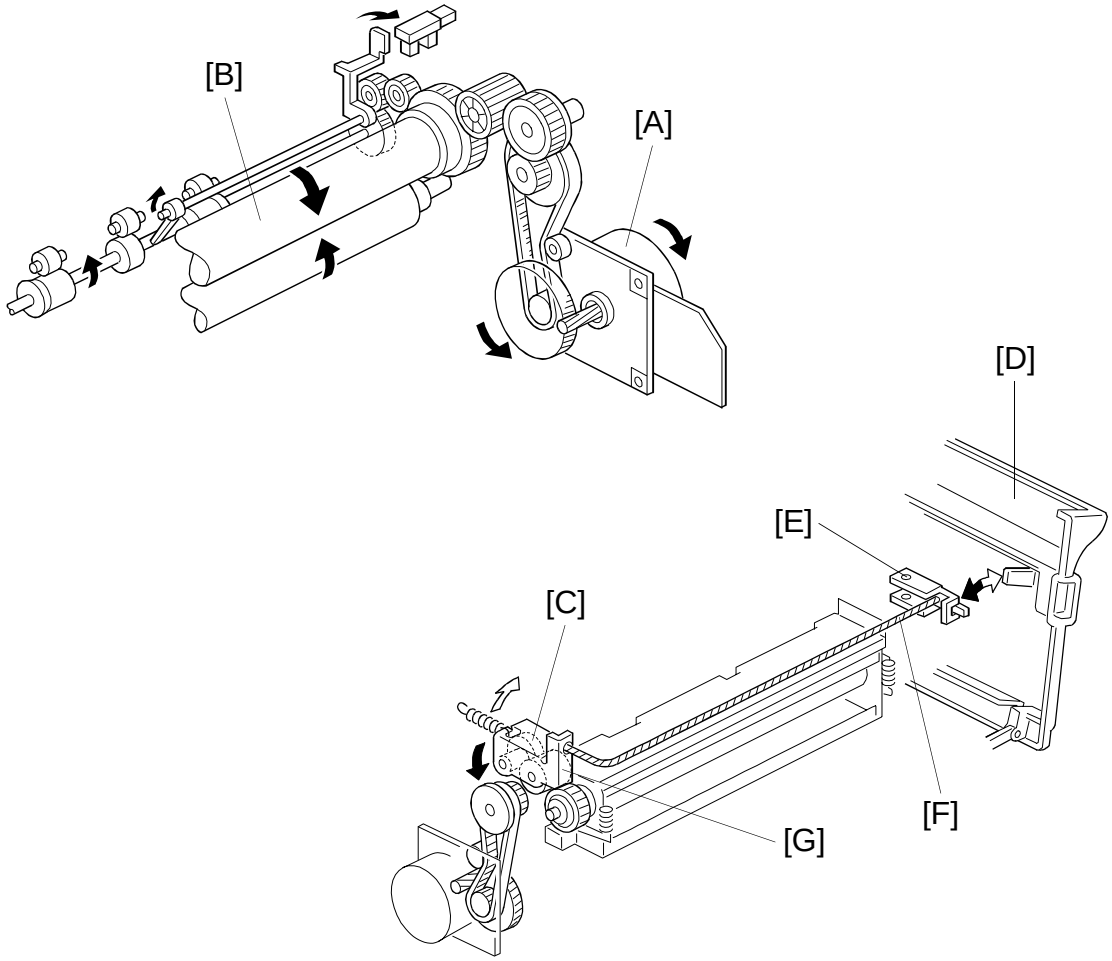

Drive from the main motor [A] is transmitted to the hot roller [B] through idle gears and a timing belt. The hot roller always rotates while the main motor rotates.

The fusing unit drive release mechanism automatically disengages the fusing drive gear [C] when the front cover [D] is opened. This allows the fusing unit drive gear to rotate freely so that misfed paper can be easily removed.

When the front cover is opened, the actuator plate [E] pulls the release wire [F]. The wire pulls the fusing unit gear bracket [G] and the fusing unit drive is disengaged.

11.3 FUSING LAMP CONTROL

The CPU monitors the temperature of the hot roller surface using a thermistor. The fusing lamp is turned on and off to keep the hot roller surface at the target temperature. The target temperature depends on the machine condition as follows:

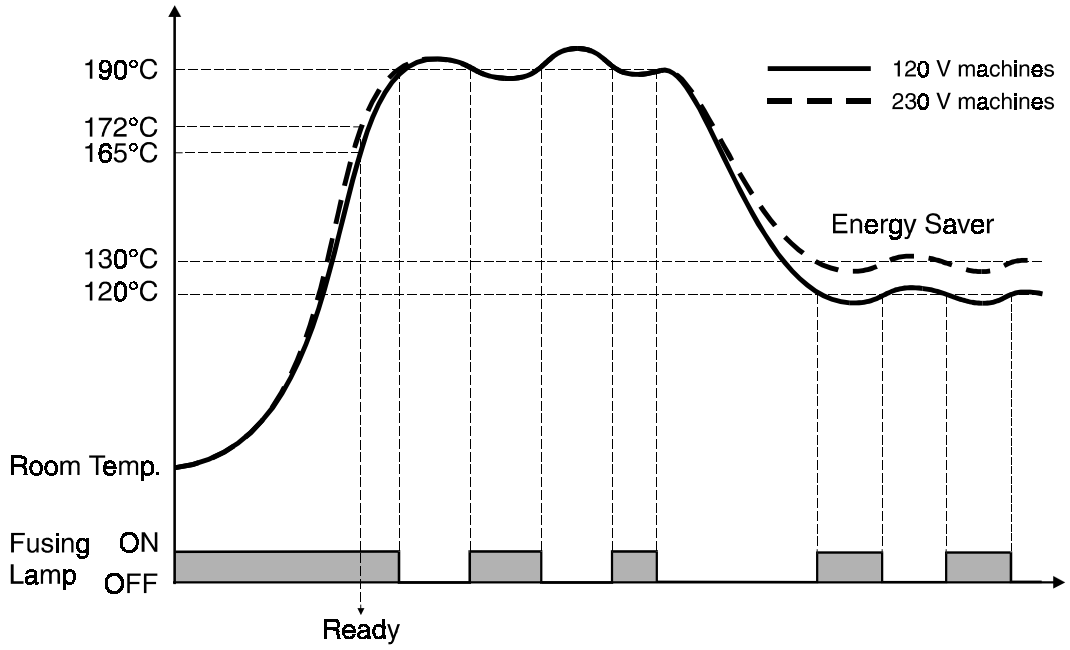

Machine Condition	Fusing Lamp ON/OFF Threshold	Remarks
Ready	165°C: 120 V machines 172°C: 230 V machines	—
After the main switch is turned on, and after one minute has passed since the fusing temperature reached the Ready condition.	190°C	After the fusing unit reaches the ready temperature, the fusing lamp is kept on until it reaches 190°C.
After the above time period, the copier enters the energy saver mode.	120°C: 120 V machines 130°C: 230 V machines	When the ◇ key is pressed, the red indicator blinks and copying starts after the fusing temperature reaches the Ready condition.
During copying	190°C	—

When the main switch is turned on, the CPU turns on the fusing lamp. When the fusing thermistor detects the ready temperature, the machine enters the ready condition. After the ready temperature is detected, the CPU keeps the fusing temperature at 190°C for one minute, then the target temperature is changed to 120°C (120 V machines) or 130°C (230 V machines).

When the ⧈ key is pressed, if the fusing lamp temperature is higher than the ready temperature, the machine starts copying immediately. If the temperature is lower, the fusing lamp is turned on and the start indicator turns red and blinks. Copying starts after the fusing temperature reaches the ready temperature, and the fusing temperature is kept at 190°C during copying.

After copying is finished, the fusing temperature is kept at 190°C for one minute.

To prevent any copy quality problem caused by exposure lamp intensity fluctuation, the fusing lamp does not turn on while the exposure lamp is on, even if the fusing temperature drops below 190°C.

11.4 FUSING LAMP CONTROL CIRCUIT

11.4.1 Overview

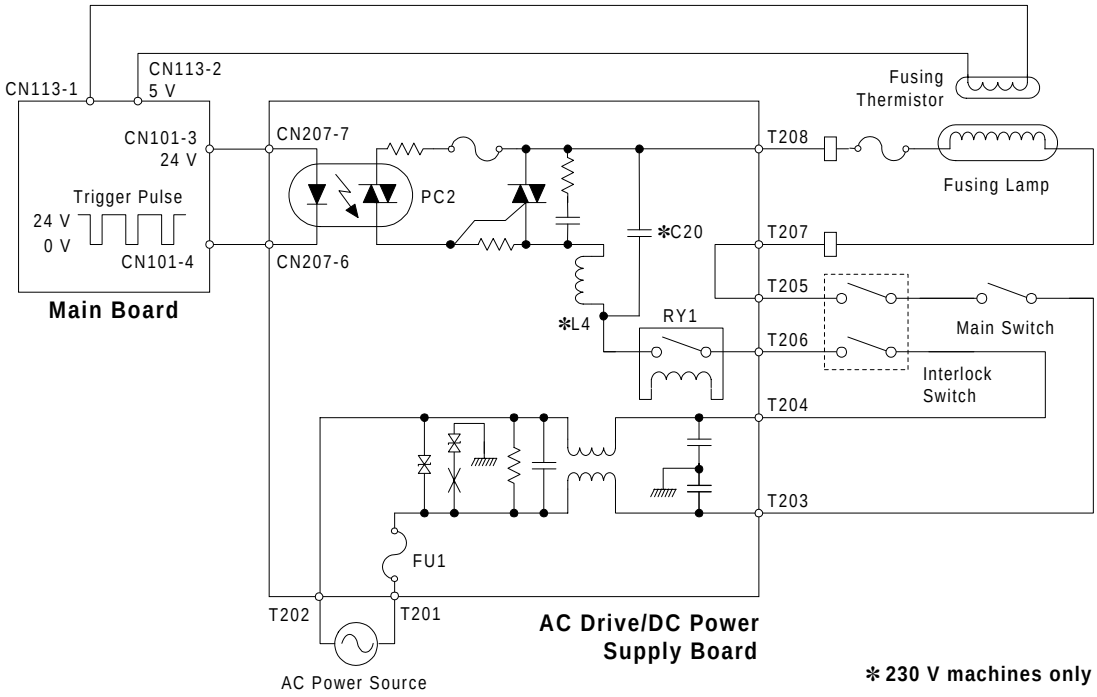

The main board monitors the fusing temperature through a thermistor. It uses the zero cross signal generated by the ac drive/dc power supply board to control the applied power accurately.

Normally, the voltage applied to the lamp is the full duty cycle of the ac waveform. However, through SP29, fusing power can be set to phase control mode. (Phase control is used only if the customer has a problem with electrical noise or interference.)

11.4.2 On/Off Control

When the main switch is turned on, the main board starts to output a trigger pulse, which has the same timing as the zero cross signal, to the ac drive/dc power supply board. This trigger pulse allows maximum ac power to be applied to the fusing lamp. When the operating temperature is reached, the CPU stops outputting the trigger pulse (the trigger stays HIGH) and the fusing lamp turns off.

11.4.3 Phase Control Mode

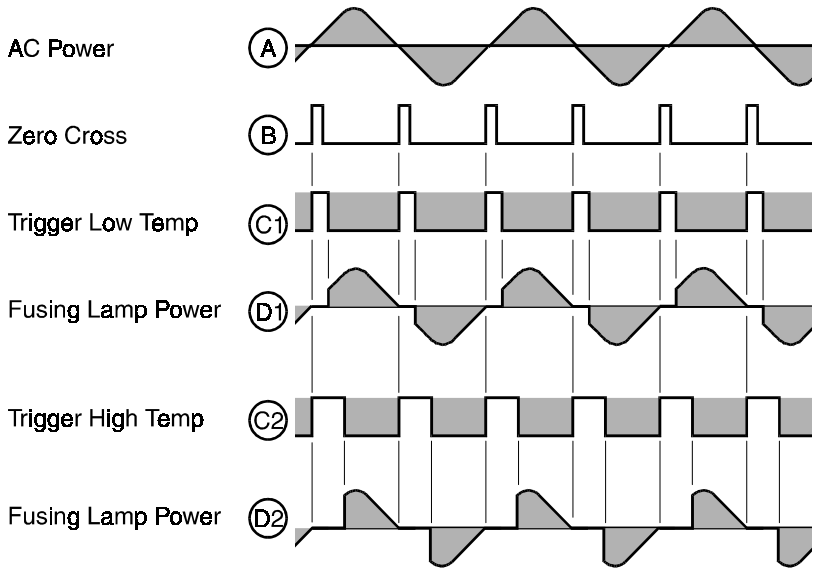

The main board sends the fusing lamp trigger pulse (LOW active) to the ac drive/dc power supply board, which provides ac power to the fusing lamp at the falling edge of each trigger pulse. The trigger pulse goes HIGH when the main board receives the zero cross signal.

The amount of time that power is applied to the fusing lamp depends on the temperature of the hot roller.

The trigger pulse (LOW part) is wider [C1] and power is supplied for longer [D1] when the hot roller temperature is lower. It is narrower [C2] and power is supplied for a shorter time [D2] when the hot roller is near the operating temperature.

11.4.4 Overheat Protection

There is an overheat protection circuit in the main board. If the hot roller temperature reaches 245°C during the main motor off condition, or 255°C during the main motor on condition, the resistance of the thermistor (between CN113-1 and CN113-2) becomes too low. If the main board detects this condition, "E-53" lights on the operation panel and power to the fusing lamp is cut.

Even if the thermistor overheat protection fails, the thermofuse opens when it reaches 169°C, removing power from the fusing lamp.

INSTALLATION

1. INSTALLATION REQUIREMENTS

1.1 ENVIRONMENT

1. Temperature Range: 10°C to 30°C (50°F to 87°F)
2. Humidity Range: 15% to 90% RH
3. Ambient Illumination: Less than 1,500 lux (Do not exposure to direct sunlight.)
4. Ventilation: Room air should turn over at least 3 times per hour
5. Ambient Dust: Less than 0.15 mg/m^3 (4 x 10^{-3} oz/yd^3)
6. If the place of installation is air-conditioned or heated, do not place the machine:
   1) Where it will not be subjected to sudden temperature changes.
   2) Where it will not be directly exposed to cool air from an air-conditioner.
   3) Where it will not be directly exposed to heat from a heater.
7. Do not place the machine where it will be exposed to corrosive gasses.
8. Do not install the machine at any location over 2,000 m (6,500 feet) above sea level.
9. Place the copier on a strong and level base.
10. Do not place the machine where it may be subjected to strong vibrations.

1.2 MACHINE LEVEL

1. Front to back: Within 5 mm (0.2") of level
2. Right to left: Within 5 mm (0.2") of level

1.3 MINIMUM SPACE REQUIREMENTS

Place the copier near the power source, providing clearance as shown:

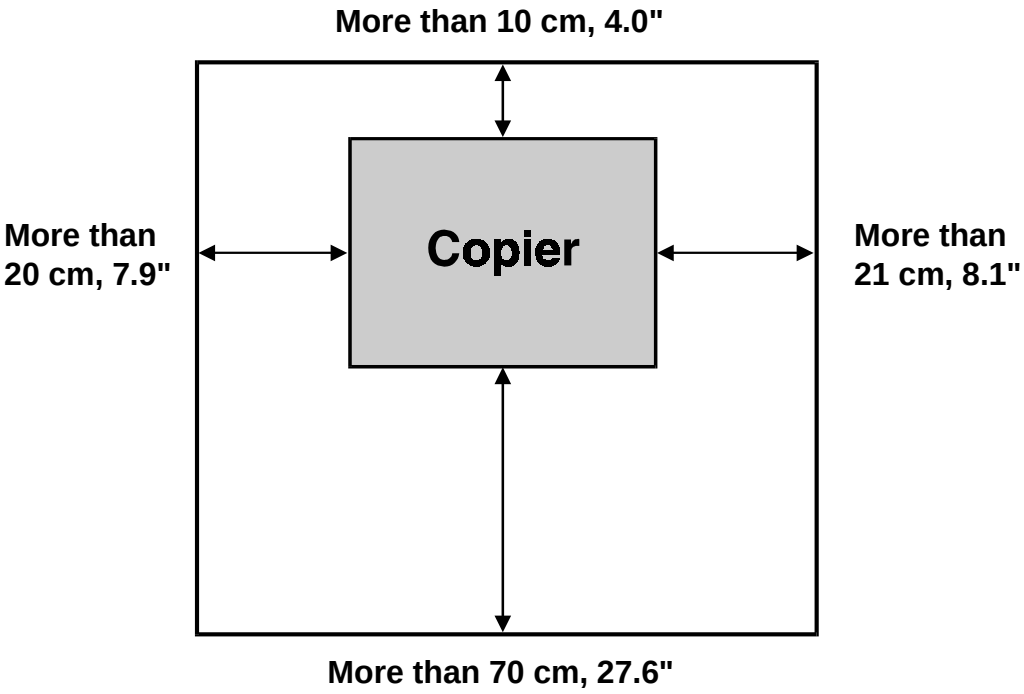

1.4 POWER REQUIREMENTS

⚠ CAUTION

1. Make sure the plug is firmly inserted in the outlet.
2. Avoid multi-wiring.
3. Do not set anything on the power cord.

1. Input voltage level:	110 ~ 127 V/60 Hz: More than 15 A 220 ~ 240 V/50/60 Hz: More than 8 A
2. Permissible voltage fluctuation:	10%

2. COPIER (A219)

2.1 ACCESSORY CHECK

Check the quantity and condition of the accessories in the box against the following list:

1. Model Name Decal (-10, -22 machines)
2. Symbol Explanation Decal - Multi-language
3. Installation Procedure - Multi-language (-10, -15, -22, -26 machines)
4. Operation Instructions - English (-10, -15, -17, -19, -22, -26, -29 machines)
5. NECR - English (-17 machines)
6. NECR - Multi-language (-27, -29 machines)
7. Copy Tray
8. User Survey Card (-17 machines)
9. Envelope for NECR (-17 machines)

2.2 INSTALLATION PROCEDURE

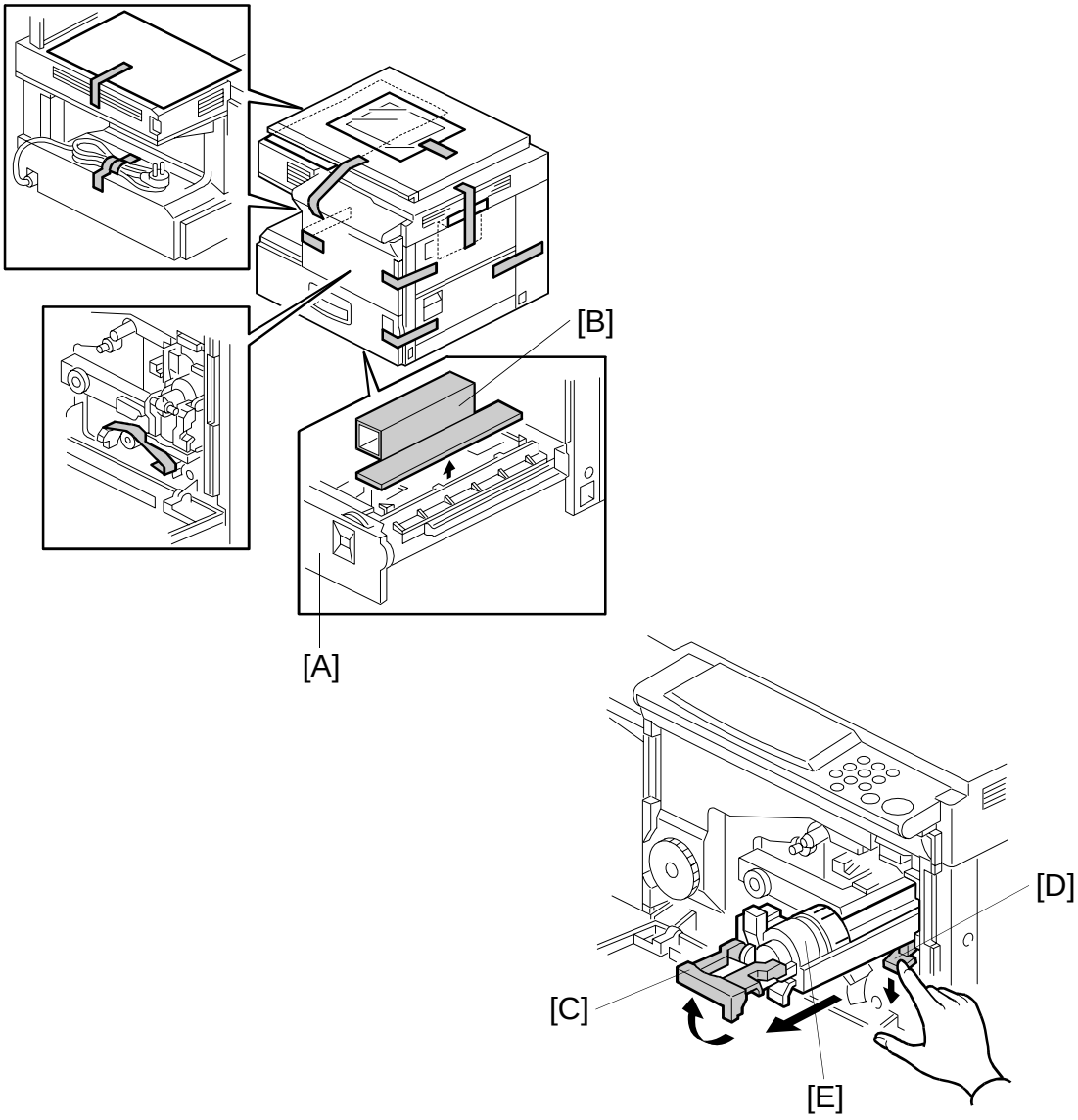

⚠ CAUTION

Do not plug in the power cord before starting the following procedure.

1. Remove all strips of tape shown above.
2. Pull out the paper tray [A], and remove the cardboard [B].
3. Open the front cover and raise the toner bottle holder lever [C].
   Then pull down the securing lever [D], and remove the toner bottle holder [E].

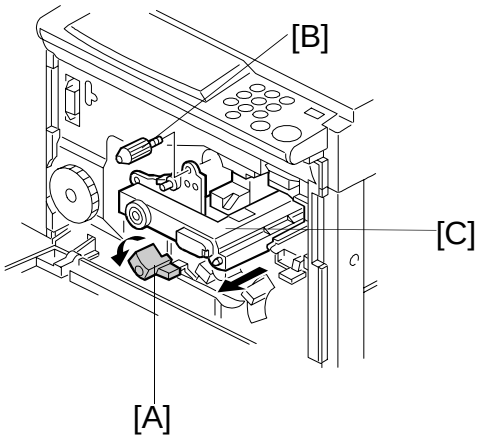

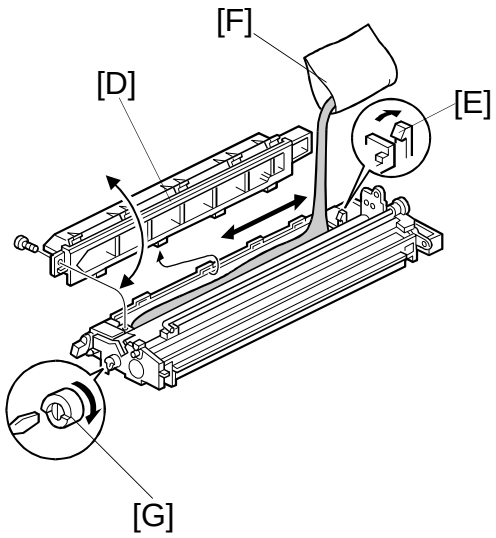

⇒

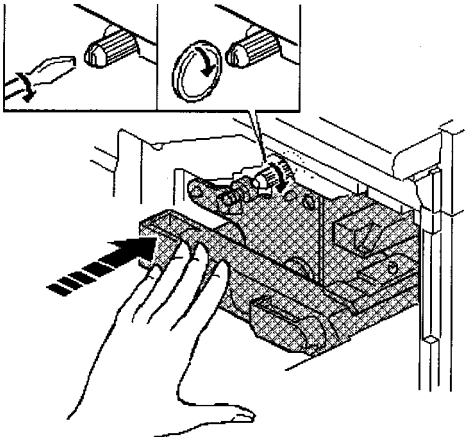

4. Turn the "B1" lever [A] counterclockwise to lower the transfer corona unit.
5. Remove the knob screw [B] and gently pull out the imaging unit [C]. Then place it on a clean sheet of paper.
6. Remove the cover [D] from the imaging unit (1 screw and 1 snap [E]).
7. Pour in the developer [F] evenly into the imaging unit. Then rotate the outer gear [G] for one or two turns to distribute the developer as shown.

   NOTE: When installing new developer or manually rotating the development roller, always make sure to turn the gear in the direction shown above. Also do not rotate the gear more than 3 turns to prevent damage to the unit.

⇒ 8. Remount the cover on the imaging unit, and install the unit in the copier. Push the unit toward the back until it stops. While holding the unit in this position, Tighten the knob screw by hand. For the final tightening, use a screwdriver or coin as shown in the illustration above. Then turn the "B1" lever clockwise to raise the transfer corona unit.

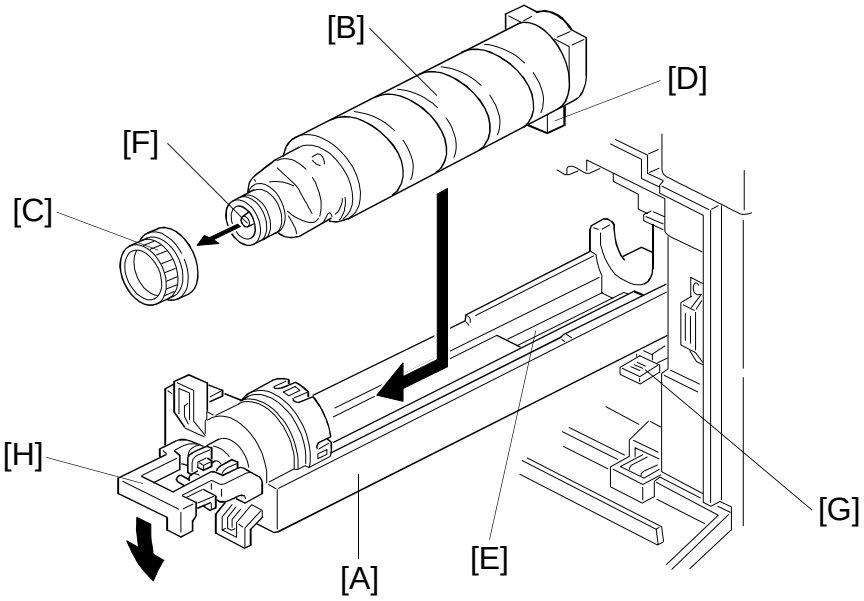

9. Install the toner bottle holder [A] in the copier as shown.
10. Shake the toner bottle [B] well.

    NOTE: Do not remove the bottle cap [C] of the toner bottle at this time.
11. Unscrew the bottle cap and insert the toner bottle into the holder, so that the rib [D] rides the rail [E].

    NOTE: Do not open the inner bottle cap [F].
12. Reposition the holder by making sure that the securing lever [G] clicks. Then press down the holder lever [H] to secure the bottle. Close the front cover.

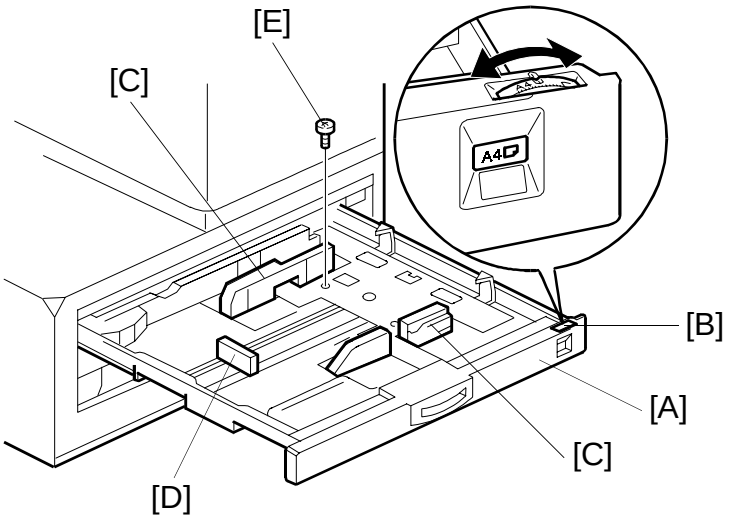

13. Pull the paper tray [A] out and turn the paper size dial [B] to select the appropriate size. Adjust the side guides [C] and the end guide [D] to match the paper size.

    NOTE: 1) Make sure the stack of paper is aligned, and that there is no space between the side guides and the paper stack.

    2) Always push the paper tray in gently.

14. Plug in the copier and turn on the main switch. Wait until it warms up. (It takes about 45 seconds.)

15. Enter the SP mode as follows:

    1) Press the ◈/▽ key.

    2) Enter "107" using the numeric keys.

    3) Hold down the C/▽ key for more than 3 seconds.

16. Perform the TD sensor initial setting as follows:

    1) Enter "66" using the numeric keys.

    2) Press the "Auto Image Density" key.

    NOTE: The machine will automatically stop when completed. (It takes about 1 minute.)

17. Turn the main switch off and on to exit SP mode.

18. Check the copy quality and machine operation.

19. Inform the customer of the notes in step 13 concerning the paper tray. Also find out if the customer changes paper sizes frequently. If not, inform the customer that the side guides can be fixed with a screw [E] to achieve better paper feed quality (use tapping screw M3 x 8).

3. DOCUMENT FEEDER (A662)

3.1 ACCESSORY CHECK

Check the accessories against the following list:

Description	Q'ty
1. Voltage Reference Decal	1
2. Thumb Screw M4 x 12	2
3. Stud Screw (M3)	2
4. Installation Procedure - English	1
5. NECR - Multi-language	1
6. Interface Unit for A219 copier	1
7. Accessory Kit for A203 copier	1
• Interface Unit Bracket	1
• Stud Screw (M4)	2
• Harness Clamp	1
• Upper Unit Stand	1
• Stepped Screw (Short)	1
• Stepped Screw (Long)	1
• Magnet	1
• Operation Decal	1
• Screw Driver	1

3.2 INSTALLATION PROCEDURE

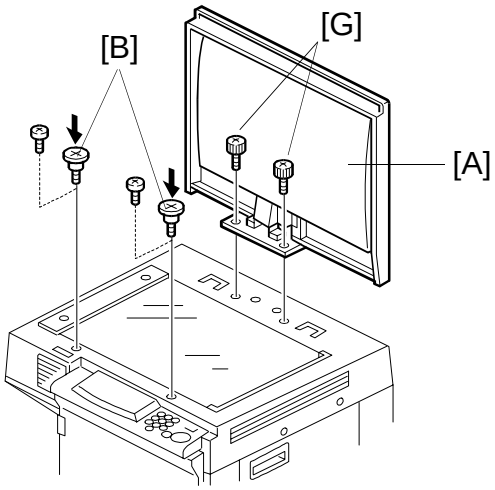

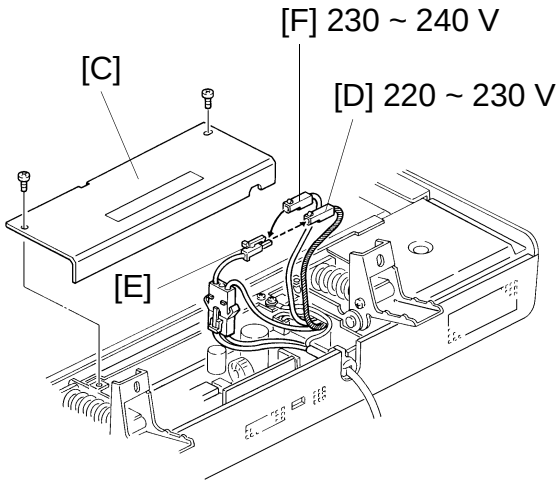

⚠ CAUTION

When installing the DF, make sure the copier is unplugged.

1. Remove the platen cover [A] from the copier, 2 screws [G].
2. Replace the 2 screws with the 2 stud screws [B].
   - Use the M3 stud screws for A219.
   - Use the M4 stud screws for A203.
3. Remove the strips of tape from the DF.

⚠ CAUTION

The next step (step 4) must be done only in 240 volt areas.

4. Perform the conversion from 220 ~ 230 V to 240 V as follows:
   1) Remove the main board cover [C] (2 screws).
   2) Disconnect the connector for 220 ~ 230 V [D] (Black Wire) from the ac harness connector [E] and connect the connector for 240 V [F] (White Wire) to the ac harness connector.
   3) Reinstall the cover.

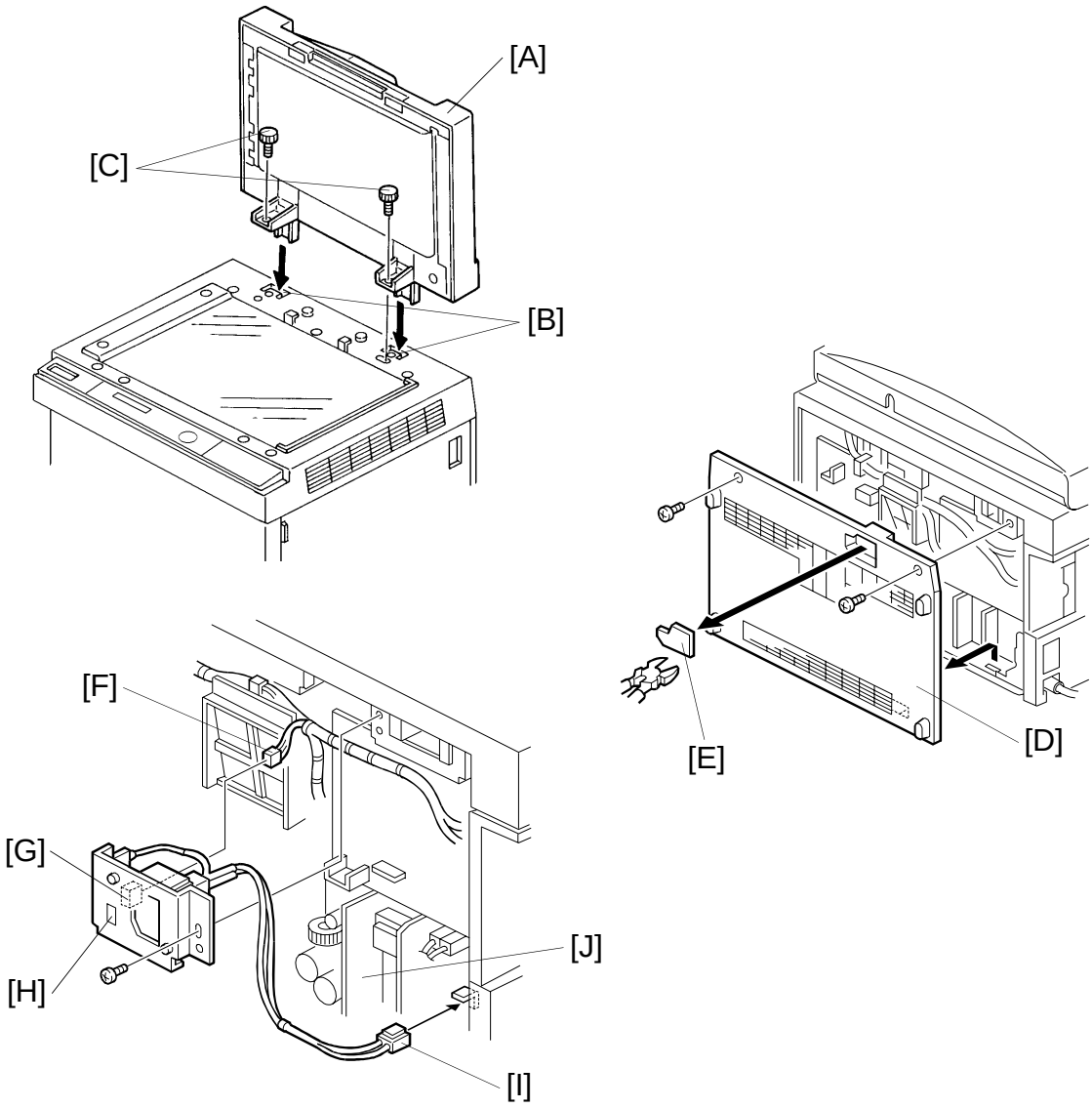

5. Insert the DF [A] into the holes [B] in the copier upper cover.
6. Secure the DF to the copier (2 thumb screws [C]).
7. Remove the rear cover [D] (2 screws) and cut away the portion [E] with cutting pliers as shown.
8. Locate the 4P connector [F] and connect it to the ADF interface board [G], then secure the DF interface unit [H] to the copier (1 screw).
9. Plug the connector [I] (3P) in to CN202 on the ac drive dc power supply board [J].

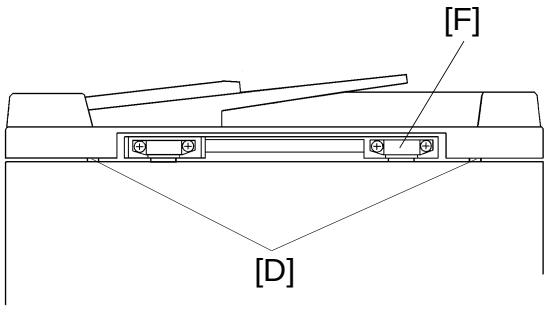

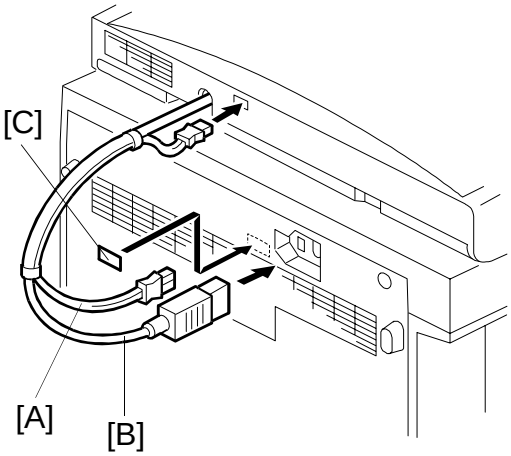

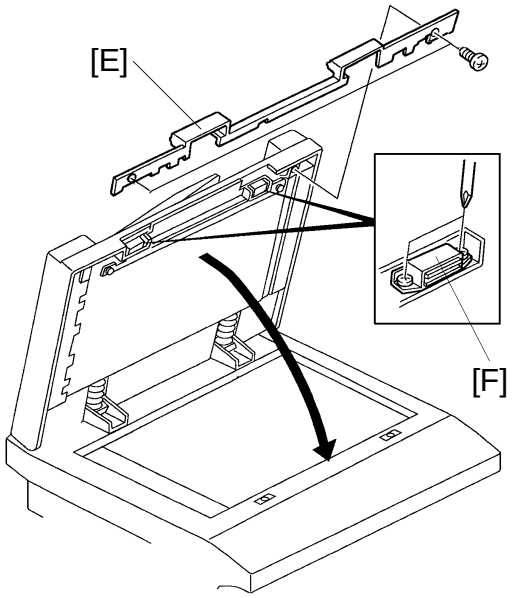

10. Reinstall the rear cover.
11. Plug the optics fiber cable [A] into the DF and the copier.
12. Plug the power supply cord [B] of the DF into the outlet in the copier rear cover.
13. Attatch the voltage reference decal [C].
14. Check that the rubber pad [D] is in contact with the top of the operation panel cover. If it is not, remove the DF grip [E] (2 screws), then adjust the position of the magnet catch [F] so that the rubber pad is in contact with the top of the operation panel cover.
15. Turn on the main switch and check the operation of the DF.

4. SORTER (A657)

4.1 ACCESSORY CHECK

Check the accessories against the following list:

Description	Q'ty
1. Holder Bracket	1
2. Magnet Catch	1
3. Tapping Screw M4 x 6	6
4. Grounding Screw M4 x 8	1
5. Snap Ring	1
6. NECR - Multi-language	1
7. Installation Procedure - English	1

4.2 INSTALLATION PROCEDURE

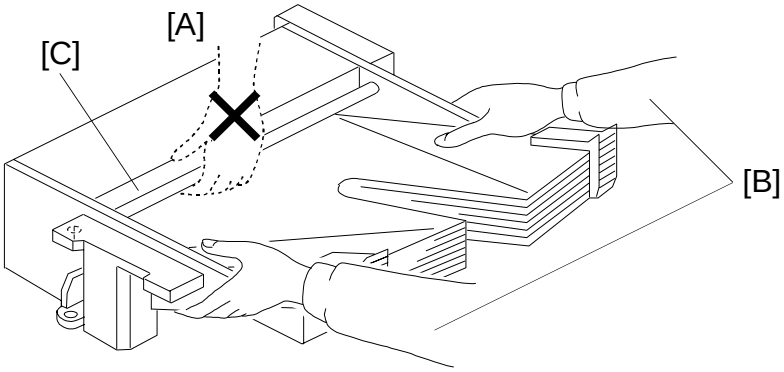

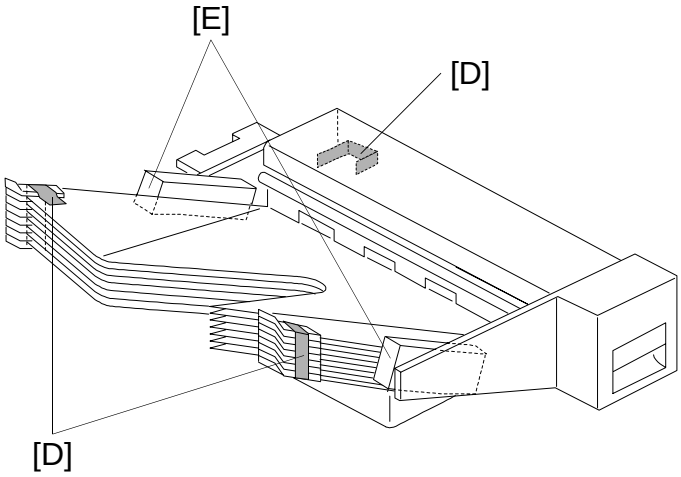

NOTE: 1) Keep the shipping retainers after installing the machine. They will be reused if the machine will be transported to an another location in the future.

2) Proper installation of the shipping retainers is required in order to avoid any transport damage.

3) Do not grasp the sorter by the top cover and stay as shown by [A]. Hold both sides of the sorter as shown by [B]. This is to prevent damage to the anti-static brush [C].

⚠ CAUTION

Unplug the copier power cord before starting the following procedure.

1. Remove the copy tray from the copier.
2. Remove the strips of tape [D] and styrofoam blocks [E].

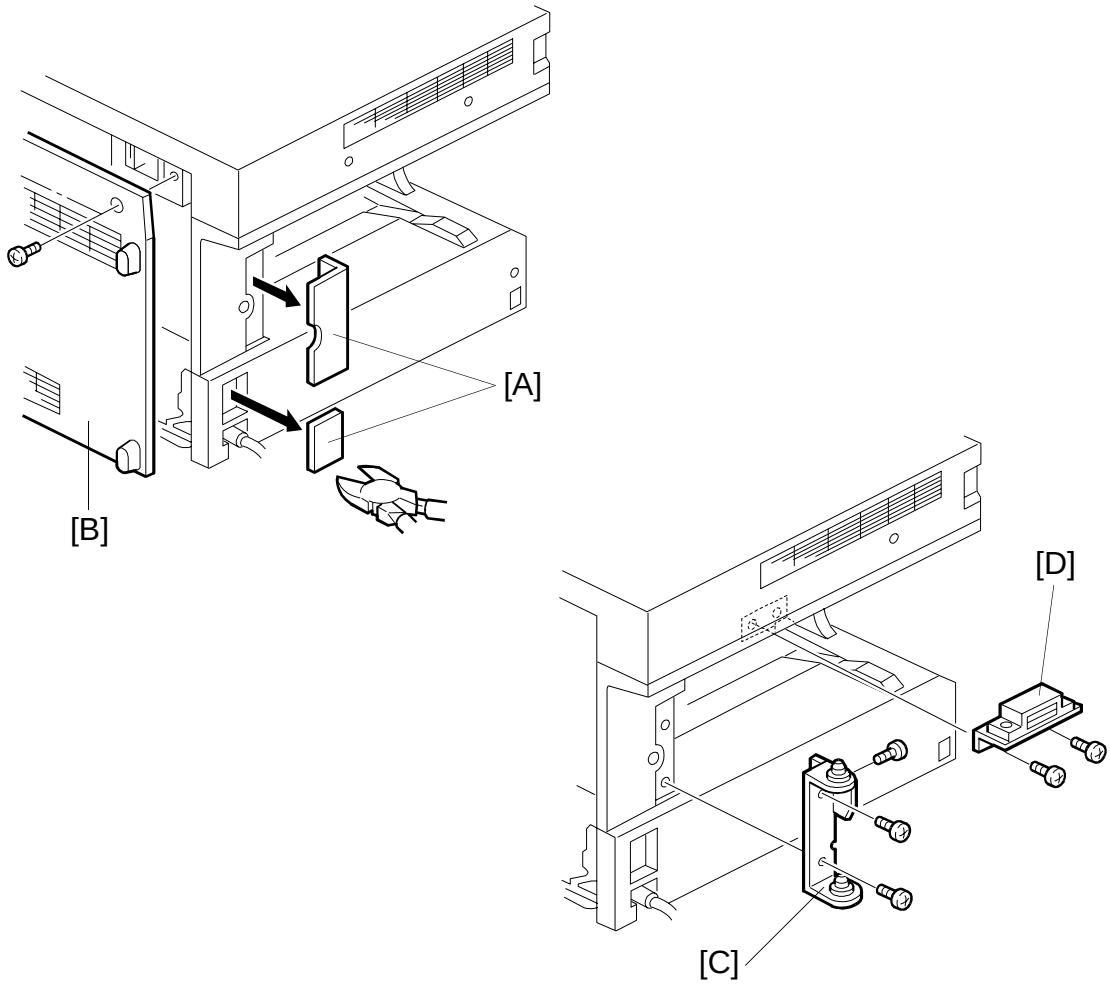

3. Remove the 2 portions [A] on the left hand side of the copier with cutting pliers as shown.
4. Remove the rear cover [B] (2 screws).
5. Mount the sorter holder bracket [C] on the copier frame (3 tapping screws).
6. Mount the magnetic catch [D] near the exit cover (2 tapping screws).

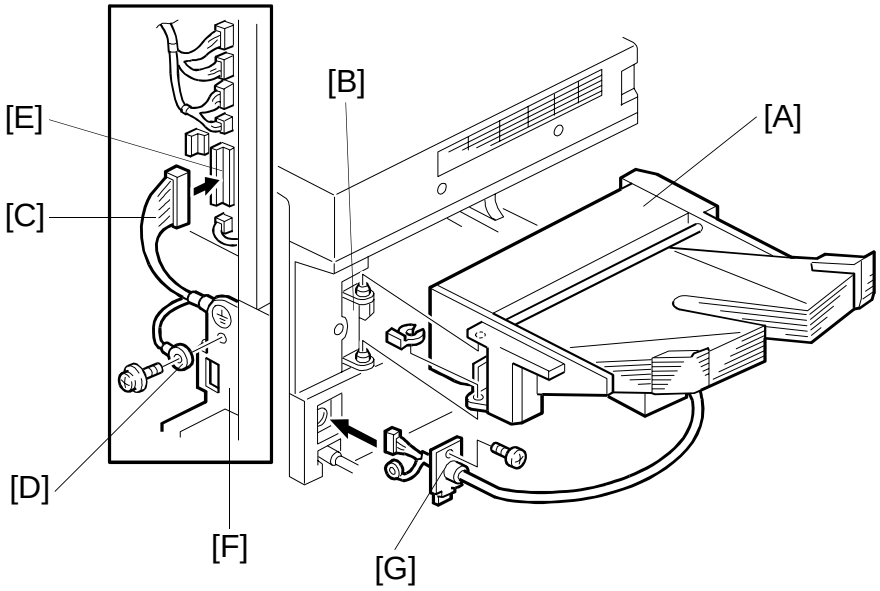

7. Install the sorter [A] on the sorter holder bracket [B] (1 snap ring) as shown.
8. Insert the sorter harness [C] and the grounding wire [D] through the opening in the lower left cover. Plug the connector in to CN130 [E] on the main control board, and secure the grounding wire to the copier frame [F] (1 M4 x 8 screw).
9. Secure the bracket [G] (1 tapping screw).
10. Reinstall the rear cover.
11. Plug in the copier power cord and turn on the main switch.
12. Enter SP mode as follows:
    1) Press the ◈/▽ key.
    2) Enter "107" using the numeric keys.
    3) Hold down the C/▽ key for more than 3 seconds.
13. Press the following sequence of keys to change the "SP 71" value to "1".

    7 → 1 → ◐ → 1 → ◐

14. Turn the main switch off and on.
15. Check the sorter's operation.

5. OTHERS

5.1 OPTICS ANTI-CONDENSATION HEATER INSTALLATION (OPTION)

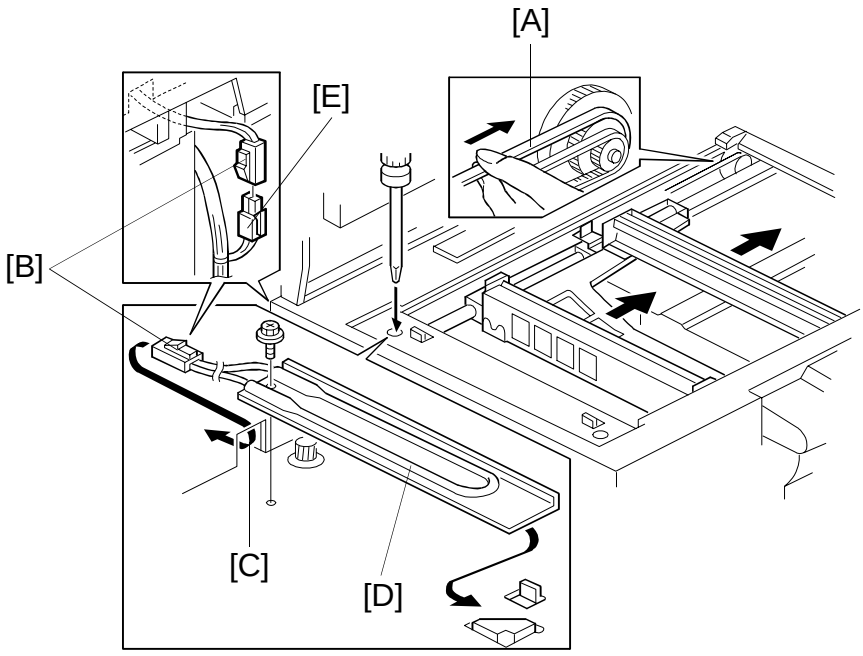

NOTE: The optics anti-condensation heater keeps water from condensing on the copier's mirrors.
Such condensation occurs at cold temperatures with high humidity, and causes the first few copies of the day to be dark, or even black.
The heater is available as a service part. (See the parts catalog.)

⚠ CAUTION

Unplug the copier power cord before starting the following procedure.

1. Remove the rear cover. (See "Replacement and Adjustment - Exterior Cover Removal".)
2. Remove the exposure glass. (See "Replacement and Adjustment - Exposure Glass Removal".)
3. By using the timing belt [A], manually move the 1st and 2nd scanner units away from the home position.

   NOTE: Move the scanners by using the timing belt as shown in the diagram. Do not handle the scanners directly.

4. Pass the connector [B] through the opening [C], and mount the anit-condensation heater [D] as shown (1 screw).
5. Connect the red two-pin connector [E] at the rear of the copier to the heater's connector [B] (red).
6. Make sure that scanner drive belt and mirrors do not touch the heater harness while they are functioning.

NOTE: Tell the customer that even when the copier main switch is turned off, the copier power cord should be plugged in. Otherwise, the optics anti-condensation heater will not function.

5.2 TRAY HEATER INSTALLATION (OPTION)

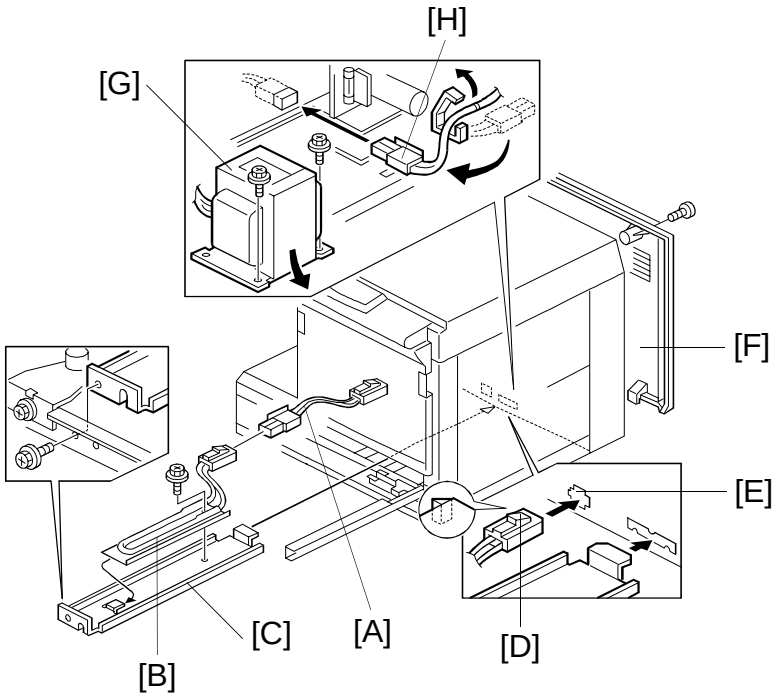

NOTE: The optional tray heater keeps copy paper dry. In humid environments, copy paper may crease as it comes out of the fusing unit. The heater is available as a service part. (See the parts catalog.)

⚠ CAUTION

Unplug the copier power cord before starting the following procedure.

1. Remove the paper tray. (See "Replacement and Adjustment - Paper Tray Removal".)
2. Connect the interface harness [A] to the tray heater [B]. Then mount the heater on the heater bracket [C] as shown (1 screw).
3. Mount the heater bracket on the bottom of the copier main frame, while passing the connector [D] through the opening [E] in the copier main frame as shown (1 screw).
4. Remove the rear cover [F] (2 screws).
5. Remove the transformer [G] (2 screws).
6. Locate the red two-pin connector [H] at the rear of the copier, and connect it to the heater's connector (red), as shown.

NOTE: Tell the customer that even when the copier main switch is turned off, the copier power cord should be plugged in.
Otherwise, the tray heater will not function.

SERVICE TABLES

1. SERVICE REMARKS

1.1 GENERAL CAUTIONS

1. To prevent physical injury, keep hands away from the mechanical drive components when the main switch is on (especially during the warm-up cycle).
   If the ◇ key is pressed before the copier finishes the warm-up cycle, the Start indicator starts blinking and the copier starts making copies as soon as the warm-up cycle is completed.
2. Before disassembling or assembling any parts of the copier, make sure that the power cord is unplugged.

1.2 IMAGING UNIT

1. Always ensure the following when removing the imaging unit from the copier.
   - Do not touch the drum surface with bare hands. When the drum surface is touched with fingers or becomes dirty, wipe it with a dry cloth.
   - Place the imaging unit on a clean and level place. Take care not to scratch the drum from under the unit as there is no cover to protect it.
   - Cover the imaging unit with sheets of paper to prevent the drum from being exposed to light.
   - Do not turn the imaging unit upside down. Toner and developer may fall out from the unit.
2. Before pulling out the imaging unit, place a sheet of paper under the unit to catch any spilled toner.
3. Never use alcohol to clean the drum; alcohol dissolves the drum surface.
4. Take care not to scratch the drum as the photoconductive layer is thin and is easily damaged.
5. Never expose the drum to corrosive gases such as ammonia gas.
6. Store the imaging unit in a cool, dry place away from heat.
7. Do not touch the charge corona wire or the grid plate with bare hands. Oil stains may cause uneven image density on copies.
8. Clean the charge corona wire by pulling on the wire cleaning knob.
9. Clean the charge grid with a blower brush (not with a cloth).

10. Be careful not to damage the edge of the cleaning blade.
11. After installing a new cleaning blade, be sure to apply setting powder evenly on the surface and edge of the blade.
12. When installing a **NEW** drum, do the following:
    1) Apply setting powder to the entire surface of the drum.
    2) Reinstall the drum and all other parts. Perform SP93 (VR Correction Reset).
    3) Open SP33 (Image Bias Adjustment - Manual ID Mode) and return the setting to the normal value if it has been changed.
    4) SP48 (Light Intensity Adjustment) - see the SP mode table for details.
    5) SP56 (ADS Reference Voltage Adjustment) - see the SP mode table for details.
13. When replacing developer, make sure that all toner and developer are cleaned from inside the imaging unit.
14. After installing **NEW** developer, reinstall the machine and perform SP66 (TD Sensor Initial Setting).

1.3 OPTICS

1. Clean the exposure glass with glass cleaner and a dry cloth to reduce the amount of static electricity on the glass surface.
2. Only use a clean soft cloth to clean the mirrors and reflectors.
3. Only use a blower brush to clean the 6th mirror and the lens.
4. Do not touch the following parts with bare hands:
    1) Reflectors
    2) Exposure Lamp
    3) Mirrors and Lens
5. Do not change the cutout position of the reflectors as they are adjusted at the factory.
6. Always replace the 1st scanner unit as an assembly, as the matching of each set of exposure lamp and reflectors is performed at the factory.
7. Only use the scanner timing belts when manually moving the scanner units.

8. Whenever cleaning or replacing the optics, all the following actions must be done in order.
   1) Optics cleaning
   2) Open SP33 (Image Bias Adjustment - Manual ID Mode) and return the setting to the normal value if it has been changed.
   3) SP48 (Light Intensity Adjustment) - see the SP mode table for details
   4) SP56 (ADS Reference Voltage Adjustment) - see the SP mode table for details

1.4 TRANSFER CORONA

1. Clean the corona wire and casing with a blower brush.
2. Never loosen the two screws securing the entrance guide plate. The position is set with a special instrument at the factory to ensure proper image transfer onto the copy paper.

1.5 FUSING UNIT

1. Be careful not to damage the edges of the hot roller strippers or their tension springs.
2. Do not touch the fusing lamp with bare hands.
3. Make sure that both fusing lamp insulators are properly set in the holders.
4. When handling the fusing unit, hold the unit by the bottom frame. Do not grasp it by the hot roller stripper bracket or by the fusing entrance guide as they are easily damaged. The upper frame tends to hold more heat than the lower frame. Be careful.
5. Do not rotate the rollers while the pressure springs are not installed and the hot roller strippers are in place. If done, the hot roller may be damaged by the strippers.

1.6 PAPER FEED

1. Do not touch the feed rollers with bare hands.
2. The side fences and the end fence of the paper tray should be positioned correctly so that they securely hold the paper. Make sure the stack of paper is aligned, and that there is no space between the side guides and the paper stack.
3. Always push the paper tray in gently. The paper stack might go over the side fence or the corner separators, causing double feed or image skewing problems.
4. Avoid storing paper for a long time.
   At high temperature and high humidity, or at low temperature and low humidity, store paper in a plastic bag. This is especially important to decrease the amount of curls or waves that would lead to paper misfeeds.
5. Find out if the customer changes the paper size in the paper tray frequently. If not, inform the customer that the side guides can be fixed with a screw to achieve better paper feed quality (use tapping screw M3 x 8).

1.7 OTHERS

1. When replacing the main board, remove the EEPROM (IC112) from the old main board and place it on the new main board. Then install the new main board in the copier.
2. After installing a new main board with a new EEPROM (IC112), the Clear All Memory (SP99) procedure must be performed. (Do not perform SP99 if you have placed the old EEPROM on the new main board.)
3. Never perform SP99 (Clear All Memory) except for the following two cases:
   a) When the copier malfunctions due to a damaged EEPROM.
   b) When replacing the EEPROM.
4. Whenever SP99 (Clear All Memory) is performed, the drum and developer must be replaced with new ones. Otherwise, copy quality might be seriously affected.

5. Securely tighten the screws used for grounding the following PCBs when reinstalling them.
   - Main Control Board
   - AC Drive/DC Power Supply Board
   - High Voltage Supply Board C/G/B/T/S
6. If the optional tray and anti-condensation heaters have been installed, keep the copier power cord plugged in, even when the copier main switch is turned off. This keeps the heaters energized.

2. PROGRAM MODES

2.1 BASIC OPERATION

1. Component

This copier is equipped with two program modes. One is the Service Program (SP) Mode for factory and field technician usage, and the other is the User Program (UP) mode for the user. Both program modes have a different access procedure, but all the UP mode functions can be accessed from the SP mode.

To be able to reset a service call (E5) condition using SP mode, the SP mode can be accessed while the error condition exists. The error code will not be displayed in the copy counter during these conditions.

2. Operation

To access these program modes, certain keys must be pressed after turning on the main switch. After accessing, select the required mode number and perform the procedure needed for that function. It is possible to move on to the next required mode without exiting each time.

To exit these modes, turn the main switch off/on.

3. Display

The Copy Counter is used to display the program mode number. The Magnification Ratio display is used to display the current value.

When the **Copy Counter is blinking**, and the **dot is lit**, the machine is ready to **accept a program mode number**. (The program mode number is displayed when you input it.) The Magnification Ratio display is blinking at this time.

When the **Copy Counter stops blinking**, and the **dot starts blinking**, the machine is ready to **accept an adjustment value**, and it may be displaying the current adjustment value on the Magnification Ratio display.

4. Notes

1. **With the exception of SP57, all copies made inside the program modes are made with ID level 4 (center value).**

2.2 SP MODE

1. Service Program Mode Access Procedure

How to enter the SP mode

1. Press the following keys in sequence.

   [Interrupt/Stop] → [1] → [0] → [7] → [C/Stop]

   NOTE: 1) The above procedure must be finished within 20 seconds.
   2) Hold the final [C/Stop] key for more than 3 seconds.

2. When SP mode is selected, "1" blinks in the Copy Counter, and a dot (•) will appear in the top left corner of the Copy Counter. Also, the Auto Image Density indicator starts blinking, and the magnification ratio display turns off.

How to enter the UP mode

1. Press the following keys in sequence to enter the UP mode.

   [Interrupt/Stop] → [C/Stop]

   * Hold the final [C/Stop] key for more than 3 seconds.

2. How to Select the Program Number

1. By using the Number keys, enter the required program number. At this point, the Copy Counter will be blinking, and the dot (•) will be lit.
2. When the Auto Image Density key is pressed, the number which is currently blinking in the Copy Counter will be entered as the selected program number.

3. Changing the Value of an SP Mode

1. Enter the desired value or setting using the Number keys.

   NOTE: After changing the value (setting), the previous value (setting) can be recalled again if the [C/Stop] key is pressed at this point.

2. When the Auto Image Density key is pressed, the number which is currently displayed in the Copy Counter will be entered as the new value or setting, and will be stored in memory.
3. The copier is ready to accept a new program number. Repeat from step 1 or leave SP mode by turning the main switch off/on.

2.3 SP MODE QUICK REFERENCE TABLE

SP Mode No.	Function	SP Mode No.	Function
4	Forced Start (Free Run)	*41	Lead Edge Erase Margin Adjustment
5	Free Run with Exposure Lamp Off	*42	Registration Adjustment
6	Misfeed Detection Off	*43	Vertical Magnification Adjustment
7	Free Run	*44	Horizontal Magnification Adjustment
8	Input Check	45	Registration Buckle Adjustment
9	Output Check	46	Registration Buckle Adjustment - A5 Paper
10	Scanner Free Run	*47	Focus Adjustment
11	All Indicators On	*48	Light Intensity Adjustment
14	Auto Shut Off Time (Energy Star)	49	Fusing Temperature Adjustment
15	Auto Reset Time Setting (Energy Saver)	50	Fusing Ready Temperature Adjustment
16	Count Up/Down Selection	51	Exposure Lamp Voltage Display
17	Narrow Paper Select Mode	52	Fusing Temperature Display
18	Auto Feed Station Shift (Japanese Market Only)	53	TD Sensor Target Control Voltage Adjustment
19	ADS Priority	54	TD Sensor Gain Adjustment
22	SADF Shut Off Time	55	TD Sensor Output Display Data
24	Horizontal Edge Margin Width Adjustment	56	ADS Reference Voltage Adjustment
28	Auto Sort Select	57	ADS Output Voltage Display
29	Fusing Temperature Control Selection	59	Optics Temperature Display
30	Toner Supply Mode Selection	60	Drum Potential Measurement (With Paper)
31	Toner Supply Amount (TD Sensor Mode)	61	Drum Potential Measurement (Without Paper)
32	Toner Supply Amount (Fixed Supply Mode)	62	V_L Correction Interval
33	Image Bias Adjustment (Manual ID Mode)	63	Forced Toner Supply
34	Image Density Adjustment (ADS Mode)	64	V_R Correction Value
35	Total Toner Supply ON Time During Toner Near/End Condition	66	TD Sensor Initial Setting
36	TD Sensor Sensitivity Setting	67	TD Sensor Initial Output Display
38	Toner Density Adjustment	68	V_{L2} Correction Selection

* Items listed on the factory setting data sheet

SP Mode No.	Function	SP Mode No.	Function
69	Imaging Unit Counter Display	94	V_{L2} Correction Reset
71	Sorter Operation	95	V_L Correction Reset
74	Special Paper Size Setting	96	Toner End Force Cancel
76	Sorter Bin Capacity	97	Service Call (E5) Reset
77	Factory Use Only	98	Total Counter Clear
78	Auto Energy Saver Mode On/Off	99	Clear All Memory
81	Factory Initialization	100	By-pass Feed Copy Counter Display
82	Data Communication	101	Paper Feed Tray Copy Counter Display
83	Factory Potential Adjustment	106	DF Original Counter Display
88	Total Copy Counter Display	130	Total Service Calls
90	Factory Data and Counter Clear	131	Total Misfeeds
93	V_R Correction Reset		

* Items listed on the factory setting data sheet

2.4 UP MODE AND SP MODE CROSS REFERENCE TABLE

UP Mode No.	SP Mode No.	Function
1	34	Image Density Adjustment (ADS Mode)
2	17	Narrow Paper Select Mode
3	15	Auto Reset Time Setting (Energy Saver)
4	78	Auto Energy Saver Mode On/Off
5	14	Auto Shut Off Time Setting (Energy Star)
6	38	Toner Density Adjustment
7	16	Count Up/Down Selection

2.5 SERVICE PROGRAM MODE TABLE

1. In the *Function* column, comments (extra information) are in italics.
2. In the ***Settings*** column, the default value is printed in bold letters.
3. If there is a † mark in the Mode No. column, copies can be made within this SP Mode.

Mode No.		Function	Settings
4	Forced Start (Free Run)	Performs a free run with a forced start. Press the [◇] key to start the free tun. Press the [C/⊘] key to stop the free run.	
		If this mode is switched on, the copier starts the free run even if the fusing temperature has not reached the required value yet. *This mode is performed with the selected paper size and magnification ratio without the paper feed clutch or total counter increment.* ***Normally, use SP7 to prevent fusing-related service call conditions from occurring.***	
5	Free Run with Exposure Lamp Off	A free run is performed without exposure. Press the [◇] key to start the free run. Press the [C/⊘] key to stop the free run.	
		This mode is performed with the selected paper size and magnification ratio without the paper feed clutch or total counter increment. ***Normally, use SP7 to reduce the cleaning blade load.***	
6	Misfeed Detection Off †	Copies are made without misfeed detection by the registration, exit sensors, and sorter paper sensor. Press the [◇] key to make a copy. It stops when reaching the set count, or when the [C/⊘] key is pressed.	
		Use this mode to check whether a paper misfeed was caused by a sensor malfunction. ***The total counter increments when copies are made in this mode.***	
7	Free Run	Performs a free run with the exposure lamp on. Press the [◇] key to start the free run. Press the [C/⊘] key to stop the free run.	
		This mode is performed with the selected paper size and magnification ratio without the paper feed clutch or total counter increment. ***Before starting, close the platen cover to reduce the cleaning blade load.***	

Mode No.		Function	Settings
8	Input Check †	Enter the desired number given in the following table. The magnification indicator is used to display the input data from the sensors while making a normal copy. Press the ◇ key to perform this mode.	

Component No.	Sensor/ Switch/Signal	Reading	
		0	1
1	Registration Sensor	Paper Not Present	Paper Present
2	Exit Sensor	Paper Not Present	Paper Present
3	By-pass Feed Paper End Sensor	Paper Not Present	Paper Present
4	Tray Paper End Sensor	Paper Present	Paper Not Present
8	High Voltage Leak Signal	No Leak Signal	Leak Signal Detected
9	Power Supply Board Signal	120 V	230 V
10	Right Vertical Guide Switch	Cover Closed	Cover Open
12	Scanner HP Sensor	Sensor Not Actuated	Sensor Actuated (HP)
13	4th/5th Mirror HP Sensor	Sensor Not Actuated	Sensor Actuated (HP)
14	Lens HP Sensor	Sensor Not Actuated	Sensor Actuated (HP)
16	Sorter Paper Sensor	Paper Not Detected	Paper Detected
17	Sorter Wheel Switch	Switch Actuated (Switch Pushed in: Wheel Moving)	Switch Not Actuated
18	Sorter Bin HP Switch	Switch Not Actuated	Switch Actuated (HP)
19	Sorter Switch	Sorter Closed	Sorter Opened
20	ADF Installation	ADF Not Installed	ADF Installed
21	ADF Lift Switch	ADF Closed	ADF Opened
22	Key Counter Set Signal (Not Used)	Key Counter Not Set	Key Counter Set

<table>
<tr><th>Mode No.</th><th>Function</th><th>Settings</th></tr>
<tr><td>9</td><td>Output Check</td><td>Use to turn on individual electrical components.
Enter the desired number given in the following table.
Press the [◇] key to turn on the electrical component.
Press the [C/◇] key to turn off the electrical component.

<table>
<tr><th>Component No.</th><th>Electrical Component</th><th>Note</th></tr>
<tr><td>1</td><td>Main Motor + Quenching Lamp + Exhaust Fan Motor (High Speed)</td><td></td></tr>
<tr><td>2</td><td>Charge Corona</td><td></td></tr>
<tr><td>3</td><td>Transfer Corona</td><td></td></tr>
<tr><td>4</td><td>Discharge Plate</td><td></td></tr>
<tr><td>5</td><td>Development Bias Voltage</td><td>Standard Voltage for Manual ID Level 4.</td></tr>
<tr><td>6</td><td>Erase Lamp</td><td>All LEDs On</td></tr>
<tr><td>7</td><td>Machine Shut Off</td><td>Main Switch Relay Off.</td></tr>
<tr><td>8</td><td>Exhaust Fan Motor (High Speed)</td><td></td></tr>
<tr><td>9</td><td>Optics Cooling Fan</td><td></td></tr>
<tr><td>10</td><td>Exposure Lamp + Optics Cooling Fan</td><td></td></tr>
<tr><td>11</td><td>Toner Supply Motor</td><td></td></tr>
<tr><td>12</td><td>Toner Supply Motor (Reverse)</td><td></td></tr>
<tr><td>14</td><td>Sorter Roller Drive Motor</td><td></td></tr>
<tr><td>15</td><td>Sorter Bin Drive Motor (Bin Up)</td><td>Moves One Bin Up.</td></tr>
<tr><td>16</td><td>Sorter Bin Drive Motor (Bin Down)</td><td>Moves One Bin Down.</td></tr>
<tr><td>17</td><td>Registration Clutch</td><td></td></tr>
<tr><td>18</td><td>By-pass Paper Feed Clutch</td><td></td></tr>
<tr><td>19</td><td>Tray Paper Feed Clutch</td><td></td></tr>
<tr><td>21</td><td>Relay Roller Clutch</td><td></td></tr>
<tr><td>23</td><td>Total Counter</td><td>Advances count</td></tr>
<tr><td>24</td><td>Key Counter</td><td>Not Used</td></tr>
</table>
</td><td></td></tr>
<tr><td>10</td><td>Scanner Free Run</td><td>Start a scanner free run.
Press the [◇] key to start the free run.
Press the [C/◇] key to stop the free run.
This mode is performed in accordance with the selected paper size and magnification ratio.</td><td></td></tr>
<tr><td>11</td><td>All Indicators On</td><td>Turns on all the indicators on the operation panel for 30 seconds. They will turn off automatically after 30 seconds.
To turn off the indicators, press the [◑] key.</td><td></td></tr>
</table>

Mode No.		Function	Settings
14	Auto Shut Off Time Setting (Energy Star)	Selects the auto shut off time. *The copier main switch is shut off automatically after the selected auto shut off time, if SP77 is at "0".*	**0: 30 min.** 1: 15 min. 2: 60 min. 3: 90 min. 4: 120 min.
15	Auto Reset Time Setting (Energy Saver)	Selects an auto reset time of 1 or 3 minutes, or cancels this mode. *The copier goes to energy saver mode automatically after the selected auto reset time, if SP78 is at "1".*	**0: 1 min.** 1: 3 min. 2: None
16	Count Up/Down Selection	Selects count up or count down.	**0: Up** 1: Down
17	Narrow Paper Select Mode	Selects narrow paper feed mode for the by-pass feed table. *Use this mode to feed non-standard paper sizes that are too narrow to be detected by the by-pass feed paper end sensor. In this case, the copier will operate even if the Add Paper indicator is on.*	**0: No** 1: Yes
18	Auto Feed Station Shift (Japanese Market Only)	Selects auto feed station shift mode. *The copier automatically shifts to the paper feed station holding the same size of paper when paper runs out.*	**0: Auto Shift** 1: Manual
19	ADS Priority	Specifies whether the copier defaults to ADS or Manual mode when the main switch is turned on.	**0: ADS** 1: Manual
22	SADF Shut Off Time	Selects the shut off time for SADF mode. *The DF must be installed on the machine.*	**0: 5 s.** 1: 60 s.
24	Horizontal Edge Margin Width Adjustment	Selects whether the side erase mechanism changes when the optional document feeder is installed. *See "Detailed Descriptions - Erase" for more details.*	**0: DF Mode** 1: Always stays in Platen Mode
28	Auto Sort Select	In Auto Sort Mode, the sorter is automatically selected when more than 1 original is set on the DF table and the entered copy quantity is greater than 1 and less than 11. In Manual mode, sort mode has to be selected at the operation panel. *The sorter and DF must be installed on the machine.*	**0: Manual** 1: Auto Sort
29	Fusing Temperature Control Selection	Selects the fusing temperature control mode. *After selecting the control mode and turning the main switch off/on, the fusing temperature control mode is changed.*	**0: ON/OFF control** 1: Phase control

<table>
<tr><th colspan="2">Mode No.</th><th>Function</th><th>Settings</th></tr>
<tr><td>30</td><td>Toner Supply Mode Selection</td><td>Selects the toner supply system.
Normally, this value should not be changed.

<table><tr><th>SP Setting</th><th>Toner Supply System</th><th>Note</th></tr><tr><td>0</td><td>Detect supply mode using the initial TD sensor setting.</td><td>Default</td></tr><tr><td>1</td><td>Detect supply mode using the target TD sensor voltage set with SP53.</td><td></td></tr><tr><td>2</td><td>Detect supply mode (fixed amount) using the initial TD sensor setting.</td><td></td></tr><tr><td>3</td><td>Detect supply mode (fixed amount) using the target TD sensor voltage set with SP53.</td><td></td></tr><tr><td>4</td><td>Fixed supply mode.</td><td>Use only in abnormal TD sensor conditions.</td></tr></table>
See SP31/SP32 for the toner supply amount.</td><td>Default = 0</td></tr>
<tr><td>31</td><td>Toner Supply Amount (TD Sensor Mode)</td><td>Determines how much toner is supplied in detect supply mode.
Select the toner supply time from 0.0 s to 5.0 s in 0.1 s steps.
See "Detailed Descriptions-Toner Supply Control" for more details.</td><td>0 ~ 50
Default = 4 (0.4 s)</td></tr>
<tr><td>32</td><td>Toner Supply Amount (Fixed Supply Mode)</td><td>Determines how much toner is supplied in fixed supply mode and in detect supply (fixed amount) mode.
For example, if the user normally makes copies of A4 originals that are about 7% black, select the 7% setting for best results.

<table><tr><th>SP Setting</th><th>Ratio</th><th>Supply Time</th><th>Note</th></tr><tr><td>0</td><td>3.5%</td><td>0.3 s</td><td>Default</td></tr><tr><td>1</td><td>7.0%</td><td>0.6 s</td><td></td></tr><tr><td>2</td><td>15%</td><td>1.2 s</td><td></td></tr><tr><td>3</td><td>30%</td><td>2.4 s</td><td></td></tr><tr><td>4</td><td>45%</td><td>3.6 s</td><td></td></tr><tr><td>5</td><td>60%</td><td>4.8 s</td><td></td></tr><tr><td>6</td><td>—</td><td>∞</td><td>Continuous supply</td></tr><tr><td>7</td><td>0%</td><td>0</td><td>No toner supply</td></tr></table>
See "Detailed Descriptions - Toner Supply Control" for more details.</td><td>0 ~ 7
Default = 0</td></tr>
</table>

<table>
<tr><th colspan="2">Mode No.</th><th>Function</th><th>Settings</th></tr>
<tr><td>33</td><td>Image Bias Adjustment (Manual ID Mode)</td><td>Adjusts the development bias voltage used in manual ID mode. This adjustment affects all manual ID settings. Use this SP mode to adjust the density of pale gray areas.

<table><tr><th>SP Setting</th><th>Setting</th><th>Dev. Bias</th><th>Note</th></tr><tr><td>0</td><td>Normal</td><td>0</td><td>Default</td></tr><tr><td>1</td><td>Darkest</td><td>+40 V</td><td></td></tr><tr><td>2</td><td>Darker</td><td>+20 V</td><td></td></tr><tr><td>3</td><td>Lighter</td><td>–20 V</td><td></td></tr><tr><td>4</td><td>Lightest</td><td>–40 V</td><td></td></tr></table>
See "Detailed Descriptions - Development" for more details.</td><td>0: Normal
1: Darker
2: Darkest
3: Lighter
4: Lightest</td></tr>
<tr><td>34</td><td>Image Density Adjustment (ADS Mode) †</td><td>Selects the image density level in ADS mode.
The development bias and the exposure lamp voltages are increased or decreased.
This adjustment affects copies made in ADS mode.

<table><tr><th>SP Setting</th><th>Setting</th><th>Dev. Bias</th><th>Exposure Lamp</th></tr><tr><td>0</td><td>Normal</td><td>0</td><td>0</td></tr><tr><td>1</td><td>Lighter</td><td>–40 V</td><td>0</td></tr><tr><td>2</td><td>Darker</td><td>+40 V</td><td>0</td></tr><tr><td>3</td><td>Lightest</td><td>–40 V</td><td>+4 steps</td></tr><tr><td>4</td><td>Darkest</td><td>+40 V</td><td>–4 steps</td></tr></table>
The exposure lamp setting specifies the change relative to the base exposure lamp voltage (Vo) in SP48, 1 step of the lamp voltage equals 0.5 V for 120 V (NA), and 1.0 V for 230 V (EU) machines.

See "Detailed Descriptions - Development" for more details.</td><td>0: Normal
1: Light
2: Dark
3: Lighter
4: Darker</td></tr>
<tr><td>35</td><td>Total Toner Supply ON Time During Toner Near/End Condition</td><td>Selects the toner supply motor on time after every copy job during a toner near/end condition.

See "Detailed Descriptions - Toner Supply" for more details.
This SP mode is intended for designer use only.</td><td>1: 10 s
2: 20 s
3: 30 s
4: 40 s
5: 50 s
6: 60 s</td></tr>
</table>

<table>
<tr><th colspan="2">Mode No.</th><th>Function</th><th>Settings</th></tr>
<tr><td>36</td><td>TD Sensor Sensitivity Setting</td><td>Adjust the sensitivity of the TD sensor.
Normally, this value should not be changed.

<table><tr><th>SP Setting</th><th>Sensitivity (V/wt%)</th><th>Note</th></tr><tr><td>0</td><td>0</td><td></td></tr><tr><td>1</td><td>0.05</td><td></td></tr><tr><td>2</td><td>0.10</td><td></td></tr><tr><td>↓</td><td>↓</td><td>0.05 per step</td></tr><tr><td>12</td><td>0.60</td><td></td></tr><tr><td>13</td><td>0.65</td><td></td></tr><tr><td>14</td><td>0.70</td><td></td></tr><tr><td>15</td><td>0.75</td><td>Default</td></tr><tr><td>16</td><td>0.80</td><td></td></tr><tr><td>↓</td><td>↓</td><td>0.05 per step</td></tr><tr><td>19</td><td>0.95</td><td></td></tr><tr><td>20</td><td>1.00</td><td></td></tr></table>
The toner supply motor on time and/or the toner density are changed by this setting. See "Detailed Descriptions - Toner Supply Control" for more details.</td><td>0 ~ 20
Default = 15</td></tr>
<tr><td rowspan="2">38</td><td rowspan="2">Toner Density Adjustment</td><td>Adjusts copy quality by changing the toner concentration inside the development unit.</td><td rowspan="2">0: Normal
1: Darker
2: Lighter
3: Darkest
4: Lightest</td></tr>
<tr><td>This can be adjusted using a UP mode.
See "Detailed Descriptions - Toner Supply Control" for more details.</td></tr>
<tr><td rowspan="2">41</td><td rowspan="2">Lead Edge Erase Margin Adjustment †</td><td>Adjusts the lead edge erase margin.</td><td rowspan="2">0 ~ 15
Default = 8
(2.5 mm from leading edge)</td></tr>
<tr><td>0.5 mm per step (–4.0 mm to +3.5 mm).
See "Replacement and Adjustment - Copy Quality Adjustment" for details.</td></tr>
<tr><td rowspan="2">42</td><td rowspan="2">Registration Adjustment †</td><td>Adjusts the registration.</td><td rowspan="2">0 ~ 15
Default = 8</td></tr>
<tr><td>0.5 mm per step (–4.0 mm to +3.5 mm). See "Replacement and Adjustment - Copy Quality Adjustment" for details.</td></tr>
<tr><td rowspan="2">43</td><td rowspan="2">Vertical Magnification Adjustment †</td><td>Adjusts magnification in the paper travel direction by changing the scanner speed.</td><td rowspan="2">0 ~ 31
Default = 16</td></tr>
<tr><td>0.2% per step (–3.2% to +3.0%).
Check the focusing after doing this SP mode, and adjust with SP47 if necessary.
See "Replacement and Adjustment - Copy Quality Adjustment" for details.</td></tr>
</table>

<table>
<tr><th colspan="2">Mode No.</th><th>Function</th><th>Settings</th></tr>
<tr><td rowspan="2">44</td><td rowspan="2">Horizontal Magnification Adjustment †</td><td>Adjusts magnification perpendicular to the direction of paper travel, by changing the home position of the lens and mirrors.</td><td rowspan="2">0 ~ 50
Default = 20</td></tr>
<tr><td>0.2% per step (–4.0% to +6.0%).
Check the focusing after doing this SP mode, and adjust with SP47 if necessary.
See "Replacement and Adjustment - Copy Quality Adjustment" for details.</td></tr>
<tr><td rowspan="2">45</td><td rowspan="2">Registration Buckle Adjustment †</td><td>Adjusts the amount of paper buckle in the registration area.</td><td rowspan="2">0 ~ 15
Default = 8</td></tr>
<tr><td>0.5 mm per step (–4.0 mm to +3.5 mm).</td></tr>
<tr><td rowspan="2">46</td><td rowspan="2">Registration Buckle Adjustment - A5 Paper †</td><td>When feeding A5 sideways paper, the registration buckle can be adjusted separately from the SP45 setting to reduce the buckle.</td><td rowspan="2">Default = 0</td></tr>
<tr><td>0.5 mm per step (0 mm to –5.0 mm).</td></tr>
<tr><td rowspan="2">47</td><td rowspan="2">Focus Adjustment †</td><td>Adjusts the 4th/5th mirror position to correct the focus.</td><td rowspan="2">0 ~ 100
Default = 40
(0.1 mm per step)</td></tr>
<tr><td>This mode must be done after vertical and horizontal magnification adjustments (SP43 and SP44).
See "Replacement and Adjustment - Copy Quality" for details on how to do this adjustment.</td></tr>
<tr><td rowspan="2">48</td><td rowspan="2">Light Intensity Adjustment †</td><td>Clean the optics, then adjust the exposure lamp voltage. The VL and VL2 corrections are reset automatically when entering this mode.

<table>
<tr><th rowspan="2">SP Setting</th><th colspan="2">Lamp Voltage (V)</th></tr>
<tr><th>120 V (NA) Version</th><th>230 V (EU) Version</th></tr>
<tr><td>100</td><td>50.0</td><td>100</td></tr>
<tr><td>101</td><td>50.5</td><td>101</td></tr>
<tr><td>102</td><td>51.0</td><td>102</td></tr>
<tr><td>↓</td><td>↓</td><td>↓</td></tr>
<tr><td>150</td><td>75.0</td><td>150</td></tr>
<tr><td>↓</td><td>↓</td><td>↓</td></tr>
<tr><td>180</td><td>90.0</td><td>180 Max</td></tr>
<tr><td>↓</td><td>↓</td><td>—</td></tr>
<tr><td>193</td><td>96.5</td><td>—</td></tr>
<tr><td>194</td><td>97.0 Max</td><td>—</td></tr>
</table>
</td><td rowspan="2">120 V Machines
100 ~ 194
Default = 140

230 V Machines
100 ~ 180
Default = 140</td></tr>
<tr><td>Before performing this mode, clean the optics.
Then open SP33 and return the setting to the normal value if it has been changed. Then adjust the light intensity using an OS-A3 Test Chart with the platen cover placed over it. After adjusting the light intensity, adjust the ADS Reference Voltage Adjustment (SP56).
See "Replacement and Adjustment - Copy Quality" for details on how to do this adjustment.</td></tr>
</table>

Mode No.		Function	Settings
49	Fusing Temperature Adjustment	Adjusts the control temperature of the hot roller during copying in 1°C steps.	120 V Machines 180°C ~ 195°C **Default = 190°C** 230 V Machines 180°C ~ 200°C **Default = 190°C**
50	Fusing Ready Temperature Adjustment	Adjusts the ready temperature of the hot roller during the warm-up period in 1°C steps. ***Normally, this value should not be changed.***	120 V Machines 160°C ~ 170°C **Default = 165°C** 230 V Machines 165°C ~ 175°C **Default = 172°C**
51	Exposure Lamp Voltage Display	Displays the current exposure lamp voltage. For 120 V machines, the actual applied voltage = displayed value/2 *The exposure lamp turns on for 10 seconds when this mode is selected. Do not repeat more than 5 times, to avoid overheating the optics cavity.*	0 ~ 247
52	Fusing Temperature Display =	Displays the fusing temperature detected by the fusing thermistor. Press the ⊡ key to monitor the temperature during the normal copy cycle.	
53	TD Sensor Target Control Voltage Adjustment	If the setting of SP30 (Toner Supply Mode Selection) is 1 or 3, this value is used for the TD sensor target voltage. ***Normally, this value should not be changed.***	1 ~ 200 **Default = 97** **(0.02 V per step)**
⇒ 54	TD Sensor Gain Adjustment	When the TD Sensor initial setting is performed, this mode is adjusted automatically. ***Normally, this value should not be changed.***	0 ~ 255 **Default = 102** **(0.04 V per step)**
55	TD Sensor Output Display Data =	Displays the TD sensor output voltage. Press the ⊡ key to monitor the output voltage during the normal copy cycle. The output voltage will display "0" when this mode is accessed after turning on the main switch without making any copies.	**(0.02 V per step) x Data**
56	ADS Reference Voltage Adjustment	Adjusts the ADS reference voltage. *After adjusting the light intensity (SP48), place 5 sheets of A4(LT) white paper on the exposure glass and select this mode. Adjust the ADS voltage to 2.5 V ± 0.1 V using VR101 on the main control board.*	
57	ADS Output Voltage Display =	Displays the ADS output voltage. Press the ⊡ key to monitor the output voltage during the normal copy cycle. *For only this SP mode, the copies are made with the ADS mode (other SP modes use manual ID level 4).*	

<table>
<tr><th colspan="2">Mode No.</th><th>Function</th><th>Settings</th></tr>
<tr><td rowspan="2">59</td><td rowspan="2">Optics Temperature Display †</td><td>Displays the optics temperature detected by the optics thermistor.</td><td rowspan="2"></td></tr>
<tr><td>Press the [◇] key to monitor the temperature during the normal copy cycle.</td></tr>
<tr><td>60</td><td>Drum Potential Measurement (With Paper)</td><td>Factory use only.</td><td></td></tr>
<tr><td>61</td><td>Drum Potential Measurement (Without Paper)</td><td>Factory use only.</td><td></td></tr>
<tr><td>62</td><td>VL Correction Interval</td><td>Sets the interval for VL correction. The exposure lamp voltage (SP48) is increased by 1 step at the set copy count interval.

<table><tr><th>SP Setting</th><th>Exposure Lamp</th><th>Note</th></tr><tr><td>0</td><td>+2 steps/8,000 copies</td><td></td></tr><tr><td>1</td><td>+2 steps/6,000 copies</td><td></td></tr><tr><td>2</td><td>+2 steps/4,000 copies</td><td>Default</td></tr><tr><td>3</td><td>+2 steps/2,000 copies</td><td></td></tr><tr><td>4</td><td>+2 steps/1,000 copies</td><td></td></tr><tr><td>5</td><td>No Correction</td><td></td></tr></table>
1 step of the lamp voltage equals 0.5 V for N-American, and 1.0 V for European machines.
See "Detailed Section Descriptions - Exposure Lamp Voltage Control" for details.</td><td>0 ~ 8
Default = 2</td></tr>
<tr><td>63</td><td>Forced Toner Supply</td><td>Forces the toner bottle to supply toner to the development unit.
This mode starts when the [◇] key is pressed, and stops automatically after the selected time. Use this mode to achieve standard image density when copy quality problems indicate low toner.</td><td>0: 6 seconds
1: 3 seconds</td></tr>
<tr><td>64</td><td>VR Correction Value</td><td>Sets the VR correction value.
Keep this at the default setting.</td><td>Default = 0</td></tr>
<tr><td>66</td><td>TD Sensor Initial Setting</td><td>Performs the TD sensor initial setting.
This SP mode controls the voltage applied to the TD sensor to make the TD sensor output 1.9 ± 0.1 V.
After using SP66, check SP67 to see if the sensor is working correctly.
This mode is started by pressing the [◎] key and stops automatically after about 1 minute. Use this mode only after installing new developer.</td><td></td></tr>
<tr><td>67</td><td>TD Sensor Initial Output Display</td><td>Display the TD sensor initial setting output.</td><td>(0.02 V x displayed value)</td></tr>
</table>

Mode No.		Function	Settings
68	V_{L2} Correction Selection	Selects or deselects V_{L2} correction. *Keep this setting at 0.*	**0: V_{L2} Correction** 1: No V_{L2} Correction
69	Imaging Unit Counter Display	Shows the total number of copies made so far by the imaging unit installed in the machine. This counter is reset by SP93. *The first three digits are displayed in the magnification indicator.* *Press the ◑ key to view the last three digits.*	
71	Sorter Operation	Enables sorter operation.	**0: No Sorter** 1: Sorter Installed
74	Special Paper Size Setting	Sets the appropriate paper size for special paper loaded in the paper feed tray. *The "✱" mark on the paper size dial must be selected to use this special feature.* *When the paper feed tray is selected, the appropriate paper size or the "✱" mark will be displayed and the copier will operate in accordance with the set paper size.*	**0: ✱ (Universal)** 1: A3 2: ✱ (Universal) 3: B4 4: A4 5: A4R 6: B5 7: B5R 8: A5 9: B6 13: DLT 14: LG 15: LT 16: LTR 17: HLT 19: F 27: 8 k 28: 16 k (Sideways) 29: 16 k (Lengthwise)
76	Sorter Bin Capacity	Sets the stock quantity limits. If set to 1, the maximum amount of copies depends on the paper size (see the specifications for the sorter).	0: No limit **1: Limit**
77		Factory use only	
78	Auto Energy Saver Mode On/Off	Selects the "Automatic Energy Saver" mode. *The copier automatically goes to Energy Saver mode at the auto reset time selected (SP15).*	0: No **1: Yes**
81	Factory Initialization	Factory use only.	
82	Data Communication	Factory use only.	
83	Factory Potential Adjustment	Factory use only.	

Mode No.		Function	Settings
88	Total Copy Counter Display	Displays the total (electrical) copy counter. *The first three digits are displayed in the magnification indicator.* *Press the ◑ key to view the last three digits.* ***The mechanical total counter and the electrical total counter may not always display the same value, because of initial differences in the counter values.***	
90	Factory Data and Counter Clear	Factory use only.	
93	VR Correction Reset	Resets the drum residual voltage correction counter for the VR correction. To clear, enter "1" then press the ◐ key and the ◑ key at the same time. ***Use this mode only after installing a new drum.***	**0: No** 1: Yes
94	VL2 Correction Reset	Resets the exposure lamp data and counter for the VL2 correction. Always perform this mode with SP95 as a set. To Clear, enter "1" then press the ◐ key and the ◑ key at the same time. *Normally not needed in the field, as this is handled by SP48.*	**0: No** 1: Yes
95	VL Correction Reset	Resets the exposure lamp data and counter for the VL correction. Always perform this mode with SP94 as a set. To clear, enter "1" then press the ◐ key and the ◑ key at the same time. *Normally not needed in the field, as this is handled by SP48.*	**0: No** 1: Yes
96	Toner End Force Cancel	The Toner End condition is canceled forcibly. *By pressing the ◐ key to enter this SP mode, the toner end condition is canceled.*	
97	Service Call (E5) Reset	Resets a service call (E5) condition. *Turn the main switch off and on to check if the service call condition is reset.*	
98	Total Counter Clear	Clears the total (electrical) counter. **Normally, this SP mode should not be performed.** *To clear, enter "1" then press the ◐ key and the ◑ key at the same time.* *To avoid resetting the counter by mistake, the counter is reset only when the ◐ key and the ◑ key are pressed at the same time.*	0: No 1: Yes

Mode No.		Function	Settings
99	Clear All Memory	Clears all counters and returns all modes to the default settings. See the Clear All Memory Procedure in this section for more details. **Normally, this SP mode should not be performed.** This SP mode is required only when replacing the EEPROM, or when the copier malfunctions due to a damaged EEPROM.	**0: No** 1: Yes
		To clear, enter "1" then press the ◑ key and the ◑ key at the same time. *To avoid resetting the counter by mistake, the counter is reset only when the ◑ key and the ◑ key are pressed at the same time.*	
100	By-pass Feed Copy Counter Display	Displays the total (electrical) copy counter for the by-pass feed table. Since the copy counter for displaying the current SP mode number has only 2 digits, the manual image density indicator is used to display the first digit.	
		The first three digits are displayed in the magnification indicator. *Press the ◑ key to view the last three digits.*	
101	Paper Feed Tray Copy Counter Display	Displays the total (electrical) copy counter for the paper feed tray. Since the copy counter for displaying the current SP mode number has only 2 digits, the manual image density indicator is used to display the first digit.	
		The first three digits are displayed in the magnification indicator. *Press the ◑ key to view the last three digits.*	
106	DF Original Counter Display	Displays the total (electrical) number of originals fed from the DF. Since the copy counter for displaying the current SP mode number has only 2 digits, the manual image density indicator is used to display the first digit.	
		The first three digits are displayed in the magnification indicator. *Press the ◑ key to view the last three digits.*	
130	Total Service Calls	Displays the total number of service call conditions. Since the copy counter for displaying the current SP mode number has only 2 digits, the manual image density indicator is used to display the first digit.	
		The first three digits are displayed in the magnification indicator. *Press the ◑ key to view the last three digits.*	

Mode No.		Function	Settings
131	Total Misfeeds	Displays the total number of misfeeds excluding original misfeeds in the DF. Since the copy counter for displaying the current SP mode number has only 2 digits, the manual image density indicator is used to display the first digit.	
		The first three digits are displayed in the magnification indicator. *Press the ◑ key to view the last three digits.*	

2.6 CLEAR ALL MEMORY PROCEDURE

WARNING: The Clear All Memory procedure (SP99) resets all the correction data for copy process control and all the software counters, and returns all modes and adjustments to the default settings. Normally, this SP mode should not be performed.
This procedure is required only when replacing the EEPROM or when the copier malfunctions due to a damaged EEPROM.

1. Enter SP99.
2. Enter "1".
3. Press the ◑ key and the ◗ key at the same time.

   NOTE: To avoid resetting the memory by mistake, the memory is reset only when the ◑ key and the ◗ key are pressed at the same time.
4. Turn the main switch off and on.

- Recovering the machine after a memory reset -

WARNING: If SP99 is performed, all the software counters for process control and the TD sensor initial setting data are reset. As a result, the old drum and the old developer cannot be used any more. Otherwise, dirty background and/or toner scattering will appear on copies sooner or later because proper process control will not be applied to the drum.
After doing SP99, execute the following procedure to return the machine to its normal operating condition.

1. Install a new drum.
2. Install new developer.
3. Clean the optics and inside the copier if necessary.

4. Refer to the "SP MODE FACTORY SETTING DATA" sheet located behind the operation guide sheet installed on the front cover, and enter the data that were stored in the following SP modes at the factory.
   - SP41: Lead Edge Erase Margin
   - SP42: Registration Adjustment
   - SP43: Vertical Magnification Adjustment
   - SP44: Horizontal Magnification Adjustment
   - SP47: Focus Adjustment
   - SP48: Light Intensity Adjustment
5. Perform SP66 (TD Sensor Initial Setting).

   NOTE: The machine will automatically stop when completed. (It takes about 1 minute.)
6. Check the copy quality and the paper path and do any necessary adjustment (see Replacement and Adjustment - Copy Quality Adjustments).

3. PRACTICAL SP MODE USE TABLE

The following table shows the SP modes that must be done, and the order in which they must be done when the listed items are replaced or cleaned.

(Priority Number)

No.	SP Mode No.	Description	Replaced or Cleaned Item				
			Developer	TD Sensor	OPC Drum	ADS Sensor	Optics (Scanner Unit)
1	SP66	TD Sensor Initial Setting	❍	❍			
2	SP93	V_R Correction Reset			❍		
*3	SP48	Light Intensity Adjustment			❍		❍
4	SP56	ADS Reference Voltage Adjustment			❍	❍	❍

***NOTE:** 1) Before performing SP48 (Light Intensity Adjustment), always check to see if the setting of SP33 (Image Bias Adjustment - Manual ID Mode) is set to the default value so that it is possible to adjust the light intensity properly.

2) The V_L and V_{L2} corrections are reset automatically when entering this mode.

4. SERVICE TABLES

4.1 TEST POINTS (Main Control Board)

Number	Label	Monitored Signal
TP101	(HET)	Fusing thermistor output
TP102	(ADS)	Auto image density sensor output
TP103	(ETH)	Optics thermistor output
TP104	(T. CON)	Toner density sensor target control voltage output
TP105	(TV)	Toner density sensor output

4.2 VARIABLE RESISTORS

Number	Location	Function
VR101	Main Control Board	Changes the ADS voltage (2.5 ± 0.1 V)
VR1(VRC)	High Voltage Supply Board - C/G/B/T/S	Changes the charge corona voltage
VR51(VRT)	High Voltage Supply Board - C/G/B/T/S	Changes the transfer corona voltage
VR152(VRB)	High Voltage Supply Board - C/G/B/T/S	Changes the standard development bias (base bias voltage)
VR21(VRG)	High Voltage Supply Board - C/G/B/T/S	Changes the charge grid voltage
VR101(VRD)	High Voltage Supply Board - C/G/B/T/S	Changes the discharge plate voltage

PREVENTIVE MAINTENANCE

1. PREVENTIVE MAINTENANCE SCHEDULE

1.1 PM TABLE

NOTE: 1) The amounts mentioned as the PM interval indicate the number of copies.

2) Refer to "REGULAR PM PROCEDURE" in this section.

Symbol key: L: Lubricate R: Replace C: Clean I: Inspect A: Adjust

	EM	45 k	90 k	135 k	180 k	Notes
Optics						
Reflector		C	C	C	C	Silicone cloth
1st to 5th Mirrors		C	C	C	C	Silicone cloth
6th Mirror		C	C	C	C	Blower brush
Lens		C	C	C	C	Blower brush
Exposure Glass	C	C	C	C	C	Soft cloth dampened with alcohol or water
Platen Cover Sheet	C	C	R	C	R	Soft cloth dampened with water
Scanner Guide Rod		C, L	C, L	C, L	C, L	Dry cloth, Grease - CPL501
Scanner Guide Rail		C, L	C, L	C, L	C, L	Dry cloth, Silicone Grease - G501
4th/5th Mirror Guide Rod		C, L	C, L	C, L	C, L	Dry cloth, Silicone Grease - G501
4th/5th Mirror Guide Rail		C, L	C, L	C, L	C, L	Dry cloth, Silicone Grease - G501
Blue Filter		C	C	C	C	Soft cloth
Exposure Lamp/1st Scanner Ass'y						Replace at 200 k copies
Around the Drum						
Charge Corona Wire	C	R	R	R	R	Blower brush
Transfer Corona Wire	C	C	R	C	R	Blower brush
Charge Corona Grid			R		R	
Transfer Guide Plate	C	C	C	C	C	Soft cloth
End Blocks and Casings		C	C	C	C	Blower brush or dry cloth
Charge Corona Cleaning Pad	I	R	R	R	R	
Erase Lamp	C	C	C	C	C	Blower brush or dry cloth
QL	C	C	C	C	C	Blower brush or dry cloth
⇒ Discharge Plate		C	C	C	C	Blower Brush
Cleaning						
Cleaning Blade		I	R	R	R	Apply setting powder
Inside the Cleaning Unit		C	C	C	C	Remove all toner and developer

	EM	45 k	90 k	135 k	180 k	Notes
Cleaning Entrance Seal		C	C	C	C	Dry cloth. Replace if necessary
Development Unit						
Developer		R	R	R	R	
Development Unit Entrance Seal		I	I	I	I	
Toner Supply Drive Gear		I	I	I	I	
Development Drive Gear		L	L	L	L	Grease - CPL501
Imaging Unit Lower Cover		C	C	C	C	Dry cloth
Paper Feed (for each paper feed station)						
Feed Roller	C		R		R	Soft cloth dampened with water
By-pass Feed Roller	C		R		R	Soft cloth dampened with water
Friction Pad	C		R		R	Soft cloth dampened with water
Tray Bottom Plate Pad	C	C	R	C	R	Soft cloth dampened with water
By-pass Bottom Plate Pad	C	C	C	C	C	Soft cloth dampened with water
Registration Roller	C	C	C	C	C	Soft cloth dampened with water
Paper Feed Guide		C	C	C	C	Soft cloth dampened with water
Paper Dust Mylar	C	C	C	C	C	Soft cloth
Fusing						
⇒ Hot Roller		I	R	I	R	
Pressure Roller		I	R	I	R	
Stripper Pawls		C	C	R	C	Suitable solvent
Fusing Entrance and Exit Guide Plates		C	C	C	C	Suitable solvent
Fusing Thermistor		C	C	C	C	Suitable solvent
Hot Roller Bearings		C, L	C, L	C, L	C, L	Barrierta JFE55/2
Pressure Roller Bearings		I	I	I	I	
Others						
ADS	A					Adjust when the lamp voltage is changed.
Exit and Registration Sensors			I		I	
Bearings		I	I	I	I	
Ozone Filter		C	R	C	R	Vacuum or Blower Brush
Driving Belts		I	I	I	I	

	EM	24 k	80 k	Notes
DOCUMENT FEEDER (A662) (for originals)				
⇒ Transport Belt	C	-	C	Clean with belt cleaner at copier PM
Friction Belt	C	-	C	Clean with belt cleaner at copier PM
Pick-up Roller	C	C	C	Soft cloth dampened with water
Feed Roller	C	C	C	Soft cloth dampened with water

	EM	Notes
SORTER (A657)		
Bin Guide/Wheel	L	Silicone Grease - G501: If movement is not smooth.
Bushings	L	Launa oil: If bushings generate noise.
Exit Rollers	C	Alcohol

1.2 REGULAR PM PROCEDURE

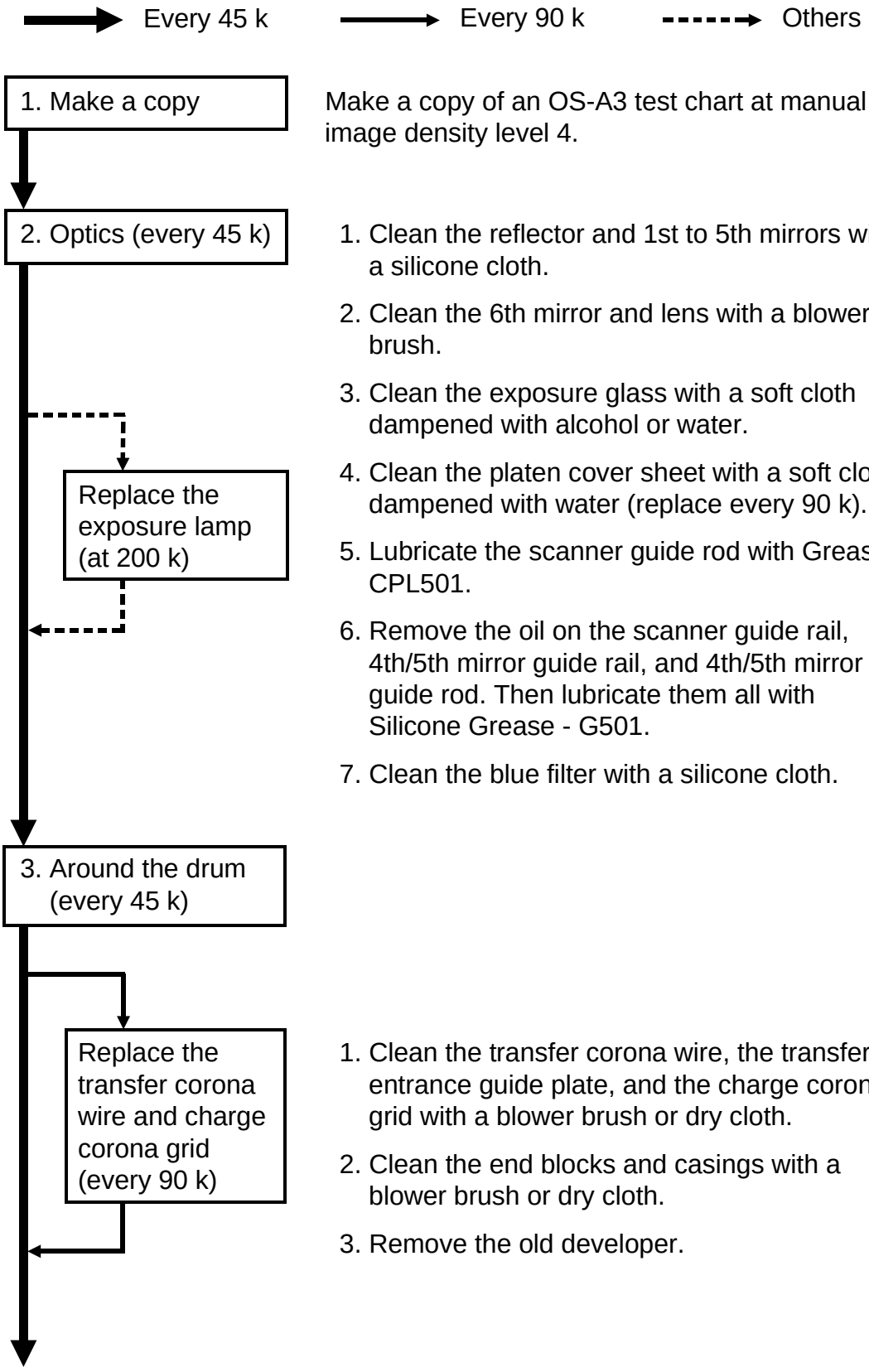

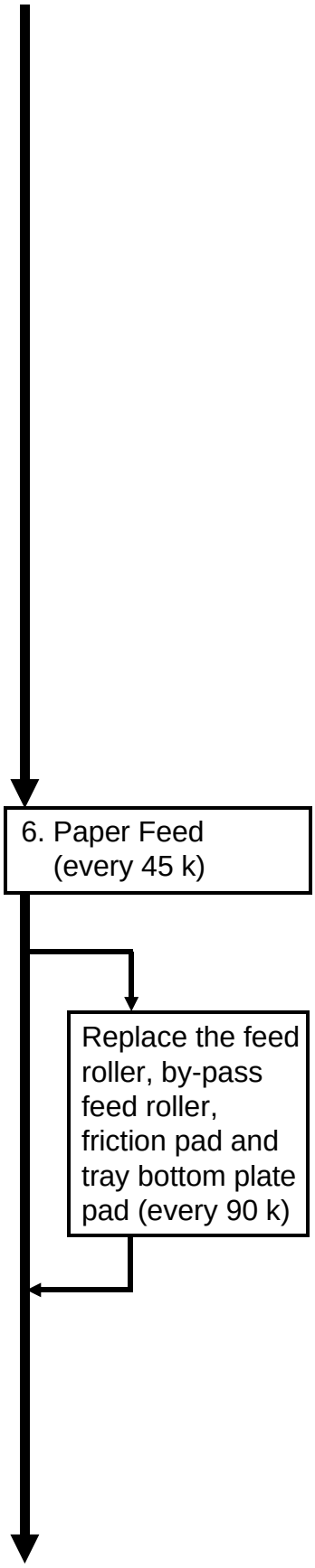

4. Remove all toner, developer and the drum from the imaging unit. Clean the **whole** imaging unit, especially the lower cover with a dry cloth.
5. Inspect the development entrance seal, toner supply drive gear, and development drive gears in the imaging unit (lubricate the latter with 2 or 3 spots of CPL501).
6. Install new developer.
7. Clean the cleaning entrance seal and replace the cleaning blade. Apply setting powder evenly on the surface and edge of the new cleaning blade.
8. Clean the erase lamp and the quenching lamp with a blower brush or dry cloth.
9. Replace the charge corona wire and charge corona cleaning pad.
10. Replace the discharge plate.

1. Clean the bottom plate pad with a soft cloth dampened with water.
2. Clean the registration roller with a soft cloth dampened with water.
3. Clean the paper feed guide with a soft cloth dampened with water.
4. Clean the paper dust mylar with a soft dry cloth.

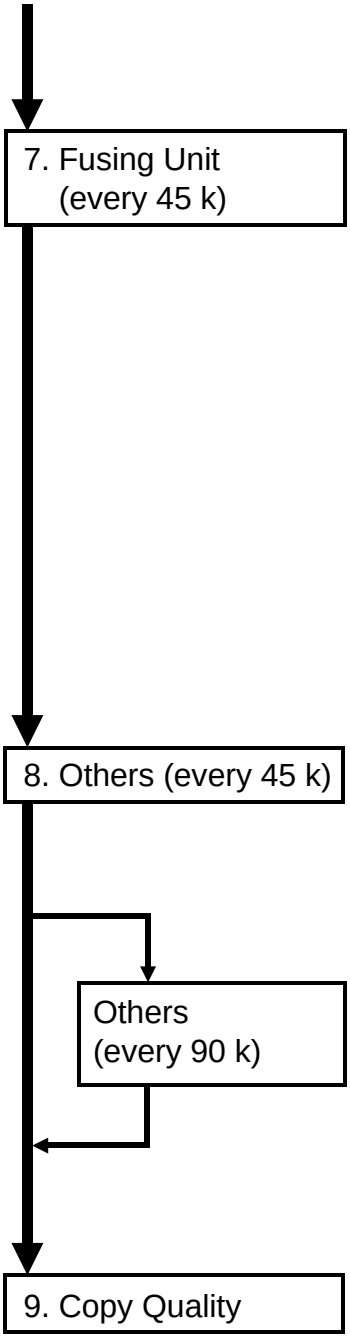

1. Clean the stripper pawls with a suitable solvent. (Replace every 135 k.)
2. Clean the fusing entrance and exit guide plates with a suitable solvent.
3. Clean the fusing thermistor with a suitable solvent.
4. Replace the hot and pressure rollers.
5. Clean the inside of the hot roller bearings and lubricate with Barrierta JFE55/2.
6. Inspect the pressure roller bearings.

1. Replace the ozone filter.
2. Inspect the bearings and the drive belts.

1. Inspect the exit and registration sensors.

1. Open SP33 (Image Bias Adjustment - Manual ID Mode) and turn the setting to the normal value if it has been changed.
2. Make a copy of a test chart at manual image density level 4. Perform the light intensity adjustment (SP48).
3. Perform the ADS reference voltage adjustment (SP56).

2. SPECIAL TOOLS AND LUBRICANTS

Part Number	Description	Q'ty
A184 9501	Scanner Positioning Pin (2 pcs/set)	1
5420 9516	Test Chart - OS-A3 (10 pcs/set)	1
5442 9103	Launa Oil	1
5203 9501	Silicone Grease - G-501	1
5420 9507	Digital Multimeter	1
5442 9101	Setting Powder	1
A028 9300	Grease Kok Barrierta - JFE 55/2	1
A190 9002	Grease - CPL501 (5 pcs/set)	1

REPLACEMENT
AND
ADJUSTMENT

1. EXTERIOR AND INNER COVERS

1.1 EXTERIOR COVER REMOVAL

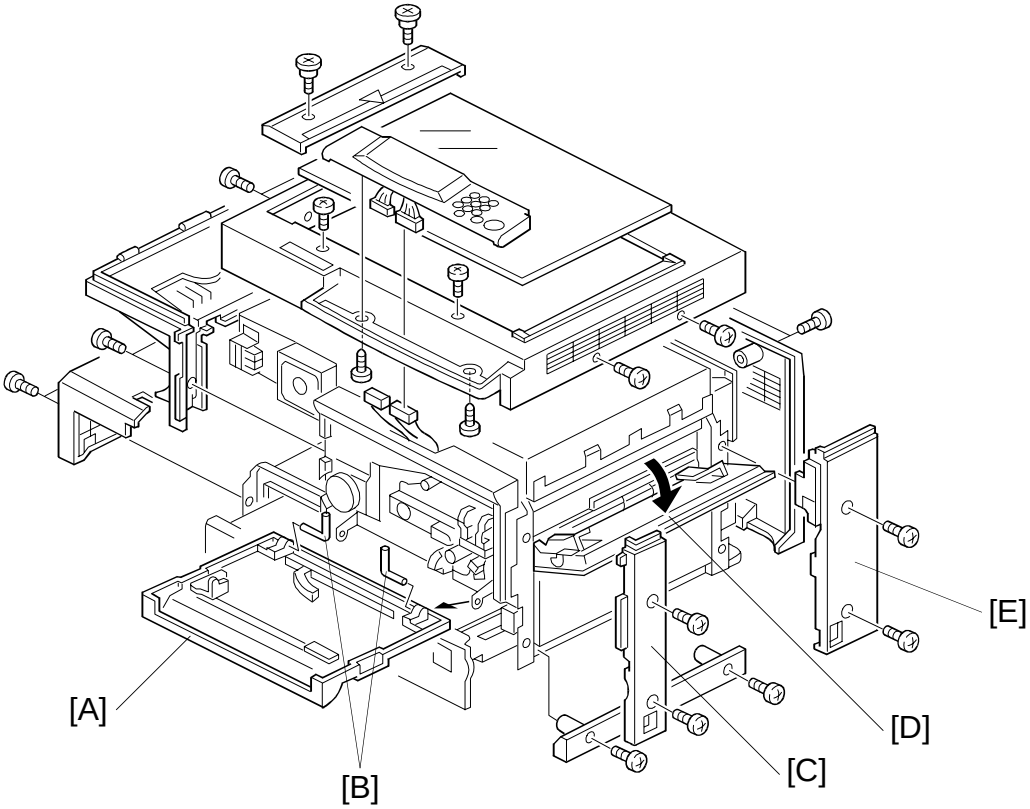

1.1.1 Front Cover

1. Open the front cover [A].
2. Remove the front cover [A] (2 locking pins [B]).

1.1.2 Front Right Cover

1. Remove the front right cover [C] (2 screws).

1.1.3 Rear Right Cover

1. Open the by-pass feed table [D].
2. Remove the rear right cover [E] (2 screws).

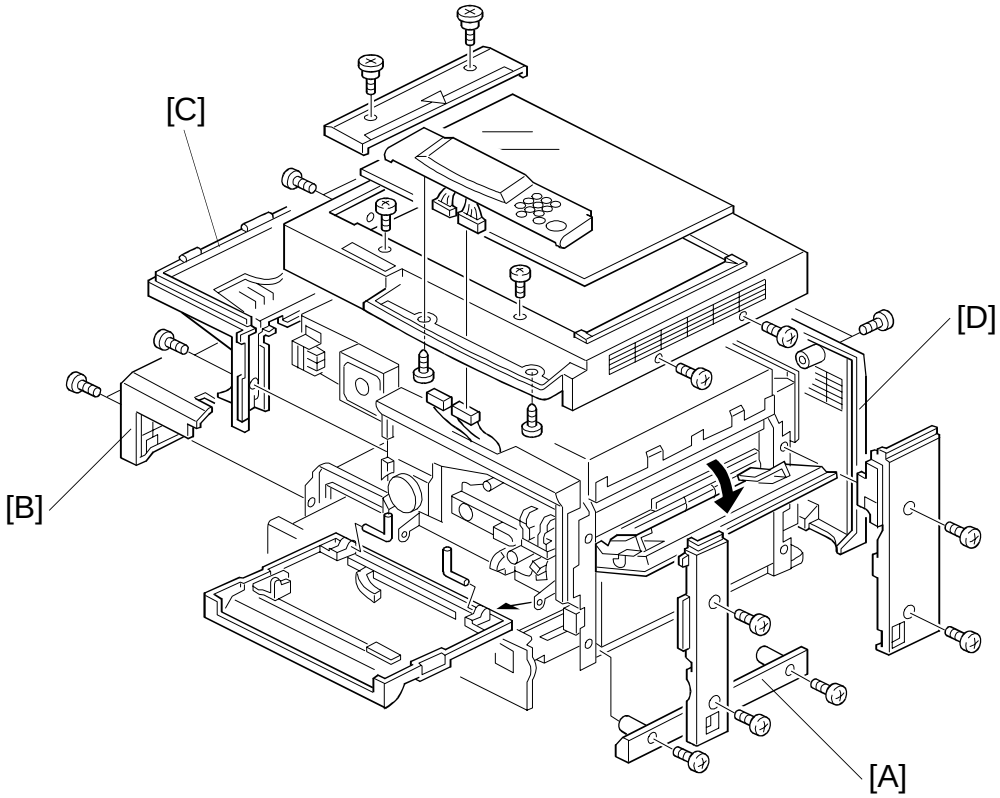

1.1.4 Lower Right Cover

1. Remove the lower right cover [A] (2 screws).

1.1.5 Lower Left Cover

1. Remove the lower left cover [B] (2 screws).

1.1.6 Upper Left Cover

1. Remove the lower left cover [B] (2 screws).
2. Remove the upper left cover [C] (2 screws).

1.1.7 Rear Cover

1. Remove the rear cover [D] (2 screws).

1.1.8 Upper Cover

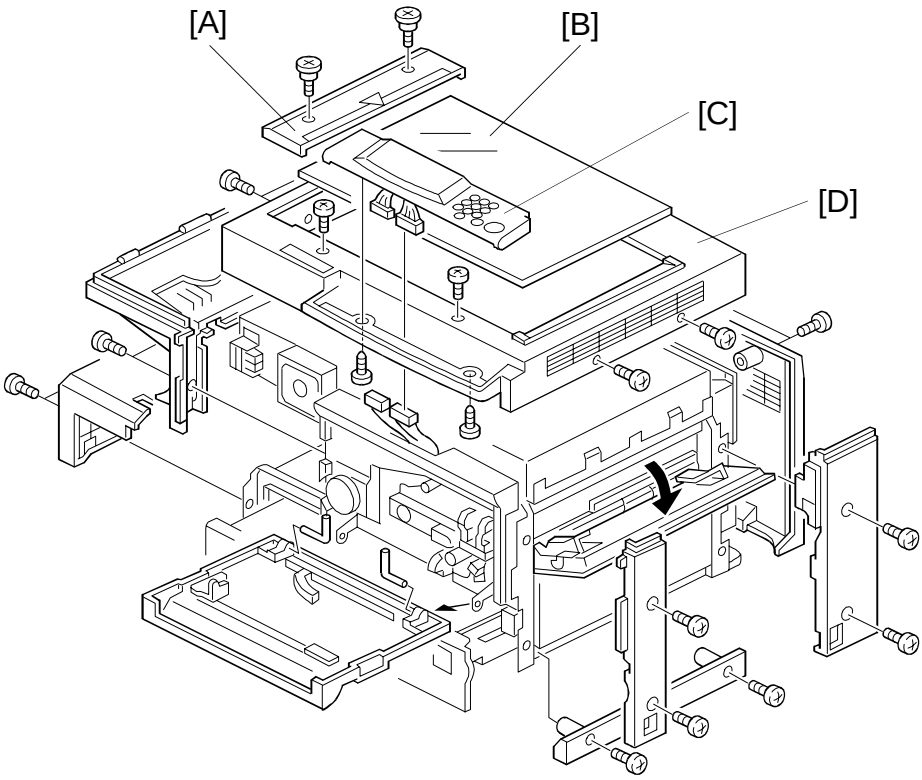

1. Turn off the main switch and unplug the power supply cord.
2. Remove the platen cover or DF.
3. Remove the left side scale [A] (2 screws).
4. Remove the exposure glass [B]. (See Exposure Glass Removal.)
5. Remove the operation panel [C] from the upper cover (2 screws and 2 connectors).
6. Remove the upper cover [D] with the operation panel (8 screws).

1.2 INNER COVER REMOVAL

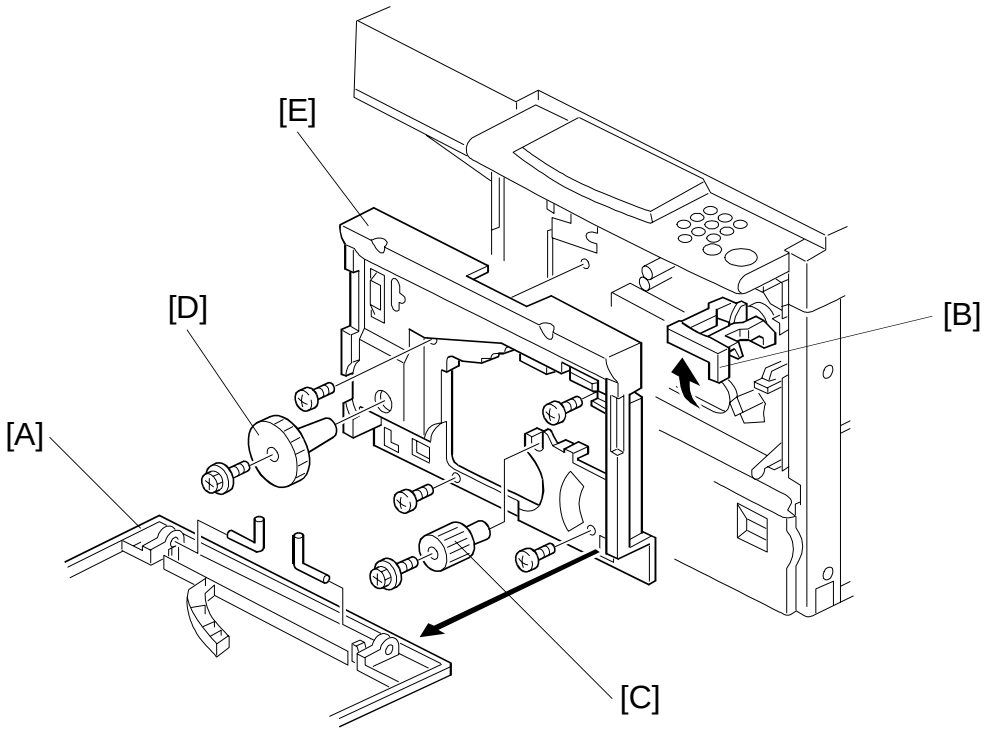

1. Open and remove the front cover [A]. (See Front Cover Removal.)
2. Pull up the toner supply unit lever [B].
3. Remove the registration knob [C] and the fusing unit knob [D] (1 screw each).
4. Remove the inner cover [E] (4 screws).

2. OPTICS

2.1 EXPOSURE GLASS REMOVAL

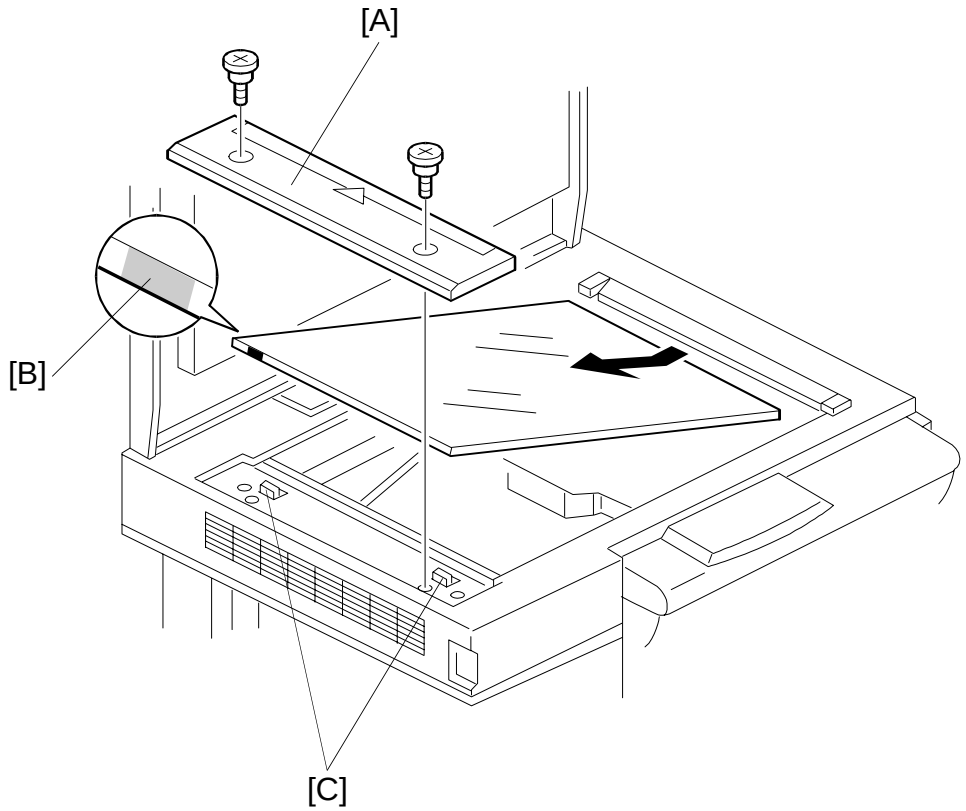

1. Remove the left scale [A] (2 shoulder screws).
2. To remove the exposure glass, grasp the left edge of the exposure glass and lift it up, then slide the other edge out from under the right glass holder.

   NOTE: 1) Position the red mark [B] at the upper left corner. This side is smoother and generates less static electricity when in DF mode.

   2) When reinstalling the exposure glass, ensure the left edge of the glass is flush with the tabs [C] to the left of the scale plate, and the right glass holder firmly secures the exposure glass.
3. Check the image quality. Do the Copy Quality Adjustments if necessary (see Copy Quality Adjustments).

2.2 1ST SCANNER/EXPOSURE LAMP REMOVAL

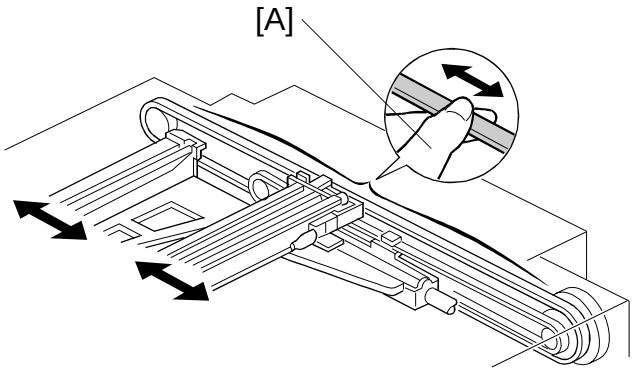

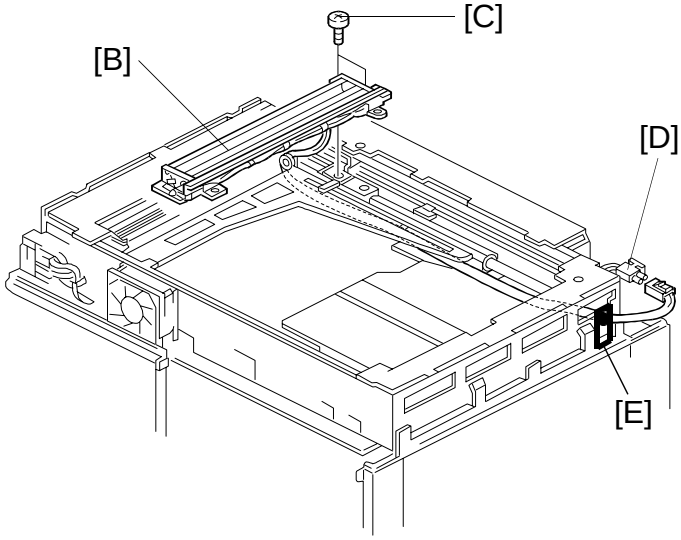

1. Turn off the main switch and unplug the power supply cord.
2. Remove the platen cover or DF.
3. Remove the exposure glass. (See Exposure Glass Removal.)
4. Remove the upper cover. (See Upper Cover Removal.)
5. Remove the rear cover. (See Rear Cover Removal.)
6. Move the 1st scanner 150 mm from the left scale, as shown by [A].

WARNING: To move the 1st scanner, pull the scanner belt. Do not apply force to the scanner directly.

⟹ 7. Remove the 1st scanner [B] (2 screws [C], white cable clamp [E] and 1 connector [D]).

NOTE: The 1st scanner contains the exposure lamp.

-Reinstallation-

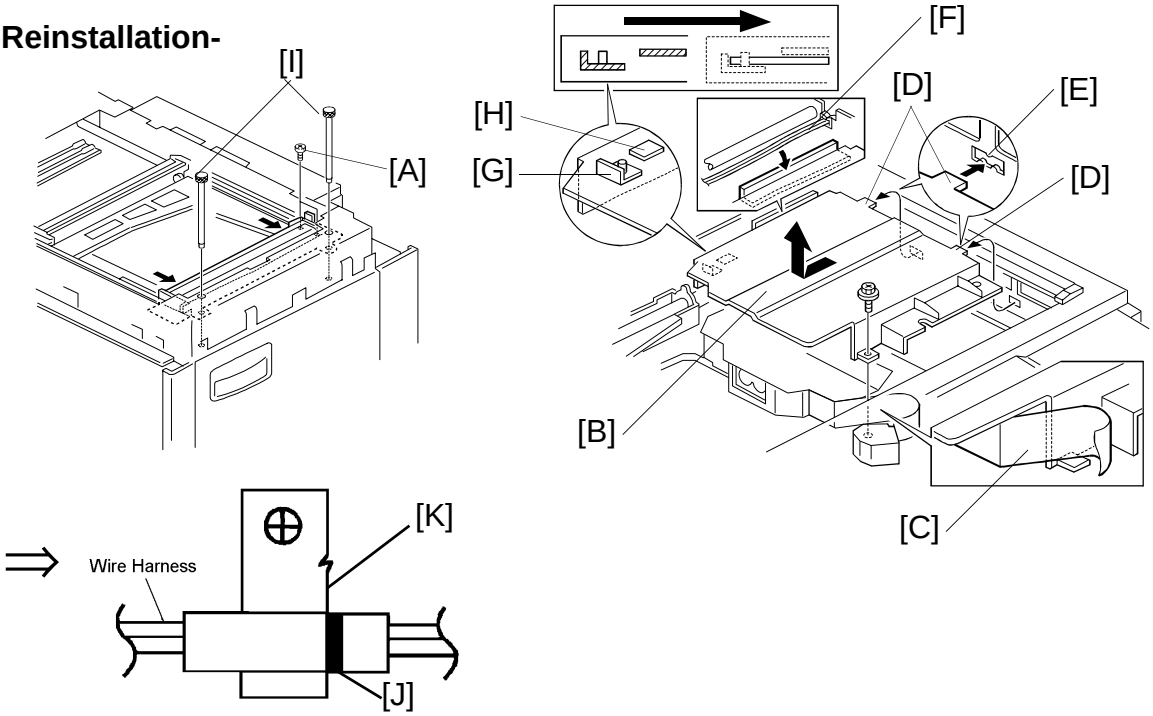

1. Reinstall the 1st scanner. (2 screws [A]; do not fully tighten the screws.)
2. Remove the lens cover [B].

   NOTE: When replacing the lens cover, be sure to:

   - Position the ribbon cable [C] so that it is not caught by the cover, as shown.
   - Insert the tabs [D] into the slots [E].
   - Position the harness [F] alongside the cover, as shown.
   - Position the cover pin [G] and tab [H] as shown.
3. Slide the 1st scanner fully to the right. Line up and insert the two scanner locking pins [I].

   NOTE: Scanner positioning pins are available as a service part. P/N: A184 9501 (See the Parts Catalog.)
4. Re-connect the connector and secure the white harness clamp to the harness.

⇒ **NOTE:** The white mark [J] should be aligned with the right side of the harness clamp [K].

5. Tighten the two screws [A] to secure the 1st scanner.
6. Remove the scanner positioning pins [I].
7. Install the lens cover, the exposure glass and exterior covers.
8. Check the image quality. Perform the Focus Adjustment (see Focus Adjustment) and the Horizontal Magnification Adjustment (see Horizontal Magnification Adjustment), if necessary.

2.3 SCANNER BELT REMOVAL

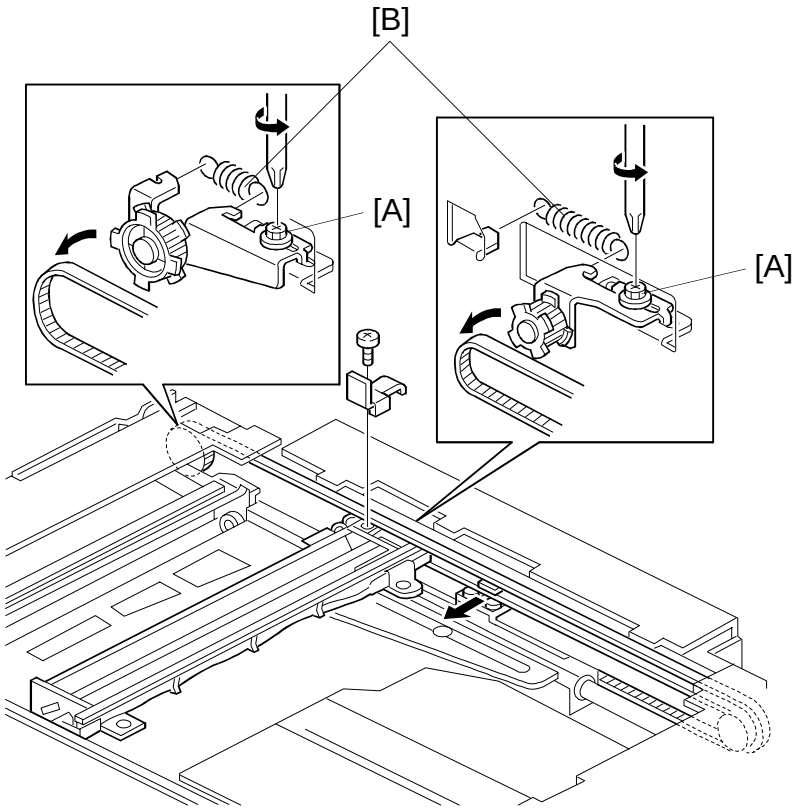

1. Turn off the main switch and unplug the power supply cord.
2. Remove the platen cover or DF.
3. Remove the exposure glass. (See Exposure Glass Removal.)
4. Remove the upper cover. (See Upper Cover Removal.)
5. Remove the rear cover. (See Rear Cover Removal.)
6. Loosen the two screws [A] securing the wire tension brackets, as shown.
7. Remove the two springs [B].
8. Remove the 1st scanner and the 2nd scanner.
9. Replace the scanner belts.
10. Reassemble.
11. Adjust the position of the 1st scanner and the 2nd scanner. (See 1st And 2nd Scanner Adjustment.)

2.4 1ST AND 2ND SCANNER POSITION ADJUSTMENT

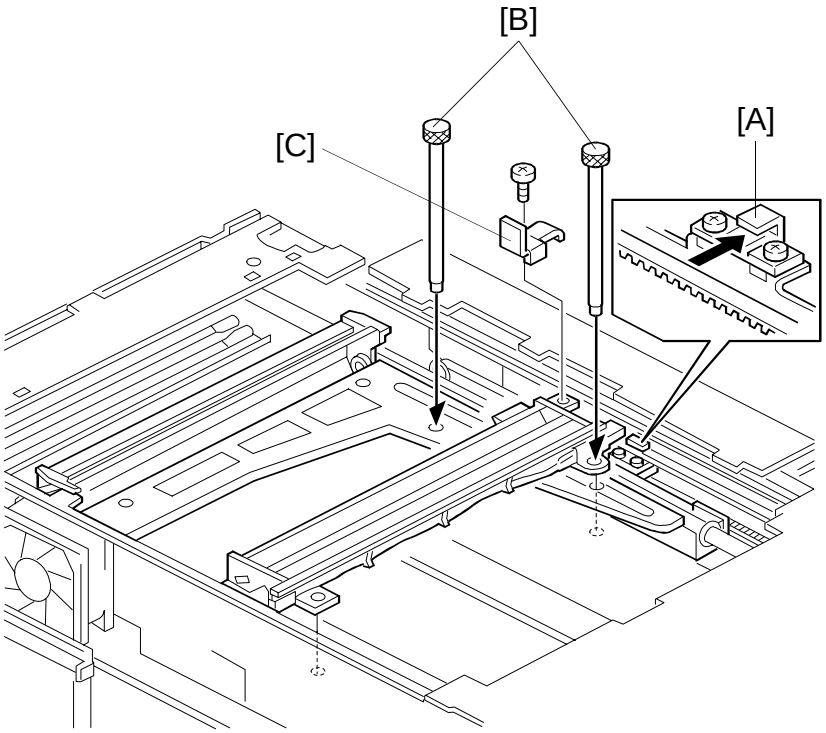

NOTE: Adjust when replacing the scanner belt or the 2nd scanner.

1. Turn off the main switch and unplug the power supply cord.
2. Remove the upper cover. (See Upper Cover Removal.)
3. From the 1st Scanner Reinstallation procedure, loosen the two screws in step 1, then do steps 2-5.
4. Attach the short belt to the clamp [A] to connect the two scanners.
5. Move the lens to the rightmost position.
6. Insert two positioning pins [B] in the holes to secure the 1st and 2nd scanners.

   NOTE: To move the scanners, pull the scanner belt. Do not apply force to the scanners directly.
7. Attach the long belt to the the clamp [C] to connect the two scanners.
8. Check the image quality. Perform the Focus Adjustment (see Focus Adjustment., and the Horizontal Magnification Adjustment (see Horizontal Magnification Adjustment) if necessary.

2.5 SCANNER DRIVE MOTOR REMOVAL

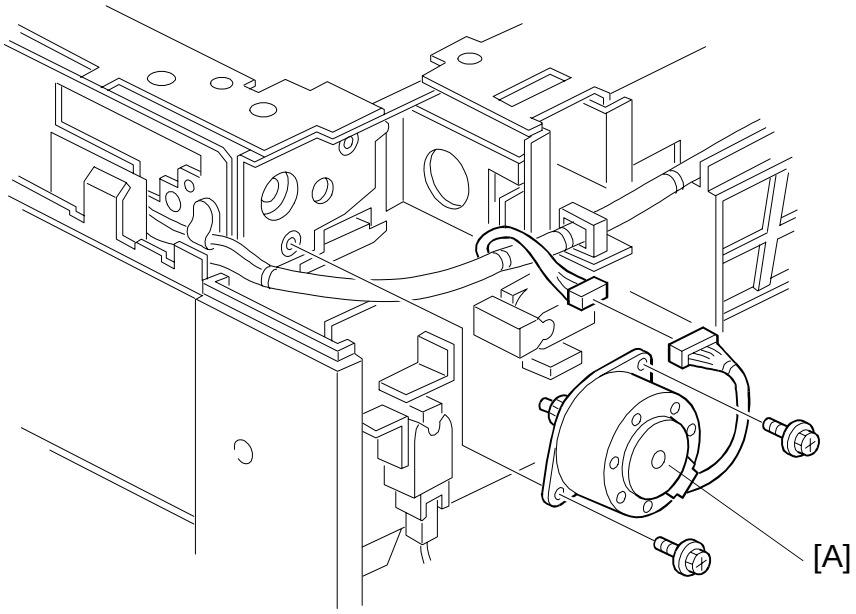

1. Turn off the main switch and unplug the power supply cord.
2. Remove the upper cover. (See Upper Cover Removal.)
3. Remove the motor [A] (2 screws and 1 connector).

2.6 LENS DRIVE MOTOR REMOVAL

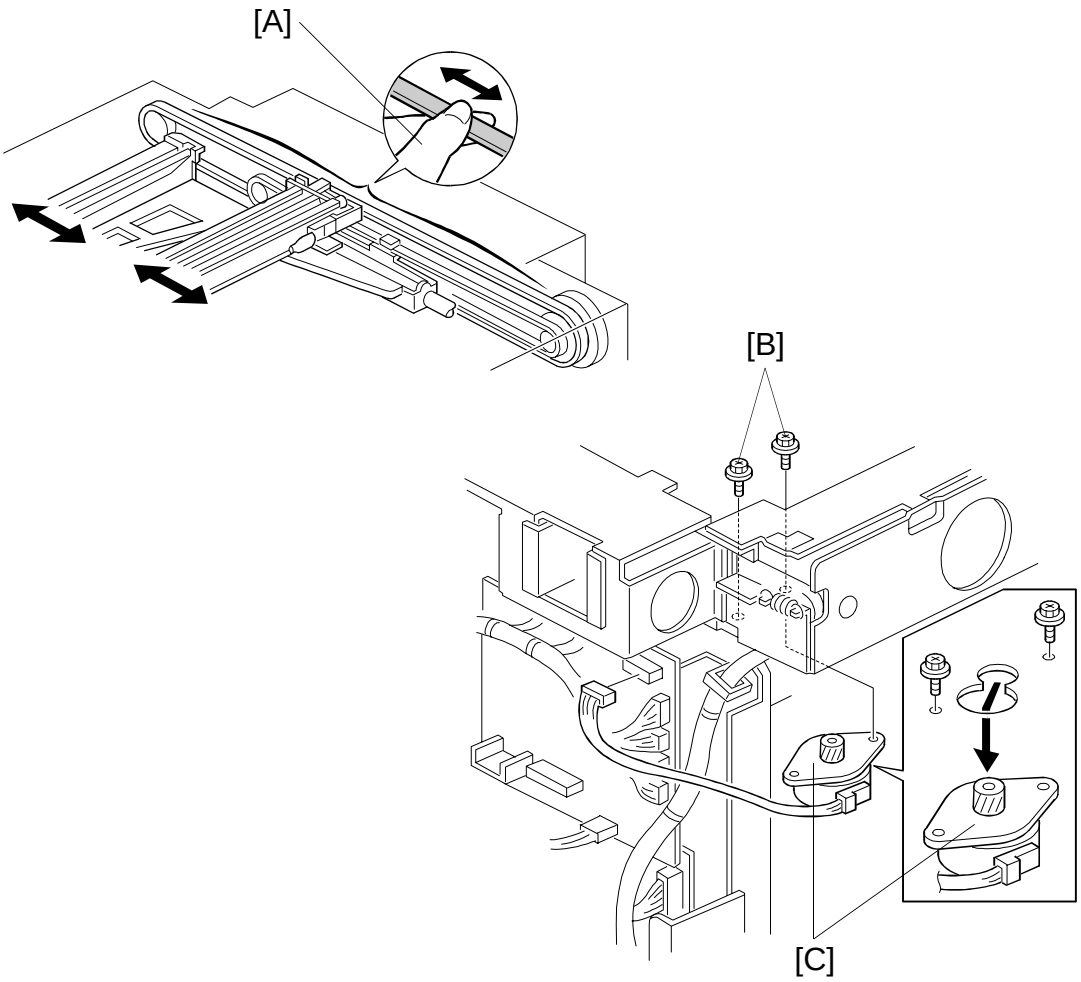

1. Turn off the main switch and unplug the power supply cord.
2. Remove the upper cover. (See Upper Cover Removal.)
3. Remove the lower left cover. (See Lower Left Cover Removal.)
4. Remove the upper left cover. (See Upper Left Cover Removal.)
5. Move the 1st scanner away from the left scale, as shown by [A].

WARNING: To move the 1st scanner, pull the scanner belt. Do not apply force to the scanner directly.

6. Remove the two screws [B].
7. Slide the motor [C] as shown, and remove it (1 connector).

2.7 4TH/5TH MIRROR DRIVE MOTOR REMOVAL

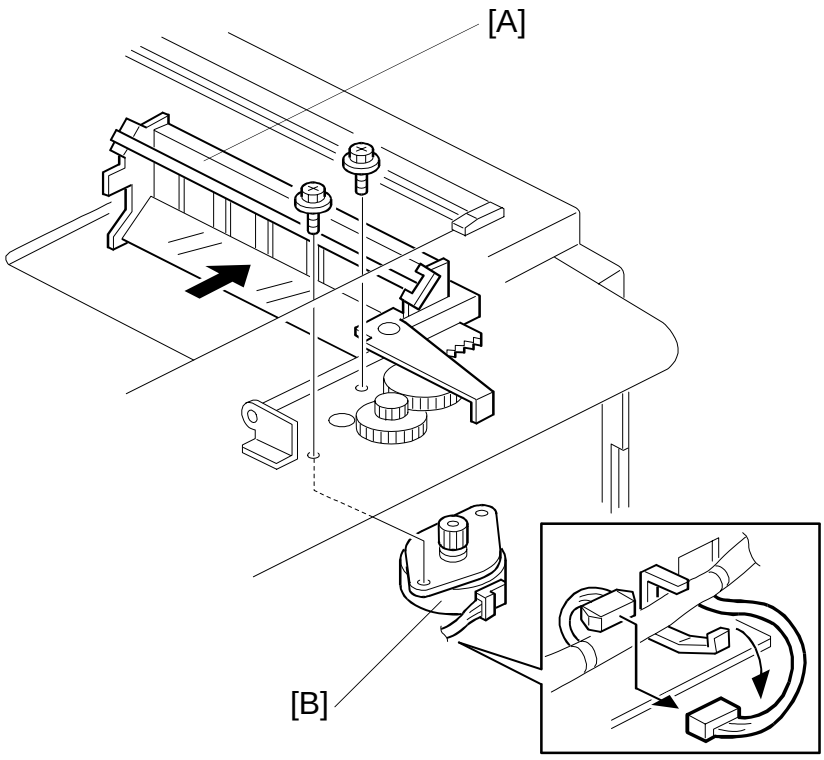

1. Turn off the main switch and unplug the power supply cord.
2. Remove the inner cover. (See Inner Cover Removal.)
3. Remove the toner supply unit.
4. Remove the imaging unit. (See Imaging Unit Removal.)
5. Move the 4th/5th mirror unit [A] to the rightmost position.
6. Remove the motor [B] (2 screws and 1 connector).

2.8 2ND MIRROR REPLACEMENT

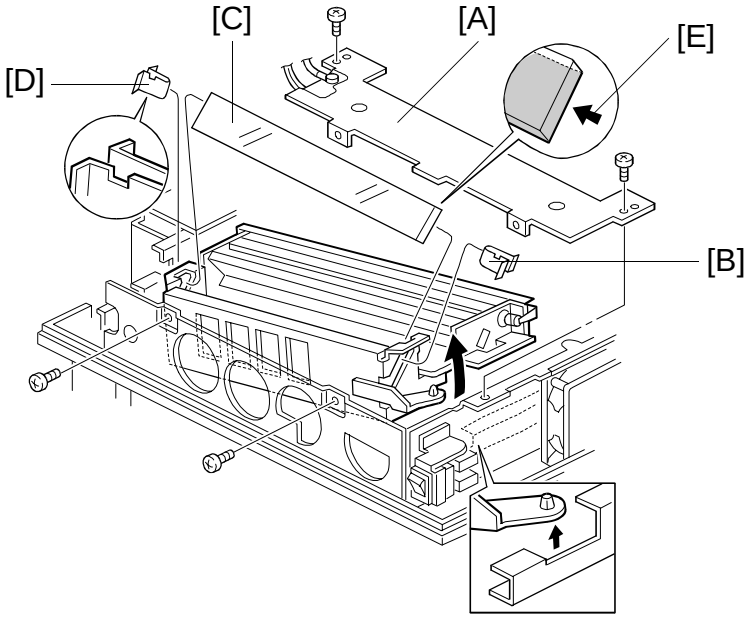

1. Turn off the main switch and unplug the power supply cord.
2. Remove the upper cover. (See Upper Cover Removal.)
3. Move the 1st scanner to home position.

WARNING: To move the 1st scanner, pull the scanner belt. Do not apply force to the scanner directly.

4. Remove the bracket [A] (4 screws).
5. Lift up the 1st scanner to remove the front 2nd mirror spring plate [B].
6. Carefully shift the 2nd mirror [C] toward the front of the machine to remove the rear spring plate [D].
7. Remove the 2nd mirror.
8. Reassemble.

- To reinstall -

1. Place the 2nd mirror in the front and rear side plate cutouts.

   NOTE: Make sure that the reflecting surface [E] faces the lens.

2. Set the rear spring plate in the rear side plate cutout while holding the mirror, then set the front spring plate in the front side plate cutout.

   NOTE: 1) Make sure that the notches in the spring plate are positioned as shown.

   2) Do not touch the reflecting surface with bare hands.

2.9 3RD MIRROR REPLACEMENT

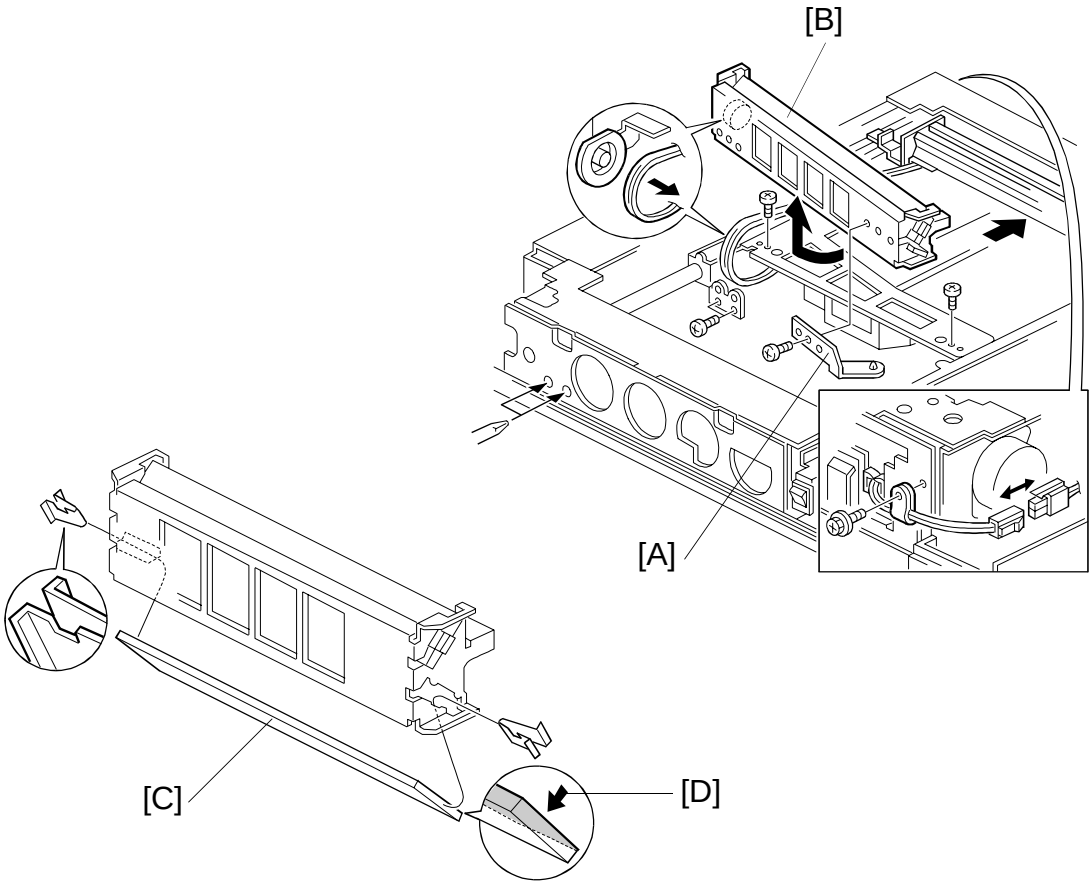

1. Turn off the main switch and unplug the power supply cord.
2. Remove the upper cover. (See Upper Cover Removal.)
3. Move the 1st scanner two thirds of the way from the left scale, as shown.

WARNING: To move the 1st scanner, pull the scanner belt. Do not apply force to the scanner directly.

4. Remove the bracket [A] (1 screw).
5. Remove the 2nd scanner [B], as shown (4 screws, 1 connector).

WARNING: 1) When removing the 2nd scanner, do not bend the bracket.

2) When reinstalling the 2nd scanner, thread the harness around the pulley.

6. Replace the 3rd mirror [C] in the same way as the 2nd mirror.

NOTE: Make sure that the reflecting surface [D] faces the lens.

2.10 4TH AND 5TH MIRROR REPLACEMENT

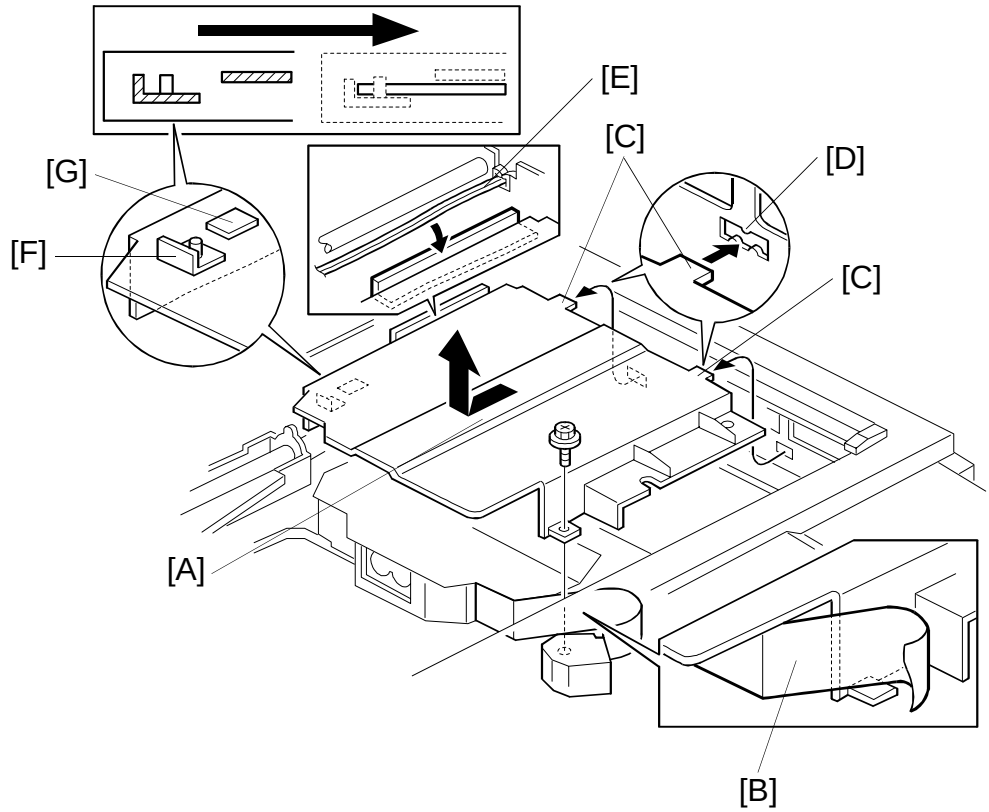

1. Turn off the main switch and unplug the power supply cord.
2. Remove the upper cover. (See Upper Cover Removal.)
3. Remove the lens cover [A].

NOTE: When replacing the lens cover, be sure to:

- Position the light shield [B] so that it is not caught by the cover, as shown.
- Insert the tabs [C] into the slots [D].
- Position the harness [E] alongside the cover, as shown.
- Position the cover pin [F] and tab [G] as shown.

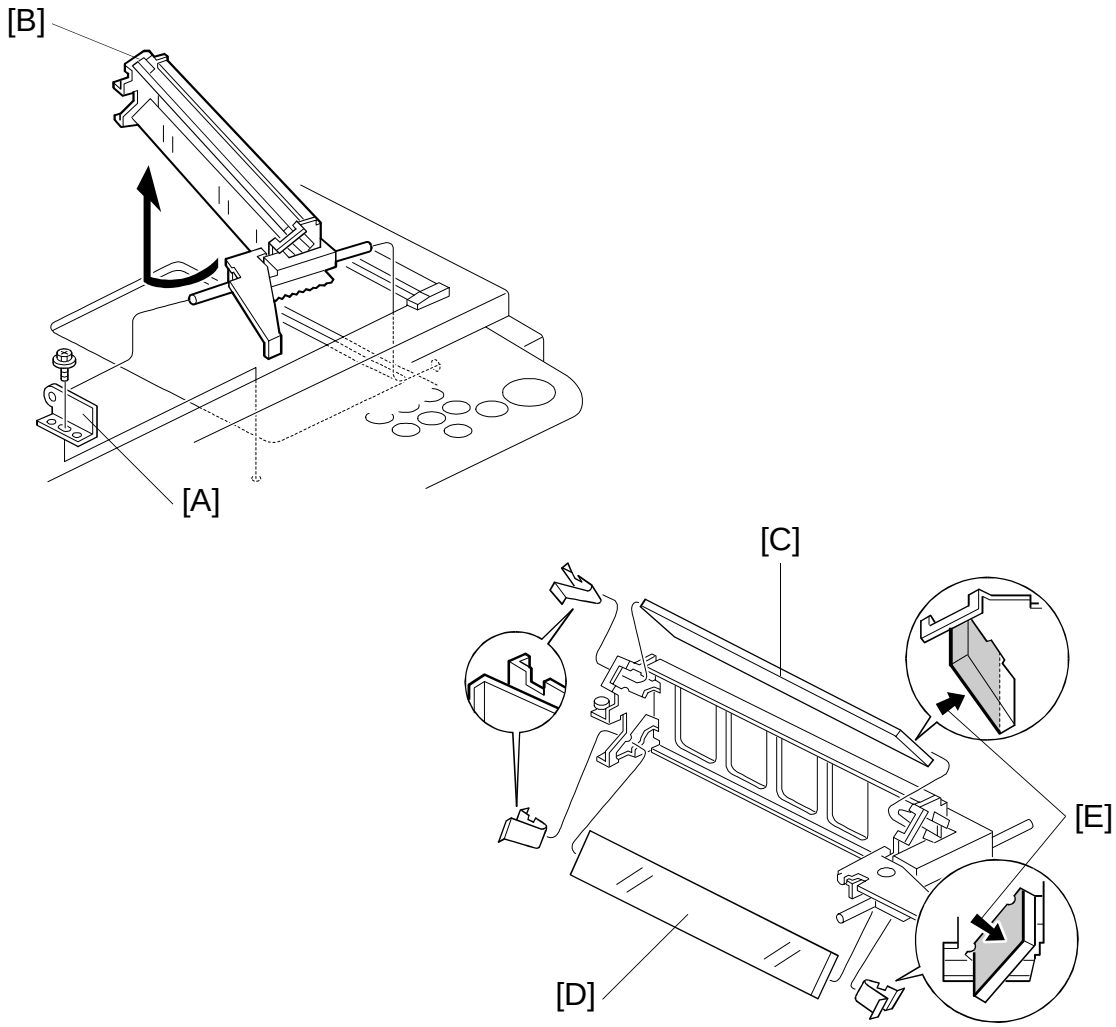

4. Remove the 4th/5th mirror unit.
   1) Remove the bracket [A].
   2) Remove the 4th/5th mirror unit [B], as shown.
5. Replace the 4th and 5th mirrors [C, D] in the same way as the 2nd mirror.
   NOTE: Make sure that the reflecting surface [E] faces the lens.

2.11 ADS SENSOR REPLACEMENT

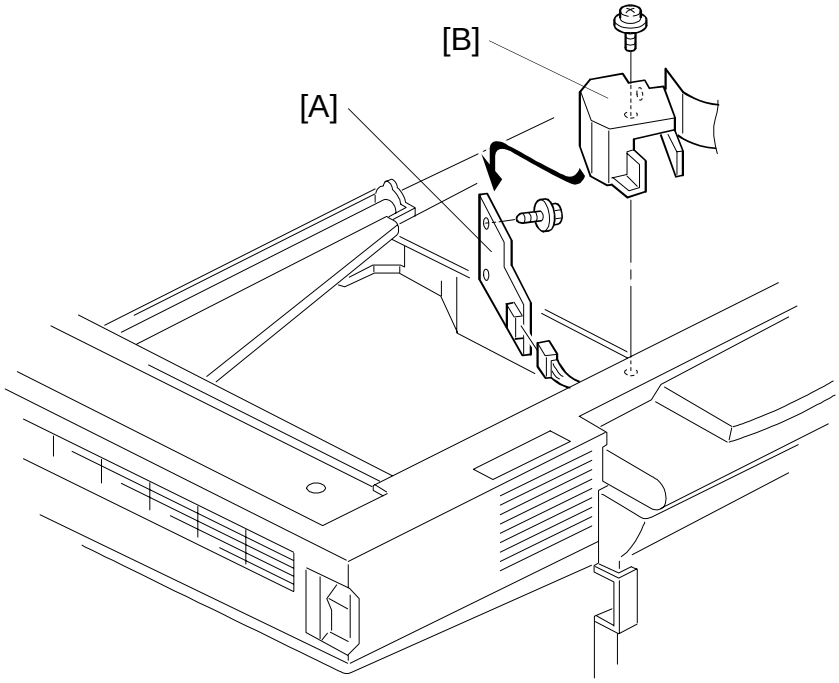

1. Turn off the main switch and unplug the power supply cord.
2. Remove the exposure glass. (See Exposure Lamp Removal.)
3. Remove the ADS sensor [A] and cover [B] as an ass'y (1 screw and 1 connector).
4. Replace the ADS sensor [A] (1 screw).
5. Reassemble.
6. Perform the ADS reference voltage adjustment. (See ADS Adjustment.)

3. AROUND THE DRUM

3.1 IMAGING UNIT REMOVAL AND TONER BOTTLE REMOVAL

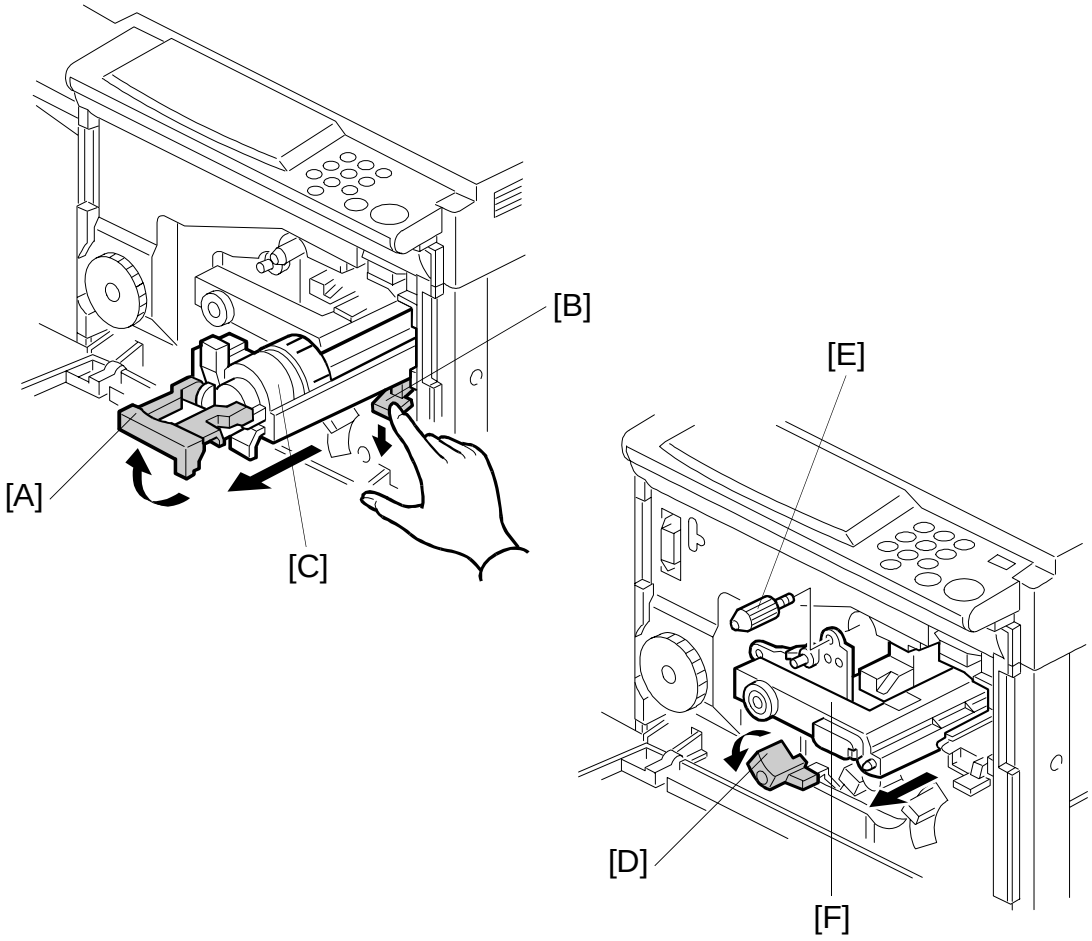

1. Open the front cover.
2. Raise the toner bottle holder lever [A] as shown.
3. Then push down the securing lever [B], and remove the toner bottle holder [C].
4. Turn the "B1" lever [D] counterclockwise to lower the transfer corona unit.
5. Remove the transfer corona unit or cover it with a clean sheet of paper.
6. Remove the knob screw [E] and place a sheet of paper under the imaging unit. Gently pull out the imaging unit [F]. Then place it on a clean sheet of paper.

3.2 CHARGE CORONA WIRE AND CHARGE CORONA GRID REPLACEMENT

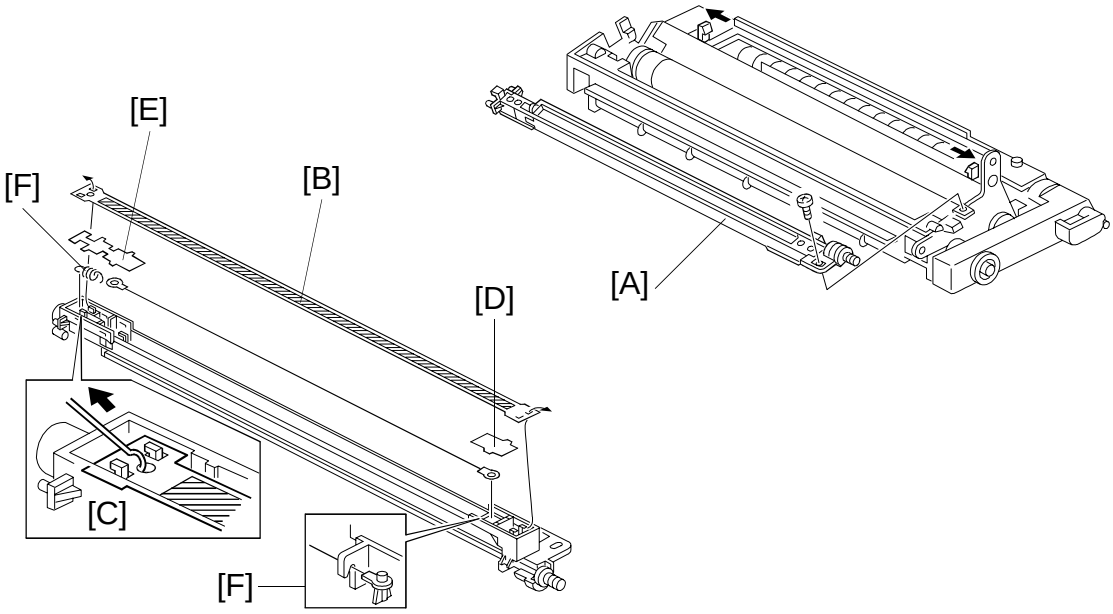

1. Open the front cover.
2. Remove the imaging unit. (See Imaging Unit Removal.)
3. Remove the charge corona unit [A] (1 screw) from the imaging unit.
4. Remove the grid [B] from the charge corona unit, as shown by [C].
5. Remove the front endblock cover [D] and the rear endblock cover [E].
6. Unhook the spring [F] from the corona wire and replace the wire.

NOTE: 1) The new corona wire must be in the groove of the front endblock [F] as shown.

2) Do not handle the new corona wire with bare hands. Oil on the wire may cause uneven charge on the drum.

3) Do not rub the corona wire with rough material (sandpaper, etc.). This will damage the corona wire.

4) Do not use any solvents to clean the wire. This will cause uneven charge on the drum.

5) Do not damage the grid plate when replacing the corona wire.

6) Oils and chemicals from your hands will deteriorate the grid plate.

7) Do not bend the grid plate. This can result in an uneven charging.

3.3 CLEANING BLADE REPLACEMENT

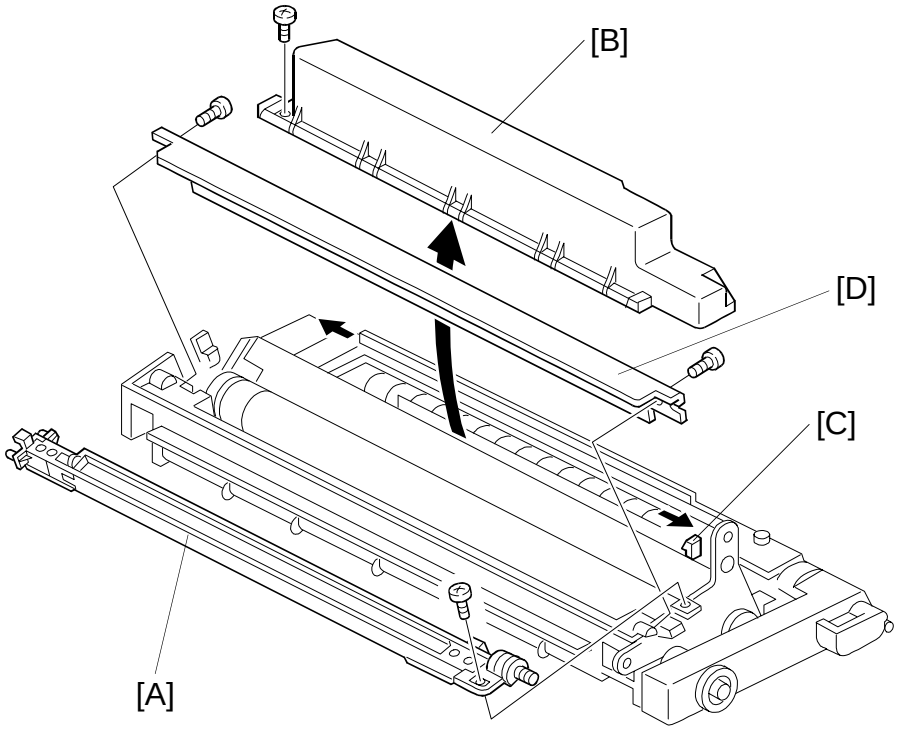

1. Open the front cover.
2. Remove the imaging unit. (See Imaging Unit Removal.)
3. Remove the charge corona unit [A] (1 screw) and development case [B] (1 screw and 1 snap [C]) from the imaging unit.
4. Remove the cleaning blade [D] (2 screws).

NOTE: 1) When removing the cleaning blade, be careful not to scratch the drum surface.

2) When installing a new cleaning blade, apply setting powder to the edge and surface of the cleaning blade.

3.4 DRUM REPLACEMENT

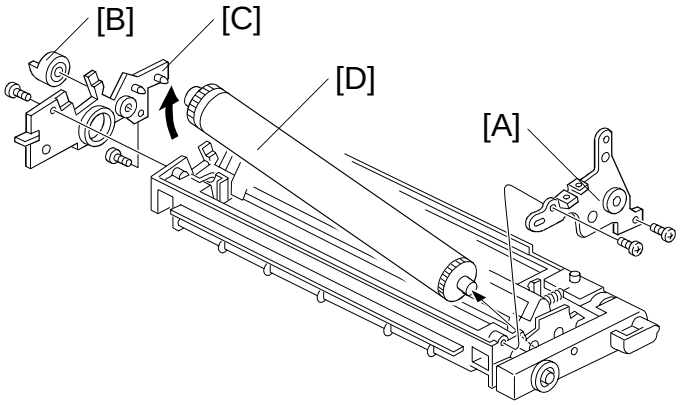

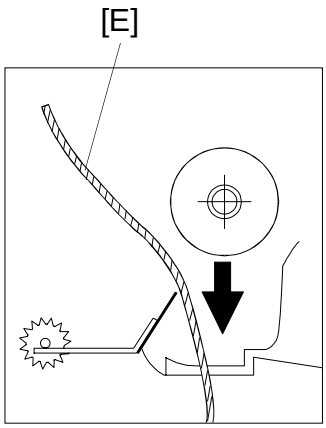

1. Open the front cover.
2. Remove the imaging unit. (See Imaging Unit Removal.)
3. Remove the charge corona unit, cover, and cleaning blade from the imaging unit.
4. Remove the front side plate [A] (2 screws).
5. Remove the outer gear [B] and rear side plate [C] (2 screws).
6. Take the rear edge of the drum [D] and lift it up slightly. Remove the drum.

   NOTE: When removing the drum, take care not to strike it against any objects.
7. Set a sheet of paper [E] in the imaging unit, as shown.
8. Put the new drum in the imaging unit without removing the protective sheet.

   NOTE: When setting the drum, do not bend the entrance seal.
9. Reinstall the outer gear and rear side plate (2 screws).
10. Reinstall the front side plate (2 screws).
11. Remove the protective sheet and apply setting powder evenly on the drum surface.
12. Set the cleaning blade, cover, and charge corona unit in the imaging unit.
13. Reinstall the other units around the imaging unit.
14. Perform SP93.
15. Then clean the optics and make sure that SP33 is at the default. Then do the light intensity adjustment (SP48) and the ADS adjustment (SP56).

3.5 TONER COLLECTION COIL AND TONER RECYCLING BELT REPLACEMENT

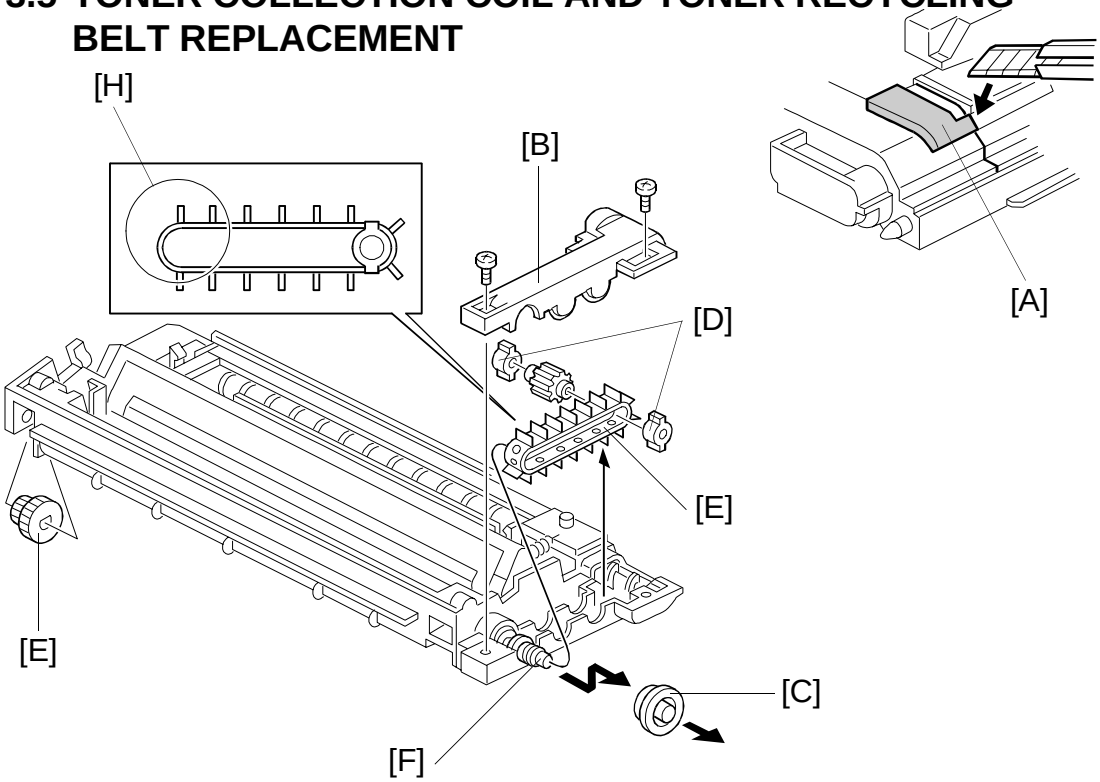

1. Open the front cover.
2. Remove the imaging unit. (See Imaging Unit Removal.)
3. Cut the seal [A] as shown.
4. Remove the toner recycling cover [B] (2 screws).
5. Remove the bearings [C,D].
6. Remove the toner recycling belt [E].
7. Remove the toner collection coil [F].

   NOTE: When removing the toner collection coil, do not lose the rear gear [G].
8. Replace the toner recycling belt and toner collection coil.

   NOTE: When installing a new toner recycling belt, make sure that the belt [H] is properly positioned, as shown.
   When reinstalling the toner recycling cover, make sure that there is no gap between the toner recycle cover and the imaging unit cover.

3.6 DEVELOPER REPLACEMENT

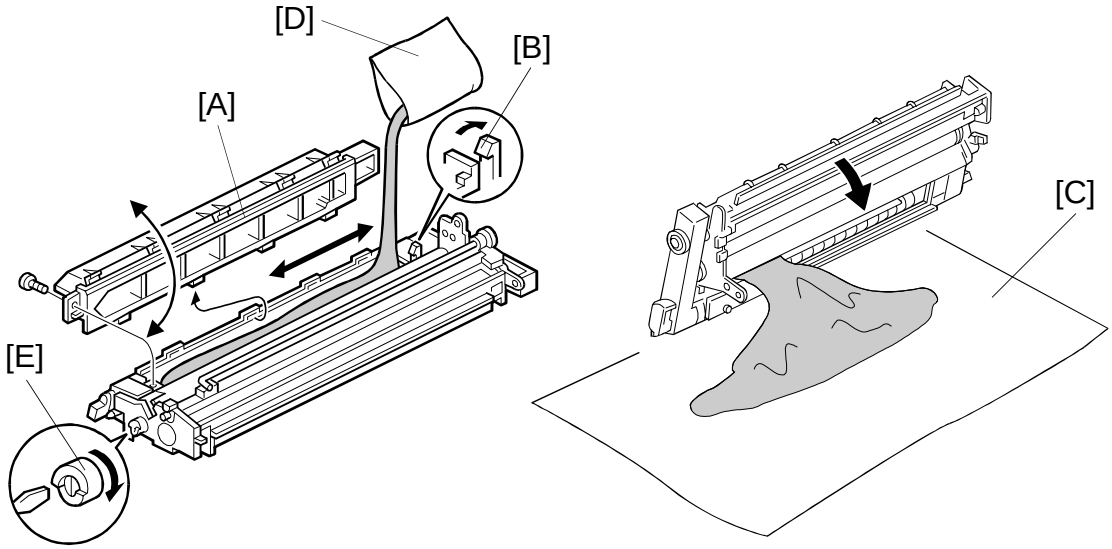

NOTE: When performing the following procedures, make sure that the developer is not spilt in the imaging unit drive gear section.

1. Open the front cover.
2. Remove the imaging unit. (See Imaging Unit Removal.)
3. Set the imaging unit on a large sheet of paper.
4. Remove the development case [A] from the imaging unit (1 screw and 1 snap [B]).
5. Empty all the developer onto the paper [C]. Make sure no developer remains on the development roller or in the unit.

   NOTE: Make sure that no toner remains in the toner recycling belt area and cleaning area of the imaging unit.
6. Pour the developer [D] evenly into the imaging unit. Then rotate the outer gear [E] for one or two turns to distribute the developer, as shown.

   NOTE: When installing new developer or manually rotating the development roller, always make sure to turn the gear in the direction shown above. Also, do not rotate the gear more then 3 turns to prevent damage to the unit.
7. Remount the cover on the imaging unit, and reinstall the unit in the copier (1 knob screw).
8. Perform the initial setting for new developer using SP66.
9. Check the copy quality. Adjust if necessary (see Copy Quality Adjustments).

3.7 REPLACEMENT THE TONER DENSITY SENSOR (TD SENSOR)

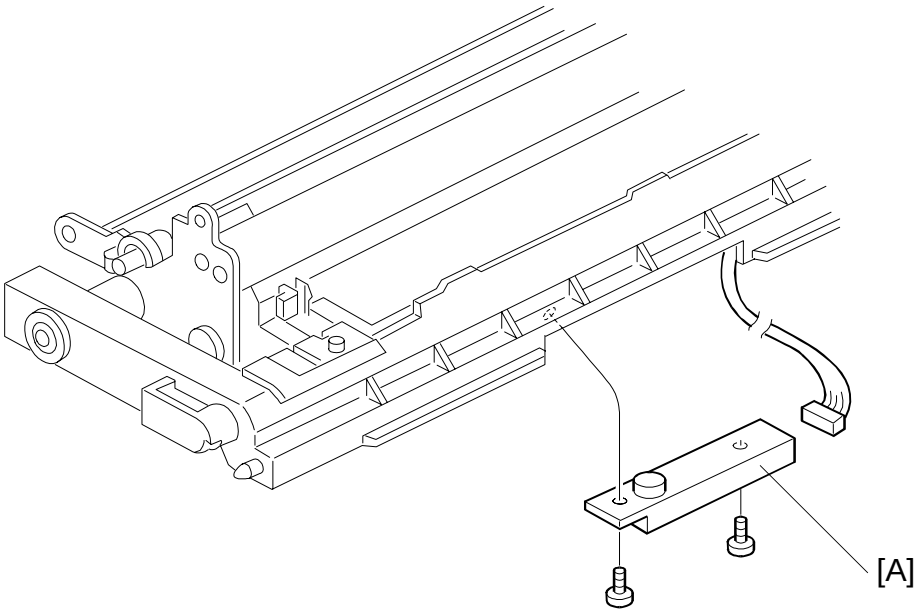

1. Open the front cover.
2. Remove the imaging unit. (See imaging unit Removal.)
3. Empty all the developer on to the paper. (See developer replacement.)
4. Remove the TD sensor [A] (2 screws and 1 connector) from the imaging unit.
5. Replacement the TD sensor.
6. Pour in the new developer evenly into the imaging unit. (See developer replacement.)
7. Reinstall the imaging unit (1 knob screw).
8. Perform SP66.

3.8 AGITATOR REPLACEMENT

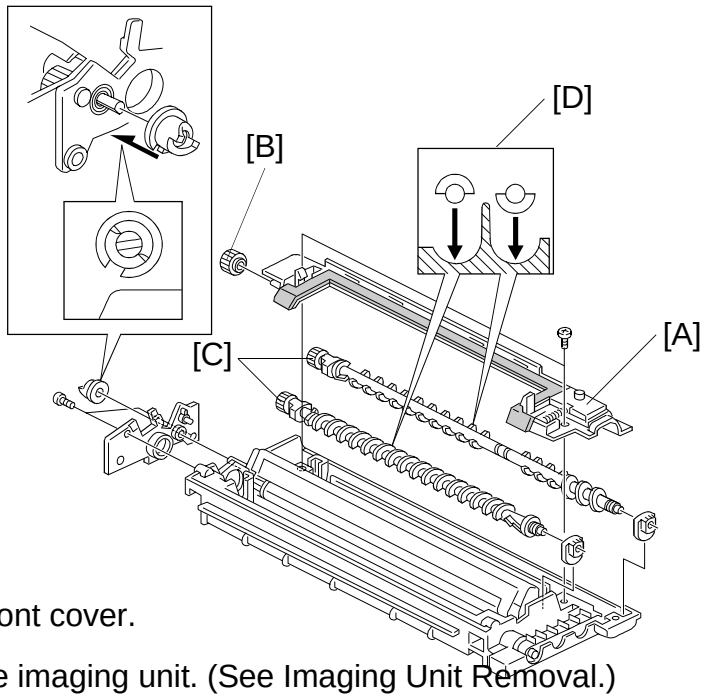

1. Open the front cover.
2. Remove the imaging unit. (See Imaging Unit Removal.)
3. Set the imaging unit on a large sheet of paper.
4. Remove the charge corona unit from the imaging unit. (See the charge corona unit removal procedures.)
5. Empty all the developer onto the paper, making sure that no developer remains on the development roller or in the unit.
6. Remove the cleaning blade and drum from the imaging unit. (See cleaning blade, and drum removal procedures.)
7. Remove the toner recycling cover from the imaging unit. (See Toner Recycling Belt Removal.)
8. Remove the upper case [A] (2 screws) from the imaging unit.

   NOTE: When removing the upper case, do not lose the idle gear [B].
9. Remove and replace the agitators [C].

   NOTE: 1) Make sure that agitators are positioned correctly, as shown [D].

   2) When installing the new agitator, install a new bearing or apply CPL501 evenly onto the old bearing.

3.9 TONER SUPPLY MOTOR ASS'Y REPLACEMENT

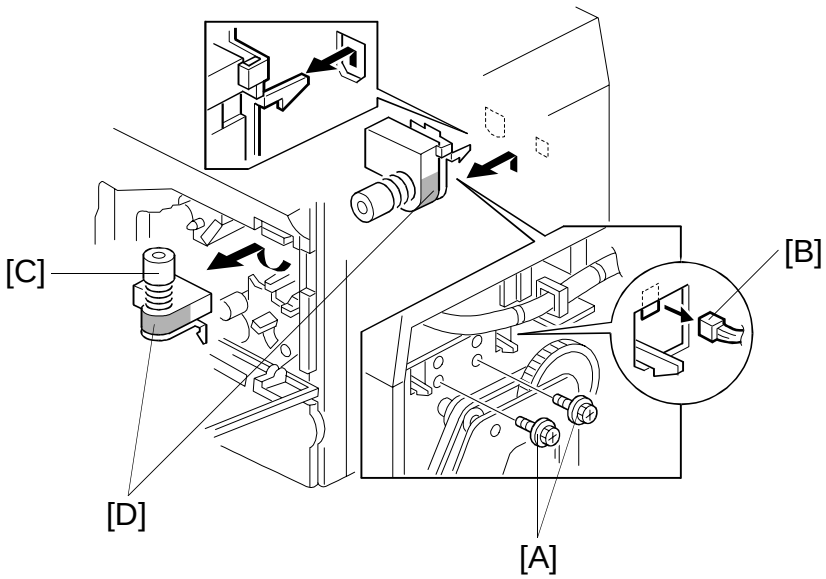

NOTE: 1) Do not manually rotate the new toner supply motor. Doing so may cause damage to the motor.

2) Make sure not to touch the 6th mirror when performing this procedure.

1. Open the front cover.
2. Remove the imaging unit. (See Imaging Unit Removal.)
3. Remove the screw securing the erase lamp unit. Hang the erase lamp unit freely inside the copier.
4. Remove the rear cover. (See Rear Cover Removal.)
5. Remove the high voltage supply board (4 screws and 6 connectors).
6. Remove the 2 screws [A] and 1 connector [B] from the rear.
7. Remove the toner supply motor ass'y [C].
8. Replace the toner supply motor ass'y.

NOTE: When reinstalling the toner supply motor ass'y, make sure of the followings:

1) First connect the hooks to the holes on the front side of the rear frame. Then replace the screws and connectors from the rear of the copier.

2) Install the motor seal [D] to the new toner supply motor. If the seal can not be pealed off and placed on the new motor, a new seal should be ordered.

3.10 ERASE LAMP REPLACEMENT

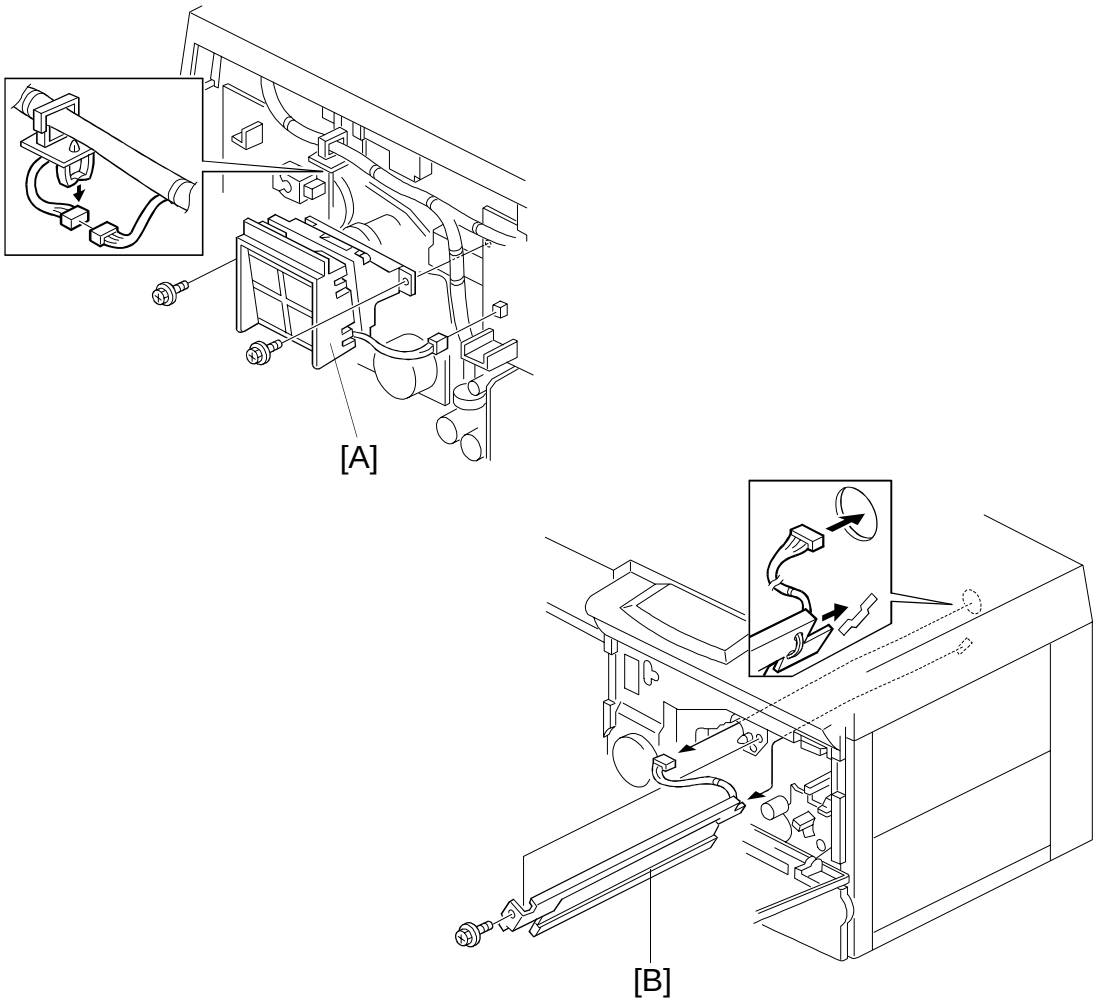

1. Open the front cover.
2. Remove the imaging unit. (See Imaging Unit Removal.)
3. Open the rear cover. (See Rear Cover Removal.)
4. Remove the high voltage supply board (4 screws and 6 connectors).
5. Remove the optics cooling fan motor [A] (2 screws and 1 connector).
6. Remove the erase lamp [B] (1 screw and 1 connector) from the front of the copier as shown.

3.11 QUENCHING LAMP REPLACEMENT

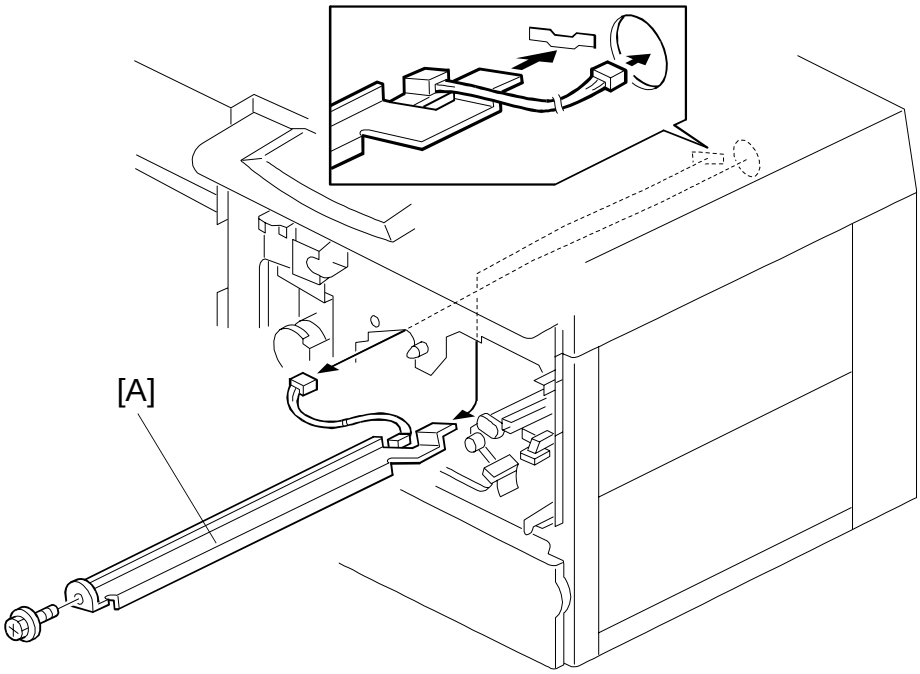

1. Open the front cover.
2. Remove the imaging unit. (See Imaging Unit Removal.)
3. Open the rear cover. (See Rear Cover Removal.)
4. Remove the erase lamp. (See Erase Lamp Replacement.)
5. Remove the inner cover. (See Inner Cover Removal.)
6. Remove the quenching lamp [A] (1 screw and 1 connector) from the front of the copier.

4. PAPER FEED

4.1 PAPER TRAY REMOVAL

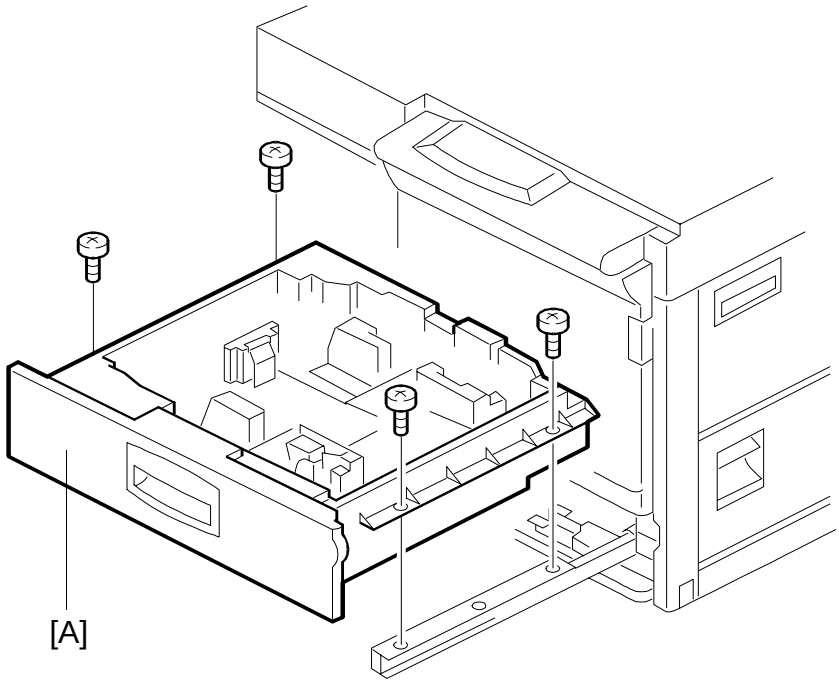

1. Pull the paper tray out.
2. Remove the paper tray [A] (4 screws).

4.2 TRAY FEED ROLLER REPLACEMENT

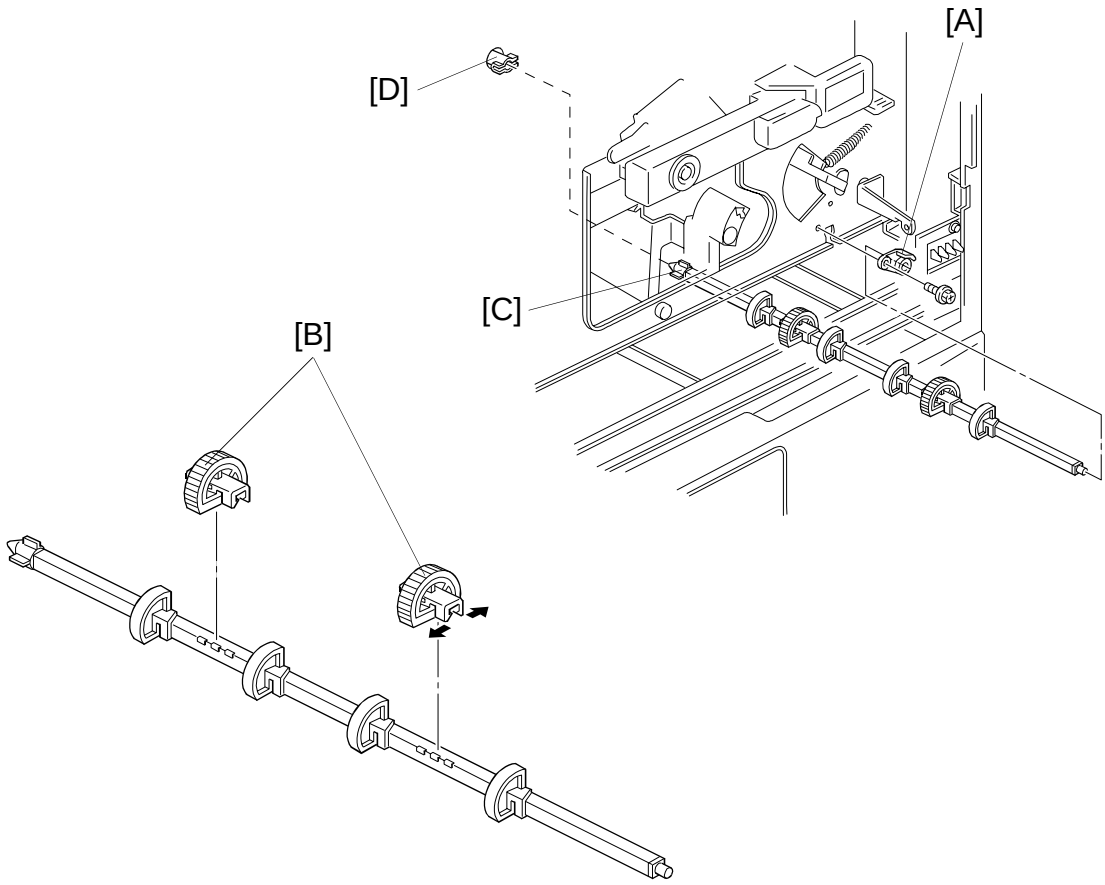

1. Turn off the main switch.
2. Remove the paper tray. (See Paper Tray Removal.)
3. Remove the front cover. (See Front Cover Removal.)
4. Remove the inner cover. (See Inner Cover Removal.)
5. Remove the bracket [A] and shaft (1 screw).
6. Replace the two feed rollers [B] on the shaft.

NOTE: When reinstalling the feed roller assembly, make sure of the following:

1) Do not touch the feed rollers with bare hands.
2) Reinstall the feed rollers face up as shown.
3) Ensure that the pin [C] on the end of the feed roller shaft fits into the slot [D] on the end of the drive shaft.

4.3 TRAY PAPER FEED ROLLER ADJUSTMENT

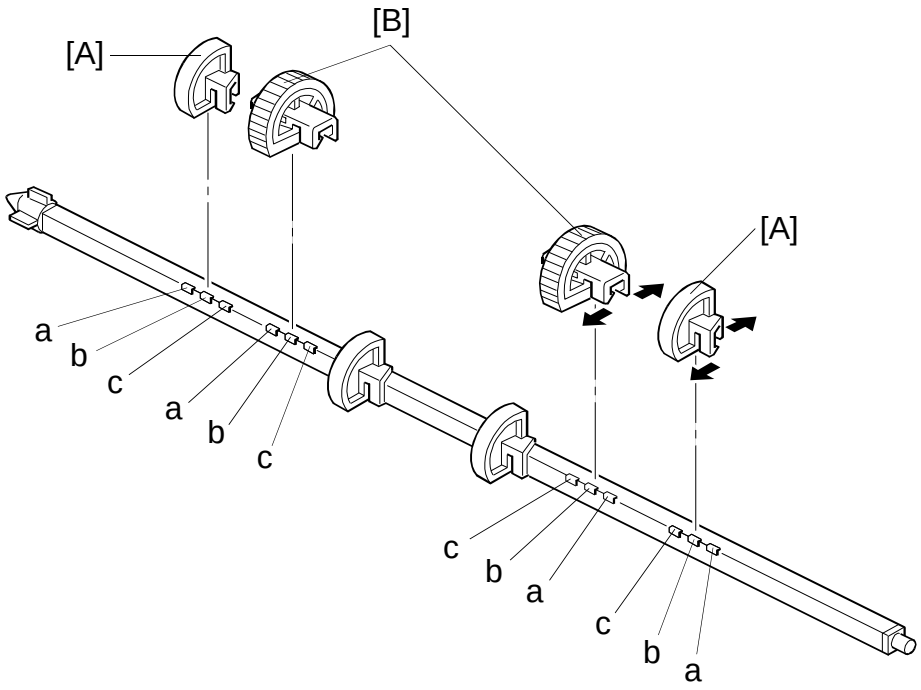

NOTE: Perform this adjustment if the customer uses **only** either A size (A3, A4, or A5) or B size (B4 or B5) paper in the paper tray.

1. Remove the tray paper feed roller. (See Tray Feed Roller Replacement.)
2. For A sizes move the feed rollers [A, B] to position "a."
3. For B sizes move the feed rollers [A, B] to position "c."

NOTE: 1) Position "b" is the default setting.

2) In North America, if the customer **never** uses executive size paper in the paper tray, set the feed rollers to position "a".

4.4 BY-PASS FEED ROLLER AND FRICTION PAD REPLACEMENT

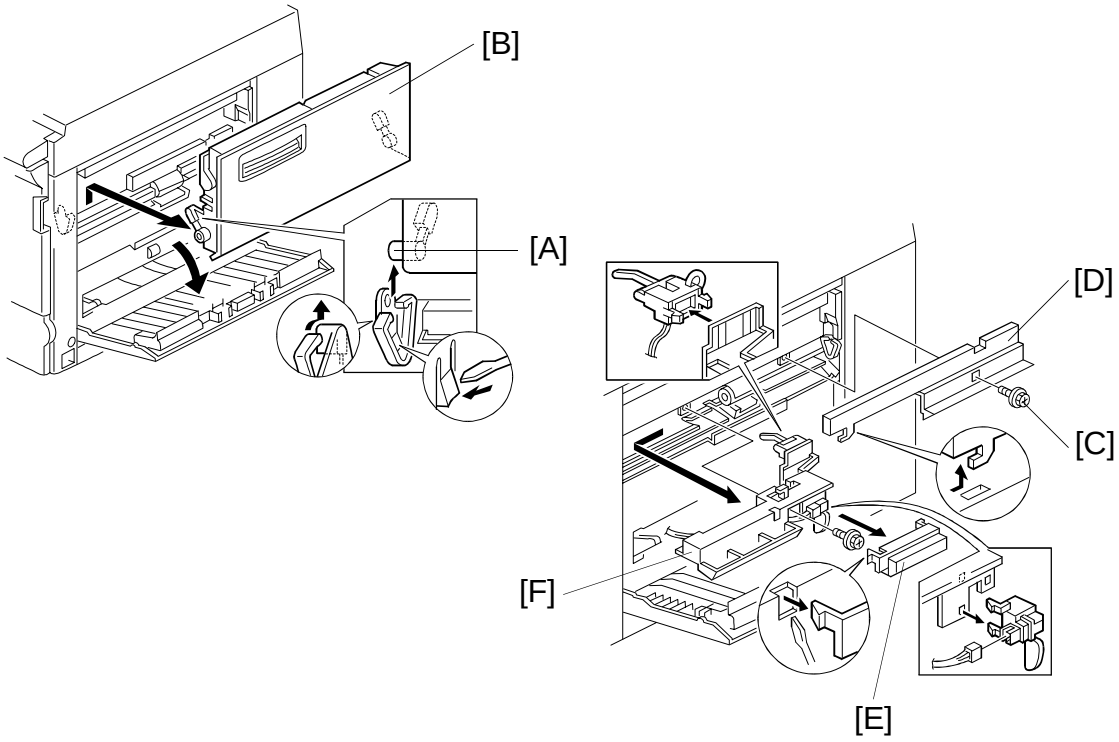

1. Turn off the main switch and unplug the power supply cord.
2. Remove the by-pass feed table.
   1) Open the by-pass feed table.
   2) Slide out the left shaft [A] and the right shaft of the by-pass feed table, as shown.
   3) Remove the by-pass feed table [B].
3. Remove the screw [C].
4. Slide the feed roller shaft cover [D] to the right, and remove it (1 screw).
5. Remove the paper end sensor cover [E] (1 tab).
6. Remove the sensor ass'y [F] (1 screw and 2 connectors).

NOTE: 1) Be careful not to damage the feeler when removing the sensor ass'y.
2) When reinstalling the ass'y, ensure that the harness is not caught on the upper guide.

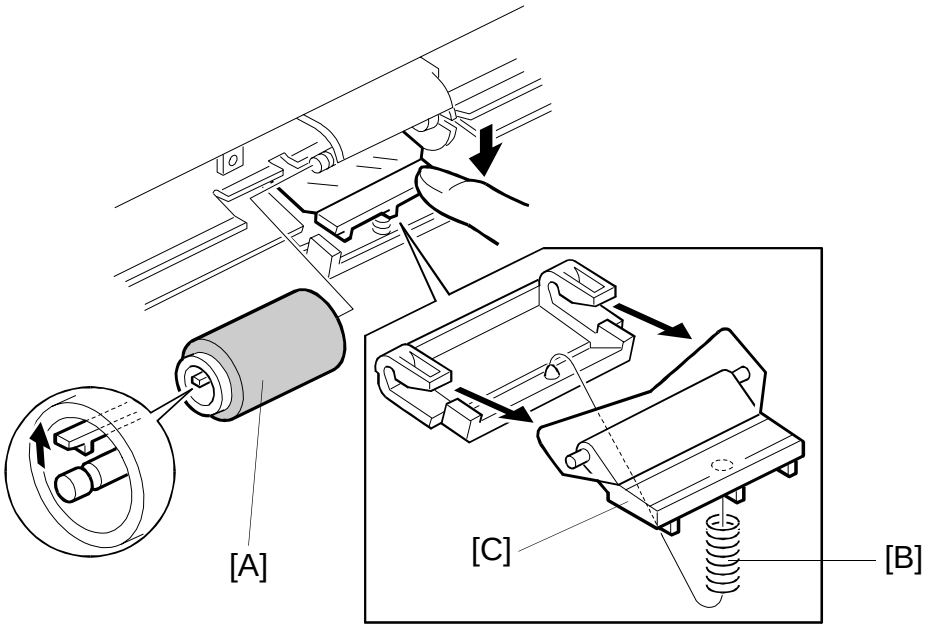

7. Remove the by-pass feed roller [A], as shown.
8. Remove the spring [B].
9. Push the friction pad [C] down and then pull it out.
   NOTE: Don't touch the feed roller with bare hands.

- To reinstall -

1. Reinstall the friction pad, the spring, and the by-pass feed roller.
2. Reinstall the sensor ass'y.
   NOTE: 1) Handle the registration sensor with care.
   2) Be sure to reconnect the harnesses.
3. Reinstall the paper end cover.
4. Reinstall the by-pass feed table.

4.5 BY-PASS PAPER FEED CLUTCH, HIGH VOLTAGE SUPPLY BOARD, AND REGISTRATION CLUTCH REPLACEMENT

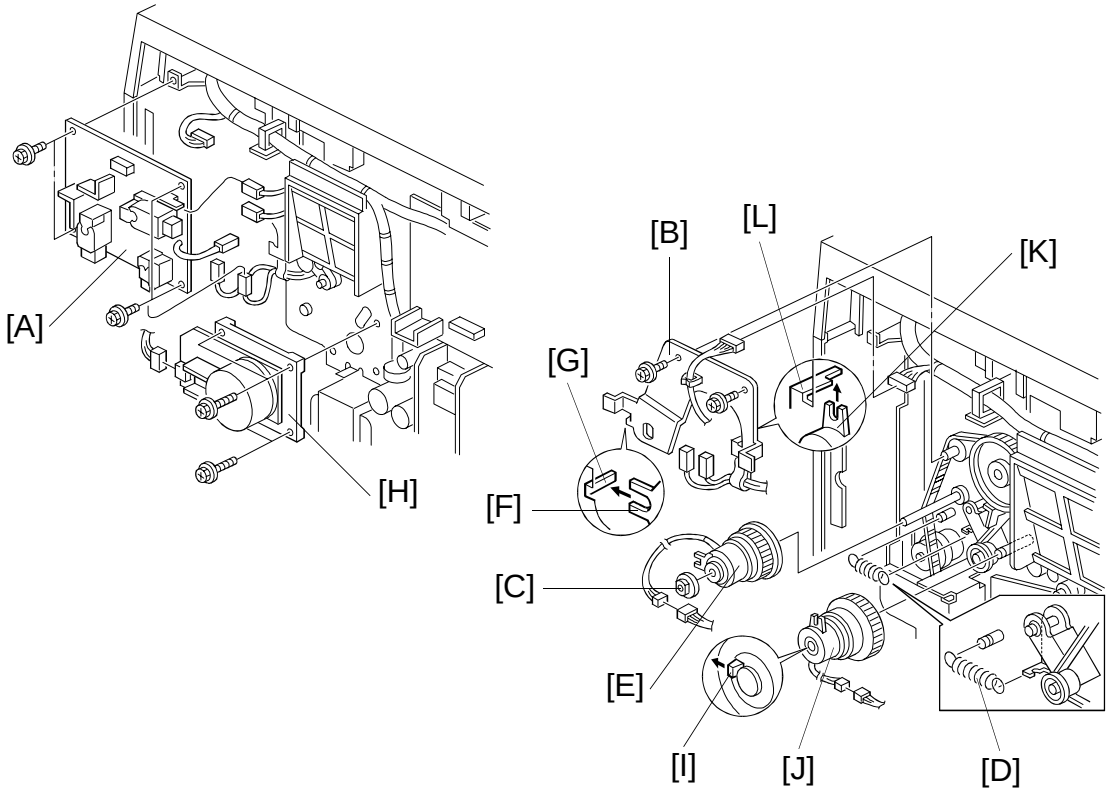

1. Turn off the main switch and unplug the power supply cord.
2. Remove the rear cover. (See Rear Cover Removal.)
3. Remove the high voltage supply board [A] (4 screws and 6 connectors).
4. Remove the bracket [B] (3 screws).
5. Remove the bearing [C].
6. Remove the spring [D].
7. Replace the by-pass paper feed clutch [E].

   NOTE: When reinstalling a new clutch, engage the notch [F] with the stopper [G], as shown.
8. Remove the main motor [H] (4 screws and 1 connector).
9. While pulling back the hook [I], remove the registration clutch [J].

   NOTE: When reinstalling a new clutch, engage the notch [K] with the stopper [L].

4.6 RIGHT VERTICAL GUIDE SWITCH REPLACEMENT

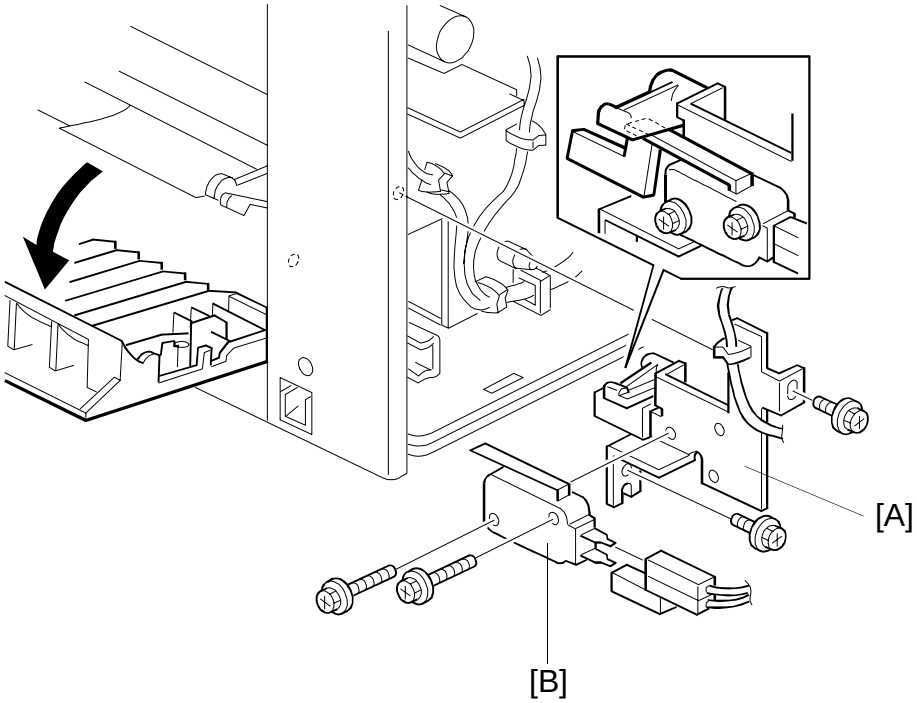

1. Turn off the main switch and unplug the power supply cord.
2. Remove the rear cover. (See Rear Cover Removal.)
3. Remove the switch bracket [A] (2 screws and 1 connector).
4. Replace the switch [B] (2 screws).

4.7 RELAY ROLLER CLUTCH AND PAPER FEED CLUTCH REPLACEMENT

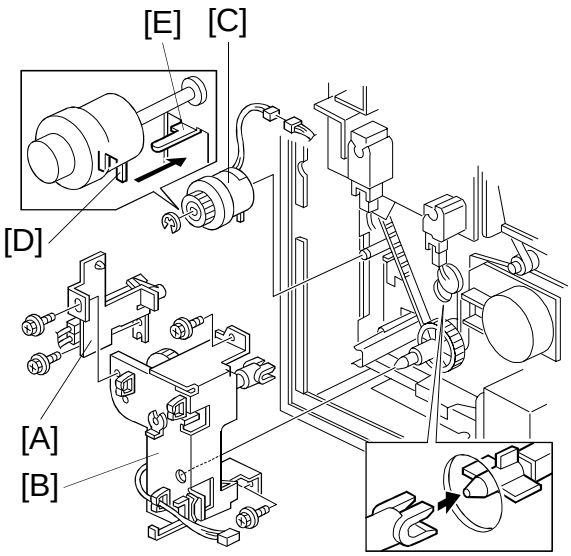

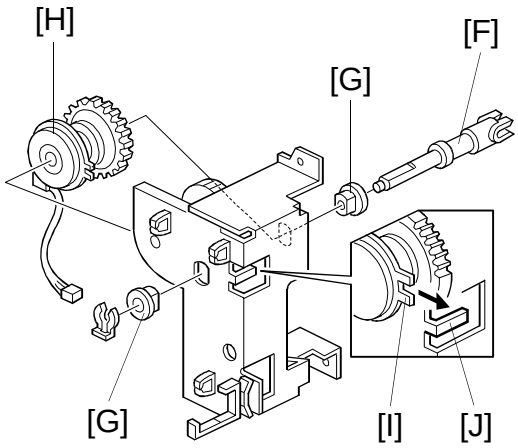

1. Turn off the main switch and unplug the power supply plug.
2. Remove the rear cover. (See Rear Cover Removal.)
3. Remove the switch bracket [A] (2 screws and 1 connector).
4. Remove the paper feed clutch ass'y [B] (2 screws).
5. Replace the relay roller clutch [C] (1 E-ring and 1 connector).

   NOTE: When reinstalling a new clutch, engage the notch [D] with the stopper [E].
6. Remove the paper feed shaft [F] and the bearings [G] (1 snap ring).
7. Replace the paper feed clutch [H].

   NOTE: When reinstalling a new clutch, engage the notch [I] with the stopper [J].

4.8 PAPER SIZE SWITCH REPLACEMENT

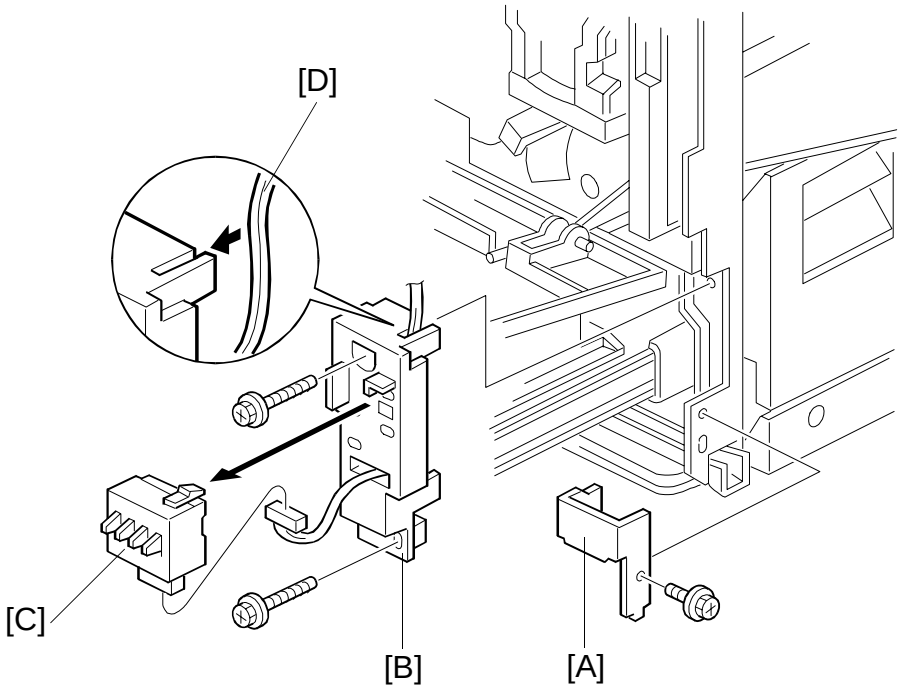

1. Turn off the main switch and unplug the power supply cord.
2. Remove the front right cover. (See Front Right Cover Removal.)
3. Remove the size switch bracket [A] (1 screw).
4. Remove the size switch ass'y [B] (2 screws and 1 connector).
5. Remove the size switch [C] (2 tabs).

NOTE: When reinstalling the size switch ass'y [B], make sure that the harness [D] is inserted into the slot, as shown.

4.9 BY-PASS PAPER END SENSOR AND REGISTRATION SENSOR REPLACEMENT

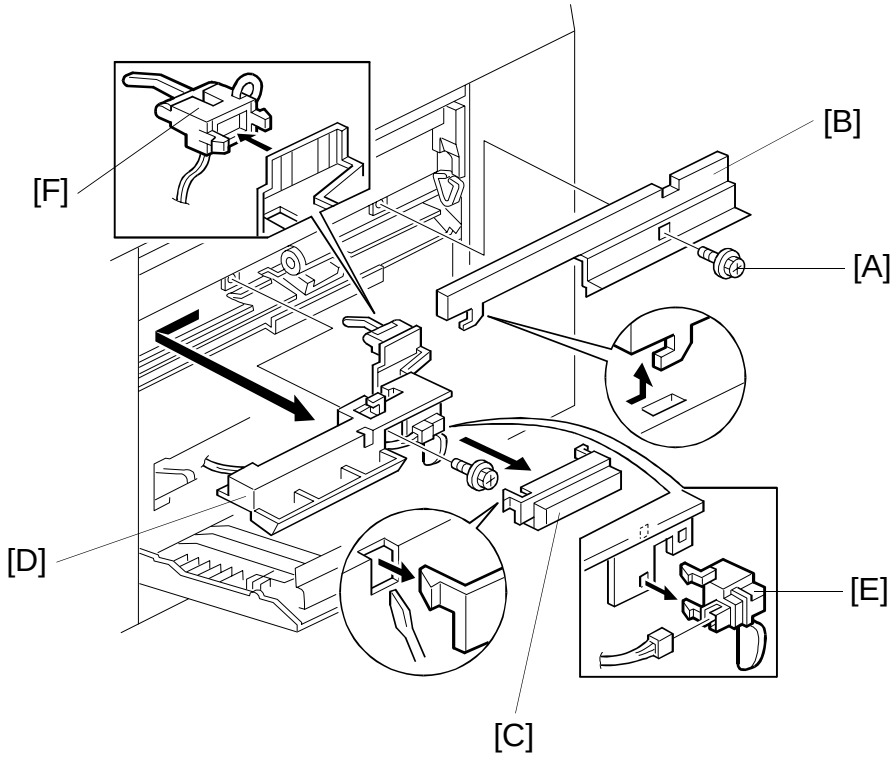

1. Turn off the main switch and unplug the power supply cord.
2. Remove the by-pass feed table. (See step 2 of By-pass Feed Roller and Friction Pad Replacement.)
3. Remove the screw [A].
4. Slide the feed roller shaft cover [B] to the right, and remove it (1 screw).
5. Remove the paper end sensor cover [C] (1 tab).
6. Remove the sensor ass'y [D] (1 screw and 2 connectors).
7. Replace the by-pass paper end sensor [E] and the registration sensor [F].

NOTE: 1) Take care not to damage the feeler when removing the sensor ass'y.

2) When reinstalling the ass'y, be careful not to get the harness caught on the upper guide.

5. FUSING

5.1 FUSING UNIT REMOVAL

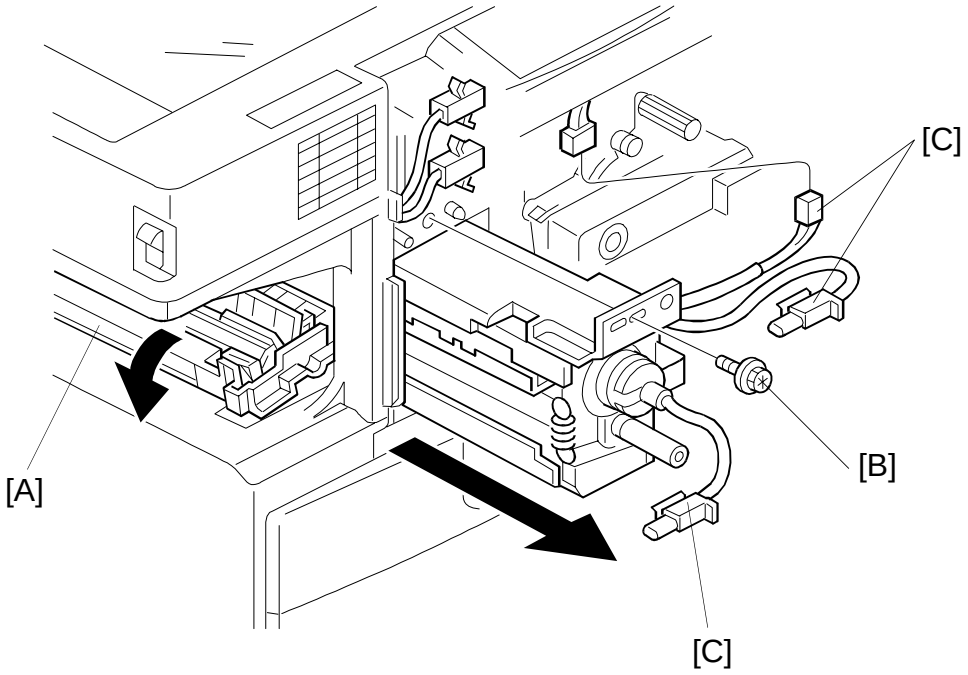

1. Make sure that main switch is turned off and the power supply cord is unplugged.
2. Open the front cover.
3. Remove the inner cover. (See Inner Cover Removal.)
4. Open the exit unit [A].
5. Remove the fusing unit (1 screw [B] and 3 connectors [C]).

5.2 HOT ROLLER REPLACEMENT

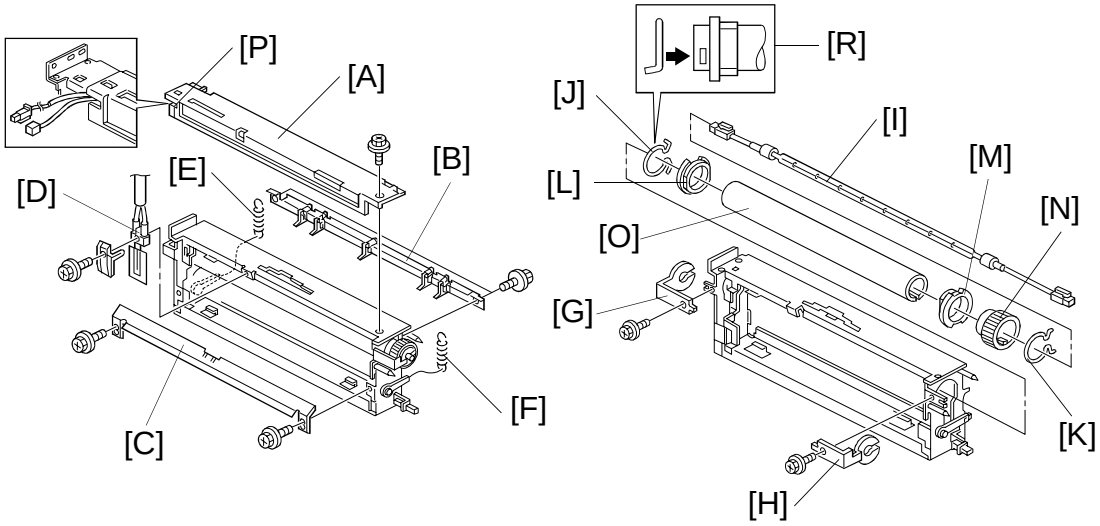

1. Take out the fusing unit and remove the upper cover [A] from the fusing unit.
2. Remove the hot roller stripper bracket [B] (2 screws).

   NOTE: When reinstalling the stripper bracket, be careful not to scratch the hot roller surface.
3. Remove the fusing entrance guide [C] (2 screws).
4. Remove the fusing thermistor [D] (1 screw).
5. Remove the front [E] and rear [F] pressure springs.
6. Remove the front [G] and rear [H] brackets (1 screw each), and the fusing lamp [I].
7. Remove the front C-ring [J] and rear C-ring [K], bearings [L] and [M], and gear [N]. Then replace the hot roller [O].

NOTE: 1) When reinstalling the thermistor, make sure that harness is positioned correctly [P] as shown.

2) The shape of the front C-ring is different from the rear C-ring. The ends of the front C-ring [J] are bent, as shown.

3) When replacing the hot roller, clean the bearing. Then apply BARRIERTA JFE55/2 evenly on the bearing.

4) When reinstalling the fusing lamp, do not forget the red connector at the rear side.

5) Do not touch the hot roller surface with bare hands.

6) When reinstalling the fusing entrance guide, make sure that the entrance guide adjustment screws are positioned correctly.

5.3 PRESSURE ROLLER REPLACEMENT

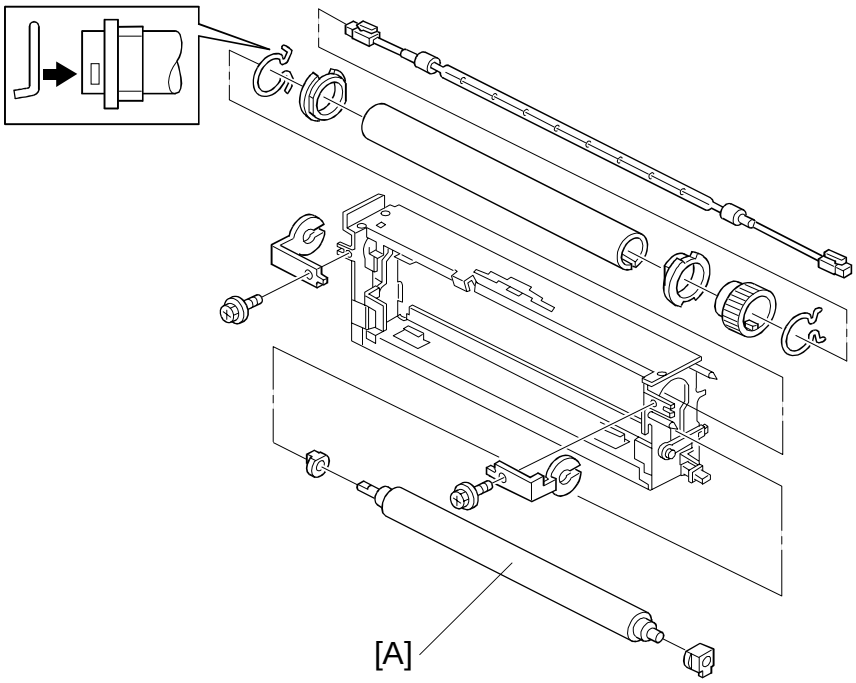

1. Remove the hot roller. (See Hot Roller Replacement.)
2. Remove the pressure roller [A].

5.4 HOT ROLLER STRIPPER REPLACEMENT

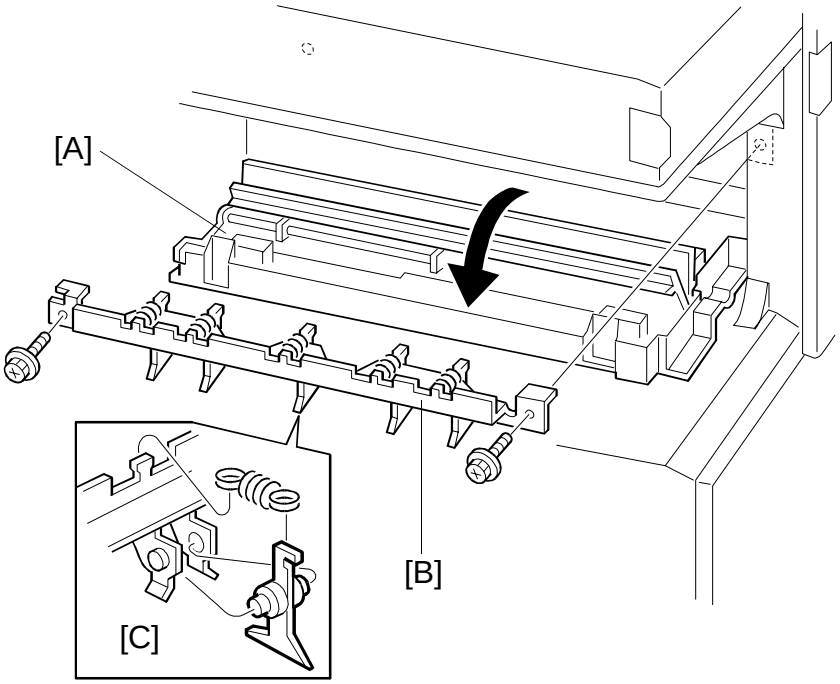

1. Open the exit unit [A].
2. Remove the bracket [B] (2 screws).
3. Replace the hot roller strippers [C] (1 spring each).

5.5 FUSING ENTRANCE GUIDE ADJUSTMENT

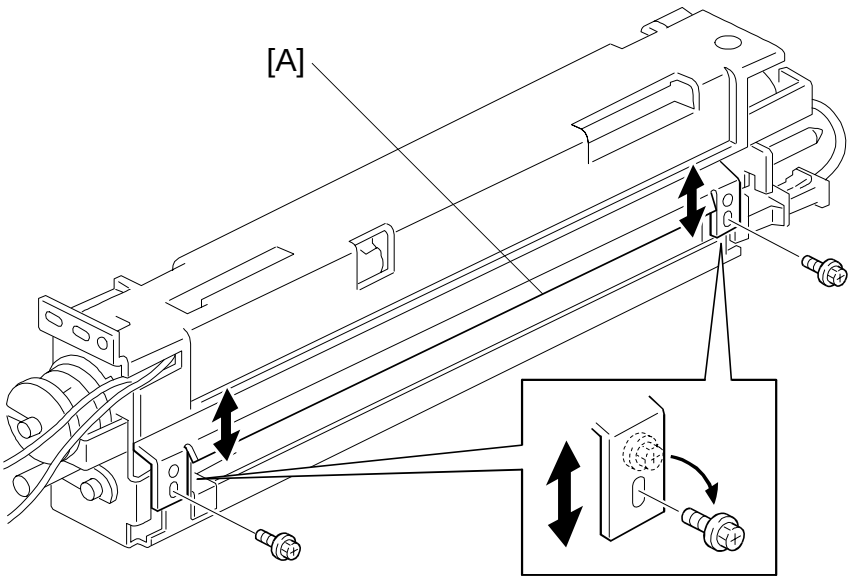

If there is paper creasing after fusing, move the guide plate [A] to the upper position as shown.

5.6 FUSING PRESSURE ADJUSTMENT

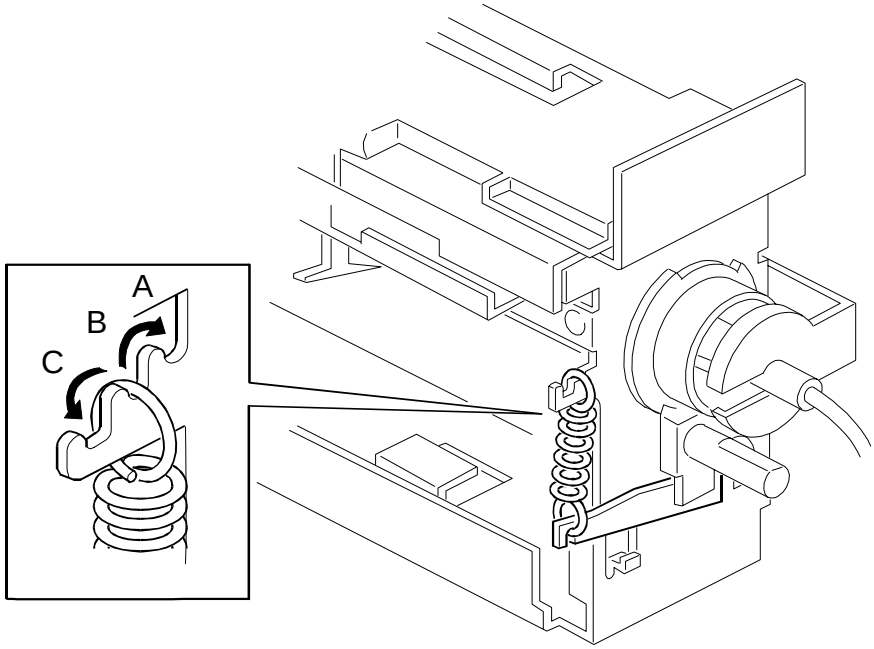

- Fusing pressure adjustment combinations -

Combination	Pressure Level
A	Stronger
B	Factory Setting
C	Weaker

The fusing pressure can be set at three different levels. Adjust the pressure spring position to [A] if poor fusing occurs or to [C] if copy paper becomes creased. For removal and installation, see the pressure roller replacement section.

NOTE: Make sure that the front and rear springs are similarly positioned.

6. TRANSFER/SEPARATION

6.1 TRANSFER CORONA WIRE REPLACEMENT

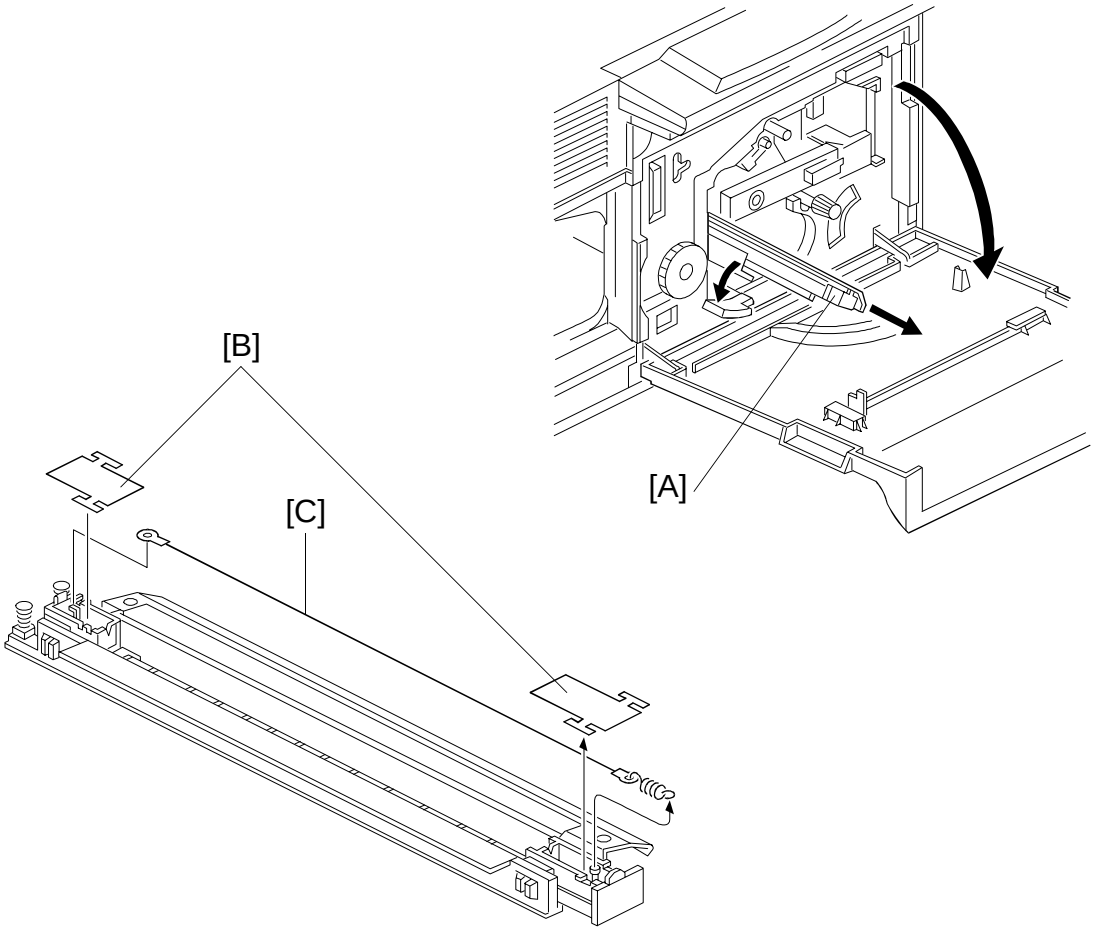

1. Turn off the main switch.
2. Open the front cover.
3. Remove the transfer corona unit [A].
4. Remove the 2 sheets of mylar [B].
5. Replace the transfer corona wire [C].

6.2 DISCHARGE PLATE REPLACEMENT

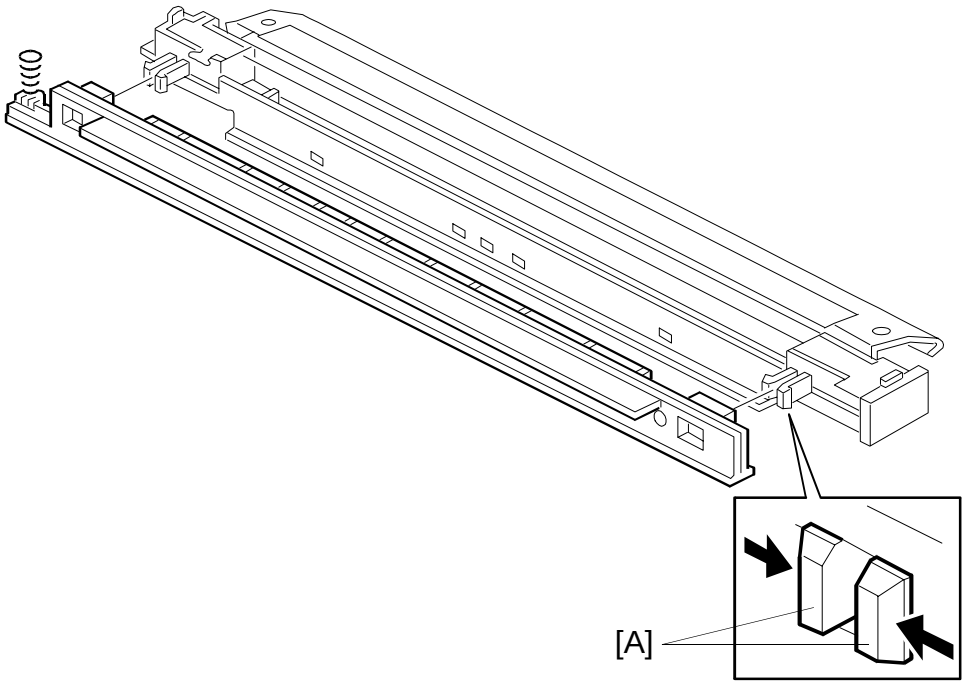

1. Turn off the main switch.
2. Open the front cover.
3. Remove the transfer corona unit.
4. Remove the discharge plate by squeezing the knobs [A] on both sides.

7. OTHERS

7.1 OZONE FILTER REPLACEMENT

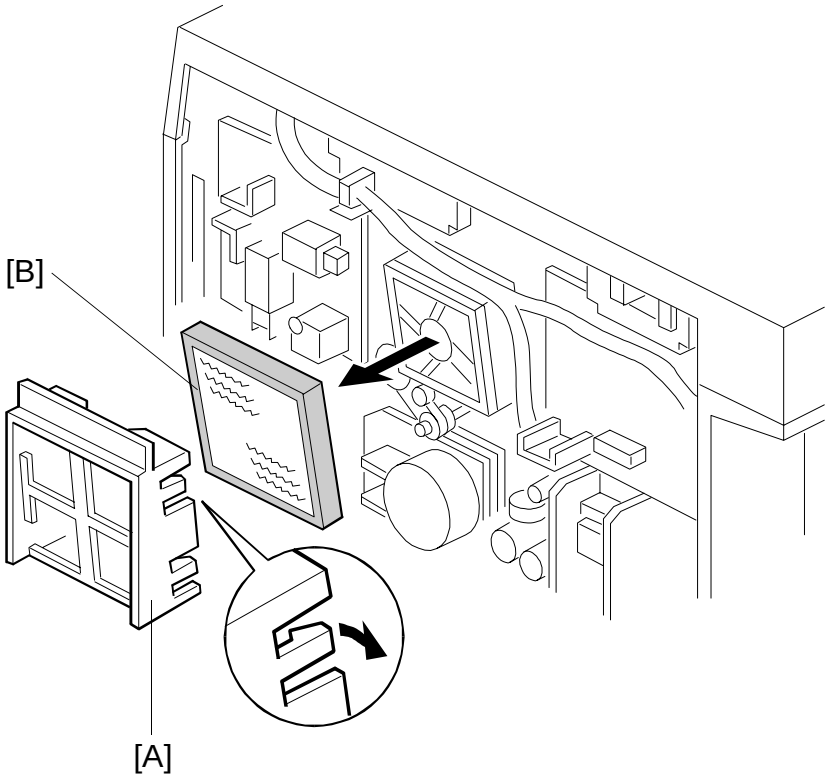

1. Turn off the main switch.
2. Remove the rear cover. (See Rear Cover Removal.)
3. Remove the ozone filter cover [A].
4. Replace the ozone filter [B].

7.2 MAIN CONTROL BOARD REPLACEMENT

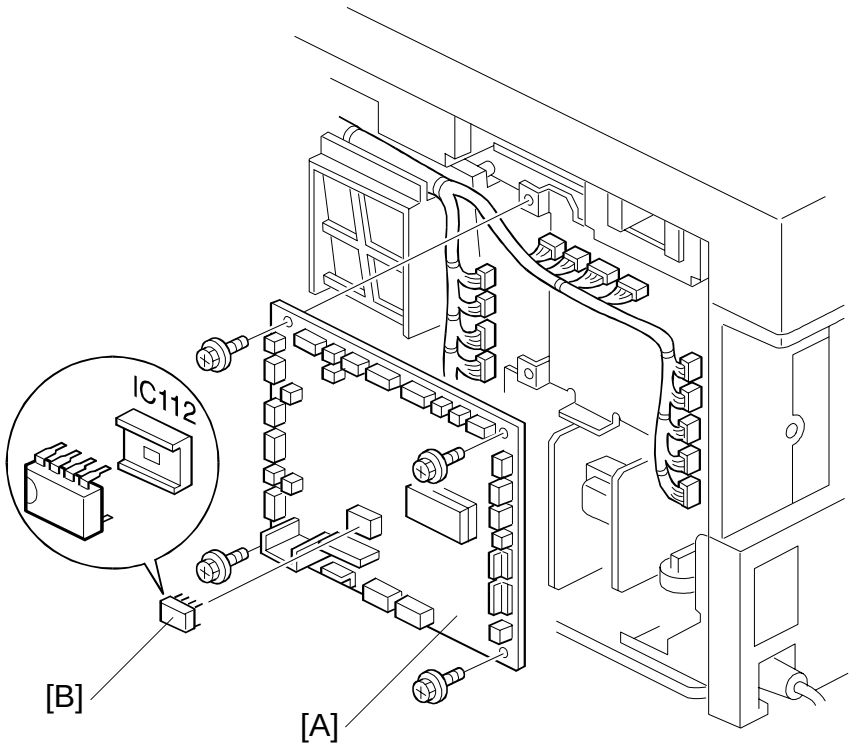

1. Turn off the main switch and unplug the power supply cord.
2. Remove the rear cover. (See Rear Cover Removal.)
3. Remove the main control board [A] (4 screws and all connectors).
4. Remove the EPROM [B] from the old main board and install it on the new board.

8. COPY QUALITY ADJUSTMENT

- General Information -

Image density is affected by the following factors:

(1) Light Intensity
(2) Development Bias Voltage
(3) Toner Density
(4) Grid Voltage/Drum Current

The items listed above must be kept in balance to maintain correct image density.

In the field, image density should be adjusted first by changing the exposure lamp voltage. If results are unsatisfactory, the bias voltage can be changed (SP33/34). Also, if requested by the customer, the overall image density can be changed by changing the toner density (SP38/UP6). Normally, this should be kept at the normal position (factory setting).

The grid voltage and charge corona current are carefully adjusted at the factory. Any adjustment out of the adjustment standard will result in overtoning, toner scattering, dirty background, or light image density problems. The grid voltage and charge corona current adjustment should be done only when replacing the power pack or to correct certain problems with image density after checking all other possible causes.

8.1 LIGHT INTENSITY ADJUSTMENT

8.1.1 Base Exposure Lamp Voltage Adjustment

When:	Every Call
Purpose:	To maintain the correct light intensity.
Adjustment Standard:	Level 2 (E0.2) of the gray scale on the OS-A3 chart should be slightly visible on the copy when the 4th manual image density level is selected.
How to Adjust:	SP48
How it works:	Changes the ac drive board output voltage.

1. Unplug the power cord.
2. Clean the following parts:

Item No.	Section	Method
(1)	Optics (mirrors, lens, filter, reflectors, exposure glass)	Damp cotton, silicone cloth, and blower brush
(2)	Corona wires (charge and transfer) and casings.	Blower blush
(3)	QL, Erase Lamp	Dry cloth and blower blush

3. Open SP33 and return the setting to the normal value if it has been changed.
4. Place the OS-A3 test chart on the exposure glass and make a full size copy at manual image density level 4 (center).
5. Confirm that level 2 (E0.2) of the gray scale is slightly visible on the copy. If the image density is not correct, proceed to the following steps.
6. Enter the lamp voltage setting mode using the numeral keys (SP48).
7. Change the value with the numeral keys as follows:
   If the image density is too dark: Increase the value
   If the image density is too light: Decrease the value
8. Confirm that the image density is within the adjustment standard.
9. Perform the ADS adjustment. (See ADS Adjustment.)

8.1.2 Image Density Adjustment

When:	The customer requires the image density to be either darker or lighter.
Purpose:	To get proper image density.
Method:	SP34
How it works:	Changes the ac drive/dc power board output voltage.

NOTE: SP34 settings can be changed by customers.

- SP34: Image Density Adjustment (ADS Mode) -

Setting	0	1	2	3	4
Bias Voltage Change [V]	±0	–40	+40	–40	+40
Exposure Lamp Change	±0	±0	±0	+4 steps	–4 steps
Image Density	Normal	Lighter	Darker	Lightest	Darkest

1 step = 0.5 V (120 V machines) or 1.0 V (230 V machines)

- SP62 V_L Correction Interval -

Setting	V_L Correction Interval
0	2 steps/8,000 copies
1	2 steps/6,000 copies
2	2 steps/4,000 copies
3	2 steps/2,000 copies
4	2 steps/1,000 copies
5	No correction

1 step = 0.5 V (120 V machines) or 1.0 V (230 V machines)

8.2 DEVELOPMENT BIAS VOLTAGE ADJUSTMENT

8.2.1 Base Bias Voltage Adjustment

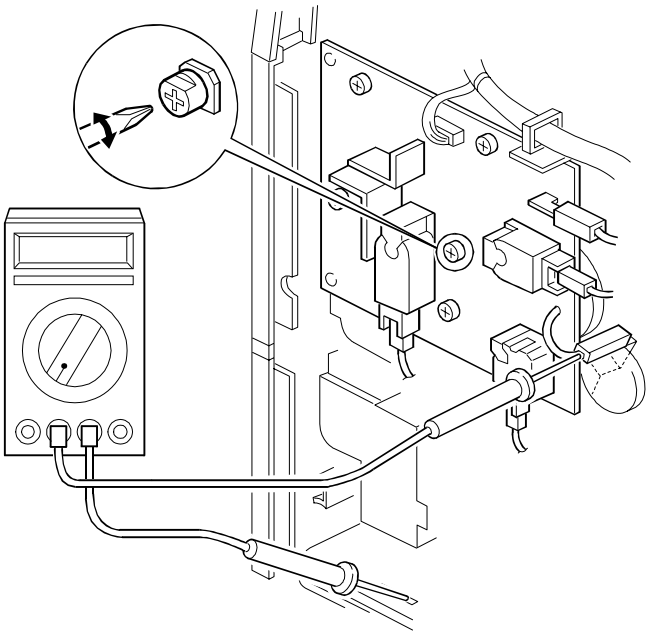

ADJUSTMENT STANDARD	Adjusting VR	SP Mode
DC –200 ± 4 V	VRB	SP9-5

NOTE: Normally, each High Voltage Supply Board spare part is adjusted in the factory before shipment. This adjustment is not required when the board is replaced.

⚠CAUTION!

Very high voltage is applied from the high voltage supply unit terminals. Pay extreme attention when adjusting the bias voltage. Make sure that the machine is unplugged before connecting the multimeter.

1. Remove the rear cover. (See Rear Cover Removal.)
2. Set the multimeter range to dc 1,500 V, and connect the multimeter leads as shown.
3. Turn on the development bias using SP9-5.
4. Adjust the development bias voltage by turning VRB on the high voltage supply board.

8.2.2 SP Bias Settings

When:	1. The image is blurred in ADS mode, even though the image density in black solid areas is acceptable. 2. Dirty background in ADS mode. The problem is not caused by excess toner and cannot be solved by adjusting the light intensity.
Purpose:	To get the proper image density
Method:	VRB on the high voltage supply board, SP33, SP34
How it works:	Changes the bias voltage while the image area on the drum is being developed.

NOTE: SP34 can be changed by customers.

- SP33 Image Bias Adjustment (Manual ID Mode) -

Setting	0	1	2	3	4
Bias Voltage Change [V]	±0	+40	+20	–20	–40
Image Density	Normal	Darkest	Darker	Lighter	Lightest

1 step = 0.5 V (120 V machines) or 1.0 V (230 V machines)

- SP34 Image Density Adjustment (ADS Mode) -

Setting	0	1	2	3	4
Bias Voltage Change [V]	±0	–40	+40	–40	+40
Exposure Lamp Change	±0	±0	±0	+4 steps	–4 steps
Image Density	Normal	Lighter	Darker	Lightest	Darkest

1 step = 0.5 V (120 V machines) or 1.0 V (230 V machines)

8.3 TONER DENSITY ADJUSTMENT

When:	The customer wants to change the overall image density of the copies.
Purpose:	To change the toner concentration inside the development unit.
How to Adjust:	SP38
How it works:	Changes the development bias voltage and either raises/lowers the toner supply threshold.

NOTE: SP38 can be changed by customers.

8.4 TONER SUPPLY RATIO SELECTION

When:	The factory setting for the toner supply amount is not appropriate for the type of original in use.
Purpose:	To adjust the toner supply amount.
Adjustment Standard:	TD Sensor Mode: 0.4 s (Factory Setting) Fixed Mode: 0.3 s (Factory Setting)
How to Adjust:	Detect Mode (using TD sensor): SP31 Fixed Mode: SP32
How it works:	Changes the interval that the toner supply motor is on.

8.5 GRID VOLTAGE ADJUSTMENT

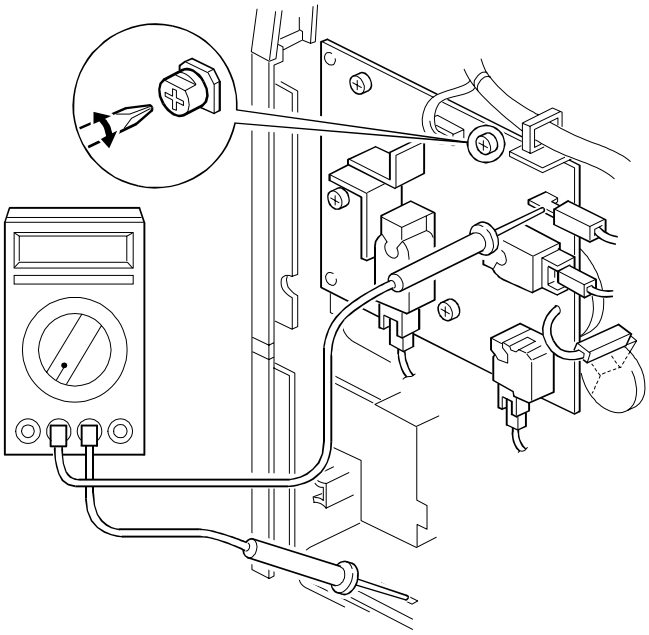

ADJUSTMENT STANDARD	Adjusting VR	SP Mode
DC –910 ± 15 V	VRG	SP9-2

NOTE: Normally, each High Voltage Supply Board spare part is adjusted in the factory before shipment. This adjustment is not required when the board is replaced.

⚠CAUTION!

Very high voltage is applied from the high voltage supply unit terminals. Pay extreme attention when adjusting the grid voltage. Make sure that the machine is unplugged before connecting the multimeter.

1. Remove the rear cover. (See Rear Cover Removal.)
2. Set the multimeter range to dc 1,500 V, and connect the multimeter leads as shown.
3. Turn on the charge corona using SP9-2.
4. Adjust the grid voltage by turning VRG on the high voltage supply unit.

8.6 TRANSFER CURRENT ADJUSTMENT

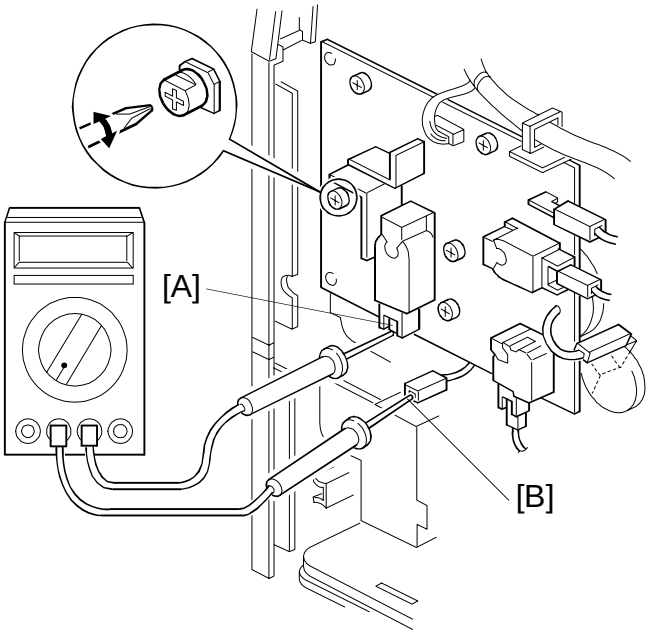

ADJUSTMENT STANDARD	Adjusting VR	SP Mode
DC –350 ± 4 μA	VRT	SP9-3

NOTE: Normally, each High Voltage Supply Board spare part is adjusted in the factory before shipment. This adjustment is not required when the board is replaced.

⚠CAUTION!

Very high voltage is applied from the high voltage supply unit terminals. Pay extreme attention when adjusting the drum current. Make sure that the machine is unplugged before connecting the multimeter.

1. Remove the rear cover. (See Rear Cover Removal.)
2. Disconnect the connector from the T corona current terminal [A]. Then connect the ground terminal of the multimeter to the connector [B], and connect the positive terminal to the T terminal of the high voltage supply board as shown in the illustration.

   NOTE: Make sure that the connector [B] is not in contact with the T terminal [A].

4. Turn on the transfer corona using SP9-3.
5. Adjust the drum current by turning VRT on the high voltage supply board.

8.7 CHARGE CURRENT ADJUSTMENT

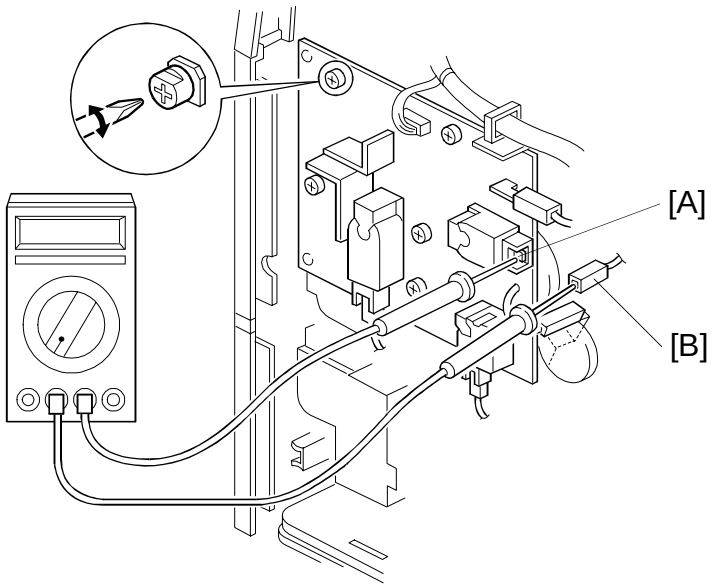

ADJUSTMENT STANDARD	Adjusting VR	SP Mode
DC –400 ± 2 μA	VRC	SP9-2

NOTE: Normally, each High Voltage Supply Board spare part is adjusted in the factory before shipment. This adjustment is not required when the board is replaced.

⚠CAUTION!

Very high voltage is applied from the high voltage supply unit terminals. Pay extreme attention when adjusting the charge current. Make sure that the machine is unplugged before connecting the multimeter.

1. Remove the rear cover. (See Rear Cover Removal.)
2. Disconnect the connector from the CT corona current terminal [A]. Then connect the ground terminal of the multimeter to the connector [B], and connect the positive terminal to the CT terminal of the high voltage supply board as shown in the illustration.

   NOTE: Make sure that the connector [B] is not in contact with the CT terminal [A].

4. Turn on the charge corona using SP9-2.
5. Adjust the charge current by turning VRC on the high voltage supply board.

8.8 HORIZONTAL MAGNIFICATION ADJUSTMENT

When:	The horizontal magnification is not within the adjustment standard.
Purpose:	To maintain proper horizontal magnification.
Adjustment Standard:	Less than ± 0.8% difference between original and copy.
How to Adjust:	SP44 (0.2%/step, 51 steps)
How it works:	Changes the lens home position.

1. Change the value of SP44 to 20 (default value).
2. Confirm that the scanner wire clamps are positioned correctly using the scanner positioning pins. (See 1st and 2nd Scanner Adjustment.)
3. Place a 150 mm scale parallel to the left scale on the exposure glass.
4. Adjust the horizontal magnification using SP44. Make three copies to check the magnification.

   NOTE: If the copy image is out of focus as making copies after this adjustment, adjust the focus. (See Focus Adjustment.)

8.9 VERTICAL MAGNIFICATION ADJUSTMENT

When:	The vertical magnification is not within the adjustment standard.
Purpose:	To maintain proper vertical magnification.
Adjustment Standard:	Less than ± 1.0% difference between original and copy.
How to Adjust:	SP43 (0.2%/step, 32 steps)
How it works:	Changes the scanner speed.

1. Place a 150 mm scale perpendicular to the left scale on the exposure glass.
2. Adjust the vertical magnification using SP43. Make three copies to check the magnification.

   NOTE: If the copy image is out of focus as making copies after this adjustment, adjust the focus. (See Focus Adjustment.)

8.10 FOCUS ADJUSTMENT

When:	The copy image is out of focus. After adjusting the horizontal magnification.
Purpose:	To maintain proper focus.
Adjustment Standard:	Copy image in focus.
How to Adjust:	SP47 (0.1 mm/step,101 steps)
How it works:	Adjusts the 4th/5th mirror assembly home position, changing the distance between the original and the drum surface.

1. Make three copies with the test chart.
2. Adjust the focus using SP47. Check the text on the copies.

8.11 LEADING EDGE ERASE MARGIN ADJUSTMENT

When:	The leading edge erase margin is not within the adjustment standard.
Purpose:	To maintain the correct leading erase margin.
Adjustment Standard:	2.5 ± 2.0 mm (0.1 ± 0.08")
How to Adjust:	SP41 (0.5 mm/step, 16 steps)
How it works:	Changes the erase lamp on period.

1. Place a 150 mm scale perpendicular to the left scale on the exposure glass.
2. Adjust the leading edge erase margin using SP41. Make three copies and check the erase margin.

8.12 REGISTRATION ADJUSTMENT

When:	Registration is not within the adjustment standard.
Purpose:	To maintain proper registration.
Adjustment Standard:	0 ± 2 mm (0 ± 0.08")
How to Adjust:	SP42 (0.5 mm/step, 16 steps)
How it works:	Changes the registration roller start timing.

1. Place a 150 mm scale perpendicular to the left scale on the exposure glass.
2. Adjust the registration using SP42. Make three copies and check the registration.

8.13 4TH/5TH MIRROR HEIGHT ADJUSTMENT

When:	Parallelogram (skewed) image appears.
Purpose:	To maintain the proper copy image.
How to Adjust:	Turn the 4th/5th mirror height adjustment screw.
How it works:	Changes the 4th/5th mirror height.

NOTE: Never perform this adjustment until you have positively verified that the source of the skewing is optical and not in the paper path.

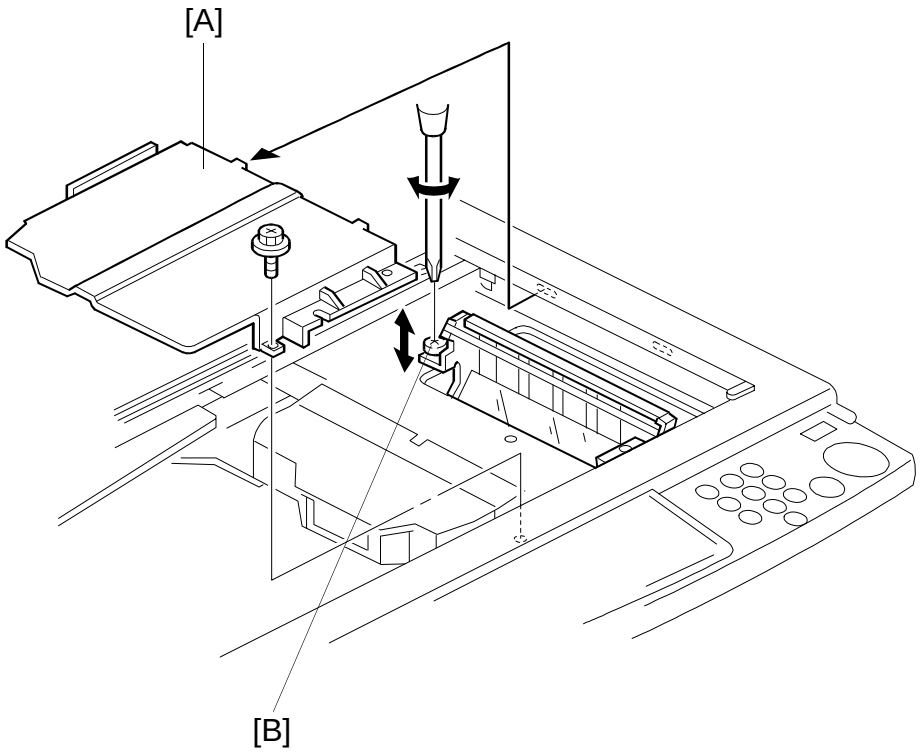

1. Turn off the main switch and remove the exposure glass. (See Exposure Glass Removal.)
2. Remove the lens cover [A] (2 screws).
3. Adjust the 4th/5th mirror height by turning the screw [B].

NOTE: When replacing the lens cover, make sure of the notes described on page 6-15.

8.14 ADS (Auto Image Density Sensor) ADJUSTMENT

When:	1. After light intensity adjustment. 2. ADS voltage is not within the adjustment standard. 3. After replacing the main board. 4. After replacing the ADS sensor.
Purpose:	To maintain correct ADS mode operation.
Adjustment Standard:	ADS Reference Voltage = 2.5 ± 0.1 volts
How to Adjust:	SP56
How it works:	Changes the main board ADS output voltage. The voltage reading is displayed on the operation panel.

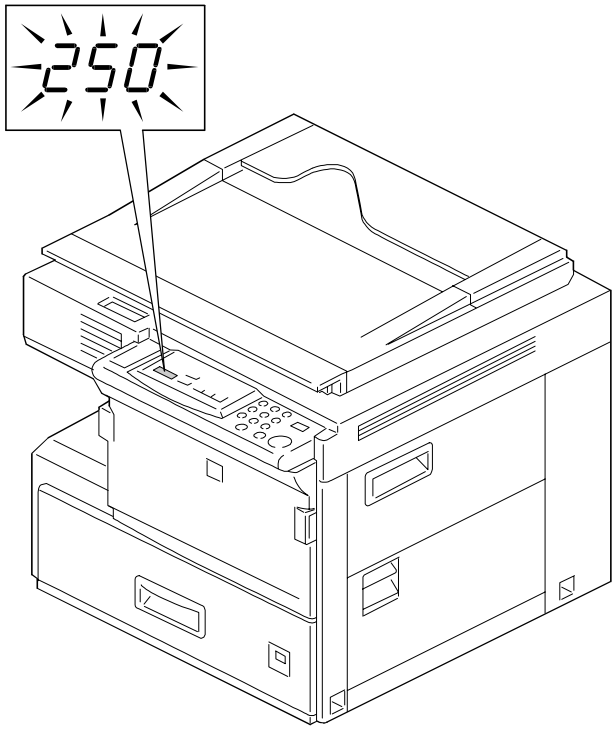

1. Place five sheets of clean white A4 (8.5" x 11") paper on the exposure glass.
2. Select SP56 and press the ◈ key.
3. If the voltage is not within the adjustment standard, adjust it by turning VR101 on the main board.

8.15 SIDE-TO -SIDE REGISTRATION ADJUSTMENT

When:	Side-to-side registration is out of the adjustment standard.
Purpose:	To maintain the proper side-to-side registration
Adjustment Standard:	0 ± 2 mm (0 ± 0.08")
How to Adjust:	1. Change the lens position. 2. Change the side fence position in the paper tray.
How it works:	Shift the copy image.

NOTE: 1) When side-to-side registration is out of the adjustment standard only for the paper tray, adjust the side fence position in the paper tray.

2) When side-to-side registration is out of the adjustment standard for both the paper tray and the by-pass feed table, adjust the lens position. Check the adjustment by making a copy from the by-pass feed table. Then, make a copy from the paper tray and adjust the side fence position in the paper tray if necessary.

-Side Fence Adjustment (Paper Tray)-

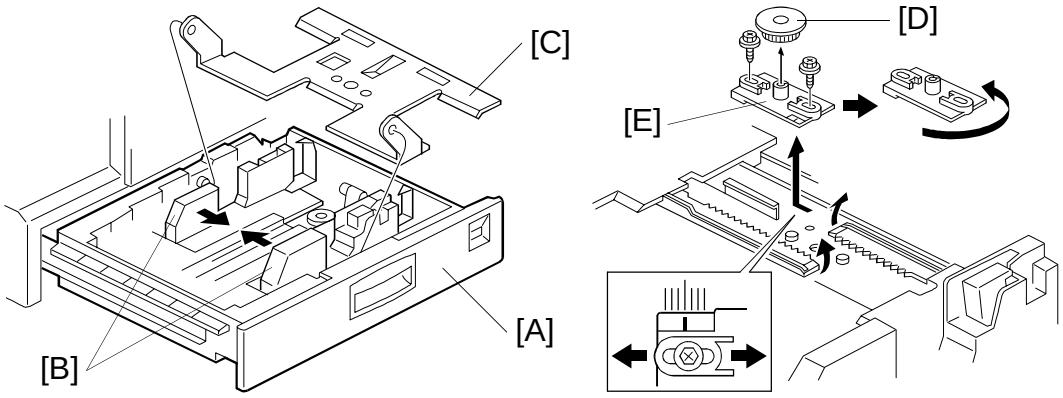

1. Pull the paper tray [A] out.
2. Move the side fences [B] to the A4 or half letter position.
3. Slide the bottom plate [C] to the front and remove it.
4. Remove the pinion gear [D].
5. Move the side fences [B] to their narrowest position and remove them.
6. Remove the registration adjustment plate [E] (2 screws).
7. Turn the registration plate 180°. The position can now be adjusted using the long screw hole.

-Lens Position Adjustment-

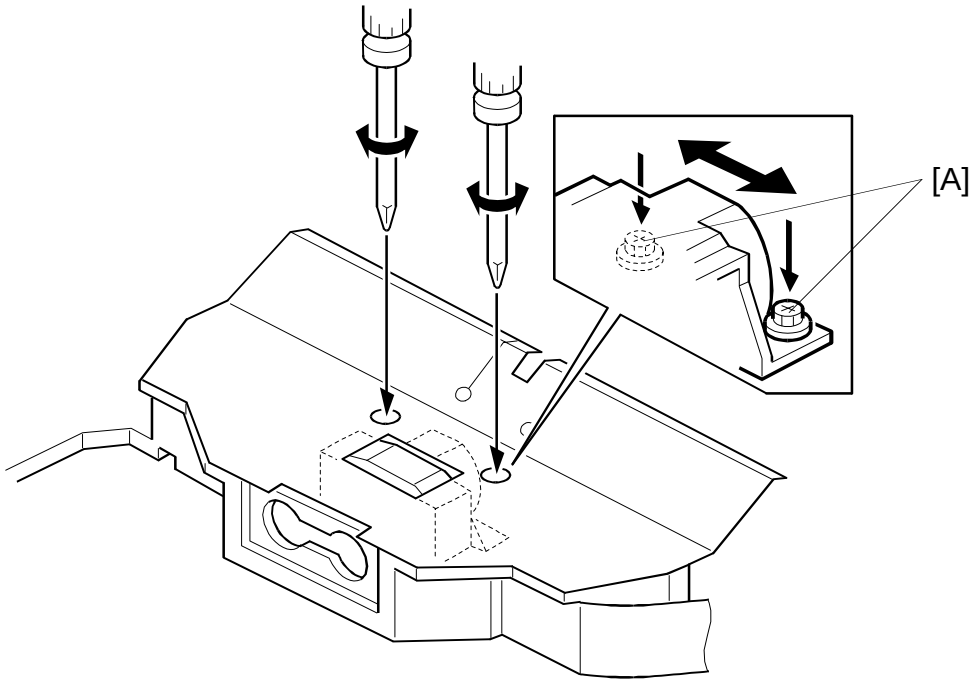

1. Turn off the main switch.
2. Remove the exposure glass. (See Exposure Glass Removal.)
3. Remove the lens cover (2 screws).
4. Mark the original position of the lens.
5. Loosen 2 screws [A] and shift the lens by trial-and-error to adjust the side-to side registration.

TROUBLESHOOTING

1. COPY QUALITY

1.1 BLANK COPY (WHITE COPY)

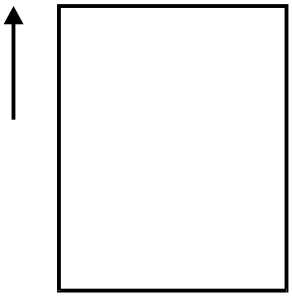

- Problem -

White or almost white copy.

- Possible Causes -

1. Charge is not applied.
   - High voltage supply board (charge or grid) failure
   - Poor charge corona unit contact
   - Broken charge corona wire
   - Leak in insulator or endblock
   - Charge corona wire cleaner pads are in contact with the corona wire.

2. Copy image is not transferred to the paper.
   - High voltage supply board (transfer) failure
   - Poor transfer corona unit contact
   - Broken transfer corona wire
   - Leak in the insulator or endblocks

3. Poor drum sensitivity.
   - The drum was exposed to fluorescent light or direct sunlight for a long period of time.
   - The drum was exposed to ammonia gas or corrosive fumes for a long period of time.

4. The imaging unit does not rotate.
   - Broken drive gear

- Action -

Is the charge corona wire cleaner knob fully inserted?
Is the cleaner mechanism working properly?

Yes

No

Fully insert the knob or fix the cleaner pad bracket.

Are the charge and transfer corona units correctly installed?

Yes

No

Install the charge and transfer corona units correctly.

Are the charge and transfer corona wires broken?

No

Yes

Replace the corona wires.

Is leakage occurring in the endblocks or receptacles?

No

Yes

Replace the defective parts.

Are the imaging unit drive gears worn or broken?

No

Yes

Replace the drive gears.

Check CN102-4 and 102-5 (Charge/Transfer trigger lines)

1) If the signal stays HIGH after the ◇ key is pressed, replace the main board.
2) If the charge or transfer corona does not turn on even if the signal changes to LOW, replace the high voltage supply board.

If there is no problem with the signal lines, replace the drum if the sensitivity does not recover even when the drum is not exposed to light.

1.2 DIRTY BACKGROUND

- Problem -

1. Dirty background at image density level 4 (manual setting).
2. When newspapers are copied, the background is dirty even at level 7.
3. ADS copies have a dirty background.

- Possible Causes -

1. Dirty optics
2. Toner scattering
   - High toner density
   - The inlet seal of the development unit is stripped off.
   - User/SP mode setting error
3. The exposure lamp is not bright enough. This may be caused by deterioration of the exposure lamp or low lamp voltage.
4. In ADS mode, light reflected from the original is too intense.
5. The ADS optical fiber is cut or bent.
6. The development bias is grounded.

- Action -

Make a copy in reduction mode at manual image density level 4.

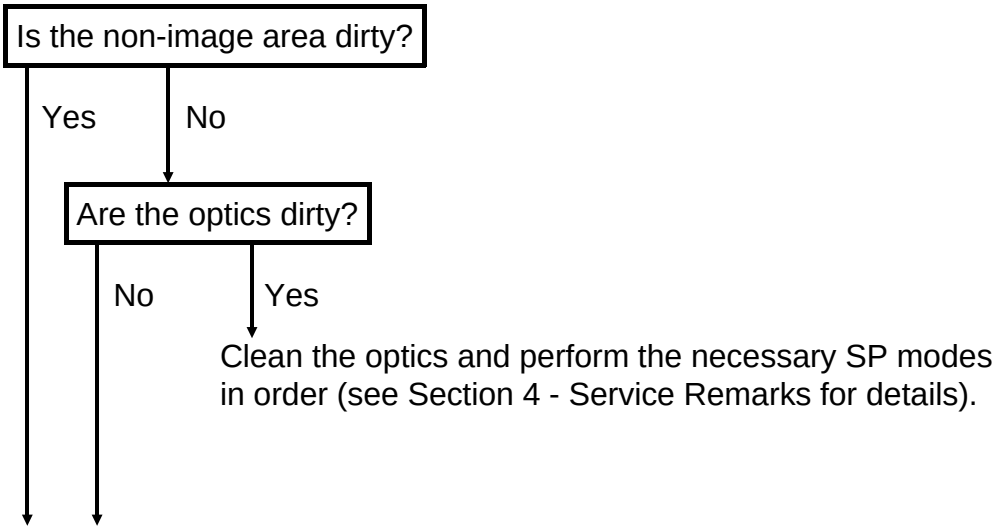

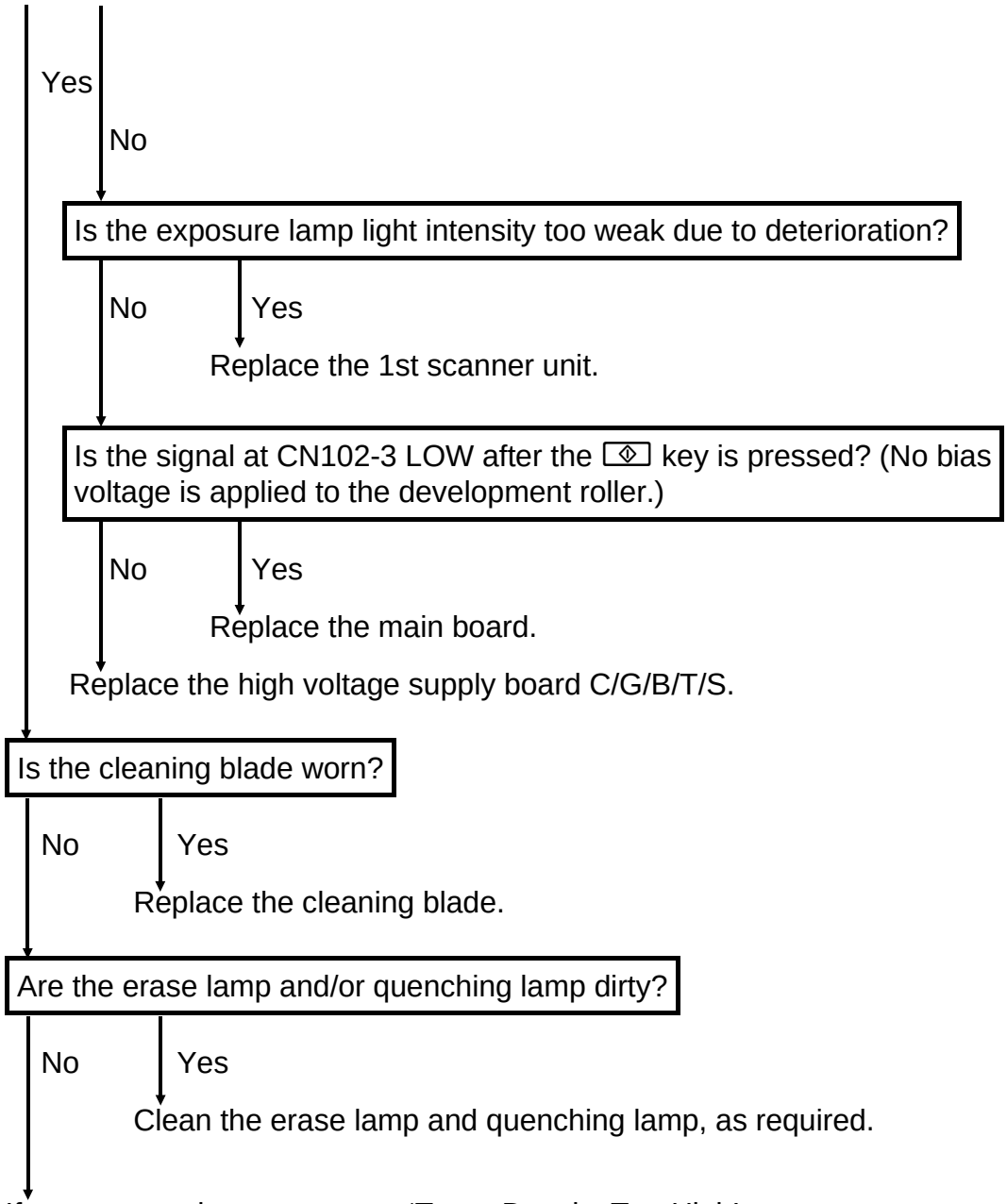

If toner scattering occurs, see ‘Toner Density Too High’.
If dirty background occurs only in ADS mode, do the following:

- If the ADS voltage is not within ± 0.2 volts of the standard voltage (2.5 V), readjust the ADS voltage.
- If the signal at CN114-5 stays HIGH, check the harness and sensor, and replace any defective parts.
- If the signal at CN114-6 stays LOW, replace the main board.

1.3 UNEVEN IMAGE DENSITY

- Problem -

Uneven image density appears on the copies.

- Possible Cause -

1. Dirty optics
2. Uneven cutout position of the reflectors
3. Dirty corona wires or grid
4. Uneven height of the charge corona wire

- Action -

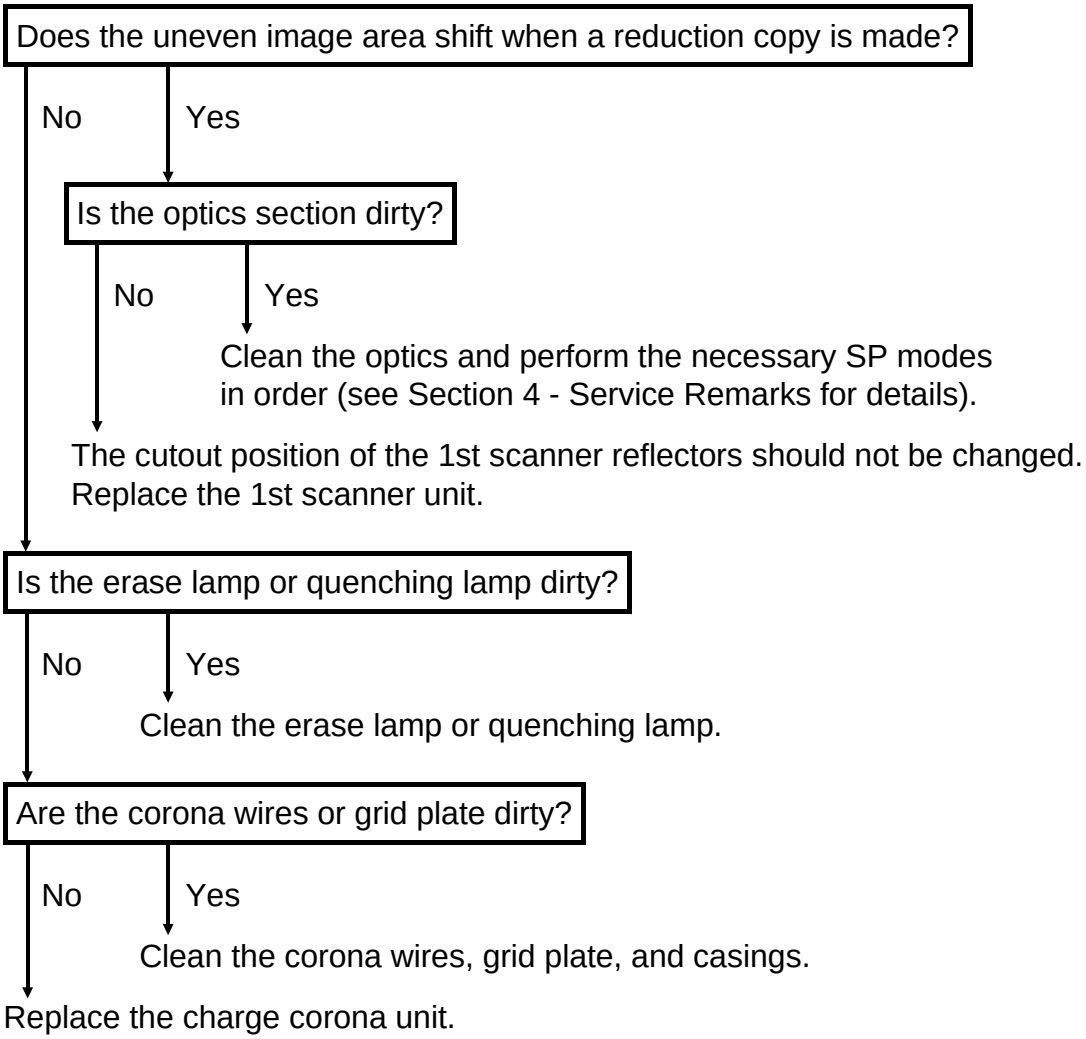

1.4 VERTICAL BLACK BANDS

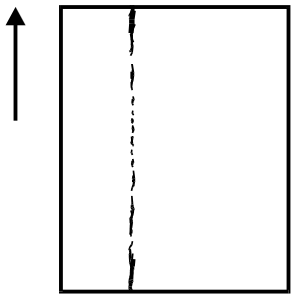

- Problem -

Vertical black bands appear on the copy.

- Possible Causes -

1. Dirty optics
2. Dust between the cleaning blade and drum
3. Deformed edge of the cleaning blade
4. Deformed inlet seal on the development unit

- Action -

Do the black bands shift when a reduction copy is made?

No

Yes

Check and clean the optics section. After cleaning the optics, perform the necessary SP modes in order (see Section 4 - Service Remarks for details).

Remove the cleaning blade and clean the edge of the cleaning blade. Then check if the edge of the cleaning blade is deformed or not.

No

Yes

Replace the cleaning blade.

Replace the imaging unit.

1.5 VERTICAL BLACK LINES

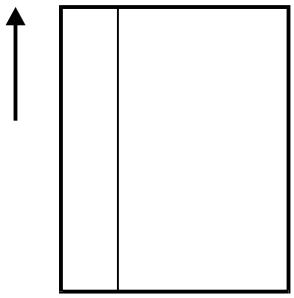

- Problem -

Thin black lines appear on the copy.

- Possible Causes -

1. Damaged cleaning blade
2. Dirty or scratched exposure glass or dirty or scratched mirrors
3. Scratched or dirty drum
4. Scratched hot roller

- Action -

Do the black lines shift when a reduction copy is made?

No

Yes

Clean or replace the exposure glass or mirrors. After cleaning the optics, perform the necessary SP modes in order (see Section 4 - Service Remarks for details).

Is the edge of the cleaning blade damaged?

No

Yes

Replace the cleaning blade.

Is the hot roller scratched?

No

Yes

Check whether black lines appear on the copy by stopping the copy paper in the transport section. If no black lines appear, replace the hot roller.

Check whether the drum is scratched or toner is built-up on the drum. Replace the drum if necessary.

1.6 VERTICAL WHITE LINES OR BANDS-1 (DULL OR BLURRED)

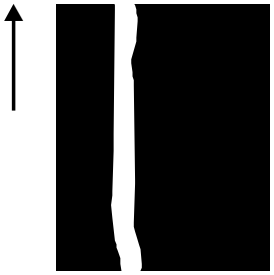

- Problem -

Dull or blurred white lines appear on the copy.

- Possible Causes -

1. Dirty or deteriorated charge corona wire
2. Dirty or deformed grid plate
3. Damp or deformed inlet seal on the development unit

- Action -

Are the charge corona wires or grid plate dirty?

No

Yes

Clean the charge corona wires or grid plate.

Is the grid plate or the charge corona wire deteriorated or deformed?

No

Yes

Replace the charge corona unit.

Replace the imaging unit.

1.7 VERTICAL WHITE LINES OR BANDS-2 (THIN, DISTINCT)

- Problem -

Vertical white lines appear on the copy.

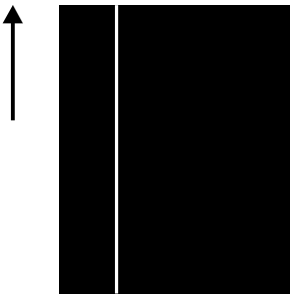

- Possible Causes -

1. Paper dust on the edge of the cleaning blade
2. Scratched drum
3. Scratched hot roller

- Action -

Remove the cleaning blade. Clean and inspect the edge of the blade. Is the edge of the cleaning blade deformed?

No

Yes

Replace the cleaning blade.

Make a copy and stop the machine when the paper reaches the transport section. Do white lines appear on the copy?

No

Yes

Replace the drum.

Replace the hot roller if it is scratched.

1.8 HORIZONTAL BLACK/WHITE LINES

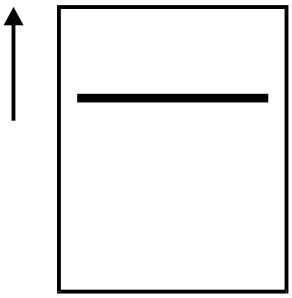

- Problem -

Black or white lines perpendicular to the paper feed direction appear on the copy image.

- Possible Causes -

1. Drum or hot roller is scratched.
   If black lines appear at 94.6 mm intervals, the cause is a scratched drum, scratched hot roller, or toner build up.
2. Toner adheres to the drum surface.
   Due to insufficient cleaning, foreign matter may accumulate on the blade, causing toner to stick to the drum surface when the drum stops.

- Action -

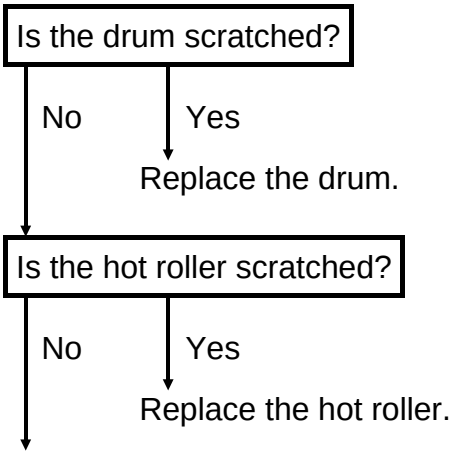

If toner adheres to the drum surface, clean the drum with water. Also clean or replace the cleaning blade.

1.9 JITTER

- Problem -

Jitter appears on the copy.

- Possible Causes -

1. Drum not turning smoothly
2. Scanner not moving smoothly

- Action -

Does the jitter interval change when a reduction copy is made?

Yes

No

Check drum drive mechanisms such as the drum drive gears and drum pulleys.

No Good

Reinstall them correctly or replace the defective parts.

Are the scanner drive belts correctly installed?

Yes

No

Reinstall them correctly or replace the defective parts.

Does the voltage at CN103-2 through 5 on the main board stay at 24 volts when the ⧫ key is pressed?

24 volts

Not always 24 volts

Replace the scanner motor or check the scanner operation.

Replace the main board.

1.10 BLACK SPOTS ON THE COPY IMAGE

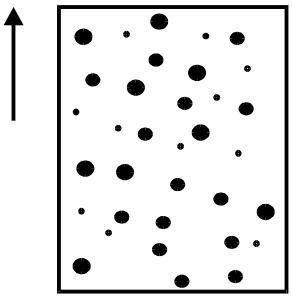

- Problem -

The grid voltage is not applied correctly.

- Poor contact between the charge corona casing and grid plate
- Main control board defective
- High voltage supply board C/G/B/T/S defective

- Action -

Is there good electrical contact between the charge corona casing and the grid plate?

Yes

No

Repair the poor contact or replace the charge corona unit if needed.

Check the voltage at CN102-6 on the main board.

0 volts

Not 0 volts

Replace the main control board.

Replace the high voltage supply board C/G/B/T/S.

1.11 SKEWED (OPTICAL) COPY IMAGE

- Problem -

The copy image is skewed (parallelogram shape).

The sides of the copy image are straight, but the leading and trailing edges are skewed.
(This differs from skewing originating in the paper path.)

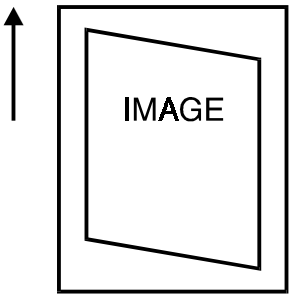

- Possible Causes -

1. The 4th/5th mirror assembly is not parallel with the 1st and 2nd scanners.
2. The mirrors are in the wrong position.

- Action -

Is each mirror positioned correctly on its scanner and on the 4th/5th mirror assembly?

Yes

No

Reposition the mirror correctly. If the spring plates are defective, replace them.

Readjust the height of 4th/5th mirror assembly by turning the adjusting screw.

1.12 TONER DENSITY ON COPIES TOO HIGH

- Problem -

1. Dirty background appears on the copy.
2. The image density of black solid areas is too high.

- Possible Causes -

1. The toner supply motor keeps on turning continuously.
2. SP30 (Toner Supply Mode Selection) has been changed from the default setting.
3. The main control board is defective.
4. The charge corona current is too low.
5. Some SP or UP modes have been changed that would lead to this problem.
6. TD sensor defective.

- Action -

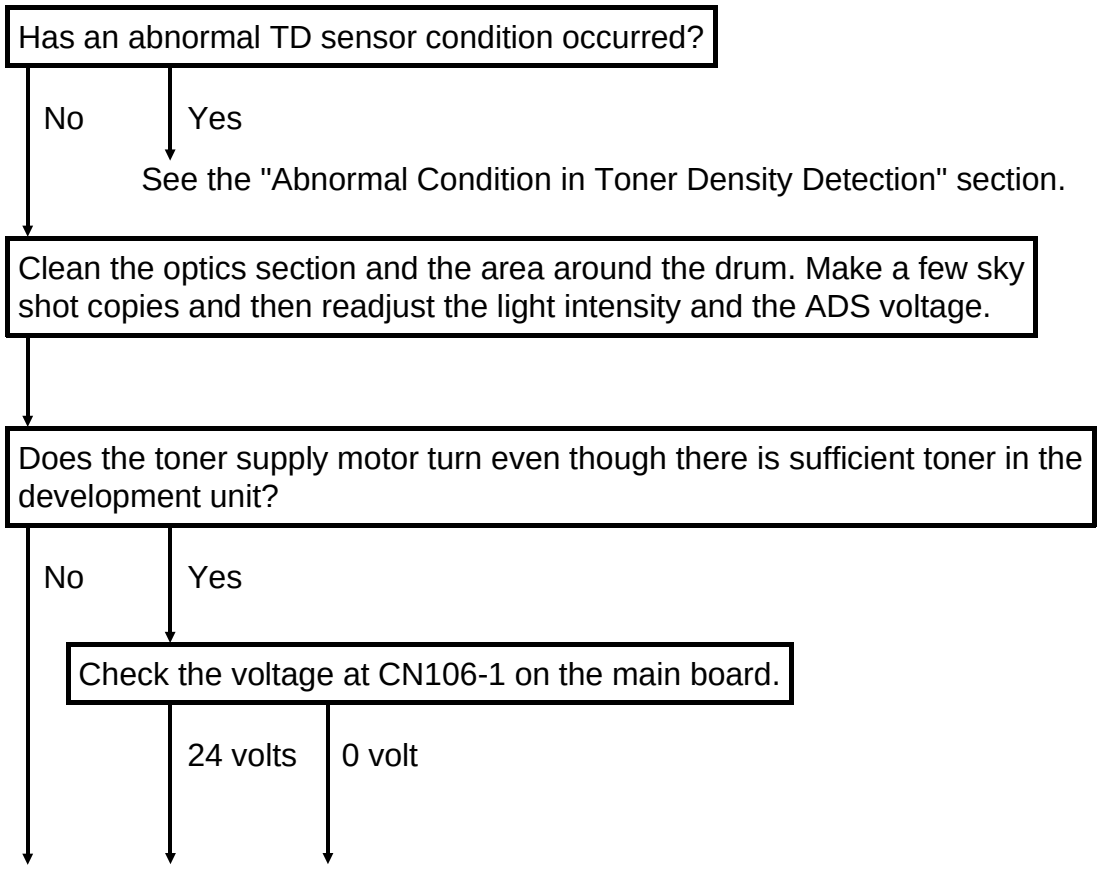

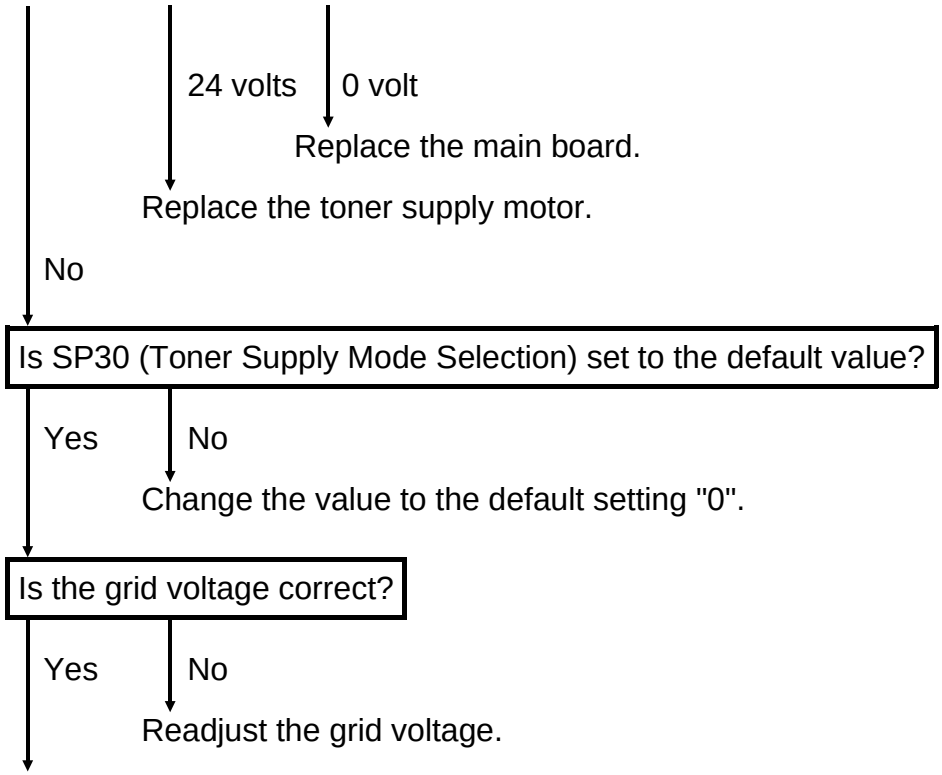

Clean the optics section and around the imaging unit.
Perform the necessary SP modes in order (see Section 4 - Service Remarks for details).

Check the related SP mode settings (SP30, 31, 32, 33, 34, 35, 36, 38, 48, 53, 54 and 62).
Change the settings to lean towards the lighter side.

1.13 TONER DENSITY ON COPIES TOO LOW

- Problem -

1. Light copy
2. Carrier on the copy.
3. Light spots appear in black solid areas.

- Possible Causes -

1. The toner supply motor does not rotate.
2. SP30 (Toner Supply Mode Selection) has been changed from the default setting.
3. The main control board is defective.
4. The charge corona current is too high.
5. Some SP or UP modes have been changed that would lead to this problem.
6. TD sensor defective.

- Action -

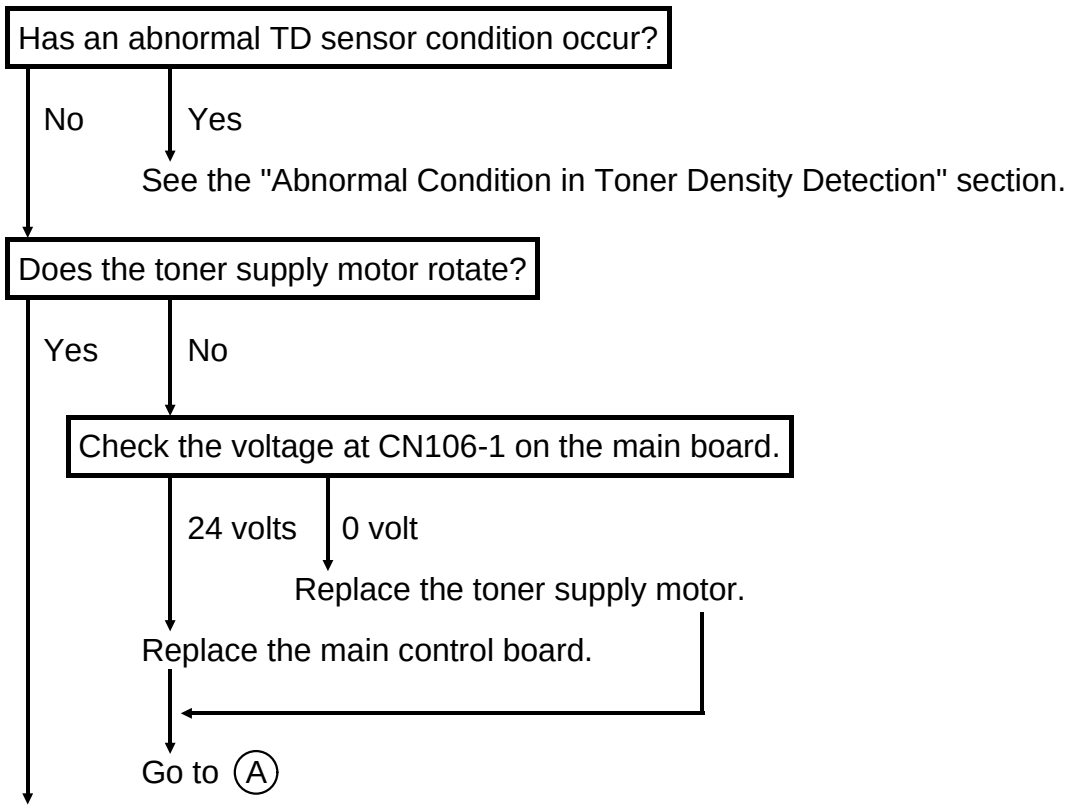

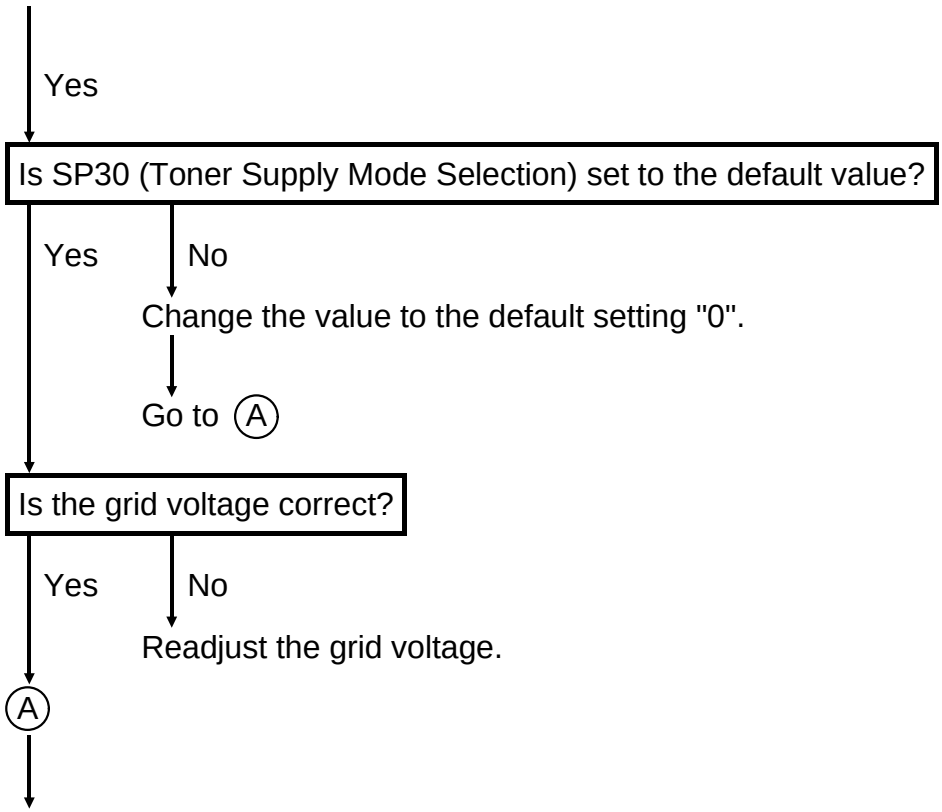

Check the related SP mode settings (SP30, 31, 32, 33, 34, 35, 36, 38, 48, 53, 54 and 62).
Change the settings to lean towards the darker side.

1.14 UNFUSED COPY IMAGE

- Problem -

Solid images rub off easily.

- Possible Causes -

1. The fusing pressure is weak.
2. The fusing temperature is too low.
3. The thermistor is malfunctioning.

- Action -

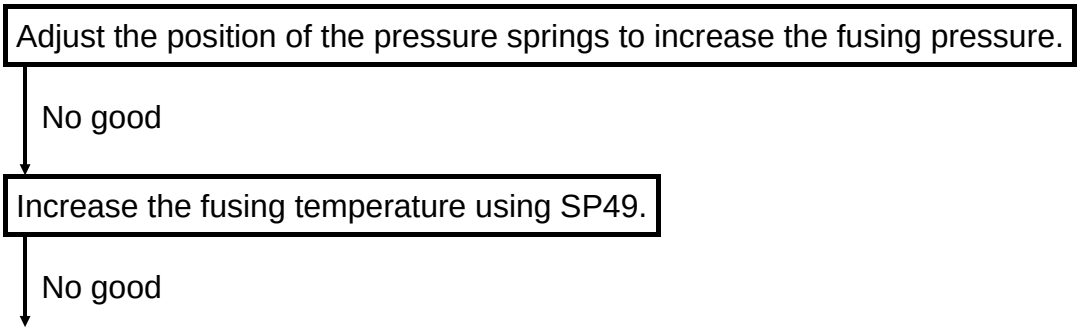

Check the thermistor. If the thermistor is malfunctioning, replace it.

1.15 CREASING PAPER AFTER FUSING

- Problem -

The copy paper is creased.

- Possible Causes -

1. The fusing temperature is too high.
2. The thermistor is malfunctioning.
3. The copier is installed in humid environment.

- Action -

Decrease the fusing temperature using SP49.

No good

Is the fusing thermistor working properly?

Yes

No

Check the thermistor. If the thermistor is malfunctioning, replace it.

Install the optional tray heater. The heater is available as a service part (see Section 3 for details).

1.16 PAPER MISFEED

- Problem -

1. The Check Paper Path indicator turns on when the main switch is turned on, even if there is no paper in the copier.
2. The Check Paper Path always turns on at the same location when copies are made.

- Possible Causes -

1. Defective sensor
2. Mechanical or electrical malfunction

- Action 1 (Initial misfeed) -

Check which sensor (registration sensor or exit sensor) is defective. Replace the defective sensor. If no sensors are defective, replace the main board.

- Action 2 (Misfeed during copy cycle) -

If the Check Paper Path indicator turns on after the key is pressed, check whether the paper tray has run out of paper or not.

No

Yes

Load paper into the paper tray

Enter Misfeed Detection OFF mode (SP6) and make a copy to see whether a misfeed occurs.

Misfeed

No misfeed

Check which sensor (registration sensor or exit sensor) is defective. If sensors are not defective, replace the main board.

Check whether a mechanical or electrical malfunction occurs. Replace the defective parts.

1.17 ABNORMAL CONDITION IN TONER DENSITY DETECTION

- Problem -

The Auto ID indicator or the selected manual ID level blinks. (No SC Code is indicated.)

- Definition -

The detected TD sensor output goes below 0.2 volts.

- Possible Causes -

- Defective TD sensor
- Defective main control board
- Loose connector
- Poor connection between the imaging unit and the main copier

- Action -

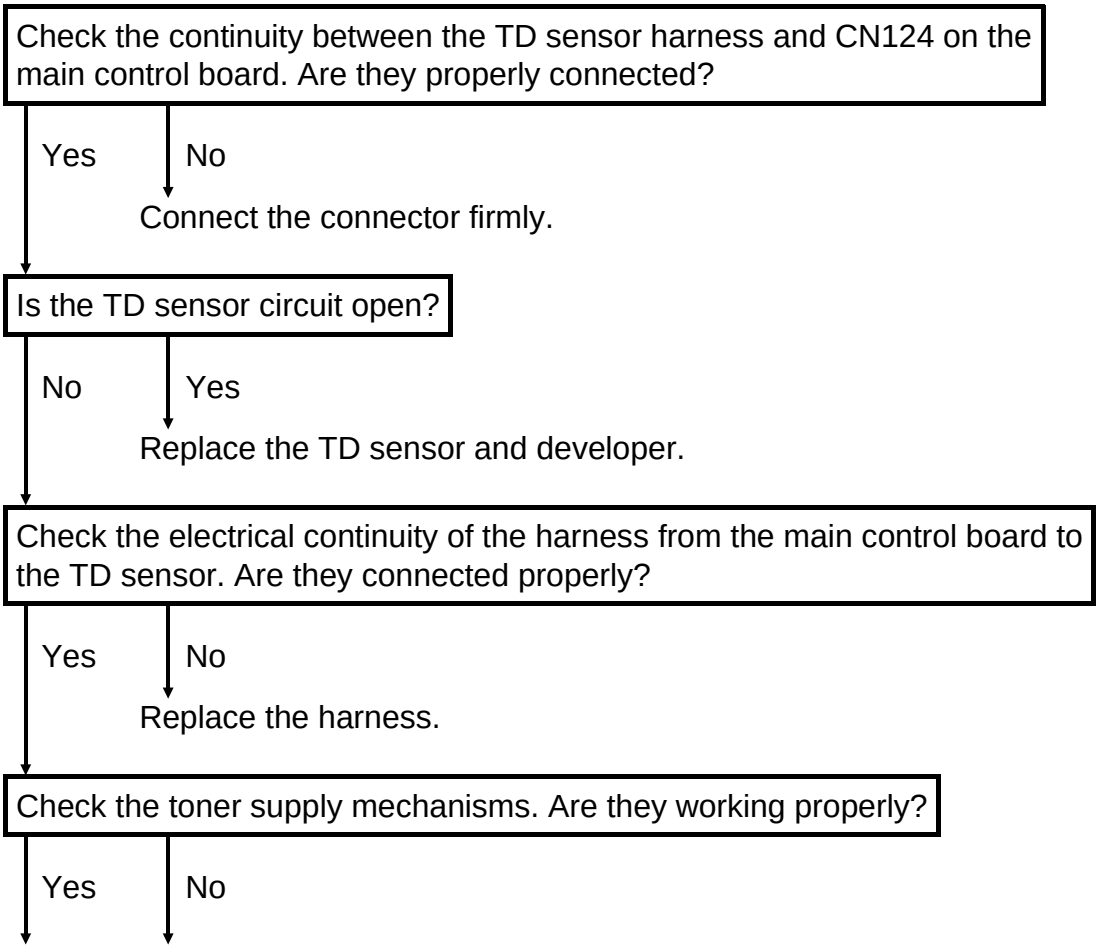

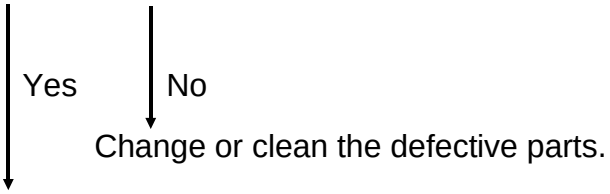

Replace the main control board.

2. SERVICE CALL CONDITIONS

NOTE: 1) E-codes are displayed in the copy counter. The "E" and the "code number" are displayed alternatively.

2) To clear the service call condition, turn the main switch off and on.

3) When a fusing service call conditions occurs (example E52) , for safety reasons they cannot be cleared by turning the main switch off/on. The following procedure must be performed to clear these service call conditions.
   1. After repairing the machine, turn on the main switch.
   2. Enter SP mode 97.
   3. Turn the main switch off and on.

CODE #11 — EXPOSURE LAMP ERROR 1

- Definition -

- The feedback signal becomes higher than 4.2 volts (rms) for 1.0 second when the exposure lamp is on.
- The feedback signal becomes higher than 1.0 volt (rms) for 1.0 second when the exposure lamp is off.

- Possible Causes -

- Triac short circuit
- Exposure lamp open
- Thermofuse open

CODE #12 — EXPOSURE LAMP ERROR 2

- Definition -

- The feedback signal falls below 0.5 volt (rms) for 1.0 second when the exposure lamp is on.
- The exposure lamp stays on for longer than 25 seconds.

- Possible Causes -

- Defective ac drive/dc power supply board
- Defective main control board
- Defective power supply circuit

CODE #13 — ZERO CROSS SIGNAL ERROR

- Definition -

The CPU does not receive the zero cross signal within 2.0 seconds, or the interval between zero cross signals is more than 2.0 seconds.

- Possible Causes -

- Defective main control board
- Defective ac drive/dc power supply board
- Zero cross line open
- CN101 on the main control board or CN207 on the ac drive/dc power supply board is not correctly connected.

⟹ SC CODE#14

- Definition -

The detected current is neither 50 or 60 Hz.

- Possible Causes -

- Defective main Control Board
- Defective AC Drive / DC Power Supply Board
- Zero Cross line open
- CN101 on the Main Conrol Board or CN207 on the AC Drive / DC Power Supply Board is not correctly connected
- Power line is not stable

* to Clear Service Code 14:

- Turn the Main Power Switch "OFF" and "ON"

CODE #21 — SCANNER HOME POSITION ERROR 1

- Definition -

The scanner home position sensor’s output remains LOW (de-actuated) for 10 seconds after the main switch is turned on, or the output remains LOW (de-actuated) after the scanner returns during the copy process.

- Possible Causes -

- Defective home position sensor
- Defective scanner drive motor
- Defective main control board
- Defective ac drive/dc power supply board
- Defective scanner drive circuit

CODE #22 — SCANNER HOME POSITION ERROR 2

- Definition -

The scanner home position sensor's output remains HIGH (actuated) for 4.0 seconds after the main switch is turned on, or the output remains HIGH (actuated) for 0.3 seconds after the scanner starts.

- Possible Causes -

- Defective home position sensor
- Defective scanner drive motor
- Defective main control board
- Defective ac drive/dc power supply board
- Defective scanner drive circuit
- F2 on the ac drive/dc power supply board open (blown fuse).

CODE #2A — 4TH/5TH MIRROR HOME POSITION ERROR 1

- Definition -

The 4th/5th mirror home position sensor's output remains LOW for 10 seconds after driving the 4th/5th mirror motor.

- Possible Causes -

- Defective 4th/5th mirror home position sensor
- Defective 4th/5th mirror motor
- Defective 4th/5th mirror drive mechanism

CODE #2B 4TH/5TH MIRROR HOME POSITION ERROR 2

- Definition -

The 4th/5th mirror home position sensor's output remains HIGH for 10 seconds after driving the 4th/5th mirror motor.

- Possible Causes -

- Defective 4th/5th mirror home position sensor
- Defective 4th/5th mirror motor
- Defective 4th/5th mirror drive mechanism
- F2 on the ac drive/dc power supply board open (blown fuse)

CODE #28 — LENS HOME POSITION ERROR 1

- Definition -

The lens home position sensor's output remains LOW (de-actuated) for 10 seconds after the unit moves to the home position.

- Possible Causes -

- Defective lens home position sensor
- Defective lens drive motor
- Defective main control board
- Defective lens drive mechanism

CODE #29 — LENS HOME POSITION ERROR 2

- Definition -

The lens home position sensor's output remains HIGH (actuated) for 10 seconds after the unit leaves the home position.

- Possible Causes -

- Defective lens home position sensor
- Defective lens drive motor
- Defective main control board
- Defective lens drive mechanism

CODE #40 — OPTICS THERMISTOR ERROR

-Definition-

The optics thermistor is open.

- Possible Cause -

- Defective optics thermistor
- Defective main control board
- CN121 on the main control board is not correctly connected.

CODE #42 — HIGH VOLTAGE LEAKAGE

- Definition -

The high voltage supply board detects the leakage and sends the leak signal to the main control board for more than 1 second.

- Possible Causes -

- Transfer charge unit
- High voltage supply board
- Main control board (CN102-1)

CODE #52 — FUSING ERROR 1

- Definition -

The temperature detected by the thermistor does not reach 100°C within 24 (NA) or 35 (EU) seconds after the main switch is turned on.
To clear this error, refer to note 3 at the beginning of this chapter.

- Possible Causes -

- Defective fusing thermistor
- Fusing lamp open
- Defective ac drive/dc power supply board
- Defective main control board
- CN101 on the main control board or CN207 on the ac drive/dc power supply board is not correctly connected.

CODE #53 — FUSING ERROR 2

- Definition -

The temperature detected by the thermistor becomes higher than 255°C.
To clear this error, refer to note 3 at the beginning of this chapter.

- Possible Causes -

- Thermistor short
- Defective ac drive/dc power supply board
- Defective main control board
- Fusing harness shorted
- Triac short

CODE #54 — FUSING ERROR 3

- Definition -

The fusing lamp stays on for longer than 38 (NA) or 57 (EU) seconds while the main motor is off.
To clear this error, refer to note 3 at the beginning of this chapter.

- Possible Causes -

- Main board
- Defective ac drive/dc power supply board

CODE #55 — FUSING ERROR 4

- Definition -

- The temperature value output by the thermistor has not changed at all 16 (NA) or 20 (EU) seconds after the main switch is turned on.
- The temperature change detected by the thermistor is more than 20°C within any one second after the 16 (NA) or 20 (EU) seconds warm up time after the main switch is turned on.
  To clear this error, refer to note 3 at the beginning of this chapter.

- Possible Causes -

- Thermistor open
- Defective main control board
- Defective ac drive/dc power supply board
- Fusing lamp open
- Poor thermistor connection

3. ELECTRICAL COMPONENT DEFECTS

3.1 SENSORS

Component	Condition	Symptom
4th/5th Mirror Home Position Sensor (S1)	Stays HIGH (CN114-2)	Service code E2B is displayed.
	Stays LOW (CN114-2)	Service code E2A is displayed.
ADS Sensor (S2)	Stays HIGH (CN114-5)	The image density will be abnormal. (Dirty background)
	Stays LOW (CN114-5)	The image density will be abnormal. (Light copies)
Tray Paper End Sensor (S3)	Stays HIGH (CN109-6)	The Load Paper indicator lights even if paper is present.
	Stays LOW (CN109-6)	The Load Paper indicator does not light even if there is no paper.
Registration Sensor (S4)	Stays HIGH (CN125-2)	Paper misfeed type A occurs whenever a copy is mode.
	Stays LOW (CN125-2)	The Paper Misfeed B indicator lights even if there is no paper.
By-pass Feed Paper End Sensor (S5)	Stays HIGH (CN125-4)	The Load Paper indicator lights even if paper is placed on the by-pass feed table.
	Stays LOW (CN125-4)	The Load Paper indicator does not light even if there is no paper on the by-pass feed table.
Exit Sensor (S6)	Stays HIGH (CN127-2)	Paper misfeed type C occurs whenever a copy is mode.
	Stays LOW (CN127-2)	The Paper Misfeed C indicator lights even if there is no paper.
Scanner Home Position Sensor (S7)	Stays HIGH (CN120-2)	Service code E22 is displayed.
	Stays LOW (CN120-2)	Service code E21 is displayed.
Lens Home Position Sensor (S8)	Stays HIGH (CN115-2)	Service code E29 is displayed.
	Stays LOW (CN115-2)	Service code E28 is displayed.
Toner Density (TD) Sensor (S9)	Stays HIGH (CN124-5)	The toner near/end condition will not be cleared even if new toner is added.
	Stays LOW (CN124-5)	User code U6 is displayed when installing a new developer. During normal usage, the Manual Image Density or the ADS indicators start blinking.

3.2 SWITCHES

Component	Condition	Symptom
Main Switch (SW1)	OPEN	The copier does not turn on.
	SHORT	The copier does not turn off.
Interlock Switch (SW2)	OPEN	The copier does not turn on.
	SHORT	The copier does not turn off when the upper unit is opened.
Tray Paper Size Switch (SW3)	OPEN	The copier detects the paper tray open condition even if the paper tray unit is closed.
	SHORT	The copier detects the paper tray closed condition even if the paper tray unit is opened.
Right Vertical Guide Switch (SW4)	OPEN	User code U1 is displayed.
	SHORT	The user code U1 will not be displayed even if the right vertical guide is opened.

4. BLOWN FUSE CONDITIONS

FUSE	Rating		Symptom when turning on the Main Switch
	120 V	230 V	
AC Drive/DC Power Supply Board			
F1	15 A/125 V	T6.3 A/250 V	No response
F2	8 A/125 V	T6.3 A/250 V	E2B is displayed
F3	3.15 A/125 V	T3.15 A/250 V	No response
F4	5 A/125 V	T3.15 A/250 V	No response

5. USER CODES

U - code	Contents
U1	Right vertical guide opened
U2	Key counter not set (JP101 is cut)
U4	Optional sorter not set
U6	Developer not installed

DOCUMENT FEEDER
A662

1. SPECIFICATIONS

Original Size:	Maximum: A3 or 11" x 17" Minimum: A5 Lengthwise or 5 1/2" x 8 1/2"
Original Weight:	52 to 105 g/m^2 (14 to 28 lb)
Original Feed:	Automatic Feed - ADF mode Semi-automatic Feed - SADF mode
Original Tray Capacity:	30 sheets - 80 g/m^2 (20 lb)
Original Set:	Face up, first sheet on top
Original Separation:	Feed roller and friction belt
Original Transport:	One flat belt
Copying Speed:	15 copies/minute (A4 lengthwise or 8 1/2" x 11" lengthwise)
Power Consumption:	45 W
Dimensions (W x D x H):	590 x 443 x 87.5 mm (23.3" x 17.5" x 3.4") (Not including the original table)
Weight:	Approximately 7 kg (15.5 lb)

- Specifications are subject to change without notice.

2. COMPONENT LAYOUT

2.1 MECHANICAL COMPONENTS

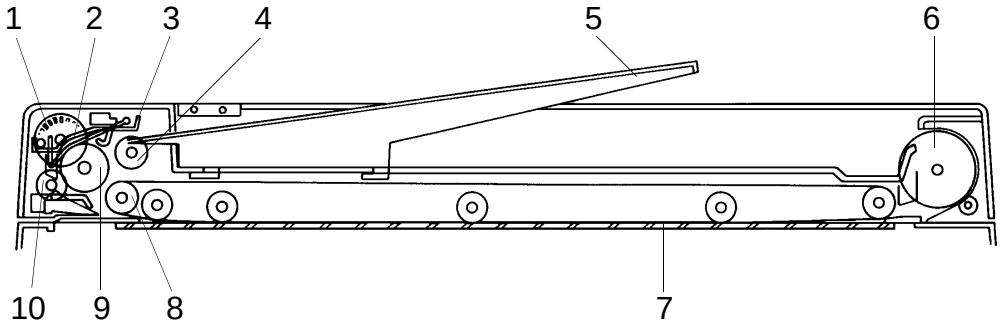

1. Pulse Generator Disk
2. Friction Belt
3. Pick-up Lever
4. Pick-up Roller
5. Original Table
6. Exit Roller
7. Transport Belt
8. Transport Belt Roller
9. Feed Roller
10. Relay Roller

2.2 ELECTRICAL COMPONENTS

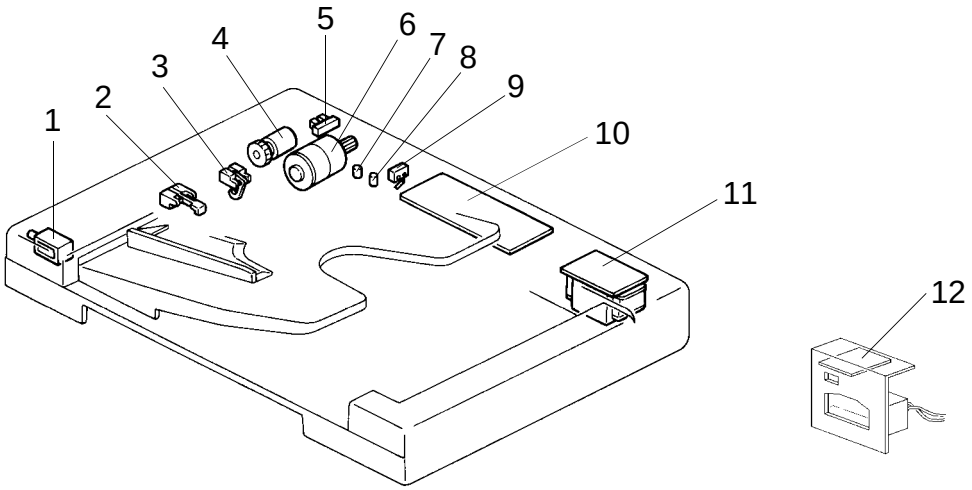

1. Pick-up Solenoid
2. Registration Sensor
3. Original Set Sensor
4. Feed Clutch
5. Pulse Generator Sensor
6. DF Motor
7. Insert Original Indicator
8. SADF Indicator
9. Lift Switch
10. DF Main Board
11. DF Transformer
12. DF Interface Board

3. ELECTRICAL COMPONENT DESCRIPTIONS

Symbol	Name	Function	Index No.
Motor			
M1	DF	Drives all the document feeder components.	6
Solenoid			
SOL1	Pick-up Solenoid	Energizes to press the pick-up lever against the stack of originals in preparation for original feed-in.	1
Clutch			
CL1	Feed Clutch	Turns on to transmit main motor rotation to the feed roller.	4
Switch			
SW1	Lift Switch	Informs the CPU when the DF is lifted and also serves as the misfeed reset switch for the DF.	9
Sensors			
S1	Pulse Generator Sensor	Supplies timing pulses to the DF main board.	5
S2	Original Set Sensor	Informs the copier CPU that originals have been placed and causes the Insert Original indicator to go out.	3
S3	Registration Sensor	Sets original stop timing and checks for original misfeeds.	2
Printed Circuit Board			
PCB1	DF Main Board	Controls all DF functions.	10
PCB2	DF Interface Board	Interfaces between the copier main board and the DF.	12
Transformer			
TR1	DF Transformer	Steps down the wall voltage to 25 volts ac.	11
LEDs			
LED1	SADF Indicator	Informs the operator that the SADF mode is available.	8
LED2	Insert Original Indicator	Turns off when the originals are inserted into the original table.	7

4. POWER DISTRIBUTION

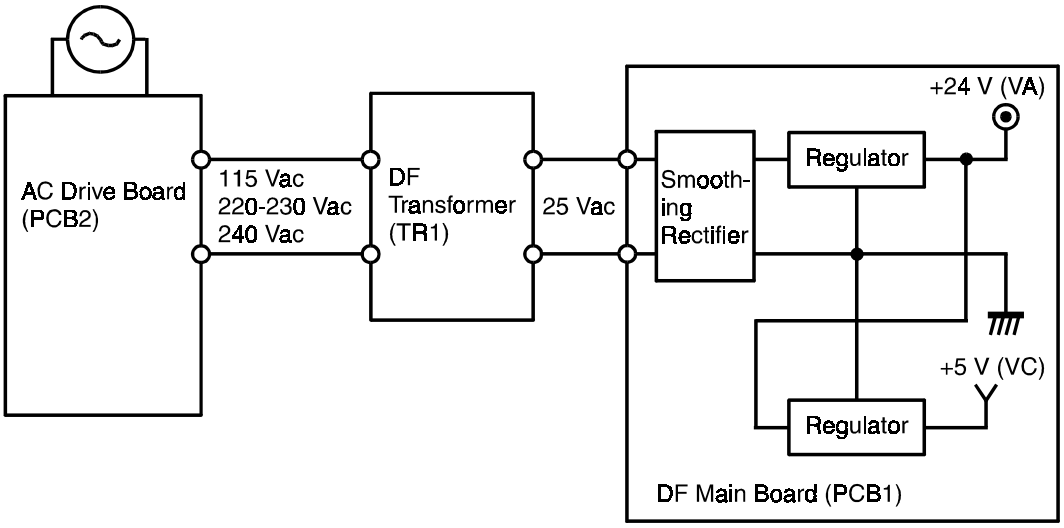

The document feeder uses two dc power levels: +24 volts, and +5 volts.

When the main switch is turned on, the DF transformer receives the wall outlet ac power through the ac drive board and outputs 25 volts ac to the DF main board. Then, the dc power supply circuit on the DF main board converts the 25 volts ac input to +24 volts and +5 volts.

+24 volts is used by the DF motor, the pick-up solenoid, and the feed clutch. +5 volts is used by other electrical components.

5. BASIC OPERATION

When the main switch is turned on, the DF CPU sends the "DF installed" signal to the copier CPU. Receiving this signal, the copier CPU recognizes that the document feeder is installed and sends the "DF confirmed" signal to the DF CPU.

When originals are placed on the original table, the Insert Original indicator turns off and the DF CPU sends the "original set" signal to the copier CPU to inform that the originals have been set.

When the Start key is pressed, the copier CPU sends the "feed-in" signal to the document feeder. On receipt of this signal, the DF CPU energizes the DF motor, then the pick-up solenoid and feed clutch to feed in the bottom sheet of the original stack onto the exposure glass. The pick-up solenoid, and the feed clutch remain energized until the original's leading edge reaches the registration sensor. The DF motor turns off shortly after the original's trailing edge passes the registration sensor. Then, the DF motor pauses and reverses for a moment to align the edge of the original with the scale.

Then the scanner starts to move, (scanner start timing does not depend on the progress of the original through the DF; it starts at a fixed time after the Start key is pressed). When the scanner reaches the return position, the copier CPU sends the "original change" signal to the DF CPU in order to feed out the current original and feed in the next original.

6. INTERFACE CIRCUIT

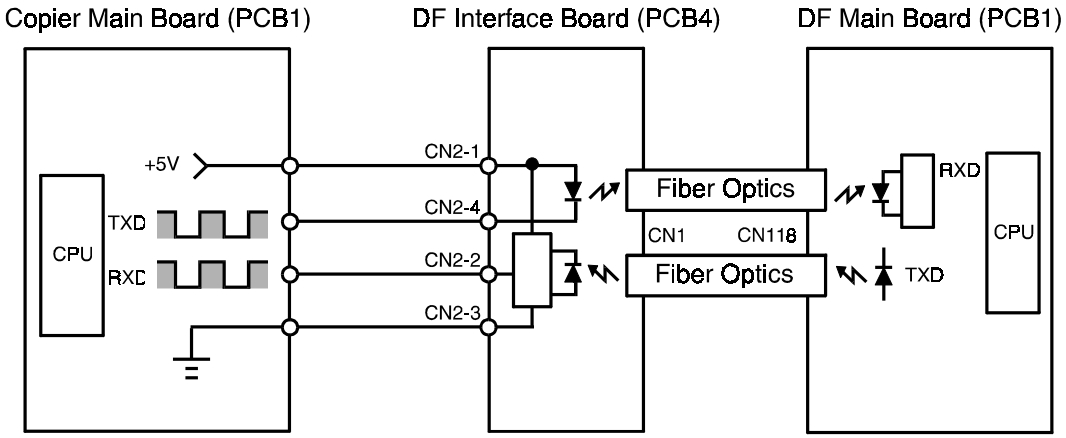

The copier CPU and the DF CPU communicate via the interface board using fiber optics. The interface board changes the optical signals to electrical signals (and vice versa).

7. ORIGINAL FEED

7.1 ORIGINAL PICK-UP MECHANISM

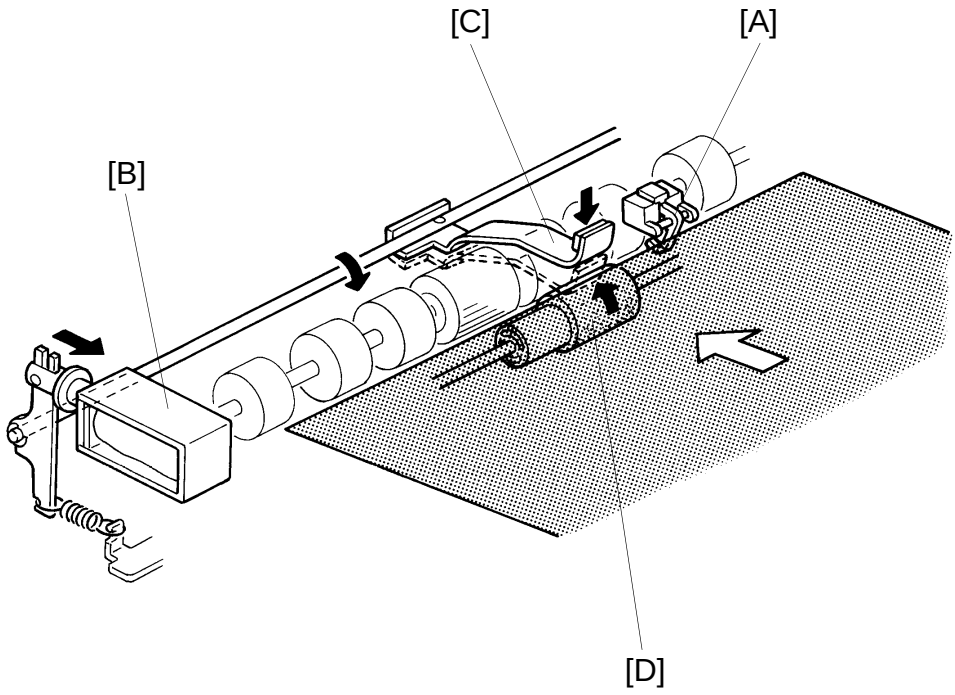

After setting the originals on the original table, the originals contact the feeler [A] of the original set sensor and cause the feeler to move out of the sensor. The DF CPU then sends the original set signal to the copier CPU to inform it that the document feeder will be used. When the Start key is pressed, the pick-up solenoid [B] is energized. The original stack is then pressed between the pick-up lever [C] and pick-up roller [D]. The rotation of the pick-up roller advances the bottom original.

7.2 ORIGINAL SEPARATION MECHANISM

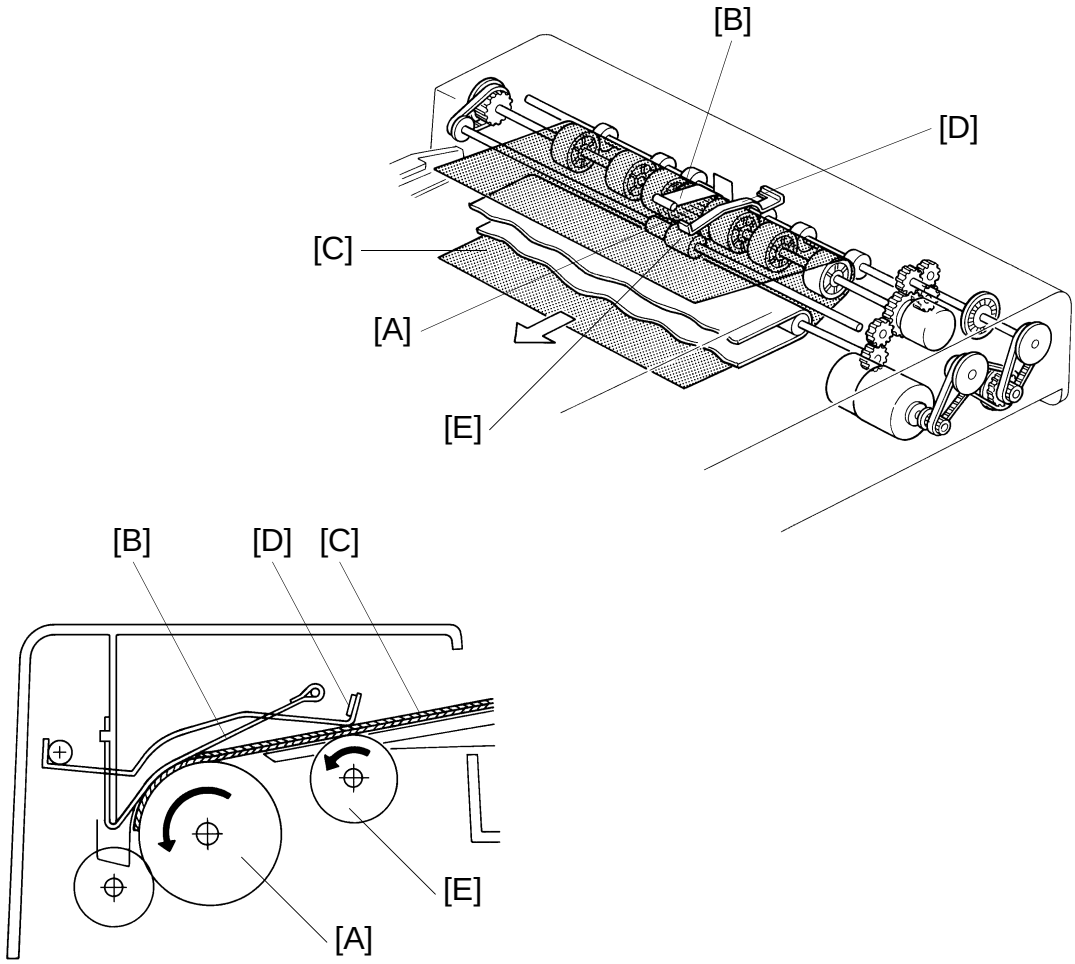

The feed roller [A] and the friction belt [B] are used to feed in and separate the originals [C]. Only the bottom original is fed because the friction belt prevents any other originals from feeding.

Original feed starts when the pick-up lever [D] presses the original stack and the rotation of the pick-up roller [E] advances the bottom original of the stack. The feed roller moves the original past the friction belt because the driving force of the feed roller is greater than the resistance of the friction belt. The friction belt prevents multiple feeds because the resistance of the friction belt is greater than the friction between original sheets.

7.3 ORIGINAL FEED-IN MECHANISM

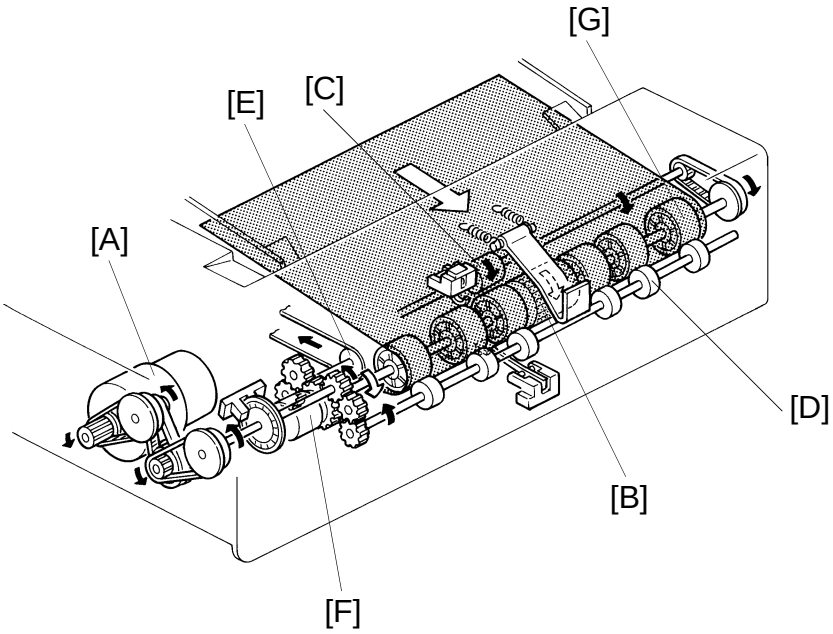

The DF motor [A] drives the feed roller [B], the pick-up roller [C], the relay rollers [D], and the transport belt roller [E] via timing belts and a gear train. The feed roller and the pick-up roller are controlled by the feed clutch [F], but the relay rollers and the transport roller are directly driven by the DF motor. The idler rollers [G] on the feed roller shaft are free from the shaft.

When the Start key is pressed, the DF motor is energized and the relay rollers and transport belt roller start turning. 100 milliseconds after the DF motor starts turning, the pick-up solenoid and the feed clutch are energized. The pick-up and feed rollers then start turning and carry the original between the relay rollers and the idler rollers. The pick-up solenoid and the feed clutch are de-energized when the original's leading edge passes through the registration sensor.

The DF motor remains energized to deliver the original to the exposure glass until a certain number of pulses (10 to 25 pulses) after the original's trailing edge passes through the registration sensor. Then, the DF motor pauses and reverses for 15 pulses to align the edge of the original with the scale.

To feed the second original, the DF motor starts rotating when the scanner reaches the return position. (The copier CPU sends the original change signal to the DF CPU.) At this time, the transport belt starts carrying the first original on the exposure glass to the exit roller. The timing for when the pick-up solenoid and the feed clutch are energized for the second original depends on the length of the first original detected by the registration sensor.

7.4 ORIGINAL FEED-OUT MECHANISM

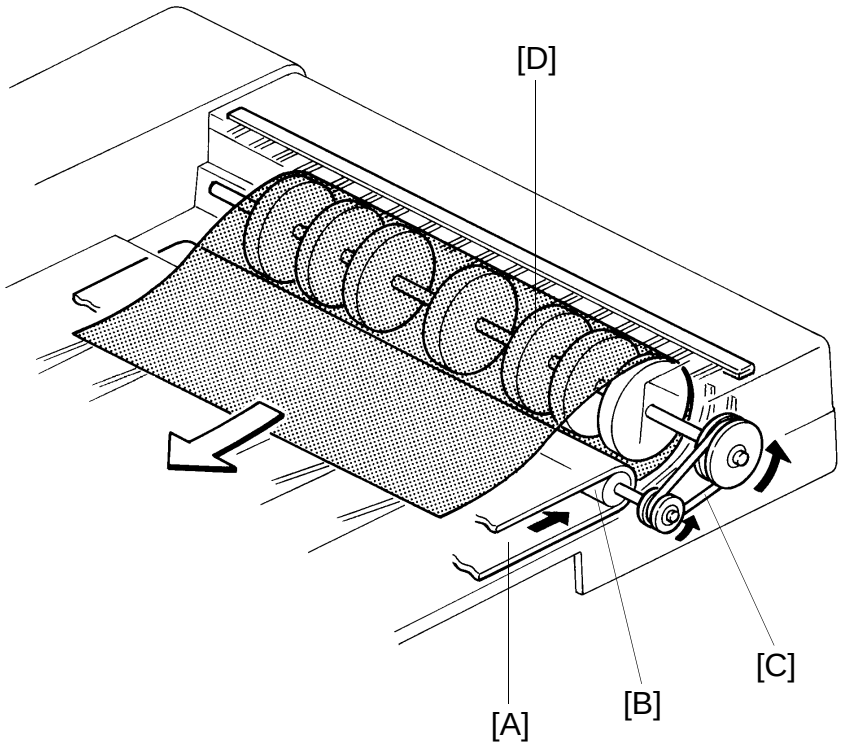

The exit rollers are driven by the DF motor through a gear train, the transport belt roller, the transport belt [A], the transport belt roller [B], and the exit roller drive belt [C]. When the DF CPU receives the original change signal from the copier CPU, the DF motor starts turning. Simultaneously, the transport belt carries the original to the exit rollers [D] and the exit rollers take over the original feed-out.

7.5 DF MOTOR CIRCUIT

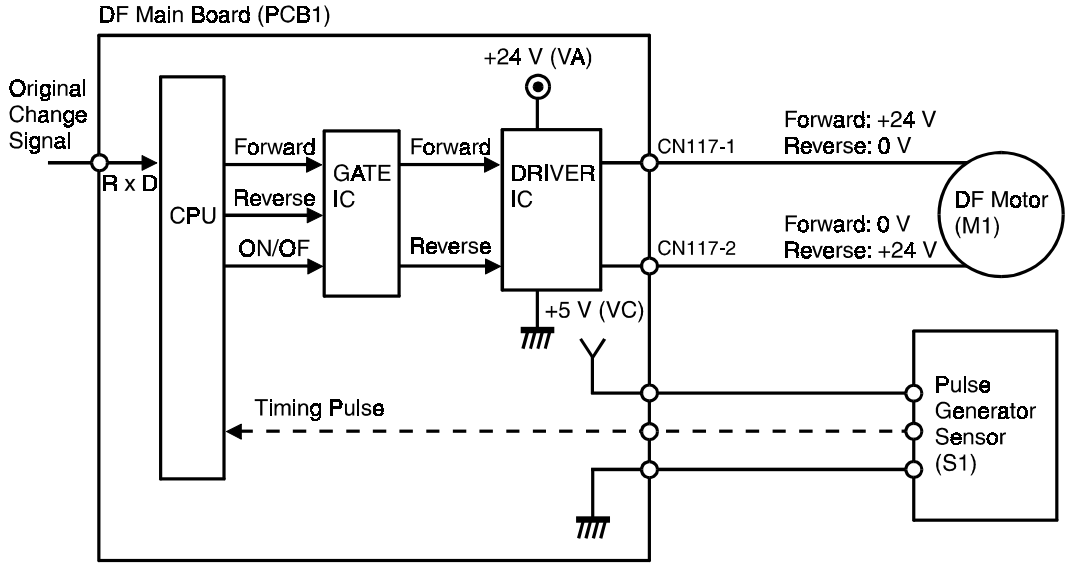

The DF motor is a 24 volt dc motor. When the CPU receives the feed signal from the copier, the CPU outputs the ON signal and the Forward signal to the gate IC. On receipt of the forward signal from the gate IC, the driver IC outputs 24 volts to CN117-1 and 0 volts to CN117-2. This causes the DF motor to start turning in the forward direction.

Within 10 to 25 pulses after the original's trailing edge passes through the registration sensor, the CPU stops sending the ON signal and the Forward signal. The DF motor stops turning. Then the CPU outputs the ON signal and the reverse signal for 15 pulses. Then the driver IC outputs 0 volts to CN117-1 and +24 volts to CN117-2 to reverse the DF motor.

7.6 ORIGINAL FEED AND MISFEED DETECTION TIMING

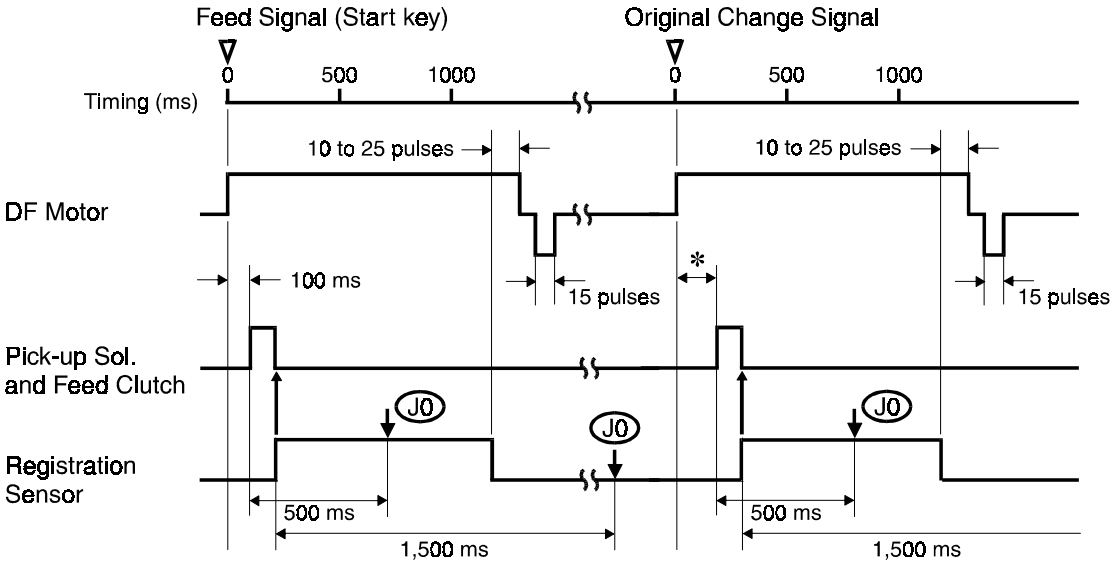

*: The timing depends on the length of the first original.

The above chart shows the original feed timing for the original size of A4 lengthwise or 8.5" x 11" and the misfeed detection timing.

The registration sensor is used for misfeed detection. If the DF CPU detects a misfeed, the DF CPU lights the Original Misfeed indicator and sends the original misfeed signal to the copier CPU. Then the copier CPU lights the Check Paper Path and Misfeed Location (J0) indicators on the operation panel.

When the main switch is turned on, the DF CPU checks the registration sensor output for initial original misfeed.

During original feed-in, the DF CPU performs two kinds of original misfeed detection:

1. Whether the registration sensor is actuated within 500 milliseconds after the pick-up solenoid and the feed clutch turn on.
2. Whether the original has passed through the registration sensor 1,500 milliseconds after the registration sensor has been actuated.

8. SERVICE TABLES

8.1 DIP SWITCHES

DPS 1				Function
1	2	3	4	
0	0	0	0	Normal Setting
1	0	0	1	Free Run
0	0	1	1	Solenoid Test
1	1	0	1	Motor Test
1	1	1	1	All Indicators On

NOTE: All the functions are executed when the DF is closed.

8.2 VARIABLE RESISTORS

VR No.	Function
VR1	Adjusts registration

8.3 FUSE

Fuse No.	Rating	Blown Fuse Condition
F1	F2 A/250 V	DF will not operate.

9. REPLACEMENT AND ADJUSTMENT

9.1 TRANSPORT BELT REPLACEMENT

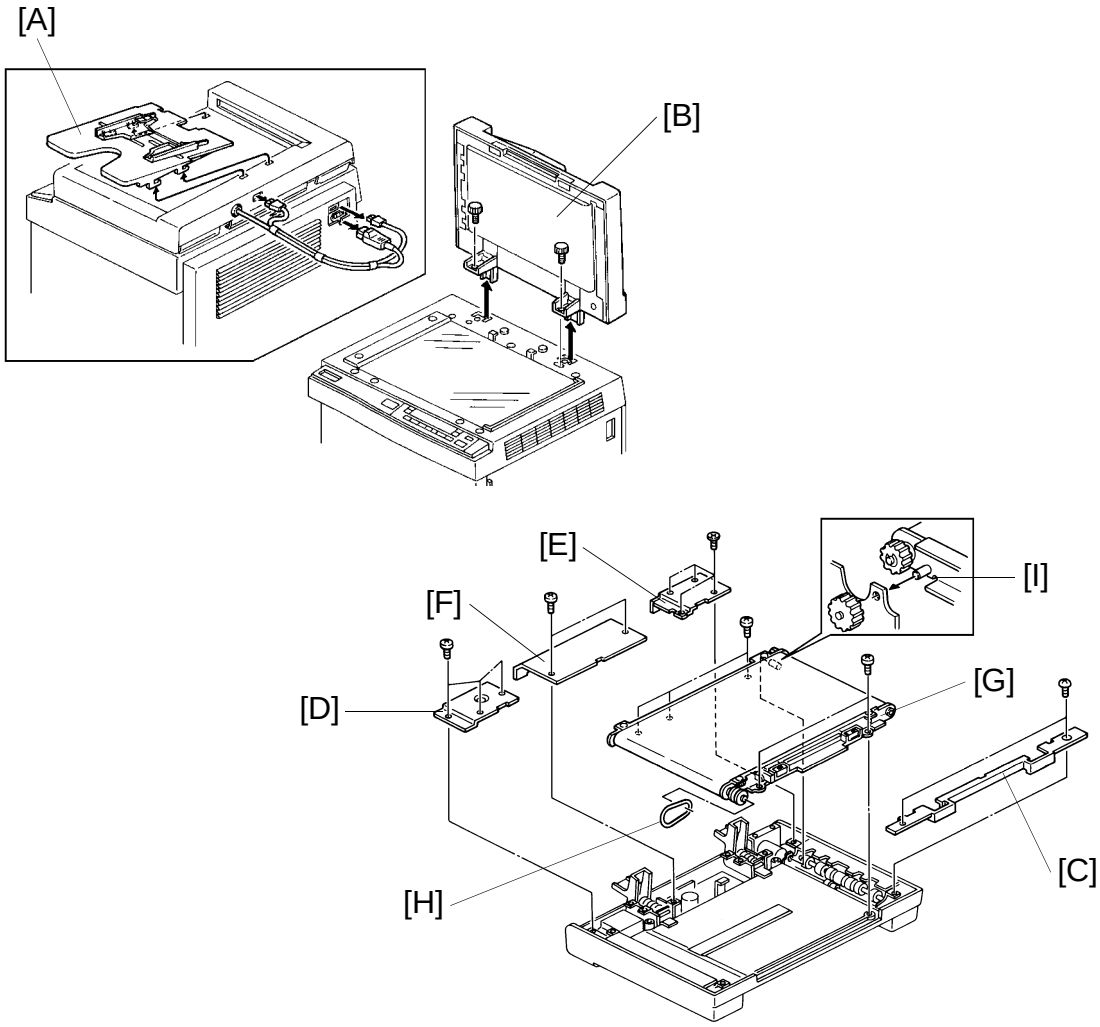

1. Turn off the main switch.
2. Remove the original table [A].
3. Remove the DF [B] from the copier (2 knob screws, 1 power supply cord, and 1 optics harness).
4. Remove the grip guide [C] (2 screws).
5. Remove the transformer cover [D] (3 screws), DF motor cover [E] (4 screws) and main board cover [F] (2 screws).
6. Remove the transport belt assembly [G] (5 screws and 1 drive belt [H]).

   NOTE: When installing the transport belt assembly, make sure that the positioning pin [I] fits into the DF frame.

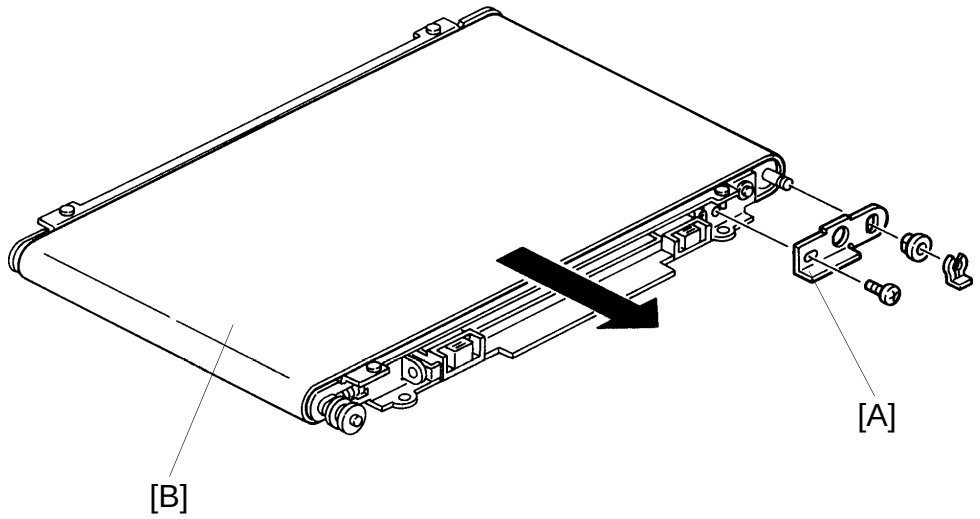

7. Remove the transport roller holder [A] (1 screw, 1 snap ring and 1 bearing).
8. Pull out the transport belt [B].

   NOTE: After reinstalling the transport belt, make sure that the bushings of the transport rollers set correctly and the transport belt turns smoothly.

9.2 FEED-IN UNIT REMOVAL

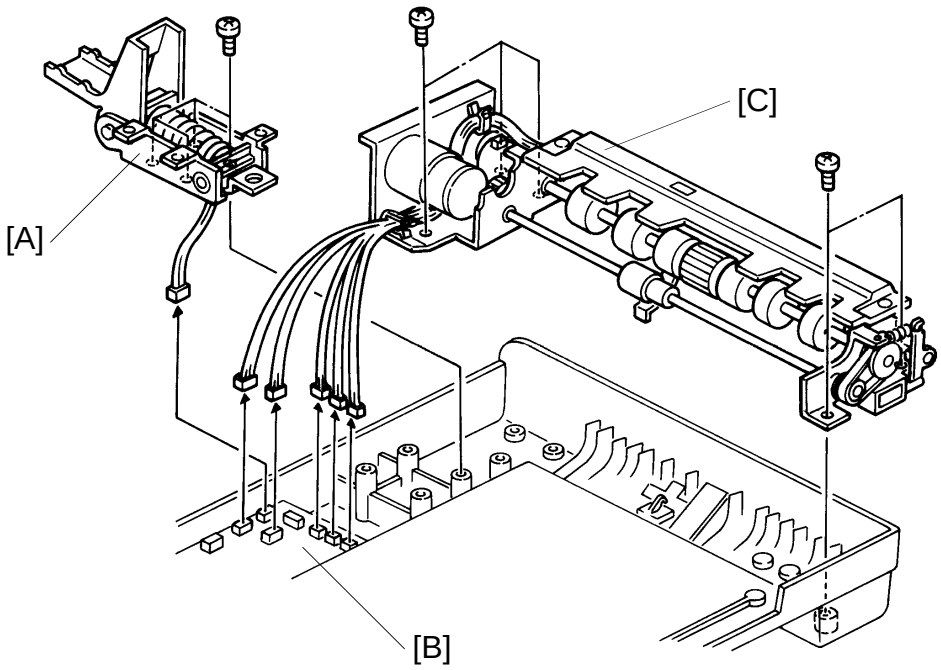

1. Turn off the main switch.
2. Remove the transport belt assembly. (See Transport Belt Replacement.)
3. Remove the left hinge bracket [A] (4 screws and 1 connector).
4. Disconnect five connectors from the main board [B] (CN111, CN113, CN115, CN116 and CN117).
5. Remove the feed-in unit [C] (5 screws).

NOTE: When reinstalling the feed-in unit, the harness must be positioned underneath the right hinge bracket.

9.3 PICK-UP ROLLER REPLACEMENT

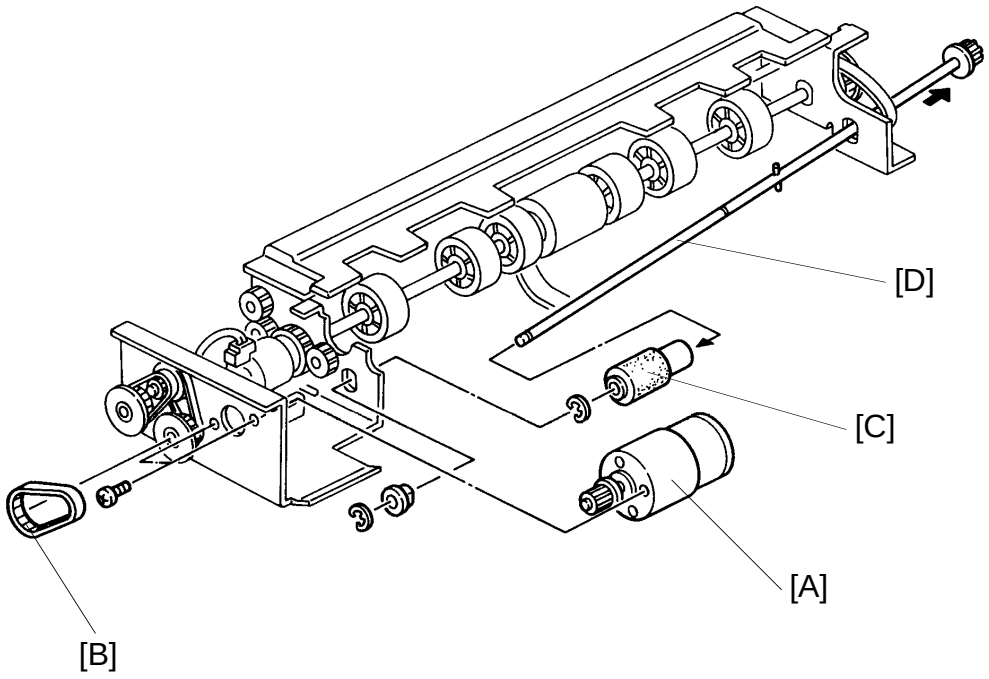

1. Turn off the main switch.
2. Remove the feed-in unit. (See Feed-in Unit Removal.)
3. Remove the DF motor [A] (2 screws and 1 timing belt [B]).
4. Remove the pick-up roller [C] (2 E-rings and 1 bushing) from the shaft [D].

9.4 FEED ROLLER REPLACEMENT

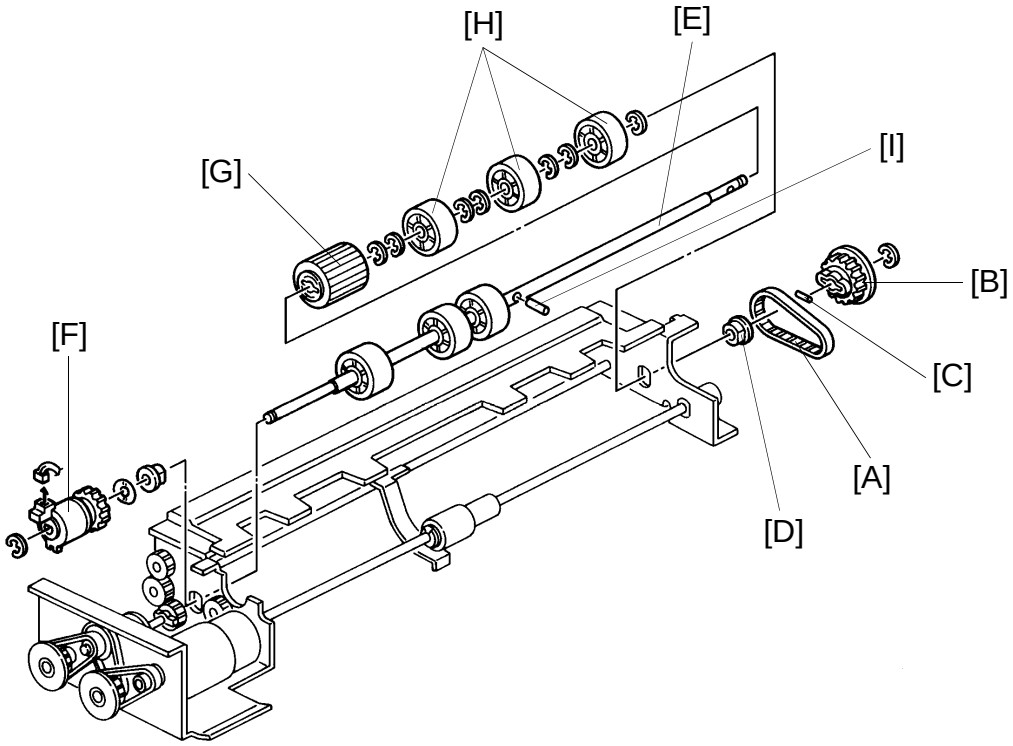

1. Turn off the main switch.
2. Remove the feed-in unit. (See Feed-in Unit Removal.)
3. Remove the feed roller timing belt [A], feed roller gear [B] (1 E-ring and 1 spring pin [C]) and 1 bushing [D].

   NOTE: Be careful not to lose the spring pin.
4. Slide the feed roller shaft [E] towards the front and remove the feed clutch [F] (1 E-ring and 1 connector).
5. Take out the feed roller shaft (1 spacer and 1 bushing ----- from the rear side).
6. Remove the feed roller [G] from the shaft (3 idler rollers [H], 7 E-rings and 1 spring pin [I]).

   NOTE: Be careful not to lose the spring pin.

9.5 FRICTION BELT REPLACEMENT

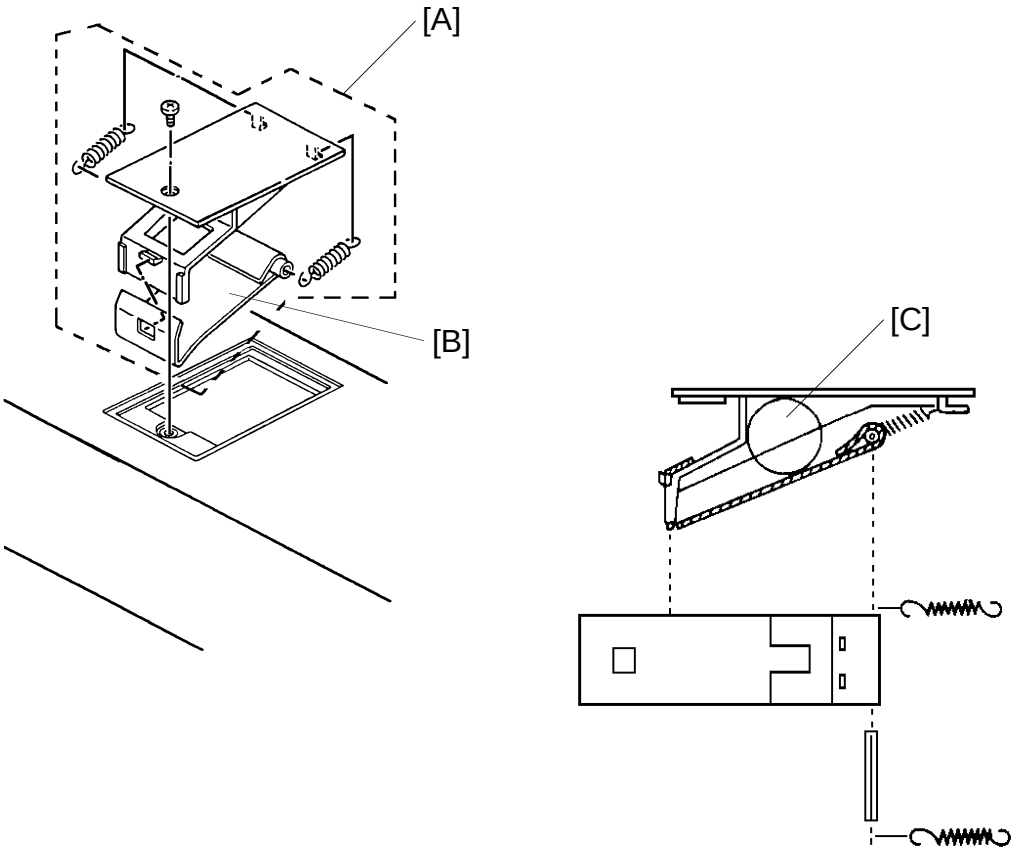

1. Turn off the main switch.
2. Remove the friction belt assembly [A] (1 screw).
3. Remove the friction belt [B] (2 springs, 1 pin).

NOTE: When installing the friction belt assembly, make sure the feed roller [C] is set in the correct position. (See the illustration.)

9.6 PICK-UP SOLENOID ADJUSTMENT

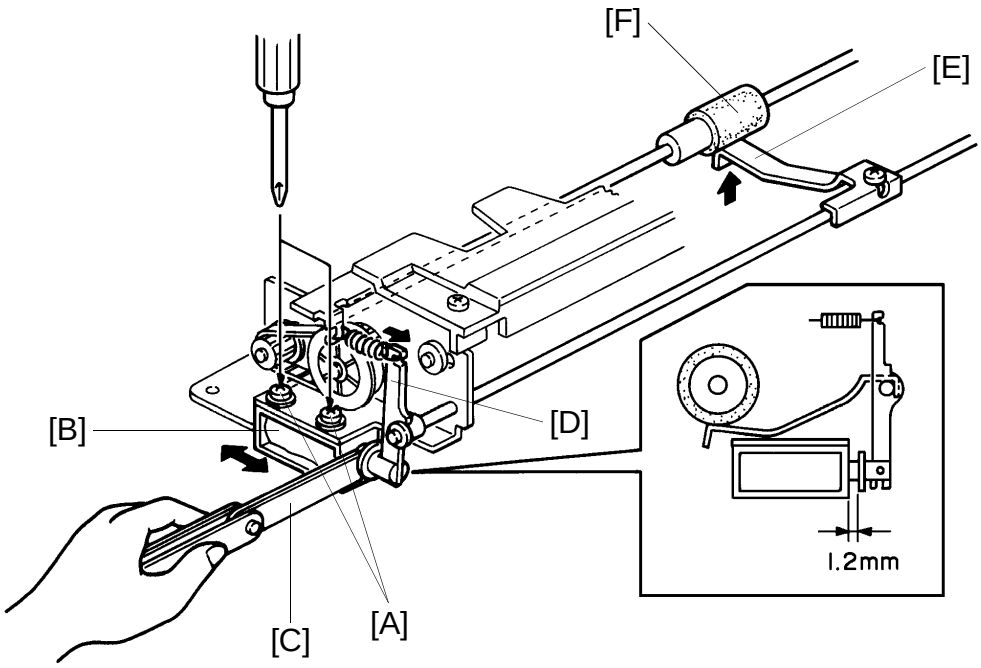

1. Turn off the main switch.
2. Remove the feed-in unit. (See Feed-in Unit Removal.)
3. Loosen two screws [A] securing the pick-up solenoid [B].
4. Place a 1.2 mm thickness gauge [C] between the plunger and the solenoid.
5. Turn the solenoid lever [D] clockwise until the plunger touches the thickness gauge. Just at this point, tighten two screws.
6. Make sure that the pick-up lever [E] is touching the pick-up roller [F] when the plunger is pushed. If not, repeat steps 3 to 5.
7. Reassemble the DF.
8. Turn on the main switch and check the original feed-in operation.

SORTER
A657

1. SPECIFICATIONS

Number of Bins: 10 bins

Paper Size for Bins:

Sort/Stack Mode:
Maximum: A3, 11" x 17"
Minimum: A5, 5 1/2" x 8 1/2"

Non-Sort/Stack Mode:
Maximum: A3, 11" x 17"
Minimum: A6 Lengthwise, 5 1/2" x 8 1/2"

Paper Weight: Sort/Stack Mode: 64 to 90 g/m^2 (17 to 24 lb)
Non-Sort/Stack Mode: 52 to 162 g/m^2 (14 to 43 lb)

Bin Capacity:

	Sort/ Stack Mode (All Bins)	Non Sort/ Stack Mode (Top Bin)
A4, 8 1/2" x 11" or less	20	100
B4, 8 1/2" x 14"	15	100
A3, 11" x 17"	10	100

Power Source: +5 volts and +24 volts from the copier

Power Consumption: 15 W

Dimensions (W x D x H): 402 mm x 447 mm x 217 mm
(15.7" x 17.5" x 8.5")

Weight: 7.5 kg (16.5 lb)

2. COMPONENT LAYOUT

- Mechanical Components -

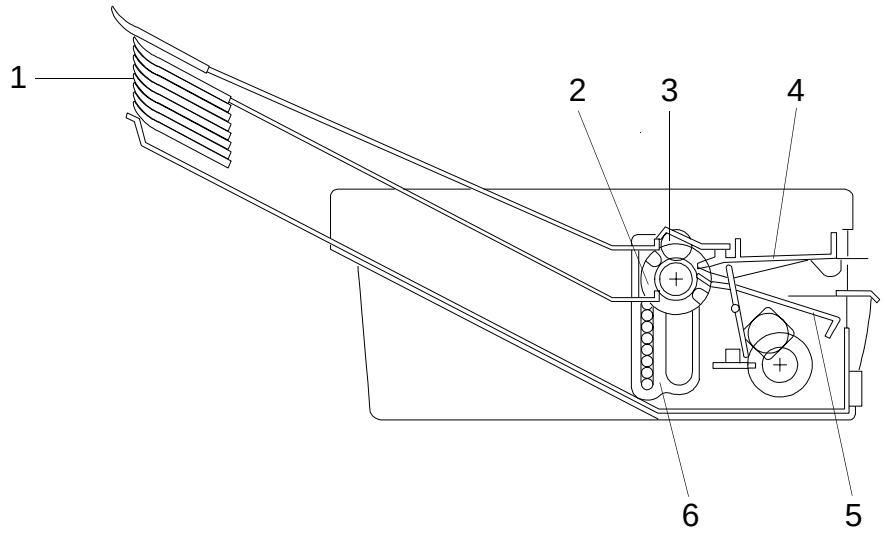

A657V500.wmf

1. Bins
2. Transfer Wheel
3. Exit Roller
4. Upper Paper Guide
5. Lower Paper Guide
6. Bin Guide

- Electrical Components -

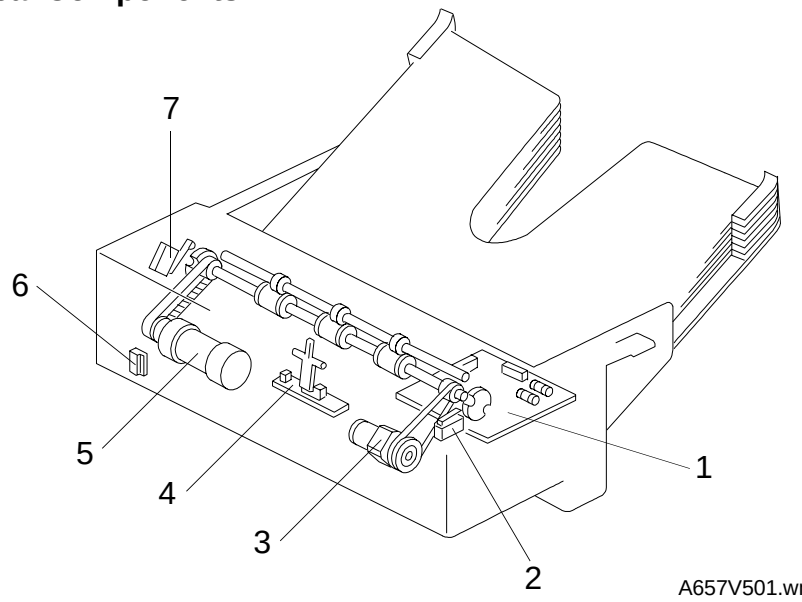

A657V501.wmf

1. Sorter Main Board
2. Wheel Switch
3. Roller Drive Motor
4. Paper Sensor
5. Bin Drive Motor
6. Sorter Switch
7. Bin Home Position Switch

3. ELECTRICAL COMPONENT DESCRIPTIONS

Symbol	Name	Function	Index No.
Motors			
M1	Roller Drive Motor	This dc motor drives the lower exit rollers.	3
M2	Bin Drive Motor	This reversible dc motor moves the bins up or down.	5
Switches			
SW1	Wheel Switch	Detects the rotation of the transfer wheel and stops it in the correct position.	2
SW2	Sorter Switch	This reed switch becomes activated when the sorter is in the proper position (aligned next to the copier). It also works as a jam reset switch for the sorter.	6
SW3	Bin Home Position Switch	Informs the CPU that all the bins are lowered.	7
Sensors			
S1	Paper Sensor	Serves as the misfeed sensor for the sorter and also sets exit roller and bin drive timing.	4
Printed Circuit Boards			
PCB1	Sorter Main Board	Serves as the communication board between the copier main board and the sorter.	1

4. BASIC OPERATION

- Clear Mode (PROOF MODE) -

When the main switch of the copier is turned on, the sorter automatically assumes clear mode. In this mode, all copies are stacked in the first bin. The sorter also assumes clear mode when interrupt mode is selected.

Sorter operation begins when the copier sends the paper feed signal to the selected paper feed station. At this time, the roller drive motor energizes. When the paper exits onto the sorter bin, the paper sensor is de-activated and the roller drive motor is then de-energized. The copier main board monitors the paper sensor through the sorter main board to check for paper misfeeds.

- Sort Mode -

In this mode, all copies of the first original are delivered to separate bins starting from the top. The copies of the second original are delivered to the same bins, but starting from the bottom. The copies of the third original start from the top and so on. At 400 milliseconds after the copy has gone through the paper sensor, the bin drive motor turns on to advance the bins one step.

- Stack Mode -

In this mode, all copies of the first original are delivered to the first bin, all copies of the second original are delivered to the second bin, and so on. At 400 milliseconds after the last copy of the original has gone through the paper sensor, the bin drive motor turns on to advance the bins one step.

5. EXIT ROLLER DRIVE MECHANISM

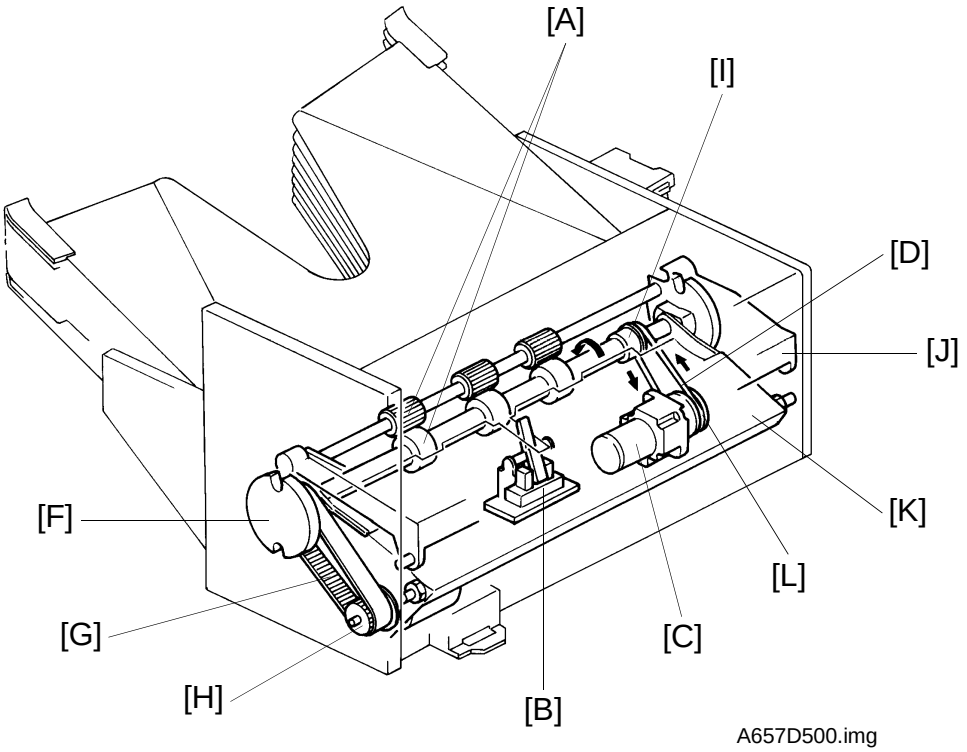

A657D500.img

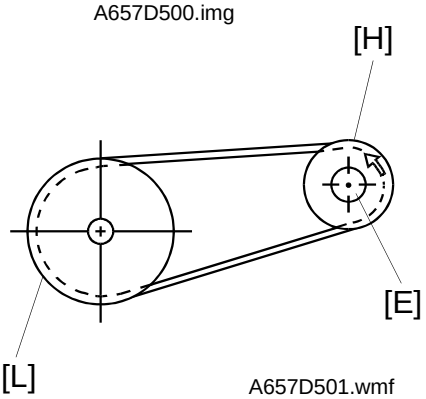

A657D501.wmf

F: Transfer Wheel
G: Bin Drive Belt
H: Bin Drive Pulley
I: Exit Roller Pulley
J: Upper Paper Guide
K: Lower Paper Guide
L: Roller Drive Motor Pulley

The exit rollers [A] take over paper transport from the copier. When the copier sends the paper feed signal to the selected paper feed station, the exit rollers start rotating. The exit rollers continue to rotate for 900 milliseconds after the copy paper has gone through the paper sensor [B].

The roller drive motor [C] rotates the lower exit roller via the roller drive belt [D]. The shaft of the lower exit roller is a cylindrical cavity type which rotates around the transfer wheel shaft [E]. The paper sensor is positioned just in front of the exit rollers. The paper sensor detects misfeeds in the sorter.

6. BIN DRIVE MECHANISM

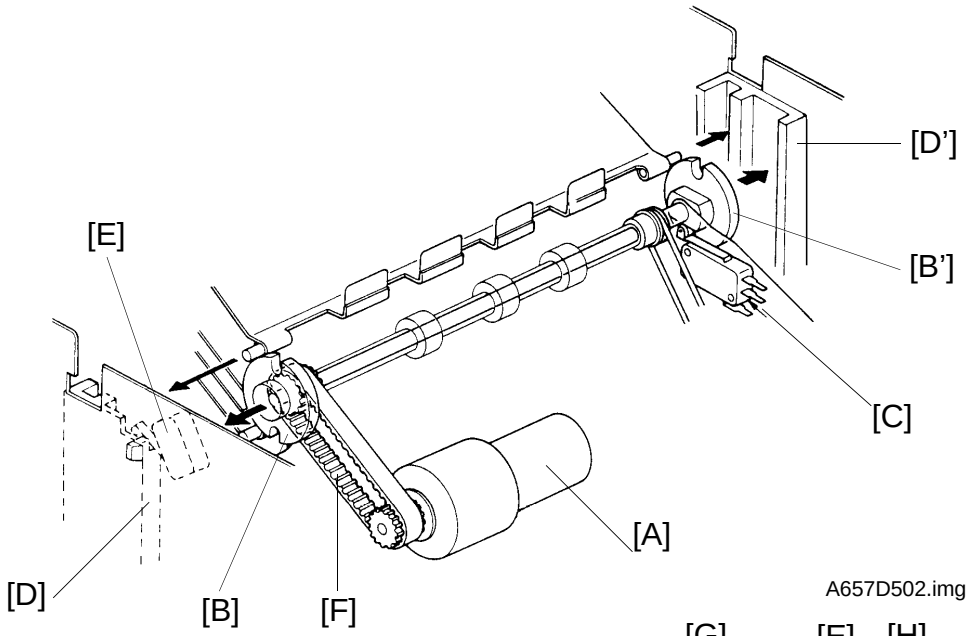

A657D502.img

G: Exit Roller
H: Upper Paper Guide
I: Lower Paper Guide

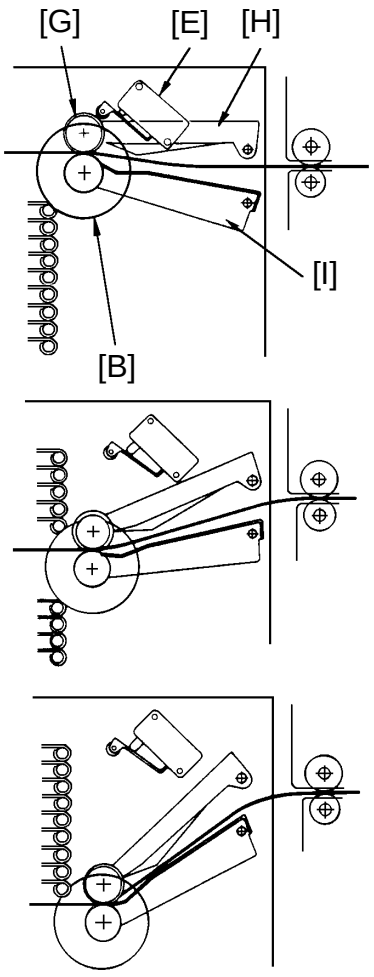

The bin drive mechanism moves the bins up and down to receive copies under the direction of the copier CPU. The main components in this mechanism are the bin drive motor [A], two transfer wheels [B,B'], the wheel switch [C], and the bins themselves.

Pins on either side of each bin are inserted into slots called bin guides [D,D']. The bins slide up and down in the bin guides.
The bins sit on each other with the lower bin resting on the 10th bin (the 10th bin is permanently fixed in position). The upper and lower paper guides pivot up and down depending on the height of the bin to be picked up or released.

The bin home position switch [E] informs the CPU when all the bins are lowered.

A657D503.img

To move the bins up, the bin drive motor turns clockwise (as viewed from the front). A timing belt [F] turns the transfer wheels.

The transfer wheels have two slots in them 180 degrees apart. As the transfer wheels turn, these slots engage the bins and lift them up. Each time the transfer wheels turn 180 degrees, they raise one bin.

To move the bins down, the CPU reverses the bin drive motor and the above process reverses.

The CPU monitors the position of the bins through pulses generated by the wheel switch and the actuator cam [J].
The actuator cam has two flat sides that are 180 degrees apart and is mounted behind the rear transfer wheel. A pulse is generated each time one of the lobes of the actuator cam passes the wheel switch.

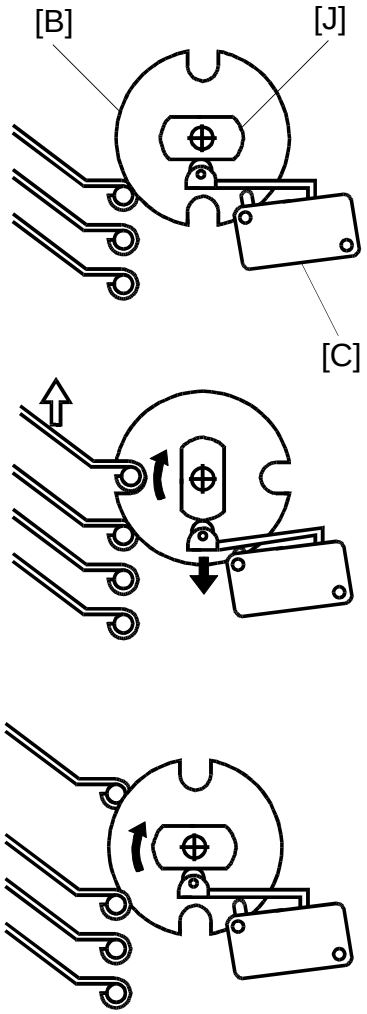

A657D504.wmf

7. MISFEED DETECTION

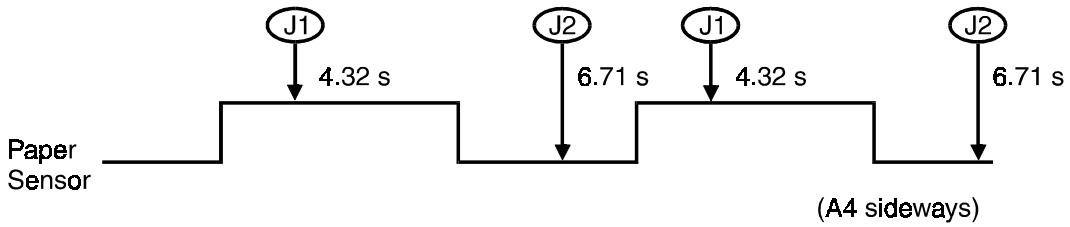

A657D505.wmf

In addition to being used for the exit roller drive timing, the paper sensor checks for misfeeds in the sorter.

J1 - Paper Sensor On Check (A4 Sideways):
The copier CPU checks whether the paper sensor is actuated within 4.32 seconds after the registration clutch turns on.

J2 - Paper Sensor Off Check (A4 Sideways):
The copier CPU also starts a timing cycle to detect the paper sensor off check after the registration clutch turns on. The misfeed detection timing is 6.71 seconds.

In misfeed condition, the "Check Paper Path" and "Misfeed Location" indicators light and copier operation is disabled. To recover the sorter from the misfeed condition, the sorter has to be slid away from the copier, the misfed paper removed, and the sorter returned to its original position.

8. SERVICE TABLES

8.1 FUSE

Fuse No.	Rating	Blown Fuse Condition
F101	T1.0 A/250 V	Sorter will not operate.
F102	T0.5 A/250 V	Sorter will not operate.

9. PREPARATION FOR TRANSPORTATION

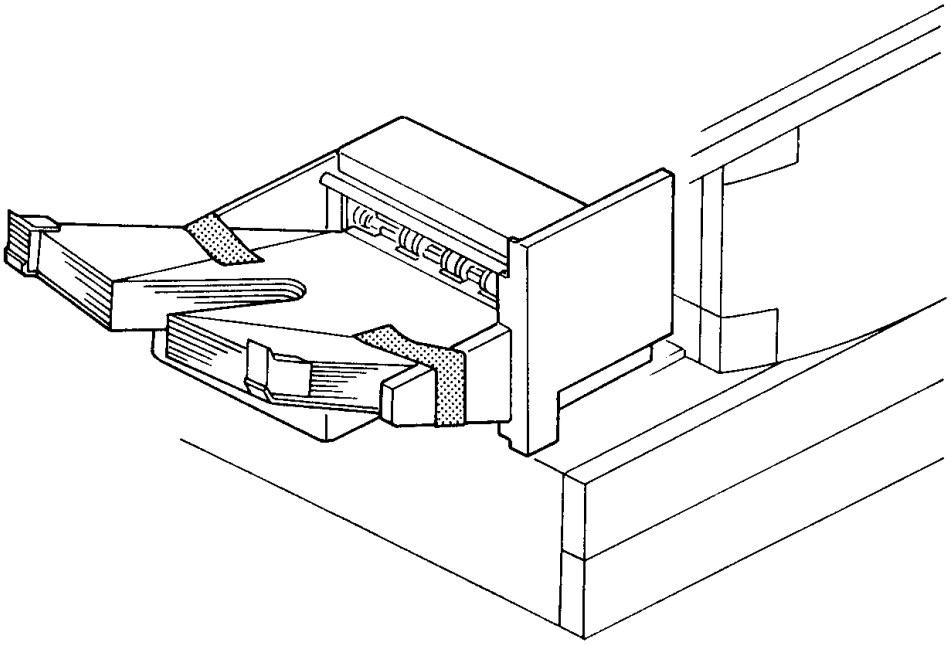

A657R500.img

CAUTION: When removing and transporting the sorter, be careful not to carry it in a vertical position, as the bins will become dislocated.

CAUTION: Before moving the sorter, be sure to prepare it for transportation as follows. The sorter may be badly damaged if it is moved without proper preparation.

1. If the bins are not at the home position, turn on the main switch of the copier to move the bins to the home position.
2. Secure the bins with strips of tape as shown in the illustration.
3. Remove the sorter from the copier. (See the Installation Procedure.)

10. ROLLER DRIVE BELT REPLACEMENT

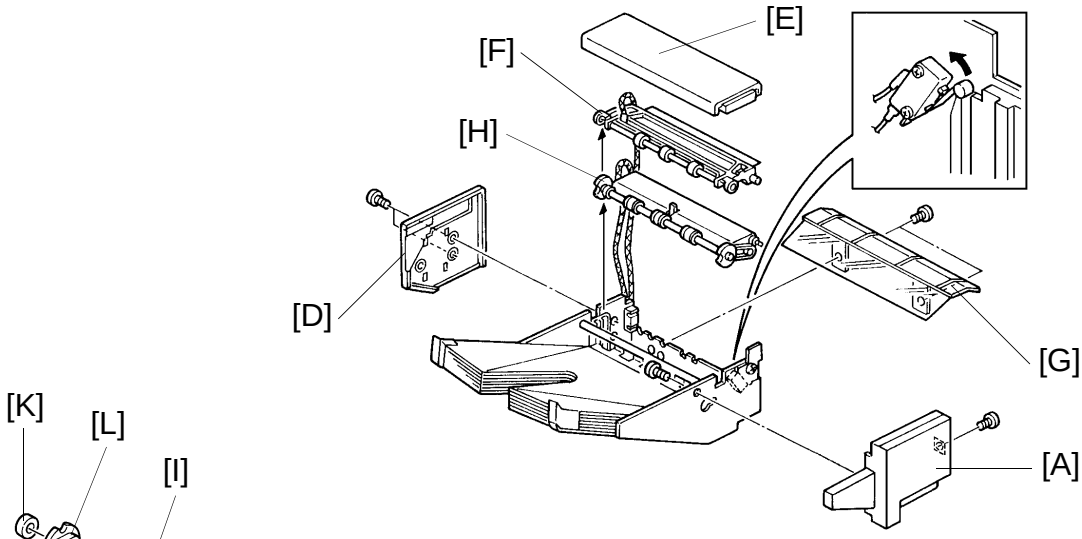

A657R501.img

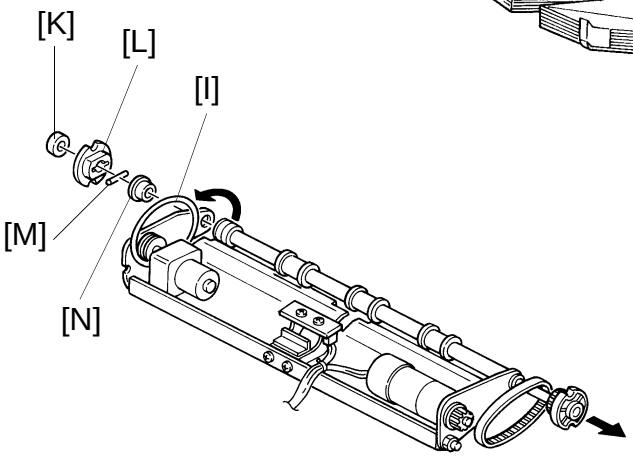

A657R502.img

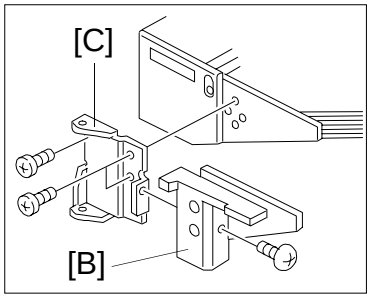

A657R503.wmf

1. Remove the front cover [A] (1 screw).
2. Remove the rear cover [B] (1 screw) and the sorter hinge [C] (2 screws).
3. Remove the rear flat cover [D] (2 screws).
4. Lift off the top cover [E].
5. Lift the upper paper guide [F] up and out of position (1 grounding wire).
6. Remove the entrance guide bracket [G] (2 screws).
7. Lift the lower paper guide [H] out of position and turn it over to remove the roller drive belt [I].

   NOTE: Be careful not to damage the bin home position switch actuator [J] when reassembling.
8. Remove the transfer spacer [K], wheel [L], pin [M], and bushing [N] on both sides of the shaft.
9. Slide the wheel shaft towards the front and replace the roller drive belt.

11. BIN GUIDE LUBRICATION

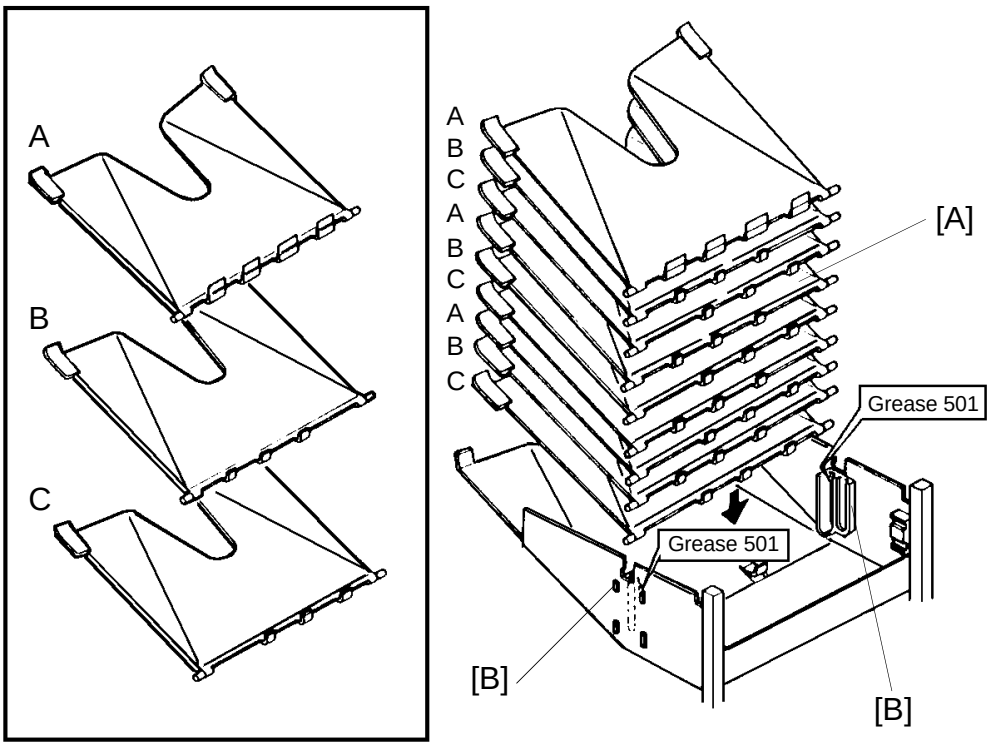

A657R504.img

1. Remove the lower paper guide. (See Roller Drive Belt Replacement.)
2. Remove all bins [A] from the bin guides [B].
3. Apply G501 grease to the grooves of the bin guides.

NOTE: There are three types of bins (types A, B, and C in the above diagram). Therefore, when installing the bins, be sure that they are installed in the correct order.

APPENDIX

ELECRICAL COMPONENT LAYOUT & TIMING CHART

COPIER (A219) ELECTRICAL COMPONENT LAYOUT

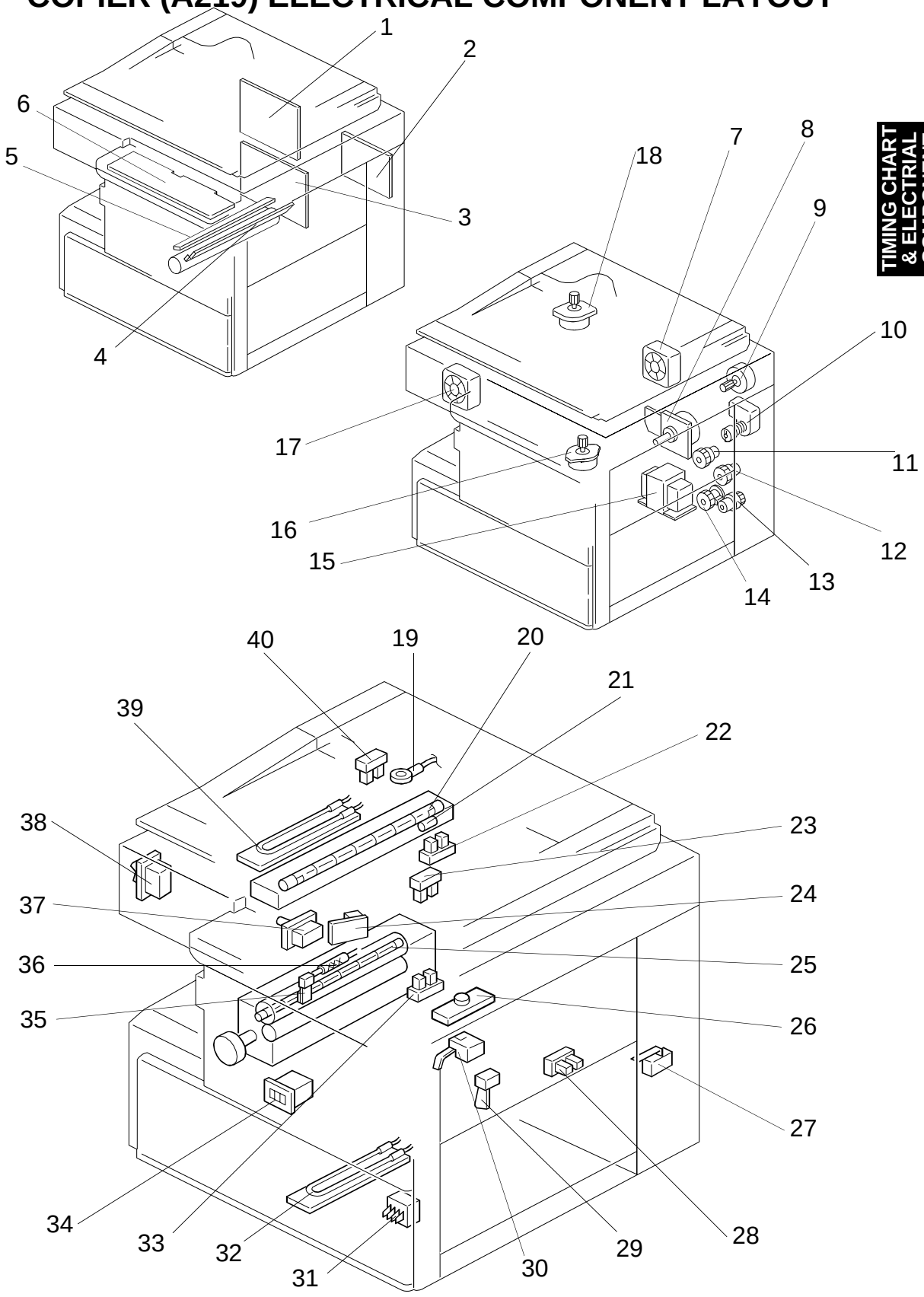

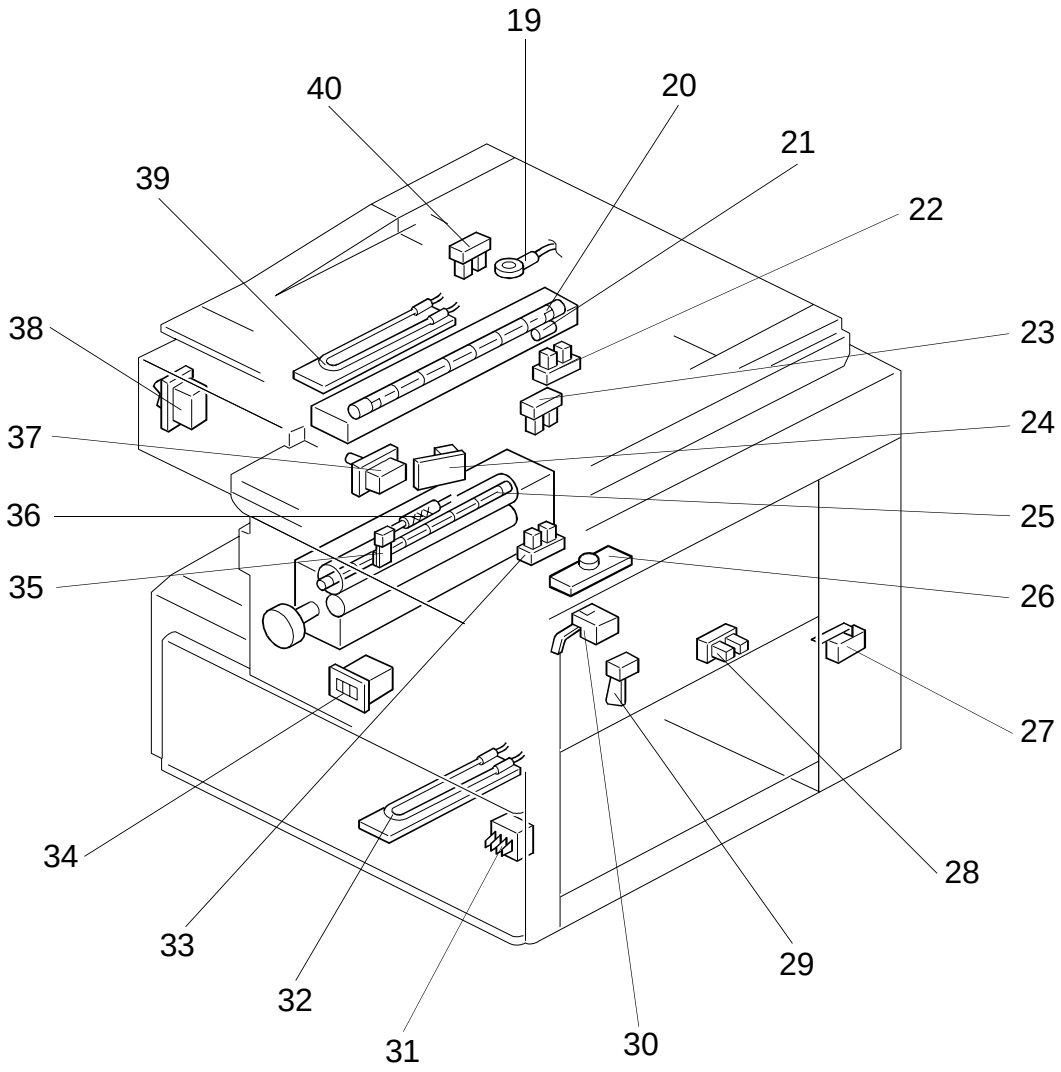
19
40
20
21
39
22
38
23
37
24
36
25
35
26
27
34
28
33
29
32
31
30

Description	Index No.	P-to-P Location
Main Control Board (PCB1)	1	E1
High Voltage Supply Board - C/G/B/T/S (PCB2)	2	D3
AC Drive/DC Power Supply Board (PCB3)	3	B5
Erase Lamp (L1)	4	D4
Quenching Lamp (L2)	5	D5
Operation Panel Board (PCB4)	6	D2
Exhaust Fan Motor (M7)	7	E8
Main Motor (M1)	8	C5
Scanner Drive Motor (M2)	9	C8
Toner Supply Motor (M5)	10	D8
Registration Clutch (CL4)	11	G5
By-pass Paper Feed Clutch (CL2)	12	G3
Relay Roller Clutch (CL3)	13	G5
Tray Paper Feed Clutch (CL1)	14	G3
Transformer (TR)	15	C2
4th/5th Mirror Motor (M4)	16	D8
Optics Cooling Fan Motor (M6)	17	E8
Lens Motor (M3)	18	D8
Optics Thermistor (TH2)	19	G5
Exposure Lamp (L3)	20	B5
Exposure Lamp Thermofuse (TF1)	21	B4
Lens Home Position Sensor (S8)	22	G7
Exit Sensor (S6)	23	G6
ADS Sensor (S2)	24	G3
Fusing Lamp (L4)	25	B4
Toner Density Sensor (S9)	26	F8
Right Vertical Guide Switch (SW4)	27	G4
Tray Paper End Sensor (S3)	28	G3
By-pass Feed Paper End Sensor (S5)	29	G4
Registration Sensor (S4)	30	G4
Tray Paper Size Switch (SW3)	31	G6
Tray Heater (Option) (H1)	32	B4
4th/5th Mirror Home Position Sensor (S1)	33	G2
Total Counter (CO1)	34	E8
Fusing Thermistor (TH1)	35	G5
Fusing Thermofuse (TF2)	36	B4
Interlock Switch (SW2)	37	B2
Man Switch (SW1)	38	B3
Optics Anti-condensation Heater (Option) (H2)	39	B3
Scanner Home Position Sensor (S7)	40	G7
Key Counter (Not Used) (CO2)	N/A	E8

DF (A662) ELECTRICAL COMPONENT LAYOUT

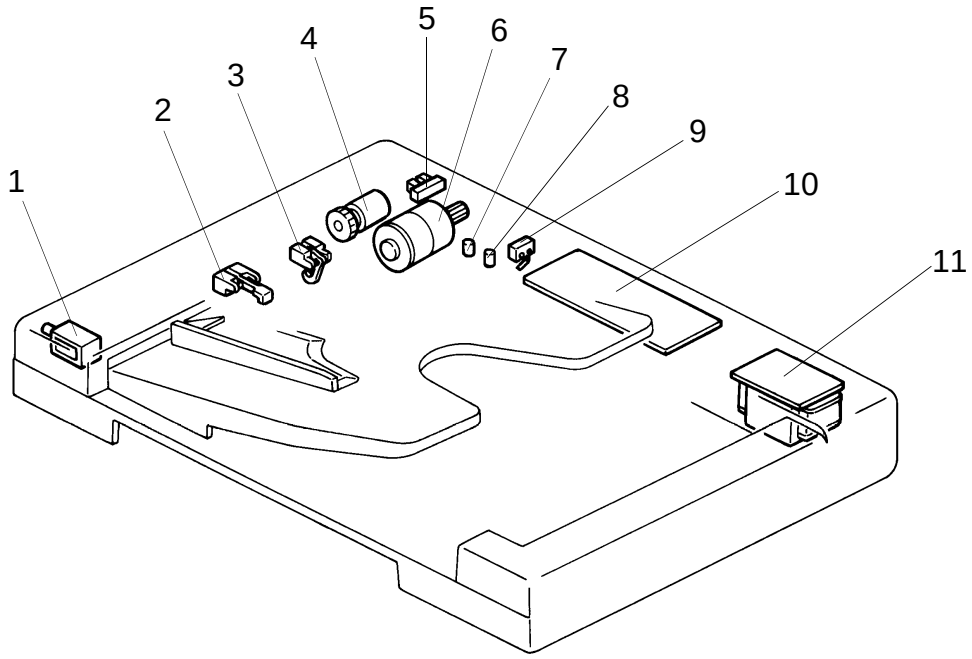

Description	Index No.	P to P Location
Pick-up Solenoid (SOL1)	1	A7
Registration Sensor (S3)	2	C7
Original Set Sensor (S2)	3	C7
Feed Clutch (CL1)	4	A7
Pulse Generator Sensor (S1)	5	A8
DF Motor (M1)	6	A7
Insert Original Indicator (LED2)	7	A8
SADF Indicator (LED1)	8	A8
Lift Switch (SW1)	9	C6
DF Main Board (PCB1)	10	B8
DF Transformer (TR1)	11	B6
DF Interface Board (PCB2)	12	C8

SORTER (A657) ELECTRICAL COMPONENT LAYOUT

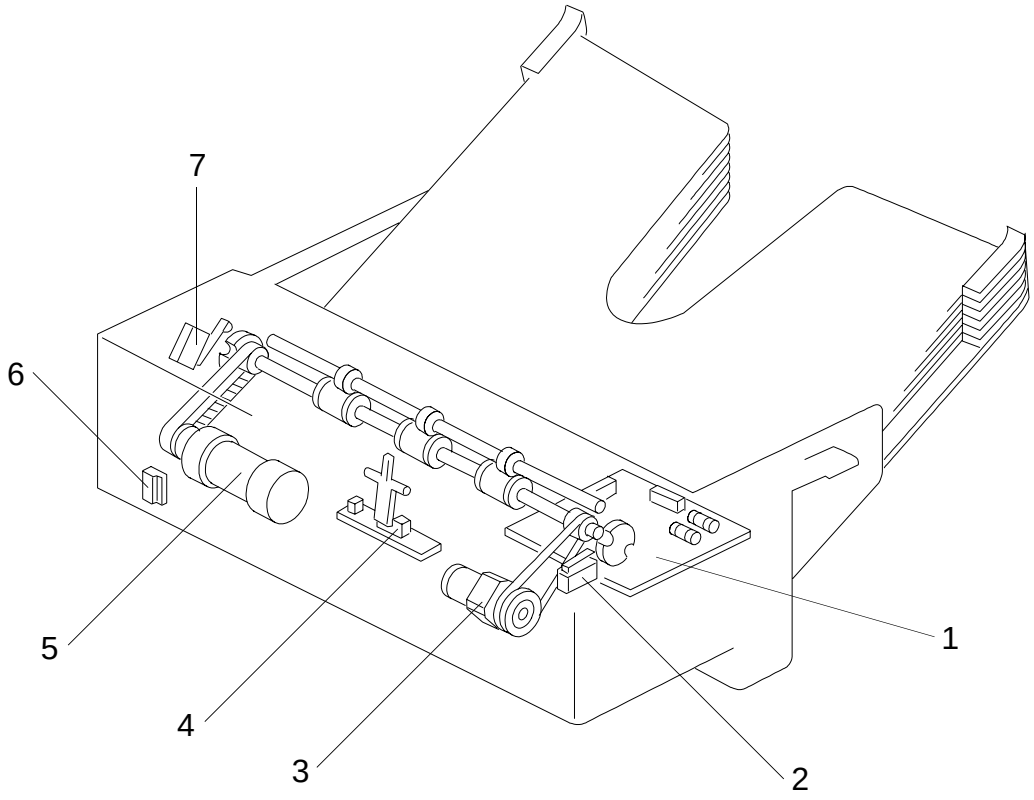

Description	Index No.	P to P Location
Sorter Main Board (PCB1)	1	G1
Wheel Switch (SW1)	2	H2
Roller Drive Motor (M1)	3	H1
Paper Sensor (S1)	4	H2
Bin Drive Motor (M2)	5	H1
Sorter Switch (SW2)	6	H2
Home Position Switch (SW3)	7	H1

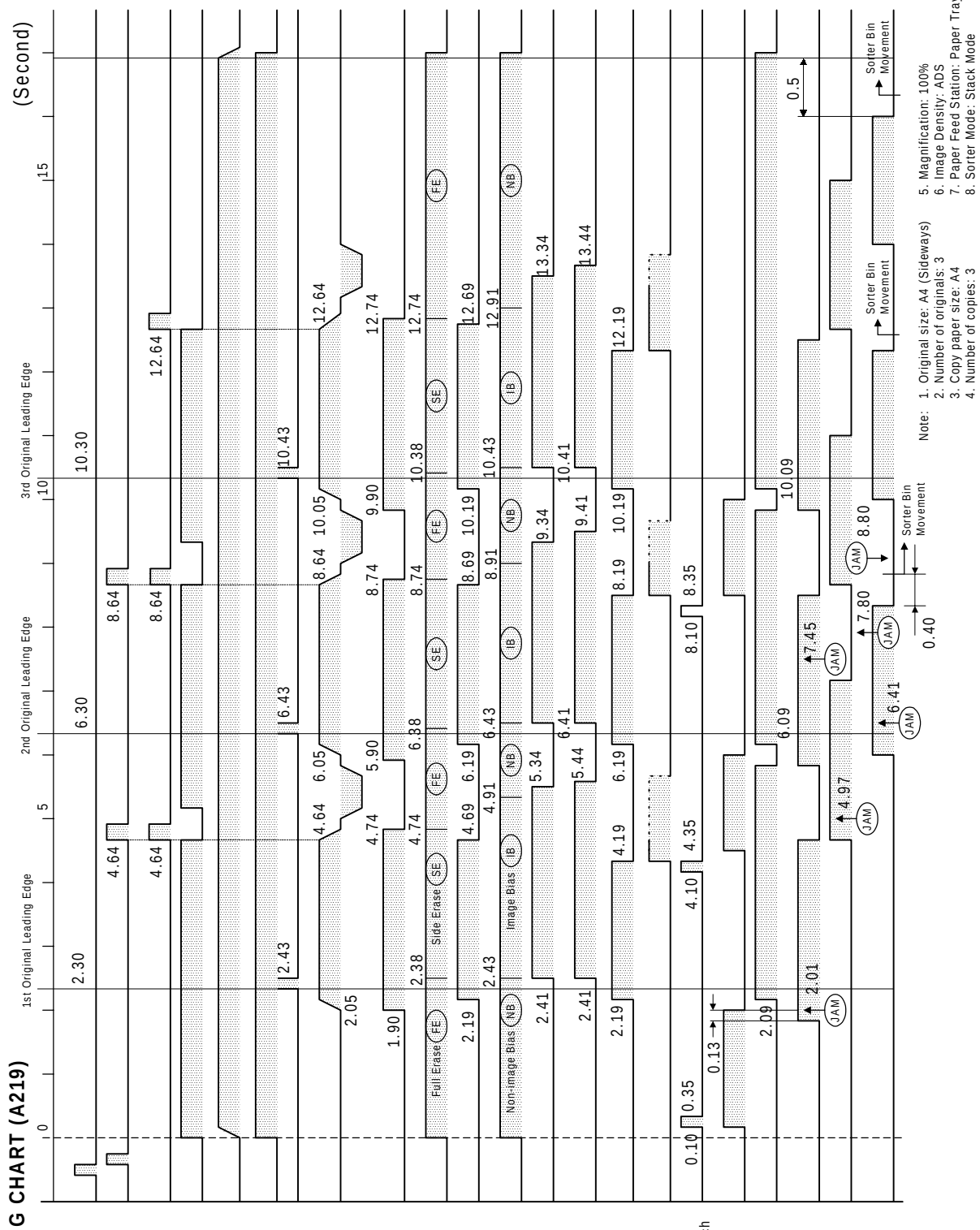
COPIER TIMING CHART (A219)
1st Original Leading Edge
2nd Original Leading Edge
3rd Original Leading Edge
(Second)
0
5
10
15
Start Key
DF Original Feed-in
DF Original Feed-out
Original Set
Main Motor
Quenching Lamp
ADS Detection
Scanner Drive Motor
Exposure Lamp
Erase Lamp
Charge Grid
Development Bias
Transfer Corona
Discharge Plate
TD Sensor Detection
Toner Supply Motor
Tray Paper Feed Clutch
Relay Roller Clutch
Registration Clutch
Registration Sensor
Exit Sensor
Sorter Paper Sensor
Full Erase
Side Erase
Non-image Bias
Image Bias
JAM
Sorter Bin Movement
Note: 1. Original size: A4 (Sideways)
2. Number of originals: 3
3. Copy paper size: A4
4. Number of copies: 3
5. Magnification: 100%
6. Image Density: ADS
7. Paper Feed Station: Paper Tray
8. Sorter Mode: Stack Mode

Gestetner® RICOH® savin®

A245
SERVICE MANUAL
-Insert Version-

The A245 copier is based on the A219 copier.

Only the differences from the A219 copier are described in the following pages. Refer to the A219 copier service manual regarding the other information.

A245
Service Manual

1. SPECIFICATIONS

NOTE: Only items marked with ✻ are different from the A219 copier.

Configuration:	Desktop
Copy Process:	Dry electrostatic transfer system
Originals:	Sheet/Book
Original Size:	Maximum: A3/11" x 17"
Copy Paper Size:	Maximum: A3/11" x 17" Minimum: A5/5 1/2" x 8 1/2" sideways (Paper tray feed) A6/5 1/2" x 8 1/2" lengthwise (By-pass feed) Non-standard sizes: Vertical 45 mm ~ 308 mm, 1.8" ~ 12" Horizontal 148 mm ~ 432 mm, 5.8" ~ 17"
Copy Paper Weight:	Paper tray feed: 64 to 90 g/m^2, 17 to 24 lb By-pass feed: 52 to 157 g/m^2, 14 to 42 lb

Reproduction Ratios:

	Metric Version	Inch Version
Enlargement	200% 141% 122%	200% 155% 129%
Full Size	100%	100%
Reduction	93% 82% 71% 50%	93% 74% 65% 50%

Zoom:	From 50% to 200% in 1% steps
✻ Copying Speed:	18 copies/minute (A4/8.5" x 11" sideways) 10 copies/minute (A3/11" x 17")
✻ Warm-up Time:	120 V machines: Less than 35 seconds (at 23°C) 230 V machines: Less than 45 seconds (at 23°C)
✻ First Copy Time:	Less than 6.5 seconds (A4/8.5" x 11" sideways)
Copy Number Input:	Number keys, 1 to 99
Manual Image Density Selection:	7 steps

Automatic Reset: 1 minute standard setting; can also be set to 3 minutes or no auto reset

✻ Paper Capacity: Paper tray: 250 sheets or less than 30 mm stack height

By-pass feed entrance:

Standard paper	80 sheets
OHP	10 sheets
Others	1 sheet

Toner Replenishment: Bottle exchange (215 g/bottle)

Copy Tray Capacity: 100 sheets

Power Source:
120 V/60 Hz: More than 15 A (for North America)
220 ~ 240 V/50 Hz: More than 8 A (for Europe)
220 V/50 Hz: More than 8 A (for Asia)
220 V/60 Hz: More than 8 A (for Middle East/Asia)
110 V/60 Hz: More than 15 A (for Taiwan)
127 V/60 Hz: More than 15 A (for Middle East)

✻ Power Consumption:

	Copier only	**Full system***
Maximum	1.4 kW (120 V machines)	1.5 kW (120 V machines)
	1.1 kW (230 V machines)	1.2 kW (230 V machines)
Copy cycle	0.82 kW	0.85 kW
Warm-up	0.95 kW	0.95 kW
Stand-by	0.16 kW	0.16 kW
Energy saver	0.12 kW	0.12 kW

*Full system: Copier with document feeder and 10-bin sorter

✻ Dimensions:

	Width	**Depth**	**Height**
Copier	579 mm (22.8")	560 mm (22.1")	465 mm (183.8")
Full system*	775 mm (30.2")	560 mm (22.1")	563 mm (21.5")

*Full system: Copier with document feeder and 10-bin sorter

✻ Noise Emissions:

Sound pressure level (the measurements are made in accordance with ISO 7779 at the operator position.)

	Copier only	Full system*
Copying	58 dB or less	62 dB or less

*Full system: Copier with document feeder and 10-bin sorter

Sound power level (the measurements are made in accordance with ISO 7779)

	Copier only	Full system*
Stand-by	40 dB or less	40 dB or less
Copy cycle	64 dB or less	68 dB or less

*Full system: Copier with document feeder and 10-bin sorter

✻ Weight:

Copier only	45 kg (99.2 lb)
Full system*	58 kg (128 lb)

*Full system: Copier with document feeder and 10-bin sorter

Optional Equipment: (Sales items)
Document feeder (A662)
10-bin sorter (A657)

Optional Equipment: (Service items)
Optics anti-condensation heater
Tray heater

- Specifications are subject to change without notice.

2. MECHANICAL COMPONENT LAYOUT

NOTE: The paper feed area has been changed.

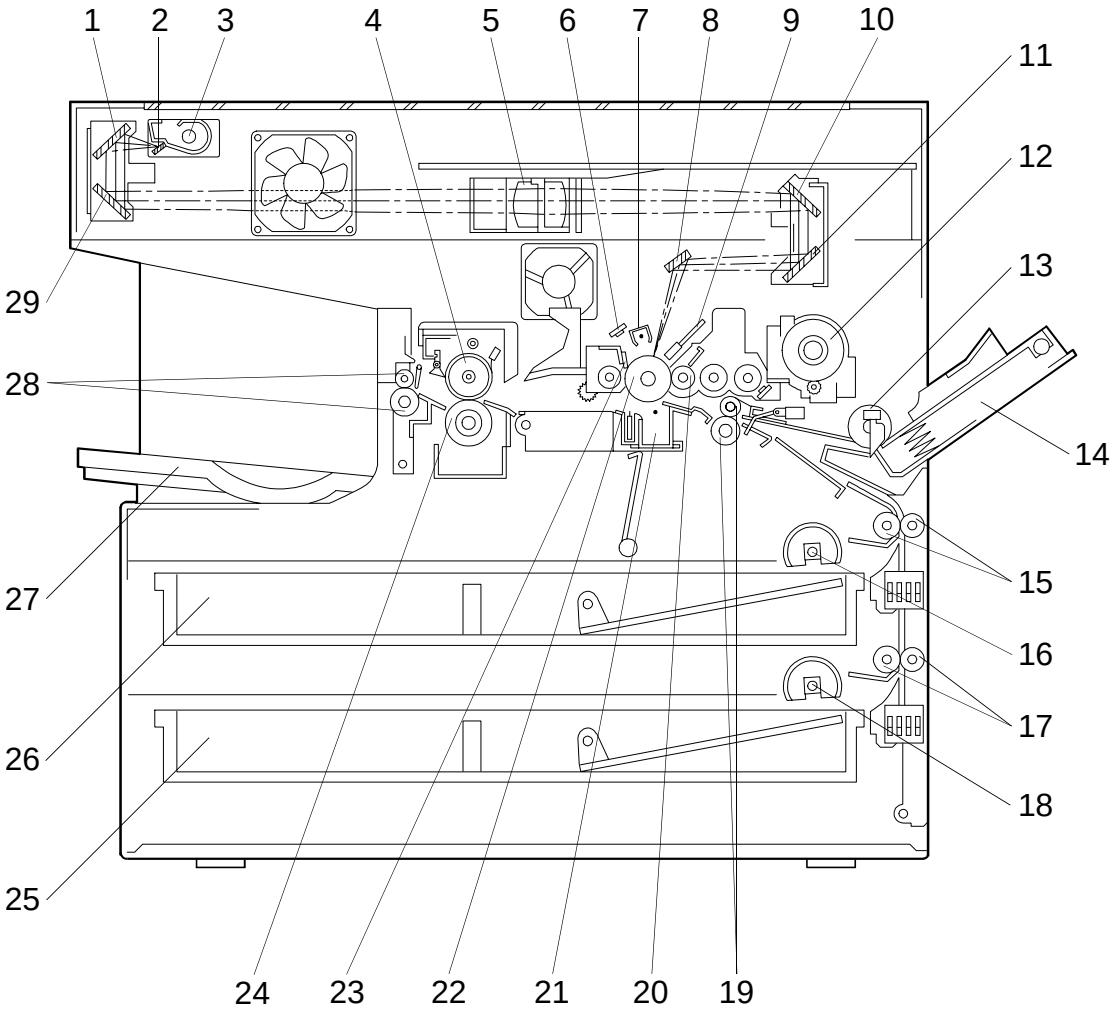

1. 2nd Mirror
2. 1st Mirror
3. Exposure Lamp
4. Hot Roller
5. Lens
6. Quenching Lamp
7. Charge Corona Unit
8. 6th Mirror
9. Erase Lamp
10. 4th Mirror
11. 5th Mirror
12. Toner Bottle Holder
13. By-pass Feed Roller
14. By-pass Feed Table
15. Upper Relay Rollers
16. Upper Tray Paper Feed Rollers
17. Lower Relay Rollers
18. Lower Tray Paper Feed Rollers
19. Registration Rollers
20. Development Roller
21. Transfer/Separation Unit
22. Drum
23. Cleaning Blade
24. Pressure Roller
25. Lower Paper Tray
26. Upper Paper Tray
27. Copy Tray
28. Exit Rollers
29. 3rd Mirror

3. DRIVE LAYOUT

NOTE: The paper feed area has been changed.

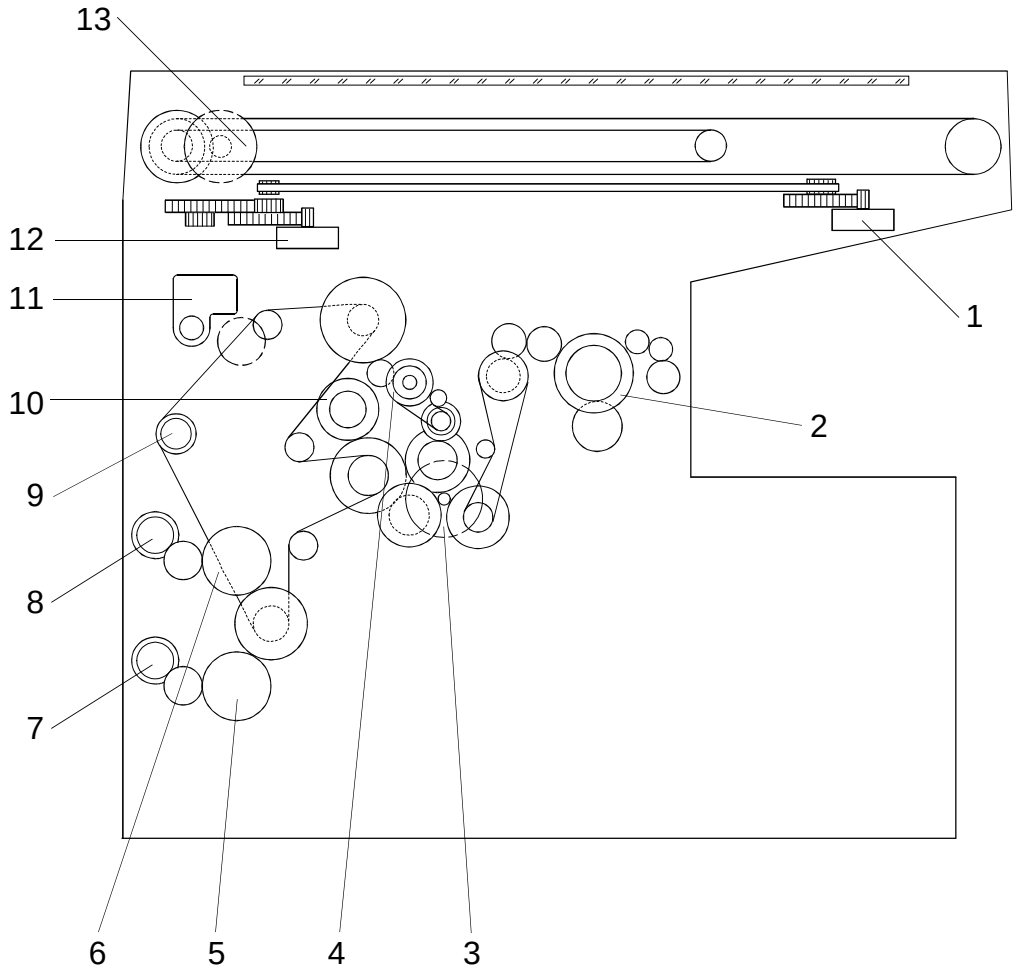

1. Lens Motor
2. Fusing Unit Drive Gear
3. Main Motor
4. Drum Drive Gear
5. Lower Tray Paper Feed Clutch Gear
6. Upper Tray Paper Feed Clutch Gear
7. Lower Relay Roller Clutch Gear
8. Upper Relay Roller Clutch Gear
9. By-pass Paper Feed Clutch
10. Registration Clutch Gear
11. Toner Supply Motor
12. 4th/5th Mirror Motor
13. Scanner Drive Motor

4. PAPER PATH

NOTE: The paper feed area has been changed.

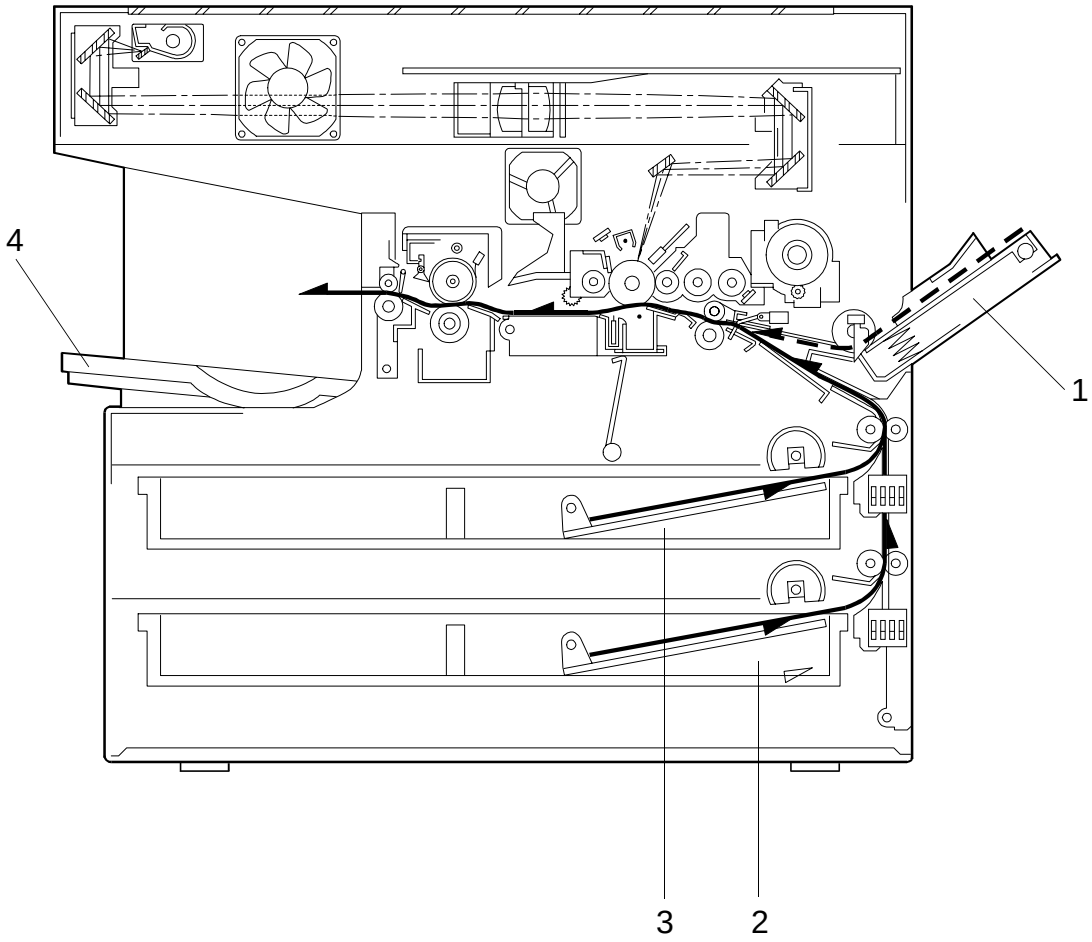

1. By-pass Feed
2. Lower Paper Tray Feed
3. Upper Paper Tray Feed
4. Copy Tray

5. ELECTRICAL COMPONENT DESCRIPTIONS

Refer to the electrical component layout and the point-to-point diagram on the waterproof paper in the pocket for symbols and index numbers.

Symbol	Name	Function	Index No.
Motors			
M1	Main Motor	Drives all the main unit components except for the optics unit, fans and toner supply.	8
M2	Scanner Drive Motor	Drives the scanners (1st and 2nd).	9
M3	Lens Motor	Moves the lens position in accordance with the selected magnification.	20
M4	4th/5th Mirror Motor	Moves the 4th/5th mirror position in accordance with the selected magnification.	18
M5	Toner Supply Motor	Rotates the toner bottle to supply toner to the development unit.	10
M6	Optics Cooling Fan Motor	Prevents build-up of hot air in the optics cavity.	19
M7	Exhaust Fan Motor	Removes heat from around the fusing unit and blows the ozone built up around the charge corona unit towards the ozone filter.	7
Clutches			
CL1	Upper Tray Paper Feed Clutch	Transfers main motor drive to the upper paper feed roller.	13
CL2	By-pass Paper Feed Clutch	Starts paper feed from the by-pass feed table.	12
CL3	Lower Tray Paper Feed Clutch	Transfers main motor drive to the lower paper feed roller.	16
CL4	Registration Clutch	Drives the registration rollers.	11
CL5	Upper Relay Roller Clutch	Drives the upper relay rollers for upper paper tray feed.	14
CL6	Lower Relay Roller Clutch	Drives the lower relay rollers for lower paper tray feed.	15
Switches			
SW1	Main Switch	Supplies power to the copier.	43
SW2	Interlock Switch	Cuts all power when the front cover is opened.	42
SW3	Upper Tray Paper Size Switch	Determines what size of paper is in the upper paper tray.	36
SW4	Right Vertical Guide Switch	Cuts the +24 V dc power line of the relay roller clutch.	30
SW5	Lower Tray Paper Size Switch	Determines what size of paper is in the lower paper tray.	35
Sensors			
S1	4th/5th Mirror Home Position Sensor	Informs the CPU when the 4th/5th mirror assembly is at the home position (full size position).	28

Symbol	Name	Function	Index No.
S2	ADS Sensor	Detects the background density of the original.	26
S3	Upper Tray Paper End Sensor	Informs the CPU when the upper paper tray runs out of paper.	31
S4	Registration Sensor	Detects the leading edge of the copy paper to determine the stop timing of the relay roller clutch, and detects misfeeds.	34
S5	By-pass Feed Paper End Sensor	Informs the CPU when there is no paper in the by-pass tray.	33
S6	Exit Sensor	Detects misfeeds.	25
S7	Scanner Home Position Sensor	Informs the CPU when the 1st scanner is at the home position.	45
S8	Lens Home Position Sensor	Informs the CPU when the lens is at the home position.	24
S9	Toner Density (TD) Sensor	Detects the ratio of toner to carrier in the developer.	29
S10	Lower Tray Paper End Sensor	Informs the CPU when the lower paper tray runs out of paper.	32
Printed Circuit Boards			
PCB1	Main Control Board	Controls all copier functions.	1
PCB2	High Voltage Supply Board - C/G/B/T/S	Provides high voltage to the charge corona, grid, development bias, transfer corona, and discharge plate.	2
PCB3	AC Drive/DC Power Supply Board	Drives the exposure lamp, fusing lamp, and main motor. Rectifies 30 Vac and 8 Vac input and outputs 5 Vdc and 24 Vdc.	3
PCB4	Operation Panel Board	Informs the CPU of the selected modes and displays the situation on the panel.	6
Lamps			
L1	Erase Lamp	Discharges the drum outside of the image area. (Provides leading/trailing edge and side erases.)	4
L2	Quenching Lamp	Neutralizes any charge remaining on the drum surface after cleaning.	5
L3	Exposure Lamp	Applies high intensity light to the original for exposure.	22
L4	Fusing Lamp	Provides heat to the hot roller.	27
Others			
CO1	Total Counter	Keeps track of the total number of copies made.	39
H1	Upper Tray Heater (Option)	Turns on when the main switch is off to keep paper in the upper paper tray dry.	38
H2	Optics Anti-condensation Heater (Option)	Turns on when the main switch is off to prevent moisture from accumulating in the optics.	44

Symbol	Name	Function	Index No.
H3	Lower Tray Heater (Option)	Turns on when the main switch is off to keep paper in the lower paper tray dry.	37
TF1	Exposure Lamp Thermofuse	Provide back-up overheat protection around the exposure lamp.	23
TF2	Fusing Thermofuse	Provide back-up overheat protection in the fusing unit.	41
TH1	Fusing Thermistor	Monitors the temperature around the exposure lamp for overheat protection.	40
TH2	Optics Thermistor	Monitors the temperature around the exposure lamp for overheat protection.	21
TR	Transformer	Steps down the wall voltage to 30 Vac and 8 Vac.	17

6. PAPER FEED

6.1 OVERVIEW

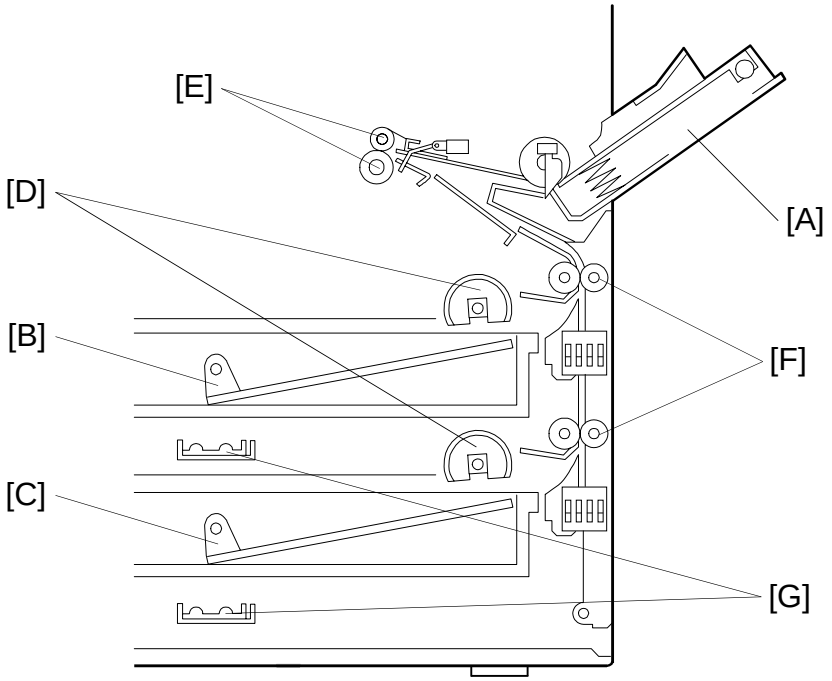

There are two paper trays and a by-pass feed table [A].

The upper [B] and lower [C] paper trays each hold 250 sheets. The by-pass feed table can hold 1, 10, or 80 sheets of paper, depending on the paper type.

The semicircular feed rollers [D] drive the top sheet of paper from the tray to the registration rollers [E] through the relay rollers [F].

The tray has two corner separators (see [F] in the diagram in the "Paper Lift Mechanism" section), which allow only one sheet to feed at a time. The corner separators, along with the tray's springs, also serve to set the height of the paper stack.

When the tray is closed after the paper is loaded, the paper size actuator located at the front right of the tray pushes the paper size sensor. This informs the cpu what paper size is loaded in the tray and that the tray is in place.

The by-pass feed table uses a feed roller and friction pad system to feed the top sheet of paper to the registration rollers.

In humid environments, copy paper may crease as it comes out of the fusing unit. The optional tray heaters [G] are available as service parts to keep copy paper dry. It can be installed for both paper trays.

6.2 PAPER LIFT MECHANISM

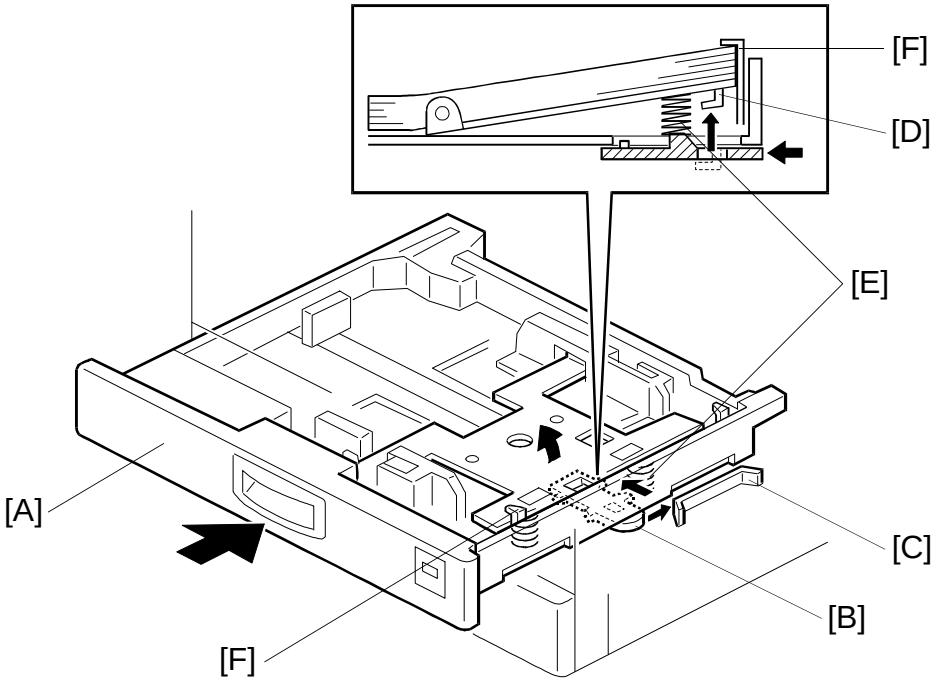

When the paper tray [A] is closed after paper is loaded, the release slider [B], which is mounted on the bottom part of the tray, is pushed by the projection [C] on the main frame and the release slider comes off the bottom plate hook [D].

Once the release slider comes off, the bottom plate is raised by the pressure springs [E] and the top sheet pushes up the corner separators [F]. This keeps the stack of paper at the correct height.

6.3 PAPER FEED AND DRIVE MECHANISM

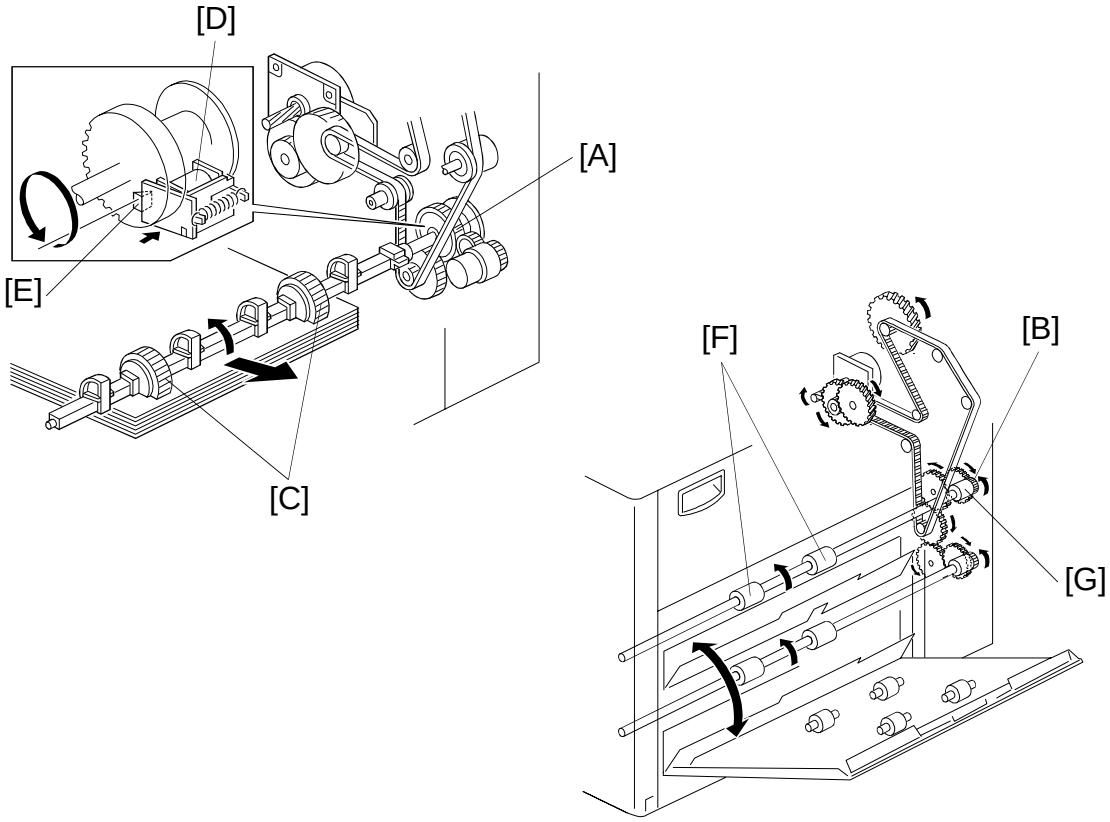

Through several gears and a timing belt, main motor rotation is transmitted to the tray paper feed clutch gear [A] and the relay roller clutch gear [B].

-Feed rollers-

The tray paper feed clutch gear is on the same shaft as the semicircular feed rollers [C]. After the ⎆ key is pressed, the tray paper feed clutch [D] is energized for 250 milliseconds to release the stopper [E]. Then main motor drive is transmitted, and the feed rollers make one complete rotation to feed the top sheet of paper, which is enough for the leading edge of the paper to be caught by the relay rollers [F]. The feed rollers stop when the stopper drops back into the notch at the end of one complete turn.

-Relay rollers-

The relay roller clutch gear is on the same shaft as the relay rollers. The rotation timing of the relay rollers is controlled by the relay roller clutch [G]. The CPU energizes the relay roller clutch after the ⎆ key is pressed (at the same time as the tray paper feed clutch). Paper is fed from the relay rollers to the registration rollers.

6.4 PAPER FEED AND MISFEED DETECTION TIMING

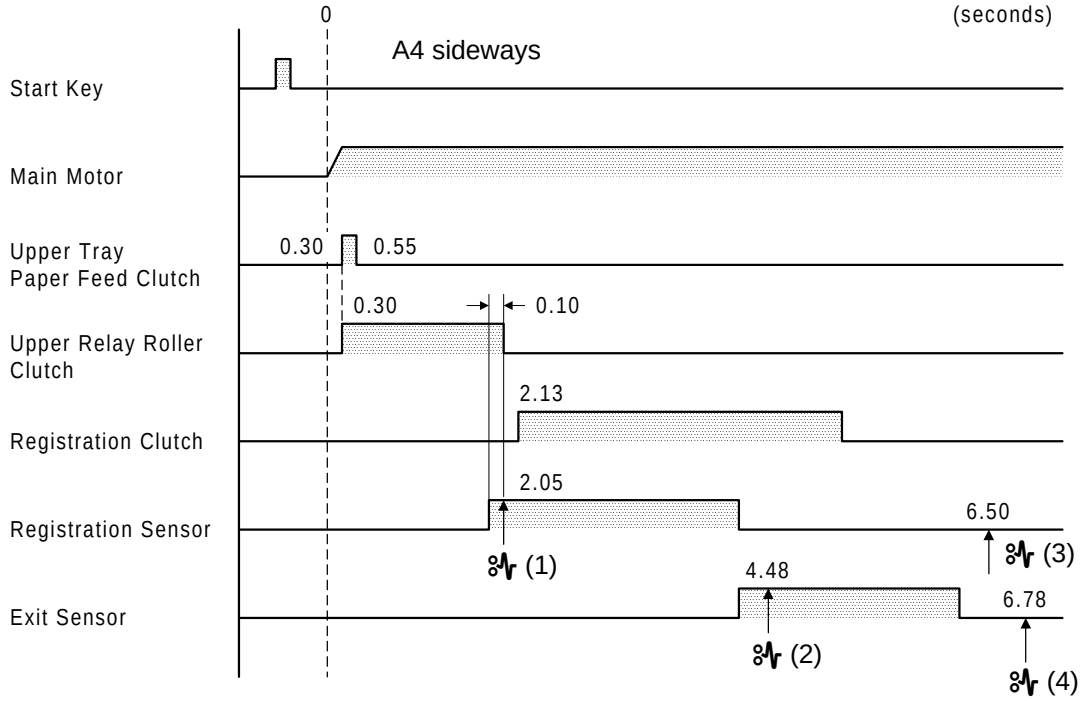

The registration sensor and the exit sensor are used for misfeed detection. If the CPU detects a misfeed, the Check Paper Path and the Location indicators turn on.

Just after the main switch is turned on, the CPU checks these sensors for any jammed paper.

During the copy cycle, the CPU performs four kinds of misfeed detection. The following explains jam detection timing for copying on A4 sideways paper from the upper paper tray unit.

(1): Checks whether the registration sensor is actuated within 2.05 seconds after the main motor starts rotating.

(2): Checks whether the exit sensor is actuated within 4.48 seconds after the main motor starts rotating.

(3): Checks whether the copy paper has passed through the registration sensor 6.50 seconds after the main motor starts rotating.

(4): Checks whether the copy paper has passed through the exit sensor 6.78 seconds after the main motor starts rotating.

NOTE: (1) and (2) are detected from the leading edge of the copy paper. (3) and (4) are detected from the trailing edge of the copy paper. The detection timing for (3) and (4) will vary with the copy paper size in use.

7. IMAGE FUSING

1. Both the hot roller and pressure roller for the A245 are different from the A219. To distinguish between the two types of roller, check the end of the roller shaft as described below.

HOT ROLLER

- A219 -

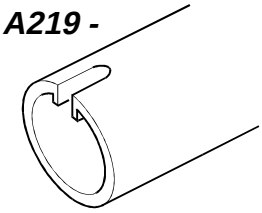

- A245 -

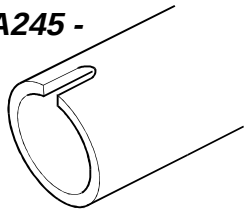

PRESSURE ROLLER

- A219 -

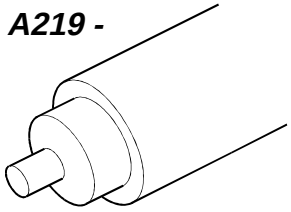

- A245 -

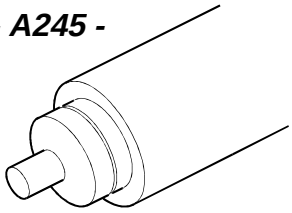

2. Due to the increase in copier CPM, the thickness of the metal core of the hot roller has been increased for the A245 copier. This causes the ready temperature to be higher, and the temperatures are as follows:

A245 copier	A219 copier
172°C: 120 V machines	165°C: 120 V machines
177°C: 230 V machines	172°C: 230 V machines

   Also, to achieve the same warm-up time as for the A219 copier in the 230 V machines, the fusing lamp wattage has been increased from 650 W to 760 W. For the 120 V machine, the warm-up time specification is slightly longer than for the A219, so the lamp is not changed.

3. FUSING IDLING (SP116)
   Fusing idling can be selected with SP116. This mode should be used when the copier has fusing problems with copies which are made soon after warm up. This problem is most likely to occur in low temperature locations where the wall outlet condition is also not stable. Please note that when this mode is selected, copier warm-up will take a couple of seconds extra, and the first copy time will not be within specification. When the start key is pressed, fusing idling is performed for 2 seconds. If the temperature of the fusing unit is below the operating temperature by up to 10°C, copying starts. If the detected temperature is more than 10°C lower than the operating temperature, fusing idling will continue until the detected temperature reaches 180°C. This will take 6 ~ 7 seconds longer to warm up than if fusing idling is not used.

8. INSTALLATION

8.1 COPIER ACCESSORY CHECK

Check the quantity and condition of the accessories in the box against the followings list:

1. Model Name Decal (-10, -22 machines)
2. Symbol Explanation Decal - Multi-language
3. Installation Procedure - Multi-language (-10, -15, -22, -26 machines)
4. Operation Instructions English (-10, -15, -17, -19, -22, -26, -29, -39 machines)
5. NECR - English (-17 machines)
6. NECR - Multi-language (-27, -29, -39 machines)
7. Copy Tray
8. User Survey Card (-17 machines)
9. Paper Set Direction Deal - Multi-language (-22, -26, -27 machines)

8.2 COPIER INSTALLATION PROCEDURE

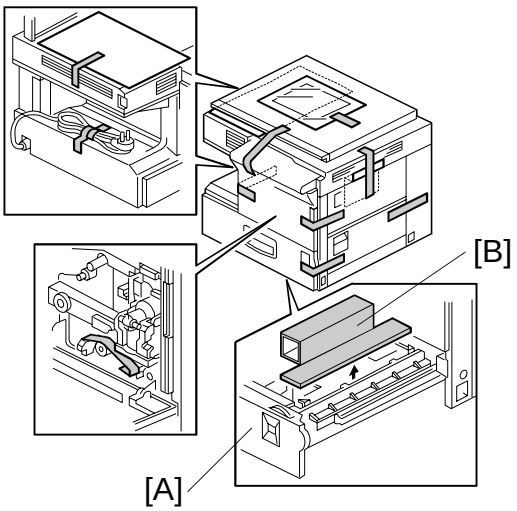

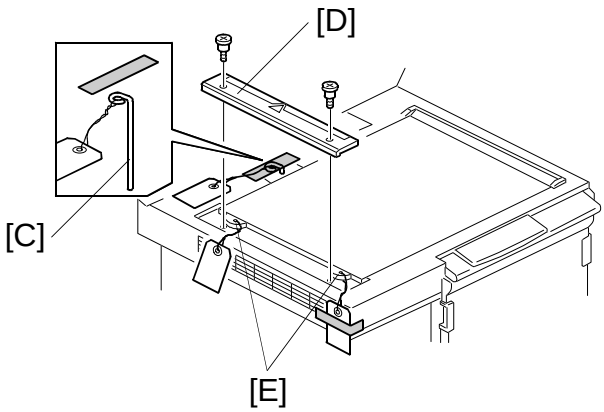

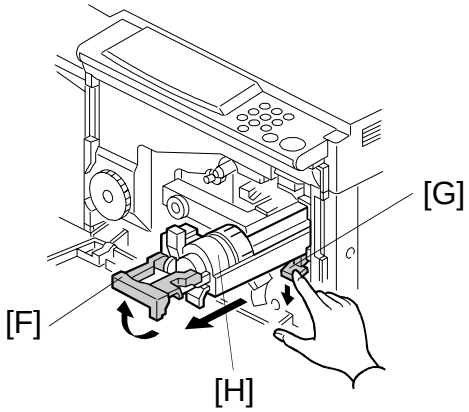

⚠CAUTION

Do not plug in the power cord before starting the following procedure.

1. Remove all strips of tape shown above.
2. Pull out the paper trays [A], and remove the cardboards [B].
3. Open the platen cover and remove the lock pin [C].

   NOTE: Save the lock pin for future shipping.
4. Remove the left side scale [D] (2 screws) and remove the lock pins [E].

   NOTE: Save the lock pins for future shipping.
5. Open the front cover and raise the toner bottle holder lever [F].
   Then pull down the securing lever [G], and remove the toner bottle holder [H].

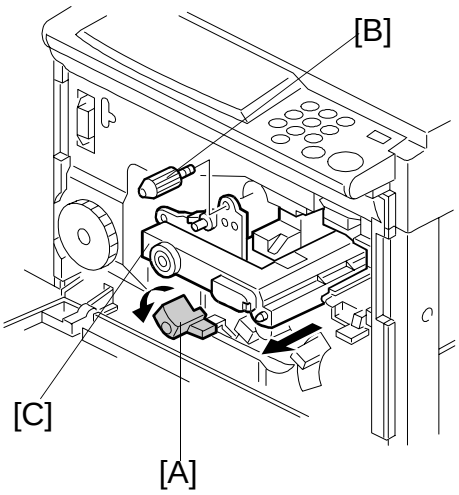

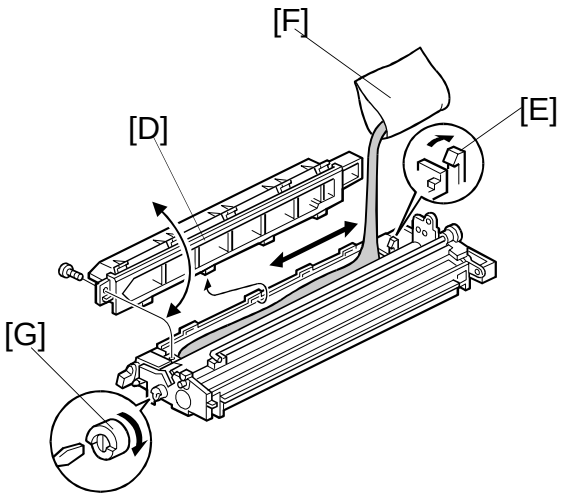

⇒ 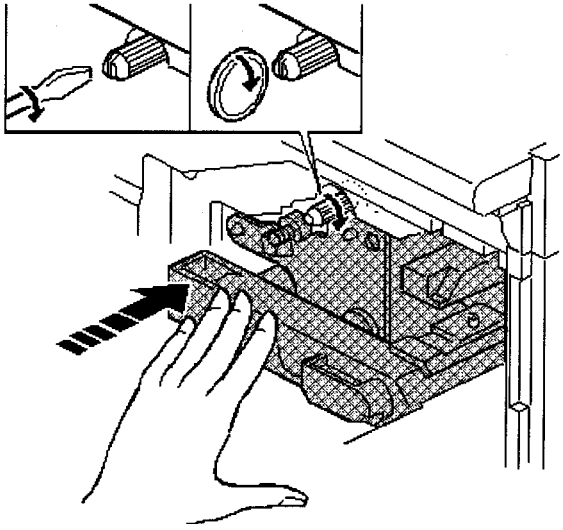

6. Turn the "B1" lever [A] counterclockwise to lower the transfer corona unit.
7. Remove the knob screw [B] and gently pull out the imaging unit [C].
   Then place it on a clean sheet of paper.
8. Remove the cover [D] from the imaging unit (1 screw and 1 snap [E]).
9. Pour in the developer [F] evenly into the imaging unit. Then rotate the outer gear [G] for one or two turns to distribute the developer as shown.

NOTE: When installing new developer or manually rotating the development roller, always make sure to turn the gear in the direction shown above. Also do not rotate the gear more than 3 turns to prevent damage to the unit.

⇒ 10. Remount the cover on the imaging unit, and install the unit in the copier. Push the unittoward the back until it stops. While holding the unit in this position, tighten the knob screw by hand. For the final tightening, use a screwdriver or coin as shown in the illustration above. Then turn the "B1" lever counter-clockwise to raise the transfer corona unit.

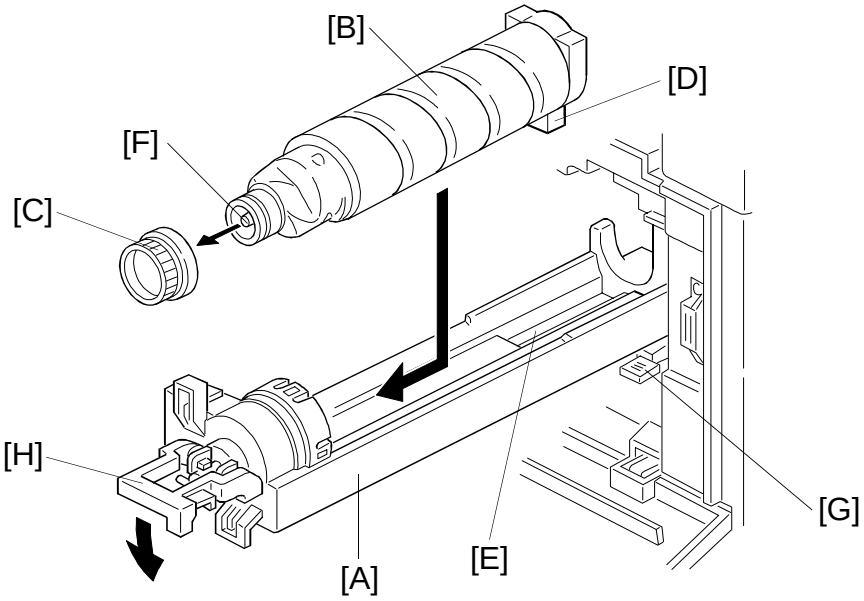

11. Install the toner bottle holder [A] in the copier as shown.
12. Shake the toner bottle [B] well.

    NOTE: Do not remove the bottle cap [C] of the toner bottle at this time.
13. Unscrew the bottle cap and insert the toner bottle into the holder, so that the rib [D] rides the rail [E].

    NOTE: Do not open the inner bottle cap [F].
14. Reposition the holder by making sure that the securing lever [G] clicks. Then press down the holder lever [H] to secure the bottle. Close the front cover.

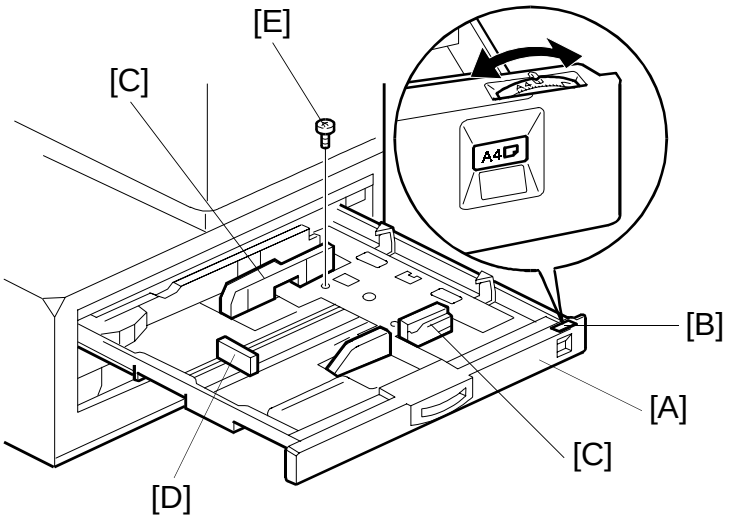

15. Pull the paper tray [A] out and turn the paper size dial [B] to select the appropriate size. Adjust the side guides [C] and the end guide [D] to match the paper size.

    NOTE: 1) Make sure the stack of paper is aligned, and that there is no space between the side guides and the paper stack.

    2) Always push the paper tray in gently.

16. Plug in the copier and turn on the main switch. Wait until it warms up. (It takes about 45 seconds.)

17. Enter the SP mode as follows:

    1) Press the "Clear Modes" key.

    2) Enter "107" using the numeric keys.

    3) Hold down the "Clear/Stop" key for more than 3 seconds.

18. Perform the TD sensor initial setting as follows:

    1) Enter "66" using the numeric keys.

    2) Press the "Auto Image Density" key.

    NOTE: The machine will automatically stop when completed. (It takes about 1 minute.)

19. Turn the main switch off and on to exit SP mode.

20. Check the copy quality and machine operation.

21. Inform the customer of the notes in step 13 concerning the paper tray. Also find out if the customer changes paper sizes frequently. If not, inform the customer that the side guides can be fixed with a screw [E] to achieve better paper feed quality (use a tapping screw less than 8 mm long).

8.3 UPPER AND LOWER TRAY HEATER INSTALLATION (OPTION)

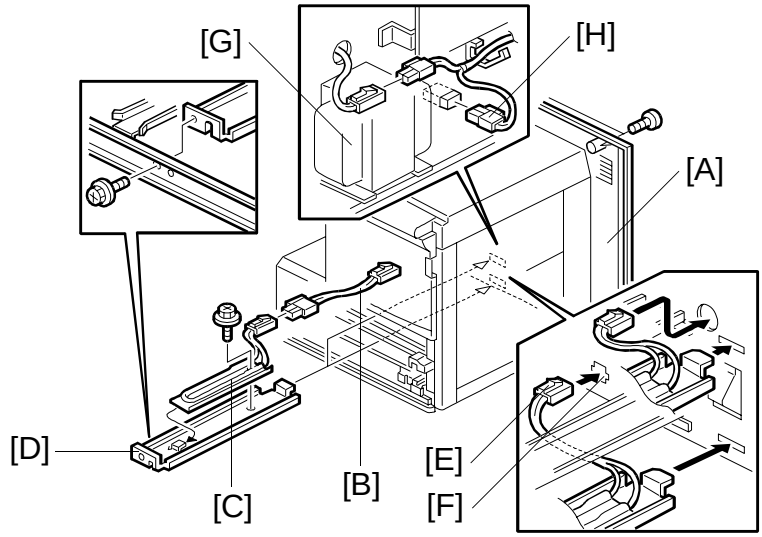

NOTE: 1) The optional tray heaters keep copy paper dry. In humid environments, copy paper may crease as it comes out of the fusing unit. The heaters are available as service part. (See the parts catalog.)

2) Tell the customer that even when the copier main switch is turned off, the copier power cord should be plugged in. Otherwise, the tray heater will not function.

⚠ CAUTION

Unplug the copier power cord before starting the following procedure.

1. Remove the rear cover [A] (2 screws).
2. Remove the paper trays.
3. Connect the interface harness [B] to the tray heater [C]. Then mount the heater on the heater bracket [D] as shown (1 screw).

- LOWER TRAY -

4. Mount the heater bracket on the bottom of the copier main frame, while passing the connector [E] through the opening [F] in the copier main frame as shown (1 screw).
5. Remove the transformer [G] (2 screws).
6. Locate the red two-pin connector [H] at the rear of the copier, and connect it to the heater's connector (red), as shown.

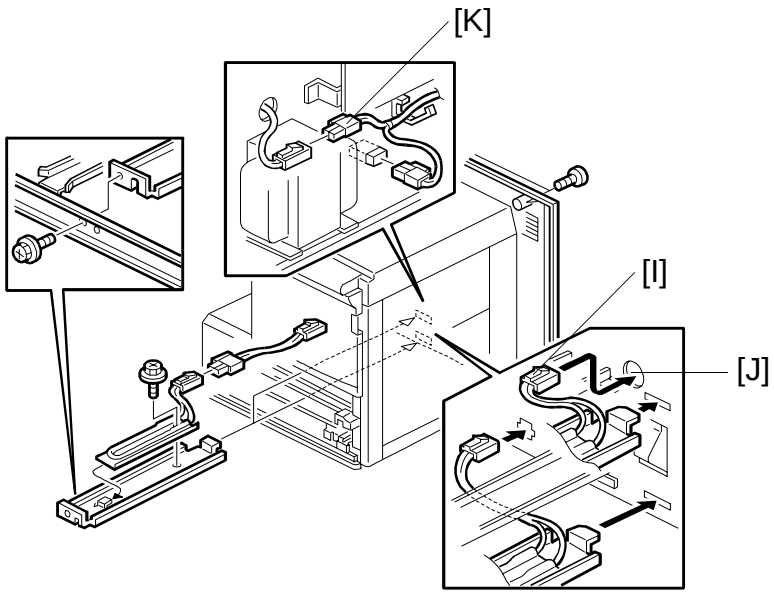

- UPPER TRAY -

4. Mount the heater bracket while passing the connector [I] through the round opening [J] in the copier main frame as shown (1 screw).
5. Locate the red two-pin connector [K] at the rear of the copier, and connect it to the heater's connector (red), as shown.

9. PROGRAM MODE

9.1 SP MODE QUICK REFERENCE TABLE

NOTE: 1) Items written in ***bold italic letters*** are newly added service programs.

2) Items written in **bold** are modified service programs.

SP Mode No.	Function	SP Mode No.	Function
4	Forced Start (Free Run)	36	TD Sensor Sensitivity Setting
5	Free Run with Exposure Lamp Off	38	Toner Density Adjustment
6	Misfeed Detection Off	***39***	***V_{L2} Correction Interval***
7	Free Run	*41	Lead Edge Erase Margin Adjustment
8	**Input Check**	*42	Registration Adjustment
9	**Output Check**	*43	Vertical Magnification Adjustment
10	Scanner Free Run	*44	Horizontal Magnification Adjustment
11	All Indicators On	45	Registration Buckle Adjustment
14	**Auto Shut Off Time (Energy Star)**	46	Registration Buckle Adjustment - A5 Paper
15	Auto Reset Time Setting (Energy Saver)	*47	Focus Adjustment
16	Count Up/Down Selection	*48	Light Intensity Adjustment
17	Narrow Paper Select Mode	49	Fusing Temperature Adjustment
18	**Auto Feed Station Shift**	**50**	**Fusing Ready Temperature Adjustment**
19	ADS Priority	51	Exposure Lamp Voltage Display
22	SADF Shut Off Time	52	Fusing Temperature Display
24	Horizontal Edge Margin Width Adjustment	53	TD Sensor Target Control Voltage Adjustment
27	***A3/DLT Double Count***	54	TD Sensor Gain Adjustment
28	Auto Sort Select	55	TD Sensor Output Display Data
29	Fusing Temperature Control Selection	56	ADS Reference Voltage Adjustment
30	Toner Supply Mode Selection	57	ADS Output Voltage Display
31	Toner Supply Amount (TD Sensor Mode)	***58***	***Image Adjustment at ID Level 1***
32	Toner Supply Amount (Fixed Supply Mode)	59	Optics Temperature Display
33	Image Bias Adjustment (Manual ID Mode)	60	Drum Potential Measurement (With Paper)
34	Image Density Adjustment (ADS Mode)	61	Drum Potential Measurement (Without Paper)
35	Total Toner Supply ON Time During Toner Near/End Condition	**62**	**V_L Correction Interval**

* Items listed on the factory setting data sheet

SP Mode No.	Function	SP Mode No.	Function
63	Forced Toner Supply	90	Factory Data and Counter Clear
64	V_R Correction Value	***92***	***User Code Counter Clear***
66	TD Sensor Initial Setting	93	V_R Correction Reset
67	TD Sensor Initial Output Display	94	V_{L2} Correction Reset
68	V_{L2} Correction Selection	95	V_L Correction Reset
69	Imaging Unit Counter Display	96	Toner End Force Cancel
70	***User Code Mode***	97	Service Call (E5) Reset
71	Sorter Operation	98	Total Counter Clear
73	***User Code Counter Display***	99	Clear All Memory
74	Special Paper Size Setting	100	By-pass Feed Copy Counter Display
76	Sorter Bin Capacity	**101**	**Upper Paper Feed Tray Copy Counter Display**
77	**Auto Shut Off (Energy Star) On/Off**	***102***	***Lower Paper Feed Tray Copy Counter Display***
78	Auto Energy Saver Mode On/Off	106	DF Original Counter Display
81	Factory Initialization	***116***	***Fusing Idling***
82	Data Communication	130	Total Service Calls
83	Factory Potential Adjustment	131	Total Misfeeds
88	Total Copy Counter Display		

* Items listed on the factory setting data sheet

9.2 UP MODE AND SP MODE CROSS REFERENCE TABLE

NOTE: Items written in ***bold italic letters*** are newly added programs.

UP Mode No.	SP Mode No.	Function
1	34	Image Density Adjustment (ADS Mode)
2	17	Narrow Paper Select Mode
3	15	Auto Reset Time Setting (Energy Saver)
4	78	Auto Energy Saver Mode On/Off
5	14	Auto Shut Off Time Setting (Energy Star)
6	38	Toner Density Adjustment
7	16	Count Up/Down Selection
8	***73***	***User Code Counter Display***
9	***92***	***User Code Counter Clear***
10	***77***	***Auto Shut Off (Energy Star) On/Off***
11	***58***	***Image Adjustment at ID Level 1***

9.3 SERVICE PROGRAM MODE TABLE

1. In the *Function* column, comments (extra information) are in italics.
2. In the ***Settings*** column, the default value is printed in bold letters.
3. If there is a † mark in the Mode No. column, copies can be made within this SP Mode.

Mode No.		Function	Settings
4	Forced Start (Free Run)	Performs a free run with a forced start. Press the Start key to start the free tun. Press the Clear/Stop key to stop the free run.	
		If this mode is switched on, the copier starts the free run even if the fusing temperature has not reached the required value yet. *This mode is performed with the selected paper size and magnification ratio without the paper feed clutch or total counter increment.* ***Normally, use SP7 to prevent fusing-related service call conditions from occurring.***	
5	Free Run with Exposure Lamp Off	A free run is performed without exposure. Press the Start key to start the free run. Press the Clear/Stop key to stop the free run.	
		This mode is performed with the selected paper size and magnification ratio without the paper feed clutch or total counter increment. ***Normally, use SP7 to reduce the cleaning blade load.***	
6	Misfeed Detection Off †	Copies are made without misfeed detection by the registration, exit sensors, and sorter paper sensor. Press the Start key to make a copy. It stops when reaching the set count, or when the Clear/Stop key is pressed.	
		Use this mode to check whether a paper misfeed was caused by a sensor malfunction. ***The total counter increments when copies are made in this mode.***	
7	Free Run	Performs a free run with the exposure lamp on. Press the Start key to start the free run. Press the Clear/Stop key to stop the free run.	
		This mode is performed with the selected paper size and magnification ratio without the paper feed clutch or total counter increment. ***Before starting, close the platen cover to reduce the cleaning blade load.***	

Mode No.		Function	Settings
8	**Input Check †**	Enter the desired number given in the following table. The magnification indicator is used to display the input data from the sensors while making a normal copy. Press the ◇ key to perform this mode.	

Component No.	Sensor/ Switch/Signal	Reading	
		0	1
1	Registration Sensor	Paper Not Present	Paper Present
2	Exit Sensor	Paper Not Present	Paper Present
3	By-pass Feed Paper End Sensor	Paper Not Present	Paper Present
*4	Upper Tray Paper End Sensor	Paper Present	Paper Not Present
*5	Lower Tray Paper End Sensor	Paper Present	Paper Not Present
8	High Voltage Leak Signal	No Leak Signal	Leak Signal Detected
9	Power Supply Board Signal	120 V	230 V
10	Right Vertical Guide Switch	Cover Closed	Cover Open
12	Scanner HP Sensor	Sensor Not Actuated	Sensor Actuated (HP)
13	4th/5th Mirror HP Sensor	Sensor Not Actuated	Sensor Actuated (HP)
14	Lens HP Sensor	Sensor Not Actuated	Sensor Actuated (HP)
16	Sorter Paper Sensor	Paper Not Detected	Paper Detected
17	Sorter Wheel Switch	Switch Actuated (Switch Pushed in: Wheel Moving)	Switch Not Actuated
18	Sorter Bin HP Switch	Switch Not Actuated	Switch Actuated (HP)
19	Sorter Switch	Sorter Closed	Sorter Opened
20	ADF Installation	ADF Not Installed	ADF Installed
21	ADF Lift Switch	ADF Closed	ADF Opened
22	Key Counter Set Signal (Not Used)	Key Counter Not Set	Key Counter Set

* Newly added or modified items from the A219 copier.

Mode No.		Function	Settings
9	**Output Check**	Use to turn on individual electrical components. Enter the desired number given in the following table. Press the ◇ key to turn on the electrical component. Press the C/⊘ key to turn off the electrical component.	

Component No.	Electrical Component	Note
1	Main Motor + Quenching Lamp + Exhaust Fan Motor (High Speed)	
2	Charge Corona	
3	Transfer Corona	
4	Discharge Plate	
5	Development Bias Voltage	Standard Voltage for Manual ID Level 4.
6	Erase Lamp	All LEDs On
7	Machine Shut Off	Main Switch Relay Off.
8	Exhaust Fan Motor (High Speed)	
9	Optics Cooling Fan	
10	Exposure Lamp + Optics Cooling Fan	
11	Toner Supply Motor	
12	Toner Supply Motor (Reverse)	
14	Sorter Roller Drive Motor	
15	Sorter Bin Drive Motor (Bin Up)	Moves One Bin Up.
16	Sorter Bin Drive Motor (Bin Down)	Moves One Bin Down.
17	Registration Clutch	
18	By-pass Paper Feed Clutch	
*19	Upper Tray Paper Feed Clutch	
*20	Lower Tray Paper Feed Clutch	
*21	Upper Relay Roller Clutch	
*22	Lower Relay Roller Clutch	
23	Total Counter	
24	Key Counter	Not Used

* Newly added or modified items from the A219 copier.

Mode No.		Function	Settings
10	Scanner Free Run	Start a scanner free run. *Press the ◇ key to start the free run.* *Press the C/⊘ key to stop the free run.* *This mode is performed in accordance with the selected paper size and magnification ratio.*	
11	All Indicators On	Turns on all the indicators on the operation panel for 30 seconds. They will turn off automatically after 30 seconds. *To turn off the indicators, press the ◑ key.*	
14	**Auto Shut Off Time Setting (Energy Star)**	Selects the auto shut off time. *The copier main switch is shut off automatically after the selected auto shut off time, if SP77 is at "0".*	**0: 30 min.** 1: 15 min. 2: 60 min. 3: 90 min. 4: 120 min. 5: 240 min.
15	Auto Reset Time Setting (Energy Saver)	Selects an auto reset time of 1 or 3 minutes, or cancels this mode. *The copier goes to energy saver mode automatically after the selected auto reset time, if SP78 is at "1".*	**0: 1 min.** 1: 3 min. 2: None
16	Count Up/Down Selection	Selects count up or count down.	**0: Up** 1: Down
17	Narrow Paper Select Mode	Selects narrow paper feed mode for the by-pass feed table. *Use this mode to feed non-standard paper sizes that are too narrow to be detected by the by-pass feed paper end sensor. In this case, the copier will operate even if the Add Paper indicator is on.*	**0: No** 1: Yes
18	**Auto Feed Station Shift**	Selects auto feed station shift mode. *The copier automatically shifts to the other paper feed station when paper runs out, if it holds the same size of paper.*	**0: Auto Shift** 1: Manual
19	ADS Priority	Specifies whether the copier defaults to ADS or Manual mode when the main switch is turned on.	**0: ADS** 1: Manual
22	SADF Shut Off Time	Selects the shut off time for SADF mode. *The DF must be installed on the machine.*	**0: 5 s.** 1: 60 s.
24	Horizontal Edge Margin Width Adjustment	Selects whether the side erase mechanism changes when the optional document feeder is installed. *See "Detailed Descriptions - Erase" for more details.*	**0: DF Mode** 1: Always stays in Platen Mode

<table>
<tr><th colspan="2">Mode No.</th><th>Function</th><th>Settings</th></tr>
<tr><td rowspan="2">27</td><td rowspan="2">A3/DLT Double Count</td><td>Specifies whether the counter is doubled for A3/DLT paper.</td><td rowspan="2">0: OFF
1: ON</td></tr>
<tr><td>If "ON" is selected, the total counter, electrical total counter (SP88), and the current user code counter count up twice when A3/DLT copy paper is used. This function is not applicable when using the by-pass feed table, since the by-pass feed table can not detect copy paper size.</td></tr>
<tr><td rowspan="2">28</td><td rowspan="2">Auto Sort Select</td><td>In Auto Sort Mode, the sorter is automatically selected when more than 1 original is set on the DF table and the entered copy quantity is greater than 1 and less than 11.
In Manual mode, sort mode has to be selected at the operation panel.</td><td rowspan="2">0: Manual
1: Auto Sort</td></tr>
<tr><td>The sorter and DF must be installed on the machine.</td></tr>
<tr><td rowspan="2">29</td><td rowspan="2">Fusing Temperature Control Selection</td><td>Selects the fusing temperature control mode.</td><td rowspan="2">0: ON/OFF control
1: Phase control</td></tr>
<tr><td>After selecting the control mode and turning the main switch off/on, the fusing temperature control mode is changed.</td></tr>
<tr><td rowspan="2">30</td><td rowspan="2">Toner Supply Mode Selection</td><td>Selects the toner supply system.
Normally, this value should not be changed.
<table>
<tr><th>SP Setting</th><th>Toner Supply System</th><th>Note</th></tr>
<tr><td>0</td><td>Detect supply mode using the initial TD sensor setting.</td><td>Default</td></tr>
<tr><td>1</td><td>Detect supply mode using the target TD sensor voltage set with SP53.</td><td></td></tr>
<tr><td>2</td><td>Detect supply mode (fixed amount) using the initial TD sensor setting.</td><td></td></tr>
<tr><td>3</td><td>Detect supply mode (fixed amount) using the target TD sensor voltage set with SP53.</td><td></td></tr>
<tr><td>4</td><td>Fixed supply mode.</td><td>Use only in abnormal TD sensor conditions.</td></tr>
</table>
</td><td rowspan="2">Default = 0</td></tr>
<tr><td>See SP31/SP32 for the toner supply amount.</td></tr>
<tr><td rowspan="2">31</td><td rowspan="2">Toner Supply Amount (TD Sensor Mode)</td><td>Determines how much toner is supplied in detect supply mode.</td><td rowspan="2">0 ~ 50
Default = 4 (0.4 s)</td></tr>
<tr><td>Select the toner supply time from 0.0 s to 5.0 s in 0.1 s steps.
See "Detailed Descriptions-Toner Supply Control" for more details.</td></tr>
</table>

<table>
<tr><th colspan="2">Mode No.</th><th>Function</th><th>Settings</th></tr>
<tr><td>32</td><td>Toner Supply Amount (Fixed Supply Mode)</td><td>Determines how much toner is supplied in fixed supply mode and in detect supply (fixed amount) mode.
For example, if the user normally makes copies of A4 originals that are about 7% black, select the 7% setting for best results.

<table><tr><th>SP Setting</th><th>Ratio</th><th>Supply Time</th><th>Note</th></tr><tr><td>0</td><td>3.5%</td><td>0.3 s</td><td>Default</td></tr><tr><td>1</td><td>7.0%</td><td>0.6 s</td><td></td></tr><tr><td>2</td><td>15%</td><td>1.2 s</td><td></td></tr><tr><td>3</td><td>30%</td><td>2.4 s</td><td></td></tr><tr><td>4</td><td>45%</td><td>3.6 s</td><td></td></tr><tr><td>5</td><td>60%</td><td>4.8 s</td><td></td></tr><tr><td>6</td><td>—</td><td>∞</td><td>Continuous supply</td></tr><tr><td>7</td><td>0%</td><td>0</td><td>No toner supply</td></tr></table>
See "Detailed Descriptions - Toner Supply Control" for more details.</td><td>0 ~ 7
Default = 0</td></tr>
<tr><td>33</td><td>Image Bias Adjustment (Manual ID Mode)</td><td>Adjusts the development bias voltage used in manual ID mode. This adjustment affects all manual ID settings. Use this SP mode to adjust the density of pale gray areas.

<table><tr><th>SP Setting</th><th>Setting</th><th>Dev. Bias</th><th>Note</th></tr><tr><td>0</td><td>Normal</td><td>0</td><td>Default</td></tr><tr><td>1</td><td>Darkest</td><td>+40 V</td><td></td></tr><tr><td>2</td><td>Darker</td><td>+20 V</td><td></td></tr><tr><td>3</td><td>Lighter</td><td>–20 V</td><td></td></tr><tr><td>4</td><td>Lightest</td><td>–40 V</td><td></td></tr></table>
See "Detailed Descriptions - Development" for more details.</td><td>0: Normal
1: Darker
2: Darkest
3: Lighter
4: Lightest</td></tr>
</table>

<table>
<tr><th colspan="2">Mode No.</th><th>Function</th><th>Settings</th></tr>
<tr><td>34</td><td>Image Density Adjustment (ADS Mode) †</td><td>Selects the image density level in ADS mode.
The development bias and the exposure lamp voltages are increased or decreased.
This adjustment affects copies made in ADS mode.

<table><tr><th>SP Setting</th><th>Setting</th><th>Dev. Bias</th><th>Exposure Lamp</th></tr><tr><td>0</td><td>Normal</td><td>0</td><td>0</td></tr><tr><td>1</td><td>Lighter</td><td>–40 V</td><td>0</td></tr><tr><td>2</td><td>Darker</td><td>+40 V</td><td>0</td></tr><tr><td>3</td><td>Lightest</td><td>–40 V</td><td>+4 steps</td></tr><tr><td>4</td><td>Darkest</td><td>+40 V</td><td>–4 steps</td></tr></table>
The exposure lamp setting specifies the change relative to the base exposure lamp voltage (Vo) in SP48, 1 step of the lamp voltage equals 0.5 V for 120 V (NA), and 1.0 V for 230 V (EU) machines.

See "Detailed Descriptions - Development" for more details.</td><td>0: Normal
1: Light
2: Dark
3: Lighter
4: Darker</td></tr>
<tr><td>35</td><td>Total Toner Supply ON Time During Toner Near/End Condition</td><td>Selects the toner supply motor on time after every copy job during a toner near/end condition.

See "Detailed Descriptions - Toner Supply" for more details.
This SP mode is intended for designer use only.</td><td>1: 10 s
2: 20 s
3: 30 s
4: 40 s
5: 50 s
6: 60 s</td></tr>
<tr><td>36</td><td>TD Sensor Sensitivity Setting</td><td>Adjust the sensitivity of the TD sensor.
Normally, this value should not be changed.

<table><tr><th>SP Setting</th><th>Sensitivity (V/wt%)</th><th>Note</th></tr><tr><td>0</td><td>0</td><td></td></tr><tr><td>1</td><td>0.05</td><td></td></tr><tr><td>2</td><td>0.10</td><td></td></tr><tr><td>Å</td><td>↓</td><td>0.05 per step</td></tr><tr><td>12</td><td>0.60</td><td></td></tr><tr><td>13</td><td>0.65</td><td></td></tr><tr><td>14</td><td>0.70</td><td></td></tr><tr><td>15</td><td>0.75</td><td>Default</td></tr><tr><td>16</td><td>0.80</td><td></td></tr><tr><td>Å</td><td>↓</td><td>0.05 per step</td></tr><tr><td>19</td><td>0.95</td><td></td></tr><tr><td>20</td><td>1.00</td><td></td></tr></table>
The toner supply motor on time and/or the toner density are changed by this setting. See "Detailed Descriptions - Toner Supply Control" for more details.</td><td>0 ~ 20
Default = 15</td></tr>
</table>

Mode No.		Function	Settings
38	Toner Density Adjustment	Adjusts copy quality by changing the toner concentration inside the development unit. *This can be adjusted using a UP mode.* *See "Detailed Descriptions - Toner Supply Control" for more details.*	**0: Normal** 1: Darker 2: Lighter 3: Darkest 4: Lightest
39	***VL2 Correction Interval***	Selects the interval for detecting the standard light intensity of the white plate for the VL2 correction. *For Small CV users in a dusty environment, 200 copies may be a better setting.*	**0: 500 copies** 1: 200 copies
41	Lead Edge Erase Margin Adjustment †	Adjusts the lead edge erase margin. *0.5 mm per step (–4.0 mm to +3.5 mm).* *See "Replacement and Adjustment - Copy Quality Adjustment" for details.*	0 ~ 15 **Default = 8** **(2.5 mm from leading edge)**
42	Registration Adjustment †	Adjusts the registration. *0.5 mm per step (–4.0 mm to +3.5 mm). See "Replacement and Adjustment - Copy Quality Adjustment" for details.*	0 ~ 15 **Default = 8**
43	Vertical Magnification Adjustment †	Adjusts magnification in the paper travel direction by changing the scanner speed. *0.2% per step (–3.2% to +3.0%).* *Check the focusing after doing this SP mode, and adjust with SP47 if necessary.* *See "Replacement and Adjustment - Copy Quality Adjustment" for details.*	0 ~ 31 **Default = 16**
44	Horizontal Magnification Adjustment †	Adjusts magnification perpendicular to the direction of paper travel, by changing the home position of the lens and mirrors. *0.2% per step (–4.0% to +6.0%).* *Check the focusing after doing this SP mode, and adjust with SP47 if necessary.* *See "Replacement and Adjustment - Copy Quality Adjustment" for details.*	0 ~ 50 **Default = 20**
45	Registration Buckle Adjustment †	Adjusts the amount of paper buckle in the registration area. *0.5 mm per step (–4.0 mm to +3.5 mm).*	0 ~ 15 **Default = 8**
46	Registration Buckle Adjustment - A5 Paper †	When feeding A5 sideways paper, the registration buckle can be adjusted separately from the SP45 setting to reduce the buckle. *0.5 mm per step (0 mm to –5.0 mm).*	**Default = 0**
47	Focus Adjustment †	Adjusts the 4th/5th mirror position to correct the focus. *This mode must be done after vertical and horizontal magnification adjustments (SP43 and SP44).* *See "Replacement and Adjustment - Copy Quality" for details on how to do this adjustment.*	0 ~ 100 **Default = 40** **(0.1 mm per step)**

<table>
<tr><th colspan="2">Mode No.</th><th>Function</th><th>Settings</th></tr>
<tr><td>48</td><td>Light Intensity Adjustment †</td><td>Clean the optics, then adjust the exposure lamp voltage. The V_L and V_{L2} corrections are reset automatically when entering this mode.

<table>
<tr><th rowspan="2">SP Setting</th><th colspan="2">Lamp Voltage (V)</th></tr>
<tr><th>120 V (NA) Version</th><th>230 V (EU) Version</th></tr>
<tr><td>100</td><td>50.0</td><td>100</td></tr>
<tr><td>101</td><td>50.5</td><td>101</td></tr>
<tr><td>102</td><td>51.0</td><td>102</td></tr>
<tr><td>Å</td><td>↓</td><td>↓</td></tr>
<tr><td>150</td><td>75.0</td><td>150</td></tr>
<tr><td>Å</td><td>↓</td><td>↓</td></tr>
<tr><td>180</td><td>90.0</td><td>180 Max</td></tr>
<tr><td>Å</td><td>↓</td><td>—</td></tr>
<tr><td>193</td><td>96.5</td><td>—</td></tr>
<tr><td>194</td><td>97.0 Max</td><td>—</td></tr>
</table>

Before performing this mode, clean the optics.
Then open SP33 and return the setting to the normal value if it has been changed. Then adjust the light intensity using an OS-A3 Test Chart with the platen cover placed over it. After adjusting the light intensity, adjust the ADS Reference Voltage Adjustment (SP56).
See "Replacement and Adjustment - Copy Quality" for details on how to do this adjustment.</td><td>120 V Machines
100 ~ 194
Default = 140

230 V Machines
100 ~ 180
Default = 140</td></tr>
<tr><td>49</td><td>Fusing Temperature Adjustment</td><td>Adjusts the control temperature of the hot roller during copying in 1°C steps.</td><td>120 V Machines
180°C ~ 195°C
Default = 190°C

230 V Machines
180°C ~ 200°C
Default = 190°C</td></tr>
<tr><td>50</td><td>Fusing Ready Temperature Adjustment</td><td>Adjusts the ready temperature of the hot roller during the warm-up period in 1°C steps.
<u>Normally, this value should not be changed.</u></td><td>120 V Machines
160°C ~ 175°C
Default = 172°C

230 V Machines
165°C ~ 180°C
Default = 177°C</td></tr>
<tr><td>51</td><td>Exposure Lamp Voltage Display</td><td>Displays the current exposure lamp voltage.
For 120 V machines, the actual applied voltage = displayed value/2
The exposure lamp turns on for 10 seconds when this mode is selected. Do not repeat more than 5 times, to avoid overheating the optics cavity.</td><td>0 ~ 247</td></tr>
</table>

Mode No.		Function	Settings
52	Fusing Temperature Display †	Displays the fusing temperature detected by the fusing thermistor. Press the ◇ key to monitor the temperature during the normal copy cycle.	
53	TD Sensor Target Control Voltage Adjustment	If the setting of SP30 (Toner Supply Mode Selection) is 1 or 3, this value is used for the TD sensor target voltage. ***Normally, this value should not be changed.***	1 ~ 200 **Default = 97** **(0.02 V per step)**
54	**TD Sensor Gain Adjustment**	When the TD Sensor initial setting is performed, this mode is adjusted automatically. ***Normally, this value should not be changed.***	0 ~ 255 **Default = 102** **(0.04 V per step)**
55	TD Sensor Output Display Data †	Displays the TD sensor output voltage. Press the ◇ key to monitor the output voltage during the normal copy cycle. The output voltage will display "0" when this mode is accessed after turning on the main switch without making any copies.	**(0.02 V per step) x Data**
56	ADS Reference Voltage Adjustment	Adjusts the ADS reference voltage. *After adjusting the light intensity (SP48), place 5 sheets of A4(LT) white paper on the exposure glass and select this mode. Adjust the ADS voltage to 2.5 V ± 0.1 V using VR101 on the main control board.*	
57	ADS Output Voltage Display †	Displays the ADS output voltage. Press the ◇ key to monitor the output voltage during the normal copy cycle. *For only this SP mode, the copies are made with the ADS mode (other SP modes use manual ID level 4).*	
58	***Image Adjustment at ID Level 1***	Adjusts the image density at ID level 1 by changing the development bias voltage.	**0: Normal** 1: Darker

SP Setting	Setting	Dev. Bias	Note
0	Normal	–200	Default
1	Darker	–140	

59	Optics Temperature Display †	Displays the optics temperature detected by the optics thermistor. *Press the ◇ key to monitor the temperature during the normal copy cycle.*	
60	Drum Potential Measurement (With Paper)	Factory use only.	
61	Drum Potential Measurement (Without Paper)	Factory use only.	

<table>
<tr><th colspan="2">Mode No.</th><th>Function</th><th>Settings</th></tr>
<tr><td>62</td><td>V_L Correction Interval</td><td>Sets the interval for V_L correction. The exposure lamp voltage (SP48) is increased by 1 step at the set copy count interval.

<table><tr><th>SP Setting</th><th>Exposure Lamp</th><th>Note</th></tr><tr><td>0</td><td>+2 steps/8,000 copies</td><td></td></tr><tr><td>1</td><td>+2 steps/6,000 copies</td><td></td></tr><tr><td>2</td><td>+2 steps/4,000 copies</td><td>Default</td></tr><tr><td>3</td><td>+2 steps/2,000 copies</td><td></td></tr><tr><td>4</td><td>+2 steps/1,000 copies</td><td></td></tr><tr><td>5</td><td>No Correction</td><td></td></tr><tr><td>6</td><td>+2 steps/500 copies</td><td></td></tr><tr><td>7</td><td>+2 steps/200 copies</td><td></td></tr></table>
1 step of the lamp voltage equals 0.5 V for N-American, and 1.0 V for European machines.

See "Detailed Section Descriptions - Exposure Lamp Voltage Control" for details.</td><td>0 ~ 8
Default = 2</td></tr>
<tr><td>63</td><td>Forced Toner Supply</td><td>Forces the toner bottle to supply toner to the development unit.

This mode starts when the [◇] key is pressed, and stops automatically after the selected time. Use this mode to achieve standard image density when copy quality problems indicate low toner.</td><td>0: 6 seconds
1: 3 seconds</td></tr>
<tr><td>64</td><td>V_R Correction Value</td><td>Sets the V_R correction value.
Keep this at the default setting.</td><td>Default = 0</td></tr>
<tr><td>66</td><td>TD Sensor Initial Setting</td><td>Performs the TD sensor initial setting.
This SP mode controls the voltage applied to the TD sensor to make the TD sensor output 1.9 ± 0.1 V.
After using SP66, check SP67 to see if the sensor is working correctly.

This mode is started by pressing the [◎] key and stops automatically after about 1 minute. Use this mode only after installing new developer.</td><td></td></tr>
<tr><td>67</td><td>TD Sensor Initial Output Display</td><td>Display the TD sensor initial setting output.</td><td>(0.02 V x displayed value)</td></tr>
<tr><td>68</td><td>V_{L2} Correction Selection</td><td>Selects or deselects V_{L2} correction.

Keep this setting at 0.</td><td>0: V_{L2} Correction
1: No V_{L2} Correction</td></tr>
</table>

Mode No.		Function	Settings
69	Imaging Unit Counter Display	Shows the total number of copies made so far by the imaging unit installed in the machine. This counter is reset by SP93. *The first three digits are displayed in the magnification indicator.* *Press the ◑ key to view the last three digits.*	
70	***User Code Mode***	Enables user code mode. ***JP101 on the main board must be cut.*** *It this mode is set, operators must enter a code to make copies. The user codes are the following 5 numbers:* *1101, 2202, 3303, 4404, 5505*	**0: No** 1: Yes
71	Sorter Operation	Enables sorter operation.	**0: No Sorter** 1: Sorter Installed
73	***User Code Counter Display***	Displays the contents of each user code counter. *Use the ⊞ or ⊟ key to select a user code. The last digit of the user code is displayed in the copy counter. User counters count from 0 to 999999.* *The first three digits are displayed in the magnification indicator.* *Press the ◑ key to display the last three digits.*	
74	Special Paper Size Setting	Sets the appropriate paper size for special paper loaded in the paper feed tray. *The "⋆ " mark on the paper size dial must be selected to use this special feature.* *When the paper feed tray is selected, the appropriate paper size or the "⋆ " mark will be displayed and the copier will operate in accordance with the set paper size.*	**0: ⋆ (Universal)** 1: A3 2: ⋆ (Universal) 3: B4 4: A4 5: A4R 6: B5 7: B5R 8: A5 9: B6 13: DLT 14: LG 15: LT 16: LTR 17: HLT 19: F 27: 8 k 28: 16 k (Sideways) 29: 16 k (Lengthwise)
76	Sorter Bin Capacity	Sets the stock quantity limits. If set to 1, the maximum amount of copies depends on the paper size (see the specifications for the sorter).	0: No limit **1: Limit**

Mode No.		Function	Settings
77	**Auto Shut Off (Energy Star) On/Off**	Selects the "Automatic Shut off" mode. *The copier automatically shuts itself off at the auto shut off time selected (SP14).*	0: Yes 1: No **Default = 0 (NA)** **Default = 1 (Others)**
78	Auto Energy Saver Mode On/Off	Selects the "Automatic Energy Saver" mode. *The copier automatically goes to Energy Saver mode at the auto reset time selected (SP15).*	0: No **1: Yes**
81	Factory Initialization	Factory use only.	
82	Data Communication	Factory use only.	
83	Factory Potential Adjustment	Factory use only.	
88	Total Copy Counter Display	Displays the total (electrical) copy counter. *The first three digits are displayed in the magnification indicator.* *Press the ◑ key to view the last three digits.* ***The mechanical total counter and the electrical total counter may not always display the same value, because of initial differences in the counter values.***	
90	Factory Data and Counter Clear	Factory use only.	
92	***User Code Counter Clear***	Resets all the user code counters (SP73). *To clear, enter "1" then press the ◐ key and the ◑ key at the same time.*	**0: No** 1: Yes
93	V_R Correction Reset	Resets the drum residual voltage correction counter for the VR correction. To clear, enter "1" then press the ◐ key and the ◑ key at the same time. ***Use this mode only after installing a new drum.***	**0: No** 1: Yes
94	V_{L2} Correction Reset	Resets the exposure lamp data and counter for the V_{L2} correction. Always perform this mode with SP95 as a set. To Clear, enter "1" then press the ◐ key and the ◑ key at the same time. *Normally not needed in the field, as this is handled by SP48.*	**0: No** 1: Yes
95	V_L Correction Reset	Resets the exposure lamp data and counter for the V_L correction. Always perform this mode with SP94 as a set. To clear, enter "1" then press the ◐ key and the ◑ key at the same time. *Normally not needed in the field, as this is handled by SP48.*	**0: No** 1: Yes

Mode No.		Function	Settings
96	Toner End Force Cancel	The Toner End condition is canceled forcibly. *By pressing the ◎ key to enter this SP mode, the toner end condition is canceled.*	
97	Service Call (E5) Reset	Resets a service call (E5) condition. *Turn the main switch off and on to check if the service call condition is reset.*	
98	Total Counter Clear	Clears the total (electrical) counter. **Normally, this SP mode should not be performed.** *To clear, enter "1" then press the ◎ key and the ◑ key at the same time.* *To avoid resetting the counter by mistake, the counter is reset only when the ◎ key and the ◑ key are pressed at the same time.*	0: No 1: Yes
99	Clear All Memory	Clears all counters and returns all modes to the default settings. See the Clear All Memory Procedure in this section for more details. **Normally, this SP mode should not be performed.** This SP mode is required only when replacing the EEPROM, or when the copier malfunctions due to a damaged EEPROM. *To clear, enter "1" then press the ◎ key and the ◑ key at the same time.* *To avoid resetting the counter by mistake, the counter is reset only when the ◎ key and the ◑ key are pressed at the same time.*	**0: No** 1: Yes
100	By-pass Feed Copy Counter Display	Displays the total (electrical) copy counter for the by-pass feed table. Since the copy counter for displaying the current SP mode number has only 2 digits, the manual image density indicator is used to display the first digit. *The first three digits are displayed in the magnification indicator.* *Press the ◑ key to view the last three digits.*	
101	**Upper Paper Feed Tray Copy Counter Display**	Displays the total (electrical) copy counter for the upper paper feed tray. Since the copy counter for displaying the current SP mode number has only 2 digits, the manual image density indicator is used to display the first digit. *The first three digits are displayed in the magnification indicator.* *Press the ◑ key to view the last three digits.*	

Mode No.		Function	Settings
102	***Lower Paper Feed Tray Copy Counter Display***	Displays the total (electrical) copy counter for the lower paper feed tray. Since the copy counter for displaying the current SP mode number has only 2 digits, the manual image density indicator is used to display the first digit.	
		The first three digits are displayed in the magnification indicator. Press the ◑ key to view the last three digits.	
106	DF Original Counter Display	Displays the total (electrical) number of originals fed from the DF. Since the copy counter for displaying the current SP mode number has only 2 digits, the manual image density indicator is used to display the first digit.	
		The first three digits are displayed in the magnification indicator. *Press the ◑ key to view the last three digits.*	
116	***Fusing Idling***	Selects fusing idling during warm-up. This mode should be used for troubleshooting purposes only. See "Detailed Descriptions" for more details.	**0: No** 1: Yes
		If this mode is selected, inform the customer that the first copy time will not be within specification. *This mode is enabled after turning the main switch off/on.*	
130	Total Service Calls	Displays the total number of service call conditions. Since the copy counter for displaying the current SP mode number has only 2 digits, the manual image density indicator is used to display the first digit.	
		The first three digits are displayed in the magnification indicator. *Press the ◑ key to view the last three digits.*	
131	Total Misfeeds	Displays the total number of misfeeds excluding original misfeeds in the DF. Since the copy counter for displaying the current SP mode number has only 2 digits, the manual image density indicator is used to display the first digit.	
		The first three digits are displayed in the magnification indicator. *Press the ◑ key to view the last three digits.*	

10. PREVENTIVE MAINTENANCE SCHEDULE

10.1 MODIFIED PM TABLE

Below lists the modified PM table for the A219 and A245 copiers.

NOTE: 1) The amounts mentioned as the PM interval indicate the number of copies.

2) Refer to "REGULAR PM PROCEDURE" in this section.

Symbol key: L: Lubricate R: Replace C: Clean I: Inspect A: Adjust

	EM	45 k	90 k	135 k	180 k	Notes
Optics						
Reflector		C	C	C	C	Silicone cloth
1st to 5th Mirrors		C	C	C	C	Silicone cloth
6th Mirror		C	C	C	C	Blower brush
Lens		C	C	C	C	Blower brush
Exposure Glass	C	C	C	C	C	Soft cloth dampened with alcohol or water
Platen Cover Sheet	C	C	R	C	R	Soft cloth dampened with water
Scanner Guide Rod		C, L	C, L	C, L	C, L	Dry cloth, Grease - CPL501
Scanner Guide Rail		C, L	C, L	C, L	C, L	Dry cloth, Silicone Grease - G501
4th/5th Mirror Guide Rod		C, L	C, L	C, L	C, L	Dry cloth, Silicone Grease - G501
4th/5th Mirror Guide Rail		C, L	C, L	C, L	C, L	Dry cloth, Silicone Grease - G501
Blue Filter		C	C	C	C	Soft cloth
Exposure Lamp/1st Scanner Ass'y						Replace at 200 k copies
Around the Drum						
Charge Corona Wire	C	R	R	R	R	Blower brush
Transfer Corona Wire	C	C	R	C	R	Blower brush
Charge Corona Grid			R		R	
Transfer Guide Plate	C	C	C	C	C	Soft cloth
End Blocks and Casings		C	C	C	C	Blower brush or dry cloth
Charge Corona Cleaning Pad	I	R	R	R	R	
Erase Lamp	C	C	C	C	C	Blower brush or dry cloth
QL	C	C	C	C	C	Blower brush or dry cloth
Discharge Plate	I	C	C	C	C	Blower brush

	EM	45 k	90 k	135 k	180 k	Notes
Cleaning						
Cleaning Blade		I	R	I	R	Apply setting powder
Inside the Cleaning Unit		C	C	C	C	Remove all toner and developer
Cleaning Entrance Seal		C	C	C	C	Dry cloth. Replace if necessary
Development Unit						
Developer		R	R	R	R	
Development Unit Entrance Seal		I	I	I	I	
Toner Supply Unit		I	I	I	I	
Development Drive Gear		L	L	L	L	Grease - CPL501
Imaging Unit Lower Cover		C	C	C	C	Dry cloth
Paper Feed (for each paper feed station)						
Feed Roller	C		R		R	Soft cloth dampened with water
By-pass Feed Roller	C		R		R	Soft cloth dampened with water
Friction Pad	C		R		R	Soft cloth dampened with water
Tray Bottom Plate Pad	C	C	R	C	R	Soft cloth dampened with water
By-pass Bottom Plate Pad	C	C	C	C	C	Soft cloth dampened with water
Registration Roller	C	C	C	C	C	Soft cloth dampened with water
Paper Feed Guide		C	C	C	C	Soft cloth dampened with water
Paper Dust Mylar	C	C	C	C	C	Soft cloth
Fusing						
Hot Roller			R		R	
Pressure Roller			R		R	
Stripper Pawls		C	C	R	C	Suitable solvent
Fusing Entrance and Exit Guide Plates		C	C	C	C	Suitable solvent
Fusing Thermistor		C	C	C	C	Suitable solvent
Hot Roller Bearings		C, L	C, L	C, L	C, L	Barrierta JFE55/2
Pressure Roller Bearings		I	I	I	I	
Others						
ADS	A					Adjust when the lamp voltage is changed.

	EM	45 k	90 k	135 k	180 k	Notes
Exit and Registration Sensors			I		I	
Bearings		I	I	I	I	
Ozone Filter		C	R	C	R	Vacuum cleaner or blower brash
Driving Belts		I	I	I	I	

	EM	80 k	160 k	Notes
DOCUMENT FEEDER (A662) (for originals)				
Transport Belt	C	R	R	Clean with belt cleaner at copier PM
Friction Belt	C	R	R	Clean with belt cleaner at copier PM
Pick-up Roller	C	C	C	Soft cloth dampened with water
Feed Roller	C	C	C	Soft cloth dampened with water

	EM	Notes
SORTER (A657)		
Bin Guide/Wheel	L	Silicone Grease - G501: If movement is not smooth.
Bushings	L	Launa oil: If bushings generate noise.
Exit Rollers	C	Alcohol

11. REGULAR PM PROCEDURE



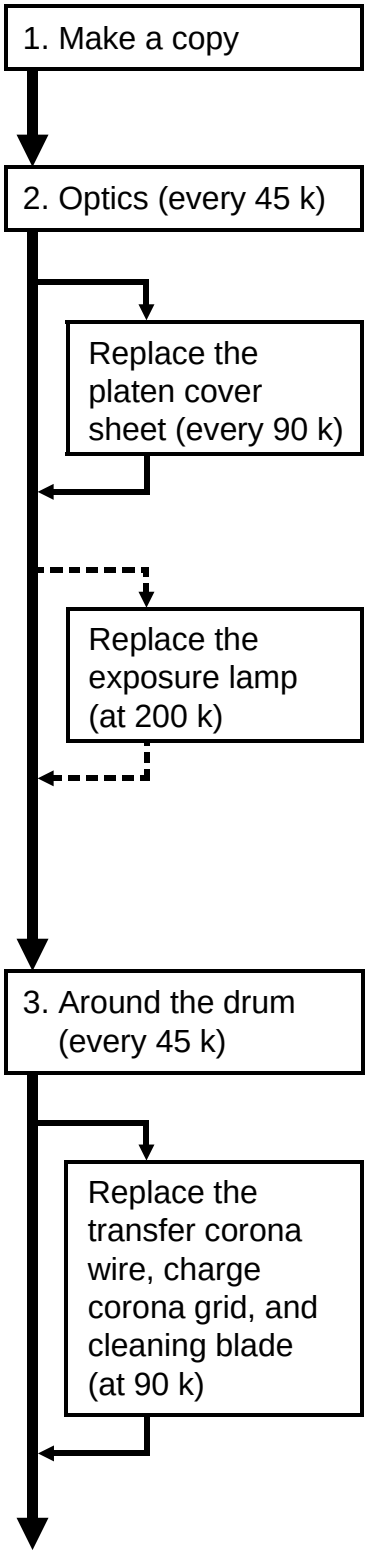

Make a copy of an OS-A3 test chart at manual image density level 4.

1. Clean the reflector and 1st to 5th mirrors with a silicone cloth.
2. Clean the 6th mirror and lens with a blower brush.
3. Clean the exposure glass with a soft cloth dampened with alcohol or water.
4. Clean the platen cover sheet with a soft cloth dampened with water (replace every 90 k).
5. Lubricate the scanner guide rod with Grease - CPL501.
6. Remove the oil on the scanner guide rail, 4th/5th mirror guide rail, and 4th/5th mirror guide rod. Then lubricate them all with Silicone Grease - G501.
7. Clean the blue filter with a silicone cloth.

1. Clean the transfer corona wire, the transfer entrance guide plate, and the charge corona grid with a blower brush or dry cloth.
2. Clean the end blocks and casings with a blower brush or dry cloth.
3. Remove the old developer.

4. Remove all toner, developer and the drum from the imaging unit. Clean the **whole** imaging unit, especially the lower cover with a dry cloth.
5. Inspect the development entrance seal, toner supply unit, and development drive gears in the imaging unit (lubricate the latter with 2 or 3 spots of CPL501).
6. Install new developer.
7. Clean the cleaning entrance seal and inspect the cleaning blade. If replaced, apply setting powder evenly on the surface and edge of the new cleaning blade.
8. Clean the erase lamp and the quenching lamp with a blower brush or dry cloth.
9. Replace the charge corona wire and charge corona cleaning pad.
10. Inspect the discharge plate. Clean it with a blower brush.

6. Paper Feed
(every 45 k)

1. Clean the bottom plate pad with a soft cloth dampened with water.
2. Clean the registration roller with a soft cloth dampened with water.
3. Clean the paper feed guide with a soft cloth dampened with water.
4. Clean the paper dust mylar with a soft dry cloth.

Replace the feed roller, by-pass feed roller, friction pad tray bottom plate pad
(every 90 k)

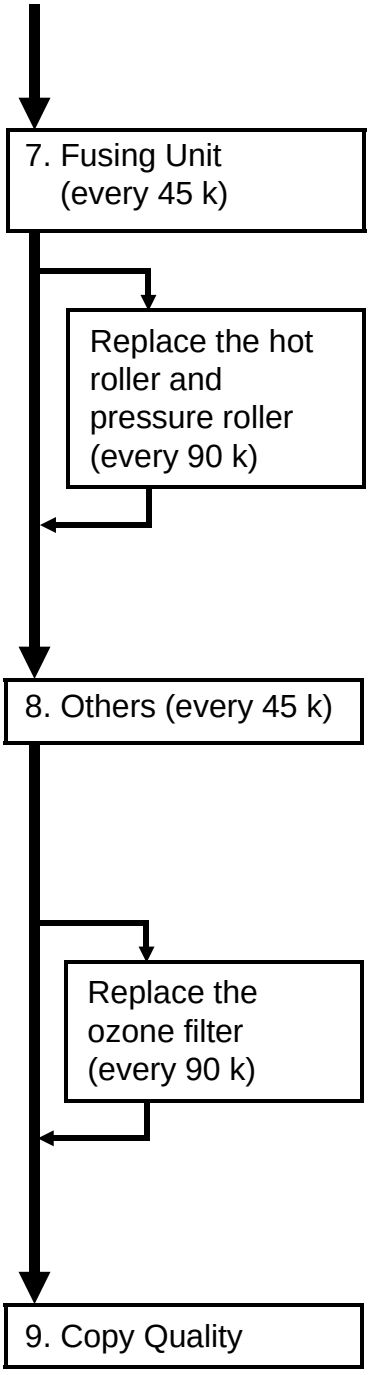

1. Clean the stripper pawls with a suitable solvent. (Replace every 135 k.)
2. Clean the fusing entrance and exit guide plates with a suitable solvent.
3. Clean the fusing thermistor with a suitable solvent.
4. Clean the inside of the hot roller bearings and lubricate with Barrierta JFE55/2.
5. Inspect the pressure roller bearings.

1. Clean the ozone filter with a vacuum cleaner or blower brush.
2. Inspect the bearings and the drive belts.

1. Inspect the exit and registration sensors.

1. Open SP33 (Image Bias Adjustment - Manual ID Mode) and turn the setting to the normal value if it has been changed.
2. Make a copy of a test chart at manual image density level 4. Perform the light intensity adjustment (SP48).
3. Perform the ADS reference voltage adjustment (SP56).

12. REPLACEMENT AND ADJUSTMENT

12.1 PAPER FEED ROLLER REPLACEMENT

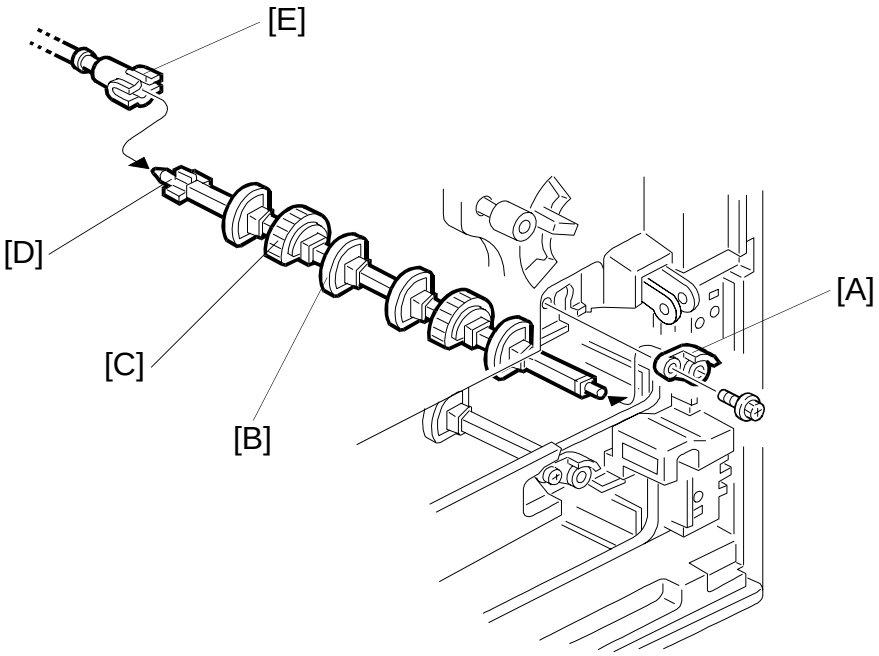

Paper Feed Rollers

1. Remove both paper trays.
2. Remove the front door and the inner cover only when replacing the 1st paper feed roller.
3. Remove the paper feed bushing [A] (1 screw).
4. Pull the paper feed roller shaft [B] out.
5. Replace the paper feed roller [C].

NOTE: When reinstalling the feed roller assembly, make sure of the following:

1) Do not touch the feed rollers with bare hands.
2) Reinstall the feed rollers face up as shown.
3) Ensure that the pin [D] on the end of the feed roller shaft fits into the slot [E] on the end of the drive shaft.

12.2 RELAY ROLLER CLUTCH AND PAPER FEED CLUTCH REPLACEMENT

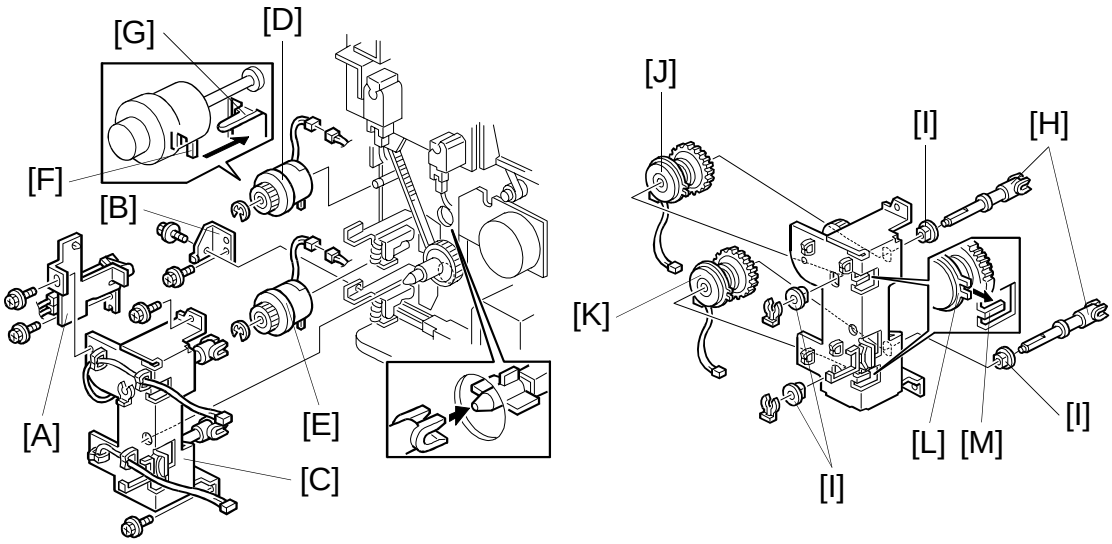

1. Turn off the main switch and unplug the power supply plug.
2. Remove the rear cover and the rear right cover. (See Rear Cover Removal.)
3. Remove the switch bracket [A] (2 screws and 1 connector).
4. Remove the securing bracket [B] (2 screws).
5. Remove the paper feed clutch assembly [C] (2 screws).
6. Replace the upper [D] and lower [E] relay roller clutches (1 E-ring and 1 connector each).

   NOTE: When reinstalling a new clutch, engage the notch [F] with the stopper [G].
7. Remove the paper feed shafts [H] and bearings [I] (1 snap ring each).
8. Replace the upper [J] and lower [K] paper feed clutches.

   NOTE: When reinstalling a new clutch, engage the notch [L] with the stopper [M].

- Reinstallation -

When reinstalling the paper feed clutch assembly, it is easier to operate if one of the paper feed roller shaft is removed from the copier. (See Paper Feed Roller Replacement.)

12.3 PAPER SIZE SWITCH REPLACEMENT

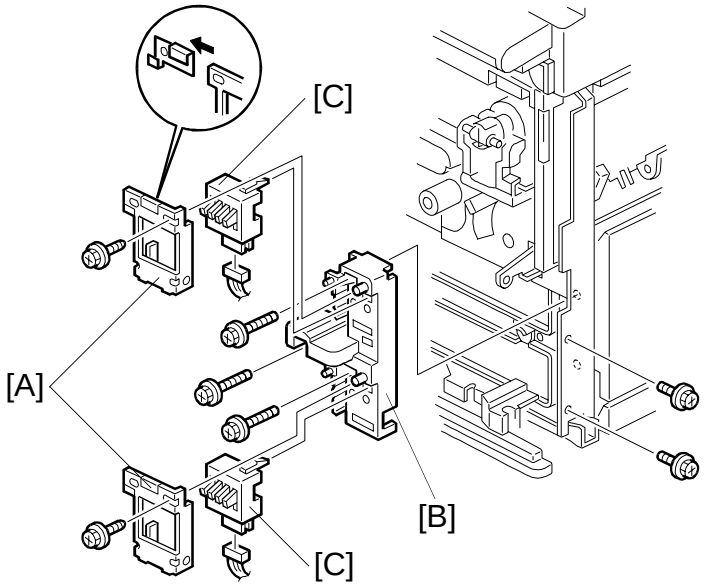

1. Remove the front right cover. (See Exterior and Inner Covers Removal.)
2. Remove the both paper trays.
3. Remove the brackets [A] (2 screws each).
4. Remove the paper size switch bracket [B] (3 screws).
5. Replace the tray paper size switches [C] (2 snap fits and 1 connector).

12.4 PAPER END SENSORS

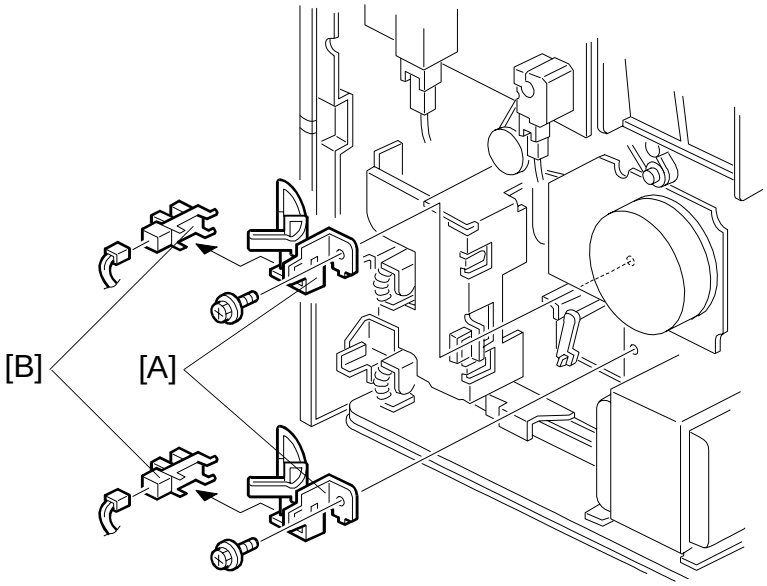

1. Remove both paper trays.
2. Remove the rear cover. (See Exterior and Inner Covers Removal.)
3. Remove the paper end sensor assemblies [A] (1 screw and 1 connecotr each).
4. Replace the paper end sensors [B].

NOTE: When reinstalling, manually make sure that the paper end sensing mechanism properly works.

13. SERVICE CALL CONDITIONS

✻ Only the following SC codes have been changed or added from the base copier.
(SC codes 14 and 96 were not listed in the base copier's service manual, and a RTB has been released.)

CODE #14 — ZERO CROSS SIGNAL ERROR 2

- Definition -

- The detected current is not 50 or 60 Hz.

- Possible Causes -

- Defective main control board
- Defective ac drive/dc power supply board
- Zero cross line open
- CN101 on the main control board or CN207 on the ac drive/dc power supply board is not correctly connected.
- Power line not stable

CODE #52 — FUSING ERROR 1

- Definition -

- The temperature detected by the thermistor does not reach 100°C within 35 (NA) or 43 (EU) seconds after the main switch is turned on. **To clear this error, refer to note 3 at the beginning of this chapter in the base copier's manual.**

- Possible Causes -

- Defective fusing thermistor
- Fusing lamp open
- Defective ac drive/dc power supply board
- Defective main control board
- CN101 on the main control board or CN207 on the ac drive/dc power supply board is not correctly connected.

CODE #53 — FUSING ERROR 2

- Definition -

- The temperature detected by the thermistor becomes higher than 255°C during copying, or 245°C during stand-by.
  To clear this error, refer to note 3 at the beginning of this chapter in the base copier's manual.

- Possible Causes -

- Thermistor short
- Defective ac drive/dc power supply board
- Defective main control board
- Fusing harness shorted
- Triac short

CODE #54 — FUSING ERROR 3

- Definition -

- The fusing lamp stays on for longer than 53 (NA) or 68 (EU) seconds while the main motor is off.
- The temperature detected by the thermistor does not change more than 20°C when the fusing lamp stays on for 17 (NA) or 19 (EU) seconds when the main motor is off.

  To clear this error, refer to note 3 at the beginning of this chapter in the base copier's manual.

- Possible Causes -

- Main board
- Defective ac drive/dc power supply board

CODE #55 — FUSING ERROR 4

- Definition -

- The temperature value output by the thermistor does not change at all 23 (NA) or 26 (EU) seconds after the main switch is turned on.
- The temperature change detected by the thermistor is more than 30°C within any 0.5 second interval after the 23 (NA) or 26 (EU) seconds warm up time after the main switch is turned on.

To clear this error, refer to note 3 at the beginning of this chapter in the base copier's manual.

- Possible Causes -

- Thermistor open
- Defective main control board
- Defective ac drive/dc power supply board
- Fusing lamp open
- Poor thermistor connection

CODE #96 — MAIN SWITCH ERROR

- Definition -

- The machine does not turn off within 8.5 seconds after Auto Shut Off is performed.

- Possible Causes -

- Defective main switch
- The connectors of the main switch are not correctly connected.
- Poor main switch dc harness connection (some lines must be cut.)

* Remedy for the initially produced machines.

- Turn the main switch off and on.

COPIER TIMING CHART (A245)

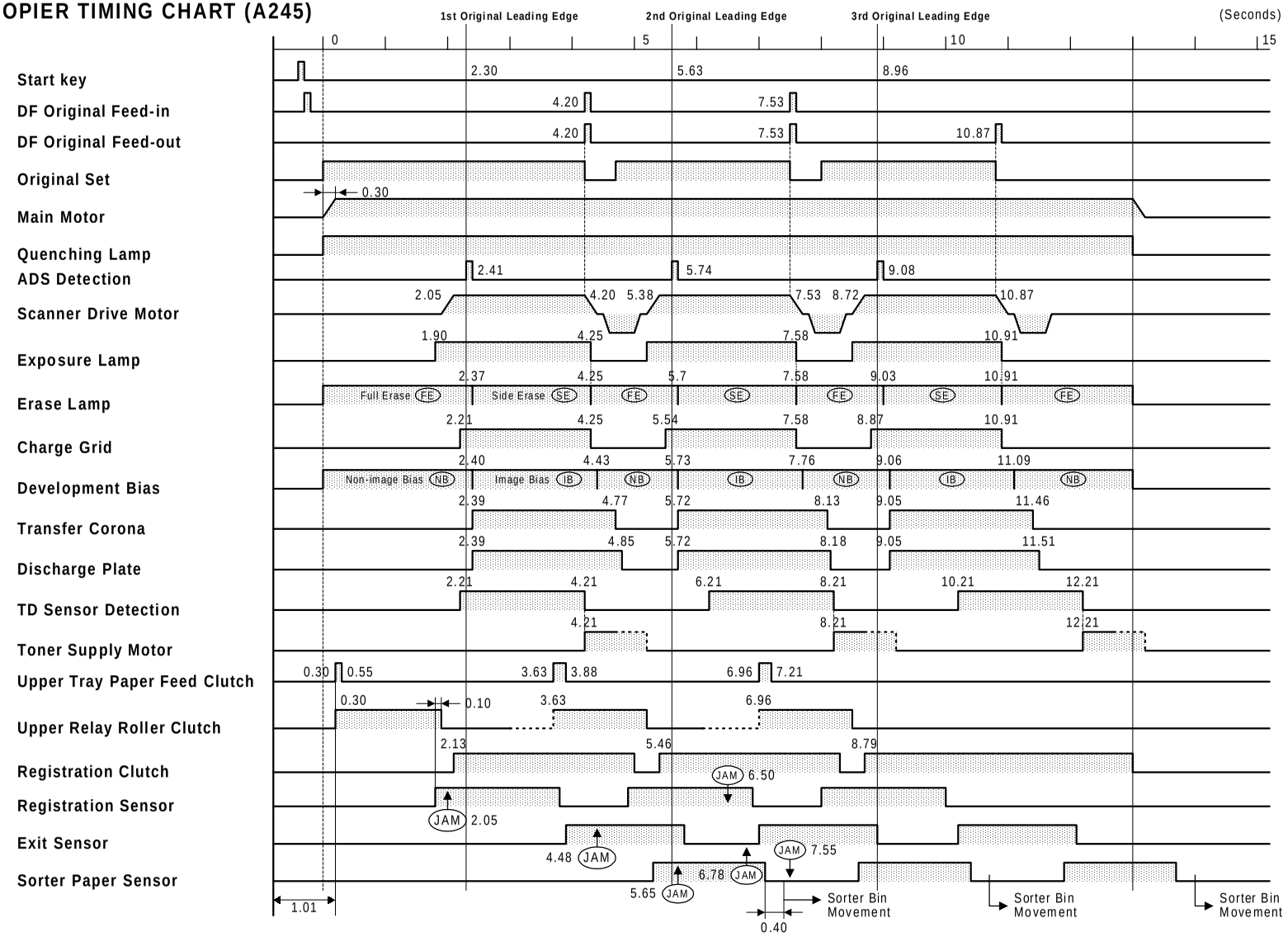

Note:
1. Original size: A4 (Sideways)
2. Number of originals: 3
3. Copy paper size: A4
4. Number of copies: 3
5. Magnification: 100%
6. Image Density: ADS
7. Paper Feed Station: Upper Paper Tray
8. Sorter Mode: Stack Mode

COPIER (A245) ELECTRICAL COMPONENT LAYOUT

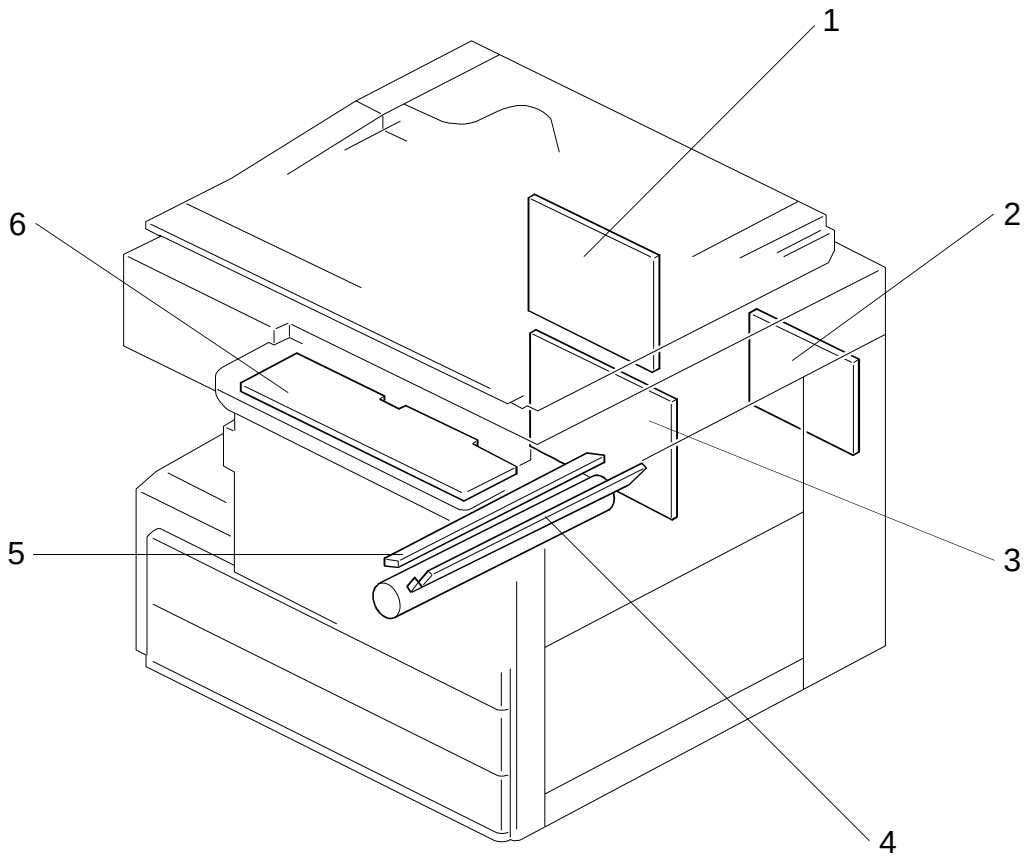

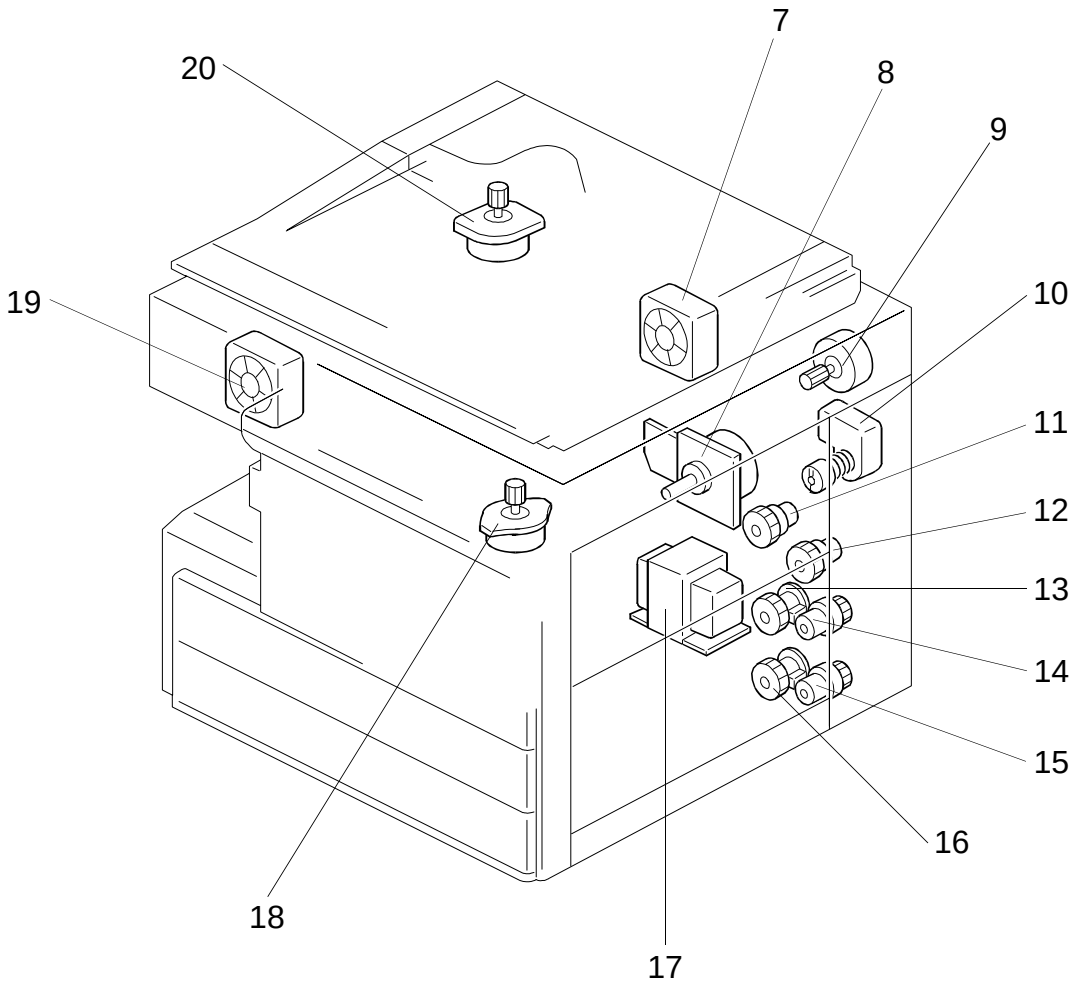
7
20
8
9
19
10
11
12
13
14
15
16
18
17

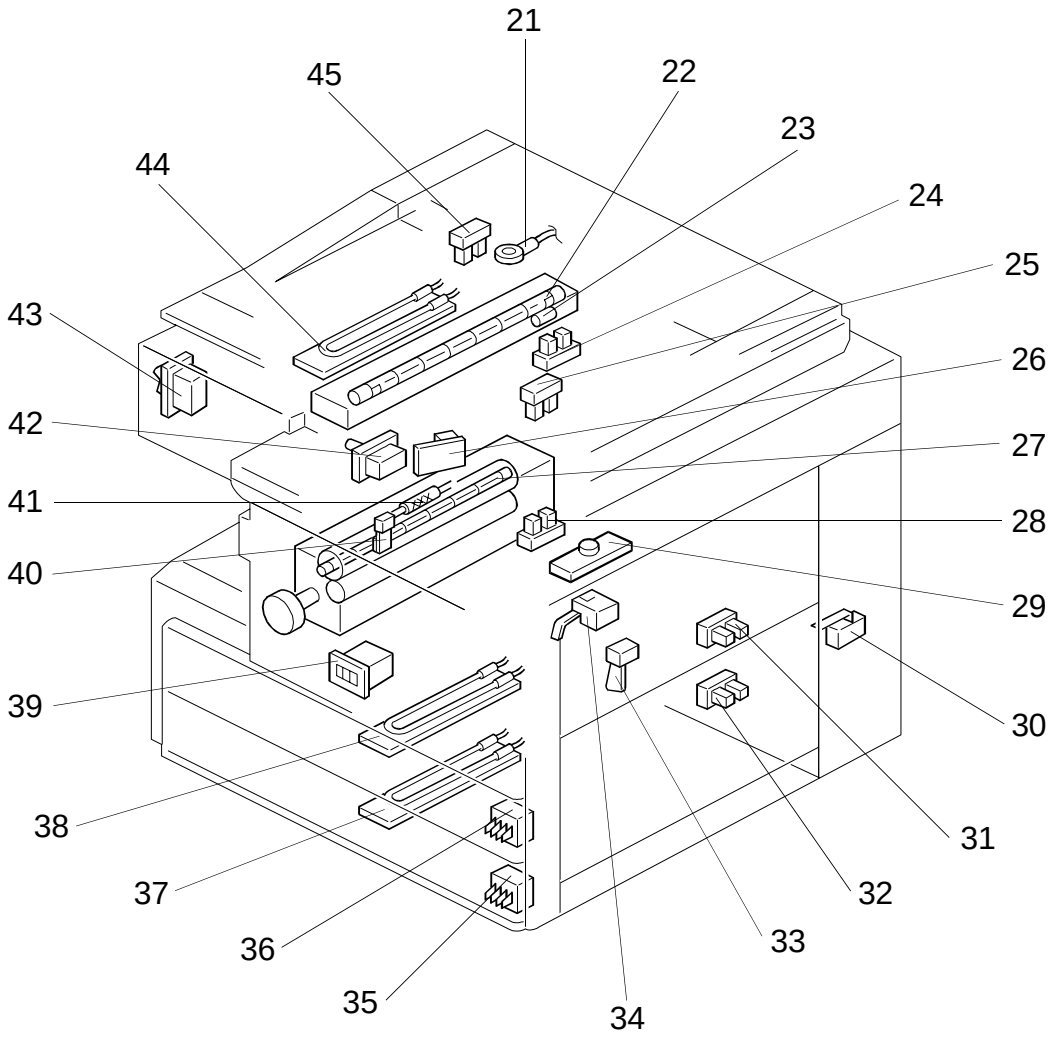
21
45
22
23
44
24
25
43
26
42
27
41
28
40
29
39
30
38
31
37
32
36
33
35
34

Description	Index No.	P-to-P Location
Main Control Board (PCB1)	1	E1
High Voltage Supply Board - C/G/B/T/S (PCB2)	2	D3
AC Drive/DC Power Supply Board (PCB3)	3	B5
Erase Lamp (L1)	4	D4
Quenching Lamp (L2)	5	D5
Operation Panel Board (PCB4)	6	D2
Exhaust Fan Motor (M7)	7	E8
Main Motor (M1)	8	C5
Scanner Drive Motor (M2)	9	C8
Toner Supply Motor (M5)	10	D8
Registration Clutch (CL4)	11	G4
By-pass Paper Feed Clutch (CL2)	12	G3
Upper Tray Paper Feed Clutch (CL1)	13	G3
Upper Relay Roller Clutch (CL5)	14	G5
Lower Relay Roller Clutch (CL6)	15	G5
Lower Tray Paper Feed Clutch (CL3)	16	G3
Transformer (TR)	17	C2
4th/5th Mirror Motor (M4)	18	D8
Optics Cooling Fan Motor (M6)	19	E8
Lens Motor (M3)	20	D8
Optics Thermistor (TH2)	21	G5
Exposure Lamp (L3)	22	B5
Exposure Lamp Thermofuse (TF1)	23	B4
Lens Home Position Sensor (S8)	24	G7
Exit Sensor (S6)	25	G6
ADS Sensor (S2)	26	G3
Fusing Lamp (L4)	27	B4
4th/5th Mirror Home Position Sensor (S1)	28	G2
Toner Density Sensor (S9)	29	F8
Right Vertical Guide Switch (SW4)	30	G4
Upper Tray Paper End Sensor (S3)	31	G3
Lower Tray Paper End Sensor (S10)	32	G4
By-pass Feed Paper End Sensor (S5)	33	G4
Registration Sensor (S4)	34	G4
Lower Tray Paper Size Switch (SW5)	35	G6
Upper Tray Paper Size Switch (SW3)	36	G6
Lower Tray Heater (Option) (H3)	37	B4
Upper Tray Heater (Option) (H1)	38	B3
Total Counter (CO1)	39	E8
Fusing Thermistor (TH1)	40	G5
Fusing Thermofuse (TF2)	41	B4
Interlock Switch (SW2)	42	B2
Main Switch (SW1)	43	B2
Optics Anti-condensation Heater (Option) (H2)	44	B2
Scanner Home Position Sensor (S7)	45	G7
Key Counter (Not Used) (CO2)	N/A	E8

SORTER (A657) ELECTRICAL COMPONENT LAYOUT

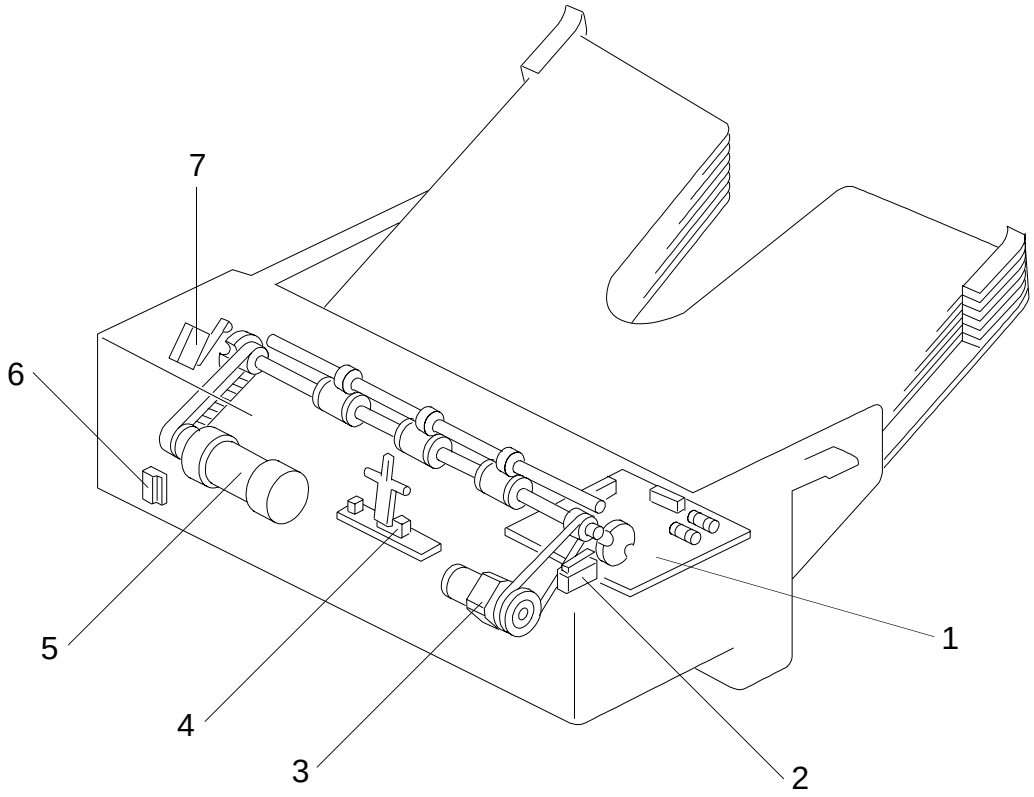

Description	Index No.	P to P Location
Sorter Main Board (PCB1)	1	G1
Wheel Switch (SW1)	2	H2
Roller Drive Motor (M1)	3	H1
Paper Sensor (S1)	4	H2
Bin Drive Motor (M2)	5	H1
Sorter Switch (SW2)	6	H2
Home Position Switch (SW3)	7	H1

DF (A662) ELECTRICAL COMPONENT LAYOUT

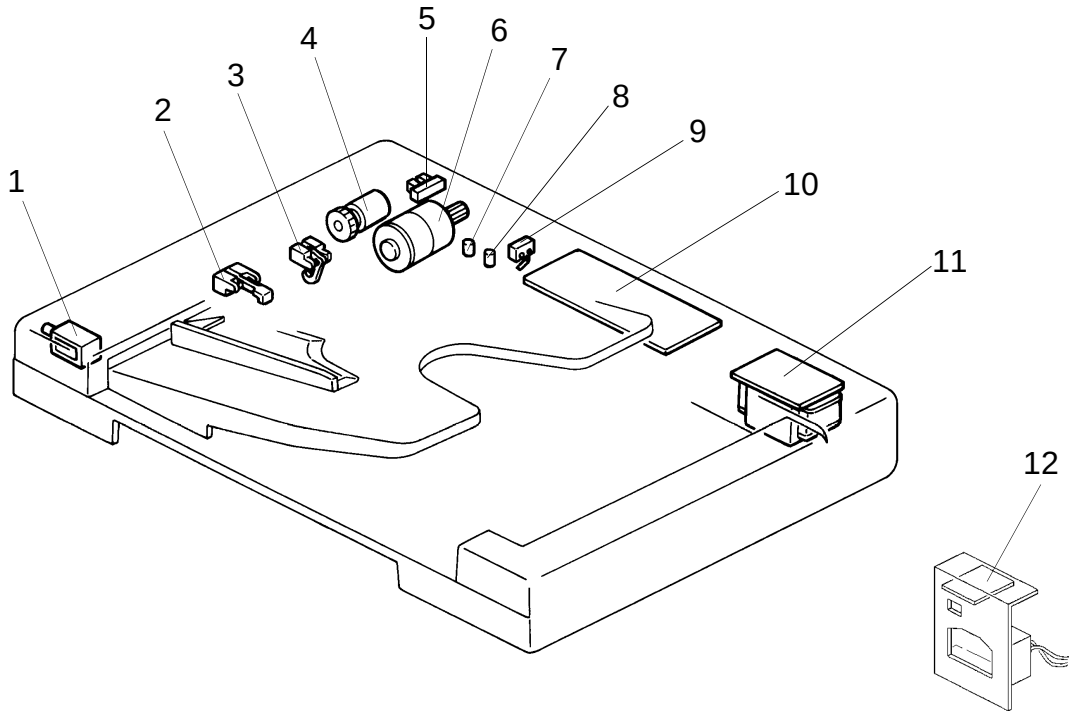

Description	Index No.	P to P Location
Pick-up Solenoid (SOL1)	1	A7
Registration Sensor (S3)	2	C7
Original Set Sensor (S2)	3	C7
Feed Clutch (CL1)	4	A7
Pulse Generator Sensor (S1)	5	A8
DF Motor (M1)	6	A7
Insert Original Indicator (LED2)	7	A8
SADF Indicator (LED1)	8	A8
Lift Switch (SW1)	9	C6
DF Main Board (PCB1)	10	B8
DF Transformer (TR1)	11	B6
DF Interface Board (PCB2)	12	C8

B019

SERVICE MANUAL

1. OVERALL MACHINE INFORMATION

1.1 SPECIFICATIONS

Copy paper capacity: 250 sheets or less than 30mm (copy tray)
Copying speed: 13 copies/minute
(A4 or 8 1/2" x 11" sideways, fed from the paper tray.)
9 copies/minute (A3 or 11" x 17" lengthwise, fed from the paper tray.)

First copy time : 6.9 seconds
(A4 or 8 1/2" x 11" sideways, fed from the paper tray.)

Warm-up time : 35 seconds (at 23)

Reproduction ratio : Enlargement:

Inch Version:	129% 121%	Metric Version:	141% 122%

Reduction:

Inch Version:	93% 74% 65%	Metric Version:	93% 82% 71%

Noise Emission:
Sound Power Level: Same as Grand Kingfisher 2
Sound pressure level during copying: Copier only: 57 dB, with DF: 61 dB

Dimensions :

	Width	Depth	Height
Copier Only	579mm,22.8"	560mm,22.1"	420mm,16.6"
Full system(*)	579mm,22.8"	560mm,22.1"	508mm,19.8"

(*) with DF (B019 only)

Weight :

Copier only: Approx. 40.5Kg (89.3 lbs.)
*without copy tray and toner bottle.
Full system (with DF): approx. 46.5Kg (102.6 lbs.)

Optional equipment: DF(Document Feeder)

2. ELECTRICAL COMPONENT DESCRIPTION

No changes:

3. INSTALLATION PROCEDURES

3.1 COPIER ACCESSORY CHECK LIST

1. Copy Tray
2. Platen Cover
3. Photoconductor
4. Operating Instructions – English (-17, -29, -22, -15)
4. Decal – Symbol Explanation – English (-17, -29, -15)
5. Decal – Symbol Explanation – Multi-language (-27, -29, -23, -10, -22, -26)
6. NECR (-17, -27, -29, --19, -23, -69, -15)
7. Model Name Decal (-15)
8. Safety Information (-10)

4. SERVICE TABLES

4.1 SERVICE PROGRAM MODE

The following SP modes were added:

1. The method for calculating the target TD sensor output (Target VT) has been changed from previous models. The previous Target VT will be called “VTref”, and its default value has been changed from 1.9 to 1.5V. The alpha and beta corrections described below will be added to VTref. The new Target VT is then calculated as:

   Target VT = VTref + α + β

2. For toner density correction, SP37 (alpha correction) has been added as a new SP Mode.
3. In addition, items 5 and 6 in the second table below have been added to SP38 (beta correction).

<table>
<tr><th colspan="2">Mode No.</th><th>Function</th><th>Data</th></tr>
<tr><td>37</td><td>Alpha Correction</td><td>This correction is designed to operate gradually, over a period of time. Therefore, it should not be used to achieve quick results.
<table>
<tr><th>Correction Level</th><th colspan="2">Variable Correction Target</th><th></th></tr>
<tr><td>No correction</td><td></td><td></td><td>0</td></tr>
<tr><td>+0.06V / 1K copies</td><td>- -</td><td>Lighter</td><td>1</td></tr>
<tr><td>+0.04V / 1K copies</td><td>-</td><td>Light</td><td>2</td></tr>
<tr><td>+0.02V / 1K copies</td><td>Default</td><td></td><td>3</td></tr>
<tr><td>+0.02V / 2K copies</td><td>+</td><td>Dark</td><td>4</td></tr>
<tr><td>+0.02V / 4K copies</td><td>++</td><td>Darker</td><td>5</td></tr>
</table></td><td></td></tr>
<tr><td></td><td></td><td></td><td></td></tr>
<tr><td>38</td><td>Toner Density Adjustment

Beta Correction</td><td>Adjusts copy quality by changing the toner concentration inside the development unit.
Note: items 5 and 6 have been newly added to SP38.
<table>
<tr><th>Toner Density Correction Target:</th><th>Target VT Correction:</th><th>Target</th><th></th></tr>
<tr><td></td><td></td><td>No correction</td><td>0</td></tr>
<tr><td>+0.5%</td><td>-0.375V</td><td>Darker</td><td>1</td></tr>
<tr><td>-0.5%</td><td>+0.375V</td><td>Lighter</td><td>2</td></tr>
<tr><td>+1.0%</td><td>-0.75V</td><td>Dark</td><td>3</td></tr>
<tr><td>-1.0%</td><td>+0.75V</td><td>Light</td><td>4</td></tr>
<tr><td>+1.3%</td><td>-1.0V</td><td>Darkest</td><td>5</td></tr>
<tr><td>-1.3%</td><td>+1.0V</td><td>Lightest</td><td>6</td></tr>
</table>
Limitations: -The maximum value of the combined alpha and beta corrections is 1V.

Therefore: $|\alpha + \beta| \leq 1$.

Perform SP66, to reset the correction counter.</td><td></td></tr>
<tr><td></td><td></td><td></td><td></td></tr>
<tr><td>70</td><td>User Code Mode

(No UP mode)</td><td>Enables user code mode.
JP101 on the main board must be cut.
If this mode is set, "U2" is displayed in the copy counter and operators must enter a code to make copies.
Using the number keys, input the three-digit user code number (e.g.111,123, 999). Available user codes are; 1 - 999. Please note that 000 is invalid.</td><td>0: No
1: Yes</td></tr>
<tr><td></td><td></td><td></td><td></td></tr>
<tr><td>72</td><td>Registering User Numbers

(UP 12)</td><td>Function: Registers user numbers.

The user number (1-10) is displayed in the copy counter. Code numbers are displayed in the three digit indicator (Zoom, %). To change the user code numbers, use the Zoom key.</td><td></td></tr>
<tr><td></td><td></td><td></td><td></td></tr>
</table>

Mode No.		Function	Data
73	User Code Counter Display (UP 8)	Displays the copy counter value for each user number registered. The user number (1-10) is displayed in the copy counter and the corresponding total copy counter value is displayed in the 3-digit indicator (Zoom,%). Using the Zoom key (up:+,down:-), you can view how many copies each registered user has made. Access mode number 73 (number 8 for UP mode). "1" is displayed in the copy counter. At first, only 3 digits are displayed in the 3-digit indicator (6th, 5th and 4th). After you press the "Darker" key, the next 3 digits will be displayed (3rd, 2nd and 1st). To exit, press the Auto Image Density key and turn the main switch off and on.	
92	User Code Counter Clear (UP 9)	Clears the total copy counter values for all registered users. To clear, enter "1" then press the Auto Image Density key and the "Darker" key at the same time. To exit, turn the main switch off and on.	**0: No** 1: Yes

SP 70 (No UP mode) User Code Mode selection:

Function: Enables User Code Mode.

Procedure:

1. Access SP mode 70.
2. Select 1: user code mode (Default is 0: No user code).
3. The machine is then ready to access next mode number.

Note: Cut JP101 on the main board.

Procedure to set the user code:

1. "U2" is displayed in the copy counter. Using the number keys, input the three-digit user code number (e.g.111,123, 999). Available user codes are; 1 - 999. Please note that 000 is invalid.
2. Press the Auto Image Density key.
3. "U2" is no longer displayed and the machine becomes ready to copy.
4. If any invalid values are entered or other keys are pressed, "U2" will remain displayed and copies cannot be made.
5. After the copy job is completed (or one minute after the last key is pressed), the machine initiates Auto Reset and becomes ready to set the next user code. At this time, "U2" will be displayed and copies cannot be made.
6. As an alternative, you can set the next user code by pressing the Clear Mode/Energy Star key and then the Clear/Stop key when the machine is in Copy Ready condition. The machine will then become ready to accept the next user code.

SP 72 (UP 12) Registering User Numbers:

Function: Registers user numbers.

The user number (1-10) is displayed in the copy counter. Code numbers are displayed in the three digit indicator (Zoom, %). To change the user code numbers, use the Zoom key.

Procedure:

1. Access mode number 72 in SP mode (12 for UP mode).
2. "1" is displayed in the copy counter. A 3-digit number can be displayed in the three digit indicator(Zoom,%). Press the Zoom Up(+) key or Zoom Down (-) key to see the next user codes.
3. Enter the new user code with number keys. This can be a 3-digit number from 1 to 999.
4. Press the Auto Image Density key. The old user code is then changed to the new code.
5. To exit from the User Tools, turn the main switch off and on.

User Numbers:	User code:
1 - 10	1-999

Note: User codes are set to "0" when the machine is shipped from the factory.

SP 73 (UP 8) User Code Counter Check:

Function:

Displays the copy counter value for each user number registered.

The user number (1-10) is displayed in the copy counter and the corresponding total copy counter value is displayed in the 3-digit indicator (Zoom,%). Using the Zoom key (up:+,down:-), you can view how many copies each registered user has made.

Procedure:

1. Access mode number 73 (number 8 for UP mode).
2. "1" is displayed in the copy counter.
3. At first, only 3 digits are displayed in the 3-digit indicator (6th, 5th and 4th).
4. After you press the "Darker" key, the next 3 digits will be displayed (3rd, 2nd and 1st).
5. To exit, press the Auto Image Density key and turn the main switch off and on.

SP 92 (UP 9) User Code Counter Clear:

Function: Clears the total copy counter values for all registered users.

Procedure:

1. Access mode number 92 (number 9 for UP mode).
2. Press "1" on the number key pad.
3. Press the Auto Image Density key and the "Darker" key at the same time.
4. The Image density indicator will blink and begin to clear the counter values.
5. The image density indicator then turns off and all total copy counter values are cleared. The machine will then wait for the next SP mode number to be input.
6. To exit, turn the main switch off and on.

5. PM TABLE

5.1 All parts indicated as 45K PM in prior model are changed to 60K.

TECHNICAL SERVICE BULLETINS

RICOH TECHNICAL SERVICE BULLETIN

CUSTOMER SERVICE GROUP

BULLETIN NUMBER: 4015 - 001 **07/29/97**

APPLICABLE MODEL: FT4015

Note: This copy intended as master of original for reproduction of additional bulletins.

SUBJECT: PARTS CATALOG CORRECTIONS

GENERAL:

The following Parts Catalog corrections are being issued for all FT4015 Parts Catalogs. This information should be incorporated into all existing Parts Catalog documentation.

1. Part Number Correction

INCORRECT PART NUMBER	CORRECT PART NUMBER	DESCRIPTION	REFERENCE	
			PAGE	ITEM
A2193131	A2193132	Development Cover	31	6

2. Not Listed

PART NUMBER	DESCRIPTION	QTY	REFERENCE	
			PAGE	ITEM
16607473	Capacitor - 47000pF: +80,-20: 50V	n	54	177

3. Illustration Correction

CAPACITOR

SYMBOL NO.	INDEX NO.
C121	173
C122	176
C123	173
C124	175
C125	175
C126	173
C127	172
C128	173
C129	176
C130	175

→

SYMBOL NO.	INDEX NO.
C121	173
C122	176
C123	177
C124	175
C125	175
C126	173
C127	172
C128	173
C129	176
C130	175

Item	Page No.	Symbol No.	Incorrect Index No.	Correct Index No.
Capacitor	50	C123	173	177

Continued...

4. Illustration Correction - page 30

Incorrect

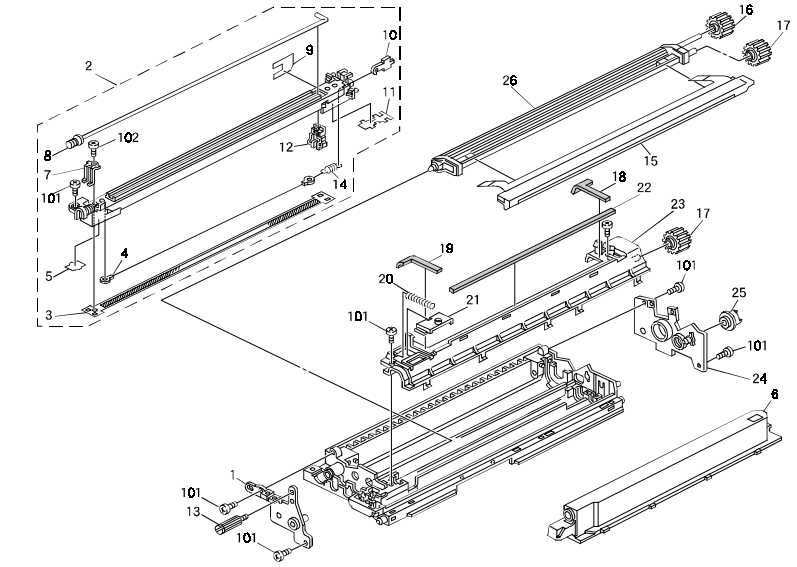

Correct

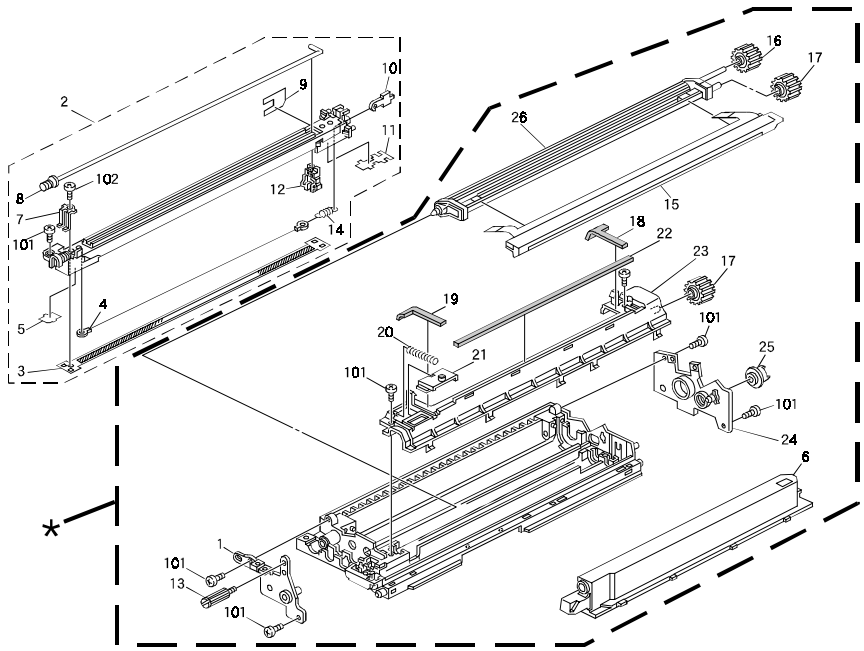

RICOH TECHNICAL SERVICE BULLETIN

CUSTOMER SERVICE GROUP

BULLETIN NUMBER: 4015 - 002 **08/29/97**

APPLICABLE MODEL: FT4015

Note: This copy intended as master of original for reproduction of additional bulletins.

SUBJECT: SERVICE MANUAL - INSERT

GENERAL:

The Service Manual page(s) listed below must be replaced with the page(s) supplied. Each bulletin package contains 1 set of replacement pages.

PAGES:

The revised areas have been highlighted by an arrow ⇒

- 5-1 Corrected Information
- 5-2 Corrected Information
- 5-3 Corrected Information
- 6-6 Corrected Information
- 6-7 Corrected Information
- 7-24 Additional Information

RICOH TECHNICAL SERVICE BULLETIN

CUSTOMER SERVICE GROUP

BULLETIN NUMBER: 4015 - 003 **08/29/97**

APPLICABLE MODEL: FT4015

Note: This copy intended as master of original for reproduction of additional bulletins.

SUBJECT: SC CODE #14

CODE #14 - ZERO CROSS SIGNAL ERROR 2

DEFINITION

The detected current is neither 50 or 60 Hz.

Possible Causes

- Defective main Control Board
- Defective AC Drive /DC Power Supply Board
- Zero Cross line open
- CN101 on the Main Control Board or CN207 on the AC Drive/DC Power Supply Board is not correctly connected
- Power line is not stable

* To Clear Service Code 14:

- Turn the Main Power Switch "OFF" and "ON"

RICOH TECHNICAL SERVICE BULLETIN

CUSTOMER SERVICE GROUP

BULLETIN NUMBER: 4015 - 004 **08/29/97**

APPLICABLE MODEL: FT4015

Note: This copy intended as master of original for reproduction of additional bulletins.

SUBJECT: 1st SCANNER RE-INSTALLATION NOTICE

The following information was not mentioned in the Service Manual.

When re-installing the 1st Scanner, make sure to clamp the Scanner Harness [A] at the position shown below. The white mark [B] should be aligned with the right side of the Harness Clamp [C].

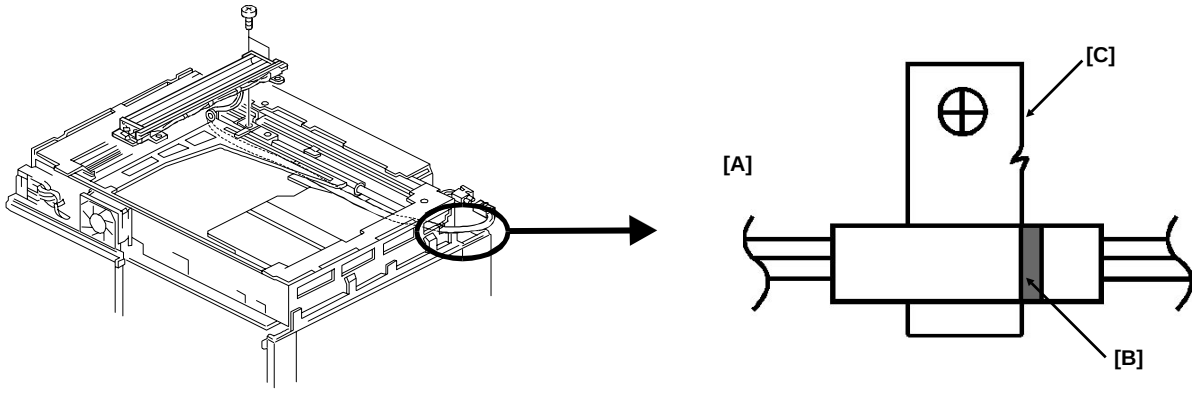

NOTE: *Failure to perform the procedure above can result in the Scanner Harness falling off of the 2nd Scanner Pulley. This can result in a scanner lock condition.*

RICOH TECHNICAL SERVICE BULLETIN

CUSTOMER SERVICE GROUP

BULLETIN NUMBER: 4015 - 005 **08/29/97**

APPLICABLE MODEL: FT4015

Note: This copy intended as master of original for reproduction of additional bulletins.

SUBJECT: PARTS CATALOG CORRECTION

GENERAL:

The following Parts Catalog corrections are being issued for all FT4015 Parts Catalogs. This information should be incorporated into all existing Parts Catalog documentation.

1. Parts Catalog Addition

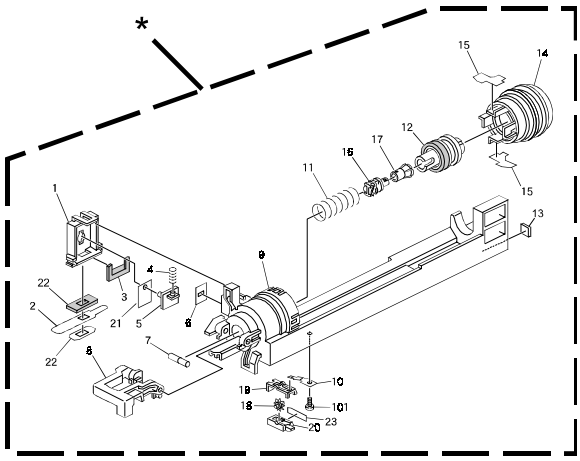

			REFERENCE	
NEW PART NO.	**DESCRIPTION**	**QTY**	**PAGE**	**ITEM**
A2193030	Toner Supply Unit (NA) (RIC)	1	29	*
A2193034	Toner Supply Unit (EU) (RIC)	1	29	*
A2193036	Toner Supply Unit (Others)	1	29	*

2. Description Change

			REFERENCE	
PART NO.	**INCORRECT DESCRIPTION**	**CORRECT DESCRIPTION**	**PAGE**	**ITEM**
A2193314	Toner Supply Case - 115V (RIC)	Toner Supply Case (NA) (RIC)	29	9
A2193411	Toner Supply Case - 230V (RIC)	Toner Supply Case (EU) (RIC)	29	9
A2193416	Toner Supply Case - (OEM)	Toner Supply Case (Others)	29	9

RICOH TECHNICAL SERVICE BULLETIN

CUSTOMER SERVICE GROUP

BULLETIN NUMBER: FT4015 - 006 **10/17/97**

APPLICABLE MODEL: FT4015

Note: This copy intended as master of original for reproduction of additional bulletins.

SUBJECT: PARTS CATALOG CORRECTION

The following Parts Catalog Corrections are being issued for all FT4015 Parts Catalogs.

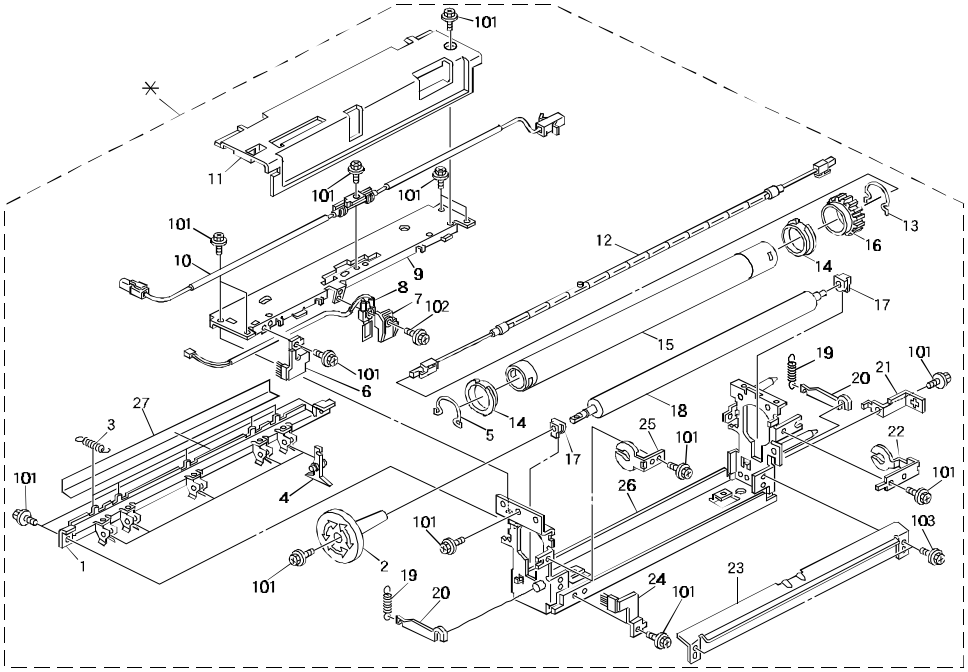

					REFERENCE	
OLD PART NO.	**NEW PART NO.**	**DESCRIPTION**	**QTY**	**INT**	**PAGE**	**ITEM**
A2194055		Fusing Unit	1	1	37	*
	A2194021	Fusing Unit - 120V	1	1	37	*
	A219 4022	Fusing Unit - 230V	1	1	37	*

RICOH TECHNICAL SERVICE BULLETIN

CUSTOMER SERVICE GROUP

BULLETIN NUMBER: 4015 - 007 **10/31/97**

APPLICABLE MODEL: FT4015

Note: This copy intended as master of original for reproduction of additional bulletins.

SUBJECT: OHP SHEET COPY QUALITY

SYMPTOM:

Straight lines on the bottom half of OHP sheet copies are slightly bent.

CAUSE:

Inadequate fusing pressure.

SOLUTION:

The Pressure Spring tension tolerance has been changed to prevent the above mentioned symptom.

					REFERENCE	
OLD PART NO.	**NEW PART NO.**	**DESCRIPTION**	**QTY**	**INT**	**PAGE**	**ITEM**
A2194069	A2194068	Pressure Spring	2	1	37	19

UNITS AFFECTED:

All FT4015 copiers manufactured after Serial Number A7367834584 will have the new style Pressure Springs installed during production.

INTERCHANGEABILITY CHART:

0	OLD and NEW parts can be used in both OLD and NEW machines.	2	NEW parts CAN NOT be used in OLD machines. OLD parts can be used in OLD and NEW machines.
1	NEW parts can be used in OLD and NEW machines. OLD parts CAN NOT be used in NEW machines.	3	OLD parts CAN NOT be used in NEW machines. NEW parts CAN NOT be used in OLD machines.
3/S	Must be installed as a set on units manufactured prior to the S/N cut-in. On units manufactured after the S/N cut-in or previously modified, use the new part numbers individually.		

RICOH TECHNICAL SERVICE BULLETIN

CUSTOMER SERVICE GROUP

BULLETIN NUMBER: 4015 - 008 **10/31/97**

APPLICABLE MODEL: FT4015

Note: This copy intended as master of original for reproduction of additional bulletins.

SUBJECT: SERVICE MANUAL - INSERT

GENERAL:

The Service Manual page(s) listed below must be replaced with the page(s) supplied. Each bulletin package contains 1 set of replacement pages.

PAGES:

The revised areas have been highlighted by an arrow ⇒

- 7-28 Updated Information (New Service Call Condition # 96)

CODE #55 — FUSING ERROR 4

- Definition -

- The temperature value output by the thermistor has not changed at all 16 (NA) or 20 (EU) seconds after the main switch is turned on.
- The temperature change detected by the thermistor is more than 20°C within any one second after the 16 (NA) or 20 (EU) seconds warm up time after the main switch is turned on.
  To clear this error, refer to note 3 at the beginning of this chapter.

- Possible Causes -

- Thermistor open
- Defective main control board
- Defective ac drive/dc power supply board
- Fusing lamp open
- Poor thermistor connection

CODE #96 — MAIN SWITCH ERROR

- Definition -

- Machine does not turn off within 8.5 seconds after Auto Shut Off is performed.

- Possible Causes -

- Defective main switch.
- Connectors of the main switch are not correctly connected.
- Poor DC Harness of the main switch connection (some lines must be cut).

Remedy for the initial produced machines.

- Turn off and on the main switch.

RICOH CUSTOMER SERVICE GROUP TECHNICAL SERVICE BULLETIN

BULLETIN NUMBER: 4015 – 009 **03/17/98**

APPLICABLE MODEL: FT4015

Note: This copy intended as master of original for reproduction of additional bulletins.

SUBJECT: SHIELDING PLATE BRACKET

GENERAL:

The following Part Addition is being issued for all FT4015 Parts Catalogs.
The Shielding Plate Bracket – ADF is being added as a Service Part.

ILLUSTRATION
Page 22

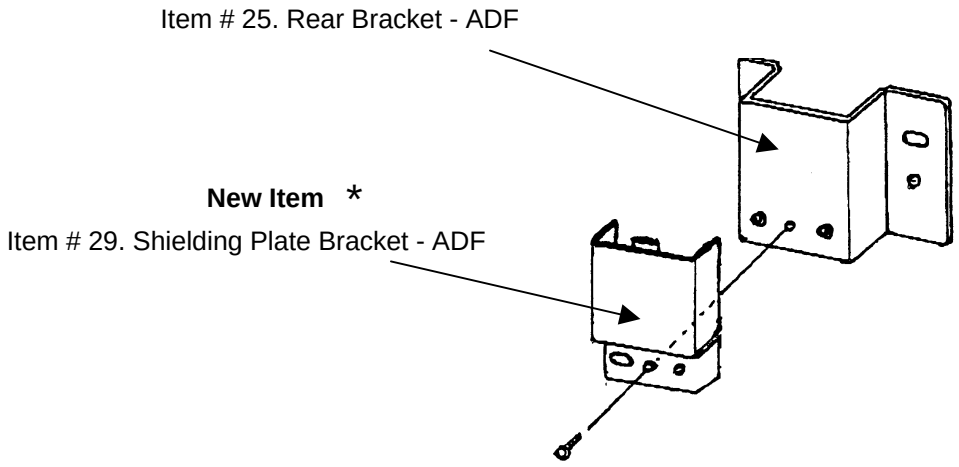

			REFERENCE	
NEW PART NO.	**DESCRIPTION**	**QTY**	**PAGE**	**ITEM**
A2191196	Shielding Plate Bracket – ADF	1	23	29*

* DENOTES NEW PART

UNITS AFFECTED:

FT4015 Copier Serial Number cut-in was not available at time of publication.

savin

Modification Bulletin

Model: 9 115	Date: September 23, 1997	No: 9115 - 001
Modified Article: Parts Catalog Correction	Serial Number: 7A4	

Reason for Modification:

- ☑ Parts catalog correction
- ☐ To facilitate assembly
- ☐ Part Standardization
- ☐ Vendor change
- ☑ To improve reliability
- ☐ Other
- ☐ To meet standards

Please correct your Parts Catalog as follows.

Page No. 37

Parts number correction

Old part number	New part number	Description	Qty	Page	Index
A219 4055		Fusing Unit	1	37	*
	~~A2 19 402 1~~	~~Fusing Unit - 120V~~	~~1~~	~~37~~	*
	~~A219 4022~~	~~Fusing Unit - 230V~~	~~1~~	~~37~~	*

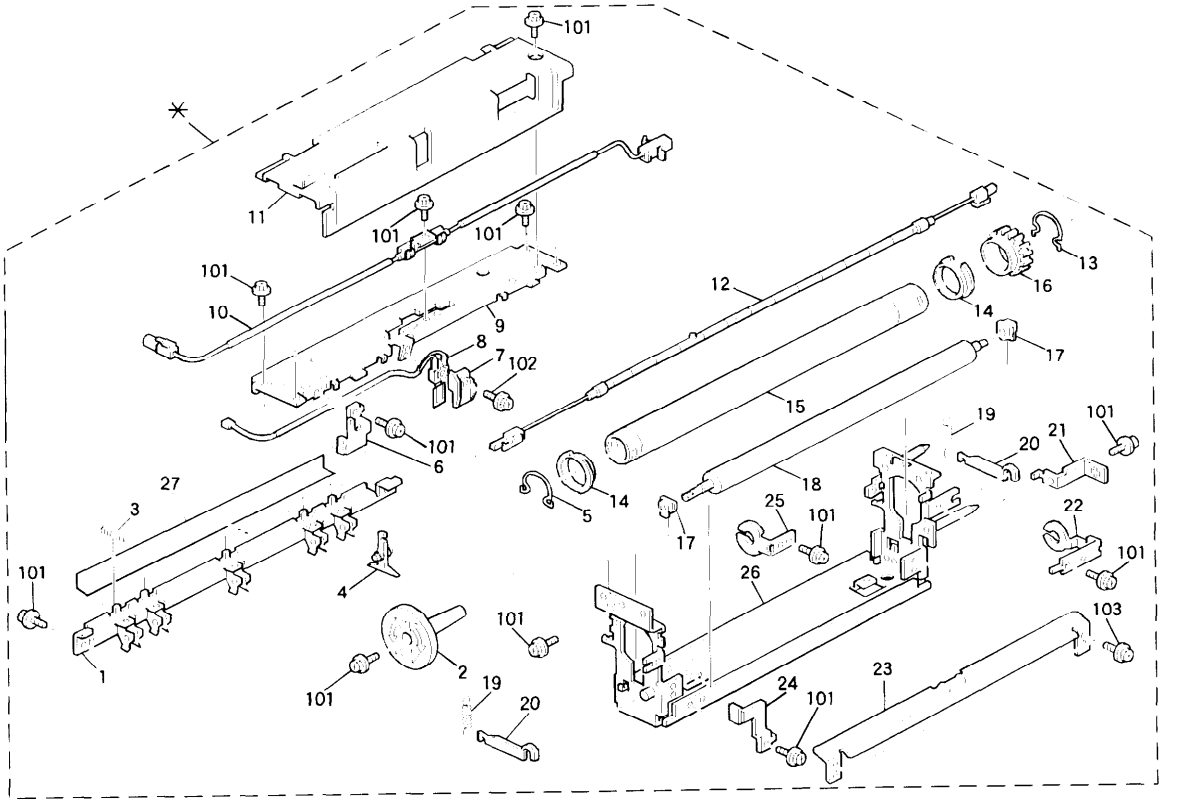

Gestetner Corporation
123 Fairview Park Drive
Elmsford, New York 10523

Tel: (914)) 347-7756
Fax: (914) 347-7809

Customer Services

Issued By: Joe Cyrulik, Manager, Service Support & Planning

May, 1997

271 5z/371 5 Copier Technical Bulletin/#1

REVISED
GESTETNER 2715z & NASHUATEC 3715
PRODUCT INTRODUCTION

The Gestetner 2715z and Nashuatec 3715 launch package includes supply data, parts replacement schedule.

NO FORMAL TRAINING IS SCHEDULED FOR THE 2715z/3715 COPIER. A SELF-PACED TRAINING KIT (P/C 4300710) IS AVAILABLE WHICH INCLUDES A SERVICE AND PARTS MANUAL, WORK-BOOK, SERVICE MANAGER'S COURSE GUIDE AND TESTS. CERTIFICATION IS BASED ON COMPLETION OF THE ABOVE SELF-PACED TRAINING PACKAGE.

2715~13715 SUPPLY DATA

DESCRIPTION	PRODUCT CODE	YIELD
2715z Copier (Gesteiner)	2290715	
3715 Copier (Nashuatec)	2291715	
Drum (2715z/3715)	2300014	**45,000**
Toner - Black (2715z)*	**2960704**	**6,000**
Toner - Black (3715)*	**2960705**	**6,000**
Developer - Black (2715z/3715)	**2960706**	**45,000**
DF-44 ADF/SADF	**2960864**	
CS15010-Bin Sorter	**2960868**	
2715z/3715 Service & Parts Manual	**4300704**	

***NOTE: TONER CARTRIDGES ARE NOT INTERCHANGEABLE BETWEEN THE GESTETNER 27152 AND THE NASHUATEC 3715.**

Set-up instructions can be found on our "Fast Facts" information retrieval system (914-347-7810) under Document #28002715.

HEADQUARTERS			BRANCH	DEALERS: GESTETNER	DEALERS: NASHUATEC
ACCT/FINANCE	DISTRIBUTION		TECH SERV. MGR.	COPIER	COPIER
ADMINISTRATION	MARKETING		TECH SERV. REP	COPYPRINTER	COPYPRINTER
CUSTOMER SERVICES	MIS		SALES MGR.	DUPLICATOR	DUPLICATOR
DEALER DIVISION	SENIOR MGMT.		SALES REP	FACSIMILE	FACSIMILE
			TELEMARKETING MGR.	ANCILLARY	ANCILLARY
			TELEMARKETING REP	ALL	ALL

Gestetner
nashuatec

2715 P.M. PARTS

PART NUMBER	DESCRIPTION	QTY	P.M. INTERVAL
Optics			
54482804	Platen Cover Sheet	1	90K
Around the Drum			
Al 902065	Charge Corona Wire	1	45K
Al 902060	Charge Corona Grid	1	90K
Al 903866	Transfer Corona Wire	1	90K
Al 902070	Charge Corona Cleaning Pad	1	45K
Cleaning			
Al 903550	Cleaning Blade	1	45K
Transfer and Separation			
Al 903880	Discharge Plate	1	45K
Paper Feed (For Each Paper Feed Station\			
GO202555	Feed Roller	2	90K
GO202721	By-Pass Feed Roller	1	90K
GO20271 6	Friction Pad	1	90K
GO202645	Tray Bottom Plate Pad	2	90K
Fusing			
A21 94081	Hot Roller	1	45K
Al 904082	Pressure Roller	1	45K
Al 844072	Stripper Pawls	5	135K
Other			
Al901 157	Ozone Filter	1	45K
ADF (For Originals)			
A4651 127	Transport Belt	1	24K
A4971 170	Friction Belt	1	24K

SPECIAL TOOLS AND LUBRICANTS

PART NUMBER	DESCRIPTION	QTY
Al 849501	Scanner Positioning Pin (2pcs/set)	1
54209516	Test Chart - OS-A3 (10 pcs/set)	1
54429103	Launa Oil	1
52039501	Silicone Grease - G-501	1
54209507	Digital Multimeter	1
54429101	Setting Powder	1
A0289300	Grease Kok Barrierta - JFE 55/2	1
Al 909002	Grease - CPL501 (5 pcs/set)	1

Gestetner Corporation
103 B Fait-view Park Drive
Elmsford, New York 10523

Tel: (914) 347-7756
Fax: (914) 347-7809

Customer Services

Issued By: Joe Cyrulik, Manager, Service Support & Planning

2715z/3715 Copier Technical Bulletin/#2

START-UP PARTS KIT

Attached is the Start-Up Parts Kit for the Gestetner 2715z and Nashuatec 3715 copier.

HEADQUARTERS		BRANCH	DEALERS	
			Gestetner	Nashuatec
ACCT/FINANCE	DISTRIBUTION	TECH.SERV.MNGR	COPIER	COPIER
ADMINISTRATION	MARKETING	TECH.SERV.REP.	COPYPRINTER	COPYPRINTER
CUSTOMER SERVICES	MIS	SALES MNGR.	DUPLICATOR	DUPLICATOR
DEALER DIVISION	SENIOR MANAGEMENT	SALES REP.	FACSIMILE	FACSIMILE
		TELEMARKT. MNGR	ANCILLARY	ANCILLARY
		TELEMRKT. REP.	ALL	ALL

Gestetner
nashuatec

GESTETNER DEALER START-UP PARTS KIT ORDER FORM

AND APPLICATION FOR 10% DISCOUNT

Submit your start-up parts order to the address below for processing and to receive your 10% discount.

Gestetner Corporation
599 West Putnam Avenue
P.O. Box 2656
Greenwich, CT 06836-2656
Attention: Customer Service - Parts Discount

Ordered by: _____ **Ship To:** _____

_____ _____

_____ _____

Phone So.: _____ **Phone No.:** _____

Authorized Signature: _____ **Order No.:** _____

Date of Order: _____ **Ship Via:** _____

271513715 START-UP PARTS KIT

Quantity	Description	Produc Code	Part Number	Suggested Retail Price*	Standard Dealer Net Price**	Discount Net Pr i	Total Discount cost
10	Platen Cover Sheet (1 each)	8494022	54482804	8.04	4.73	4.26	42.56
10	Charge Corona Wire (1 each)	8580014	A1902065	4.55	2.68	2.41	24.09
10	Transfer Corona Wire (1 each)	8580062	A1903866	3.10	1.82	1.64	16.41
1	Charge Corona Grid	8580013	A1902060	4.55	2.68	2.41	2.41
1	Charge Corona Cleaning Ass'y	8580015	A1902070	1.53	0.90	0.81	0.81
1	Discharge Plate Unit	8580005	A1903880	17.19	10.11	9.10	9.10
1	Cleaning Blade	8580004	Al903550	26.10	15.35	13.82	13.82
2	Feed Roller	7230048	GO202555	17.85	10.50	9.45	18.90
1	Friction Pad	8580100	GO202716	4.14	2.44	2.19	2.19
1	Bypass Bottom Plate Pad	7112353	52152713	0.51	0.30	0.27	0.27
1	Hot Roller	8580006	A2194081	82.33	48.43	43.59	43.59
1	Pressure Roller	8580104	A1904082	35.33	20.78	18.70	18.70
5	Stripper Pawls	8580007	A1844072	2.13	1.25	1.13	5.64
1	Ozone Filter	8580010	A1901157	12.08	7.11	6.40	6.40
1	Transport Belt	8990625	A4651127	86.72	51.01	45.91	45.91
1	Friction Belt	7103372	A4971170	9.52	5.60	5.04	5.04
1	Thermofuse	8580021	A2194123	25.81	15.18	13.66	13.66
1	Thermistor	8580044	A19041 19	25.30	14.88	13.39	13.39
	TOTAL						$269.50

*** Dealers may resell at prices of their own choosing.**

*** * Prices subject to change without notice.** Jun-97

Date Received: _____ **Order No. Verified By R.S.M.:** _____

Approved By: _____ **Date:** _____

Gestetner Corporation
103 B Fairview Park Drive
Elmsford, New York 10523

Tel: (914) 347-7756
Fax: (914) 347-7809

Customer Services

Issued By: Joe Cyrulik, Manager, Service Support & Planning

2715z Copier Technical Bulletin/#3

MATERIAL SAFETY DATA SHEETS

Attached are the Material Safety Data Sheets for the 2715z toner, developer and drum.

Please keep these MSDS sheets on file. If you need to obtain additional copies, they can be retrieved from our "Fast Facts" information retrieval system. The document numbers are provided below:

DOCUMENT NAME	DOCUMENT NUMBER
2715z Black Developer	12960706
2715z Black Toner	12960704
2713/2713z/2715z Drum	12300014

HEADQUARTERS		BRANCH	DEALERS	
			Gestetner	Nashuatec
ACCT/FINANCE	DISTRIBUTION	TECH.SERV.MNGR	COPIER	COPIER
ADMINISTRATION	MARKETING	TECH.SERV.REP.	COPYPRINTER	COPYPRINTER
CUSTOMER SERVICES	MIS	SALES MNGR.	DUPLICATOR	DUPLICATOR
DEALER DIVISION	SENIOR MANAGEMENT	SALES REP.	FACSIMILE	FACSIMILE
		TELEMARKT. MNGR	ANCILLARY	ANCILLARY
		TELEMRKT. REP.	ALL	ALL

Gestetner
nashuakec

PRODUCT CODE 2960706

Ricoh Corporation
MATERIAL SAFETY DATA SHEET

Section I. General Information

MSDS Identifier Code
Supplier ID: **GESTETNER 2715z & NASHUATEC** 3715

Identity: BLACK DEVELOPER

Manufacturer's Name and Address:
Ricoh Corporation
5 Dedrick Place
West Caldwell, NJ 07006

Emergency Telephone Number: (800) 336-6737

Telephone Number for Information: **(914) 347-7749**

Synonyms & Common Names: Gestetner 2715z/Nashuatec 3715

Uses: Gestetner 2715z, Nashuatec 3715

Chemical Formula: Mixture

Registry numbers
CAS Number: 0-00-0
RTECS Number: N/App

Date Prepared: 01/03/96 Filed/Prepared By: Ricoh CQA\EA Division

Section II. Hazardous Ingredients/Identity Information

Composition

Component	%	CAS #	OSHA Pel	ACGIH TLV
Iron Oxide	96.00	1317-61-g	N/App	N/App
Styrene Acrylic Polymer	<4.00	25036-19-5	N/App	N/App
Polyolefine	<4.00	9003-07-0	3.5mg/m3	3.5mg/m3
*Carbon Black	<4.00	1333-86-4	N/App	N/App
Polyester Resin (CAS# Confidential)	<4.00	0-00-0	N/App	N/App

*Carbon Black was reclassified by the IARC as a Group 2B substance (see section VI).

Gestetner 2715z/Nashuatec 3715 Developer is is contained in Gestetner 2715z/Nashuatec 3715 Photoconductor.

All components of this mixture comply with the United States TSCA.

PRODUCT CODE 2960706

Exposure Limits (TLV/PEL)
OSHA : see above
NIOSH : Not applicable
ACGIH: See above
State: Not applicable
Other: None

Section III. Physical/Chemical Characteristics

Boiling Point: Not applicable
Specific Gravity: Apprx.4.6
Vapor Pressure: No data
% volatile by Volume: Not applicable
Melting Point: No data
Vapor Density (Air=1): Not applicable
Evaporation Rate (n-BuAc=1) : Not applicable

Solubility in Water: Negligible: less than 0.1%

Appearance and Odor: Black powder with slight plastic odor

Section IV. Fire and Explosion Hazard Data

Flash Point and Method: Not applicable

Explosive Limits: LEL N/App UEL N/App
Comments: Not applicable

Extinguishing Media: Foam, water spray(fog), dry chemical or carbon dioxide may be suitable.

Special Fire-Fighting Procedures: No special fire-fighting procedure is necessary.

Unusual Fire and Explosion Hazards: Airborne dispersal of most finely divided organic powders such as developer may form an explosive mixture. Do not incinerate loose or spilled developer.

Section V. Reactivity Data

Stability: Stable
Conditions to Avoid: Not applicable

Incompatibility (Materials to Avoid) : Not applicable

Hazardous Decomposition or Byproducts: Carbon monoxide and other decomposition products in the case of incomplete combustion.

Hazardous Polymerization: Will not Occur
Conditions to Avoid: Not applicable

Section VI. Health and Hazard Data

Routes of Entry: Eyes, skin, inhalation

Health Hazards of Short-Term exposure (Acute)

Eyes: May cause temporary eye discomfort.

Skin: Non-irritant. No corrosive or irritating effects are expected from usual use as a developer.

Inhalation: Gasping

Ingestion: Acute oral toxicity: greater than 5g/kg bodyweight

Health Hazards of Long-Term exposure (Chronic): Prolonged inhalation of excessive dust may cause lung damage that is attributed to "lung overloading", a generic response to excessive amounts of any dust retained in the lungs for a prolonged interval. Use of this product as intended does not result in inhalation of excessive dust.

Carcinogenicity: In 1996 the IARC reevaluated carbon black as a Group 2B carcinogen (possible human carcinogen) based on the result of inhalation studies on rats. This was determined *on* the development of lung tumors in rats receiving chronic (large amounts over a long period-of time) inhalation exposures of free carbon black at levels that induce particle overload of the lungs. There were no observed incidence of tumors in-either dermal or oral studies.
A two year bioassay using typical toner preparations containing carbon black showed no association between toner exposure (inhalation or otherwise) and tumor development in rats. Studies performed in animal models other than rats have not demostrated an association between carbon black and lung tumors.

NTP? No IARC Monographs? Yes OSHA Regulated? No

Signs and Symptoms of Exposure: None under normal conditions of use.

Medical Conditions Generally Aggravated by Exposure: Will not occur

Emergency and First Aid Procedures

first Aid

Eyes : Try to remove with eye drops or flush out with water. If unsuccessful, get medical attention.

Skin: Wash thoroughly with soap and water.

Inhalation: Remove from exposure.

Ingestion: Dilute stomach contents with several glasses of water.

Additional Information: Ames test result: negative

Section VII. Precautions for Safe Handling and Use

Steps to be Taken in Case Material is Released or Spilled: If spilled, sweep up using an approved toner vacuum cleaner with a .5 micron filter or smaller such as the Atrix AAA Toner Vacuum (Ricoh EDP Code: 342MIU). Use of a vacuum cleaner not rated for toner particulate could be a potential fire hazard and/or result in personal injury.
Remove residue with soap and water.

Waste Disposal Method: Used developer should disposed in an environmentally safe manner and in accordance with governmental regulations. Disposal regulations vary from locality to locality, therefore, consult your local office of the EPA to determine proper method of disposal. Do not incinerate loose or spilled developer (see section IV).

Precautions to Be Taken in Handling and Storing: Store in a cool, dry place. Cleanse skin thoroughly after contact, before breaks and meals, and at the end of work periods. Keep out of reach of children.

Other Precautions: Flying powder may enter eyes. Minimize inhalation of dust.

Section VIII. Control Measures

Respiratory Protection: None needed under normal conditions of use.

Ventilation

Local Exhaust: None needed

Special: None needed

Mechanical (general) : Adequate ventilation

Other: None needed

Protective Gloves: None needed under normal conditions of use.

Eye Protection: None needed under normal conditions of use,

Other Protective Clothing or Equipment: None needed

Work and Hygenic Practices: Cleanse skin thoroughly after contact, before breaks and meals, and at the end of work periods. Keep out of reach of children.

PRODUCT CODE 2960704

Ricoh Corporation
MATERIAL SAFETY DATA SHEET

Section I. General Information

MSDS Identifier Code
Supplier ID: **GESTETNER 27 1 5z**

Identity: **BLACK TONER**

Manufacturer's Name and Address:
Ricoh Corporation
5 Dedrick Place
West Caldwell, NJ 07006

Emergency Telephone Number: (800) 336-6737

Telephone Number fcr Information: (914) **347-7749**

Synonyms & Common Names: Gestetner 2715z

Uses: Gestetner 2715z

Chemical Formula: Mixture

Registry numbers
CAS Number: 0-00-0
RTECS Number: N/App

Date Prepared: 01/03/96 Filed/Prepared By: Ricoh CQA\EA Division

Section II. Hazardous Ingredients/Identity Information

Composition

Component	%	CAS #	OSHA Pel	ACGIH TLV
Styrene Acrylic Polymer	57.00	25036-19-5	N/App	N/App
Polyester Resin (CAS# Confidential)	26.00	0-00-0	N/App	N/App
Polyolefine	04.00	9003-07-0	N/App	N/App
*Carbon Black	13.00	1333-86-4	3.5mg/m3	3.5mg/m3

*Carbon Black was reclassified by the IARC as a Group 25 substance (see section VI).

THIS PRODUCT is NON-HAZARDOUS

All components of this mixture comply with the United States TSCA.

Exposure Limits (TLV/PEL)
OSHA : see above data

NIOSH: Not applicable
ACGIH : See above data
State: Not applicable
Other: None

Section III. Physical/Chemical Characteristics

Boiling Point: Not applicable
Specific Gravity: 0.31
Vapor Pressure: Not applicable
% Volatile by Volume: Not applicable
Melting Point: No data
Vapor Density (Air=1): Not applicable
Evaporation Rate (n-BuAc=1): Not applicable

Solubility in Water: Negligible: less than 0.1%

Appearance and Odor: Black powder, slight plastic odor

Section IV. Fire and Explosion Hazard Data

Flash Point and Method: Not applicable

Explosive Limits: LEL N/App UEL N/App
Comments: Not applicable

Extinguishing Media: Foam, water spray(fog), dry chemical or carbon dioxide may be suitable.

Special Fire-Fighting Procedures: No special fire-fighting procedure is necessary.

Unusual Fire and Explosion Hazards: Will not occur

Section V. Reactivity Data

Stability: Stable
Conditions to Avoid: Not applicable

Incompatibility (Materials to Avoid) : Not applicable

Hazardous Decomposition or Byproducts: Carbon monoxide and other decomposition Products in the case of incomplete combustion.

Hazardous Polymerization: Will not Occur
Conditions to Avoid: Not applicable

Section VI. Health and Hazard Data

Routes of Entry: Eyes , inhalation, ingestion

Health Hazards of Short-Term exposure (Acute)

Eyes: *May* cause temporary eye discomfort.

Skin: May cause slight irritation on prolonged and repeated contact.

Inhalation: Gasping

Ingestion: Greater than 5g/kg bodyweight, practically non-toxic

Health Hazards of Long-Term exposure (Chronic): Prolonged inhalation of excessive dust may cause lung damage that is attributed to "lung overloading", a generic response to excessive amounts of any dust retained in the lungs for a prolonged interval. Use of this product as intended does not result in inhalation of excessive dust.

Carcinogenicity: In 1996 the IARC reevaluated carbon black as a Group 2B carcinogen (possible human carcinogen) based on the result of inhalation studies on rats. This was determined on the development of lung tumors in rats receiving chronic (large amounts over a long period of time} inhalation exposures of free carbon black at levels that induce particle overload of the lungs. There were no observed incidence of tumors in either dermal or oral studies.
A two year bioassay using typical toner preparations containing carbon black showed no association between toner exposure (inhalation or otherwise) and tumor development in rats. Studies performed in animal models other than rats have not demostrated an association between carbon black and lung tumors.

NTP? No IARC Monographs? Yes OSHA Regulated? No

Signs and Symptoms of Exposure: Not applicable

Medical Conditions Generally Aggravated by Exposure: Not applicable

Emergency and First Aid Procedures

First Aid

Eyes: Try to remove or flush out with eye drops. If unsuccessful, get medical attention.

Skin: Wash thoroughly with soap and water.

Inhalation: Remove from exposure.

Ingestion: Dilute stomach contents with several *glasses of* water.

Additional Information: Ames test result: negative

Section VII. Precautions fcr Safe Handling and Use

Steps tc be Taken in Case Material is Released cr Spilled: If spilled, sweep

up using an approved toner vacuum cleaner with a .5 micron filter or smaller such as the Atrix AAA Toner Vacuum Cleaner (Ricoh EDF Code: 342MIU). Use cf a vacuum cleaner not rated for toner particulate could be a potential fire hazard and/or result in personal injury. Remove residue with soap and water.

Waste Disposal Method: Used toner should be disposed of in an environmentally safe manner and in accordance with governmental regulations. Disposal regulations vary from locality to locality, therefore, consult your local office of the EPA to determine proper method of disposal. Do not incinerate loose or spilled toner (see section IV) .

Precautions to Be Taken in Handling and Storing: Cleanse skin thoroughly after contact, before breaks and meals, and at the end of work periods. Keep out of reach of children.

Other Precautions: None

Section VIII. Control Measures

Respiratory Protection: None required under normal conditions of use.

Ventilation

Local Exhaust: None required under normal conditions of use.

Special: None

Mechanical (general) : Adequate ventilation

Other: None

Protective Gloves: None required under normal conditions of use.

Eye Protection: None required under normal conditions of use.

Other Protective Clothing or Equipment: None required under normal conditions of use.

Work and Hygenic Practices: Cleanse skin thoroughly after contact, before breaks and meals, and at the end of work periods.

PRODUCT CODE 2300014

Ricoh Corporation
MATERIAL SAFETY DATA SHEET

Section I. *General* Information

MSDS Identifier Code
Supplier ID: **GESTETNER 2713/2713z/2715z & NASHUATEC 3713/3713s/3715**

Identity: **OPC DRUM**

Manufacturer's Name and Address:
Ricoh Corporation
5 Dedrick Place
West Caldwell, NJ 07006

Emergency Telephone Number: (800) 336-6737

Telephone Number for Information: (9 14) **347-7749**

Synonyms & Common Names: Gestetner 2713 OPC, OPC Drum

Uses: Gestetner 2713

Chemical Formula: Mixture

Registry numbers
CAS Number: 0-00-0
RTECS Number: N/App

Date Prepared: 03/13/97 Filed/Prepared By: Ricoh CQA\EA Division

Section II. Hazardous Ingredients/Identity Information

Composition

Component	%	CAS #	OSHA Pel	ACGIH TLV
Stilben Derivative	46.00	0-00-0	N/App	N/App
Polycarbonate	52.00	25135-52-8	N/App	N/App
Organic Pigment (CAS# Confidential)	02.00	0-00-0	N/App	N/App
THIS PRODUCT IS NON-HAZARDOUS				
Based on the definition of an article as defined by 29 CFR 1910.1200, this product is among those items which are dependent upon their shape and design during end use *and* do not release or otherwise result in exposure to a hazardous chemical under normal conditions of use. Therefore, it is exempt from CAS# disclosure.				

Exposure Limits (TLV/PEL)
OSHA: See data above
NIOSH: Not applicable
ACGIH: See data above
State: Not applicable
Other: None

Section III. Physical/Chemical Characteristics

Boiling Point: Not applicable
Specific Gravity: N/App
Vapor Pressure: Not applicable
% Volatile by Volume: Not applicable
Melting Point: Not applicable
Vapor Density (Air=1): Not applicable
Evaporation Rate (n-BuAc=1): Not applicable

Solubility in Water: Negligible: less than 0.1%

Appearance and Odor: Deep blue cylinder with no odor

Section IV. Fire and Explosion Hazard Data

Flash Point and Method: Not applicable

Explosive Limits: LEL N/App UEL N/App
Comments: Not applicable

Extinguishing Media: Carbon dioxide, dry chemicals, foam or water spray(fog) may be suitable.

Special Fire-Fighting Procedures: No special fire-fighting procedure is necessary.

Unusual Fire and Explosion Hazards: None

Section V. Reactivity Data

Stability: Stable
Conditions to Avoid: Not applicable

Incompatibility (Materials to Avoid): Not applicable

Hazardous Decomposition or Byproducts: Carbon monoxide and other decomposition products in the case of incomplete combustion.

Hazardous Polymerization: Will not Occur
Conditions to Avoid: Not applicable

Section VI. Health and Hazard Data

Routes of Entry: Not applicable

Health Hazards of Short-Term exposure (Acute)

Eyes: Not applicable

Skin: No corroding or irritating effects are expected from intended use as a photosensitive drum.

Inhalation: Not applicable

Ingestion: Not applicable

Health Hazards of Long-Term exposure (Chronic): Not applicable

Carcinogenicity: Not applicable

NTP? No IARC Monographs? No OSHA Regulated? No

Signs and Symptoms of Exposure: None under normal conditions of use.

Medical Conditions Generally Aggravated by Exposure: Will not occur

Emergency and First Aid Procedures

First Aid

Eyes: Not applicable

Skin: Wash with soap and water.

Inhalation: Not applicable

Ingestion: Not applicable

Additional Information: Ames test result: negative

Section VII. Precautions for Safe Handling and Use

Steps to be Taken in Case Material is Released or Spilled: Not applicable

Waste Disposal Method: Used OPC drums should be disposed of in an environmentally safe manner and in accordance with governmental regulations. Disposal regulations vary from locality to locality, therefore, consult your local office of the EPA to determine proper method of disposal.

Precautions to Be Taken in Handling and Storing: Store in a cool, dry place. Keep out of reach of children. Keep from contact with oxidizing materials.

Other Precautions: None

Section VIII. Control Measures

Respiratory Protection: None required under normal conditions of use.

Ventilation

Local Exhaust: None required under normal conditions of use.

Special: None

Mechanical (general): None required under normal conditions of use.

Other: None

Protective Gloves: None required under normal conditions of use.

Eye Protection: None required under normal conditions of use.

Other Protective Clothing or Equipment: None

Work and Hygenic Practices: Cleanse skin thoroughly after contact, before breaks and meals, and at the end of work periods.

Gestetner Corporation
103 B Fairview Park Drive
Elmsford, New York 10523

Tel: (914) 347-7756
Fax: (914) 347-7809

Customer Services

Issued By: Joe Cyrulik, Manager Service Support & Planning

July, 1997

2715z/3715 Copier Technical Bulletin/#4

P.M. PARTS YIELD

The yields for some of the P.M. parts have been revised. Please correct your P.M. table as follows:

PM Parts Item	Current	New	Note
COPIER (A2 19)			
Hot Roller	45 K copies	**90** K copies	
Pressure Roller	45 K copies	**90** K copies	------
Ozone Filter	45 K copies	Clean every 45 K, Replace every 90 K	Vacuum Cleaner or Blower Brush
Cleaning Blade	45 K copies	**90** K copies	Apply Setting Powder
Discharge Plate	45 K copies	Clean every 45 K copies	Apply Blower Brush
Document Feeder (A662) (for originals)			
Transport Belt	24 K	80 K	Clean with Belt Cleaner at Copier PM
Friction Belt	**24** K	80 K	Clean with Belt Cleaner at Copier PM

HEADQUARTERS				BRANCH		DEALERS			
						Gestetner		Nashuatec	
	ACCT/FINANCE		DISTRIBUTION	●	TECH.SERV.MNGR	●	COPIER	●	COPIER
	ADMINISTRATION		MARKETING	●	TECH.SERV.REP.		COPYPRINTER		COPYPRINTER
●	CUSTOMER SERVICES		MIS	●	SALES MNGR.		DUPLICATOR		DUPLICATOR
●	DEALER DIVISION	●	SENIOR MANAGEMENT		SALES REP.		FACSIMILE		FACSIMILE
				●	TELEMARKT. MNGR		ANCILLARY		ANCILLARY
					TELEMRKT. REP.		ALL		ALL

Gestetner
nashuatec

Gestetner Corporation
103 B Fairview Park Drive
Elmsford, New York 10523

Tel : (914) 347-7756
Fax: (914) 347-7809

Customer Services

Issued By: Joe Cyrulik, Manager Service Support & Planning

2715z/3715 Copier Technical Bulletin/ #5

PARTS CATALOG CORRECTION

Below are corrections to your Parts Catalog. Please incorporate these corrections into your parts manual.

Page 31

1. Part Number Correction

Incorrect Part Number	Correct Part Number	Description	Index
A2193132	A2193132	Development Cover	6

Page 3

1. Not Listed

Part number	Description	Index
16607473	Capacitor 47000pF: +80,-20: 50V	177

Paae 50

1. Illustration Correction

Item	Symbol No.	Incorrect Index number	Correct Index number
Capacitor	**Cl 23**	**173**	**177**

HEADQUARTERS				BRANCH	DEALERS Gestetner		DEALERS Nashuatec	
	ACCT/FINANCE		DISTRIBUTION	TECH.SERV.MNGR	●	COPIER	●	COPIER
	ADMINISTRATION		MARKETING	TECH.SERV.REP.		COPYPRINTER		COPYPRINTER
●	CUSTOMER SERVICES		MIS	SALES MNGR.		DUPLICATOR		DUPLICATOR
	DEALER DIVISION	●	SENIOR MANAGEMENT	SALES REP.		FACSIMILE		FACSIMILE
				TELEMARKT. MNGR		ANCILLARY		ANCILLARY
				TELEMRKT. REP.		ALL		ALL

Gestetner nashuatec

SYMBOL NO.	INDEX NO.
C121	173
C122	176
CI23	173
CI24	175
C125	175
CI26	173
CI27	172
CI28	173
C129	176
CI30	175

SYMBOL NO.	INDEX NO.
C121	173
C122	176
CI23	177
CI24	175
CI25	175
CI26	173
CI27	172
CI28	173
C129	176
CI30	175

Page 30

1. Illustration Correction

OLD

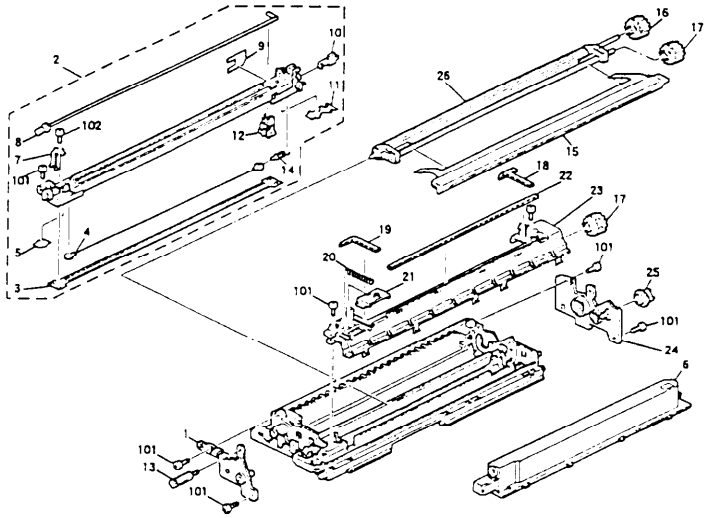

NEW

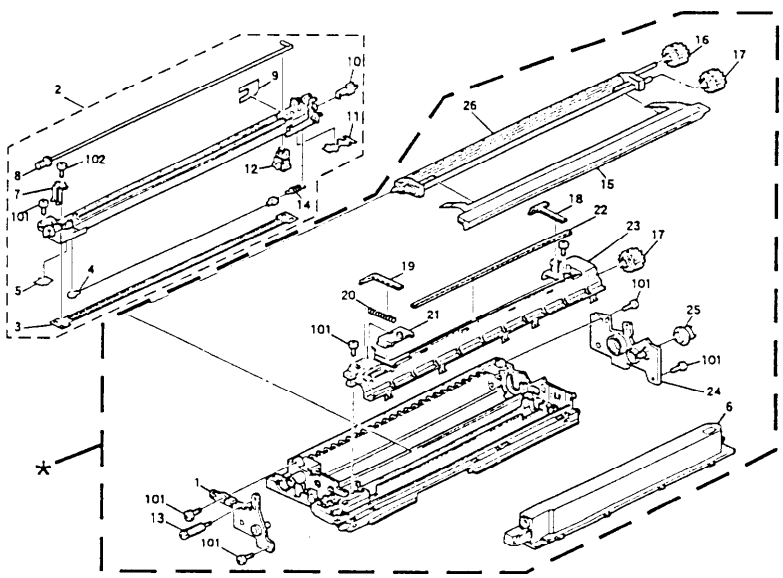

Paae 29

1. Newly Added

Part Number	Description	Index
A219 3030	Toner Supply Unit (NA)(RIC)	*
A219 3034	Toner Supply Unit (EU)(RIC)	*
A219 3036	Toner Supply Unit (Others)	*

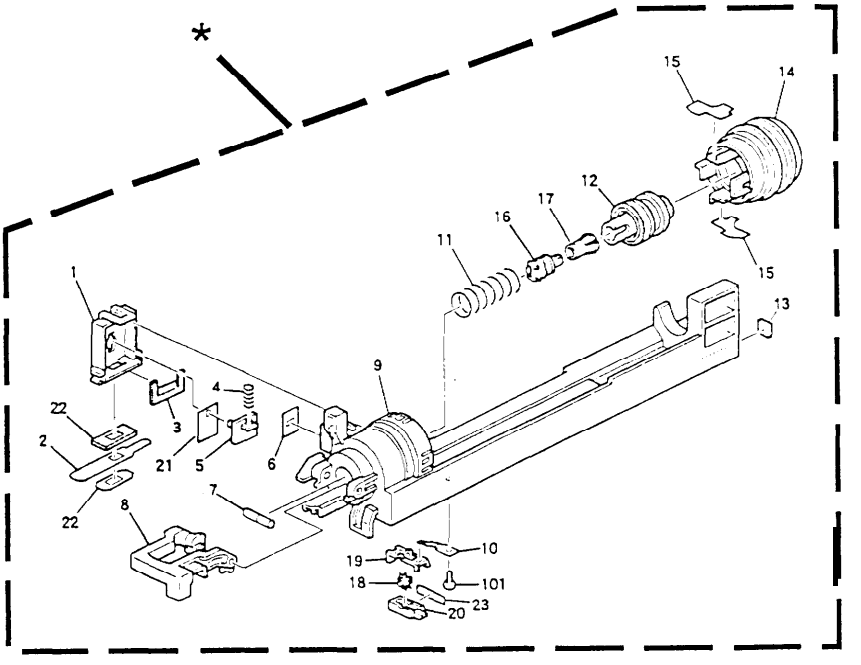

2. Description Change

Part Number	Old Description	New Description	Index
A219 3314	Toner Supply Unit Case- 115V (RIC)	Toner Supply Unit Case (NA)(RIC)	9
A219 3411	Toner Supply Unit Case- 230V (RIC)	Toner Supply Unit Case (EU)(RIC)	9
A219 3416	Toner Supply Unit Case (OEM)	Toner Supply Unit Case (Others)	9

Gestetner Corporation
103 B Fairview Park Drive
Elmsford, New York 10523

Tel: (914) 347-7756
Fax: (914) 347-7809

Customer Services

Issued By: Joe Cyrulik, Manager Service Support & Planning

July, 1997

2715z/3715 Copier Technical Bulletin/#6

1ST SCANNER REINSTALLATION

When reinstalling the 1" scanner, make sure to follow the procedure below. If not performed correctly, the scanner harness may fall off from the2nd scanner pulley, causing a scanner lock condition.

NOTE: Clamp the scanner harness {A} at the position shown. The white paint mark {B} should be aligned with the right side of the harness clamp {C}.

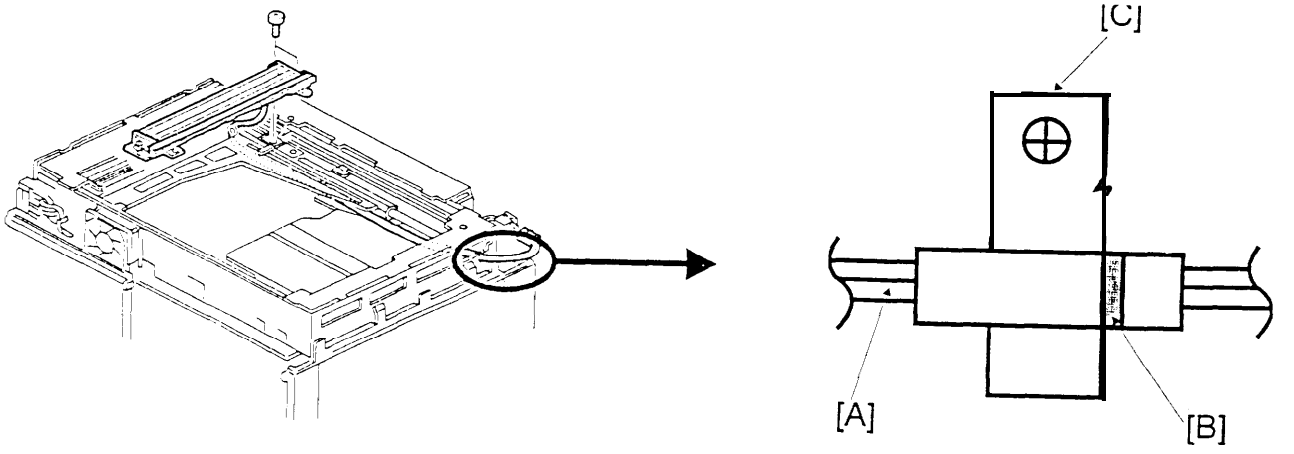

HEADQUARTERS				BRANCH	DEALERS	
					Gestetner	Nashuatec
	ACCT/FINANCE		DISTRIBUTION	● TECH.SERV.MNGR	● COPIER	● COPIER
	ADMINISTRATION		MARKETING	● TECH.SERV.REP.	COPYPRINTER	COPYPRINTER
●	CUSTOMER SERVICES		MIS	● SALES MNGR.	DUPLICATOR	DUPLICATOR
●	DEALER DIVISION	●	SENIOR MANAGEMENT	SALES REP.	FACSIMILE	FACSIMILE
				● TELEMARKT. MNGR	ANCILLARY	ANCILLARY
				TELEMRKT. REP.	ALL	ALL

Gestetner nashuatec

Gestetner Corporation
103 B Fairview Park Drive
Elmsford, New York 10523

Tel : (914) 347-7756
Fax: (914) 347-7809

Customer Services

Issued By: Joe Cyrulik, Manager Service Support & Planning

July, 1997

271 5z/3715 Copier Technical Bulletin/ #7

SC CODE #14

The following description should be added to the SERVICE CALL CONDITIONS" in the 2715z/3715 Service Manual.

Page 7-24

Code #14 - ZERO CROSS SIGNAL ERROR 2

Symptom:

The detected current is not 50 or 60 Hz.

Possible Causes:

- Defective main control board,
- Defective AC drive/DC power supply board.
- Zero cross line open.
- CN101 on the main control board or CN207 on the AC drive/DC power supply board is not correctly connected.
- Power line not stable.

Solution:

- Turn off and on the main switch.

HEADQUARTERS				BRANCH	DEALERS	
					Gestetner	Nashuatec
	ACCT/FINANCE		DISTRIBUTION	TECH.SERV.MNGR	COPIER	COPIER
	ADMINISTRATION		MARKETING	TECH.SERV.REP.	COPYPRINTER	COPYPRINTER
	CUSTOMER SERVICES		MIS	SALES MNGR.	DUPLICATOR ,	DUPLICATOR
	DEALER DIVISION		SENIOR MANAGEMENT	SALES REP.	FACSIMILE	FACSIMILE
				TELEMARKT. MNGR	ANCILLARY	ANCILLARY
				TELEMRKT. REP.	ALL	ALL

Gestetner nashuatec

Gestetner Corporation
103 B Fairview Park Drive
Elmsford, New York 10523

Tel : (914) 347-7756
Fax: (914) 347-7809

Customer Services

Issued By: Joe Cyrulik, Manager Service Support & Planning

July, 1997

2715z/3715 Copier Technical Bulletin/#8

SERVICE MANUAL REVISION

Please correct your 2715z/3715 Service Manual as follows:

Page 4-20

	Mode No.	Function	Settings
77	Auto Shut Off (Energy Star) On/Off	Selects the "Automatic Shut Off" Mode. *The copier automatically shuts itself off* at the *auto shut off time selected (SP14).*	0: Yes 1: No

1

	Mode No.	Function	Settings
77	Auto Shut Off (Energy Star) On/Off	Selects th "Automatic Shut Off" Mode *The copier automatically shuts itself off at the auto shut off time selected(SP14).*	120V Machines *0: Yes* *1: No* 230V Machines 0: Yes 1: No

The following description should alsobe added to the "SERVICE CALL CONDITIONS" in the Service Manual.

Page 7-28

CODE 96 - MAIN SWITCH ERROR

Symptom:

Machine does not turn off within 8.5 seconds after Auto Shut Off is performed.

Possible Causes:

- Defective main switch.
- Connectors of the main switch are not correctly connected.
- Poor DC Harness of the main switch connection (some lines must be cut).

Solution:

- Turn off and on the main switch.

HEADQUARTERS		BRANCH	DEALERS	
			Gestetner	Nashuatec
ACCT/FINANCE	DISTRIBUTION	TECH.SERV.MNGR	COPIER	COPIER
ADMINISTRATION	MARKETING	TECH.SERV.REP.	COPYPRINTER	COPYPRINTER
CUSTOMER SERVICES	MIS	SALES MNGR.	DUPLICATOR	DUPLICATOR
DEALER DIVISION	SENIOR MANAGEMENT	SALES REP.	FACSIMILE	FACSIMILE
		TELEMARKT. MNGR	ANCILLARY	ANCILLARY
		TELEMRKT. REP.	ALL	ALL

Gestetner
nashuatec

Gestetner Corporation
103 B Fairview **Park Drive**
Elmsford, New York 10523

Tel: (914) 347-7756
Fax: (914) 347-7809

Customer Services

Issued By: **Joe Cyrulik, Manager** Service **Support** &Planning

2715z/3715 Copier Technical Bulletin#9

PARTS CATALOG CORRECTION

Below are corrections to your Parts Catalog. Please incorporate these corrections into your service& **parts** manual.

Page No. 37
Parts number correction

	New part number	Description	Qty	Page	Index
~~A129 4055~~		~~Fusing Unit~~	~~1~~	**37**	*
	~~A219 4021~~	~~Fusing Unit~~	~~1~~	**37**	*

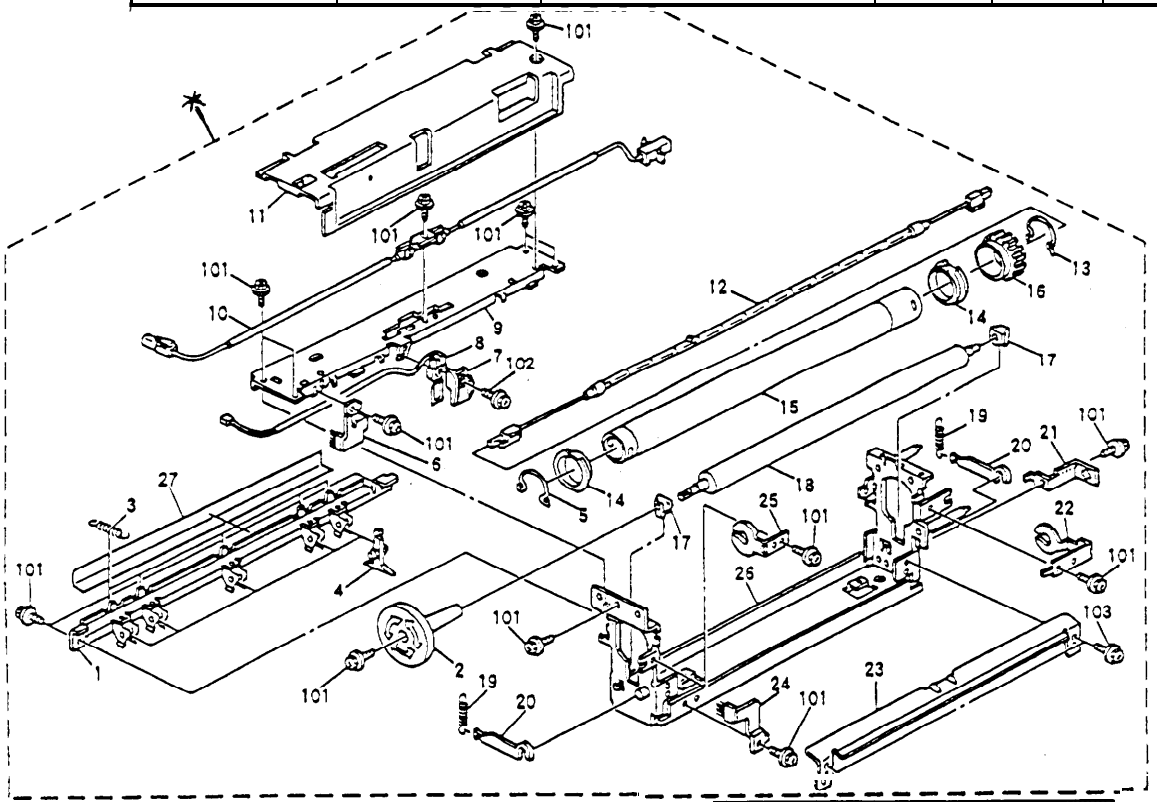

HEADQUARTERS		BRANCH	DEALERS	
			Gestetner	Nashuatec
ACCT/FINANCE	DISTRIBUTION	TECH.SERV.MNGR	COPIER	COPIER
ADMINISTRATION	MARKETING	TECH.SERV.REP.	COPYPRINTER	COPYPRINTER
CUSTOMER SERVICES	MIS	SALES MNGR.	DUPLICATOR	DUPLICATOR
DEALER DIVISION	SENIOR MANAGEMENT	SALES REP.	FACSIMILE	FACSIMILE
		TELEMARKT. MNGR	ANCILLARY	ANCILLARY
		TELEMRKT. REP.	ALL	ALL

Gestetner
nashuatec

Gestetner Corporation
103 B Fairview Park Drive
Elmsford, New York 10523

Tel: (914) 347-7756
Fax: (914) 347-7809

Customer Services

Issued By: Joe Cyrulik, Manager Service Support 8 Planning

271 5z/3715 Copier Technical Bulletin/ #10

PARTS CATALOG CORRECTION

Below are corrections to your Parts Catalog. Please incorporate these corrections into your servic& parts manual.

Page 29

1. Newly Added

Part Number	Description	Index
A21 93030	Toner Supply Unit	*

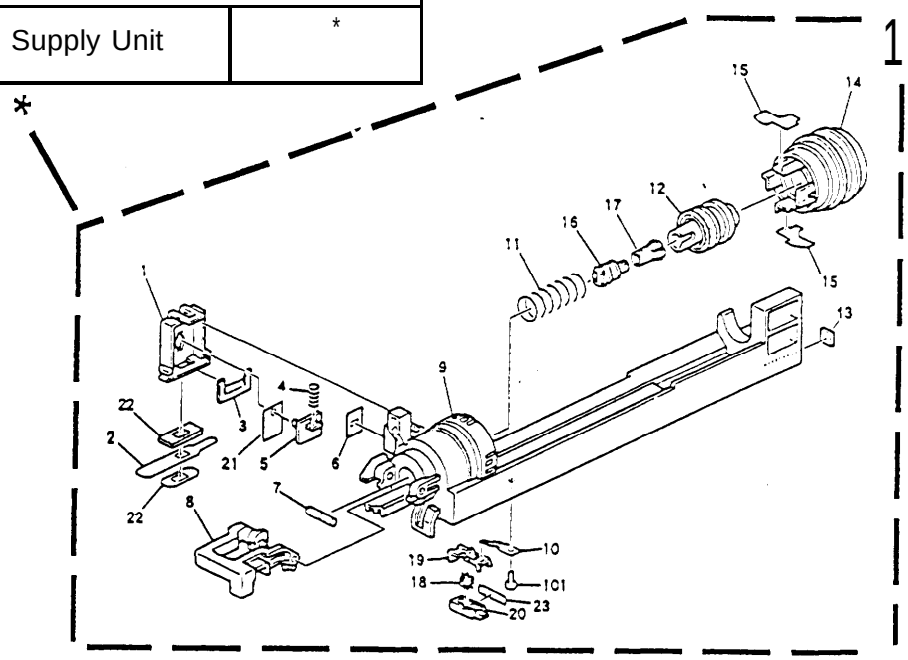

2. Description Change

Part Number	Old Description	New Description	Index
A2193314	Toner Supply Unit Case115V	Toner Supply Unit Case	9

HEADQUARTERS		BRANCH	DEALERS Gestetner	DEALERS Nashuatec
ACCT/FINANCE	DISTRIBUTION	TECH.SERV.MNGR	COPIER	COPIER
ADMINISTRATION	MARKETING	TECH.SERV.REP.	COPYPRINTER	COPYPRINTER
CUSTOMER SERVICES	MIS	SALES MNGR.	DUPLICATOR	DUPLICATOR
DEALER DIVISION	SENIOR MANAGEMENT	SALES REP.	FACSIMILE	FACSIMILE
		TELEMARKT. MNGR	ANCILLARY	ANCILLARY
		TELEMRKT. REP.	ALL	ALL

Gestetner
nashuatec

Gestetner Corporation
103 B Fairview Park Drive
Elmsford, New York 10523

Tel: (914) 347-7756
Fax: (914) 347-7809

Customer Services

Issued By: Joe Cyrulik, Manager, Service Support& Planning

2715z/3715 Copier TechnicalBulletin/#1 1

PRESSURE SPRING

In test copies involving transparency sheets it has been determined that straight lines on the bottom half of the sheet may appear slightly bent, even though the tension of the pressure springs in the fusing unit has been standardized.

In order to prevent this, new pressure springs have been introduced where the tension has been changed from ± 10 to ± 5%.

Old Part number	New Part number	Description	Qty	Inter-changeability	Page	Index
A2194069	A2194068	Pressure Spring	2	x/o	37	19

OLD PART NUMBER	NEW PART NUMBER	PRODUCT CODE	DESCRIPTION	LIST PRICE	DLR PRICE
A2194069	A2 194068	8580108	Pressure Spring	$1.02	$ .60

Dealers may resell at prices of their own choosing

NOTE: The Pressure Spring will be implemented on all units above SN**AJ07830001**
Please update your manuals to ensure prompt order processing.

HEADQUARTERS				BRANCH	DEALERS	
					Gestetner	Nashuatec
	ACCT/FINANCE		DISTRIBUTION	TECH SERV MNGR	COPIER	COPIER
	ADMINISTRATION		MARKETING	TECH SERV REP	COPYPRINTER	COPYPRINTER
●	CUSTOMER SERVICES		MIS	SALES MNGR	DUPLICATOR	DUPLICATOR
	DEALER DIVISION		SENIOR MANAGEMENT	SALES REP	FACSIMILE	FACSIMILE
				TELEMARKT MNGR	ANCILLARY	ANCILLARY
				TELEMRKT REP	ALL	ALL

Gestetner
nashuatec

Gestetner Corporation
103 B Fairview Park Drive
Elmsford, New York 10523

Tel: (914) 347-7756
Fax: (914) 347-7809

Customer Services

Issued By: Joe Cyrulik, Manager,Service Support & Planning

2715z/3715 Copier TechnicalBulletin/#1 2

MYLAR BLADE DETACHMENT

SYMPTOM:

1. Image density decreases.
2. Toner end indicator turns on before toner supply is depleted.

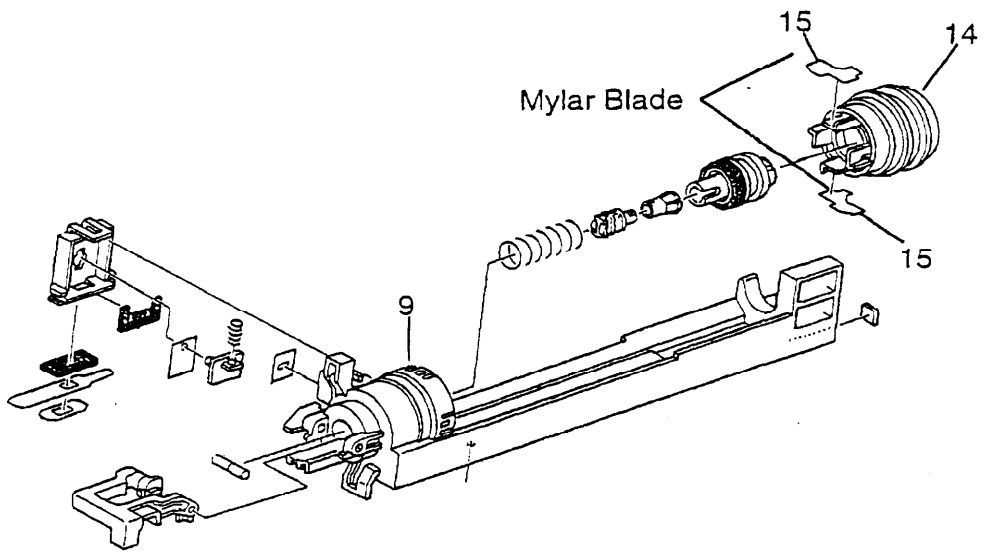

CAUSE:

The Mylar blades detach from the Tonerbottle cover, causing decreased toner supply. The TD sensor in the development unit detects a low toner condition, even if the toner bottle is not depleted.

FIELD ACTION:

1) Remove the toner bottle holder unit from the machine and vacuum excess toner from the area.
2) Remove the toner bottle cover (14) from the toner supply unit case (9) and clean with a soft cloth.
3) Remove the Mylar Blades { 15) from their position.
4) Clean the area where the Mylar blades will be affixed with alcohol to remove any residue.
5) Affix new Mylar blades onto the original position.

NOTE: *To reduce troubleshooting time please review the above information with your service staff.*

HEADQUARTERS		BRANCH	DEALERS	
			Gestetner	Nashuatec
ACCT/FINANCE	DISTRIBUTION	TECH.SERV.MNGR	COPIER	COPIER
ADMINISTRATION	MARKETING	TECH.SERV.REP.	COPYPRINTER	COPYPRINTER
CUSTOMER SERVICES	MIS	SALES MNGR	DUPLICATOR	DUPLICATOR
DEALER DIVISION	SENIOR MANAGEMENT	SALES REP.	FACSIMILE	FACSIMILE
		TELEMARKT. MNG R	ANCILLARY	ANCILLARY
		TELEMRKT. REP.	ALL	ALL

Gestetner
nashuatec

TECHNICAL SERVICE BULLETIN

BULLETIN NUMBER: A219 - 001 **04/23/98**

APPLICABLE MODEL:
GESTETNER GES2715Z
RICOH FT4015
SAVIN 9115

The chart listed below shows the Last Bulletin Number issued for the A219 series.

Bulletin Cross Reference	
Ricoh Group Companies	**Last Bulletin No.**
Gestetner	**022**
Ricoh	**009**
Savin	**006**

Note: This copy intended as master original for reproduction of additional bulletins.

SUBJECT: TONER ADDING SHUTTER

GENERAL:

The following Parts Corrections are being issued for all A219 Parts Catalogs.

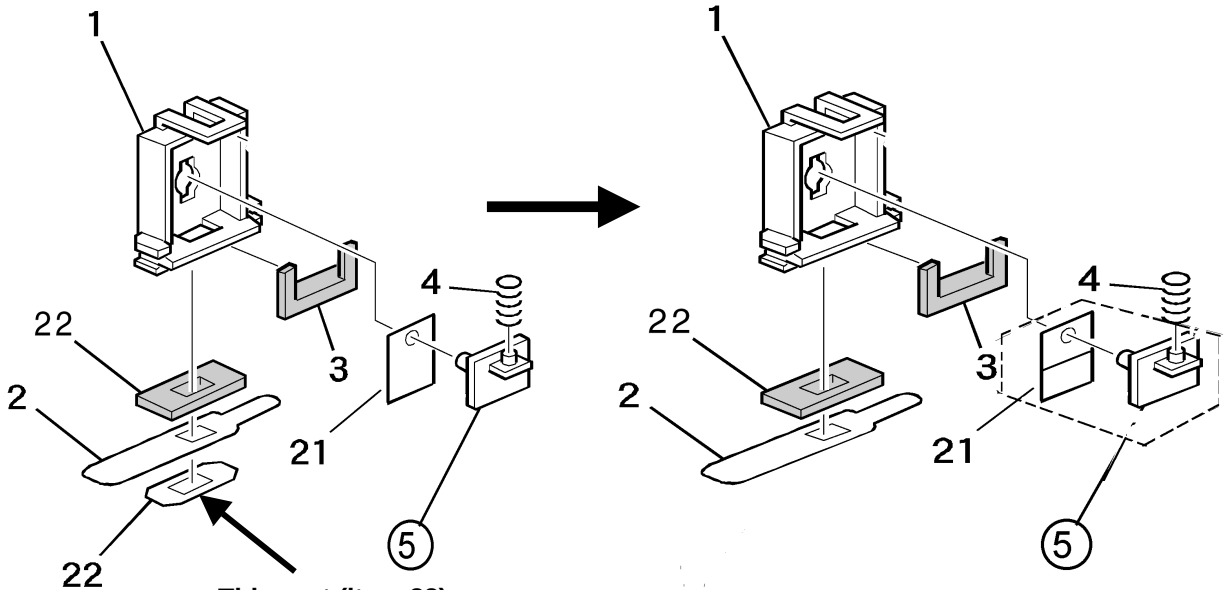

This part (item 22) was deleted

				REFERENCE	
OLD PART NO.	**NEW PART NO.**	**DESCRIPTION**	**QTY**	**PAGE**	**ITEM**
A2193318	A2193317	Toner Adding Shutter	1 → 1	29	5

TECHNICAL SERVICE BULLETIN

BULLETIN NUMBER: A219 - 002 **04/23/98**

APPLICABLE MODEL:
GESTETNER - 2715Z
RICOH - FT4015
SAVIN - 9115

Note: This copy is intended as a master original for reproduction of additional bulletins.

SUBJECT: IMPROVED CHARGE CORONA UNIT

SYMPTOM:

Copying low contrast originals may produce blurred copies.

CAUSE:

The Charge Corona Unit may produce a blurred image by over charging the OPC drum.

SOLUTION:

A new style Charge Corona Unit will prevent blurred copies when using a low contrast original. The sidewall of the Charge Corona Unit has been lengthened and a mylar has been affixed as shown below.

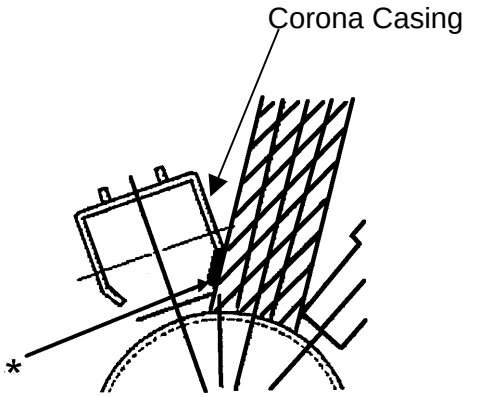

* This portion has been lengthened and a mylar has been affixed.

NOTE: After installing the improved Charge Corona Unit, the image may become lighter. Adjust the exposure lamp value (decrease 3 to 4 steps) using SP48.

Continued…

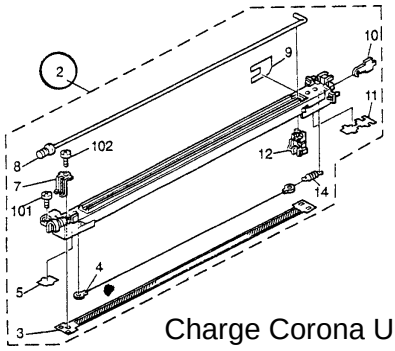

Charge Corona Unit

					REFERENCE	
OLD PART NO.	**NEW PART NO.**	**DESCRIPTION**	**QTY**	**INT**	**PAGE**	**ITEM**
A1902010	A1902011	Charge Corona Unit	1	1	31	2

UNITS AFFECTED:

All copiers manufactured after the Serial Number listed below will have the new style Charge Corona Unit installed during production.

MODEL NAME	SERIAL NUMBER
Gestetner 2715Z	AJ07890001
Ricoh FT4015	A7367896628
Savin 9115	7A47890001

INTERCHANGEABILITY CHART:

0	OLD and NEW parts can be used in both OLD and NEW machines.	2	NEW parts CAN NOT be used in OLD machines. OLD parts can be used in OLD and NEW machines.
1	NEW parts can be used in OLD and NEW machines. OLD parts CAN NOT be used in NEW machines.	3	OLD parts CAN NOT be used in NEW machines. NEW parts CAN NOT be used in OLD machines.
3/S	Must be installed as a set on units manufactured prior to the S/N cut-in. On units manufactured after the S/N cut-in or units previously modified, use the new individual part numbers.		

TECHNICAL SERVICE BULLETIN

BULLETIN NUMBER: A219 - 003 **05/15/98**

APPLICABLE MODEL:
GESTETNER – 2715Z
RICOH – FT4015
SAVIN – 9115

Note: This copy is intended as a master original for reproduction of additional bulletins.

SUBJECT: ROM UPGRADE

GENERAL:

The ROM has been changed for the following two (2) reasons:

Reason 1 - Energy Star

To meet the new Energy Star requirements, the software of the Main Board ROM has been changed to extend the settings for the Auto Reset Time Setting to 240 minutes. SP Mode 14 has been altered to support this change. User Codes 10 and 5 have been added. See the Tables below.

SP Mode

Mode No.		Function	Settings
14	Auto Reset Time Setting (Energy Star)	Select the auto shut off time. The copier main switch is shut off automatically after the selected auto shut off time.	0 : 30min. (Factory Setting) 1 : 15min. 2 : 60min. 3 : 90min. 4 : 120min 5 : 240min.∗

∗ Setting No.5 has been added.

User Tools

User Code	Function	Settings
5	Exactly the same as SP14 shown above.	

Reason 2 - Double Count

SP Mode 27 has been added to select single or double count for the total counter when making A3 or 11”x17” copies.. See the Table below.

SP Mode

Mode No.		Function	Settings
27	A3/11”x17” Double Count	Select single or double count for the total counter when making A3 or 11”x17” copies	0 : Single. (Factory Setting) 1 : Double

NOTE: *Double Count is not applied when copies are fed from the By-pass Tray.*

Continued…

The following part update is being issued for all A174 Parts Catalogs.

					REFERENCE	
PART NO.	**DESCRIPTION**	**OLD SUFFIX**	**NEW SUFFIX**	**QTY**	**PAGE**	**ITEM**
A2195104	IC – UVEPROM 1M X 8 120N	C	D	1	53	5

The Main Board ROM revision D (file name 4015ES1.EXE) can be downloaded through the Ricoh Technical Services BBS.

NOTE: *For more information about the Ricoh Technical Services BBS, order the Guide to Operation (P/N BBS00001) through normal NSPC channels.*

UNITS AFFECTED:

All copiers manufactured after the Serial Numbers listed below will have the “D” suffix ROM installed during production.

MODEL NAME	SERIAL NUMBER
Gestetner 2715Z	AJ07870001
Ricoh FT4015	A7367874569
Savin 9115	7A47870001

TECHNICAL SERVICE BULLETIN

BULLETIN NUMBER: A219 - 004 **05/15/98**

APPLICABLE MODEL:
GESTETNER – 2715Z
RICOH – FT4015
SAVIN – 9115

Note: This copy is intended as a master original for reproduction of additional bulletins.

SUBJECT: LEFT COVERS

GENERAL:

The illustration Item numbers for the Left Lower Cover and the Left upper Cover were reversed in the illustration. Change Item 16 to 17 and change Item 17 to 16. The following Item corrections are being issued for all A219 Parts Catalogs.

1. EXTERIOR (A219)

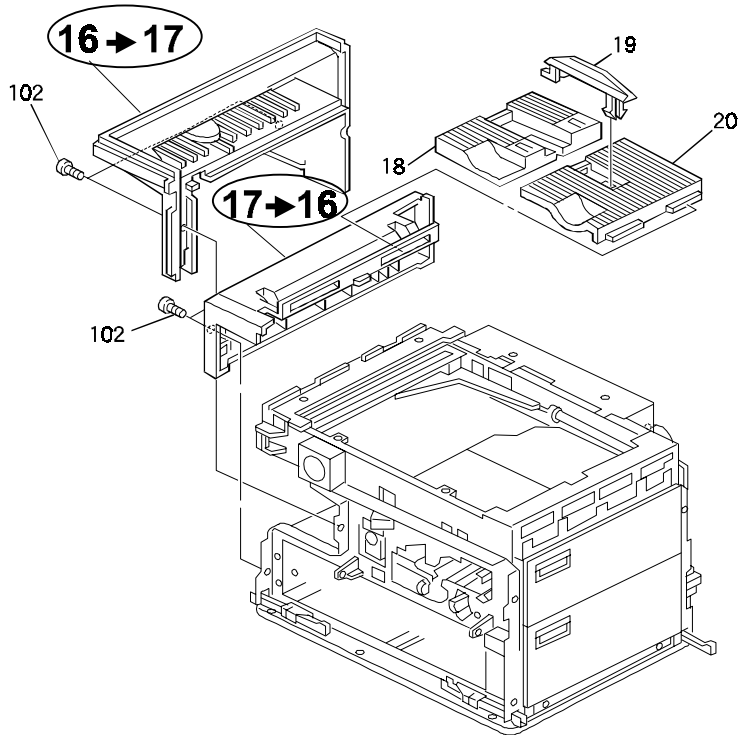

PART NO.	DESCRIPTION	QTY	ILLUSTRATION REFERENCE		
			PAGE	ILLUSTRATION ITEM	
				OLD	NEW
A2191305	Left Lower Cover	1	6	17	16
A1901300	Left Upper Cover	1	6	16	17

TECHNICAL SERVICE BULLETIN

BULLETIN NUMBER: A219/A245 - 005 **05/20/98**

APPLICABLE MODEL:
GESTETNER – 2718
RICOH – FT4018
SAVIN – N/A

Note: This copy is intended as a master original for reproduction of additional bulletins.

SUBJECT: PARTS CATALOG UPDATES

GENERAL:
The following Item corrections are being issued for all A245 Parts Catalogs.

- **UPDATE 1:** LEFT COVERS- The illustration Item number for the Left Lower Cover and the Left Upper Cover were reversed in the illustration. Change Item 16 to 17 and change Item 17 to 16.

1. EXTERIOR (A245)

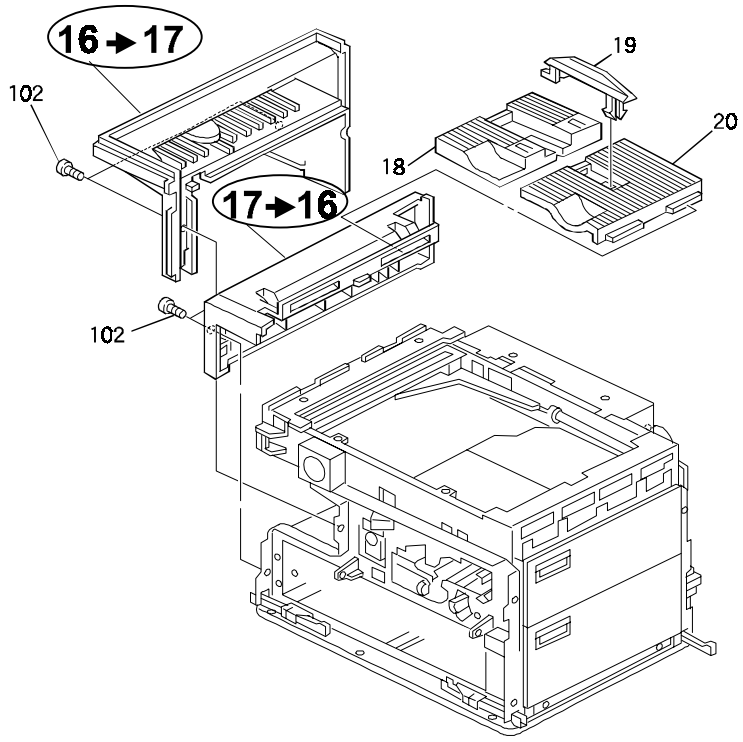

PART NO.	DESCRIPTION	QTY	ILLUSTRATION REFERENCE		
			PAGE	ILLUSTRATION ITEM	
				OLD	NEW
A2191305	Left Lower Cover	1	6	17	16
A1901300	Left Upper Cover	1	6	16	17

Continued…

- **UPDATE 2:** TONER HOLDER RIGHT SEAL- The figure for Item number 3, Right Seal was the wrong shape. Change old figure for Item 3 with new figure for Item 3.

OLD

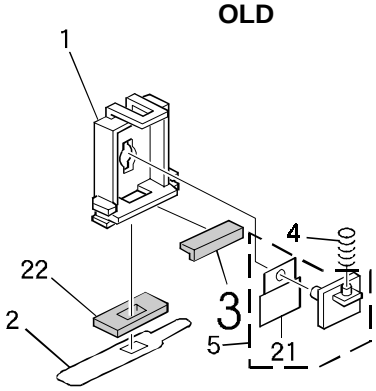

NEW

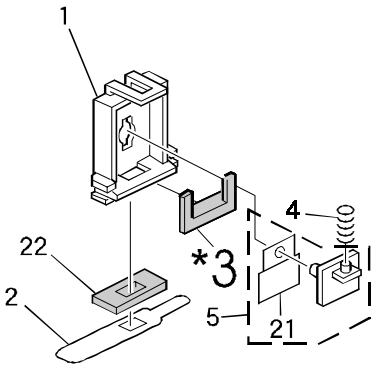

PART NO.	DESCRIPTION	QTY	ILLUSTRATION REFERENCE		
			PAGE	ILLUSTRATION ITEM	
				OLD FIG.	NEW FIG.
G0203345	Right Seal	1	28	3	3 *

* Denotes new figure.

TECHNICAL SERVICE BULLETIN

BULLETIN NUMBER: A219/A245 - 006 **07/08/98**

APPLICABLE MODEL:
GESTETNER – 2715Z
RICOH – FT4015
SAVIN – 9115

Note: This copy is intended as a master original for reproduction of additional bulletins.

SUBJECT: PAPER FEED ROLLER

GENERAL:

The shape of the Paper Feed Roller was changed to decrease double sheet feeding. The following part update is being issued for all A219 Parts Catalogs.

OLD STYLE NEW STYLE

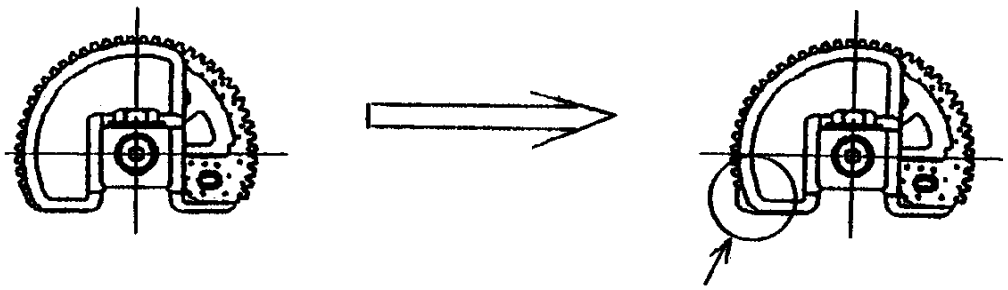

Slight Protrusion

					REFERENCE	
OLD PART NO.	**NEW PART NO.**	**DESCRIPTION**	**QTY**	**INT**	**PAGE**	**ITEM**
G0202555	A2192555	Paper Feed Roller	2	1	17	2

UNITS AFFECTED:

All copiers manufactured after the Serial Numbers listed below will have the new style Paper Feed Roller installed during production.

MODEL NAME	SERIAL NUMBER
Gestetner 2715Z	AJ08840001
Ricoh FT4015	A7368842954
Savin 9115	7A48840001

INTERCHANGEABILITY CHART:

0	OLD and NEW parts can be used in both OLD and NEW machines.	2	NEW parts CAN NOT be used in OLD machines. OLD parts can be used in OLD and NEW machines.
1	NEW parts can be used in OLD and NEW machines. OLD parts CAN NOT be used in NEW machines.	3	OLD parts CAN NOT be used in NEW machines. NEW parts CAN NOT be used in OLD machines.
3/S	Must be installed as a set on units manufactured prior to the S/N cut-in. On units manufactured after the S/N cut-in or previously modified, use the new part numbers individually.		

TECHNICAL SERVICE BULLETIN

BULLETIN NUMBER: A219/A245 - 007 **07/15/98**

APPLICABLE MODEL:
GESTETNER – 2715Z
RICOH – FT4015
SAVIN – 9115

Note: This copy is intended as a master original for reproduction of additional bulletins.

PAPER PATH

SUBJECT: DOUBLE SHEET FEEDING

SYMPTOM:

Double sheet feeding (especially when using “A” size paper- A3, A4 or A5).

CAUSE:

1. The friction coefficient of the paper is higher than normal.
2. The paper is poorly cut, therefore sheets tend to stick together and hamper paper separation.
3. The Side Fences in Paper Tray are not positioned flush against the paper. This allows the paper to catch on the Paper Guides and this hampers paper separation. (Paper setting issue.)

SOLUTION:

If double sheet feeds occur, utilize the countermeasure outlined below:

1. Change the position of the Paper Feed Roller and the Paper Feed Guide to match “A” size paper. (Refer to page 6-31 in the Service Manual.)

NOTE: *Be sure to adjust the positions of both the Paper Feed Roller and the Paper Guide.*

2. Follow the instructions provided for setting the paper in the Paper Tray (See decal A2192692.).
    a) Set the paper correctly in the Paper Tray (Align the edges of the paper).
    b) When adjusting the Side Fences, make sure that there are no gaps between the Side Fences and the paper. If gaps exist, the Side Fences will not work effectively.
    c) When closing the Paper Tray, close the Tray gently. Excessive force will cause the paper to shift towards the back of the Tray.
3. If the customer has difficulty following the instructions listed above, obtain permission from the customer to secure the Side Fences with screws. To secure the Side Fences using screws, place a few sheets of paper in the Tray, align the fences and secure the Fences using M3x8 Tapping Screws (P/N 04130082B)

If the procedure listed above does not solve the double sheet feeding, replace the Paper Feed Roller with the Double-Sheet Feed countermeasure Feed Roller (P/N A2192555).

NOTE: *The modified Roller has been implemented in production machines starting from April, 1998.*

Continued…

Modification Details:

1. The shape of the Paper Feed Roller has been modified. (See illustration below.)
2. The default position of the Paper Feed Roller and the Paper Guide has been adjusted to correspond with "A" size paper. See page 6-31 in the Service Manual.

OLD STYLE NEW STYLE

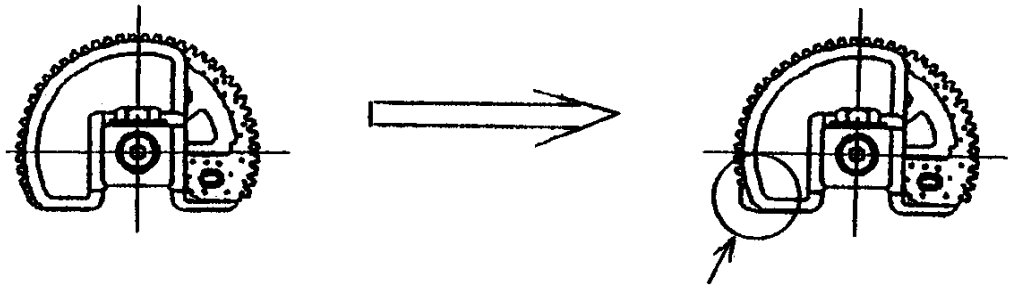

Slight Protrusion

GENERAL:

The following part update is being issued for all A219 Parts Catalogs.

					REFERENCE	
OLD PART NO.	**NEW PART NO.**	**DESCRIPTION**	**QTY**	**INT**	**PAGE**	**ITEM**
G0202555	A2192555	Paper Feed Roller	2	1	17	2

UNITS AFFECTED:

All copiers manufactured after the Serial Numbers listed below will have the new style Paper Feed Roller installed during production.

MODEL NAME	SERIAL NUMBER
Gestetner 2715Z	AJ08840001
Ricoh FT4015	A7368842954
Savin 9115	7A48840001

INTERCHANGEABILITY CHART:

0	OLD and NEW parts can be used in both OLD and NEW machines.	2	NEW parts CAN NOT be used in OLD machines. OLD parts can be used in OLD and NEW machines.
1	NEW parts can be used in OLD and NEW machines. OLD parts CAN NOT be used in NEW machines.	3	OLD parts CAN NOT be used in NEW machines. NEW parts CAN NOT be used in OLD machines.
3/S	Must be installed as a set on units manufactured prior to the S/N cut-in. On units manufactured after the S/N cut-in or previously modified, use the new part numbers individually.		

TECHNICAL SERVICE BULLETIN

BULLETIN NUMBER: A219/A245 - 008 **08/12/98**

APPLICABLE MODEL:
GESTETNER – 2715Z
RICOH – FT4015
SAVIN – 9115

Note: This copy is intended as a master original for reproduction of additional bulletins.

SUBJECT: MIDDLE RAIL – PAPER TRAY

GENERAL:

The following part update is being issued for all A219 Parts Catalogs.

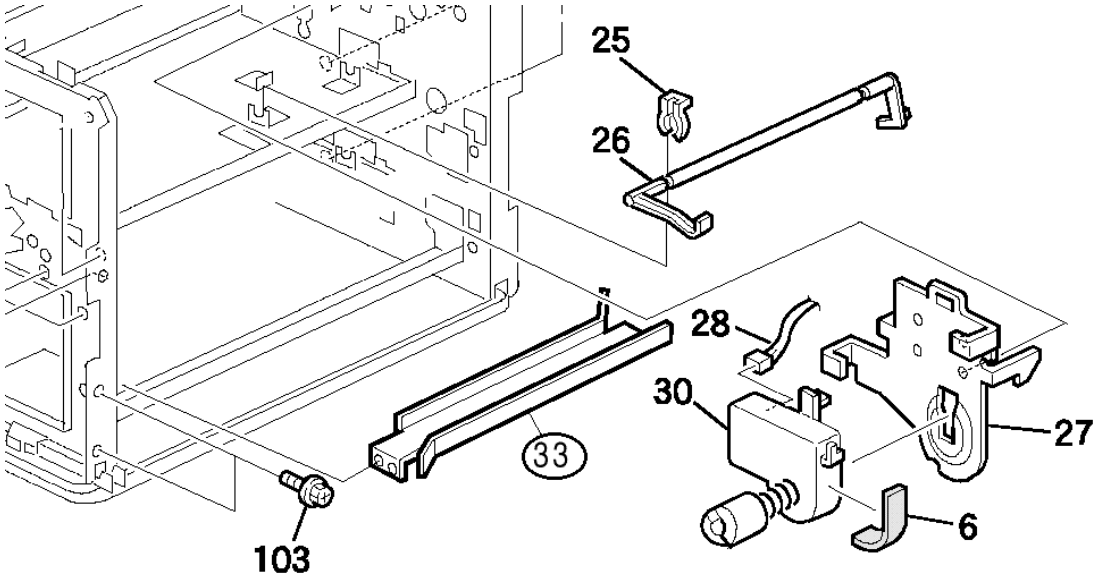

				REFERENCE	
OLD PART NO.	NEW PART NO.	DESCRIPTION	QTY	PAGE	ITEM
A2192650	A2192652	Middle Rail – Paper Tray	1→1	47	33

TECHNICAL SERVICE BULLETIN

BULLETIN NUMBER: A219/A245 - 009 **09/11/98**

APPLICABLE MODEL:
GESTETNER – 2715Z/2718Z
RICOH – FT4015/4018
SAVIN – 9115

Note: This copy is intended as a master original for reproduction of additional bulletins.

SUBJECT: DC POWER HARNESS

GENERAL:

The following part update is being issued for all A219 and A245 Parts Catalogs.

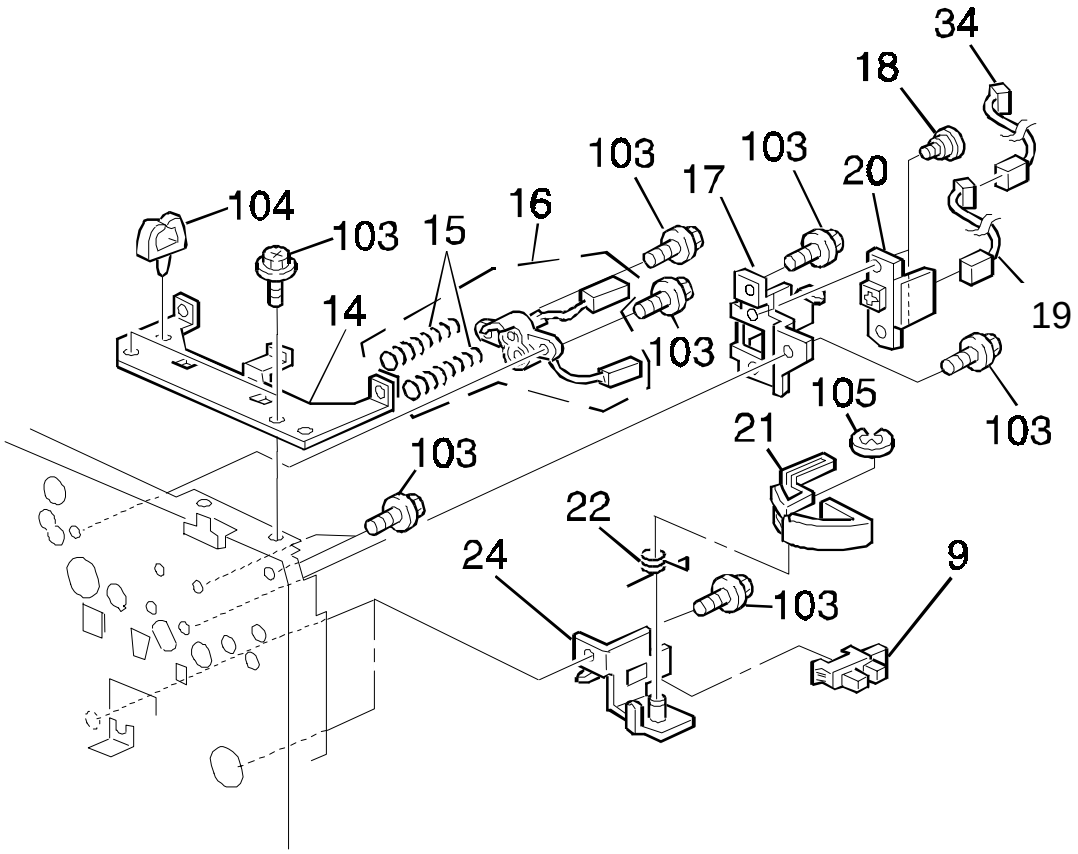

				REFERENCE	
OLD PART NO.	**NEW PART NO.**	**DESCRIPTION**	**QTY**	**PAGE**	**ITEM**
A1905335	A1905347	DC Power Harness	1	47	19

TECHNICAL SERVICE BULLETIN

BULLETIN NUMBER: A219/A245 - 010 **04/06/99**

APPLICABLE MODEL:
GESTETNER – 2715Z
RICOH – FT4015
SAVIN – 9115

Note: This copy is intended as a master original for reproduction of additional bulletins.

SUBJECT: PAPER LIFT SHUTTER / BOTTOM PLATE LEVER

GENERAL:

Please update your Parts Catalog with the following corrections. The following Part corrections are being issued for all A219 Parts Catalogs.

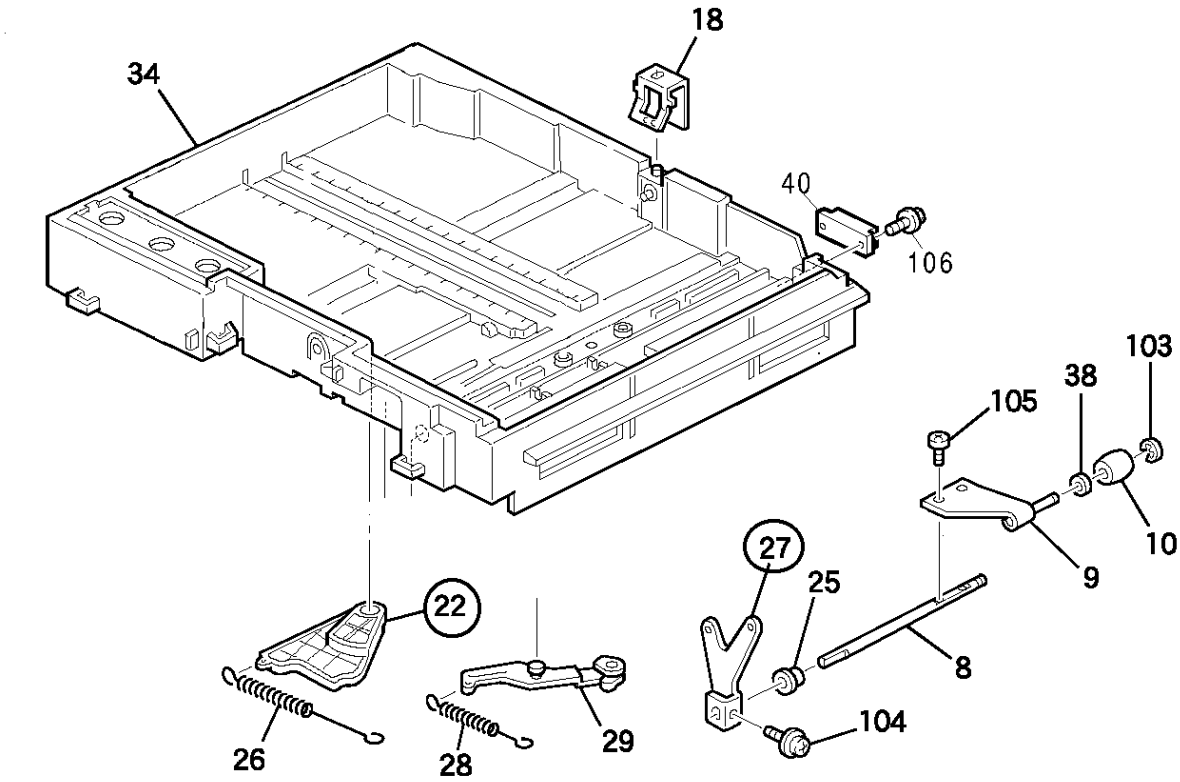

				REFERENCE	
OLD PART NO.	**NEW PART NO.**	**DESCRIPTION**	**QTY**	**PAGE**	**ITEM**
A2192582	A2192597	Paper Lift Shutter	1	13	22
A2192597	A2192582	Bottom Plate Lever	1	13	27

TECHNICAL SERVICE BULLETIN

BULLETIN NUMBER: A219/A245 - 011 **05/11/99**

APPLICABLE MODEL:
GESTETNER – 2718
RICOH – FT4018
SAVIN – N/A

Note: This copy is intended as a master original for reproduction of additional bulletins.

SUBJECT: OPERATION PANEL BOARD

GENERAL:

The following part update is being issued for all A245 Parts Catalogs. Please update your Parts Catalog with the following change.

OPERATION PANEL (A245)

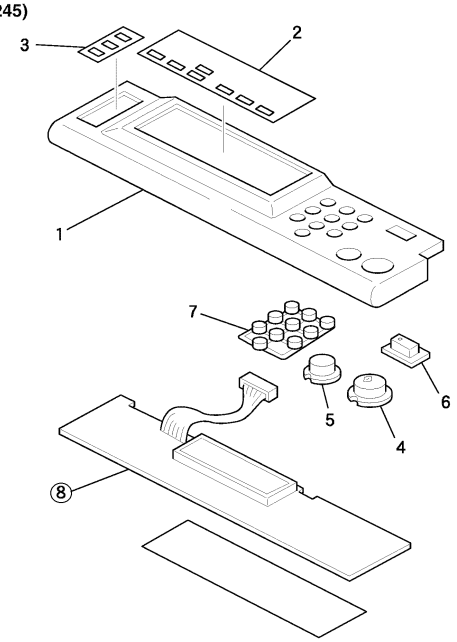

				REFERENCE	
OLD PART NO.	**NEW PART NO.**	**DESCRIPTION**	**QTY**	**PAGE**	**ITEM**
A2191464	A2191464	Operation Panel Board – 120V	1	11	8
	A2191468	Operation Panel Board – 230V	1	11	8

INTERCHANGEABILITY CHART:

0	OLD and NEW parts can be used in both OLD and NEW machines.	2	NEW parts CAN NOT be used in OLD machines. OLD parts can be used in OLD and NEW machines.
1	NEW parts can be used in OLD and NEW machines. OLD parts CAN NOT be used in NEW machines.	3	OLD parts CAN NOT be used in NEW machines. NEW parts CAN NOT be used in OLD machines.
3/S	Must be installed as a set on units manufactured prior to the S/N cut-in. On units manufactured after the S/N cut-in or previously modified, use the new part numbers individually.		

TECHNICAL SERVICE BULLETIN

BULLETIN NUMBER: A219/A245 - 012 **05/28/99**

APPLICABLE MODEL:
GESTETNER – 2715Z/2718
RICOH – FT4015/4018
SAVIN – 9115/NA

Note: This copy is intended as a master original for reproduction of additional bulletins.

SUBJECT: TRANSFER AND EXIT SECTION SPRING

GENERAL:

The following Parts Correction is being issued for all A219 and A245 Parts Catalogs.

				REFERENCE	
INCORRECT PART NO.	CORRECT PART NO.	DESCRIPTION	QTY	PAGE	ITEM
AA63042	AA063040	Spring	1	39	34

TECHNICAL SERVICE BULLETIN

BULLETIN NUMBER: A219/A245/A289 - 013 **06/25/99**

APPLICABLE MODEL:

GESTETNER – 2715Z/2718Z/2818Z
RICOH – FT4015/4018/4118
SAVIN – 9115/9118/NA

Note: This copy is intended as a master original for reproduction of additional bulletins.

SUBJECT: BLUE FILTER

GENERAL:

The original style Blue Filter (P/N A1901812) could become fogged if a drop of water contacted it. A new style Blue Filter (P/N A1901805) with material that will not be affected by water will be used. The following part update is being issued for all A219, A245 and A289 Parts Catalogs. Please update your Parts Catalog with the following information.

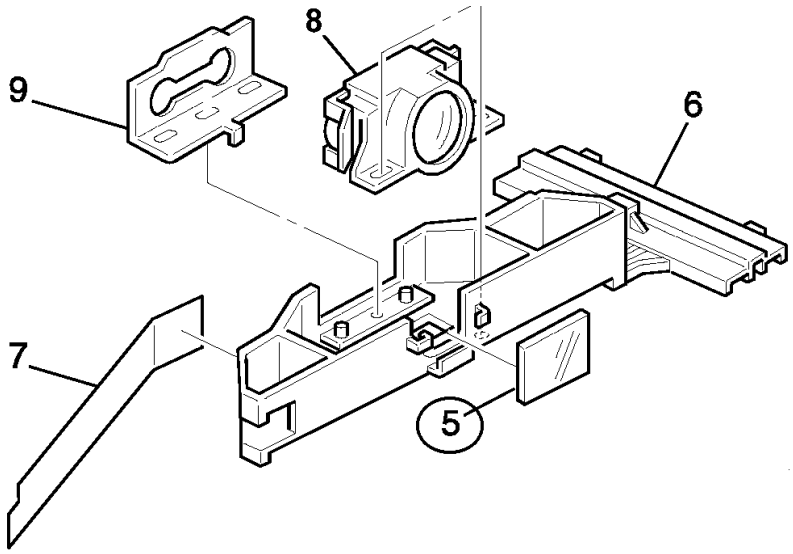

					REFERENCE	
OLD PART NO.	NEW PART NO.	DESCRIPTION	QTY	INT	PAGE	ITEM
A1901812	A1901805	Blue Filter	1	1	25	5

UNITS AFFECTED:

All copiers manufactured after the Serial Numbers listed below will have the new style Blue Filter installed during production.

MODEL NAME	SERIAL NUMBER
Gestetner 2715Z	AJ08870001
Gestetner 2718Z	AN88870001
Gestetner 2818Z	A7938860001
Ricoh FT4015	A7368870877
Ricoh FT4018	A7628870289
Ricoh FT4118	A7938860001
Savin 9115	7A48870001
Savin 9118	Not Available

TECHNICAL SERVICE BULLETIN

BULLETIN NUMBER: A219/A245/A289 - 014 **08/20/99**

APPLICABLE MODEL:
GESTETNER – 2715Z/2718Z
RICOH – FT4015/FT4018
SAVIN – 9115/9118

Note: This copy is intended as a master original for reproduction of additional bulletins.

SUBJECT: COPY QUALITY SYMPTOMS

SYMPTOM (S):

1. Void/light areas on copies.
2. Light copies.
3. Black spots on copies.
4. Blurry copies.

CAUSE (S):

1. Dirty Charge Corona Wire, Grid, Transfer Corona Wire, Separation Discharge Plate, SP modes not set to factory settings or Copy Paper.
2. SP modes not set to factory settings, Toner supply problem, Corona Currents out of specification, Grid Voltage out of specification or Bias Voltage out of specification.
3. Machine overtoned, SP modes not set to factory settings or Toner recycling system clogged.
4. Old style Charge Corona Unit installed, Blue Filter fogged or focus out of adjustment.

SOLUTION (S):

1. Solutions for Void/Light Areas on Copies

1. The copy paper may be dry. Change the paper.
2. Clean the Transfer Corona Wire and Casing with water.
3. Clean the Charge Corona Wire, Grid and Casing with water.
4. Clean the Separation Discharge Plate with water.

NOTE: Ensure the Corona Units are completely dry before installing them in the machine to avoid arcing. Replace the Corona Wires and Grid if necessary.

5. Vacuum out the Toner Collection Coil and Toner Recycling Belt areas.
6. Mark the position of VRD on the High Voltage Supply Board with a marker. Turn VRD all the way CCW (minimum output).

Continued…

7. Ensure the Settings/Value of the following SP Modes are set to factory settings.

SP Mode	Default Setting
SP30	0
SP31	4
SP32	0
SP33	0
SP34	0
SP35	1
SP36	15
SP38	0
SP43	See factory data sheet setting
SP44	See factory data sheet setting
SP47	See factory data sheet setting
SP48	See factory data sheet setting
SP53	97
SP54	102 value changes when SP66 is performed

NOTE: *If the SP Modes that effect the toner supply are changed, the machine may overtone or undertone. If the machine overtones the Corona Wires and Grid will become dirty causing the void/light areas. If the machine runs undertoned, over time the Carrier particles of the Developer will become stripped (smooth) and the toner particles will not be attracted (held) properly by the Carrier particles so the machine will run dirty.*

8. Adjust the Development Bias to specification (-200VDC +/-4V). Refer to page 6-52 of SM.
9. Adjust the Grid Voltage to specification (-910VDC +/-15V). Refer to page 6-55 of SM.
10. Adjust the Charge Current to specification (-400uA DC +/-2uA). Refer to page 6-57 of SM.
11. Adjust Transfer Current to specification (-350uA DC +/-4uA). Refer to page 6-56 of SM.
12. Check the Ozone Filter. Clean with a Blower Brush if life is under 45K and replace the Ozone Filter if over or at 45K.

NOTE: *If the Ozone Filter becomes dirty, it will affect the airflow around the coronas causing Ozone to buildup and the Corona Wires to fail prematurely.*

Continued…

2. Solutions for Light Copies

1. Perform solutions for void/light areas on copies. If the copies are still light perform step 2.
2. Run SP63 (Forced Toner Supply) three times. Did the Toner Density improve? If yes, perform SP66 (TD Sensor Initial Setting) twice. If no, perform step 3.
3. Did the Toner Supply Motor turn ON when SP63 was run? If no, check the Copier Main Board, Toner Supply Motor and Toner Supply Motor wiring. Replace the defective part. If yes, perform step 4.
4. Inspect the Toner Supply Mylars (A2193325). Are the Toner Supply Mylars intact? If no, replace the Toner Supply Mylars or Toner Supply Unit. If yes, perform step 5.
5. Is Toner flowing from the Toner Supply Unit to the Development Section of the Imaging Unit when SP63 is run? If no, remove possible obstruction blocking Toner flow or replace the Toner Supply Unit. If yes, perform step 6.
6. Replace Developer and run SP66 twice.

3. Solutions for Black Spots

1. Place a white sheet of paper on the Exposure Glass so it covers 3 inches of the lead edge of the paper. Run sky shots to de-tone the machine until the black spots clear up (20 to 50 copies should be enough).
2. Perform solutions for void/light areas on copies.

NOTE: ***1.*** *While Vacuuming out the Toner Collection Coil area, inspect the Cleaning Section Entrance Seal. If the Entrance Seal is, wavy/damaged and not resting evenly against the Drum gaps are created. Toner may have fallen from these gaps causing black spots. Replace the Imaging Unit.*

2. *To prevent damage to the Cleaning Section Entrance Seal when removing or installing the Drum, place a sheet of paper between the Drum and the Cleaning Section Entrance Seal as shown on page 6-21 of SM.*

3. After performing steps 1 & 2, perform SP66 (TD Sensor initial Setting) twice.
4. If the black spots still appear, replace Developer and run SP66 twice.

4. Solutions for Blurry Copies

1. Adjust the focus using SP47. Refer to SM page 6-59.

NOTE: *After adjusting SP47, check the Horizontal and Vertical Magnification. Adjust the Horizontal and Vertical Magnification if necessary.*

2. Install new style Charge Corona Unit (A1902011) from TSB A219-002.
3. The Blue Filter may be fogged. Install new style Blue Filter (A1901805) from TSB A219/A245/A289-013.

NOTE: *If steps 1, 2 or 3 do not resolve the blurry copies, please contact the TSC Hotline.*

TECHNICAL SERVICE BULLETIN

BULLETIN NUMBER: A219/A245/A289 - 015 09/27/99

APPLICABLE MODEL:
GESTETNER – 2715Z
RICOH – FT4015
SAVIN - 9115

Note: This copy is intended as a master original for reproduction of additional bulletins.



SERVICE MANUAL

SUBJECT: SERVICE MANUAL - INSERT

GENERAL:

The Service Manual page(s) listed below must be replaced with the page(s) supplied. Each bulletin package contains 1 set of replacement pages.

PAGES:

The revised areas have been highlighted by an arrow ⇒.

- 4-18 Updated Information (SP54)

Mode No.		Function	Settings
49	Fusing Temperature Adjustment	Adjusts the control temperature of the hot roller during copying in 1°C steps.	120 V Machines 180°C ~ 195°C **Default = 190°C** 230 V Machines 180°C ~ 200°C **Default = 190°C**
50	Fusing Ready Temperature Adjustment	Adjusts the ready temperature of the hot roller during the warm-up period in 1°C steps. ***Normally, this value should not be changed.***	120 V Machines 160°C ~ 170°C **Default = 165°C** 230 V Machines 165°C ~ 175°C **Default = 172°C**
51	Exposure Lamp Voltage Display	Displays the current exposure lamp voltage. For 120 V machines, the actual applied voltage = displayed value/2 *The exposure lamp turns on for 10 seconds when this mode is selected. Do not repeat more than 5 times, to avoid overheating the optics cavity.*	0 ~ 247
52	Fusing Temperature Display =	Displays the fusing temperature detected by the fusing thermistor. Press the ⊡ key to monitor the temperature during the normal copy cycle.	
53	TD Sensor Target Control Voltage Adjustment	If the setting of SP30 (Toner Supply Mode Selection) is 1 or 3, this value is used for the TD sensor target voltage. ***Normally, this value should not be changed.***	1 ~ 200 **Default = 97** **(0.02 V per step)**
⇒ 54	TD Sensor Gain Adjustment	When the TD Sensor initial setting is performed, this mode is adjusted automatically. ***Normally, this value should not be changed.***	0 ~ 255 **Default = 102** **(0.04 V per step)**
55	TD Sensor Output Display Data =	Displays the TD sensor output voltage. Press the ⊡ key to monitor the output voltage during the normal copy cycle. The output voltage will display "0" when this mode is accessed after turning on the main switch without making any copies.	**(0.02 V per step) x Data**
56	ADS Reference Voltage Adjustment	Adjusts the ADS reference voltage. *After adjusting the light intensity (SP48), place 5 sheets of A4(LT) white paper on the exposure glass and select this mode. Adjust the ADS voltage to 2.5 V ± 0.1 V using VR101 on the main control board.*	
57	ADS Output Voltage Display =	Displays the ADS output voltage. Press the ⊡ key to monitor the output voltage during the normal copy cycle. *For only this SP mode, the copies are made with the ADS mode (other SP modes use manual ID level 4).*	

TECHNICAL SERVICE BULLETIN

BULLETIN NUMBER: A219/A245/A289 - 016 **10/04/99**

APPLICABLE MODEL:
GESTETNER – 2715Z/2718Z
RICOH – FT4015/4018
SAVIN – 9115/9118

Note: This copy is intended as a master original for reproduction of additional bulletins.

SUBJECT: 1ST & 2ND AGITATORS

GENERAL:

The 1st and 2nd Agitator part numbers were reversed in the Parts Catalog. The following part number corrections are being issued for all A245 Parts Catalogs. Please update your Parts Catalogs with the following information.

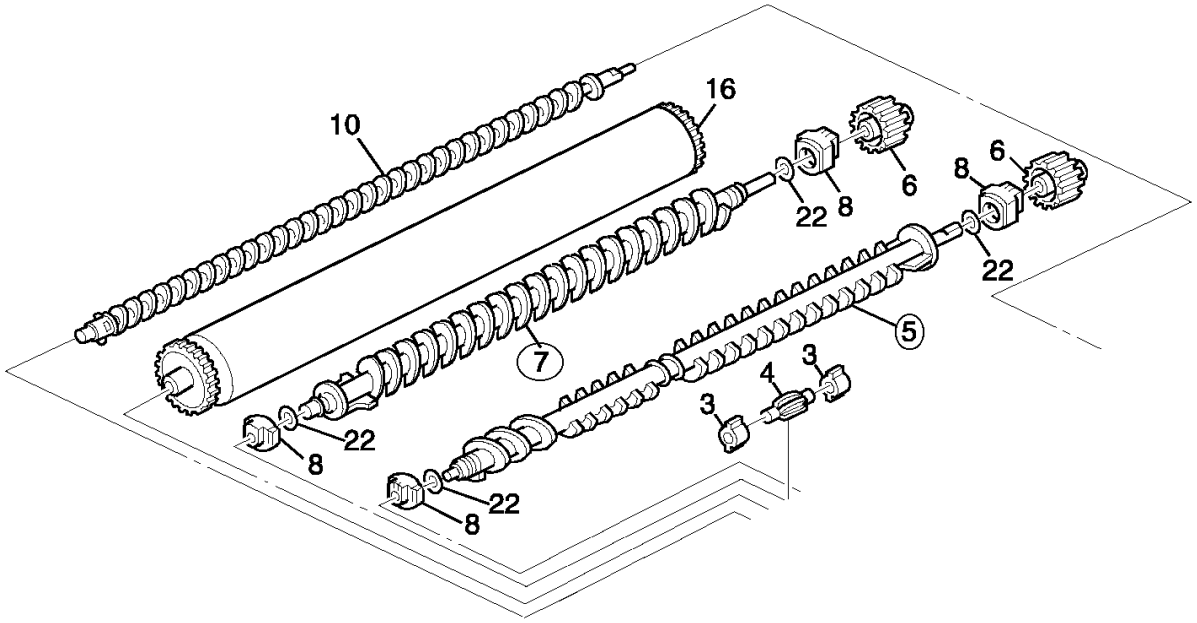

				REFERENCE	
INCORRECT PART NO.	CORRECT PART NO.	DESCRIPTION	QTY	PAGE	ITEM
A1903112	A1903116	1st Agitator	1	33	5
A1903116	A1903112	2nd Agitator	1	33	7

TECHNICAL SERVICE BULLETIN

BULLETIN NUMBER: A219/A245/A289 - 018 **11/17/99**

APPLICABLE MODEL:
GESTETNER – 2715Z/2718Z/2818Z
RICOH – FT4015/4018/4118
SAVIN – 9115/9118

Note: This copy is intended as a master original for reproduction of additional bulletins.

SUBJECT: MAIN SWITCH

GENERAL:

The vendor for the Main Switch has been changed and the original part can no longer be procured. The old style Main Switch is still in stock and can be used until the stock is depleted. The following part update is being issued for all A219, A245 and A289 Parts Catalogs. Please update your Parts Catalogs with the following information.

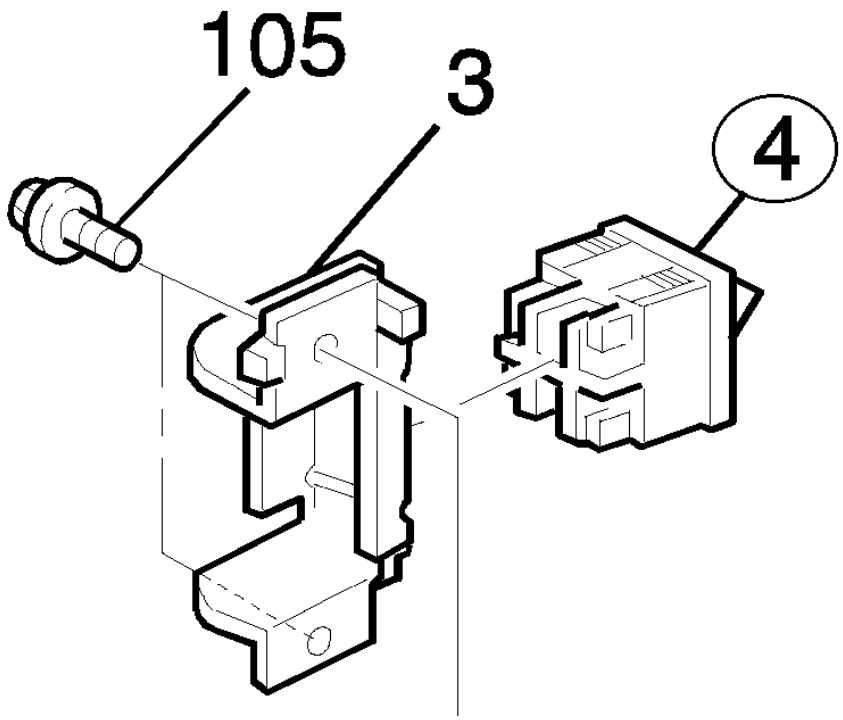

					REFERENCE	
OLD PART NO.	NEW PART NO.	DESCRIPTION	QTY	INT	PAGE	ITEM
A1525220	A1905222	Main Switch	1	1	45	4

Continued…

UNITS AFFECTED:

All copiers manufactured after the Serial Numbers listed below will have the new style ((Part Name)) installed during production.

MODEL NAME	SERIAL NUMBER
Gestetner 2715Z	AJ08890001
Gestetner 2718Z	AN88890001
Gestetner 2817Zl	A7938890188
Ricoh FT4015	A7368891702
Ricoh FT4018	Service Part Only
Ricoh FT4118	A7938890188
Savin 9115	7A48890001
Savin 9118	Not Available

INTERCHANGEABILITY CHART:

0	OLD and NEW parts can be used in both OLD and NEW machines.	2	NEW parts CAN NOT be used in OLD machines. OLD parts can be used in OLD and NEW machines.
1	NEW parts can be used in OLD and NEW machines. OLD parts CAN NOT be used in NEW machines.	3	OLD parts CAN NOT be used in NEW machines. NEW parts CAN NOT be used in OLD machines.
3/S	Must be installed as a set on units manufactured prior to the S/N cut-in. On units manufactured after the S/N cut-in or previously modified, use the new part numbers individually.		

TECHNICAL SERVICE BULLETIN

BULLETIN NUMBER: A219/A245/A289 - 019 **11/17/99**

APPLICABLE MODEL:
GESTETNER – 2715Z/2718Z/2818Z
RICOH – FT4015/4018/4118
SAVIN – 9115/9118

Note: This copy is intended as a master original for reproduction of additional bulletins.

SUBJECT: EXIT SENSOR

GENERAL:

The old style Photointerrupter (P/N AW020075) used for the Exit Sensor was susceptible to damage due to high temperature. A new style Photointerrupter (P/N AW020086) with a higher heat tolerance is now used as the Exit Sensor. The following part update is being issued for all A219, A245 and A289 Parts Catalogs. Please update your Parts Catalogs with the following information.

					REFERENCE	
OLD PART NO.	NEW PART NO.	DESCRIPTION	QTY	INT	PAGE	ITEM
AW020075	AW020086	Photointerrupter	1	1	47	9

NOTE: *Photointerrupters (P/N AW020075) that are used in other devices within the copier such as the Optics section, remain unchanged.*

UNITS AFFECTED:

All A219, A245 and A289 copiers manufactured after the Serial Numbers listed below will have the new style Photointerrupter installed during production.

MODEL NAME	SERIAL NUMBER
Gestetner 2715Z	AJ09900001
Gestetner 2718Z	AN8990xxxx
Gestetner 2818Z	A7939890051 (120V/60Hz)
Gestetner 2818Z	A7939890001 (220, 230 V/ 50,60Hz)
Ricoh FT4015	A736980001
Ricoh FT4018	A762990xxxx
Ricoh FT4118	A7939890051 (120V/60Hz)
Ricoh FT4118	A7939890001 (220, 230 V/ 50,60Hz)
Savin 9115	7A4990xxxx
Savin 9118	9A9990xxxx

INTERCHANGEABILITY CHART:

0	OLD and NEW parts can be used in both OLD and NEW machines.	2	NEW parts CAN NOT be used in OLD machines. OLD parts can be used in OLD and NEW machines.
1	NEW parts can be used in OLD and NEW machines. OLD parts CAN NOT be used in NEW machines.	3	OLD parts CAN NOT be used in NEW machines. NEW parts CAN NOT be used in OLD machines.
3/S	Must be installed as a set on units manufactured prior to the S/N cut-in. On units manufactured after the S/N cut-in or previously modified, use the new part numbers individually.		

TECHNICAL SERVICE BULLETIN

BULLETIN NUMBER A219/A245/A289 – 020 **03/21/2000**

APPLICABLE MODEL:

GESTETNER – 2715Z/2718Z/2818Z
RICOH – FT4015/FT4018/FT4118
SAVIN – 9115/9118

Note: This copy is intended as a master original for reproduction of additional bulletins.

SUBJECT: COPY QUALITY

SYMPTOMS:

1. Toner drops onto the copy.
2. Dirty background on copies (occasional).
3. Image density too high (occasional).

CAUSES:

1. The Toner Density Sensor supplies too much Toner into the Development Tank due to misdetection.
2. Used Toner accumulates in the IU (Imaging Unit), preventing proper Toner recycling.

Although the Toner concentration in the Developer is maintained between 3 and 4%, an increase can be observed when used over an extended period of time. This level is normally kept under 5% even after 60K copies, however there are rare cases where this limit is exceeded due to the environmental factors described below. These are thought to cause the Toner to fall onto the surface of the copy.

The presence of paper dust as well as conditions such as high humidity are thought to cause an oversupply of Toner to the Development unit (by raising the limit of the Toner concentration control to over 6%), which in turn causes the Toner to fall onto the copy surface.
In addition, due to this oversupply of Toner to the Development Unit, Recycled Toner creates a block in the Imaging Unit and the Toner falls from the Cleaning Area.

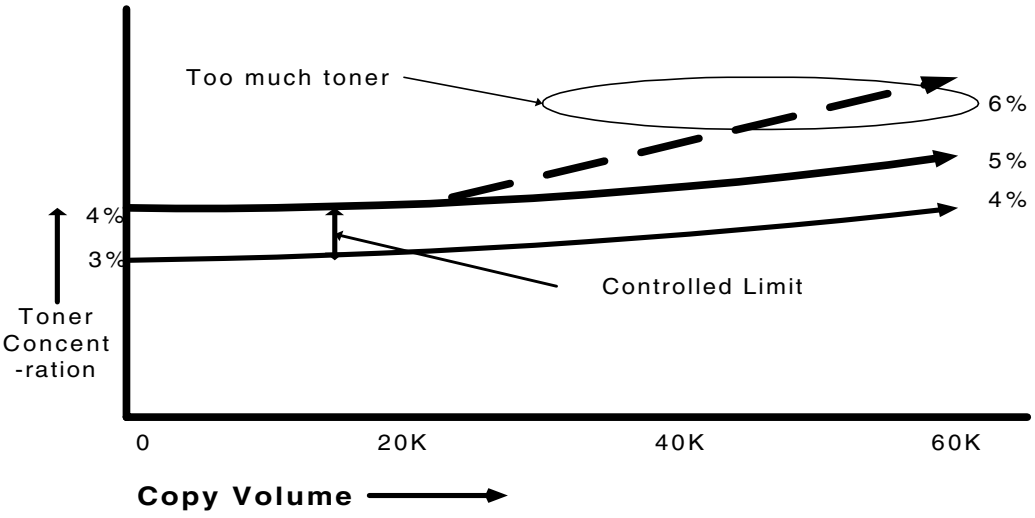

Continued…

SOLUTIONS:

TEMPORARY COUNTERMEASURE:

Please follow the procedure outlined below.
1. Remove the IU from the machine.
2. Completely remove the Recycled Toner at the Toner Collection Coil under the Cleaning Blade and the Toner Recycling Belt area. Install the IU into the machine.
3. Remove the Toner Bottle from the machine. Confirm that SP38 is 0. (Input "0" if it is not.)
4. Make 20, A4 sideways, skyshot copies (Black solid copies).
5. Set an original and make some copies to confirm that copy quality is normal.
6. Change the Toner supply mode from “0” to “1” in SP30.
7. Make some copies while monitoring the TD Sensor Output (SP55).
8. Input the value obtained in ***step 7*** into SP53 – TD Sensor Target Control Voltage Adjustment (If it is more than 127, input 127).
9. Install the Toner Bottle in the machine
10. Set an original and make some copies to confirm that copy quality is normal.

Note:
When the Developer is replaced, please observe the following for efficient troubleshooting:
1) Perform SP66 to initialize the Developer.
*2) Do not change the settings of SP30 and SP53.The SP30 setting must be at “1”. The TD Sensor control voltage must be kept at the same level in SP53, as entered in **step 8** above.*

PERMANENT COUNTERMEASURE:

The rise in the amount of Toner being supplied will be prevented according to the copy volume by modifying the software so that an oversupply does not result.

This modification is scheduled to be implemented in the *A219* from October 1999 mass production.
The serial number cut in was not available for the A245 and A289 copiers at time of publication

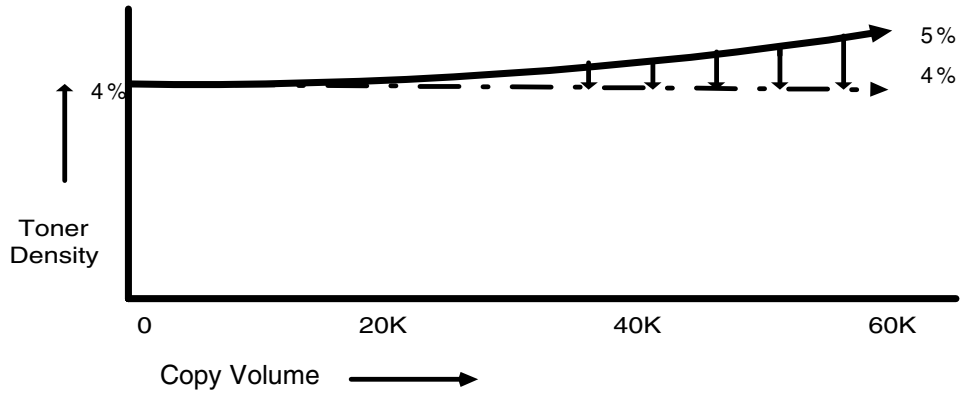

Continued…

If the above symptom should occur in the field before preventative maintenance is performed, please institute the temporary countermeasure described in the previous section and refrain from upgrading the software.
The new software has two major differences from the previous version:

The overall Process Control and Toner Density Control is maintained by lowering it to a fixed value every 1K. Due to these differences, it is recommended that the new firmware be used together with the new Developer.

NOTE:
Please upgrade the software at the next PM visit (when the Developer is replaced).
Please refer to the flowchart on the following page.

NOTE:
When the Developer is replaced, remove the old Developer completely. Otherwise the volume of the Developer is increased and it causes Toner dropping.

NOTE:
The ROM files are available from the T.S.C. Web site Http://TSC.ricohcorp.com

The filenames are: A289MA1D.EXE
A245MA1D.EXE
A219MA1G.EXE

Continued…

FLOW CHART FOR THE TONER DROPPING PROBLEM

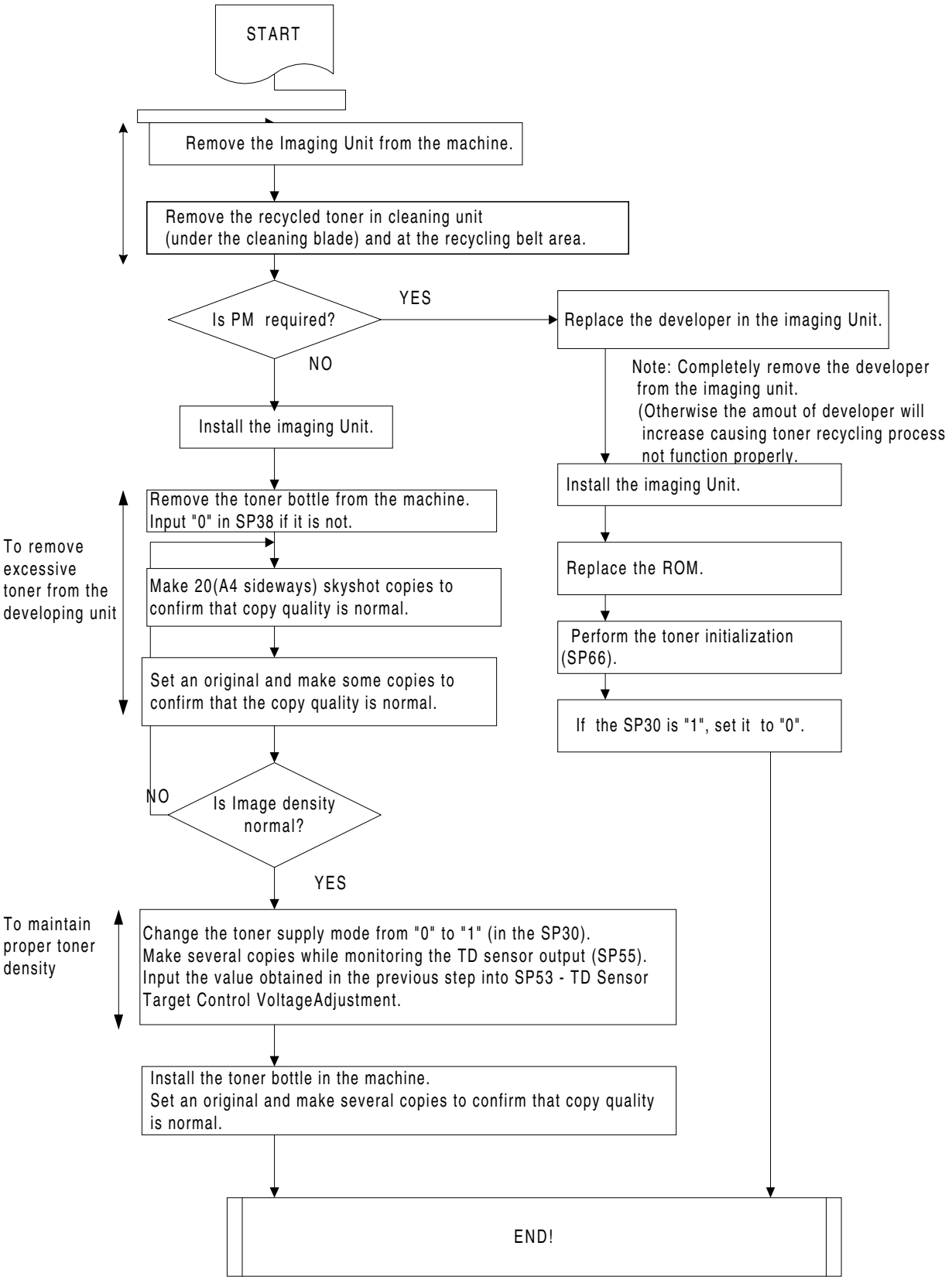

1.

TECHNICAL SERVICE BULLETIN

BULLETIN NUMBER: A219/A245/A289/B019 - 021 **04/25/2000**

APPLICABLE MODEL:

GESTETNER – 2715Z/2718Z/2818Z/2913z
RICOH – FT4015/4018/4118/3813
SAVIN – 9115/9118/NA/2013Z

Note: This copy is intended as a master original for reproduction of additional bulletins.

SUBJECT: OVERTONING AND TONER DROPPING ONTO COPIES

SYMPTOM:

1) During machine installation or after the developer is replaced, SP66 (TD sensor Initial Setting) should take approximately 60 seconds but stops after only a few seconds.

2) After a new machine is installed, copies have high image density and/or toner drops onto copies. This occurs until approximately 100 copies are made.

CAUSE:

The TD sensor connector (P/N A1905346: Development Unit Harness) which is mounted on the I/U (Imaging Unit) is not properly connected to the connector of the Development Relay Board (P/N A1905145). The board is mounted on the rear side plate of the mainframe.

The Knob Screw must be tightened properly *while* pushing the I/U against the raised portion of the Mainframe Front Side Plate. If it is not tightened properly, the TD Sensor Connector will not be fully inserted into the receiving connector on the board.

To check whether or not the connection is properly secured, make some copies while monitoring the reading of SP55. If the connection is not properly secured, the SP55 readings will fluctuate greatly (e.g. 71, 125, 13, 17, 117, 35).

SOLUTION:

Use the I/U installation procedure below:

1) Insert the I/U into the Mainframe.
2) Push the I/U toward the back so that the I/U Front Side Plate (P/N A1902280) remains flush against the raised portion of the Front Side Plate of the Mainframe (see illustration on page 2). While holding the Unit in this position (while pushing on the handle), tighten the Knob Screw (P/N A1902320) by hand until the I/U is secure.

Continued…

© 2000 RICOH Corporation. All rights reserved.

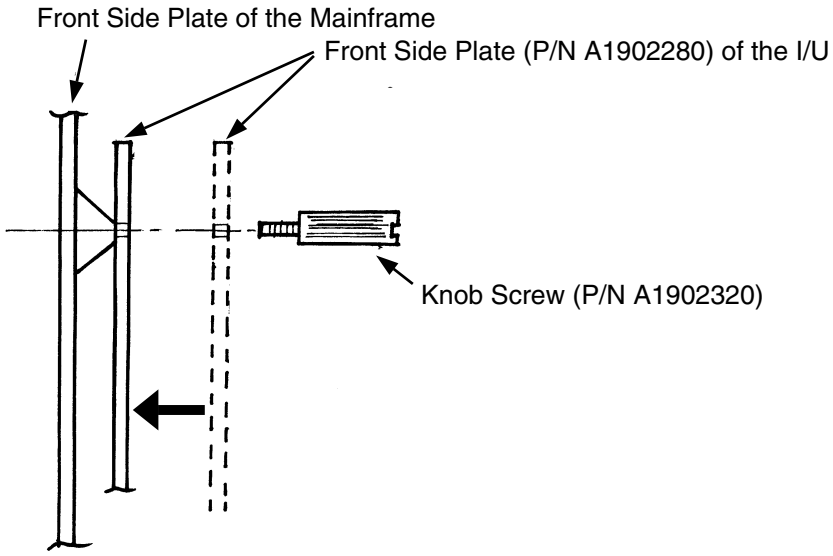

3) Use a slotted screwdriver for the final tightening.

TECHNICAL SERVICE BULLETIN

BULLETIN NUMBER: A219/A245/A289/B019 - 022 **04/28/2000**

APPLICABLE MODEL:

GESTETNER – 2715Z
RICOH – FT4015
SAVIN – 9115

Note: This copy is intended as a master original for reproduction of additional bulletins.

SUBJECT: SPRING

GENERAL:

The following parts corrections are being issued for all A219 Parts Catalogs.

4. PAPER TRAY (A219)

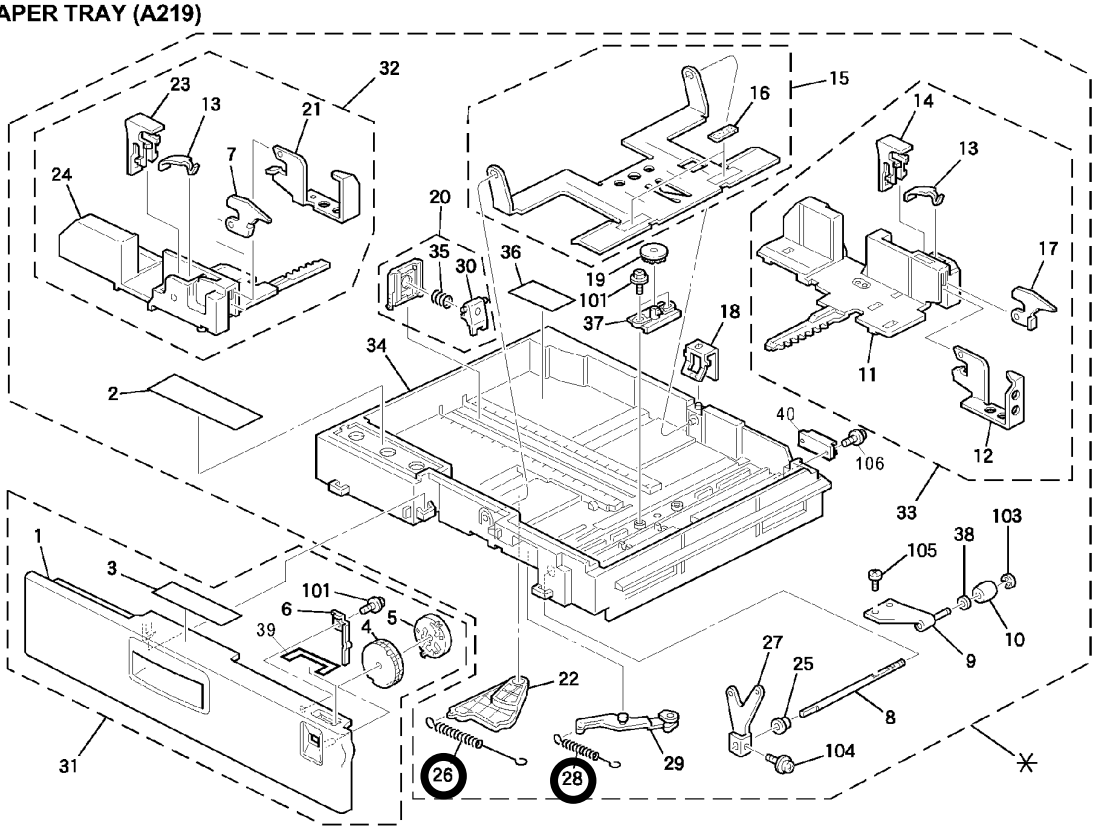

				REFERENCE	
OLD PART NO.	**NEW PART NO.**	**DESCRIPTION**	**QTY**	**PAGE**	**ITEM**
A2192543	A2192541	Spring	1	13	26
A2192541	A2192543	Spring	1	13	28

© 2000 RICOH Corporation. All rights reserved.

TECHNICAL SERVICE BULLETIN

BULLETIN NUMBER: A219/A245/A289/B019 – 023 **10/30/2000**

APPLICABLE MODEL:

GESTETNER – 2818Z/2913Z
RICOH – FT4118/3813
SAVIN – NA/2013Z

Note: This copy is intended as a master original for reproduction of additional bulletins.

SUBJECT: LOW IMAGE DENSITY IN LEADING AREA

SYMPTOM:

The image density of the leading (top) half of the copy becomes lighter when originals with a specific density or halftone are copied.

CAUSE:

When the 1st and 2nd Scanners start to move, part of the light from the 1st Scanner is sent directly to the Mirror of the 2nd Scanner, as the two Scanners are relatively close. This "extra light" received by the Mirror will cause the image to appear lighter. As scanning continues, the 1st Scanner increases to twice the speed of the 2nd Scanner, causing the two Scanners to get farther and farther apart. Therefore, less and less of the "extra light" reaches the 2nd Scanner Mirror. This is why the leading edge is lighter.

SOLUTION:

A Shading Seal (P/N A2981684) should be affixed to the Lens Cartridge to ensure proper image density at the leading edge (when making copies with very light/halftone originals). This will prevent extra light from passing from the 2nd Scanner Mirror to the Photoconductor via the Base Plate of the Optics Unit and Lens Carriage (P/N A1901682). The Seal should be attached to the lower portion of the Lens Carriage. This will prevent the extra light from passing between the Optic Base Plate and Lens Carriage. This modification will be applied from the August 2000 production. Please follow the PROCEDURE on page 2.

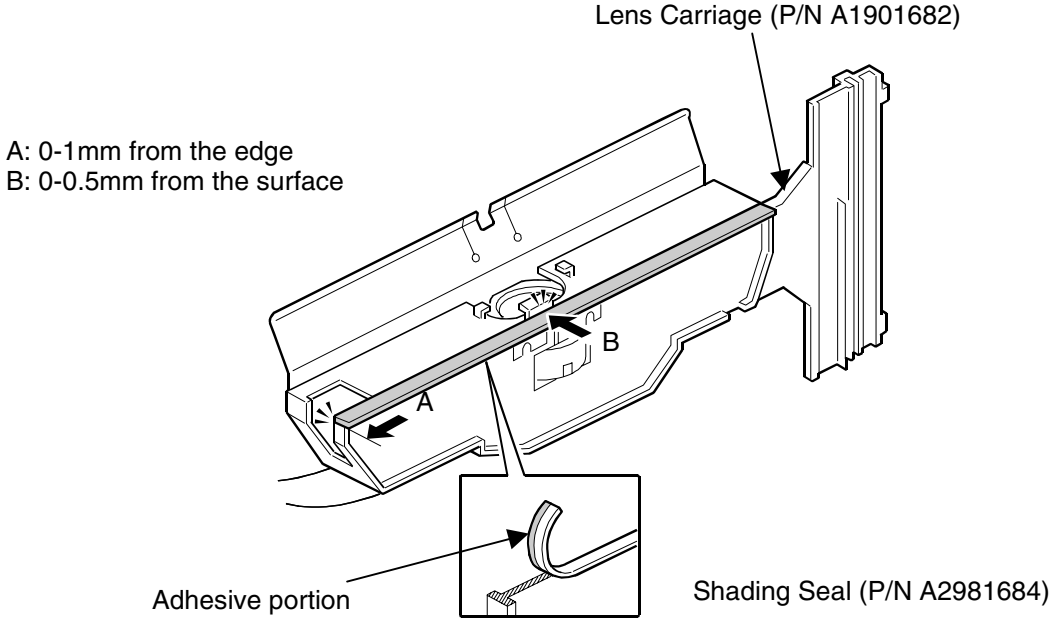

Continued…

© 2000 RICOH Corporation. All rights reserved.

PROCEDURE:

1. Remove the Power Plug from the wall outlet.
2. Remove the Lens Carriage from the Optics Unit.

NOTE: *Before removing the Lens Carriage, remove the Left Scale, the Exposure Glass and the Lens Cover.*

3. Affix the Shading Seal on the Lens Carriage as shown in the illustration on page 1.

GENERAL:

The following part update is being issued for all B019 Parts Catalogs.

B019			REFERENCE	
PART NUMBER	**DESCRIPTION**	**QTY**	**PAGE**	**ITEM**
A2981684	Shading Seal	1	27	23 *

* Denotes new item number.

UNITS AFFECTED:

A289/B019 will have the Shading Seal installed from the August 2000 production.

TECHNICAL SERVICE BULLETIN

BULLETIN NUMBER: A219/A245/A289/B019 – 023 RESISSUE ★ **12/12/2000**

APPLICABLE MODEL:
GESTETNER – 2818Z/2913Z
RICOH – FT4118/3813
SAVIN – NA/2013Z

Note: This copy is intended as a master original for reproduction of additional bulletins.

SUBJECT: LOW IMAGE DENSITY IN LEADING AREA

SYMPTOM:

The image density of the leading (top) half of the copy becomes lighter when originals with a specific density or halftone are copied.

CAUSE:

When the 1st and 2nd Scanners start to move, part of the light from the 1st Scanner is sent directly to the Mirror of the 2nd Scanner, as the two Scanners are relatively close. This "extra light" received by the Mirror will cause the image to appear lighter. As scanning continues, the 1st Scanner increases to twice the speed of the 2nd Scanner, causing the two Scanners to get farther and farther apart. Therefore, less and less of the "extra light" reaches the 2nd Scanner Mirror. This is why the leading edge is lighter.

SOLUTION:

A Shading Seal (P/N A2981684) should be affixed to the Lens Carriage to ensure proper image density at the leading edge (when making copies with very light/halftone originals). This will prevent extra light from passing from the 2nd Scanner Mirror to the Photoconductor via the Base Plate of the Optics Unit and Lens Carriage (P/N A1901682). The Seal should be attached to the lower portion of the Lens Carriage. This will prevent the extra light from passing between the Optic Base Plate and Lens Carriage. This modification will be applied from the August 2000 production. Please follow the PROCEDURE on page 2.

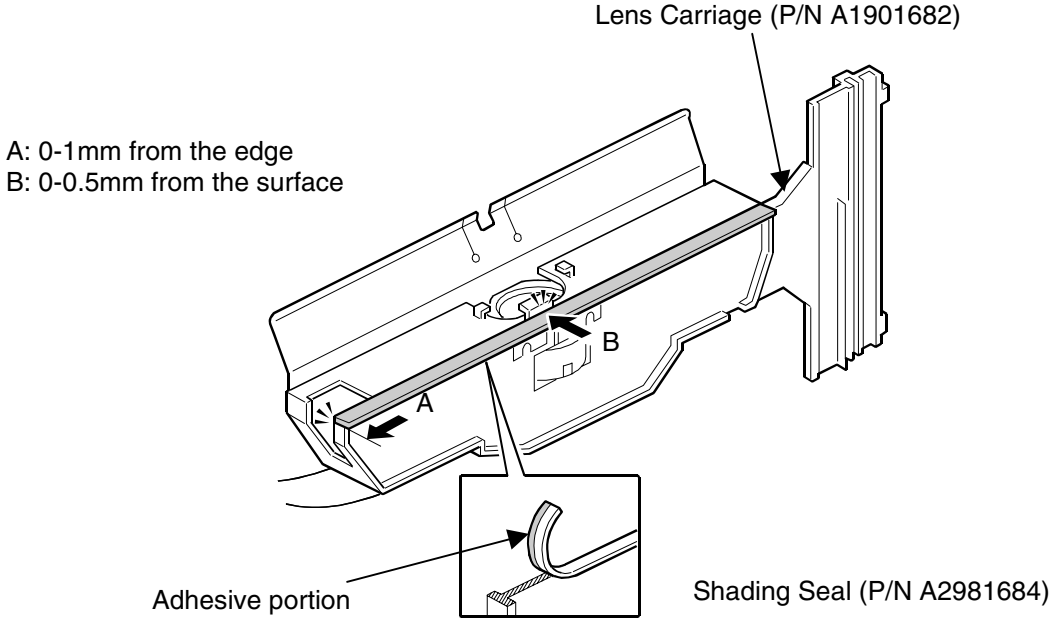

Continued…

© 2000 RICOH Corporation. All rights reserved.

PROCEDURE:

1. Remove the Power Plug from the wall outlet.
2. Remove the Lens Carriage from the Optics Unit.

NOTE: *Before removing the Lens Carriage, remove the Left Scale, the Exposure Glass and the Lens Cover.*

3. Affix the Shading Seal on the Lens Carriage as shown in the illustration on page 1.

GENERAL:

The following part update is being issued for all B019 Parts Catalogs.

B019			REFERENCE	
PART NUMBER	**DESCRIPTION**	**QTY**	**PAGE**	**ITEM**
A2981684	Shading Seal	1	27	23 *

* Denotes new item number.

UNITS AFFECTED:

★ All A289 copiers manufactured after the Serial Numbers listed below will have the new style Shading Seal installed during production.

MODEL NAME	SERIAL NUMBER
Gestetner 2818Z (220V)	A7930880201
Gestetner 2818Z	A7930870001
Ricoh FT4118 (120V)	A7930870001
Ricoh FT4118 (220V)	A7930880201

★ All B019 copiers manufactured after the Serial Numbers listed below will have the new style Shading Seal installed during production.

MODEL NAME	SERIAL NUMBER
Gestetner 2913Z	H4206703891
Ricoh FT3813	H4206704396
Savin 2013Z	H4206703891

TECHNICAL SERVICE BULLETIN

BULLETIN NUMBER: A219/A245/A289/B019 – 024 **11/17/2000**

APPLICABLE MODEL:

GESTETNER – 2715Z/2718Z/2818Z/2913Z
RICOH – FT4015/4018/4118/3813
SAVIN – 9115/9118/NA/2013Z

Note: This copy is intended as a master original for reproduction of additional bulletins.

SUBJECT: PARTS CATALOG UPDATES

GENERAL:

The following parts updates are being issued for all A219/A245/A289/B019 Parts Catalogs.

- **UPDATE 1:** **Thermofuse–** Due to a vendor change, a 172°C Thermofuse will be used instead of a 169°C type. When installing the new Thermofuse, be sure to remove the decal stating 169°C. Please note that the opening temperature of 169°C remains unchanged. Please update your Parts Catalog with the following information.

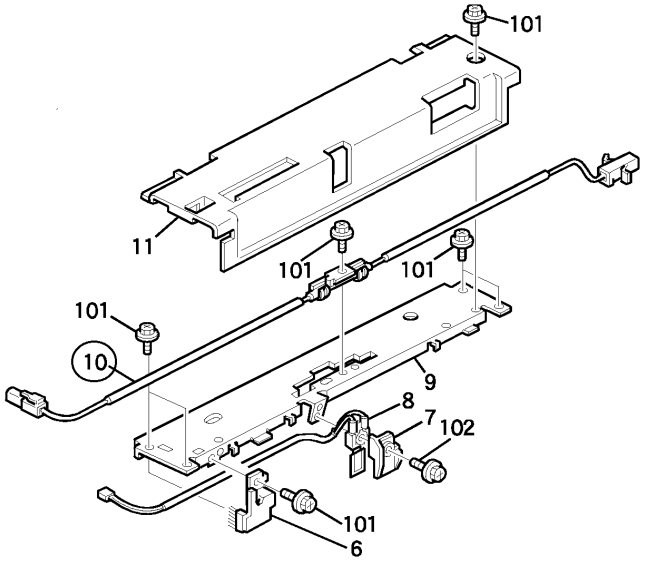

OLD PART NO.	NEW PART NO.	DESCRIPTION	QTY	INT	REFERENCE PAGE A219/ A245/ A289	REFERENCE PAGE B019	REFERENCE ITEM
A2194123		Thermofuse - 169°C	1	0	37	39	10
	→ A2984123	Thermofuse - 172°C					

Continued…

© 2000 RICOH Corporation. All rights reserved.

- **UPDATE 2:** **Platen Cover Hinge Ass'y –** Oil had been applied to the spring of the Platen Cover Hinge Assembly, but the oil will vaporize for some time. Therefore, grease has been applied instead of oil. The part itself remains unchanged. Please update your A219/A245 Parts Catalogs with the following information.

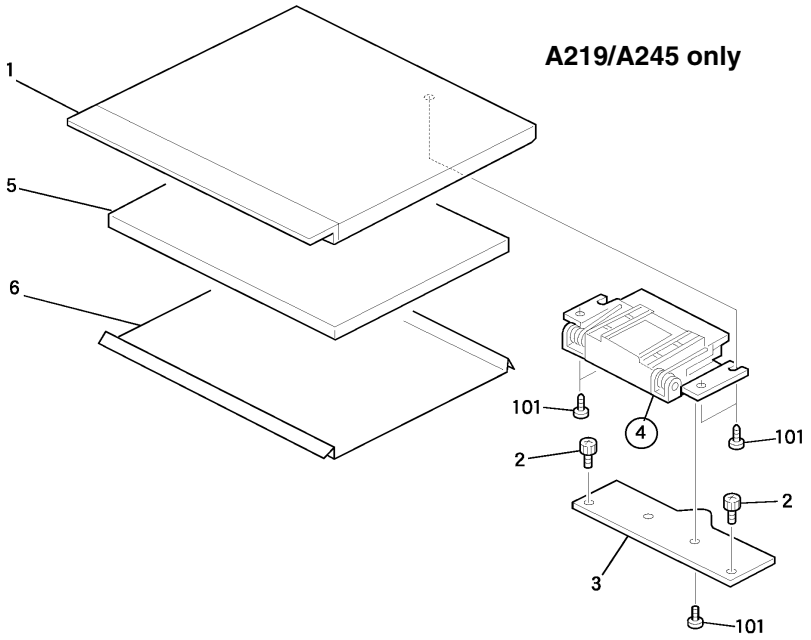

A219/A245 only					REFERENCE	
OLD PART NO.	**NEW PART NO.**	**DESCRIPTION**	**QTY**	**INT**	**PAGE**	**ITEM**
A1931246	A1931248	Platen Cover Hinge Ass'y	1	1	9	4

INTERCHANGEABILITY CHART:

0	OLD and NEW parts can be used in both OLD and NEW machines.	2	NEW parts CAN NOT be used in OLD machines. OLD parts can be used in OLD and NEW machines.
1	NEW parts can be used in OLD and NEW machines. OLD parts CAN NOT be used in NEW machines.	3	OLD parts CAN NOT be used in NEW machines. NEW parts CAN NOT be used in OLD machines.
3/S	Must be installed as a set on units manufactured prior to the S/N cut-in. On units manufactured after the S/N cut-in or previously modified, use the new part numbers individually.		

TECHNICAL SERVICE BULLETIN

BULLETIN NUMBER: A219/A245/A289/B019 – 025 **11/28/2000**

APPLICABLE MODEL:

GESTETNER – 2715Z/2913Z
RICOH – FT4015/3813
SAVIN – 9115/2013Z

Note: This copy is intended as a master original for reproduction of additional bulletins.

SUBJECT: PARTS CATALOG UPDATES

GENERAL:

The following parts updates are being issued for all A219/B019 Parts Catalogs.

- **UPDATE 1:** **Torque Limiter Spring –** The A219 Torque Limiter Spring was not used in production machines. Please delete the Torque Limiter Spring from your A219 Parts Catalog.

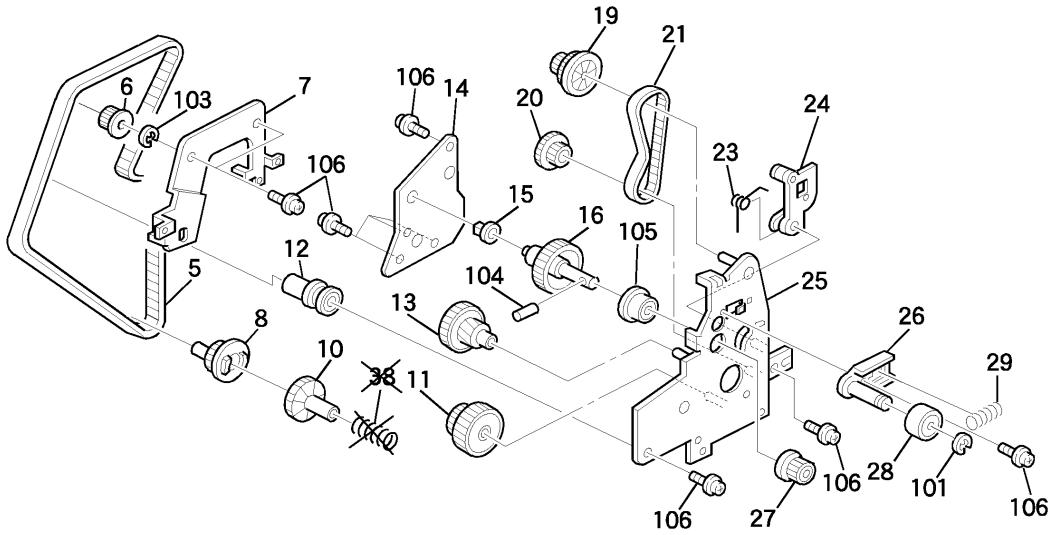

A219 only					REFERENCE	
OLD PART NO.	NEW PART NO.	DESCRIPTION	QTY	INT	PAGE	ITEM
A1902682	-	Torque Limiter Spring	1→0	-	41	38

Continued…

© 2000 RICOH Corporation. All rights reserved.

- **UPDATE 2:** **Timing Belt-S2M 158MM –** Due to a vendor change, the B019 Timing Belt-S2M 158MM has been changed. The old part is interchangeable with the new part. Please update your B019 Parts Catalog with the following information.

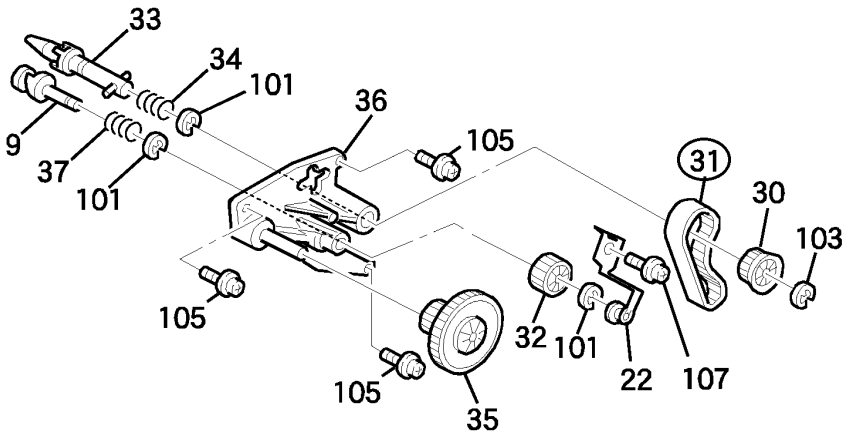

B019 only					REFERENCE	
OLD PART NO.	**NEW PART NO.**	**DESCRIPTION**	**QTY**	**INT**	**PAGE**	**ITEM**
G0201187	A2981187	Timing Belt-S2M 158MM	1	0	43	31

INTERCHANGEABILITY CHART:

0	OLD and NEW parts can be used in both OLD and NEW machines.	2	NEW parts CAN NOT be used in OLD machines. OLD parts can be used in OLD and NEW machines.
1	NEW parts can be used in OLD and NEW machines. OLD parts CAN NOT be used in NEW machines.	3	OLD parts CAN NOT be used in NEW machines. NEW parts CAN NOT be used in OLD machines.
3/S	Must be installed as a set on units manufactured prior to the S/N cut-in. On units manufactured after the S/N cut-in or previously modified, use the new part numbers individually.		

Gestetner RICOH SAVIN

TECHNICAL SERVICE BULLETIN

BULLETIN NUMBER: A219/A245/A289/B019 – 026 **12/12/2000**

APPLICABLE MODEL:

GESTETNER – 2715Z/2718Z/2818Z/2013Z
RICOH – FT4015/4018/4118/3813
SAVIN – 9115/9118/NA/2013Z

Note: This copy is intended as a master original for reproduction of additional bulletins.

SUBJECT: PARTS CATALOG UPDATES

GENERAL:

The following parts updates are being issued for all A219/A245/A289/B019 Parts Catalogs.

- **UPDATE 1:** **Fan Motor-DC24V 4.32W –** To facilitate assembly, a Harness Tightener has been added to the new Fan Motor. The old style Fan Motor can still be used. Please update your A219/A245/A289/B019 Parts Catalog with the following information.

A219/A245/A289 only

OLD PART NO.	NEW PART NO.	DESCRIPTION	QTY	INT	REFERENCE PAGE	REFERENCE ITEM
A2715225	A2985238	Fan Motor-DC24V 4.32W	1	0	45	14

B019 only

OLD PART NO.	NEW PART NO.	DESCRIPTION	QTY	INT	REFERENCE PAGE	REFERENCE ITEM
A2985225	A2985238	Fan Motor-DC24V 4.32W	1	0	47	2

- **UPDATE 2:** **Recycle Roller Bushing –** The Parts Catalog incorrectly listed the part number and description of the Recycle Roller Bushing. Please update your A245/A289/B019 Parts Catalog with the following information.

A245/A289/B019 only

INCORRECT PART NO.	CORRECT PART NO.	DESCRIPTION	QTY	REFERENCE PAGE A245/A289	REFERENCE PAGE B019	REFERENCE ITEM
A1903563		Toner Recycle Roller	2	33	35	3
	→ A1903569	Recycle Roller Bushing				

Continued…

© 2000 RICOH Corporation. All rights reserved.

- **UPDATE 3:** **Toner Recycle Roller –** The Parts Catalog incorrectly listed the part number and description of the Toner Recycle Roller. Please update your A245/A289/B019 Parts Catalog with the following information.

A245/A289/B019 only				REFERENCE		
INCORRECT PART NO.	CORRECT PART NO.	DESCRIPTION	QTY	PAGE A245 /A289	PAGE B019	ITEM
A1903569		Recycle Roller Bushing	1	33	35	4
	→ A1903563	Toner Recycle Roller				

INTERCHANGEABILITY CHART:

0	OLD and NEW parts can be used in both OLD and NEW machines.	2	NEW parts CAN NOT be used in OLD machines. OLD parts can be used in OLD and NEW machines.
1	NEW parts can be used in OLD and NEW machines. OLD parts CAN NOT be used in NEW machines.	3	OLD parts CAN NOT be used in NEW machines. NEW parts CAN NOT be used in OLD machines.
3/S	Must be installed as a set on units manufactured prior to the S/N cut-in. On units manufactured after the S/N cut-in or previously modified, use the new part numbers individually.		

TECHNICAL SERVICE BULLETIN

BULLETIN NUMBER: A219/245/298/B009/B019 – 027 **08/06/2001**

APPLICABLE MODEL:
GESTETNER – 2913Z
RICOH – FT3813
SAVIN – 2013Z

SUBJECT: DC MOTOR

Note: This copy is intended as a master original for reproduction of additional bulletins.

GENERAL:

The material of the worm gear, a component part of the DC motor (Toner Supply Motor) has been modified to increase its durability. In addition, grease designed for a plastic material has been applied to the worm gear. In accordance with this change, the part number for the DC motor has been changed. In addition, the worm gear has been registered as a service part.

When replacing the worm gear in the field with this new one, field engineers must apply grease designed for plastic materials to the tip and spiral threads of the worm gear. The recommended greases are as follows:

In addition to Cosmos No.1 grease (used for production units), the following are available as Service Parts:

A1909002 Grease-CP501(5pcs/set)
52039502 Grease-501

The following parts corrections are being issued for all A298 Parts Catalogs.

					REFERENCE	
OLD PART NO.	NEW PART NO.	DESCRIPTION	QTY	INT	PAGE	ITEM
A2983371	A2983381	DC Motor-3.36W	1-1	1	49	30
-	A2983388	Worm Gear	0-1	-	49	34*

***DENOTES NEW ITEM NUMBER**

UNITS AFFECTED:

All A298 copiers manufactured after the Serial Numbers listed below will have the new style DC motor and worm gear installed during production.

MODEL NAME	SERIAL NUMBER
Gestetner 2913Z	H4216202117
Ricoh FT3813	H4216202802
Savin 2013Z	H4216202117

© 2000 RICOH Corporation. All rights reserved. CONTROL NO 095ABW