Gestetner® RICOH® savin®

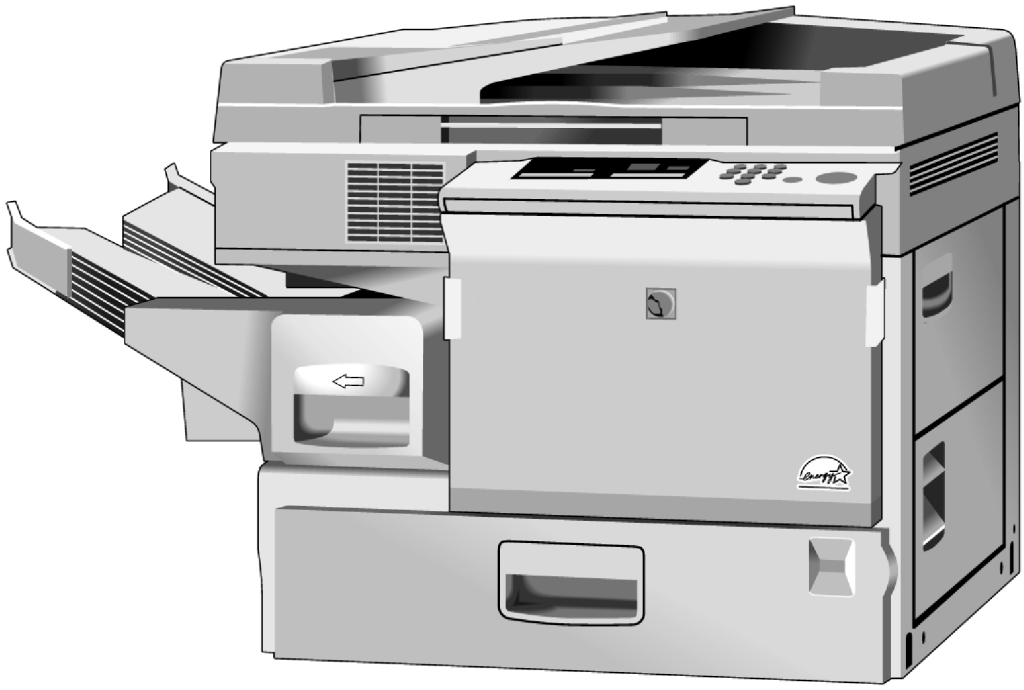

A219/A245/B019

PARTS CATALOG

PN:RCPC4015

RICOH GROUP COMPANIES

Gestetner®

RICOH®

savin®

A219/A245/B019
PARTS CATALOG

RICOH GROUP COMPANIES

Gestetner RICOH savin

A219/A245/B019
PARTS CATALOG

PN: RCPC4015

It is the reader's responsibility when discussing the information contained within this document to maintain a level of confidentiality that is in the best interest of Ricoh Corporation and its member companies.

NO PART OF THIS DOCUMENT MAY BE REPRODUCED IN ANY

FASHION AND DISTRIBUTED WITHOUT THE PRIOR PERMISSION OF RICOH CORPORATION.

All product names, domain names or product illustrations, including desktop images, used in this document are trademarks, registered trademarks or the property of their respective companies.
They are used throughout this book in an informational or editorial fashion only and for the benefit of such companies. No such use, or the use of any trade name, or web site is intended to convey endorsement or other affiliation with Ricoh products.

© 2000 RICOH Corporation. All rights reserved.

LEGEND

PRODUCT CODE	COMPANY		
	GESTETNER	RICOH	SAVIN
A219	2715X	FT4015	9115
A245	2718	FT4018	---
B019	2913z	FT3813	2013Z
A657	Sorter - CS150		
A662	Document Feeder - DF44		

DOCUMENTATION HISTORY

REV. NO.	DATE	COMMENT
*	3/97	Original Printing
1	7/98	Reprint
2	2/99	A245 Addition
3	3/2000	B019 Addition

A219/A245/B019 PARTS CATALOG

TABLE OF CONTENTS

A219 PARTS LOCATION & LIST

LOCATION OF UNIT 2
1. EXTERIOR (A219) 6
2. PLATEN COVER (A219) 8
3. OPERATION PANEL (A219) 10
4. PAPER TRAY (A219) 12
5. BY-PASS FEED TABLE(A219) 14
6. PAPER FEED SECTION 1 (A219) 16
7. PAPER FEED SECTION 2 (A219) 18
8. PAPER REGISTRATION (A219) 20
9. OPTICS SECTION 1 (A219) 22
10. OPTICS SECTION 2 (A219) 24
11. OPTICS SECTION 3 (A219) 26
12. TONER BOTTLE HOLDER UNIT (A219) 28
13. IMAGING UNIT - 1 30
14. IMAGING UNIT - 2 32
15. LOWER OPTICS SECTION (A219) 34
16. FUSING UNIT (A219) 36
17. TRANSFER AND EXIT SECTION (A219) 38
18. DRIVE SECTION 1 (A219) 40
19. DRIVE SECTION 2 (A219) 42
20. ELECTRICAL SECTION 1 (A219) 44
21. ELECTRICAL SECTION 2 (A219) 46
22. FRAME SECTION (A219) 48
23. MAIN CONTROL BOARD (A219) 50
24. DECAL AND DOCUMENT (A219) 54
25. SPECIAL TOOLS (A219) 56

A219PARTS INDEX

PARTS INDEX 2

A245 PARTS LOCATION AND LIST

LOCATION OF UNIT 2
1. EXTERIOR (A245) 6
2. PLATEN COVER (A245) 8
3. OPERATION PANEL (A245) 10
4. PAPER TRAY (A245) 12
5. BY-PASS FEED TABLE (A245) 14
6. PAPER FEED SECTION 1 (A245) 16
7. PAPER FEED SECTION 2 (A245) 18
8. PAPER REGISTRATION (A245) 20
9. OPTICS SECTION 1 (A245) 22
10. OPTICS SECTION 2 (A245) 24
11. OPTICS SECTION 3 (A245) 26
12. TONER BOTTLE HOLDER UNIT 28
13. IMAGING UNIT - 1 (A245) 30
14. IMAGING UNIT - 2 (245) 32
15. LOWER OPTICS SECTION (A245) 34
16. FUSING UNIT (A245) 36
17. TRANSFER AND EXIT SECTION (A245) 38
18. DRIVE SECTION 1 (A245) 40
19. DRIVE SESCTION 2 (A245) 42
20. ELECTRICAL SECTION 1 (A245) 44
21. ELECTRICAL SECTION 2 (A245) 46
22. FRAME SECTION (A245) 48
23. MAIN CONTROL BOARD (A245) 50
24. DECAL AND DOCUMENT (A245) 54
25. SPECIAL TOOLS (A245) 56

A245 PARTS INDEX

PARTS INDEX 2

B009/B019 PARTS LOCATION AND LIST

LOCATION OF UNIT 2
1.EXTERIOR (B009/B019) 6
2.PLATEN COVER (B009/B019) 8
3.OPERATION PANEL (B009/B019) 10
4.PAPER TRAY (B009/B019) 12
5.BY-PASS FEED TABLE(B009/B019) 14
6.PAPER FEED SECTION 1 (B009/B019) 16
7.PAPER FEED SECTION 2 (B009/B019) 18
8.PAPER REGISTRATION (B009/B019) 20
9.OPTICS SECTION 1 (B009/B019) 22
10.OPTICS SECTION 2 (B009) 24
11.OPTICS SECTION 3 (B019) 26
12.OPTICS SECTION 4 (B019) 28
13.TONER BOTTLE HOLDER UNIT (B009/B019) 30
14.IMAGING UNIT - 1 (B009/B019) 32
15.IMAGING UNIT - 2 (B009/B019) 34
16.LOWER OPTICS SECTION (B009/B019) 36
17.FUSING UNIT (B009/B019) 38
18.TRANSFER AND EXIT SECTION (B009/B019) 40
19.DRIVE SECTION 1 (B009/B019) 42
20.DRIVE SECTION 2 (B009/B019) 44
21.ELECTRICAL SECTION 1 (B009/B019) 46
22.ELECTRICAL SECTION 2 (A298) 48
23.FRAME SECTION (B009/B019) 50
24.MAIN CONTROL BOARD (B009/B019) 52
25.DECAL AND DOCUMENT (B009/B019) 56
26.SPECIAL TOOLS (B009/B019) 58

B009/B019 PARTS INDEX

PARTS INDEX 2

DOCUMENT FEEDER A662 PARTS LOCATION & LIST

LOCATION OF UNIT 3
1. EXTERIOR 1 (A662) 4
2. EXTERIOR 2 (A622) 6
3. FEED-IN SECTION (A662) 8
4. TRANSPORT AND EXIT SECTION (A662) 10
5 .DF MAIN BOARD (A662) 12

DOCUMENT FEEDER A662 PARTS INDEX

PARTS INDEX 3

SORTER A657 PARTS LOCATION & LIST

1. SORTER UNIT 1 (A657) 2
2. SORTER UNIT 2 (A657) 4
3. DECAL AND DOCUMENT (A657) 6

SORTER A657 PARTS INDEX

PARTS INDEX 3

A219
PARTS LOCATION AND LIST

This section instructs you as to the numbers and names of parts on this machine.

LOCATION OF UNIT

1. EXTERIOR (A219)

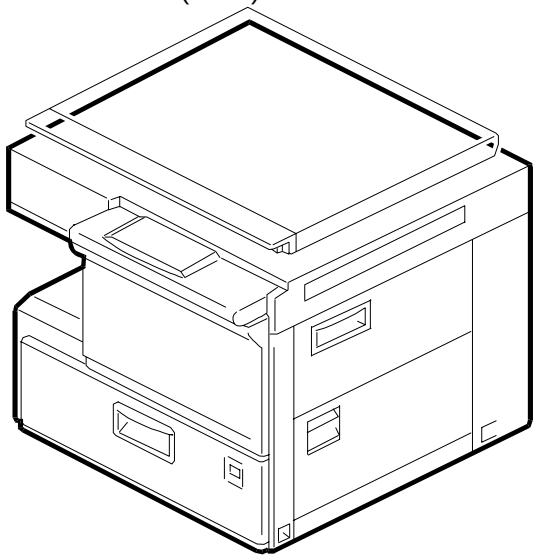

See Page 6

2. PLATEN COVER (A219)

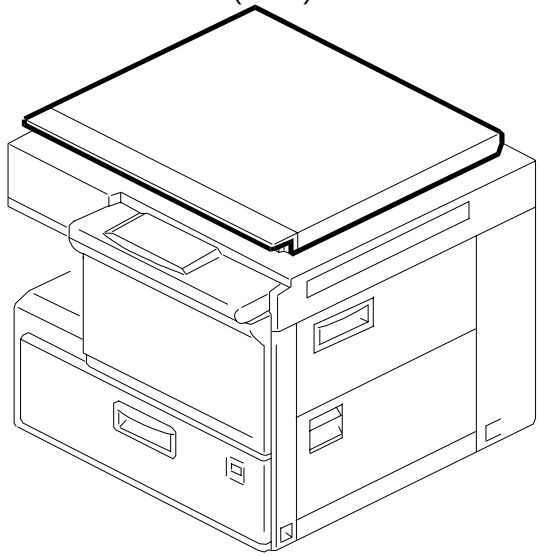

See Page 8

3. OPERATION PANEL (A219)

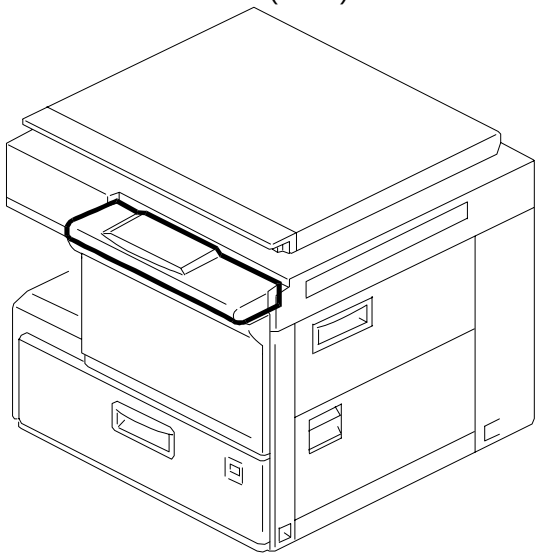

See Page 10

4. PAPER TRAY (A219)

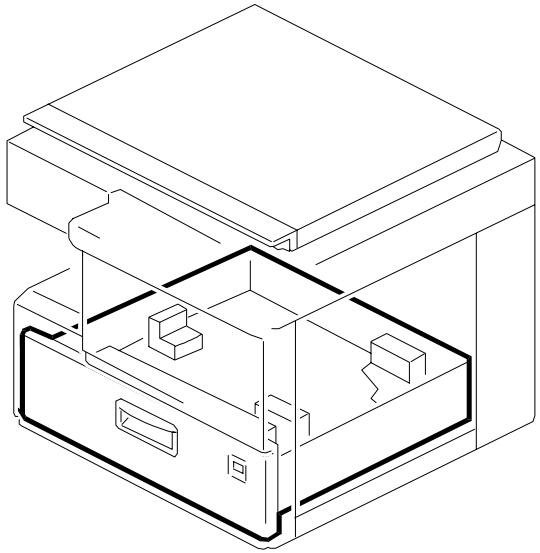

See Page 12

5. BY-PASS FEED TABLE(A219)

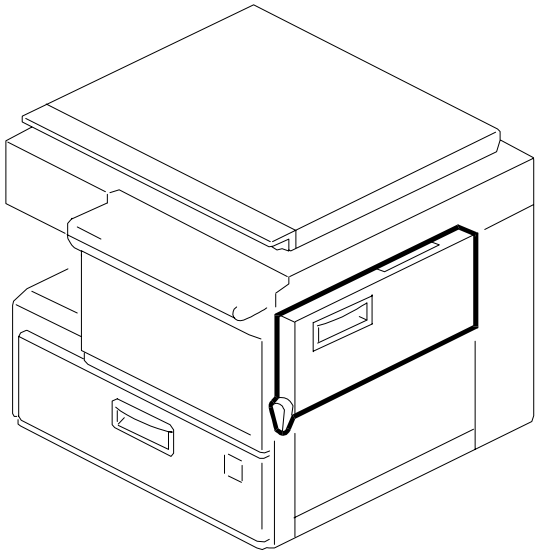

See Page 14

6. PAPER FEED SECTION 1 (A219)

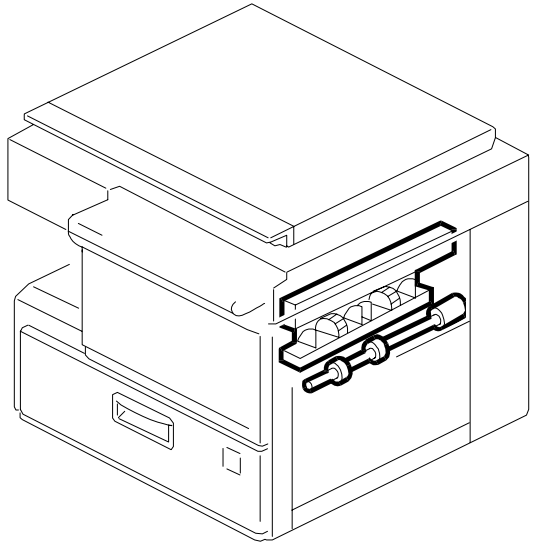

See Page 16

LOCATION OF UNIT

7. PAPER FEED SECTION 2 (A219)

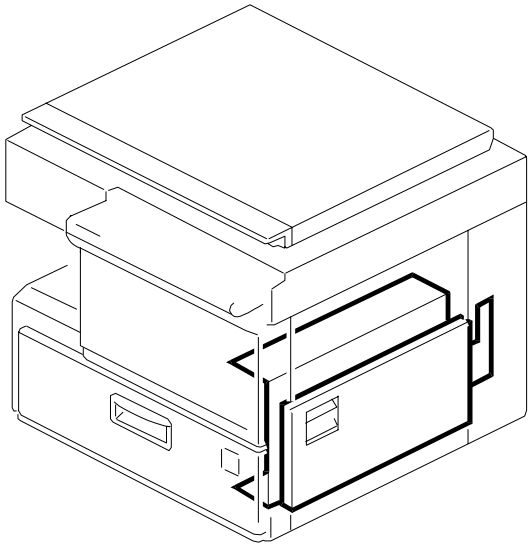

See Page 18

8. PAPER REGISTRATION (A219)

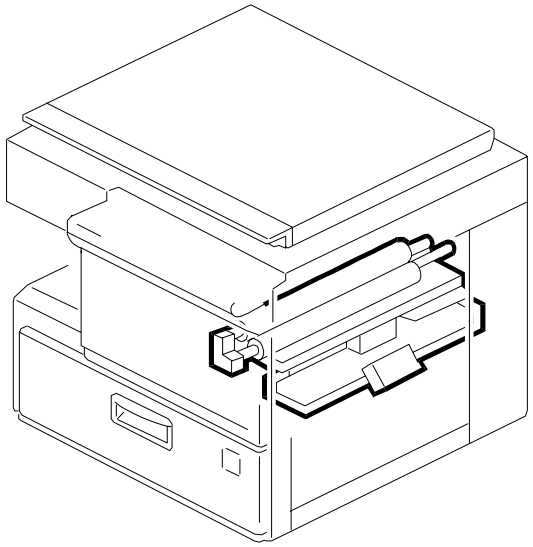

See Page 20

9. OPTICS SECTION 1 (A219)

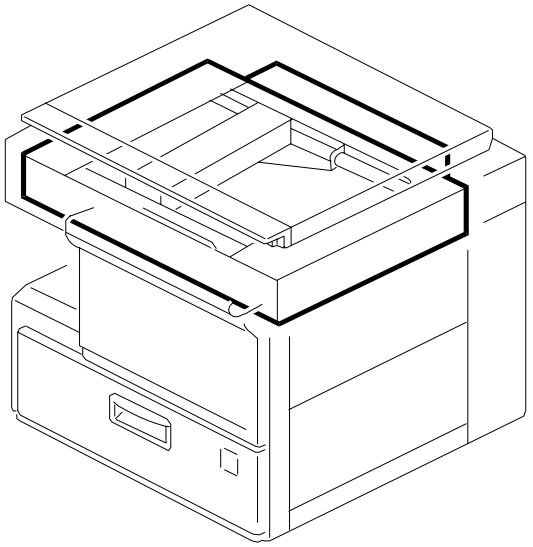

See Page 22

10. OPTICS SECTION 2 (A219)

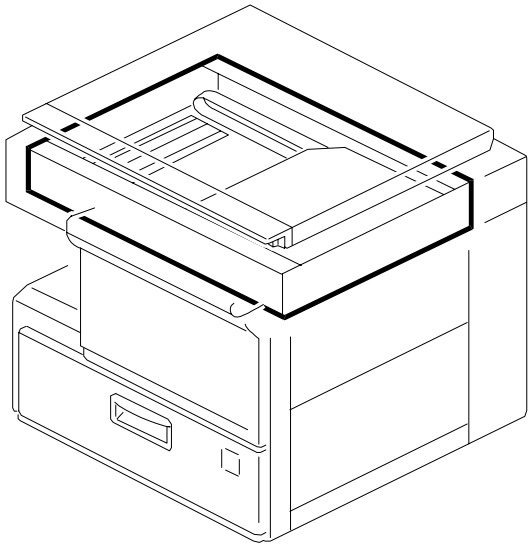

See Page 24

11. OPTICS SECTION 3 (A219)

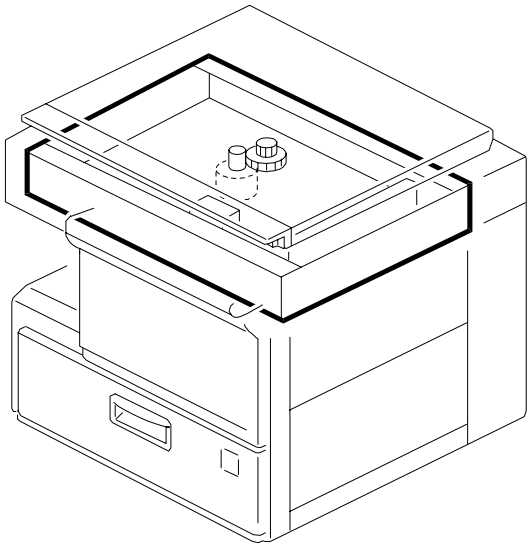

See Page 26

12. TONER BOTTLE HOLDER UNIT (A219)

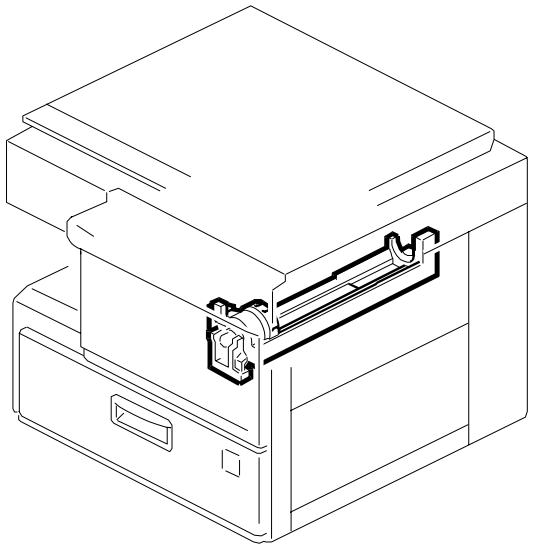

See Page 28

LOCATION OF UNIT

13. IMAGING UNIT - 1

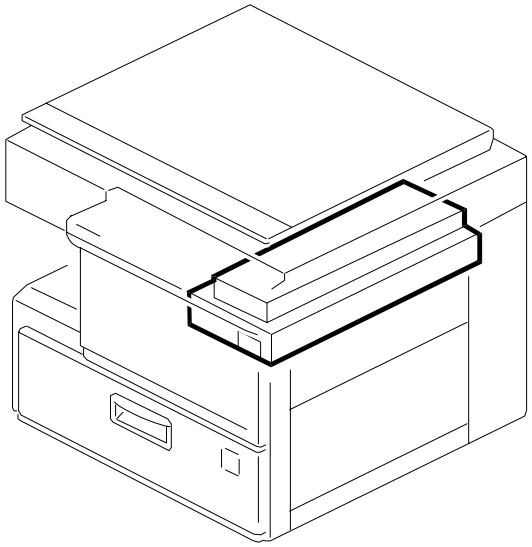

See Page 30

14. IMAGING UNIT - 2

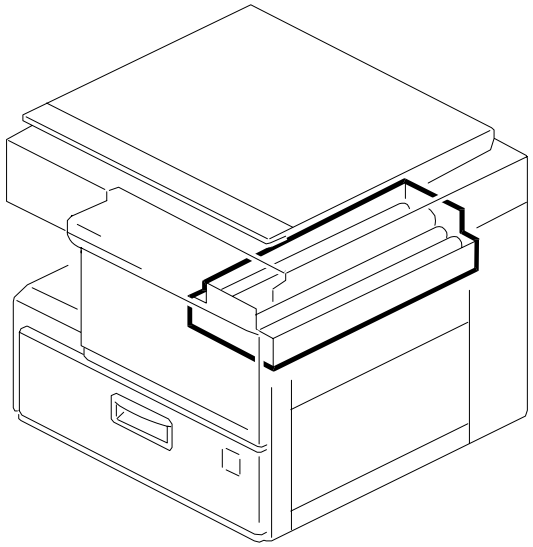

See Page 32

15. LOWER OPTICS SECTION (A219)

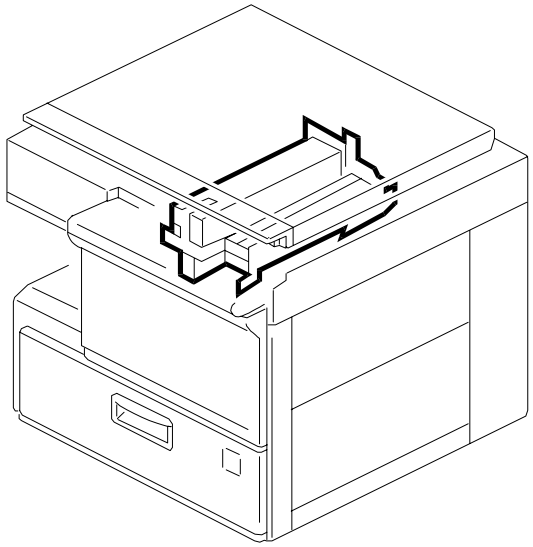

See Page 34

16. FUSING UNIT (A219)

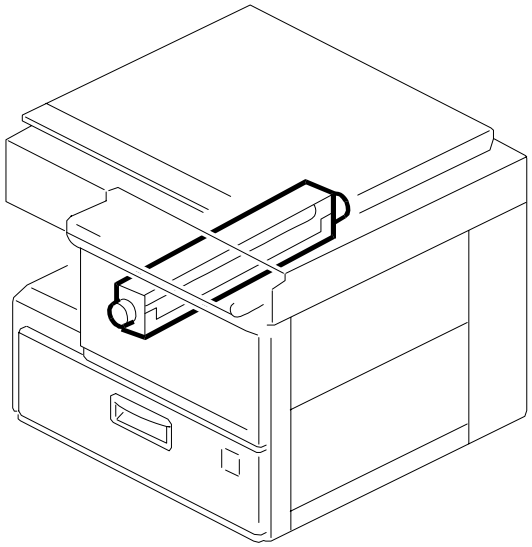

See Page 36

17. TRANSFER AND EXIT SECTION (A219)

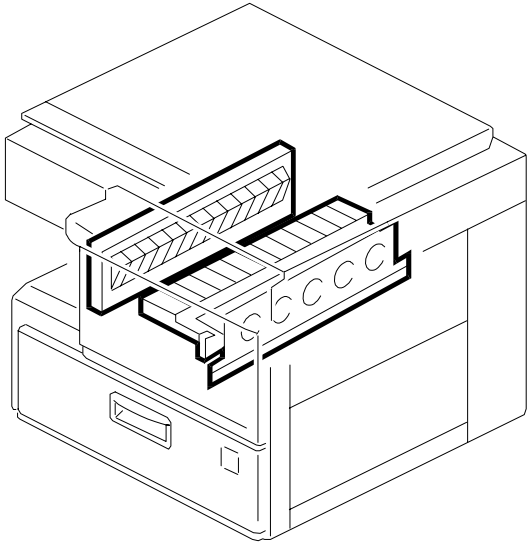

See Page 38

18. DRIVE SECTION 1 (A219)

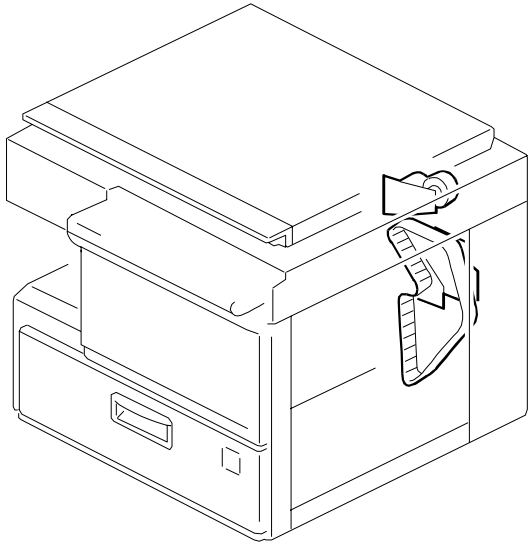

See Page 40

LOCATION OF UNIT

19. DRIVE SECTION 2 (A219)

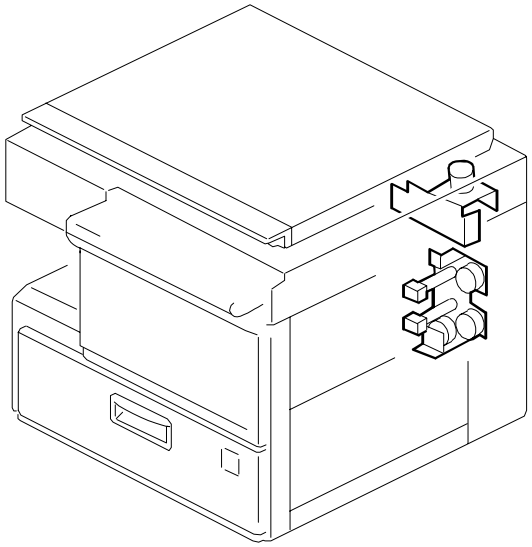

See Page 42

20. ELECTRICAL SECTION 1 (A219)

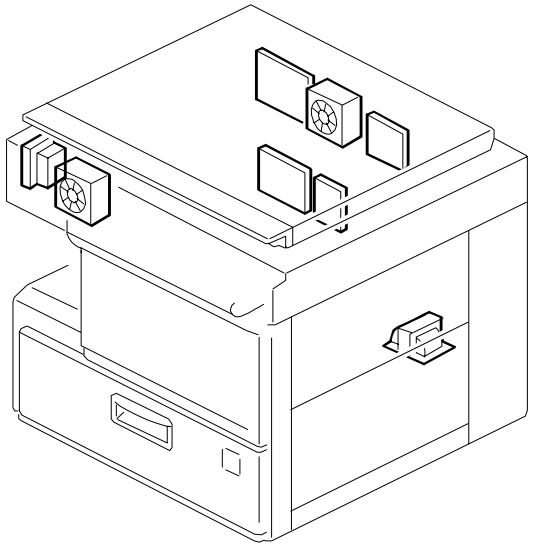

See Page 44

21. ELECTRICAL SECTION 2 (A219)

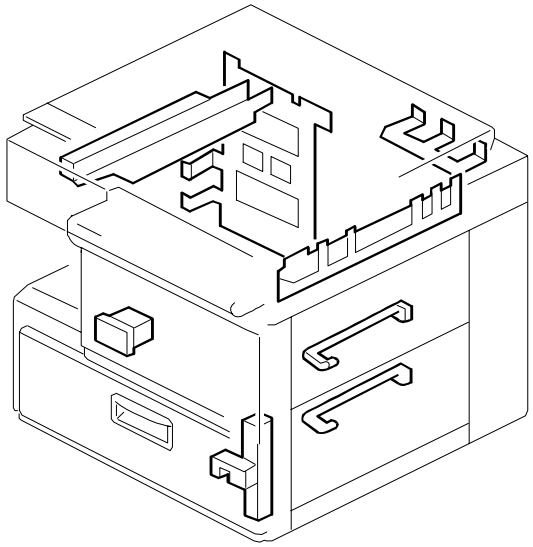

See Page 46

22. FRAME SECTION (A219)

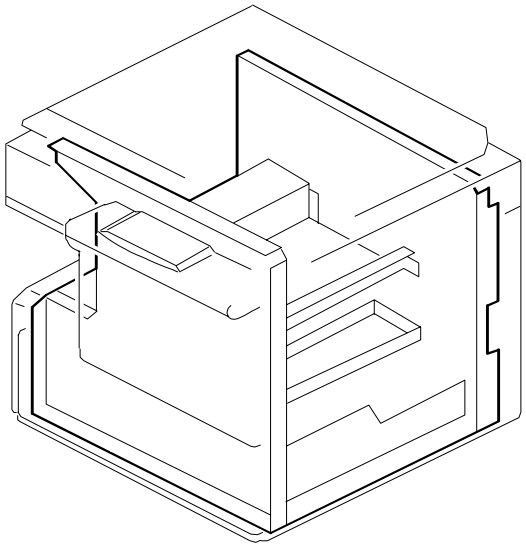

See Page 48

23. MAIN CONTROL BOARD (A219)

See Page 50

24. DECAL AND DOCUMENT (A219)

See Page 54

1. EXTERIOR (A219)

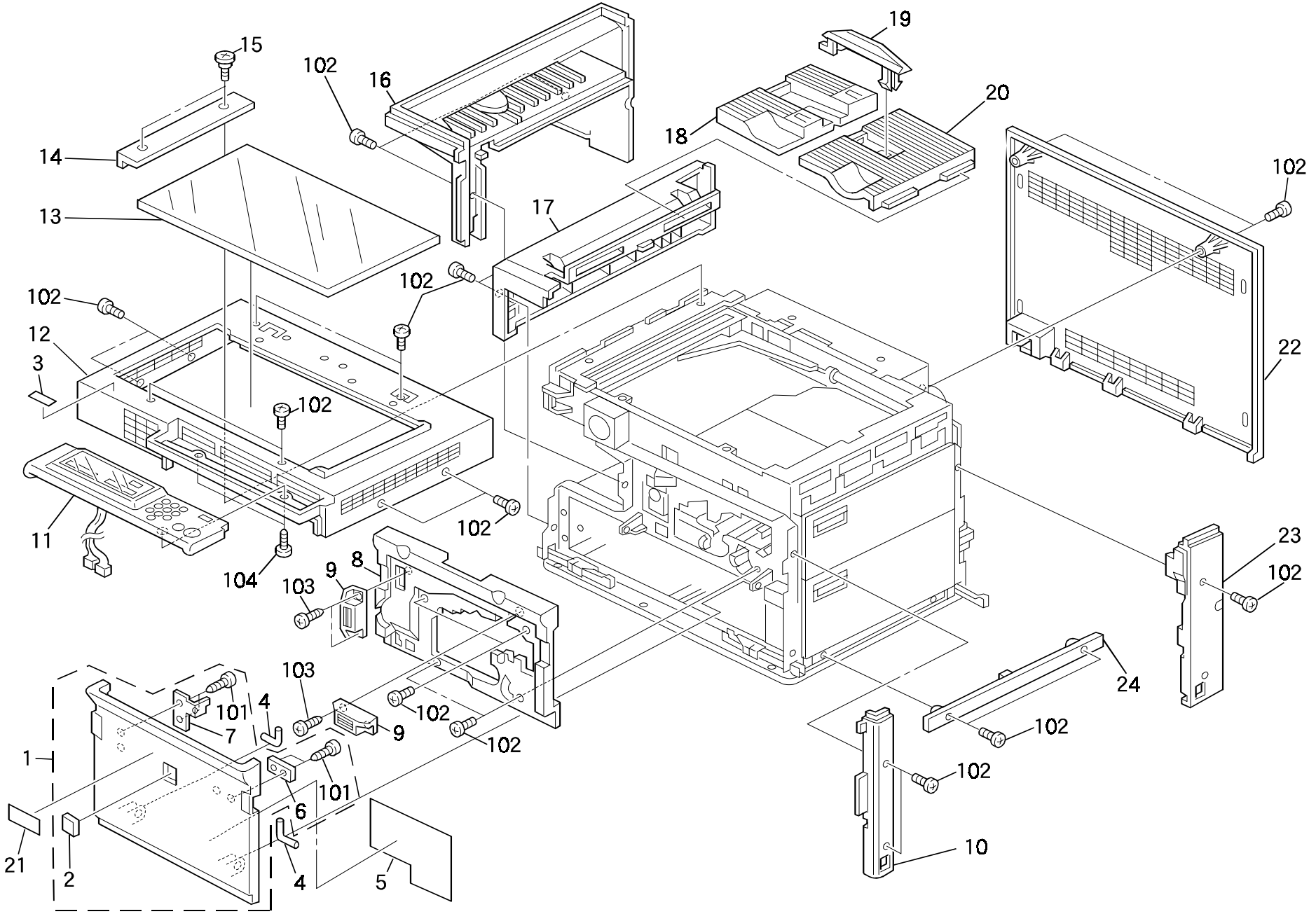

1. EXTERIOR (A219)

Rev. 11/07/2000

Index No.	Part No.	Description	Q'ty Per Assembly
1	A219 1270	Front Cover Ass'y (RIC)	1
1	A219 6070	Front Cover Ass'y (NRG)	1
1	A219 6470	Front Cover Ass'y (SVN)	1
1	A216 6270	Front Cover Ass'y (INF)	1
2	A153 1285	Emblem (RIC)	1
2	A156 6413	Emblem (SVN)	1
2	A153 6423	Support Cover (INF)	1
3	C225 2866	Decal - Key Top Cover (REX)	1
3	C225 2867	Decal - Cover - Panel (NSA)	1
3	A153 6409	Decal - Keytop Cover (GES)	1
4	A298 1354	Hinge Pin	2
5	A219 1284	Operation Guide Sheet	1
6	A190 1282	Magnet Catch	1
7	A190 1283	Magnet Catch	1
8	A190 1337	Inner Cover	1
9	AG07 0004	Magnetic Catch	2
10	A219 1295	Front Right Cover	1
11	A219 1450	Operation Panel Ass'y - LT (RIC/NRG)	1
11	A219 1452	Operation Panel Ass'y - LT (SVN)	1
11	A219 1451	Operation Panel Ass'y - A4	1
12	A190 1260	Upper Cover	1
13	AC01 2042	Exposure Glass	1
14	A190 1655	Scale - A4	1
15	AA14 3070	Shoulder Screw - M2x2	2
16	A219 1305	Left Lower Cover	1
17	A190 1300	Left Upper Cover	1
18	A126 4460	Slide Copy Tray	1
19	A126 4470	Copy Tray Guide	1
20	A126 4400	Copy Tray	1
21	A219 6183	Model Name Plate - NSA	1
21	A219 6185	Model Name Plate - REX	1
21	A219 6181	Model Name Plate - GES	1
21	A219 6187	Model Name Plate - GER	1
22	A219 1330	Rear Cover	1
23	A219 1290	Rear Right Cover	1
24	A190 1297	Right Lower Cover	1
101	0452 3008Z	Binding Tapping Screw - M3x8	
102	0353 0060B	Philips Pan Head Screw - M3x6	
103	0434 0102W	Tapping Screw - M4x10	
104	0452 3010Z	Binding Tapping Screw - 3x10	

2. PLATEN COVER (A219)

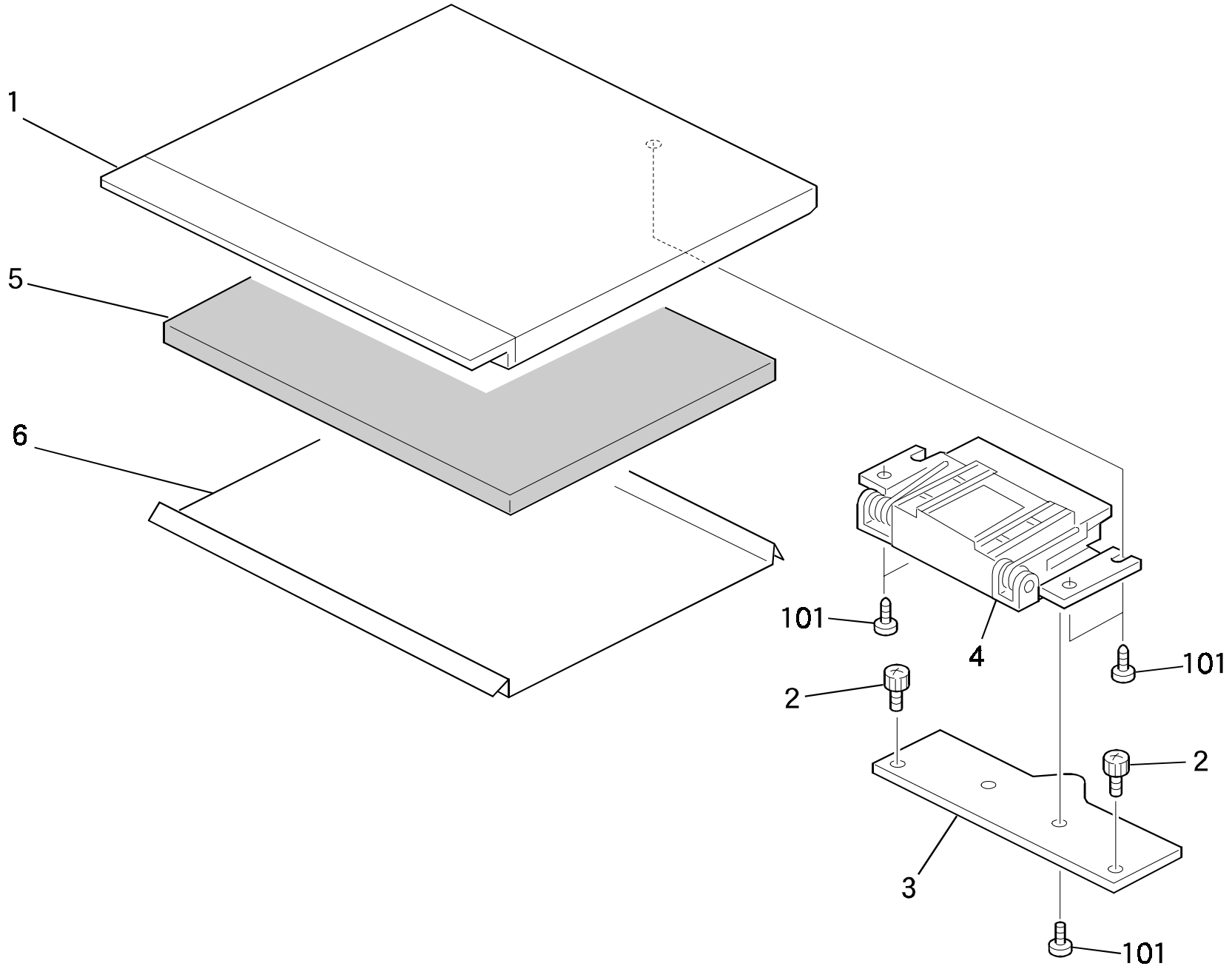

2. PLATEN COVER (A219)

Rev. 11/20/2000

Index No.	Part No.	Description	Q'ty Per Assembly
1	A219 1391	Platen Cover	1
2	AA14 3424	Knob Screw - M4x8	1
3	A190 1856	Platen Cover Bracket	1
4	A193 1248	Plate Cover Hinge Ass'y	1
5	AA16 2067	Platen Cover Pad	1
6	**5448 2804**	**Platen Cover Sheet**	**1**

Index No.	Part No.	Description	Q'ty Per Assembly
101	0414 0142B	Binding Self Tapping Screw - M4x14	

3. OPERATION PANEL (A219)

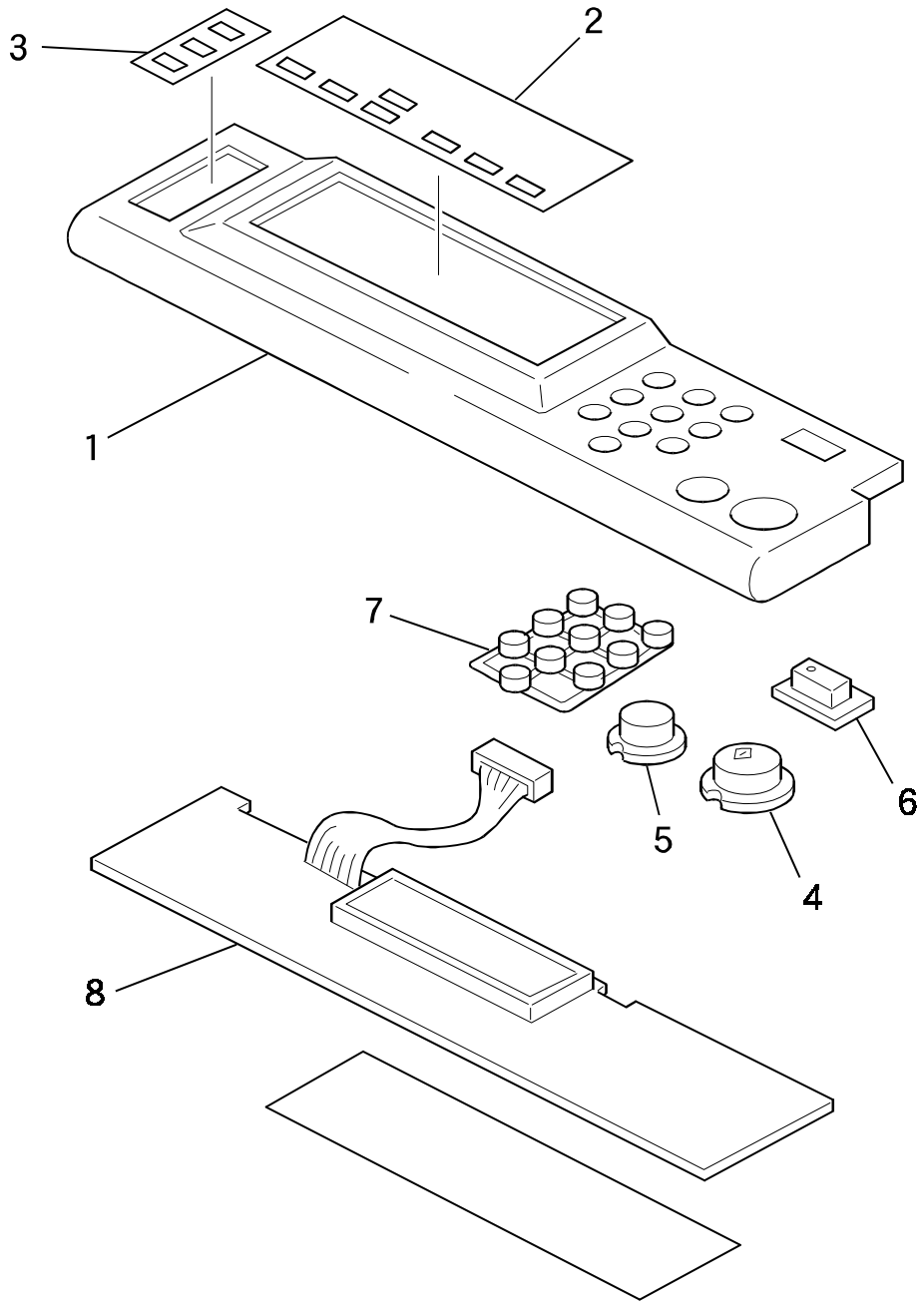

3. OPERATION PANEL (A219)

Index No.	Part No.	Description	Q'ty Per Assembly
*	A219 1450	Operation Panel Ass'y - LT (RIC)	1
*	A219 1452	Operation Panel Ass'y - LT (SVN)	1
*	A219 1451	Operation Panel Ass'y - A4	1
1	A219 1461	Operation Panel Cover - LT	1
1	A219 1465	Operation Panel Cover - A4	1
2	A219 1462	Indication Sheet - LT (RIC/NRG)	1
2	A219 1475	Indication Sheet - LT (SVN)	1
2	A219 1466	Indication Sheet - A4	1
3	A219 1463	Operation Panel Sheet - LT (RIC/NRG)	1
3	A219 1476	Operation Panel Sheet - LT (SVN)	1
3	A219 1467	Operation Panel Sheet - A4	1
4	A190 1452	Keytop - Start (RIC/NRG)	1
4	A219 1471	Keytop - Start (SVN)	1
5	A190 1453	Keytop - Clear/Stop (RIC/NRG)	1
5	A219 1472	Keytop - Clear/Stop (SVN)	1
6	A190 1454	Keytop - Clear Mode (RIC/NRG)	1
6	A219 1473	Keytop - Clear Mode (SVN)	1
7	A190 1455	Keytop - 10 keys (RIC/NRG)	1
7	A219 1474	Keytop - 10 keys (SVN)	1
8	A219 1464	Operation Panel Board - 120V (RIC/NRG)	1
8	A219 1477	Operation Panel Board - 120V (SVN)	1
8	A219 1468	Operation Panel Board - 230V	1

Index No.	Part No.	Description	Q'ty Per Assembly

4. PAPER TRAY (A219)

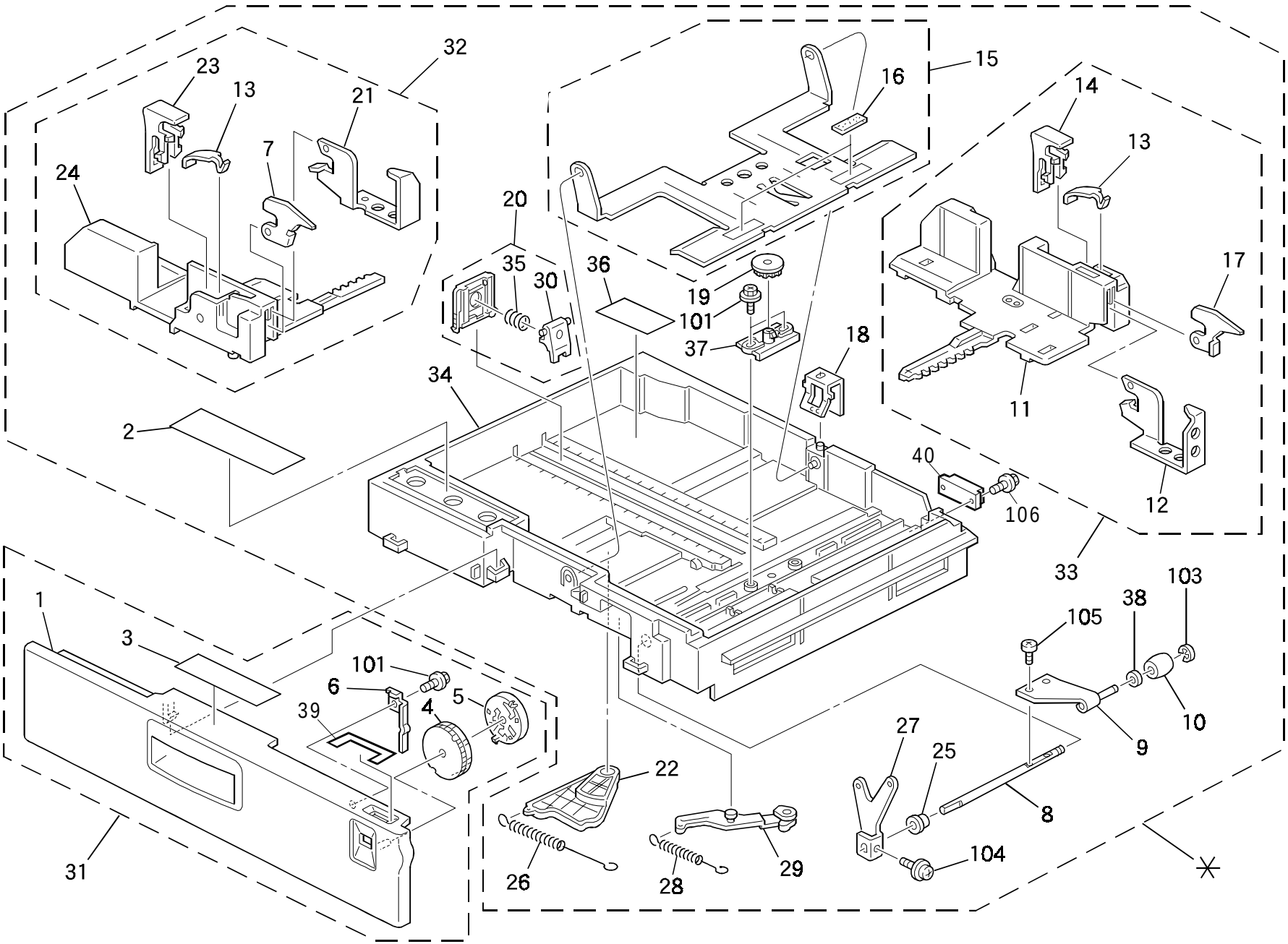

4. PAPER TRAY (A219)

Index No.	Part No.	Description	Q'ty Per Assembly
*	A219 2551	Paper Tray Ass'y	1
1	A219 2647	Paper Tray Cover	1
2	A219 2667	Decal - Paper Set	1
3	A219 2692	Decal - Operating	1
4	A193 2650	Paper Size Detector - A4	1
4	A193 2649	Paper Size Detector - LT	1
5	G020 2595	Paper Size Sensor - A4	1
5	G020 2593	Paper Size Sensor - LT	1
6	G020 2648	Holder - Paper Size Detector	1
7	A219 2569	Adjusting Plate - Front	1
8	A219 2591	Paper Lift Shaft	1
9	A219 2574	Paper Lift Arm Ass'y	1
10	A219 2577	Paper Lift Roller	1
11	A219 2567	Rear Side Fence	1
12	A219 2568	Rear Corner Separator	1
13	A157 2769	Rear Stopper Spring	2
14	A219 2642	Rear Lever Stopper	1
15	A219 2661	Paper Bottom Plate	1
16	**G020 2645**	**Friction Pad**	**2**
17	A219 2563	Adjusting Plate - Rear	1
18	G020 2658	Grounding Plate - Bottom Plate	1
19	AB01 3868	Gear - 16Z	1
20	A219 2572	End Fence Ass'y	1
21	A219 2561	Front Corner Separator	1
22	A219 2597	Paper Lift Shutter	1
23	A219 2664	Front Stopper Lever	1
24	A219 2560	Front Side Fence	1
25	AA08 0111	Bushing - 8x12x7	1
26	A219 2541	Spring	1
27	A219 2582	Bottom Plate Lever	1
28	A219 2543	Spring	1
29	A219 2585	Lever	1
30	A219 2558	End Fence Guide	1
31	A219 2648	Paper Tray Cover Ass'y - A4	1
31	A219 2646	Paper Tray Cover Ass'y - LT	1

Index No.	Part No.	Description	Q'ty Per Assembly
32	A219 2559	Front Side Fence Ass'y	1
33	A219 2566	Rear Side Fence Ass'y	1
34	A219 2590	Paper Tray	1
35	A219 2656	End Fence Spring	1
36	A219 2694	Decal - Paper Set Direction	1
37	A219 2595	Adjusting Plate - Registration	1
38	A096 3863	Spacer - 4x6x1	1
39	A219 2696	Decal - Paper Size Selection	1
40	G020 2630	Magnet Catch	1
101	0450 3008B	Tapping Screw - M3x8	
102	0452 3008B	Tapping Screw - M3x8	
103	0720 0030E	Retaining Ring - M3	
104	0960 4012W	Philips Flange Screw - M4x12	
105	0453 4006B	Tapping Screw - 4x6	
106	0451 3006B	Tapping Screw - M3x6	

5. BY-PASS FEED TABLE(A219)

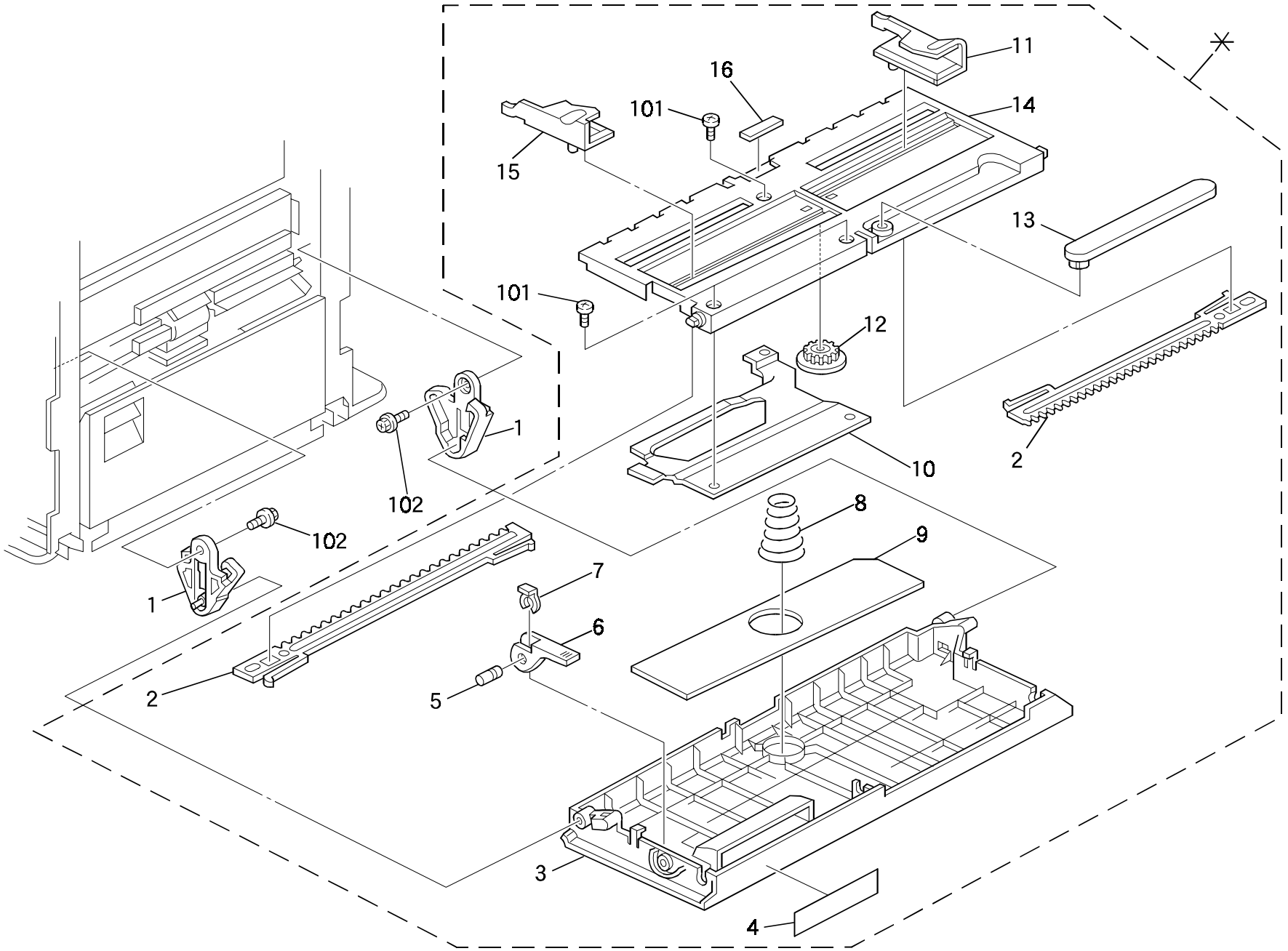

5. BY-PASS FEED TABLE(A219)

Index No.	Part No.	Description	Q'ty Per Assembly
*	A190 2700	By-pass Feed Unit	1
1	G020 2735	Guide - By-pass Feed Table	2
2	A190 2707	Side Fence Rack	2
3	A190 2701	By-pass Feed Cover	1
4	A190 2708	Decal - By-pass Feed	1
5	G020 2786	Shaft - By-pass Release Lever	1
6	G020 2784	Lever - By-pass Feed Table	1
7	5447 2681	Snap Ring	1
8	G020 2702	Pressure Spring - By-pass Feed	1
9	A190 2698	Support Cover - By-pass Feed	1
10	A190 2782	Bottom Plate Stay	1
11	A190 2705	Right Side Fence	1
12	G011 3305	Gear - 16T	1
13	A190 2702	Paper Guide	1
14	A190 2704	Bottom Plate - By-pass Feed	1
15	A190 2706	Left Side Fence	1
16	5215 2713	Bottom Plate Pad	1

Index No.	Part No.	Description	Q'ty Per Assembly
101	0453 3006Z	Binding Tapping Screw - M3x6	
102	0451 3006B	Tapping Screw - M3x6	

6. PAPER FEED SECTION 1 (A219)

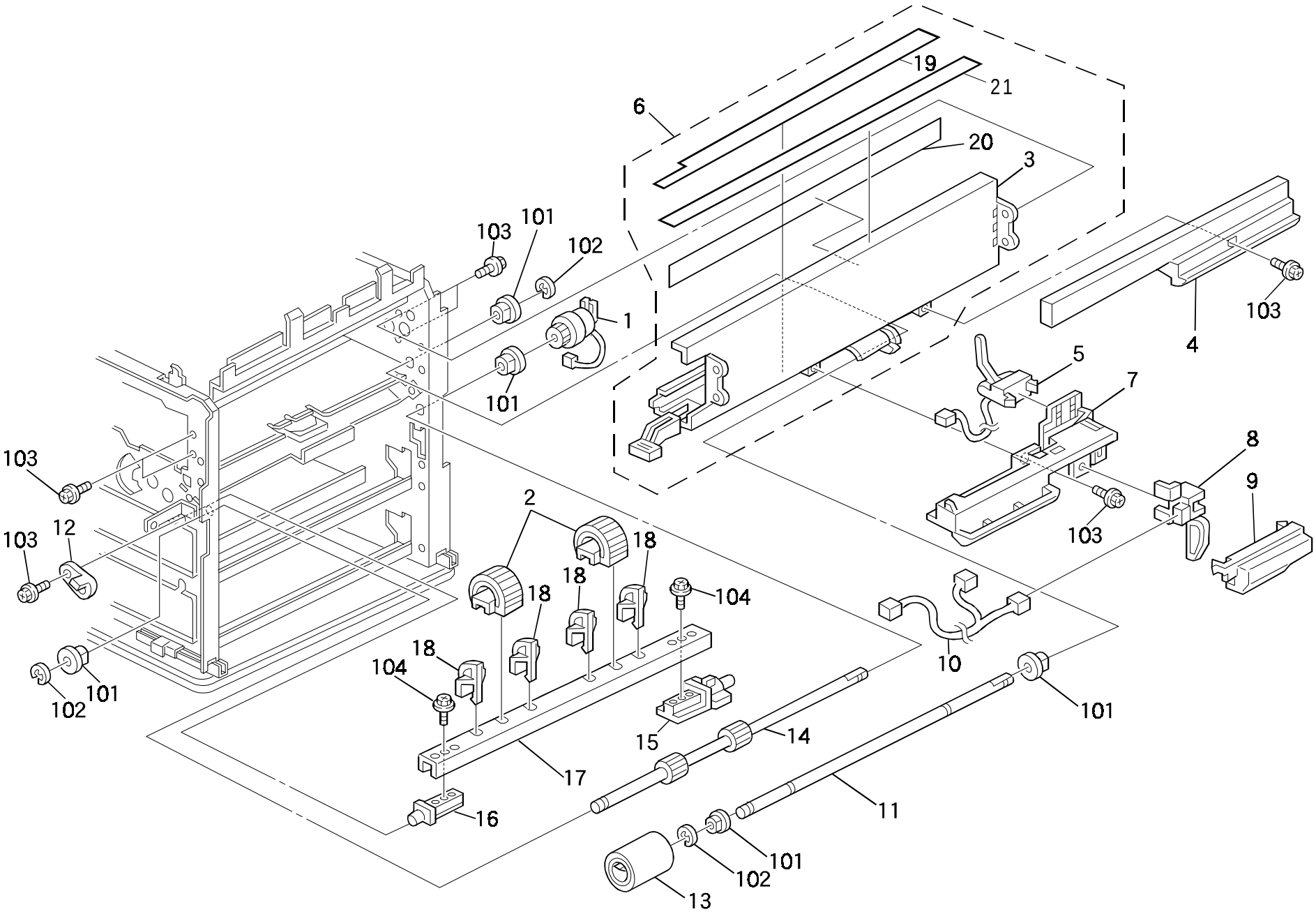

6. PAPER FEED SECTION 1 (A219)

Index No.	Part No.	Description	Q'ty Per Assembly
1	A190 1139	Magnetic Clutch - Vertical	1
2	**G020 2555**	**Paper Feed Roller**	**2**
3	A190 3361	Toner Bottle Holder Guide	1
4	G020 2785	Cover - Feed Roller Shaft	1
5	A190 2771	Registration Sensor	1
6	A219 3360	Toner Bottle Holder guide Ass'y	1
7	G020 2753	Bracket - Registration Sensor	1
8	A190 2772	Paper End Sensor	1
9	G020 2787	Cover - By-pass Paper End Sensor	1
10	A190 5344	Relay Harness - By-pass Feed	1
11	G020 2723	By-pass Feed Shaft	1
12	G020 2587	Bushing - Paper Feed	1
13	**G020 2721**	**By-pass Feed Roller**	**1**
14	A190 2564	Relay Roller	1
15	G020 2586	Rear Pin - Paper Feed Roller	1
16	G020 2585	Front Pin - Paper Feed Roller	1
17	G020 2570	Shaft - Paper Feed Roller	1
18	G020 2565	Paper Guide	4
19	A219 3364	Mylar Seal - 8x429	1
20	A219 3365	Mylar Seal - 8x400	1
21	A190 3363	Mylar Seal - 10x360	1

Index No.	Part No.	Description	Q'ty Per Assembly
101	0805 3480	Bushing - 6mm	
102	0720 0040E	Retaining Ring - M4	
103	0451 3006B	Tapping Screw - M3x6	
104	0450 3008B	Tapping Screw - M3x8	

7. PAPER FEED SECTION 2 (A219)

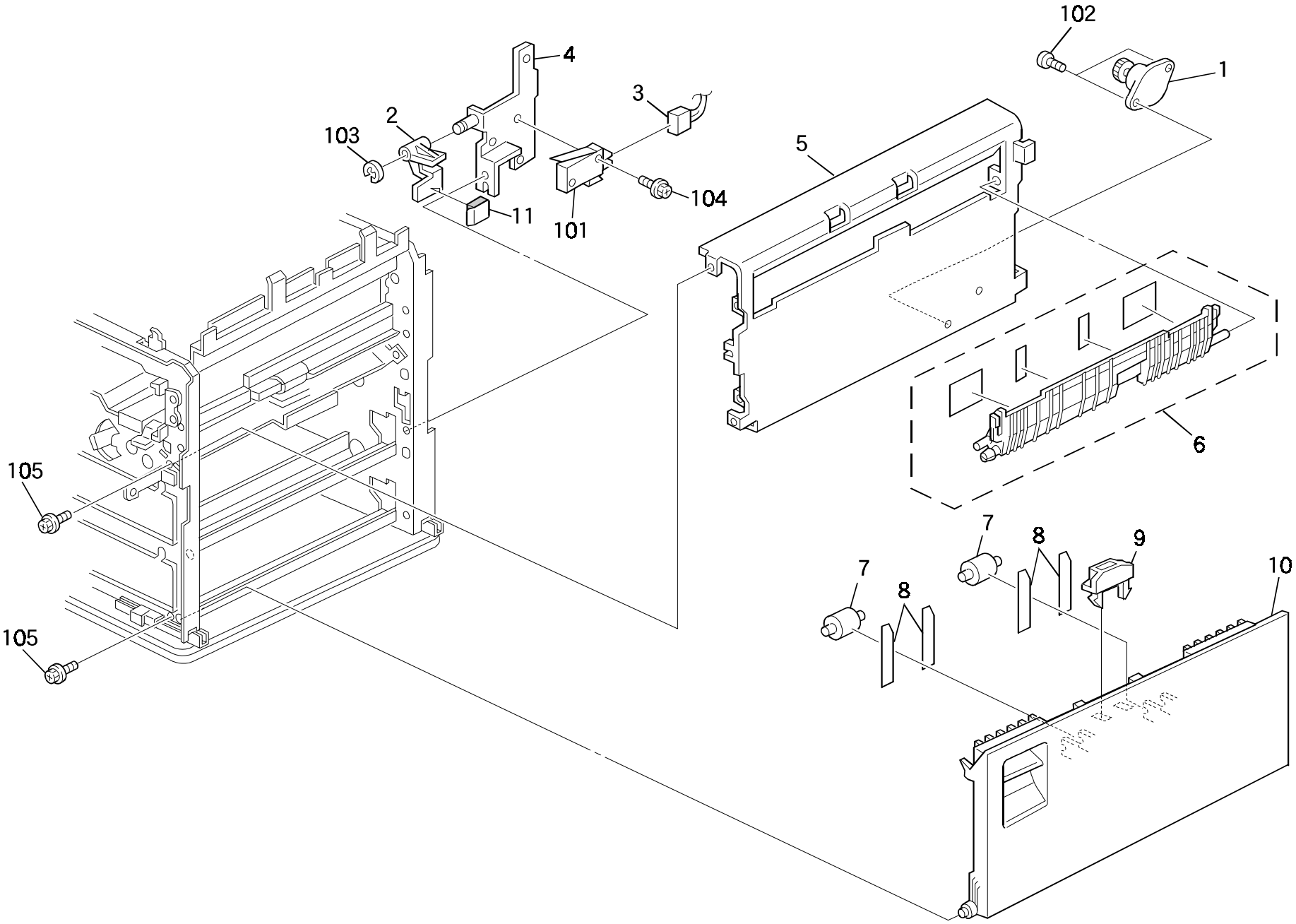

7. PAPER FEED SECTION 2 (A219)

Index No.	Part No.	Description	Q'ty Per Assembly
1	A219 2669	Oil Dumper	1
2	A190 2902	Switch Lever	1
3	A219 5310	DC Main Harness	1
4	A190 2900	Switch Bracket	1
5	A219 2611	Paper Guide Plate	1
6	A219 2612	Lower Paper Guide	1
7	AF02 0283	Pressure Roller	2
8	G020 2577	Spring Plate - Driven Roller	4
9	G020 2630	Magnetic Catch	1
10	A219 2575	Vertical Transport	1
11	A190 2905	Cushion	1

Index No.	Part No.	Description	Q'ty Per Assembly
101	1204 2356	Micro Switch - Am51612a531	
102	0451 4006B	Tapping Screw - 4x6	
103	0720 0030E	Retaining Ring - M3	
104	0451 3014B	Tapping Screw - M3-14	
105	0451 3006B	Tapping Screw - M3x6	

8. PAPER REGISTRATION (A219)

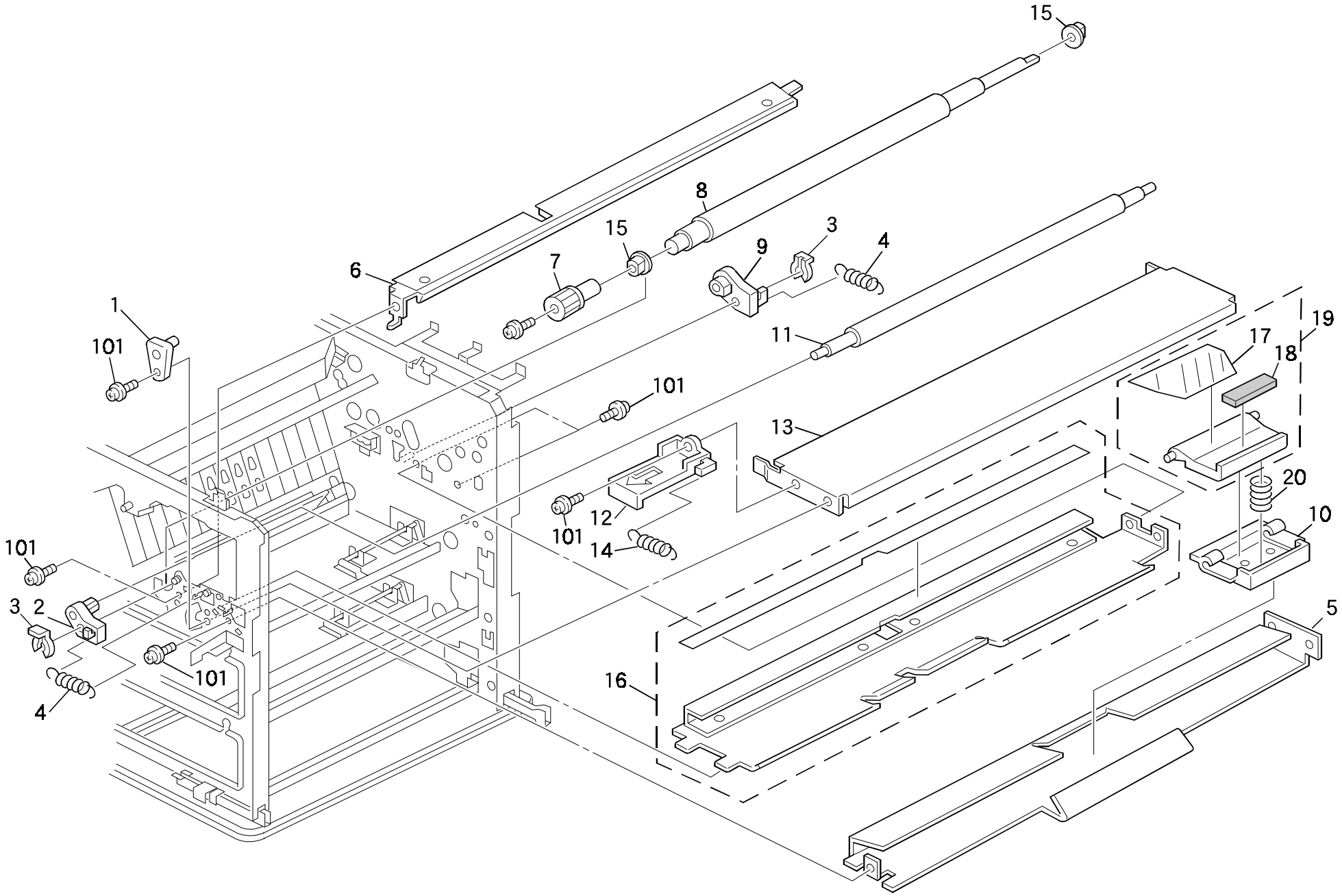

8. PAPER REGISTRATION (A219)

Rev. 11/07/2000

Index No.	Part No.	Description	Q'ty Per Assembly
1	G020 3888	Pin - Transfer Guide	1
2	A190 2780	Front Bushing	1
3	5447 2681	Snap Ring	1
4	G020 2743	Tension Spring	1
5	A190 2711	Friction Pad Stay	1
6	G020 2745	Lower Guide Plate - Registration	1
7	A190 2783	Registration Roller Knob	1
8	A190 2740	Lower Registration Roller	1
9	A190 2781	Rear Bushing	1
10	G020 2712	Holder - By-pass Feed Friction Pad	1
11	A298 2741	Upper Registration Roller	1
12	G020 2765	Knob - Lower Transport Guide	1
13	G020 2745	Lower Guide Plate - Registration	1
14	AA06 0331	Release Spring	1
15	5053 0223	Bushing - 8mm	2
16	G020 2754	Upper Paper Guide	1
17	A190 2717	Friction Pad Guide	1
18	**G020 2716**	**Friction Pad**	**1**
19	A190 2714	Friction Pad Holder Ass'y	1
20	G020 2713	Pressure Spring	1

Index No.	Part No.	Description	Q'ty Per Assembly
101	0451 3006B	Tapping Screw - M3x6	

9. OPTICS SECTION 1 (A219)

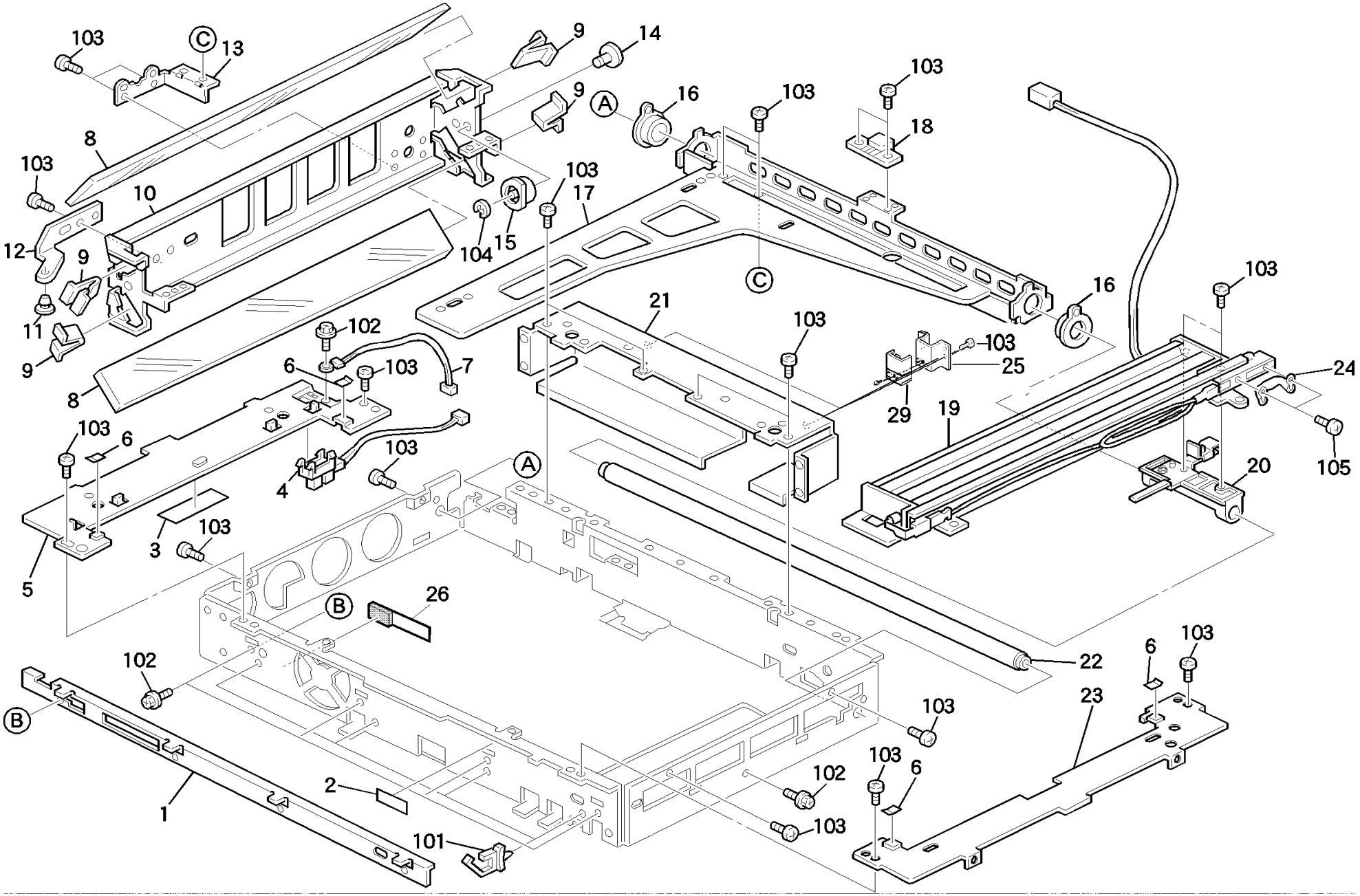

9. OPTICS SECTION 1 (A219)

Rev. 03/98

Index No.	Part No.	Description	Q'ty Per Assembly
1	A190 1660	Scanner Guide Rail	1
2	A111 1753	Seal - 0.1x18x49	1
3	AC06 3001	White Reference Plate	1
4	AW02 0075	Photo interrupter	1
5	A190 1651	Left Scale Support Plate	1
6	A190 1652	Exposure Glass Seal	4
7	AW10 0033	Thermistor	1
8	A190 1815	2nd/3rd Mirror	2
9	A077 1690	Spring Plate - Mirror	4
10	A190 1691	2nd Scanner Frame	1
11	A069 1883	Shoe - Scanner	1
12	A190 1694	Shoe Bracket	1
13	A190 1824	2nd Scanner Support Plate	1
14	A190 1751	Harness Guide Pulley Ass'y	1
15	A190 1821	Harness Guide Pulley	1
16	A190 1688	Bushing	1
17	A190 1692	2nd Scanner Support Plate	1
18	A190 1689	Clamp	1
19	A219 1700	1st Scanner Unit - 120V	1
19	A219 1701	1st Scanner Unit - 230V	1
20	A190 1725	1st Scanner Clamp	1
21	A219 1194	ADF Bracket	1
22	A190 1814	Scanner Guide Rod	1
23	A190 1654	Right Bracket - Exposure Glass	1
24	A184 1672	Thermofuse - 128c	1
25	A219 1197	Rear Bracket - ADF	1
26	A190 1740	Mylar Cushion	1
29	A2191196	Shielding Plate Bracket - ADF	1

Index No.	Part No.	Description	Q'ty Per Assembly
101	1105 0310	Wire Clamp	
102	0451 3006B	Tapping Screw - M3x6	
103	0353 0060B	Philips Pan Head Screw - M3x6	
104	0720 0040E	Retaining Ring - M4	
105	0453 3006Z	Binding Tapping Screw - M3x6	

10. OPTICS SECTION 2 (A219)

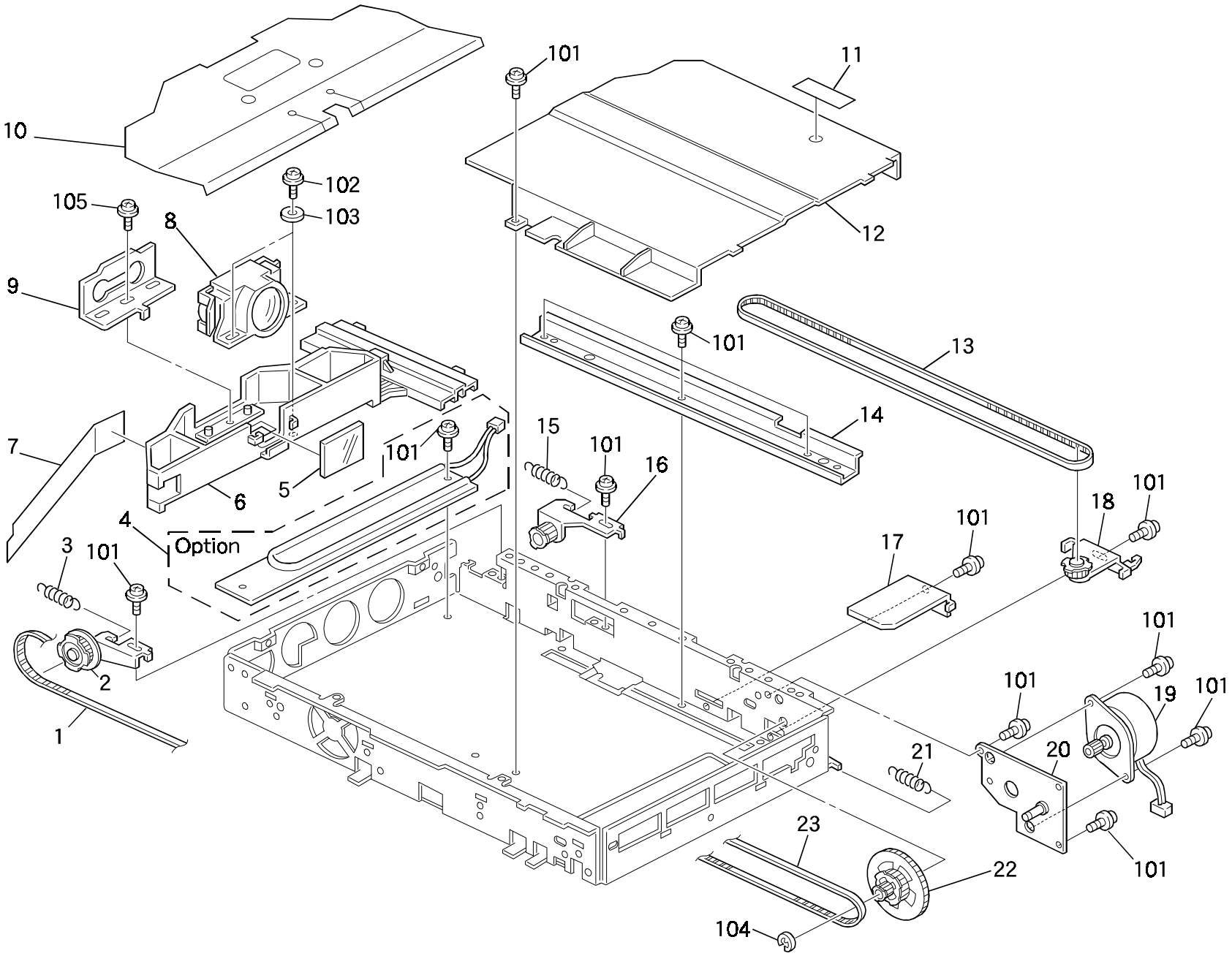

10. OPTICS SECTION 2 (A219)

Rev. 06/99

Index No.	Part No.	Description	Q'ty Per Assembly
1	A190 1816	Timing Belt - L1110P2M	1
2	A190 1666	Pulley Bracket	1
3	A190 1819	1st Scanner Spring	1
4	AX40 0052	Anti condensation Heater - 120V 18W	1
4		(OPTION)	
4	AX40 0053	Anti condensation Heater - 240V 18W	1
4		(OPTION)	
5	A190 1805	Blue Filter	1
6	A190 1682	Lens Caridge	1
7	A190 1698	Shielding Plate	1
8	AC02 0077	Lens - F8/180	1
9	A190 1683	Shading Plate	1
10	A190 1684	Shielding Plate	1
11	A111 1753	Seal - 0.1x18x49	1
12	A190 1693	Lens Cover	1
13	A190 1813	Timing Belt - L824P2M	1
14	A190 1663	Lens Guide Rail	1
15	A190 1818	2nd Scanner Spring	1
16	A190 1664	Pulley Bracket	1
17	A190 1685	Lens Cover Bracket	1
18	A190 1669	Lens Support Bracket	1
19	A184 5205	Scanner Motor - DC24V 96W	1
20	A190 1696	Motor Bracket	1
21	A190 1820	Lens Holder Spring	1
22	A190 1803	Timing Pulley - 22Z/44Z	1
23	A190 1817	Timing Belt - L754P2M	1

Index No.	Part No.	Description	Q'ty Per Assembly
101	0451 3006B	Tapping Screw - M3x6	
102	0450 3010B	Tapping Screw - M3x10	
103	0701 0030B	Flat Washer - M3	
104	0720 0060E	Retaining Ring - M6	
105	0450 3006B	Tapping Screw - M3x6	

11. OPTICS SECTION 3 (A219)

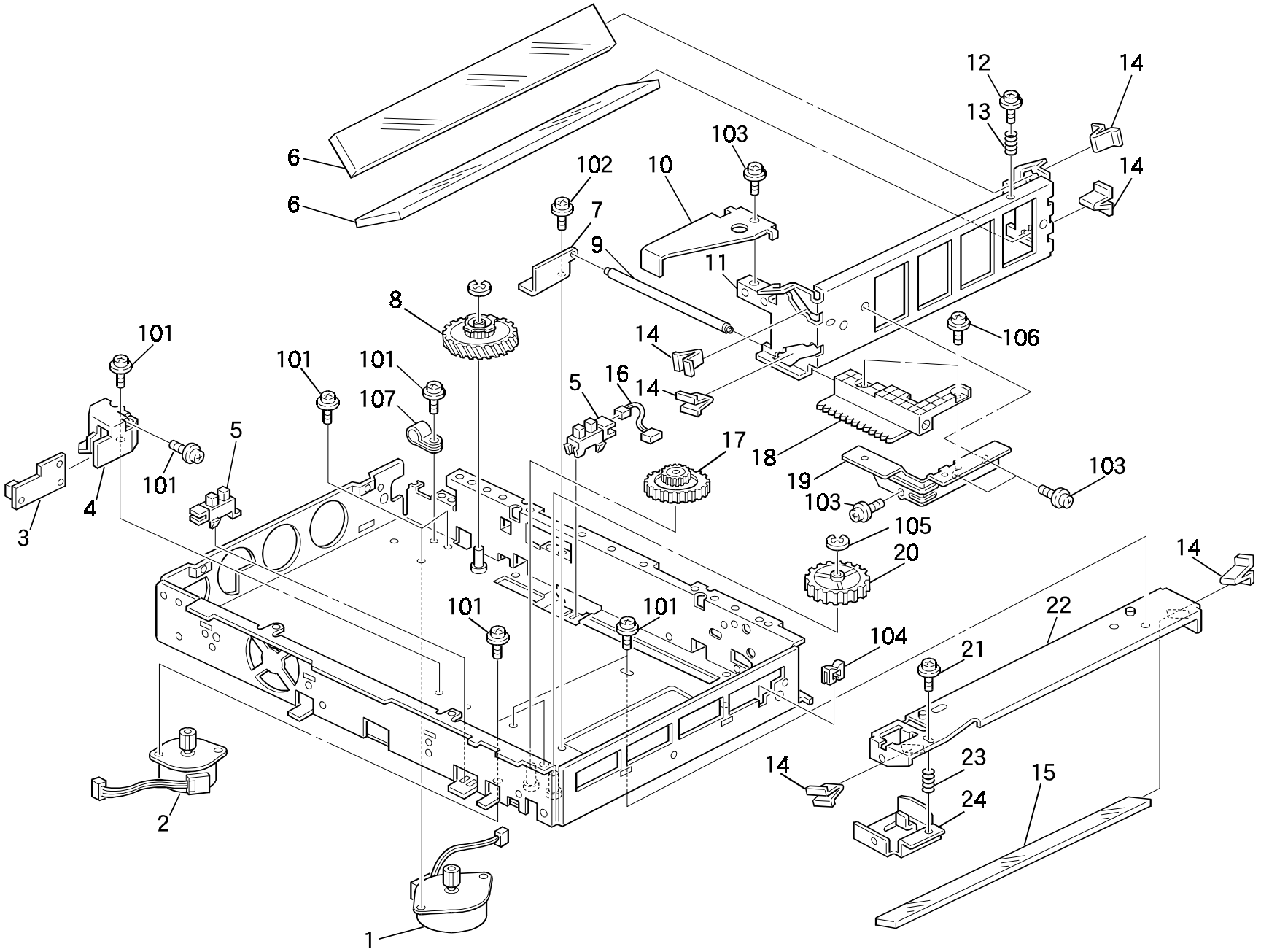

11. OPTICS SECTION 3 (A219)

Index No.	Part No.	Description	Q'ty Per Assembly
1	A190 1672	Lens Drive Motor DC24V 81.6W	1
2	A190 1671	Mirror Drive Motor DC24V 81.6W	1
3	A152 5120	Optics Control Board	1
4	A077 1745	Cover - ADS Sensor	1
5	AW02 0075	Photo interrupter	2
6	A190 1811	4th/5th Mirror	2
7	A190 1676	Rod Bracket	1
8	A190 1802	Timing Pulley - 30Z	1
9	A190 1810	Mirror Guide Rod	1
10	A190 1679	Mirror Sensor Shutter	1
11	A190 1678	3rd Scanner Bracket	1
12	A153 1906	Adjust Shoe	1
13	AA06 3523	Adjust Spring	1
14	A077 1690	Spring Plate - Mirror	6
15	A190 1809	6th Mirror	1
16	A190 5343	Scanner H.P Harness	1
17	AB01 7361	Gear - 24Z/56Z	1
18	A190 1827	Rack Gear	1
19	A190 1825	3rd Scanner Support Plate	1
20	AB01 7129	Gear - 20Z And 72Z	1
21	A077 1746	Mirror Adjusting Screw	1
22	A190 1675	6th Mirror Bracket - Rear	1
23	AA06 3180	Adjust Spring	1
24	A190 1674	6th Mirror Bracket - Front	1

Index No.	Part No.	Description	Q'ty Per Assembly
101	0450 3006B	Tapping Screw - M3x6	
102	0353 0060B	Philips Pan Head Screw - M3x6	
103	0451 3006B	Tapping Screw - M3x6	
104	1105 0328	Harness Clamp - Es-0505	
105	0720 0040E	Retaining Ring - M4	
106	0951 3005B	Philips Screw With Flat Washer - M3x5	
107	1105 0008	Nylon Clamp - 2n	

12. TONER BOTTLE HOLDER UNIT (A219)

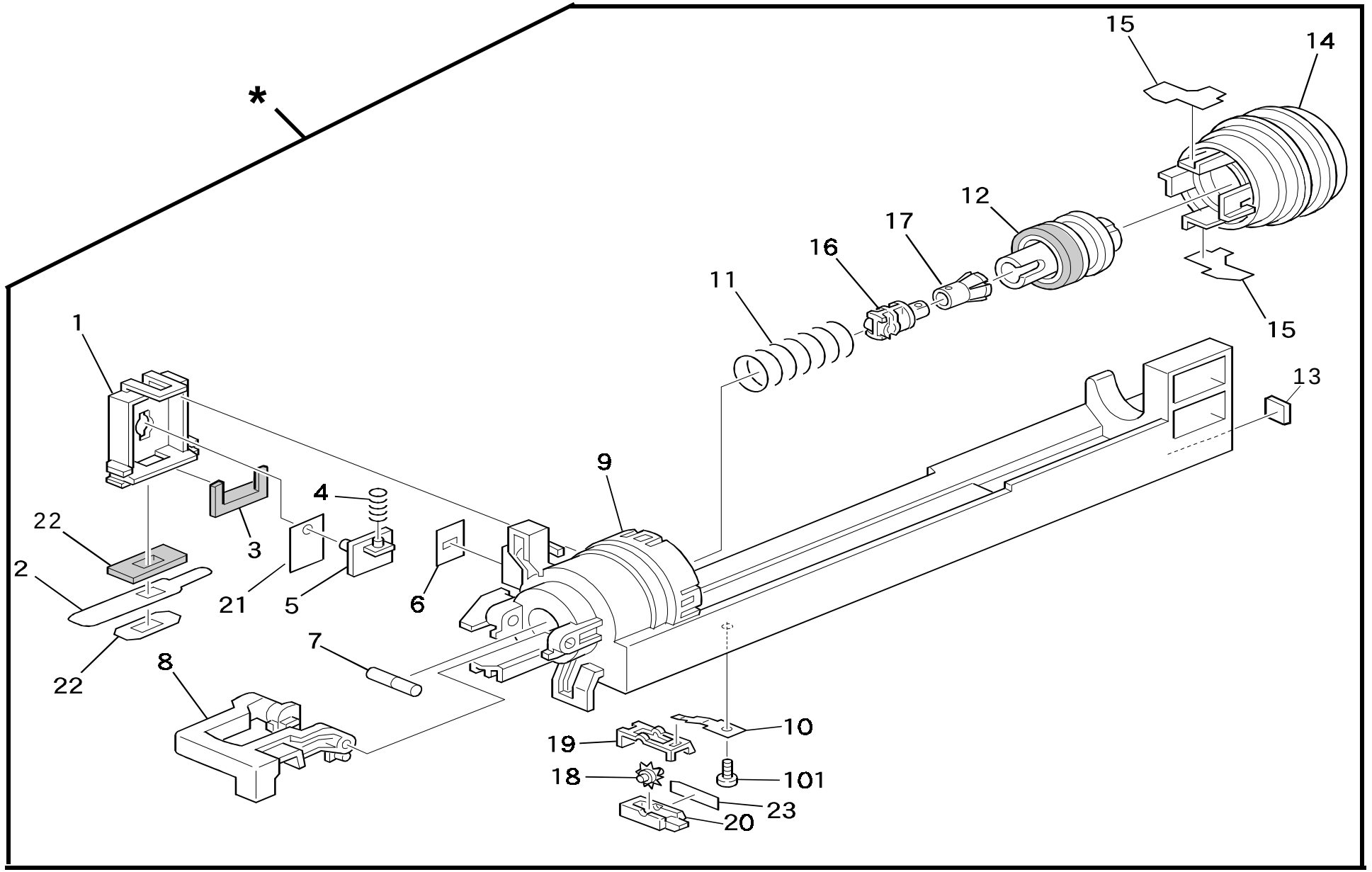

12. TONER BOTTLE HOLDER UNIT (A219)

08/29/97

Index No.	Part No.	Description	Q'ty Per Assembly
*	A219 3030	Toner Supply Unit (NA) (RIC)	
*	A219 3034	Toner Supply Unit (EU) (RIC)	
*	A219 3036	Toner Supply Unit (Others)	
1	A219 3311	Toner Collection Cover	1
2	A219 3342	Lower Seal - Toner Collection Cover	1
3	G020 3345	Right Seal	1
4	G020 3313	Spring	1
5	A219 3318	Toner Adding Sutter	1
6	A219 3312	Toner Adding Gate	1
7	A184 3422	Toner Slider	1
8	A219 3339	Toner Bottle Holder Lever	1
9	A219 3314	Toner Supply Unit Case - (NA) (RIC)	1
9	A219 3411	Toner Supply Unit Case - (EU) (RIC)	1
9	A219 3416	Toner Supply Unit Case (Others)	1
10	A219 3384	Spring Plate	1
11	A184 3411	Chuck Spring	1
12	G020 3334	Slider Ass'y	1
13	G020 3326	Cushion	1
14	A219 3322	Toner Bottle Cover	1
15	A219 3325	Mylar Blade	2
16	A184 3421	Chuck Shaft	1
17	A184 3420	Bottle Chuck	1
18	A219 3381	Roller	1
19	A219 3382	Upper Cover	1
20	A219 3383	Lower Cover	1
21	A219 3319	Sheet - Toner Supply Shutter	1
22	A219 3341	Cushion - Toner Collection Cover	1
23	A219 3385	Sheet - Roller Cover	1

Index No.	Part No.	Description	Q'ty Per Assembly
101	0452 3006B	Tapping Screw - M3x6	

13. IMAGING UNIT - 1

Rev 7/25/97

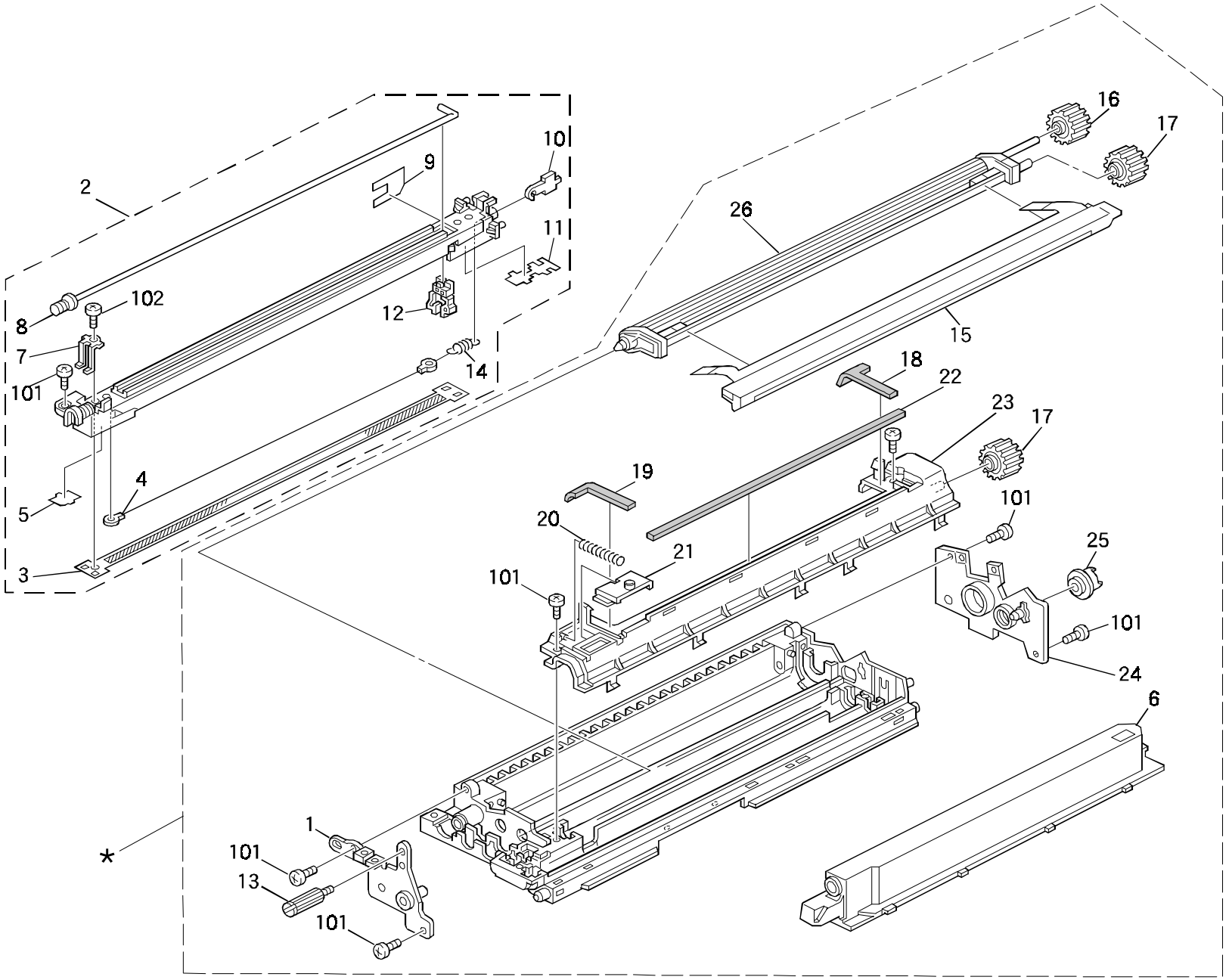

13. IMAGING UNIT - 1

Rev. 06/11/2001

Index No.	Part No.	Description	Q'ty Per Assembly
*	A219 2206	Imaging Unit	1
1	A190 2280	Front Side Plate	1
2	A190 2010	Charge Corona Unit	1
3	**A190 2060**	**Charge Corona Grid**	**1**
4	**A190 2065**	**Charge Corona Wire**	**1**
5	A190 2085	Front End block Cover	1
6	A219 3132	Development Cover	1
7	A190 2062	Spring Plate - Corona Grid	1
8	A190 2075	Cleaning Shaft	1
9	A190 2116	Rear End block Cover	1
10	A190 2105	Corona Wire Terminal	1
11	A190 2086	Rear Shielding Sheet	1
12	**A190 2070**	**Corona Wire Cleaner Ass'y**	**1**
13	A190 2320	Knob Screw	1
14	A184 3863	Corona Wire Spring	1
15	A190 3094	Development Entrance Seal	1
16	A190 3152	Gear - 18Z	1
17	A190 3155	Idle Gear - 17Z	2
18	A190 3166	Rear Seal	1
19	A190 3167	Front Seal	1
20	G020 2327	Pressure Spring	1
21	A190 3171	Imaging Unit Shutter	1
22	A190 3165	Long Seal	1
23	A190 3162	Imaging Unit Upper Case	1
24	A190 2290	Rear Side Plate	1
25	A190 3156	Cam Gear	1
26	A190 3050	Development Roller Ass'y	1

Index No.	Part No.	Description	Q'ty Per Assembly
101	0353 0060B	Philips Pan Head Screw - M3x6	
102	0452 3006B	Tapping Screw - 3x6	

14. IMAGING UNIT - 2

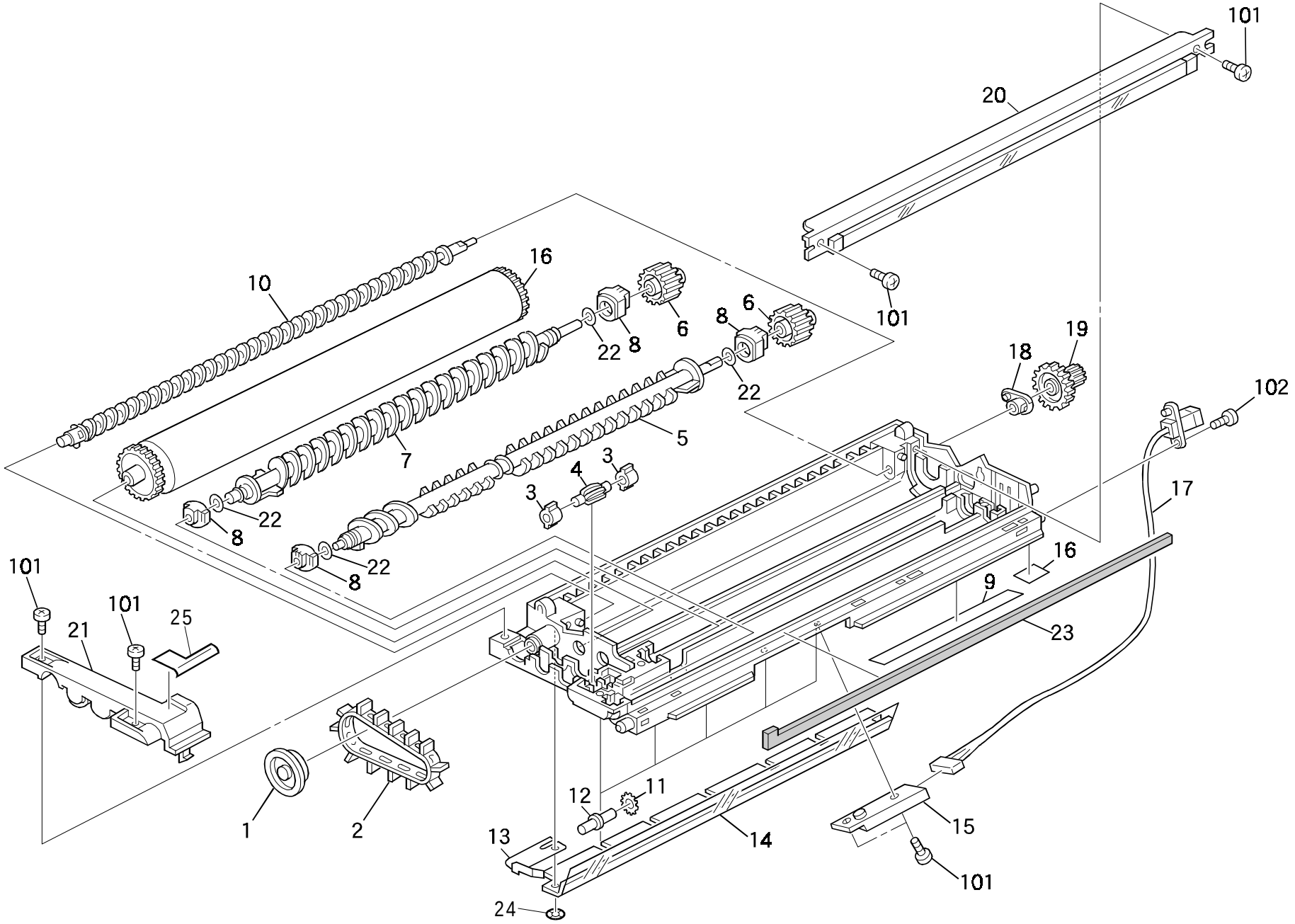

14. IMAGING UNIT - 2

Index No.	Part No.	Description	Q'ty Per Assembly
1	A190 3564	Toner Cap	1
2	A184 3611	Toner Recycle Belt	1
3	A190 3569	Toner Recycle Roller Bushing	2
4	A190 3563	Toner Recycle Roller	1
5	A190 3112	1st Agitator	1
6	A190 3153	Gear -	2
7	A190 3116	2nd Agitator	1
8	A190 3125	Bushing	4
9	A190 3183	Harness Holder	1
10	A190 3560	Toner Collection Coil	1
11	A048 2276	Ring - Transport Bracket	1
12	G020 2355	Transport Guide Shaft	1
13	G020 3565	Grounding Plate	1
14	A190 3570	Cleaning Entrance Seal	1
15	A184 2455	Toner Density Sensor	1
16	**A219 9510**	**OPC Drum**	**1**
17	A190 5346	Development Unit Harness	1
18	A190 3568	Rear Bushing	1
19	G020 3571	Toner Correction Gear - 14/24Z	1
20	**A190 3550**	**Cleaning Blade**	**1**
21	A190 2330	Toner Recycle Cover	1
22	A190 3128	Seal 6mm	4
23	A190 3192	Lower Seal -3x6x396	1
24	G020 1923	CS Ring - M2.4	1
25	A190 3193	Seal - 5x55	1

Index No.	Part No.	Description	Q'ty Per Assembly
101	0353 0060B	Philips Pan Head Screw - M3x6	
102	0452 3006B	Tapping Screw - 3x6	

14. IMAGING UNIT - 2

Rev. 10/99

Index No.	Part No.	Description	Q'ty Per Assembly
1	A190 3564	Toner Cap	1
2	A184 3611	Toner Recycle Belt	1
3	A190 3569	Toner Recycle Roller Bushing	2
4	A190 3563	Toner Recycle Roller	1
5	A190 3116	1st Agitator	1
6	A190 3153	Gear -	2
7	A190 3112	2nd Agitator	1
8	A190 3125	Bushing	4
9	A190 3183	Harness Holder	1
10	A190 3560	Toner Collection Coil	1
11	A048 2276	Ring - Transport Bracket	1
12	G020 2355	Transport Guide Shaft	1
13	G020 3565	Grounding Plate	1
14	A190 3570	Cleaning Entrance Seal	1
15	A184 2455	Toner Density Sensor	1
16	**A219 9510**	**OPC Drum**	**1**
17	A190 5346	Development Unit Harness	1
18	A190 3568	Rear Bushing	1
19	G020 3571	Toner Correction Gear - 14/24Z	1
20	**A190 3550**	**Cleaning Blade**	**1**
21	A190 2330	Toner Recycle Cover	1
22	A190 3128	Seal 6mm	4
23	A190 3192	Lower Seal -3x6x396	1
24	G020 1923	CS Ring - M2.4	1
25	A190 3193	Seal - 5x55	1

Index No.	Part No.	Description	Q'ty Per Assembly
101	0353 0060B	Philips Pan Head Screw - M3x6	
102	0452 3006B	Tapping Screw - 3x6	

15. LOWER OPTICS SECTION (A219)

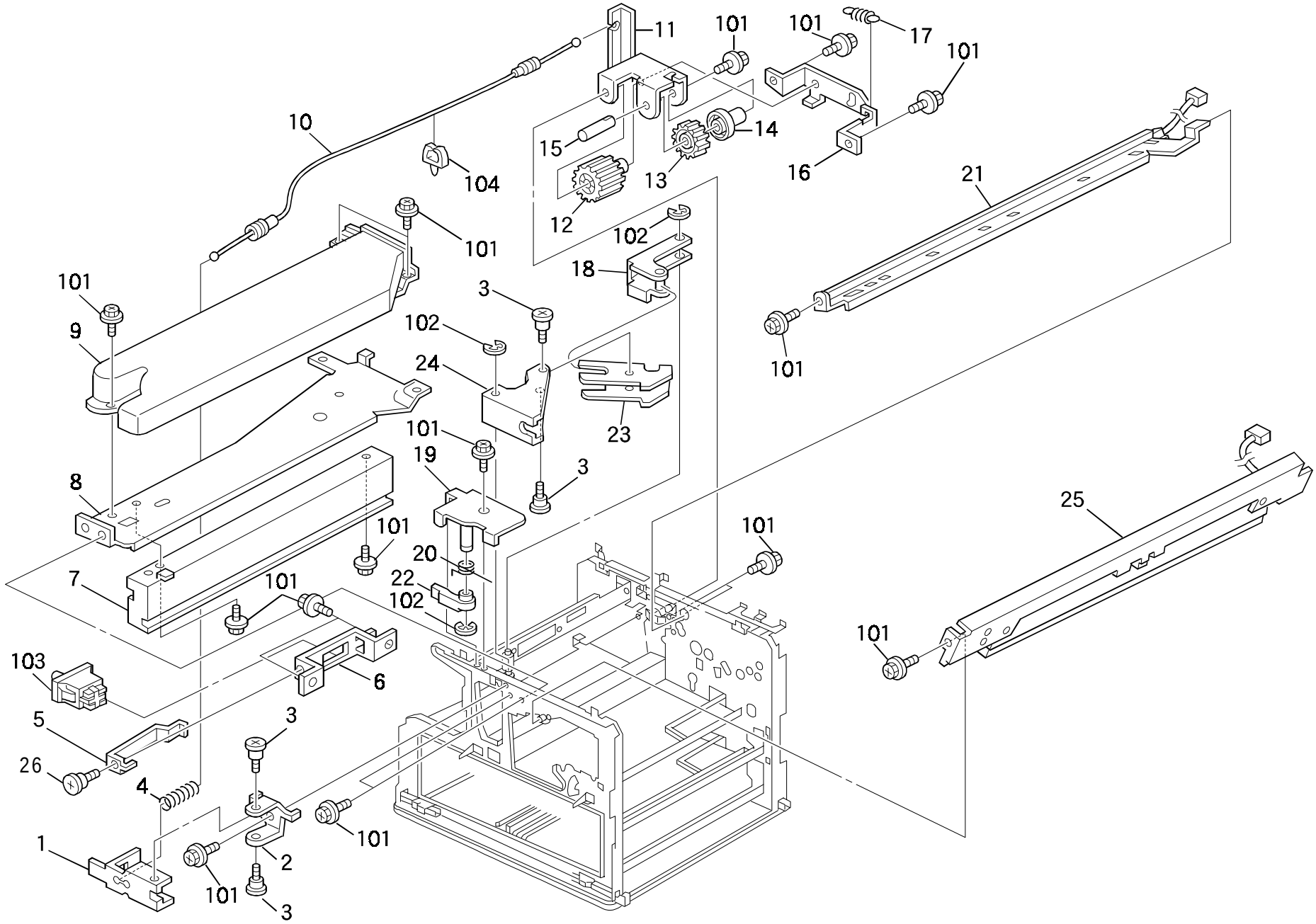

15. LOWER OPTICS SECTION (A219)

Index No.	Part No.	Description	Q'ty Per Assembly
1	A190 1042	Front Lever Bracket	1
2	A190 1041	Front Door Switch Lever	1
3	5206 2684	Shoulder Screw - M3	4
4	AA06 3489	Spring - 45mm	1
5	A190 1164	Safety Switch Lever	1
6	A190 1160	Safety Switch Bracket	1
7	A190 1152	Guide Rail	1
8	A190 1151	Duct Cover	1
9	A190 1153	Duct	1
10	A190 1163	Drive Release Wire	1
11	A190 1131	Drive Gear Joint Bracket	1
12	G020 1157	Gear - 28Z	1
13	A190 1132	Gear - 32Z	1
14	A190 1138	Spacer	1
15	A190 1136	Gear Shaft	1
16	A190 1134	Support Bracket	1
17	A422 1082	Pick-up Spring	1
18	A190 1043	Fusing Switch Lever	1
19	A190 1342	Front Lever Support Plate	1
20	A190 1345	Release Spring - Front Lever	1
21	A190 2020	Quenching Lamp Unit	1
22	A190 1341	Front Door Lever	1
23	A190 1162	Safety Switch Arm	1
24	A190 1040	Front Safety Switch Arm	1
25	A190 2030	Erase Lamp Unit	1
26	AA14 3716	Stepped Screw	1

Index No.	Part No.	Description	Q'ty Per Assembly
101	0451 3006B	Tapping Screw - M3x6	
102	0720 0030E	Retaining Ring - M3	
103	1204 2334	Interlock Switch - Fa1l	
104	1105 0199	Clamp	

16. FUSING UNIT (A219)

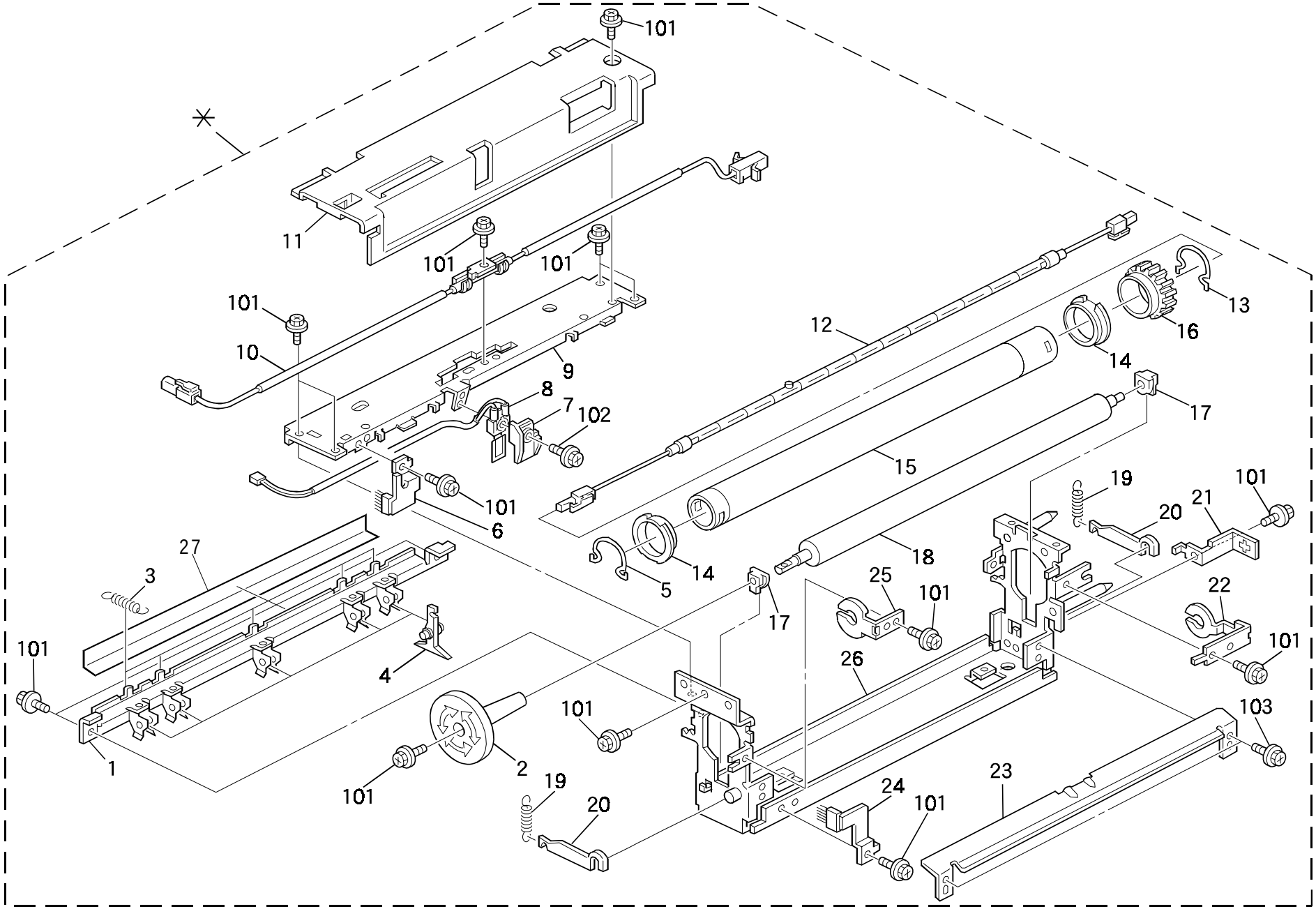

16. FUSING UNIT (A219)

Rev. 11/20/2000

Index No.	Part No.	Description	Q'ty Per Assembly
*	A219 4055	Fusing Unit	1
1	A190 4089	Stripper Pawl Bracket	1
2	A190 4053	Fusing Unit Knob	1
3	A190 4092	Stripper Pawl Spring	5
4	A184 4072	Stripper Pawl	5
5	A184 4105	Left Retaining Ring - 31	1
6	A190 4385	Anti static Brush	1
7	A153 4087	Thermistor Holder	1
8	A190 4119	Thermistor	1
9	A190 4073	Fusing Stay	1
10	A298 4123	Thermofuse - 172°c	1
11	A190 4070	Fusing Unit Cover	1
12	A219 4117	Fusing Lamp - 115V 850W	1
12	A219 4118	Fusing Lamp - 230V 650W	1
13	A184 4081	Right Retaining Ring - 31	1
14	A190 4086	Hot Roller Bushing	2
15	A219 4081	Hot Roller	1
16	G020 4177	Gear - 40Z	1
17	G020 4175	Bushing - Pressure Roller	2
18	A190 4082	Pressure Roller	1
19	A219 4068	Pressure Spring	2
20	A190 4099	Pressure Roller Lever	2
21	A190 4129	Connector Bracket	1
22	A190 4121	Rear Heater Bracket	1
23	A298 4071	Fusing Entrance Guide	1
24	A190 4386	Anti static Brush	1
25	A190 4120	Front Heater Bracket	1
26	A190 4076	Fusing Frame	1
27	A190 4088	Seal	1

Index No.	Part No.	Description	Q'ty Per Assembly
101	0451 3006B	Tapping Screw - M3x6	
102	0954 3012B	Screw - M3X12	
103	0951 3006B	Philips Screw With Flat Washer - M3x6	

17. TRANSFER AND EXIT SECTION (A219)

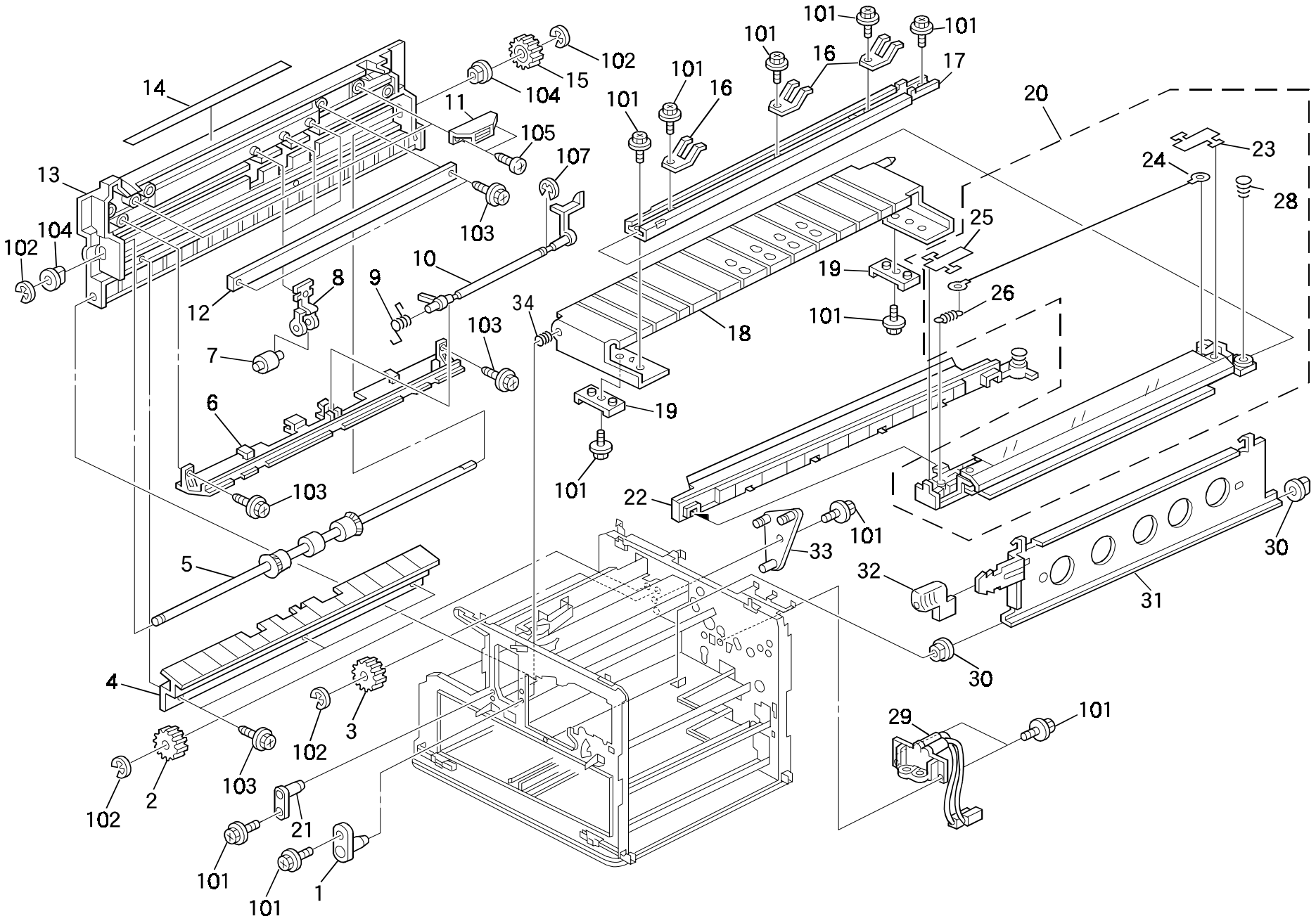

17. TRANSFER AND EXIT SECTION (A219)

Rev. 11/30/2000

Index No.	Part No.	Description	Q'ty Per Assembly
1	A048 3860	Transport Bracket Holder	1
2	A190 4097	Idle Gear - 16Z	1
3	A190 4096	Idle Gear - 18Z	1
4	A190 4470	Lower Guide Plate	1
5	A190 4465	Exit Roller	1
6	A190 4471	Upper Guide Plate	1
7	AF04 0031	Upper Exit Roller	3
8	A190 4474	Exit Roller Holder	3
9	A190 4456	Exit Sensor Feeler Spring	1
10	A190 4455	Exit Sensor Feeler	1
11	A298 4189	Magnetic Catch	1
12	A190 4479	Shielding Plate	1
13	A190 4478	Exit Cover	1
14	A190 4476	Decal - High Temperature	1
15	A190 4463	Exit Roller Gear - 23Z	1
16	A190 3906	Spring Plate	3
17	A190 3905	Transfer Corona Rail	1
18	A190 3900	Transfer Guide	1
19	A190 3903	Transfer Release Guide	2
20	A190 3851	T/S Unit	1
21	A190 1073	Paper Exit Pin Bracket	1
22	**A190 3880**	**Discharge Plate Unit**	**1**
23	A190 3864	Rear End Block Cover	1
24	**A190 3866**	**Transfer Corona Wire**	**1**
25	A190 3863	Front End Block Cover	1
26	A184 3863	Corona Wire Spring	1
28	AA06 3036	Terminal Spring	1
29	A190 3890	T/S Corona Receptacle	1
30	A190 3914	Bushing	1
31	A190 3911	T/S Position Plate	1
32	G020 3912	Transport Lever	1
33	A190 1085	Exit Rear Bracket	1
34	AA06 3040	Spring	1

Index No.	Part No.	Description	Q'ty Per Assembly
101	0451 3006B	Tapping Screw - M3x6	
102	0720 0040E	Retaining Ring - M4	
103	0413 0082B	Tapping Screw - M3x8	
104	0805 3480	Bushing - 6mm	
105	0452 3008B	Tapping Screw - M3x8	
106	0951 3006B	Philips Screw With Flat Washer - M3x6	
107	0720 0025E	Retaining Ring - M2.5	

18. DRIVE SECTION 1 (A219)

Rev. 11/29/2000

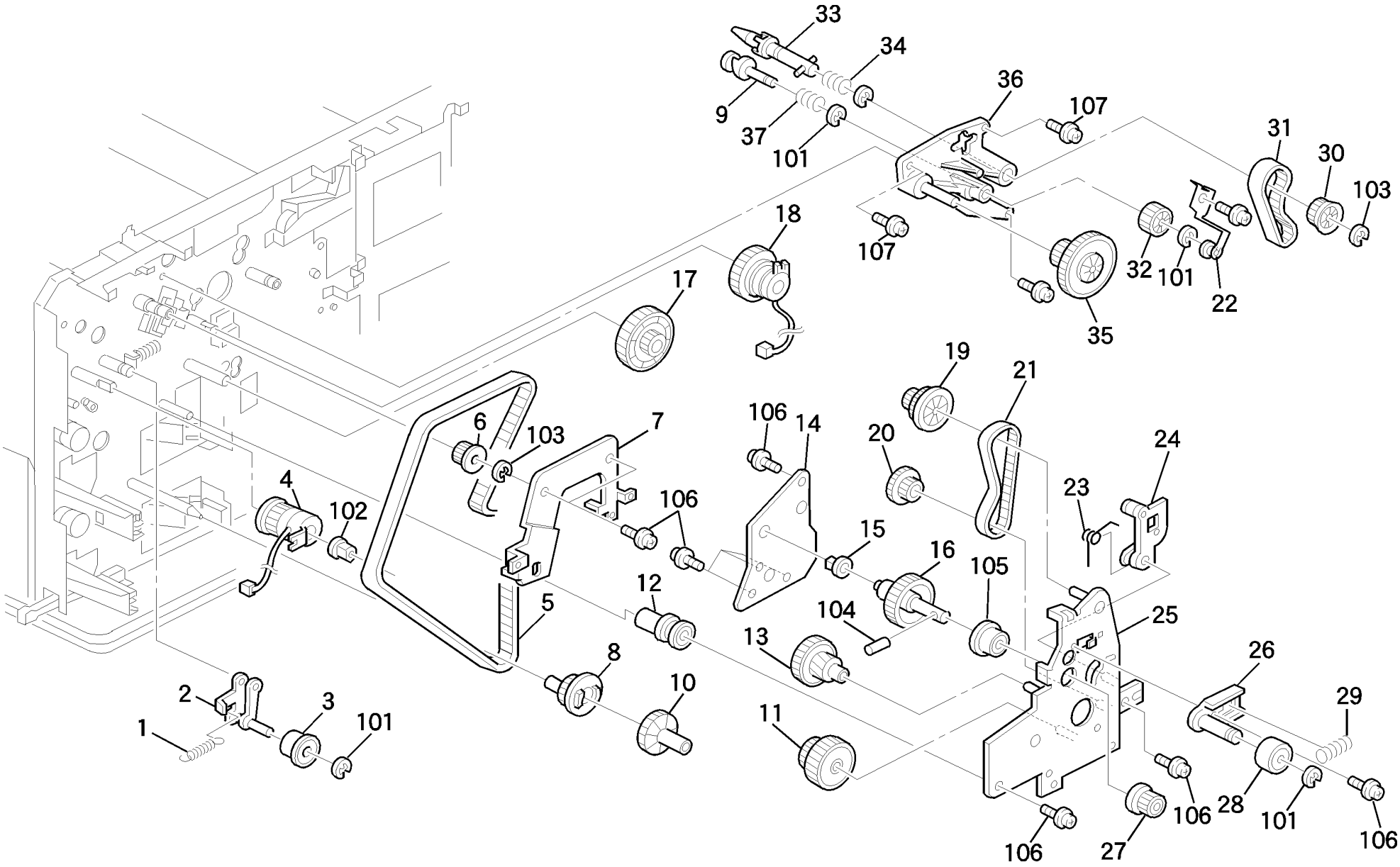

18. DRIVE SECTION 1 (A219)

Rev. 11/29/2000

Index No.	Part No.	Description	Q'ty Per Assembly
1	A190 1145	Release Spring	1
2	A190 1146	Tightner Ass'y	1
3	A190 1149	Tightner Pulley	1
4	G020 1114	By-pass Feed Clutch	1
5	A190 1141	Timing Belt - SM699	1
6	AB03 0273	Timing Pulley - T20	1
7	A190 1122	Development Drive Bracket	1
8	G020 1148	Pulley - 30T	1
9	A190 1185	Development Drive Shaft	1
10	A219 1169	Gear - 40Z	1
11	G020 1130	Gear - 65Z/24Z	1
12	A190 1144	Tightner Pulley	1
13	G020 1131	Gear - 58Z/35Z	1
14	A190 1117	Support Plate - Drive Unit	1
15	5053 0223	Bushing - 8mm	1
16	G020 1132	Gear - 68Z	1
17	G020 1168	Gear - 52Z/26T	1
18	G020 1115	Registration Clutch	1
19	A190 1182	Gear - 21Z/40Z	1
20	A190 1180	Pulley - 20Z/63Z	1
21	A190 1181	Timing Belt - S3M288	1
22	A190 1198	Development Bias Terminal	1
23	A190 1124	Tightner Spring	1
24	A190 1165	Tightner Bracket	1
25	A190 1112	Drive Bracket	1
26	A190 1125	Tightner Bracket	1
27	G020 1138	Pulley - 24T	1
28	A190 1128	Tightner Pulley	1
29	5446 1205	Release Spring	1
30	G020 1178	Pulley - 51T	1
31	A298 1187	Timing Belt - S2M 158MM	1
32	G020 1177	Gear - 26Z	1
33	A190 1118	Imaging Drive Shaft	1
34	A190 1183	Pressure Spring	1
35	A190 1123	Development Drive Gear	1
36	A190 1171	Imaging Unit Holder	1
37	A190 1174	Pressure Spring	1
101	0720 0040E	Retaining Ring - M4	
102	0805 3480	Bushing - 6mm	
103	0720 0060E	Retaining Ring - M6	
104	0633 0120E	Spring Pin - M3x12	
105	0741 3808	Ball Bearing - 8x16x5mm	
106	0451 3006B	Tapping Screw - M3x6	
107	0451 3012B	Tapping Screw With Washer - M3x12	

19. DRIVE SECTION 2 (A219)

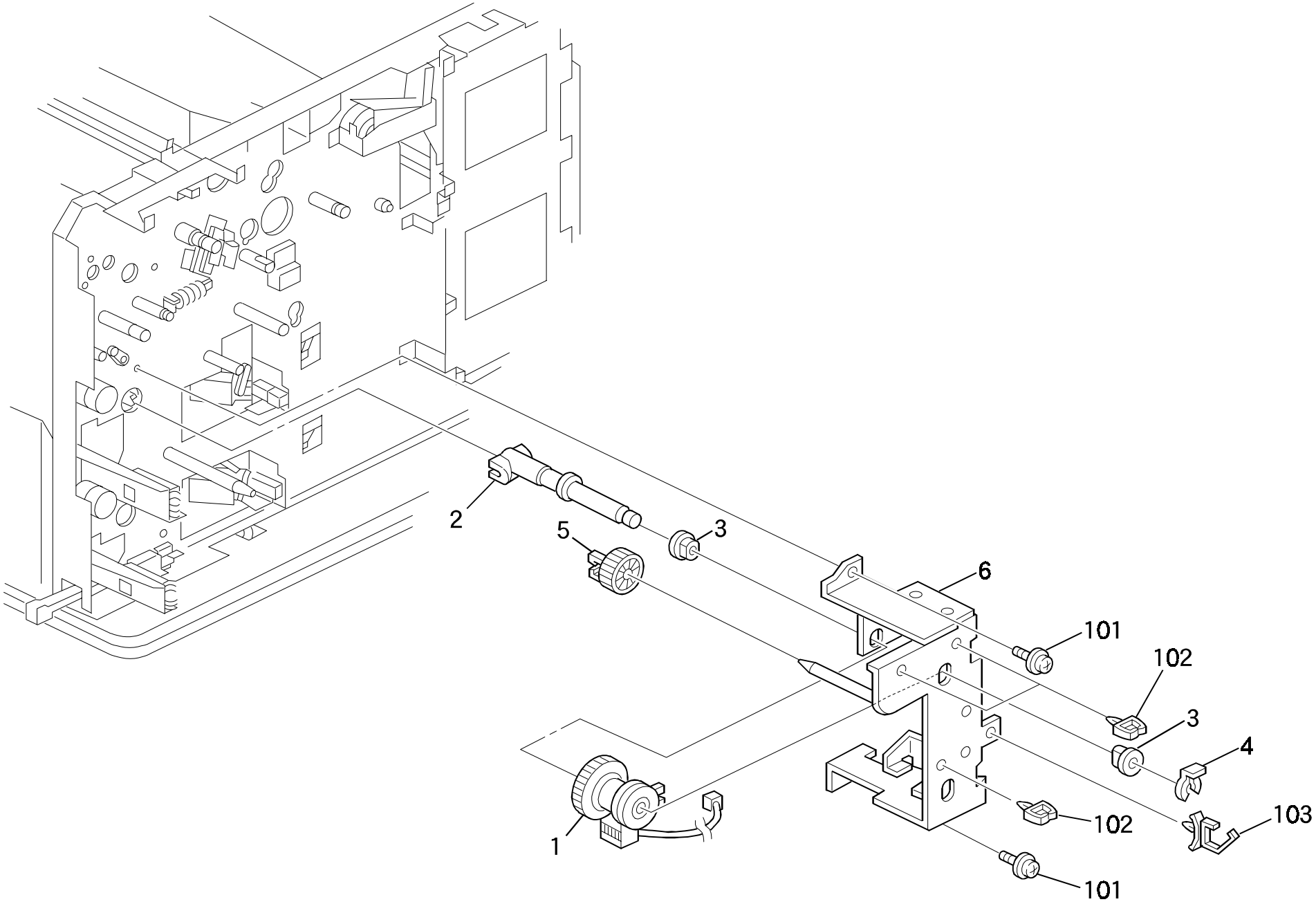

19. DRIVE SECTION 2 (A219)

Index No.	Part No.	Description	Q'ty Per Assembly
1	G020 1112	Paper Feed Clutch	1
2	G020 1145	Shaft - Paper Feed Roller	1
3	AA08 0111	Bushing - 8x12x7	2
4	5447 2681	Snap Ring	1
5	G020 1144	Gear - 27Z	1
6	A219 1176	Paper Feed Drive Bracket	1

Index No.	Part No.	Description	Q'ty Per Assembly
101	0451 3006B	Tapping Screw - M3x6	
102	1105 0199	Clamp	
103	1105 0310	Wire Clamp	

20. ELECTRICAL SECTION 1 (A219)

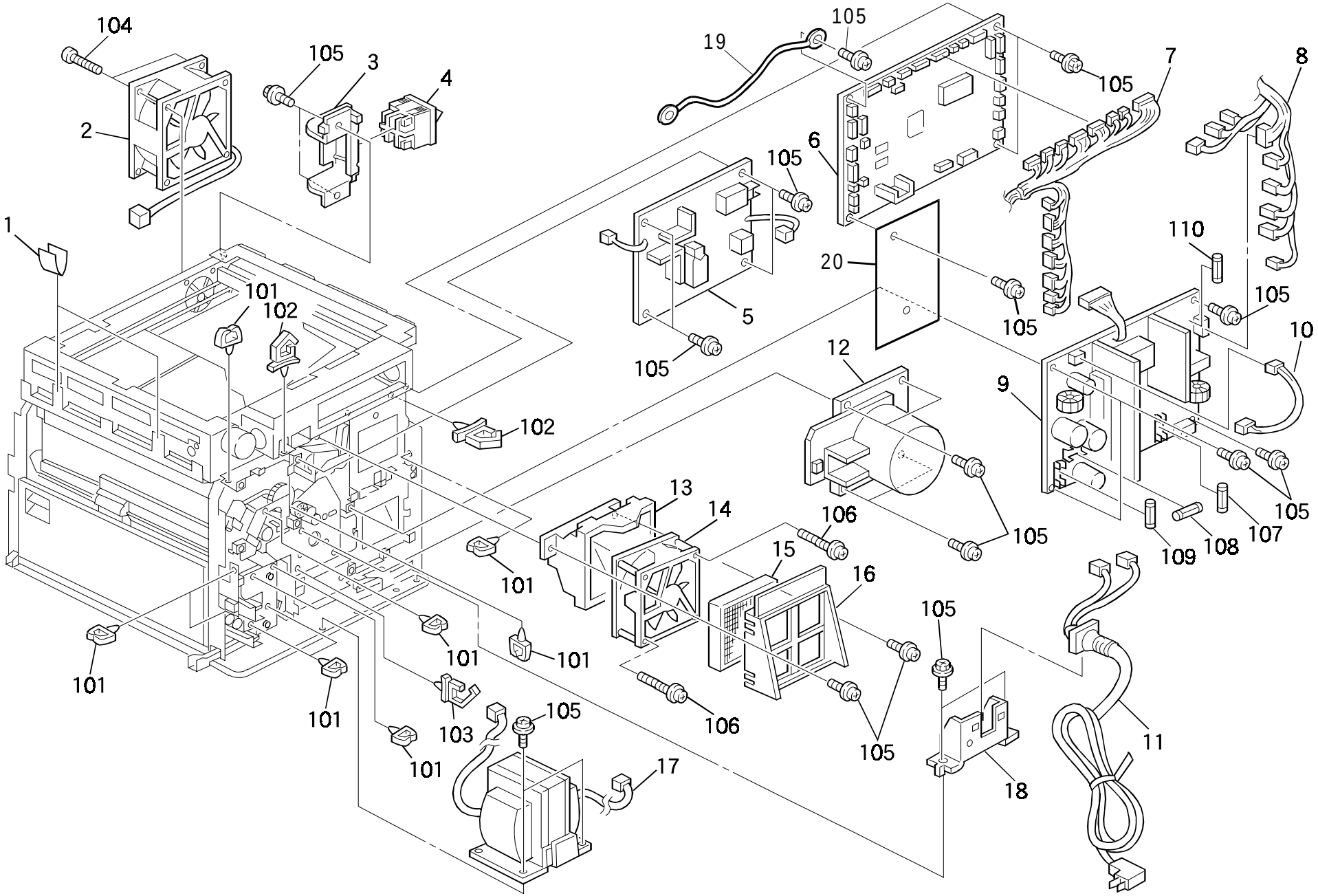

20. ELECTRICAL SECTION 1 (A219)

Rev. 12/12/2000

Index No.	Part No.	Description	Q'ty Per Assembly
1	A190 1195	Right Harness Cover	2
2	AX64 0058	Fan Motor - DC 24V 4.32W	1
3	A190 1192	Main Switch Bracket	1
4	A190 5222	Main Switch	1
5	A190 5150	High Voltage Supply Board	1
6	A219 5120	Main Control Board - 115V	1
6	A219 5100	Main Control Board - 230V	1
7	A219 5310	DC Main Harness	1
8	A219 5302	AC Main Harness - 120V	1
8	A219 5301	AC Main Harness - 230V	1
9	A219 5551	AC Drive DC Power Supply Board - 120V	1
9	A219 5651	AC Drive DC Power Supply Board - 230V	1
10	A190 5335	DC Power Harness	1
11	A219 5581	Power Supply Cord - 120V	1
11	A219 5681	Power Supply Cord - 230V	1
12	A190 1111	DC Motor 23W	1
13	A190 1155	Duct Bracket	1
14	A298 5238	Exhaust Fan Motor - DC24V 4.32W	1
15	**A190 1157**	**Ozone Filter**	**1**
16	A190 1156	Ozone Filter Cap	1
17	A219 5552	Transformer - 120V	1
17	A219 5652	Transformer - 230V	1
18	A219 1190	Power Supply Cord Bracket	1
19	A184 5344	Scanner Grounding Harness	1
20	A219 1291	Protection Sheet	1

Index No.	Part No.	Description	Q'ty Per Assembly
101	1105 0199	Clamp	
102	1105 0413	Harness Clamp	
103	1105 0310	Wire Clamp	
104	0313 0300W	Philips Pan Head Screw - M3x30	
105	0451 3006B	Tapping Screw - M3x6	
106	0450 4030B	Tapping Screw - M4x30	
107	1107 0485	Fuse (Glass Case) 17A 125V	
107	1107 0885	Fuse - 6.3A 250V	
108	1107 0855	Fuse - 8A 125V	
108	1107 0885	Fuse - 6.3A 250V	
109	1107 0872	Fuse - 3.15A 125V	
109	1107 0883	Fuse - 3.15A 250V	
110	1107 0868	Fuse - 5A 125V	
110	1107 0883	Fuse - 3.15A 250V	

21. ELECTRICAL SECTION 2 (A219)

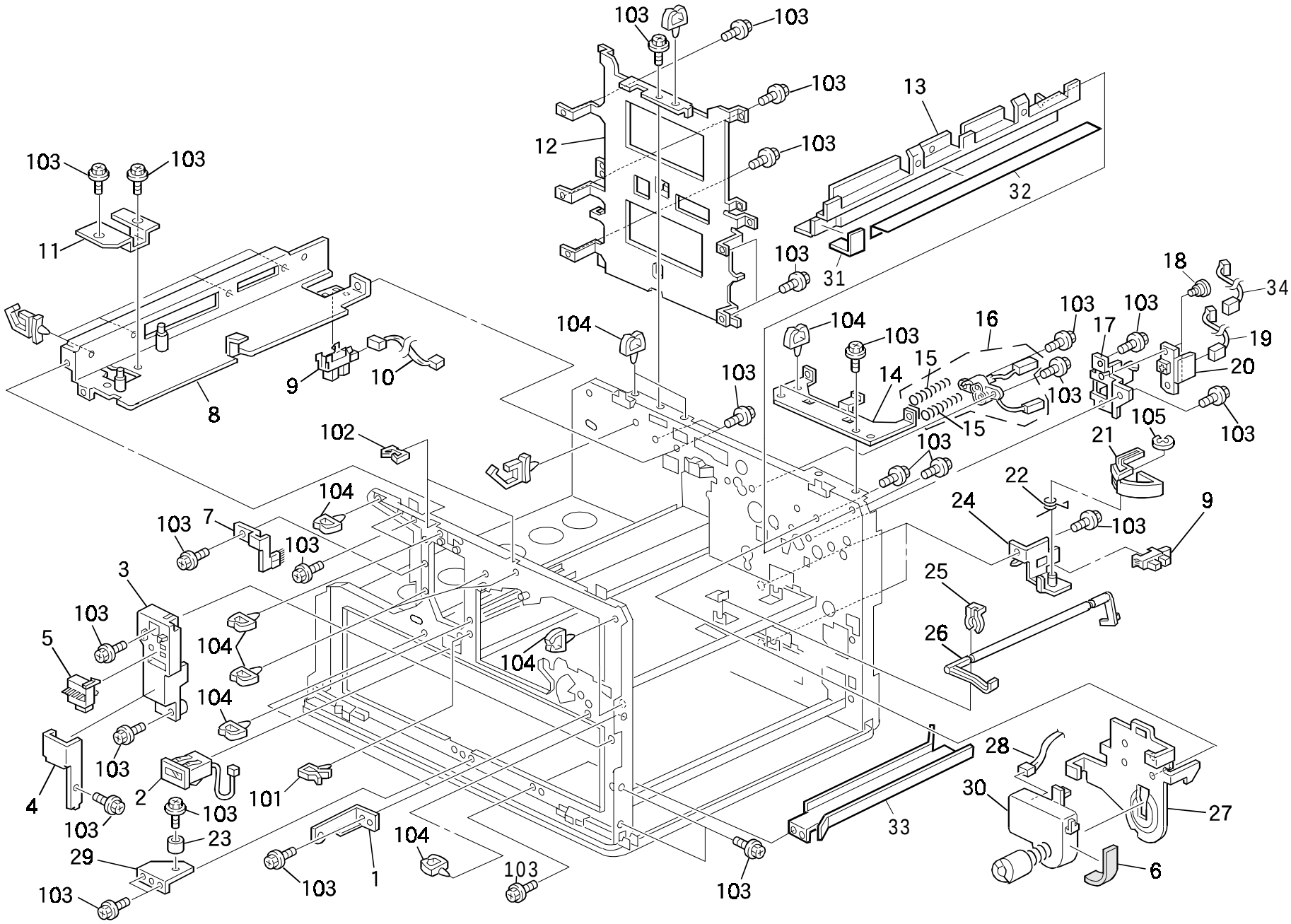

21. ELECTRICAL SECTION 2 (A219)

Rev. 11/17/99

Index No.	Part No.	Description	Q'ty Per Assembly
1	A190 1286	Front Cover Hing Bracket	1
2	AX31 0024	Total Counter	1
3	A219 2631	Paper Size Switch Bracket	1
4	A219 2632	Paper Size Sensor Cover	1
5	G020 2620	Push Switch - Paper Size	1
6	A219 3373	Seal - 2x15x95	1
7	A190 4484	Anti static Brush	1
8	A190 1045	Safety Switch Stay	1
9	AW02 0086	Photo interrupter	2
10	A190 5345	Exit Sensor Harness	1
11	A190 1048	Fusing Lever Cover	1
12	A219 1186	Main Board Bracket	1
13	A190 1191	By-pass Feed Cover	1
14	A190 1187	High Voltage Supply Bracket	1
15	AA06 3249	Grid Terminal Spring	2
16	A190 2040	Transfer Corona Wire Receptacle	1
17	A190 1193	Connector Bracket	1
18	G020 5829	Shoulder Screw - M	1
19	A190 5335	DC Power Harness	1
20	A190 5145	Development Relay Board	1
21	G020 2622	Release Arm - Paper End Feeler	1
22	G020 2626	Release Spring - Paper End Feeler	1
23	A219 1099	Stopper	1
24	G020 2580	Paper End Sensor Bracket	1
25	5447 2681	Snap Ring	1
26	A219 2581	Paper End Sensor Feeler	1
27	A219 3372	Motor Bracket	1
28	A219 5319	Toner Motor Harness	1
29	A219 1073	Stopper Bracket	1
30	A219 3371	DC Motor - 3.36W	1
31	A190 1197	Front Seal - By-pass Feed	1
32	A190 1196	Upper Seal - By-pass Feed	1
33	A219 2652	Middle Rail - Paper Tray	1
34	A190 5335	DC Power Harness	1

Index No.	Part No.	Description	Q'ty Per Assembly
101	1105 0290	Harness Clamp - Horizontal	
102	1105 0329	Clamp - ES-0510	
103	0451 3006B	Tapping Screw - M3x6	
104	1105 0199	Clamp	
105	0720 0030E	Retaining Ring - M3	

22. FRAME SECTION (A219)

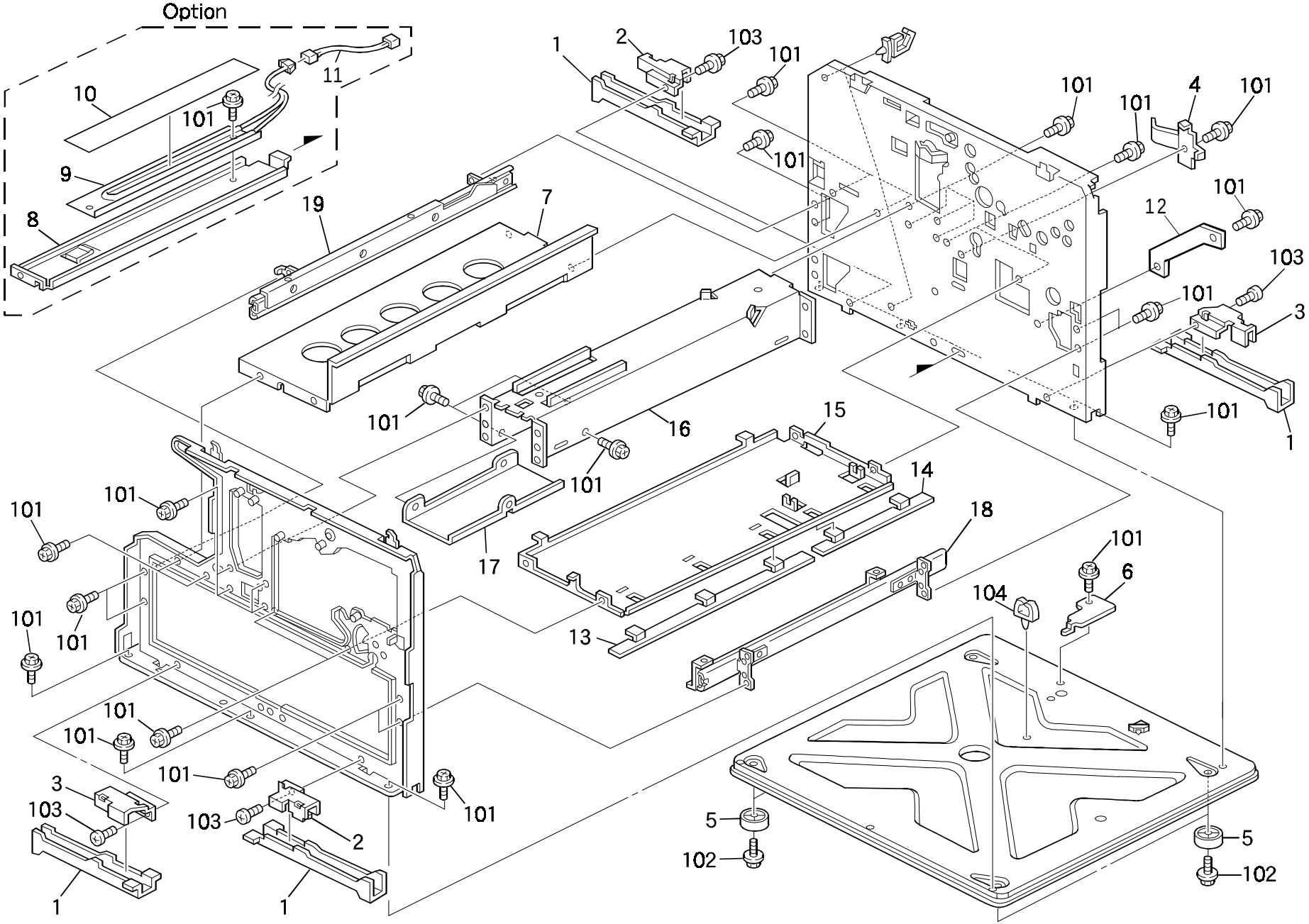

22. FRAME SECTION (A219)

Rev. 11/07/2000

Index No.	Part No.	Description	Q'ty Per Assembly
1	A298 1071	Left Grip Plate	4
2	A190 1084	Front Right Grip Bracket	2
3	A134 1072	Right Bracket - Grip Plate	2
4	G020 2643	Front Grounding Plate - Paper Tray	1
5	G020 1052	Stand	4
6	A190 1076	Base Cover	1
7	A190 1080	Exit Stay	1
8	A190 2825	Heater Bracket	1
9	AX40 0063	Anti condensation Heater - 120V 9W (OPTION)	1
9	AX40 0064	Anti condensation Heater - 230V 9W (OPTION)	1
10	A190 2824	Heater Seal	1
11	A219 9501	Tray Heater Relay Harness	1
12	A219 1065	Cover Bracket	1
13	G020 2655	Upper Front Guide - Paper Tray	1
14	G020 2654	Upper Rear Guide - Paper Tray	1
15	G020 1078	Right Shielding Plate	1
16	G020 1072	Fusing Unit Guide	1
17	A193 1074	Relay Harness Cover	1
18	G697 1100	Right Slide Rail	1
19	G697 1110	Left Slide Rail	1

Index No.	Part No.	Description	Q'ty Per Assembly
101	0451 3006B	Tapping Screw - M3x6	
102	0451 3010B	Tapping Screw - M3x10	
103	0434 0060B	Pan Head Self-tapping Screw - M4x6	
104	1105 0199	Clamp	

CAPACITOR

SYMBOL NO.	INDEX NO.
C101	169
C102	176
C103	173
C104	170
C105	169
C106	171
C107	169
C108	171
C109	173
C110	176

SYMBOL NO.	INDEX NO.
C111	173
C112	173
C113	175
C114	173
C115	175
C116	176
C117	173
C118	175
C119	173
C120	173

SYMBOL NO.	INDEX NO.
C121	177
C122	176
C123	173
C124	175
C125	175
C126	173
C127	172
C128	173
C129	176
C130	175

SYMBOL NO.	INDEX NO.
C131	173
C132	173
C133	175
C134	175
C135	173
C136	172
C137	176
C138	173
C139	174
C140	175

SYMBOL NO.	INDEX NO.
C141	173
C142	174
C143	173
C144	175
C145	173
C146	175
C147	175
C148	173
C149	175
C150	173

SYMBOL NO.	INDEX NO.
C151	175
C152	174
C153	174
C154	175
C155	175
C156	173
C157	175
C158	175
C159	175
C160	173

SYMBOL NO.	INDEX NO.
C161	173
C162	175
C163	175
C164	173
C165	173
C170	175

CONNECTOR

SYMBOL NO.	INDEX NO.
CN100	115
CN101	108
CN102	107
CN103	118
CN104	106
CN105	106
CN106	111
CN107	112
CN108	103
CN109	107

SYMBOL NO.	INDEX NO.
CN110	---
CN111	106
CN112	111
CN113	112
CN114	107
CN115	104
CN116	103
CN117	105
CN118	109
CN119	110

SYMBOL NO.	INDEX NO.
CN120	104
CN121	103
CN122	---
CN123	105
CN124	114
CN125	113
CN126	103
CN127	104
CN128	116
CN129	---

SYMBOL NO.	INDEX NO.
CN130	119
CN131	117

DIODE

SYMBOL NO.	INDEX NO.
D101	129
D102	---
D103	129
D104	129
D105	129
D106	129
D107	130
D108	130
D109	130
D110	130

SYMBOL NO.	INDEX NO.
D111	129
D112	129
D113	129
D114	129
D115	127

IC

SYMBOL NO.	INDEX NO.
IC101	132
IC102	132
IC103	140
IC104	140
IC105	138
IC106	131 (120)
IC107	143
IC108	142
IC109	133
IC110	136

23. MAIN CONTROL BOARD (A219)

IC

SYMBOL NO.	INDEX NO.
IC111	140
IC112	139
IC113	137
IC114	135
IC115	131
IC116	138
IC117	5
	101
(SOCKET)	121
IC118	2

SYMBOL NO.	INDEX NO.
IC119	134
IC120	141

L

SYMBOL NO.	INDEX NO.
L101	147

OSC

SYMBOL NO.	INDEX NO.
OSC101	144

Q

SYMBOL NO.	INDEX NO.
Q101	124
Q102	124
Q103	123
Q104	123
Q105	123
Q106	123
Q107	123
Q108	123
Q109	123
Q110	123

SYMBOL NO.	INDEX NO.
Q111	122
Q112	122
Q113	---
Q114	123

RESISTOR

SYMBOL NO.	INDEX NO.
R101	3
R102	156
R103	156
R104	149
R105	149
R106	148
R107	153
R108	163
R109	166
R110	156

SYMBOL NO.	INDEX NO.
R111	156
R112	156
R113	156
R114	145
R115	154
R116	154
R117	154
R118	154
R119	145
R120	162

RESISTOR

SYMBOL NO.	INDEX NO.
R121	164
R122	156
R123	156
R124	156
R125	156
R126	156
R127	---
R128	149
R129	1
R130	156

SYMBOL NO.	INDEX NO.
R131	156
R132	156
R133	149
R134	156
R135	156
R136	156
R137	157
R138	156
R139	154
R140	150

SYMBOL NO.	INDEX NO.
R141	167
R142	156
R143	156
R144	156
R145	156
R146	149
R147	158
R148	156
R149	156
R150	156

SYMBOL NO.	INDEX NO.
R151	156
R152	154
R153	154
R154	154
R155	154
R156	154
R157	154
R158	154
R159	154
R160	154

SYMBOL NO.	INDEX NO.
R161	154
R162	154
R163	156
R164	149
R165	149
R166	157
R167	156
R168	162
R169	156
R170	149

SYMBOL NO.	INDEX NO.
R171	162
R172	152
R173	154
R174	154
R175	151
R176	154
R177	156
R178	154
R179	154
R180	154

SYMBOL NO.	INDEX NO.
R181	154
R182	150
R183	150
R184	150
R185	150
R186	154
R187	149
R188	149
R189	154
R190	149

23. MAIN CONTROL BOARD (A219)

RESISTOR

SYMBOL NO.	INDEX NO.
R191	149
R192	154
R193	149
R194	149
R195	154
R196	149
R197	149
R198	154
R199	149
R200	149

SYMBOL NO.	INDEX NO.
R201	154
R202	149
R203	149
R204	154
R205	149
R206	---
R207	154
R208	149
R209	149
R210	154

SYMBOL NO.	INDEX NO.
R211	149
R212	153
R213	154
R214	149
R215	153
R216	156
R217	156
R218	156
R219	156
R220	156

SYMBOL NO.	INDEX NO.
R221	156
R222	156
R223	149
R224	149
R225	159
R226	150
R227	165
R228	168
R229	150
R230	156

SYMBOL NO.	INDEX NO.
R231	156
R232	149
R233	156
R234	149
R235	156
R236	156
R237	154
R238	150
R239	155
R240	156

SYMBOL NO.	INDEX NO.
R241	156
R242	156
R243	159
R244	149
R245	149
R246	149
R247	156
R248	156
R249	156
R250	161

SYMBOL NO.	INDEX NO.
R251	161
R252	161
R253	161
R254	161
R255	161
R256	161
R257	161
R258	161
R259	147
R260	147

RESISTOR

SYMBOL NO.	INDEX NO.
R261	147
R262	147
R263	147
R264	147
R265	147
R266	147
R267	161
R268	---
R269	147
R270	147

SYMBOL NO.	INDEX NO.
R271	161
R272	161
R273	161
R274	161
R275	161
R276	147
R277	---
R278	147
R279	147
R280	161

SYMBOL NO.	INDEX NO.
R281	161
R282	161
R283	161
R284	161
R285	161
R286	161
R287	161
R288	161
R289	---
R290	161

SYMBOL NO.	INDEX NO.
R291	161
R292	160
R293	160
R294	160
R295	160
R296	160
R297	156
R298	156
R299	156
R300	156

SYMBOL NO.	INDEX NO.
R301	---
R302	161
R303	161
R304	161
R305	161
R306	161
R307	161
R308	161

VR

SYMBOL NO.	INDEX NO.
C100	181
C101	178
C102	183
C103	182
C104	181
C105	152
C106	152
C107	181
C108	181
C109	181

ZD

SYMBOL NO.	INDEX NO.
C100	181
C101	178
C102	183
C103	182
C104	181
C105	152
C106	152
C107	181
C108	181
C109	181

23. MAIN CONTROL BOARD (A219)

Index No.	Part No.	Description	Q'ty Per Assembly
*	A219 5120	Main Control Board - 115V	1
*	A219 5100	Main Control Board - 230V	1
1	A077 5717	Resistor - 1k Ω ±5% 1W	1
2	A184 5105	IIC RF5A93	1
3	A190 5107	Resistor - 180 Ω ±5% 3W	1
4	A190 5108	Heat Sink	1
5	A219 5104	IC - UVEPROM 1M X8 120N	1

Index No.	Part No.	Description	Q'ty Per Assembly
101	1905 0008	IC UVEPROM 1M X8 120NS	
103	1102 4201	Connector - 2p	
104	1102 4202	Connector - 3p	
105	1102 4204	Ct Header - 5p	
106	1102 4205	Ct Header- 6p	
107	1102 4206	Connector - 7p	
108	1102 4208	Connector - 9p	
109	1102 4209	Ct Header - 10p	
110	1102 4211	Ct Header - 12p	
111	1102 4619	Connector - 2p	
112	1102 4631	Ct Connector - 2p	
113	1102 4634	Ct Connector - 5p	
114	1102 4646	Ct Connector - 5p	
115	1102 5303	Connector - 4p	
116	1103 1770	Connector - 4p	
117	1103 1771	Connector - 5p	
118	1103 1772	Pin Header - 6p	
119	1103 1778	Pin Header - 12p	
120	1104 0511	IC Socket - 8p-DICF-8CS-E	
121	1104 0589	Dip Socket : 32p	
122	1400 0072	Transistor - 2sc372y	
123	1400 0291	Transistor - 2sa1020y	
124	1400 0652	IC Socket - 8p-DICF-8CS-E	
125	1401 0694	Zener Diode - Rd6.8fb	
126	1402 0277	Zener Diode - 1z12	
127	1402 1050	Silicone Diode - 100V 1A	
128	1402 1125	Zener Diode - 1W-RD33FB2	
129	1402 1160	Diode - S5688	
130	1402 1310	Diode - D1NL20V	
131	1407 1535	IC - TD62308AP	
132	1407 2187	TTLIC - SN74LS07NS	
133	1407 2836	IC - HD74C14FP	
134	1407 3764	IC - TC7SU04F	
135	1407 3857	Transistor - Array - TD62381F	
136	1407 4315	IC - TE7751	

Index No.	Part No.	Description	Q'ty Per Assembly
137	1407 4642	IC - MTD1110	
138	1407 4672	C TTL HD74LS368FP	
139	1407 4678	C EEPROM BR93LC56A	
140	1408 0150	IC - ULN2003AN	
141	1408 0595	IC - NJM2904M	
142	1408 0611	IC - 3771	
143	1408 0826	IC - TA8428K	
144	1503 0563	Oscillator-9.83mtz040	
145	1601 5295	Resistor - 0.47 Ω ±2% 1W	
146	1601 8157	Variable Resistor - 100	
147	1607 0878	Inductor - BLM21A102S	
148	1630 3101	Resistor - 100Ω - 1/1	
149	1630 3102	Resistor - 1KΩ 1/10W	
150	1630 3103	Resistor - 10KΩ 1/10W	
151	1630 3105	Resistor - 1M Ω ±5%	
152	1630 3204	Resistor - 220k Ω 1/10W ±5%	
153	1630 3222	Resistor - 2.2KΩ 1/10	
154	1630 3223	Resistor - 22kΩ - 1/1	
155	1630 3393	Resistor - 39K Ω 1/10	
156	1630 3472	Resistor - 4.7K Ω 1/10	
157	1630 3512	Resistor - 5.1K Ω 1/10W	
158	1630 3751	Resistor - 750 Ω ±5% 1/10W	
159	1630 3752	Resistor - 7.5k Ω ±5% 1/10W	
160	1632 0000	Resistor - 0 Ω 1/8W	
161	1633 0000	Resistor - 0Ω 1/10W:J	
162	1633 1001	Resistor - 1K Ω ±1%	
163	1633 1002	Resistor - 10K Ω ±1%	
164	1633 1050	Resistor - 105 Ω ±1% 1/10W	
165	1633 2150	Resistor - 215 Ω ±1% 1/10W	
166	1633 3901	Resistor - 3.9 Ω ±1%	
167	1633 7870	Resistor - 787 Ω ±1% 1/10W	
168	1633 9319	Resistor - 93.1 Ω ±1% 1/10W	
169	1640 5100	Capacitor - 10µF +20% 35V	
170	1640 5109	Capacitor - 1µF ±20% -50V	

Index No.	Part No.	Description	Q'ty Per Assembly
171	1640 5470	Capacitor - 47µF ±20%	
172	1660 3101	Capacitor - 100pF 50V	
173	1660 3471	Capacitor - 470pF 50V	
174	1660 5332	Capacitor - 3300pF ±10% 50V	
175	1660 7103	Capacitor - 10000pF 50V	
176	1660 7104	Capacitor - 100000pF 50V	
177	1660 747	Capacitor - 4700pF: +80, -20: 50V	

24. DECAL AND DOCUMENT (A219)

1

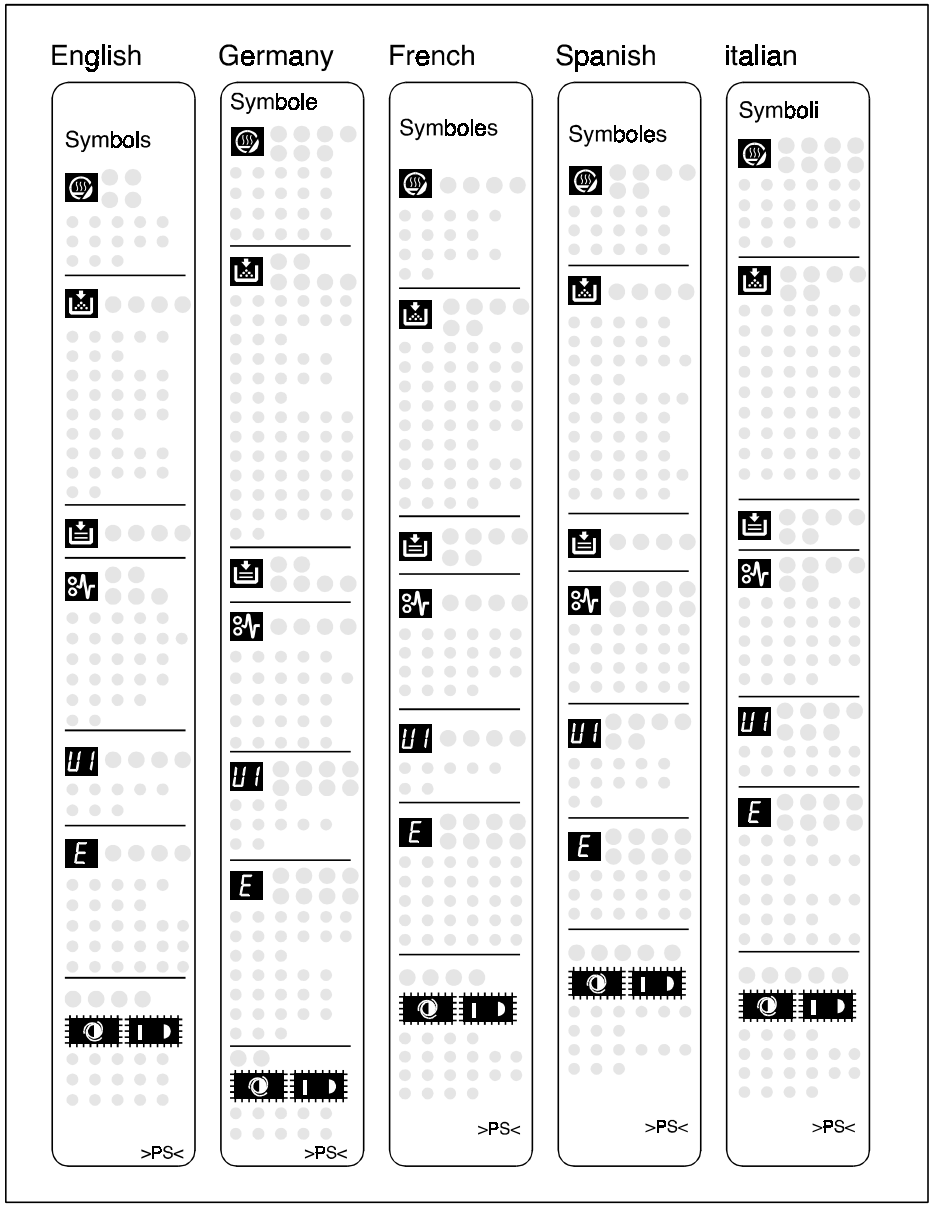

2



3



4

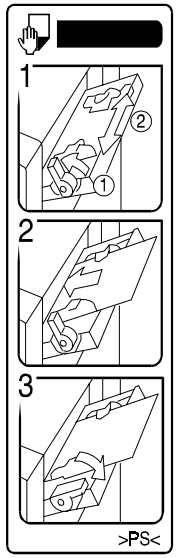

5

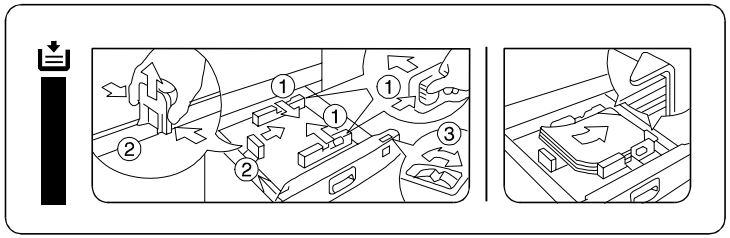

7

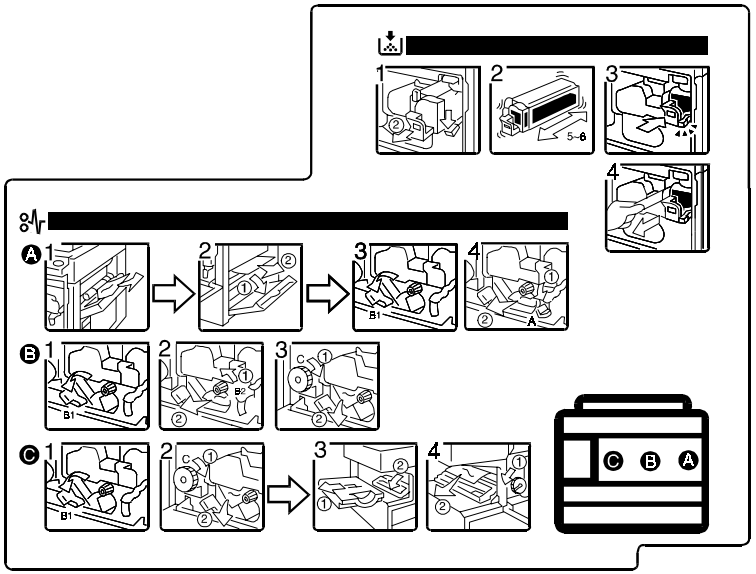

12

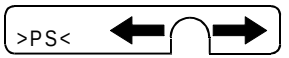

6

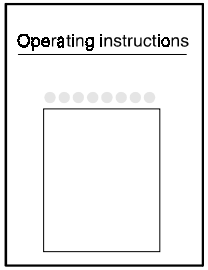

8

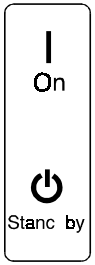

9

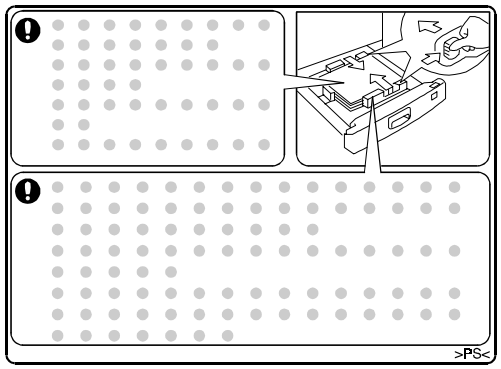

10

Gestetner ****

Rex-Rotary ****

nashuatec ****

11

Gestetner

Rex-Rotary

nashuatec

24. DECAL AND DOCUMENT (A219)

Index No.	Part No.	Description	Q'ty Per Assembly
1	A219 1380	Decal - Symbol Explanation 5 Lang	1
2	A153 1285	Emblem (RIC)	1
2	A156 6413	Emblem (SVN)	1
3	A190 4476	Decal - High Temperature	1
4	A190 2708	Decal - By-pass Feed	1
5	A219 2667	Decal - Paper Set	1
6	A219 8607	Operating Instructions - English LT (RIC)	1
6	A219 8650	Operating Instructions - English LT (SVN)	1
6	A219 8697	Operating Instructions - English LT (NRG)	1
6	A219 8608	Operating Instructions - English A4 (RIC)	1
6	A219 8660	Operating Instructions - English A4 (INF)	1
6	A219 8690	Operating Instructions - English A4 (NRG)	1
7	A219 1284	Operating Sheet	1
8	A219 1265	Decal - Main Switch	1
9	A219 2694	Decal - Paper Set Direction	1
10	A219 6183	Mode Name Plate - NSA	1
10	A219 6185	Mode Name Plate - REX	1
10	A219 6181	Mode Name Plate - GES	1
10	A219 6187	Mode Name Plate - GER	1
11	C225 2867	Decal - Cover - Panel (NSA)	1
11	C225 2866	Decal - Key-top Cover (REX)	1
11	A153 6409	Decal - Keytop Cover (GES)	1
12	A219 2696	Decal - Paper Size Selection	1

Index No.	Part No.	Description	Q'ty Per Assembly

25. SPECIAL TOOLS (A219)

Rev. 10/30/2000

1	2	3	4
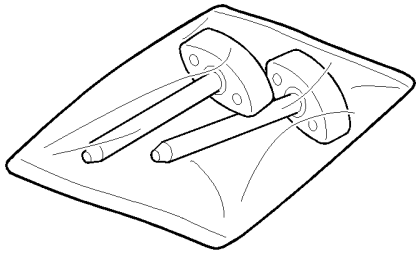	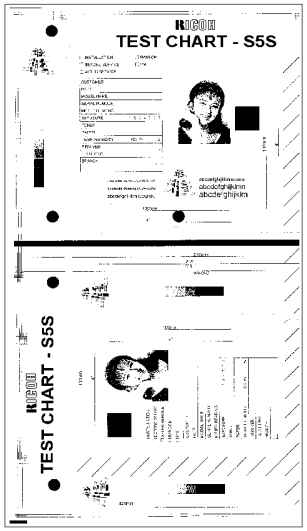		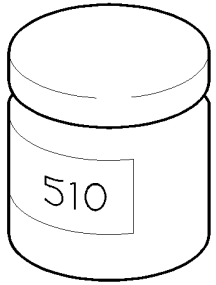
5	6	7,8	
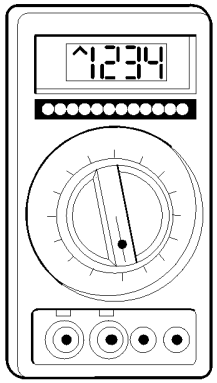	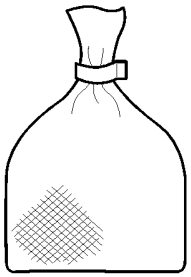	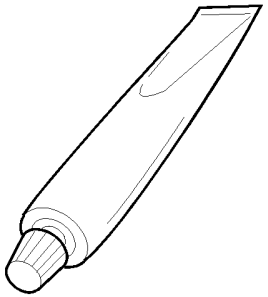	

25. SPECIAL TOOLS (A219)

Rev. 10/30/2000

Index No.	Part No.	Description	Q'ty Per Assembly
1	A184 9501	Optics Adjustment Tool	1
2	A292 9500	Test Chart S5S (10pcs/set)	1
3	5442 9103	Launa Oil 40	1
4	5203 9501	Silicone Grease G-510	1
5	5420 9507	Digital Multimeter	1
6	5442 9101	Setting Powder	1
7	A257 9300	Grease Barrierta - S552R	1
8	A190 9002	Grease - CPL501 (5 Pcs/set)	1

Index No.	Part No.	Description	Q'ty Per Assembly

A219
PARTS INDEX

This section instructs you as to the numbers and names of parts on this machine.

PM Parts Index

Section Name	Part No.	Description in Service Manual	Description in Parts Catalog	Q'ty Per Assembly	Page and Index No
EXTERIOR 1 (A662)	A497 1170	Friction Belt	Friction Belt	1	5- 11
TRANSPORT AND EXIT SECTION	A465 1127	Transport Belt	Transport Belt	1	11- 22

Parts Index

Part No.	Description	Page and Index No.
A219 1065	Cover Bracket	49- 12
A219 1073	Stopper Bracket	47- 29
A219 1099	Stopper	47- 23
A219 1169	Gear - 40Z	41- 10
A219 1176	Paper Feed Drive Bracket	43- 6
A219 1186	Main Board Bracket	47- 12
A219 1190	Power Supply Cord Bracket	45- 18
A219 1194	ADF Bracket	23- 21
A219 1197	Rear Bracket - ADF	23- 25
A219 1265	Decal - Main Switch	55- 8
A219 1270	Front Cover Ass‘y (RIC)	7- 1
A219 1284	Operation Guide Sheet	7- 5
A219 1284	Operating Sheet	55- 7
A219 1290	Rear Right Cover	7- 23
A219 1291	Protection Sheet	45- 20
A219 1295	Front Right Cover	7- 10
A219 1305	Left Lower Cover	7- 16
A219 1330	Rear Cover	7- 22
A219 1380	Decal - Symbol Explanation 5 Lang	55- 1
A219 1391	Platen Cover	9- 1
A219 1450	Operation Panel Ass‘y - LT (RIC/NRG)	7- 11
A219 1450	Operation Panel Ass‘y - LT (RIC)	11- *
A219 1451	Operation Panel Ass‘y - A4	7- 11
A219 1451	Operation Panel Ass‘y - A4	11- *
A219 1452	Operation Panel Ass‘y - LT (SVN)	7- 11
A219 1452	Operation Panel Ass‘y - LT (SVN)	11- *
A219 1461	Operation Panel Cover - LT	11- 1
A219 1462	Indication Sheet - LT (RIC/NRG)	11- 2
A219 1463	Operation Panel Sheet - LT (RIC/NRG)	11- 3
A219 1464	Operation Panel Board - 120V (RIC/NRG)	11- 8
A219 1465	Operation Panel Cover - A4	11- 1
A219 1466	Indication Sheet - A4	11- 2
A219 1467	Operation Panel Sheet - A4	11- 3
A219 1468	Operation Panel Board - 230V	11- 8
A219 1471	Keytop - Start (SVN)	11- 4
A219 1472	Keytop - Clear/Stop (SVN)	11- 5
A219 1473	Keytop - Clear Mode (SVN)	11- 6
A219 1474	Keytop - 10 keys (SVN)	11- 7
A219 1475	Indication Sheet - LT (SVN)	11- 2
A219 1476	Operation Panel Sheet - LT (SVN)	11- 3
A219 1477	Operation Panel Board - 120V (SVN)	11- 8
A219 1700	1st Scanner Unit - 120V	23- 19
A219 1701	1st Scanner Unit - 230V	23- 19
A219 2205	Imaging Unit	31- *
A219 2541	Spring	13- 28
A219 2543	Spring	13- 26
A219 2551	Paper Tray Ass’y	13- *
A219 2558	End Fence Guide	13- 30
A219 2559	Front Side Fence Ass‘y	13- 32
A219 2560	Front Side Fence	13- 24
A219 2561	Front Corner Separator	13- 21
A219 2563	Adjusting Plate - Rear	13- 17
A219 2566	Rear Side Fence Ass‘y	13- 33
A219 2567	Rear Side Fence	13- 11
A219 2568	Rear Corner Separator	13- 12
A219 2569	Adjusting Plate - Front	13- 7
A219 2572	End Fence Ass’y	13- 20
A219 2574	Paper Lift Arm Ass‘y	13- 9
A219 2575	Vertical Transport	19- 10
A219 2577	Paper Lift Roller	13- 10
A219 2581	Paper End Sensor Feeler	47- 26
A219 2582	Paper Lift Shutter	13- 22
A219 2585	Lever	13- 29
A219 2590	Paper Tray	13- 34
A219 2591	Paper Lift Shaft	13- 8
A219 2595	Adjusting Plate - Registration	13- 37
A219 2597	Bottom Plate Lever	13- 27
A219 2611	Paper Guide Plate	19- 5
A219 2612	Lower Paper Guide	19- 6
A219 2631	Paper Size Switch Bracket	47- 3

Part No.	Description	Page and Index No.
A219 2632	Paper Size Sensor Cover	47- 4
A219 2642	Rear Lever Stopper	13- 14
A219 2646	Paper Tray Cover Ass'y - LT	13- 31
A219 2647	Paper Tray Cover	13- 1
A219 2648	Paper Tray Cover Ass'y - A4	13- 31
A219 2650	Middle Rail - Paper Tray	47- 33
A219 2656	End Fence Spring	13- 35
A219 2661	Paper Bottom Plate	13- 15
A219 2664	Front Stopper Lever	13- 23
A219 2667	Decal - Paper Set	13- 2
A219 2667	Decal - Paper Set	55- 5
A219 2669	Oil Dumper	19- 1
A219 2692	Decal - Operating	13- 3
A219 2694	Decal - Paper Set Direction	13- 36
A219 2694	Decal - Paper Set Direction	55- 9
A219 2696	Decal - Paper Size Selection	13- 39
A219 2696	Decal - Paper Size Selection	55- 12
A219 3131	Development Cover	31- 6
A219 3311	Toner Collection Cover	29- 1
A219 3312	Toner Adding Gate	29- 6
A219 3314	Toner Supply Unit Case - 115V (RIC)	29- 9
A219 3318	Toner Adding Sutter	29- 5
A219 3319	Sheet - Toner Supply Shutter	29- 21
A219 3322	Toner Bottle Cover	29- 14
A219 3325	Mylar Blade	29- 15
A219 3339	Toner Bottle Holder Lever	29- 8
A219 3341	Cushion - Toner Collection Cover	29- 22
A219 3342	Lower Seal - Toner Collection Cover	29- 2
A219 3360	Toner Bottle Holder guide Ass'y	17- 6
A219 3364	Mylar Seal - 8x429	17- 19
A219 3365	Mylar Seal - 8x400	17- 20
A219 3371	DC Motor - 3.36W	47- 30
A219 3372	Motor Bracket	47- 27
A219 3373	Seal - 2x15x95	47- 6
A219 3381	Roller	29- 18

Part No.	Description	Page and Index No
A219 3382	Upper Cover	29- 19
A219 3383	Lower Cover	29- 20
A219 3384	Spring Plate	29- 10
A219 3385	Sheet - Roller Cover	29- 23
A219 3411	Toner Supply Unit Case - 230V (RIC)	29- 9
A219 3416	Toner Supply Unit Case (OEM)	29- 9
A219 4055	Fusing Unit	37- *
A219 4069	Pressure Spring	37- 19
A219 4081	Hot Roller	37- 15
A219 4117	Fusing Lamp - 115V 850W	37- 12
A219 4118	Fusing Lamp - 230V 650W	37- 12
A219 4123	Thermofuse - 169°c	37- 10
A219 5100	Main Control Board - 230V	45- 6
A219 5100	Main Control Board - 230V	53- *
A219 5104	IC - UVEPROM 1M X8 120N	53- 5
A219 5120	Main Control Board - 115V	45- 6
A219 5120	Main Control Board - 115V	53- *
A219 5301	AC Main Harness - 230V	45- 8
A219 5302	AC Main Harness - 120V	45- 8
A219 5310	DC Main Harness	19- 3
A219 5310	DC Main Harness	45- 7
A219 5319	Toner Motor Harness	47- 8
A219 5551	AC Drive DC Power Supply Board - 120V	45- 9
A219 5552	Transformer - 120V	45- 17
A219 5581	Power Supply Cord - 120V	45- 11
A219 5651	AC Drive DC Power Supply Board - 230V	45- 9
A219 5652	Transformer - 230V	45- 17
A219 5681	Power Supply Cord - 230V	45- 11
A219 6070	Front Cover Ass'y (NRG)	7- 1
A219 6181	Model Name Plate - GES	7- 21
A219 6181	Mode Name Plate - GES	55- 10
A219 6183	Model Name Plate - NSA	7- 21
A219 6183	Mode Name Plate - NSA	55- 10
A219 6185	Model Name Plate - REX	7- 21
A219 6185	Mode Name Plate - REX	55- 10

Part No.	Description	Page and Index No.
A219 6187	Model Name Plate - GER	7- 21
A219 6187	Mode Name Plate - GER	55- 10
A219 6470	Front Cover Ass'y (SVN)	7- 1
A219 8607	Operating Instructions - English LT (RIC)	55- 6
A219 8608	Operating Instructions - English A4 (RIC)	55- 6
A219 8650	Operating Instructions - English LT (SVN)	55- 6
A219 8660	Operating Instructions - English A4 (INF)	55- 6
A219 8690	Operating Instructions - English A4 (NRG)	55- 6
A219 8697	Operating Instructions - English LT (NRG)	55- 6
A219 9501	Tray Heater Relay Harness	49- 11
A219 9510	OPC Drum	33- 16

Part No.	Description	Page and Index No
AA06 0331	Release Spring	21- 14
AA06 3036	Terminal Spring	39- 28
AA06 3042	Spring	39- 34
AA06 3180	Adjust Spring	27- 23
AA06 3249	Grid Terminal Spring	47- 15
AA06 3489	Spring - 45mm	35- 4
AA06 3523	Adjust Spring	27- 13
AA08 0111	Bushing - 8x12x7	13- 25
AA08 0111	Bushing - 8x12x7	43- 3
AA14 3070	Shoulder Screw - M2x2	7- 15
AA14 3424	Knob Screw - M4x8	9- 2
AA14 3716	Stepped Screw	35- 26
AA16 2067	Platen Cover Pad	9- 5
AB01 3868	Gear - 16Z	13- 19
AB01 7129	Gear - 20Z And 72Z	27- 20
AB01 7361	Gear - 24Z/56Z	27- 17
AB03 0273	Timing Pulley - T20	41- 6
AC01 2042	Exposure Glass	7- 13
AC02 0077	Lens - F8/180	25- 8
AC06 3001	White Reference Plate	23- 3
AF02 0283	Pressure Roller	19- 7
AF04 0031	Upper Exit Roller	39- 7
AG07 0004	Magnetic Catch	7- 9
AG07 0009	Magnetic Catch	39- 11
AW02 0075	Photo interrupter	23- 4
AW02 0075	Photo interrupter	27- 5
AW02 0075	Photo interrupter	47- 9
AW10 0033	Thermistor	23- 7
AX31 0024	Total Counter	47- 2
AX40 0052	Anti condensation Heater - 120V 18W	25- 4
AX40 0053	Anti condensation Heater - 240V 18W	25- 4
AX40 0063	Anti condensation Heater - 120V 9W (OPTION)	49- 9
AX40 0064	Anti condensation Heater - 230V 9W (OPTION)	49- 9
AX64 0058	Fan Motor - DC 24V 4.32W	45- 2
C225 2866	Decal - Key Top Cover (REX)	7- 3

Part No.	Description	Page and Index No.
C225 2866	Decal - Key-top Cover (REX)	55- 11
C225 2867	Decal - Cover - Panel (NSA)	7- 3
C225 2867	Decal - Cover - Panel (NSA)	55- 11
G011 3305	Gear - 16T	15- 12
G020 1052	Stand	49- 5
G020 1072	Fusing Unit Guide	49- 16
G020 1078	Right Shielding Plate	49- 15
G020 1112	Paper Feed Clutch	43- 1
G020 1114	By-pass Feed Clutch	41- 4
G020 1115	Registration Clutch	41- 18
G020 1130	Gear - 65Z/24Z	41- 11
G020 1131	Gear - 58Z/35Z	41- 13
G020 1132	Gear - 68Z	41- 16
G020 1138	Pulley - 24T	41- 27
G020 1144	Gear - 27Z	43- 5
G020 1145	Shaft - Paper Feed Roller	43- 2
G020 1148	Pulley - 30T	41- 8
G020 1157	Gear - 28Z	35- 12
G020 1168	Gear - 52Z/26T	41- 17
G020 1177	Gear - 26Z	41- 32
G020 1178	Pulley - 51T	41- 30
G020 1187	Timing Belt - S2M 158MM	41- 31
G020 1923	CS Ring - M2.4	33- 24
G020 2327	Pressure Spring	31- 20
G020 2355	Transport Guide Shaft	33- 12
G020 2555	Paper Feed Roller	17- 2
G020 2565	Paper Guide	17- 18
G020 2570	Shaft - Paper Feed Roller	17- 17
G020 2577	Spring Plate - Driven Roller	19- 8
G020 2580	Paper End Sensor Bracket	47- 24
G020 2585	Front Pin - Paper Feed Roller	17- 16
G020 2586	Rear Pin - Paper Feed Roller	17- 15
G020 2587	Bushing - Paper Feed	17- 12
G020 2593	Paper Size Sensor - LT	13- 5
G020 2595	Paper Size Sensor - A4	13- 5

Part No.	Description	Page and Index No
G020 2620	Push Switch - Paper Size	47- 5
G020 2622	Release Arm - Paper End Feeler	47- 21
G020 2626	Release Spring - Paper End Feeler	47- 22
G020 2630	Magnet Catch	13- 40
G020 2630	Magnetic Catch	19- 9
G020 2643	Front Grounding Plate - Paper Tray	49- 4
G020 2645	Friction Pad	13- 16
G020 2648	Holder - Paper Size Detector	13- 6
G020 2654	Upper Rear Guide - Paper Tray	49- 14
G020 2655	Upper Front Guide - Paper Tray	49- 13
G020 2658	Grounding Plate - Bottom Plate	13- 18
G020 2702	Pressure Spring - By-pass Feed	15- 8
G020 2712	Holder - By-pass Feed Friction Pad	21- 10
G020 2713	Pressure Spring	21- 20
G020 2716	Friction Pad	21- 18
G020 2721	By-pass Feed Roller	17- 13
G020 2723	By-pass Feed Shaft	17- 11
G020 2735	Guide - By-pass Feed Table	15- 1
G020 2741	Upper Registration Roller	21- 11
G020 2743	Tension Spring	21- 4
G020 2745	Lower Guide Plate - Registration	21- 6
G020 2745	Lower Guide Plate - Registration	21- 13
G020 2753	Bracket - Registration Sensor	17- 7
G020 2754	Upper Paper Guide	21- 16
G020 2765	Knob - Lower Transport Guide	21- 12
G020 2784	Lever - By-pass Feed Table	15- 6
G020 2785	Cover - Feed Roller Shaft	17- 4
G020 2786	Shaft - By-pass Release Lever	15- 5
G020 2787	Cover - By-pass Paper End Sensor	17- 9
G020 3313	Spring	29- 4
G020 3326	Cushion	29- 13
G020 3334	Slider Ass'y	29- 12
G020 3345	Right Seal	29- 3
G020 3565	Grounding Plate	33- 13
G020 3571	Toner Correction Gear - 14/24Z	33- 19

Part No.	Description	Page and Index No.
G020 3888	Pin - Transfer Guide	21- 1
G020 3912	Transport Lever	39- 32
G020 4175	Bushing - Pressure Roller	37- 17
G020 4177	Gear - 40Z	37- 16
G020 5829	Shoulder Screw - M	47- 18
G697 1100	Right Slide Rail	49- 18
G697 1110	Left Slide Rail	49- 19

Part No.	Description	Page and Index No
A028 9300	Grease Kok Barrierta - JFE 55/2	57- 7
A048 2276	Ring - Transport Bracket	33- 11
A048 3860	Transport Bracket Holder	39- 1
A069 1883	Shoe - Scanner	23- 11
A077 1690	Spring Plate - Mirror	23- 9
A077 1690	Spring Plate - Mirror	27- 14
A077 1745	Cover - ADS Sensor	27- 4
A077 1746	Mirror Adjusting Screw	27- 21
A077 5717	Resistor - 1k Ω ±5% 1W	53- 1
A096 3863	Spacer - 4x6x1	13- 38
A111 1753	Seal - 0.1x18x49	23- 2
A111 1753	Seal - 0.1x18x49	25- 11
A126 4400	Copy Tray	7- 20
A126 4460	Slide Copy Tray	7- 18
A126 4470	Copy Tray Guide	7- 19
A134 1071	Left Grip Plate	49- 1
A134 1072	Right Bracket - Grip Plate	49- 3
A152 5120	Optics Control Board	27- 3
A152 5220	Main Switch	45- 4
A153 1285	Emblem (RIC)	7- 2
A153 1285	Emblem (RIC)	55- 2
A153 1354	Hinge Pin	7- 4
A153 1906	Adjust Shoe	27- 12
A153 4087	Thermistor Holder	37- 7
A153 6409	Decal - Keytop Cover (GES)	7- 3
A153 6409	Decal - Keytop Cover (GES)	55- 11
A153 6423	Support Cover (INF)	7- 2
A156 6413	Emblem (SVN)	7- 2
A156 6413	Emblem (SVN)	55- 2
A157 2769	Rear Stopper Spring	13- 13
A184 1672	Thermofuse - 128c	23- 24
A184 2455	Toner Density Sensor	33- 15
A184 3411	Chuck Spring	29- 11
A184 3420	Bottle Chuck	29- 17
A184 3421	Chuck Shaft	29- 16

Part No.	Description	Page and Index No.
A184 3422	Toner Slider	29- 7
A184 3611	Toner Recycle Belt	33- 2
A184 3863	Corona Wire Spring	31- 14
A184 3863	Corona Wire Spring	39- 26
A184 4072	Stripper Pawl	37- 4
A184 4081	Right Retaining Ring - 31	37- 13
A184 4105	Left Retaining Ring - 31	37- 5
A184 5105	IIC RF5A93	53- 2
A184 5205	Scanner Motor - DC24V 96W	25- 19
A184 5225	Exhaust Fan Motor - DC24V 3.6W	45- 14
A184 5344	Scanner Grounding Harness	45- 19
A184 9501	Optics Adjustment Tool	57- 1
A190 1040	Front Safety Switch Arm	35- 24
A190 1041	Front Door Switch Lever	35- 2
A190 1042	Front Lever Bracket	35- 1
A190 1043	Fusing Switch Lever	35- 18
A190 1045	Safety Switch Stay	47- 8
A190 1048	Fusing Lever Cover	47- 11
A190 1073	Paper Exit Pin Bracket	39- 21
A190 1076	Base Cover	49- 6
A190 1080	Exit Stay	49- 7
A190 1084	Front Right Grip Bracket	49- 2
A190 1085	Exit Rear Bracket	39- 33
A190 1111	DC Motor 23W	45- 12
A190 1112	Drive Bracket	41- 25
A190 1117	Support Plate - Drive Unit	41- 14
A190 1118	Imaging Drive Shaft	41- 33
A190 1122	Development Drive Bracket	41- 7
A190 1123	Development Drive Gear	41- 35
A190 1124	Tightner Spring	41- 23
A190 1125	Tightner Bracket	41- 26
A190 1128	Tightner Pulley	41- 28
A190 1131	Drive Gear Joint Bracket	35- 11
A190 1132	Gear - 32Z	35- 13
A190 1134	Support Bracket	35- 16

Part No.	Description	Page and Index No
A190 1136	Gear Shaft	35- 15
A190 1138	Spacer	35- 14
A190 1139	Magnetic Clutch - Vertical	17- 1
A190 1141	Timing Belt - SM699	41- 5
A190 1144	Tightner Pulley	41- 12
A190 1145	Release Spring	41- 1
A190 1146	Tightner Ass'y	41- 2
A190 1149	Tightner Pulley	41- 3
A190 1151	Duct Cover	35- 8
A190 1152	Guide Rail	35- 7
A190 1153	Duct	35- 9
A190 1155	Duct Bracket	45- 13
A190 1156	Ozone Filter Cap	45- 16
A190 1157	Ozone Filter	45- 15
A190 1160	Safety Switch Bracket	35- 6
A190 1162	Safety Switch Arm	35- 23
A190 1163	Drive Release Wire	35- 10
A190 1164	Safety Switch Lever	35- 5
A190 1165	Tightner Bracket	41- 24
A190 1171	Imaging Unit Holder	41- 36
A190 1174	Pressure Spring	41- 37
A190 1180	Pulley - 20Z/63Z	41- 20
A190 1181	Timing Belt - S3M288	41- 21
A190 1182	Gear - 21Z/40Z	41- 19
A190 1183	Pressure Spring	41- 34
A190 1185	Development Drive Shaft	41- 9
A190 1187	High Voltage Supply Bracket	47- 14
A190 1191	By-pass Feed Cover	47- 13
A190 1192	Main Switch Bracket	45- 3
A190 1193	Connector Bracket	47- 17
A190 1195	Right Harness Cover	45- 1
A190 1196	Upper Seal - By-pass Feed	47- 32
A190 1197	Front Seal - By-pass Feed	47- 31
A190 1198	Development Bias Terminal	41- 22
A190 1260	Upper Cover	7- 12

Part No.	Description	Page and Index No.
A190 1282	Magnet Catch	7- 6
A190 1283	Magnet Catch	7- 7
A190 1286	Front Cover Hing Bracket	47- 1
A190 1297	Right Lower Cover	7- 24
A190 1300	Left Upper Cover	7- 17
A190 1337	Inner Cover	7- 8
A190 1341	Front Door Lever	35- 22
A190 1342	Front Lever Support Plate	35- 19
A190 1345	Release Spring - Front Lever	35- 20
A190 1452	Keytop - Start (RIC/NRG)	11- 4
A190 1453	Keytop - Clear/Stop (RIC/NRG)	11- 5
A190 1454	Keytop - Clear Mode (RIC/NRG)	11- 6
A190 1455	Keytop - 10 keys (RIC/NRG)	11- 7
A190 1651	Left Scale Support Plate	23- 5
A190 1652	Exposure Glass Seal	23- 6
A190 1654	Right Bracket - Exposure Glass	23- 23
A190 1655	Scale - A4	7- 14
A190 1660	Scanner Guide Rail	23- 1
A190 1663	Lens Guide Rail	25- 14
A190 1664	Pulley Bracket	25- 16
A190 1666	Pulley Bracket	25- 2
A190 1669	Lens Support Bracket	25- 18
A190 1671	Mirror Drive Motor DC24V 81.6W	27- 2
A190 1672	Lens Drive Motor DC24V 81.6W	27- 1
A190 1674	6th Mirror Bracket - Front	27- 24
A190 1675	6th Mirror Bracket - Rear	27- 22
A190 1676	Rod Bracket	27- 7
A190 1678	3rd Scanner Bracket	27- 11
A190 1679	Mirror Sensor Shutter	27- 10
A190 1682	Lens Caridge	25- 6
A190 1683	Shading Plate	25- 9
A190 1684	Shielding Plate	25- 10
A190 1685	Lens Cover Bracket	25- 17
A190 1688	Bushing	23- 16
A190 1689	Clamp	23- 18

Part No.	Description	Page and Index No
A190 1691	2nd Scanner Frame	23- 10
A190 1692	2nd Scanner Support Plate	23- 17
A190 1693	Lens Cover	25- 12
A190 1694	Shoe Bracket	23- 12
A190 1696	Motor Bracket	25- 20
A190 1698	Shielding Plate	25- 7
A190 1725	1st Scanner Clamp	23- 20
A190 1740	Mylar Cushion	23- 26
A190 1751	Harness Guide Pulley Ass'y	23- 14
A190 1802	Timing Pulley - 30Z	27- 8
A190 1803	Timing Pulley - 22Z/44Z	25- 22
A190 1809	6th Mirror	27- 15
A190 1810	Mirror Guide Rod	27- 9
A190 1811	4th/5th Mirror	27- 6
A190 1812	Blue Filter	25- 5
A190 1813	Timing Belt - L824P2M	25- 13
A190 1814	Scanner Guide Rod	23- 22
A190 1815	2nd/3rd Mirror	23- 8
A190 1816	Timing Belt - L1110P2M	25- 1
A190 1817	Timing Belt - L754P2M	25- 23
A190 1818	2nd Scanner Spring	25- 15
A190 1819	1st Scanner Spring	25- 3
A190 1820	Lens Holder Spring	25- 21
A190 1821	Harness Guide Pulley	23- 15
A190 1824	2nd Scanner Support Plate	23- 13
A190 1825	3rd Scanner Support Plate	27- 19
A190 1827	Rack Gear	27- 18
A190 1856	Platen Cover Bracket	9- 3
A190 2010	Charge Corona Unit	31- 2
A190 2020	Quenching Lamp Unit	35- 21
A190 2030	Erase Lamp Unit	35- 25
A190 2040	Transfer Corona Wire Receptacle	47- 16
A190 2060	Charge Corona Grid	31- 3
A190 2062	Spring Plate - Corona Grid	31- 7
A190 2065	Charge Corona Wire	31- 4

Part No.	Description	Page and Index No.
A190 2070	Corona Wire Cleaner Ass'y	31- 12
A190 2075	Cleaning Shaft	31- 8
A190 2085	Front End block Cover	31- 5
A190 2086	Rear Shielding Sheet	31- 11
A190 2105	Corona Wire Terminal	31- 10
A190 2116	Rear End block Cover	31- 9
A190 2280	Front Side Plate	31- 1
A190 2290	Rear Side Plate	31- 24
A190 2320	Knob Screw	31- 13
A190 2330	Toner Recycle Cover	33- 21
A190 2564	Relay Roller	17- 14
A190 2682	Torque limitter Spring	41- 38
A190 2698	Support Cover - By-pass Feed	15- 9
A190 2700	By-pass Feed Unit	15- 0
A190 2701	By-pass Feed Cover	15- 3
A190 2702	Paper Guide	15- 13
A190 2704	Bottom Plate - By-pass Feed	15- 14
A190 2705	Right Side Fence	15- 11
A190 2706	Left Side Fence	15- 15
A190 2707	Side Fence Rack	15- 2
A190 2708	Decal - By-pass Feed	15- 4
A190 2708	Decal - By-pass Feed	55- 4
A190 2711	Friction Pad Stay	21- 5
A190 2714	Friction Pad Holder Ass'y	21- 19
A190 2717	Friction Pad Guide	21- 17
A190 2740	Lower Registration Roller	21- 8
A190 2771	Registration Sensor	17- 5
A190 2772	Paper End Sensor	17- 8
A190 2780	Front Bushing	21- 2
A190 2781	Rear Bushing	21- 9
A190 2782	Bottom Plate Stay	15- 10
A190 2783	Registration Roller Knob	21- 7
A190 2824	Heater Seal	49- 10
A190 2825	Heater Bracket	49- 8
A190 2900	Switch Bracket	19- 4

Part No.	Description	Page and Index No
A190 2902	Switch Lever	19- 2
A190 2905	Cushion	19- 11
A190 3050	Development Roller Ass'y	31- 26
A190 3094	Development Entrance Seal	31- 15
A190 3112	1st Agitator	33- 5
A190 3116	2nd Agitator	33- 7
A190 3125	Bushing	33- 8
A190 3128	Seal 6mm	33- 22
A190 3152	Gear - 18Z	31- 16
A190 3153	Gear -	33- 6
A190 3155	Idle Gear - 17Z	31- 17
A190 3156	Cam Gear	31- 25
A190 3162	Imaging Unit Upper Case	31- 23
A190 3165	Long Seal	31- 22
A190 3166	Rear Seal	31- 18
A190 3167	Front Seal	31- 19
A190 3171	Imaging Unit Shutter	31- 21
A190 3183	Harness Holder	33- 9
A190 3192	Lower Seal -3x6x396	33- 23
A190 3193	Seal - 5x55	33- 25
A190 3361	Toner Bottle Holder Guide	17- 3
A190 3363	Mylar Seal - 10x360	17- 21
A190 3550	Cleaning Blade	33- 20
A190 3560	Toner Collection Coil	33- 10
A190 3563	Toner Recycle Roller	33- 3
A190 3564	Toner Cap	33- 1
A190 3568	Rear Bushing	33- 18
A190 3569	Recycle Roller Bushing	33- 4
A190 3570	Cleaning Entrance Seal	33- 14
A190 3851	T/S Unit	39- 20
A190 3863	Front End Block Cover	39- 25
A190 3864	Rear End Block Cover	39- 23
A190 3866	Transfer Corona Wire	39- 24
A190 3880	Discharge Plate Unit	39- 22
A190 3890	T/S Corona Receptacle	39- 29

Part No.	Description	Page and Index No.
A190 3900	Transfer Guide	39- 18
A190 3903	Transfer Release Guide	39- 19
A190 3905	Transfer Corona Rail	39- 17
A190 3906	Spring Plate	39- 16
A190 3911	T/S Position Plate	39- 31
A190 3914	Bushing	39- 30
A190 4053	Fusing Unit Knob	37- 2
A190 4070	Fusing Unit Cover	37- 11
A190 4071	Fusing Entrance Guide	37- 23
A190 4073	Fusing Stay	37- 9
A190 4076	Fusing Frame	37- 26
A190 4082	Pressure Roller	37- 18
A190 4086	Hot Roller Bushing	37- 14
A190 4088	Seal	37- 27
A190 4089	Stripper Pawl Bracket	37- 1
A190 4092	Stripper Pawl Spring	37- 3
A190 4096	Idle Gear - 18Z	39- 3
A190 4097	Idle Gear - 16Z	39- 2
A190 4099	Pressure Roller Lever	37- 20
A190 4119	Thermistor	37- 8
A190 4120	Front Heater Bracket	37- 25
A190 4121	Rear Heater Bracket	37- 22
A190 4129	Connector Bracket	37- 21
A190 4385	Anti static Brush	37- 6
A190 4386	Anti static Brush	37- 24
A190 4455	Exit Sensor Feeler	39- 10
A190 4456	Exit Sensor Feeler Spring	39- 9
A190 4463	Exit Roller Gear - 23Z	39- 15
A190 4465	Exit Roller	39- 5
A190 4470	Lower Guide Plate	39- 4
A190 4471	Upper Guide Plate	39- 6
A190 4474	Exit Roller Holder	39- 8
A190 4476	Decal - High Temperature	39- 14
A190 4476	Decal - High Temperature	55- 3
A190 4478	Exit Cover	39- 13

Part No.	Description	Page and Index No
A190 4479	Shielding Plate	39- 12
A190 4484	Anti static Brush	47- 7
A190 5107	Resistor - 180 Ω ±5% 3W	53- 3
A190 5108	Heat Sink	53- 4
A190 5145	Development Relay Board	47- 20
A190 5150	High Voltage Supply Board	45- 5
A190 5335	DC Power Harness	45- 10
A190 5335	DC Power Harness	47- 19
A190 5335	DC Power Harness	47- 34
A190 5343	Scanner H.P Harness	27- 16
A190 5344	Relay Harness - By-pass Feed	17- 10
A190 5345	Exit Sensor Harness	47- 10
A190 5346	Development Unit Harness	33- 17
A190 9002	Grease - CPL501 (5 Pcs/set)	57- 8
A193 1074	Relay Harness Cover	49- 17
A193 1246	Plate Cover Hinge Ass'y	9- 4
A193 2649	Paper Size Detector - LT	13- 4
A193 2650	Paper Size Detector - A4	13- 4
A216 6270	Front Cover Ass'y (INF)	7- 1
A422 1082	Pick-up Spring	35- 17
5053 0223	Bushing - 8mm	21- 15
5053 0223	Bushing - 8mm	41- 15
5203 9501	Silicone Grease G-510	57- 4
5206 2684	Shoulder Screw - M3	35- 3
5215 2713	Bottom Plate Pad	15- 16
5420 9507	Digital Multimeter	57- 5
5420 9516	Test Chart OS-A3 (10pcs/set)	57- 2
5442 9101	Setting Powder	57- 6
5442 9103	Launa Oil 40	57- 3
5446 1205	Release Spring	41- 29
5447 2681	Snap Ring	15- 7
5447 2681	Snap Ring	21- 3
5447 2681	Snap Ring	43- 4
5447 2681	Snap Ring	47- 25
5448 2804	Platen Cover Sheet	9- 6

Part No.	Description	Page and Index No.
0313 0300W	Philips Pan Head Screw - M3x30	45-104
0353 0060B	Philips Pan Head Screw - M3x6	7-102
0353 0060B	Philips Pan Head Screw - M3x6	23-103
0353 0060B	Philips Pan Head Screw - M3x6	27-102
0353 0060B	Philips Pan Head Screw - M3x6	31-101
0353 0060B	Philips Pan Head Screw - M3x6	33-101
0413 0082B	Tapping Screw - M3x8	39-103
0414 0142B	Bindinging Self Tapping Screw - M4x14	9-101
0434 0060B	Pan Head Self-tapping Screw - M4x6	49-103
0434 0102W	Tapping Screw - M4x10	7-103
0450 3006B	Tapping Screw - M3x6	25-105
0450 3006B	Tapping Screw - M3x6	27-101
0450 3008B	Tapping Screw - M3x8	13-101
0450 3008B	Tapping Screw - M3x8	17-104
0450 3010B	Tapping Screw - M3x10	25-102
0450 4030B	Tapping Screw - M4x30	45-106
0451 3006B	Tapping Screw - M3x6	13-106
0451 3006B	Tapping Screw - M3x6	15-102
0451 3006B	Tapping Screw - M3x6	17-103
0451 3006B	Tapping Screw - M3x6	19-105
0451 3006B	Tapping Screw - M3x6	21-101
0451 3006B	Tapping Screw - M3x6	23-102
0451 3006B	Tapping Screw - M3x6	25-101
0451 3006B	Tapping Screw - M3x6	27-103
0451 3006B	Tapping Screw - M3x6	35-101
0451 3006B	Tapping Screw - M3x6	37-101
0451 3006B	Tapping Screw - M3x6	39-101
0451 3006B	Tapping Screw - M3x6	41-106
0451 3006B	Tapping Screw - M3x6	43-101
0451 3006B	Tapping Screw - M3x6	45-105
0451 3006B	Tapping Screw - M3x6	47-103
0451 3006B	Tapping Screw - M3x6	49-101
0451 3010B	Tapping Screw - M3x10	49-102
0451 3012B	Tapping Screw With Washer - M3x12	41-107
0451 3014B	Tapping Screw - M3-14	19-104

Part No.	Description	Page and Index No
0451 4006B	Tapping Screw - 4x6	19-102
0452 3006B	Tapping Screw - M3x6	29-101
0452 3006B	Tapping Screw - 3x6	31-102
0452 3006B	Tapping Screw - 3x6	33-102
0452 3008B	Tapping Screw - M3x8	13-102
0452 3008B	Tapping Screw - M3x8	39-105
0452 3008Z	Binding Tapping Screw - M3x8	7-101
0452 3010Z	Binding Tapping Screw - 3x10	7-104
0453 3006Z	Binding Tapping Screw - M3x6	15-101
0453 3006Z	Binding Tapping Screw - M3x6	23-105
0453 4006B	Tapping Screw - 4x6	13-105
0633 0120E	Spring Pin - M3x12	41-104
0701 0030B	Flat Washer - M3	25-103
0720 0025E	Retaining Ring - M2.5	39-107
0720 0030E	Retaining Ring - M3	13-103
0720 0030E	Retaining Ring - M3	19-103
0720 0030E	Retaining Ring - M3	35-102
0720 0030E	Retaining Ring - M3	47-105
0720 0040E	Retaining Ring - M4	17-102
0720 0040E	Retaining Ring - M4	23-104
0720 0040E	Retaining Ring - M4	27-105
0720 0040E	Retaining Ring - M4	39-102
0720 0040E	Retaining Ring - M4	41-101
0720 0060E	Retaining Ring - M6	25-104
0720 0060E	Retaining Ring - M6	41-103
0741 3808	Ball Bearing - 8x16x5mm	41-105
0805 3480	Bushing - 6mm	17-101
0805 3480	Bushing - 6mm	39-104
0805 3480	Bushing - 6mm	41-102
0951 3005B	Philips Screw With Flat Washer - M3x5	27-106
0951 3006B	Philips Screw With Flat Washer - M3x6	37-103
0951 3006B	Philips Screw With Flat Washer - M3x6	39-106
0954 3012B	Screw - M3X12	37-102
0960 4012W	Philips Flange Screw - M4x12	13-104
1102 4201	Connector - 2p	53-103

Part No.	Description	Page and Index No.
1102 4202	Connector - 3p	53-104
1102 4204	Ct Header - 5p	53-105
1102 4205	Ct Header- 6p	53-106
1102 4206	Connector - 7p	53-107
1102 4208	Connector - 9p	53-108
1102 4209	Ct Header - 10p	53-109
1102 4211	Ct Header - 12p	53-110
1102 4619	Connector - 2p	53-111
1102 4631	Ct Connector - 2p	53-112
1102 4634	Ct Connector - 5p	53-113
1102 4646	Ct Connector - 5p	53-114
1102 5303	Connector - 4p	53-115
1103 1770	Connector - 4p	53-116
1103 1771	Connector - 5p	53-117
1103 1772	Pin Header - 6p	53-118
1103 1778	Pin Header - 12p	53-119
1104 0511	IC Socket - 8p-DICF-8CS-E	53-120
1104 0589	Dip Socket : 32p	53-121
1105 0008	Nylon Clamp - 2n	27-107
1105 0199	Clamp	35-104
1105 0199	Clamp	43-102
1105 0199	Clamp	45-101
1105 0199	Clamp	47-104
1105 0199	Clamp	49-104
1105 0290	Harness Clamp - Horizontal	47-101
1105 0310	Wire Clamp	23-101
1105 0310	Wire Clamp	43-103
1105 0310	Wire Clamp	45-103
1105 0328	Harness Clamp - Es-0505	27-104
1105 0329	Clamp - ES-0510	47-102
1105 0413	Harness Clamp	45-102
1107 0485	Fuse (Glass Case) 17A 125V	45-107
1107 0855	Fuse - 8A 125V	45-108
1107 0868	Fuse - 5A 125V	45-110
1107 0872	Fuse - 3.15A 125V	45-109

Part No.	Description	Page and Index No
1107 0883	Fuse - 3.15A 250V	45-109
1107 0883	Fuse - 3.15A 250V	45-110
1107 0885	Fuse - 6.3A 250V	45-107
1107 0885	Fuse - 6.3A 250V	45-108
1204 2334	Interlock Switch - Fa1l	35-103
1204 2356	Micro Switch - Am51612a531	19-101
1400 0072	Transistor - 2sc372y	53-122
1400 0291	Transistor - 2sa1020y	53-123
1400 0652	IC Socket - 8p-DICF-8CS-E	53-124
1401 0694	Zener Diode - Rd6.8fb	53-125
1402 0277	Zener Diode - 1z12	53-126
1402 1050	Silicone Diode - 100V 1A	53-127
1402 1125	Zener Diode - 1W-RD33FB2	53-128
1402 1160	Diode - S5688	53-129
1402 1310	Diode - D1NL20V	53-130
1407 1535	IC - TD62308AP	53-131
1407 2187	TTLIC - SN74LS07NS	53-132
1407 2836	IC - HD74C14FP	53-133
1407 3764	IC - TC7SU04F	53-134
1407 3857	Transistor - Array - TD62381F	53-135
1407 4315	IC - TE7751	53-136
1407 4642	IC - MTD1110	53-137
1407 4672	C TTL HD74LS368FP	53-138
1407 4678	C EEPROM BR93LC56A	53-139
1408 0150	IC - ULN2003AN	53-140
1408 0595	IC - NJM2904M	53-141
1408 0611	IC - 3771	53-142
1408 0826	IC - TA8428K	53-143
1503 0563	Oscillator-9.83mtz040	53-144
1601 5295	Resistor - 0.47 Ω ±2% 1W	53-145
1601 8157	Variable Resistor - 100	53-146
1607 0878	Inductor - BLM21A102S	53-147
1630 3101	Resistor - 100Ω - 1/1	53-148
1630 3102	Resistor - 1KΩ 1/10W	53-149
1630 3103	Resistor - 10KΩ 1/10W	53-150

Part No.	Description	Page and Index No.
1630 3105	Resistor - 1M Ω ±5%	53-151
1630 3204	Resistor - 220k Ω 1/10W ±5%	53-152
1630 3222	Resistor - 2.2KΩ 1/10	53-153
1630 3223	Resistor - 22kΩ - 1/1	53-154
1630 3393	Resistor - 39K Ω 1/10	53-155
1630 3472	Resistor - 4.7K Ω 1/10	53-156
1630 3512	Resistor - 5.1K Ω 1/10W	53-157
1630 3751	Resistor - 750 Ω ±5% 1/10W	53-158
1630 3752	Resistor - 7.5k Ω ±5% 1/10W	53-159
1632 0000	Resistor - 0 Ω 1/8W	53-160
1633 0000	Resistor - 0Ω 1/10W:J	53-161
1633 1001	Resistor - 1K Ω ±1%	53-162
1633 1002	Resistor - 10K Ω ±1%	53-163
1633 1050	Resistor - 105 Ω ±1% 1/10W	53-164
1633 2150	Resistor - 215 Ω ±1% 1/10W	53-165
1633 3901	Resistor - 3.9 Ω ±1%	53-166
1633 7870	Resistor - 787 Ω ±1% 1/10W	53-167
1633 9319	Resistor - 93.1 Ω ±1% 1/10W	53-168
1640 5100	Capacitor - 10µF +20% 35V	53-169
1640 5109	Capacitor - 1µF ±20% -50V	53-170
1640 5470	Capacitor - 47µF ±20%	53-171
1660 3101	Capacitor - 100pF 50V	53-172
1660 3471	Capacitor - 470pF 50V	53-173
1660 5332	Capacitor - 3300pF ±10% 50V	53-174
1660 7103	Capacitor - 10000pF 50V	53-175
1660 7104	Capacitor - 100000pF 50V	53-176
1905 0008	IC UVEPROM 1M X8 120NS	53-101

Part No.	Description	Page and Index No

A245
PARTS LOCATION AND LIST

This section instructs you as to the numbers and names of parts on this machine

LOCATION OF UNIT

1. EXTERIOR (A245)

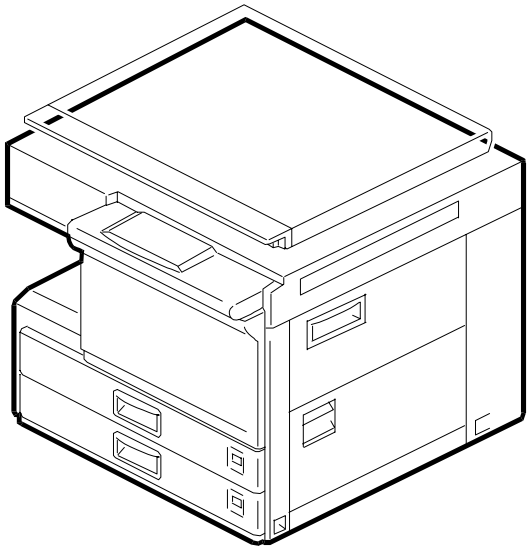

See Page 7

2. PLATEN COVER (A245)

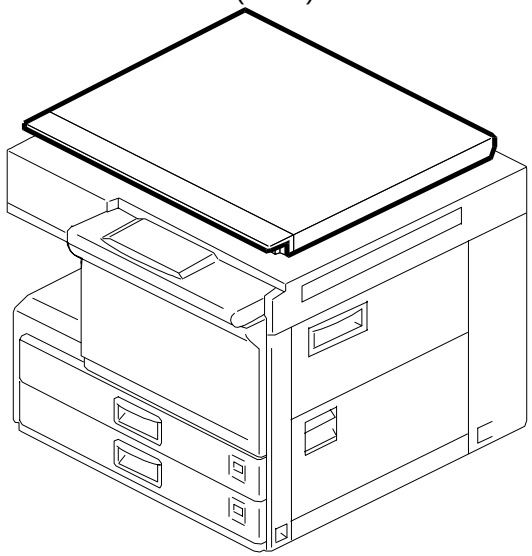

See Page 9

3. OPERATION PANEL (A245)

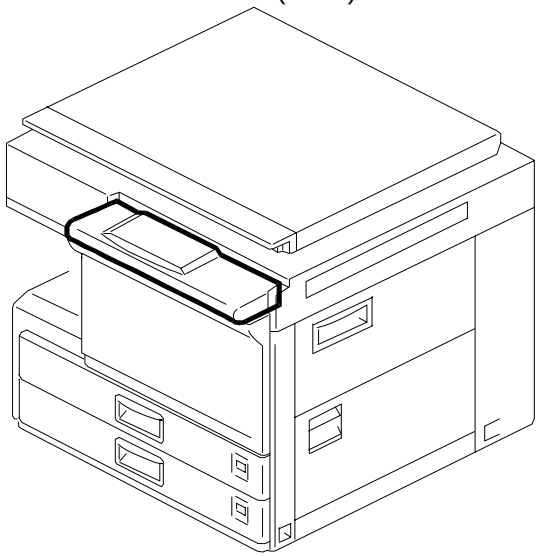

See Page 11

4. PAPER TRAY (A245)

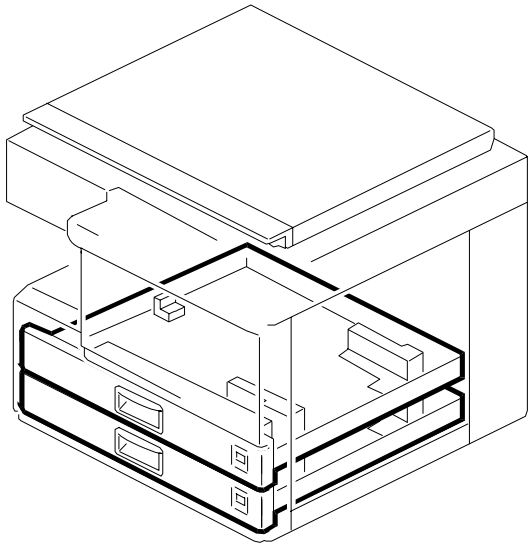

See Page 13

5. BY-PASS FEED TABLE (A245)

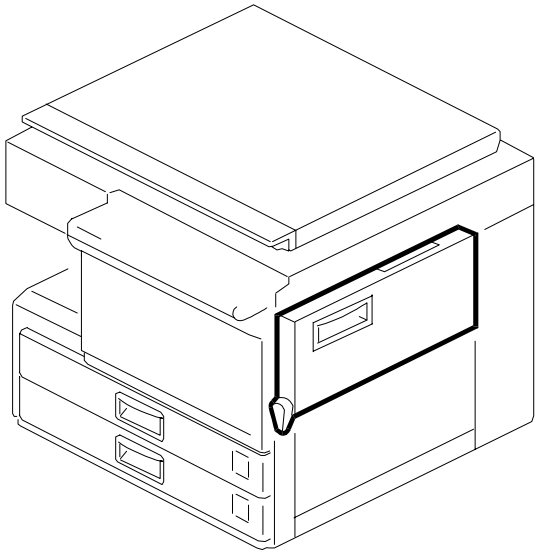

See Page 15

6. PAPER FEED SECTION 1 (A245)

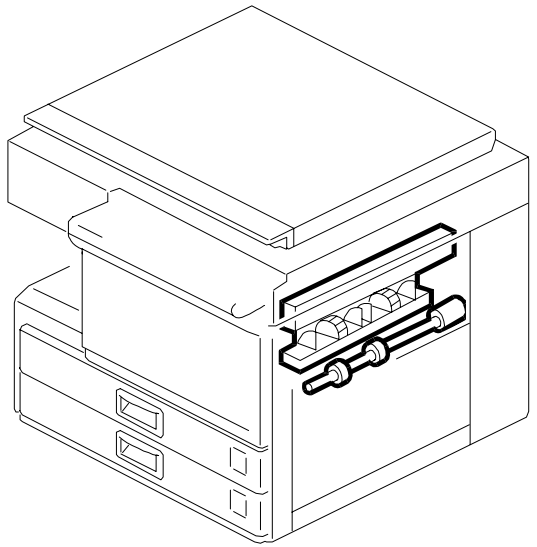

See Page 17

LOCATION OF UNIT

7. PAPER FEED SECTION 2 (A245)

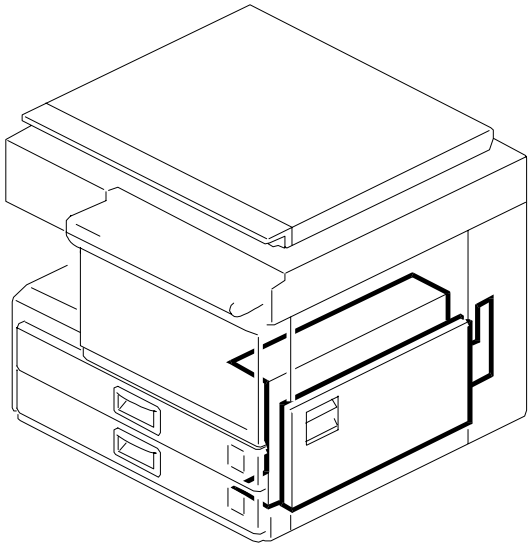

See Page 19

8. PAPER REGISTRATION (A245)

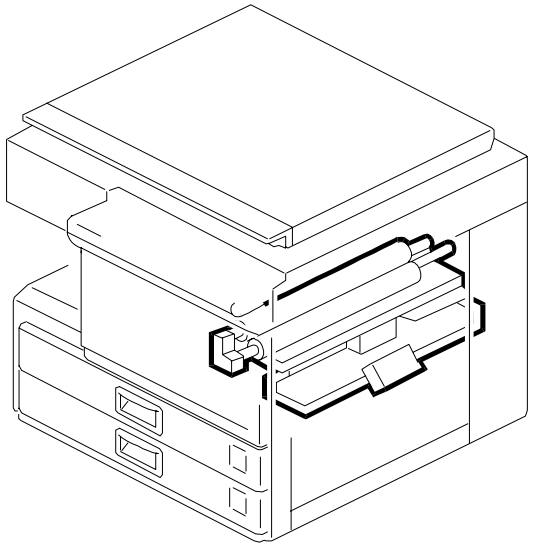

See Page 21

9. OPTICS SECTION 1 (A245)

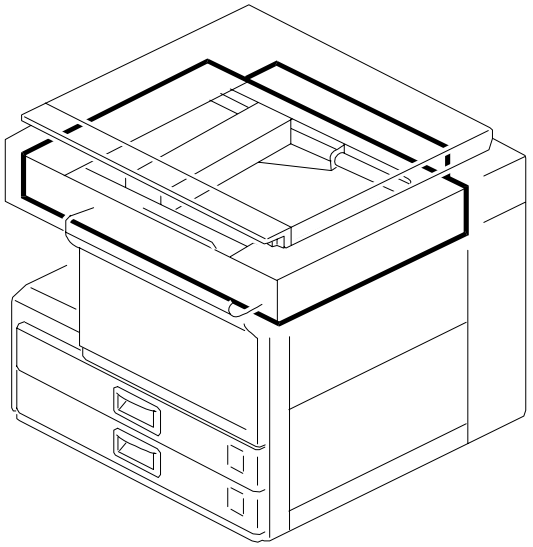

See Page 23

10. OPTICS SECTION 2 (A245)

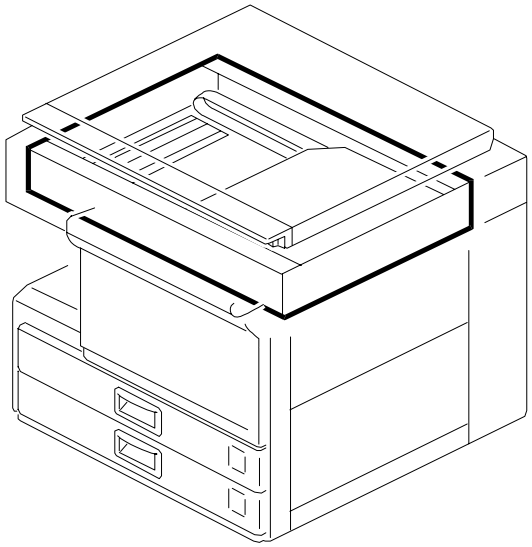

See Page 25

11. OPTICS SECTION 3 (A245)

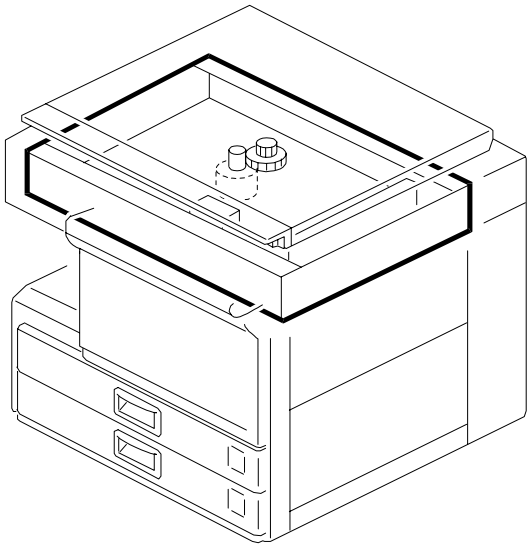

See Page 27

12. TONER BOTTLE HOLDER UNIT (A245)

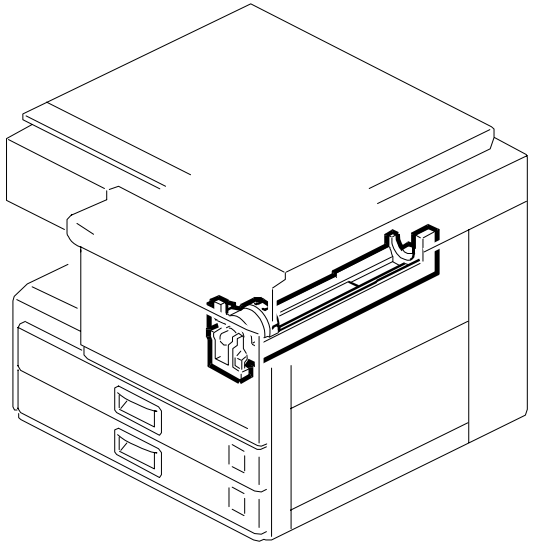

See Page 29

LOCATION OF UNIT

13. IMAGING UNIT - 1 (A245)

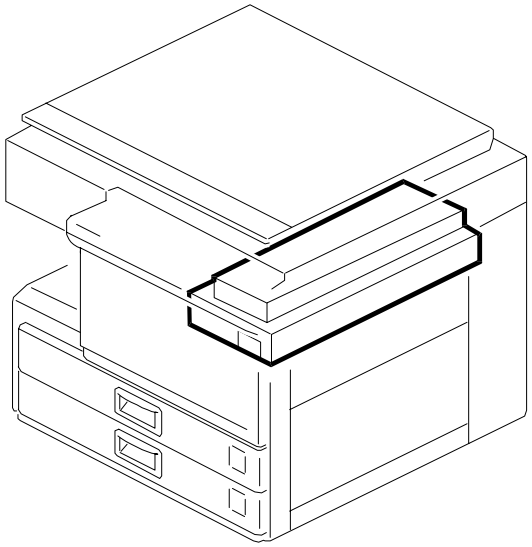

See Page 31

14. IMAGING UNIT - 2 (A245)

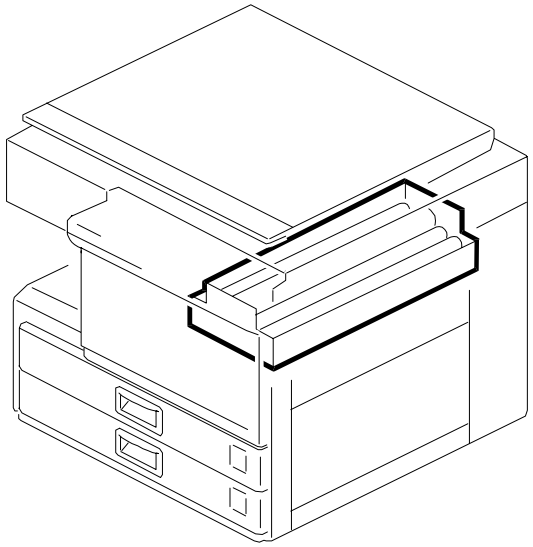

See Page 33

15. LOWER OPTICS SECTION (A245)

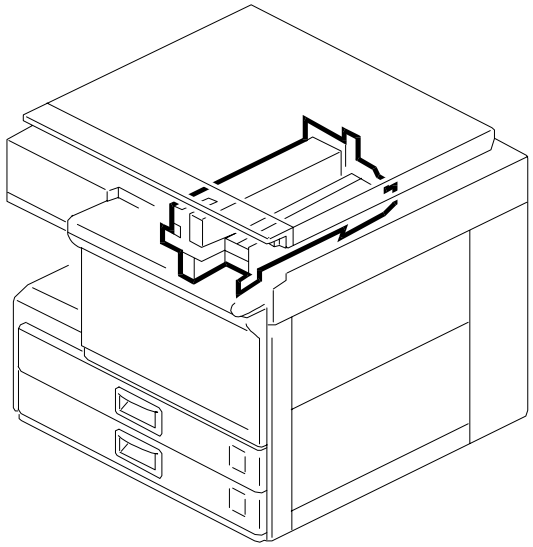

See Page 35

16. FUSING UNIT (A245)

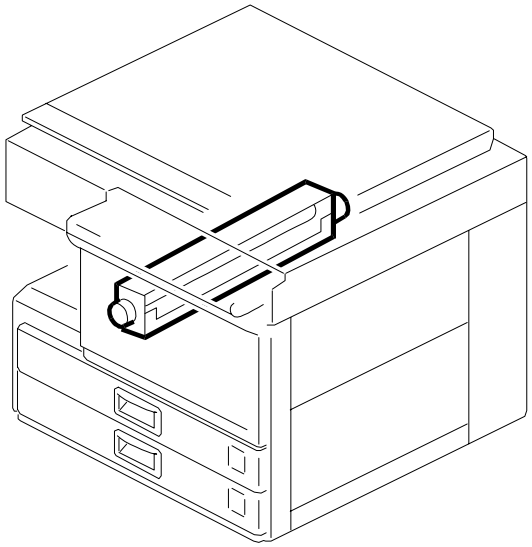

See Page 37

17. TRANSFER AND EXIT SECTION (A245)

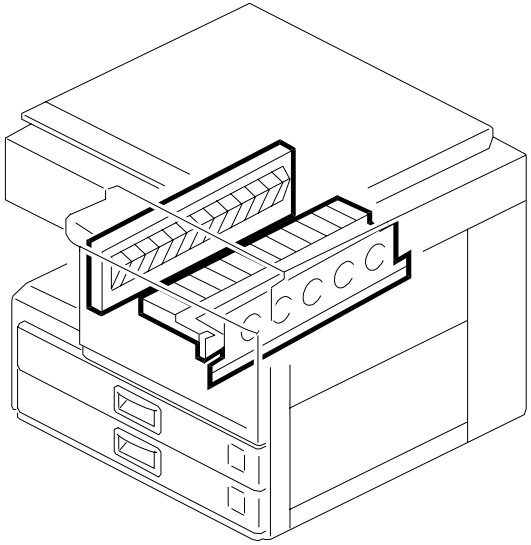

See Page 39

18. DRIVE SECTION 1 (A245)

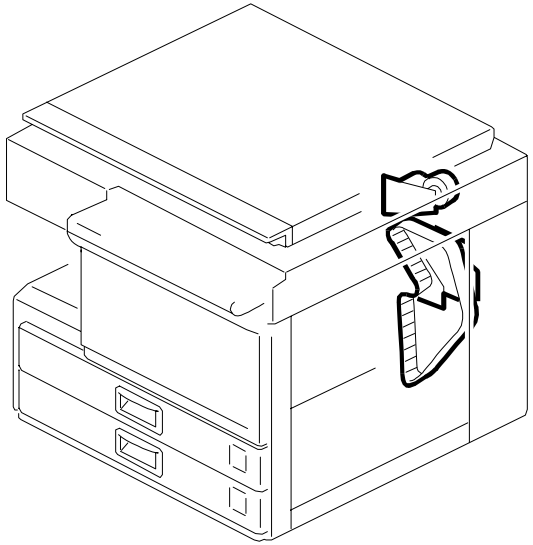

See Page 41

LOCATION OF UNIT

19. DRIVE SECTION 2 (A245)

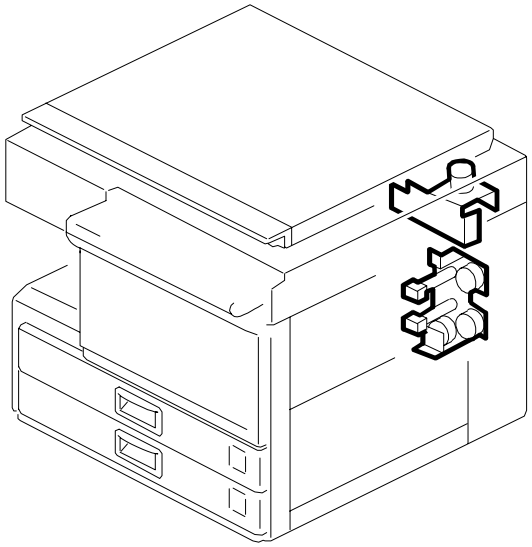

See Page 43

20. ELECTRICAL SECTION 1 (A245)

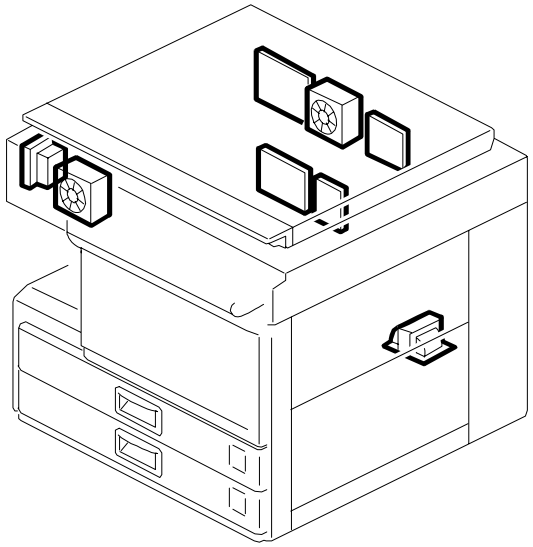

See Page 45

21. ELECTRICAL SECTION 2 (A245)

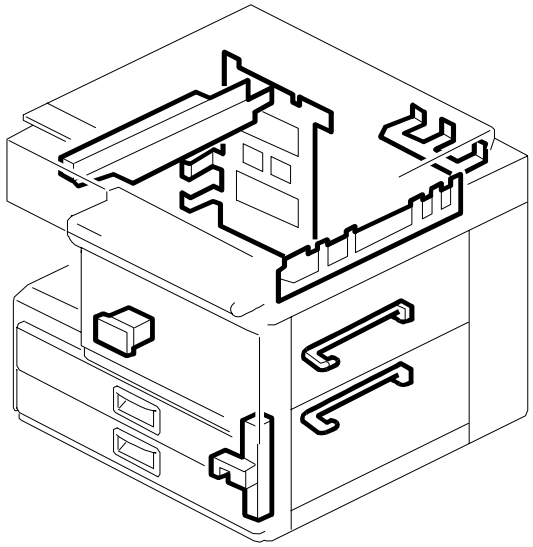

See Page 47

22. FRAME SECTION (A245)

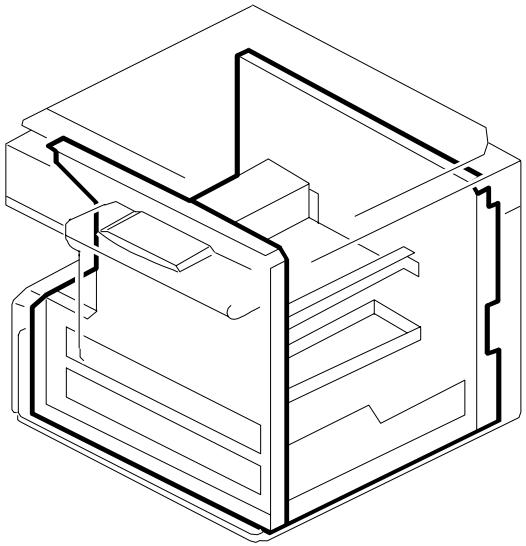

See Page 49

1. EXTERIOR (A245)

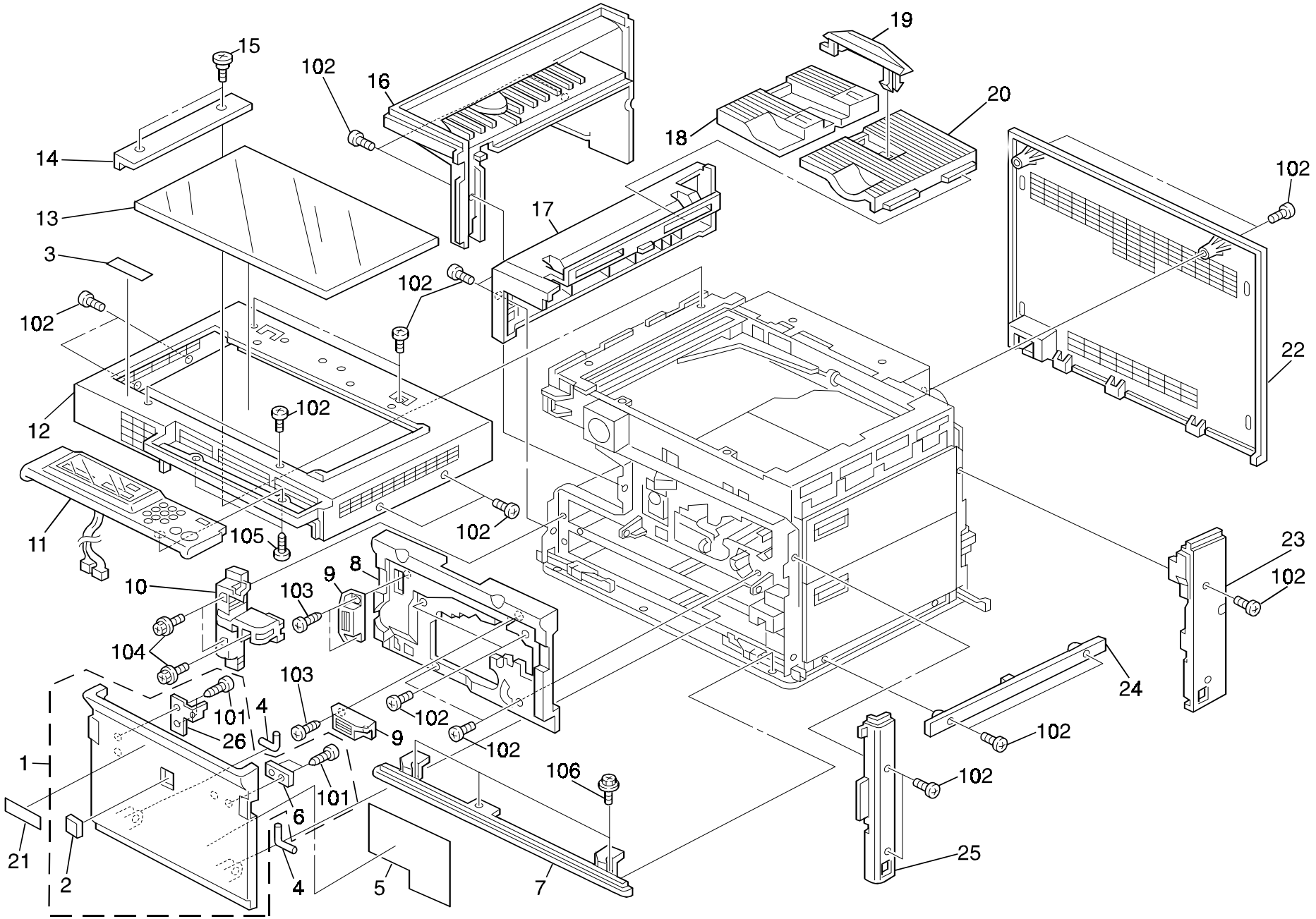

1. EXTERIOR (A245)

Rev. 11/07/2000

Index No.	Part No.	Description	Q'ty Per Assembly
1	A245 1270	Front Cover Ass'y (RIC)	1
1	A219 6070	Front Cover Ass'y (NRG)	1
1	A245 6470	Front Cover Ass'y (SVN)	1
1	A245 6270	Front Cover Ass'y (INF)	1
2	A153 1285	Emblem (RIC/NRG)	1
2	A156 6413	Emblem (SVN)	1
2	A153 6423	Support Cover (INF)	1
3	C225 2867	Decal - Cover - Panel (NSA)	1
3	C225 2866	Decal - key Top Cover (REX)	1
3	A153 6409	Decal - key Top Cover (GES)	1
4	A298 1354	Hinge Pin	2
5	A219 1284	Operation Guide Sheet	1
6	A190 1282	Magnet Catch	1
7	A190 1287	Front Lower Cover	1
8	A190 1337	Inner Cover	1
9	AG07 0004	Magnetic Catch	2
10	G020 2677	Support - Paper Tray - Left	1
11	A245 1450	Operation Panel Ass'y - LT (RIC/NRG)	1
11	A245 1451	Operation Panel Ass'y - A4	1
11	A245 1452	Operation Panel Ass'y -LT (SVN)	1
12	A190 1260	Upper Cover	1
13	AC01 2042	Exposure Glass	1
14	A190 1655	Scale - A4	1
15	AA14 3070	Shoulder Screw - M2x2	2
16	A245 1305	Left Lower Cover	1
17	A190 1300	Left Upper Cover	1
18	A126 4460	Slide Copy Tray	1
19	A126 4470	Copy Tray Guide	1
20	A126 4400	Copy Tray	1
21	A245 6182	Model Name Plate - GES	1
21	A245 6184	Model Name Plate - NSA	1
21	A245 6186	Model Name Plate - REX	1
21	A219 6186	Model Name Plate - GENERIC	1
22	A245 1330	Rear Cover	1
23	A190 1290	Rear Right Cover	1
24	A190 1297	Right Lower Cover	1
25	A190 1295	Front Right Cover	1
26	A190 1283	Magnet Catch	1
101	0452 3008Z	Bind Tapping Screw - M3x8	
102	0353 0060B	Philips Pan Head Screw - M3x6	
103	0434 0102W	Tapping Screw - M4x10	
104	0451 3014B	Tapping Screw - M3-14	
105	0452 3010Z	Bind Tapping Screw - 3x10	
106	0451 3006B	Tapping Screw - M3x6	

2. PLATEN COVER (A245)

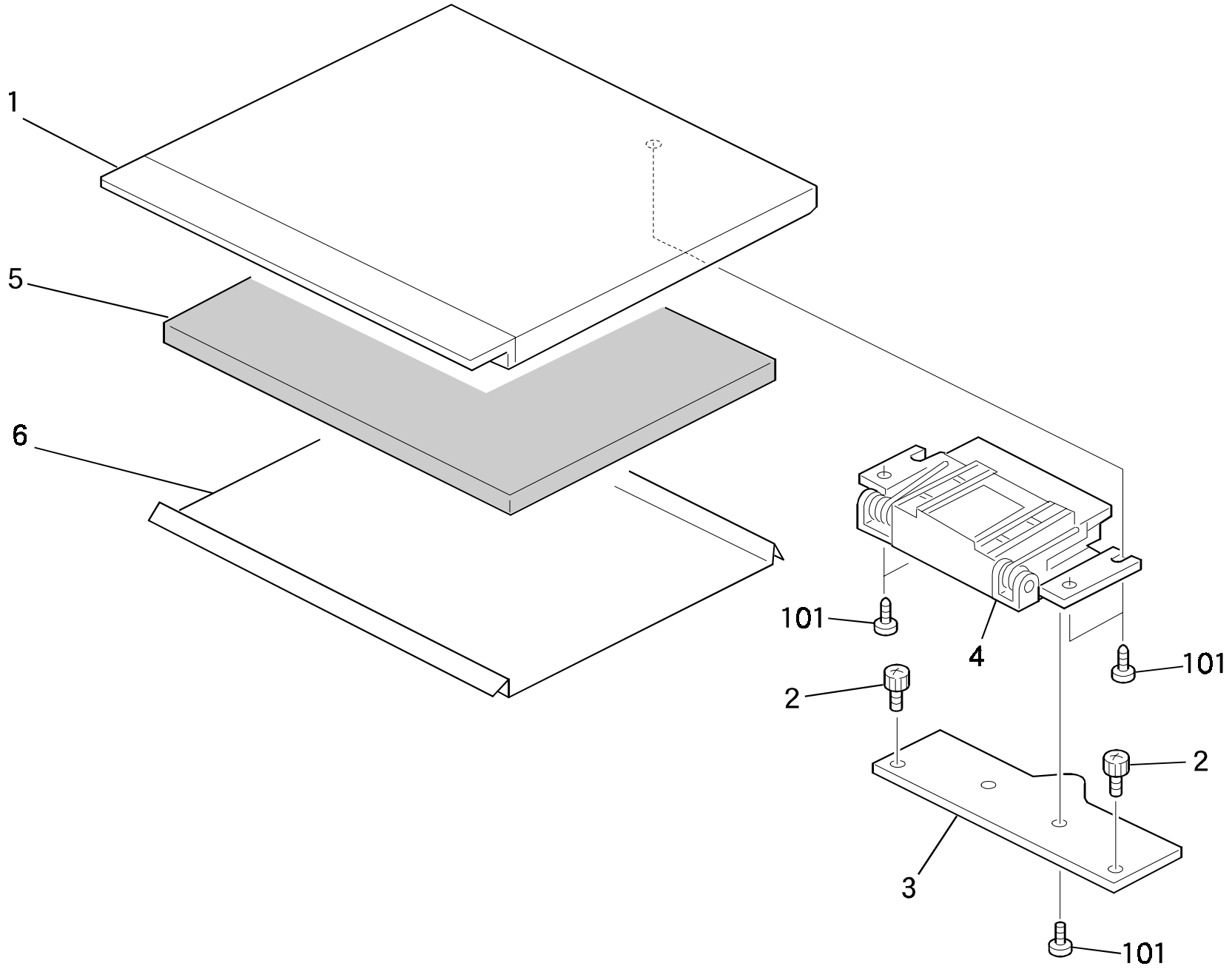

2. PLATEN COVER (A245)

Rev. 11/20/2000

Index No.	Part No.	Description	Q'ty Per Assembly
1	A219 1391	Platen Cover	1
2	AA14 3424	Knob Screw - M4x8	2
3	A190 1856	Platen Cover Bracket	1
4	A193 1248	Platen Cover Hinge Ass'y	1
5	AA16 2067	Platen Cover Pad	1
6	**5448 2804**	**Platen Cover Sheet**	**1**

Index No.	Part No.	Description	Q'ty Per Assembly
101	0414 0142B	Binding Self Tapping Screw - M4x14	

3. OPERATION PANEL (A245)

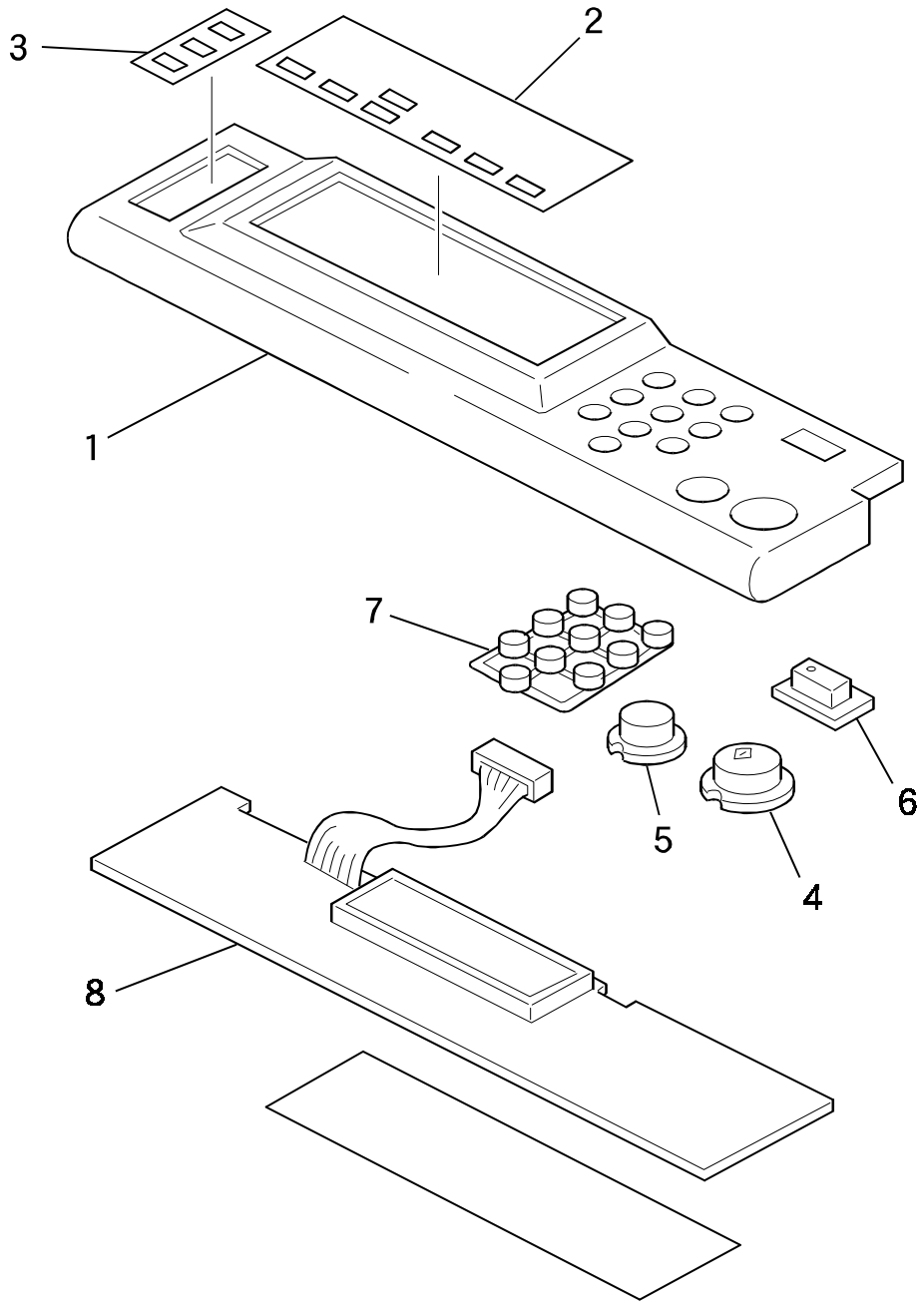

3. OPERATION PANEL (A245)

Rev. 05/99

Index No.	Part No.	Description	Q'ty Per Assembly
*	A245 1450	Operation Panel Ass'y - LT (RIC/NRG)	1
*	A245 1451	Operation Panel Ass'y - A4	1
*	A245 1452	Operation Panel Ass'y - LT (SVN)	1
1	A219 1461	Operation Panel Cover	1
2	A245 1461	Indication Sheet - LT (RIC/NRG)	1
2	A245 1462	Indication Sheet - A4	1
2	A245 1463	Indication Sheet - LT (SVN)	1
3	A219 1463	Operation Panel Sheet	1
3	A219 1476	Operation Panel Sheet - LT (SVN)	1
4	A190 1452	Keytop - Start (RIC/NRG)	1
4	A219 1471	Keytop - Start (SVN)	1
5	A190 1453	Keytop - Clear/Stop (RIC/NRG)	1
5	A219 1472	Keytop - Clear/Stop (SVN)	1
6	A190 1454	Keytop - Clear Mode (RIC/NRG)	1
6	A219 1473	Keytop - Clear Mode (SVN)	1
7	A190 1455	Keytop - 10keys (RIC/NRG)	1
7	A219 1474	Keytop - 10keys (SVN)	1
8	A219 1464	Operation Panel Board - 120V	1
8	A219 1468	Operation Panel Board - 230V	1

Index No.	Part No.	Description	Q'ty Per Assembly

4. PAPER TRAY (A245)

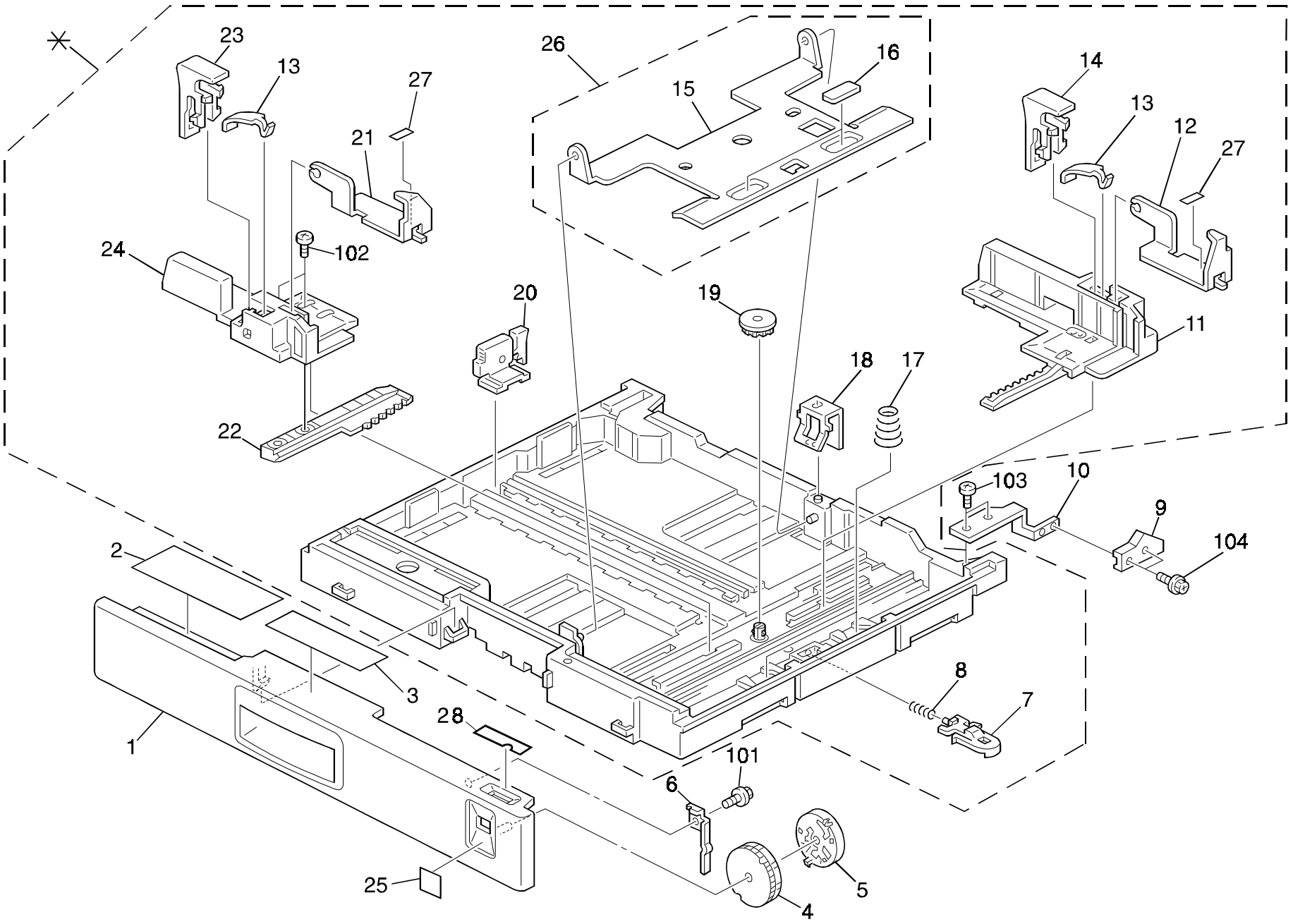

4. PAPER TRAY (A245)

Index No.	Part No.	Description	Q'ty Per Assembly
*	A245 2551	Paper Tray Ass'y - LT	1
*	A245 2552	Paper Tray Ass'y - A4	1
1	G020 2647	Paper Tray Cover	1
2	G020 2668	Sheet - Paper Set	1
3	A190 2692	Decal - Paper Tray Operation	1
4	G020 2593	Paper Size Sensor - LT	1
4	G020 2595	Paper Size Sensor - A4	1
5	G020 2663	Paper Size Actuator	1
6	G020 2648	Holder - Paper Size Detector	1
7	G020 2592	Release Lever - Bottom Plate	1
8	G020 2599	Spring - Release Lever	1
9	A190 2812	Stopper Cover	1
10	A190 2810	Cassette Stopper	1
11	G020 2567	Rear Side Fence	1
12	G020 2558	Rear Corner Separator	1
13	A157 2769	Rear Stopper Spring	2
14	A190 2642	Rear Lever Stopper	1
15	G020 2557	Tray Bottom Plate	1
16	**G020 2645**	**Friction Pad**	**1**
17	G020 2656	Pressure Spring - Bottom Plate	2
18	G020 2658	Grounding Plate - Bottom Plate	1
19	AB01 3868	Gear - 16Z	1
20	G020 2644	End Fence	1
21	G020 2573	Front Paper Separator	1
22	A190 2561	Side Fence Rack	1
23	G020 2664	Front Stopper Lever	1
24	A190 2560	Front Side Fence	1
25	A190 2690	Decal - 1st Paper Tray	1
25	A190 2691	Decal - 2nd Paper Tray	1
26	G020 2661	Bottom Plate Ass'y	1
27	A193 2660	Paper Separator Cushion	2
28	A219 2696	Decal - Size Selection	1

Index No.	Part No.	Description	Q'ty Per Assembly
101	0450 3008B	Tapping Screw - M3x8	
102	0452 3008B	Tapping Screw - M3x8	
103	0413 0082W	Tapping Screw - M3x8	
104	0451 3006B	Tapping Screw - M3x6	

5. BY-PASS FEED TABLE (A245)

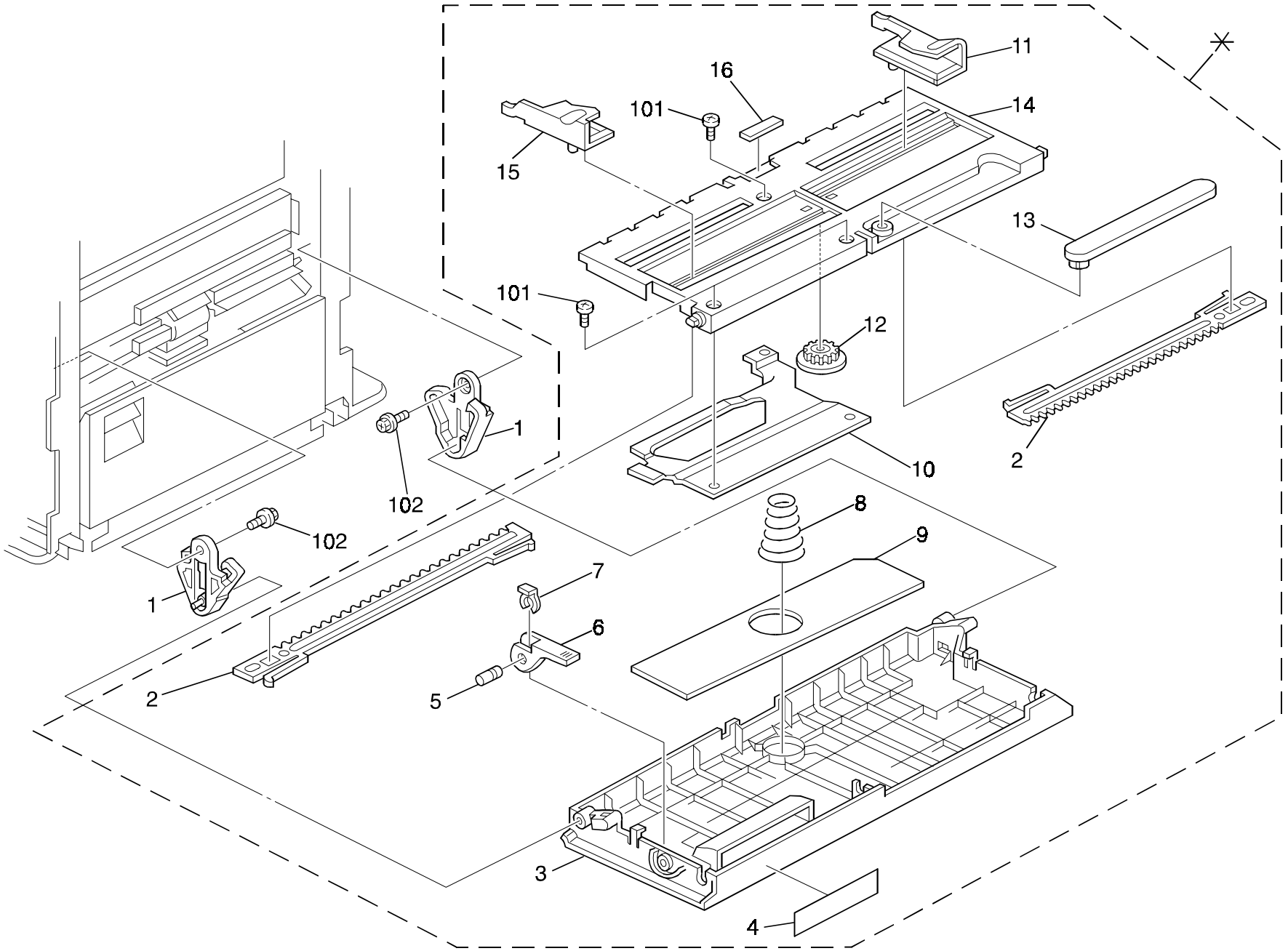

5. BY-PASS FEED TABLE (A245)

Index No.	Part No.	Description	Q'ty Per Assembly
*	A190 2700	By-pass Feed Unit	1
1	G020 2735	Guide - By-pass Feed Table	2
2	A190 2707	Side Fence Rack	2
3	A190 2701	By-pass Feed Cover	1
4	A190 2708	Decal - By-pass Feed	1
5	G020 2786	Shaft - By-pass Release Lever	1
6	G020 2784	Lever - By-pass Feed Table	1
7	5447 2681	Snap Ring	1
8	G020 2702	Pressure Spring - By-pass Feed	1
9	A190 2698	Support Cover - By-pass Feed	1
10	A190 2782	Bottom Plate Stay	1
11	A190 2705	Right Side Fence	1
12	G011 3305	Gear - 16T	1
13	A190 2702	Paper Guide	1
14	A190 2704	Bottom Plate - By-pass Feed	1
15	A190 2706	Left Side Fence	1
16	5215 2713	Bottom Plate Pad	1

Index No.	Part No.	Description	Q'ty Per Assembly
101	0453 3006Z	Tapping Screw - M3x6	
102	0451 3006B	Tapping Screw - M3x6	

6. PAPER FEED SECTION 1 (A245)

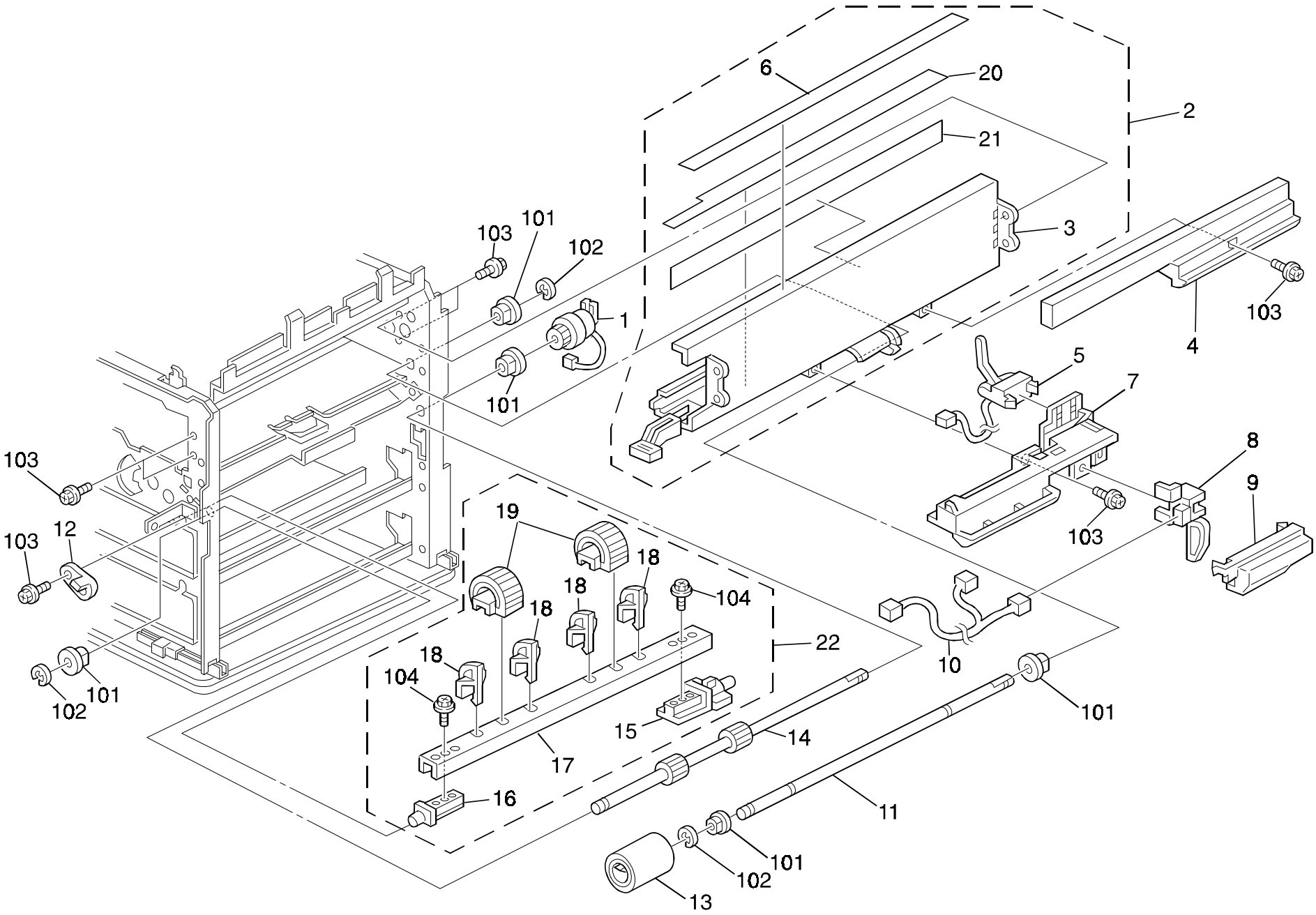

6. PAPER FEED SECTION 1 (A245)

Index No.	Part No.	Description	Q'ty Per Assembly
1	A190 1139	Magnetic Clutch - Vertical	1
2	A219 3360	Toner Bottle Holder Guide - Ass'y	1
3	A190 3361	Toner Bottle Holder Guide	1
4	G020 2785	Cover - Feed Roller Shaft	1
5	A190 2771	Resist Sensor	1
6	A190 3363	Guide Seal - Toner Supply Unit	1
7	G020 2753	Bracket - Registration Sensor	1
8	A190 2772	Paper End Sensor	1
9	G020 2787	Cover - By-pass Paper End Sensor	1
10	A190 5344	Relay Harness - By-pass Feed	1
11	G020 2723	By-pass Feed Shaft	1
12	G020 2587	Bushing - Paper Feed	1
13	**G020 2721**	**By-pass Feed Roller**	**1**
14	A190 2564	Relay Roller	1
15	G020 2586	Rear Pin - Paper Feed Roller	1
16	G020 2585	Front Pin - Paper Feed Roller	1
17	G020 2570	Shaft - Paper Feed Roller	1
18	G020 2565	Paper Guide	4
19	**G020 2555**	**Paper Feed Roller**	**2**
20	A219 3364	Mylar Seal - 8x429	1
21	A219 3365	Mylar Seal - 8x400	1
22	G020 2554	Paper Feed Roller Ass'y	1

Index No.	Part No.	Description	Q'ty Per Assembly
101	0805 3480	Bushing - 6mm	
102	0720 0040E	Retaining Ring - M4	
103	0451 3006B	Tapping Screw - M3x6	
104	0450 3008B	Tapping Screw - M3x8	

7. PAPER FEED SECTION 2 (A245)

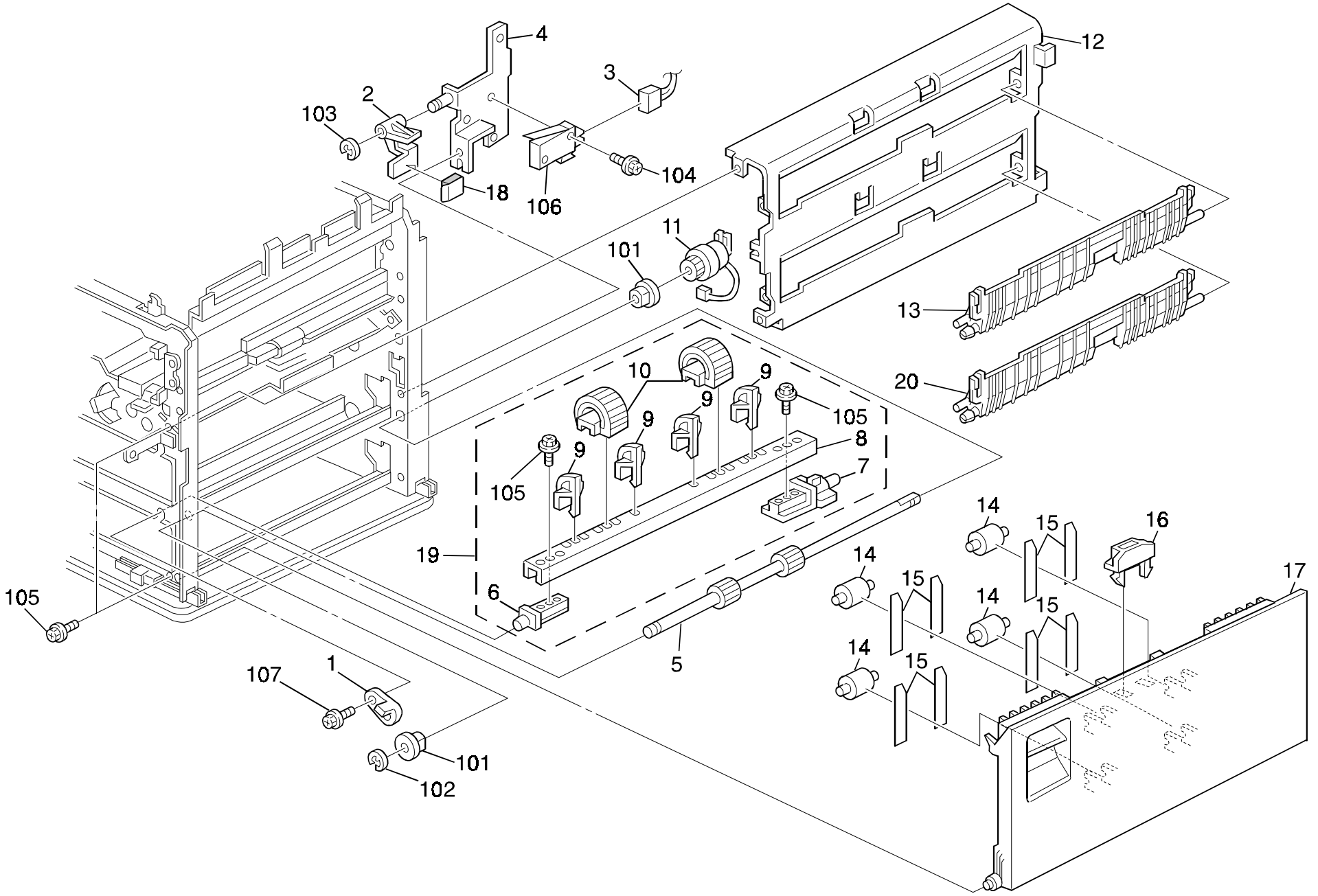

7. PAPER FEED SECTION 2 (A245)

Index No.	Part No.	Description	Q'ty Per Assembly
1	G020 2587	Bushing - Paper Feed	1
2	A190 2902	Switch Lever	1
3	A245 5310	DC Harness	1
4	A190 2900	Switch Bracket	1
5	A190 2564	Relay Roller	1
6	G020 2585	Front Pin - Paper Feed Roller	1
7	G020 2586	Rear Pin - Paper Feed Roller	1
8	G020 2570	Shaft - Paper Feed Roller	1
9	G020 2565	Paper Guide	4
10	**G020 2555**	**Paper Feed Roller**	**2**
11	A190 1139	Magnetic Clutch - Vertical	1
12	A190 2611	Paper Guide Plate	1
13	G020 2613	Vertical Relay Guide	1
14	AF02 0283	Pressure Roller	4
15	G020 2577	Spring Plate - Driven Roller	8
16	G020 2630	Magnetic Catch	1
17	G020 2576	Guide - Vertical Transport	1
18	A190 2905	Cushion	1
19	G020 2554	Paper Feed Roller Ass'y	1
20	A245 2610	Lower Paper Guide	1

Index No.	Part No.	Description	Q'ty Per Assembly
101	0805 3480	Bushing - 6mm	
102	0720 0040E	Retaining Ring - M4	
103	0720 0030E	Retaining Ring - M3	
104	0451 3014B	Tapping Screw - M3-14	
105	0451 3006B	Tapping Screw - M3x6	
106	1204 2356	Micro Switch - AM51612A531	
107	0453 3008B	Bind Tapping Screw - M3X8	

8. PAPER REGISTRATION (A245)

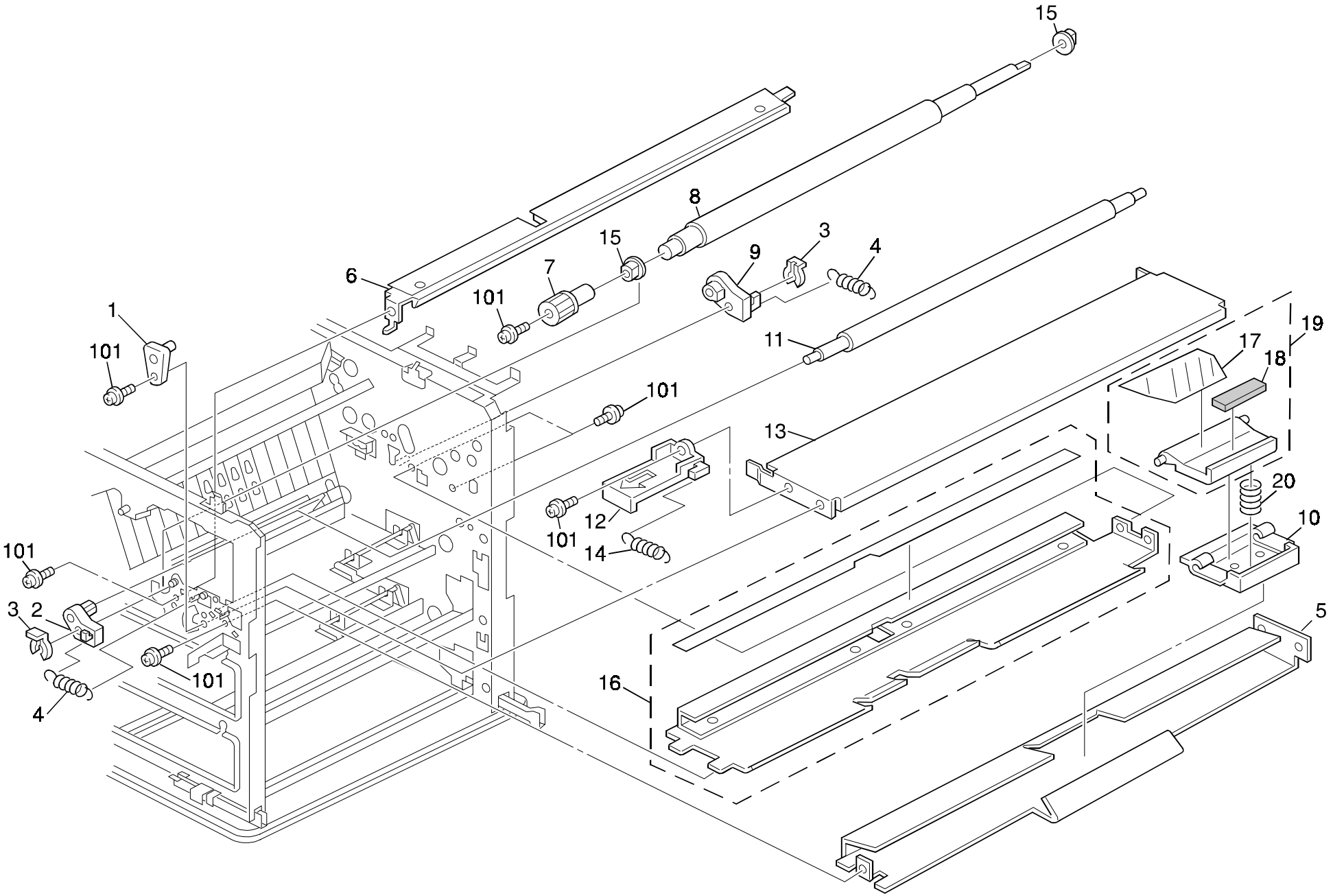

8. PAPER REGISTRATION (A245)

Rev. 11/07/2000

Index No.	Part No.	Description	Q'ty Per Assembly
1	G020 3888	Pin - Transfer Guide	1
2	A190 2780	Front Bushing	1
3	5447 2681	Snap Ring	2
4	G020 2743	Tension Spring	2
5	A190 2711	Friction Pad Stay	1
6	G020 2745	Lower Guide Plate - Regist	1
7	A190 2783	Resist Roller Knob	1
8	A190 2740	Lower Registration Roller	1
9	A190 2781	Rear Bushing	1
10	G020 2712	Holder - By-pass Feed Friction Pad	1
11	A298 2741	Upper Registration Roller	1
12	G020 2765	Knob - Lower Transport Guide	1
13	G020 2745	Lower Guide Plate - Regist	1
14	AA06 0331	Release Spring	1
15	5053 0223	Bushing - 8mm	2
16	G020 2754	Upper Paper Guide	1
17	A190 2717	Friction Pad Guide	1
18	**G020 2716**	**Friction Pad**	**1**
19	A190 2714	Friction Pad Holder Ass'y	1
20	G020 2713	Pressure Spring	1

Index No.	Part No.	Description	Q'ty Per Assembly
101	0451 3006B	Tapping Screw - M3x6	

9. OPTICS SECTION 1 (A245)

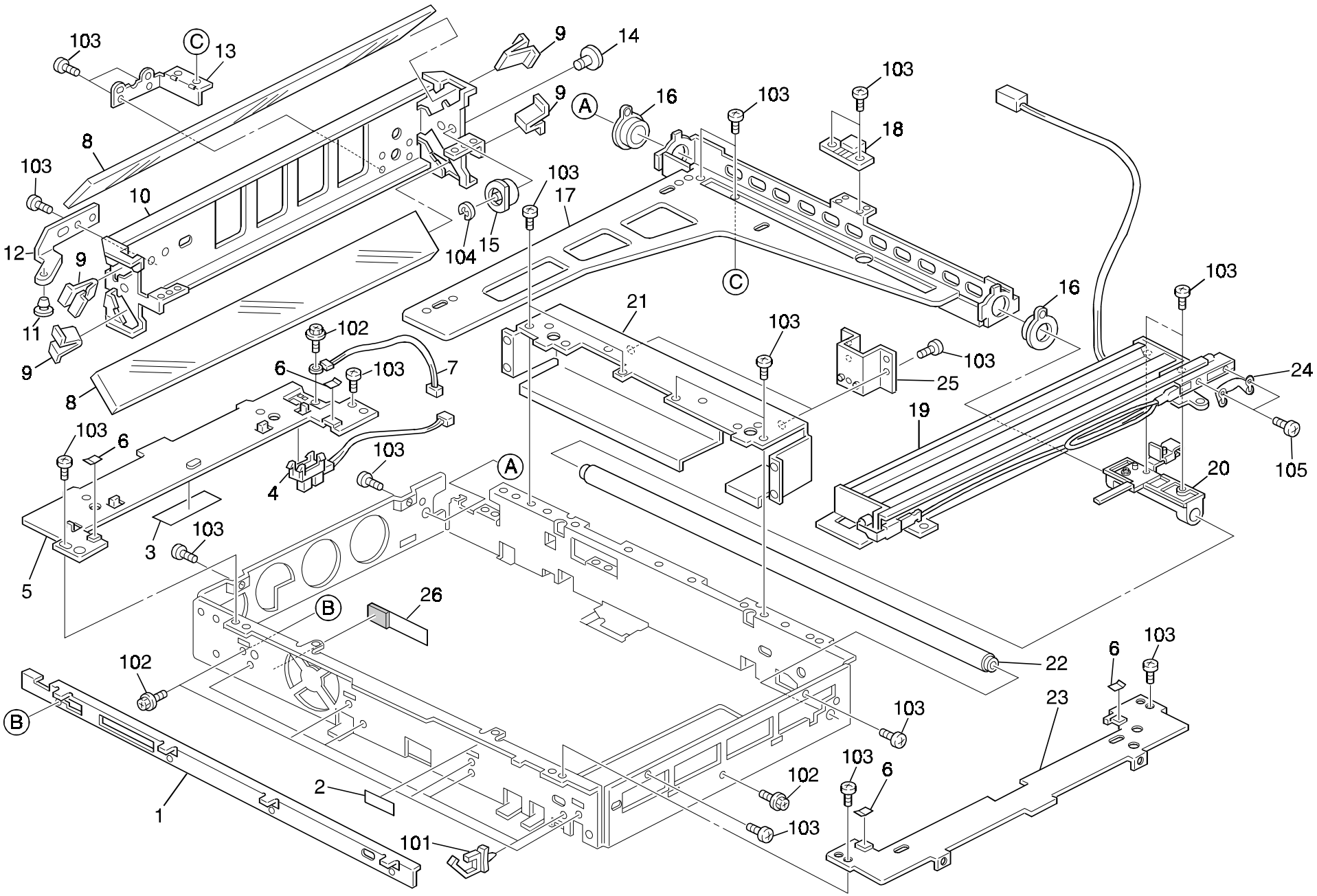

9. OPTICS SECTION 1 (A245)

Index No.	Part No.	Description	Q'ty Per Assembly
1	A190 1660	Scanner Guide Rail	1
2	A111 1753	Seal - 0.1x18x49	1
3	AC06 3001	White Reference Plate	1
4	AW02 0075	Photointerrupter	1
5	A190 1651	Left Scale Support Plate	1
6	A190 1652	Exposure Glass Seal	4
7	AW10 0033	Thermistor	1
8	A190 1815	2nd/3rd Mirror	2
9	A077 1690	Spring Plate - Mirror	4
10	A190 1691	2nd Scanner Frame	1
11	A069 1883	Shoe - Scanner	1
12	A190 1694	Shoe Bracket	1
13	A190 1824	2nd Scanner Support Plate	1
14	A190 1751	Harness Guide Pulley Ass'y	1
15	A190 1821	Harness Guide Pulley	1
16	A190 1688	Bushing	2
17	A190 1692	2nd Scanner Support Plate	1
18	A190 1689	Clamp	1
19	A245 1700	1st Scanner Unit - 120V	1
19	A245 1701	1st Scanner Unit - 230V	1
20	A190 1725	Bushing	1
21	A219 1194	ADF Bracket	1
22	A190 1814	Scanner Guide Rod	1
23	A190 1654	Right Bracket - Exposure Glass	1
24	A184 1672	Thermofuse - 128	1
25	A219 1197	Rear Bracket - ADF	2
26	A245 1740	1st Scanner Cushion	1

Index No.	Part No.	Description	Q'ty Per Assembly
101	1105 0310	Wire Clamp	
102	0451 3006B	Tapping Screw - M3x6	
103	0353 0060B	Philips Pan Head Screw - M3x6	
104	0720 0040E	Retaining Ring - M4	
105	0453 3006Z	Tapping Screw - M3x6	

10. OPTICS SECTION 2 (A245)

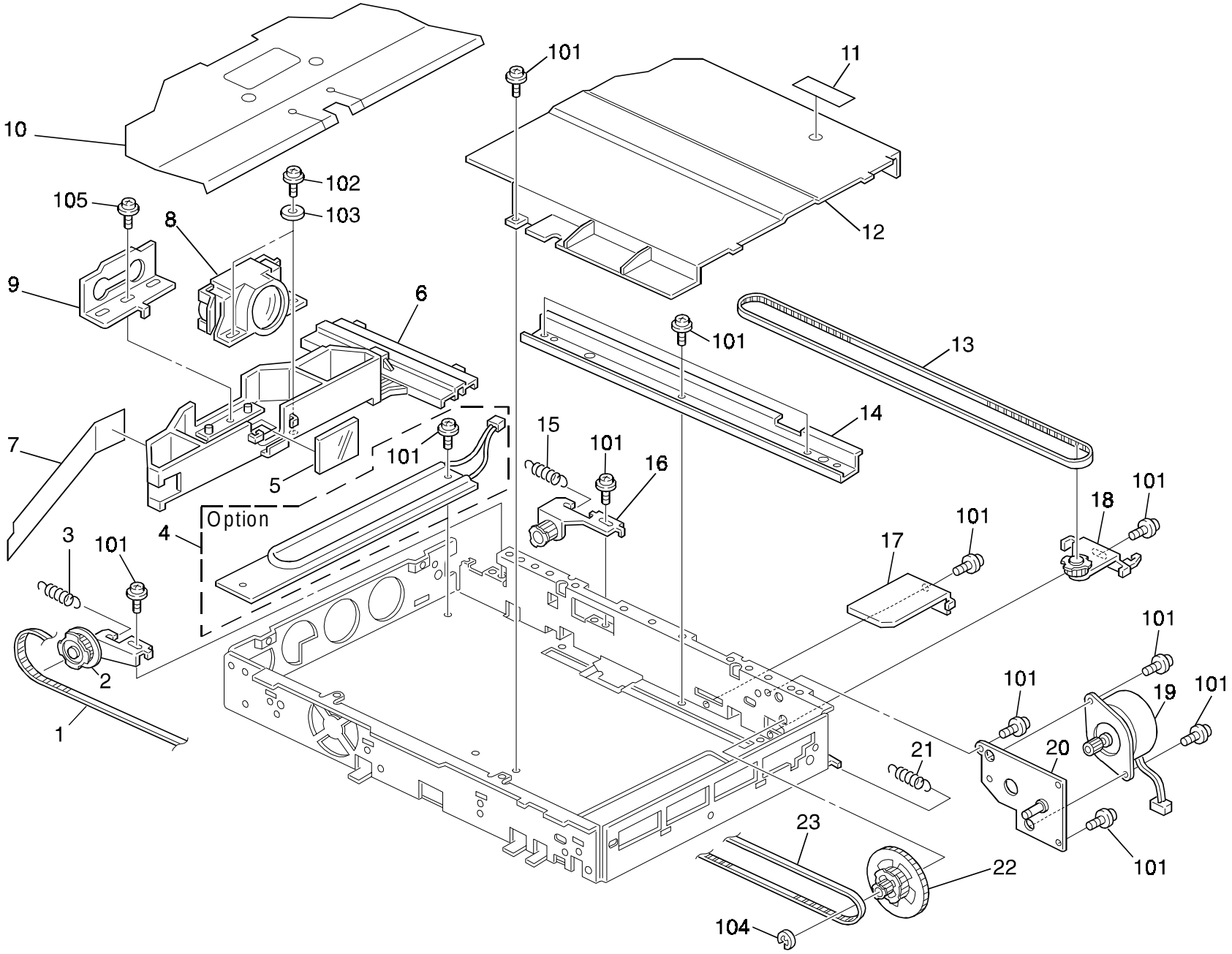

10. OPTICS SECTION 2 (A245)

Index No.	Part No.	Description	Q'ty Per Assembly
1	A190 1816	Timing Belt - L1110P2M	1
2	A190 1666	Pulley Bracket	1
3	A190 1819	1st Scanner Spring	1
4	AX40 0052	Anti-Condensation Heater - 115V 18W (Option)	1
4	AX40 0053	Anti-Condensation Heater - 240V 18W (Option)	1
5	A190 1812	Blue Filter	1
6	A190 1682	Lens Carriage	1
7	A190 1698	Shielding Plate	1
8	AC02 0077	Lens - F8/180	1
9	A190 1683	Shading Plate	1
10	A190 1684	Shielding Plate	1
11	A111 1753	Seal - 0.1x18x49	1
12	A190 1693	Lens Cover	1
13	A190 1813	Timing Belt - L824P2M	1
14	A190 1663	Lens Guide Rail	1
15	A190 1818	2nd Scanner Spring	1
16	A190 1664	Pulley Bracket	1
17	A190 1685	Lens Cover Bracket	1
18	A190 1669	Lens Support Bracket	1
19	A184 5205	Scanner Motor - DC24V 96W	1
20	A190 1696	Motor Bracket	1
21	A190 1820	Lens Holder Spring	1
22	A190 1803	Timing Pulley - 22Z/44Z	1
23	A190 1817	Timing Belt - L754P2M	1

Index No.	Part No.	Description	Q'ty Per Assembly
101	0451 3006B	Tapping Screw - M3x6	
102	0450 3010B	Tapping Screw - M3x10	
103	0701 0030B	Flat Washer - M3	
104	0720 0060E	Retaining Ring - M6	
105	0450 3006B	Tapping Screw - M3x6	

11. OPTICS SECTION 3 (A245)

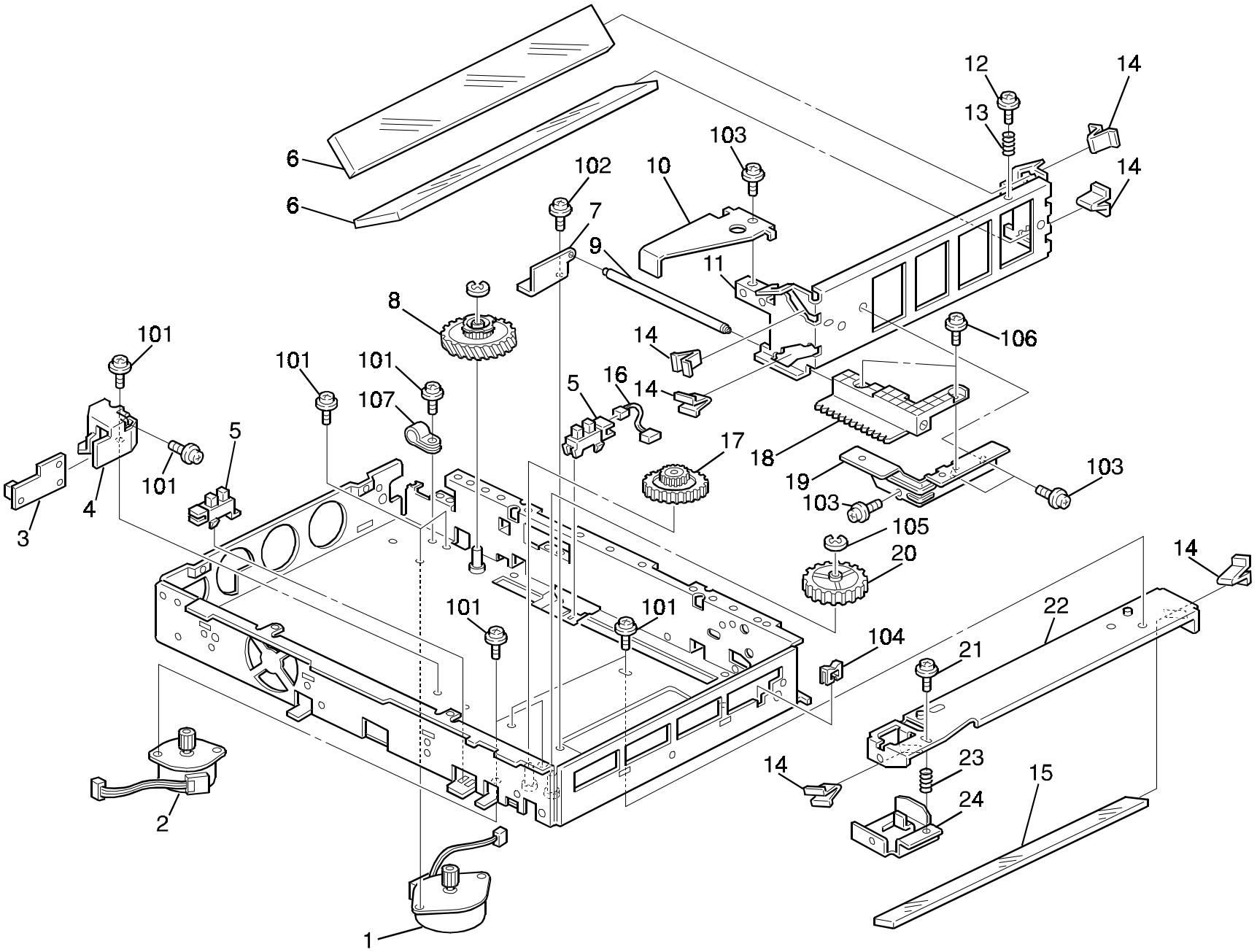

11. OPTICS SECTION 3 (A245)

Index No.	Part No.	Description	Q'ty Per Assembly
1	A190 1672	Lens Drive Motor Ass'y DC24V 81.6W	1
2	A190 1671	Mirror Drive Motor Ass'y DC24V 81.6W	1
3	A152 5120	Optics Control Board	1
4	A077 1745	Cover - ADS Sensor	1
5	AW02 0075	Photointerrupter	2
6	A190 1811	4th/5th Mirror	2
7	A190 1676	Rod Bracket	1
8	A190 1802	Timing Pulley - 30Z	1
9	A190 1810	Mirror Guide Rod	1
10	A190 1679	Mirror Sensor Shutter	1
11	A190 1678	3rd Scanner Bracket	1
12	A153 1906	Adjust Shoe	1
13	AA06 3523	Adjust Spring	1
14	A077 1690	Spring Plate - Mirror	6
15	A190 1809	6th Mirror	1
16	A190 5343	Scanner H.P Harness	1
17	AB01 7361	Gear - 24Z/56Z	1
18	A190 1827	Rack Gear	1
19	A190 1825	3rd Scanner Support Plate	1
20	AB01 7129	Gear - 20Z AND 72Z	1
21	A077 1746	Mirror Adjusting Screw	1
22	A190 1675	6th Mirror Bracket - Rear	1
23	AA06 3180	Adjust Spring	1
24	A190 1674	6th Mirror Bracket - Front	1
25	A190 1831	Shield heater Rear	1
26	AA15 0234	Mylar Seal - Base	1

Index No.	Part No.	Description	Q'ty Per Assembly
101	0450 3006B	Tapping Screw - M3x6	
102	0353 0060B	Philips Pan Head Screw - M3x6	
103	0451 3006B	Tapping Screw - M3x6	
104	1105 0328	Harness Clamp - ES-0505	
105	0720 0040E	Retaining Ring - M4	
106	0951 3006B	Philips Screw With Flat Washer-M3x6	
107	1105 0008	Nylon Clamp - 2n	

12. TONER BOTTLE HOLDER UNIT (A245)

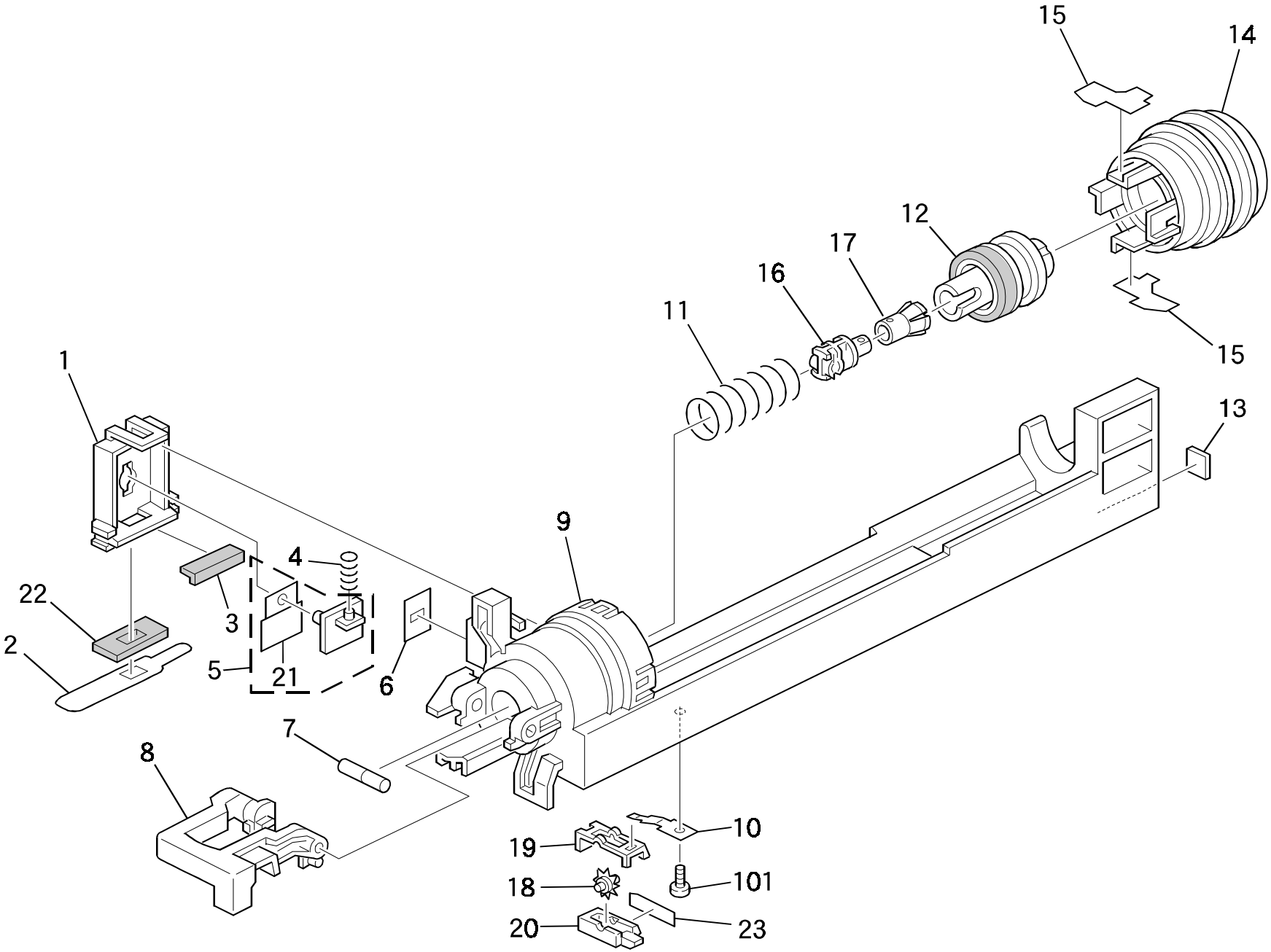

12. TONER BOTTLE HOLDER UNIT (A245)

Index No.	Part No.	Description	Q'ty Per Assembly
*	A219 3030	Toner Supply Unit - 115V (RIC-NA)	1
*	A219 3034	Toner Supply Unit - 230V (RIC-EU)	1
*	A219 3036	Toner Supply Unit (Others)	1
1	A219 3311	Toner Collection Cover	1
2	A219 3342	Lower Seal - Toner Collection Cover	1
3	G020 3345	Right Seal	1
4	G020 3313	Spring	1
5	A219 3317	Toner Adding Shutter	1
6	A219 3312	Toner Adding Gate	1
7	A184 3422	Toner Slider	1
8	A219 3339	Toner Bottle Holder Lever	1
9	A219 3314	Toner Supply Unit Case (RIC-NA)	1
9	A219 3411	Toner Supply Unit Case (RIC-EU)	1
9	A219 3416	Toner Supply Unit Case (Others)	1
10	A219 3384	Spring Plate	1
11	A184 3411	Chuck Spring	1
12	G020 3334	Slider Ass'y	1
13	G020 3326	Cushion	1
14	A219 3322	Toner Bottle Cover	1
15	A219 3325	Mylar Blade	2
16	A184 3421	Chuck Shaft	1
17	A184 3420	Bottle Chuck	1
18	A219 3381	Roller	1
19	A219 3382	Upper Cover	1
20	A219 3383	Lower Cover	1
21	A219 3319	Sheet - Toner Supply Shutter	1
22	A219 3341	Cushion - Toner Collection Cover	2
23	A219 3385	Sheet - Roller Cover	1

Index No.	Part No.	Description	Q'ty Per Assembly
101	0452 3006B	Tapping Screw - M3x6	

13. IMAGING UNIT - 1 (A245)

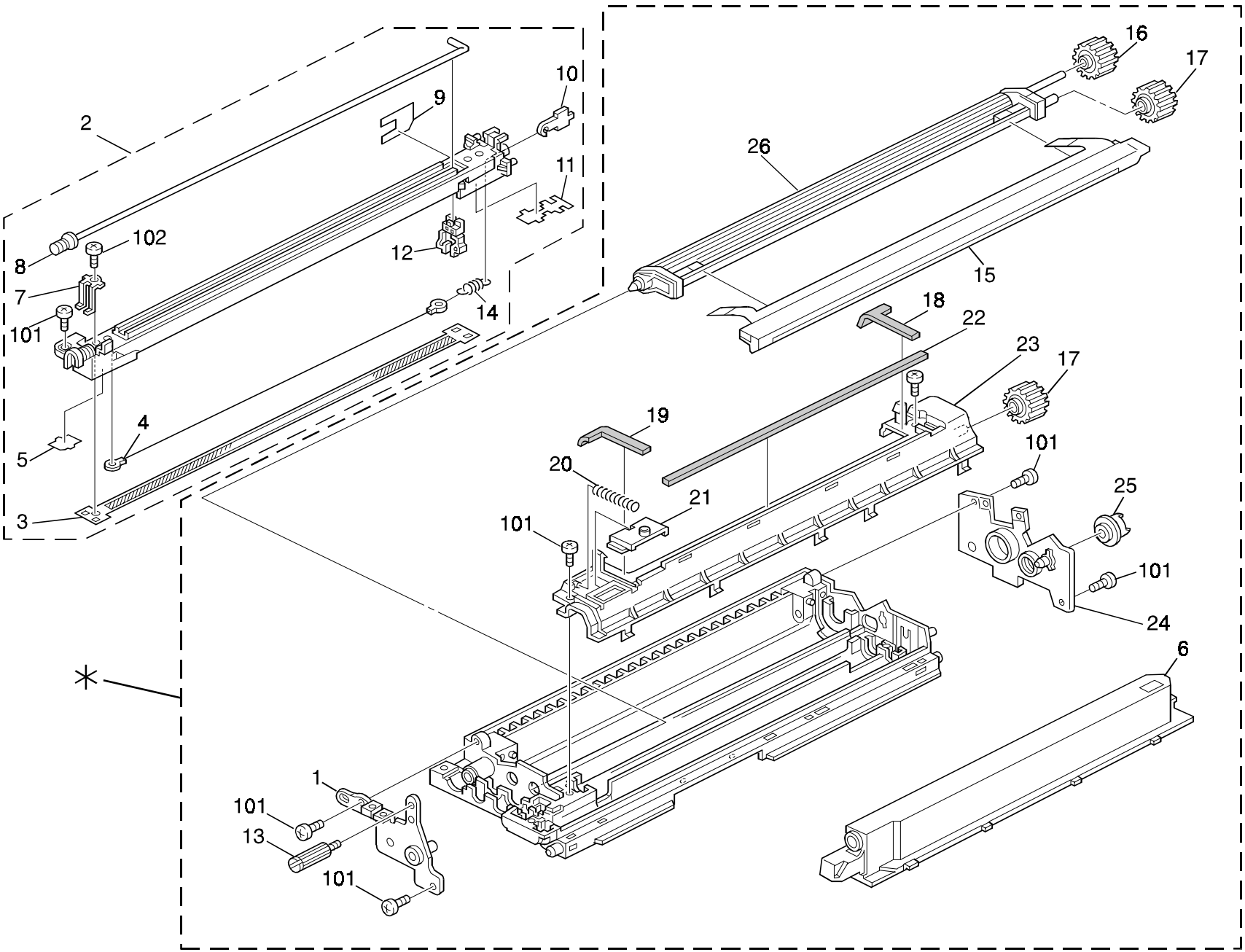

13. IMAGING UNIT - 1 (A245)

Rev. 06/11/2001

Index No.	Part No.	Description	Q'ty Per Assembly
*	A219 2206	Imaging Unit	1
1	A190 2280	Front Side Plate	1
2	A190 2011	Charge Corona Unit	1
3	**A190 2060**	**Charge Corona Grid**	**1**
4	**A190 2065**	**Charge Corona Wire**	**1**
5	A190 2085	Front End Block Cover	1
6	A219 3132	Development Cover	1
7	A190 2062	Spring Plate - Charge Corona Grid	1
8	A190 2075	Cleaning Shaft	1
9	A190 2116	Rear Shielding Plate	1
10	A190 2105	Corona Wire Terminal	1
11	A190 2086	Rear End Block Cover	1
12	**A190 2070**	**Corona Wire Cleaner Ass'y**	**1**
13	A190 2320	Knob Screw	1
14	A184 3863	Corona Wire Spring	1
15	A190 3094	Development Entrance Seal	1
16	A190 3152	Gear - 18Z	1
17	A190 3155	Idle Gear - 17Z	2
18	A190 3166	Rear Seal	1
19	A190 3167	Front Seal	1
20	G020 2327	Pressure Spring	1
21	A190 3171	Imaging Unit Shutter	1
22	A190 3165	Long Seal	1
23	A190 3162	Imaging Unit Upper Case	1
24	A190 2290	Rear Side Plate	1
25	A190 3156	Cam Gear	1
26	A190 3050	Development Roller Ass'y	1

Index No.	Part No.	Description	Q'ty Per Assembly
101	0353 0060B	Philips Pan Head Screw - M3x6	
102	0452 3006B	Tapping Screw - M3x6	

14. IMAGING UNIT - 2 (A245)

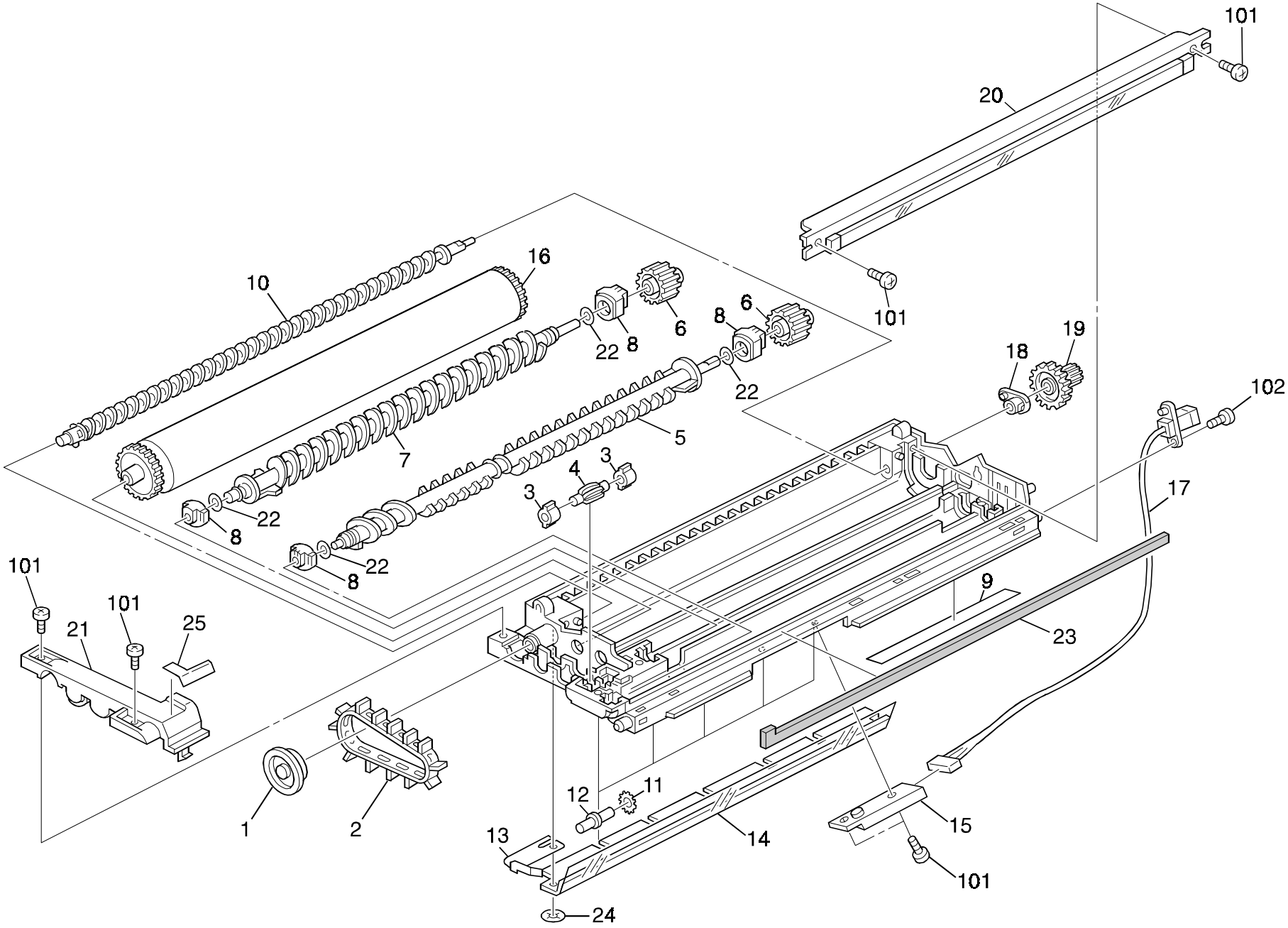

14. IMAGING UNIT - 2 (A245)

Index No.	Part No.	Description	Q'ty Per Assembly
1	A190 3564	Toner Cap	1
2	A184 3611	Toner Recycle Belt	1
3	A190 3569	Bushing Recycle Roller	2
4	A190 3563	Toner Recycle Roller	1
5	A190 3116	1st Agitator	1
6	A190 3153	Transfer Auger Gear	2
7	A190 3112	2nd Agitator	1
8	A190 3125	Busing	4
9	A190 3183	Harness Holder	1
10	A190 3560	Toner Collection Coil	1
11	A048 2276	Ring - Transport Bracket	5
12	G020 2355	Transport Guide Shaft	5
13	G020 3565	Grounding Plate	1
14	A190 3570	Cleaning Entrance Seal	1
15	A184 2455	Toner Density Sensor	1
16	**A219 9510**	**OPC Drum**	**1**
17	A190 5346	Development Unit Harness	1
18	A190 3568	Rear Bushing	1
19	G020 3571	Toner Correction Gear - 14/24Z	1
20	**A190 3550**	**Cleaning Blade**	**1**
21	A190 2330	Toner Recycle Cover	1
22	A190 3128	Seal 6mm	4
23	A190 3192	Lower Seal - 3 x 6 x 396	1
24	G020 1923	CS Ring - M2.4	2
25	A190 3193	Seal - 5x55	1

Index No.	Part No.	Description	Q'ty Per Assembly
101	0353 0060B	Philips Pan Head Screw - M3x6	
102	0452 3006B	Tapping Screw - M3x6	

14. IMAGING UNIT - 2 (A245)

Rev. 10/99

Index No.	Part No.	Description	Q'ty Per Assembly
1	A190 3564	Toner Cap	1
2	A184 3611	Toner Recycle Belt	1
3	A190 3563	Toner Recycle Roller	2
4	A190 3569	Recycle Roller Bushing	1
5	A190 3116	1st Agitator	1
6	A190 3153	Transfer Auger Gear	2
7	A190 3112	2nd Agitator	1
8	A190 3125	Busing	4
9	A190 3183	Harness Holder	1
10	A190 3560	Toner Collection Coil	1
11	A048 2276	Ring - Transport Bracket	5
12	G020 2355	Transport Guide Shaft	5
13	G020 3565	Grounding Plate	1
14	A190 3570	Cleaning Entrance Seal	1
15	A184 2455	Toner Density Sensor	1
16	**A219 9510**	**OPC Drum**	**1**
17	A190 5346	Development Unit Harness	1
18	A190 3568	Rear Bushing	1
19	G020 3571	Toner Correction Gear - 14/24Z	1
20	**A190 3550**	**Cleaning Blade**	**1**
21	A190 2330	Toner Recycle Cover	1
22	A190 3128	Seal 6mm	4
23	A190 3192	Lower Seal - 3 x 6 x 396	1
24	G020 1923	CS Ring - M2.4	2
25	A190 3193	Seal - 5x55	1

Index No.	Part No.	Description	Q'ty Per Assembly
101	0353 0060B	Philips Pan Head Screw - M3x6	
102	0452 3006B	Tapping Screw - M3x6	

15. LOWER OPTICS SECTION (A245)

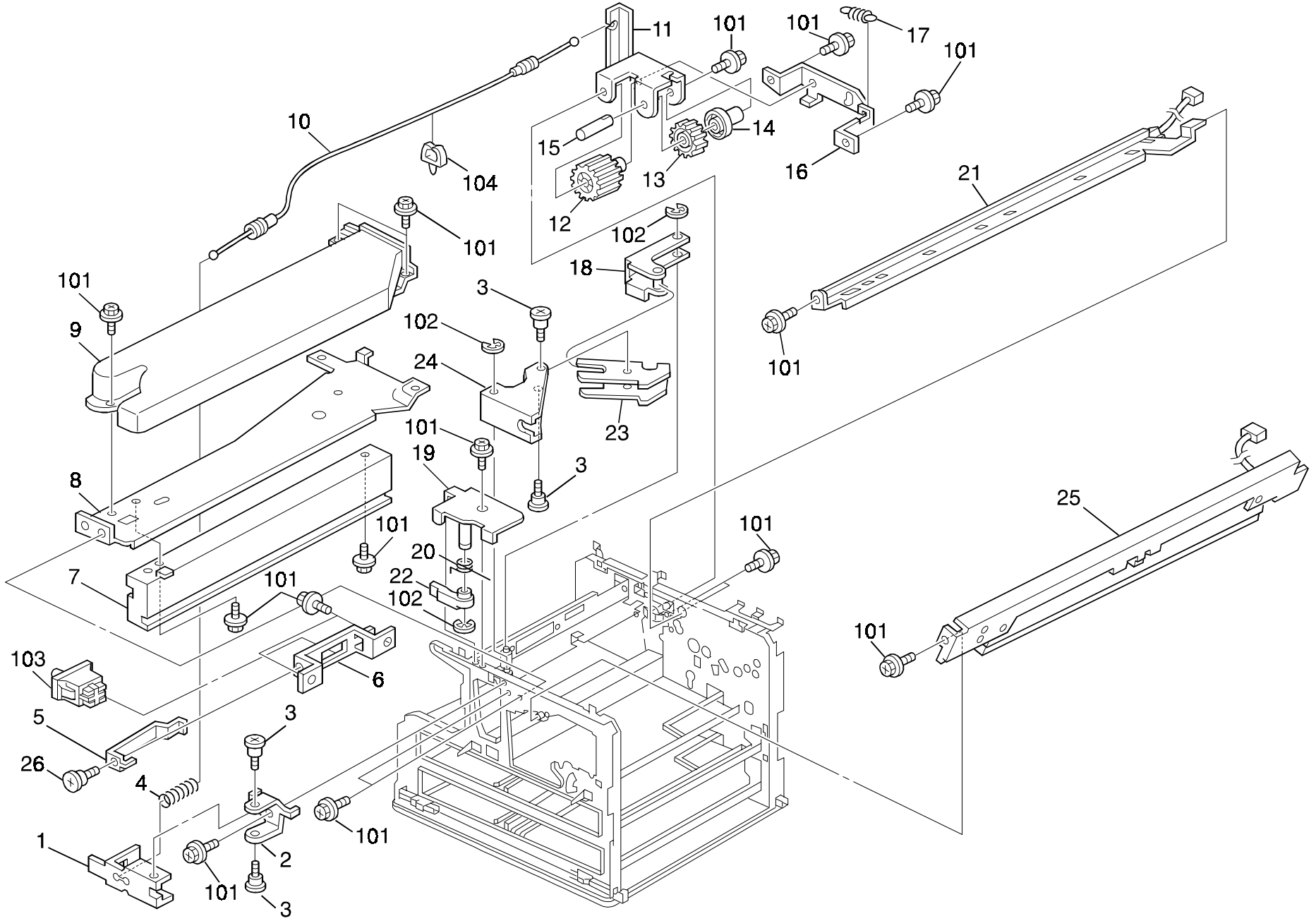

15. LOWER OPTICS SECTION (A245)

Index No.	Part No.	Description	Q'ty Per Assembly
1	A190 1042	Front Lever Bracket	1
2	A190 1041	Front Door Switch Lever	1
3	5206 2684	Shoulder Screw - M3	4
4	AA06 3489	Spring - 45mm	1
5	A190 1164	Safety Switch Lever	1
6	A190 1160	Safety Switch Bracket	1
7	A190 1152	Guide Rail	1
8	A190 1151	Duct Cover	1
9	A190 1153	Duct	1
10	A190 1163	Drive Release Wire	1
11	A190 1131	Drive Gear Joint Bracket	1
12	G020 1157	Gear - 28Z	1
13	A190 1132	Gear - 32Z	1
14	A190 1138	Spacer	1
15	A190 1136	Gear Shaft	1
16	A190 1134	Support Bracket	1
17	A422 1082	Pick-up Spring	1
18	A190 1043	Fusing Switch Lever	1
19	A190 1342	Front Lever Support Plate	1
20	A190 1345	Release Spring - Front Lever	1
21	A190 2020	Quenching Lamp Unit	1
22	A190 1341	Front Door Lever	1
23	A190 1162	Safety Switch Arm	1
24	A190 1040	Front Safety Switch Arm	1
25	A190 2030	Erase Lamp Unit	1
26	AA14 3716	Stepped Screw	1

Index No.	Part No.	Description	Q'ty Per Assembly
101	0451 3006B	Tapping Screw - M3x6	
102	0720 0030E	Retaining Ring - M3	
103	1204 2334	Interlock Switch - Fa1l	
104	1105 0199	Clamp	

16. FUSING UNIT (A245)

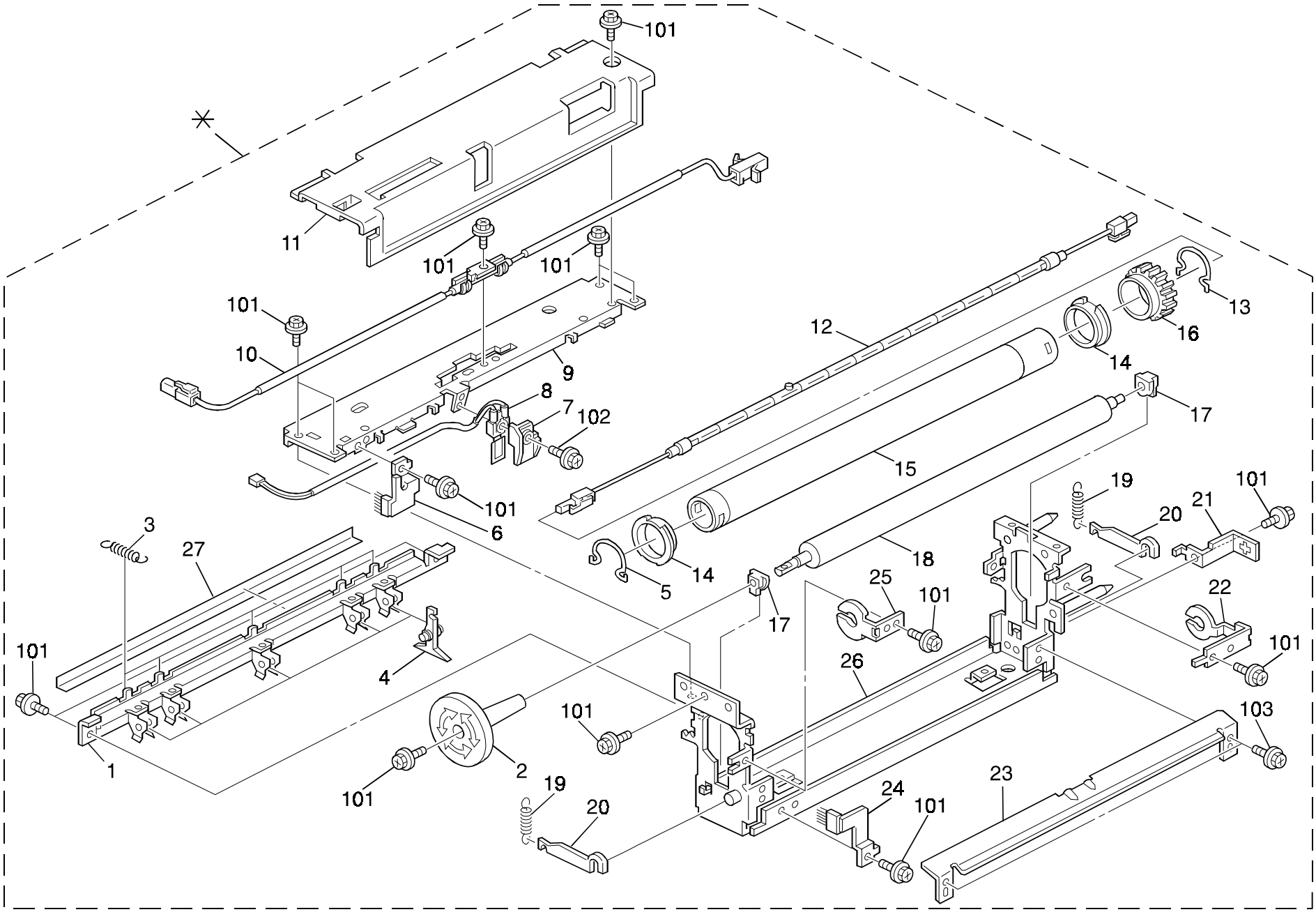

16. FUSING UNIT (A245)

Rev. 11/20/2000

Index No.	Part No.	Description	Q'ty Per Assembly
*	A245 4023	Fusing Unit - 120V	1
*	A245 4024	Fusing Unit - 230V	1
1	A190 4089	Stripper Pawl Bracket	1
2	A190 4053	Fusing Unit Knob	1
3	A190 4092	Stripper Pawl Spring	5
4	**A184 4072**	**Stripper Pawl**	**5**
5	A184 4105	Left Retaining Ring - 31	1
6	A190 4385	Antistatic Brush	1
7	A153 4087	Thermistor Holder	1
8	A190 4119	Thermistor	1
9	A190 4073	Fusing Stay	1
10	A298 4123	Thermofuse - 172°C	1
11	A190 4070	Fusing Unit Cover	1
12	A219 4117	Fusing Lamp - 115V 850W	1
12	A245 4120	Fusing Lamp - 230V 760W	1
13	A184 4081	Right Retaining Ring - 31	1
14	A190 4086	Hot Roller Bushing	2
15	**A245 4100**	**Hot Roller**	**1**
16	G020 4177	Gear - 40Z	1
17	G020 4175	Bushing - Pressure Roller	2
18	**A245 4103**	**Pressure Roller**	**1**
19	A245 4109	Pressure Spring	2
20	A245 4108	Pressure Roller Lever	2
21	A190 4129	Connector Bracket	1
22	A190 4121	Rear Heater Bracket	1
23	A298 4071	Fusing Entrance Guide	1
24	A190 4386	Antistatic Brush	1
25	A190 4120	Front Heater Bracket	1
26	A190 4076	Fusing Frame	1
27	A190 4088	Seal	1

Index No.	Part No.	Description	Q'ty Per Assembly
101	0451 3006B	Tapping Screw - M3x6	
102	0954 3012B	Screw - M3X12	
103	0951 3006B	Philips Screw With Flat Washer - M3x6	

17. TRANSFER AND EXIT SECTION (A245)

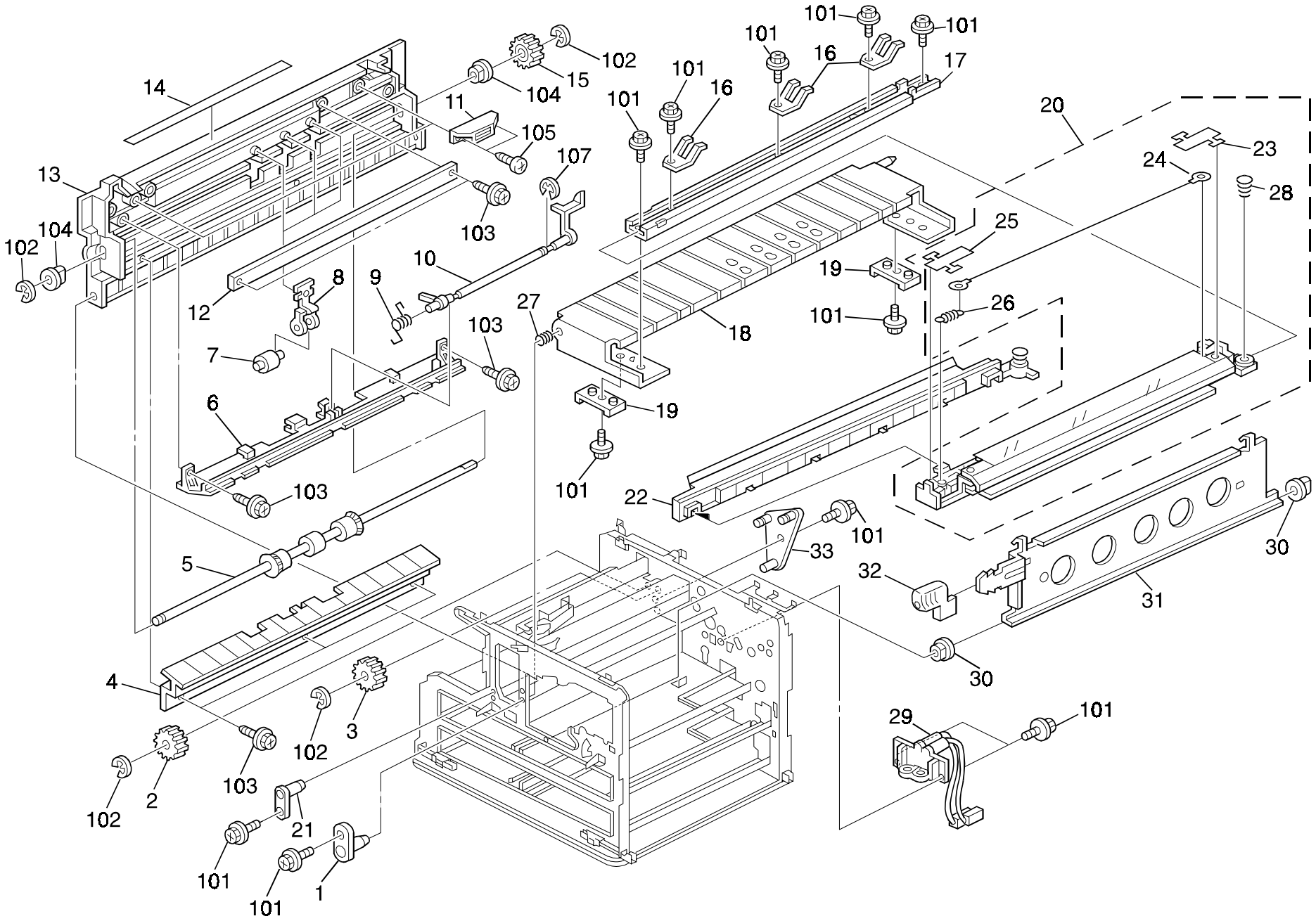

17. TRANSFER AND EXIT SECTION (A245)

Rev. 11/30/2000

Index No.	Part No.	Description	Q'ty Per Assembly
1	A048 3860	Transport Bracket Holder	1
2	A190 4097	Idle Gear - 16Z	1
3	A190 4096	Idle Gear - 18Z	1
4	A245 4472	Lower Guide Plate	1
5	A190 4465	Exit Roller	1
6	A190 4471	Upper Guide Plate	1
7	AF04 0031	Upper Exit Roller	3
8	A190 4474	Exit Roller Holder	3
9	A190 4456	Exit Sensor Feeler Spring	1
10	A190 4455	Exit Sensor Feeler	1
11	A298 4189	Magnetic Catch	2
12	A190 4479	Shielding Plate	1
13	A190 4478	Exit Cover	1
14	A190 4476	Decal - High Temperature	1
15	A190 4463	Exit Roller Gear - 23Z	1
16	A190 3906	Spring Plate	3
17	A190 3905	Transfer Corona Rail	1
18	A190 3900	Transfer Guide	1
19	A190 3903	Transfer Release Guide	2
20	A190 3851	T/S Unit	1
21	A190 1073	Paper Exit Pin Bracket	1
22	A190 3880	Discharge Plate Unit	**1**
23	A190 3864	Rear End Block Cover	1
24	**A190 3866**	**Transfer Corona Wire**	**1**
25	A190 3863	Front Block Cover	1
26	A184 3863	Corona Wire Spring	1
27	AA06 3040	Spring	1
28	AA06 3036	Terminal Spring	1
29	A190 3890	T/S Corona Receptacle	1
30	A190 3914	Bushing	2
31	A190 3911	T/S Position Plate	1
32	G020 3912	Transport Lever	1
33	A190 1085	Exit Rear Bracket	1

Index No.	Part No.	Description	Q'ty Per Assembly
101	0451 3006B	Tapping Screw - M3x6	
102	0720 0040E	Retaining Ring - M4	
103	0413 0082W	Tapping Screw - M3x8	
104	0805 3480	Bushing - 6mm	
105	0452 3008B	Tapping Screw - M3x8	
107	0720 0025E	Retaining Ring - M2.5	

18. DRIVE SECTION 1 (A245)

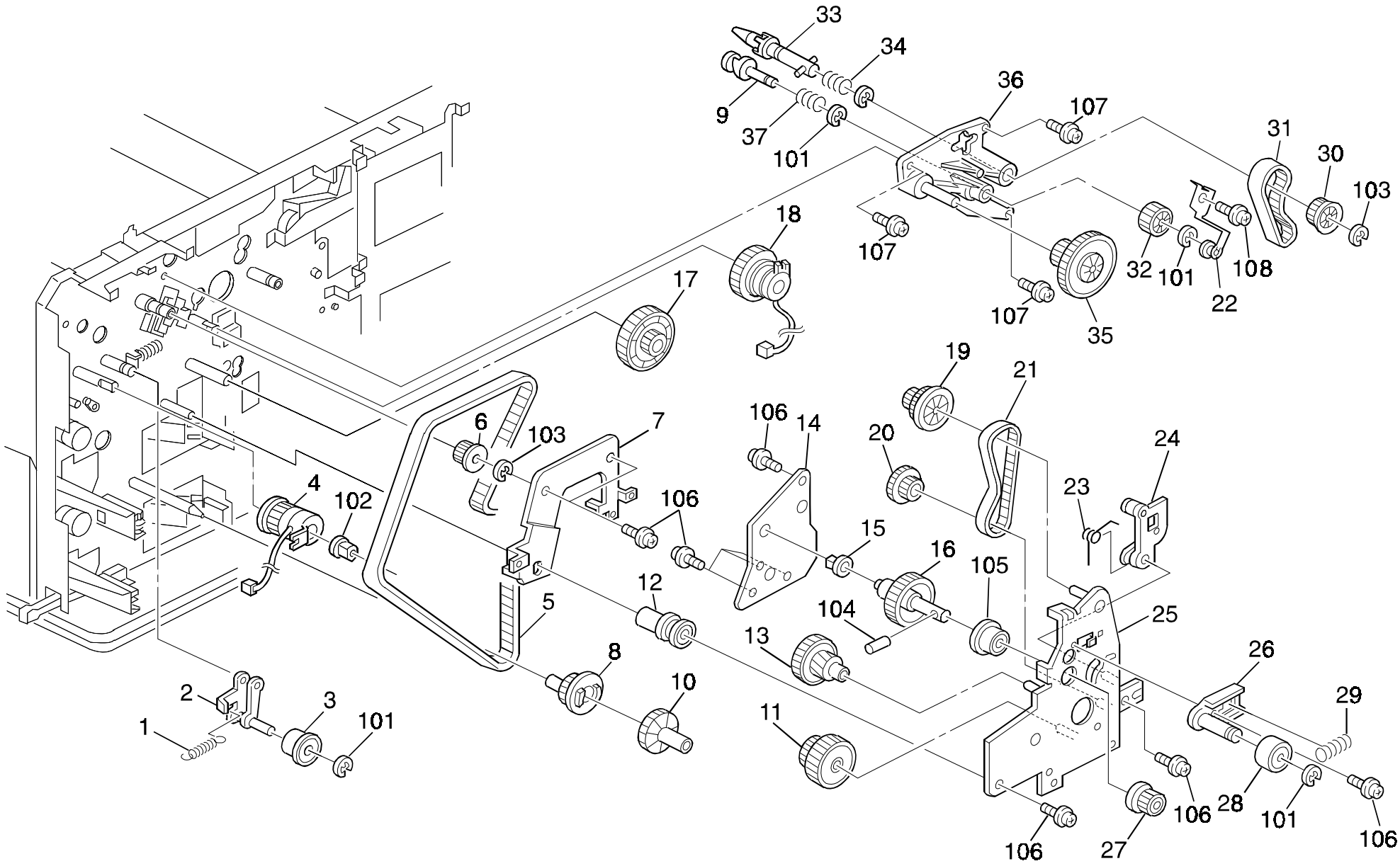

18. DRIVE SECTION 1 (A245)

Rev. 11/07/2000

Index No.	Part No.	Description	Q'ty Per Assembly
1	A190 1145	Release Spring	1
2	A190 1146	Tightner Ass'y	1
3	A190 1149	Tightner Pulley	1
4	G020 1114	By-pass Feed Clutch	1
5	A190 1141	Timing Belt - SM699	1
6	AB03 0273	Timing Pulley - T20	1
7	A190 1122	Development Drive Bracket	1
8	A245 1148	Timing pulley - 37Z	1
9	A190 1185	Development Drive Shaft	1
10	A219 1169	Gear - 40Z	1
11	G020 1130	Gear - 65Z/24Z	1
12	A190 1144	Tightner Pulley	1
13	G020 1131	Gear - 58Z/35Z	1
14	A190 1117	Support Plate - Drive Unit	1
15	5053 0223	Bushing - 8mm	1
16	G020 1132	Gear - 68Z	1
17	G020 1168	Gear - 52Z/26T	1
18	G020 1115	Registration Clutch	1
19	A190 1182	Gear - 21Z/40Z	1
20	A190 1180	Pulley - 20Z/63Z	1
21	A190 1181	Timing Belt - S3M288	1
22	A190 1198	Development Bias Terminal	1
23	A190 1124	Tightner Spring	1
24	A190 1165	Tightner Bracket	1
25	A190 1112	Drive Bracket	1
26	A190 1125	Tightner Bracket	1
27	G020 1138	Pulley - 24T	1
28	A190 1128	Tightner Pulley	1
29	5446 1205	Release Spring	1
30	G020 1178	Pulley - 51T	1
31	A298 1187	Timing Belt - S2M 158MM	1
32	G020 1177	Gear - 26Z	1
33	A190 1118	Imaging Unit Drive Shaft	1
34	A190 1183	Pressure Spring	1
35	A190 1123	Development Drive Gear	1
36	A190 1171	Imaging Unit Holder	1
37	A190 1174	Pressure Spring	1
101	0720 0040E	Retaining Ring - M4	
102	0805 3480	Bushing - 6mm	
103	0720 0060E	Retaining Ring - M6	
104	0633 0120E	Spring Pin - M3x12	
105	0741 3808	Ball Bearing - 8x16x5mm	
106	0451 3006B	Tapping Screw - M3x6	
107	0451 3012B	Tapping Screw With Washer - M3x12	
108	0450 3006B	Tapping Screw - M3X6	

19. DRIVE SECTION 2 (A245)

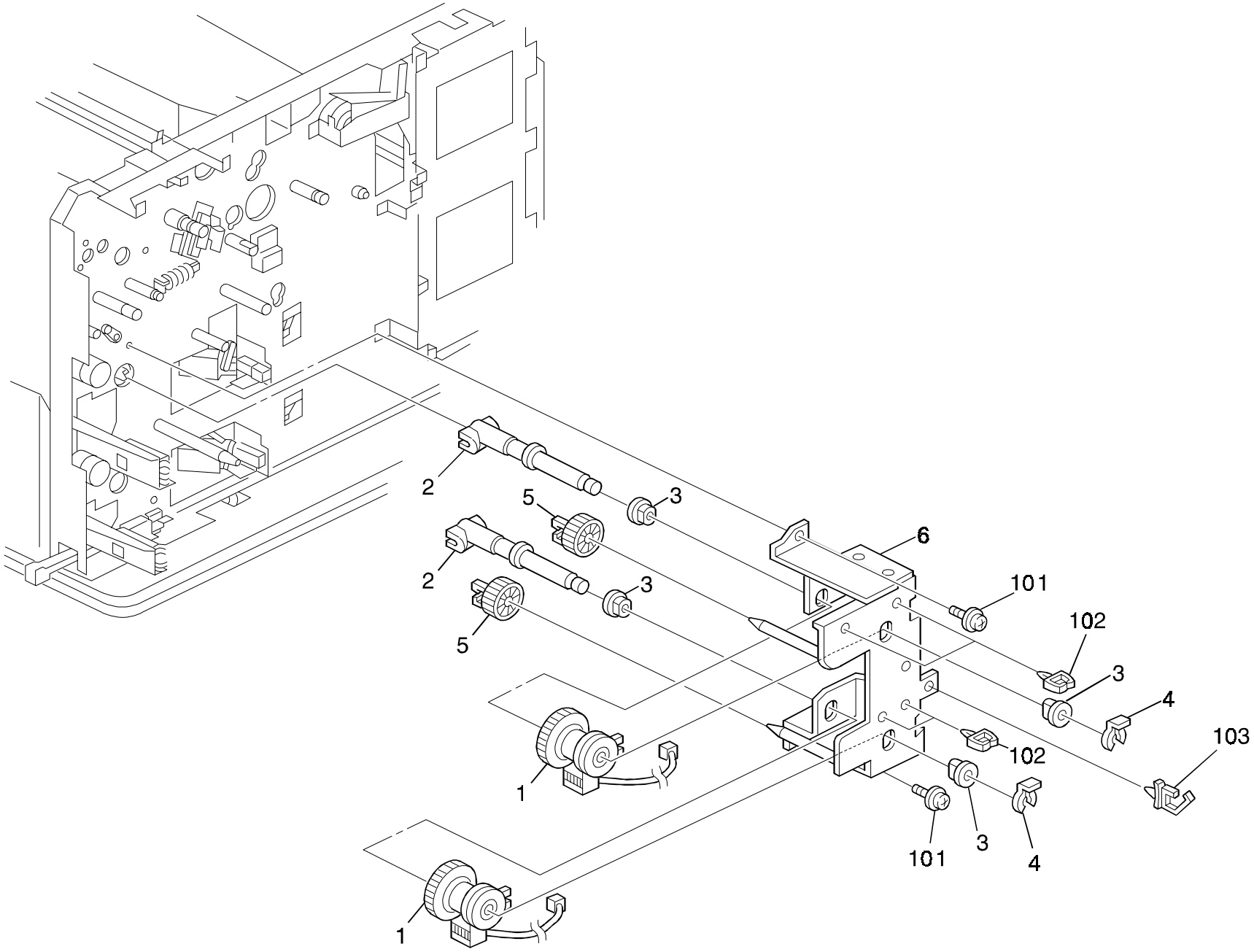

19. DRIVE SECTION 2 (A245)

Index No.	Part No.	Description	Q'ty Per Assembly
1	G020 1112	Paper Feed Clutch	2
2	G020 1145	Shaft - Paper Feed Roller	2
3	AA08 0111	Bushing - 8x12x7	4
4	5447 2681	Snap Ring	2
5	G020 1144	Gear - 27Z	1
6	A190 1176	Paper Feed Drive Unit	1

Index No.	Part No.	Description	Q'ty Per Assembly
101	0451 3006B	Tapping Screw - M3x6	
102	1105 0199	Clamp	
103	1105 0310	Wire Clamp	

20. ELECTRICAL SECTION 1 (A245)

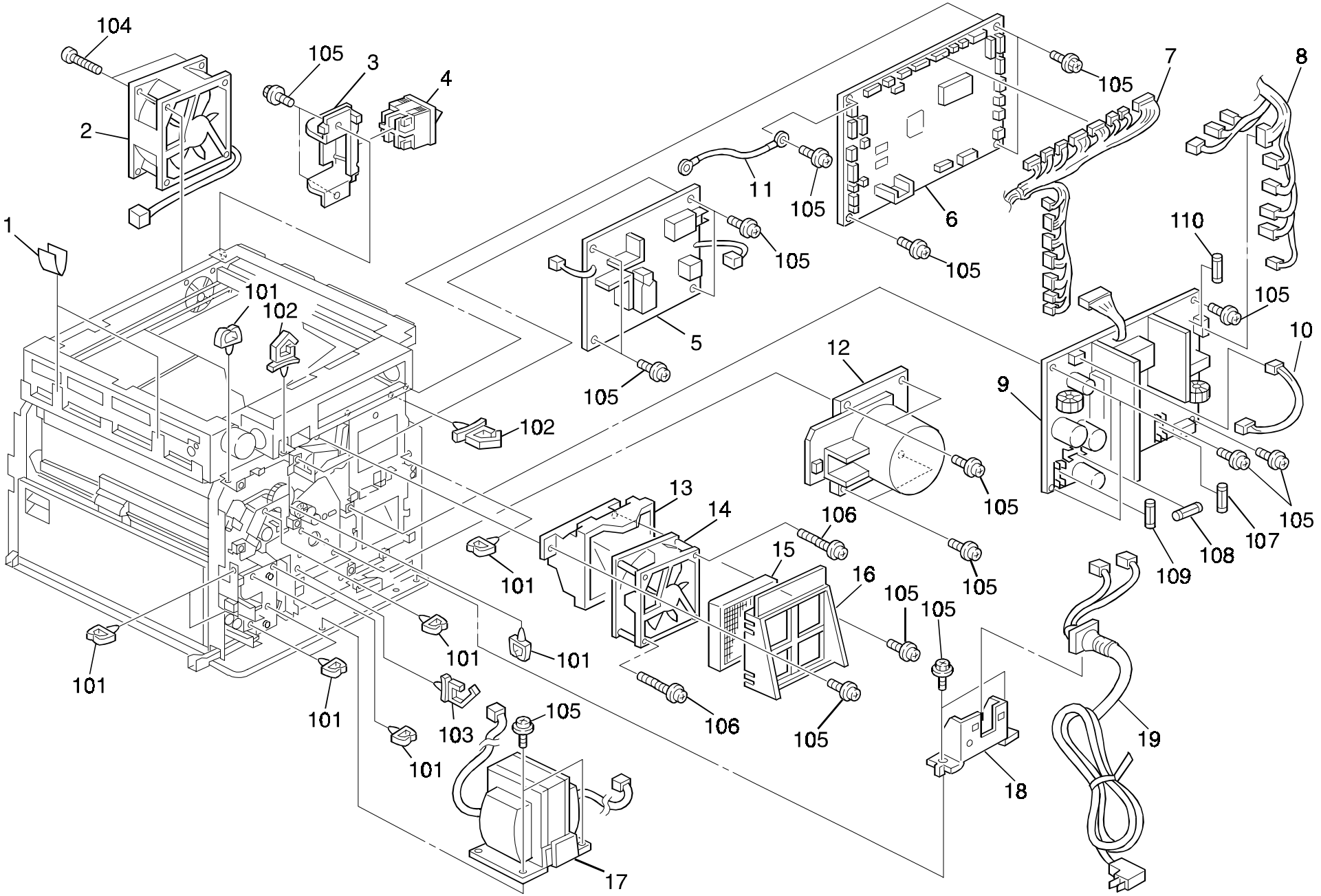

20. ELECTRICAL SECTION 1 (A245)

Rev. 12/12/2000

Index No.	Part No.	Description	Q'ty Per Assembly
1	A190 1195	Right Harness Cover	2
2	AX64 0058	Fan Motor - DC 24V 4.32W	1
3	A190 1192	Main Switch Bracket	1
4	A190 5222	Main Switch	1
5	A190 5150	High Voltage Supply Board	1
6	A245 5120	Main Control Board - 120V	1
6	A245 5100	Main Control Board - 230V	1
7	A245 5310	DC Harness	1
8	A190 5301	AC Main Harness - 120V	1
8	A245 5301	AC Main Harness - 230V	1
9	A219 5551	AC Drive DC Power Supply Board-120V	1
9	A245 5651	AC Drive DC Power Supply Board-230V	1
10	A190 5335	DC Power Harness	1
11	A184 5344	Scanner Grounding Harness	1
12	A245 1111	DC Motor 28W	1
13	A190 1155	Duct Bracket	1
14	A298 5238	Exhaust Fan Motor - DC24V 4.32W	1
15	**A190 1157**	**Ozone Filter**	**1**
16	A190 1156	Ozone Filter Cap	1
17	A219 5552	Transformer - 120V	1
17	A219 5652	Transformer - 230V	1
18	A245 1190	Power Cord Bracket	1
19	A219 5581	Power Supply Cord - 120V	1
19	A219 5681	Power Supply Cord - 230V	1

Index No.	Part No.	Description	Q'ty Per Assembly
101	1105 0199	Clamp	
102	1105 0413	Harness Clamp	
103	1105 0310	Wire Clamp	
104	0313 0300W	Philips Pan Head Screw - M3x30	
105	0451 3006B	Tapping Screw - M3x6	
106	0450 4030B	Tapping Screw - M4x30	
107	1107 0485	Fuse (ceramic Case) - 15A - 125V	
107	1107 0885	Fuse - 6.3A 250V	
108	1107 0855	Fuse - 8A 125V	
108	1107 0885	Fuse - 6.3A 250V	
109	1107 0872	Fuse - 3.15A 125V	
109	1107 0883	Fuse - 3.15A 250V	
110	1107 0868	Fuse - 5A 125V	
110	1107 0883	Fuse - 3.15A 250V	

21. ELECTRICAL SECTION 2 (A245)

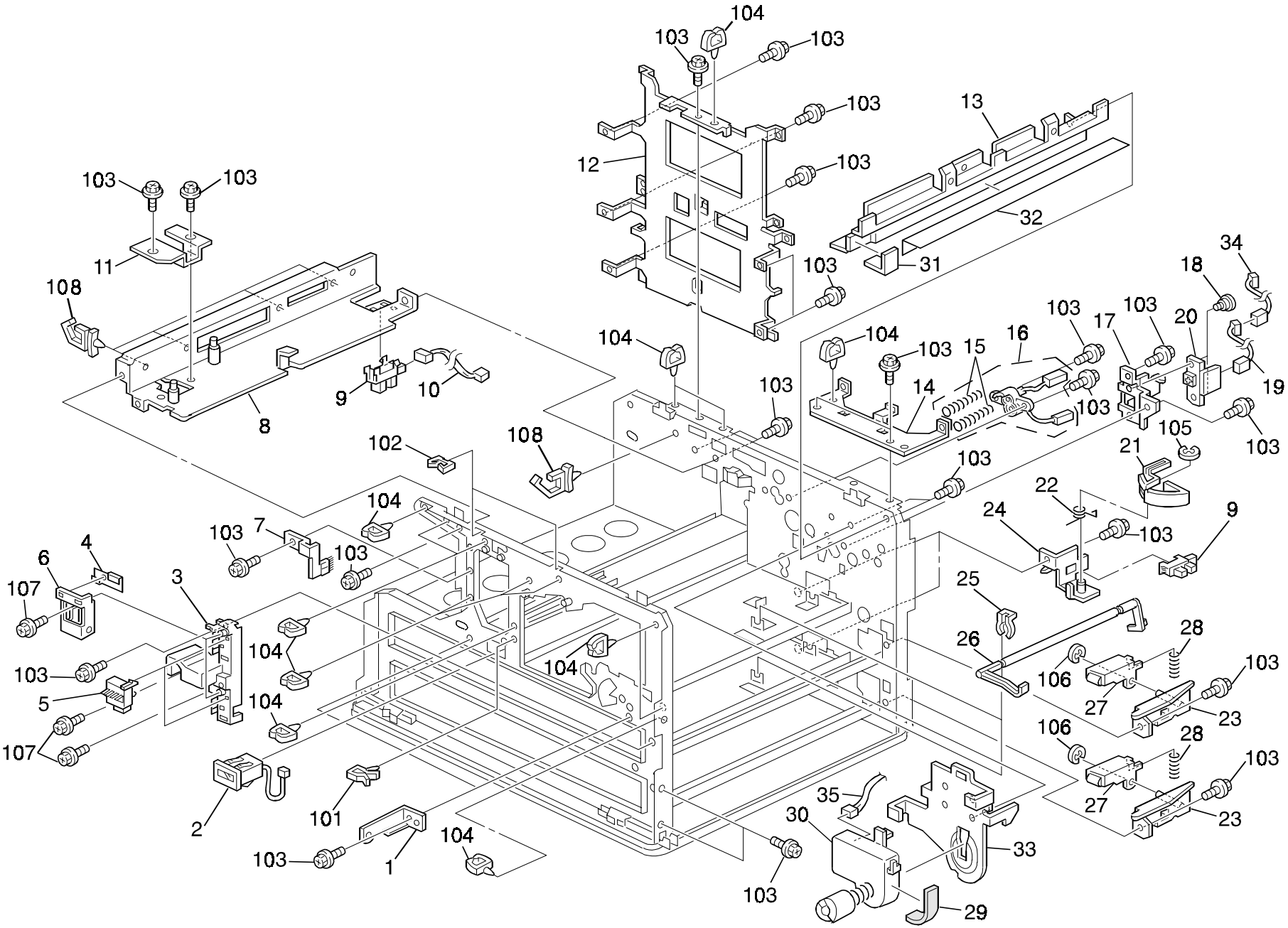

21. ELECTRICAL SECTION 2 (A245)

Rev. 11/17/99

Index No.	Part No.	Description	Q'ty Per Assembly
1	A190 1286	Front Cover Hinge Bracket	1
2	AX31 0024	Total Counter	1
3	A190 2671	Paper Size Switch Bracket	1
4	A190 2684	Guard - Paper Tray Stopper	2
5	A190 2620	Push Switch - Paper Size	2
6	A190 2680	Paper Tray Stopper	2
7	A190 4484	Antistatic Brush	1
8	A190 1045	Safety Switch Stay	1
9	AW02 0086	Photointerrupter	2
10	A190 5345	Exit Sensor Harness	1
11	A190 1048	Fusing Lever Cover	1
12	A190 1186	Main Board Bracket	1
13	A190 1191	By-pass Feed Cover	1
14	A190 1187	High Voltage Supply Board Bracket	1
15	AA06 3249	Grid Terminal Spring	2
16	A190 2040	Transfer Corona Wire Receptacle	1
17	A190 1193	Connector Bracket	1
18	G020 5829	Shoulder Screw - M3x2.5	2
19	A190 5335	DC Power Harness	1
20	A190 5145	Development Relay Board	1
21	G020 2622	Release Arm - Paper End Feeler	2
22	G020 2626	Release Spring - Paper End Feeler	2
23	A190 2801	Tray Stopper Bracket	2
24	G020 2580	Paper End Sensor Bracket	2
25	5447 2681	Snap Ring	2
26	G020 2581	Paper End Feeler	2
27	A190 2805	Roller Holder	2
28	AA06 3206	Spring - Front Side Fence	2
29	A219 3373	Seal - 2x15x95	1
30	A219 3371	DC Motor - 3.36W	1
31	A190 1197	Front Seal - By-pass Feed	1
32	A190 1196	Upper Seal - By-pass Feed	1
33	A219 3372	Motor Bracket	1
34	A190 5335	DC Power Harness	1
35	A219 5319	Toner Motor Harness	1

Index No.	Part No.	Description	Q'ty Per Assembly
101	1105 0290	Harness Clamp - Horizontal	
102	1105 0329	Clamp - ES-0510	
103	0451 3006B	Tapping Screw - M3x6	
104	1105 0199	Clamp	
105	0720 0030E	Retaining Ring - M3	
106	0720 0040E	Retaining Ring - M4	
107	0450 3008B	Tapping Screw - M3x8	
108	1105 0413	Harness Clamp	

22. FRAME SECTION (A245)

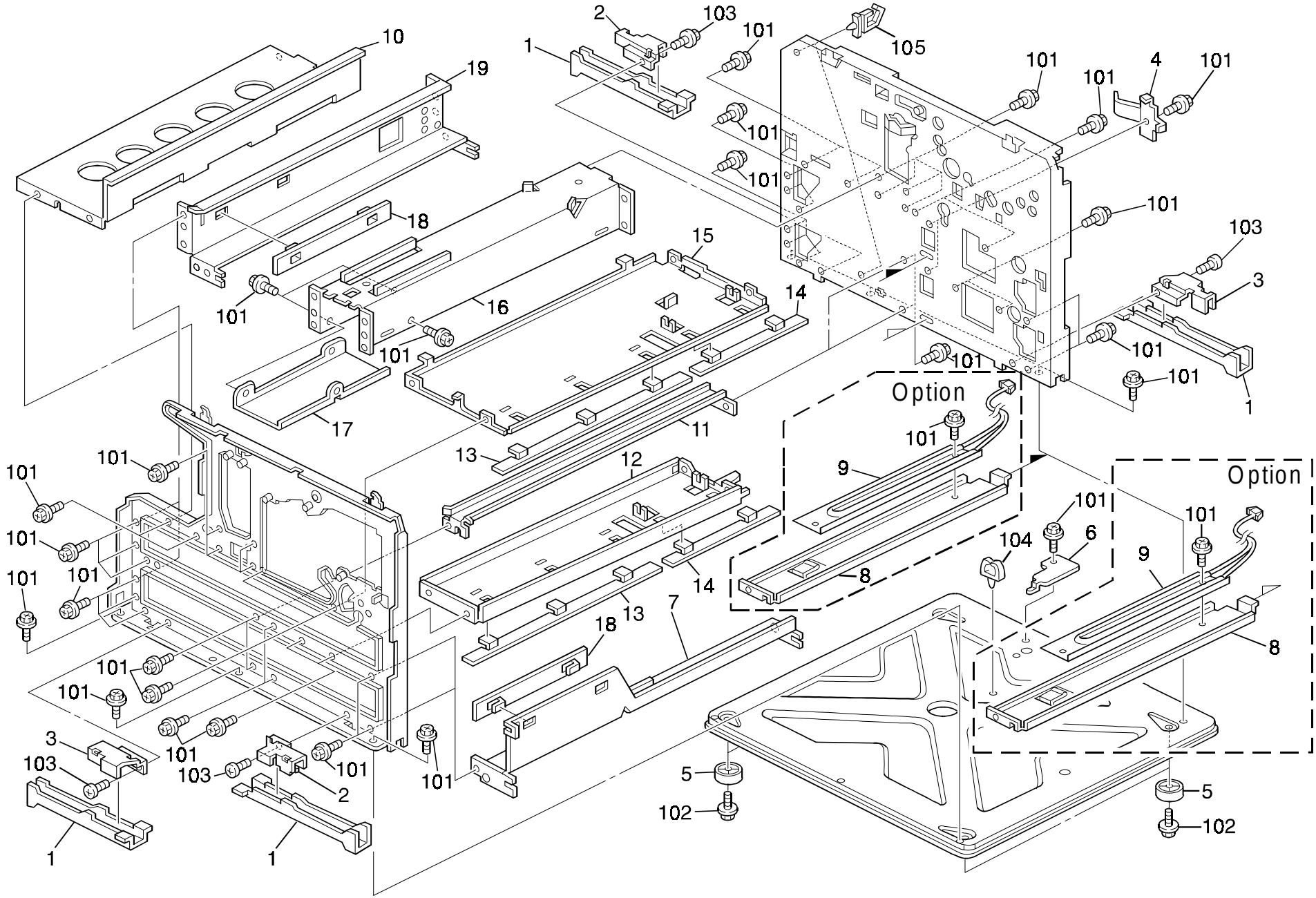

22. FRAME SECTION (A245)

Rev. 11/07/2000

Index No.	Part No.	Description	Q'ty Per Assembly
1	A298 1071	Left Grip Plate	4
2	A190 1084	Front Right Grip Bracket	2
3	A134 1072	Right Bracket - Grip Plate	2
4	G020 2643	Front Grounding Plate - Paper Tray	2
5	G020 1052	Stand	4
6	A190 1076	Base Cover	1
7	G020 2650	Right Guide - Paper Tray	1
8	A190 2825	Heater Bracket	2
9	AX40 0063	Anticondensation Heater - 120V 9W (Option)	1
9	AX40 0064	Anticondensation Heater - 230V 9W (Option)	1
10	A190 1080	Exit Stay	1
11	G020 2652	Middle Rail - Paper Tray	2
12	A190 1081	Stay - Paper End Sensor	1
13	G020 2655	Upper Front Guide - Paper Tray	2
14	G020 2654	Upper Rear Guide - Paper Tray	2
15	G020 1078	Right Shielding Plate	1
16	G020 1072	Fusing Unit Guide	1
17	A193 1074	Relay Harness Cover	1
18	G020 2678	Guide Plate - Paper Tray	2
19	G020 2653	Left Rail - Paper Tray	1

Index No.	Part No.	Description	Q'ty Per Assembly
101	0451 3006B	Tapping Screw - M3x6	
102	0451 3010B	Tapping Screw - M3x10	
103	0434 0060B	Pan Head Self-tapping Screw - M4x6	
104	1105 0199	Clamp	
105	1105 0310	Wire Clamp	

23. MAIN CONTROL BOARD (A245)

CAPACITOR

SYMBOL NO.	INDEX NO.
C 101	169
C 102	176
C 103	173
C 104	170
C 105	169
C 106	171
C 107	169
C 108	171
C 109	173
C 110	176

SYMBOL NO.	INDEX NO.
C 111	173
C 112	173
C 113	175
C 114	173
C 115	175
C 116	176
C 117	173
C 118	175
C 119	173
C 120	173

SYMBOL NO.	INDEX NO.
C 121	173
C 122	176
C 123	177
C 124	175
C 125	175
C 126	173
C 127	172
C 128	173
C 129	176
C 130	175

SYMBOL NO.	INDEX NO.
C 131	173
C 132	173
C 133	175
C 134	175
C 135	173
C 136	172
C 137	176
C 138	173
C 139	174
C 140	175

SYMBOL NO.	INDEX NO.
C 141	173
C 142	174
C 143	173
C 144	175
C 145	173
C 146	175
C 147	175
C 148	173
C 149	175
C 150	173

SYMBOL NO.	INDEX NO.
C 151	175
C 152	174
C 153	174
C 154	175
C 155	175
C 156	173
C 157	175
C 158	175
C 159	175
C 160	173

SYMBOL NO.	INDEX NO.
C 161	173
C 162	175
C 163	175
C 164	173
C 165	173
C 166	----
C 167	----
C 168	----
C 169	----
C 170	175

CNNECTOR

SYMBOL NO.	INDEX NO.
CN 101	107
CN 102	106
CN 103	118
CN 104	105
CN 105	105
CN 106	110
CN 107	112
CN 108	101
CN 109	106
CN 110	111

SYMBOL NO.	INDEX NO.
CN 111	103
CN 112	110
CN 113	112
CN 114	106
CN 115	102
CN 116	101
CN 117	104
CN 118	108
CN 119	109
CN 120	102

SYMBOL NO.	INDEX NO.
CN 121	101
CN 122	179
CN 123	104
CN 124	114
CN 125	113
CN 126	101
CN 127	102
CN 128	116
CN 129	----
CN 130	119

SYMBOL NO.	INDEX NO.
CN 131	117

DIODE

SYMBOL NO.	INDEX NO.
D 101	129
D 102	----
D 103	129
D 104	129
D 105	129
D 106	129
D 107	130
D 108	130
D 109	130
D 110	130

SYMBOL NO.	INDEX NO.
D 111	129
D 112	129
D 113	129
D 114	129
D 115	127

DSC

SYMBOL NO.	INDEX NO.
DSC101	144

23. MAIN CONTROL BOARD (A245)

IC

SYMBOL NO.	INDEX NO.
IC 101	132
IC 102	132
IC 103	140
IC 104	140
IC 105	138
IC106	131
(Socket)	120
IC 107	143
IC 108	142
IC 109	133
IC 110	136

SYMBOL NO.	INDEX NO.
IC 111	140
IC 112	139
IC 113	137
IC 114	135
IC 115	131
IC 116	138
IC 117	5
(Socket)	121
IC 118	2
IC 119	134
IC 120	141

JP

SYMBOL NO.	INDEX NO.
JP 101	178
JP 102	----
JP 103	----
JP 104	178
JP 105	178

L

SYMBOL NO.	INDEX NO.
L 181	147

Q

SYMBOL NO.	INDEX NO.
Q 101	124
Q 102	124
Q 103	123
Q 104	123
Q 105	123
Q 106	123
Q 107	123
Q 108	123
Q 109	123
Q 110	123

SYMBOL NO.	INDEX NO.
Q 111	122
Q 112	122
Q 113	----
Q 114	123

RESISTOR

SYMBOL NO.	INDEX NO.
R 101	3
R 102	156
R 103	156
R 104	149
R 105	149
R 106	148
R 107	153
R 108	163
R 109	166
R 110	156

RESISTOR

SYMBOL NO.	INDEX NO.
R 111	156
R 112	156
R 113	156
R 114	145
R 115	154
R 116	154
R 117	154
R 118	154
R 119	145
R 120	162

SYMBOL NO.	INDEX NO.
R 121	164
R 122	156
R 123	156
R 124	156
R 125	156
R 126	156
R 127	----
R 128	149
R 129	1
R 130	156

SYMBOL NO.	INDEX NO.
R 131	156
R 132	156
R 133	149
R 134	156
R 135	156
R 136	156
R 137	157
R 138	156
R 139	154
R 140	150

SYMBOL NO.	INDEX NO.
R 141	167
R 142	156
R 143	156
R 144	156
R 145	156
R 146	149
R 147	158
R 148	156
R 149	156
R 150	156

SYMBOL NO.	INDEX NO.
R 151	156
R 152	154
R 153	154
R 154	154
R 155	154
R 156	154
R 157	154
R 158	154
R 159	154
R 160	154

SYMBOL NO.	INDEX NO.
R 161	154
R 162	154
R 163	156
R 164	149
R 165	149
R 166	157
R 167	156
R 168	162
R 169	156
R 170	149

SYMBOL NO.	INDEX NO.
R 171	162
R 172	152
R 173	154
R 174	154
R 175	151
R 176	154
R 177	156
R 178	154
R 179	154
R 180	154

23. MAIN CONTROL BOARD (A245)

RESISTOR (115V)

SYMBOL NO.	INDEX NO.
R 181	154
R 182	150
R 183	150
R 184	150
R 185	150
R 186	154
R 187	149
R 188	149
R 189	154
R 190	149

SYMBOL NO.	INDEX NO.
R 191	149
R 192	154
R 193	149
R 194	149
R 195	154
R 196	149
R 197	149
R 198	154
R 199	149
R 200	149

SYMBOL NO.	INDEX NO.
R 201	154
R 202	149
R 203	149
R 204	154
R 205	149
R 206	149
R 207	154
R 208	149
R 209	149
R 210	154

SYMBOL NO.	INDEX NO.
R 211	149
R 212	153
R 213	154
R 214	149
R 215	153
R 216	156
R 217	156
R 218	156
R 219	156
R 220	156

SYMBOL NO.	INDEX NO.
R 221	156
R 222	156
R 223	149
R 224	149
R 225	159
R 226	150
R 227	165
R 228	168
R 229	150
R 230	156

SYMBOL NO.	INDEX NO.
R 231	156
R 232	149
R 233	156
R 234	149
R 235	156
R 236	156
R 237	154
R 238	150
R 239	155
R 240	156

SYMBOL NO.	INDEX NO.
R 241	156
R 242	156
R 243	159
R 244	149
R 245	149
R 246	149
R 247	156
R 248	156
R 249	156
R 250	----

SYMBOL NO.	INDEX NO.
R 291	----
R 292	160
R 293	160
R 294	160
R 295	160
R 296	160
R 297	156
R 298	156
R 299	156
R 300	156

RESISTOR (230V)

SYMBOL NO.	INDEX NO.
R 329	161
R 330	161
R 331	161
R 332	161

SYMBOL NO.	INDEX NO.
R 250	147
R 251	147
R 252	147
R 253	147
R 254	147
R 255	147
R 256	147
R 257	147
R 258	----
R 259	147
R 260	147

SYMBOL NO.	INDEX NO.
R 261	147
R 262	147
R 263	147
R 264	147
R 265	147
R 266	147
R 267	147
R 268	147
R 269	147
R 270	147

SYMBOL NO.	INDEX NO.
R 271	147
R 272	147
R 273	147
R 274	147
R 275	147
R 276	147
R 277	----
R 278	147
R 279	147
R 280	147

SYMBOL NO.	INDEX NO.
R 281	147
R 282	147
R 283	147
R 284	147
R 285	147
R 286	147
R 287	147
R 288	147
R 289	147
R 290	147

SYMBOL NO.	INDEX NO.
R 291	147
R 292	160
R 293	160
R 294	160
R 295	160
R 296	160
R 297	----
R 298	----
R 299	147
R 300	----

SYMBOL NO.	INDEX NO.
R 301	----
R 302	147
R 303	147
R 304	147
R 305	147
R 306	147
R 307	147
R 308	147
	147
L101	147

VR

SYMBOL NO.	INDEX NO.
VR 101	146

ZD

SYMBOL NO.	INDEX NO.
ZD 101	126
ZD 102	128
ZD 103	126
ZD 104	125

23. MAIN CONTROL BOARD (A245)

Index No.	Part No.	Description	Q'ty Per Assembly
*	A245 5100	Main Control Board - 230V	1
*	A245 5120	Main Control Board - 120V	1
1	A077 5717	Resistor - 1K Ω ±5% 1W	1
2	A184 5105	IC - RF5A93	1
3	A190 5107	Resistor - 180 Ω ±5% 3W	1
5	A245 5104	IC - UVEPROM 1M X8 120N	1

Index No.	Part No.	Description	Q'ty Per Assembly
101	1102 4201	Connector - 2p	
102	1102 4202	Connector - 3p	
103	1102 4203	CT Header - 4P	
104	1102 4204	Ct Header - 5p	
105	1102 4205	Ct Header- 6p	
106	1102 4206	Connector - 7p	
107	1102 4208	Connector - 9p	
108	1102 4209	Ct Header - 10p	
109	1102 4211	Ct Header - 12p	
110	1102 4619	Connector - 2p	
111	1102 4624	Ct Connector - 7p	
112	1102 4631	Ct Connector - 2p	
113	1102 4634	Ct Connector - 5P	
114	1102 4646	Connector - 5P	
115	1102 5303	Connector - 4p	
116	1103 1770	Connector - 4p	
117	1103 1771	Connector - 5p	
118	1103 1772	Pin Header - 6p	
119	1103 1778	Pin Header - 12P	
120	1104 0511	IC Socket - 8P - DICF-8CS-E	
121	1104 0589	Dip Socket : 32p	
122	1400 0072	Transistor - 2SC372Y	
123	1400 0291	Transistor - 2SA1020Y	
124	1400 0652	Transistor - 2SA1287	
125	1401 0694	Zener Diode - RD6.8FB	
126	1402 0277	Zener Diode - 1Z12	
127	1402 1050	Silicon Diode - 100V 1A	
128	1402 1125	Zener Diode - 1W - RD33FB2	
129	1402 1160	Diode - S5688	
130	1402 1310	Diode - D1NL20U	
131	1407 1535	IC - TD62308AP	
132	1407 2187	TTLIC - SN74LS07NS	
133	1407 2836	IC - HD74C14FP	
134	1407 3764	IC - TC7SU04F	
135	1407 3857	IC - TC7SU04F	

Index No.	Part No.	Description	Q'ty Per Assembly
136	1407 4315	IC - TE7751	
137	1407 4642	IC - MTD1110	
138	1407 4672	TTL HD74LS368FP	
139	1407 4678	EPROM BR93LC56A	
140	1408 0150	IC - ULN2003AN	
141	1408 0595	IC - NJM2904M	
142	1408 0611	IC - 3771	
143	1408 0826	IC - TA8428K	
144	1503 0563	Oscillator - 9.83mtz040	
145	1601 5295	Resistor - 0.47Ω ±2% 1W	
146	1601 8157	Variable Resistor - 100K Ω	
147	1607 0878	Inductor - BLM21A102S	
148	1630 3101	Resistor - 100Ω - 1/10W	
149	1630 3102	Resistor - 1KΩ 1/10W ±5%	
150	1630 3103	Resistor - 10KΩ 1/10W ±5%	
151	1630 3105	Resistor - 1M Ω ±5% 1/10W	
152	1630 3204	Resistor - 200K Ω 1/10W ±5%	
153	1630 3222	Resistor - 2.2KΩ 1/10W ±5%	
154	1630 3223	Resistor - 22kΩ - 1/10W	
155	1630 3393	Resistor - 39K Ω 1/10W	
156	1630 3472	Resistor - 4.7KΩ 1/10W ±5%	
157	1630 3512	Resistor - 5.10KΩ - 1/10W	
158	1630 3751	Resistor - 750Ω±5% 1/10W	
159	1630 3752	Resistor - 7.5K Ω ±5% 1/10W	
160	1632 0000	Resistor - 0 Ω 1/8W	
161	1633 0000	Resistor - 0Ω 1/10W:JUMPER CHIP	
162	1633 1001	Resistor - 1K Ω ±1% 1/10W	
163	1633 1002	Resistor - 10K Ω ±1% 1/10W	
164	1633 1050	Resistor - 105 Ω ±1% 1/10W	
165	1633 2150	Resistor - 215Ω ±1% 1/10W	
166	1633 3901	Resistor - 3.9 Ω ±1% 1/10W	
167	1633 7870	Resistor - 787 Ω ±1% 1/10W	
168	1633 9319	Resistor - 93.1 Ω ±1% 1/10W	
169	1640 5100	Capacitor - 10µF+20% 35V	

Index No.	Part No.	Description	Q'ty Per Assembly
170	1640 5109	Capacitor - 1µF- ±20% - 50V	
171	1640 5470	Capacitor - 47µF±20% 50V	
172	1660 3101	Capacitor - 100pF 50V	
173	1660 3471	Capacitor - 470pF 50V	
174	1660 5332	Capacitor - 3300pF ±10% 50V	
175	1660 7103	Capacitor - 10000pF 50V	
176	1660 7104	Capacitor - 100000pF 50V	
177	1660 7473	Capacitor - 47000pF +80% -20% 50V	
178	1002 0307	Jumper Wire	

24. DECAL AND DOCUMENT (A245)

1

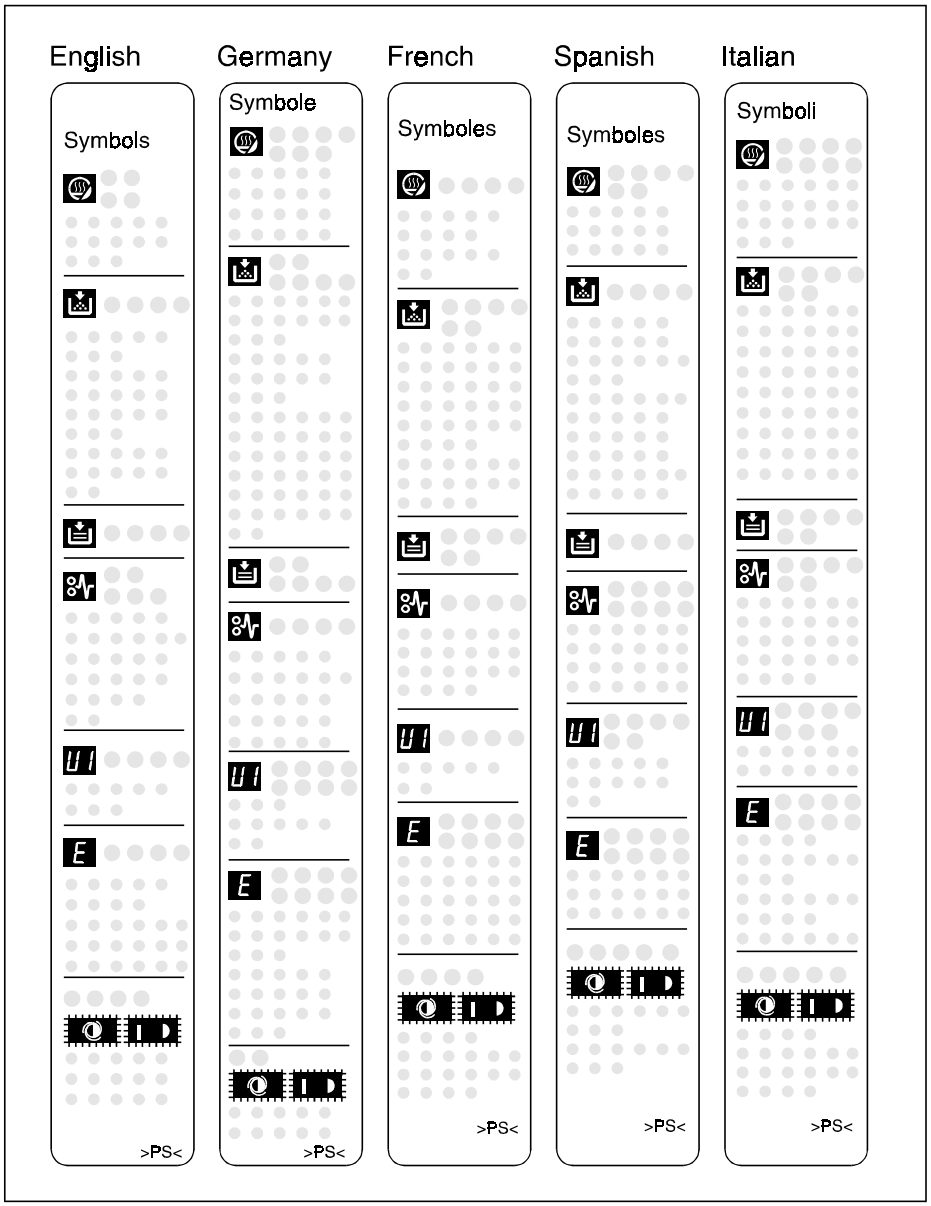

2



3



4

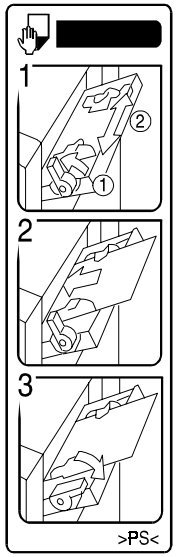

5

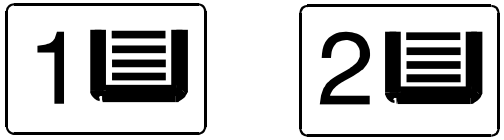

6

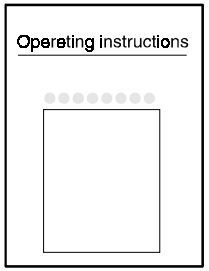

8

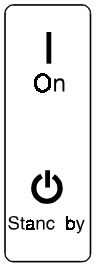

9

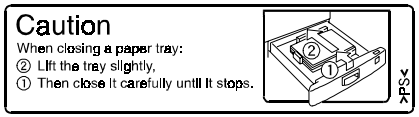

7

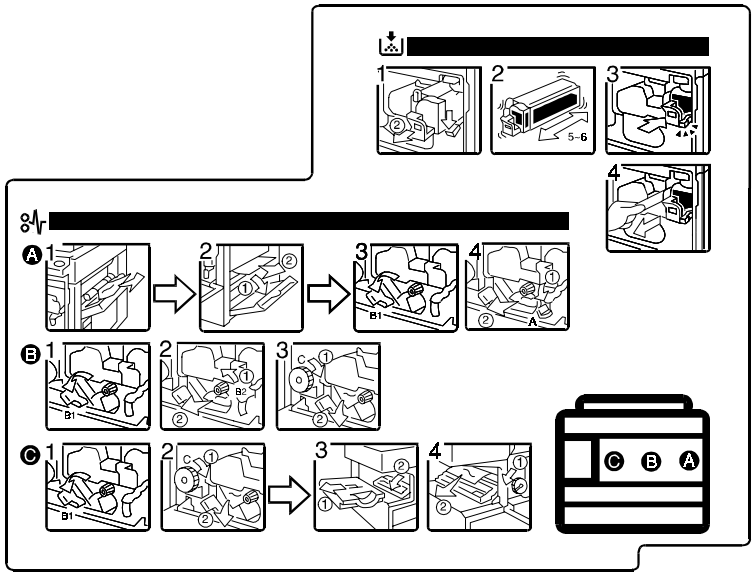

10

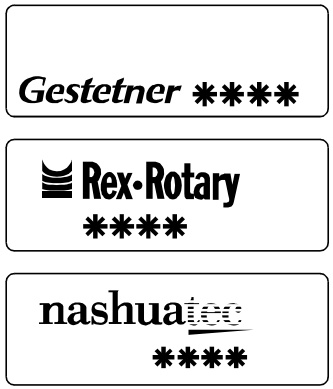

11



12

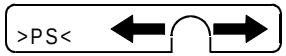

13

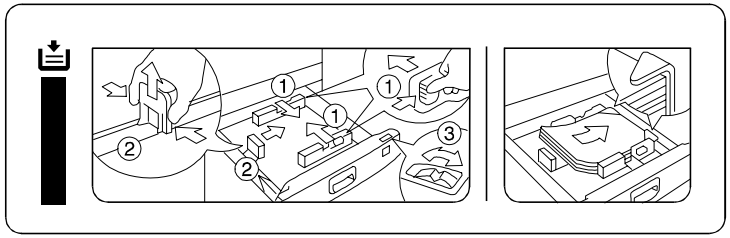

24. DECAL AND DOCUMENT (A245)

Index No.	Part No.	Description	Q'ty Per Assembly
1	A219 1380	Decal - Symbol Explanation 5 Lang.	1
2	A153 1285	Emblem (RIC)	1
2	A156 6413	Emblem (SVN)	1
3	A190 4476	Decal - High Temperature	1
4	A190 2708	Decal - By-pass Feed	1
5	A190 2690	Decal - 1st Paper Tray	1
5	A190 2691	Decal - 2nd Paper Tray	1
6	A245 8607	Operating Instructions - English LT (RIC)	1
6	A245 8650	Operating Instructions - English LT (SVN)	1
6	A245 8697	Operating Instructions - English LT (NRG)	1
6	A245 8608	Operating Instructions - English A4 (RIC)	1
6	A245 8690	Operating Instructions - English A4 (NRG)	1
6	A245 8660	Operating Instructions - English A4 (INF)	1
6	A245 8661	Operating Instructions - German (INF)	1
6	A245 8662	Operating Instructions - French (INF)	1
6	A245 8663	Operating Instructions - Italian (INF)	1
6	A245 8664	Operating Instructions - Spanish (INF)	1
7	A219 1284	Operation Guide Sheet	1
8	A219 1265	Decal - Main Switch	1
9	A190 2692	Decal - Paper Tray Operation	1
9	A245 2694	Decal - Paper Tray Operation (4 Language)	1
10	A245 6182	Model Name Plate - GES	1
10	A245 6184	Model Name Plate - NSA	1
10	A245 6186	Model Name Plate - REX	1
10	A219 6187	Model Name Plate - GENERIC	1
11	C225 2867	Decal - Cover - Panel (NSA)	1
11	C225 2866	Decal - Key Top Cover (REX)	1
11	A153 6409	Decal - Keytop Cover (GES)	1
12	A219 2696	Decal - Size Selection	1
13	G020 2668	Decal - Paper Set	1

Index No.	Part No.	Description	Q'ty Per Assembly

25. SPECIAL TOOLS (A245)

Rev. 10/30/2000

1 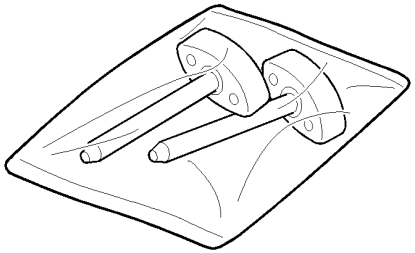	2 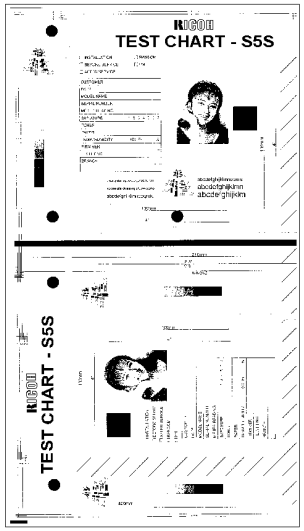	3 	4 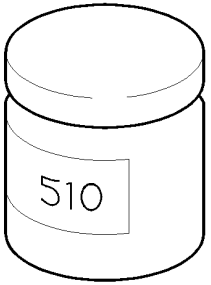
5 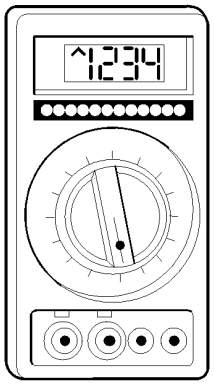	6 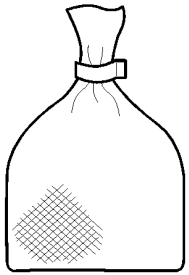	7,8 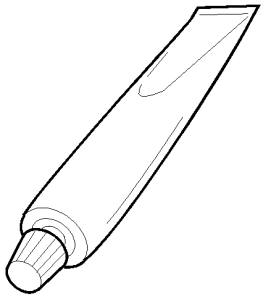	

25. SPECIAL TOOLS (A245)

Rev. 10/30/2000

Index No.	Part No.	Description	Q'ty Per Assembly
1	A184 9501	Optics Adjustment Tool	1
2	A292 9500	Test Chart - S5S (10pcs/set)	1
3	5442 9103	Launa Oil 40	1
4	5203 9501	Grease 501	1
5	5420 9507	Digital Multimeter - Beckman	1
6	5442 9101	Setting Powder	1
7	A257 9300	Grease Barrierta - S552R	1
8	A190 9002	Grease - CP501 (5 Pcs/set)	1

Index No.	Part No.	Description	Q'ty Per Assembly

A245
PARTS INDEX

This section instructs you as to the numbers and names of parts on this machine.

PM Parts Index

Section Name	Part No.	Description in Service Manual	Description in Parts Catalog	Q'ty Per Assembly	Page and Index No
PLATEN COVER (A245)	5448 2804	Platen Cover Sheet	Platen Cover Sheet	1	9- 6
PAPER TRAY (A245)	G020 2645	Tray Bottom Plate Pad	Friction Pad	1	13- 16
PAPER FEED SECTION 1 (A245)	G020 2555	Feed Roller	Paper Feed Roller	2	17- 19
	G020 2721	By-pass Feed Roller	By-pass Feed Roller	1	17- 13
PAPER FEED SECTION 2 (A245)	G020 2555	Feed Roller	Paper Feed Roller	2	19- 10
PAPER REGISTRATION (A245)	G020 2716	Friction Pad	Friction Pad	1	21- 18
IMAGING UNIT - 1 (A245)	A190 2060	Charge Corona Grid	Charge Corona Grid	1	31- 3
	A190 2065	Charge Corona Wire	Charge Corona Wire	1	31- 4
	A190 2070	Charge Corona Cleaning Pad	Corona Wire Cleaner Ass'y	1	31- 12
IMAGING UNIT - 2 (A245)	A219 9510	OPC Drum	OPC Drum	1	33- 16
	A190 3550	Cleaning Blade	Cleaning Blade	1	33- 20
FUSING UNIT (A245)	A184 4072	Stripper Pawl	Stripper Pawl	5	37- 4
	A245 4100	Hot Roller	Hot Roller	1	37- 15
	A245 4103	Pressure Roller	Pressure Roller	1	37- 18
TRANSFER AND EXIT SECTION (A245)	A190 3866	Transfer Corona Wire	Transfer Corona Wire	1	39- 24
ELECTRICAL SECTION 1 (A245)	A190 1157	Ozone Filter	Ozone Filter	1	45- 15

Parts Index

Part No.	Description	Page and Index No.
A245 1111	DC Motor 28W	45- 12
A245 1148	Timing pulley - 37Z	41- 8
A245 1190	Power Cord Bracket	45- 18
A245 1270	Front Cover Ass'y (RIC)	7- 1
A245 1305	Left Lower Cover	7- 16
A245 1330	Rear Cover	7- 22
A245 1450	Operation Panel Ass'y - LT (RIC/NRG)	7- 11
A245 1450	Operation Panel Ass'y - LT (RIC/NRG)	11- *
A245 1451	Operation Panel Ass'y - A4	7- 11
A245 1451	Operation Panel Ass'y - A4	11- *
A245 1452	Operation Panel Ass'y -LT (SVN)	7- 11
A245 1452	Operation Panel Ass'y - LT (SVN)	11- *
A245 1461	Indication Sheet - LT (RIC/NRG)	11- 2
A245 1462	Indication Sheet - A4	11- 2
A245 1463	Indication Sheet - LT (SVN)	11- 2
A245 1700	1st Scanner Unit - 120V	23- 19
A245 1701	1st Scanner Unit - 230V	23- 19
A245 1740	1st Scanner Cushion	23- 26
A245 2551	Paper Tray Ass'y - LT	13- *
A245 2552	Paper Tray Ass'y - A4	13- *
A245 2610	Lower Paper Guide	19- 20
A245 2694	Decal - Paper Tray Operation (4 Language)	55- 9
A245 4023	Fusing Unit - 120V	37- *
A245 4024	Fusing Unit - 230V	37- *
A245 4100	Hot Roller	37- 15
A245 4103	Pressure Roller	37- 18
A245 4108	Pressure Roller Lever	37- 20
A245 4109	Pressure Spring	37- 19
A245 4120	Fusing Lamp - 230V 760W	37- 12
A245 4472	Lower Guide Plate	39- 4
A245 5100	Main Control Board - 230V	45- 6
A245 5100	Main Control Board - 230V	53- *
A245 5104	IC - UVEPROM 1M X8 120N	53- 5
A245 5120	Main Control Board - 120V	53- *
A245 5120	Main Control Board - 120V	45- 6

Part No.	Description	Page and Index No
A245 5301	AC Main Harness - 230V	45- 8
A245 5310	DC Harness	45- 7
A245 5310	DC Harness	19- 3
A245 5651	AC Drive DC Power Supply Board-230V	45- 9
A245 6182	Model Name Plate - GES	7- 21
A245 6182	Model Name Plate - GES	55- 10
A245 6184	Model Name Plate - NSA	55- 10
A245 6184	Model Name Plate - NSA	7- 21
A245 6186	Model Name Plate - REX	55- 10
A245 6186	Model Name Plate - REX	7- 21
A245 6270	Front Cover Ass'y (INF)	7- 1
A245 6470	Front Cover Ass'y (SVN)	7- 1
A245 8607	Operating Instructions - English LT (RIC)	55- 6
A245 8608	Operating Instructions - English A4 (RIC)	55- 6
A245 8650	Operating Instructions - English LT (SVN)	55- 6
A245 8660	Operating Instructions - English A4 (INF)	55- 6
A245 8661	Operating Instructions - German (INF)	55- 6
A245 8662	Operating Instructions - French (INF)	55- 6
A245 8663	Operating Instructions - Italian (INF)	55- 6
A245 8664	Operating Instructions - Spanish (INF)	55- 6
A245 8690	Operating Instructions - English A4 (NRG)	55- 6
A245 8697	Operating Instructions - English LT (NRG)	55- 6

Part No.	Description	Page and Index No.
AA06 0331	Release Spring	21- 14
AA06 3036	Terminal Spring	39- 28
AA06 3040	Spring	39- 27
AA06 3180	Adjust Spring	27- 23
AA06 3206	Spring - Front Side Fence	47- 28
AA06 3249	Grid Terminal Spring	47- 15
AA06 3489	Spring - 45mm	35- 4
AA06 3523	Adjust Spring	27- 13
AA08 0111	Bushing - 8x12x7	43- 3
AA14 3070	Shoulder Screw - M2x2	7- 15
AA14 3424	Knob Screw - M4x8	9- 2
AA14 3716	Stepped Screw	35- 26
AA15 0234	Mylar Seal - Base	27- 26
AA16 2067	Platen Cover Pad	9- 5
AB01 3868	Gear - 16Z	13- 19
AB01 7129	Gear - 20Z AND 72Z	27- 20
AB01 7361	Gear - 24Z/56Z	27- 17
AB03 0273	Timing Pulley - T20	41- 6
AC01 2042	Exposure Glass	7- 13
AC02 0077	Lens - F8/180	25- 8
AC06 3001	White Reference Plate	23- 3
AF02 0283	Pressure Roller	19- 14
AF04 0031	Upper Exit Roller	39- 7
AG07 0004	Magnetic Catch	7- 9
AG07 0009	Magnetic Catch	39- 11
AW02 0075	Photointerrupter	47- 9
AW02 0075	Photointerrupter	27- 5
AW02 0075	Photointerrupter	23- 4
AW10 0033	Thermistor	23- 7
AX31 0024	Total Counter	47- 2
AX40 0052	Anti-Condensation Heater - 115V 18W	25- 4
AX40 0053	Anti-Condensation Heater - 240V 18W	25- 4
AX40 0063	Anticondensation Heater - 120V 9W	49- 9
AX40 0064	Anticondensation Heater - 230V 9W	49- 9
AX64 0058	Fan Motor - DC 24V 4.32W	45- 2

Part No.	Description	Page and Index No
C225 2866	Decal - key Top Cover (REX)	7- 3
C225 2866	Decal - Key Top Cover (REX)	55- 11
C225 2867	Decal - Cover - Panel (NSA)	55- 11
C225 2867	Decal - Cover - Panel (NSA)	7- 3
G011 3305	Gear - 16T	15- 12
G020 1052	Stand	49- 5
G020 1072	Fusing Unit Guide	49- 16
G020 1078	Right Shielding Plate	49- 15
G020 1112	Paper Feed Clutch	43- 1
G020 1114	By-pass Feed Clutch	41- 4
G020 1115	Registration Clutch	41- 18
G020 1130	Gear - 65Z/24Z	41- 11
G020 1131	Gear - 58Z/35Z	41- 13
G020 1132	Gear - 68Z	41- 16
G020 1138	Pulley - 24T	41- 27
G020 1144	Gear - 27Z	43- 5
G020 1145	Shaft - Paper Feed Roller	43- 2
G020 1157	Gear - 28Z	35- 12
G020 1168	Gear - 52Z/26T	41- 17
G020 1177	Gear - 26Z	41- 32
G020 1178	Pulley - 51T	41- 30
G020 1187	Timing Belt - S2M 158MM	41- 31
G020 1923	CS Ring - M2.4	33- 24
G020 2327	Pressure Spring	31- 20
G020 2355	Transport Guide Shaft	33- 12
G020 2554	Paper Feed Roller Ass'y	19- 19
G020 2554	Paper Feed Roller Ass'y	17- 22
G020 2555	Paper Feed Roller	17- 19
G020 2555	Paper Feed Roller	19- 10
G020 2557	Tray Bottom Plate	13- 15
G020 2558	Rear Corner Separator	13- 12
G020 2565	Paper Guide	17- 18
G020 2565	Paper Guide	19- 9
G020 2567	Rear Side Fence	13- 11
G020 2570	Shaft - Paper Feed Roller	17- 17

Part No.	Description	Page and Index No.
G020 2570	Shaft - Paper Feed Roller	19- 8
G020 2573	Front Paper Separator	13- 21
G020 2576	Guide - Vertical Transport	19- 17
G020 2577	Spring Plate - Driven Roller	19- 15
G020 2580	Paper End Sensor Bracket	47- 24
G020 2581	Paper End Feeler	47- 26
G020 2585	Front Pin - Paper Feed Roller	17- 16
G020 2585	Front Pin - Paper Feed Roller	19- 6
G020 2586	Rear Pin - Paper Feed Roller	17- 15
G020 2586	Rear Pin - Paper Feed Roller	19- 7
G020 2587	Bushing - Paper Feed	17- 12
G020 2587	Bushing - Paper Feed	19- 1
G020 2592	Release Lever - Bottom Plate	13- 7
G020 2593	Paper Size Sensor - LT	13- 4
G020 2595	Paper Size Sensor - A4	13- 4
G020 2599	Spring - Release Lever	13- 8
G020 2613	Vertical Relay Guide	19- 13
G020 2622	Release Arm - Paper End Feeler	47- 21
G020 2626	Release Spring - Paper End Feeler	47- 22
G020 2630	Magnetic Catch	19- 16
G020 2643	Front Grounding Plate - Paper Tray	49- 4
G020 2644	End Fence	13- 20
G020 2645	Friction Pad	13- 16
G020 2647	Paper Tray Cover	13- 1
G020 2648	Holder - Paper Size Detector	13- 6
G020 2650	Right Guide - Paper Tray	49- 7
G020 2652	Middle Rail - Paper Tray	49- 11
G020 2653	Left Rail - Paper Tray	49- 19
G020 2654	Upper Rear Guide - Paper Tray	49- 14
G020 2655	Upper Front Guide - Paper Tray	49- 13
G020 2656	Pressure Spring - Bottom Plate	13- 17
G020 2658	Grounding Plate - Bottom Plate	13- 18
G020 2661	Bottom Plate Ass'y	13- 26
G020 2663	Paper Size Actuator	13- 5
G020 2664	Front Stopper Lever	13- 23
G020 2668	Sheet - Paper Set	13- 2
G020 2668	Decal - Paper Set	55- 13
G020 2677	Support - Paper Tray - Left	7- 10
G020 2678	Guide Plate - Paper Tray	49- 18
G020 2702	Pressure Spring - By-pass Feed	15- 8
G020 2712	Holder - By-pass Feed Friction Pad	21- 10
G020 2713	Pressure Spring	21- 20
G020 2716	Friction Pad	21- 18
G020 2721	By-pass Feed Roller	17- 13
G020 2723	By-pass Feed Shaft	17- 11
G020 2735	Guide - By-pass Feed Table	15- 1
G020 2741	Upper Registration Roller	21- 11
G020 2743	Tension Spring	21- 4
G020 2745	Lower Guide Plate - Regist	21- 6
G020 2745	Lower Guide Plate - Regist	21- 13
G020 2753	Bracket - Registration Sensor	17- 7
G020 2754	Upper Paper Guide	21- 16
G020 2765	Knob - Lower Transport Guide	21- 12
G020 2784	Lever - By-pass Feed Table	15- 6
G020 2785	Cover - Feed Roller Shaft	17- 4
G020 2786	Shaft - By-pass Release Lever	15- 5
G020 2787	Cover - By-pass Paper End Sensor	17- 9
G020 3313	Spring	29- 4
G020 3326	Cushion	29- 13
G020 3334	Slider Ass'y	29- 12
G020 3345	Right Seal	29- 3
G020 3565	Grounding Plate	33- 13
G020 3571	Toner Correction Gear - 14/24Z	33- 19
G020 3888	Pin - Transfer Guide	21- 1
G020 3912	Transport Lever	39- 32
G020 4175	Bushing - Pressure Roller	37- 17
G020 4177	Gear - 40Z	37- 16
G020 5829	Shoulder Screw - M3x2.5	47- 18

Part No.	Description	Page and Index No.
A028 9300	Grease Barrierta JFE 55/2	57- 7
A048 2276	Ring - Transport Bracket	33- 11
A048 3860	Transport Bracket Holder	39- 1
A069 1883	Shoe - Scanner	23- 11
A077 1690	Spring Plate - Mirror	27- 14
A077 1690	Spring Plate - Mirror	23- 9
A077 1745	Cover - ADS Sensor	27- 4
A077 1746	Mirror Adjusting Screw	27- 21
A077 5717	Resistor - 1K Ω ±5% 1W	53- 1
A111 1753	Seal - 0.1x18x49	25- 11
A111 1753	Seal - 0.1x18x49	23- 2
A126 4400	Copy Tray	7- 20
A126 4460	Slide Copy Tray	7- 18
A126 4470	Copy Tray Guide	7- 19
A134 1071	Left Grip Plate	49- 1
A134 1072	Right Bracket - Grip Plate	49- 3
A152 5120	Optics Control Board	27- 3
A152 5220	Main Switch	45- 4
A153 1285	Emblem (RIC/NRG)	7- 2
A153 1285	Emblem (RIC)	55- 2
A153 1354	Hinge Pin	7- 4
A153 1906	Adjust Shoe	27- 12
A153 4087	Thermistor Holder	37- 7
A153 6409	Decal - key Top Cover (GES)	7- 3
A153 6409	Decal - Keytop Cover (GES)	55- 11
A153 6423	Support Cover (INF)	7- 2
A156 6413	Emblem (SVN)	7- 2
A156 6413	Emblem (SVN)	55- 2
A157 2769	Rear Stopper Spring	13- 13
A184 1672	Thermofuse - 128	23- 24
A184 2455	Toner Density Sensor	33- 15
A184 3411	Chuck Spring	29- 11
A184 3420	Bottle Chuck	29- 17
A184 3421	Chuck Shaft	29- 16
A184 3422	Toner Slider	29- 7

Part No.	Description	Page and Index No
A184 3611	Toner Recycle Belt	33- 2
A184 3863	Corona Wire Spring	31- 14
A184 3863	Corona Wire Spring	39- 26
A184 4072	Stripper Pawl	37- 4
A184 4081	Right Retaining Ring - 31	37- 13
A184 4105	Left Retaining Ring - 31	37- 5
A184 5105	IC - RF5A93	53- 2
A184 5205	Scanner Motor - DC24V 96W	25- 19
A184 5225	Exhaust Fan Motor - DC24V 3.6W	45- 14
A184 5344	Scanner Grounding Harness	45- 11
A184 9501	Optics Adjustment Tool	57- 1
A190 1040	Front Safety Switch Arm	35- 24
A190 1041	Front Door Switch Lever	35- 2
A190 1042	Front Lever Bracket	35- 1
A190 1043	Fusing Switch Lever	35- 18
A190 1045	Safety Switch Stay	47- 8
A190 1048	Fusing Lever Cover	47- 11
A190 1073	Paper Exit Pin Bracket	39- 21
A190 1076	Base Cover	49- 6
A190 1080	Exit Stay	49- 10
A190 1081	Stay - Paper End Sensor	49- 12
A190 1084	Front Right Grip Bracket	49- 2
A190 1085	Exit Rear Bracket	39- 33
A190 1112	Drive Bracket	41- 25
A190 1117	Support Plate - Drive Unit	41- 14
A190 1118	Imaging Unit Drive Shaft	41- 33
A190 1122	Development Drive Bracket	41- 7
A190 1123	Development Drive Gear	41- 35
A190 1124	Tightner Spring	41- 23
A190 1125	Tightner Bracket	41- 26
A190 1128	Tightner Pulley	41- 28
A190 1131	Drive Gear Joint Bracket	35- 11
A190 1132	Gear - 32Z	35- 13
A190 1134	Support Bracket	35- 16
A190 1136	Gear Shaft	35- 15

Part No.	Description	Page and Index No.
A190 1138	Spacer	35- 14
A190 1139	Magnetic Clutch - Vertical	19- 11
A190 1139	Magnetic Clutch - Vertical	17- 1
A190 1141	Timing Belt - SM699	41- 5
A190 1144	Tightner Pulley	41- 12
A190 1145	Release Spring	41- 1
A190 1146	Tightner Ass'y	41- 2
A190 1149	Tightner Pulley	41- 3
A190 1151	Duct Cover	35- 8
A190 1152	Guide Rail	35- 7
A190 1153	Duct	35- 9
A190 1155	Duct Bracket	45- 13
A190 1156	Ozone Filter Cap	45- 16
A190 1157	Ozone Filter	45- 15
A190 1160	Safety Switch Bracket	35- 6
A190 1162	Safety Switch Arm	35- 23
A190 1163	Drive Release Wire	35- 10
A190 1164	Safety Switch Lever	35- 5
A190 1165	Tightner Bracket	41- 24
A190 1171	Imaging Unit Holder	41- 36
A190 1174	Pressure Spring	41- 37
A190 1176	Paper Feed Drive Unit	43- 6
A190 1180	Pulley - 20Z/63Z	41- 20
A190 1181	Timing Belt - S3M288	41- 21
A190 1182	Gear - 21Z/40Z	41- 19
A190 1183	Pressure Spring	41- 34
A190 1185	Development Drive Shaft	41- 9
A190 1186	Main Board Bracket	47- 12
A190 1187	High Voltage Supply Board Bracket	47- 14
A190 1191	By-pass Feed Cover	47- 13
A190 1192	Main Switch Bracket	45- 3
A190 1193	Connector Bracket	47- 17
A190 1195	Right Harness Cover	45- 1
A190 1196	Upper Seal - By-pass Feed	47- 32
A190 1197	Front Seal - By-pass Feed	47- 31

Part No.	Description	Page and Index No
A190 1198	Development Bias Terminal	41- 22
A190 1260	Upper Cover	7- 12
A190 1282	Magnet Catch	7- 6
A190 1283	Magnet Catch	7- 26
A190 1286	Front Cover Hinge Bracket	47- 1
A190 1287	Front Lower Cover	7- 7
A190 1290	Rear Right Cover	7- 23
A190 1295	Front Right Cover	7- 25
A190 1297	Right Lower Cover	7- 24
A190 1300	Left Upper Cover	7- 17
A190 1337	Inner Cover	7- 8
A190 1341	Front Door Lever	35- 22
A190 1342	Front Lever Support Plate	35- 19
A190 1345	Release Spring - Front Lever	35- 20
A190 1452	Keytop - Start (RIC/NRG)	11- 4
A190 1453	Keytop - Clear/Stop (RIC/NRG)	11- 5
A190 1454	Keytop - Clear Mode (RIC/NRG)	11- 6
A190 1455	Keytop - 10keys (RIC/NRG)	11- 7
A190 1651	Left Scale Support Plate	23- 5
A190 1652	Exposure Glass Seal	23- 6
A190 1654	Right Bracket - Exposure Glass	23- 23
A190 1655	Scale - A4	7- 14
A190 1660	Scanner Guide Rail	23- 1
A190 1663	Lens Guide Rail	25- 14
A190 1664	Pulley Bracket	25- 16
A190 1666	Pulley Bracket	25- 2
A190 1669	Lens Support Bracket	25- 18
A190 1671	Mirror Drive Motor Ass'y DC24V 81.6W	27- 2
A190 1672	Lens Drive Motor Ass'y DC24V 81.6W	27- 1
A190 1674	6th Mirror Bracket - Front	27- 24
A190 1675	6th Mirror Bracket - Rear	27- 22
A190 1676	Rod Bracket	27- 7
A190 1678	3rd Scanner Bracket	27- 11
A190 1679	Mirror Sensor Shutter	27- 10
A190 1682	Lens Carriage	25- 6

Part No.	Description	Page and Index No.
A190 1683	Shading Plate	25- 9
A190 1684	Shielding Plate	25- 10
A190 1685	Lens Cover Bracket	25- 17
A190 1688	Bushing	23- 16
A190 1689	Clamp	23- 18
A190 1691	2nd Scanner Frame	23- 10
A190 1692	2nd Scanner Support Plate	23- 17
A190 1693	Lens Cover	25- 12
A190 1694	Shoe Bracket	23- 12
A190 1696	Motor Bracket	25- 20
A190 1698	Shielding Plate	25- 7
A190 1725	Bushing	23- 20
A190 1751	Harness Guide Pulley Ass'y	23- 14
A190 1802	Timing Pulley - 30Z	27- 8
A190 1803	Timing Pulley - 22Z/44Z	25- 22
A190 1809	6th Mirror	27- 15
A190 1810	Mirror Guide Rod	27- 9
A190 1811	4th/5th Mirror	27- 6
A190 1812	Blue Filter	25- 5
A190 1813	Timing Belt - L824P2M	25- 13
A190 1814	Scanner Guide Rod	23- 22
A190 1815	2nd/3rd Mirror	23- 8
A190 1816	Timing Belt - L1110P2M	25- 1
A190 1817	Timing Belt - L754P2M	25- 23
A190 1818	2nd Scanner Spring	25- 15
A190 1819	1st Scanner Spring	25- 3
A190 1820	Lens Holder Spring	25- 21
A190 1821	Harness Guide Pulley	23- 15
A190 1824	2nd Scanner Support Plate	23- 13
A190 1825	3rd Scanner Support Plate	27- 19
A190 1827	Rack Gear	27- 18
A190 1831	Shield heater Rear	27- 25
A190 1856	Platen Cover Bracket	9- 3
A190 2011	Charge Corona Unit	31- 2
A190 2020	Quenching Lamp Unit	35- 21

Part No.	Description	Page and Index No
A190 2030	Erase Lamp Unit	35- 25
A190 2040	Transfer Corona Wire Receptacle	47- 16
A190 2060	Charge Corona Grid	31- 3
A190 2062	Spring Plate - Charge Corona Grid	31- 7
A190 2065	Charge Corona Wire	31- 4
A190 2070	Corona Wire Cleaner Ass'y	31- 12
A190 2075	Cleaning Shaft	31- 8
A190 2085	Front End Block Cover	31- 5
A190 2086	Rear End Block Cover	31- 11
A190 2105	Corona Wire Terminal	31- 10
A190 2116	Rear Shielding Plate	31- 9
A190 2280	Front Side Plate	31- 1
A190 2290	Rear Side Plate	31- 24
A190 2320	Knob Screw	31- 13
A190 2330	Toner Recycle Cover	33- 21
A190 2560	Front Side Fence	13- 24
A190 2561	Side Fence Rack	13- 22
A190 2564	Relay Roller	17- 14
A190 2564	Relay Roller	19- 5
A190 2611	Paper Guide Plate	19- 12
A190 2620	Push Switch - Paper Size	47- 5
A190 2642	Rear Lever Stopper	13- 14
A190 2671	Paper Size Switch Bracket	47- 3
A190 2680	Paper Tray Stopper	47- 6
A190 2684	Guard - Paper Tray Stopper	47- 4
A190 2690	Decal - 1st Paper Tray	13- 25
A190 2690	Decal - 1st Paper Tray	55- 5
A190 2691	Decal - 2nd Paper Tray	13- 25
A190 2691	Decal - 2nd Paper Tray	55- 5
A190 2692	Decal - Paper Tray Operation	55- 9
A190 2692	Decal - Paper Tray Operation	13- 3
A190 2698	Support Cover - By-pass Feed	15- 9
A190 2700	By-pass Feed Unit	15- *
A190 2701	By-pass Feed Cover	15- 3
A190 2702	Paper Guide	15- 13

Part No.	Description	Page and Index No.
A190 2704	Bottom Plate - By-pass Feed	15- 14
A190 2705	Right Side Fence	15- 11
A190 2706	Left Side Fence	15- 15
A190 2707	Side Fence Rack	15- 2
A190 2708	Decal - By-pass Feed	55- 4
A190 2708	Decal - By-pass Feed	15- 4
A190 2711	Friction Pad Stay	21- 5
A190 2714	Friction Pad Holder Ass'y	21- 19
A190 2717	Friction Pad Guide	21- 17
A190 2740	Lower Registration Roller	21- 8
A190 2771	Resist Sensor	17- 5
A190 2772	Paper End Sensor	17- 8
A190 2780	Front Bushing	21- 2
A190 2781	Rear Bushing	21- 9
A190 2782	Bottom Plate Stay	15- 10
A190 2783	Resist Roller Knob	21- 7
A190 2801	Tray Stopper Bracket	47- 23
A190 2805	Roller Holder	47- 27
A190 2810	Cassette Stopper	13- 10
A190 2812	Stopper Cover	13- 9
A190 2825	Heater Bracket	49- 8
A190 2900	Switch Bracket	19- 4
A190 2902	Switch Lever	19- 2
A190 2905	Cushion	19- 18
A190 3050	Development Roller Ass'y	31- 26
A190 3094	Development Entrance Seal	31- 15
A190 3112	1st Agitator	33- 5
A190 3116	2nd Agitator	33- 7
A190 3125	Busing	33- 8
A190 3128	Seal 6mm	33- 22
A190 3152	Gear - 18Z	31- 16
A190 3153	Transfer Auger Gear	33- 6
A190 3155	Idle Gear - 17Z	31- 17
A190 3156	Cam Gear	31- 25
A190 3162	Imaging Unit Upper Case	31- 23

Part No.	Description	Page and Index No
A190 3165	Long Seal	31- 22
A190 3166	Rear Seal	31- 18
A190 3167	Front Seal	31- 19
A190 3171	Imaging Unit Shutter	31- 21
A190 3183	Harness Holder	33- 9
A190 3192	Lower Seal - 3 x 6 x 396	33- 23
A190 3193	Seal - 5x55	33- 25
A190 3361	Toner Bottle Holder Guide	17- 3
A190 3363	Guide Seal - Toner Supply Unit	17- 6
A190 3550	Cleaning Blade	33- 20
A190 3560	Toner Collection Coil	33- 10
A190 3563	Toner Recycle Roller	33- 3
A190 3564	Toner Cap	33- 1
A190 3568	Rear Bushing	33- 18
A190 3569	Recycle Roller Bushing	33- 4
A190 3570	Cleaning Entrance Seal	33- 14
A190 3851	T/S Unit	39- 20
A190 3863	Front Block Cover	39- 25
A190 3864	Rear End Block Cover	39- 23
A190 3866	Transfer Corona Wire	39- 24
A190 3880	Discharge Plate Unit	39- 22
A190 3890	T/S Corona Receptacle	39- 29
A190 3900	Transfer Guide	39- 18
A190 3903	Transfer Release Guide	39- 19
A190 3905	Transfer Corona Rail	39- 17
A190 3906	Spring Plate	39- 16
A190 3911	T/S Position Plate	39- 31
A190 3914	Bushing	39- 30
A190 4053	Fusing Unit Knob	37- 2
A190 4070	Fusing Unit Cover	37- 11
A190 4071	Fusing Entrance Guide	37- 23
A190 4073	Fusing Stay	37- 9
A190 4076	Fusing Frame	37- 26
A190 4086	Hot Roller Bushing	37- 14
A190 4088	Seal	37- 27

Part No.	Description	Page and Index No.
A190 4089	Stripper Pawl Bracket	37- 1
A190 4092	Stripper Pawl Spring	37- 3
A190 4096	Idle Gear - 18Z	39- 3
A190 4097	Idle Gear - 16Z	39- 2
A190 4119	Thermistor	37- 8
A190 4120	Front Heater Bracket	37- 25
A190 4121	Rear Heater Bracket	37- 22
A190 4129	Connector Bracket	37- 21
A190 4385	Antistatic Brush	37- 6
A190 4386	Antistatic Brush	37- 24
A190 4455	Exit Sensor Feeler	39- 10
A190 4456	Exit Sensor Feeler Spring	39- 9
A190 4463	Exit Roller Gear - 23Z	39- 15
A190 4465	Exit Roller	39- 5
A190 4471	Upper Guide Plate	39- 6
A190 4474	Exit Roller Holder	39- 8
A190 4476	Decal - High Temperature	39- 14
A190 4476	Decal - High Temperature	55- 3
A190 4478	Exit Cover	39- 13
A190 4479	Shielding Plate	39- 12
A190 4484	Antistatic Brush	47- 7
A190 5107	Resistor - 180 Ω ±5% 3W	53- 3
A190 5145	Development Relay Board	47- 20
A190 5150	High Voltage Supply Board	45- 5
A190 5301	AC Main Harness - 120V	45- 8
A190 5335	DC Power Harness	47- 19
A190 5335	DC Power Harness	47- 34
A190 5335	DC Power Harness	45- 10
A190 5343	Scanner H.P Harness	27- 16
A190 5344	Relay Harness - By-pass Feed	17- 10
A190 5345	Exit Sensor Harness	47- 10
A190 5346	Development Unit Harness	33- 17
A190 9002	Grease - CP501 (5 Pcs/set)	57- 8
A193 1074	Relay Harness Cover	49- 17
A193 1246	Platen Cover Hinge Ass'y	9- 4
A193 2660	Paper Separator Cushion	13- 27
A219 1169	Gear - 40Z	41- 10
A219 1194	ADF Bracket	23- 21
A219 1197	Rear Bracket - ADF	23- 25
A219 1265	Decal - Main Switch	55- 8
A219 1284	Operation Guide Sheet	7- 5
A219 1284	Operation Guide Sheet	55- 7
A219 1380	Decal - Symbol Explanation 5 Lang.	55- 1
A219 1391	Platen Cover	9- 1
A219 1461	Operation Panel Cover	11- 1
A219 1463	Operation Panel Sheet	11- 3
A219 1464	Operation Panel Board	11- 8
A219 1471	Keytop - Start (SVN)	11- 4
A219 1472	Keytop - Clear/Stop (SVN)	11- 5
A219 1473	Keytop - Clear Mode (SVN)	11- 6
A219 1474	Keytop - 10keys (SVN)	11- 7
A219 1476	Operation Panel Sheet - LT (SVN)	11- 3
A219 2205	Imaging Unit	31- *
A219 2696	Decal - Size Selection	13- 28
A219 2696	Decal - Size Selection	55- 12
A219 3030	Toner Supply Unit - 115V (RIC-NA)	29- *
A219 3034	Toner Supply Unit - 230V (RIC-EU)	29- *
A219 3036	Toner Supply Unit (Others)	29- *
A219 3132	Development Cover	31- 6
A219 3311	Toner Collection Cover	29- 1
A219 3312	Toner Adding Gate	29- 6
A219 3314	Toner Supply Unit Case (RIC-NA)	29- 9
A219 3317	Toner Adding Shutter	29- 5
A219 3319	Sheet - Toner Supply Shutter	29- 21
A219 3322	Toner Bottle Cover	29- 14
A219 3325	Mylar Blade	29- 15
A219 3339	Toner Bottle Holder Lever	29- 8
A219 3341	Cushion - Toner Collection Cover	29- 22
A219 3342	Lower Seal - Toner Collection Cover	29- 2
A219 3360	Toner Bottle Holder Guide - Ass'y	17- 2

Part No.	Description	Page and Index No.
A219 3364	Mylar Seal - 8x429	17- 20
A219 3365	Mylar Seal - 8x400	17- 21
A219 3371	DC Motor - 3.36W	47- 30
A219 3372	Motor Bracket	47- 33
A219 3373	Seal - 2x15x95	47- 29
A219 3381	Roller	29- 18
A219 3382	Upper Cover	29- 19
A219 3383	Lower Cover	29- 20
A219 3384	Spring Plate	29- 10
A219 3385	Sheet - Roller Cover	29- 23
A219 3411	Toner Supply Unit Case (RIC-EU)	29- 9
A219 3416	Toner Supply Unit Case (Others)	29- 9
A219 4117	Fusing Lamp - 115V 850W	37- 12
A219 4123	Thermofuse - 169°C	37- 10
A219 5319	Toner Motor Harness	47- 35
A219 5551	AC Drive DC Power Supply Board-120V	45- 9
A219 5552	Transformer - 120V	45- 17
A219 5581	Power Supply Cord - 120V	45- 19
A219 5652	Transformer - 230V	45- 17
A219 5681	Power Supply Cord - 230V	45- 19
A219 6070	Front Cover Ass'y (NRG)	7- 1
A219 6186	Model Name Plate - GENERIC	7- 21
A219 6187	Model Name Plate - GENERIC	55- 10
A219 9510	OPC Drum	33- 16
A422 1082	Pick-up Spring	35- 17

Part No.	Description	Page and Index No
5053 0223	Bushing - 8mm	21- 15
5053 0223	Bushing - 8mm	41- 15
5203 9501	Grease 501	57- 4
5206 2684	Shoulder Screw - M3	35- 3
5215 2713	Bottom Plate Pad	15- 16
5420 9507	Digital Multimeter - Beckman	57- 5
5420 9516	Test Chart - OS - A3 (10PSC/SET)	57- 2
5442 9101	Setting Powder	57- 6
5442 9103	Launa Oil 40	57- 3
5446 1205	Release Spring	41- 29
5447 2681	Snap Ring	47- 25
5447 2681	Snap Ring	43- 4
5447 2681	Snap Ring	21- 3
5447 2681	Snap Ring	15- 7
5448 2804	Platen Cover Sheet	9- 6

Part No.	Description	Page and Index No.
0313 0300W	Philips Pan Head Screw - M3x30	45-104
0353 0060B	Philips Pan Head Screw - M3x6	31-101
0353 0060B	Philips Pan Head Screw - M3x6	27-102
0353 0060B	Philips Pan Head Screw - M3x6	23-103
0353 0060B	Philips Pan Head Screw - M3x6	33-101
0353 0060B	Philips Pan Head Screw - M3x6	7-102
0413 0082W	Tapping Screw - M3x8	13-103
0413 0082W	Tapping Screw - M3x8	39-103
0414 0142B	Binding Self Tapping Screw - M4x14	9-101
0434 0060B	Pan Head Self-tapping Screw - M4x6	49-103
0434 0102W	Tapping Screw - M4x10	7-103
0450 3006B	Tapping Screw - M3x6	25-105
0450 3006B	Tapping Screw - M3x6	27-101
0450 3006B	Tapping Screw - M3X6	41-108
0450 3008B	Tapping Screw - M3x8	47-107
0450 3008B	Tapping Screw - M3x8	17-104
0450 3008B	Tapping Screw - M3x8	13-101
0450 3010B	Tapping Screw - M3x10	25-102
0450 4030B	Tapping Screw - M4x30	45-106
0451 3006B	Tapping Screw - M3x6	27-103
0451 3006B	Tapping Screw - M3x6	39-101
0451 3006B	Tapping Screw - M3x6	37-101
0451 3006B	Tapping Screw - M3x6	35-101
0451 3006B	Tapping Screw - M3x6	25-101
0451 3006B	Tapping Screw - M3x6	41-106
0451 3006B	Tapping Screw - M3x6	23-102
0451 3006B	Tapping Screw - M3x6	7-106
0451 3006B	Tapping Screw - M3x6	15-102
0451 3006B	Tapping Screw - M3x6	21-101
0451 3006B	Tapping Screw - M3x6	43-101
0451 3006B	Tapping Screw - M3x6	19-105
0451 3006B	Tapping Screw - M3x6	13-104
0451 3006B	Tapping Screw - M3x6	45-105
0451 3006B	Tapping Screw - M3x6	47-103
0451 3006B	Tapping Screw - M3x6	17-103

Part No.	Description	Page and Index No
0451 3006B	Tapping Screw - M3x6	49-101
0451 3010B	Tapping Screw - M3x10	49-102
0451 3012B	Tapping Screw With Washer - M3x12	41-107
0451 3014B	Tapping Screw - M3-14	7-104
0451 3014B	Tapping Screw - M3-14	19-104
0452 3006B	Tapping Screw - M3x6	33-102
0452 3006B	Tapping Screw - M3x6	29-101
0452 3006B	Tapping Screw - M3x6	31-102
0452 3008B	Tapping Screw - M3x8	39-105
0452 3008B	Tapping Screw - M3x8	13-102
0452 3008Z	Bind Tapping Screw - M3x8	7-101
0452 3010Z	Bind Tapping Screw - 3x10	7-105
0453 3006Z	Tapping Screw - M3x6	15-101
0453 3006Z	Tapping Screw - M3x6	23-105
0453 3008B	Bind Tapping Screw - M3X8	19-107
0633 0120E	Spring Pin - M3x12	41-104
0701 0030B	Flat Washer - M3	25-103
0720 0025E	Retaining Ring - M2.5	39-107
0720 0030E	Retaining Ring - M3	19-103
0720 0030E	Retaining Ring - M3	47-105
0720 0030E	Retaining Ring - M3	35-102
0720 0040E	Retaining Ring - M4	39-102
0720 0040E	Retaining Ring - M4	47-106
0720 0040E	Retaining Ring - M4	17-102
0720 0040E	Retaining Ring - M4	41-101
0720 0040E	Retaining Ring - M4	19-102
0720 0040E	Retaining Ring - M4	27-105
0720 0040E	Retaining Ring - M4	23-104
0720 0060E	Retaining Ring - M6	25-104
0720 0060E	Retaining Ring - M6	41-103
0741 3808	Ball Bearing - 8x16x5mm	41-105
0805 3480	Bushing - 6mm	17-101
0805 3480	Bushing - 6mm	19-101
0805 3480	Bushing - 6mm	39-104
0805 3480	Bushing - 6mm	41-102

Part No.	Description	Page and Index No.
0951 3006B	Philips Screw With Flat Washer-M3x6	27-106
0951 3006B	Philips Screw With Flat Washer - M3x6	37-103
0954 3012B	Screw - M3X12	37-102
1002 0307	Jumper Wire	53-178
1102 4201	Connector - 2p	53-101
1102 4202	Connector - 3p	53-102
1102 4203	CT Header - 4P	53-103
1102 4204	Ct Header - 5p	53-104
1102 4205	Ct Header- 6p	53-105
1102 4206	Connector - 7p	53-106
1102 4208	Connector - 9p	53-107
1102 4209	Ct Header - 10p	53-108
1102 4211	Ct Header - 12p	53-109
1102 4619	Connector - 2p	53-110
1102 4624	Ct Connector - 7p	53-111
1102 4631	Ct Connector - 2p	53-112
1102 4634	Ct Connector - 5P	53-113
1102 4646	Connector - 5P	53-114
1102 5303	Connector - 4p	53-115
1103 1770	Connector - 4p	53-116
1103 1771	Connector - 5p	53-117
1103 1772	Pin Header - 6p	53-118
1103 1778	Pin Header - 12P	53-119
1104 0511	IC Socket - 8P - DICF-8CS-E	53-120
1104 0589	Dip Socket : 32p	53-121
1105 0008	Nylon Clamp - 2n	27-107
1105 0199	Clamp	45-101
1105 0199	Clamp	35-104
1105 0199	Clamp	43-102
1105 0199	Clamp	49-104
1105 0199	Clamp	47-104
1105 0290	Harness Clamp - Horizontal	47-101
1105 0310	Wire Clamp	49-105
1105 0310	Wire Clamp	45-103
1105 0310	Wire Clamp	43-103

Part No.	Description	Page and Index No
1105 0310	Wire Clamp	23-101
1105 0328	Harness Clamp - ES-0505	27-104
1105 0329	Clamp - ES-0510	47-102
1105 0413	Harness Clamp	45-102
1105 0413	Harness Clamp	47-108
1107 0485	Fuse (ceramic Case) - 15A - 125V	45-107
1107 0855	Fuse - 8A 125V	45-108
1107 0868	Fuse - 5A 125V	45-110
1107 0872	Fuse - 3.15A 125V	45-109
1107 0883	Fuse - 3.15A 250V	45-109
1107 0883	Fuse - 3.15A 250V	45-110
1107 0885	Fuse - 6.3A 250V	45-108
1107 0885	Fuse - 6.3A 250V	45-107
1204 2334	Interlock Switch - Fa1l	35-103
1204 2356	Micro Switch - AM51612A531	19-106
1400 0072	Transistor - 2SC372Y	53-122
1400 0291	Transistor - 2SA1020Y	53-123
1400 0652	Transistor - 2SA1287	53-124
1401 0694	Zener Diode - RD6.8FB	53-125
1402 0277	Zener Diode - 1Z12	53-126
1402 1050	Silicon Diode - 100V 1A	53-127
1402 1125	Zener Diode - 1W - RD33FB2	53-128
1402 1160	Diode - S5688	53-129
1402 1310	Diode - D1NL20U	53-130
1407 1535	IC - TD62308AP	53-131
1407 2187	TTLIC - SN74LS07NS	53-132
1407 2836	IC - HD74C14FP	53-133
1407 3764	IC - TC7SU04F	53-134
1407 3857	IC - TC7SU04F	53-135
1407 4315	IC - TE7751	53-136
1407 4642	IC - MTD1110	53-137
1407 4672	TTL HD74LS368FP	53-138
1407 4678	EPROM BR93LC56A	53-139
1408 0150	IC - ULN2003AN	53-140
1408 0595	IC - NJM2904M	53-141

Part No.	Description	Page and Index No.
1408 0611	IC - 3771	53-142
1408 0826	IC - TA8428K	53-143
1503 0563	Oscillator - 9.83mtz040	53-144
1601 5295	Resistor - 0.47Ω ±2% 1W	53-145
1601 8157	Variable Resistor - 100K Ω	53-146
1607 0878	Inductor - BLM21A102S	53-147
1630 3101	Resistor - 100Ω - 1/10W	53-148
1630 3102	Resistor - 1KΩ 1/10W ±5%	53-149
1630 3103	Resistor - 10KΩ 1/10W ±5%	53-150
1630 3105	Resistor - 1M Ω ±5% 1/10W	53-151
1630 3204	Resistor - 200K Ω 1/10W ±5%	53-152
1630 3222	Resistor - 2.2KΩ 1/10W ±5%	53-153
1630 3223	Resistor - 22kΩ - 1/10W	53-154
1630 3393	Resistor - 39K Ω 1/10W	53-155
1630 3472	Resistor - 4.7KΩ 1/10W ±5%	53-156
1630 3512	Resistor - 5.10KΩ - 1/10W	53-157
1630 3751	Resistor - 750Ω±5% 1/10W	53-158
1630 3752	Resistor - 7.5K Ω ±5% 1/10W	53-159
1632 0000	Resistor - 0 Ω 1/8W	53-160
1633 0000	Resistor - 0Ω 1/10W:JUMPER CHIP	53-161
1633 1001	Resistor - 1K Ω ±1% 1/10W	53-162
1633 1002	Resistor - 10K Ω ±1% 1/10W	53-163
1633 1050	Resistor - 105 Ω ±1% 1/10W	53-164
1633 2150	Resistor - 215Ω ±1% 1/10W	53-165
1633 3901	Resistor - 3.9 Ω ±1% 1/10W	53-166
1633 7870	Resistor - 787 Ω ±1% 1/10W	53-167
1633 9319	Resistor - 93.1 Ω ±1% 1/10W	53-168
1640 5100	Capacitor - 10µF +20% 35V	53-169
1640 5109	Capacitor - 1µF - ±20% - 50V	53-170
1640 5470	Capacitor - 47µF ±20% 50V	53-171
1660 3101	Capacitor - 100pF 50V	53-172
1660 3471	Capacitor - 470pF 50V	53-173
1660 5332	Capacitor - 3300pF ±10% 50V	53-174
1660 7103	Capacitor - 10000pF 50V	53-175

Part No.	Description	Page and Index No
1660 7104	Capacitor - 100000pF 50V	53-176
1660 7473	Capacitor - 47000pF +80% -20% 50V	53-177

B009/B019
PARTS LOCATION AND LIST

This section instructs you as to the numbers and names of parts on this machine.

LOCATION OF UNIT

1.EXTERIOR (B009/B019)

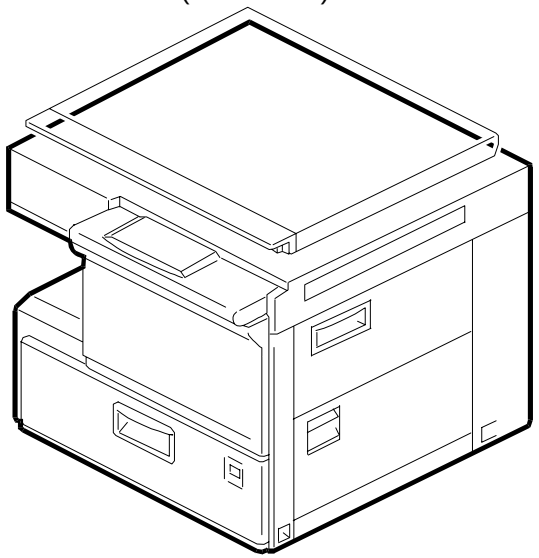

See Page 7

2.PLATEN COVER (B009/B019)

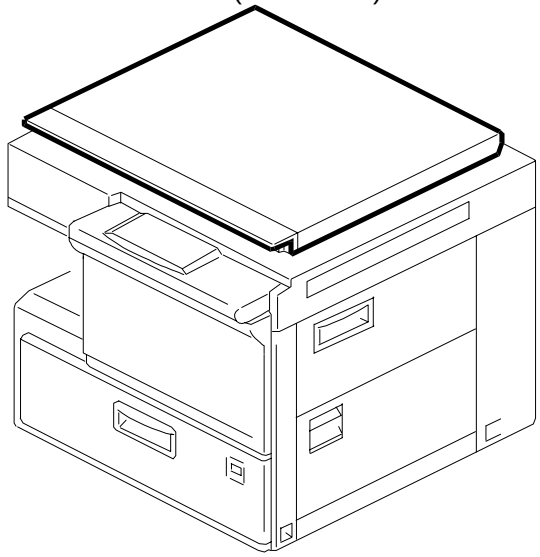

See Page 9

3.OPERATION PANEL (B009/B019)

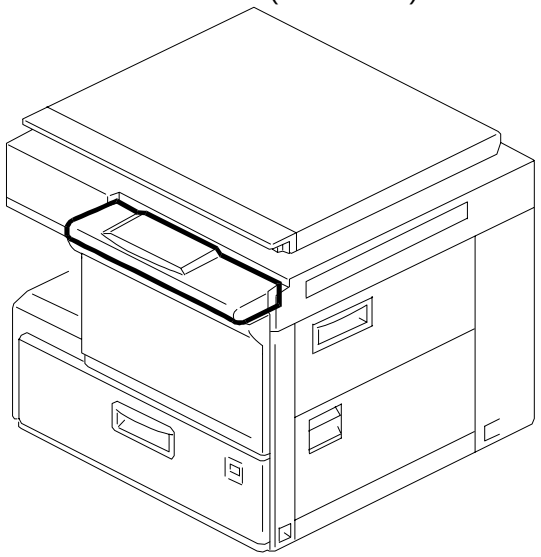

See Page 11

4.PAPER TRAY (B009/B019)

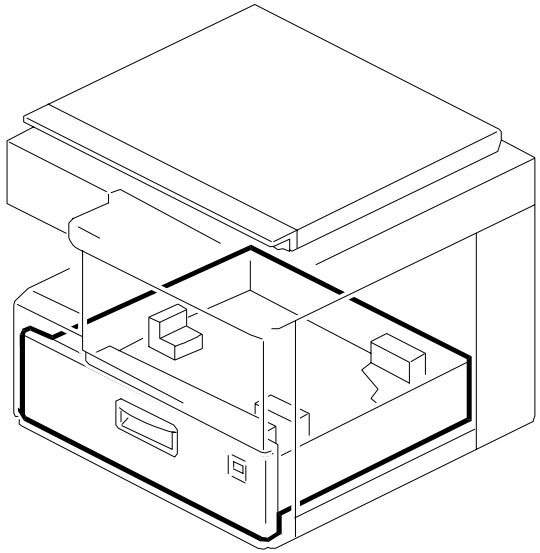

See Page 13

5.BY-PASS FEED TABLE(B009/B019)

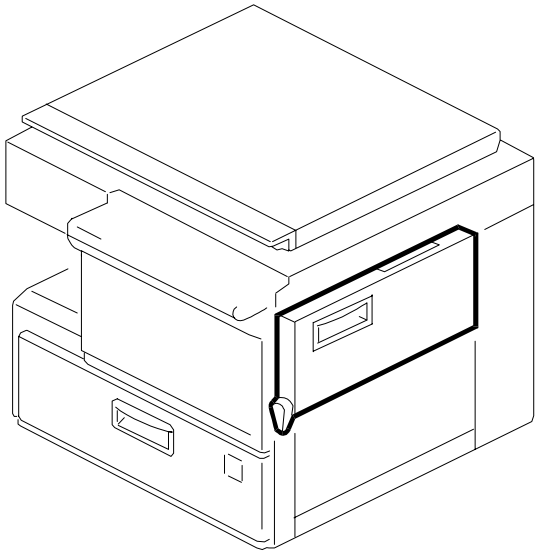

See Page 15

6.PAPER FEED SECTION 1 (B009/B019)

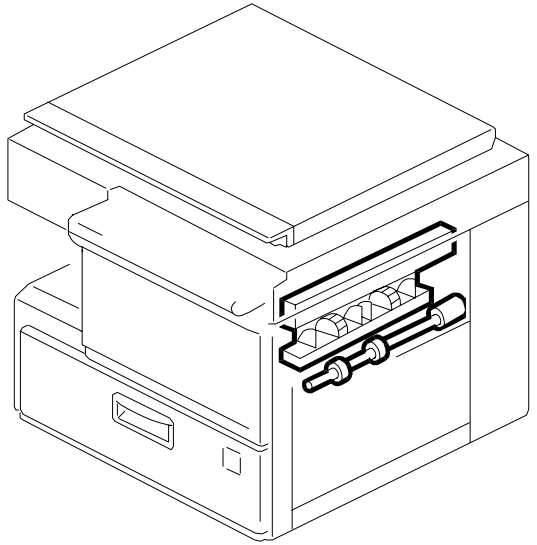

See Page 17

LOCATION OF UNIT

7.PAPER FEED SECTION 2 (B009/B019)

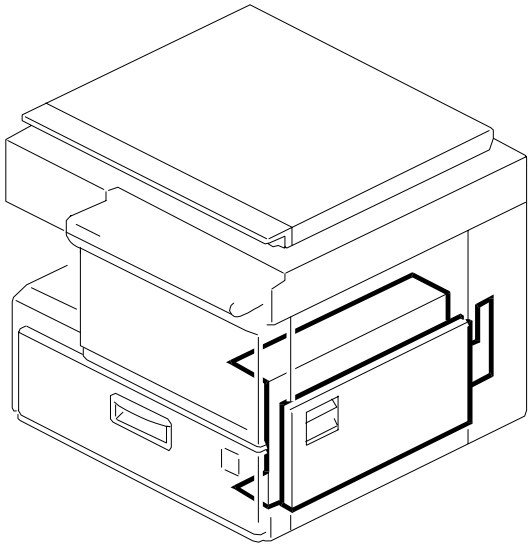

See Page 19

8.PAPER REGISTRATION (B009/B019)

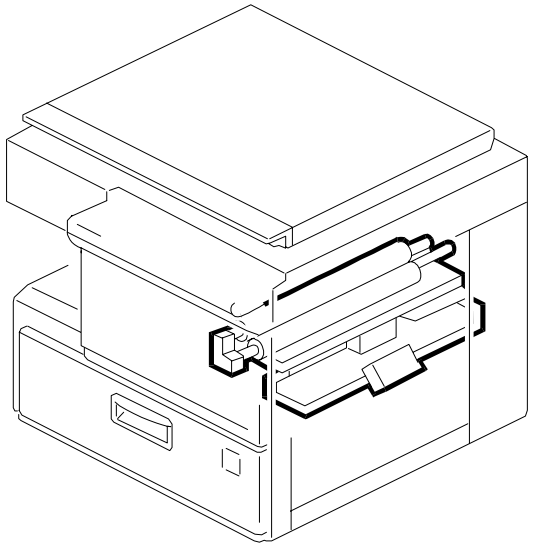

See Page 21

9.OPTICS SECTION 1 (B009/B019)

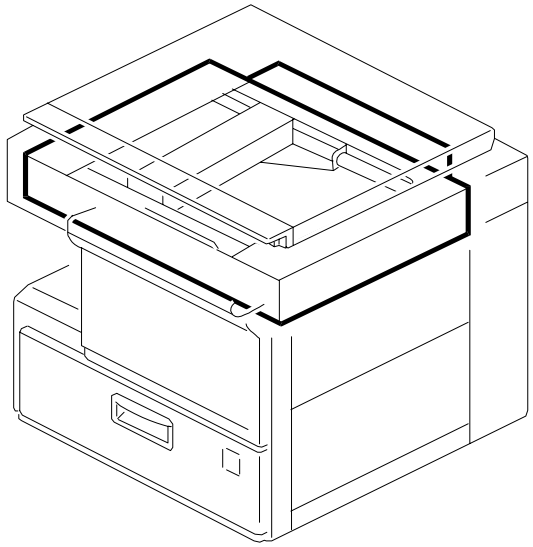

See Page 23

10.OPTICS SECTION 2 (B009)

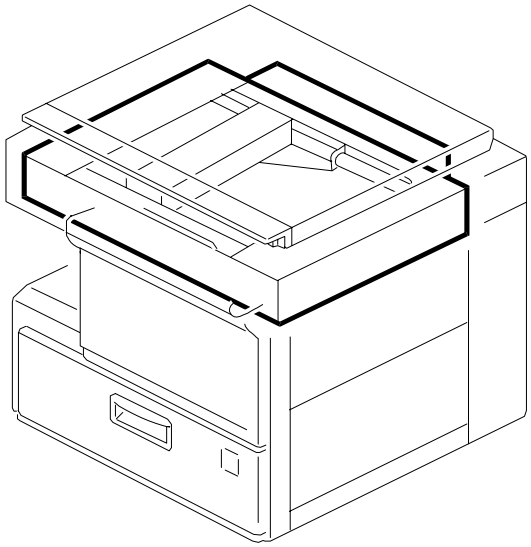

See Page 25

11.OPTICS SECTION 3 (B019)

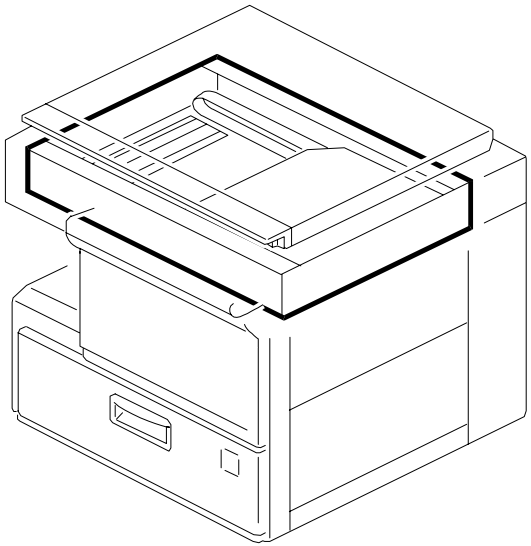

See Page 27

12.OPTICS SECTION 4 (B019)

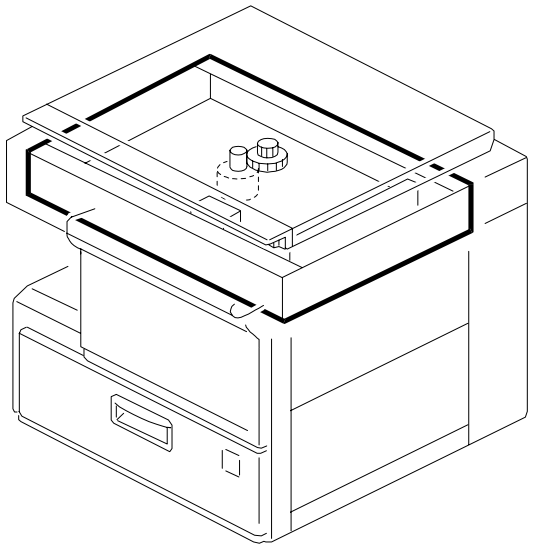

See Page 29

LOCATION OF UNIT

13.TONER BOTTLE HOLDER UNIT (B009/B019)

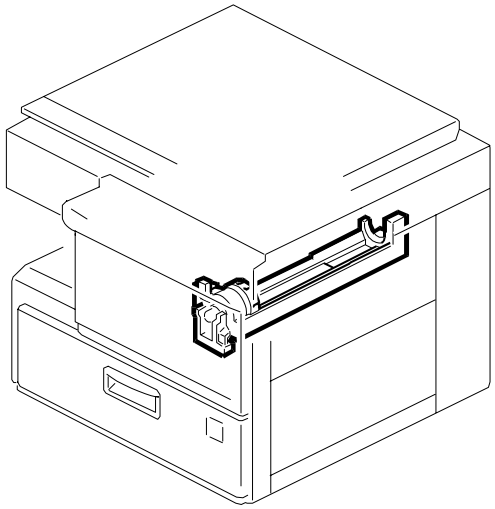

See Page 31

14.IMAGING UNIT - 1 (B009/B019)

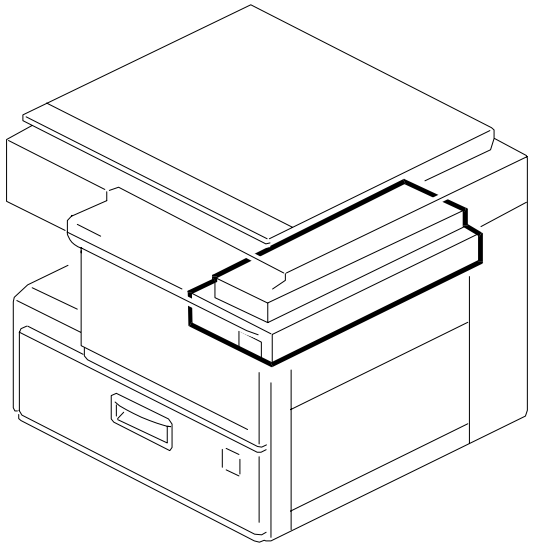

See Page 33

15.IMAGING UNIT - 2 (B009/B019)

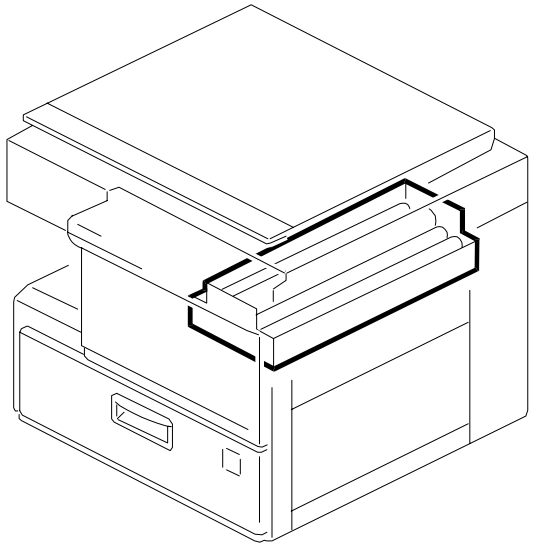

See Page 35

16.LOWER OPTICS SECTION (B009/B019)

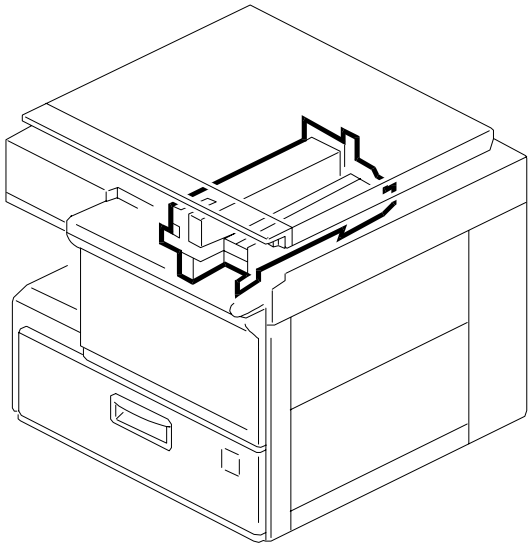

See Page 37

17.FUSING UNIT (B009/B019)

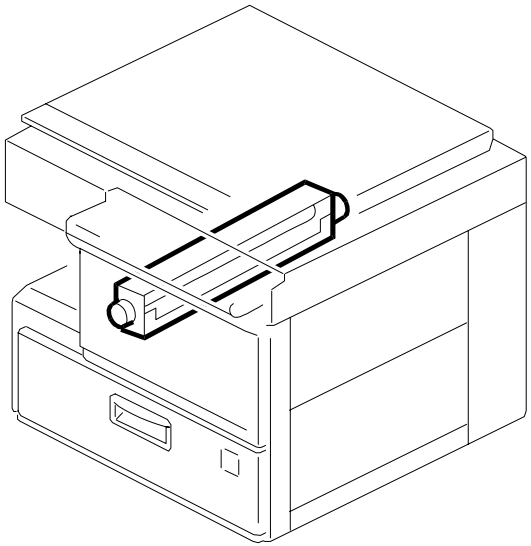

See Page 39

18.TRANSFER AND EXIT SECTION (B009/B019)

See Page 41

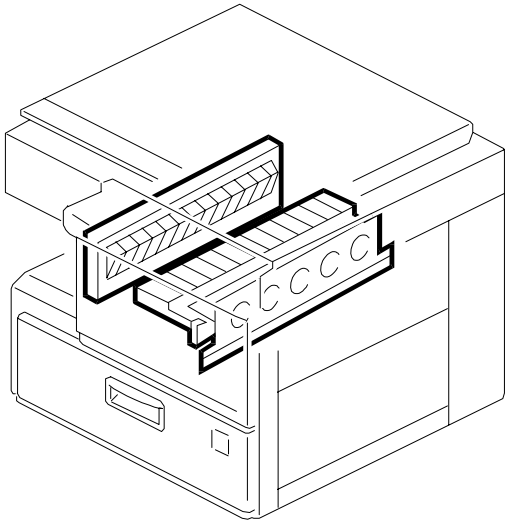

19.DRIVE SECTION 1 (B009/B019)

LOCATION OF UNIT

See Page 43

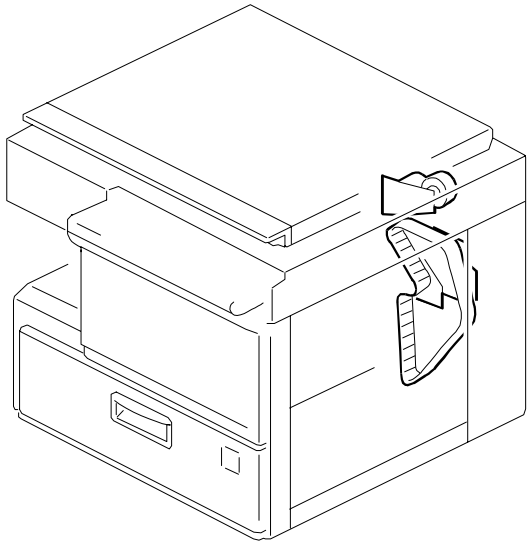

20.DRIVE SECTION 2 (B009/B019)

See Page 45

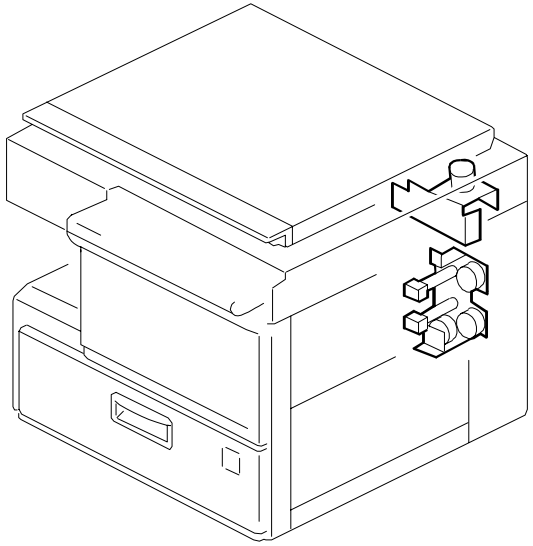

21.ELECTRICAL SECTION 1 (B009/B019)

See Page 47

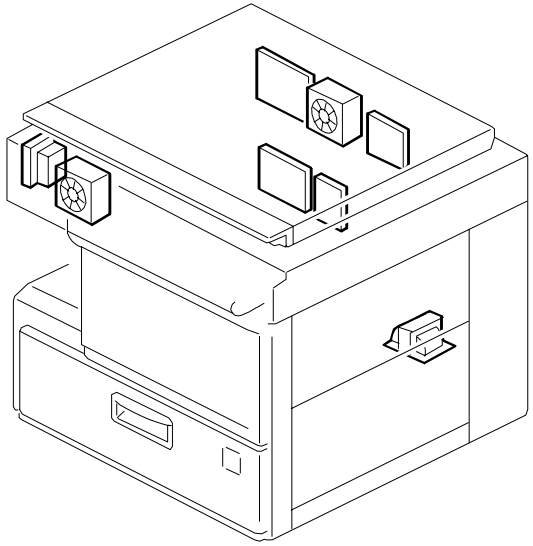

22.ELECTRICAL SECTION 2 (A298)

See Page 49

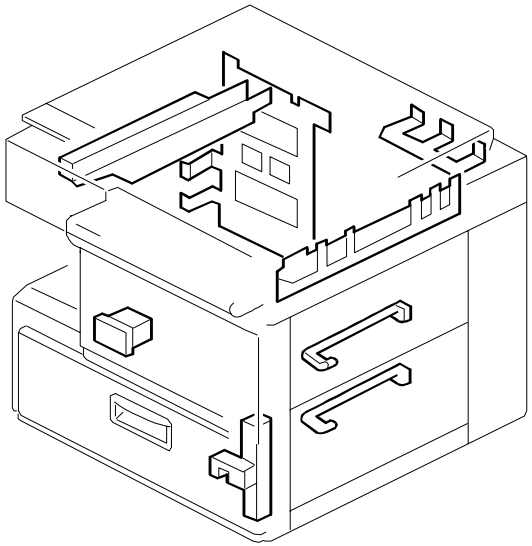

23.FRAME SECTION (B009/B019)

See Page 51

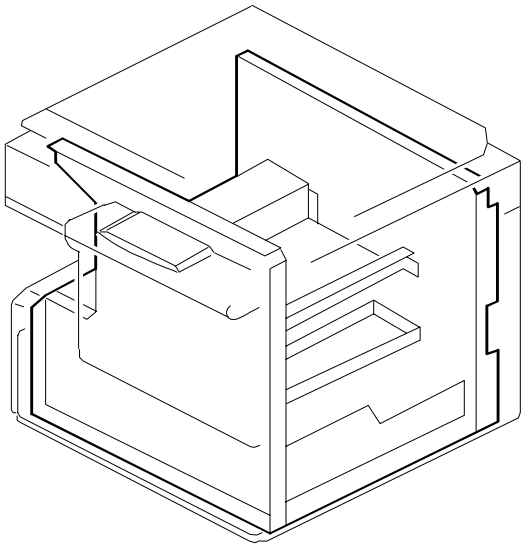

1.EXTERIOR (B009/B019)

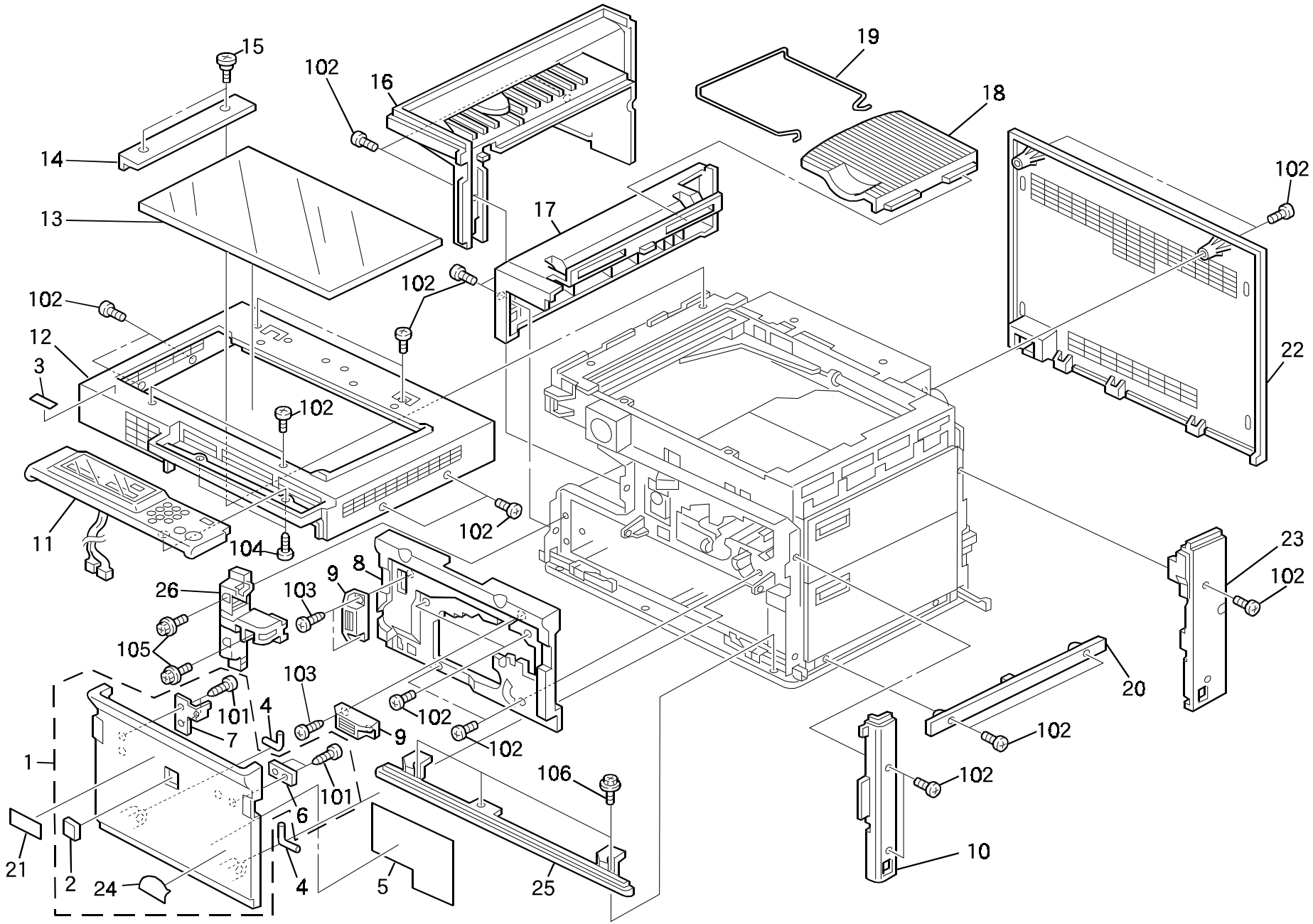

1.EXTERIOR (B009/B019)

Index No.	Part No.	Description	Q'ty Per Assembly
1	B009 1270	Front Cover Assembly (RIC) (B009)	1
1	A298 1270	Front Cover Assembly (RIC) (B019)	1
1	A219 6070	Front Cover Ass'y (NRG/SVN)	1
1	B009 6270	Front Cover Ass'y (INF) (B009)	1
1	B019 6270	Front Cover Ass'y (INF) (B019)	1
2	A153 1285	Emblem (RIC)	1
2	A153 6423	Support Cover (INF)	1
3	C225 2866	Decal - Key Top Cover (REX)	1
3	C225 2867	Decal - Cover - Panel (NSA)	1
3	A153 6409	Decal - Keytop Cover (GES)	1
4	A298 1354	Hinge Pin	2
5	A219 1284	Opetation Guide Sheet	1
6	A190 1282	Magnet Catch	1
7	A190 1283	Magnet Catch	1
8	A190 1337	Inner Cover	1
9	AG07 0004	Magnetic Catch	2
10	A219 1296	Front Right Cover	1
11	B009 1451	Operation Panel - A4 (B009)	1
11	B019 1450	Operation Panel - LT (B019)	1
11	B019 1451	Operation Panel - A4 (B019)	1
11	B019 1452	Operation Panel - LT (LA) (B019)	1
12	A190 1260	Upper Cover	1
13	AC01 2042	Exposure Glass	1
14	A298 1655	Left Scale	1
15	AA14 3070	Shoulder Screw - M2x2	2
16	A219 1305	Left Lower Cover	1
17	A190 1300	Left Upper Cover	1
18	A298 1201	Exit Tray	1
19	A298 1202	Slide Wire - Exit Tray	1
20	A190 1297	Right Lower Cover	1
21	B009 6184	Model Name Plate - NSA (B009)	1
21	B009 6186	Model Name Plate - REX (B009)	1
21	B009 6182	Model Name Plate - GES (B009)	1
21	B019 6184	Model Name Plate - NSA (B019)	1
21	B019 6186	Model Name Plate - REX (B019)	1
21	B019 6182	Model Name Plate - GES (B019)	1
22	A219 1330	Rear Cover	1
23	A219 1290	Rear Right Cover	1
24	AA00 1383	Decal - Energy Star	1
25	A219 1288	Lower Front Cover	1
26	A219 2715	Rail Auxiliary - Left	
101	0452 3008Z	Bind Tapping Screw - M3x8	
102	0353 0060B	Philips Pan Head Screw - M3x6	
103	0434 0102W	Tapping Screw - M4x10	
104	0452 3010Z	Bind Tapping Screw - 3x10	
105	0451 3014B	Tapping Screw - M3-14	
106	0451 3006B	Tapping Screw - M3x6	

2.PLATEN COVER (B009/B019)

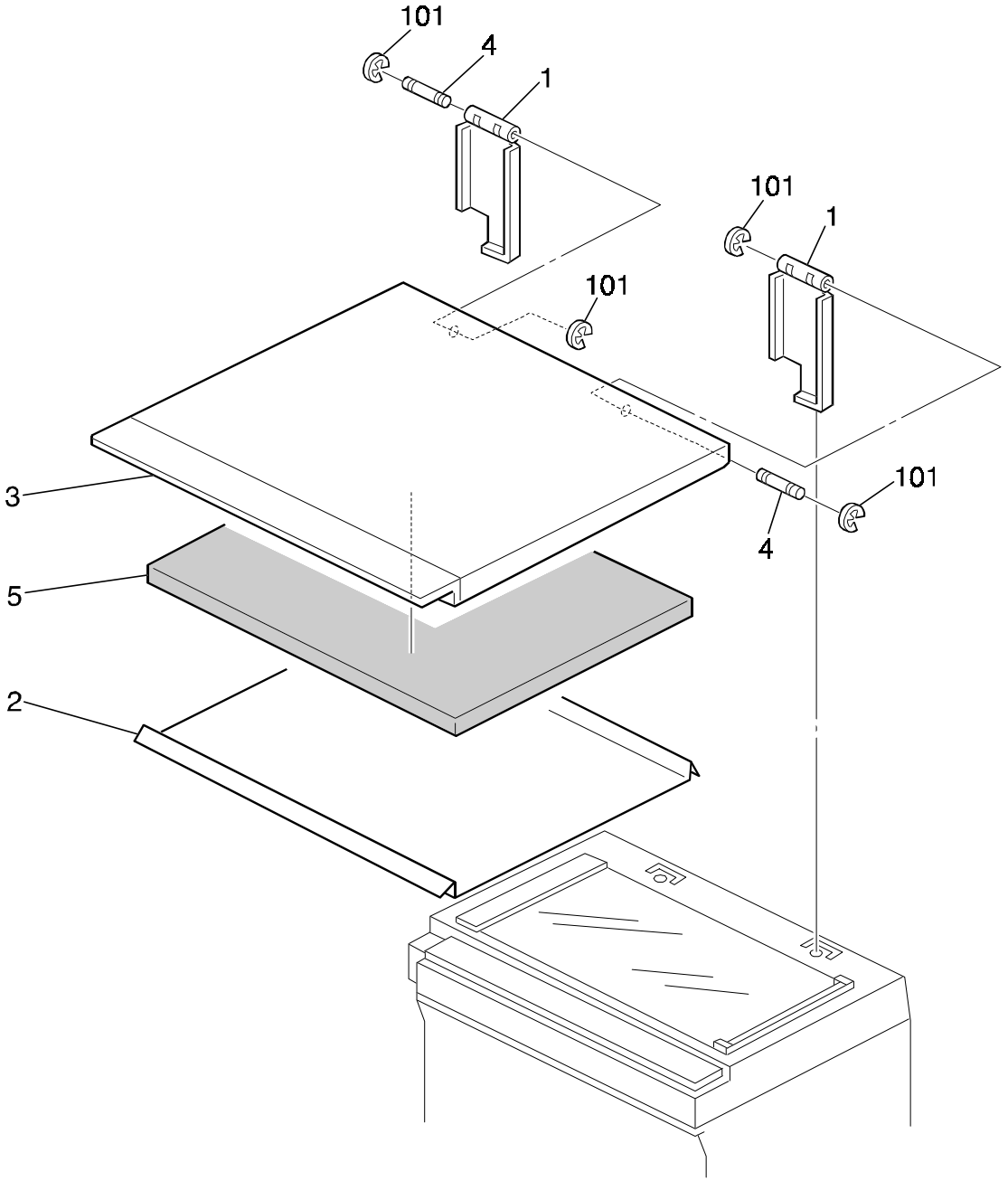

2.PLATEN COVER (B009/B019)

Index No.	Part No.	Description	Q'ty Per Assembly
1	A203 1346	Platen Cover Hinge	2
2	**5448 2804**	**Platen Cover Sheet**	**1**
3	A298 1391	Platen Cover	1
4	A203 1356	Hinge Shaft - Platen Cover	2
5	AA16 2067	Platen Cover Pad	1

Index No.	Part No.	Description	Q'ty Per Assembly
101	0720 0025E	Retaining Ring - M2.5	

3.OPERATION PANEL (B009/B019)

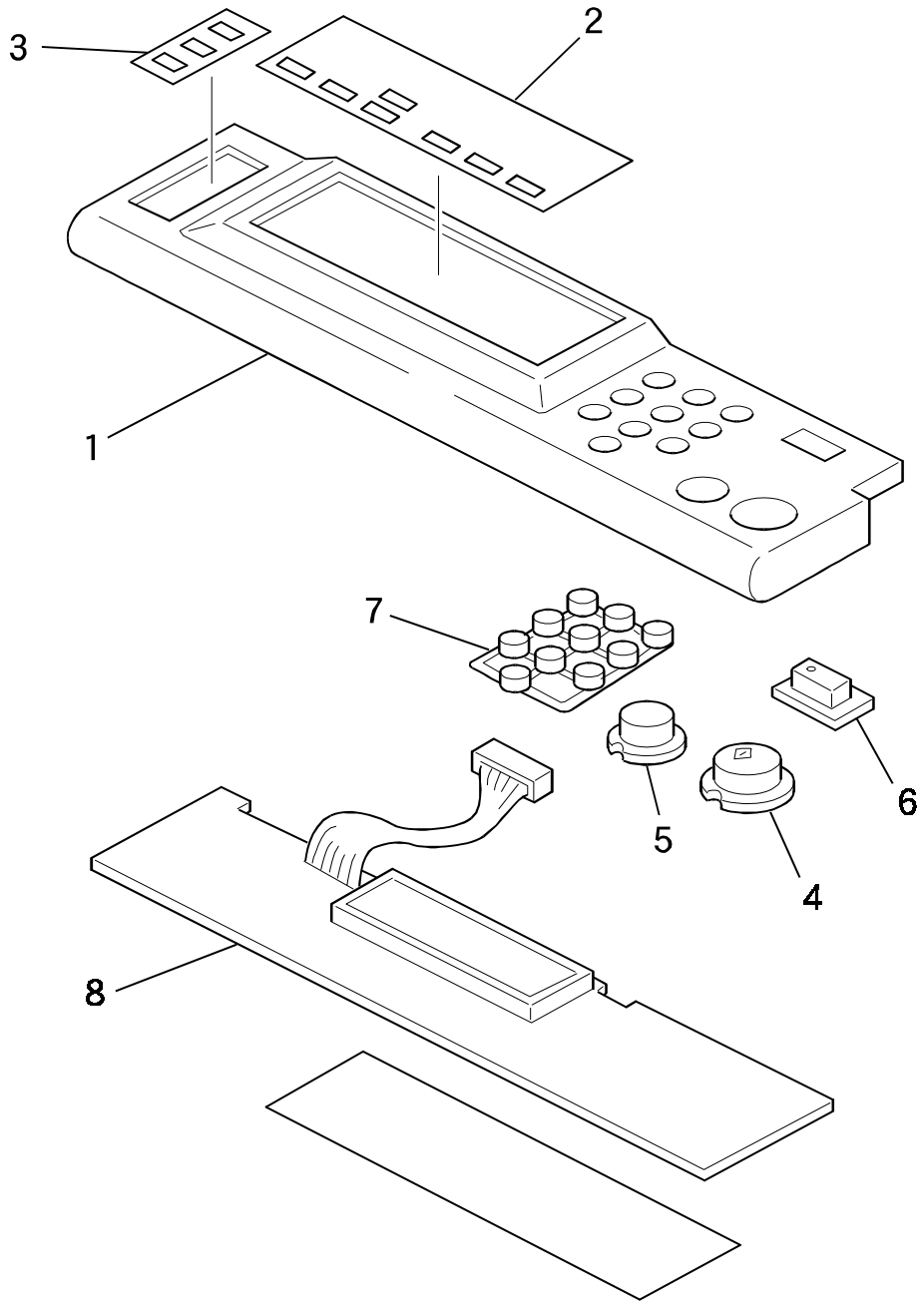

3.OPERATION PANEL (B009/B019)

Index No.	Part No.	Description	Q'ty Per Assembly
*	B009 1451	Operation Panel - A4 (B009)	1
*	B019 1450	Operation Panel - LT (B019)	1
*	B019 1451	Operation Panel - A4 (B019)	1
*	B019 1452	Operation Panel - LT (LA) (B019)	1
1	A298 1465	Operation Panel Cover - A4	1
2	B009 1466	Indication Sheet - A4 (B009)	1
2	B019 1462	Indication Sheet - LT (B019)	1
2	B019 1464	Indication Sheet - LT (LA) (B019)	1
2	B019 1466	Indication Sheet - A4 (B019)	1
3	B009 1467	Operation Panel Sheet - A4 (B009)	1
3	B019 1463	Operation Panel Sheet - LT (B019)	1
3	B019 1465	Operation Panel Sheet - LT (LA) (B019)	1
3	B019 1467	Operation Panel Sheet - A4 (B019)	1
4	A190 1452	Keytop - Start (RIC/NRG)	1
5	A190 1453	Keytop - Clear/Stop (RIC/NRG)	1
6	A190 1454	Keytop - Clear Mode (RIC/NRG)	1
7	A190 1455	Keytop - 10keys (RIC/NRG)	1
8	A298 1464	Operation Panel Board - 120V	1
8	A298 1468	Operation Panel Board - 230V	1

Index No.	Part No.	Description	Q'ty Per Assembly

4.PAPER TRAY (B009/B019)

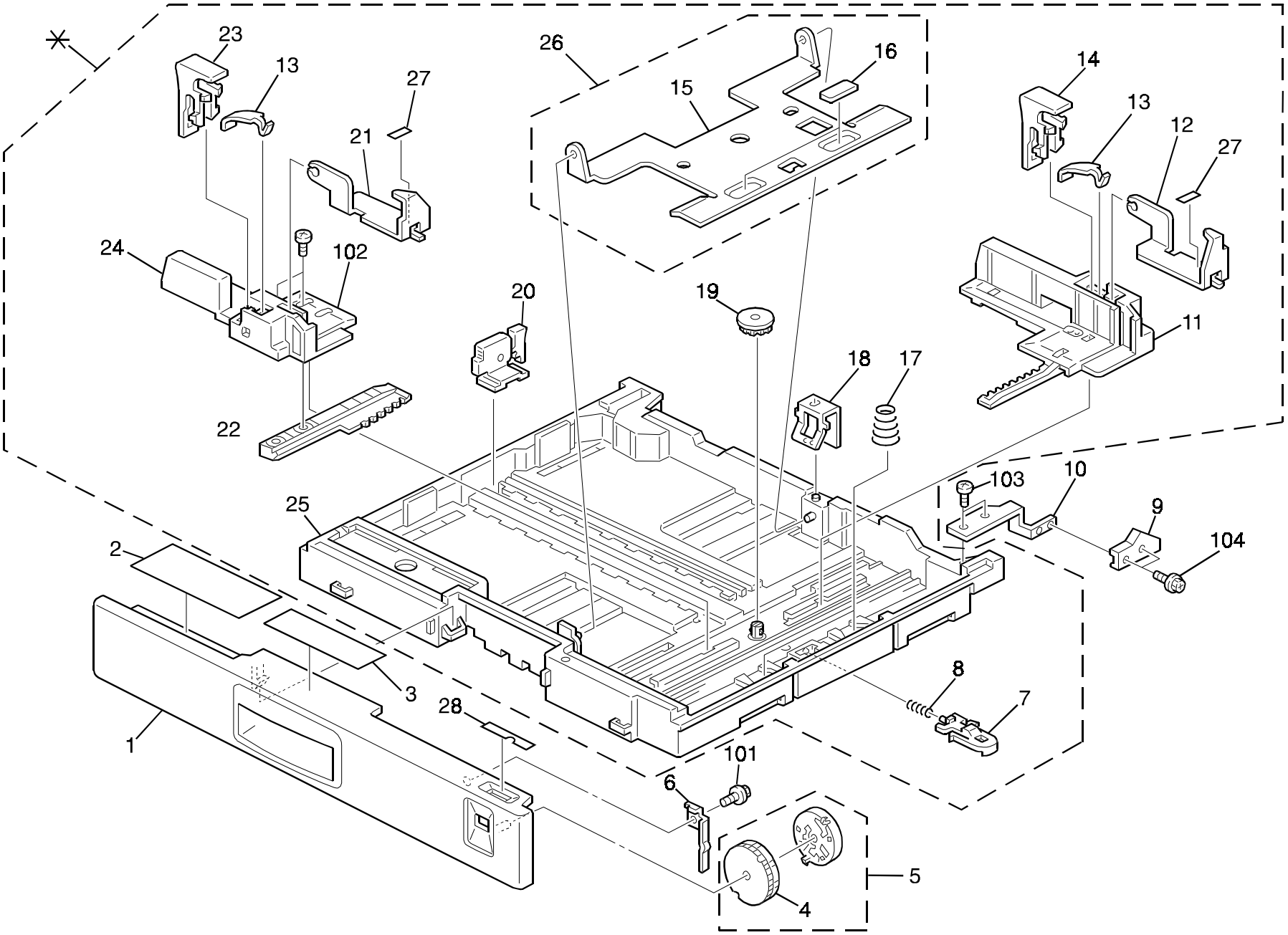

4.PAPER TRAY (B009/B019)

Index No.	Part No.	Description	Q'ty Per Assembly
*	A245 2551	Paper Tray Ass'y - LT	1
*	A245 2552	Paper Tray Ass'y - A4	1
1	G020 2647	Paper Tray Cover	1
2	G020 2668	Sheet - Paper Set	1
3	A245 2693	Decal Paper Tray Operation	1
3	A245 2694	Decal - Paper Set Direction (4Languages)	1
4	G020 2593	Paper Size Sensor - LT	1
4	G020 2595	Paper Size Sensor - A4	1
5	G020 2663	Paper Size Actuator	1
6	G020 2648	Holder - Paper Size Detector	1
7	G020 2592	Release Lever - Bottom Plate	1
8	G020 2599	Spring - Release Lever	1
9	A190 2812	Stopper Cover	1
10	A190 2810	Cassette Stopper	1
11	G020 2567	Rear Side Fence	1
12	G020 2568	Rear Corner Separator	1
13	A157 2769	Rear Stopper Spring	2
14	A190 2642	Rear Lever Stopper	1
15	G020 2557	Tray Bottom Plate	1
16	**G020 2645**	**Friction Pad**	**1**
17	G020 2656	Pressure Spring - Bottom Plate	2
18	G020 2658	Grounding Plate - Bottom Plate	1
19	AB01 3868	Gear - 16Z	1
20	G020 2644	End Fence	1
21	G020 2561	Front Paper Separator	1
22	A190 2561	Side Fence Rack	1
23	G020 2664	Front Stopper Lever	1
24	A190 2560	Front Side Fence	1
25	A190 2590	Paper Tray	1
26	G020 2661	Bottom Plate Ass'y	1
27	A193 2660	Paper Separator Cushion	2
28	A219 2696	Decal - Size Selection	1

Index No.	Part No.	Description	Q'ty Per Assembly
101	0450 3008B	Tapping Screw - M3x8	
102	0452 3008B	Tapping Screw - M3x8	
103	0413 0082W	Tapping Screw - M3x8	
104	0451 3006B	Tapping Screw - M3x6	

5.BY-PASS FEED TABLE(B009/B019)

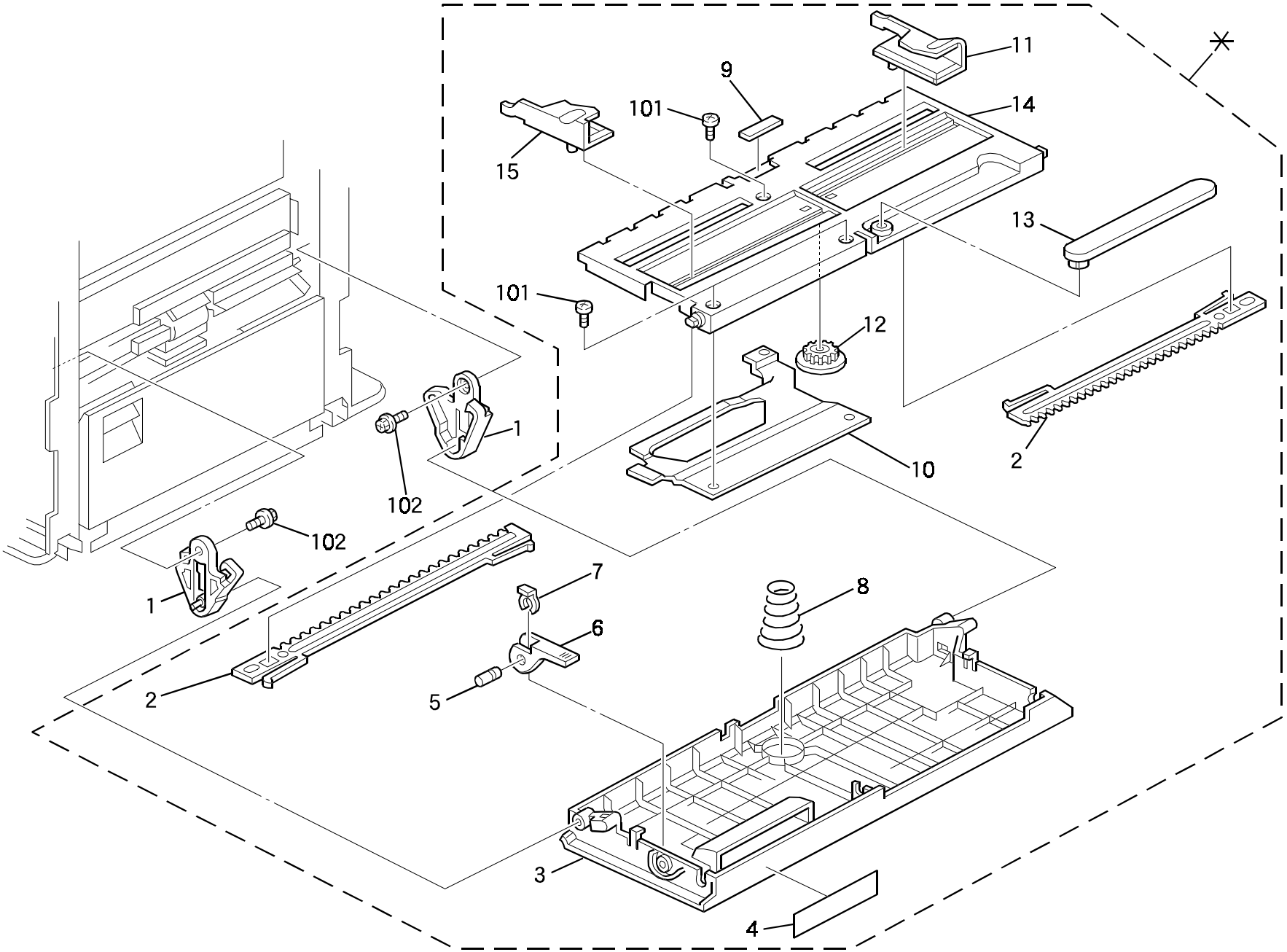

5.BY-PASS FEED TABLE(B009/B019)

Index No.	Part No.	Description	Q'ty Per Assembly
*	A298 2700	By-pass Feed Unit	1
1	G020 2735	Guide - By-pass Feed Table	2
2	A190 2707	Side Fence Rack	2
3	A190 2701	By-pass Feed Cover	1
4	A190 2708	Decal - By-pass Feed	1
5	G020 2786	Shaft - By-pass Release Lever	1
6	G020 2784	Lever - By-pass Feed Table	1
7	5447 2681	Snap Ring	1
8	G020 2702	Pressure Spring - By-pass Feed	1
9	5215 2713	Bottom Plate Pad	1
10	A190 2782	Bottom Plate Stay	1
11	A190 2705	Right Side Fence	1
12	G011 3305	Gear - 16T	1
13	A190 2702	Paper Guide	1
14	A190 2704	Bottom Plate - By-pass Feed	1
15	A190 2706	Left Side Fence	1

Index No.	Part No.	Description	Q'ty Per Assembly
101	0453 3006Z	Bind Tapping Screw - M3x6	
102	0451 3006B	Tapping Screw - M3x6	

6.PAPER FEED SECTION 1 (B009/B019)

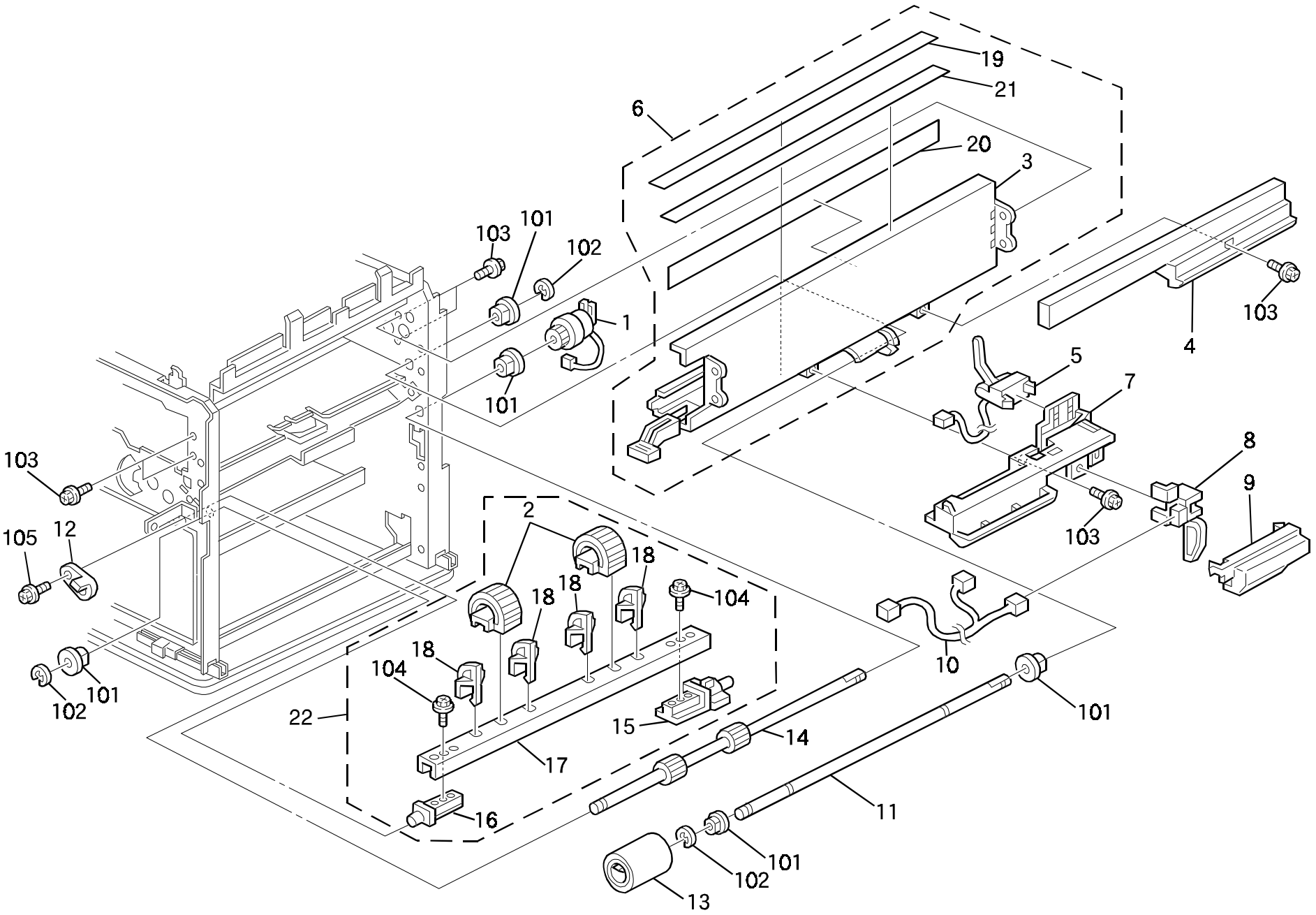

6.PAPER FEED SECTION 1 (B009/B019)

Index No.	Part No.	Description	Q'ty Per Assembly
1	A298 1139	Magnetic Clutch - Vertical	1
2	**G020 2555**	**Paper Feed Roller**	**2**
3	A190 3361	Toner Bottle Holder Guide	1
4	G020 2785	Cover - Feed Roller Shaft	1
5	A190 2771	Resist Sensor	1
6	A219 3360	Toner Bottle Holder guide Ass'y	1
7	G020 2753	Bracket - Registration Sensor	1
8	A190 2772	Paper End Sensor	1
9	G020 2787	Cover - By-pass Paper End Sensor	1
10	A190 5344	Relay Harness - By-pass Feed	1
11	G020 2723	By-pass Feed Shaft	1
12	G020 2587	Bushing - Paper Feed	1
13	**G020 2721**	**By-pass Feed Roller**	**1**
14	A190 2564	Relay Roller	1
15	G020 2586	Rear Pin - Paper Feed Roller	1
16	G020 2585	Front Pin - Paper Feed Roller	1
17	G020 2570	Shaft - Paper Feed Roller	1
18	G020 2565	Paper Guide	4
19	A219 3364	Mylar Seal - 8x429	1
20	A219 3365	Mylar Seal - 8x400	1
21	A190 3363	Mylar Seal - 10x360	1
22	G020 2554	Paper Feed Roller Ass'y	1

Index No.	Part No.	Description	Q'ty Per Assembly
101	0805 3480	Bushing - 6mm	
102	0720 0040E	Retaining Ring - M4	
103	0451 3006B	Tapping Screw - M3x6	
104	0450 3008B	Tapping Screw - M3x8	
105	0453 3008	Bbind Tapping Screw - M3x8	

7.PAPER FEED SECTION 2 (B009/B019)

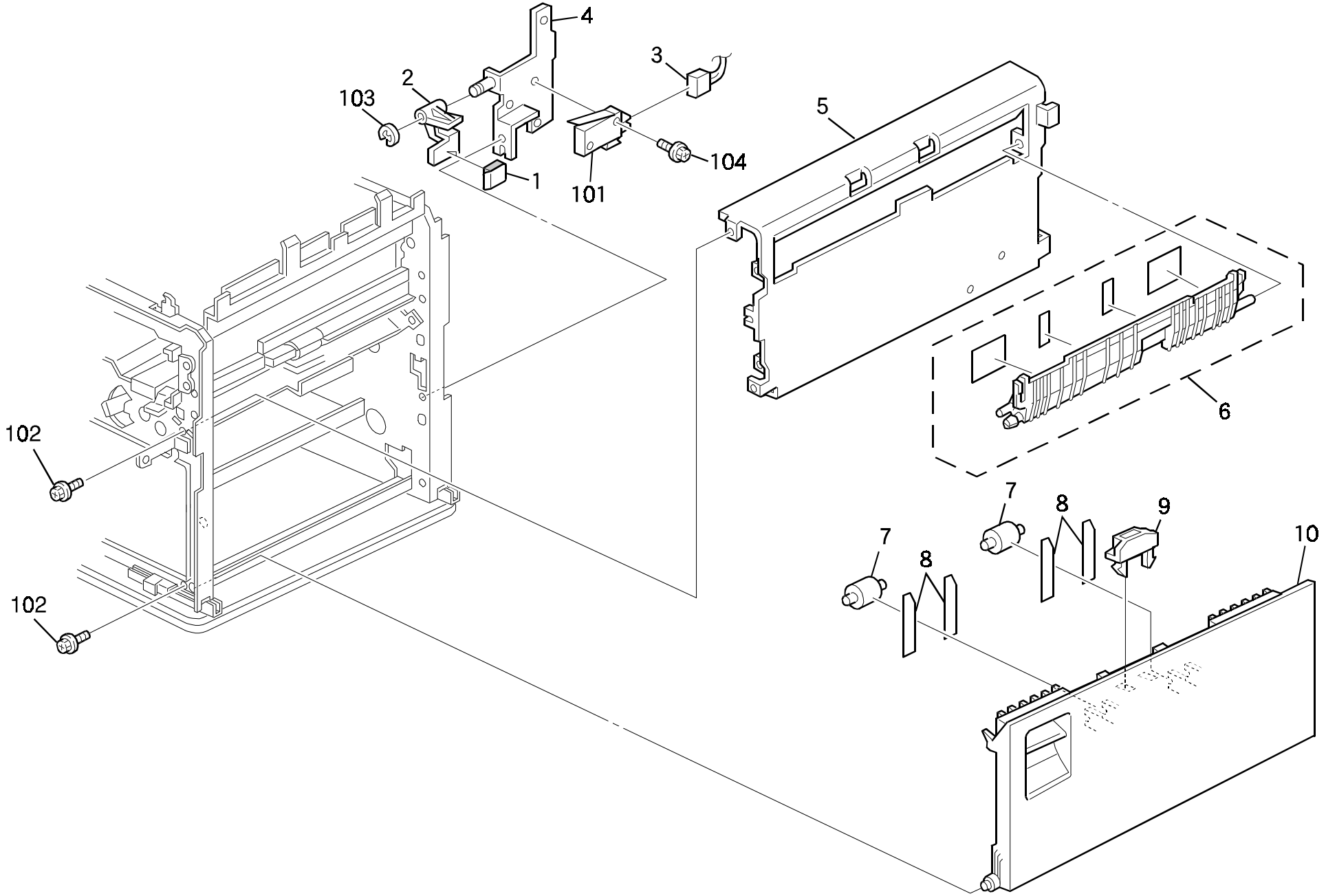

7.PAPER FEED SECTION 2 (B009/B019)

Index No.	Part No.	Description	Q'ty Per Assembly
1	A190 2905	Cushion	1
2	A190 2902	Switch Lever	1
3	B009 5310	DC Main Harness (B009)	1
3	A298 5310	DC Main Harness (B019)	1
4	A190 2900	Switch Bracket	1
5	A219 2611	Paper Guide Plate	1
6	A219 2612	Lower Paper Guide	1
7	AF02 0283	Pressure Roller	2
8	G020 2577	Spring Plate - Driven Roller	4
9	G020 2630	Magnetic Catch	1
10	A219 2575	Vartical Transport	1

Index No.	Part No.	Description	Q'ty Per Assembly
101	1204 2466	Micro Switch - V -16506 IC25	
102	0451 3006B	Tapping Screw - M3x6	
103	0720 0030E	Retaining Ring - M3	
104	0451 3014B	Tapping Screw - M3-14	

8.PAPER REGISTRATION (B009/B019)

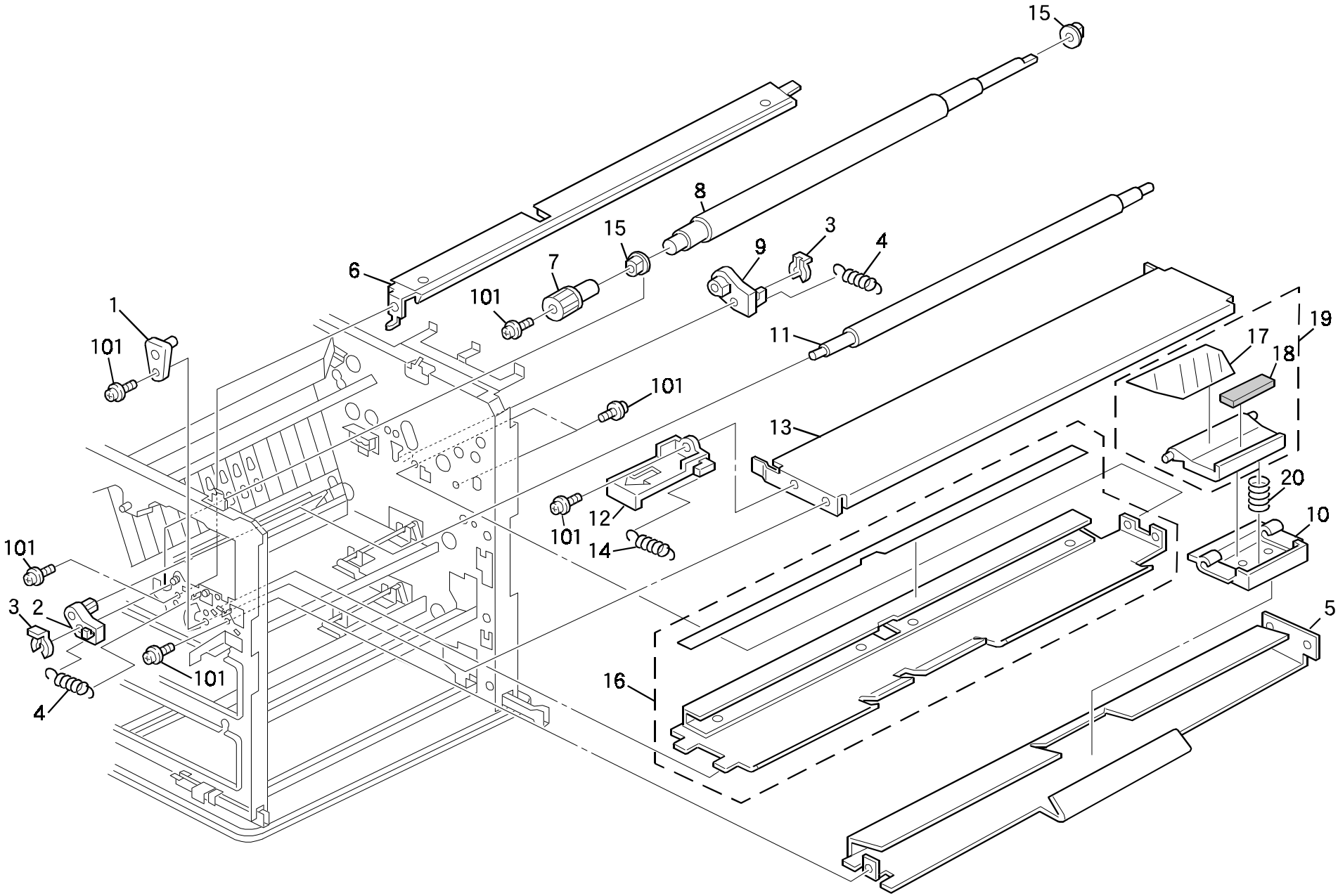

8.PAPER REGISTRATION (B009/B019)

Index No.	Part No.	Description	Q'ty Per Assembly
1	G020 3888	Pin - Transfer Guide	1
2	A190 2780	Front Bushing	1
3	5447 2681	Snap Ring	1
4	G020 2743	Tension Spring	1
5	A190 2711	Friction Pad Stay	1
6	G020 2745	Lower Guide Plate - Regist	1
7	A190 2783	Resist Roller Knob	1
8	A190 2740	Lower Resistration Roller	1
9	A190 2781	Rear Bushing	1
10	G020 2712	Holder - By-pass Feed Friction Pad	1
11	A298 2741	Upper Registration Roller	1
12	G020 2765	Knob - Lower Transport Guide	1
13	G020 2762	Lower Transport Guide	1
14	AA06 0331	Release Spring	1
15	5053 0223	Bushing - 8mm	2
16	G020 2754	Upper Paper Guide	1
17	A190 2717	Friction Pad Guide	1
18	**G020 2716**	**Friction Pad**	**1**
19	A190 2714	Friction Pad Holder Ass'y	1
20	G020 2713	Pressure Spring	1

Index No.	Part No.	Description	Q'ty Per Assembly
101	0451 3006B	Tapping Screw - M3x6	

9.OPTICS SECTION 1 (B009/B019)

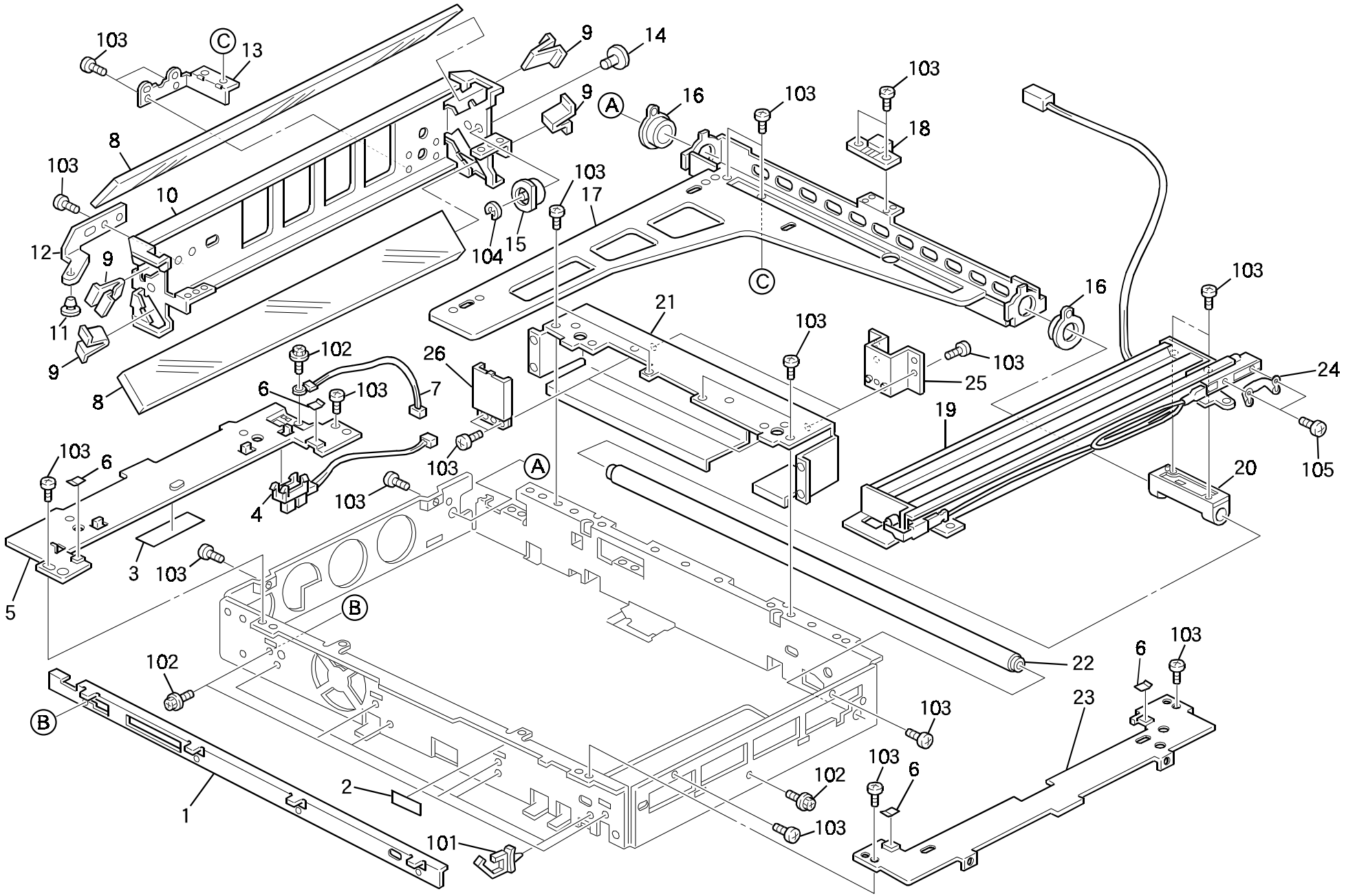

9.OPTICS SECTION 1 (B009/B019)

Index No.	Part No.	Description	Q'ty Per Assembly
1	A190 1660	Scanner Guide Rail	1
2	A111 1753	Seal - 0.1x18x49	1
3	AC06 3001	White Reference Plate	1
4	AW02 0075	Photointerrupter	1
5	A190 1651	Left Scale Support Plate	1
6	A190 1652	Exposure Glass Seal	4
7	AW10 0027	Thermister	1
8	A190 1815	2nd/3rd Mirror	2
9	A077 1690	Spring Plate - Mirror	4
10	A190 1691	2nd Scanner Frame	1
11	A069 1883	Shoe - Scanner	1
12	A190 1694	Shoe Bracket	1
13	A190 1824	2nd Scanner Support Plate	1
14	A190 1751	Harness Guide Pulley Ass'y	1
15	A190 1821	Harness Guide Pulley	1
16	A190 1688	Bushing	1
17	A190 1692	2nd Scanner Support Plate	1
18	A190 1689	Clamp	1
19	A298 1700	1st Scanner Unit - 120V	1
19	A298 1701	1st Scanner Unit - 230V	1
20	A298 1725	1st Scanner Clamp	1
21	A219 1194	ADF Bracket	1
22	A190 1814	Scanner Guide Rod	1
23	A190 1654	Right Bracket - Exposure Glass	1
24	A298 1807	Thermofuse - 152°C	1
25	A219 1197	Rear Bracket - ADF	1
26	A219 1196	Shielding Plate Bracket - ADF	2

Index No.	Part No.	Description	Q'ty Per Assembly
101	1105 0310	Wire Clamp	
102	0451 3006B	Tapping Screw - M3x6	
103	0353 0060B	Philips Pan Head Screw - M3x6	
104	0720 0040E	Retaining Ring - M4	
105	0453 3006Z	Bind Tapping Screw - M3x6	

10.OPTICS SECTION 2 (B009)

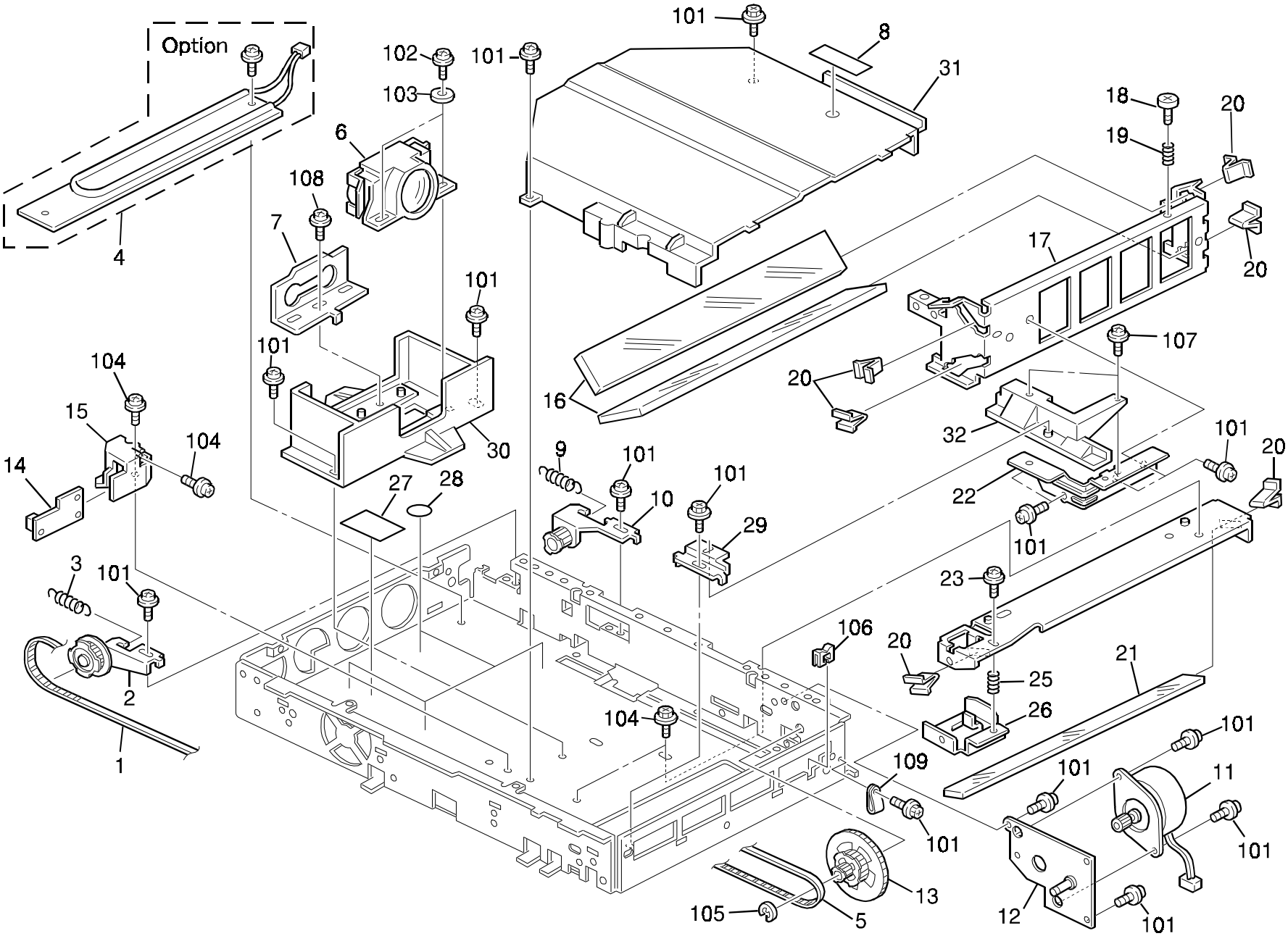

10.OPTICS SECTION 2 (B009)

Index No.	Part No.	Description	Q'ty Per Assembly
1	A190 1816	Timing Belt - L1110P2M	1
2	A190 1666	Pulley Bracket	1
3	A190 1819	1st Scanner Spring	1
4	AX40 0053	Anticondensation Heater - 240V 18W (OPTION)	1
5	A190 1817	Timing Belt - L754P2M	1
6	A298 1682	Lens - F8/180	1
7	A298 1683	Shading Plate	1
8	A111 1753	Seal - 0.1x18x49	1
9	A190 1818	2nd Scanner Spring	1
10	A190 1664	Pulley Bracket	1
11	A271 5205	Scanner Motor - Dc24v 96w	1
12	A190 1696	Motor Bracket	1
13	A190 1803	Timing Puley - 22Z/44Z	1
14	A152 5120	Optics Control Board	1
15	A077 1745	Cover - ADS Sensor	1
16	A190 1811	4th/5th Mirror	2
17	A190 1678	3rd Scanner Brakcet	1
18	A153 1906	Adjust Shoe	1
19	AA06 3523	Adjust Spring	1
20	A077 1690	Spring Plate - Mirror	6
21	A190 1809	6th Mirror	1
22	A190 1825	3rd Scanner Support Plate	1
23	A077 1746	Mirror Adjusting Screw	1
24	A190 1675	6th Mirror Bracket - Rear	1
25	AA06 3180	Adjust Spring	1
26	A190 1674	6th Mirror Bracket - Front	1
27	A190 1831	Shield Heater Rear	1
28	AA15 0234	Mylar Seal - Base	1
29	A076 1720	Mirror Adjusting Bracket	1
30	B009 1682	Lens Caridge	1
31	B009 1693	Lens Cover	1
32	B009 1827	Mirror Bracket	1

Index No.	Part No.	Description	Q'ty Per Assembly
101	0451 3006B	Tapping Screw - M3x6	
102	0450 3010B	Tapping Screw - M3x10	
103	0701 0030B	Flat Washer - M3	
104	0450 3006B	Tapping Screw - M3x6	
105	0720 0060E	Retaining Ring - M6	
106	1105 0328	Harness Clamp - ES-0505	
107	0951 3005B	Philips Screw With Flat Washer M3x5	
108	0450 3008B	Tapping Screw - M3x8	
109	1105 0008	Nylon Clamp - 2n	

11.OPTICS SECTION 3 (B019)

Rev. 10/31/2000

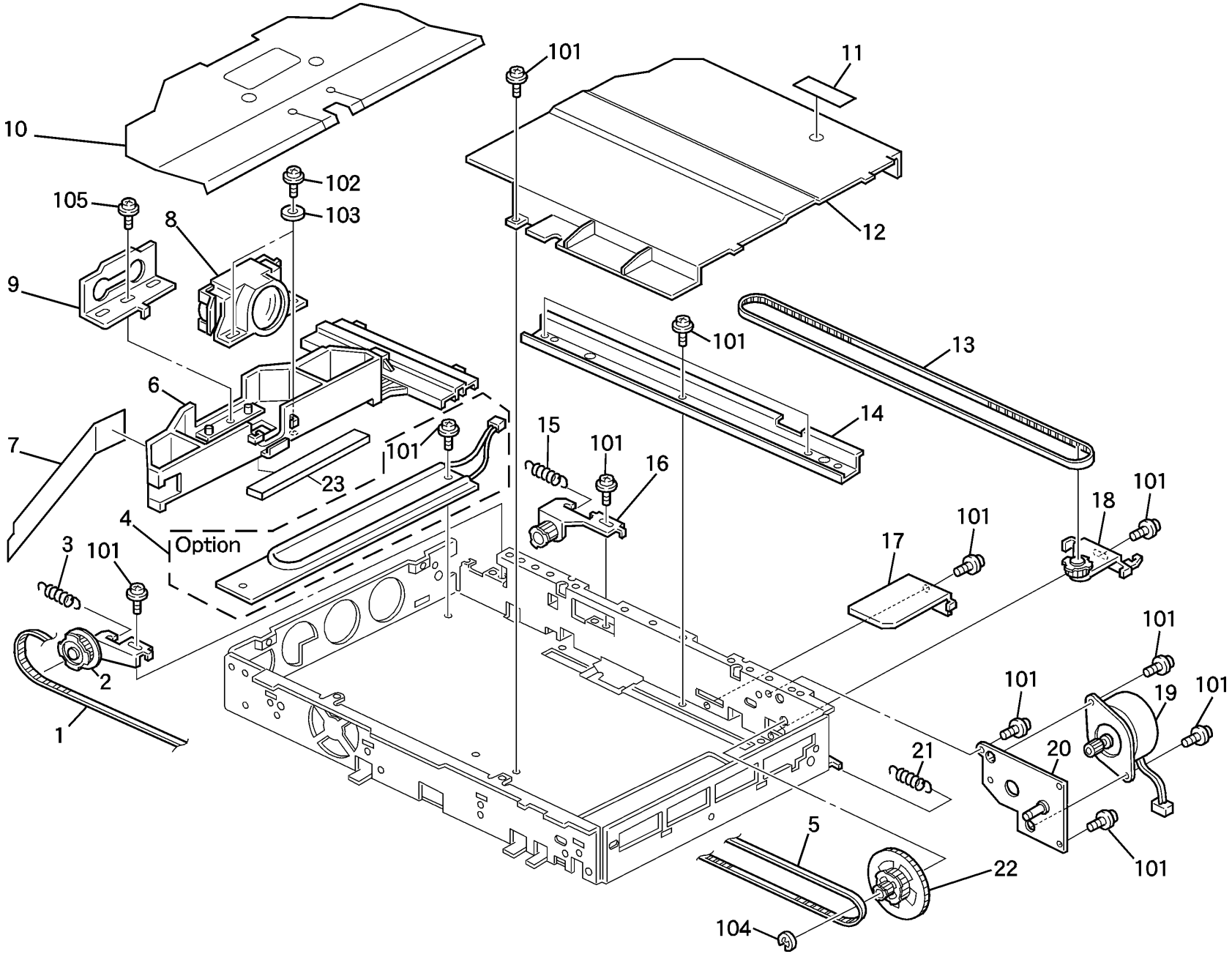

11.OPTICS SECTION 3 (B019)

Rev. 10/31/2000

Index No.	Part No.	Description	Q'ty Per Assembly
1	A190 1816	Timing Belt - L1110P2M	1
2	A190 1666	Pulley Bracket	1
3	A190 1819	1st Scanner Spring	1
4	AX40 0052	Anticondensation Heater - 120V 18W (OPTION)	1
4	AX40 0053	Anticondensation Heater - 240V 18W (OPTION)	1
5	A190 1817	Timing Belt - L754P2M	1
6	A190 1682	Lens Caridge	1
7	A190 1698	Shielding Plate	1
8	A298 1682	Lens - F8/180	1
9	A298 1683	Shading Plate	1
10	A190 1684	Shielding Plate	1
11	A111 1753	Seal - 0.1x18x49	1
12	A190 1693	Lens Cover	1
13	A190 1813	Timing Belt - L824P2M	1
14	A190 1663	Lens Guide Rail	1
15	A190 1818	2nd Scanner Spring	1
16	A190 1664	Pulley Bracket	1
17	A190 1685	Lens Cover Bracket	1
18	A190 1669	Lens Support Bracket	1
19	A271 5205	Scanner Motor - DC24V 96W	1
20	A190 1696	Motor Bracket	1
21	A190 1820	Lens Holder Spring	1
22	A190 1803	Timing Puley - 22Z/44Z	1
23	A298 1684	Shading Seal	1

Index No.	Part No.	Description	Q'ty Per Assembly
101	0451 3006B	Tapping Screw - M3x6	
102	0450 3010B	Tapping Screw - M3x10	
103	0701 0030B	Flat Washer - M3	
104	0720 0060E	Retaining Ring - M6	
105	0450 3006B	Tapping Screw - M3x6	

12.OPTICS SECTION 4 (B019)

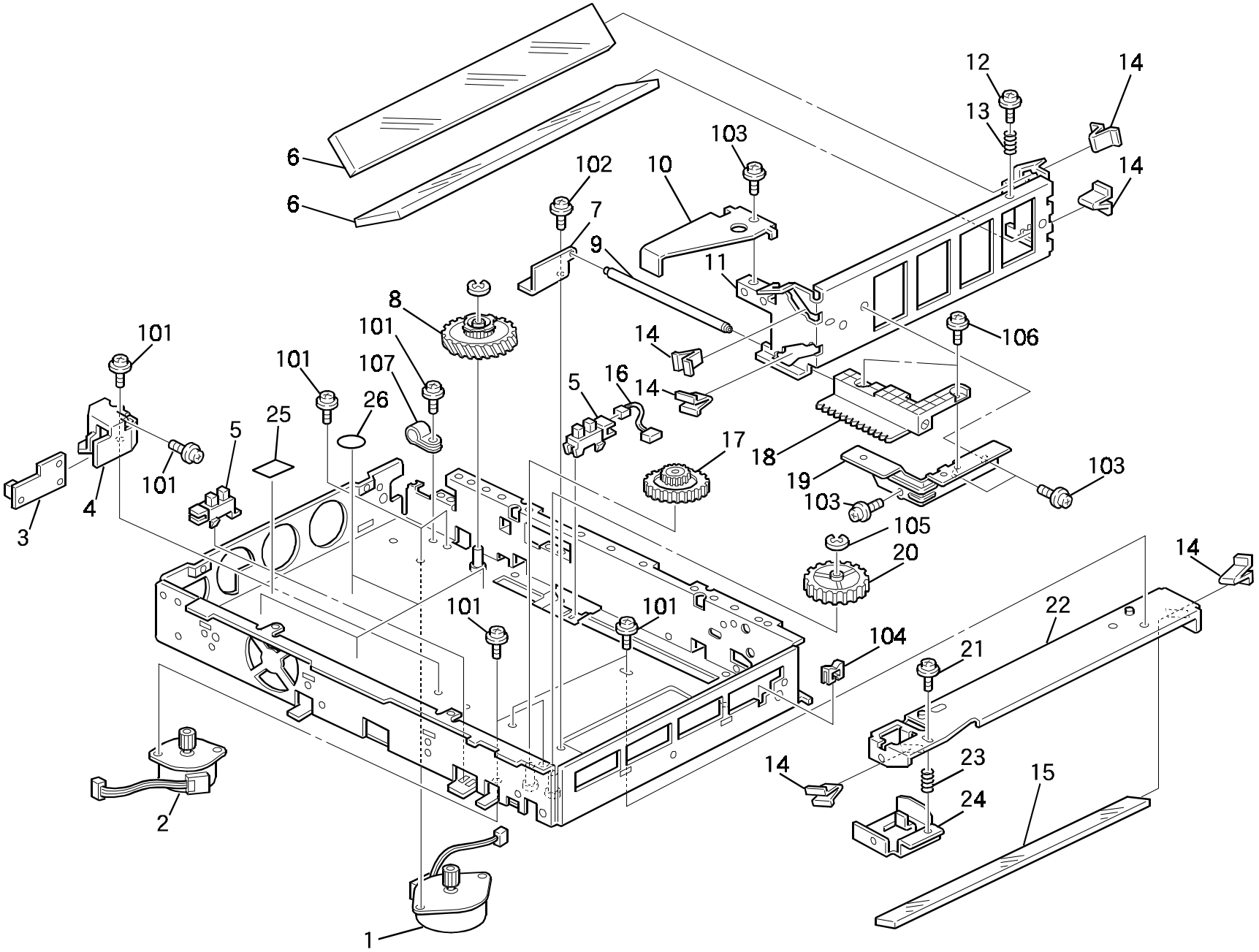

12.OPTICS SECTION 4 (B019)

Index No.	Part No.	Description	Q'ty Per Assembly
1	A190 1672	Lens Drive Motor DC24V 81.6W	1
2	A298 1671	Mirror Drive Motor - DC24V 7.2W	1
3	A152 5120	Optics Control Board	1
4	A077 1745	Cover - ADS Sensor	1
5	AW02 0075	Photointerrupter	2
6	A190 1811	4th/5th Mirror	2
7	A190 1676	Rod Bracket	1
8	A190 1802	Timing Pulley - 30Z	1
9	A190 1810	Mirror Guide Rod	1
10	A190 1679	Mirror Sensor Shuter	1
11	A190 1678	3rd Scanner Brakcet	1
12	A153 1906	Adjust Shoe	1
13	AA06 3523	Adjust Spring	1
14	A077 1690	Spring Plate - Mirror	6
15	A190 1809	6th Mirror	1
16	A190 5343	Scanner H.P Harness	1
17	AB01 7361	Gear - 24Z/56Z	1
18	A190 1827	Rack Gear	1
19	A190 1825	3rd Scanner Support Plate	1
20	AB01 7129	Gear - 20Z And 72Z	1
21	A077 1746	Mirror Adjusting Screw	1
22	A190 1675	6th Mirror Bracket - Rear	1
23	AA06 3180	Adjust Spring	1
24	A190 1674	6th Mirror Bracket - Front	1
25	A190 1831	Shield Heater Rear	1
26	AA15 0234	Mylar Seal - Base	4

Index No.	Part No.	Description	Q'ty Per Assembly
101	0450 3006B	Tapping Screw - M3x6	
102	0353 0060B	Philips Pan Head Screw - M3x6	
103	0451 3006B	Tapping Screw - M3x6	
104	1105 0328	Harness Clamp - Es-0505	
105	0720 0040E	Retaining Ring - M4	
106	0951 3005B	Philips Screw With Flate Washer - M3x5	
107	1105 0008	Nylon Clamp - 2n	

13.TONER BOTTLE HOLDER UNIT (B009/B019)

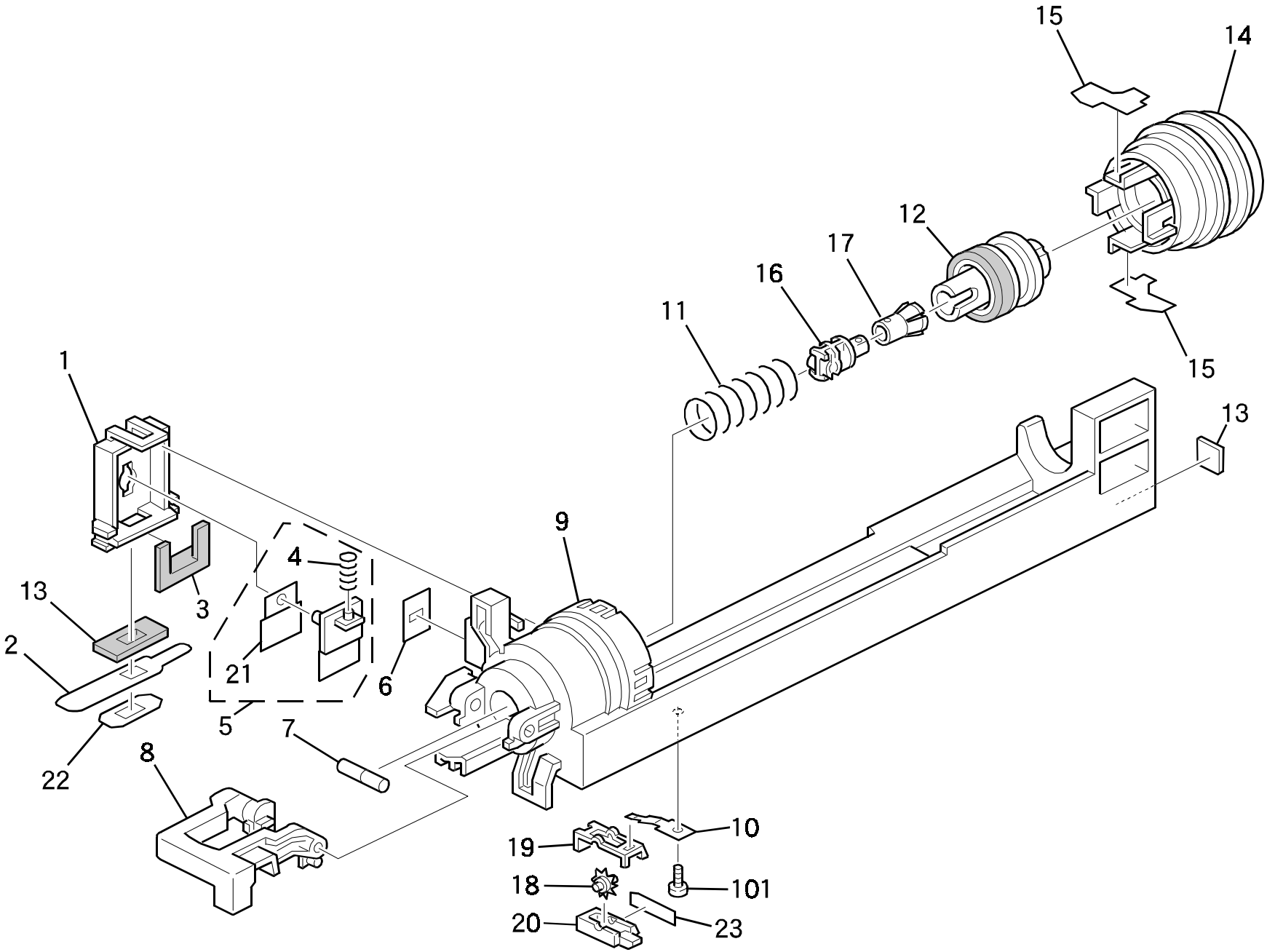

13.TONER BOTTLE HOLDER UNIT (B009/B019)

Index No.	Part No.	Description	Q'ty Per Assembly
*	A219 3034	Toner Supply Unit (RIC-EU/LA)	1
*	A219 3030	Toner Supply Unit (RIC-NA)	1
*	A219 3036	Toner Supply Unit (Others)	1
1	A219 3311	Toner Collection Cover	1
2	A219 3342	Lower Seal - Tonner Collection Cover	1
3	G020 3345	Right Seal	1
4	G020 3313	Spring	1
5	A219 3317	Toner Adding Shutter	1
6	A219 3312	Toner Adding Gate	1
7	A184 3422	Toner Slider	1
8	A219 3339	Toner Bottle Holder Lever	1
9	A219 3411	Toner Supply Unit Case (RIC-EU/LA)	1
9	A219 3314	Toner Supply Unit Case (RIC-NA)	1
9	A219 3416	Toner Supply Unit Case (Others)	1
10	A219 3384	Spring Plate	1
11	A184 3411	Chuck Spring	1
12	G020 3334	Slider Ass'y	1
13	G020 3326	Cushion	1
14	A219 3322	Toner Bottle Cover	1
15	A219 3325	Mylar Blade	2
16	A184 3421	Chuck Shaft	1
17	A184 3420	Bottle Chuck	1
18	A219 3381	Roller	1
19	A219 3382	Upper Cover	1
20	A219 3383	Lower Cover	1
21	A219 3319	Sheet - Toner Supply Shutter	1
22	A219 3341	Cushion - Toner Collection Cover	1
23	A219 3385	Sheet - Roller Cover	1

Index No.	Part No.	Description	Q'ty Per Assembly
101	0452 3006B	Tapping Screw - M3x6	

14.IMAGING UNIT - 1 (B009/B019)

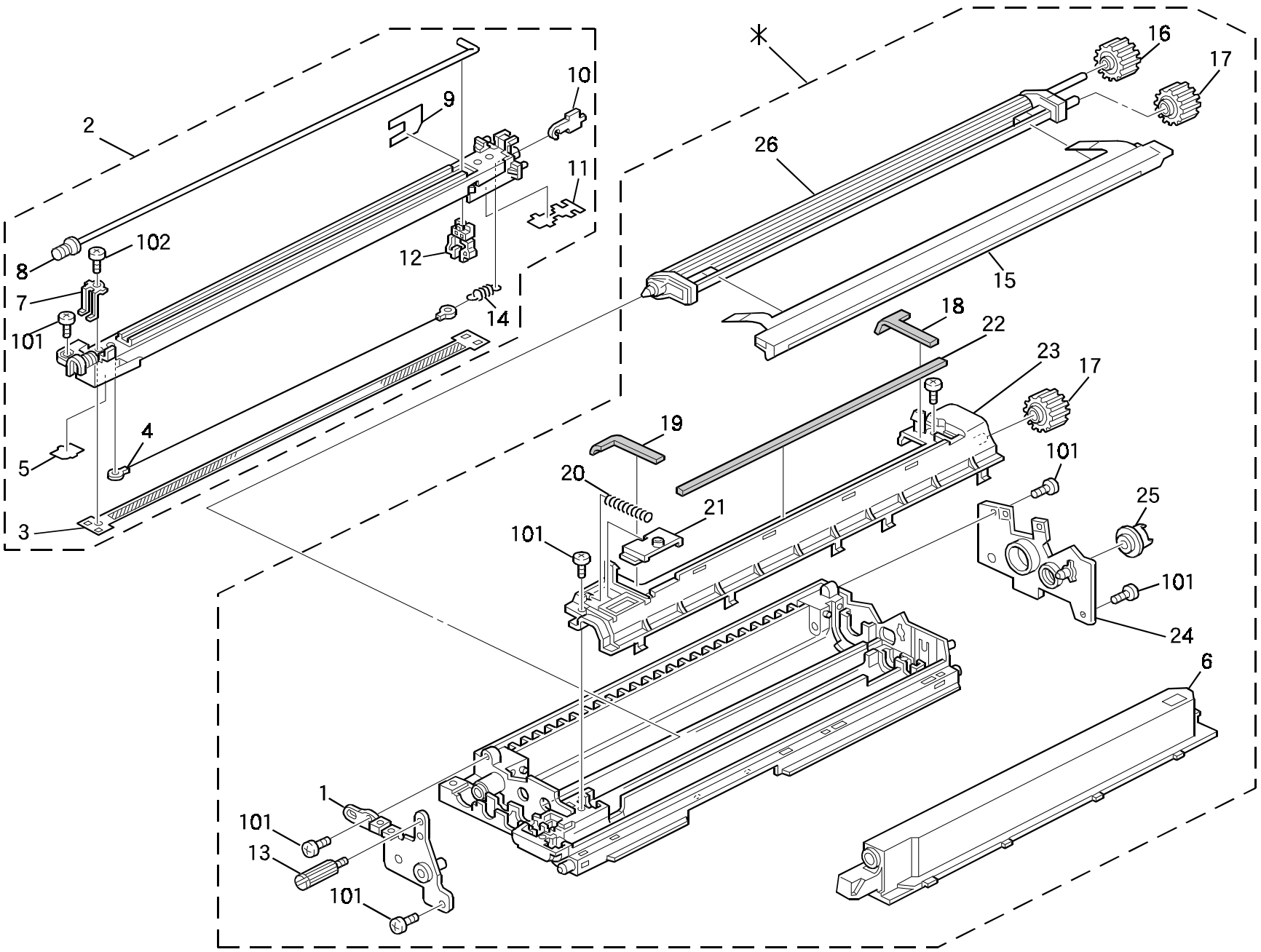

14.IMAGING UNIT - 1 (B009/B019)

Index No.	Part No.	Description	Q'ty Per Assembly
*	A298 2205	Imaging Unit	1
1	A190 2280	Front Side Plate	1
2	A190 2011	Charge Corona Unit	1
3	**A190 2060**	**Charge Corona Grid**	**1**
4	**A190 2065**	**Charge Corona Wire**	**1**
5	A190 2085	Front Endblock Cover	1
6	A219 3132	Development Cover	1
7	A190 2062	Spring Plate - Corona Grid	1
8	A190 2075	Cleaning Shaft	1
9	A190 2116	Rear Endblock Cover	1
10	A190 2105	Corona Wire Terminal	1
11	A190 2086	Rear Shilding Sheet	1
12	**A190 2070**	**Corona Wire Cleaner Ass'y**	**1**
13	A190 2320	Knob Screw	1
14	A184 3863	Corona Wire Spring	1
15	A190 3094	Development Entrance Seal	1
16	A190 3152	Gear - 18Z	1
17	A190 3155	Idle Gear - 17Z	2
18	A190 3166	Rear Seal	1
19	A190 3167	Front Seal	1
20	G020 2327	Pressure Spring	1
21	A190 3171	Imaging Unit Shutter	1
22	A190 3165	Long Seal	1
23	A190 3162	Imaging Unit Upper Case	1
24	A190 2290	Rear Side Plate	1
25	A190 3156	Cam Gear	1
26	A190 3050	Development Roller Ass'y	1

Index No.	Part No.	Description	Q'ty Per Assembly
101	0353 0060B	Philips Pan Head Screw - M3x6	
102	0452 3006B	Tapping Screw - 3x6	

15.IMAGING UNIT - 2 (B009/B019)

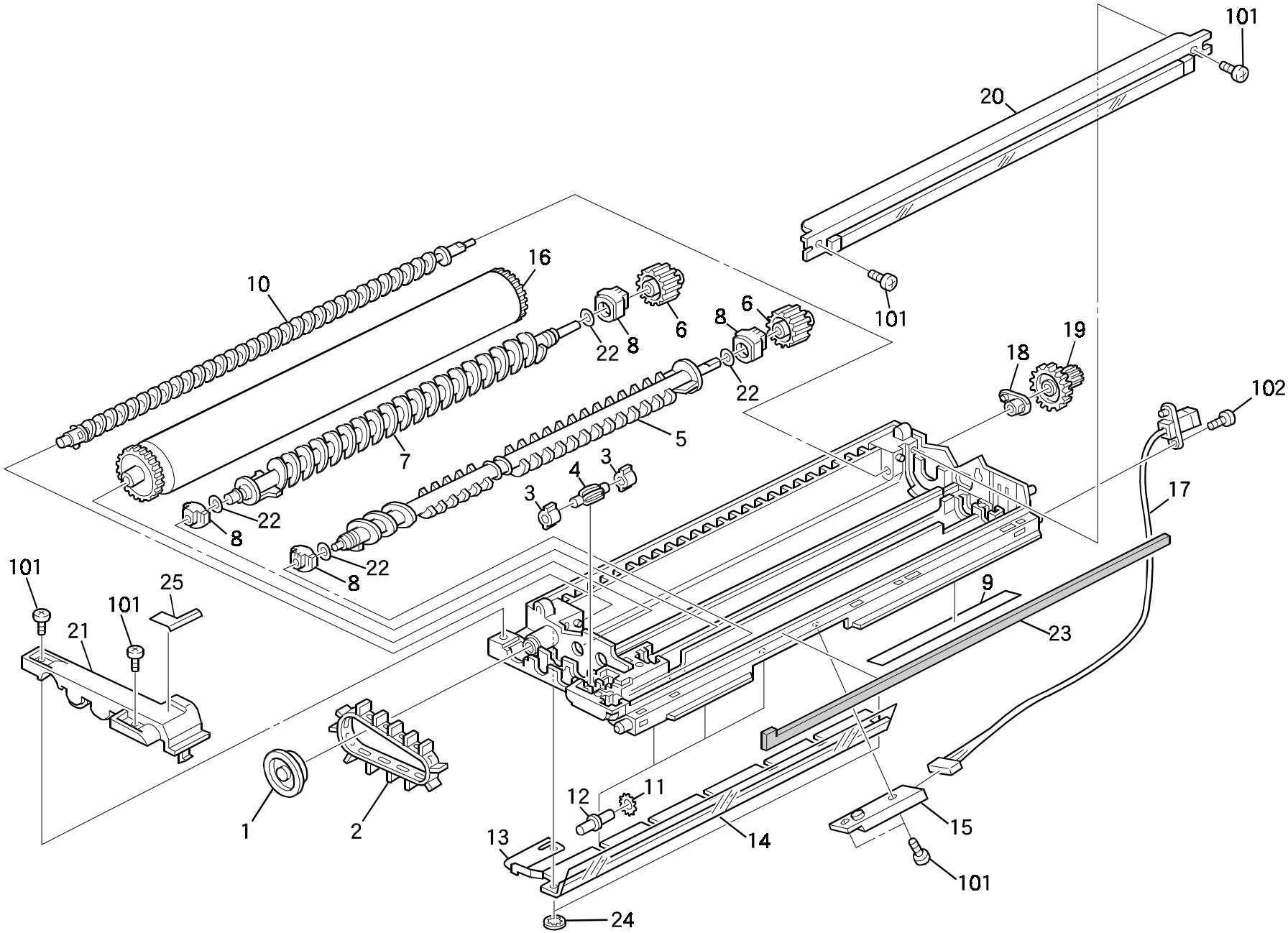

15.IMAGING UNIT - 2 (B009/B019)

Rev. 12/12/2000

Index No.	Part No.	Description	Q'ty Per Assembly
1	A190 3564	Toner Cap	1
2	A184 3611	Toner Recycle Belt	1
3	A190 3569	Bushing Recycle Roller	2
4	A190 3563	Toner Recycle Roller	1
5	A190 3116	2nd Agitator	1
6	A190 3153	Transfer Auger Gear	2
7	A190 3112	1st Agitator	1
8	A190 3125	Busing	4
9	A190 3183	Harness Holder	1
10	A190 3560	Toner Collection Coil	1
11	A048 2276	Ring - Transport Bracket	3
12	G020 2355	Transport Guide Shaft	3
13	G020 3565	Grounding Plate	1
14	A190 3570	Cleaning Entrance Seal	1
15	A184 2455	Toner Density Sensor	1
16	**A219 9510**	**OPC Drum**	**1**
17	A190 5346	Development Unit Harness	1
18	A190 3568	Rear Bushing	1
19	G020 3571	Toner Correction Gear - 14/24Z	1
20	**A190 3550**	**Cleaning Blade**	**1**
21	A190 2330	Toner Recicle Cover	1
22	A190 3128	Seal 6mm	4
23	A190 3192	Lower Seal -3x6x396	1
24	G020 1923	CS Ring - M2.4	2
25	A190 3193	Seal - 5x55	1

Index No.	Part No.	Description	Q'ty Per Assembly
101	0353 0060B	Philips Pan Head Screw - M3x6	
102	0452 3006B	Tapping Screw - 3x6	

16.LOWER OPTICS SECTION (B009/B019)

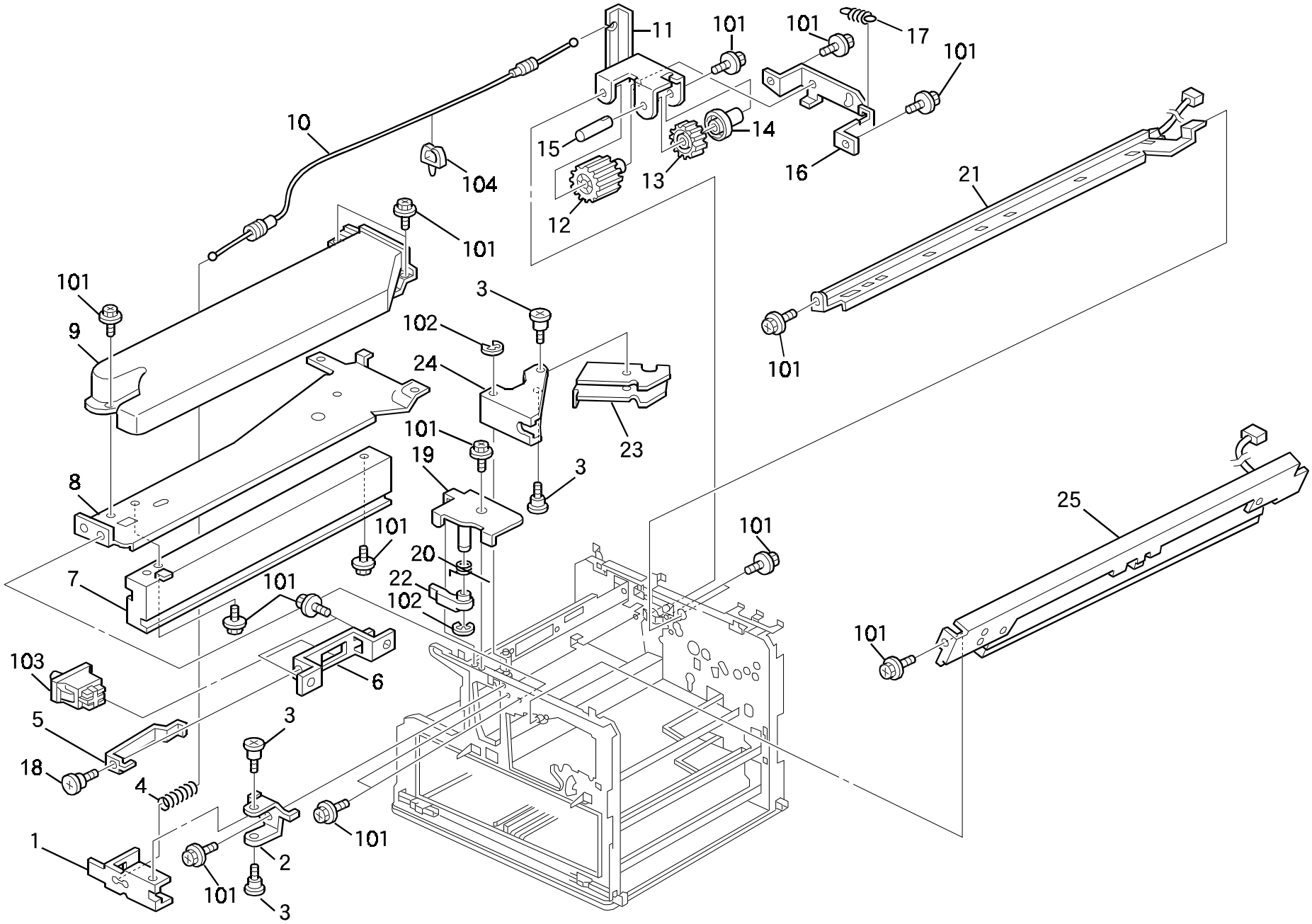

16.LOWER OPTICS SECTION (B009/B019)

Index No.	Part No.	Description	Q'ty Per Assembly
1	A190 1042	Front Lever Bracket	1
2	A190 1041	Front Door Switch Lever	1
3	5206 2684	Shoulder Screw - M3	4
4	AA06 3489	Spring - 45mm	1
5	A190 1164	Safety Switch Lever	1
6	A190 1160	Safety Switch Bracket	1
7	A190 1152	Guide Rail	1
8	A190 1151	Duct Cover	1
9	A190 1153	Duct	1
10	A190 1163	Drive Release Wire	1
11	A190 1131	Drive Gear Joint Bracket	1
12	G020 1157	Gear - 28Z	1
13	A190 1132	Gear - 32Z	1
14	A190 1138	Spacer	1
15	A190 1136	Gear Shaft	1
16	A190 1134	Support Bracket	1
17	A422 1082	Pick-up Spring	1
18	AA14 3716	Stepped Screw	1
19	A190 1342	Front Lever Support Plate	1
20	A190 1345	Release Spring - Front Lever	1
21	A190 2020	Quenching Lamp Unit	1
22	A190 1341	Front Door Lever	1
23	A190 1162	Safety Switch Arm	1
24	A190 1040	Front Safety Switch Arm	1
25	A190 2030	Erase Lamp Unit	1

Index No.	Part No.	Description	Q'ty Per Assembly
101	0451 3006B	Tapping Screw - M3x6	
102	0720 0030E	Retaining Ring - M3	
103	1204 2334	Interlock Switch - Fa1l	
104	1105 0199	Clamp	

17.FUSING UNIT (B009/B019)

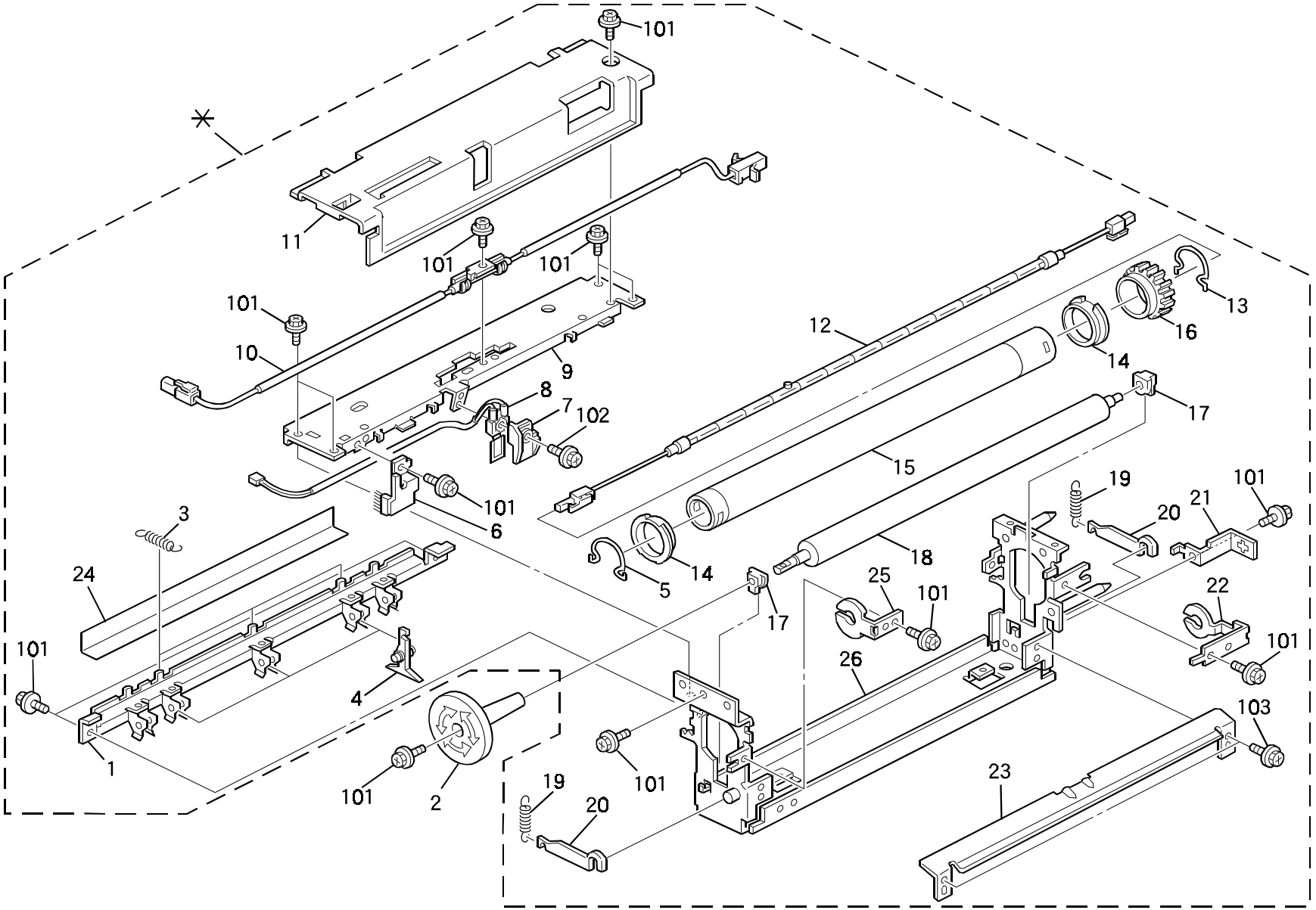

17.FUSING UNIT (B009/B019)

Rev. 11/20/2000

Index No.	Part No.	Description	Q'ty Per Assembly
*	A298 4021	Fusing Unit - 120V	1
*	A298 4022	Fusing Unit - 230V	1
1	A298 4089	Stripper Pawl Bracket	1
2	A190 4053	Fusing Unit Knob	1
3	A190 4092	Stripper Pawl Spring	3
4	**A184 4072**	**Stripper Pawl**	**3**
5	A184 4105	Left Retaining Ring - 31	1
6	A190 4385	Antistatic Brush	1
7	A153 4087	Thermistor Holder	1
8	A190 4119	Thermistor	1
9	A190 4073	Fusing Stay	1
10	A298 4123	Thermofuse - 172°c	1
11	A190 4070	Fusing Unit Cover	1
12	A219 4117	Fusing Lamp - 115V 850W	1
12	A245 4120	Fusing Lamp - 230V 760W	1
13	A184 4081	Right Retaining Ring - 31	1
14	A190 4086	Hot Roller Bushing	2
15	**A298 4081**	**Hot Roller**	**1**
16	G020 4177	Gear - 40Z	1
17	G020 4175	Bushing - Pressure Roller	2
18	**A298 4082**	**Pressure Roller**	**1**
19	A219 4068	Pressure Spring	2
20	A190 4099	Pressure Roller Lever	2
21	A190 4129	Connector Bracket	1
22	A190 4121	Rear Heater Bracket	1
23	A298 4071	Fusing Entrance Guide Plate	1
24	A190 4088	Seal	1
25	A190 4120	Front Heater Bracket	1
26	A190 4076	Fusing Frame	1

Index No.	Part No.	Description	Q'ty Per Assembly
101	0451 3006B	Tapping Screw - M3x6	
102	0954 3012B	Screw - M3X12	
103	0951 3006B	Philips Screw With Flat Washer - M3x6	

18.TRANSFER AND EXIT SECTION (B009/B019)

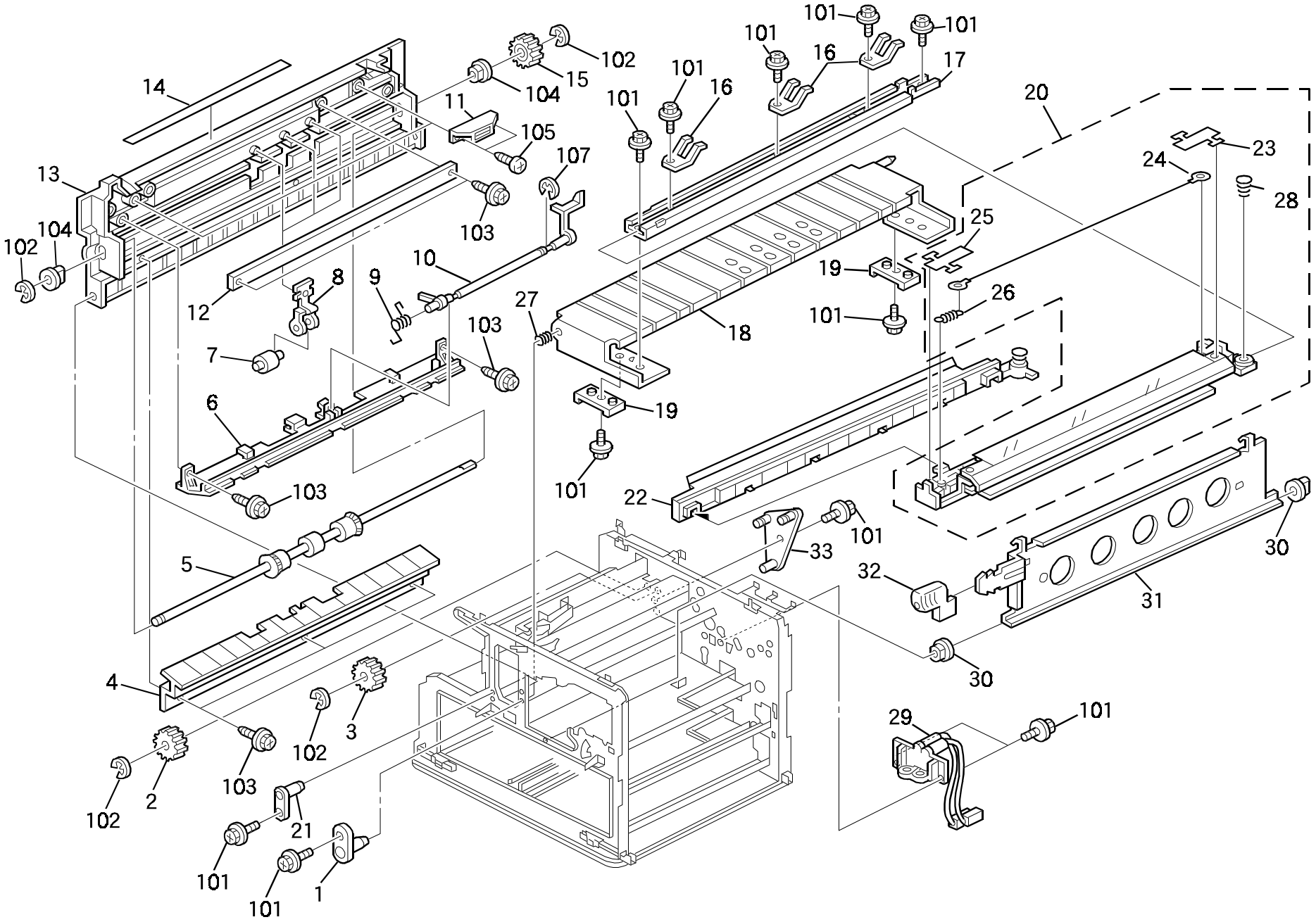

18.TRANSFER AND EXIT SECTION (B009/B019)

Rev. 11/30/2000

Index No.	Part No.	Description	Q'ty Per Assembly
1	A048 3860	Transport Bracket Holder	1
2	A190 4097	Idle Gear - 16Z	1
3	A190 4096	Idle Gear - 18Z	1
4	A190 4470	Lower Guide Plate	1
5	A190 4465	Exit Roller	1
6	A190 4471	Upper Guide Plate	1
7	AF04 0031	Upper Exit Roller	3
8	A190 4474	Exit Roller Holder	3
9	A190 4456	Exit Sensor Feeler Spring	1
10	A190 4455	Exit Sensor Feeler	1
11	A298 4189	Magnetic Catch	1
12	A190 4479	Shielding Plate	1
13	A190 4478	Exit Cover	1
14	A190 4476	Decal - High Temperature	1
15	A190 4463	Exit Roller Gear - 23Z	1
16	A190 3906	Spring Plate	3
17	A190 3905	Transfer Corona Rail	1
18	A190 3900	Transfer Guide	1
19	A190 3903	Transfer Release Guide	2
20	A190 3851	T/S Unit	1
21	A190 1073	Paper Exit Pin Bracket	1
22	A190 3880	Discharg Plate Unit	1
23	A190 3864	Rear End Block Cover	1
24	**A190 3866**	**Tranfer Corona Wire**	**1**
25	A190 3863	Front End Block Cover	1
26	A184 3863	Corona Wire Spring	1
27	AA06 3040	Spring	1
28	AA06 3036	Terminal Spring	1
29	A190 3890	T/S Corona Receptacle	1
30	A190 3914	Bushing	2
31	A190 3911	T/S Position Plate	1
32	G020 3912	Transport Lever	1
33	A190 1085	Exit Rear Bracket	1

Index No.	Part No.	Description	Q'ty Per Assembly
101	0451 3006B	Tapping Screw - M3x6	
102	0720 0040E	Retaining Ring - M4	
103	0413 0082B	Tapping Screw - M3x8	
104	0805 3480	Bushing - 6mm	
105	0452 3008B	Tapping Screw - M3x8	
106	0951 3006B	Philips Screw With Flat Washer - M3x6	
107	0720 0025E	Retaining Ring - M2.5	

19.DRIVE SECTION 1 (B009/B019)

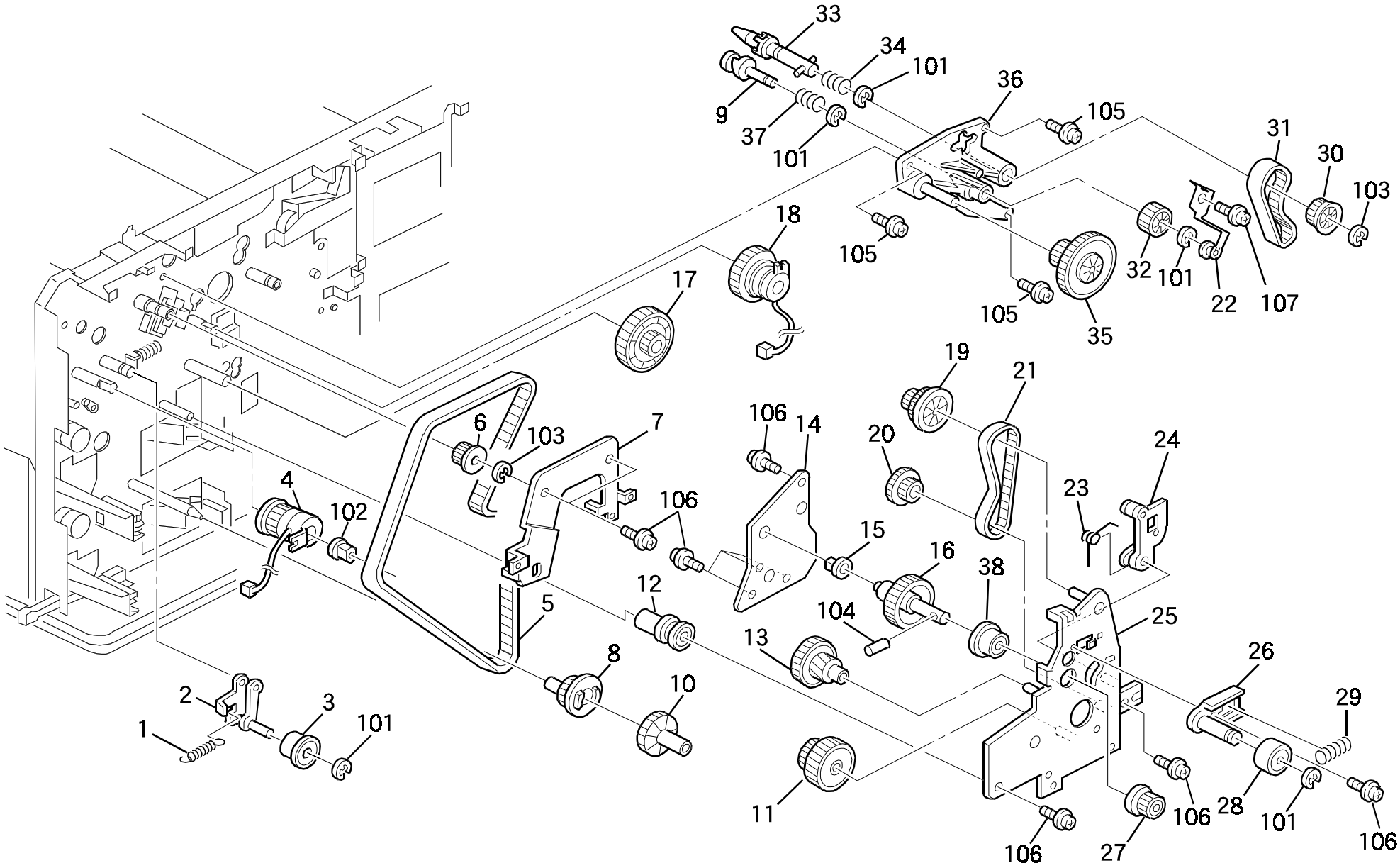

19.DRIVE SECTION 1 (B009/B019)

Rev. 11/29/2000

Index No.	Part No.	Description	Q'ty Per Assembly
1	A190 1145	Release Spring	1
2	A190 1146	Tightner Ass'y	1
3	A190 1149	Tightner Pulley	1
4	G020 1114	By-pass Feed Clutch	1
5	A298 1141	Timing Belt - S3M699	1
6	AB03 0273	Timing Pulley - T20	1
7	A190 1122	Development Drive Bracket	1
8	G020 1148	Pulley - 30T	1
9	A190 1185	Development Drive Shaft	1
10	A219 1169	Gear - 40Z	1
11	G020 1130	Gear - 65Z/24Z	1
12	A190 1144	Tightner Pulley	1
13	G020 1131	Gear - 58Z/35Z	1
14	A190 1117	Support Plate - Drive Unit	1
15	5053 0223	Bushing - 8mm	1
16	G020 1132	Gear - 68Z	1
17	G020 1168	Gear - 52Z/26T	1
18	G020 1115	Registration Clutch	1
19	A190 1182	Gear - 21Z/40Z	1
20	A190 1180	Pulley - 20Z/63Z	1
21	A298 1181	Timing Belt - S3M288	1
22	A190 1198	Development Bias Terminal	1
23	A190 1124	Tightner Spring	1
24	A190 1165	Tightner Bracket	1
25	A190 1112	Drive Bracket	1
26	A190 1125	Tightner Bracket	1
27	G020 1138	Pulley - 24T	1
28	A190 1128	Tightner Pulley	1
29	5446 1205	Release Spring	1
30	G020 1178	Pulley - 51T	1
31	A298 1187	Timing Belt - S2M 158MM	1
32	G020 1177	Gear - 26Z	1
33	A190 1118	Imaging Drive Shaft	1
34	A190 1183	Pressure Spring	1
35	A190 1123	Development Drive Gear	1
36	A298 1171	Imaging Unit Holder	1
37	A190 1174	Pressure Spring	1
38	A298 1153	Bushing - 8x15x5	1
101	0720 0040E	Retaining Ring - M4	
102	0805 3480	Bushing - 6mm	
103	0720 0060E	Retaining Ring - M6	
104	0633 0120E	Spring Pin - M3x12	
105	0451 3012B	Tapping Screw With Washer - M3x12	
106	0451 3006B	Tapping Screw - M3x6	
107	0450 3006B	Tapping Screw - M3x6	

20.DRIVE SECTION 2 (B009/B019)

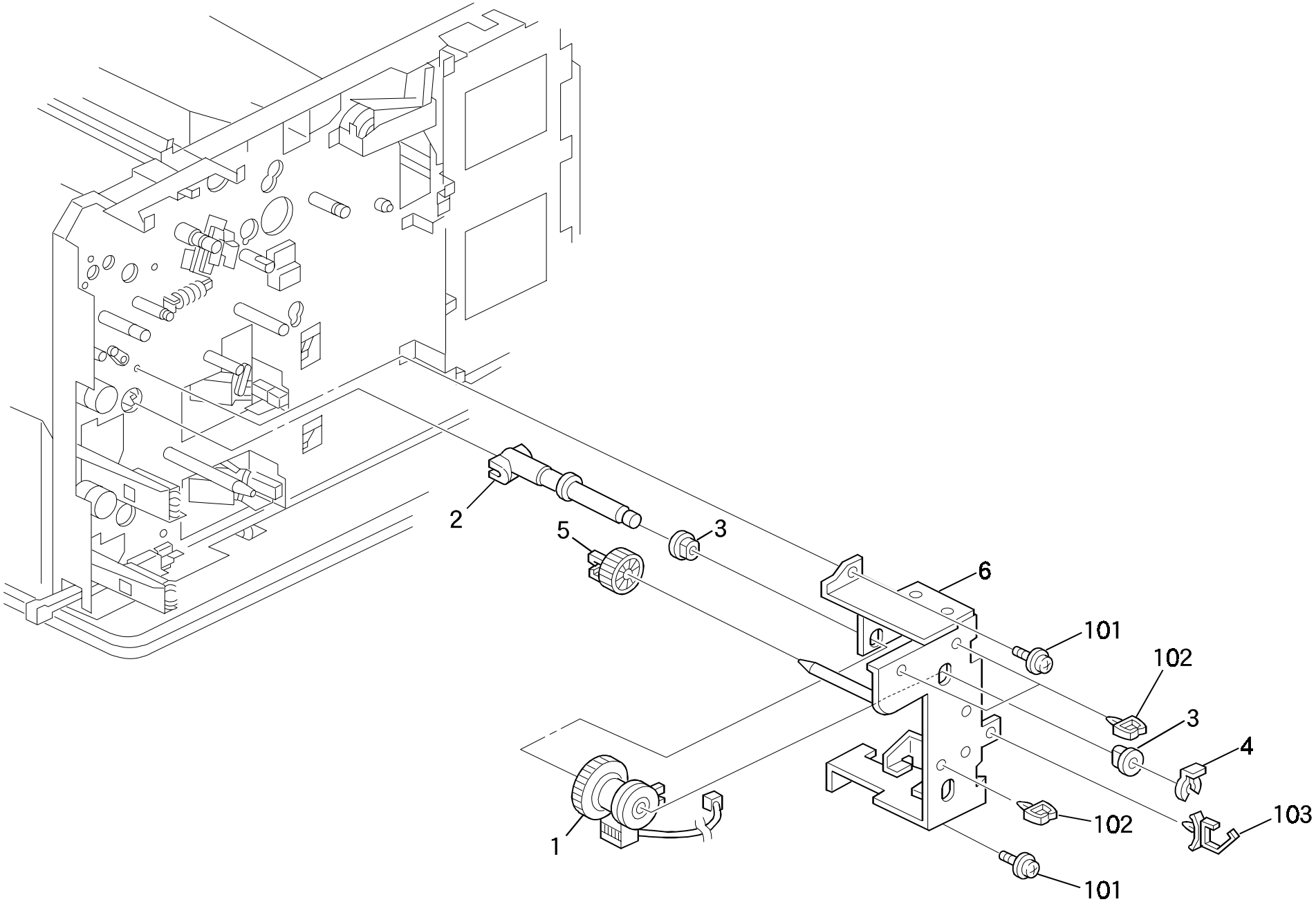

20.DRIVE SECTION 2 (B009/B019)

Index No.	Part No.	Description	Q'ty Per Assembly
1	G020 1112	Paper Feed Clutch	1
2	G020 1145	Shaft - Paper Feed Roller	1
3	AA08 0111	Bushing - 8x12x7	2
4	5447 2681	Snap Ring	1
5	G020 1144	Gear - 27Z	1
6	A219 1176	Paper Feed Drive Bracket	1

Index No.	Part No.	Description	Q'ty Per Assembly
101	0451 3006B	Tapping Screw - M3x6	
102	1105 0199	Clamp	
103	1105 0310	Wire Clamp	

21.ELECTRICAL SECTION 1 (B009/B019)

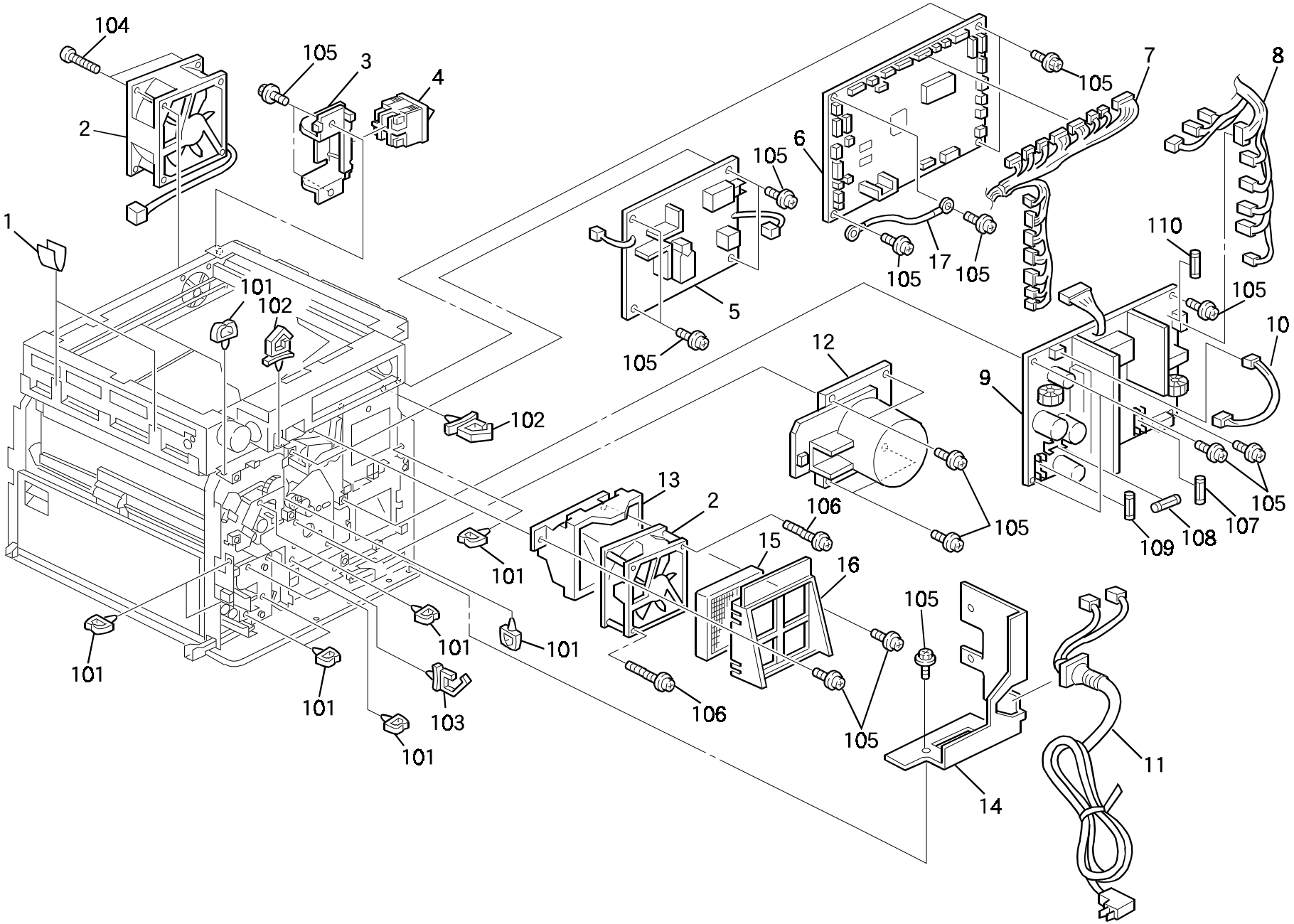

21.ELECTRICAL SECTION 1 (B009/B019)

Rev. 12/12/2000

Index No.	Part No.	Description	Q'ty Per Assembly
1	A190 1195	Right Harness Cover	2
2	A298 5238	Fan Motor - DC 24V 4.32W	2
3	A190 1192	Main Switch Bracket	1
4	A190 5222	Main Switch	1
5	A298 5150	High Voltage Supply Board	1
6	B009 5100	Main Control Board (B009)	1
6	B019 5100	Main Control Board (B019)	1
7	B009 5310	DC Main Harness (B009)	1
7	A298 5310	DC Main Harness (B019)	1
8	A219 5302	AC Main Harness - 120V	1
8	A219 5301	AC Main Harness - 230V	1
9	A298 5551	AC Drive DC Power Supply Board - 120V	1
9	A298 5651	AC Drive DC Power Supply Board - 230V (EU/ASIA)	1
9	A298 5653	AC Drive DC Power Supply Board - 230V (CHN)	1
10	A190 5335	DC Power Harness	1
11	A219 5581	Power Supply Cord - 120V	1
11	A219 5680	Power Supply Cord - 220V China	1
11	A219 5681	Power Supply Cord - 230V (EU)	1
12	A298 1111	DC Motor - 23W	1
13	A190 1155	Duct Bracket	1
14	A219 1190	Power Supply Cord Bracket	1
15	**A298 1157**	**Ozone Filter**	**1**
16	A190 1156	Ozone Filter Cap	1
17	A184 5344	Scanner Grounding Harness	1

Index No.	Part No.	Description	Q'ty Per Assembly
101	1105 0199	Clamp	
102	1105 0413	Harness Clamp	
103	1105 0310	Wire Clamp	
104	0313 0300W	Philips Pan Head Screw - M3x30	
105	0451 3006B	Tapping Screw - M3x6	
106	0450 4030B	Tapping Screw - M4x30	
107	1107 0485	Fuse (Glass Case) 17A 125V	
107	1107 0885	Fuse - 6.3A 250V	
108	1107 0855	Fuse - 8A 125V	
108	1107 0885	Fuse - 6.3A 250V	
109	1107 0872	Fuse - 3.15A 125V	
109	1107 0883	Fuse - 3.15A 250V	
110	1107 0868	Fuse - 5A 125V	
110	1107 0883	Fuse - 3.15A 250V	

22.ELECTRICAL SECTION 2 (A298)

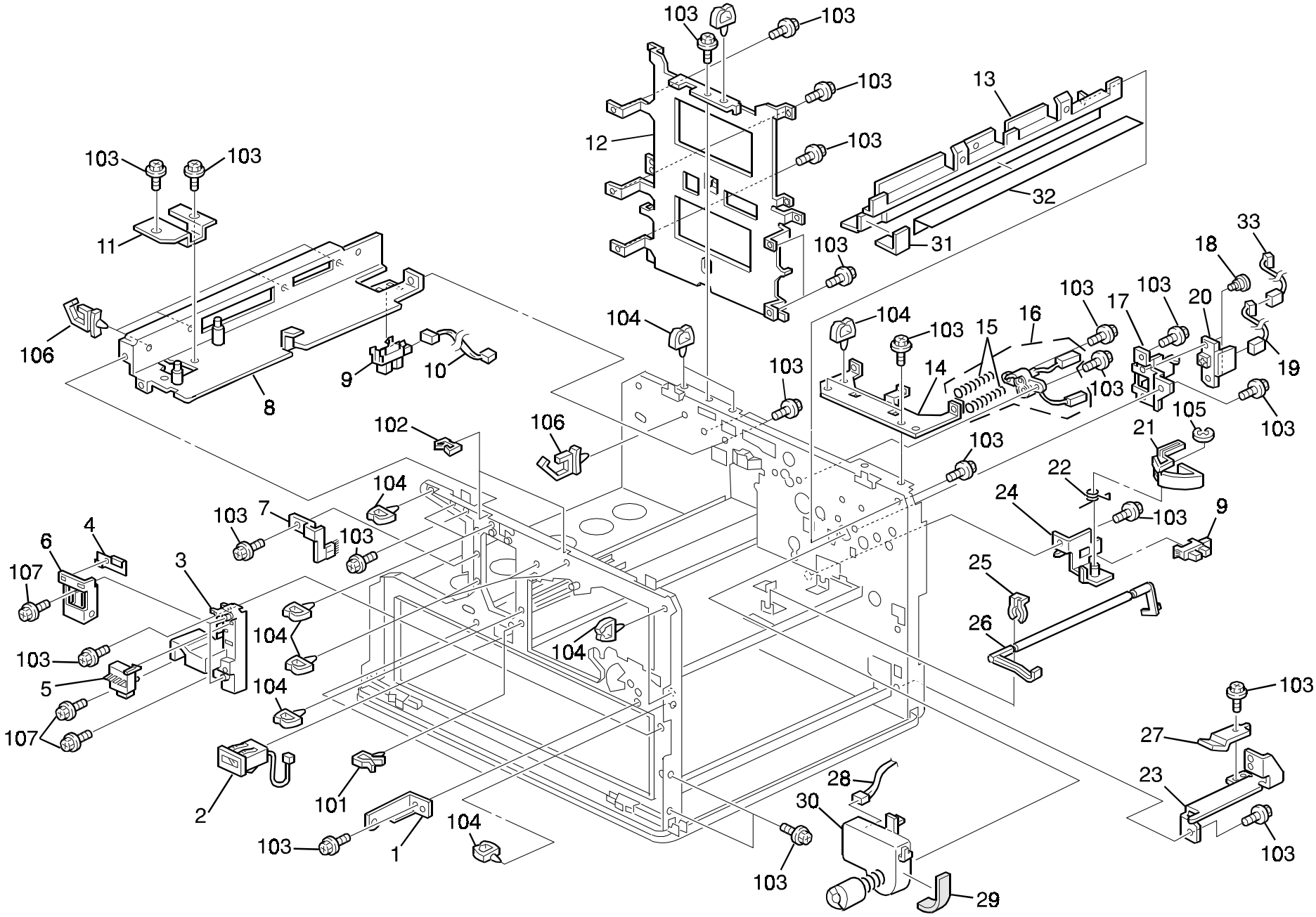

22.ELECTRICAL SECTION 2 (A298)

Rev. 08/09/2001

Index No.	Part No.	Description	Q'ty Per Assembly
1	A190 1286	Front Cover Hing Bracket	1
2	A271 1366	Total Counter	1
3	A219 2711	Paper Size Switch Bracket	1
4	A190 2684	Guard - Paper Tray Stopper	1
5	A190 2620	Push Switch - Paper Size	1
6	A219 2712	Paper Tray Stopper	1
7	A190 4484	Antistatic Brush	1
8	A190 1045	Safety Switch Stay	1
9	AW02 0086	Photointerruptor	2
10	A190 5345	Exit Sensor Harness	1
11	A190 1048	Fusing Lever Cover	1
12	A190 1186	Main Board Bracket	1
13	A190 1191	By-pass Feed Cover	1
14	A190 1187	High Voltage Supply Board Bracket	1
15	AA06 3249	Grid Terminal Spring	2
16	A190 2040	Transfer Corona Wire Receptacle	1
17	A190 1193	Connector Bracket	1
18	G020 5829	Shoulder Screw - M3x2.5	2
19	A190 5335	DC Power Harness	1
20	A190 5145	Development Relay Board	1
21	G020 2622	Release Arm - Paper End Feeler	1
22	G020 2626	Release Spring - Paper End Feeler	1
23	A299 2530	Tray Stopper Bracket	1
24	G020 2580	Paper End Sensor Bracket	1
25	5447 2681	Snap Ring	1
26	G020 2581	Paper End Feeler	1
27	A299 2531	Plate Spring - Tray Stopper	1
28	A219 5319	Toner Motor Harness	1
29	A219 3373	Seal - 2x15x95	1
30	A298 3381	DC Motor - 3.36W	1
31	A190 1197	Front Seal - By-pass Feed	1
32	A190 1196	Upper Seal - By-pass Feed	1
33	A190 5347	Relay Harness - Development	1
34	A298 3388	Worm Gear	1

Index No.	Part No.	Description	Q'ty Per Assembly
101	1105 0290	Harness Clamp - Horizontal	
102	1105 0329	Clamp - ES-0510	
103	0451 3006B	Tapping Screw - M3x6	
104	1105 0199	Clamp	
105	0720 0030E	Retaining Ring - M3	
106	1105 0413	Harness Clamp	
107	0450 3008B	Tapping Screw - M3x8	

23.FRAME SECTION (B009/B019)

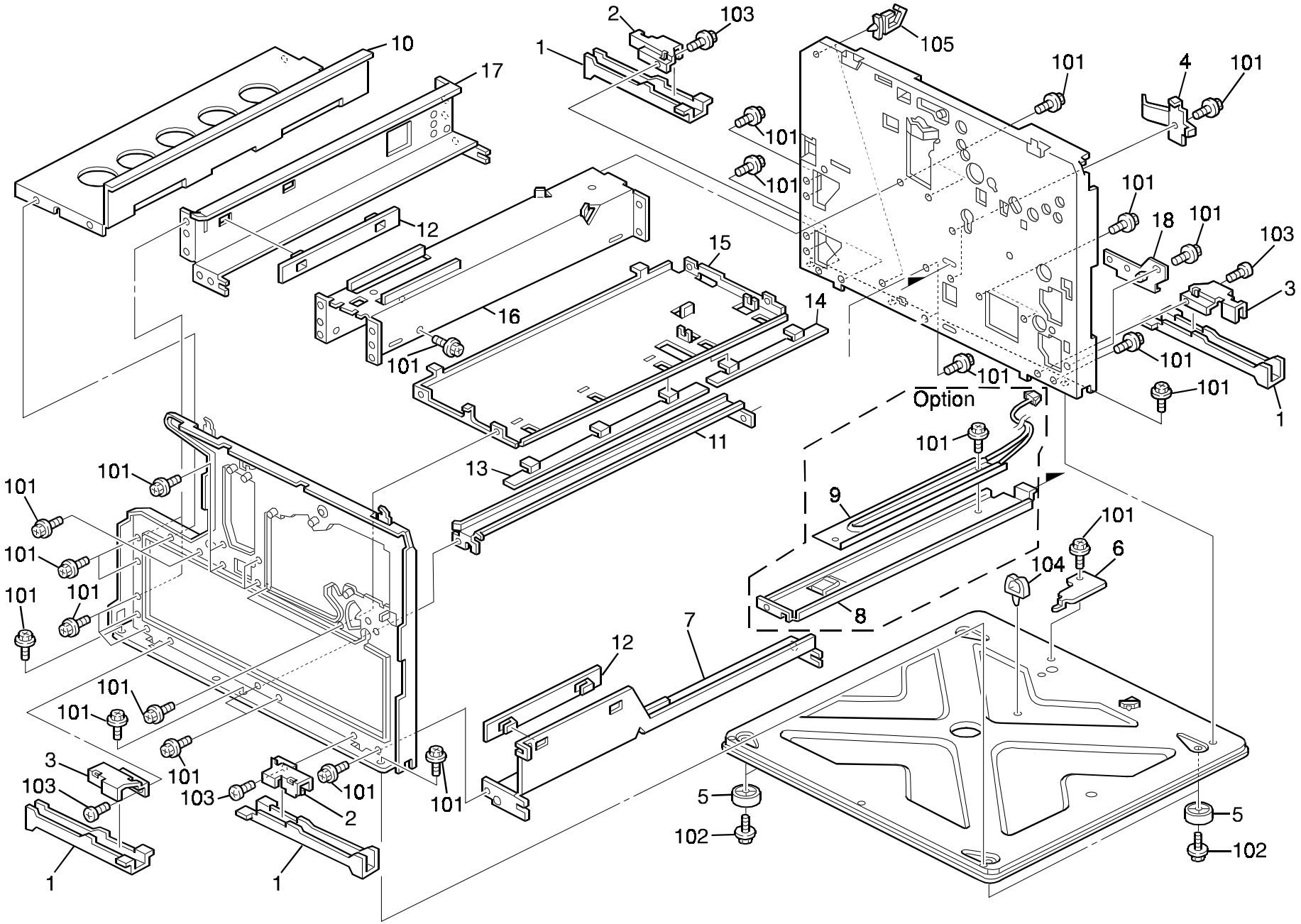

23.FRAME SECTION (B009/B019)

Index No.	Part No.	Description	Q'ty Per Assembly
1	A298 1071	Left Grip Plate	4
2	A190 1084	Front Right Grip Bracket	2
3	A134 1072	Right Bracket - Grip Plate	2
4	G020 2643	Front Grounding Plate - Paper Tray	1
5	G020 1052	Stand	4
6	A190 1076	Base Cover	1
7	G020 2650	Right Guide - Paper Tray	1
8	A190 2825	Heater Bracket	1
9	AX40 0063	Anticondensation Heater - 120V 9W (Option)	1
9	AX40 0064	Anticondensation Heater - 230V 9W (Option)	1
10	A298 1080	Exit Stay	1
11	G020 2652	Middle Rail - Paper Tray	2
12	G020 2678	Guide Plate - Paper Tray	2
13	G020 2655	Upper Front Guide - Paper Tray	2
14	G020 2654	Upper Rear Guide - Paper Tray	2
15	G020 1078	Right Sielding Plate	1
16	A298 1072	Fusing Unit Guide	1
17	A219 2701	Left Rail - Paper Tray	1
18	A219 2702	Rail Bracket	1

Index No.	Part No.	Description	Q'ty Per Assembly
101	0451 3006B	Tapping Screw - M3x6	
102	0451 3010B	Tapping Screw - M3x10	
103	0434 0060B	Pan Head Self-tapping Screw - M4x6	
104	1105 0199	Clamp	
105	1105 0310	Wire Clamp	

24.MAIN CONTROL BOARD (B009/B019)

CAPACITOR

SYMBOL NO.	INDEX NO.
C101	169
C102	177
C103	174
C104	170
C105	-
C106	171
C107	169
C108	171
C109	174
C110	177

SYMBOL NO.	INDEX NO.
C111	174
C112	174
C113	176
C114	174
C115	176
C116	177
C117	174
C118	176
C119	174
C120	-

SYMBOL NO.	INDEX NO.
C121	174
C122	177
C123	178
C124	176
C125	176
C126	174
C127	173
C128	174
C129	177
C130	176

SYMBOL NO.	INDEX NO.
C131	174
C132	174
C133	176
C134	176
C135	174
C136	173
C137	177
C138	174
C139	175
C140	176

SYMBOL NO.	INDEX NO.
C141	174
C142	175
C143	174
C144	176
C145	174
C146	176
C147	176
C148	174
C149	176
C150	174

SYMBOL NO.	INDEX NO.
C151	176
C152	175
C153	175
C154	176
C155	176
C156	174
C157	176
C158	176
C159	176
C160	174

SYMBOL NO.	INDEX NO.
C161	174
C162	176
C163	176
C164	174
C165	174
C170	176

CONNECTOR

SYMBOL NO.	INDEX NO.
CN100	115
CN101	108
CN102	107
CN103	118
CN104	105
CN105	105
CN106	111
CN107	112
CN108	102
CN109	106

SYMBOL NO.	INDEX NO.
CN110	-
CN111	105
CN112	111
CN113	112
CN114	106
CN115	103
CN116	102
CN117	104
CN118	109
CN119	110

SYMBOL NO.	INDEX NO.
CN120	103
CN121	102
CN122	-
CN123	104
CN124	114
CN125	113
CN126	102
CN127	103
CN128	116
CN129	-

SYMBOL NO.	INDEX NO.
CN130	119
CN131	117

DIODE

SYMBOL NO.	INDEX NO.
D101	130
D102	-
D103	130
D104	130
D105	130
D106	130
D107	131
D108	131
D109	131
D110	131

SYMBOL NO.	INDEX NO.
D111	130
D112	130
D113	130
D114	130
D115	128
D116	128

IC

SYMBOL NO.	INDEX NO.
IC101	133
IC102	133
IC103	140
IC104	140
IC105	138
IC106	132
IC107	-
IC108	142
IC109	134
IC110	135

24.MAIN CONTROL BOARD (B009/B019)

IC

SYMBOL NO.	INDEX NO.
IC111	140
IC112	139
(Socket)	120
IC113	143
IC114	137
IC115	132
IC116	138
IC117	5
	172
(Socket)	121

SYMBOL NO.	INDEX NO.
IC118	2
IC119	136
IC120	141

JP

SYMBOL NO.	INDEX NO.
JP101	101
JP102	-
JP103	-
JP104	101
JP105	101

L

SYMBOL NO.	INDEX NO.
L101	147

OSC

SYMBOL NO.	INDEX NO.
OSC101	144

Q

SYMBOL NO.	INDEX NO.
Q101	124
Q102	124
Q103	123
Q104	123
Q105	123
Q106	123
Q107	123
Q108	123
Q109	123
Q110	123

SYMBOL NO.	INDEX NO.
Q111	122
Q112	122
Q113	-
Q114	123
Q115	-
Q116	125

RESISTOR

SYMBOL NO.	INDEX NO.
R101	3
R102	156
R103	156
R104	149
R105	-
R106	148
R107	153
R108	163
R109	166
R110	156

RESISTOR

SYMBOL NO.	INDEX NO.
R111	156
R112	156
R113	156
R114	145
R115	154
R116	154
R117	154
R118	154
R119	145
R120	162

SYMBOL NO.	INDEX NO.
R121	164
R122	156
R123	156
R124	156
R125	156
R126	156
R127	-
R128	149
R129	1
R130	156

SYMBOL NO.	INDEX NO.
R131	156
R132	156
R133	149
R134	156
R135	156
R136	-
R137	157
R138	156
R139	154
R140	150

SYMBOL NO.	INDEX NO.
R141	167
R142	156
R143	156
R144	156
R145	156
R146	149
R147	158
R148	156
R149	156
R150	156

SYMBOL NO.	INDEX NO.
R151	156
R152	154
R153	154
R154	154
R155	154
R156	154
R157	154
R158	154
R159	154
R160	154

SYMBOL NO.	INDEX NO.
R161	154
R162	154
R163	156
R164	149
R165	149
R166	157
R167	156
R168	162
R169	156
R170	149

SYMBOL NO.	INDEX NO.
R171	162
R172	152
R173	154
R174	154
R175	151
R176	154
R177	156
R178	154
R179	154
R180	154

RESISTOR

SYMBOL NO.	INDEX NO.
R181	154
R182	150
R183	150
R184	150
R185	150
R186	154
R187	149
R188	149
R189	154
R190	149

SYMBOL NO.	INDEX NO.
R191	149
R192	154
R193	149
R194	149
R195	154
R196	149
R197	149
R198	154
R199	149
R200	149

SYMBOL NO.	INDEX NO.
R201	154
R202	149
R203	149
R204	154
R205	149
R206	149
R207	154
R208	149
R209	149
R210	154

SYMBOL NO.	INDEX NO.
R211	149
R212	153
R213	154
R214	149
R215	153
R216	156
R217	156
R218	156
R219	156
R220	156

SYMBOL NO.	INDEX NO.
R221	156
R222	156
R223	149
R224	149
R225	159
R226	150
R227	165
R228	168
R229	150
R230	156

SYMBOL NO	INDEX NO.
R231	156
R232	149
R233	156
R234	149
R235	156
R236	156
R237	154
R238	150
R239	155
R240	156

SYMBOL NO.	INDEX NO.
R241	156
R242	156
R243	159
R244	-
R245	-
R246	149
R247	156
R248	-
R249	156
R250	147

RESISTOR

SYMBOL NO.	INDEX NO.
R251	147
R252	147
R253	147
R254	147
R255	147
R256	147
R257	147
R258	-
R259	147
R260	147

SYMBOL NO.	INDEX NO.
R261	147
R262	147
R263	147
R264	147
R265	147
R266	147
R267	147
R268	147
R269	147
R270	147

SYMBOL NO.	INDEX NO.
R271	147
R272	147
R273	147
R274	147
R275	147
R276	147
R277	-
R278	147
R279	147
R280	147

SYMBOL NO.	INDEX NO.
R281	147
R282	147
R283	147
R284	147
R285	147
R286	147
R287	147
R288	147
R289	-
R290	147

SYMBOL NO.	INDEX NO.
R291	147
R292	160
R293	160
R294	160
R295	160
R296	160
R297	156
R298	156
R299	156
R300	156

SYMBOL NO.	INDEX NO.
R301	-
R302	147
R303	147
R304	147
R305	147
R306	147
R307	147
R308	147
R309	147
R310	147

SYMBOL NO.	INDEX NO.
R311	147
R312	147
R313	147
R314	147
R315	147
R316	-
R317	147
R318	147
R319	147
R320	147

24.MAIN CONTROL BOARD (B009/B019)

RESISTOR

SYMBOL NO.	INDEX NO.
R321	147
R322	147
R323	147
R324	147
R325	147
R326	147
R327	147
R328	147
R329	161
R330	161

SYMBOL NO.	INDEX NO.
R331	161
R332	161
R333	147
R334	147
R335	147
R336	147
R337	147

VR

SYMBOL NO.	INDEX NO.
VR101	146

ZD

SYMBOL NO.	INDEX NO.
ZD101	127
ZD102	129
ZD103	127
ZD104	126

24.MAIN CONTROL BOARD (B009/B019)

Rev. 07/17/2000

Index No.	Part No.	Description	Q'ty Per Assembly
*	B009 5100	Main Control Board (B009)	1
*	B019 5100	Main Control Board (B019)	1
1	A077 5717	Resistor - 1K Ω ±5% 1W	
2	A184 5105	IC - RF5A93	
3	A190 5107	Resistor - 180Ω ±5% 3W	
4	A190 5108	Heat Sink - M-SIP-7	
5	B019 5104	IC - UVEPROM 1M X8 120NS	

Index No.	Part No.	Description	Q'ty Per Assembly
101	1002 0307	Jumper Wire	
102	1102 4201	Connector - 2P	
103	1102 4202	Connector - 3P	
104	1102 4204	CT Header - 5P	
105	1102 4205	CT Header - 6P	
106	1102 4206	Connector - 7P	
107	1102 4207	Connector - 8P	
108	1102 4208	Connector - 9P	
109	1102 4209	CT Header - 10P	
110	1102 4211	CT Header - 12P	
111	1102 4619	Connector - 2P	
112	1102 4631	CT Connector - 2P	
113	1102 4634	CT Connector - 5P	
114	1102 4646	Connector - 5P	
115	1102 5303	Connector - 4P	
116	1103 1770	Connector - 4P	
117	1103 1771	Connector - 5P	
118	1103 1772	Pin Header - 6p	
119	1103 1778	Pin Header - 12P	
120	1104 0511	IC Socket - 8P - DICF-8CS-E	
121	1104 0589	Dip Socket - 32P	
122	1400 0072	Transistor - 2SC372Y	
123	1400 0291	Transistor - 2SA1020Y	
124	1400 0652	Transistor - 2SA1287	
125	1400 0733	Transistor - 2SD1866	
126	1401 0694	Zener Diode - RD6.8FB	
127	1402 0277	Zener Diode - 1Z12	
128	1402 1050	Silicon Diode - 100V 1A	
129	1402 1125	Zener Diode - 1W - RD33FB2	
130	1402 1160	Diode - S5688	
131	1402 1310	Diode - D1NL20	
132	1407 1535	IC - TD62308AP	
133	1407 2187	TTLIC - SN74LS07NS	
134	1407 2836	IC - HD74C14FP	

Index No.	Part No.	Description	Q'ty Per Assembly
135	1407 3764	IC - TC7SU04F	
136	1407 3857	Transistor - Array - TD62381F	
137	1407 4315	IC - TE7751	
138	1407 4672	TTL - HD74LS368FP	
139	1407 5072	EEPROM M93C66-BN6	
140	1408 0150	IC - ULN2003AN	
141	1408 0595	IC - NJM2904M	
142	1408 0611	IC - 3771	
143	1408 1228	IC - MTD1120	
144	1503 0563	Oscillator - 9.83MHZ040	
145	1601 5295	Resistor - 0.47Ω ±2% 1W	
146	1601 8157	Variable Resistor - 100K Ω	
147	1607 1159	Filter - BGH2012B102L	
148	1630 3101	Resistor - 100Ω - 1/10W	
149	1630 3102	Resistor - 1KΩ 1/10W ±5%	
150	1630 3103	Resistor - 10KΩ 1/10W ±5%	
151	1630 3105	Resistor - 1M Ω ±5% 1/10W	
152	1630 3204	Resistor - 200K Ω 1/10W ±5%	
153	1630 3222	Resistor - 2.2KΩ 1/10W ±5%	
154	1630 3223	Resistor - 22kΩ - 1/10W	
155	1630 3393	Resistor - 39K Ω 1/10W	
156	1630 3472	Resistor - 4.7KΩ 1/10W ±5%	
157	1630 3512	Resistor - 5.10KΩ - 1/10W	
158	1630 3751	Resistor - 750Ω±5% 1/10W	
159	1630 3752	Resistor - 7.5K Ω ±5% 1/10W	
160	1632 0000	Resistor - 0 Ω 1/8W	
161	1633 0000	Resistor - 0 Ω 1/10W	
162	1633 1001	Resistor - 1K Ω ±1% 1/10W	
163	1633 1002	Resistor - 10K Ω ±1% 1/10W	
164	1633 1050	Resistor - 105 Ω ±1% 1/10W	
165	1633 2150	Resistor - 215Ω ±1% 1/10W	
166	1633 3901	Resistor - 3.9 Ω ±1% 1/10W	
167	1633 7870	Resistor - 787 Ω ±1% 1/10W	
168	1633 9319	Resistor - 93.1 Ω ±1% 1/10W	

Index No.	Part No.	Description	Q'ty Per Assembly
169	1640 5100	Capacitor - 10µF+20% 50	
170	1640 5109	Capacitor - 1µF- ±20% - 50V	
171	1640 5470	Capacitor - 47µF±20% 50V	
172	1407 5311	OTPROM-M27C1001-12B1(K)	
173	1660 3101	Capacitor - 100pF 50V	
174	1660 3471	Capacitor - 470pF 50V	
175	1660 5332	Capacitor - 3300pF ±10% 50V	
176	1660 7103	Capacitor - 10000pF 50V	
177	1660 7104	Capacitor - 100000pF 50V	
178	1660 7473	Capacitor - 47000pF +80% -20% 50V	

25.DECAL AND DOCUMENT (B009/B019)

1

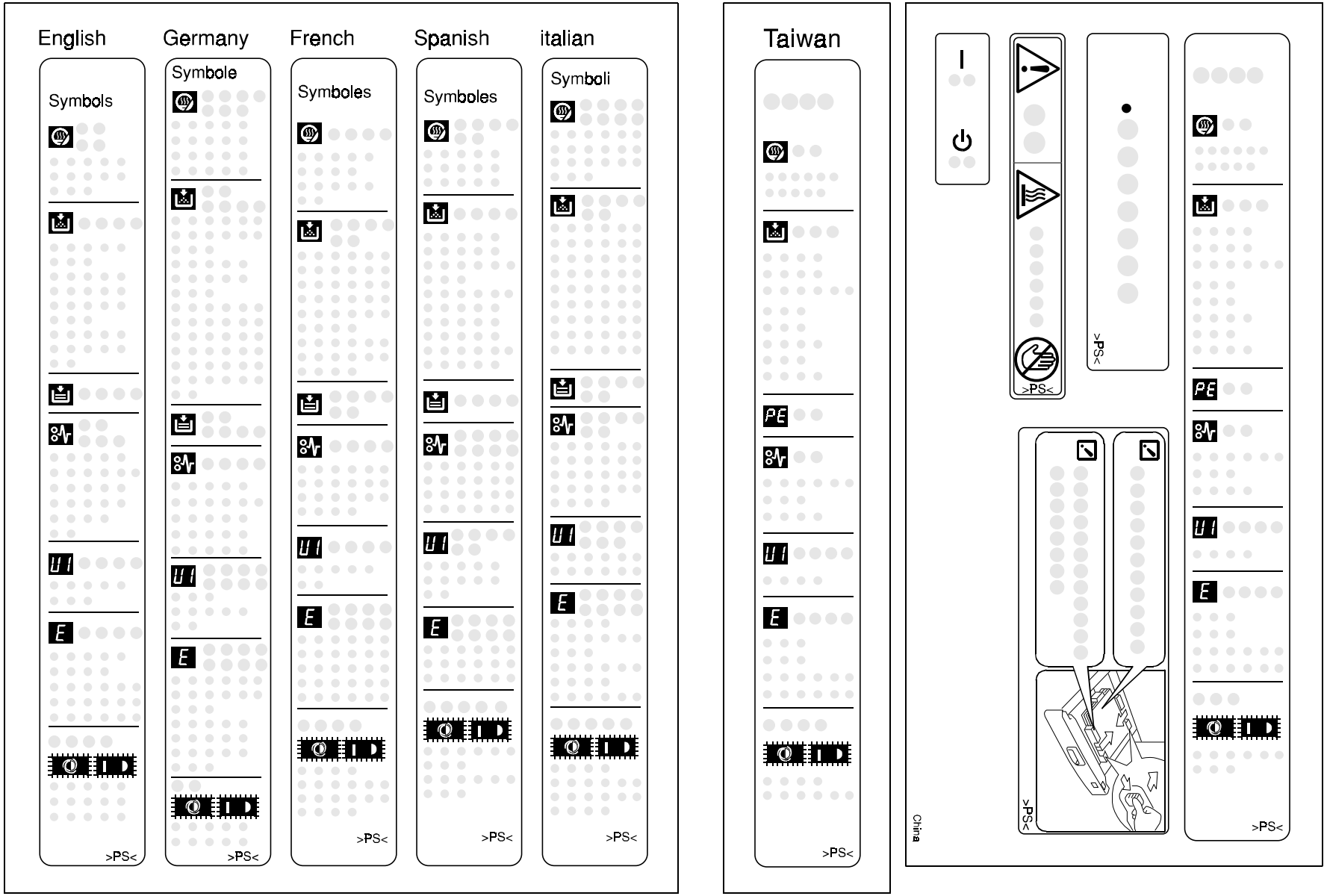

2

3



4

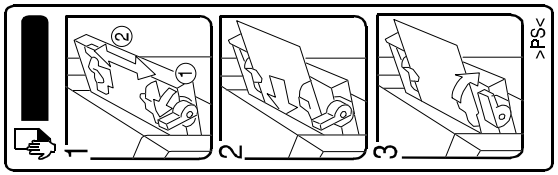

5

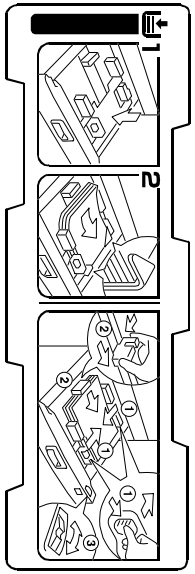

6

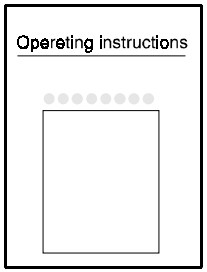

7

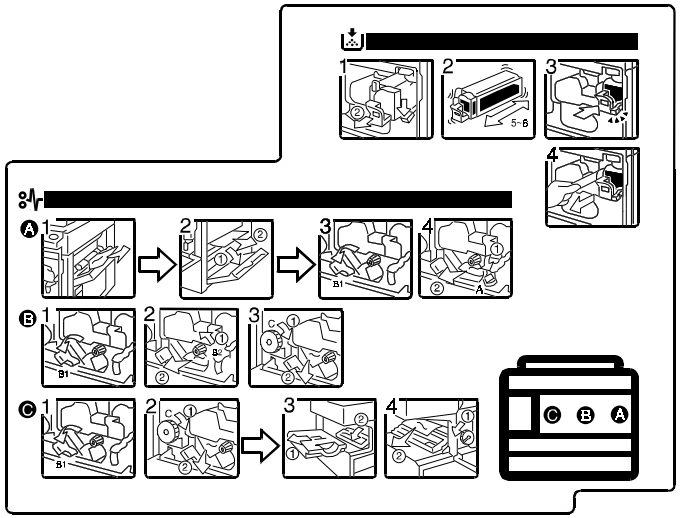

8

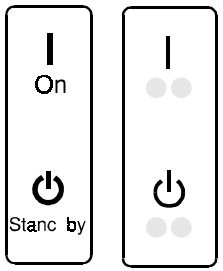

9

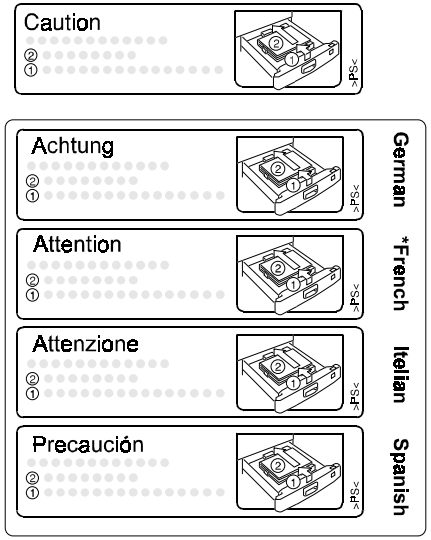

10

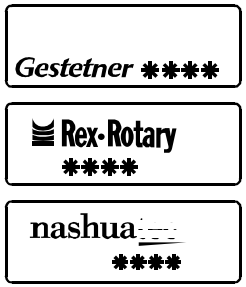

11



12

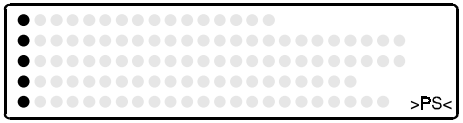

13



14

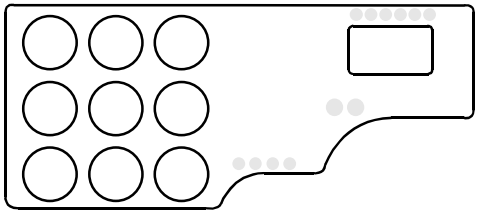

15

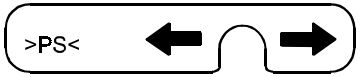

25.DECAL AND DOCUMENT (B009/B019)

Index No.	Part No.	Description	Q'ty Per Assembly
1	A298 1380	Decal - Symbol Explanation (EU/LA)	1
1	A298 1386	Decal - Symbol Explanation (TWN)	1
1	A298 1389	Decal - Symbol Explanation (CHN)	1
1	b019 1381	Decal - Symbol Explanation (NA/ASIA)	1
2	A153 1285	Emblem (RIC)	1
3	A190 4476	Decal - High Temperature	1
4	A190 2708	Decal - By-pass Feed	1
5	G020 2668	Decal - Paper Set	1
6	B009 8605	Operating Instructions - Russian	1
6	B019 8606	Operating Instructions - Chinese (RIC)	1
6	B019 8608	Operating Instructions - English AA (RIC)	1
6	B019 8609	Operating Instructions - Taiwanese (RIC)	1
6	B019 8660	Operating Instructions - English A4 (INF)	1
6	B019 8661	Operating Instructions - German (INF)	1
6	B019 8662	Operating Instructions - French (INF)	1
6	B019 8663	Operating Instructions - Italian (INF)	1
6	B019 8664	Operating Instructions - Spanish (INF)	1
6	B019 8690	Operating Instructions - English A4 (NRG)	1
6	B019 8696	Operating Instructions - Chinese (NRG)	1
6	B019 8699	Operating Instructions - Taiwanese (NRG)	1
6	B019 8695	Operating Instructions - English LT (SVN)	1
6	B019 8607	Operating Instructions - English (RIC)	1
7	A219 1284	Operating Sheet	1
8	A219 1265	Decal - Main Switch	1
8	A219 1266	Decal - Main Switch -TWN	1
9	A245 2693	Decal - Paper Set Operation	1
9	A245 2694	Decal - Paper Set Operation (4 Language)	1
10	B009 6184	Model Name Plate - NSA (B009)	1
10	B009 6186	Model Name Plate - REX (B009)	1
10	B009 6182	Model Name Plate - GES (B009)	1
10	B019 6184	Model Name Plate - NSA (B019)	1
10	B019 6186	Model Name Plate - REX (B019)	1
10	B019 6182	Model Name Plate - GES (B019)	1
10	A219 6187	Model Name Plate - GER	1
11	C225 2867	Decal - Cover - Panel (NSA)	1
11	C225 2866	Decal - Key-top Cover (REX)	1
11	A153 6409	Decal - Keytop Cover (GES)	1
12	A219 2696	Decal - Paper Size Selection	1
13	AA00 1383	Decal - Energy Star	1
14	A219 1388	Sheet - Operate - Keytop - CHN	1
14	A219 1387	Sheet - Operate - Keytop - TWN	1
15	A219 2696	Decal - Size Selection	1

26.SPECIAL TOOLS (B009/B019)

Rev. 10/30/2000

1 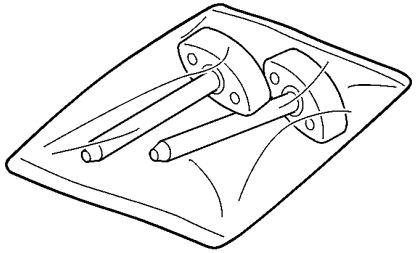	2 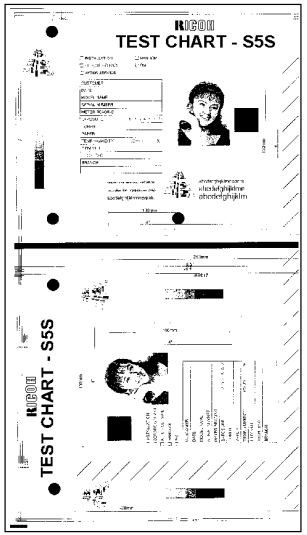	3 	4 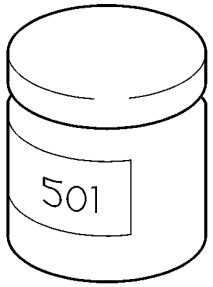
5 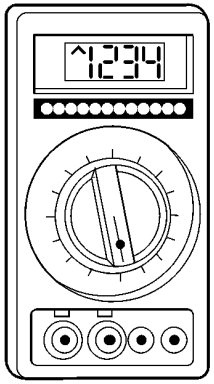	6 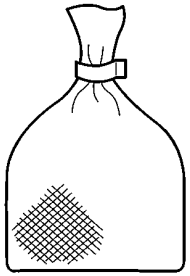	7,8 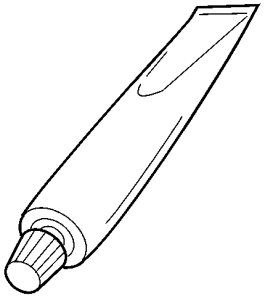	

26.SPECIAL TOOLS (B009/B019)

Rev. 10/30/2000

Index No.	Part No.	Description	Q'ty Per Assembly
1	A184 9501	Optics Adjustment Tool	1
2	A292 9500	Test Chart S5S (10pcs/set)	1
3	5442 9103	Launa Oil 40	1
4	5203 9501	Silicone Grease G-510	1
5	A029 9387	Digital Multimeter	1
6	5442 9101	Setting Powder	1
7	A257 9300	Grease Barrierta - S552R	1
8	A190 9002	Grease - CP501 (5 Pcs/set)	1

Index No.	Part No.	Description	Q'ty Per Assembly

B009/B019
PARTS INDEX

This section instructs you as to the numbers and names of parts on this machine.

PM Parts Index

Section Name	Part No.	Description in Service Manual	Description in Parts Catalog	Q'ty Per Assembly	Page and Index No
PLATEN COVER (B009/B019)	5448 2804	Platen Cover Sheet	Platen Cover Sheet	1	9- 6
PAPER TRAY (B009/B019)	G020 2645	Tray Bottom Plate Pad	Friction Pad	2	13- 16
PAPER FEED SECTION 1 (B009/B019)	G020 2555	Feed Roller	Paper Feed Roller	2	17- 2
PAPER FEED SECTION 1 (B009/B019)	G020 2721	By-pass Feed Roller	By-pass Feed Roller	1	17- 13
PAPER REGISTRATION (B009/B019)	G020 2716	Friction Pad	Friction Pad	1	21- 18
IMAGING UNIT - 1 (B009/B019)	A190 2060	Charge Corona Grid	Charge Corona Grid	1	33- 3
IMAGING UNIT - 1 (B009/B019)	A190 2065	Charge Corona Wire	Charge Corona Wire	1	33- 4
IMAGING UNIT - 1 (B009/B019)	A190 2070	Charge Corona Cleaning Pad	Corona Wire Cleaner Ass'y	1	33- 12
IMAGING UNIT - 2 (B009/B019)	A219 9510	OPC Drum	OPC Drum	1	35- 16
IMAGING UNIT - 2 (B009/B019)	A190 3550	Cleaning Blade	Cleaning Blade	1	35- 20
FUSING UNIT (B009/B019)	A184 4072	Stripper Pawl	Stripper Pawl	5	39- 4
FUSING UNIT (B009/B019)	A298 4081	Hot Roller	Hot Roller	1	39- 15
FUSING UNIT (B009/B019)	A298 4082	Pressure Roller	Pressure Roller	1	39- 18
TRANSFER AND EXIT SECTION (B009/B019)	A190 3866	Tranfer Corona Wire	Tranfer Corona Wire	1	41- 24
ELECTRICAL SECTION 1 (B009/B019)	A298 1157	Ozone Filter	Ozone Filter	1	47- 15

Parts Index

Part No.	Description	Page and Index No.
B009 1270	Front Cover Assembly (RIC) (B009)	7- 1
B009 1451	Operation Panel - A4 (B009)	11- *
B009 1451	Operation Panel - A4 (B009)	7- 11
B009 1466	Indication Sheet - A4 (B009)	11- 2
B009 1467	Operation Panel Sheet - A4 (B009)	11- 3
B009 1682	Lens Caridge	25- 30
B009 1693	Lens Cover	25- 31
B009 1827	Mirror Bracket	25- 32
B009 5310	DC Main Harness (B009)	19- 3
B009 5310	DC Main Harness (B009)	47- 7
B009 6182	Model Name Plate - GES (B009)	7- 21
B009 6182	Model Name Plate - GES (B009)	57- 10
B009 6184	Model Name Plate - NSA (B009)	7- 21
B009 6184	Model Name Plate - NSA (B009)	57- 10
B009 6186	Model Name Plate - REX (B009)	7- 21
B009 6186	Model Name Plate - REX (B009)	57- 10
B009 6270	Front Cover Ass'y (INF) (B009)	7- 1
B009 8605	Operating Instructions - Russian	57- 6

Part No.	Description	Page and Index No
AA00 1383	Decal - Energy Star	7- 24
AA00 1383	Decal - Energy Star	57- 13
AA06 0331	Release Spring	21- 14
AA06 3036	Terminal Spring	41- 28
AA06 3040	Spring	41- 27
AA06 3180	Adjust Spring	25- 25
AA06 3180	Adjust Spring	29- 23
AA06 3249	Grid Terminal Spring	49- 15
AA06 3489	Spring - 45mm	37- 4
AA06 3523	Adjust Spring	25- 19
AA06 3523	Adjust Spring	29- 13
AA08 0111	Bushing - 8x12x7	45- 3
AA14 3070	Shoulder Screw - M2x2	7- 15
AA14 3716	Stepped Screw	37- 18
AA15 0234	Mylar Seal - Base	25- 28
AA15 0234	Mylar Seal - Base	29- 26
AA16 2067	Platen Cover Pad	9- 5
AB01 3868	Gear - 16Z	13- 19
AB01 7129	Gear - 20Z And 72Z	29- 20
AB01 7361	Gear - 24Z/56Z	29- 17
AB03 0273	Timing Pulley - T20	43- 6
AC01 2042	Exposure Glass	7- 13
AC06 3001	White Reference Plate	23- 3
AF02 0283	Pressure Roller	19- 7
AF04 0031	Upper Exit Roller	41- 7
AG07 0004	Magnetic Catch	7- 9
AG07 0009	Magnetic Catch	41- 11
AW02 0075	Photointerrupter	29- 5
AW02 0075	Photointerrupter	23- 4
AW02 0086	Photointerruptor	49- 9
AW10 0027	Thermister	23- 7
AX40 0052	Anticondensation Heater - 120V 18W	27- 4
AX40 0053	Anticondensation Heater - 240V 18W	25- 4
AX40 0053	Anticondensation Heater - 240V 18W	27- 4
AX40 0063	Anticondensation Heater - 120V 9W	51- 9

Part No.	Description	Page and Index No.
AX40 0064	Anticondensation Heater - 230V 9W	51- 9
B019 1450	Operation Panel - LT (B019)	7- 11
B019 1450	Operation Panel - LT (B019)	11- *
B019 1451	Operation Panel - A4 (B019)	11- *
B019 1451	Operation Panel - A4 (B019)	7- 11
B019 1452	Operation Panel - LT (LA) (B019)	11- *
B019 1452	Operation Panel - LT (LA) (B019)	7- 11
B019 1462	Indication Sheet - LT (B019)	11- 2
B019 1463	Operation Panel Sheet - LT (B019)	11- 3
B019 1464	Indication Sheet - LT (LA) (B019)	11- 2
B019 1465	Operation Panel Sheet - LT (LA) (B019)	11- 3
B019 1466	Indication Sheet - A4 (B019)	11- 2
B019 1467	Operation Panel Sheet - A4 (B019)	11- 3
B019 5100	Main Control Board	47- 6
B019 5100	Main Control Board	55- *
B019 5104	IC - UVEPROM 1M X8 120NS	55- 5
B019 6182	Model Name Plate - GES (B019)	57- 10
B019 6182	Model Name Plate - GES (B019)	7- 21
B019 6184	Model Name Plate - NSA (B019)	7- 21
B019 6184	Model Name Plate - NSA (B019)	57- 10
B019 6186	Model Name Plate - REX (B019)	7- 21
B019 6186	Model Name Plate - REX (B019)	57- 10
B019 6270	Front Cover Ass'y (INF) (B019)	7- 1
B019 8606	Operating Instructions - Chinese (RIC)	57- 6
B019 8607	Operating Instructions - English (RIC)	57- 6
B019 8608	Operating Instructions - English AA (RIC)	57- 6
B019 8609	Operating Instructions - Taiwanese (RIC)	57- 6
B019 8660	Operating Instructions - English A4 (INF)	57- 6
B019 8661	Operating Instructions - German (INF)	57- 6
B019 8662	Operating Instructions - French (INF)	57- 6
B019 8663	Operating Instructions - Italian (INF)	57- 6
B019 8664	Operating Instructions - Spanish (INF)	57- 6
B019 8690	Operating Instructions - English A4 (NRG)	57- 6
B019 8695	Operating Instructions - English LT (SVN)	57- 6
B019 8696	Operating Instructions - Chinese (NRG)	57- 6

Part No.	Description	Page and Index No
B019 8699	Operating Instructions - Taiwanese (NRG)	57- 6
C225 2866	Decal - Key-top Cover (REX)	57- 11
C225 2866	Decal - Key Top Cover (REX)	7- 3
C225 2867	Decal - Cover - Panel (NSA)	57- 11
C225 2867	Decal - Cover - Panel (NSA)	7- 3
G011 3305	Gear - 16T	15- 12
G020 1052	Stand	51- 5
G020 1078	Right Sielding Plate	51- 15
G020 1112	Paper Feed Clutch	45- 1
G020 1114	By-pass Feed Clutch	43- 4
G020 1115	Registration Clutch	43- 18
G020 1130	Gear - 65Z/24Z	43- 11
G020 1131	Gear - 58Z/35Z	43- 13
G020 1132	Gear - 68Z	43- 16
G020 1138	Pulley - 24T	43- 27
G020 1144	Gear - 27Z	45- 5
G020 1145	Shaft - Paper Feed Roller	45- 2
G020 1148	Pulley - 30T	43- 8
G020 1157	Gear - 28Z	37- 12
G020 1168	Gear - 52Z/26T	43- 17
G020 1177	Gear - 26Z	43- 32
G020 1178	Pulley - 51T	43- 30
G020 1187	Timing Belt - S2M 158MM	43- 31
G020 1923	CS Ring - M2.4	35- 24
G020 2327	Pressure Spring	33- 20
G020 2355	Transport Guide Shaft	35- 12
G020 2554	Paper Feed Roller Ass'y	17- 22
G020 2555	Paper Feed Roller	17- 2
G020 2557	Tray Bottom Plate	13- 15
G020 2561	Front Paper Separator	13- 21
G020 2565	Paper Guide	17- 18
G020 2567	Rear Side Fence	13- 11
G020 2568	Rear Corner Separator	13- 12
G020 2570	Shaft - Paper Feed Roller	17- 17
G020 2577	Spring Plate - Driven Roller	19- 8

Part No.	Description	Page and Index No.
G020 2580	Paper End Sensor Bracket	49- 24
G020 2581	Paper End Feeler	49- 26
G020 2585	Front Pin - Paper Feed Roller	17- 16
G020 2586	Rear Pin - Paper Feed Roller	17- 15
G020 2587	Bushing - Paper Feed	17- 12
G020 2592	Release Lever - Bottom Plate	13- 7
G020 2593	Paper Size Sensor - LT	13- 4
G020 2595	Paper Size Sensor - A4	13- 4
G020 2599	Spring - Release Lever	13- 8
G020 2622	Release Arm - Paper End Feeler	49- 21
G020 2626	Release Spring - Paper End Feeler	49- 22
G020 2630	Magnetic Catch	19- 9
G020 2643	Front Grounding Plate - Paper Tray	51- 4
G020 2644	End Fence	13- 20
G020 2645	Friction Pad	13- 16
G020 2647	Paper Tray Cover	13- 1
G020 2648	Holder - Paper Size Detector	13- 6
G020 2650	Right Guide - Paper Tray	51- 7
G020 2652	Middle Rail - Paper Tray	51- 11
G020 2654	Upper Rear Guide - Paper Tray	51- 14
G020 2655	Upper Front Guide - Paper Tray	51- 13
G020 2656	Pressure Spring - Bottom Plate	13- 17
G020 2658	Grounding Plate - Bottom Plate	13- 18
G020 2661	Bottom Plate Ass'y	13- 26
G020 2663	Paper Size Actuator	13- 5
G020 2664	Front Stopper Lever	13- 23
G020 2668	Decal - Paper Set	57- 5
G020 2668	Sheet - Paper Set	13- 2
G020 2678	Guide Plate - Paper Tray	51- 12
G020 2702	Pressure Spring - By-pass Feed	15- 8
G020 2712	Holder - By-pass Feed Friction Pad	21- 10
G020 2713	Pressure Spring	21- 20
G020 2716	Friction Pad	21- 18
G020 2721	By-pass Feed Roller	17- 13
G020 2723	By-pass Feed Shaft	17- 11

Part No.	Description	Page and Index No
G020 2735	Guide - By-pass Feed Table	15- 1
G020 2743	Tension Spring	21- 4
G020 2745	Lower Guide Plate - Regist	21- 6
G020 2753	Bracket - Registration Sensor	17- 7
G020 2754	Upper Paper Guide	21- 16
G020 2762	Lower Transport Guide	21- 13
G020 2765	Knob - Lower Transport Guide	21- 12
G020 2784	Lever - By-pass Feed Table	15- 6
G020 2785	Cover - Feed Roller Shaft	17- 4
G020 2786	Shaft - By-pass Release Lever	15- 5
G020 2787	Cover - By-pass Paper End Sensor	17- 9
G020 3313	Spring	31- 4
G020 3326	Cushion	31- 13
G020 3334	Slider Ass'y	31- 12
G020 3345	Right Seal	31- 3
G020 3565	Grounding Plate	35- 13
G020 3571	Toner Correction Gear - 14/24Z	35- 19
G020 3888	Pin - Transfer Guide	21- 1
G020 3912	Transport Lever	41- 32
G020 4175	Bushing - Pressure Roller	39- 17
G020 4177	Gear - 40Z	39- 16
G020 5829	Shoulder Screw - M3x2.5	49- 18

Part No.	Description	Page and Index No.
A028 9300	Grease Kok Barrierta - JFE 55/2	59- 7
A029 9387	Digital Multimeter	59- 5
A048 2276	Ring - Transport Bracket	35- 11
A048 3860	Transport Bracket Holder	41- 1
A069 1883	Shoe - Scanner	23- 11
A076 1720	Mirror Adjusting Bracket	25- 29
A077 1690	Spring Plate - Mirror	25- 20
A077 1690	Spring Plate - Mirror	23- 9
A077 1690	Spring Plate - Mirror	29- 14
A077 1745	Cover - ADS Sensor	25- 15
A077 1745	Cover - ADS Sensor	29- 4
A077 1746	Mirror Adjusting Screw	25- 23
A077 1746	Mirror Adjusting Screw	29- 21
A077 5717	Resistor - 1K Ω ±5% 1W	55- 1
A111 1753	Seal - 0.1x18x49	23- 2
A111 1753	Seal - 0.1x18x49	27- 11
A111 1753	Seal - 0.1x18x49	25- 8
A134 1072	Right Bracket - Grip Plate	51- 3
A152 5120	Optics Control Board	29- 3
A152 5120	Optics Control Board	25- 14
A153 1285	Emblem (RIC)	7- 2
A153 1285	Emblem (RIC)	57- 2
A153 1906	Adjust Shoe	25- 18
A153 1906	Adjust Shoe	29- 12
A153 4087	Thermistor Holder	39- 7
A153 6409	Decal - Keytop Cover (GES)	7- 3
A153 6409	Decal - Keytop Cover (GES)	57- 11
A153 6423	Support Cover (INF)	7- 2
A157 2769	Rear Stopper Spring	13- 13
A184 2455	Toner Density Sensor	35- 15
A184 3411	Chuck Spring	31- 11
A184 3420	Bottle Chuck	31- 17
A184 3421	Chuck Shaft	31- 16
A184 3422	Toner Slider	31- 7
A184 3611	Toner Recycle Belt	35- 2

Part No.	Description	Page and Index No
A184 3863	Corona Wire Spring	41- 26
A184 3863	Corona Wire Spring	33- 14
A184 4072	Stripper Pawl	39- 4
A184 4081	Right Retaining Ring - 31	39- 13
A184 4105	Left Retaining Ring - 31	39- 5
A184 5105	IC - RF5A93	55- 2
A184 5344	Scanner Grounding Harness	47- 17
A184 9501	Optics Adjustment Tool	59- 1
A190 1040	Front Safety Switch Arm	37- 24
A190 1041	Front Door Switch Lever	37- 2
A190 1042	Front Lever Bracket	37- 1
A190 1045	Safety Switch Stay	49- 8
A190 1048	Fusing Lever Cover	49- 11
A190 1073	Paper Exit Pin Bracket	41- 21
A190 1076	Base Cover	51- 6
A190 1084	Front Right Grip Bracket	51- 2
A190 1085	Exit Rear Bracket	41- 33
A190 1112	Drive Bracket	43- 25
A190 1117	Support Plate - Drive Unit	43- 14
A190 1118	Imaging Drive Shaft	43- 33
A190 1122	Development Drive Bracket	43- 7
A190 1123	Development Drive Gear	43- 35
A190 1124	Tightner Spring	43- 23
A190 1125	Tightner Bracket	43- 26
A190 1128	Tightner Pulley	43- 28
A190 1131	Drive Gear Joint Bracket	37- 11
A190 1132	Gear - 32Z	37- 13
A190 1134	Support Bracket	37- 16
A190 1136	Gear Shaft	37- 15
A190 1138	Spacer	37- 14
A190 1144	Tightner Pulley	43- 12
A190 1145	Release Spring	43- 1
A190 1146	Tightner Ass'y	43- 2
A190 1149	Tightner Pulley	43- 3
A190 1151	Duct Cover	37- 8

Part No.	Description	Page and Index No.
A190 1152	Guide Rail	37- 7
A190 1153	Duct	37- 9
A190 1155	Duct Bracket	47- 13
A190 1156	Ozone Filter Cap	47- 16
A190 1160	Safety Switch Bracket	37- 6
A190 1162	Safety Switch Arm	37- 23
A190 1163	Drive Release Wire	37- 10
A190 1164	Safety Switch Lever	37- 5
A190 1165	Tightner Bracket	43- 24
A190 1174	Pressure Spring	43- 37
A190 1180	Pulley - 20Z/63Z	43- 20
A190 1182	Gear - 21Z/40Z	43- 19
A190 1183	Pressure Spring	43- 34
A190 1185	Development Drive Shaft	43- 9
A190 1186	Main Board Bracket	49- 12
A190 1187	High Voltage Supply Board Bracket	49- 14
A190 1191	By-pass Feed Cover	49- 13
A190 1192	Main Switch Bracket	47- 3
A190 1193	Connector Bracket	49- 17
A190 1195	Right Harness Cover	47- 1
A190 1196	Upper Seal - By-pass Feed	49- 32
A190 1197	Front Seal - By-pass Feed	49- 31
A190 1198	Development Bias Terminal	43- 22
A190 1260	Upper Cover	7- 12
A190 1282	Magnet Catch	7- 6
A190 1283	Magnet Catch	7- 7
A190 1286	Front Cover Hing Bracket	49- 1
A190 1297	Right Lower Cover	7- 20
A190 1300	Left Upper Cover	7- 17
A190 1337	Inner Cover	7- 8
A190 1341	Front Door Lever	37- 22
A190 1342	Front Lever Support Plate	37- 19
A190 1345	Release Spring - Front Lever	37- 20
A190 1452	Keytop - Start (RIC/NRG)	11- 4
A190 1453	Keytop - Clear/Stop (RIC/NRG)	11- 5
A190 1454	Keytop - Clear Mode (RIC/NRG)	11- 6
A190 1455	Keytop - 10keys (RIC/NRG)	11- 7
A190 1651	Left Scale Support Plate	23- 5
A190 1652	Exposure Glass Seal	23- 6
A190 1654	Right Bracket - Exposure Glass	23- 23
A190 1660	Scanner Guide Rail	23- 1
A190 1663	Lens Guide Rail	27- 14
A190 1664	Pulley Bracket	25- 10
A190 1664	Pulley Bracket	27- 16
A190 1666	Pulley Bracket	27- 2
A190 1666	Pulley Bracket	25- 2
A190 1669	Lens Support Bracket	27- 18
A190 1672	Lens Drive Motor DC24V 81.6W	29- 1
A190 1674	6th Mirror Bracket - Front	25- 26
A190 1674	6th Mirror Bracket - Front	29- 24
A190 1675	6th Mirror Bracket - Rear	29- 22
A190 1675	6th Mirror Bracket - Rear	25- 24
A190 1676	Rod Bracket	29- 7
A190 1678	3rd Scanner Brakcet	29- 11
A190 1678	3rd Scanner Brakcet	25- 17
A190 1679	Mirror Sensor Shuter	29- 10
A190 1682	Lens Caridge	27- 6
A190 1684	Shielding Plate	27- 10
A190 1685	Lens Cover Bracket	27- 17
A190 1688	Bushing	23- 16
A190 1689	Clamp	23- 18
A190 1691	2nd Scanner Frame	23- 10
A190 1692	2nd Scanner Support Plate	23- 17
A190 1693	Lens Cover	27- 12
A190 1694	Shoe Bracket	23- 12
A190 1696	Motor Bracket	25- 12
A190 1696	Motor Bracket	27- 20
A190 1698	Shielding Plate	27- 7
A190 1751	Harness Guide Pulley Ass‘y	23- 14
A190 1802	Timing Pulley - 30Z	29- 8

Part No.	Description	Page and Index No.
A190 1803	Timing Puley - 22Z/44Z	25- 13
A190 1803	Timing Puley - 22Z/44Z	27- 22
A190 1809	6th Mirror	25- 21
A190 1809	6th Mirror	29- 15
A190 1810	Mirror Guide Rod	29- 9
A190 1811	4th/5th Mirror	29- 6
A190 1811	4th/5th Mirror	25- 16
A190 1813	Timing Belt - L824P2M	27- 13
A190 1814	Scanner Guide Rod	23- 22
A190 1815	2nd/3rd Mirror	23- 8
A190 1816	Timing Belt - L1110P2M	25- 1
A190 1816	Timing Belt - L1110P2M	27- 1
A190 1817	Timing Belt - L754P2M	27- 5
A190 1817	Timing Belt - L754P2M	25- 5
A190 1818	2nd Scanner Spring	27- 15
A190 1818	2nd Scanner Spring	25- 9
A190 1819	1st Scanner Spring	27- 3
A190 1819	1st Scanner Spring	25- 3
A190 1820	Lens Holder Spring	27- 21
A190 1821	Harness Guide Pulley	23- 15
A190 1824	2nd Scanner Support Plate	23- 13
A190 1825	3rd Scanner Support Plate	29- 19
A190 1825	3rd Scanner Support Plate	25- 22
A190 1827	Rack Gear	29- 18
A190 1831	Shield Heater Rear	25- 27
A190 1831	Shield Heater Rear	29- 25
A190 2011	Charge Corona Unit	33- 2
A190 2020	Quenching Lamp Unit	37- 21
A190 2030	Erase Lamp Unit	37- 25
A190 2040	Transfer Corona Wire Receptacle	49- 16
A190 2060	Charge Corona Grid	33- 3
A190 2062	Spring Plate - Corona Grid	33- 7
A190 2065	Charge Corona Wire	33- 4
A190 2070	Corona Wire Cleaner Ass'y	33- 12
A190 2075	Cleaning Shaft	33- 8

Part No.	Description	Page and Index No
A190 2085	Front Endblock Cover	33- 5
A190 2086	Rear Shilding Sheet	33- 11
A190 2105	Corona Wire Terminal	33- 10
A190 2116	Rear Endblock Cover	33- 9
A190 2280	Front Side Plate	33- 1
A190 2290	Rear Side Plate	33- 24
A190 2320	Knob Screw	33- 13
A190 2330	Toner Recicle Cover	35- 21
A190 2560	Front Side Fence	13- 24
A190 2561	Side Fence Rack	13- 22
A190 2564	Relay Roller	17- 14
A190 2590	Paper Tray	13- 25
A190 2620	Push Switch - Paper Size	49- 5
A190 2642	Rear Lever Stopper	13- 14
A190 2684	Guard - Paper Tray Stopper	49- 4
A190 2701	By-pass Feed Cover	15- 3
A190 2702	Paper Guide	15- 13
A190 2704	Bottom Plate - By-pass Feed	15- 14
A190 2705	Right Side Fence	15- 11
A190 2706	Left Side Fence	15- 15
A190 2707	Side Fence Rack	15- 2
A190 2708	Decal - By-pass Feed	15- 4
A190 2708	Decal - By-pass Feed	57- 4
A190 2711	Friction Pad Stay	21- 5
A190 2714	Friction Pad Holder Ass'y	21- 19
A190 2717	Friction Pad Guide	21- 17
A190 2740	Lower Resistration Roller	21- 8
A190 2771	Resist Sensor	17- 5
A190 2772	Paper End Sensor	17- 8
A190 2780	Front Bushing	21- 2
A190 2781	Rear Bushing	21- 9
A190 2782	Bottom Plate Stay	15- 10
A190 2783	Resist Roller Knob	21- 7
A190 2810	Cassette Stopper	13- 10
A190 2812	Stopper Cover	13- 9

Part No.	Description	Page and Index No.
A190 2825	Heater Bracket	51- 8
A190 2900	Switch Bracket	19- 4
A190 2902	Switch Lever	19- 2
A190 2905	Cushion	19- 1
A190 3050	Development Roller Ass'y	33- 26
A190 3094	Development Entrance Seal	33- 15
A190 3112	1st Agitator	35- 7
A190 3116	2nd Agitator	35- 5
A190 3125	Busing	35- 8
A190 3128	Seal 6mm	35- 22
A190 3152	Gear - 18Z	33- 16
A190 3153	Transfer Auger Gear	35- 6
A190 3155	Idle Gear - 17Z	33- 17
A190 3156	Cam Gear	33- 25
A190 3162	Imaging Unit Upper Case	33- 23
A190 3165	Long Seal	33- 22
A190 3166	Rear Seal	33- 18
A190 3167	Front Seal	33- 19
A190 3171	Imaging Unit Shutter	33- 21
A190 3183	Harness Holder	35- 9
A190 3192	Lower Seal -3x6x396	35- 23
A190 3193	Seal - 5x55	35- 25
A190 3361	Toner Bottle Holder Guide	17- 3
A190 3363	Mylar Seal - 10x360	17- 21
A190 3550	Cleaning Blade	35- 20
A190 3560	Toner Collection Coil	35- 10
A190 3563	Toner Recycle Roller	35- 3
A190 3564	Toner Cap	35- 1
A190 3568	Rear Bushing	35- 18
A190 3569	Recycle Roller Bushing	35- 4
A190 3570	Cleaning Entrance Seal	35- 14
A190 3851	T/S Unit	41- 20
A190 3863	Front End Block Cover	41- 25
A190 3864	Rear End Block Cover	41- 23
A190 3866	Tranfer Corona Wire	41- 24

Part No.	Description	Page and Index No
A190 3880	Discharg Plate Unit	41- 22
A190 3890	T/S Corona Receptacle	41- 29
A190 3900	Transfer Guide	41- 18
A190 3903	Transfer Release Guide	41- 19
A190 3905	Transfer Corona Rail	41- 17
A190 3906	Spring Plate	41- 16
A190 3911	T/S Position Plate	41- 31
A190 3914	Bushing	41- 30
A190 4053	Fusing Unit Knob	39- 2
A190 4070	Fusing Unit Cover	39- 11
A190 4073	Fusing Stay	39- 9
A190 4076	Fusing Frame	39- 26
A190 4086	Hot Roller Bushing	39- 14
A190 4088	Seal	39- 24
A190 4092	Stripper Pawl Spring	39- 3
A190 4096	Idle Gear - 18Z	41- 3
A190 4097	Idle Gear - 16Z	41- 2
A190 4099	Pressure Roller Lever	39- 20
A190 4119	Thermistor	39- 8
A190 4120	Front Heater Bracket	39- 25
A190 4121	Rear Heater Bracket	39- 22
A190 4129	Connector Bracket	39- 21
A190 4385	Antistatic Brush	39- 6
A190 4455	Exit Sensor Feeler	41- 10
A190 4456	Exit Sensor Feeler Spring	41- 9
A190 4463	Exit Roller Gear - 23Z	41- 15
A190 4465	Exit Roller	41- 5
A190 4470	Lower Guide Plate	41- 4
A190 4471	Upper Guide Plate	41- 6
A190 4474	Exit Roller Holder	41- 8
A190 4476	Decal - High Temperature	41- 14
A190 4476	Decal - High Temperature	57- 3
A190 4478	Exit Cover	41- 13
A190 4479	Shielding Plate	41- 12
A190 4484	Antistatic Brush	49- 7

Part No.	Description	Page and Index No.
A190 5107	Resistor - 180Ω ±5% 3W	55- 3
A190 5108	Heat Sink - M-SIP-7	55- 4
A190 5145	Development Relay Board	49- 20
A190 5222	Main Switch	47- 4
A190 5335	DC Power Harness	49- 19
A190 5335	DC Power Harness	47- 10
A190 5343	Scanner H.P Harness	29- 16
A190 5344	Relay Harness - By-pass Feed	17- 10
A190 5345	Exit Sensor Harness	49- 10
A190 5346	Development Unit Harness	35- 17
A190 5347	Relay Harness - Development	49- 33
A190 9002	Grease - CP501 (5 Pcs/set)	59- 8
A193 2660	Paper Separator Cushion	13- 27
A203 1346	Platen Cover Hinge	9- 1
A203 1356	Hinge Shaft - Platen Cover	9- 4
A219 1169	Gear - 40Z	43- 10
A219 1176	Paper Feed Drive Bracket	45- 6
A219 1190	Power Supply Cord Bracket	47- 14
A219 1194	ADF Bracket	23- 21
A219 1196	Shielding Plate Bracket - ADF	23- 26
A219 1197	Rear Bracket - ADF	23- 25
A219 1265	Decal - Main Switch	57- 8
A219 1266	Decal - Main Switch -TWN	57- 8
A219 1284	Operating Sheet	57- 7
A219 1284	Opetation Guide Sheet	7- 5
A219 1288	Lower Front Cover	7- 25
A219 1290	Rear Right Cover	7- 23
A219 1296	Front Right Cover	7- 10
A219 1305	Left Lower Cover	7- 16
A219 1330	Rear Cover	7- 22
A219 1387	Sheet - Operate - Keytop - TWN	57- 14
A219 1388	Sheet - Operate - Keytop - CHN	57- 14
A219 2575	Vartical Transport	19- 10
A219 2611	Paper Guide Plate	19- 5
A219 2612	Lower Paper Guide	19- 6

Part No.	Description	Page and Index No
A219 2696	Decal - Size Selection	57- 15
A219 2696	Decal - Size Selection	13- 28
A219 2696	Decal - Paper Size Selection	57- 12
A219 2701	Left Rail - Paper Tray	51- 17
A219 2702	Rail Bracket	51- 18
A219 2711	Paper Size Switch Bracket	49- 3
A219 2712	Paper Tray Stopper	49- 6
A219 2715	Rail Auxiliary - Left	7- 26
A219 3030	Toner Supply Unit (RIC-NA)	31- *
A219 3034	Toner Supply Unit (RIC-EU/LA)	31- *
A219 3036	Toner Supply Unit (Others)	31- *
A219 3132	Development Cover	33- 6
A219 3311	Toner Collection Cover	31- 1
A219 3312	Toner Adding Gate	31- 6
A219 3314	Toner Supply Unit Case (RIC-NA)	31- 9
A219 3317	Toner Adding Shutter	31- 5
A219 3319	Sheet - Toner Supply Shutter	31- 21
A219 3322	Toner Bottle Cover	31- 14
A219 3325	Mylar Blade	31- 15
A219 3339	Toner Bottle Holder Lever	31- 8
A219 3341	Cushion - Toner Collection Cover	31- 22
A219 3342	Lower Seal - Tonner Collection Cover	31- 2
A219 3360	Toner Bottle Holder guide Ass'y	17- 6
A219 3364	Mylar Seal - 8x429	17- 19
A219 3365	Mylar Seal - 8x400	17- 20
A219 3373	Seal - 2x15x95	49- 29
A219 3381	Roller	31- 18
A219 3382	Upper Cover	31- 19
A219 3383	Lower Cover	31- 20
A219 3384	Spring Plate	31- 10
A219 3385	Sheet - Roller Cover	31- 23
A219 3411	Toner Supply Unit Case (RIC-EU/LA)	31- 9
A219 3416	Toner Supply Unit Case (Others)	31- 9
A219 4068	Pressure Spring	39- 19
A219 4117	Fusing Lamp - 115V 850W	39- 12

Part No.	Description	Page and Index No.
A219 4123	Thermofuse - 169°c	39- 10
A219 5301	AC Main Harness - 230V	47- 8
A219 5302	AC Main Harness - 120V	47- 8
A219 5319	Toner Motor Harness	49- 28
A219 5581	Power Supply Cord - 120V	47- 11
A219 5680	Power Supply Cord - 220V China	47- 11
A219 5681	Power Supply Cord - 230V (EU)	47- 11
A219 6070	Front Cover Ass'y (NRG/SVN)	7- 1
A219 6187	Model Name Plate - GER	57- 10
A219 9510	OPC Drum	35- 16
A245 2551	Paper Tray Ass'y - LT	13- *
A245 2552	Paper Tray Ass'y - A4	13- *
A245 2693	Decal Paper Tray Operation	13- 3
A245 2693	Decal - Paper Set Operation	57- 9
A245 2694	Decal - Paper Set Direction (4Languages)	13- 3
A245 2694	Decal - Paper Set Operation (4 Language)	57- 9
A245 4120	Fusing Lamp - 230V 760W	39- 12
A271 1366	Total Counter	49- 2
A271 5205	Scanner Motor - Dc24v 96w	25- 11
A271 5205	Scanner Motor - DC24V 96W	27- 19
A298 1071	Left Grip Plate	51- 1
A298 1072	Fusing Unit Guide	51- 16
A298 1080	Exit Stay	51- 10
A298 1111	DC Motor - 23W	47- 12
A298 1139	Magnetic Clutch - Vertical	17- 1
A298 1141	Timing Belt - S3M699	43- 5
A298 1153	Bushing - 8x15x5	43- 38
A298 1157	Ozone Filter	47- 15
A298 1171	Imaging Unit Holder	43- 36
A298 1181	Timing Belt - S3M288	43- 21
A298 1201	Exit Tray	7- 18
A298 1202	Slide Wire - Exit Tray	7- 19
A298 1270	Front Cover Assembly (RIC) (B019)	7- 1
A298 1354	Hinge Pin	7- 4
A298 1380	Decal - Symbol Explanation (EU/LA)	57- 1

Part No.	Description	Page and Index No
A298 1386	Decal - Symbol Explanation (TWN)	57- 1
A298 1389	Decal - Symbol Explanation (CHN)	57- 1
A298 1391	Platen Cover	9- 3
A298 1464	Operation Panel Board - 120V	11- 8
A298 1465	Operation Panel Cover - A4	11- 1
A298 1468	Operation Panel Board - 230V	11- 8
A298 1655	Left Scale	7- 14
A298 1671	Mirror Drive Motor - DC24V 7.2W	29- 2
A298 1682	Lens - F8/180	25- 6
A298 1682	Lens - F8/180	27- 8
A298 1683	Shading Plate	25- 7
A298 1683	Shading Plate	27- 9
A298 1700	1st Scanner Unit - 120V	23- 19
A298 1701	1st Scanner Unit - 230V	23- 19
A298 1725	1st Scanner Clamp	23- 20
A298 1807	Thermofuse - 152°C	23- 24
A298 2205	Imaging Unit	33- *
A298 2700	By-pass Feed Unit	15- *
A298 2741	Upper Registration Roller	21- 11
A298 3371	DC Motor - 3.36W	49- 30
A298 4021	Fusing Unit - 120V	39- *
A298 4022	Fusing Unit - 230V	39- *
A298 4071	Fusing Entrance Guide Plate	39- 23
A298 4081	Hot Roller	39- 15
A298 4082	Pressure Roller	39- 18
A298 4089	Stripper Pawl Bracket	39- 1
A298 5150	High Voltage Supply Board	47- 5
A298 5225	Fan Motor - DC 24V 4.32W	47- 2
A298 5310	DC Main Harness (B019)	47- 7
A298 5310	DC Main Harness (B019)	19- 3
A298 5551	AC Drive DC Power Supply Board - 120V	47- 9
A298 5651	AC Drive DC Power Supply Board - 230V	47- 9
A298 5653	AC Drive DC Power Supply Board - 230V	47- 9
A299 2530	Tray Stopper Bracket	49- 23
A299 2531	Plate Spring - Tray Stopper	49- 27

Part No.	Description	Page and Index No.
A422 1082	Pick-up Spring	37- 17

Part No.	Description	Page and Index No
5053 0223	Bushing - 8mm	43- 15
5053 0223	Bushing - 8mm	21- 15
5203 9501	Silicone Grease G-510	59- 4
5206 2684	Shoulder Screw - M3	37- 3
5215 2713	Bottom Plate Pad	15- 9
5420 9516	Test Chart OS-A3 (10pcs/set)	59- 2
5442 9101	Setting Powder	59- 6
5442 9103	Launa Oil 40	59- 3
5446 1205	Release Spring	43- 29
5447 2681	Snap Ring	45- 4
5447 2681	Snap Ring	49- 25
5447 2681	Snap Ring	21- 3
5447 2681	Snap Ring	15- 7
5448 2804	Platen Cover Sheet	9- 2

Part No.	Description	Page and Index No.
0313 0300W	Philips Pan Head Screw - M3x30	47-104
0353 0060B	Philips Pan Head Screw - M3x6	7-102
0353 0060B	Philips Pan Head Screw - M3x6	23-103
0353 0060B	Philips Pan Head Screw - M3x6	29-102
0353 0060B	Philips Pan Head Screw - M3x6	33-101
0353 0060B	Philips Pan Head Screw - M3x6	35-101
0413 0082B	Tapping Screw - M3x8	41-103
0413 0082W	Tapping Screw - M3x8	13-103
0434 0060B	Pan Head Self-tapping Screw - M4x6	51-103
0434 0102W	Tapping Screw - M4x10	7-103
0450 3006B	Tapping Screw - M3x6	27-105
0450 3006B	Tapping Screw - M3x6	29-101
0450 3006B	Tapping Screw - M3x6	25-104
0450 3006B	Tapping Screw - M3x6	43-107
0450 3008B	Tapping Screw - M3x8	17-104
0450 3008B	Tapping Screw - M3x8	25-108
0450 3008B	Tapping Screw - M3x8	13-101
0450 3008B	Tapping Screw - M3x8	49-107
0450 3010B	Tapping Screw - M3x10	27-102
0450 3010B	Tapping Screw - M3x10	25-102
0450 4030B	Tapping Screw - M4x30	47-106
0451 3006B	Tapping Screw - M3x6	51-101
0451 3006B	Tapping Screw - M3x6	43-106
0451 3006B	Tapping Screw - M3x6	27-101
0451 3006B	Tapping Screw - M3x6	29-103
0451 3006B	Tapping Screw - M3x6	47-105
0451 3006B	Tapping Screw - M3x6	45-101
0451 3006B	Tapping Screw - M3x6	37-101
0451 3006B	Tapping Screw - M3x6	39-101
0451 3006B	Tapping Screw - M3x6	41-101
0451 3006B	Tapping Screw - M3x6	49-103
0451 3006B	Tapping Screw - M3x6	19-102
0451 3006B	Tapping Screw - M3x6	25-101
0451 3006B	Tapping Screw - M3x6	7-106
0451 3006B	Tapping Screw - M3x6	13-104

Part No.	Description	Page and Index No
0451 3006B	Tapping Screw - M3x6	17-103
0451 3006B	Tapping Screw - M3x6	23-102
0451 3006B	Tapping Screw - M3x6	15-102
0451 3006B	Tapping Screw - M3x6	21-101
0451 3010B	Tapping Screw - M3x10	51-102
0451 3012B	Tapping Screw With Washer - M3x12	43-105
0451 3014B	Tapping Screw - M3-14	7-105
0451 3014B	Tapping Screw - M3-14	19-104
0452 3006B	Tapping Screw - 3x6	33-102
0452 3006B	Tapping Screw - M3x6	31-101
0452 3006B	Tapping Screw - 3x6	35-102
0452 3008B	Tapping Screw - M3x8	41-105
0452 3008B	Tapping Screw - M3x8	13-102
0452 3008Z	Bind Tapping Screw - M3x8	7-101
0452 3010Z	Bind Tapping Screw - 3x10	7-104
0453 3006Z	Bind Tapping Screw - M3x6	15-101
0453 3006Z	Bind Tapping Screw - M3x6	23-105
0453 3008	Bbind Tapping Screw - M3x8	17-105
0633 0120E	Spring Pin - M3x12	43-104
0701 0030B	Flat Washer - M3	25-103
0701 0030B	Flat Washer - M3	27-103
0720 0025E	Retaining Ring - M2.5	41-107
0720 0025E	Retaining Ring - M2.5	9-101
0720 0030E	Retaining Ring - M3	49-105
0720 0030E	Retaining Ring - M3	19-103
0720 0030E	Retaining Ring - M3	37-102
0720 0040E	Retaining Ring - M4	23-104
0720 0040E	Retaining Ring - M4	43-101
0720 0040E	Retaining Ring - M4	29-105
0720 0040E	Retaining Ring - M4	17-102
0720 0040E	Retaining Ring - M4	41-102
0720 0060E	Retaining Ring - M6	43-103
0720 0060E	Retaining Ring - M6	25-105
0720 0060E	Retaining Ring - M6	27-104
0805 3480	Bushing - 6mm	41-104

Part No.	Description	Page and Index No.
0805 3480	Bushing - 6mm	43-102
0805 3480	Bushing - 6mm	17-101
0951 3005B	Philips Screw With Flate Washer - M3x5	29-106
0951 3005B	Philips Screw With Flat Washer M3x5	25-107
0951 3006B	Philips Screw With Flat Washer - M3x6	41-106
0951 3006B	Philips Screw With Flat Washer - M3x6	39-103
0954 3012B	Screw - M3X12	39-102
1002 0307	Jumper Wire	55-101
1102 4201	Connector - 2P	55-102
1102 4202	Connector - 3P	55-103
1102 4204	CT Header - 5P	55-104
1102 4205	CT Header - 6P	55-105
1102 4206	Connector - 7P	55-106
1102 4207	Connector - 8P	55-107
1102 4208	Connector - 9P	55-108
1102 4209	CT Header - 10P	55-109
1102 4211	CT Header - 12P	55-110
1102 4619	Connector - 2P	55-111
1102 4631	CT Connector - 2P	55-112
1102 4634	CT Connector - 5P	55-113
1102 4646	Connector - 5P	55-114
1102 5303	Connector - 4P	55-115
1103 1770	Connector - 4P	55-116
1103 1771	Connector - 5P	55-117
1103 1772	Pin Header - 6p	55-118
1103 1778	Pin Header - 12P	55-119
1104 0511	IC Socket - 8P - DICF-8CS-E	55-120
1104 0589	Dip Socket - 32P	55-121
1105 0008	Nylon Clamp - 2n	29-107
1105 0008	Nylon Clamp - 2n	25-109
1105 0199	Clamp	47-101
1105 0199	Clamp	37-104
1105 0199	Clamp	45-102
1105 0199	Clamp	51-104
1105 0199	Clamp	49-104

Part No.	Description	Page and Index No
1105 0290	Harness Clamp - Horizontal	49-101
1105 0310	Wire Clamp	51-105
1105 0310	Wire Clamp	45-103
1105 0310	Wire Clamp	47-103
1105 0310	Wire Clamp	23-101
1105 0328	Harness Clamp - ES-0505	25-106
1105 0328	Harness Clamp - Es-0505	29-104
1105 0329	Clamp - ES-0510	49-102
1105 0413	Harness Clamp	49-106
1105 0413	Harness Clamp	47-102
1107 0485	Fuse (Glass Case) 17A 125V	47-107
1107 0855	Fuse - 8A 125V	47-108
1107 0868	Fuse - 5A 125V	47-110
1107 0872	Fuse - 3.15A 125V	47-109
1107 0883	Fuse - 3.15A 250V	47-110
1107 0883	Fuse - 3.15A 250V	47-109
1107 0885	Fuse - 6.3A 250V	47-108
1107 0885	Fuse - 6.3A 250V	47-107
1204 2334	Interlock Switch - Fa1l	37-103
1204 2466	Micro Switch - V -16506 IC25	19-101
1400 0072	Transistor - 2SC372Y	55-122
1400 0291	Transistor - 2SA1020Y	55-123
1400 0652	Transistor - 2SA1287	55-124
1400 0733	Transistor - 2SD1866	55-125
1401 0694	Zener Diode - RD6.8FB	55-126
1402 0277	Zener Diode - 1Z12	55-127
1402 1050	Silicon Diode - 100V 1A	55-128
1402 1125	Zener Diode - 1W - RD33FB2	55-129
1402 1160	Diode - S5688	55-130
1402 1310	Diode - D1NL20	55-131
1407 1535	IC - TD62308AP	55-132
1407 2187	TTLIC - SN74LS07NS	55-133
1407 2836	IC - HD74C14FP	55-134
1407 3764	IC - TC7SU04F	55-135
1407 3857	Transistor - Array - TD62381F	55-136

Part No.	Description	Page and Index No.
1407 4315	IC - TE7751	55-137
1407 4672	TTL - HD74LS368FP	55-138
1407 5072	EEPROM M93C66-BN6	55-139
1408 0150	IC - ULN2003AN	55-140
1408 0595	IC - NJM2904M	55-141
1408 0611	IC - 3771	55-142
1408 1228	IC - MTD1120	55-143
1503 0563	Oscillator - 9.83MHZ040	55-144
1601 5295	Resistor - 0.47Ω ±2% 1W	55-145
1601 8157	Variable Resistor - 100K Ω	55-146
1607 1159	Filter - BGH2012B102L	55-147
1630 3101	Resistor - 100Ω - 1/10W	55-148
1630 3102	Resistor - 1KΩ 1/10W ±5%	55-149
1630 3103	Resistor - 10KΩ 1/10W ±5%	55-150
1630 3105	Resistor - 1M Ω ±5% 1/10W	55-151
1630 3204	Resistor - 200K Ω 1/10W ±5%	55-152
1630 3222	Resistor - 2.2KΩ 1/10W ±5%	55-153
1630 3223	Resistor - 22kΩ - 1/10W	55-154
1630 3393	Resistor - 39K Ω 1/10W	55-155
1630 3472	Resistor - 4.7KΩ 1/10W ±5%	55-156
1630 3512	Resistor - 5.10KΩ - 1/10W	55-157
1630 3751	Resistor - 750Ω±5% 1/10W	55-158
1630 3752	Resistor - 7.5K Ω ±5% 1/10W	55-159
1632 0000	Resistor - 0 Ω 1/8W	55-160
1633 0000	Resistor - 0 Ω 1/10W	55-161
1633 1001	Resistor - 1K Ω ±1% 1/10W	55-162
1633 1002	Resistor - 10K Ω ±1% 1/10W	55-163
1633 1050	Resistor - 105 Ω ±1% 1/10W	55-164
1633 2150	Resistor - 215Ω ±1% 1/10W	55-165
1633 3901	Resistor - 3.9 Ω ±1% 1/10W	55-166
1633 7870	Resistor - 787 Ω ±1% 1/10W	55-167
1633 9319	Resistor - 93.1 Ω ±1% 1/10W	55-168
1640 5100	Capacitor - 10µF +20% 50	55-169
1640 5109	Capacitor - 1µF - ±20% - 50V	55-170
1640 5470	Capacitor - 47µF ±20% 50V	55-171
1660 3101	Capacitor - 100pF 50V	55-173
1660 3471	Capacitor - 470pF 50V	55-174
1660 5332	Capacitor - 3300pF ±10% 50V	55-175
1660 7103	Capacitor - 10000pF 50V	55-176
1660 7104	Capacitor - 100000pF 50V	55-177
1660 7473	Capacitor - 47000pF +80% -20% 50V	55-178
1905 0008	UVEPROM 1M X8 120NS	55-172