FT5535/5025/4527/4027/4522/4022

COPIER ELECTRICAL COMPONENT LAYOUT

Rev. 7/95

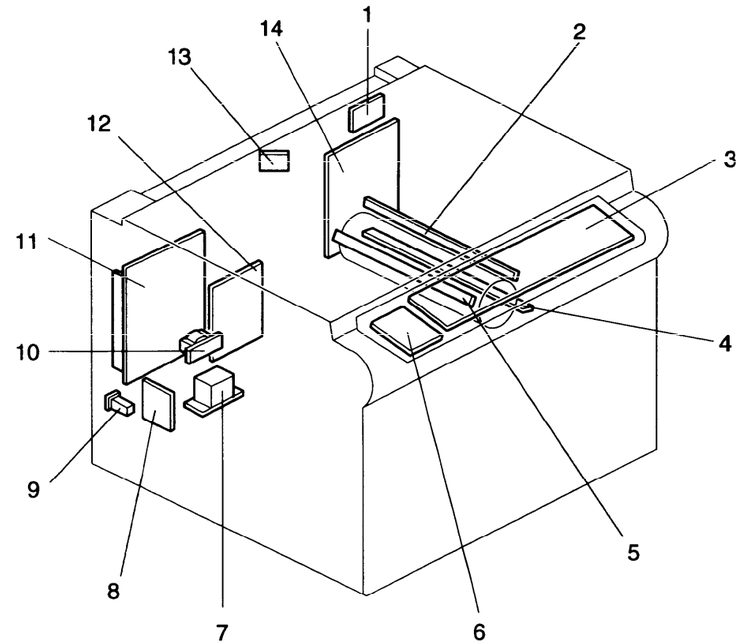

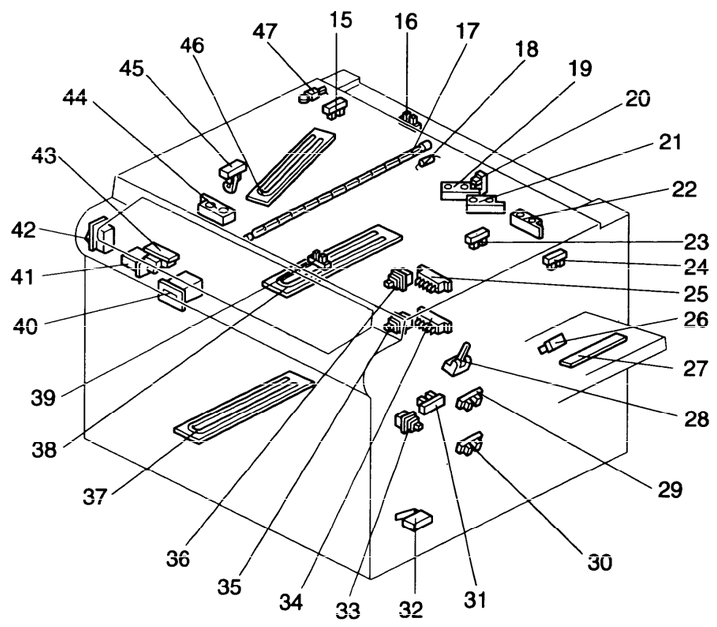

Description	Index No.	P to P Location
CB High Voltage Supply Board (PCB5)	1	A2
Erase Lamp (L6)	2	H2
Operation Panel Board (PCB7)	3	F2
Pre-transfer Lamp (L4)	4	D13
Quenching Lamp (L5)	5	D14
Liquid Crystal Display Board (A156 machines only) (PCB10)	6	E2
Transformer (220 ~ 240V machines only) (TR1)	7	C3
Noise Filter Board (220 ~ 240V machines only) (PCB8)	8	A2
Circuit Breaker (220 ~ 240V machines only) (CB1)	9	A2
Choke Coil (CC1)	10	B9
DC Power Supply Board (PCB3)	11	C9
AC Drive Board (PCB2)	12	C6
Auto Image Density Sensor (ADS Sensor) (S25)	13	D8
Main Control Board (PCB1)	14	F13
Scanner HP Sensor (S17)	15	G10
Platen Cover Sensor (S21)	16	D13
Exposure Lamp (L1)	17	A6
Exposure Lamp Thermofuse (TF3)	18	A6
Original Length Sensor-1 (S27)	19	D7
Lens Vertical HP Sensor (S16)	20	G10
Original Length Sensor-2 (S19)	21	D14
Original Length Sensor (Option for N. American models (S33)	22	D11
Transfer Belt Contact HP Sensor (S24)	23	D12
3rd Scanner HP Sensor (S18)	24	F9
Upper Tray Paper Size Switch (Non-duplex machines only) (SW5)	25	G16
LCT Upper Limit Sensor (LCT machines only) (S11)	26	J13
By-pass Feed Paper Width Sensor (S1)	27	J16
Registration Sensor (S12)	28	H10

Description	Index No.	P to P Location
Upper Tray Upper Limit Sensor (A153/A155 machines only) (S5)	29	I16
Lower Tray Upper Limit Sensor (A153/A155/A156 machines only) (S8)	30	J16
By-pass Feed Paper End Sensor (S2)	31	H10
Vertical Guide Set Switch	32	J16
By-pass Feed Table Switch (SW1)	33	I10
Lower Tray Paper Size Switch (SW6)	34	H16
Lower Tray Switch (SW3)	35	G11
Upper Tray Switch (Non-duplex machines only) (SW2)	36	G11
Lower Tray Heater (option) (H3)	37	A5
Drum Heater (H1)	38	A4
Lens Horizontal HP Sensor (S15)	39	G10
Total Counter (CO1)	40	D11
Front Cover Safety Switch (SW11)	41	C10
Main Switch (SW10)	42	B8
Auto Response Sensor (S23)	43	F1
Original Width Sensor (S26)	44	D8
Fusing Exit Sensor (S20)	45	D14
Optics Anti-condensation Heater (option) (H2)	46	A5
Optics Thermistor (TH3)	47	D4

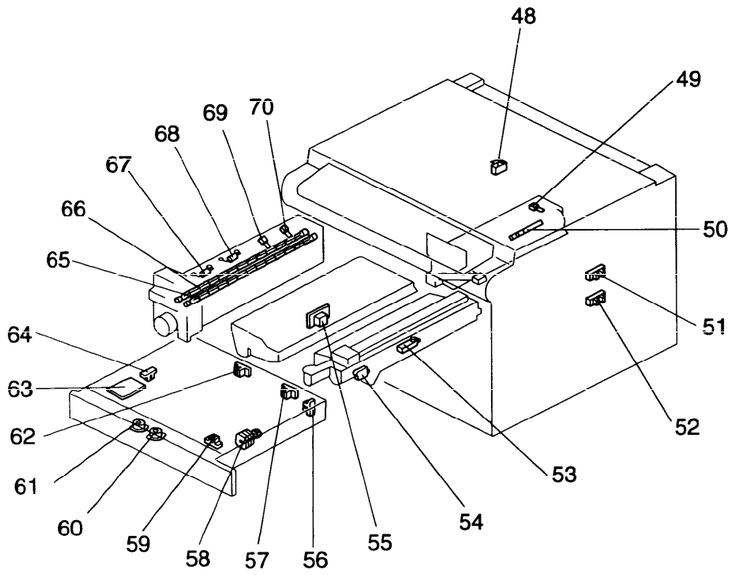

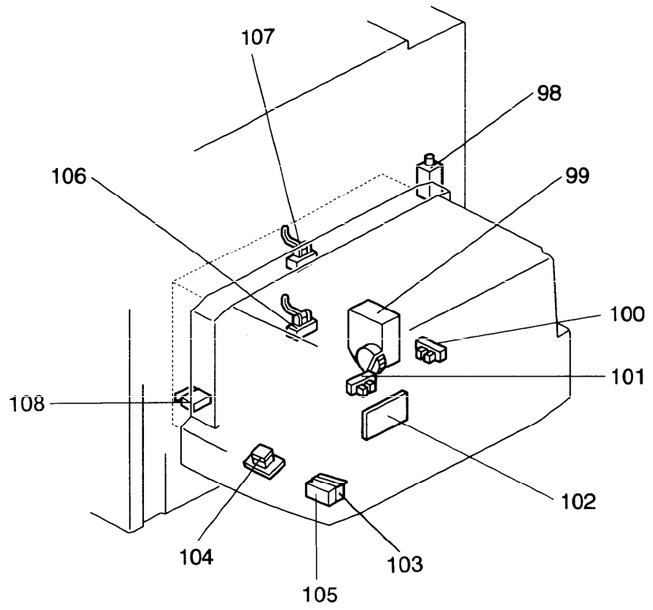

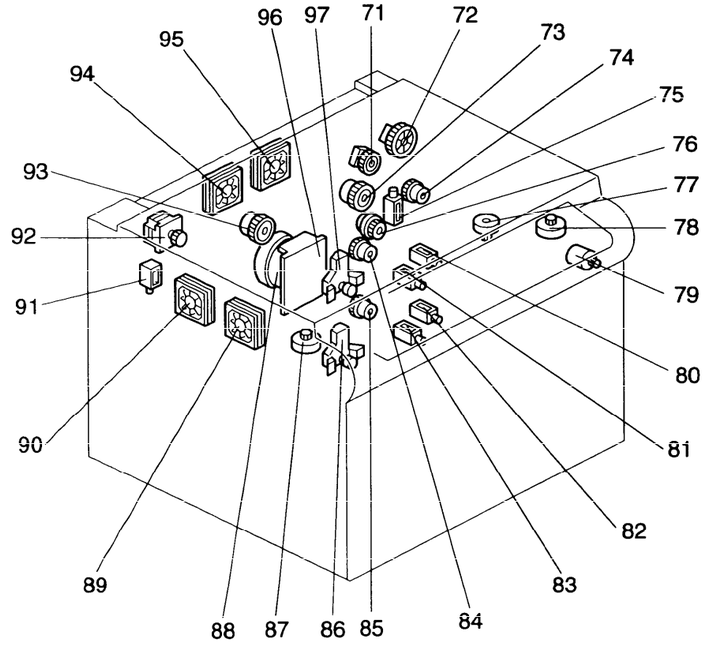

Description	Index No.	P to P Location
Exit Cover Safety Switch (A157/A159/A160 machines only) (SW12)	48	D10
Drum Charge Thermistor (TH4)	49	I2
Image Density Sensor (ID) (S13)	50	I3
Upper Tray Paper End Sensor (Non-duplex machines only) (S3)	51	H16
Lower Tray Paper End Sensor (S6)	52	I16
Toner Density Sensor (TD) (S14)	53	I3
Toner End Sensor (S22)	54	D13
T High Voltage Supply Board (PCB6)	55	B12
Duplex Paper End Sensor (Duplex machines only) (S28)	56	K5
Duplex Turn Sensor (Duplex machines only) (S29)	57	K5
Duplex Feed Motor (Duplex machines only) (M14)	58	J8
Side Fence Jogger HP Sensor (Duplex machines only) (S31)	59	K6
Side Fence Jogger Motor (Duplex machines only) (M16)	60	K5
End Fence Jogger Motor (Duplex machines only) (M15)	61	K4
Duplex Entrance Sensor (Duplex machines only) (S30)	62	K6
Duplex Control Board (Duplex machines only) (PCB9)	63	J5
End Fence Jogger HP Sensor (Duplex machines only) (S32)	64	K6
Main Fusing Lamp (L2)	65	A7
Secondary Fusing Lamp (L3)	66	A8
Secondary Fusing Thermofuse (TF2)	67	B7
Main Fusing Thermofuse (TF1)	68	A7
Main Fusing Thermistor (TH1)	69	D12
Secondary Fusing Thermistor (TH2)	70	C12
Development Clutch (CL2)	71	D6
Toner Supply Clutch (CL1)	72	D5
Registration Clutch (CL4)	73	I10
By-pass Feed Clutch (CL5)	74	I10

Description	Index No.	P to P Location
LCT machines: LCT/By-Pass Pick up Solenoid Non-LCT machines: By-Pass Pick up Solenoid (SOL1)	75	I10
Relay Clutch (CL6)	76	K16
Lens Horizontal Drive Motor (M13)	77	G9
3rd Scanner Drive Motor (M11)	78	G8
Toner Bottle Drive Motor (M2)	79	D6
Upper Tray Pick-up Solenoid (A153/A155 machines only) (SOL4)	80	E16
Upper Tray Separation Solenoid (A153/A155 machines only) (SOL6)	81	F16
Lower Tray Pick-up Solenoid (A153/A155/A156 machines only) (SOL5)	82	F16
Lower Tray Separation Solenoid (A153/A155/A156 machines only) (SOL7)	83	F16
Upper- Paper Feed Clutch (Non-duplex machines only) (CL7)	84	E16
Lower Paper Feed Clutch (CL8)	85	E16
Lower Tray Lift Motor (A153/A155/A156 machines only) (M4)	86	G16
Lens Vertical Drive Motor (M12)	87	G8
Main Motor (M1)	88	D10
Exhaust Fan Motor 1 (M8)	89	D5
Exhaust Fan Motor 2 (A153/A155/A156 machines only) (M9)	90	D5
Junction Gate Solenoid (Duplex machines only) (SOL2)	91	G7
Scanner Drive Motor (M10)	92	F7
Transfer Belt Contact Clutch (CL3)	93	D11
Optics Cooling Fan Motor 1 (M6)	94	D4
Optics Cooling Fan Motor 2 (A153/A155/A156 machines only) (M7)	95	D5
Main Motor Control Board (PCB4)	96	D9
Upper Tray Lift Motor (A153/A155 machines only) (M3)	97	F16

Description	Index No.	P to P Location
LCT Pick-up Solenoid (LCT machines only) (SOL3)	98	J14
LCT Lift Motor (LCT machines only) (M5)	99	L11
LCT Lower Limit Sensor (LCT machines only) (S9)	100	J12
LCT Paper End Sensor (LCT machines only) (S10)	101	J13
LCT Interface Board (LCT machines only) (PCB11)	102	K12
LCT Cover Switch-2 (LCT machines only) (SW9)	103	K12
Tray Down Switch (LCT machines only) (SW4)	104	J13
LCT Cover Switch-1 (LCT machines only) (SW8)	105	J12
Lower Relay Sensor (S7)	106	I16
Upper Relay Sensor (S4)	107	H16
Vertical Guide Set Switch (SW7)	108	J16

CS130 (A557) 10 BIN SORTER
ELECTRICAL COMPONENT LAYOUT

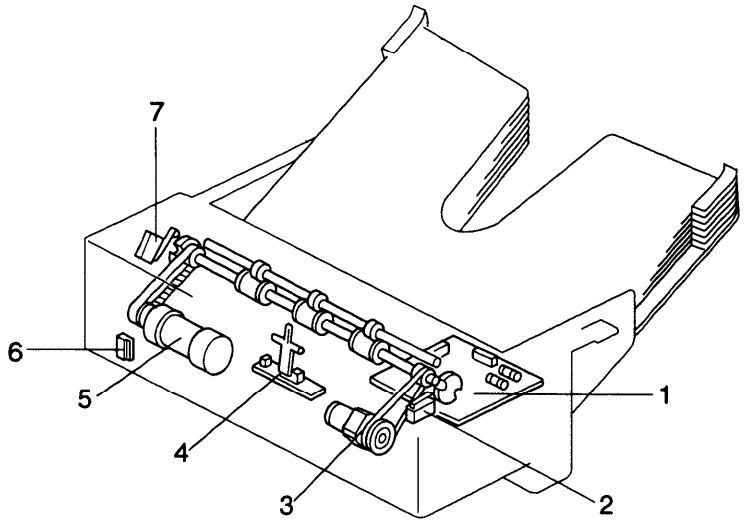

Description	Index No.	P to P Location
Sorter Main Board (PCB1)	1	F8
Wheel Switch (SW1)	2	H14
Roller Drive Motor (M1)	3	E14
Paper Sensor (S1)	4	J14
Bin Drive Motor (M2)	5	C14
Sorter Switch (SW2)	6	I14
Home Position Switch (SW3)	7	G14

CS130 (A557) 10 BIN SORTER POINT TO POINT DIAGRAM

Rev. 7/95

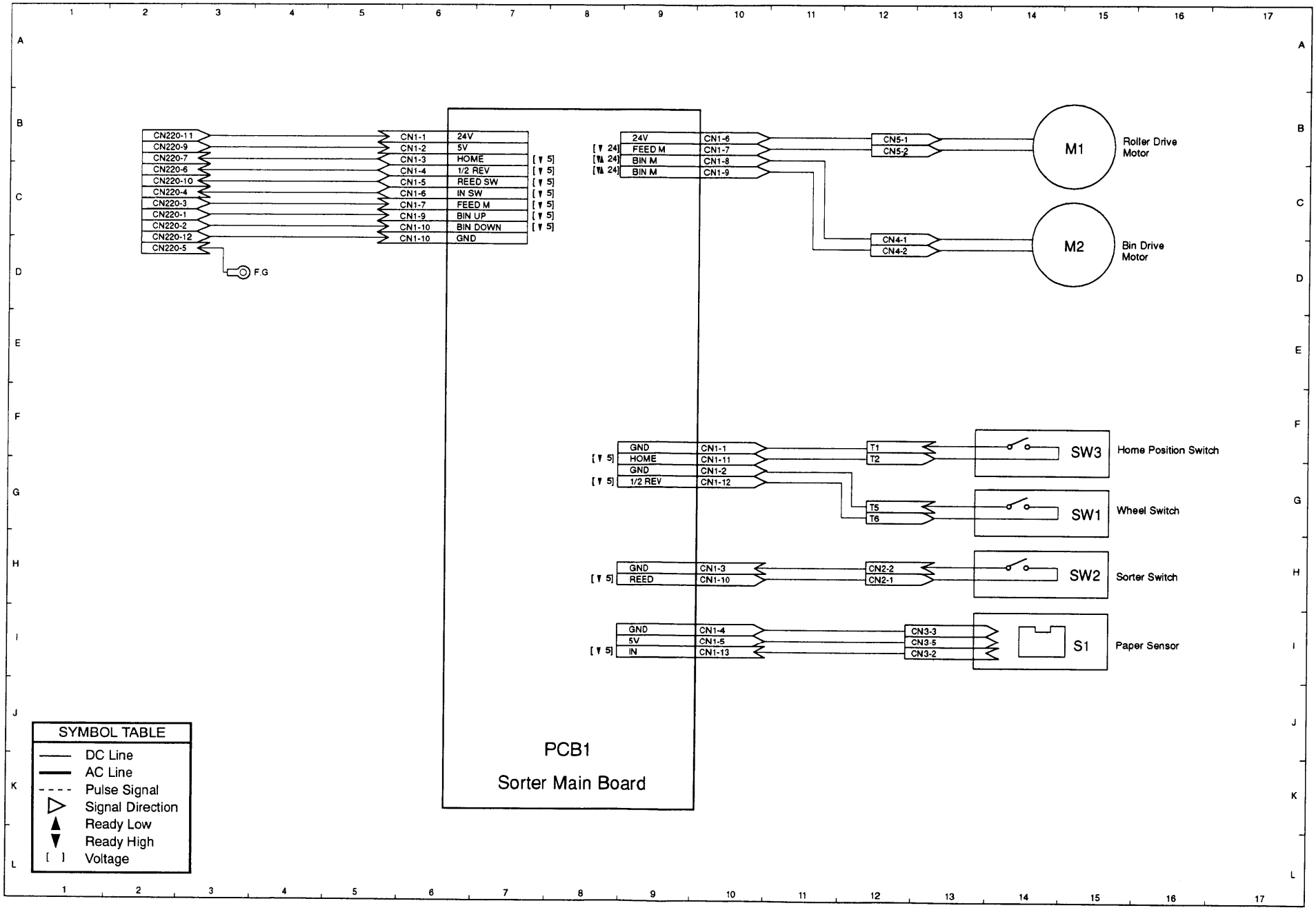

CS220 (A556) 20 BIN SORTER
ELECTRICAL COMPONENT LAYOUT

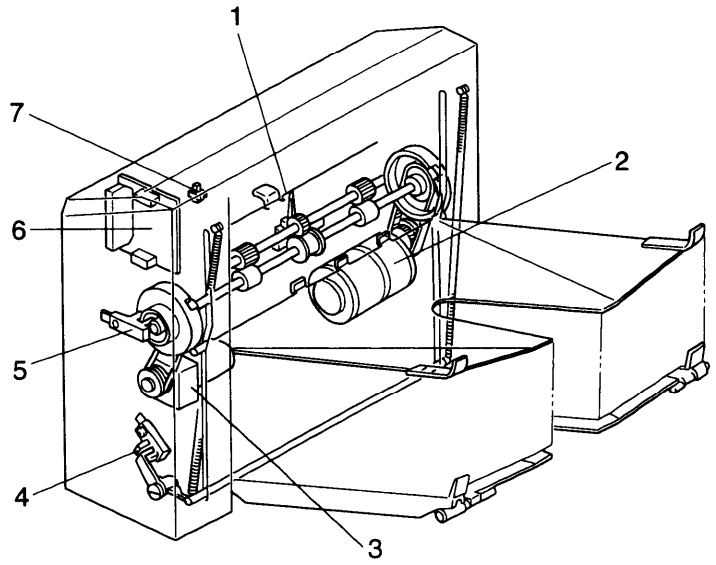

Description	Index No.	P to P Location
Paper Sensor (S1)	1	G15
Wheel Drive Motor (M1)	2	C15
Roller Drive Motor (M2)	3	E15
Bin Home Position Sensor (S2)	4	I15
Wheel Sensor (S3)	5	H15
Sorter Control Board (PCB1)	6	F8
Cover Safety Switch (SW1)	7	J15

CS220 (A556) POINT TO POINT DIAGRAM

Rev. 7/95

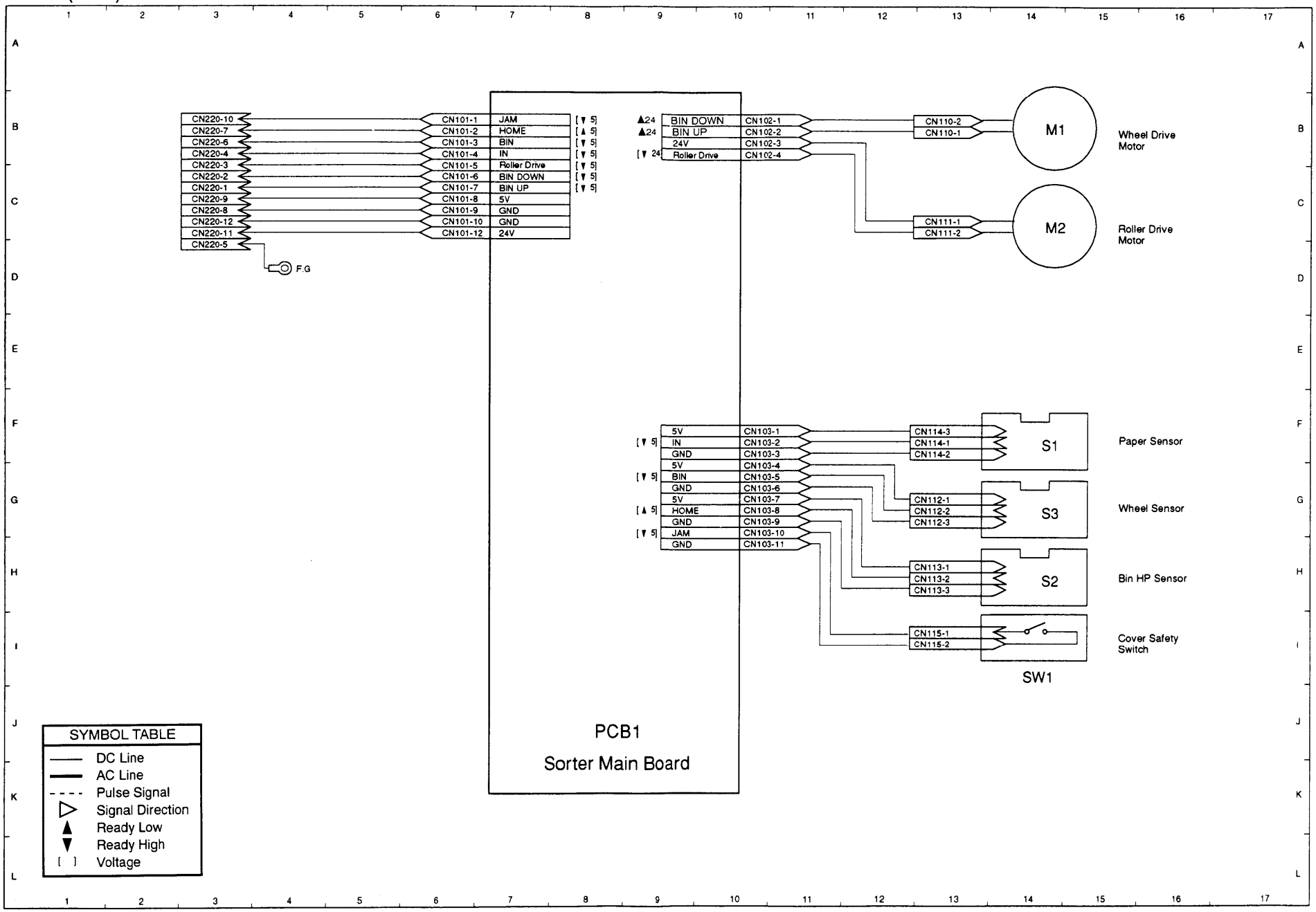

DF61 (A548) ARDF POINT TO POINT DIAGRAM

REV. 5/97

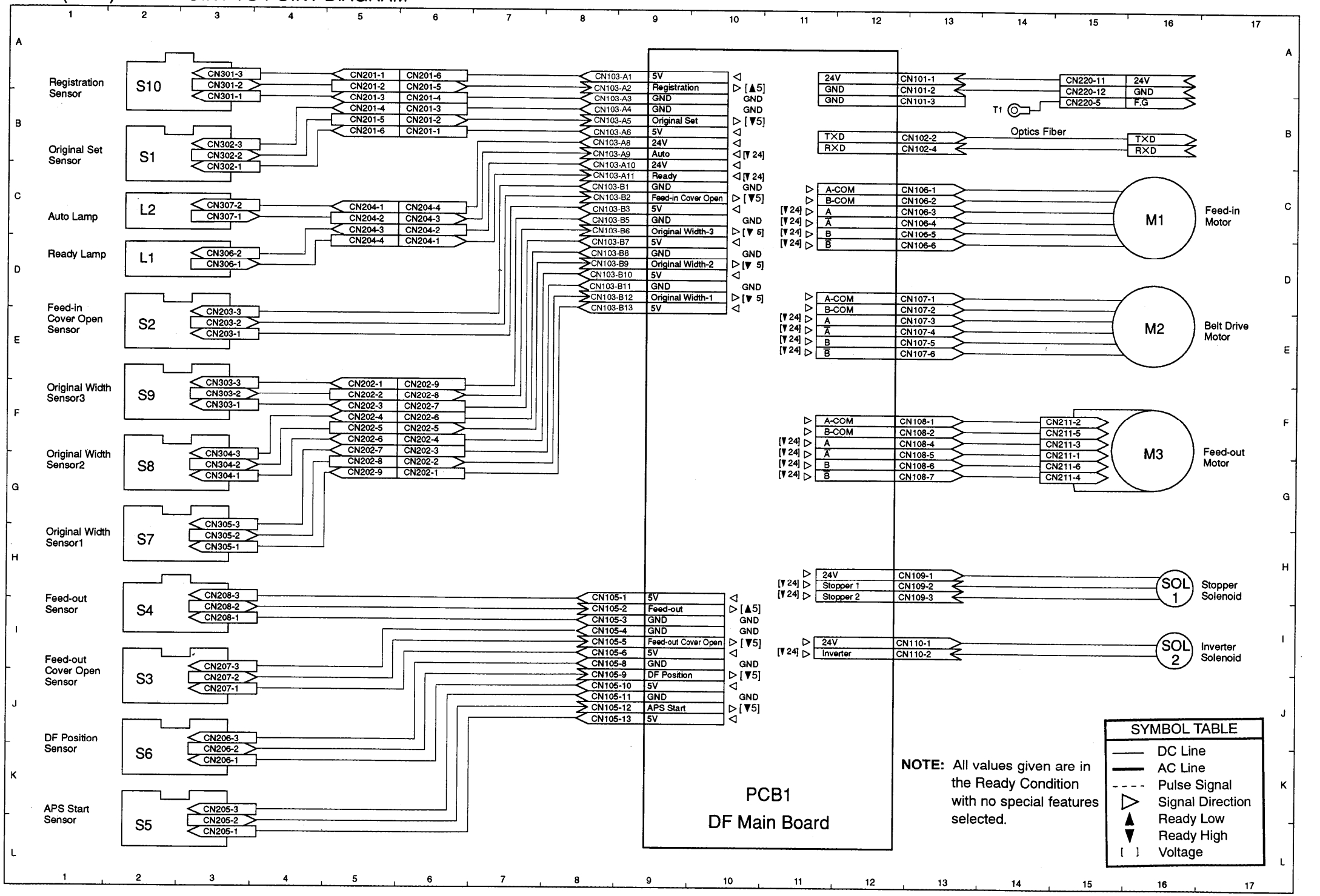

DF61 (A548) ARDF
ELECTRICAL COMPONENT LAYOUT

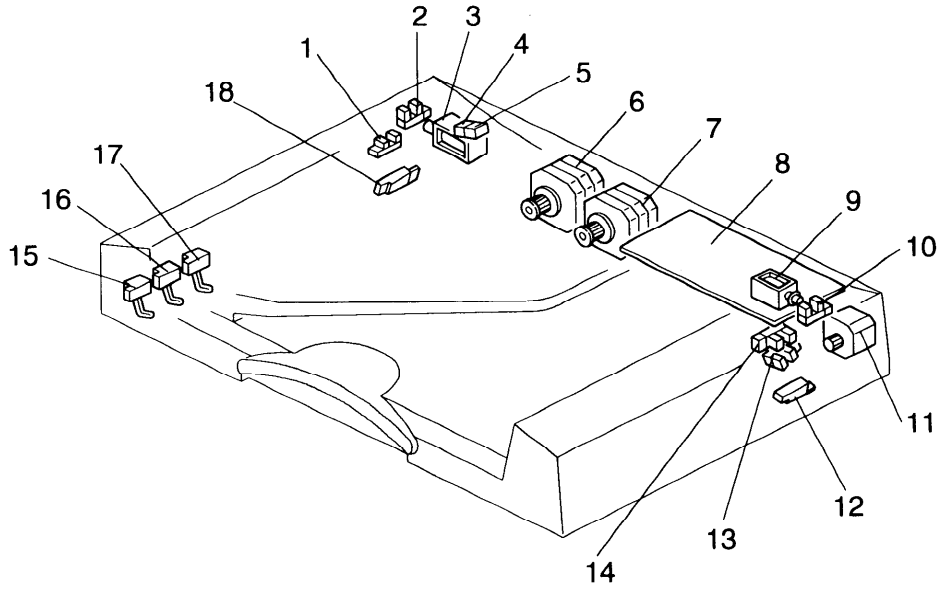

Description	Index No.	P to P Location
Original Set Sensor (S1)	1	B3
Feed-in Cover Open Sensor (S2)	2	E3
Stopper Solenoid (SOL1)	3	I16
Ready Lamp (L1)	4	D3
Auto Lamp (L2)	5	C3
Feed-in Motor (M1)	6	C16
Belt Drive Motor (M2)	7	E16
DF Main Board (PCB1)	8	F11
Inverter Solenoid (SOL2)	9	J16
Feed-out Cover Open Sensor (S3)	10	J3
Feed-out Motor (M3)	11	F16
Feed-out Sensor (S4)	12	I3
APS Start Sensor (S5)	13	L3
DF Position Sensor (S6)	14	K3
Original Width Sensor-1 (S7)	15	H3
Original Width Sensor-2 (S8)	16	G3
Original Width Sensor-3 (S9)	17	F3
Registration Sensor (S10)	18	A3

SYMBOL TABLE
- AC Line
- DC Line
- Pulse Line
- Signal Direction
- Ready Low
- Ready High
- Voltage

6. NOT USED ON FT4522/4022
5. EXCEPT LCT MACHINES
4. FOR LCT MACHINES.FUNCTIONS ARE CHANGED AS FOLLOWS:
   By-Pass Feed Pick Up SOL → LCT Pick Up SOL.
   LCT Pick Up SOL → By-Pass Feed Pick Up SOL
3. ONLY FOR LCT MACHINES
2. ONLY FOR DUPLEX MACHINES
(NOTE) 1. -EXCEPT DUPLEX MACHINES

♦SMC - SPRING ASSISTED MAGNETIC CLUTCH
★SW12 FT4527/4522 ONLY

POINT TO POINT DIAGRAM FT4527/4027/4522/4022 MACHINES

Rev. 7/96

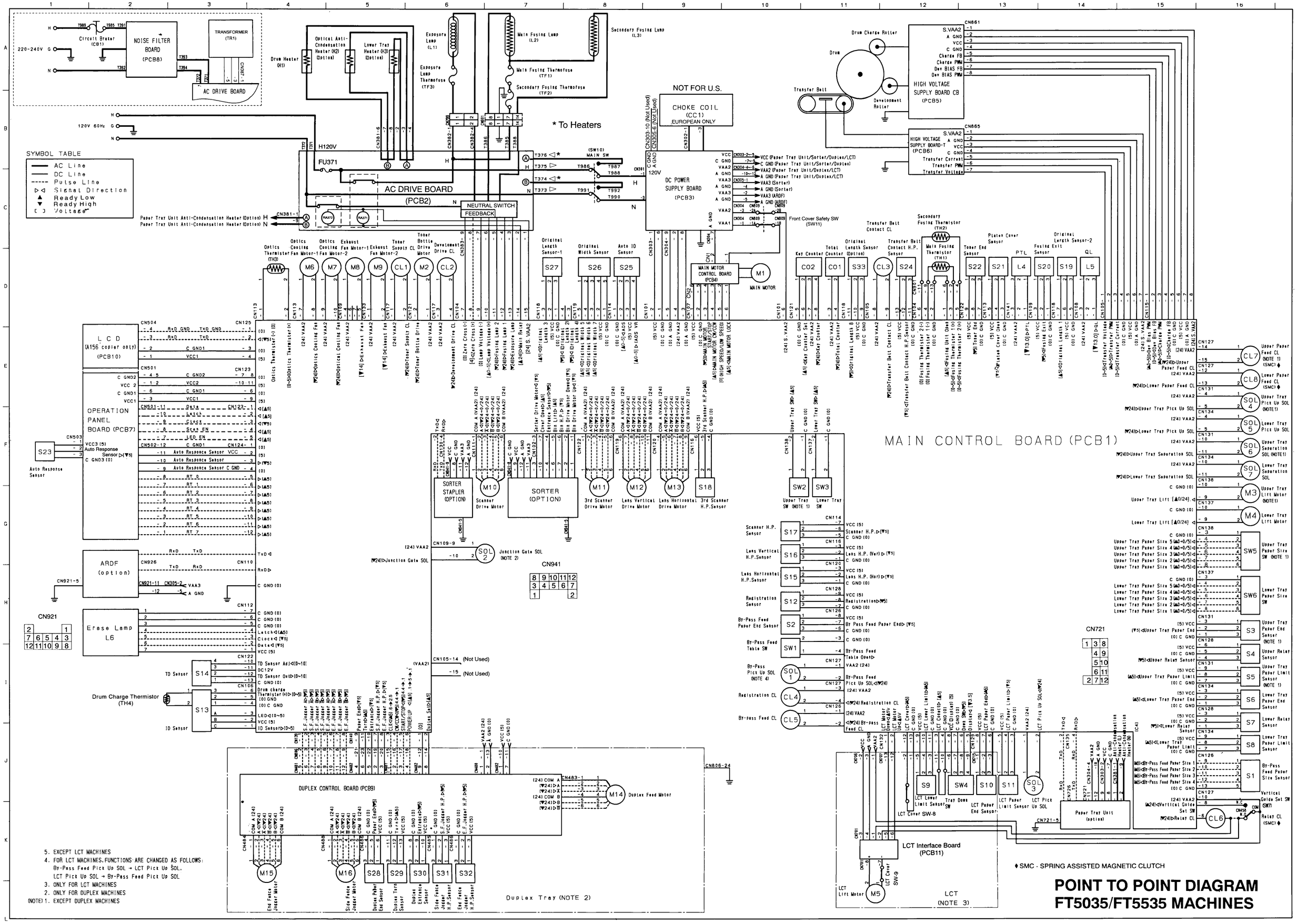
SYMBOL TABLE
AC Line
DC Line
Pulse Line
Signal Direction
Ready Low
Ready High
Voltage
AC DRIVE BOARD (PCB2)
DC POWER SUPPLY BOARD (PCB3)
MAIN MOTOR CONTROL BOARD (PCB4)
NOISE FILTER BOARD (PCB8)
TRANSFORMER (TR1)
Circuit Brator (CB1)
220-240V
120V 60Hz
H120V
FU371
NEUTRAL SWITCH FEEDBACK
CHOKE COIL (CC1) EUROPEAN ONLY
NOT FOR U.S.
* To Heaters
Drum Heater (H1)
Optical Anti-Condensation Heater (H2) (Option)
Lower Tray Heater (H3) (Option)
Exposure Lamp (L1)
Exposure Lamp Thermofuse (TF3)
Main Fusing Lamp (L2)
Main Fusing Thermofuse (TF1)
Secondary Fusing Lamp (L3)
Secondary Fusing Thermofuse (TF2)
Drum
Drum Charge Roller
Development Roller
Transfer Belt
HIGH VOLTAGE SUPPLY BOARD CB (PCB5)
HIGH VOLTAGE SUPPLY BOARD-T (PCB6)
Front Cover Safety SW (SW11)
Paper Tray Unit Anti-Condensation Heater (Option)
Optics Thermistor (TH3)
Optics Cooling Fan Motor-1
Optics Cooling Fan Motor-2
Exhaust Fan Motor-1
Exhaust Fan Motor-2
Toner Supply CL
Toner Bottle Drive Motor
Development Drive CL
Original Length Sensor-1
Original Width Sensor
Auto ID Sensor
Key Counter
Total Counter
Original Length Sensor (Option)
Transfer Belt Contact CL
Transfer Belt Contact H.P. Sensor
Secondary Fusing Thermistor (TH2)
Main Fusing Thermistor (TH1)
Toner End Sensor
Platen Cover Sensor
PTL
Fusing Exit Sensor
Original Length Sensor-2
QL
MAIN MOTOR
MAIN CONTROL BOARD (PCB1)
LCD (A156 copier only) (PCB10)
OPERATION PANEL BOARD (PCB7)
Auto Response Sensor
Erase Lamp L6
ARDF (option)
Drum Charge Thermistor (TH4)
TD Sensor
ID Sensor
SORTER STAPLER (OPTION)
SORTER (OPTION)
Scanner Drive Motor
3rd Scanner Drive Motor
Lens Vertical Drive Motor
Lens Horizontal Drive Motor
3rd Scanner H.P.Sensor
Junction Gate SOL (NOTE 2)
Upper Tray SW (NOTE 1)
Lower Tray SW
Scanner H.P. Sensor
Lens Vertical H.P.Sensor
Lens Horizontal H.P.Sensor
Registration Sensor
By-Pass Feed Paper End Sensor
By-Pass Feed Table SW
By-Pass Pick Up SOL (NOTE 4)
Registration CL
By-pass Feed CL
DUPLEX CONTROL BOARD (PCB9)
Duplex Feed Motor
Duplex Tray (NOTE 2)
LCT Interface Board (PCB11)
LCT Lift Motor
LCT Cover SW-8
LCT Cover SW-9
LCT (NOTE 3)
Paper Tray Unit (option)
Upper Paper Feed CL (NOTE 1) (SMC)♦
Lower Paper Feed CL (SMC)♦
Upper Tray Pick Up SOL (NOTE1)
Lower Tray Pick Up SOL
Upper Tray Separation SOL (NOTE1)
Lower Tray Separation SOL
Upper Tray Lift Motor (NOTE1)
Lower Tray Lift Motor
Upper Tray Paper Size SW (NOTE 1)
Lower Tray Paper Size SW
Upper Tray Paper End Sensor (NOTE 1)
Upper Relay Sensor
Upper Tray Paper Limit Sensor (NOTE 1)
Lower Tray Paper End Sensor
Lower Relay Sensor
Lower Tray Paper Limit Sensor
By-Pass Feed Paper Size Sensor
Vertical Guide Set SW (SW7)
Relay CL (SMC)♦
♦ SMC - SPRING ASSISTED MAGNETIC CLUTCH
5. EXCEPT LCT MACHINES
4. FOR LCT MACHINES, FUNCTIONS ARE CHANGED AS FOLLOWS:
By-Pass Feed Pick Up SOL → LCT Pick Up SOL.
LCT Pick Up SOL → By-Pass Feed Pick Up SOL
3. ONLY FOR LCT MACHINES
2. ONLY FOR DUPLEX MACHINES
(NOTE) 1. EXCEPT DUPLEX MACHINES
POINT TO POINT DIAGRAM
FT5035/FT5535 MACHINES

PS270 (A553) PAPER TRAY UNIT
ELECTRICAL COMPONENT LAYOUT

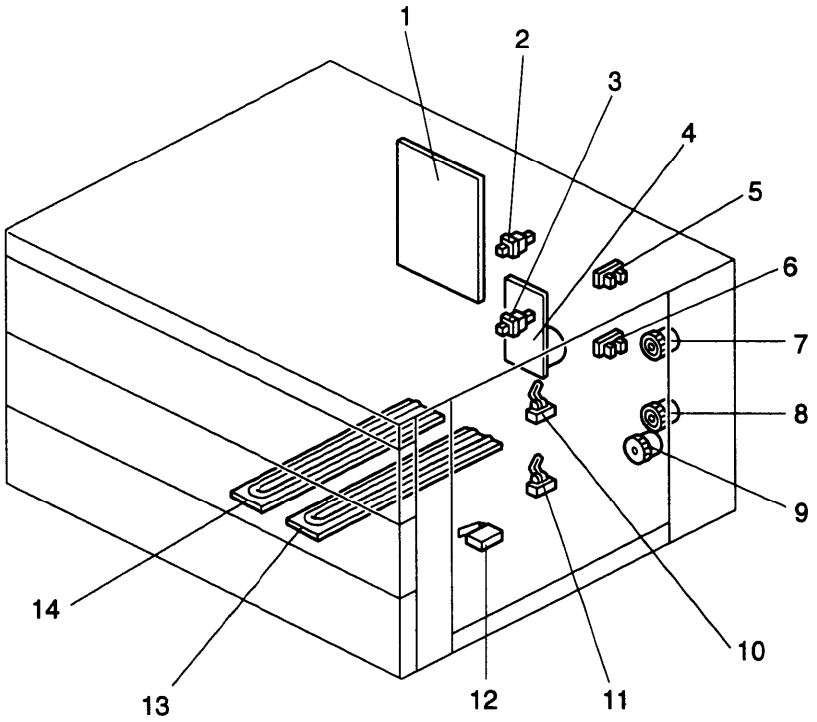

Description	Index No.	P to P Location
Interface Board (PCB1)	1	F8
Tray Set Switch 1 (SW2)	2	H2
Tray Set Switch 2 (SW3)	3	I2
Main Motor (M1)	4	G2
Paper End Sensor 1 (S3)	5	G16
Paper End Sensor 2 (S4)	6	G16
Paper Feed Clutch 1 (CL1)	7	I16
Paper Feed Clutch 2 (CL2)	8	I16
Relay Clutch (CL3)	9	H16
Relay Sensor 1 (S1)	10	B16
Relay Sensor 2 (S2)	11	C16
Tray Cover Switch (SW1)	12	B16
Tray Heater (Option) (H1)	13	C6
Tray Heater (Option) (H2)	14	D6

PS270 (A553) PAPER TRAY UNIT POINT TO POINT DIAGRAM

Rev. 7/95

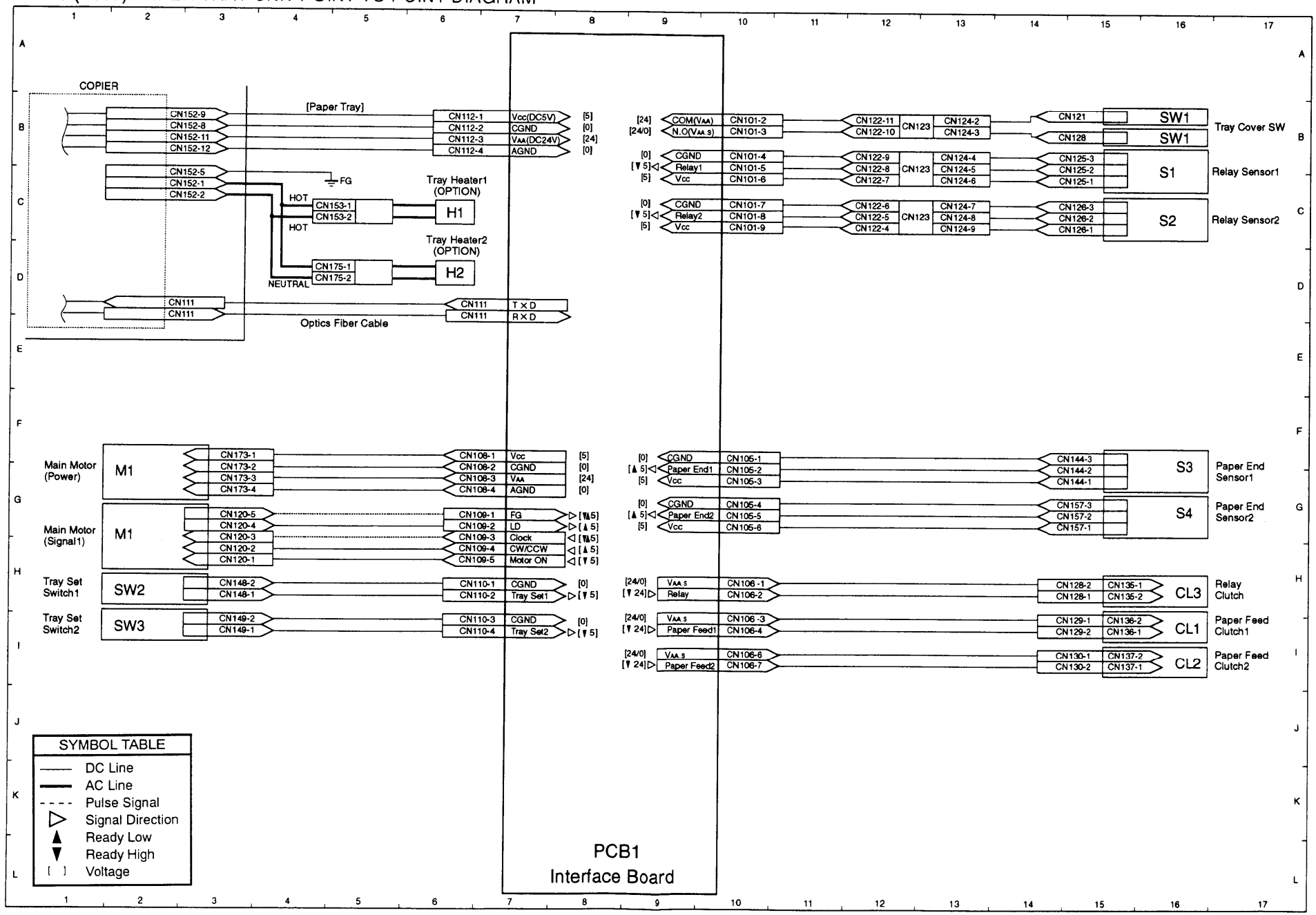

PS290/280 (A550/549) PAPER TRAY UNIT ELECTRICAL COMPONENT LAYOUT

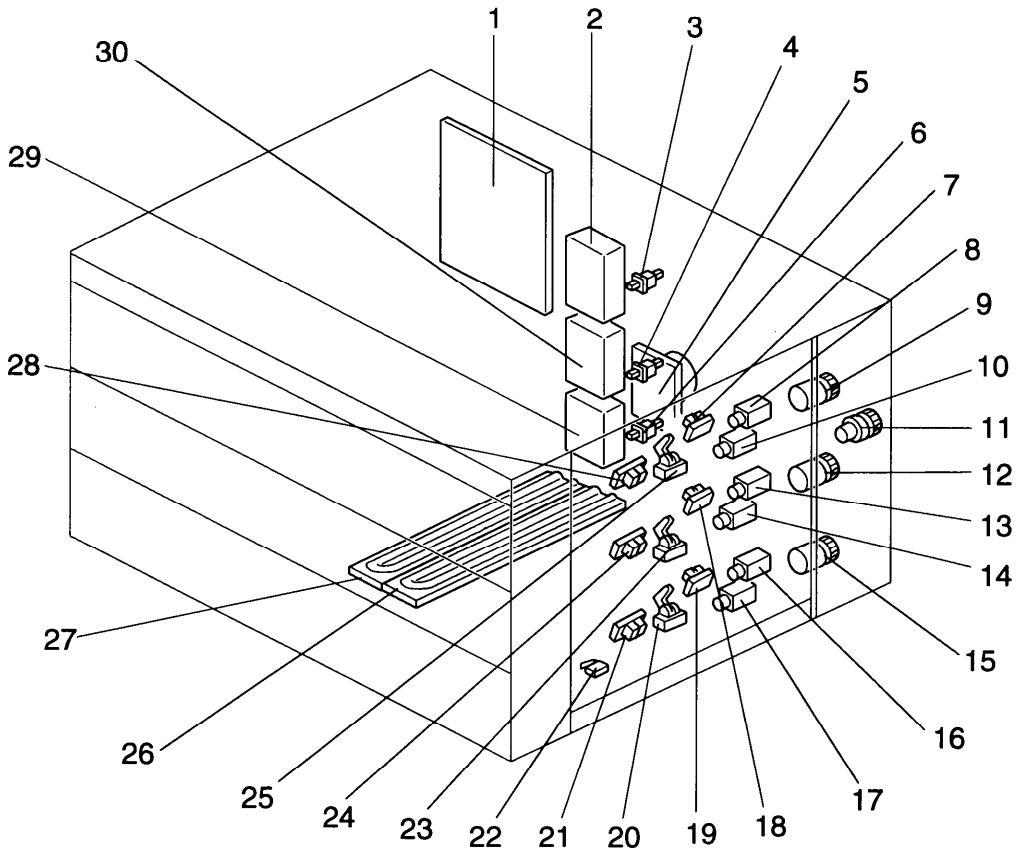

Description	Index No.	P to P Location
Interface Board (PCB1)	1	F8
Tray Lift Motor 1 (M2)	2	E2
Tray Set Switch 1 (SW2)	3	H2
Tray Set Switch 2 (SW3)	4	H2
Main Motor (M1)	5	F2
Tray Set Switch 3 (A549 only) (SW4)	6	I2
Tray Upper Limit Sensor 1 (S1)	7	E16
Paper Pick-up Solenoid 1 (SOL1)	8	D16
Paper Feed Clutch 1 (CL1)	9	K16
Separation Solenoid 1 (SOL4)	10	E16
Relay Clutch (CL4)	11	J16
Paper Feed Clutch 2 (CL2)	12	K16
Paper Pick-up Solenoid 2 (SOL2)	13	F16
Separation Solenoid 2 (SOL5)	14	G16
Paper Feed Clutch 3 (A549 only) (CL3)	15	L16
Paper Pick-up Solenoid 3 (A549 only) (SOL3)	16	I16
Separation Solenoid 3 (A549 only) (SOL6)	17	J16
Tray upper Limit Sensor 2 (S2)	18	G16
Tray upper Limit Sensor 3 (A549 only) (S3)	19	I16
Relay Sensor 3 (A549 only) (S6)	20	C16
Paper End Sensor 3 (A549 only) (S9)	21	H16
Tray Cover Switch (SW1)	22	A16
Relay Sensor 2 (S5)	23	B16
Paper End Sensor 2 (S8)	24	F16
Relay Sensor 1 (S4)	25	B16
Tray Heater (Option) (H1)	26	B6
Tray Heater (Option) (H2)	27	C6
Paper End Sensor 1 (S7)	28	C16
Tray Lift Motor 3 (A549 only) (M4)	29	F2
Tray Lift Motor 2 (M3)	30	E2

PS290/280 (A550/549) PAPER TRAY UNIT POINT TO POINT DIAGRAM

Rev. 10/31/96

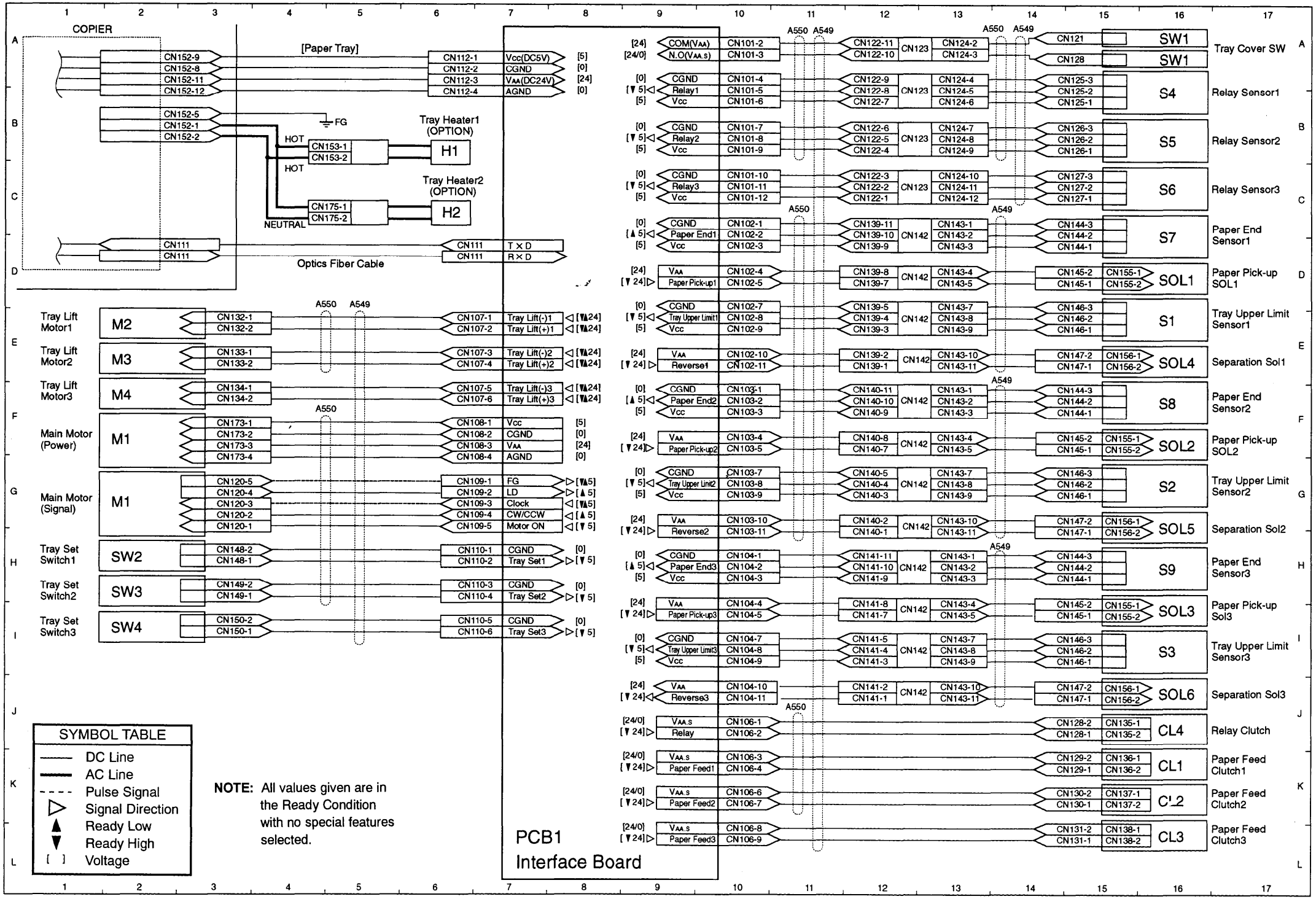

ST10 (A555) 10 BIN SORTER STAPLER POINT TO POINT DIAGRAM

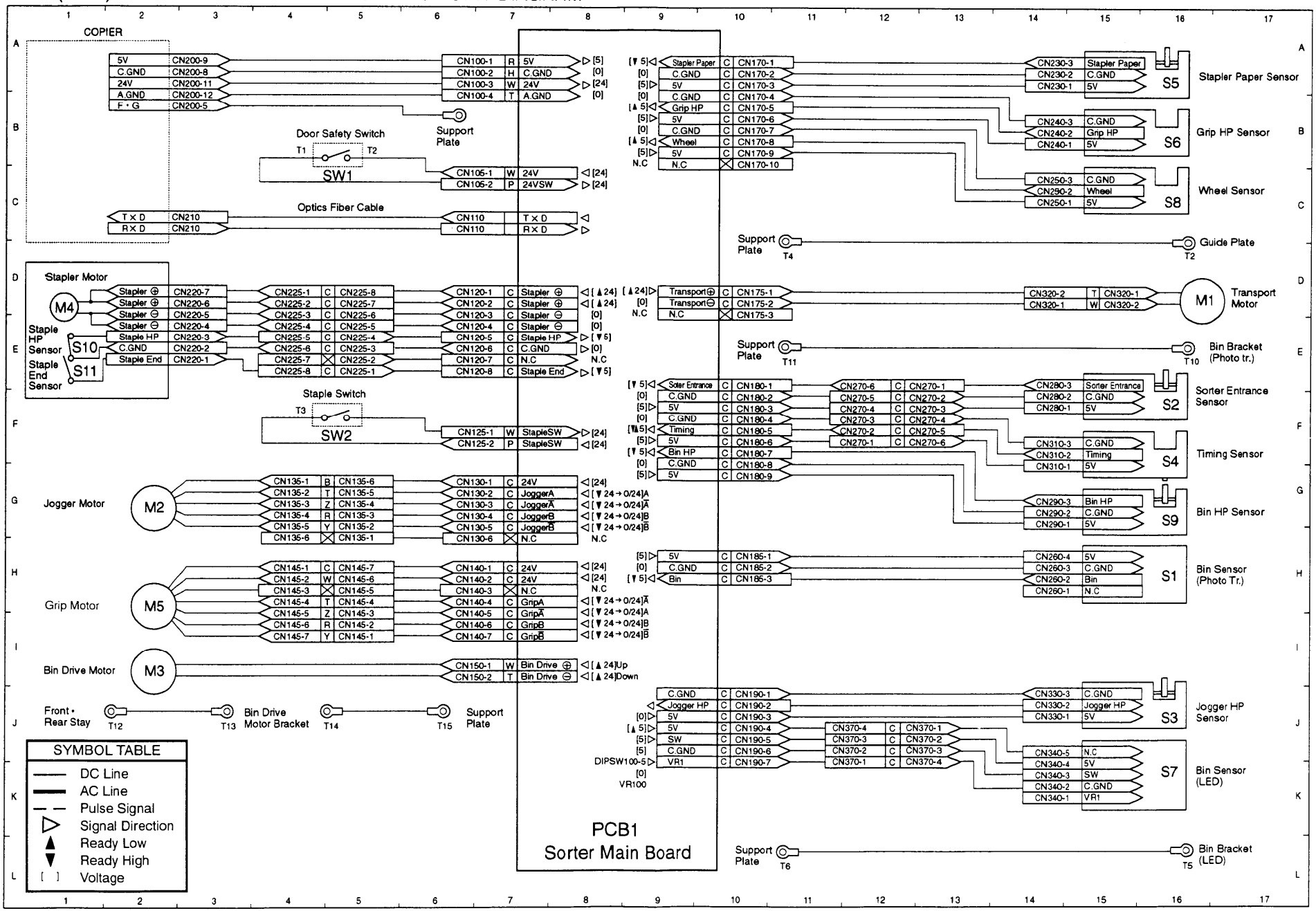

ST10 (A555) 10 BIN SORTER STAPLER
ELECTRICAL COMPONENT LAYOUT

Rev. 7/95

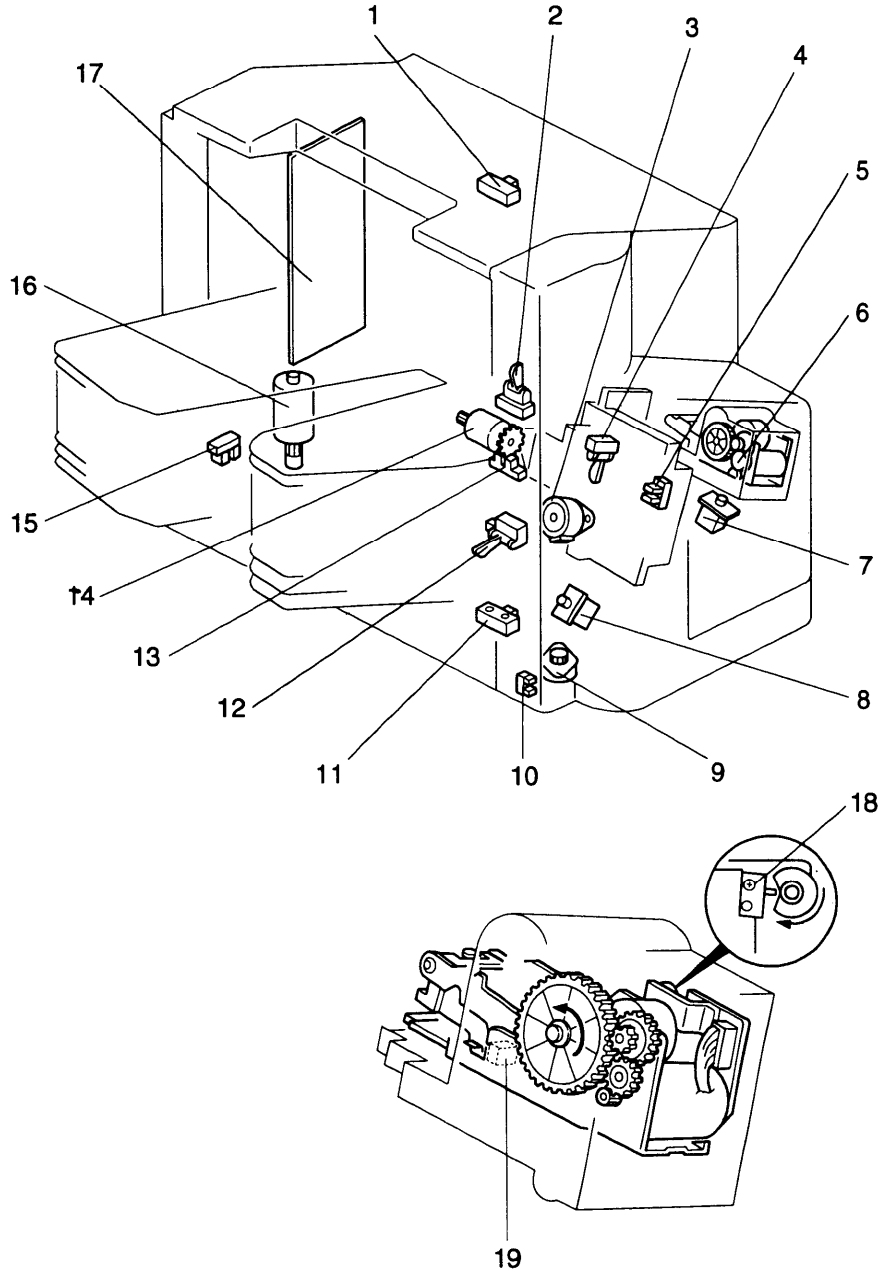

Description	Index No.	P to P Location
Bin Sensor (Photo tr.) (S1)	1	I15
Sorter Entrance Sensor (S2)	2	F15
Grip Motor (M5)	3	I2
Stapler Paper Sensor (S5)	4	A15
Grip H.P. Sensor (S6)	5	B15
Stapler Motor (M4)	6	E1
Door Safety Switch (SW1)	7	F5
Stapler Switch (SW2)	8	C5
Jogger Motor (M2)	9	H2
Wheel Sensor (S8)	10	C15
Bin Sensor (LED) (S7)	11	K15
Bin H.P. Sensor (S9)	12	H15
Timing Sensor (S4)	13	G15
Transport Motor (M1)	14	E16
Jogger H.P. Sensor (S3)	15	J15
Bin Drive Motor (M3)	16	K2
Main Board (PCB1)	17	F8
Staple H.P. Sensor (S10)	18	E1
Staple End Sensor (S11)	19	E1

ST26 (A554) 20 BIN SORTER STAPLER POINT TO POINT DIAGRAM

Rev. 7/95

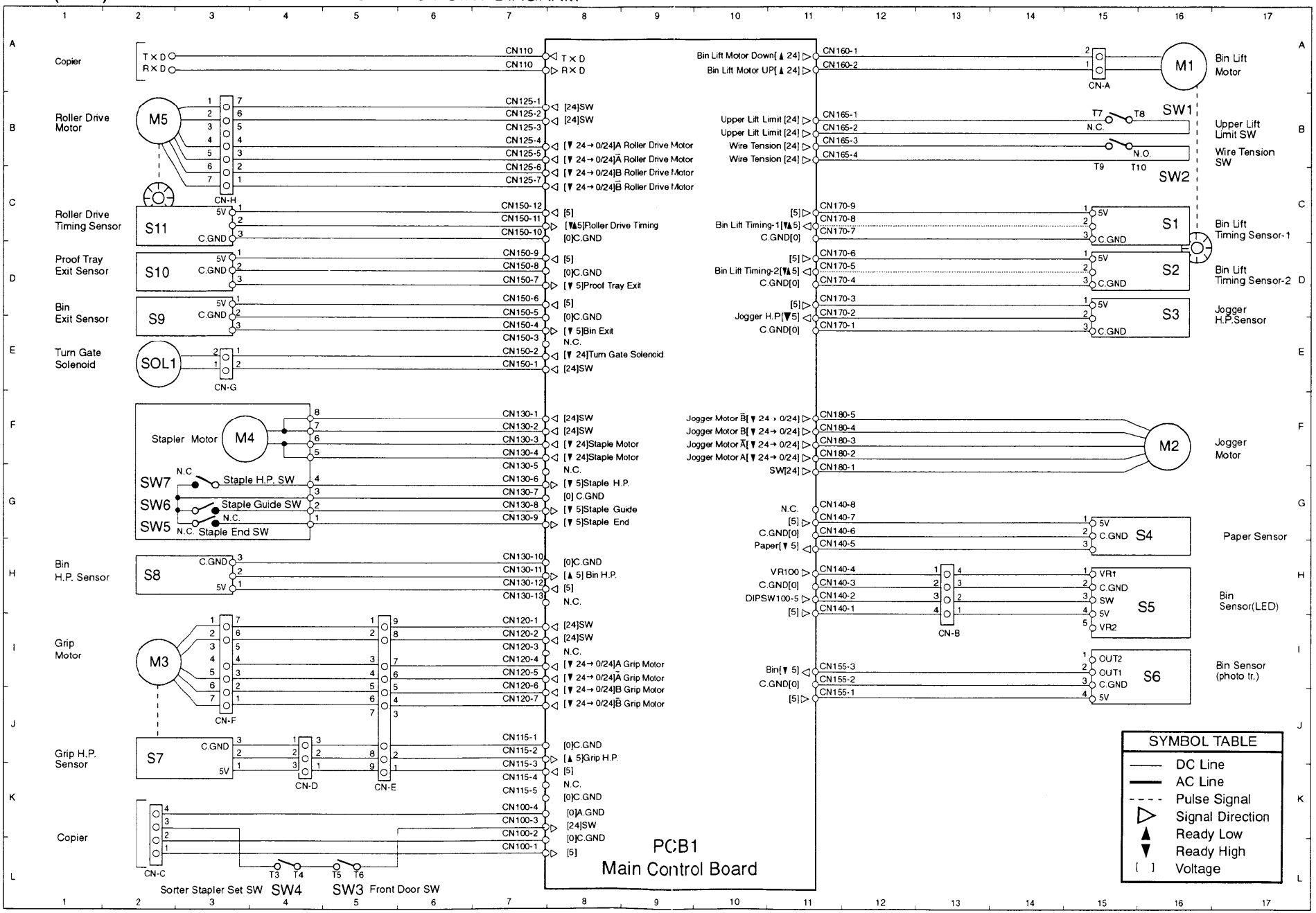

ST26 (A554) 20 BIN SORTER STAPLER
ELECTRICAL COMPONENT LAYOUT

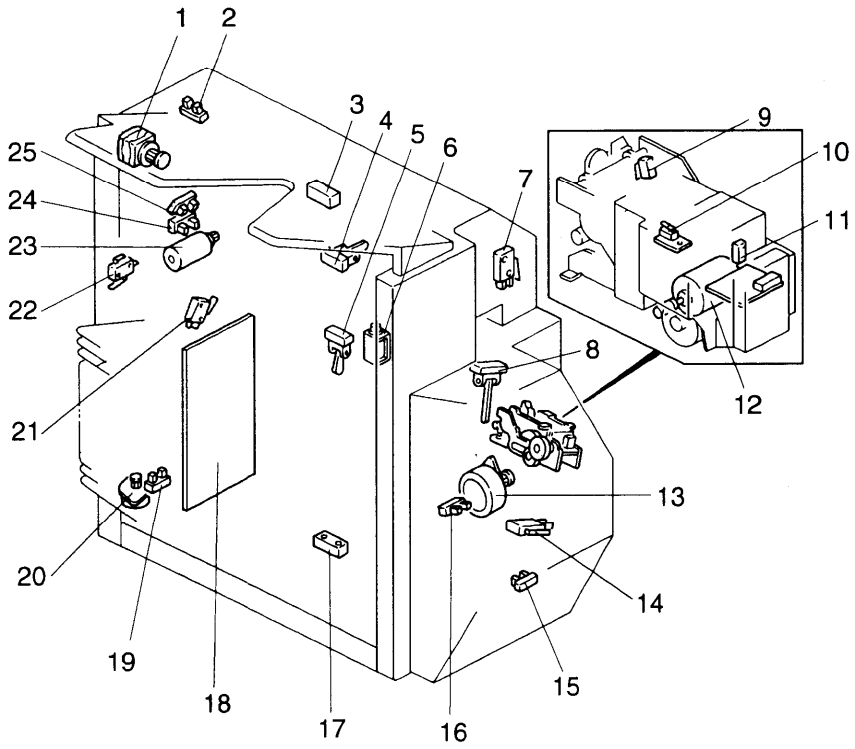

Description	Index No.	P to P Location
Roller Drive Motor (M5)	1	B2
Roller Drive Timing Sensor (S11)	2	C3
Bin Sensor (LED) (S5)	3	J16
Proof Tray Exit Sensor (S10)	4	D3
Bin Exit Sensor (S9)	5	D3
Turn Gate Solenoid (SOL1)	6	E3
Sorter Stapler Set Switch (SW4)	7	L4
Paper Sensor (S4)	8	I16
Staple Guide Switch (SW6)	9	G2
Staple End Switch (SW5)	10	G2
Staple H.P. Switch (SW7)	11	G2
Stapler Motor (M4)	12	F3
Grip Motor (M3)	13	I2
Front Door Switch (SW3)	14	L5
Bin H.P. Sensor (S8)	15	H3
Grip H.P. Sensor (S7)	16	J3
Bin Sensor (Photo tr.) (S6)	17	K16
Main Control Board (PCB1)	18	F9
Jogger H.P. Sensor (S3)	19	E16
Jogger Motor (M2)	20	G16
Wire Tension Switch (SW2)	21	B16
Upper Lift Limit Switch (SW1)	22	B16
Bin Lift Motor (M1)	23	A16
Bin Lift Timing -1 Sensor (S1)	24	C16
Bin Lift Timing -2 Sensor (S2)	25	D16

20 BIN SORTER STAPLER(A658) POINT TO POINT DIAGRAM

Rev. 5/15/97

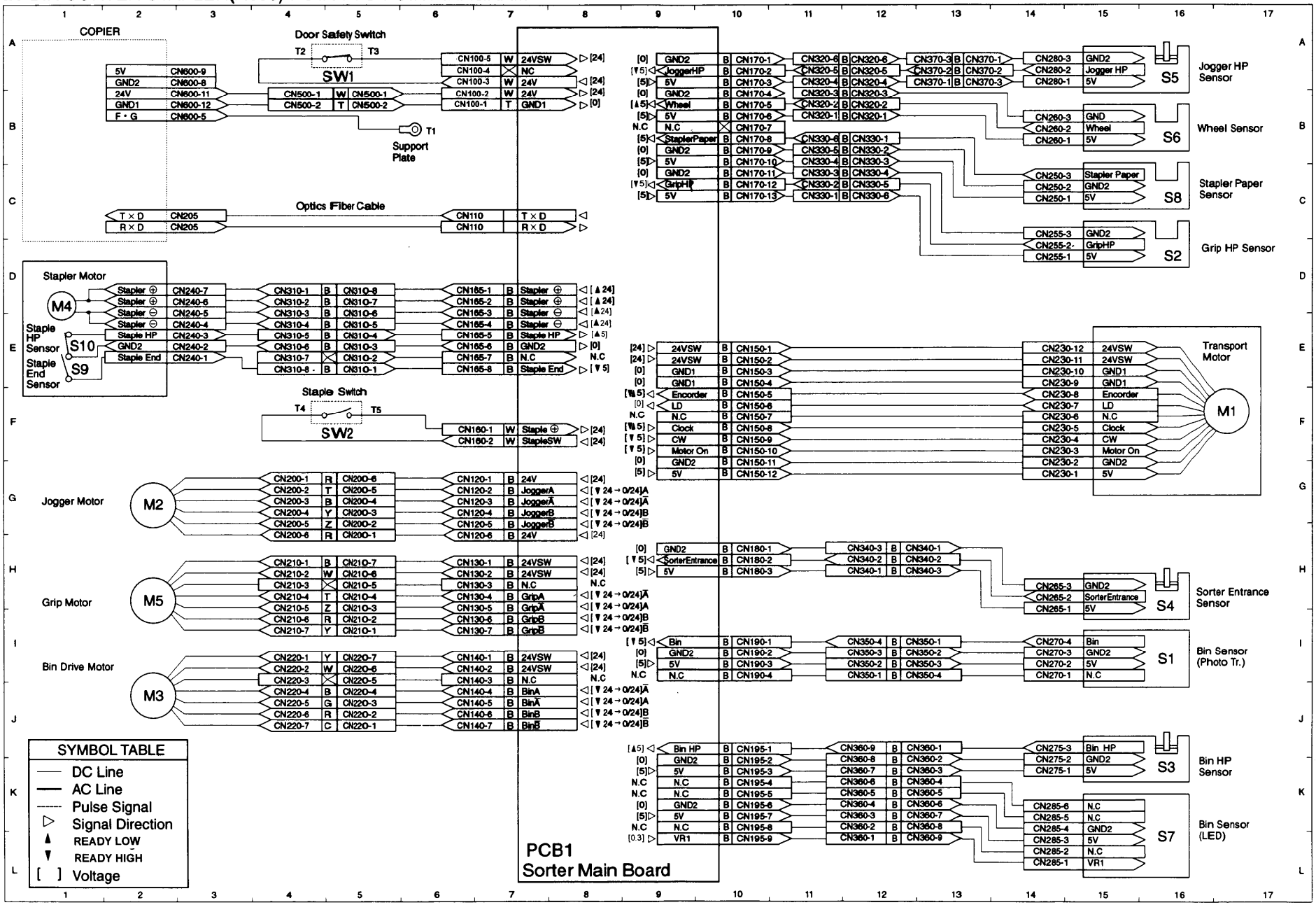

COPIER ELECTRICAL COMPONENT LAYOUT

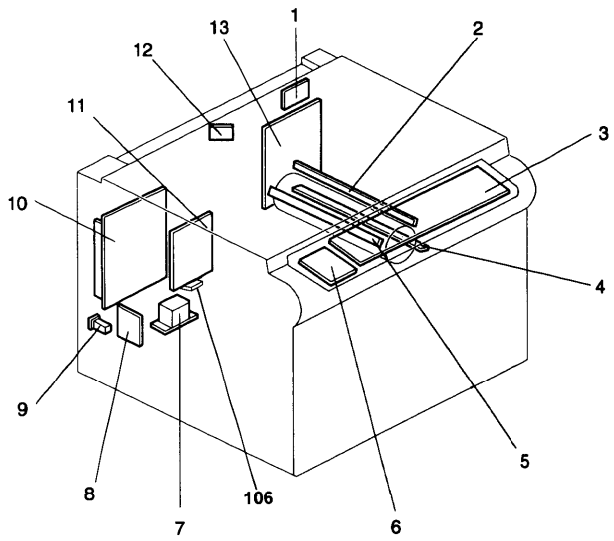

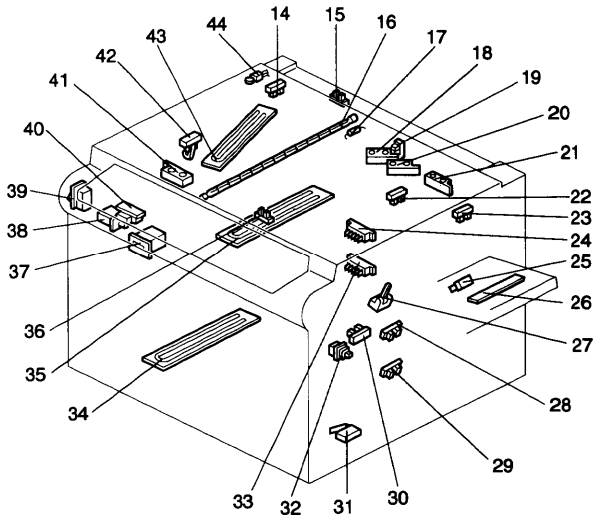

Description	Index No.	P to P Location
CB High Voltage Supply Board (PCB5)	1	A12
Erase Lamp (L6)	2	H2
Operation Panel Board (PCB7)	3	F2
Pre-transfer Lamp (L4)	4	D13
Quenching Lamp (L5)	5	D14
Liquid Crystal Display Board (A207 machines only) (PCB10)	6	E2
Transformer (220 ~ 240 V machines only) (TR1)	7	C3
Nose Filter Board (220 ~ 240 V machines only) (PCB8)	8	B4
Circuit Breaker (220 ~ 240 V machines only) (CB1)	9	B3
DC Power Supply Board (PCB3)	10	C9
AC Drive Board (PCB2)	11	C6
Auto Image Density Sensor (ADS Sensor) (S25)	12	D8
Main Control Board (PCB1)	13	F13
Relay (RY1)	106	C7

Rev. 5/15/97

Description	Index No.	P to P Location
Scanner HP Sensor (S17)	14	G10
Platen Cover Sensor (S21)	15	D13
Exposure Lamp (L1)	16	A6
Exposure Lamp Thermofuse (TF3)	17	A6
Original Length Sensor-1 (S27)	18	D7
Lens Vertical HP Sensor (S16)	19	G10
Original Length Sensor-2 (S19)	20	D14
Original Length Sensor (Option for N. American models) (S33)	21	D11
Transfer Belt Contact HP Sensor (S24)	22	D12
3rd Scanner HP Sensor (S18)	23	F9
Upper Tray Paper Size Switch (Non-duplex machines only) (SW3)	24	G16
LCT Upper Limit Sensor (LCT machines only) (S11)	25	J13
By-pass Feed Paper Width Sensor (S1)	26	J16
Registration Sensor (S12)	27	H10
Upper Tray Upper Limit Sensor (Non-duplex machines only) (S5)	28	I16
Lower Tray Upper Limit Sensor (S8)	29	J16
By-pass Feed Paper End Sensor (S2)	30	H10
Vertical Guide Set Switch (Non-LCT machines only) (SW5)	31	K16
By-pass Feed Table Switch (SW1)	32	I10
Lower Tray Paper Size Switch (SW4)	33	H16
Lower Tray Heater (option) (H3)	34	A5
Drum Heater (H1)	35	A4
Lens Horizontal HP Sensor (S15)	36	H10
Total Counter (CO1)	37	D11
Front Cover Safety Switch (SW9)	38	C10
Main Switch (SW8)	39	C8
Auto Response Sensor (S23)	40	F1
Original Width Sensor (S26)	41	D8
Fusing Exit Sensor (S20)	42	D14
Optics Anti-condensation Heater (option) (H2)	43	A5
Optics Thermistor (TH3)	44	D4

ARDF(A663) POINT TO POINT DIAGRAM

Rev. 5/15/97

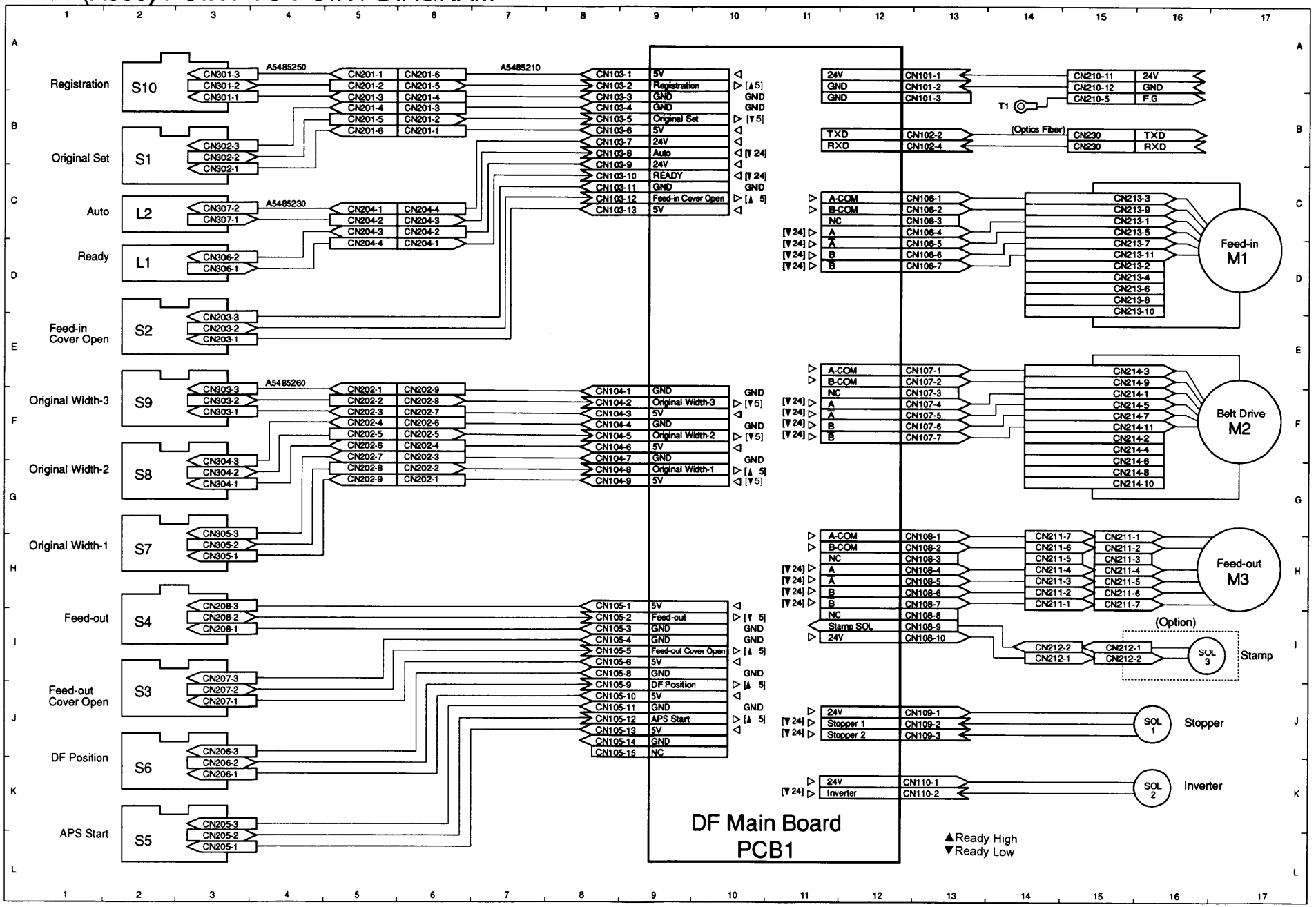

ARDF (A663) ELECTRICAL COMPONENT LAYOUT

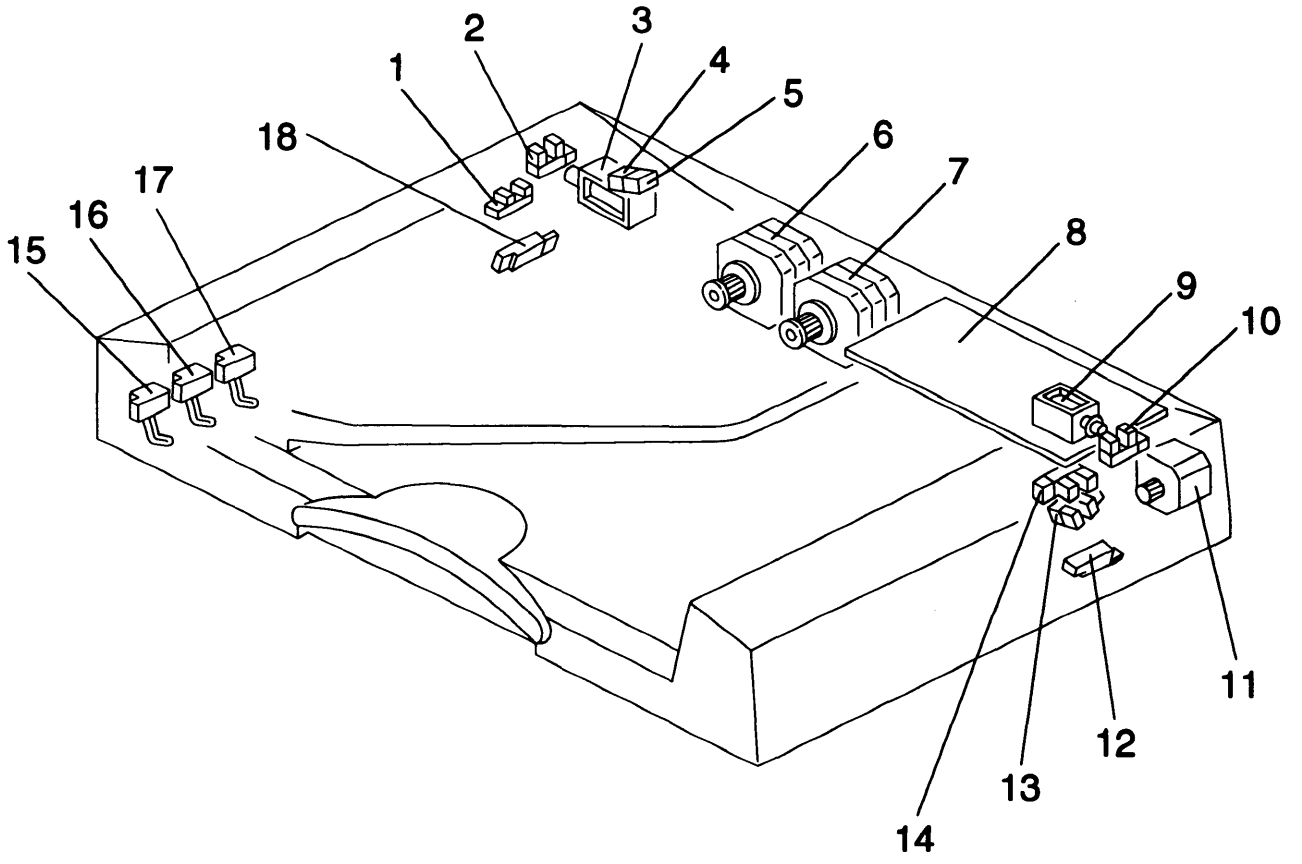

Description	Index No.	P to P Location
Original Set Sensor (S1)	1	B2
Feed-in Cover Open Sensor (S2)	2	E2
Stopper Solenoid (SOL1)	3	J16
Ready Lamp (L1)	4	D2
Auto Lamp (L2)	5	C2
Feed-in Motor (M1)	6	D17
Belt Drive Motor (M2)	7	F17
DF Main Board (PCB1)	8	F11
Inverter Solenoid (SOL2)	9	K16
Feed-out Cover Open Sensor (S3)	10	J2
Feed-out Motor (M3)	11	H17
Feed-out Sensor (S4)	12	I2
APS Start Sensor (S5)	13	L2
DF Position Sensor (S6)	14	K2
Original Width Sensor-1 (S7)	15	H2
Original Width Sensor-2 (S8)	16	G2
Original Width Sensor-3 (S9)	17	F2
Registration Sensor (S10)	18	A2

20 BIN SORTER STAPLER (A664) ELECTRICAL COMPONENT LAYOUT

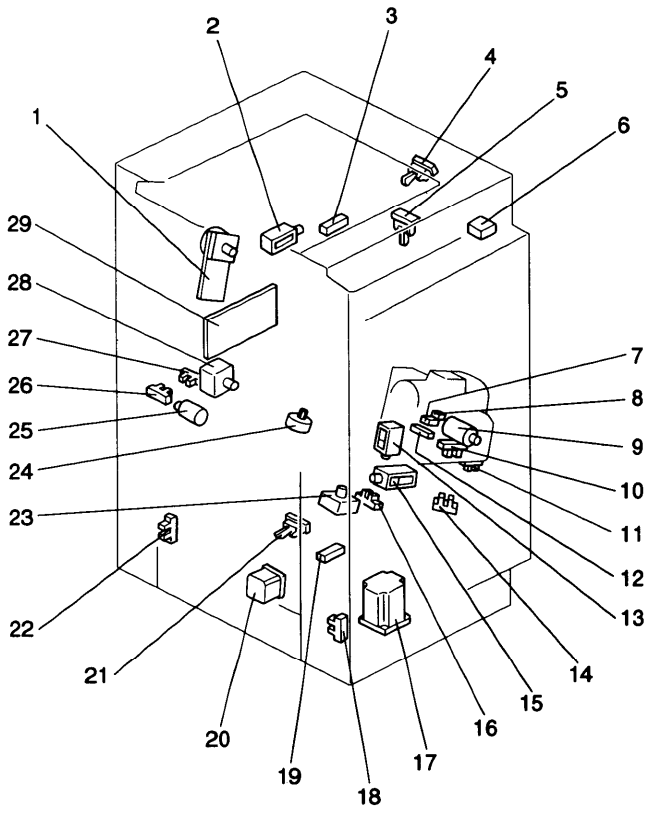

Description	Index No.	P to P Location
Main Motor (M1)	1	A3
Turn Gate Solenoid (SOL1)	2	A4
Bin Jam (LED) Sensor (S1)	3	G1
Proof Exit Sensor(S2)	4	A5
Entrance Sensor (S3)	5	A4
Door Safety Switch (SW1)	6	B2
Cartridge Set Switch (SW2)	7	A11
Staple End Switch (SW3)	8	A11
Staple Motor (M2)	9	A10
Staple Hammer Home Position Sensor (S4)	10	A11
Staple Unit Pulled-out position Sensor (S5)	11	A7
Paper Sensor (S6)	12	G8
Grip Solenoid (SOL2)	13	A9
Staple Unit Home Position Sensor (S7)	14	A8
Grip Arm Positioning Solenoid (SOL3)	15	A9
Grip Home Position Sensor (S8)	16	G9
Bin Drive Motor (M4)	17	G3
Wheel Sensor (S10)	18	G4
Bin Jam Sensor (Photo Tr.) (S9)	19	G2
Jogger Motor (M5)	20	G6
Bin Home Position (S11)	21	G4
Jogger Home Position Sensor (S12)	22	G5
Grip Motor (M3)	23	G10
Staple Unit Drive Motor (M6)	24	A8
Bin Rear Plate Drive Motor (M7)	25	A10
Bin Rear Plate Open Sensor (S13)	26	A6
Bin Rear Plate Home Position Sensor (S14)	27	A7
Sorter Exit Motor (M8)	28	A5
Main Control Board (PCB1)	29	D1

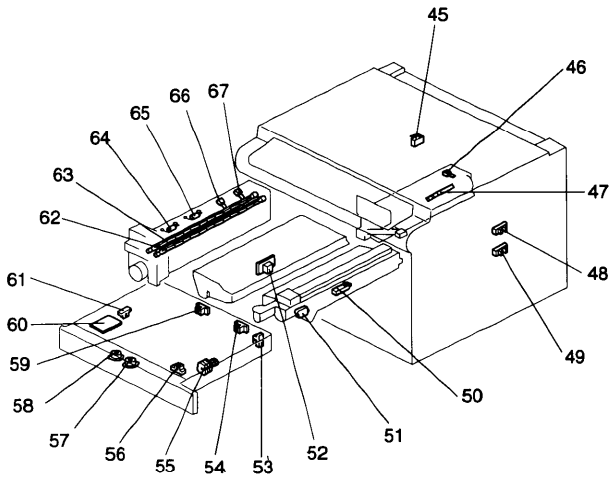

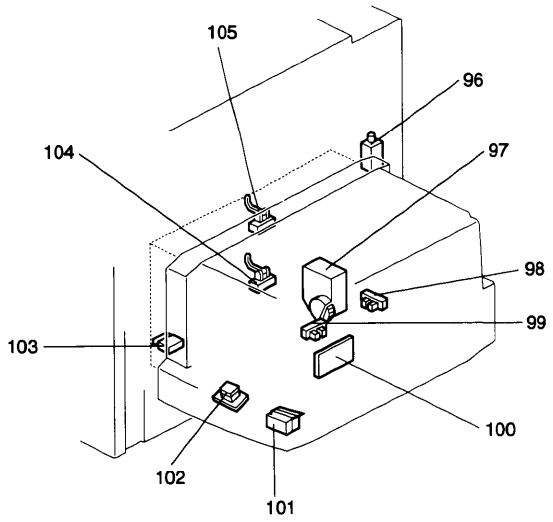

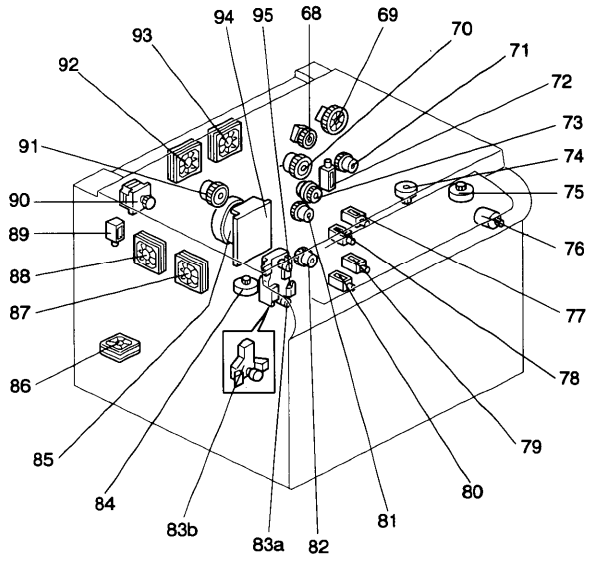

Rev. 5/15/97

Description	Index No.	P to P Location
Development Clutch (CL2)	68	D6
Toner Supply Clutch (CL1)	69	D5
Registration Clutch (CL4)	70	I10
By-pass Feed Clutch (CL5)	71	I10
LCT machines: LCT/By-Pass Pick up Solenoid Non-LCT machines: By-Pass Pick up Solenoid (SOL1)	72	I10
Relay Clutch (CL6)	73	K16
Lens Horizontal Drive Motor (M13)	74	G9
3rd Scanner Drive Motor (M11)	75	G8
Toner Bottle Drive Motor (M2)	76	D6
Upper Tray Pick-up Solenoid (Non-duplex machines only) (SOL4)	77	E16
Upper Tray Separation Solenoid (Non-duplex machines only) (SOL6)	78	F16
Lower Tray Pick-up Solenoid (SOL5)	79	F16
Lower Tray Separation Solenoid (SOL7)	80	F16
Upper- Paper Feed Clutch (Non-duplex machines only) (CL7)	81	E16
Lower Paper Feed Clutch (CL8)	82	E16
Lower Tray Lift Motor (Duplex machines only) (M4)	83a	G16
Lower Tray Lift Motor (Non-duplex machines only) (M4)	83b	G16
Lens Vertical Drive Motor (M12)	84	G8
Main Motor (M1)	85	D10
DC Board Cooling Fan Motor (A204/A206/A207 machines for N. American only) (M17)	86	I7
Exhaust Fan Motor 1 (M8)	87	D5
Exhaust Fan Motor 2 (A204/A206/A207 machines only) (M9)	88	D5
Junction Gate Solenoid (Duplex machines only) (SOL2)	89	G7
Scanner Drive Motor (M10)	90	F7
Transfer Belt Contact Clutch (CL3)	91	D12
Optics Cooling Fan Motor 1 (M6)	92	D4
Optics Cooling Fan Motor 2 (M7)	93	D5
Main Motor Control Board (PCB4)	94	D9
Upper Tray Lift Motor (Non-duplex machines only) (M3)	95	F16

Description	Index No.	P to P Location
Exit Cover Safety Switch (A211 machines only) (SW10)	45	C10
Drum Charge Thermistor (TH4)	46	I2
Image Density Sensor (ID) (S13)	47	I3
Upper Tray Paper End Sensor (Non-duplex machines only) (S3)	48	H16
Lower Tray Paper End Sensor (S6)	49	I16
Toner Density Sensor (TD) (S14)	50	I3
Toner End Sensor (S22)	51	D13
T High Voltage Supply Board (PCB6)	52	B12
Duplex Paper End Sensor (Duplex machines only) (S28)	53	K5
Duplex Turn Sensor (Duplex machines only) (S29)	54	K5
Duplex Feed Motor (Duplex machines only) (M14)	55	J8
Side Fence Jogger HP Sensor (Duplex machines only) (S31)	56	K6
Side Fence Jogger Motor (Duplex machines only) (M16)	57	K5
End Fence Jogger Motor (Duplex machines only) (M15)	58	K4
Duplex Entrance Sensor (Duplex machines only) (S30)	59	K6
Duplex Control Board (Duplex machines only) (PCB9)	60	J5
End Fence Jogger HP Sensor (Duplex machines only) (S32)	61	K6
Main Fusing Lamp (L2)	62	A7
Secondary Fusing Lamp (L3)	63	A8
Secondary Fusing Thermofuse (A208/A210/A211 machines only) (TF2)	64	B7
Main Fusing Thermofuse (TF1)	65	A7
Main Fusing Thermistor (TH1)	66	D12
Secondary Fusing Thermistor (A208/A210/A211 machines only) (TH2)	67	C12

Description	Index No.	P to P Location
LCT Pick-up Solenoid (LCT machines only) (SOL3)	96	J14
LCT Lift Motor (LCT machines only) (M5)	97	L11
LCT Lower Limit Sensor (LCT machines only) (S9)	98	J12
LCT Paper End Sensor (LCT machines only) (S10)	99	J13
LCT Interface Board (LCT machines only) (PCB11)	100	K12
LCT Cover Switch-2 (LCT machines only) (SW7)	101	K12
Tray Down Switch (LCT machines only) (SW2)	102	J13
LCT Cover Switch-1 (LCT machines only) (SW6)	103	J12
Lower Relay Sensor (S7)	104	J16
Upper Relay Sensor (S4)	105	I16

20 BIN SORTER STAPLER (A658) ELECTRICAL COMPONENT LAYOUT

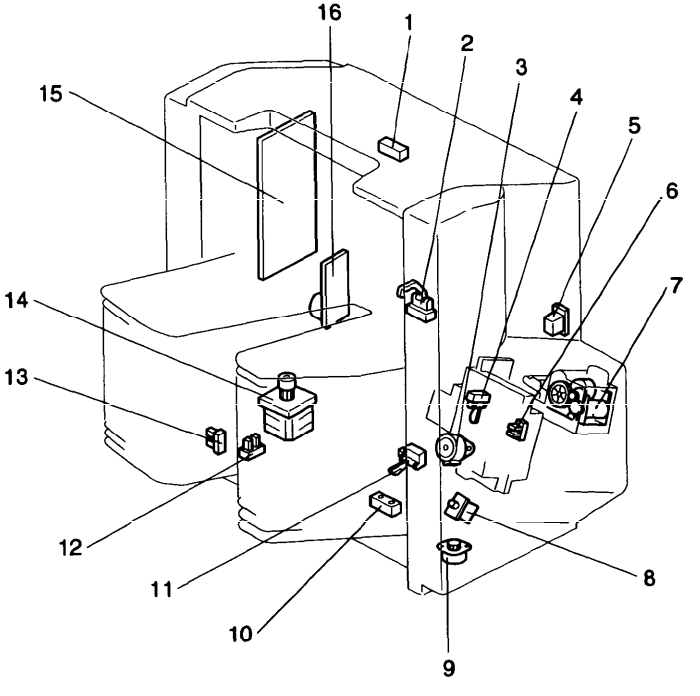

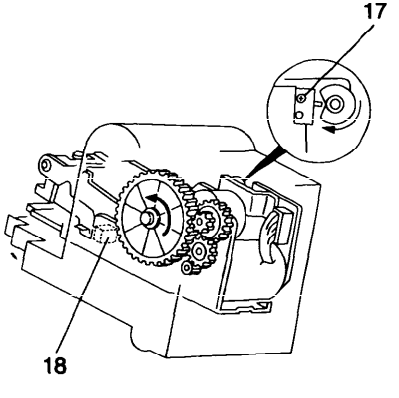

Description	Index No.	P to P Location
Bin Sensor (Photo tr.) (S1)	1	I16
Sorter Entrance Sensor (S4)	2	H16
Grip Motor (M5)	3	H2
Stapler Paper Sensor (S8)	4	C16
Door Safety Switch (SW1)	5	A5
Grip Home Position Sensor (S2)	6	D16
Stapler Motor (M4)	7	D1
Stapler Switch (SW2)	8	F5
Jogger Motor (M2)	9	G2
Bin Sensor (LED) (S7)	10	L16
Bin Home Position Sensor (S3)	11	K16
Wheel Sensor (S6)	12	B16
Jogger Home Position Sensor (S5)	13	A16
Bin Drive Motor (M3)	14	J2
Main Board (PCB1)	15	F8
Main Drive Motor (M1)	16	F17
Staple Home Position Sensor (S10)	17	E1
Staple End Sensor (S9)	18	E1

POINT TO POINT DIAGRAM SORTER STAPLER (A664)

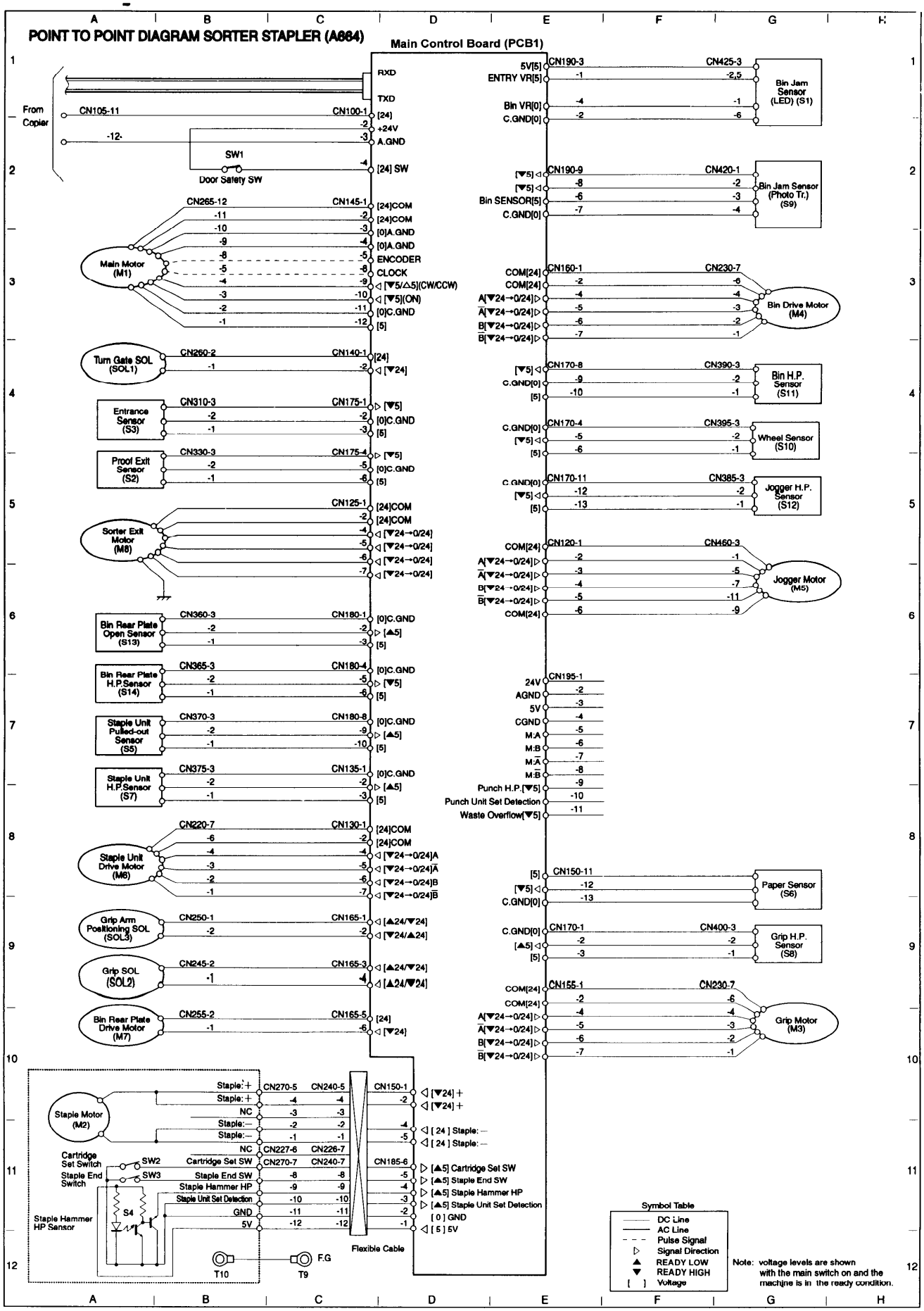

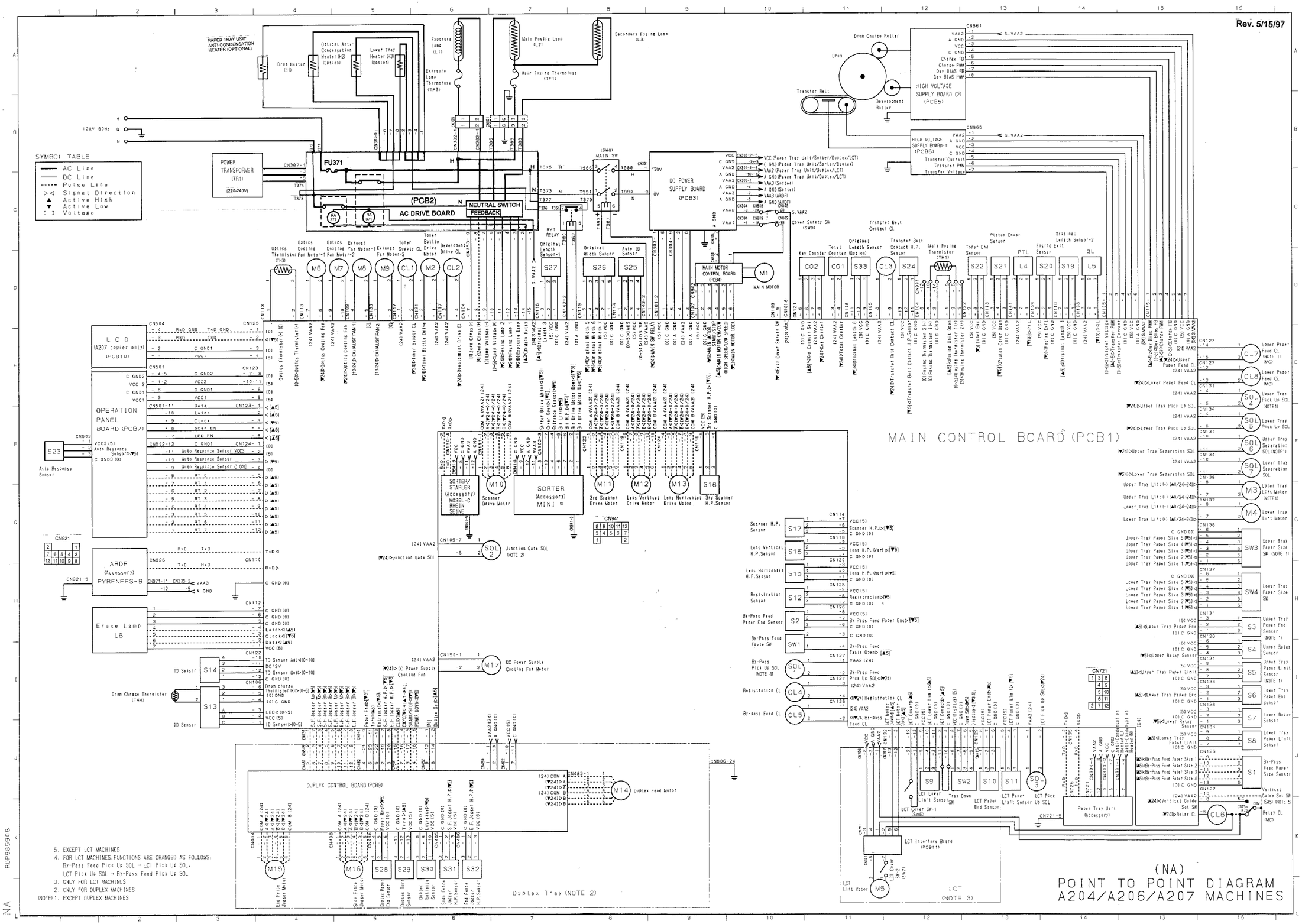
Rev. 5/15/97
SYMBOL TABLE
AC Line
DC Line
Pulse Line
Signal Direction
Active High
Active Low
Voltage
PAPER TRAY UNIT ANTI-CONDENSATION HEATER (OPTIONAL)
POWER TRANSFORMER (TR1) (220-240V)
FU371
(PCB2) AC DRIVE BOARD
NEUTRAL SWITCH FEEDBACK
DC POWER SUPPLY BOARD (PCB3)
MAIN MOTOR CONTROL BOARD (PCB4)
MAIN MOTOR
HIGH VOLTAGE SUPPLY BOARD CB (PCB5)
HIGH VOLTAGE SUPPLY BOARD-T (PCB6)
MAIN CONTROL BOARD (PCB1)
L C D (A207 copier only) (PCB10)
OPERATION PANEL BOARD (PCB7)
ARDF (Accessory) PYRENEES-B
Erase Lamp L6
SORTER/STAPLER (Accessory) MODEL-C RHEIN SEINE
SORTER (Accessory) MINI α
DUPLEX CONTROL BOARD (PCB9)
Duplex Tray (NOTE 2)
LCT (NOTE 3)
Paper Tray Unit (Accessory)
LCT Interface Board (PCB11)
5. EXCEPT LCT MACHINES
4. FOR LCT MACHINES, FUNCTIONS ARE CHANGED AS FOLLOWS:
By-Pass Feed Pick Up SOL → LCT Pick Up SOL.
LCT Pick Up SOL → By-Pass Feed Pick Up SOL
3. ONLY FOR LCT MACHINES
2. ONLY FOR DUPLEX MACHINES
(NOTE) 1. EXCEPT DUPLEX MACHINES
(NA)
POINT TO POINT DIAGRAM
A204/A206/A207 MACHINES

Rev. 5/15/97

MAIN CONTROL BOARD (PCB1)

PAPER TRAY UNIT
ANTI-CONDENSATION
HEATER (OPTIONAL)

SYMBOL TABLE
- AC Line
- DC Line
- Pulse Line
- Signal Direction
- Active High
- Active Low
- Voltage

POWER TRANSFORMER (TR1) (220-240V)

FU371

AC DRIVE BOARD (PCB2)

NEUTRAL SWITCH FEEDBACK

DC POWER SUPPLY BOARD (PCB3)

MAIN MOTOR CONTROL BOARD (PCB4)

HIGH VOLTAGE SUPPLY BOARD (PCB5)

HIGH VOLTAGE SUPPLY BOARD-T (PCB6)

OPERATION PANEL BOARD (PCB7)

ARDF (Accessory) PYRENEES-B

DUPLEX CONTROL BOARD (PCB9)

LCT Interface Board (PCB11)

Exposure Lamp (L1)
Main Fusing Lamp (L2)
Secondary Fusing Lamp (L3)
Drum Heater (H1)
Optical Anti-Condensation Heater (H2) (Option)
Lower Tray Heater (H3) (Option)
Exposure Lamp Thermofuse (TF3)
Main Fusing Thermofuse (TF1)
Secondary Fusing Thermofuse (TF2)

Drum Charge Roller
Drum
Transfer Belt
Development Roller

Optics Thermistor (TH5)
Optics Cooling Fan Motor-1 (M6)
Optics Cooling Fan Motor-2 (M7)
Exhaust Fan Motor-1 (M8)
Toner Supply CL (CL1)
Toner Bottle Drive Motor (M2)
Development Drive CL (CL2)
Original Length Sensor-1 (S27)
Original Width Sensor (S26)
Auto ID Sensor (S25)
Cover Safety SW (SW3)
Exit Cover Safety SW (SW10) (NOTE 2)
Total Key Counter Counter (CO2)
Original Length Sensor (Option) (CO1)
Transfer Belt Contact CL (S33)
Transfer Belt Contact H.P. Sensor (CL3)
Transfer Belt Contact Sensor (S24)
Secondary Fusing Thermistor (TH2)
Main Fusing Thermistor (TH1)
Toner End Sensor (S22)
Platen Cover Sensor (S21)
PTL (L4)
Fusing Exit Sensor (S20)
Original Length Sensor-2 (S19)
QL (L5)
Main Motor (M1)

Auto Response Sensor (S23)
Erase Lamp (L6)
TD Sensor (S14)
ID Sensor (S13)
Drum Charge Thermistor (TH4)

Scanner Drive Motor (M10)
SORTER (Accessory) MICRO α MINI α
3rd Scanner Drive Motor (M11)
Lens Vertical Drive Motor (M12)
Lens Horizontal Drive Motor (M13)
3rd Scanner H.P. Sensor (S18)
SORTER/STAPLER (Accessory) MOSEL-C RHEIN SEINE
Junction Gate SOL (SOL 2)
Duplex Feed Motor (M14)
End Fence Jogger Motor (M15)
Side Fence Jogger Motor (M16)
Duplex Paper End Sensor (S28)
Duplex Tray Sensor (S29)
Duplex Entrance Sensor (S30)
Side Fence Jogger H.P. Sensor (S31)
End Fence Jogger H.P. Sensor (S32)
Duplex Tray (NOTE 2)

Scanner H.P. Sensor (S17)
Lens Vertical H.P. Sensor (S16)
Lens Horizontal H.P. Sensor (S15)
Registration Sensor (S12)
By-Pass Feed Paper End Sensor (S2)
By-Pass Feed Table SW (SW1)
By-Pass Pick Up SOL (NOTE 4) (SOL 1)
Registration CL (CL4)
By-Pass Feed CL (CL5)

LCT Cover SW-1 (SW6)
LCT Lower Limit Sensor (S9)
Tray Down SW (SW2)
LCT Paper End Sensor (S10)
LCT Paper Limit Sensor (S11)
LCT Pick Up SOL (SOL 3)
LCT Cover SW-2 (SW7)
LCT Lift Motor (M5)
LCT (NOTE 3)
Paper Tray Unit (Accessory)

Upper Paper Feed CL (NOTE 1) (CL7)
Lower Paper Feed CL (MC) (CL8)
Upper Tray Pick Up SOL (NOTE1) (SOL 4)
Lower Tray Pick Up SOL (SOL 5)
Upper Tray Separation SOL (NOTE1) (SOL 6)
Lower Tray Separation SOL (SOL 7)
Upper Tray Lift Motor (NOTE1) (M3)
Lower Tray Lift Motor (M4)
Upper Tray Paper Size SW (NOTE 1) (SW3)
Lower Tray Paper Size SW (SW4)
Upper Tray Paper End Sensor (NOTE 1) (S3)
Upper Relay Sensor (S4)
Upper Tray Paper Limit Sensor (NOTE 1) (S5)
Lower Tray Paper End Sensor (S6)
Lower Relay Sensor (S7)
Lower Tray Paper Limit Sensor (S8)
By-Pass Feed Paper Size Sensor (S1)
Vertical Guide Set SW (SW5) (NOTE 5)
Relay CL (MC) (CL8)

5. EXCEPT LCT MACHINES
4. FOR LCT MACHINES, FUNCTIONS ARE CHANGED AS FOLLOWS:
   By-Pass Feed Pick Up SOL → LCT Pick Up SOL,
   LCT Pick Up SOL → By-Pass Feed Pick Up SOL
3. ONLY FOR LCT MACHINES
2. ONLY FOR DUPLEX MACHINES
(NOTE) 1. EXCEPT DUPLEX MACHINES

(NA)
POINT TO POINT DIAGRAM
A208/A210/A211 MACHINES

RDP695908

NA

Point To Point Diagram (A212/A214)

Rev. 12/97

