Gestetner® RICOH® savin®



A156/A160/A162...SERIES

PARTS CATALOG

RICOH GROUP COMPANIES

PN: RCPC5535

Gestetner®

RICOH®

savin®

A156/A160/A162...SERIES

PARTS CATALOG

RICOH GROUP COMPANIES

Gestetner® RICOH® savin®

A156/A153/A160/A157/A162/A161
PARTS CATALOG

PN: RCPC5535

It is the reader's responsibility when discussing the information contained within this document to maintain a level of confidentiality that is in the best interest of Ricoh Corporation and its member companies.

NO PART OF THIS DOCUMENT MAY BE REPRODUCED IN ANY

FASHION AND DISTRIBUTED WITHOUT THE PRIOR PERMISSION OF RICOH CORPORATION.

All product names, domain names or product illustrations, including desktop images, used in this document are trademarks, registered trademarks or the property of their respective companies.
They are used throughout this book in an informational or editorial fashion only and for the benefit of such companies. No such use, or the use of any trade name, or web site is intended to convey endorsement or other affiliation with Ricoh products.

© 2000 RICOH Corporation. All rights reserved.

LEGEND

PRODUCT CODE	COMPANY		
	GESTETNER	RICOH	SAVIN
A156	2635TD	FT5535	9035DL
A153	2635	FT5035	9035
A160	2627TD	FT4527	9027DL
A157	2627	FT4027	9027
A162	2822TD	FT4522	9220DL
A161	2822	FT4022	9220
A548	Auto Reverse Document Feeder		
A553	Paper Feed Unit		
A550/A549	Paper Feed Unit		
A554	Sorter Stapler		
A555	Sorter Stapler		
A556	Sorter		
A557	Sorter		
A568	Sorter Adapter		

DOCUMENTATION HISTORY

REV. NO.	DATE	COMMENT
*	2/95	Original Printing
1	7/95	A162/A161 Addition

A156/A153/A160/A157/A162/A161

PARTS CATALOG

TABLE OF CONTENTS

156/A153 PARTS LOCATION AND LIST

Location of Unit 2
1. Exterior (A156/A153) 8
2. Platen Cover Ass'y (A156/A153) 10
3. By-pass Feed Section (A156/A153) 12
4. Paper Tray Section (A156/A153) 14
5. LCT Unit 1 (A155/A156) 16
6. LCT Unit 2 (A155/A156) 18
7. Paper Feed Section 1 (A156/A153) 20
8. Paper Feed Section 2 (A156/A153) 22
9. Paper Feed Section 3 (A153/A155) 24
10. Paper Registration (A156/A153) 26
11. Optical Section 1 (A156/A153) 28
12. Optical Section 2 (A156/A153) 30
13. Optical Section 3 (A156/A153) 32
14. Optical Section 4 (A156/A153) 34
15. Toner Supply Unit (A156/A153) 36
16. Development UNIT (A156/A153) 38
17. Drum Unit 1 (A156/A153) 40
18. Drum Unit 2 (A156/A153) 42
19. Transfer Unit (A156/A153) 44
20. Fusing Unit 1 (A156/A153) 46
21. Fusing Unit 2 (A156) 48
22. Duplex Tray 1 (A156) 50
23. Duplex Tray 2 (A156) 52
24. Duplex Tray 3 (A156) 54
25. Duplex Tray 4 (A156) 56
26. Paper Exit Section (A156/A153) 58
27. Drive Section 1 (A156/A153) 60
28. Drive Section 2 (A156/A153) 62
29. Drive Section 3 (A156/A153) 64
30. Electrical Section 1 (A156/A153) 66
31. Electrical Section 2 (A156/A153) 68
31-1. Electrical Section 2-A (A156/A153) 69A
32. Electrical Section 3 (A156/A153) 70
33. Frame Section 1 (A156/A153) 72
34. Frame Section 2 (A156/A153) 74
35. Decal And Document (A156/A153) 76
36. Special Tools (A156/A153) 78

156/A153 PARTS INDEX

PARTS INDEX 2

A160/A157 PARTS LOCATION AND LIST

Location of Unit 2
1. Exterior (A160/A157) 8

2. Platen Cover Ass'y (A160/A157) 10
3. By-pass Feed Section (A160/A157) 12
4. Paper Tray Section (A160/A157) 14
5. LCT Unit 1 (A160) 16
6. LCT Unit 2 (A160) 18
7. Paper Feed Section 1 (A160/A157) 20
8. Paper Feed Section 2 (A160/A157) 22
9. Paper Registration (A160/A157) 24
10. Optical Section 1 (A160/A157) 26
11. Optical Section 2 (A160/A157) 28
12. Optical Section 3 (A160/A157) 30
13. Optical Section 4 (A160/A157) 32
14. Toner Supply Unit (A160/A157) 34
15. Development Unit (A160/A157) 36
16. Drum Unit 1 (A160/A157) 38
17. Drum Unit 2 (A160/A157) 40
18. Transfer Unit (A160/A157) 42
19. Fusing Unit 1 (A160/A157) 44
20. Fusing Unit 2 (A160/A157) 46
21. Duplex Tray 1 (A160) 48
22. Duplex Tray 2 (A160) 50
23. Duplex Tray 3 (A160) 52
24. Duplex Tray 4 (A160) 54
25. Paper Exit And Inverter (A160) 56
26. Paper Exit Section (A157) 58
27. Drive Section 1 (A160/A157) 60
28. Drive Section 2 (A160/A157) 62
29. Drive Section 3 (A160/A157) 64
30. Electrical Section 1 (A160/A157) 66
31. Electrical Section 2 (A160/A157) 68
31-1. Electrical Section 2-A (A160/A157) 69A
32. Electrical Section 3 (A160/A157) 70
33. Frame Section 1 (A160/A157) 72
34. Frame Section 2 (A160/A157) 74
35. Decal And Document (A160/A157) 76
36. Special Tools (A160/A157) 78

A160/A157 PARTS INDEX
PARTS INDEX 2

A162/A161 PARTS LOCATION AND LIST
Location of Unit 2
1. Exterior (A162/A161) 8
2. Platen Cover Ass'y (A162/A161) 10
3. By-pass Feed Section (A162/A161) 12
4. Paper Tray Section (A162/A161) 14
5. LCT Unit 1 (A162) 16
6. LCT Unit 2 (A162) 18
7. Paper Feed Section 1 (A162/A161) 20
8. Paper Feed Section 2 (A162/A161) 22
9. Paper Registration (A162/A161) 24
10. Optical Section 1 (A162/A161) 26
11. Optical Section 2 (A162/A161) 28
12. Optical Section 3 (A162/A161) 30
13. Optical Section 4 (A162/A161) 32
14. Toner Supply Unit (A162/A161) 34
15. Development Unit (A162/A161) 36
16. Drum Unit 1 (A162/A161) 38
17. Drum Unit 2 (A162/A161) 40
18. Transfer Unit (A162/A161) 42
19. Fusing Unit 1 (A162/A161) 44
20. Fusing Unit 2 (A162/A161) 46

21. Duplex Tray 1 (A162) 48
22. Duplex Tray 2 (A162) 50
23. Duplex Tray 3 (A162) 52
24. Duplex Tray 4 (A162) 54
25. Paper Exit And Inverter (A162) 56
26. Paper Exit Section (A161) 58
27. Drive Section 1 (A162/A161) 60
28. Drive Section 2 (A162/A161) 62
29. Drive Section 3 (A162/A161) 64
30. Electrical Section 1 (A162/A161) 66
31. Electrical Section 2 (A162/A161) 68
31-1. Electrical Section 2-A (A162/A161) 69A
32. Electrical Section 3 (A162/A161) 70
33. Frame Section 1 (A162/A161) 72
34. Frame Section 2 (A162/A161) 74
35. Decal And Document (A162/A161) 76
36. Special Tools (A162/A161) 78

A162/A161 PARTS INDEX
PARTS INDEX 2

AUTO REVERSE DOCUMENT FEEDER A548 PARTS LOCATION AND LIST
1. Exterior (A548) 2
2. Paper Feed Section 1 (A548) 4
3. Paper Feed Section 2 (A548) 6
4. Transfer Belt Unit (A548) 8
5. Paper Exit Section (A548) 10
6. Drive Section (A548) 12
7. Decal And Document (A548) 14

AUTO REVERSE DOCUMENT FEEDER A548 PARTS INDEX
PARTS INDEX 2

PAPER TRAY UNIT A553 PARTS LOCATION AND LIST
1. Exterior (A553) 2
2. Paper Feed Section (A553) 4
3. Drive And Electrical (A553) 6
4. Paper Tray Unit (A553) 8
5. Decal And Document (A553) 10

PAPER TRAY UNIT A553 PARTS INDEX
PARTS INDEX 2

PAPER TRAY UNIT A550/A549 PARTS LOCATION AND LIST
1. Exterior (A550/A549) 2
2. Paper Feed Section (A550/A549) 4
3. Electrical Section (A550/A549) 6
4. Drive Section (A550/A549) 8
5. Paper Tray Unit (A550/A549) 10
6. Decal And Document (A550/A549) 12

PAPER TRAY UNIT A550/A549 PARTS INDEX
PARTS INDEX 2

SORTER STAPLER A554 PARTS LOCATION AND LIST
1. Exterior (A554) 2
2. Staple Unit (A554) 4
3. Vertical Transport 1 (A554) 6
4. Vertical Transport 2 (A554) 8
5. Drive And Electrical Section (A554) 10
6. Tray Drive Section (A554) 12

7. Copy Tray Unit (A554) 14
8. Decal And Document (A554) 16

SORTER STAPLER A554 PARTS INDEX
PARTS INDEX 2

SORTER STAPLER A555 PARTS LOCATION AND LIST
1. Exterior (A555) 2
2. Staple Unit (A555) 4
3. Tray Drive Section (A555) 6
4. Copy Tray Section (A555) 8
5. Electrical Section (A555) 10
6. Joint Unit (A555) 12
7. Decal And Document (A555) 14

SORTER STAPLER A555 PARTS INDEX
PARTS INDEX 2

SORTER A556 PARTS LOCATION AND LIST
1. Sorter Unit 1 (A556) 2
2. Sorter Unit 2 (A556) 4
3. Decal And Document (A556) 6

SORTER A556 PARTS INDEX
PARTS INDEX 2

SORTER A557 PARTS LOCATION AND LIST
1. Sorter Unit 1 (A557) 2
2. Sorter Unit 2 (A557) 4
3. Decal And Document (A557) 6

SORTER A557 PARTS INDEX
PARTS INDEX 2

SORTER ADAPTER A568 PARTS LOCATION AND LIST
1. Sorter Adapter (A568) 2

SORTER ADAPTER A568 PARTS INDEX
PARTS INDEX 2

A156/A153
PARTS LOCATION AND LIST

This section instructs you as to the numbers and names of parts on this machine.

Location of unit

1. EXTERIOR (A156/A153)

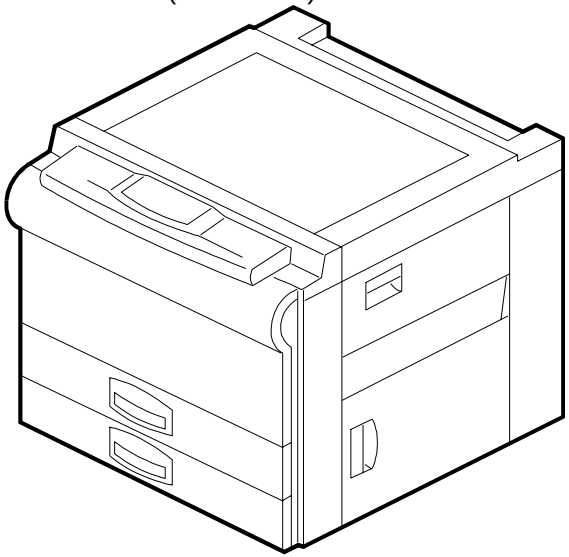

See Page 8

2. PLATEN COVER ASS'Y (A156/A153)

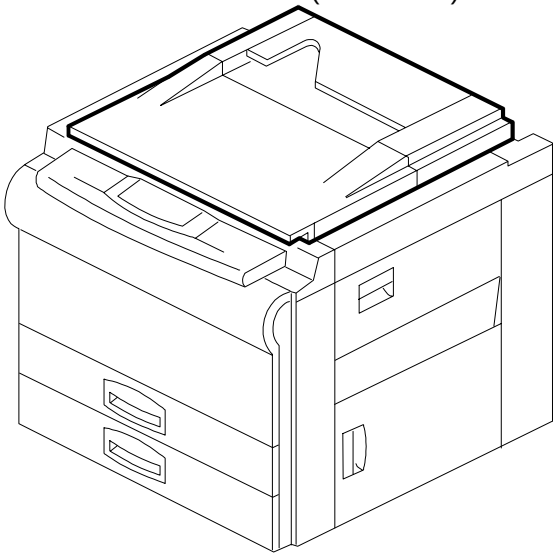

See Page 10

3. BY-PASS FEED SECTION (A156/A153)

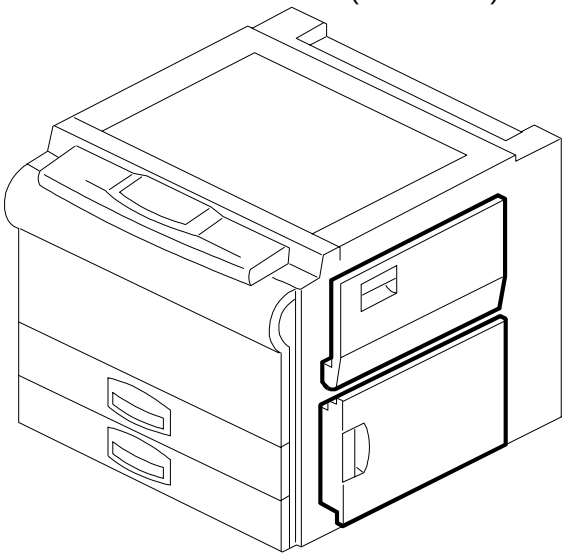

See Page 12

4. PAPER TRAY SECTION (A156/A153)

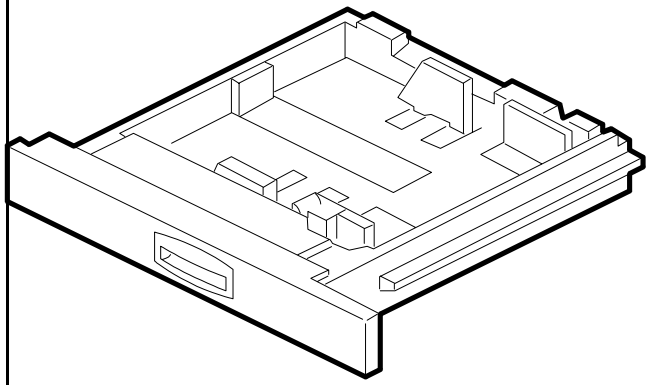

See Page 14

5. LCT UNIT 1 (A156)

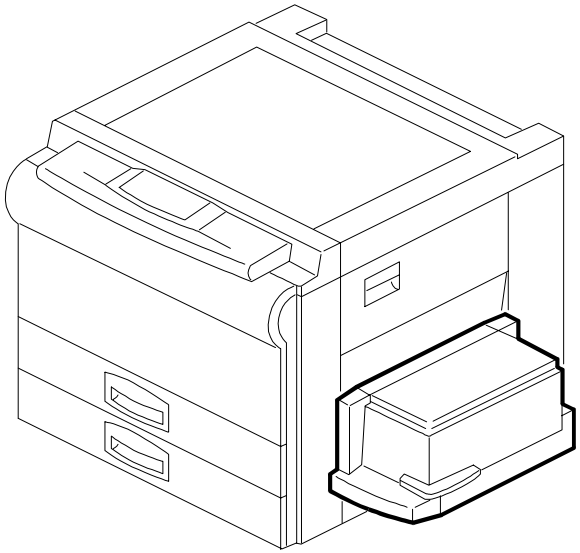

See Page 16

6. LCT UNIT 2 (A156)

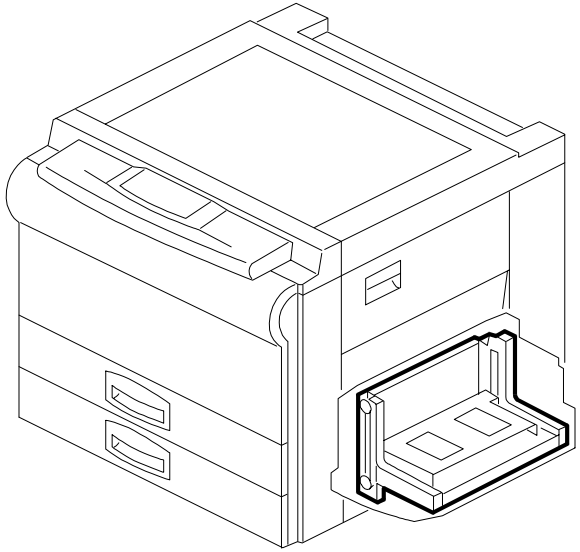

See Page 18

Location of unit

7. PAPER FEED SECTION 1 (A156/A153)

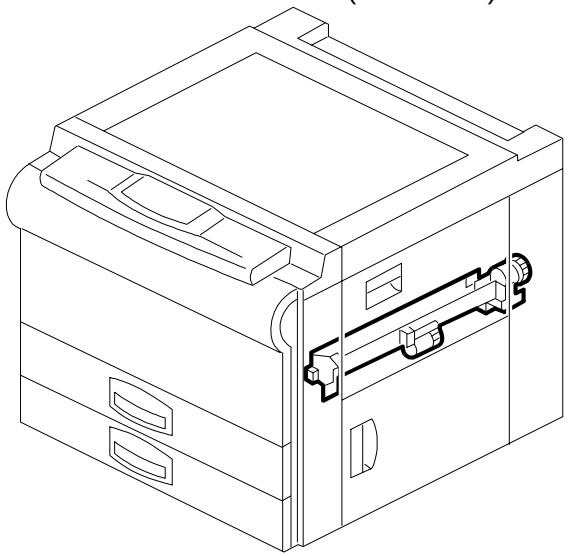

See Page 20

8. PAPER FEED SECTION 2 (A156/A153)

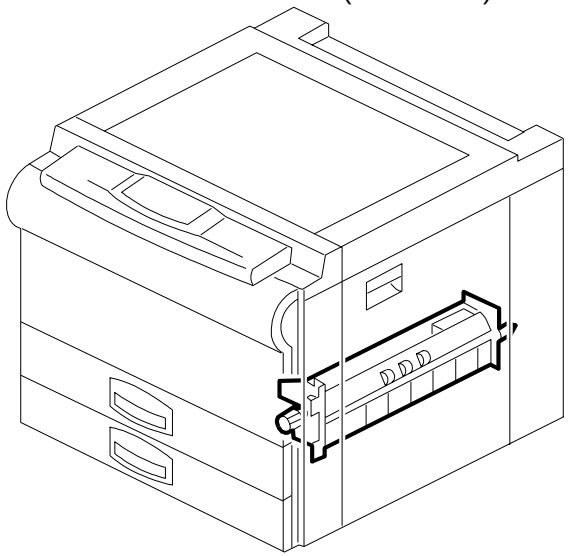

See Page 22

9. PAPER FEED SECTION 3 (A153)

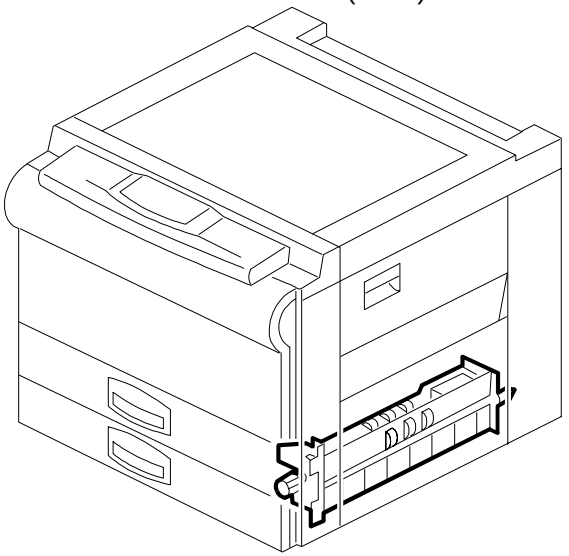

See Page 24

10. PAPER REGISTRATION (A156/A153)

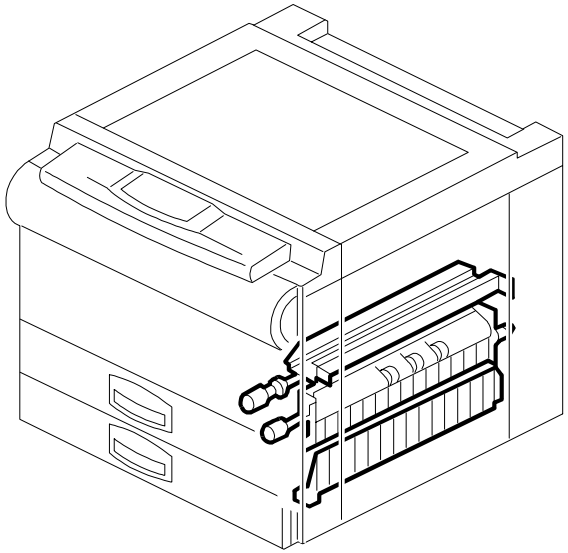

See Page 26

11. OPTICAL SECTION 1 (A156/A153)

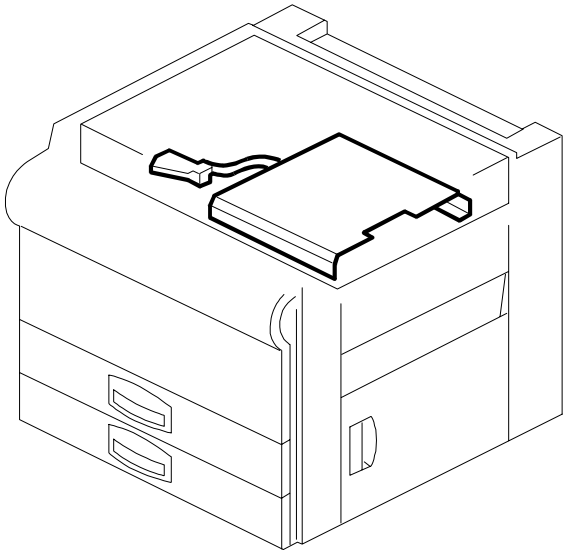

See Page 28

12. OPTICAL SECTION 2 (A156/A153)

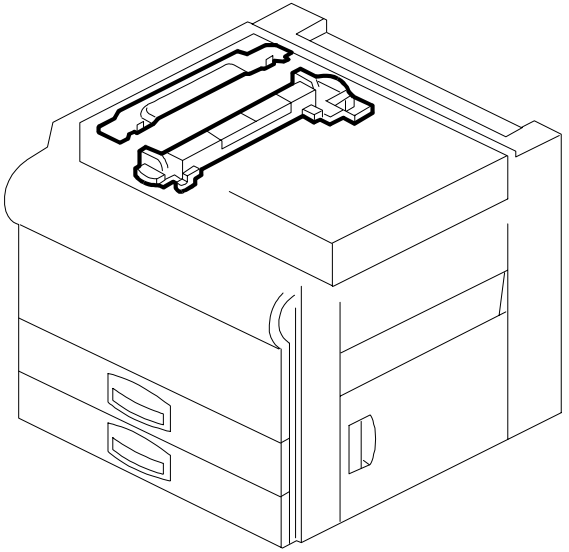

See Page 30

Location of unit

13. OPTICAL SECTION 3 (A156/A153)

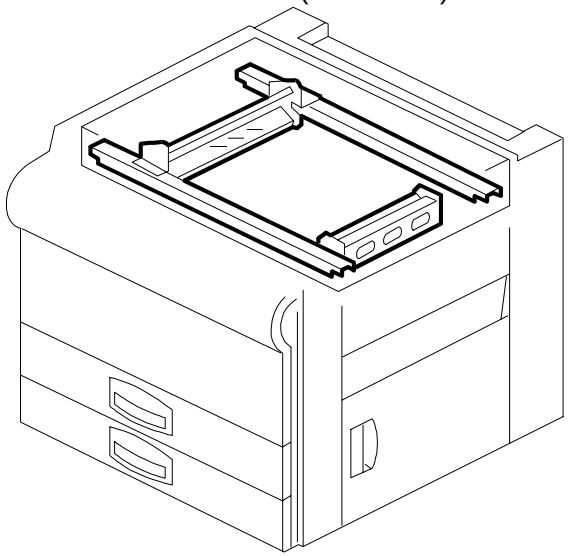

See Page 32

14. OPTICAL SECTION 4 (A156/A153)

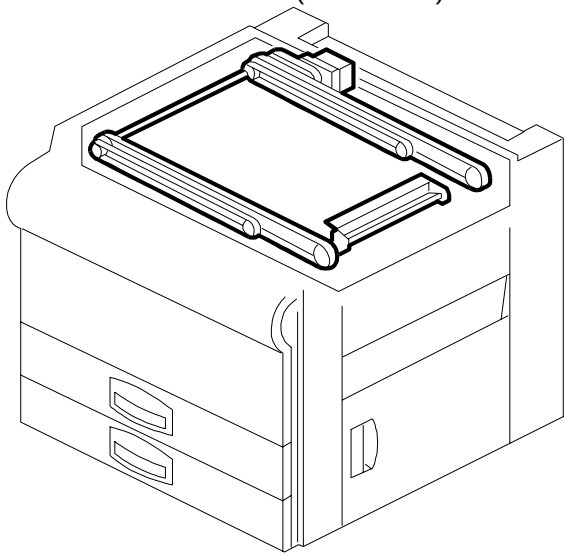

See Page 34

15. TONER SUPPLY UNIT (A156/A153)

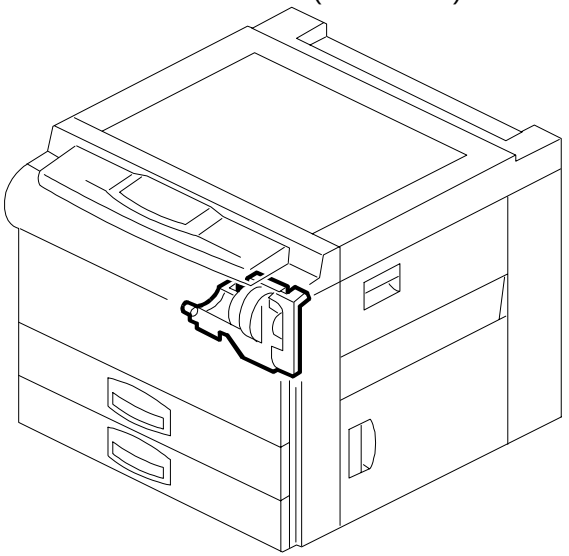

See Page 36

16. DEVELOPMENT UNIT (A156/A153)

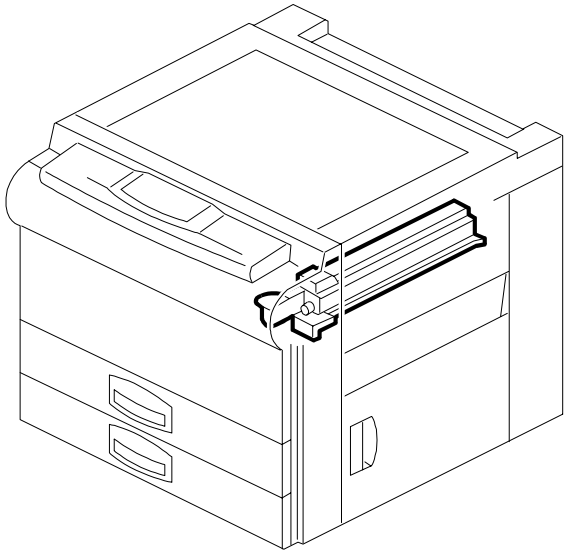

See Page 38

17. DRUM UNIT 1 (A156/A153)

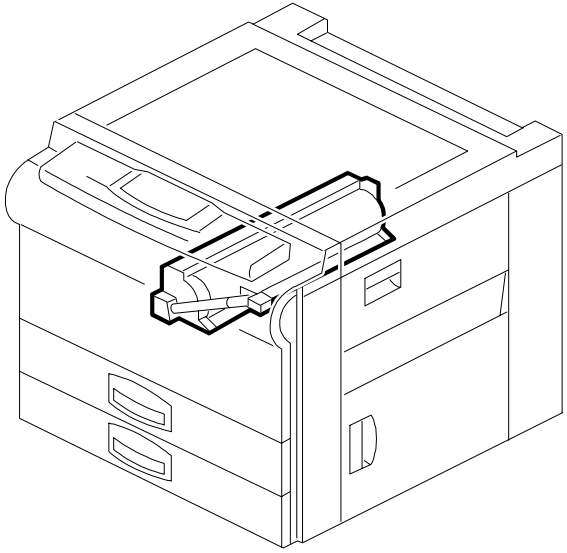

See Page 40

18. DRUM UNIT 2 (A156/A153)

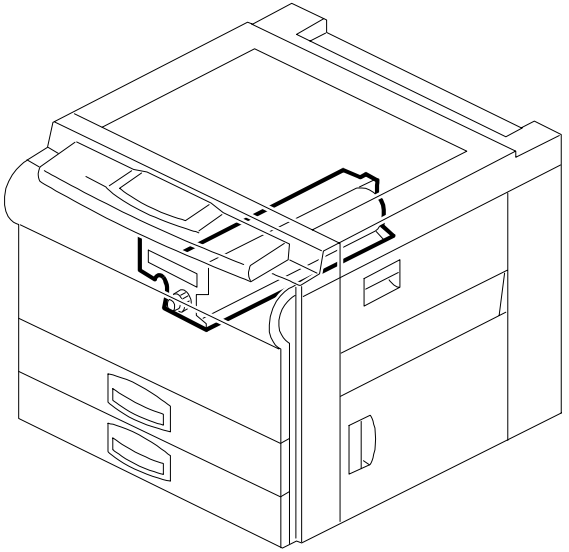

See Page 42

Location of unit

19. TRANSFER UNIT (A156/A153)

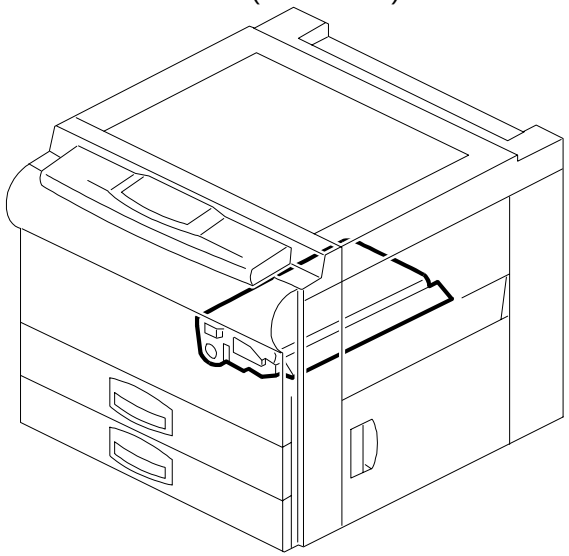

See Page 44

20. FUSING UNIT 1 (A156/A153)

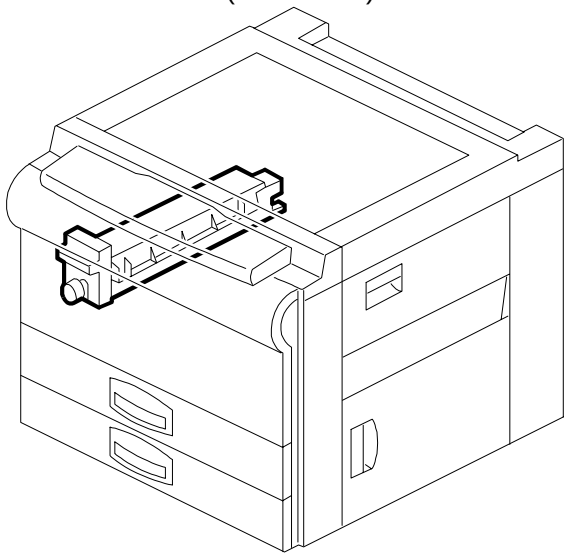

See Page 46

21. FUSING UNIT 2 (A156)

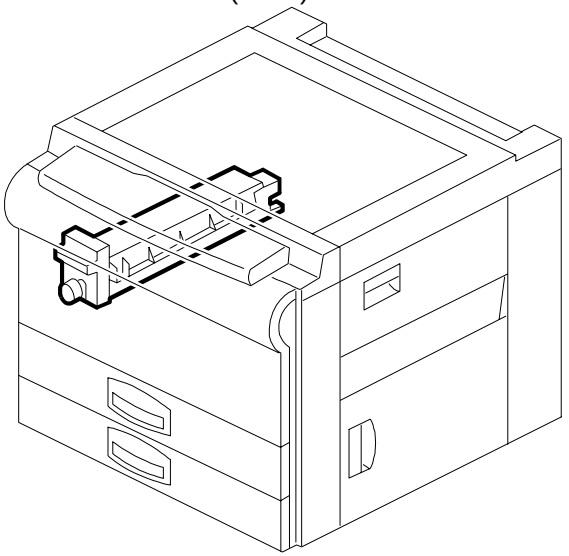

See Page 48

22. DUPLEX TRAY 1 (A156)

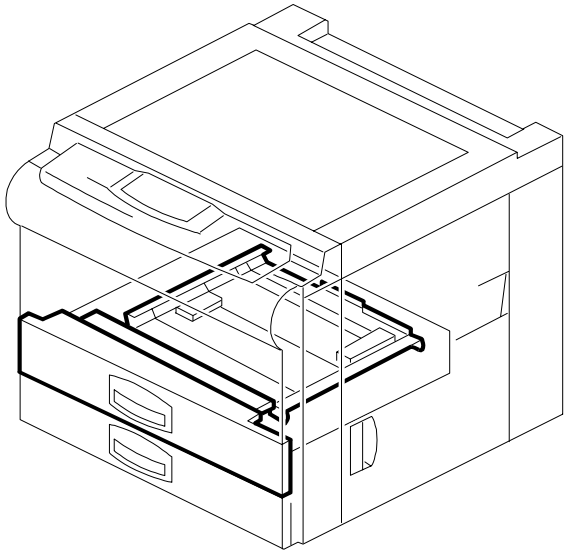

See Page 50

23. DUPLEX TRAY 2 (A156)

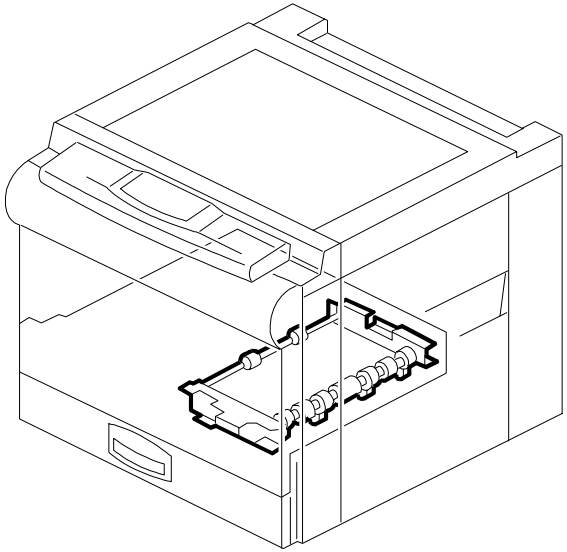

See Page 52

24. DUPLEX TRAY 3 (A156)

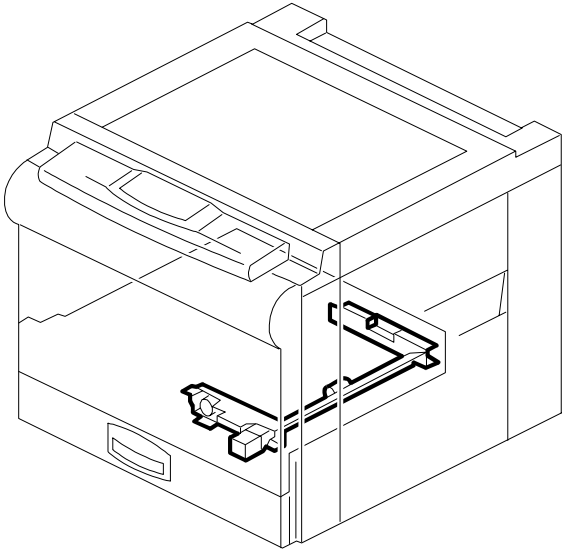

See Page 54

Location of unit

25. DUPLEX TRAY 4 (A156)

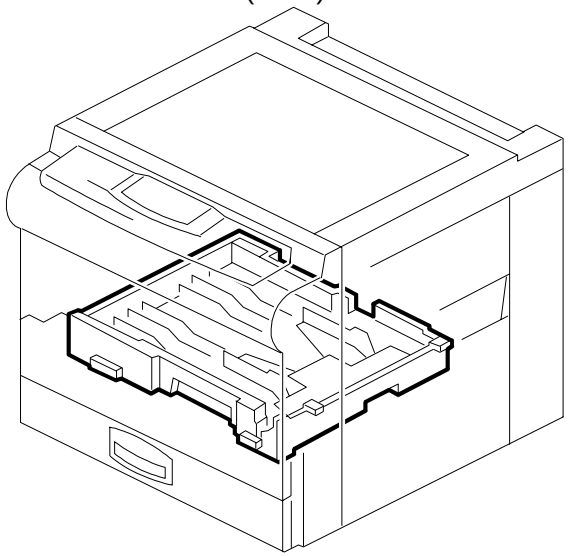

See Page 56

26. PAPER EXIT SECTION (A156/A153)

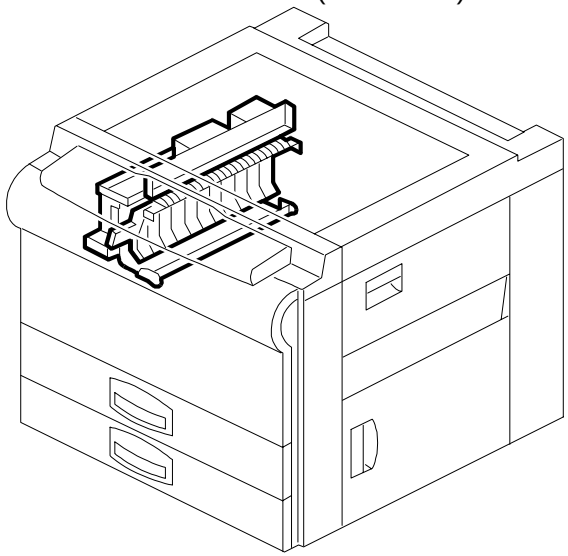

See Page 58

27. DRIVE SECTION 1 (A156/A153)

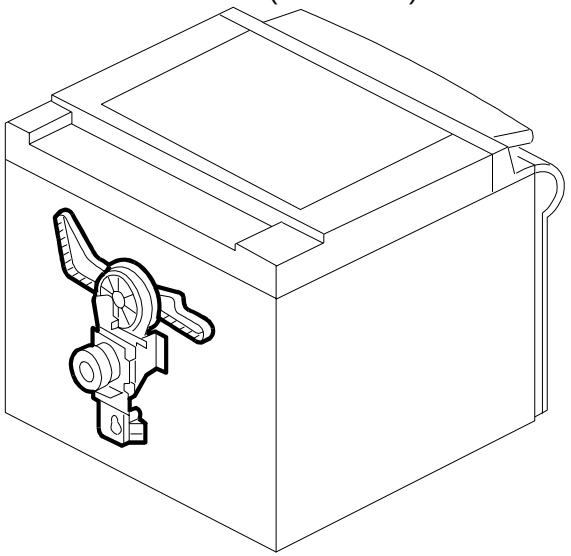

See Page 60

28. DRIVE SECTION 2 (A156/A153)

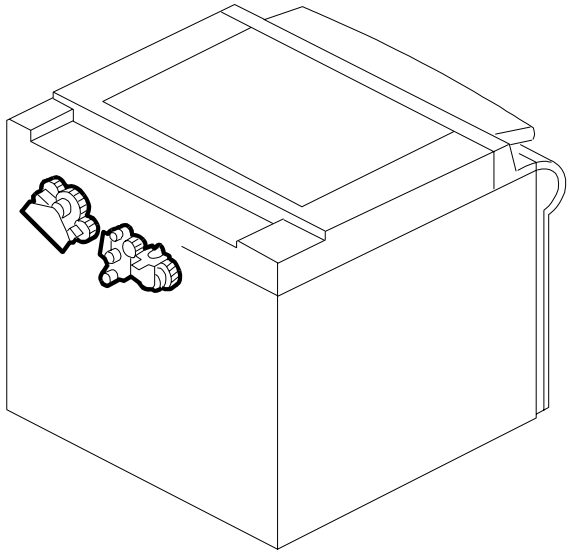

See Page 62

29. DRIVE SECTION 3 (A156/A153)

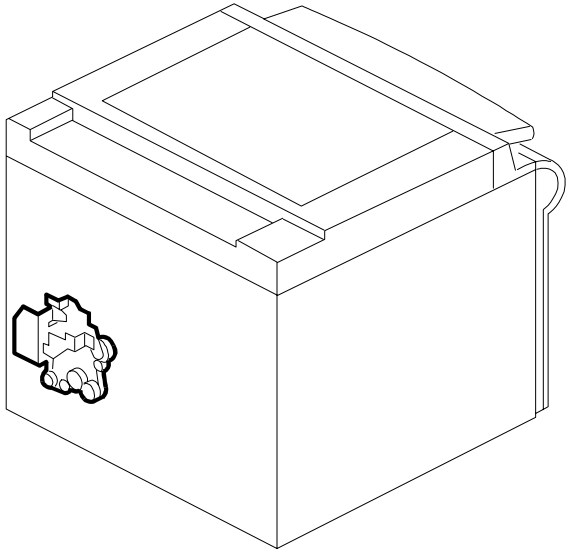

See Page 64

30. ELECTRICAL SECTION 1 (A156/A153)

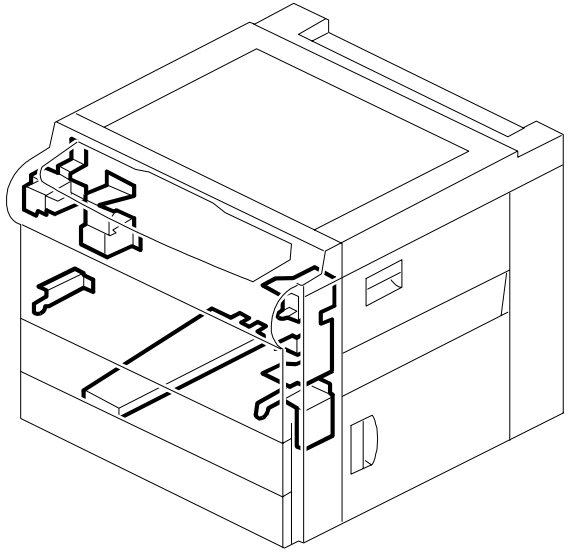

See Page 66

Location of unit

31. ELECTRICAL SECTION 2 (A156/A153)

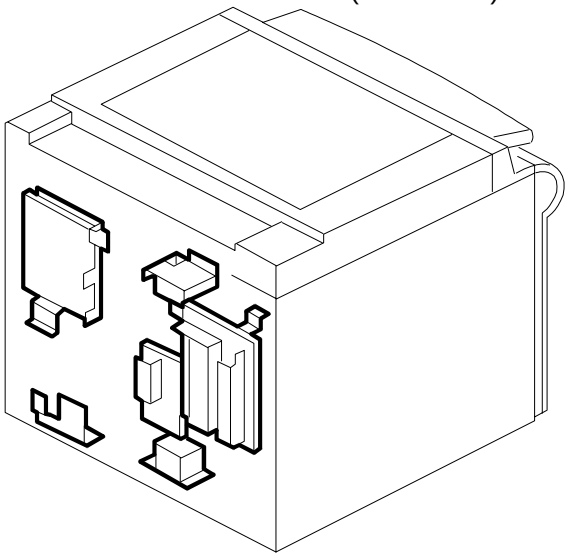

See Page 68

32. ELECTRICAL SECTION 3 (A156/A153)

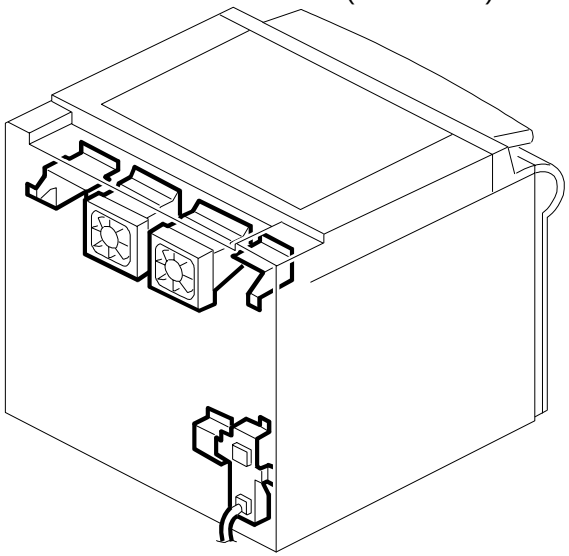

See Page 70

33. FRAME SECTION 1 (A156/A153)

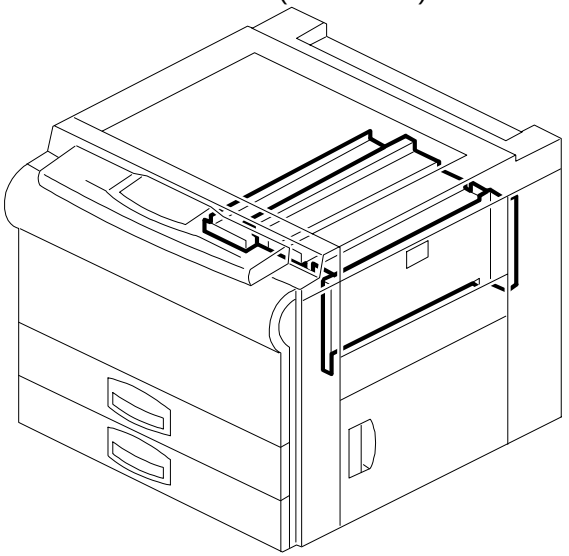

See Page 72

34. FRAME SECTION 2 (A156/A153)

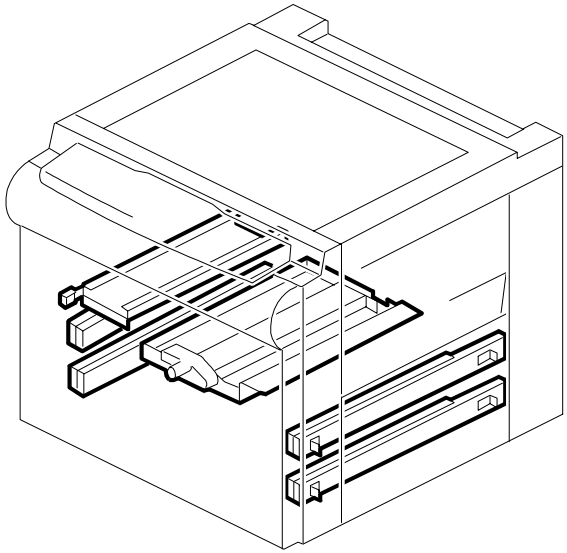

See Page 74

1. EXTERIOR (A156/A153)

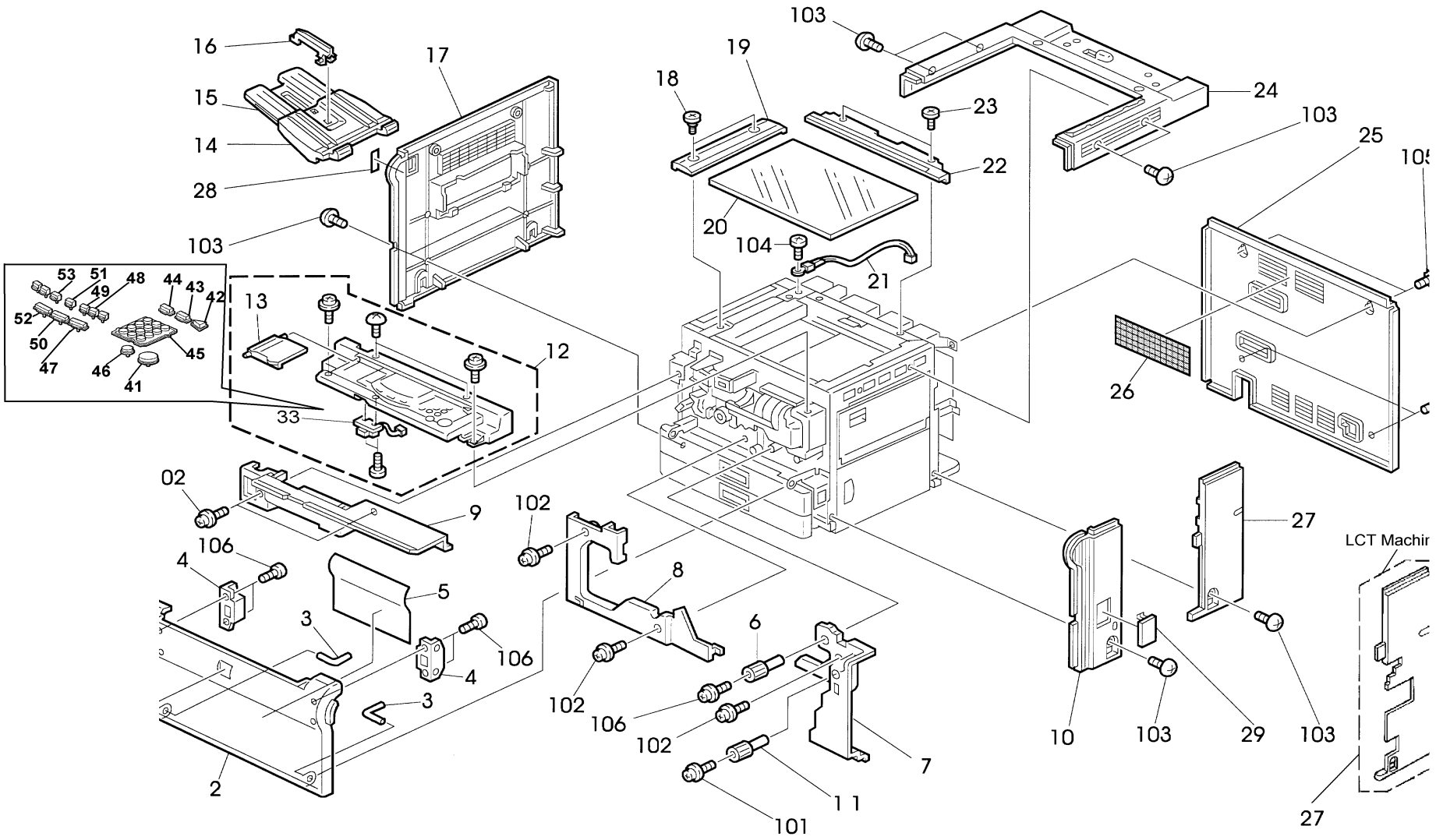

1. EXTERIOR (A156/A153)

Rev. 7/25/96

Index No.	Part No.	Description	Q'ty Per Assembly
1	A153 1285	Emblem	1
2	A153 1277	Front Cover (A153)	1
2	A156 1277	Front Cover (A156)	1
3	A153 1354	Hinge Pin	2
4	AG07 0004	Magnetic Catch	2
5	A153 1360	Operating Sheet (FT5035)	1
5	A154 1360	Operating Sheet (FT5535)	1
6	AG05 0078	Registration Knob	1
7	A153 1352	Right Lower Cover	1
8	A153 1339	Lower Inner Cover	1
9	A153 1351	Upper Inner Cover	1
10	A153 1261	Front Right Cover	1
11	AG05 0075	Middle Knob	1
12	AG01 1312	Operation Panel Ass'y - A4 (A153)	1
12	AG01 1313	Operation Panel Ass'y (A156 A4)	1
12	AG01 1310	Operation Panel Ass'y - LT (A153)	1
12	AG01 1311	Operation Panel Ass'y - LT (A156)	1
13	A153 1469	Panel Cover	1
14	AF04 3069	Copy Tray	1
15	AF04 3076	Copy Tray Slide	1
16	AF04 3077	Copy Tray Guide	1
17	A153 1302	Left Cover	1
18	AA14 3416	Stepped Screw - M4x3	2
19	AC04 2113	Left Original Scale - A4	1
19	AC04 2117	Left Original Scale - LT	1
20	5215 1980	Exposure Glass - A3T-3.2	1
21	AW10 0027	Thermister	1
22	AC04 2120	Rear Original Scale (A4)	1
22	AC04 2124	Rear Original Scale - LT	1
23	AA14 3417	Shoulder Screw - M4x4	2
24	A153 1251	Upper Cover	1
25	A153 1291	Rear Cover	1
26	AA01 2080	Dust Filter	1
27	A153 1271	Rear Right Cover	1
27	A155 1331	LCT - Rear Right Cover	1

Index No.	Part No.	Description	Q'ty Per Assembly
28	AA00 1373	Decal - Main Switch	1
29	A134 1328	Small Cap	1
30	A153 1749	Scale Bracket	1
31			
32			
33	AW01 0065	Auto Response Sensor	1
34	A155 5465	Printed Circuit Board	
35	A156 5466	Printed Circuit Board	
36	A155 5460	Printed Circuit Board	
37	A156 5461	Printed Circuit Board	
38	A156 5462	Guidance Board	
39	1204 1347	Push Switch B3F - 1000	
40	1204 1294	Key Switch B3F - 4000	
101	0951 4016B	Philips Screw With Flat Washer - M4	
102	0964 4008B	Tapping Screw With Flat Washer - M4x8	
103	0802 5094	Tapping Truss Head Screw - M4x8	
104	0313 0040B	Philips Pan Head Screw - M3x4	
105	0953 4008M	Screw - M4X8	
106	0951 3006B	Philips Screw With Flat Washer - M3x6	

2. PLATEN COVER ASS'Y (A156/A153)

Rev. 2/28/97

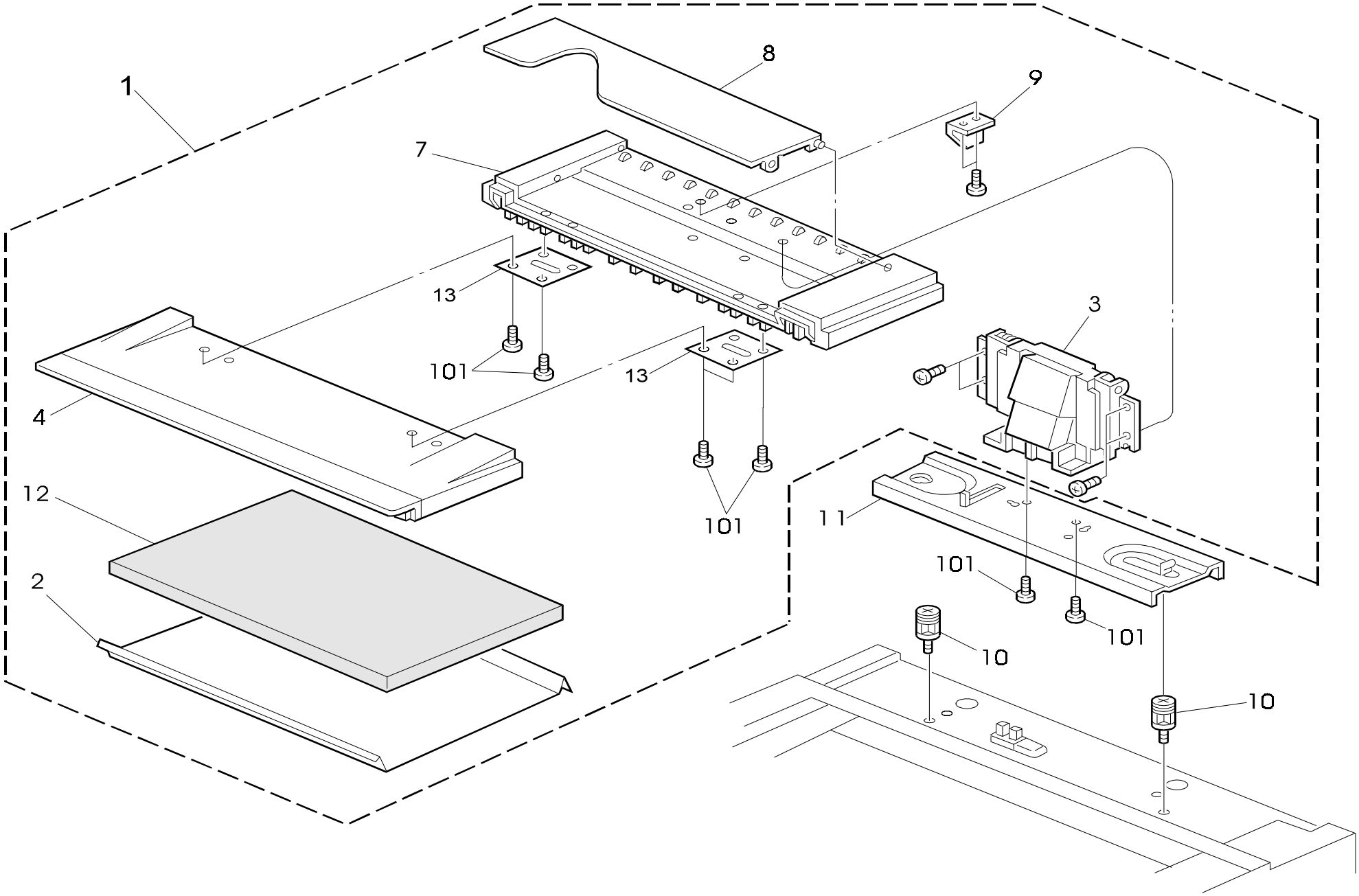

2. PLATEN COVER ASS'Y (A156/A153)

Rev. 10/11/95

Index No.	Part No.	Description	Q'ty Per Assembly
1	A153 1369	Platen cover Ass'y	1
2	5448 2804	Platen Cover Sheet	1
3	A153 1370	Platen Cover Hinge	1
4	A134 1394	Front Platen Cover	1
5			
6			
7	A134 1395	Rear Platen Cover	1
8	A134 1396	Original Holder	1
9	A153 1383	Platen Cover Feeler	1
10	5215 1667	Platen Cover Stud	1
11	A153 1380	Platen Cover Bracket	1
12	AA16 2067	Platen Cover Pad	1
13	A053 1957	Flex Hinge Platen Cover	2

Index No.	Part No.	Description	Q'ty Per Assembly
101	0414 0142B	Binding Self Tapping Screw - M4x14	

3. BY-PASS FEED SECTION (A156/A153)

Rev. 2/28/97

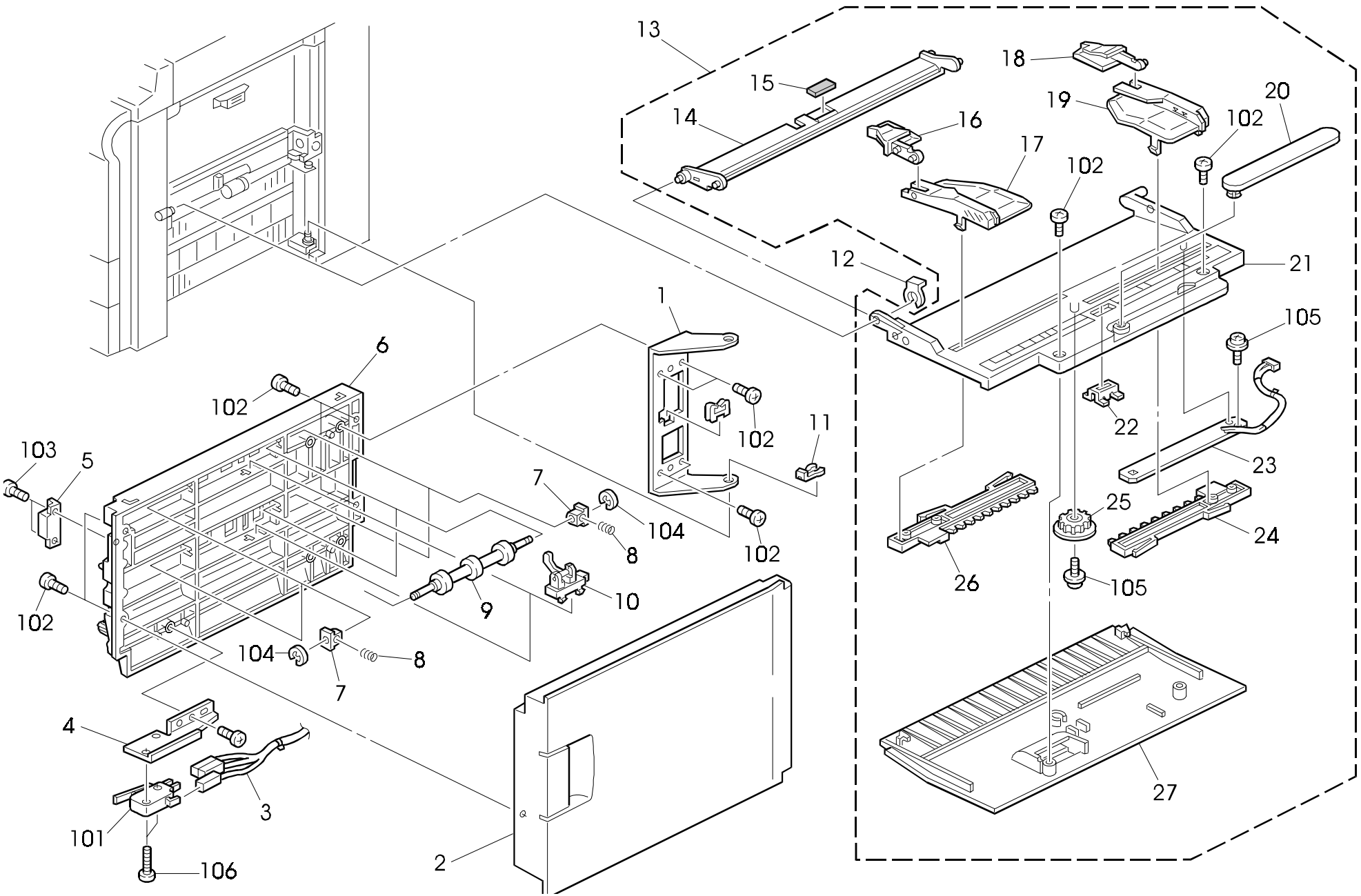

3. BY-PASS FEED SECTION (A156/A153)

Rev. 2/28/97

Index No.	Part No.	Description	Q'ty Per Assembly
1	A134 2586	Hinge Bracket (A153)	1
2	A134 2591	Vertical Transfer (A153)	1
3	A134 5316	Vertical Transfer Harness (A153)	1
4	A134 2587	Switch Bracket (A153)	1
5	AG07 0004	Magnetic Catch (A153)	1
6	A134 2585	Vertical Transfer Guide Plate (A153)	1
7	AA08 0034	Bushing - 4x5x7 (A153)	4
8	AA06 3538	Spring - 10MM (A153)	4
9	AF02 0330	Vertical Driven Roller (A153)	2
10	AW02 0069	Photointerruptor (A153)	2
11	5447 2681	Snap Ring (A153)	1
12	5215 2621	Snap Ring - M6	1
13	A134 2692	By-pass Feed Table Ass'y	1
14	A134 2741	By-pass Feed Entrance Guide	1
15	5447 2927	Friction Pad - B	1
16	A134 2721	Front Paper Guide	1
17	A134 2711	Front Side Fence	1
18	A134 2726	Rear Paper Guide	1
19	A134 2716	Rear Side Fence	1
20	A134 2701	By-pass Feed Guide	1
21	A134 2697	By-pass Feed Table	1
22	A134 2705	Magnet Catch Plate	1
23	A134 5280	Paper Size Sensor Board	1
24	A134 2706	Rear Fence Rack	1
25	G011 3305	Gear - 16T	2
26	A134 2707	Front Fence Rack	1
27	A134 2746	By-pass Feed Cover	1
28			

Index No.	Part No.	Description	Q'ty Per Assembly
101	1204 2356	Micro Switch - AM51612A531	
102	0414 0082W	Tapping Screw With Flat Washer - M4x8	
103	0802 5085	Tapping Screw - M4x8	
104	0720 0030E	Retaining Ring - M3	
105	0965 3006B	Tapping Screw With Flat Washer M3x6	
106	0313 0140B	Philips Pan Head Screw - M3x14	

4. PAPER TRAY SECTION (A156/A153)

Rev. 2/28/97

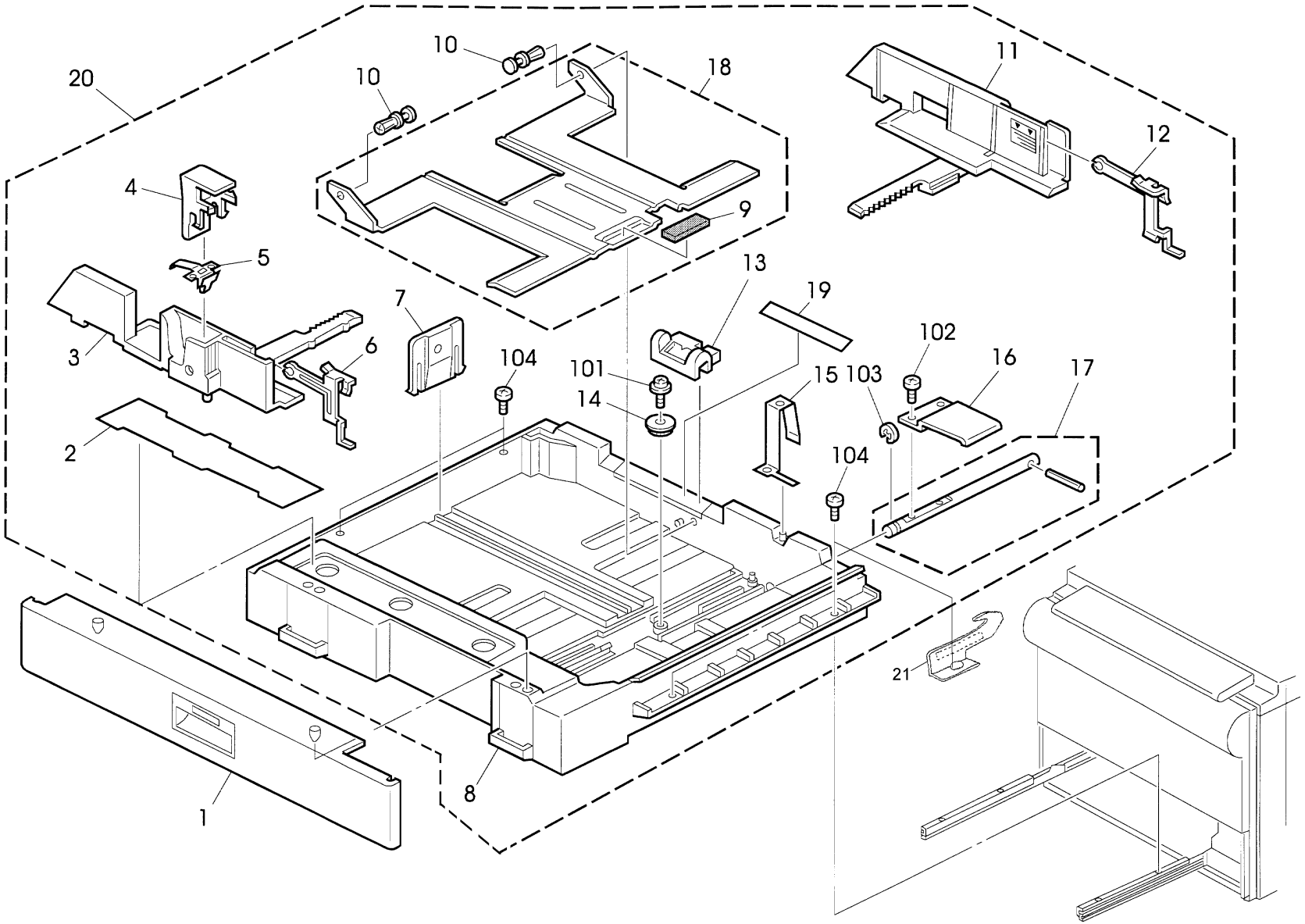

4. PAPER TRAY SECTION (A156/A153)

Rev. 7/25/97

Index No.	Part No.	Description	Q'ty Per Assembly
1	A134 2956	Paper Feed Front Cover	1
2	A134 2997	Decal - Paper Setting	1
3	AF01 6080	Front Side Fence	1
4	A134 2976	Stopper Lever	1
5	A134 2978	Spring Plate	1
6	A134 2975	Front Side Fence Guide	1
7	AF01 7012	End Fence	1
8	A134 2953	Paper Tray	1
9	AF01 3014	Bottom Plate Pad	1
10	A048 2838	Nylon Rivet	2
11	AF01 6081	Rear Side Fence	1
12	A134 2984	Rear Side Fence Guide	1
13	AF01 5027	Paper Size Slider	1
14	AB01 3868	Gear - 16Z	1
15	A134 2968	Grounding Plate	1
16	A204 2972	Bottom Lift Lever	1
17	A204 2971	Bottom Lift Shaft	1
18	A134 2986	Bottom Plate	1
19	A153 2995	Decal Paper Size - LT/DLT	1
19	A153 2996	Decal Paper Size - A4/A3	1
20	A134 2952	Universal Tray	1
21	A134 2960	Paper Talon	1

Index No.	Part No.	Description	Q'ty Per Assembly
101	0965 4008B	Tapping Screw - M4 X 8	
102	0434 0060B	Philips Tapping Screw - M4x6	
103	0720 0060E	Retaining Ring - M6	
104	0344 0060F	Philips Truss Head Screw - M4x6	

5. LCT UNIT 1 (A156)

Rev. 3/20/96

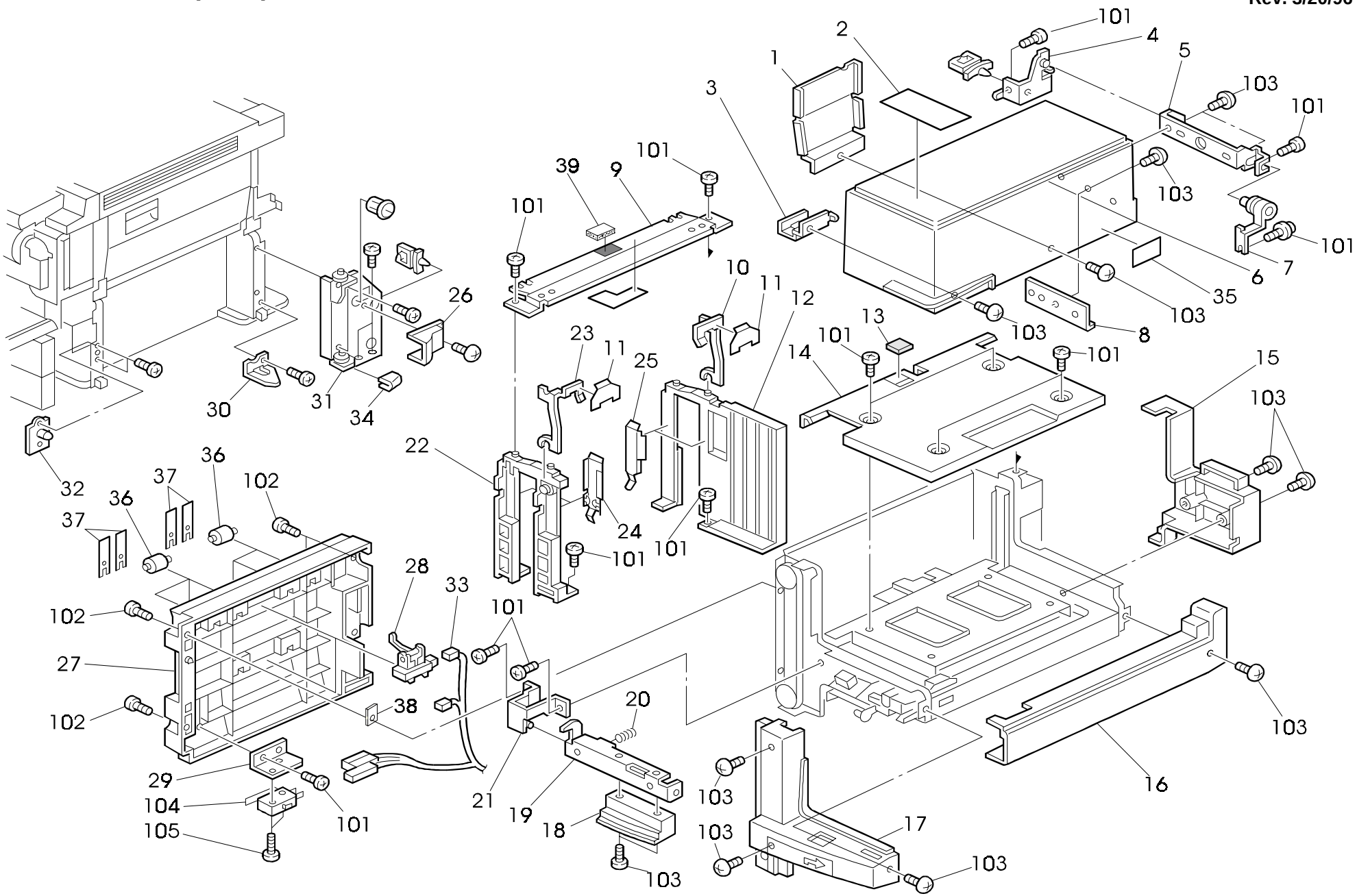

5. LCT UNIT 1 (A156)

Rev. 3/20/96

Index No.	Part No.	Description	Q'ty Per Assembly
1	A155 6324	End Fence	1
2	A155 6113	Decal - Paper Set	1
3	A155 6207	Cover Bracket	1
4	A155 6303	Fix Hinge	1
5	A155 6302	Hinge Angle	1
6	A155 6101	LCT Upper Cover	1
7	A335 3251	Top Cover Hinge	1
8	A155 6201	LCT Hinge Bracket	1
9	A155 6251	Upper Stay	1
10	A155 6312	Rear Paper Holder	1
11	A155 6313	Support Guide	2
12	A155 6307	Rear Side Fence	1
13	A421 2543	Friction Pad	1
14	A155 6142	LCT Paper Tray	1
15	A155 6221	LCT Rear Cover	1
16	A155 6231	LCT Right Cover	1
17	A155 6191	LCT Front Cover	1
18	A155 6181	Knob	1
19	A155 6171	Grip Bracket	1
20	AA06 3239	Spring - Handle	1
21	A155 6170	Hinge Bracket	1
22	A155 6306	Front Side Fence	1
23	A155 6311	Front Paper Holder	1
24	A155 6321	Front Spring Plate	1
25	A155 6322	Rear Sprig Plate	1
26	A155 6241	LCT Harness Cover	1
27	A155 6151	Vertical Transport Guide	1
28	AW02 0069	Photointerruptor	1
29	A155 6152	Switch Bracket	1
30	A155 6169	Hinge Holder	1
31	A155 6160	Lower Hinge	1
32	A155 6175	LCT Positioning Plate	1
33	A155 5349	LCT Vertical Harness	1
34	A155 6162	Cushion	1
35	A155 6114	Caution Decal - LCT	1
36	AF02 0330	Vertical Driven Roller	6
37	AA08 0034	Bushing - 4x5x7	6
38	A155 6112	Spacer - LCT	1
39	A155 6270	Cushion 20x30	1
101	0434 0060B	Philips Tapping Screw - M4x6	
102	0414 0080B	Tapping Screw - M4x8	
103	0802 5094	Tapping Truss Head Screw - M4x8	
104	1204 2356	Micro Switch - AM51612A531	

6. LCT UNIT 2 (A156)

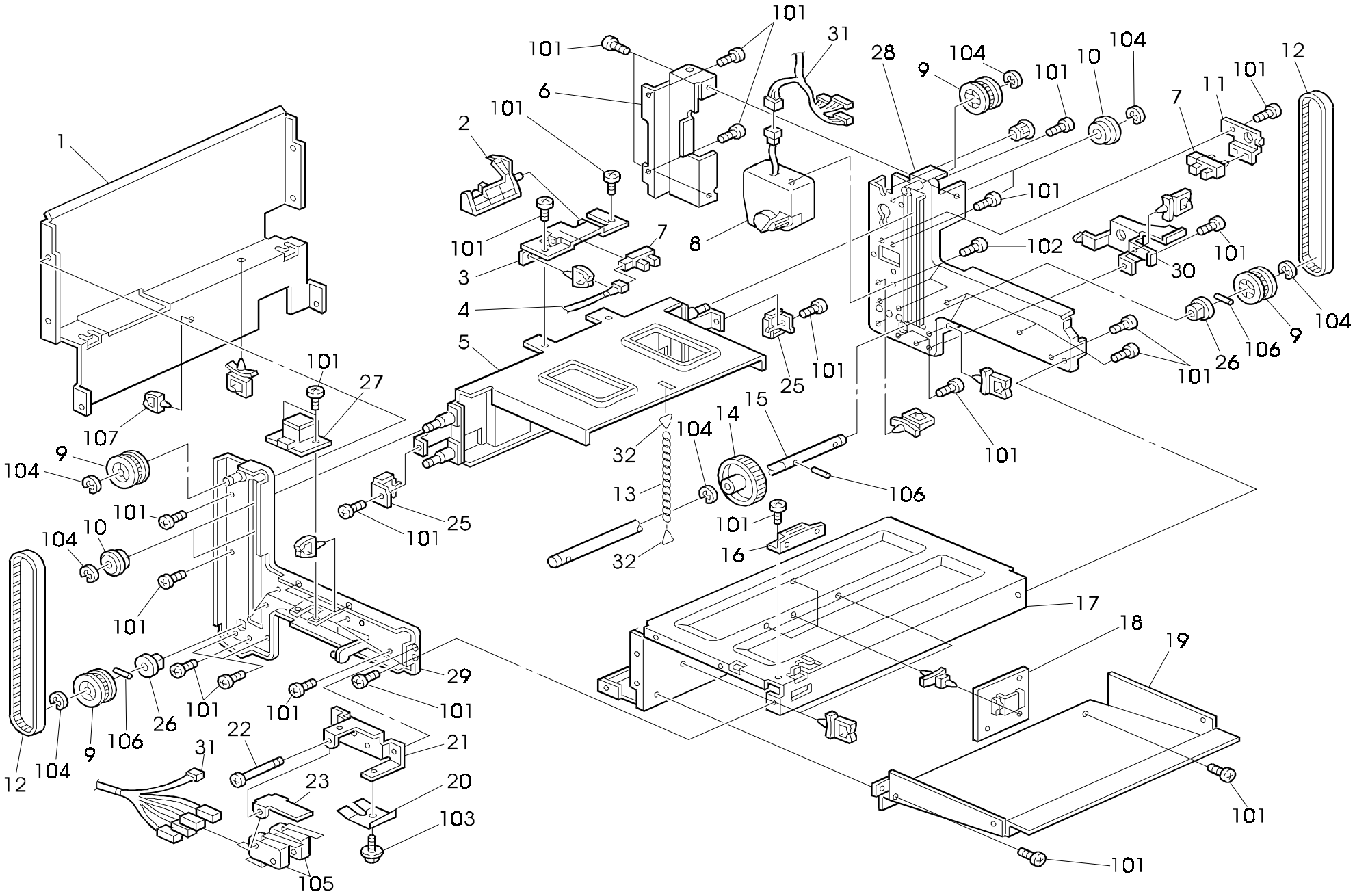

6. LCT UNIT 2 (A156)

Rev. 08/98

Index No.	Part No.	Description	Q'ty Per Assembly
1	A155 6143	Left Bracket	1
2	A155 6148	Paper Ding Sensor Feeler	1
3	A155 6147	Paper End Sensor Bracket	1
4	A155 5348	Paper End Sensor Harness	1
5	A155 6203	Paper Tray Stay	1
6	A155 6153	Upper Hinge	1
7	AW02 0075	Photointerrupter	1
8	AX05 0090	Motor - DC 24V 36W	1
9	AB03 0281	Timing Pulley - 28Z	4
10	A335 4351	Guide Roller	2
11	A155 6136	Lift Sensor Bracket	1
12	AA04 3456	Timing Belt - S3M167	2
13	5925 2258	Stopper Chain	1
14	AB01 1133	Gear - 49Z	1
15	AA14 0576	LCT Drive Shaft	1
16	AG07 0004	Magnetic Catch	1
17	A155 6141	Tray Bottom Plate	1
18	A155 5165	LCT Main Board	1
19	A155 6145	Tray Cover	1
20	A155 6118	Spring Plate	1
21	A155 6116	Safety Switch Bracket	1
22	A300 3155	Stepped Screw - M25x32	1
23	A155 6117	Safety Switch Lever	1
25	A335 4352	Timing Belt Clamp	2
26	5053 0223	Bushing - 8mm	2
27	A155 5170	Push Switch	1
28	A155 6125	Rear Side Bracket	1
29	A155 6110	Front Side Plate	1
30	A155 6215	Harness Guide	1
31	A155 5342	LCT Harness	1

Index No.	Part No.	Description	Q'ty Per Assembly
101	0434 0060B	Philips Tapping Screw - M4x6	
102	0802 5236	Tapping Screw - M4x8	
103	0443 0060B	Hexagon Tapping Screw - M3x6	
104	0720 0060E	Retaining Ring - M6	
105	1204 2355	Micro Switch - AM51632A531	
106	0623 0160E	Spring Pin - 3x16mm	
107	1105 0196	Harness Clamp	

7. PAPER FEED SECTION 1 (A156/A153)

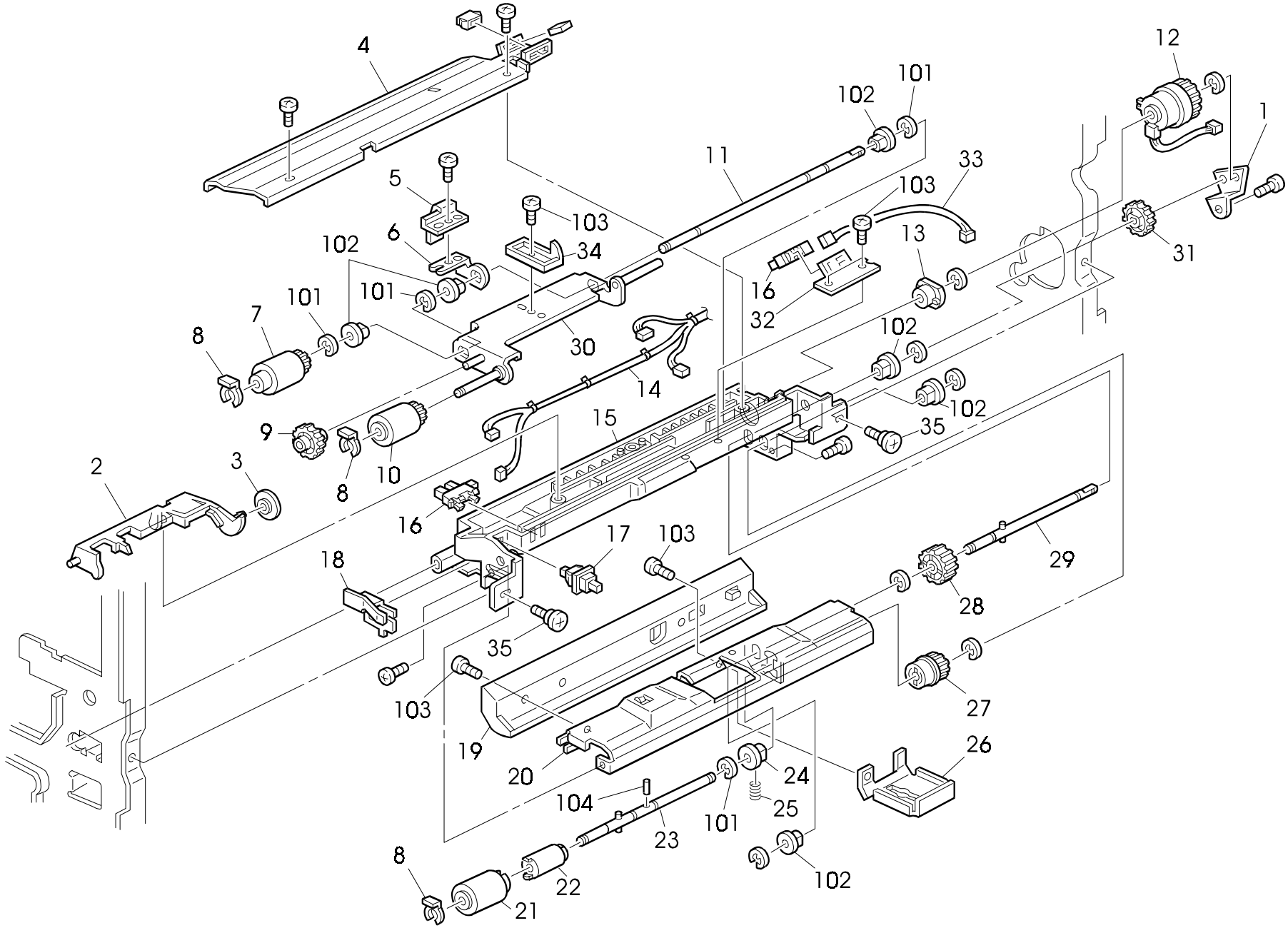

7. PAPER FEED SECTION 1 (A156/A153)

Index No.	Part No.	Description	Q'ty Per Assembly
1	A134 2688	Positioning Plate	1
2	A134 2660	Paper Feed Feeler	1
3	A134 2661	Feeler Roller	1
4	A134 2670	By-pass Feed Cover	1
5	A134 2658	Grounding Plate	1
6	A134 2656	Stopper Plate	1
7	AF03 1030	Feed Roller	1
8	5447 2681	Snap Ring	3
9	AB01 1343	Idle Gear - 23Z	1
10	AF03 0024	Pick-up Roller	1
11	AA14 0534	Feed Shaft (A153)	1
11	AA14 0575	Paper Feed Shaft (A156)	1
12	AX20 0101	Magnetic Clutch - 2.5kgf 35Z	1
13	AA08 3012	Clutch Roller - 6x14x10	1
14	A134 5311	By-pass Feed Harness	1
15	A134 2659	By-pass Feed Housing	1
16	AW02 0075	Photointerrupter	1
17	AW50 0012	Push Switch	1
18	A134 2662	Grounding Plate	1
19	A153 2560	Rear Guide Plate	1
20	A134 2663	Separation Guide	1
21	AF03 2025	Separation Roller	1
22	A134 2674	Torque Limitter - 400fg	1
23	A134 2668	Separation Driven Shaft	1
24	AA08 0037	Bushing - 6 mm	1
25	AA06 3499	Pressure Spring	1
26	A134 2689	Gear Cover	1
27	AB01 1344	Gear - 16Z	1
28	AB01 1345	Gear - 20Z	1
29	A134 2667	Separation Drive Shaft	1
30	A134 2654	Pick-up Arm	1
31	AB01 1346	Gear - 27Z	1
32	A155 2682	Lift Sensor Bracket	1
33	A155 5345	Ct Harness	1
34	A155 2667	Lift Sensor Feeler	1

Index No.	Part No.	Description	Q'ty Per Assembly
35	AA14 3219	Stepped Screw	2
101	0720 0040E	Retaining Ring - M4	
102	0805 3480	Bushing - 6mm	
103	0414 0080B	Tapping Screw - M4x8	
104	0622 0100E	Spring Pin - 2x10mm	

8. PAPER FEED SECTION 2 (A156/A153)

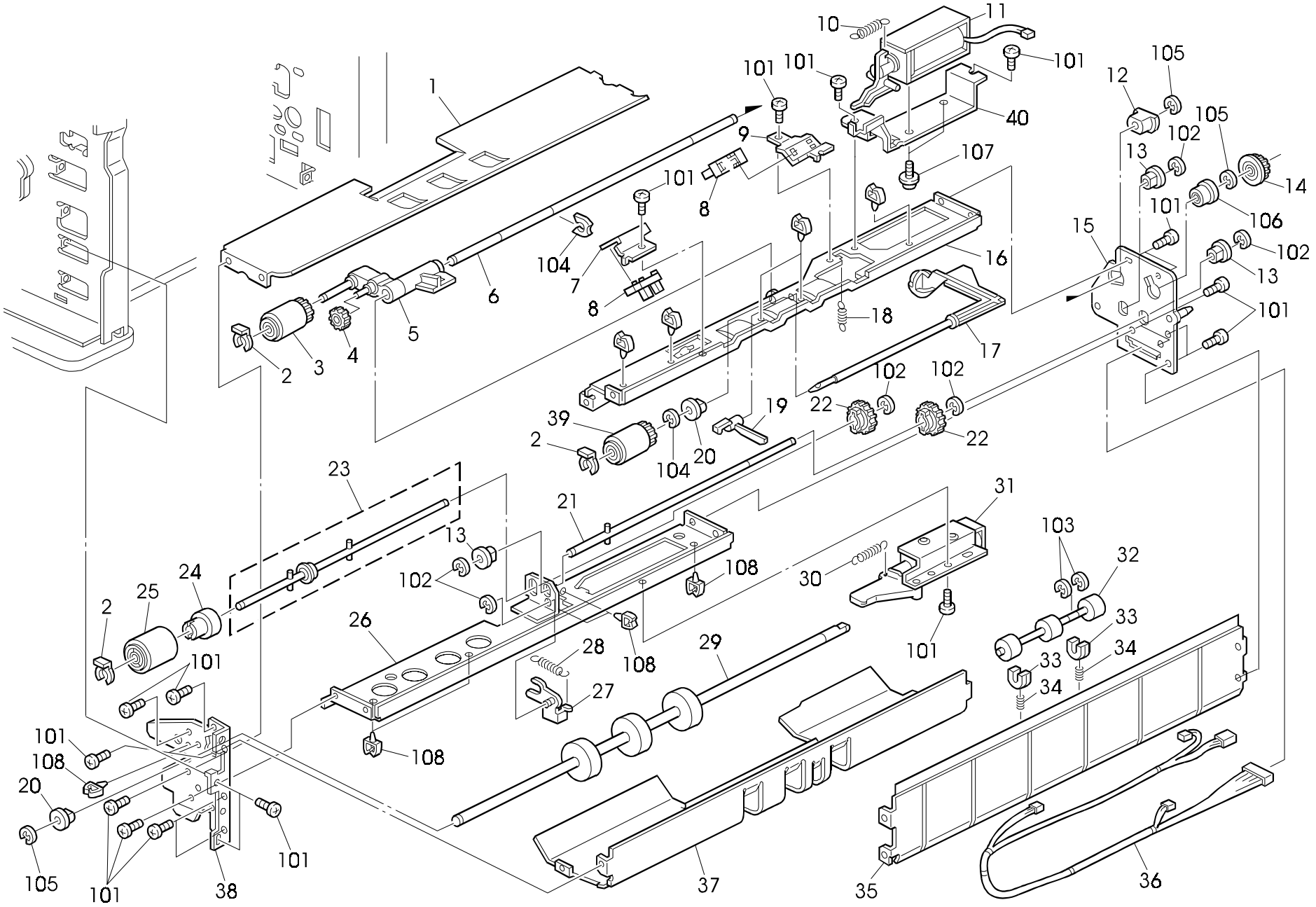

8. PAPER FEED SECTION 2 (A156/A153)

Rev. 10/15/96

Index No.	Part No.	Description	Q'ty Per Assembly
1	A134 2839	Reverse Guide Plate	1
2	5447 2681	Snap Ring	2
3	AF03 0025	Pick-up Feed Roller	1
4	5447 2706	Gear - 15T	1
5	A134 2860	Pick-up Arm	1
6	AA14 0542	Feed Roller Shaft	1
7	A134 2878	Paper End Sensor Bracket	1
8	AW02 0075	Photointerrupter	2
9	A134 2873	Positioning Sensor Bracket	1
10	AA06 0577	Release Spring	1
11	A134 2866	Pick-up Solenoid	1
12	AA08 3009	Clutch Roller 8X18X11	1
13	AA08 2046	Bushing - 6x12x6	3
14	AB03 0466	Timing Pulley - 20Z	1
15	A134 2826	Rear Side Plate	1
16	A134 2855	Lower Feed Stay	1
17	A134 2862	Paper End Sensor Feeler	1
18	AA06 0523	Pick-up Pressure Spring	1
19	A134 2863	Paper End Sensor Lever	1
20	AA08 2047	Bushing - 8x16x7	2
21	A134 2830	Drive Shaft	1
22	AB01 3420	Gear - 18Z	2
23	A134 2832	Driven Shaft Ass'y	1
24	A134 2885	Torque Limitter	1
25	AF03 2027	Separation Roller	1
26	A134 2790	Reverse Stay	1
27	A134 2795	Pressure Lever	1
28	AA06 0636	Pressure Spring	1
29	AF02 0322	Lower Drive Roller - Transport	1
30	AA06 0575	Release Spring	1
31	A134 2810	Release Solenoid	1
32	AF02 0329	Relay Roller	1
33	AA08 0156	Bushing - M4	2
34	AA06 3487	Spring - 10mm	2
35	A134 2834	Vertical Transport Guide	1

Index No.	Part No.	Description	Q'ty Per Assembly
36	A134 5315	Relay Harness - Lower Paper Feed	1
37	A134 2846	Lower Guide Plate	1
38	A134 2821	Front Side Plate	1
39	AF03 1029	Paper Feed Roller	1
40	A134 2868	Solenoid Bracket	1
101	0434 0060B	Philips Tapping Screw - M4x6	
102	0720 0040E	Retaining Ring - M4	
103	0720 0030E	Retaining Ring - M3	
104	0805 0088	Retaining Ring - M6	
105	0720 0060E	Retaining Ring - M6	
106	0742 3808	Ball Bearing - 8x16x5	
107	0353 0040B	Screw - M3X4	
108	1105 0199	Clamp	

9. PAPER FEED SECTION 3 (A153)

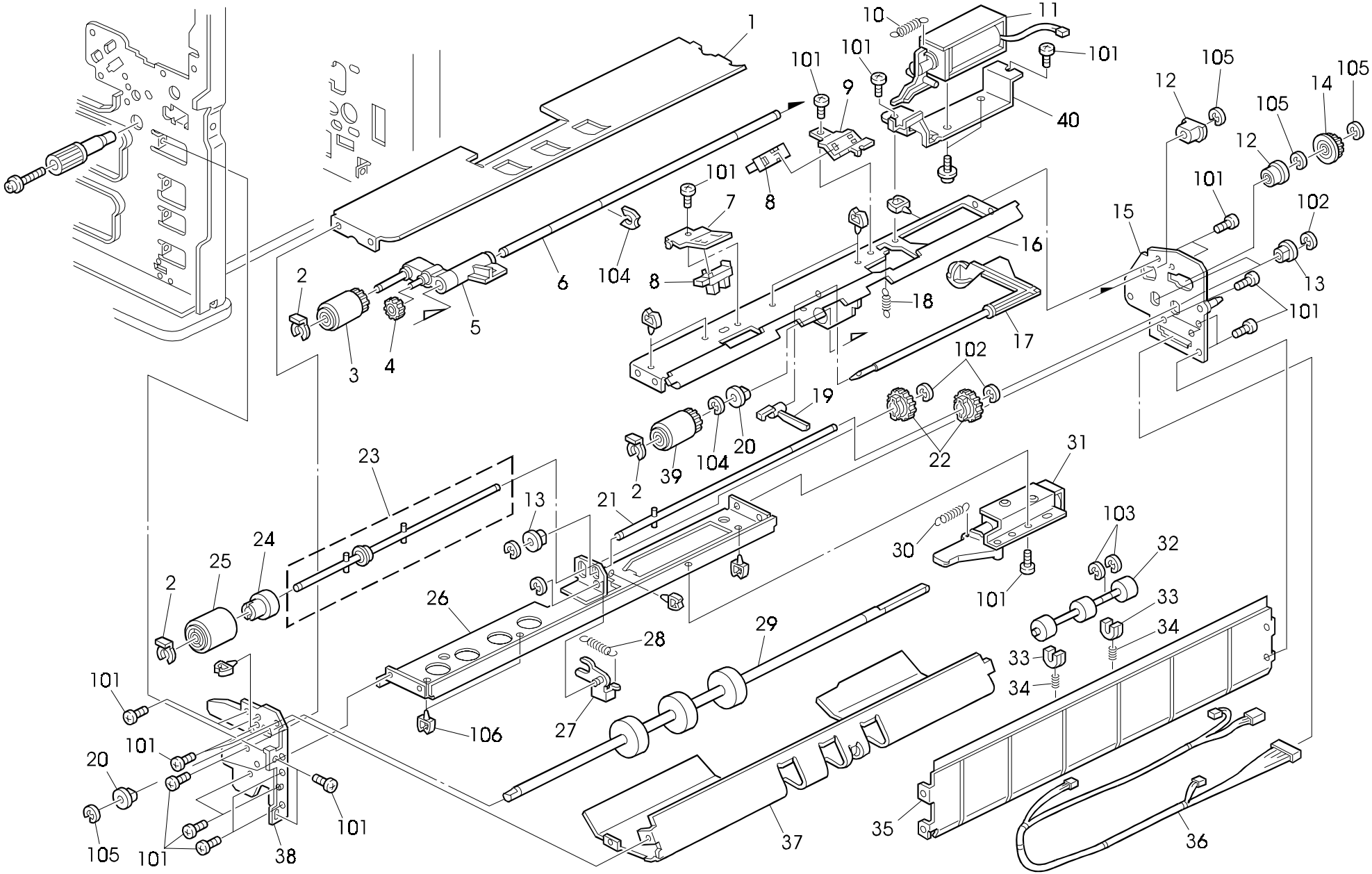

9. PAPER FEED SECTION 3 (A153)

Rev. 10/15/96

Index No.	Part No.	Description	Q'ty Per Assembly
1	A134 2839	Reverse Guide Plate	1
2	5447 2681	Snap Ring	3
3	AF03 0025	Pick-up Feed Roller	1
4	5447 2706	Gear - 15T	1
5	A134 2860	Pick-up Arm	1
6	AA14 0542	Feed Roller Shaft	1
7	A130 2876	Paper End Sensor Bracket	1
8	AW02 0075	Photointerrupter	2
9	A130 2871	Sensor Bracket	1
10	AA06 0577	Release Spring	1
11	A134 2866	Pick-up Solenoid	1
12	AA08 3009	Clutch Roller - 8x18x11	1
13	AA08 2046	Bushing - 6x12x6	2
14	AB03 0466	Timing Pulley - 20Z	2
15	A130 2824	Rear Upper Side Plate	1
16	A130 2850	Upper Feed Stay	1
17	A134 2862	Paper End Sensor Feeler	1
18	AA06 0523	Pick-up Pressure Spring	1
19	A134 2863	Paper End Sensor Lever	1
20	AA08 2047	Bushing - 8x16x7	2
21	A134 2830	Drive Shaft	1
22	AB01 3420	Gear - 18Z	2
23	A134 2832	Driven Shaft Ass'y	1
24	A134 2885	Torque Limitter	1
25	AF03 2027	Separation Roller	1
26	A134 2790	Reverse Stay	1
27	A134 2795	Pressure Lever	1
28	AA06 0636	Pressure Spring	1
29	AF02 0321	Paper Feed Drive Roller	1
30	AA06 0575	Release Spring	1
31	A134 2810	Release Solenoid	1
32	AF02 0329	Relay Roller	1
33	AA08 0156	Bushing - M4	2
34	AA06 3487	Spring - 10mm	2
35	A134 2834	Vertical Transport Guide	1
36	A130 5314	Relay Harness - Paper Feed	1
37	A130 2845	Upper Guide Plate	1
38	A130 2820	Front Upper Side Plate	1
39	AF03 1029	Paper Feed Roller	1
40	A134 2868	Solenoid Bracket	1
101	0434 0060B	Philips Tapping Screw - M4x6	
102	0720 0040E	Retaining Ring - M4	
103	0720 0030E	Retaining Ring - M3	
104	0805 0088	Retaining Ring - M6	
105	0720 0060E	Retaining Ring - M6	
106	1105 0199	Clamp	

10. PAPER REGISTRATION (A156/A153)

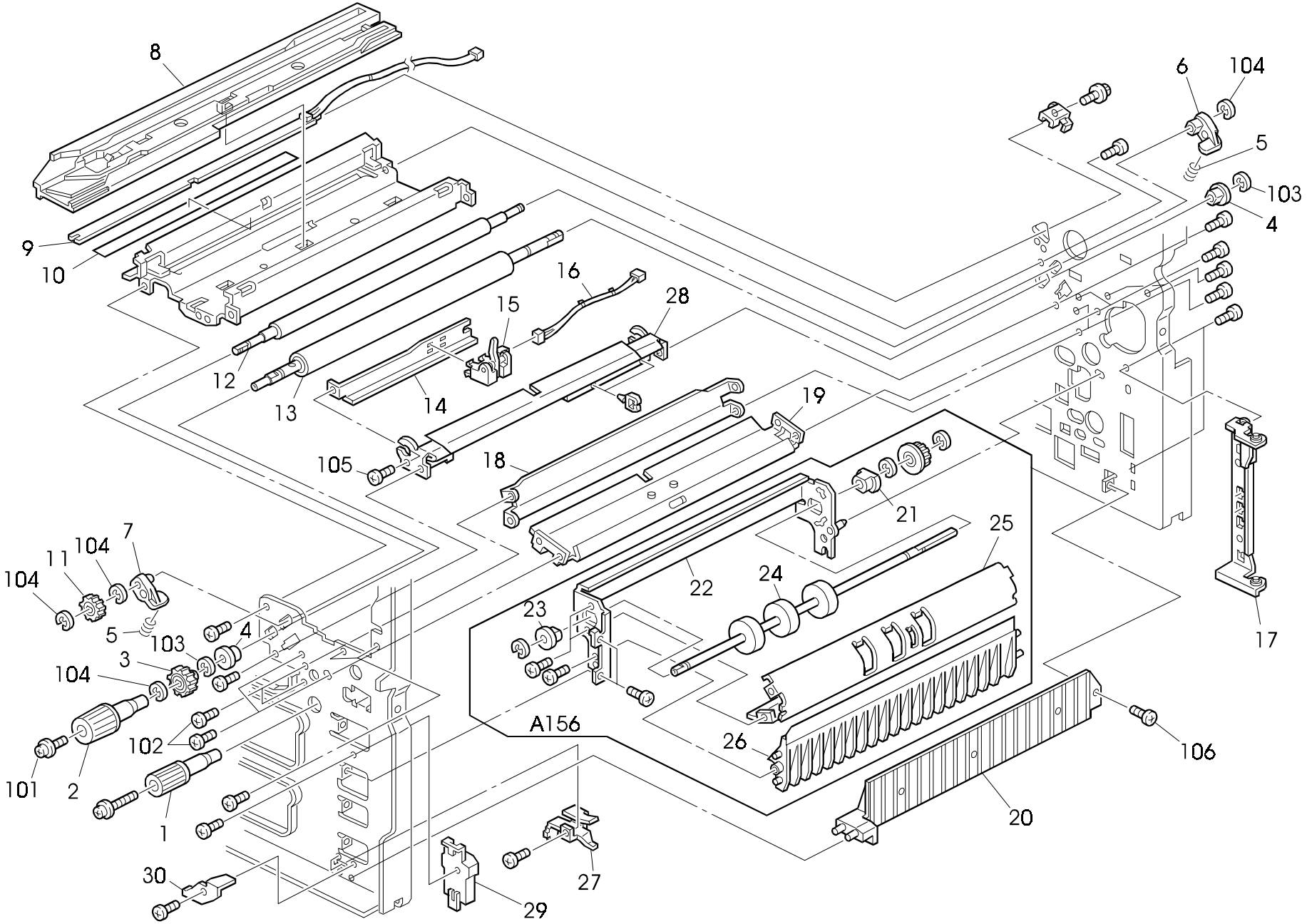

10. PAPER REGISTRATION (A156/A153)

Index No.	Part No.	Description	Q'ty Per Assembly
1	AG05 0075	Middle Knob	1
2	AG05 0078	Registration Knob	1
3	AB01 3485	Gear - 20Z	1
4	5474 2152	Bushing - 8x12x12mm	2
5	AA06 3539	Spring - Registration Roller	2
6	AA08 0172	Bushing	1
7	AA08 0171	Bushing	1
8	A153 3095	Development Rail	1
9	A153 2101	PTL Lamp	1
10	A153 3114	Transfer Entrance Guide	1
11	AB01 3486	Gear - 14Z	1
12	AF02 1052	Upper Registration Roller	1
13	AF02 0316	Lower Registration Roller	1
14	A134 2557	Regist Sensor Bracket	1
15	AW02 0068	Photointerruptor	1
16	A153 5333	CT Harness	1
17	A134 2580	Vertical Transfer Hinge (A153)	1
18	A153 2563	Middle Guide Plate	1
19	A153 2558	Upper Registration Guide	1
20	A134 2895	Vertical Relay Guide	1
21	AA08 3009	Clutch Roller - 8x18x11 (A156)	1
22	A134 2900	Duplex Stay (A156)	1
23	AA08 2047	Bushing - 8x16x7 (A156)	9
24	AF02 0321	Paper Feed Drive Roller (A156)	1
25	A134 2903	Upper Guide Plate - Duplex Feed (A156)	1
26	A134 2904	Lower Guide Plate - Duplex Feed (A156)	1
27	A134 2582	Sensor Bracket - Vertical Transfer (A153)	1
28	A134 2554	Lower Registration Guide	1
29	A155 6164	Positioning Guide	1
30	A155 6168	Vertical Support Guide	1

Index No.	Part No.	Description	Q'ty Per Assembly
101	0951 3006B	Philips Screw With Flat Washer - M3x6	
102	0434 0060B	Philips Tapping Screw - M4x6	
103	0720 0060E	Retaining Ring - M6	
104	0720 0040E	Retaining Ring - M4	
105	0313 0040B	Philips Pan Head Screw - M3x4	
106	0414 0080B	Tapping Screw - M4x8	

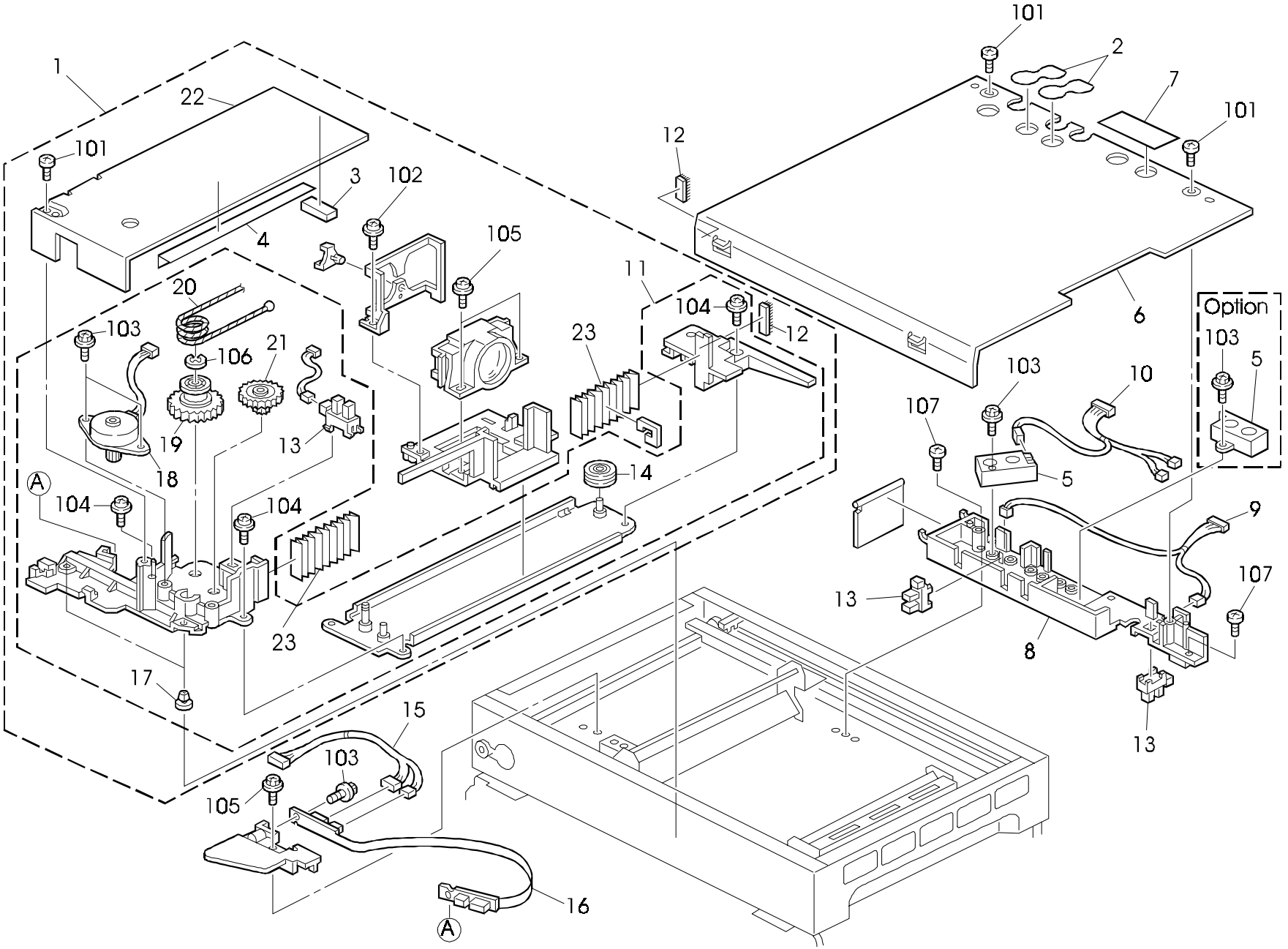
1
22
101
3
102
4
105
20
103
106
21
19
18
13
11
104
12
23
14
104
104
23
17
15
103
105
16
A
A
101
2
7
101
12
6
Option
103
5
103
10
107
5
9
107
13
8
13

11. OPTICAL SECTION 1 (A156/A153)

Rev. 7/25/97

Index No.	Part No.	Description	Q'ty Per Assembly
1	A153 1840	Lens Magnification Unit	1
2	AA15 0369	Original Sensor Seal	1
3	AA15 1941	Shield - Case - Development - Right	1
4	AA15 0368	Shielding Plate - Cover - Lens	1
5	AW01 0042	Original Length Sensor	2
6	A153 1961	Lens Cover	1
7	A111 1753	Seal - 0.1x18x49	1
8	A153 1971	Original Sensor Bracket	1
9	A153 5392	Optical Harness - 2	1
10	A153 5391	Optical Harness - 1	1
11	A153 1841	Lens Drive Unit	1
12	AA15 2330	Magnification Seal	1
13	AW02 0075	Photointerrupter	3
14	AB03 2059	Driven Pulley	2
15	A153 5395	Optical Harness - 5	1
16	A153 5141	Lens Drive Harness	1
17	A069 1883	Shoe - Scanner	2
18	A153 5212	Lens Drive Motor - Horizontal	1
19	AB01 7360	Gear Pulley	1
20	AA05 0086	Lens Drive Wire - Horizontal	1
21	AB01 7361	Gear - 24Z/56Z	1
22	A153 1850	Lens Cover	1
23	AA150367	Shielding Mylar	2

Index No.	Part No.	Description	Q'ty Per Assembly
101	0802 5237	Tapping Screw - M4x10	
102	0413 0062B	Tapping Screw - M3x6	
103	0802 5232	Tapping Screw - M3x8	
104	0951 4006B	Philips Screw With Washer - M4x6	
105	0965 3008W	Tapping Screw With Flat Washer - M3x8	
106	0720 0040E	Retaining Ring - M4	
107	0414 0080B	Tapping Screw - M4x8	

12. OPTICAL SECTION 2 (A156/A153)

Rev. 8/16/95

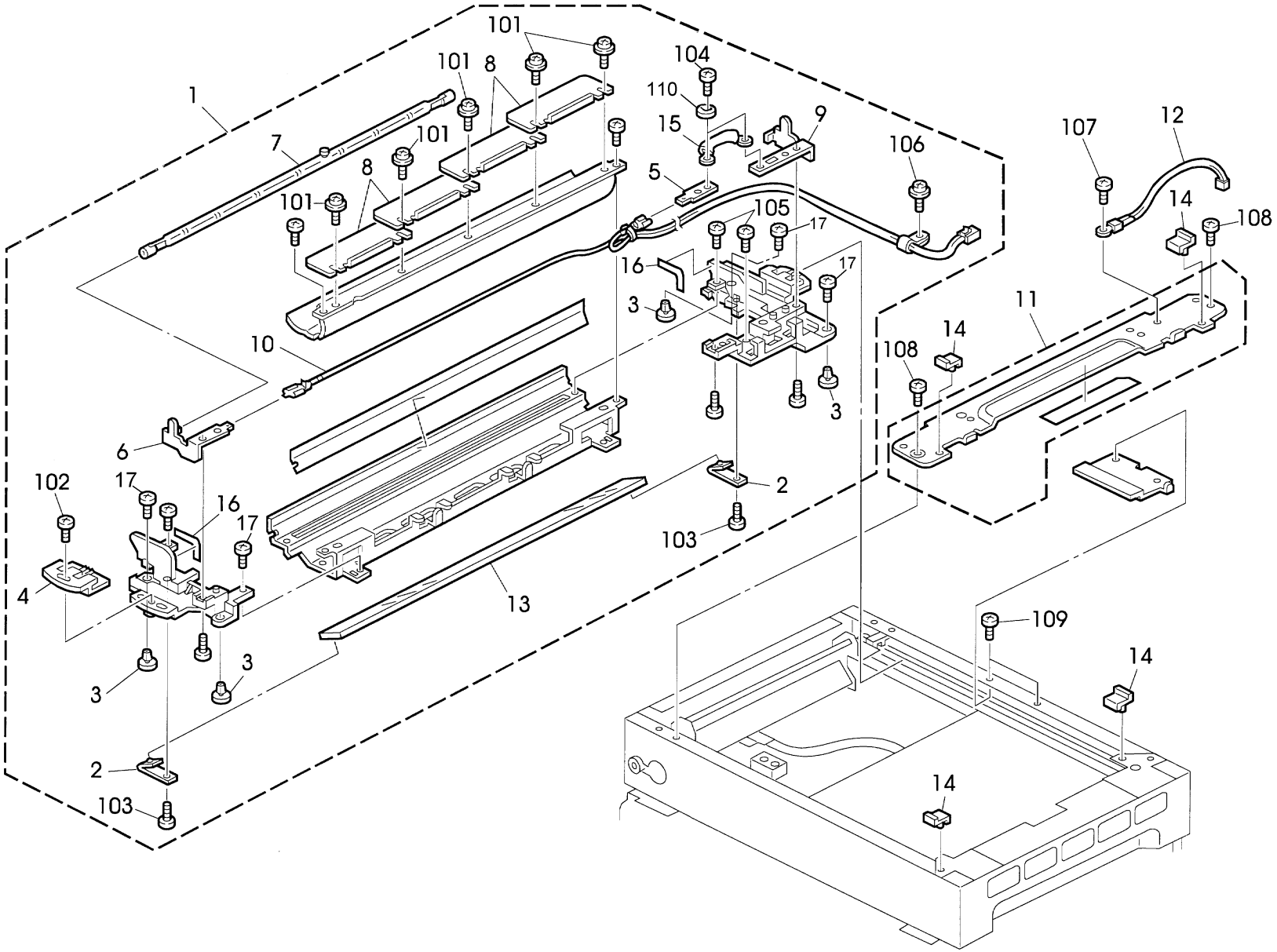

12. OPTICAL SECTION 2 (A156/A153)

Rev. 08/16/95

Index No.	Part No.	Description	Q'ty Per Assembly
1	A157 1700	!st Scanner Assy.	1
2	AC03 5022	Rear Mirror Clamp - 1st Mirror	2
3	A069 1883	Shoe - Scanner	4
4	A153 1776	Front Mirror Clamp - 1st Mirror	1
5	A077 1673	Thermofuse Terminal	1
6	A153 1777	Front Terminal	1
7	AX52 0027	Exposure Lamp - 97V 280W (120V)	1
7	AX52 0025	Exposure Lamp - 85V 280W (230V)	1
8	A085 1670	Exposure Adjusting Plate	4
9	A153 1778	Rear Terminal	1
10	A153 1780	Exposure Lamp Harness	1
11	A153 1750	Scale Bracket	1
12	AW10 0027	Thermister	1
13	AC03 0103	1st Mirror	1
14	A153 1754	Exposure Stay	4
15	A153 1779	Thermostat - 121°C 250V 10A	1
16	A153 1781	Reflector	2
17	A096 1873	Scanner Shoe Pin	4
101	0951 3006B	Philips Screw With Flat Washer - M3x6	

Index No.	Part No.	Description	Q'ty Per Assembly
102	0414 0082W	Tapping Screw With Flat Washer - M4x8	
103	0413 0062W	Tapping Screw - M3x6	
104	0413 0050Z	Tapping Screw - m3x5	
105	0413 0060W	Tapping Screw - M3x6	
106	0964 4008B	Tapping Screw With Flat Washer - M4x8	
107	0313 0040B	Philips Pan Head Screw - M3x4	
108	0313 0060B	Philips Pan Head Screw - M3x6	
109	0314 0060B	Philips Pan Head Screw - M4x6	
110	0703 0030M	Spring Washer M3	

13. OPTICAL SECTION 3 (A156/A153)

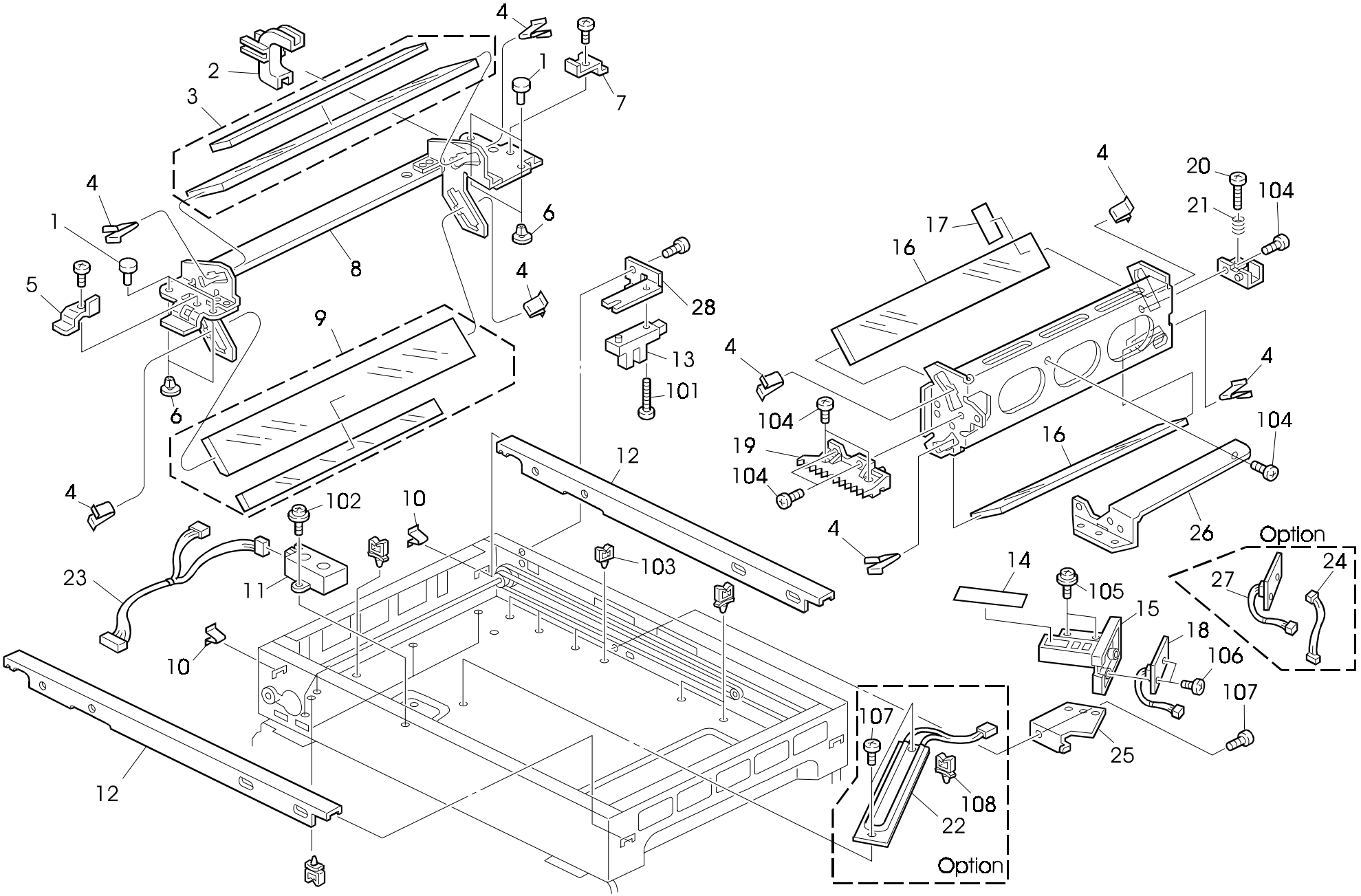

13. OPTICAL SECTION 3 (A156/A153)

Rev. 3/29/96

Index No.	Part No.	Description	Q'ty Per Assembly
1	A096 1873	Scanner Shoe Pin	4
2	A153 1807	Harness Guide	1
3	A153 1808	2nd Mirror	1
4	A077 1690	Spring Plate - Mirror	8
5	A153 1805	Front Mirror Holder	1
6	A069 1883	Shoe - Scanner	4
7	A153 1806	Rear Mirror Holder	1
8	A153 1801	2nd Scanner Ass'y	1
9	A153 1809	3rd Mirror	1
10	A153 1721	Spring Plate	2
11	AW01 0040	Original Sensor	1
12	A153 1720	Scanner Rail	2
13	AW02 0022	Photointerruptor	1
14	A096 1693	ADS Cover	1
15	A096 1692	ADS Case	1
16	AC03 0106	4/5 Mirror	2
17	A153 1908	Shielding Plate	1
18	A153 5160	ADS Sensor Board	1
19	A153 1914	3rd Scanner Rack	1
20	A153 1906	Adjust Shoe	1
21	AA06 3523	Adjust Spring	1
22	AX40 0047	Anti-condensation Heater - 115V 15W	1
22	AX40 0048	Anti-condensation Heater - 240V 15W	1
23	A153 5393	Optical Harness - 3	1
24	A153 9513	Harness - ADS	1
25	A153 1976	ADS Sensor Bracket	1
26	A153 1912	3rd Scanner Stay	1
27	A096 5230	ADS Board	1
28	A153 1981	Scanner Home Sensor Bracket	1

Index No.	Part No.	Description	Q'ty Per Assembly
101	0314 0100B	Philips Pan Head Screw - M4x10	
102	0443 0080W	Hexagon Head Tapping Screw - M3x8	
103	1105 0230	Clamp	
104	0414 0080B	Tapping Screw - M4x8	
105	0951 3005B	Philips Screw With Flat Washer M3x5	
106	0802 5231	Tapping Screw - M3x6	
107	0434 0060B	Philips Tapping Screw - M4x6	
108	1105 0231	Clamp	

14. OPTICAL SECTION 4 (A156/A153)

Rev. 2/21/96

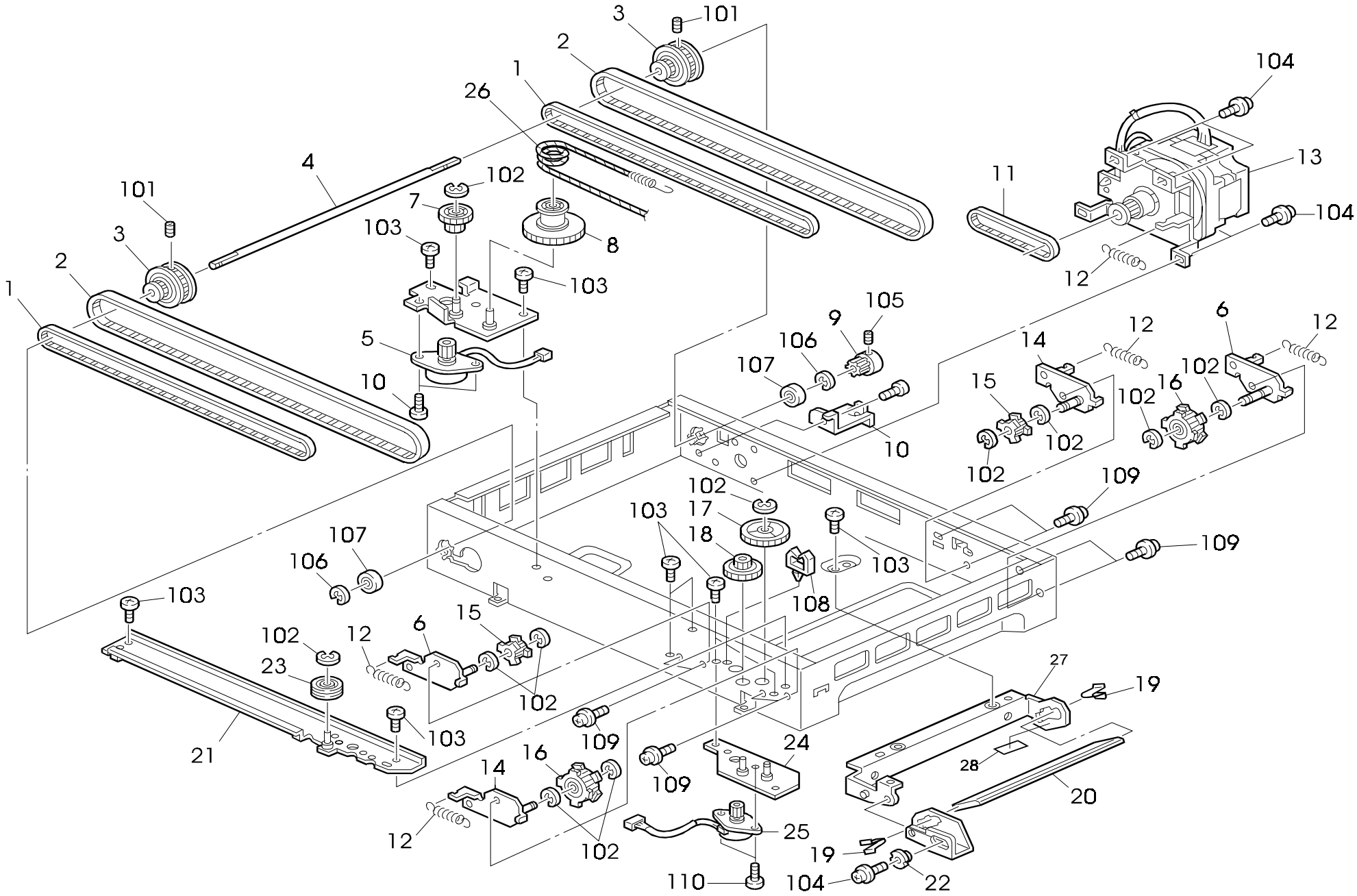

14. OPTICAL SECTION 4 (A156/A153)

Rev. 2/21/96

Index No.	Part No.	Description	Q'ty Per Assembly
1	AA04 3387	Timing Belt - 40S2M984	2
2	AA04 3386	Timing Belt - 40S2M1224	2
3	AB03 3069	Timing Pulley - 22Z/24Z	2
4	AA14 0599	Scanner Drive Shaft	1
5	A153 5213	Lens Drive Motor - DC24V 8.6W	1
6	A153 1708	Tension Bracket - Short	2
7	AB01 7362	Gear - 25Z/32Z	1
8	AB01 7360	Gear Pulley	1
9	AB03 0486	Timing Pulley - 24Z	1
10	A153 5803	Upper Bracket - DC Drive Board	1
11	AA04 3388	Timing Belt - 60S2M180	1
12	AA06 0595	Tension Spring	5
13	A153 1700	Scanner Drive Motor - DC2.3V 13.5W	1
14	A153 1707	Tension Bracket - Long	2
15	AB03 0489	Timing Pulley - 22Z	2
16	AB03 0487	Timing Pulley - 44Z	2
17	AB01 7129	Gear - 20Z AND 72Z	1
18	AB01 7361	Gear - 24Z/56Z	1
19	A077 1690	Spring Plate - Mirror	2
20	AC03 0107	6th Mirror	1
21	A153 1952	Magnification Rail	1
22	A075 1766	Adjusting Cam	1
23	AB03 2059	Driven Pulley	1
24	A153 1947	Magnification Drive Unit Bracket	1
25	A153 5211	Mirror Drive Motor - DC24V 8.6V	1
26	AA05 0087	Lens Drive Wire - Vertical	1
27	A153 1923	6th Mirror Bracket	1
28	A048 1801	Mirror Seal	1

Index No.	Part No.	Description	Q'ty Per Assembly
101	0573 0040E	Hexagon Headless Set Screw - M3x4	
102	0720 0040E	Retaining Ring - M4	
103	0434 0060B	Philips Tapping Screw - M4x6	
104	0951 4008B	Philips Screw With Washer - M4x8	
105	0574 0050E	Hexagon Headless Set Screw - M4x5	
106	0720 0060E	Retaining Ring - M6	
107	0740 3008	Ball Bearing - 8x22x7	
108	1105 0230	Clamp	
109	0951 4006B	Philips Screw With Washer - M4x6	
110	0433 0060W	Tapping Screw - M3x6	

15. TONER SUPPLY UNIT (A156/A153)

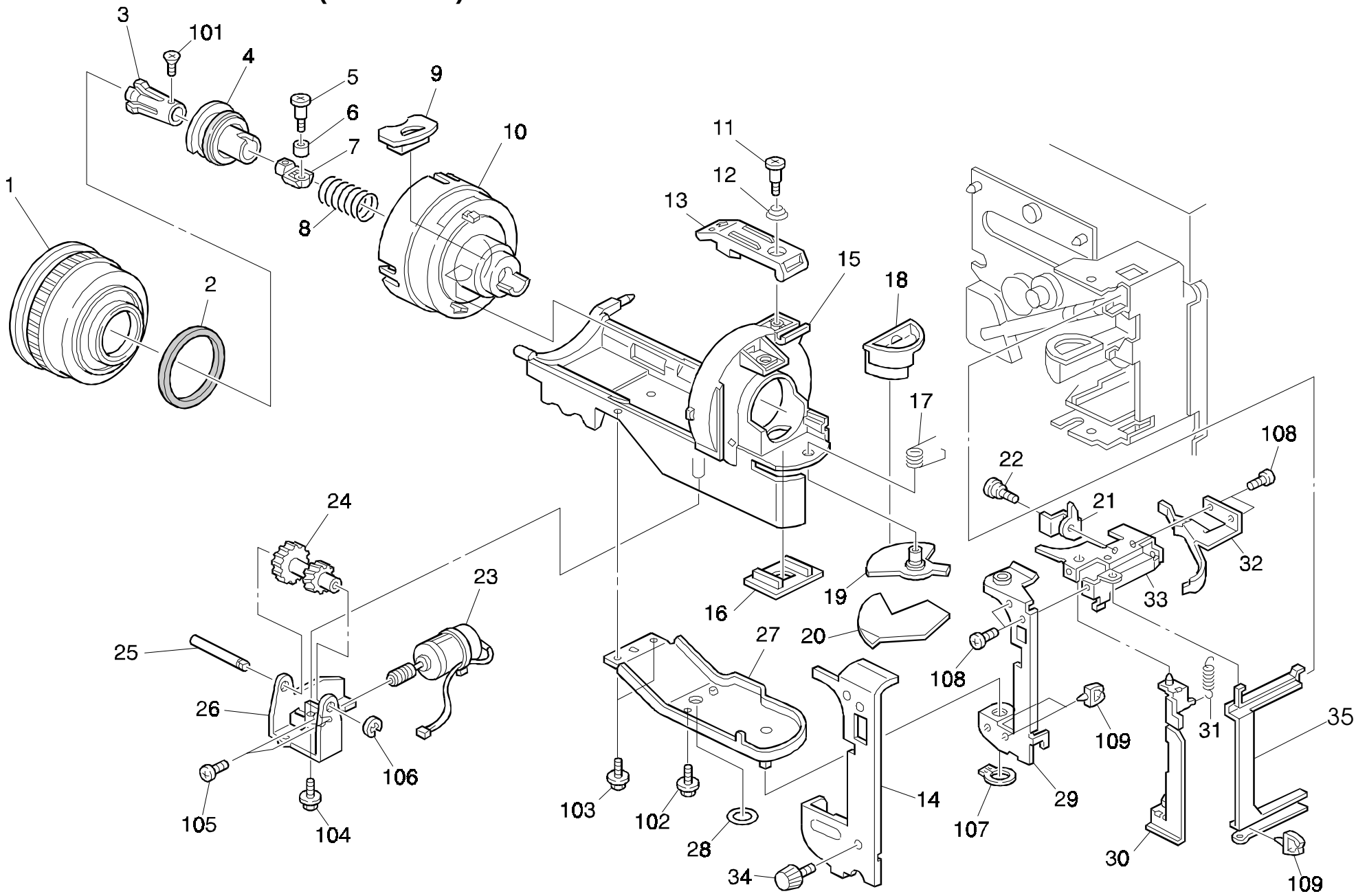

15. TONER SUPPLY UNIT (A156/A153)

Index No.	Part No.	Description	Q'ty Per Assembly
1	A153 3187	Toner Supply Gear (115V)	1
1	A153 3185	Toner Supply Gear (230V)	1
1	A153 3189	Toner Supply Gear (ASIA/TAIWAN)	1
2	AA15 1894	Seal - 67x53x2	1
3	A134 3180	Bottle Chuck	1
4	A134 3177	Toner Slider	1
5	AA14 3712	Chuck Shaft	1
6	A134 3181	Chuck Roller	1
7	A134 3179	Chuck Shaft	1
8	AA06 3366	Chuck Spring	1
9	A134 3215	Rubber Cap	1
10	A134 3190	Toner Bottle Stopper	1
11	AA14 3410	Stepped Screw - M4	1
12	AA06 3367	Pressure Spring	1
13	A134 3197	Bottle Holder	1
14	A153 3281	Bottle Bracket Cover	1
15	A134 3172	Toner Bottle Holder	1
16	A153 3173	Shutter Guide	1
17	AA06 6260	Shutter Spring	1
18	A153 3174	Shutter Holder	1
19	A153 3172	Shutter	1
20	AA15 0377	Shutter Seal	1
21	A153 3265	Bottle Unit Lock Plate	1
22	AA14 3025	Stepped Screw - M3	1
23	A134 3162	Bottle Drive Motor	1
24	AB01 7347	Idle Gear	1
25	AA14 8413	Idle Gear Shaft	1
26	A134 3161	Bottle Drive Bracket	1
27	A134 3157	Bottle Holder Bracket	1
28	AA15 0234	Mylar Seal - Base	1
29	A153 3262	Bottle Unit Hinge	1
30	A153 3266	Bottle Unit Link Plate	1
31	AA06 0453	Relay Adjusting Spring	1
32	A134 3201	Cam - Toner Bottle	1
33	A153 3264	Bottle Unit Upper Hinge	1

Index No.	Part No.	Description	Q'ty Per Assembly
34	AA14 3459	Knob Screw	1
35	A153 3272	Bottle Unit Holder	1
35	A153 3152	Toner Supply Unit - EU	1
101	0323 0060B	Philips Sunk Screw - M3x6	
102	0433 0050B	Tapping Screw - M3x5	
103	0802 5231	Tapping Screw - M3x6	
104	0802 5233	Tapping Screw - M3x10	
105	0800 0072	Philips Pan Head Screw - M2.6x4	
106	0720 0040E	Retaining Ring - M4	
107	0725 0100E	Retaining Ring C - M10	
108	0434 0060B	Philips Tapping Screw - M4x6	
109	1105 0199	Clamp	

16. DEVELOPMENT UNIT (A156/A153)

Rev. 6/13/97

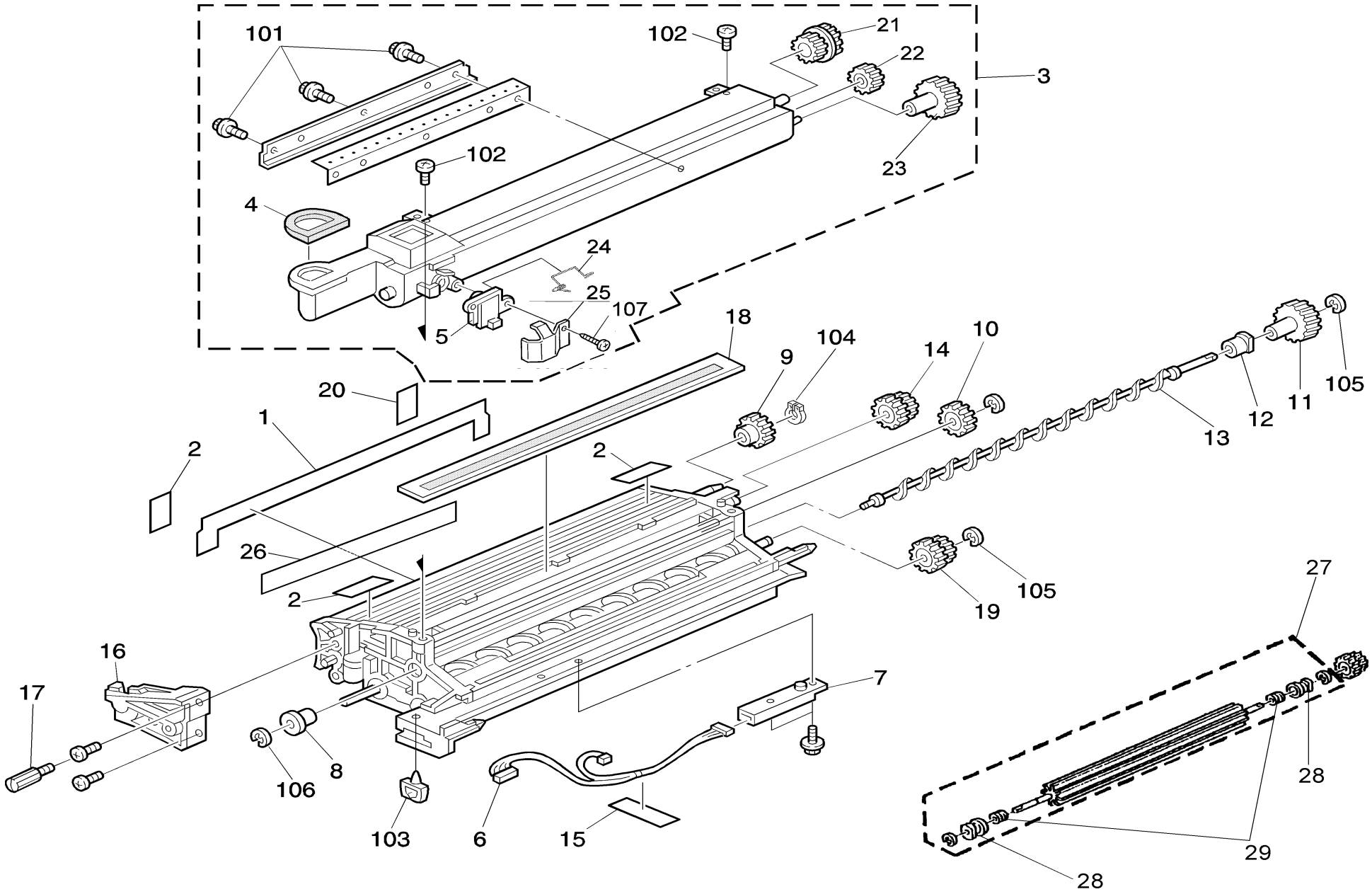

16. DEVELOPMENT UNIT (A156/A153)

Rev. 6/13/97

Index No.	Part No.	Description	Q'ty Per Assembly
*	A153 3051	Development Unit	1
1	AA15 2333	Entrance Seal	1
2	AA15 0382	Entrance Seal	4
3	A153 3200	Toner Hopper Ass'y	1
4	AA15 1935	Seal - 38x32x2.5	1
5	AW23 0009	Toner End Sensor	1
6	A153 5330	Ct Harness - 7p	1
7	AW23 0008	Toner Density Sensor	1
8	AA08 0188	Bushing - 5mm	1
9	AB01 3343	Development Roller	1
10	AB01 3909	Idle Gear	1
11	AB01 3911	Gear	1
12	AA08 0186	Bushing - 6mm	1
13	AD03 7045	Toner Collection Coil	1
14	AB01 7366	Paddle Gear	1
15	G012 3897	Harness Seal - Toner End Sensor	1
16	A153 3090	Development Position Plate	1
17	A153 3149	Knob Screw - M4x12	1
18	A153 3080	Development Filter	1
19	AB01 7367	Right Paddle Roller	1
20	AA15 0231	Seal - 15X30	1
21	AB01 7365	Coupled Gear 15Z/22Z	1
22	AB01 3914	Gear 17Z	1
23	AB01 3915	Gear 26Z	1
24	AA06 6246	Spring	1
25	A153 3227	Toner End Sensor Cover	1
26	AA15 2334	Second Mylar	1
27	A153 3063	Paddle Roller Ass'y	2
28	AA15 2331	Bushing 6x12x11	2
29	AA15 2331	V-Ring	2

Index No.	Part No.	Description	Q'ty Per Assembly
101	0802 5231	Tapping Screw - M3x6	
102	0314 0060B	Philips Pan Head Screw - M4x6	
103	1105 0199	Clamp	
104	0720 0060E	Retaining Ring - M6	
105	0720 0040E	Retaining Ring - M4	
106	0720 0030E	Retaining Ring - M3	
107	0452 3010B	Tapping Bind Screw - M3x10	

17. DRUM UNIT 1 (A156/A153)

Rev. 6/4/96

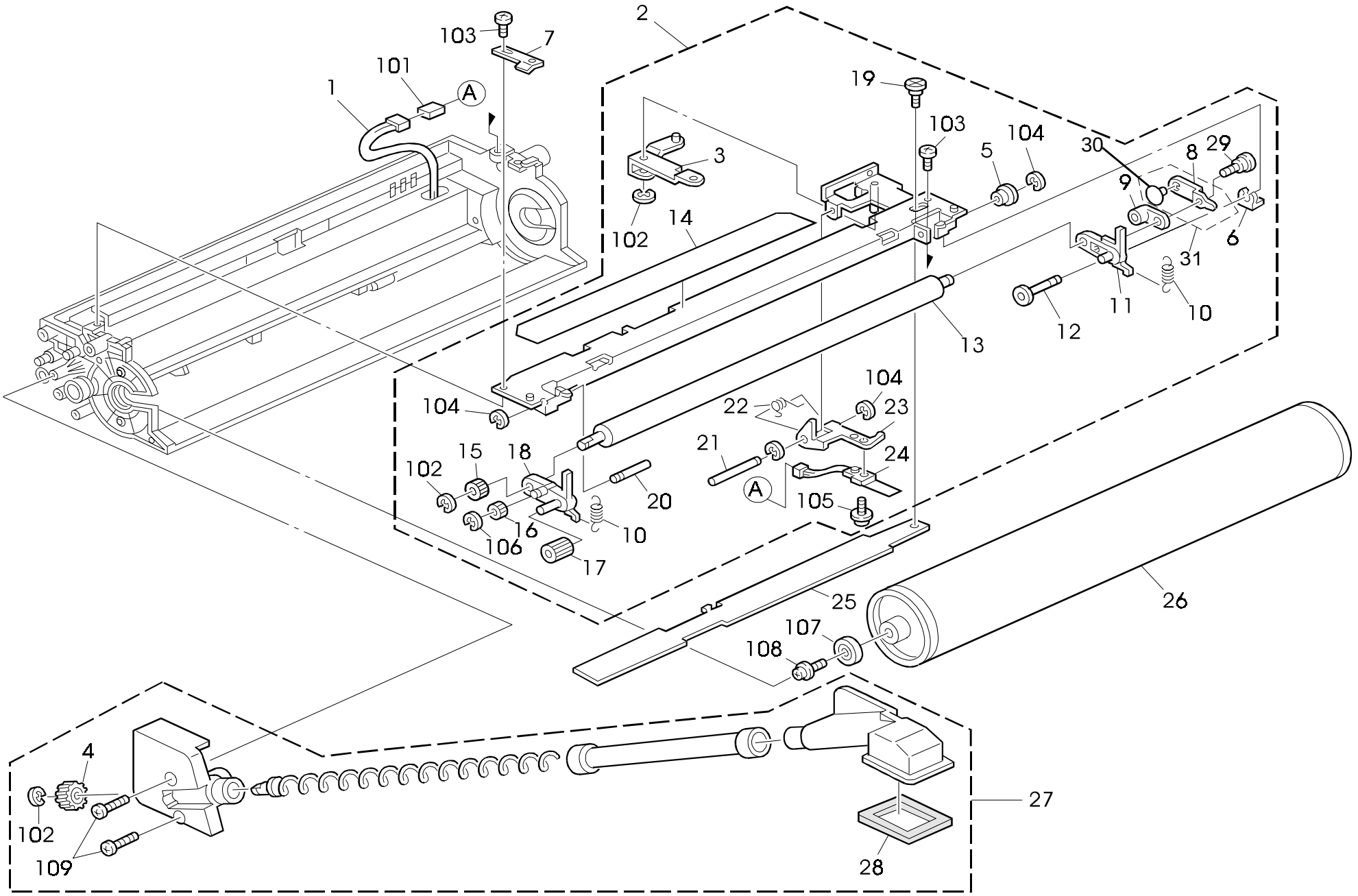

17. DRUM UNIT 1 (A156/A153)

Rev. 5/6/97

Index No.	Part No.	Description	Q'ty Per Assembly
*	A153 2255	Drum Unit	1
1	AZ48 0029	Ct Harness	1
2	A153 2110	Charge Roller Ass'y	1
3	A153 2126	Swing Arm	1
4	AB01 1358	Driven Gear	1
5	AA08 0219	Rear Roller Bushing	1
6	A077 1310	Snap Ring - M2	1
7	A153 2116	Grounding Plate	1
8	A153 2118	Charge Roller Terminal	1
9	AA08 0197	Rear Roller Bushing	1
10	AA06 2286	Pressure Spring	2
11	AA08 0209	Rear Roller Housing	1
12	AA14 5808	Rear Support Shaft	1
13	AD02 7001	Drum Charge Roller	1
14	A153 2143	Shielding Plate	1
15	AB01 0344	Roller Gear - 20Z	1
16	AB01 0343	Idle Gear - 14Z	1
17	AB01 0342	Idle Gear - 20Z	1
18	AA08 0191	Front Roller Bushing	1
19	AA14 7388	Stepped Screw	1
20	AA14 5794	Front Support Shaft	1
21	AA14 8439	Thermistor Shaft	1
22	AA06 6253	Pressure Spring	1
23	A153 2133	Thermistor Bracket	1
24	AW10 0032	Thermistor - 25°C 10k Ω	1
25	A153 2120	Drum Charge Roller Cleaner	1
26	A153 9510	OPC Drum	1
27	A153 3580	Toner Collection Unit	1
28	AA15 1945	Joint Seal	1
29	AA14 3730	Stepped Screw	1
30	A153 2117	Roller Terminal	1
31	A153 2119	Charge Roller Terminal Assembly	1

Index No.	Part No.	Description	Q'ty Per Assembly
101	1102 6613	Relay Terminal - 2P	
102	0720 0040E	Retaining Ring - M4	
103	0313 0060B	Philips Pan Head Screw - M3x6	
104	0720 0015E	Retaining Ring - 1.5	
105	0951 3008B	Philips Screw With Flat Washer - M3x8	
106	0720 0020E	Retaining Ring - M2	
107	0805 3471	Bushing - M8x22x7	
108	0951 5010B	Philips Screw With Washer - M5x10	
109	0802 5233	Tapping Screw - M3x10	

18. DRUM UNIT 2 (A156/A153)

Rev. 12/02/97

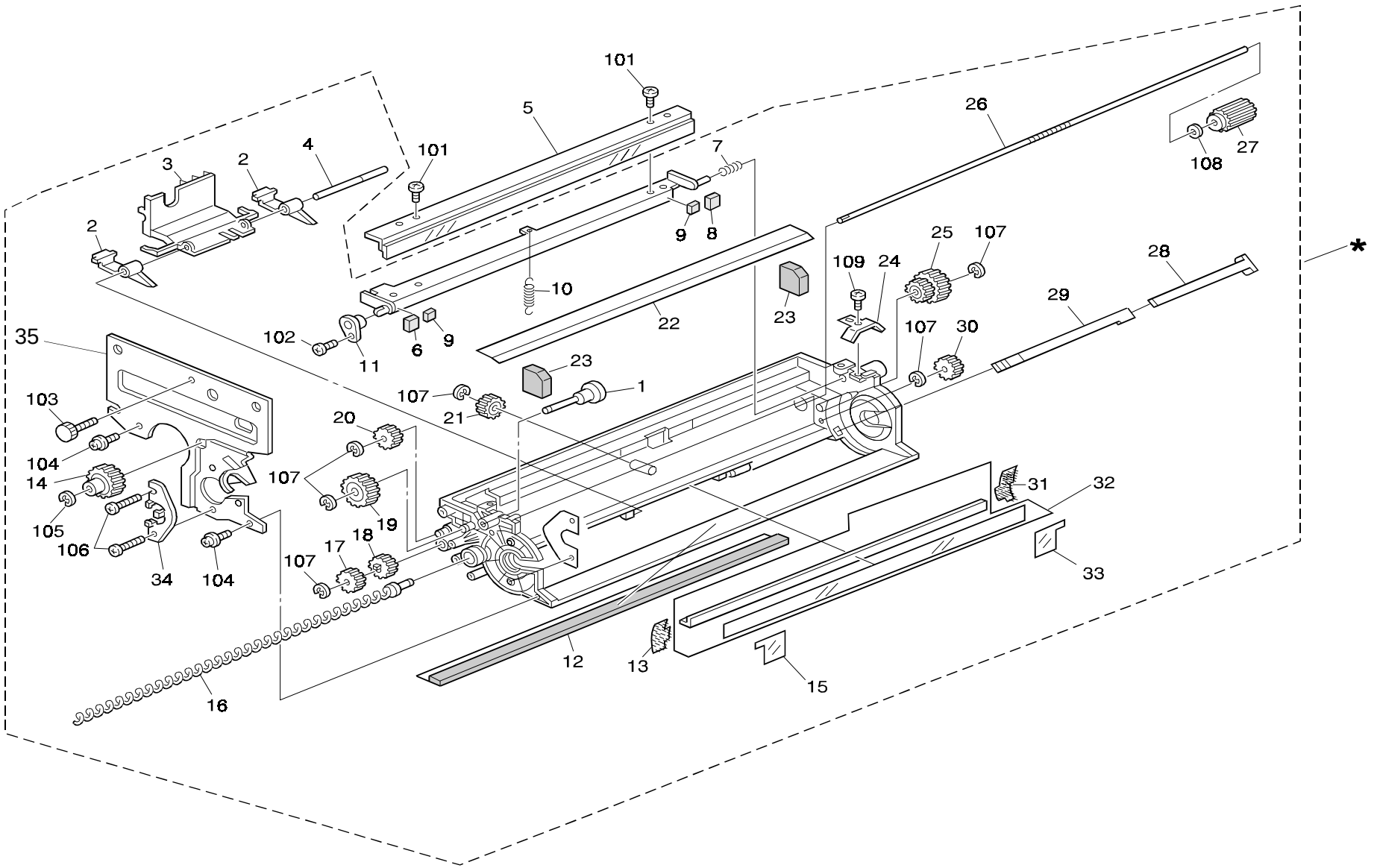

18. DRUM UNIT 2 (A156/A153)

Rev. 12/02/97

Index No.	Part No.	Description	Q'ty Per Assembly
*	A153 2255	Drum Unit	1
1	AB01 0341	Gear - 18Z	1
2	AD02 5019	Drum Pick-off Pawl	2
3	A153 3595	Pick-off Pawl Retainer	1
4	AA14 0321	Pick-off Pawl Shaft	1
5	A153 2275	Cleaning Blade	1
6	AA15 1943	Front Seal	1
7	G006 4317	Pressure Spring	1
8	AA15 1944	Rear Seal	1
9	AA15 1809	Rear Seal	2
10	AA06 0598	Pressure Spring	1
11	AA08 0154	Rear Bushing	1
12	AA15 0389	Drum Guide Seal	1
13	AA15 2245	Front Drum Seal	1
14	AB01 1361	Drive Gear	1
15	AA15 0380	Seal Front Holder	1
16	AD04 3035	Toner Collection Coil	1
17	AB01 7375	Drive Gear	1
18	AB01 7374	Drive Gear	1
19	AB01 7388	Blade Cam	1
20	AB01 1360	Idle Gear	1
21	AB01 7376	Separation Pawl Cam	1
22	A153 3558	Blade Seal	1
23	AA15 1942	Side Seal	2
24	A153 3570	Spring Plate	1
25	AB01 7373	Idle Cam	1
26	AA14 0560	Joint Shaft	1
27	AB01 1359	Joint Drive Gear	1
28	A153 3590	Density Sensor Bracket	1
29	A153 5132	ID Sensor	1
30	AB01 1357	Collection Coil Gear	1
31	AA15 2246	Rear Drum Seal	1
32	A153 3555	Cleaning Entrance Seal	1
33	AA15 0381	Seal Rear Holder	1
34	A153 2302	Drum Bearing Holder	1

Index No.	Part No.	Description	Q'ty Per Assembly
35	A1532301	Front Stay	1
101	0314 0060B	Philips Pan Head Screw - M4x6	
102	0802 5233	Tapping Screw - M3x10	
103	0803 0017	Knob Screw - M4x6.5	
104	0965 3010B	Tapping Screw With Flat Washer - M3x6	
105	0720 0030E	Retaining Ring - M3	
106	0313 0080B	Philips Pan Head Screw - M3x8	
107	0720 0040E	Retaining Ring - M4	
108	0805 3384	Bushing - 5mm	
109	0971 3006A	Philips Polycarbonate Screw - M3x6	

19. TRANSFER UNIT (A156/A153)

Rev. 11/18/96

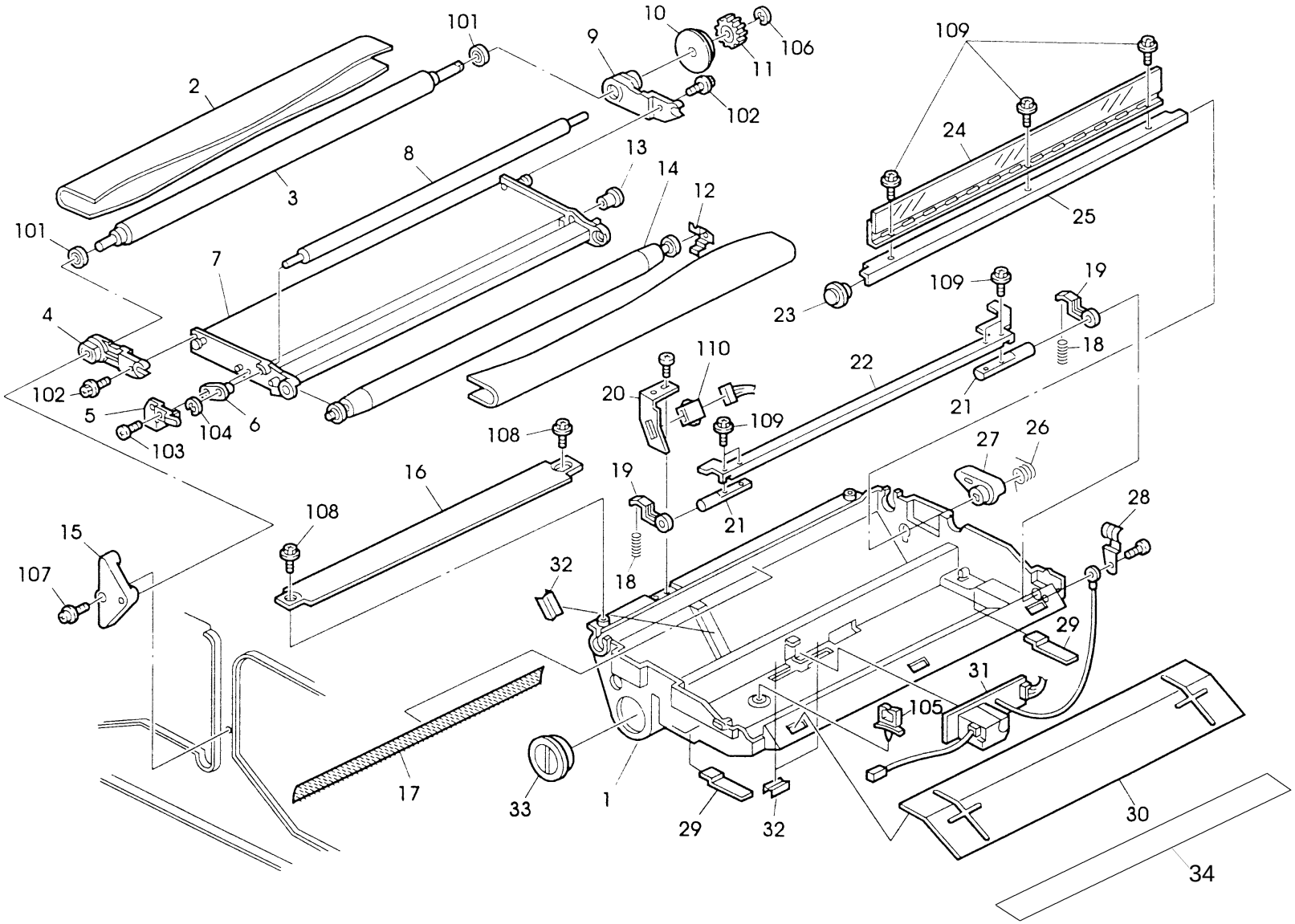

19. TRANSFER UNIT (A156/A153)

Rev. 11/18/96

Index No.	Part No.	Description	Q'ty Per Assembly
1	A153 3882	Transfer Belt Casing	1
2	A134 3850	Transfer Belt	1
3	A153 3866	Belt Drive Roller	1
4	A153 3863	Front Side Plate	1
5	A153 3873	Bias Roller Terminal	1
6	AA08 2061	Bias Roller Bushing - Front	1
7	A153 3862	Transfer Belt Frame	1
8	A153 3870	Transfer Bias Roller	1
9	A153 3864	Rear Side Plate	1
10	A153 3869	Drive Roller Bushing	1
11	AB01 3916	Belt Drive Gear - 25Z	1
12	A153 3874	Earth Terminal	1
13	AA08 0195	Bias Roller Bushing - Rear	1
14	A153 3865	Belt Driven Roller	1
15	A153 3905	Support Plate	1
16	A153 3884	Belt Guide Plate	1
17	AA15 2332	Seal Caseing	1
18	A077 3918	Spring - T/S Unit	2
19	A153 3886	Belt Pressure Lever	2
20	A153 3889	Connector Bracket	1
21	AA14 5537	Belt Release Shaft	2
22	A153 3887	Belt Release Stay	1
23	A153 3894	Bushing	1
24	A153 3892	Belt Cleaning Blade	1
25	A153 3893	Belt Cleaning Stay	1
26	AA06 6247	Torsion Spring	1
27	A153 3895	Front Bushing	1
28	A153 3888	Earth Plate	1
29	A153 3877	Spring Plate	2
30	AZ30 0041	Power Pack - Transfer Unit	1
31	A153 3901	Entrance Guide Plate	1
32	A153 3897	Harness Clamp	2
33	A153 3883	Toner Collection Cap	1
34	A153 3591	Mylar - Upper Transfer Entrance Guide	1
35	A153 3923	Spacer	1

Index No.	Part No.	Description	Q'ty Per Assembly
101	0805 3485	Bushing - 8x12x3.5mm	
102	0443 0080B	Tapping Screw - M3x8	
103	0802 5232	Tapping Screw - M3x8	
104	0720 0030E	Retaining Ring - M3	
105	1105 0196	Harness Clamp	
106	0720 0060E	Retaining Ring - M6	
107	0964 4008B	Tapping Screw With Flat Washer - M4x8	
108	0965 3008B	Tapping Screw With Washer - M3x8	
109	0443 0060B	Hexagon Tapping Screw - M3x6	
110	1102 5194	Connector - 7p	

20. FUSING UNIT 1 (A156/A153)

Rev. 9/27/96

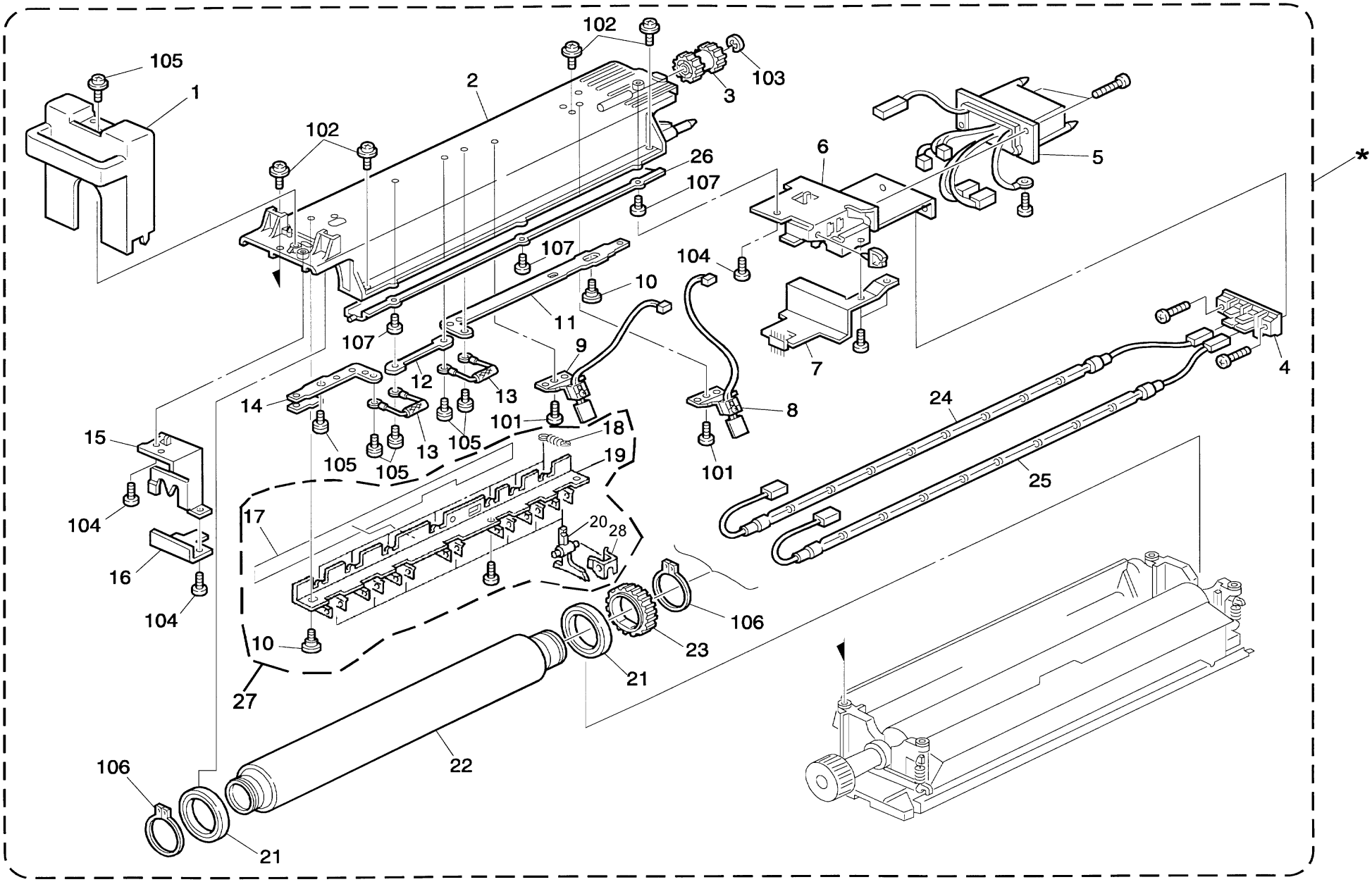

20. FUSING UNIT 1 (A156/A153)

Rev. 02/16/2001

Index No.	Part No.	Description	Q'ty Per Assembly
*	A153 4011	Fusing Unit - 115V	1
*	A153 4012	Fusing Unit - 230V	1
1	A134 4130	Fusing Front Cover	1
2	A208 4053	Fusing Upper Stay	1
3	AB01 3883	Idle Gear - 25Z	1
4	A204 4074	Terminal Connector - 2p	1
5	A153 5300	Fusing Unit Connector (120V)	1
5	A153 5665	Fusing Unit Connector (230V)	1
6	A208 4102	Fusing Connector Bracket	1
7	A208 4084	Rear Lamp Terminal Holder	1
8	A153 4089	Thermistor - 2	1
9	A153 4088	Thermistor	1
10	AA14 3715	Stepped Screw - M5	1
11	A134 4061	Rear Terminal Plate	1
12	A153 4062	Electrode Plate - Middle	1
13	A204 4160	Thermofuse - 172°C	1
14	A153 4063	Front Terminal Plate	1
15	A153 4075	Front Holder	1
16	A153 4102	Front Lamp Terminal Holder	1
17	A134 4115	Fusing Seal	1
18	AA06 0103	Solenoid Spring	5
19	A153 4112	Stripper Bracket	1
20	AE04 4019	Hot Roller Stripper	5
21	AE03 0023	Bearing - 30x42x7mm	2
22	AE01 1027	Hot Roller	1
23	AB01 3882	Gear - 40Z	1
24	AX43 0025	Fusing Lamp - 230V 350W 320mm	1
24	AX43 0023	Fusing Lamp - 120V 350W	1
25	AX43 0024	Fusing Lamp - 230V 550W 210mm	1
25	AX43 0022	Fusing Lamp - 120V 550W	1
26	A153 4055	Upper Fusing Guide	1
27	A153 9016	Stripper Bracket Ass'y	1
28	A153 4114	Retaining Clip	8

Index No.	Part No.	Description	Q'ty Per Assembly
101	0954 3010B	Philips Screw - M3x10	
102	0954 4012B	Double Sems Screw - M4 X 12	
103	0720 0060E	Retaining Ring - M6	
104	0314 0060B	Philips Pan Head Screw - M4x6	
105	0950 4006M	Philips Screw With Flat Washer - M4x6	
106	0725 0300E	Retaining Ring C - M30	
107	0313 0050B	Philips Pan Head Screw - M3X5	

21. FUSING UNIT 2 (A156)

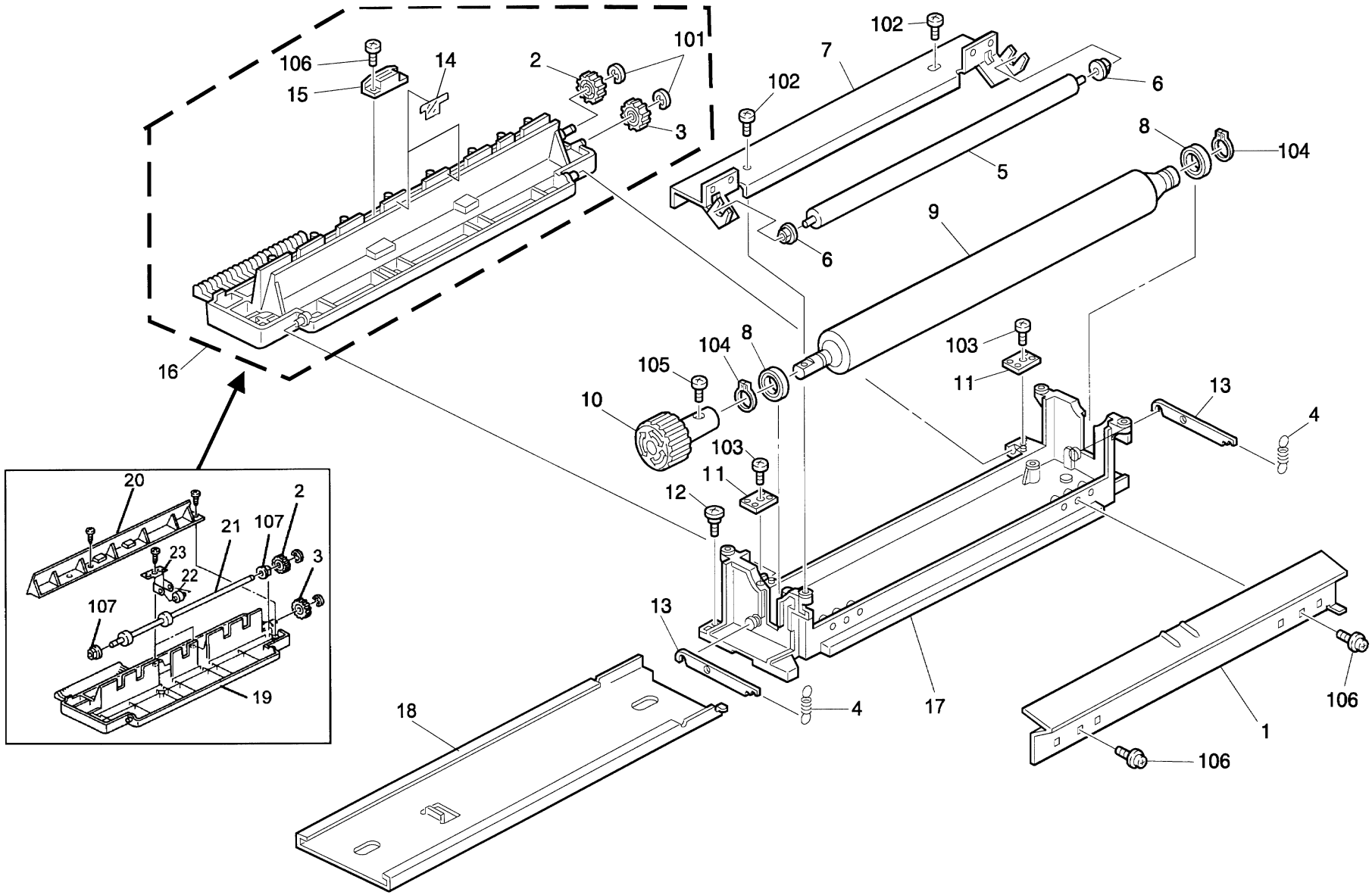

21. FUSING UNIT 2 (A156)

Rev. 6/13/97

Index No.	Part No.	Description	Q'ty Per Assembly
1	A153 4197	Lower Fusing Guide	1
2	AB01 3885	Idle Gear - 20Z	1
3	AB01 3884	Exit Gear - 17Z	1
4	AA06 0658	Spring - Pressure - 66n	2
5	AE04 2030	Cleaning Roller	1
6	AE03 1028	Bushing - 8x10x5	2
7	A153 4205	Cleaning Roller Bracket	1
8	AE03 0022	Bearing - 12x24x64m	2
9	AE02 0050	Pressure Roller	1
10	AG05 0076	Fusing Knob	1
11	A134 4301	Exit Guide Hinge	2
12	A077 4162	Shoulder Screw - M3	1
13	A134 4161	Pressure Lever	2
14	A134 4254	Fusing Exit Guide - Rear	1
14	A134 4255	Fusing Exit Guide - Front	1
15	AG07 0009	Magnetic Catch	1
16	A134 4006	Fusing Exit Frame	1
17	A134 4151	Fusing Frame	1
18	A134 4153	Slide Rail - Fusing	1
19	A153 4250	Fusing Exit Frame	1
20	A134 4280	Fusing exit Guide	1
21	AF02 0326	Exit Roller Assembly	1
22	AF04 0548	Exit Drive Roller	2
23	A134 4006	Roller Holder	2

Index No.	Part No.	Description	Q'ty Per Assembly
101	0720 0040E	Retaining Ring - M4	
102	0414 0122B	Philips Tapping Screw - M4x12	
103	0434 0082B	Tapping Screw - M4x8	
104	0725 0120E	Retaining Ring C - M12	
105	0950 4008B	Philips Screw With Spring Washer - M4X8	
106	0802 5237	Tappring Screw - M4X10	
107	0805 3480	Bushing - 6mm	

22. DUPLEX TRAY 1 (A156)

Rev. 01/23/98

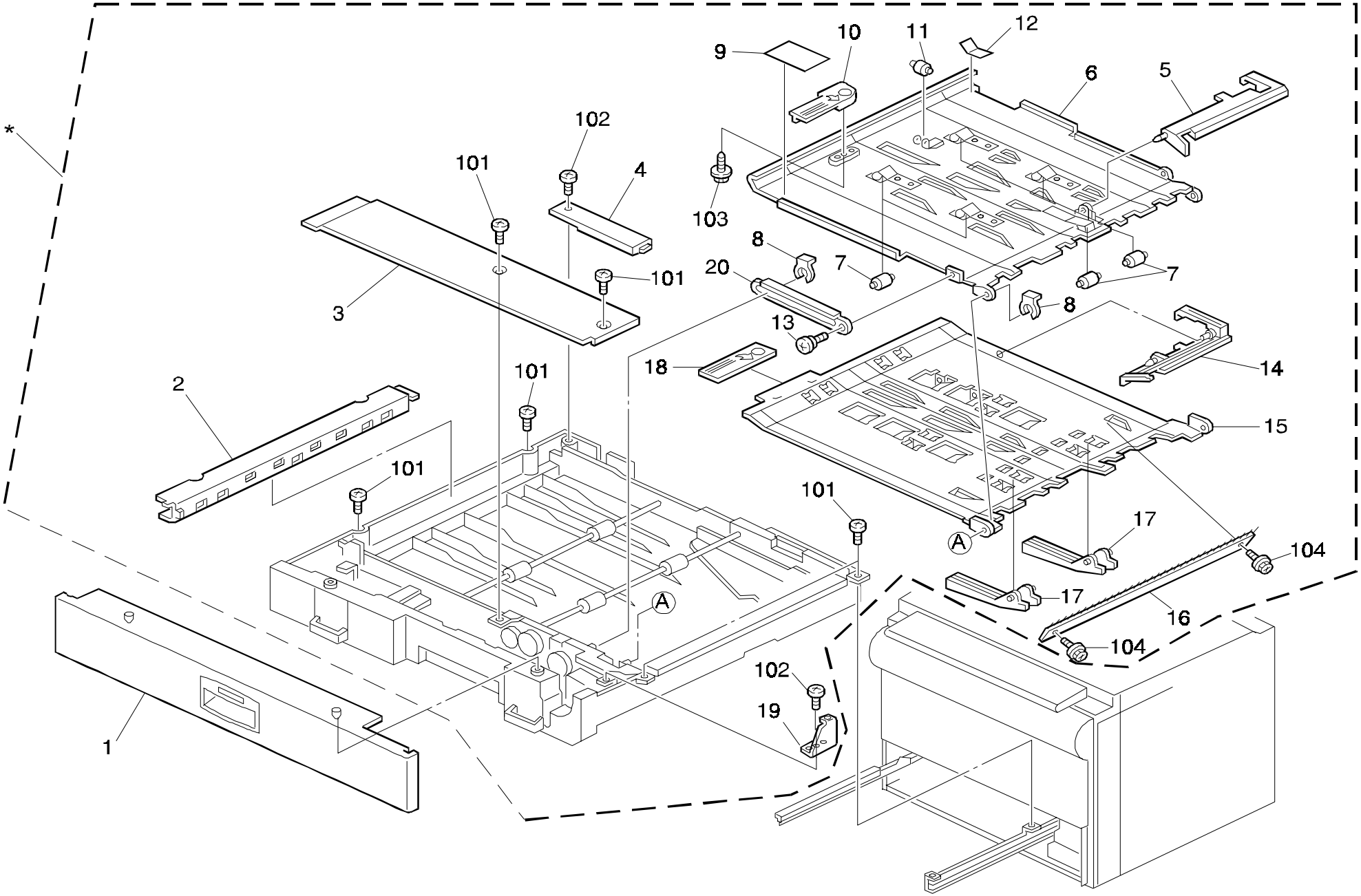

22. DUPLEX TRAY 1 (A156)

Rev. 05/30/2000

Index No.	Part No.	Description	Q'ty Per Assembly
*	A207 4610	Duplex Tray Ass'y	1
1	A134 2956	Paper Feed Front Cover	1
2	A134 4720	End Fence Upper Cover	1
3	A134 4701	Front Upper Cover	1
4	A134 4721	Connector Cover	1
5	A134 4728	Inverter Feeler	1
6	A134 4732	Upper Guide Plate	1
7	AF02 2077	Driven Roller	7
8	5206 2686	Snap Ring	2
9	A134 4884	Decal - Duplex Misfeed Removal	1
10	A134 4726	Guide Plate Knob	1
11	G694 4747	Upper Exit Roller	7
12	AA16 2068	Guide Plate Pad	1
13	5447 2768	Stepped Screw - M3	1
14	A134 4730	Entrance Feeler	1
15	A134 4740	Lower Guide Plate	1
16	AA12 0067	Anti Static Brush	1
17	A154 4616	Paper Holder	6
18	A134 4739	Lower Guide Plate Knob	1
19	A134 4712	Right Cover Bracket	1
20	A134 4619	Guide Plate Link	1

Index No.	Part No.	Description	Q'ty Per Assembly
101	0344 0080F	Philips Truss Head Screw - M4x8	
102	0802 5236	Tapping Screw - M4x8	
103	0802 5231	Tapping Screw - M3x6	
104	0443 0060W	Hexagon Head Tapping Screw - M3x6	

23. DUPLEX TRAY 2 (A156)

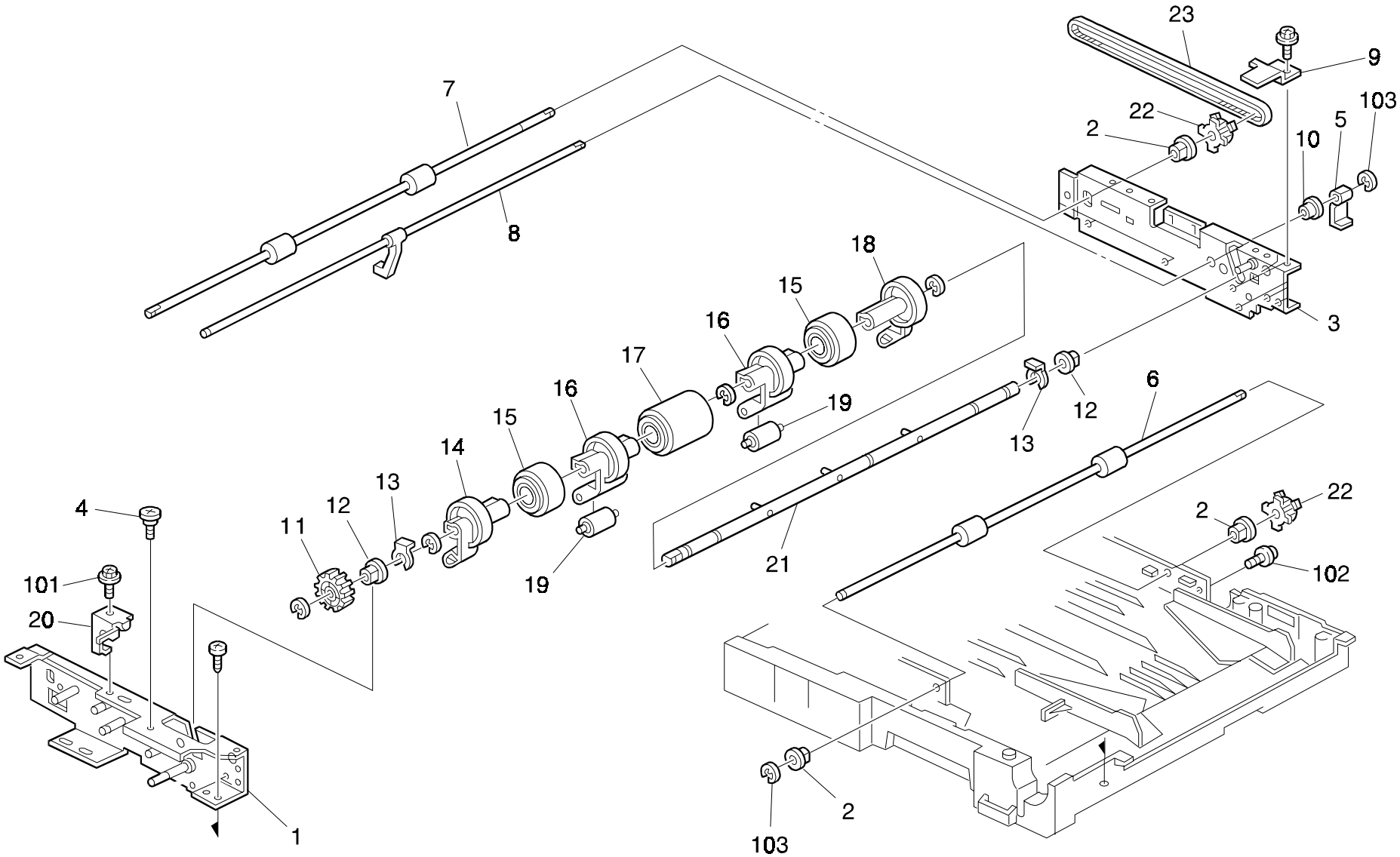

23. DUPLEX TRAY 2 (A156)

Index No.	Part No.	Description	Q'ty Per Assembly
1	A134 4751	Front Side Plate	1
2	5053 0447	Bushing - 6mm	3
3	A134 4781	Rear Side Plate	1
4	AA14 3307	Stepped Screw - M3x4	1
5	AA11 1208	Paper End Sensor Feeler	1
6	AF02 0319	Transport Roller	1
7	AF02 0320	Right Transport Roller	1
8	A134 4676	Paper End Feeler	1
9	A134 4804	Guide Plate Stopper	1
10	5443 2668	Bushing - 4x6x7mm	1
11	AB01 1166	Gear - 33Z	1
12	5304 1639	Bushing - 8mm	2
13	5215 2621	Snap Ring - M6	2
14	A134 4809	Front Guide Holder	1
15	AF02 0317	Stack Roller	2
16	A134 4649	Paper Guide Holder	2
17	AF03 1024	Feed Roller	1
18	A134 4808	Rear Guide Holder	1
19	AF02 2077	Driven Roller	2
20	A134 4690	Clutch Stopper	1
21	A134 4512	Feed Roller Shaft	1
22	AB03 0474	Pulley - 24Z	2
23	AA04 3373	Timing Belt - S2M308	1

Index No.	Part No.	Description	Q'ty Per Assembly
101	0443 0060B	Hexagon Tapping Screw - M3x6	
102	0951 4008B	Philips Screw With Washer - M4x8	
103	0720 0040E	Retaining Ring - M4	

24. DUPLEX TRAY 3 (A156)

Rev 7/25/97

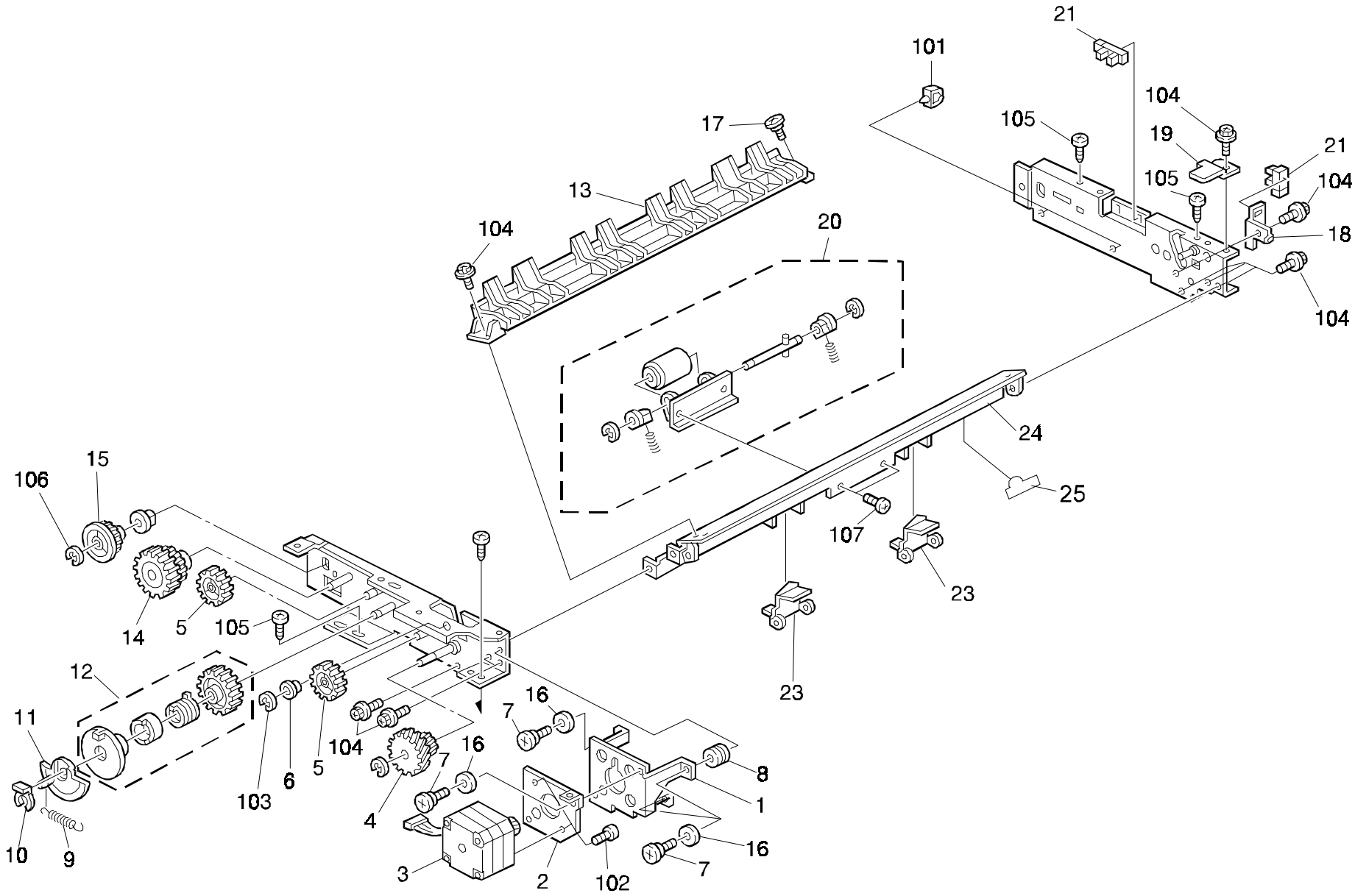

24. DUPLEX TRAY 3 (A156)

Rev. 7/25/97

Index No.	Part No.	Description	Q'ty Per Assembly
1	A134 4799	Motor Bracket	1
2	A134 4800	Motor Bracket	1
3	A134 5290	Transport Drive Motor	1
4	AB01 7337	Gear - 15Z/55Z	1
5	AB01 1165	Gear - 32Z	2
6	5443 2668	Bushing - 4x6x7mm	1
7	5053 0447	Bushing - 6mm	4
8	A134 4790	Paper End Sensor Bracket	1
9	AA06 0593	Spring	1
10	5447 2681	Snap Ring	1
11	A334 4706	Disk - Bottom Plate Clutch	1
12	AB04 0015	Spring Clutch - Tray Bottom Plate	1
13	A079 3626	Stepped Screw - Swing Cleaning	4
14	AB01 7332	Gear - 24Z/41Z	1
15	AB01 1167	Gear - 25Z	1
16	A134 4658	Vibrating Plate	2
17	AA14 3307	Stepped Screw - M3x4	1
18	A134 4508	Inverter Guide Plate	1
19	AA16 1067	Cushion - Motor	3
20	AA13 2184	Motor Cushion	3
21	AW02 0075	Photointerrupter	2
22			
23	A134 4527	Separation Roller	1
24	A134 4662	Duplex Guide Plate	1
25	A134 4670	Duplex Guide Mylar	1

Index No.	Part No.	Description	Q'ty Per Assembly
101	1105 0199	Clamp	
102	0313 0050B	Philips Pan Head Screw - M3x5	
103	0720 0030E	Retaining Ring - M3	
104	0443 0060B	Hexagon Tapping Screw - M3x6	
105	0802 5236	Tapping Screw - M4x8	
106	0720 0040E	Retaining Ring - M4	
107	0434 0060B	Philips Tapping Screw - M4x6	

25. DUPLEX TRAY 4 (A156)

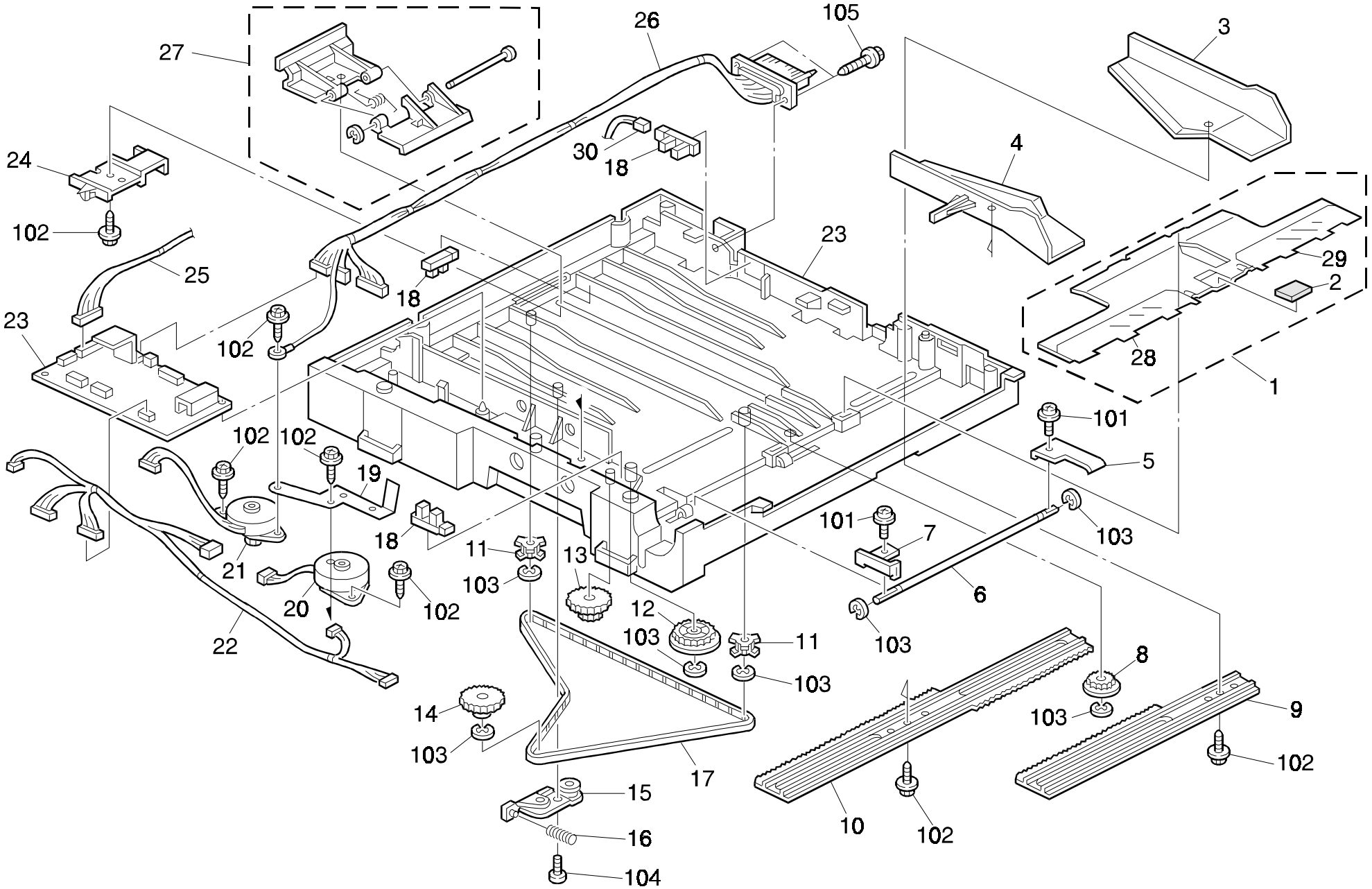

25. DUPLEX TRAY 4 (A156)

Rev. 7/25/97

Index No.	Part No.	Description	Q'ty Per Assembly
1	A154 4620	Bottom Plate	1
2	AF01 3003	Bottom Plate Pad - Duplex	1
3	AF01 6160	Rear Side Fence	1
4	AF01 6161	Front Side Fence	1
5	A204 4651	Bottom Pressure Plate	1
6	AA14 0291	Bottom Plate Shaft	1
7	A491 4690	Bottom Plate Hook	1
8	G011 3305	Gear - 16T	1
9	A134 4689	Rear Side Fence Rack	1
10	A134 4688	Front Side Fence Rack	1
11	AB03 0473	End Fence Pulley - 22Z	2
12	AB01 3881	Gear - 31Z	1
13	AB01 7400	Gear- 18Z/68Z	1
14	AB01 7339	End Fence Gear - 22Z/58Z	1
15	A134 4714	Tightener	1
16	AA06 3370	Spring	1
17	AA04 3374	Timing Belt - S2M800	1
18	AW02 0075	Photointerrupter	3
19	A134 4620	Grounding Plate	1
20	A134 5291	Jogger Drive Motor - Side Fence	1
21	A134 5292	Jogger Drive Motor - End Fence	1
22	A134 5323	Motor Harness	1
23	A134 5254	Duplex Control Board	1
23	AF01 0018	Duplex Tray	1
24	A134 4710	End Fence Actuator	1
25	A134 5321	Sensor Relay Harness	1
26	A134 5320	Duplex Tray Harness	1
27	A134 4525	End Fence	1
28	A154 4621	Front Guide Plate	1
29	A154 4622	Rear Guide Plate	1
30	A134 5322	End Fence Harness	1

Index No.	Part No.	Description	Q'ty Per Assembly
101	0951 3006B	Philips Screw With Flat Washer - M3x6	
102	0802 5232	Tapping Screw - M3x8	
103	0720 0040E	Retaining Ring - M4	
104	0802 5236	Tapping Screw - M4x8	
105	0802 5234	Tapping Screw - M3x12	

26. PAPER EXIT SECTION (A156/A153)

Rev. 2/28/97

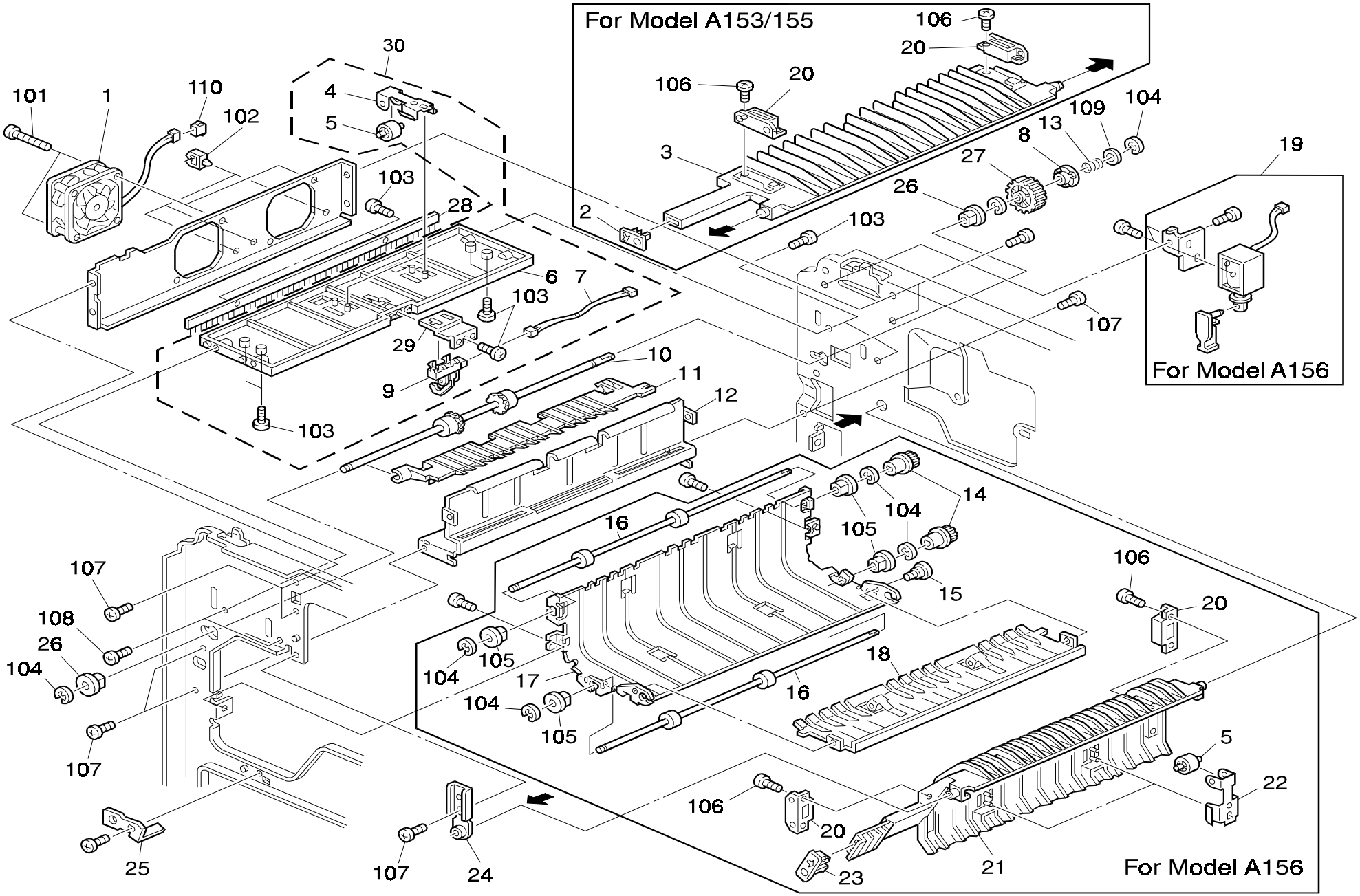

26. PAPER EXIT SECTION (A156/A153)

Rev. 2/28/97

Index No.	Part No.	Description	Q'ty Per Assembly
1	AX64 0059	Fan Motor - DC24V 3.12W	1
2	A153 4458	Exit Unit Knob	1
3	A153 4454	Lower Guide Plate	1
4	A153 4453	Exit Driven Roller	2
5	AF04 0031	Upper Exit Roller	2
6	A153 4452	Upper Guide Plate	1
7	A153 5328	Ct Harness	1
8	A470 1703	Shift Clutch	1
9	AW02 0074	Sensor Actuator	1
10	AF02 0327	Exit Roller	1
11	AF02 5023	Exit Pick-off Pawl	1
12	A134 4459	Exit Cover	1
13	A470 1704	Spring - Lower Exit Roller	1
14	AB03 0536	Pulley - 18Z S2M	2
15	AA14 3062	Shoulder Screw - M4	2
16	AF02 0328	Relay Drive Roller	2
17	A134 4464	Left Reverse Guide	1
18	A154 4465	Reverse Guide Plate - Right Lower	1
19	A134 4471	Stripper Solenoid	1
20	AG07 0004	Magnetic Catch	2
21	A154 4462	Reverse Guide Plate - Upper Right	1
22	A154 4469	Reverse Roller Holder - Upper Right	2
23	A134 4458	Exit Unit Knob (A156)	1
24	A134 4455	Upper Guide Bracket	1
25	A134 4468	Lower Guide Plate (A156)	1
26	AA08 2058	Bushing - 6x10x9mm (A156)	1
27	AB01 3889	Gear - 24Z	1
28	AA12 0071	Exit Antistatic Brush	1
29	A153 4456	Exit Sensor Bracket	1
30	A153 4451	Upper Guide Plate Ass'y	1

Index No.	Part No.	Description	Q'ty Per Assembly
101	0353 0300B	Bind Screw - M3x30	
102	1105 0199	Clamp	
103	0802 5236	Tapping Screw - M4x8	
104	0720 0040E	Retaining Ring - M4	
105	0805 3480	Bushing - 6mm	
106	0434 0082B	Tapping Screw - M4x8	
107	0434 0060B	Philips Tapping Screw - M4x6	
108	0434 0100B	Tapping Screw - M4x10	
109	0807 4072	Washer - Core	
110	1102 4473	Ct Connector - 2p	

27. DRIVE SECTION 1 (A156/A153)

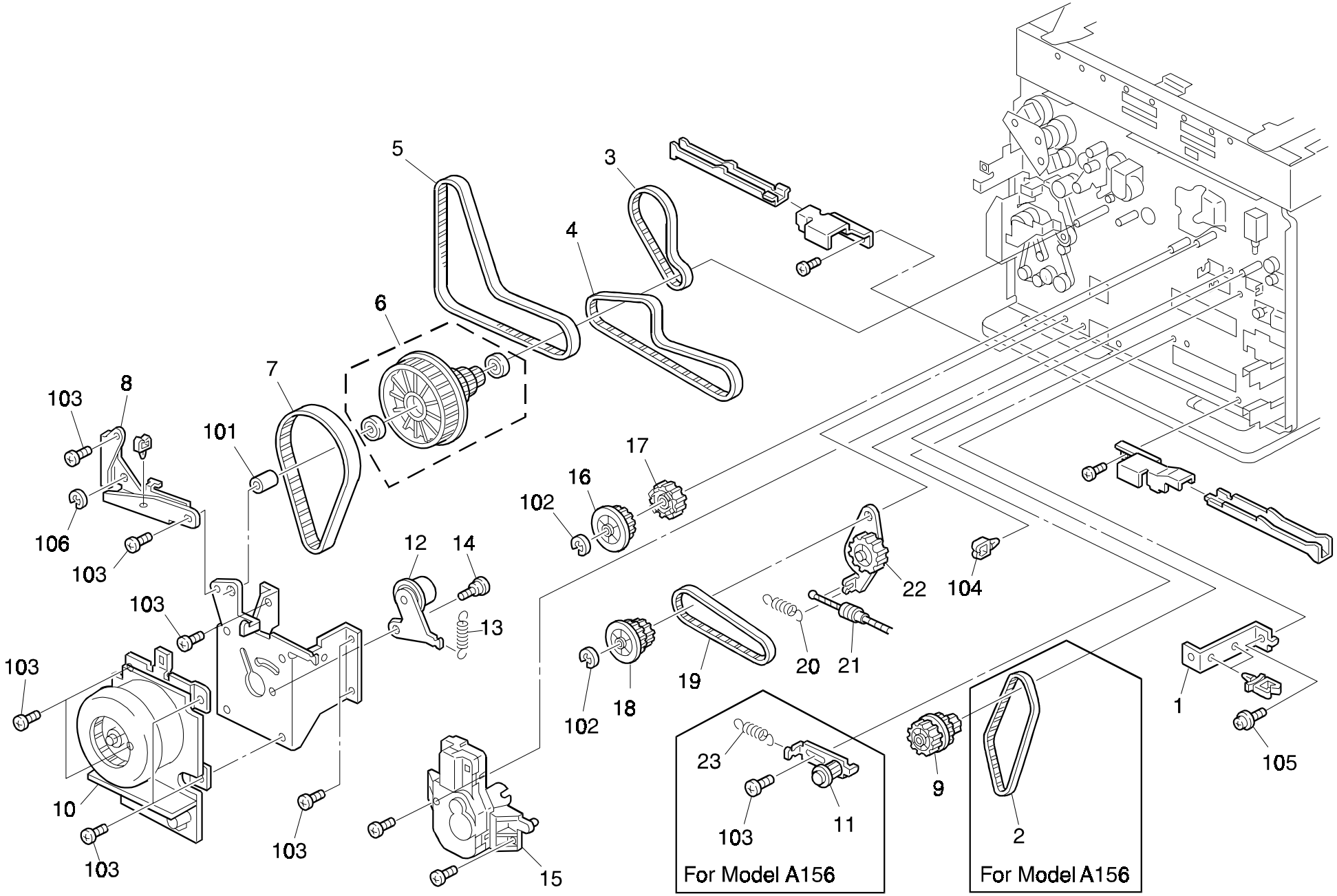

27. DRIVE SECTION 1 (A156/A153)

Rev. 3/20/96

Index No.	Part No.	Description	Q'ty Per Assembly
1	A153 5802	Lower Bracket - DC Drive Board	1
2	AA04 3411	Timing Belt - S2M 300	1
3	AA04 3392	Drum Timing Belt	1
4	AA04 3420	Timing Belt - 60S3M459	1
5	AA04 3420	Timing Belt - 80S3M519	1
6	AB03 0492	Pulley - 25/25/34/125Z	1
7	AA04 3391	Timing Belt - 160S2M328	1
8	A153 1131	Development Support Plate	1
9	AB01 7346	Exit Gear	1
10	AX07 0011	Motor - DC24V 63W (230V)	1
10	AX07 0010	Motor - DC24V 63W (120V)	1
11	A134 4481	Tightener Bracket	1
12	A153 1128	Tightener	1
13	AA06 0228	Spring - Transfer Drum Cleaning Sol	1
14	C105 2352	Stepped Screw - M6x1.7	1
15	A153 2936	Tray Lift Motor	1
16	AB03 0463	Fusing Cam Pulley	1
17	AB01 3872	Fusing Cam Gear - 28Z	1
18	AB01 7345	Timing Pulley - 35Z	1
19	AA04 3395	Timing Belt - 30S3M327	1
20	5203 3151	Roller Cover Spring	1
21	AA05 1023	Release Wire	1
22	A134 1121	Joint Gear	1
23	5414 4630	Bottle Spring (A156)	1

Index No.	Part No.	Description	Q'ty Per Assembly
101	0707 8140B	Bushing - 8x14mm	
102	0720 0060E	Retaining Ring - M6	
103	0434 0060B	Philips Tapping Screw - M4x6	
104	1105 0199	Clamp	
105	0964 4008B	Tapping Screw With Flat Washer - M4x8	

28. DRIVE SECTION 2 (A156/A153)

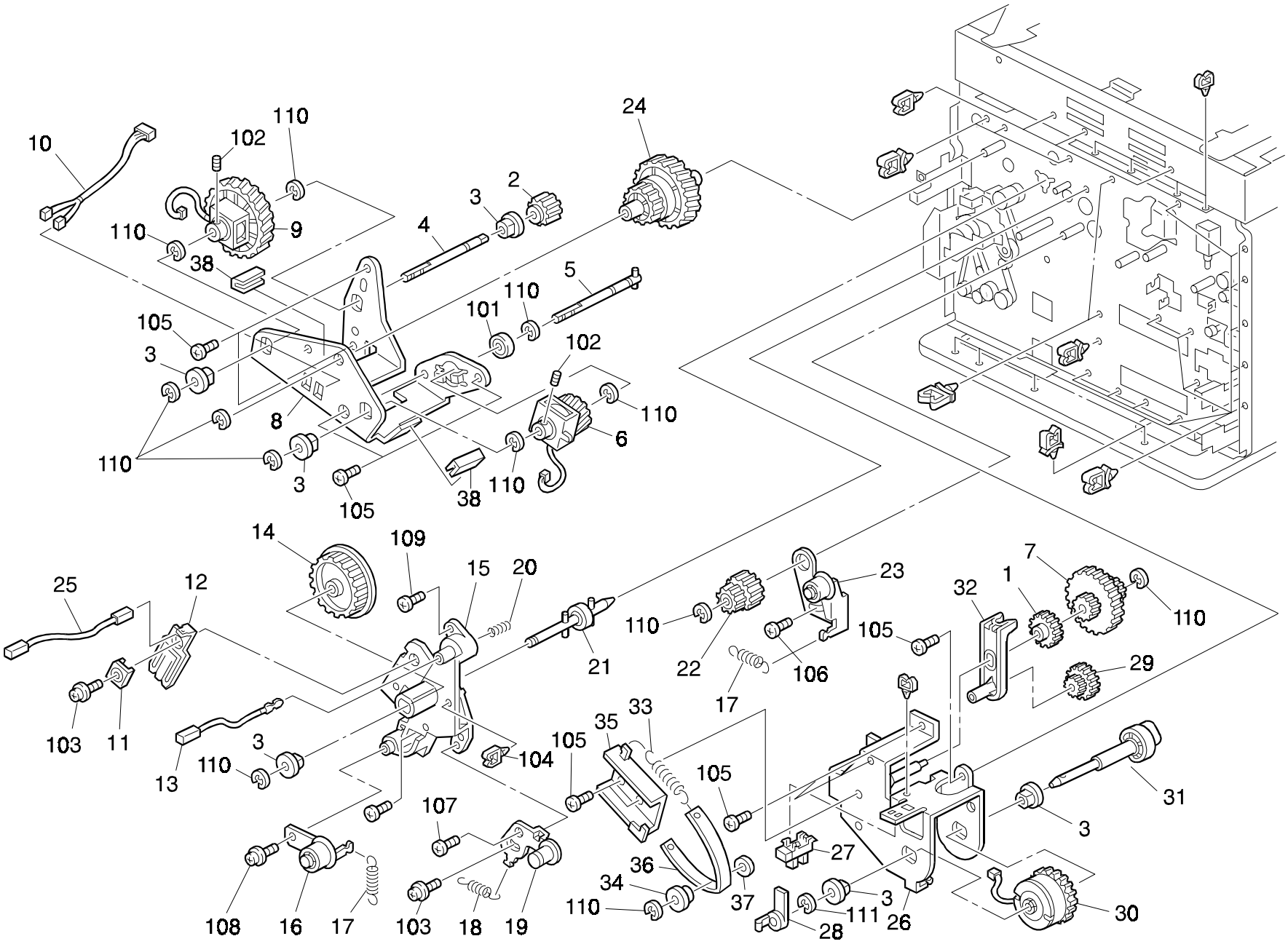

28. DRIVE SECTION 2 (A156/A153)

Index No.	Part No.	Description	Q'ty Per Assembly
1	AB01 7386	Cleaning Cam	1
2	AB01 3917	Toner Supply Gear	1
3	AA08 2047	Bushing - 8x16x7	6
4	AA14 5539	Solenoid Shaft	1
5	A153 1127	Clutch Shaft	1
6	AX20 0105	Magnetic Clutch - 15kgf 24Z	1
7	AB01 7368	Cleaning Drive Gear	1
8	A153 1125	Development Drive Bracket	1
9	AX20 0106	Magnetic Clutch - 15kgf 52Z	1
10	A153 5340	CT Harness	1
11	A153 3087	Terminal Cap	1
12	A153 3086	Bias Terminal	1
13	A153 2130	Receptacle Housing	1
14	AB03 0494	Drum Pulley	1
15	A153 1112	Drive Gear Holder	1
16	A153 1132	Development Tightener	1
17	5442 1111	Spring - Main Drive Tightner	2
18	5203 3151	Roller Cover Spring	1
19	A153 1135	Drum Drive Tightener	1
20	AA06 3524	Pressure Spring	1
21	A153 1117	Drum Drive Shaft	1
22	AB01 7369	Transfer Belt Pulley	1
23	A153 1119	Fusing Drive Tightener	1
24	AB01 7370	Development Pulley	1
25	AZ43 0020	High Voltage Supply Coard	1
26	A153 3915	Magnetic Clutch Bracket	1
27	AW02 0075	Photointerrupter	1
28	A153 3914	Magnetic Clutch Feeler	1
29	AB01 7385	Gear - 17Z/24Z	1
30	AX21 0049	Magnetic Clutch - 5kgf 42Z	1
31	A153 3911	Cam Shaft	1
32	A153 2142	Cam Lever	28
33	AA06 2290	Spring	1
34	AA13 4100	Boss	1
35	A153 3917	Magnetic Clutch Bracket	1

Index No.	Part No.	Description	Q'ty Per Assembly
36	A153 3918	Break Pad	1
37	A153 3919	Spacer	1
38	A153 1126	Edging	2
101	0740 3008	Ball Bearing - 8x22x7	
102	0573 0040E	Hexagon Headless Set Screw - M3x4	
103	0951 4012B	Philips Screw With Flat Washer - M4X12	
104	1105 0199	Clamp	
105	0434 0060B	Philips Tapping Screw - M4x6	
106	0414 0080B	Tapping Screw - M4x8	
107	0802 5236	Tapping Screw - M4x8	
108	0802 5221	Tapping Screw - M3x10	
109	0950 4008B	Philips Screw With Spring Washer - M4X8	
110	0720 0060E	Retaining Ring - M6	
111	0720 0060	Retaining Ring - M6	

29. DRIVE SECTION 3 (A156/A153)

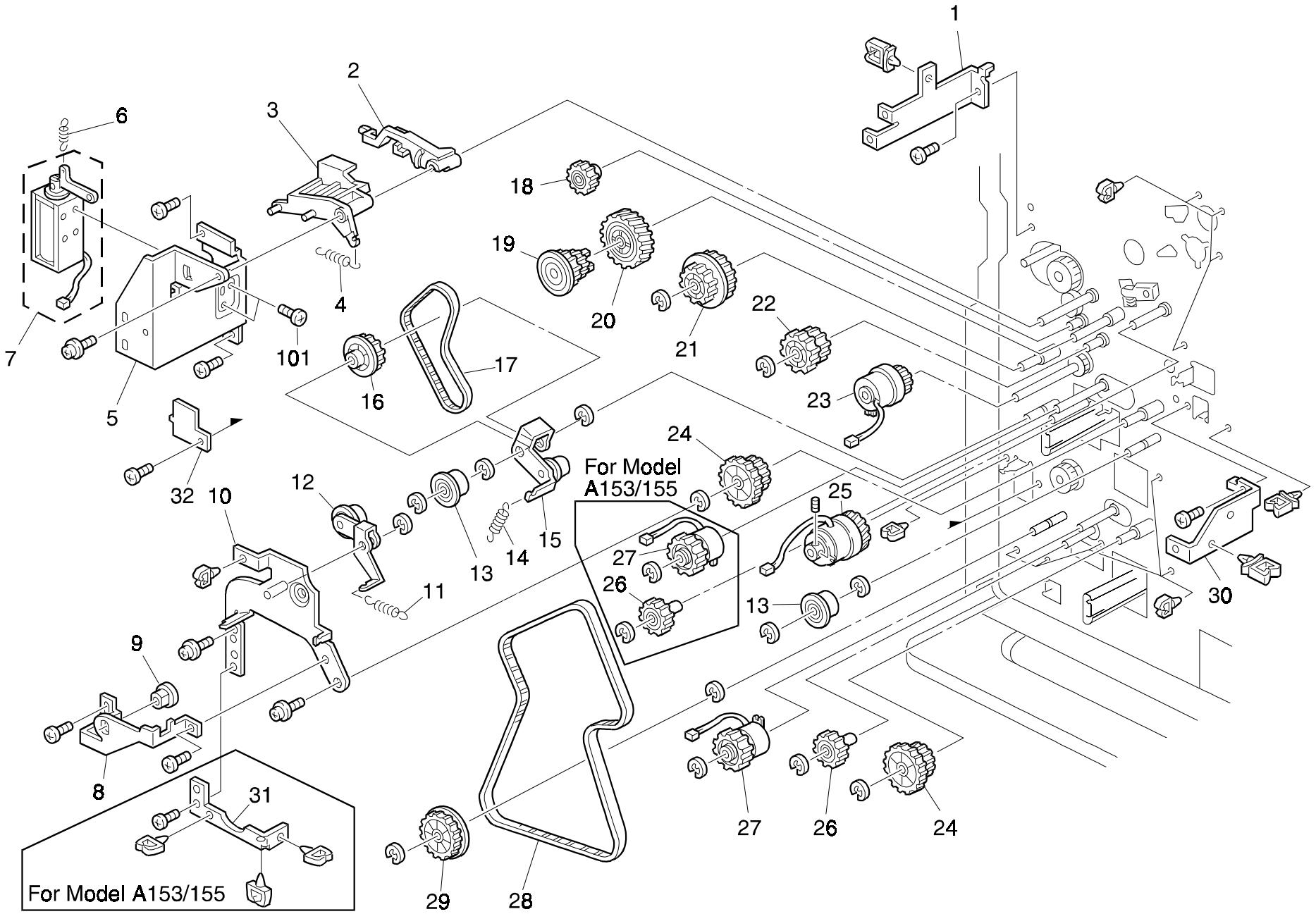

29. DRIVE SECTION 3 (A156/A153)

Index No.	Part No.	Description	Q'ty Per Assembly
1	A153 5813	Main Control Board Bracket	1
2	A155 2676	Pick-up Lever (A156)	1
3	A134 2678	Solenoid Link (A153)	1
3	A155 2677	Pick-up Link (A156)	1
4	AA06 0573	Release Spring	1
5	A134 2675	Solenoid Bracket (A153)	1
5	A155 2675	Pick-up Bracket (A156)	1
6	AA06 0572	Pressure spring	1
7	A134 2680	DC Solenoid (A153)	1
7	A155 2680	DC Solenoid (A156)	1
8	A134 2579	Stopper Bracket	1
9	5053 0223	Bushing - 8mm	1
10	A153 2570	Upper Support Plate	1
11	AA06 0453	Relay Adjusting Spring	1
12	A134 2575	Tightener Arm	1
13	AB03 0455	Tightener Pulley - 8x20x13	1
14	AA06 0228	Spring - Transfer Drum Cleaning Sol	1
15	A134 2572	Middle Tightener	1
16	AB03 0465	Timing Pulley - 25Z	1
17	AA04 3364	Timing Belt - S3M300	1
18	AB01 1153	Idle Gear - 25Z	1
19	AB03 3064	Drive Pulley	1
20	AB01 3918	Drive Gear - 35Z	1
21	AB01 7335	Timing Pulley - 22Z/37Z	1
22	AB01 7377	Gear - 25Z	1
23	AX20 0099	Magnetic Clutch - 7kgf.cm 26Z	1
24	AB01 7336	Timing Pulley - 30Z/35Z	2
25	AX20 0109	Magnetic Clutch - 10kgf.cm 35Z	1
26	AB01 3875	Reverse Gear - 27z	1
27	AX20 0100	Magnetic Clutch - 3.5kgf Cm 35Z	1
28	AA04 3368	Timing Belt - S3M609	1
29	AB03 0464	Timing Pulley - 30Z	1
30	A153 5812	Left Lower Bracket	1
31	A153 2572	Paper Feed Harness Bracket (A153)	1
32	A155 6325	Drive Cover Bracket	1

Index No.	Part No.	Description	Q'ty Per Assembly
101	0313 0050B	Philips Pan Head Screw - M3x5	

30. ELECTRICAL SECTION 1 (A156/A153)

Rev. 6/4/96

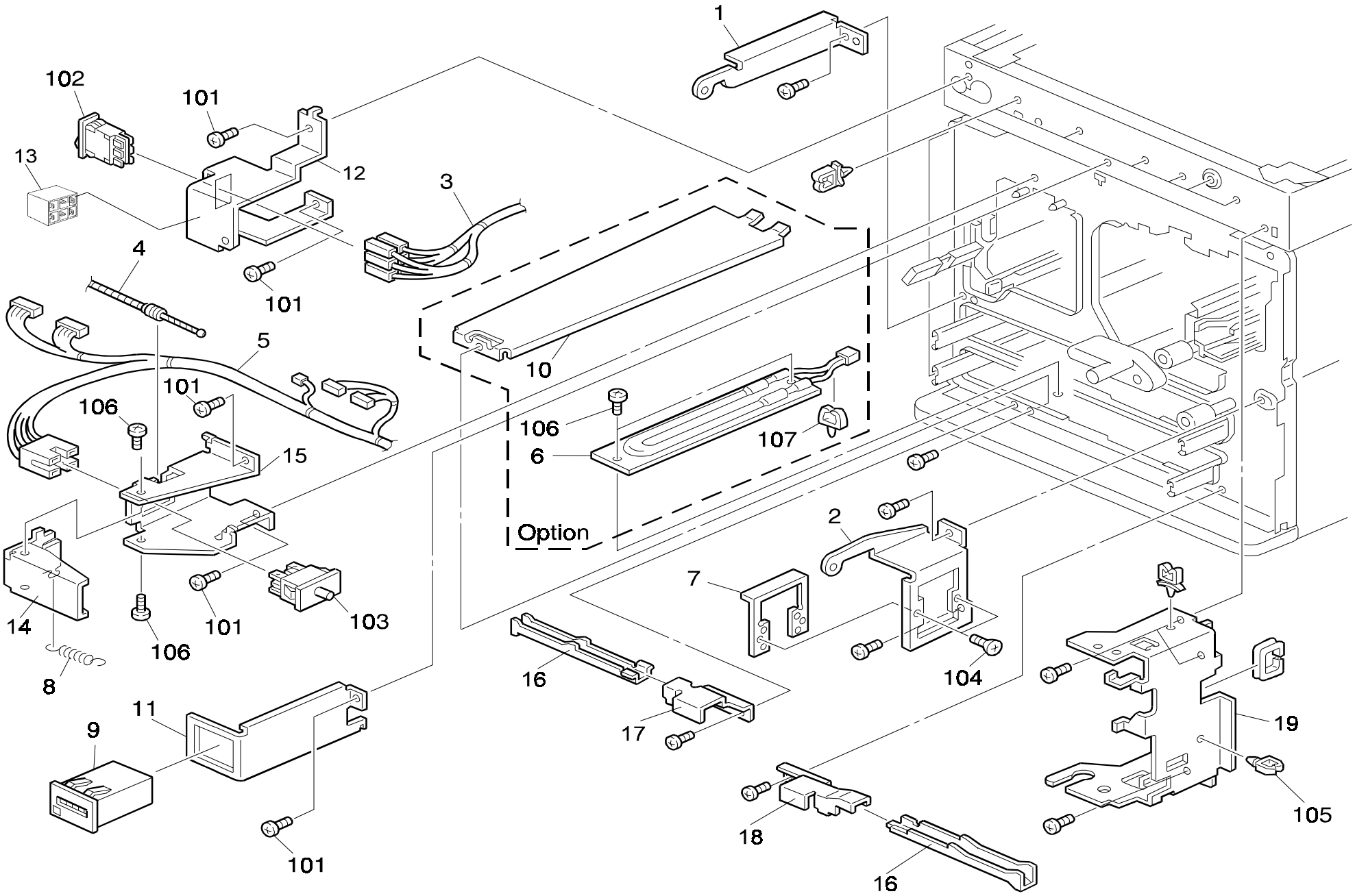

30. ELECTRICAL SECTION 1 (A156/A153)

Rev. 06/30/2000

Index No.	Part No.	Description	Q'ty Per Assembly
1	A153 1353	Front Cover Hinge	1
2	A153 1355	Key Counter Bracket	1
3	A153 5501	AC Main Harness - 120V	1
3	A153 5661	AC Main Harness (230V)	1
4	AA05 1023	Release Wire	1
5	A153 5320	Front Right Harness (A153)	1
5	A156 5513	Front Right Harness (A156)	1
6	AX40 0021	Anticondensation Heater - 115V 18W	1
6	AX40 0022	Anticondensation Heater - 240V 18W	1
7	5446 1239	Plate Nut - Key Counter	1
8	5442 4467	Spring - Stripper Pawl Plate	1
9	AX31 0022	Total Counter	1
10	A134 2947	Heater Cover	1
11	A153 5820	Total Counter Bracket	1
12	A153 5814	Main Switch Bracket	1
13	A153 5562	Main Switch Relay Harness	1
14	A153 5809	Interlock Switch Arm	1
15	A153 5808	Interlock Switch Bracket	1
16	A134 1071	Lift Grip Arm	4
17	A134 1072	Right Bracket - Grip Plate	2
18	A134 1073	Left Bracket - Grip Plate	2
19	A153 3270	Toner Supply Stay	1

Index No.	Part No.	Description	Q'ty Per Assembly
101	0434 0060B	Philips Tapping Screw - M4x6	
102	1204 2467	Main Switch	
103	1204 2397	Safety Switch	
104	0323 0080B	Philips Sunk Screw - M3x8	
105	1105 0229	Clamp	
106	0314 0060B	Philips Pan Head Screw - M4x6	
107	1105 0231	Clamp	

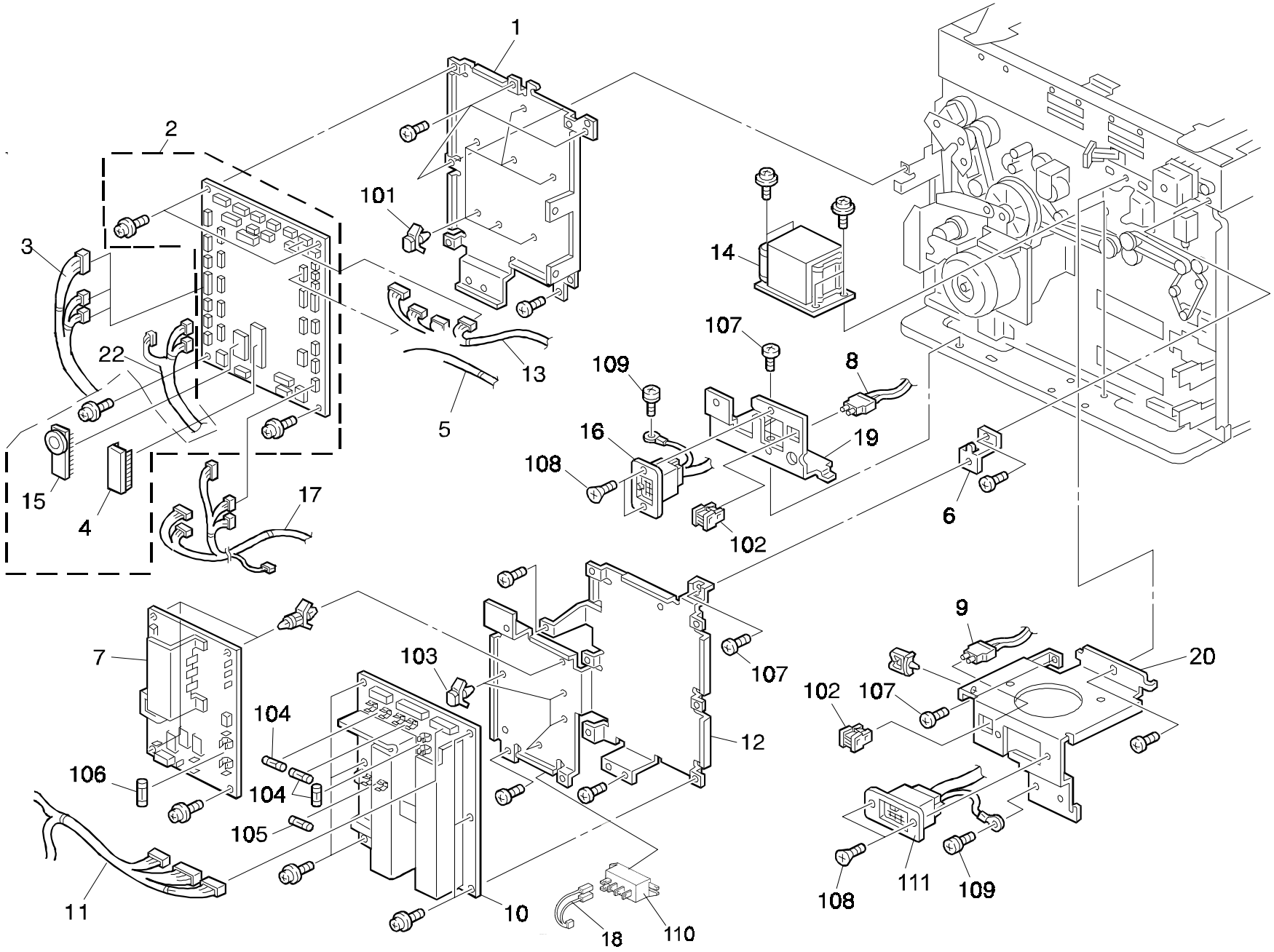
1
2
101
3
22
13
5
14
107
109
8
16
19
108
102
6
15
4
17
7
103
107
104
12
106
104
105
11
10
18
110
9
20
102
107
108
111
109

31. ELECTRICAL SECTION 2 (A156/A153)

Rev. 08/98

Index No.	Part No.	Description	Q'ty Per Assembly
1	A153 5811	Main Control Board Bracket	1
2	A153 5181	Main Control Board - 120V	1
2	A153 5111	Main Control Board - 220V	1
3	A153 5316	Paper Feed Harness (A153)	1
3	A154 5310	Duplex Unit Harness (A156)	1
4	A153 5109	IC - 4MX16-120NS	1
5	A154 5319	Rear Upper Harness	1
6	A153 5803	Upper Bracket - DC Drive Board	1
7	A153 5645	AC Drive Board (115V)	1
7	A153 5550	AC Drive Board - 120V	1
8	AW03 0055	Optical Fiber - 420mm	1
9	AW03 0054	Optical Fiber - 250mm	1
10	AZ23 0054	DC Drive Board - 120V 295W	1
10	AZ23 0059	DC Drive Board - 220/240V	1
11	A153 5344	Power Supply Harness - 2 trays (A153/A155-120V)	1
11	A154 5343	Power Supply Cord - Duplex	1
12	A153 5801	DC Drive Board Bracket	1
13	A153 5312	Optical Harness	1
14	AZ13 0023	Transformer - 230V	1
15	A153 5114	Ram Board	1
16	A153 5644	Tray Power Supply Harness (A153)	1
16	A156 5643	Power Supply Harness (A156)	1
17	A153 5511	Rear Lower Harness (A153)	1
17	A154 5509	Duplex Rear Harness (A156)	1
18	A153 5561	Relay Harness	1
19	A153 5806	Tray Unit Bracket	1
20	A153 5807	ARDF Bracket	1
22	A155 5314	LCT Relay Harness	1

Index No.	Part No.	Description	Q'ty Per Assembly
101	1105 0367	Spacer	
102	1102 4052	Optional Connector	
103	1105 0409	Spacer	
104	1107 0753	Fuse - 6.3A 250V	
105	1107 0393	Fuse - 8A,125V	
106	1107 0752	Fuse - 5A 250V	
107	0434 0060B	Philips Tapping Screw - M4x6	
108	0323 0060B	Philips Sunk Screw - M3x6	
109	0801 0137	Philips Pan Head Screw With Spring	
110	1208 1392	Relay	
111	1102 6739	Connector - 12P	

31-1. ELECTRICAL SECTION 2-A (A156/A153)

Rev. 12/3/96

IC

Symbol No.	Index No.
IC2	127
IC3	100
IC4	101
IC5	102
IC6	103
IC7	104
IC8	105
IC9	106
IC10	107
IC11	108
IC12	109
IC13	109
IC14	110
IC15	111
IC16	112
IC17	113
IC18	113
IC19	113
IC20	113
IC21	114
IC22	114
IC23	114
IC24	115
IC25	116
IC26	117
IC31	118

OSCILLATOR

Symbol No.	Index No.
OSC1	124

DIODE

Symbol No.	Index No.
D3	119
D5	119
DA1	120
DA2	120
DA3	120
DA4	120
DA5	120
DA6	120
DA7	121
DA8	121
DA9	121
DA10	121
ZD1	122
ZD2	122
ZD3	122
ZD4	123

TRANSISTOR

Symbol No.	Index No.
Q1	125
Q2	126

31-1. ELECTRICAL SECTION 2-A (A156/A153)

Rev. 12/3/96

Index No.	Part No.	Description	Q'ty Per Assembly
100	1407 4401	LSI TE6250A	1
101	1408 0770	IC-L293D	1
102	1407 2496	IC-M5261L	1
103	1407 3708	IC-SLA7026M	1
104	1408 1135	IC-X9C104S	1
105	1408 0595	IC-NJM2904M	1
106	1407 2862	SWITCH	1
107	1408 0877	IC-LM339NS	1
108	1407 4137	IC-MM1035XF	1
109	1407 2187	IC-SN74LS07NS	1
110	1407 3257	IC-TC74HC14A	1
111	1407 2862	SWITCH	1
112	1408 0595	IC-NJM2904M	1
113	1407 2187	IC-SN74LS07NS	1
114	1407 2231	IC-TD62308AF	1
115	1408 0874	TRANSISTOR ARRAY-M54587F	1
116	1407 2231	IC-TD62308AF	1
117	1408 0875	TRANSISTOR ARRAY-TD62382	1
118	1408 0629	REGULATOR:NJM78M1:+12V	1
119	1402 1030	DIODE-1SS250	1
120	1402 0708	DIODE-1SS272	1
121	1402 0478	DIODE-1SS226TE85L	1
122	1402 1037	DIODE-U1ZB12	1
123	1402 0688	DIODE	1
124	1503 0435	OSCILLATOR AT-51 20MHZ	1
125	1400 0369	TRANSISTOR-2SA1213Y	1
126	1400 0558	TRANSISTOR-2SD780	1
127	A153 5117	MPU: HD6435708A05F	1

Index No.	Part No.	Description	Q'ty Per Assembly

32. ELECTRICAL SECTION 3 (A156/A153)

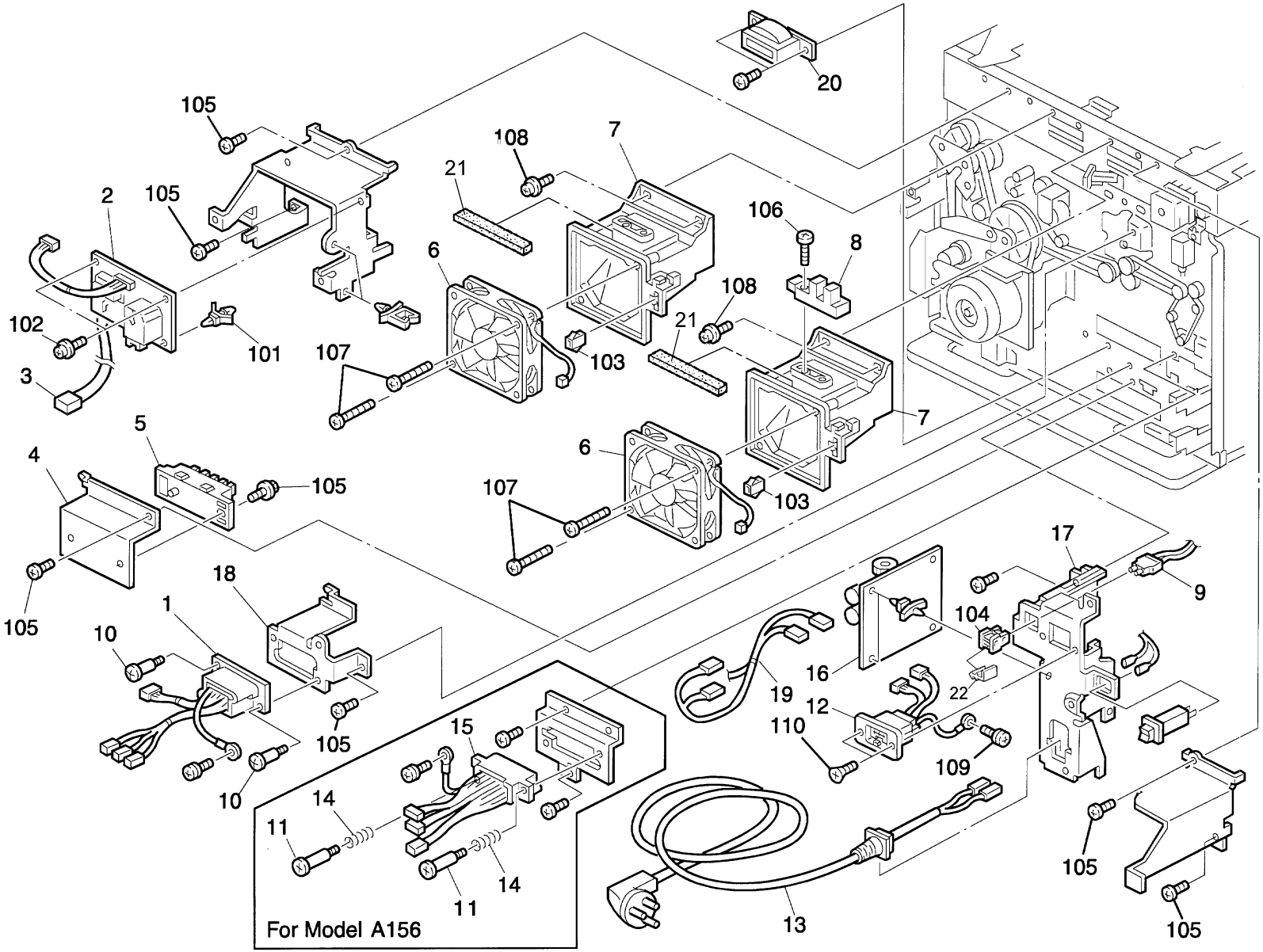

32. ELECTRICAL SECTION 3 (A156/A153)

Rev. 10/11/95

Index No.	Part No.	Description	Q'ty Per Assembly
1	A153 5326	Fusing Relay Harness (115V)	1
1	A153 5337	Fusing Relay Harness (230V)	1
2	AZ32 0078	DC Power Pack	1
3	AZ43 0020	High Voltage Supply Coard	1
4	A134 2941	Bracket - Paper Size Sensor	1
5	AW50 0010	Push Switch	2
6	AX64 0058	Fan Motor - DC 24V 4.32W	2
7	A153 1986	Cooling Fan Duct	2
8	AW02 0022	Photointerruptor	1
9	AW03 0056	Optical Fiber - 550mm	1
10	AA14 3301	Stepped Screw - M3x4	2
11	AA14 3452	Stepped Screw	2
12	A153 5324	Sorter Relay Harness	1
13	A153 5471	Power Supply Cord (ASIA)	1
13	A153 5571	Power Supply Cord - 120V	1
13	A153 5671	Power Supply Cord (230V)	1
14	AA06 3532	Spring	2
15	A154 5325	Duplex Unit Relay Harness	1
16	A153 5621	Noise Filter Board (230V)	1
17	A153 5810	Power Supply Cord Bracket	1
18	A153 5888	Fusing Unit Joint Connector	1
19	A153 5601	AC Relay Harness	1
20	AZ02 0008	Coil - 10Mh 2A	1
21	AA15 1177	Seal - 5x82x4	2
22	1102 5981	Fiber Connector	3

Index No.	Part No.	Description	Q'ty Per Assembly
101	1105 0192	Locking Support	
102	0951 3006B	Philips Screw With Flat Washer - M3x6	
103	1102 4473	Ct Connector - 2p	
104	1102 4052	Optional Connector	
105	0434 0060B	Philips Tapping Screw - M4x6	
106	0414 0142B	Binding Self Tapping Screw - M4x14	
107	0434 0352W	Pan Head Self-tapping Screw - M4x35	
108	0964 4008B	Tapping Screw With Flat Washer - M4x8	
109	0801 0137	Philips Pan Head Screw With Spring	
110	0323 0060B	Philips Sunk Screw - M3x6	

33. FRAME SECTION 1 (A156/A153)

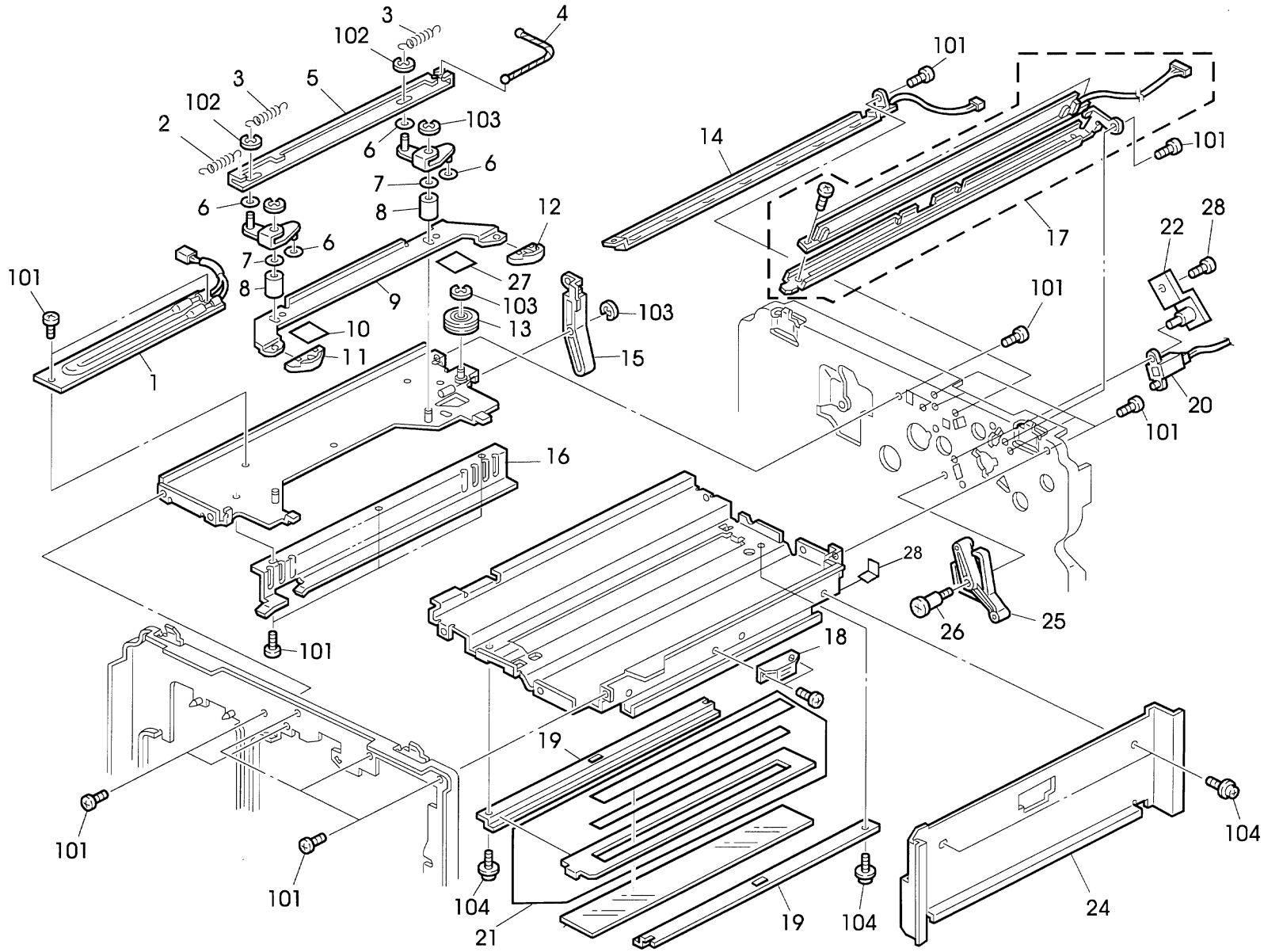

33. FRAME SECTION 1 (A156/A153)

Rev. 08/29/97

Index No.	Part No.	Description	Q'ty Per Assembly
1	AX40 0064	Anti Condensation Heater - 230V 9W	1
1	AX40 0063	Anticondensation Heater - 120V 9W	1
2	AA06 2291	Pressure Spring	1
3	AA06 2285	Release Spring	2
4	AA05 1025	Release Wire	1
5	A153 2072	Release Link Lever	1
6	AA13 2187	Spacer - 11mm	4
7	AA13 2188	Spacer - 16mm	2
8	AA13 2186	Collar	2
9	A153 2073	Guide Rail	1
10	A153 2084	Spacer	2
11	A153 2075	Front Roller Cam	1
12	A153 2076	Rear Roller Cam	1
13	A153 2060	Wire Pulley	1
14	A153 2090	Quenching Lamp	1
15	A153 2071	Cam Lever	1
16	A153 2083	Left Drum Rail	1
17	A153 2080	Eraser Lamp	1
18	AG07 0004	Magnetic Catch	1
19	A204 1674	Shield Glass Guide	2
20	A153 5339	Density Sensor Harness	1
21	A204 1677	Optical Filter	1
22	A153 3598	Pin Bracket	1
24	A153 1350	Right Middle Cover	1
25	A153 3920	Belt Release Arm	1
26	AA14 3444	Stepped Screw	1
27	A153 2085	Spacer	1
28	A153 1676	Harness Guard Seal	1

Index No.	Part No.	Description	Q'ty Per Assembly
101	0434 0060B	Philips Tapping Screw - M4x6	
102	0720 0030E	Retaining Ring - M3	
103	0720 0040E	Retaining Ring - M4	
104	0964 4006B	Tapping Screw With Flat Washer - M4x6	
105	0313 0040B	Philips Pan Head Screw - M3X4	

34. FRAME SECTION 2 (A156/A153)

Rev. 7/25/96

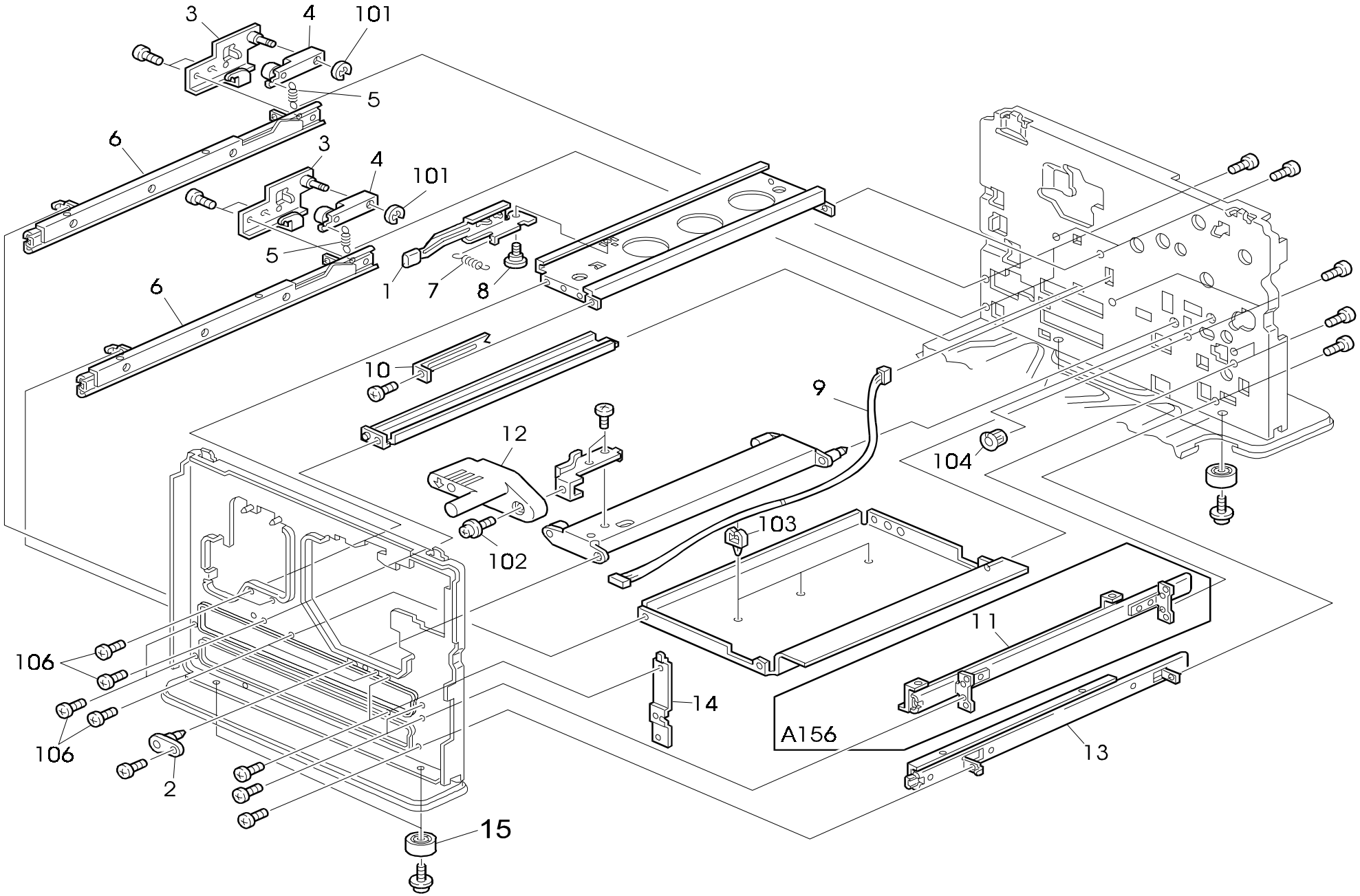

34. FRAME SECTION 2 (A156/A153)

Rev. 7/25/96

Index No.	Part No.	Description	Q'ty Per Assembly
1	A153 4352	Fusing Lock Lever	1
2	A157 3900	Support Plate	1
3	A134 2926	Paper Feed Lock Bracket	2
4	A096 6266	Tray Lock Arm	2
5	AA06 0534	Tray Lock Spring - 19mm	2
6	A134 2921	Left Slide Rail	2
7	5442 4467	Spring - Stripper Pawl Plate	1
8	5203 1686	Screw - Slid Rail	1
9	A153 5334	CT Harness - 7p	1
10	A134 4355	Fusing Unit Stopper	1
11	A134 4901	Duplex Right Rail	1
12	A153 3930	Belt Unit Handle	1
13	A134 2930	Right Slide Rail	1
14	A134 2929	Slide Rail Bracket - Front Right	1
15	AH01 0007	Rubber Foot	4

Index No.	Part No.	Description	Q'ty Per Assembly
101	0720 0040E	Retaining Ring - M4	
102	0964 4008B	Tapping Screw With Flat Washer - M4x8	
103	1105 0199	Clamp	
104	1106 0193	Bushing - 7.9mm	
105	0960 4010B	Philips Flange Screw - M4 X 10	
106	0434 0060B	Philips Tapping Screw - M4x6	

35. DECAL AND DOCUMENT (A156/A153)

Rev. 10/15/96

1

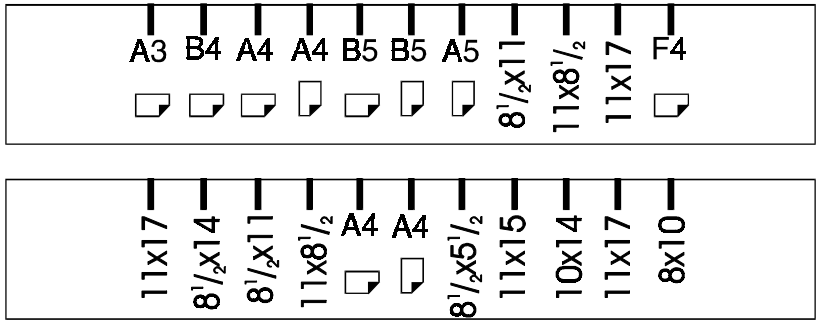

2

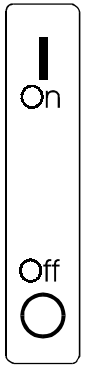

6

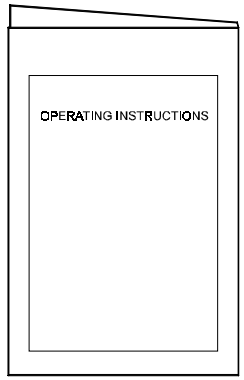

10

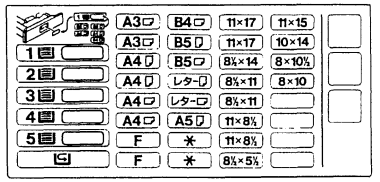

3

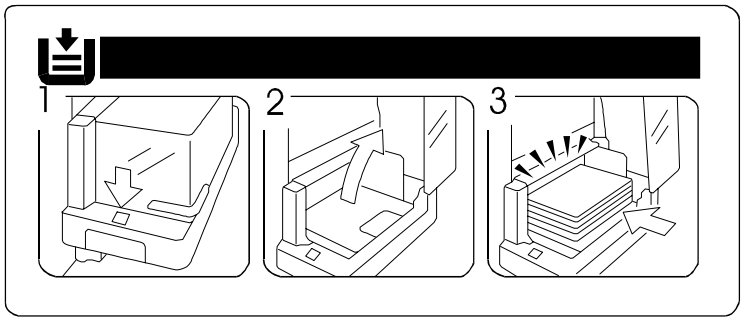

4



9

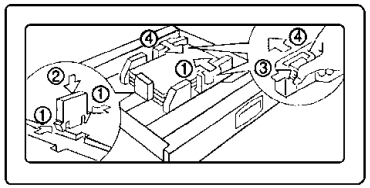

5

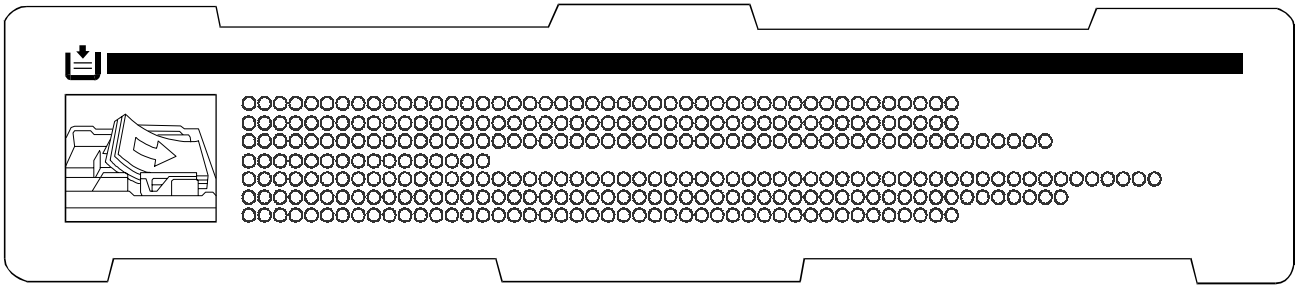

7

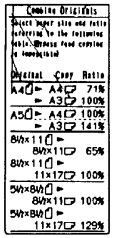

8



35. DECAL AND DOCUMENT (A156/A153)

Rev. 10/15/96

Index No.	Part No.	Description	Q'ty Per Assembly
1	A153 2995	Decal Paper Size - LT/DLT	1
1	A153 2996	Decal Paper Size - A4/A3	1
2	AA00 1373	Decal - Main Switch	1
3	A155 6113	Decal - Paper Set	1
4	A153 1285	Emblem	1
5	A134 2997	Decal - Paper Setting	1
6	A153 8607	Operating Instructions - English LT	1
6	A153 8608	Operating Instructions - English ASIA	1
6	A153 8637	Operating Instructions - Energy Star	1
7	A156 1495	Decal - Copy Ratio	1
8	A153 1365	Symbol Explanation Decal	1
9	A157 2805	Decal - Paper Setting	1
10	AA00 2209	Decal - Paper Size	1

Index No.	Part No.	Description	Q'ty Per Assembly

36. SPECIAL TOOLS (A156/A153)

1

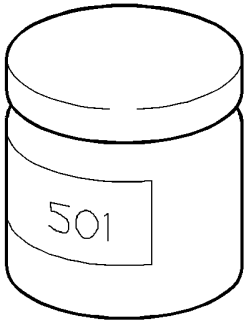

2

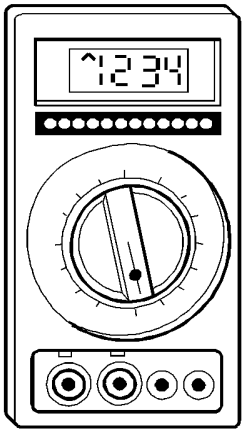

3

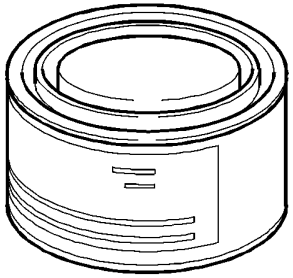

4

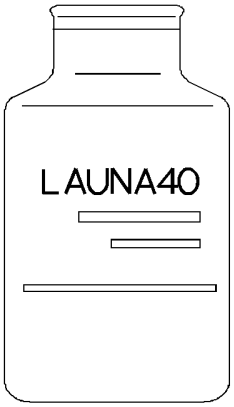

5

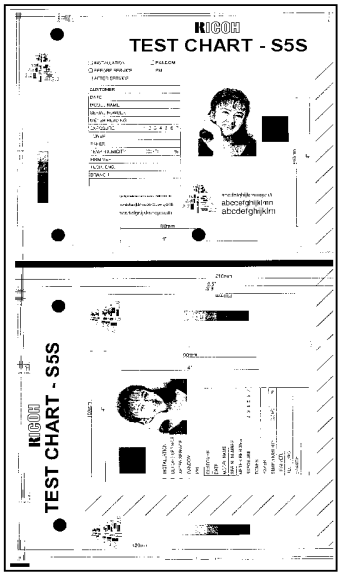

6

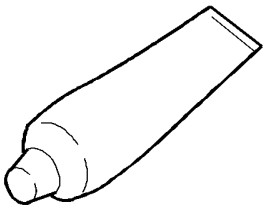

7

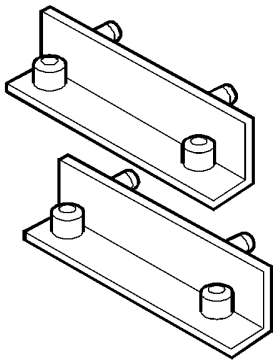

8

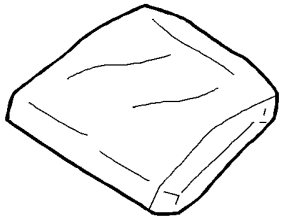

10



36. SPECIAL TOOLS (A156/A153)

Rev. 10/30/2000

Index No.	Part No.	Description	Q'ty Per Assembly
1	5203 9501	Grease 501	1
2	5420 9507	Digital Multimeter - Beckman	1
3	5447 9078	Heat Resisting Grease MT-78	1
3	A257 9300	Grease Barrierta - S552R	1
4	5442 9103	Launa Oil	1
5	A292 9500	Test Chart - S5S (10pcs/set)	1
6	A008 9502	Silicone Grease - G40m	1
7	A153 9001	Scanner Adjustment Tool	2
8	A153 9004	Wiping Cloth	1
10	A153 9530	HR Cleaner	1

Index No.	Part No.	Description	Q'ty Per Assembly

A156/A153
PARTS INDEX

This section instructs you as to the numbers and names of parts on this machine.

Part No.	Description	Page and Index No.
A153 1112	Drive Gear Holder	63- 15
A153 1117	Drum Drive Shaft	63- 21
A153 1119	Fusing Drive Tightener	63- 23
A153 1125	Development Drive Bracket	63- 8
A153 1126	Edging	63- 38
A153 1127	Clutch Shaft	63- 5
A153 1128	Tightener	61- 12
A153 1131	Development Support Plate	61- 8
A153 1132	Development Tightener	63- 16
A153 1135	Drum Drive Tightener	63- 19
A153 1251	Upper Cover	9- 24
A153 1261	Front Right Cover	9- 10
A153 1271	Rear Right Cover	9- 27
A153 1277	Front Cover (A153)	9- 2
A153 1285	Emblem	9- 1
A153 1285	Emblem	77- 4
A153 1291	Rear Cover	9- 25
A153 1301	Left Cover	9- 17
A153 1350	Right Middle Cover	73- 24
A153 1351	Upper Inner Cover	9- 9
A153 1352	Right Lower Cover	9- 7
A153 1353	Front Cover Hinge	67- 1
A153 1354	Hinge Pin	9- 3
A153 1355	Key Counter Bracket	67- 2
A153 1359	Lower Inner Cover	9- 8
A153 1360	Operating Sheet	9- 5
A153 1369	Platen cover Ass'y	11- 1
A153 1370	Platen Cover Hinge	11- 3
A153 1377	Spring Plate	11- 6
A153 1378	Hinge Stopper	11- 5
A153 1380	Platen Cover Bracket	11- 11
A153 1383	Platen Cover Feeler	11- 9
A153 1469	Panel Cover	9- 13
A153 1674	Shield Glass Guide	73- 19
A153 1677	Optical Filter	73- 21

Part No.	Description	Page and Index No
A153 1700	Scanner Drive Motor - DC2.3V 13.5W	35- 13
A153 1707	Tension Bracket - Long	35- 14
A153 1708	Tension Bracket - Short	35- 6
A153 1720	Scanner Rail	33- 12
A153 1721	Spring Plate	33- 10
A153 1750	Scale Bracket	31- 11
A153 1754	Exposure Stay	31- 14
A153 1770	1st Scanner Ass'y (230V)	31- 1
A153 1776	Front Mirror Clamp - 1st Mirror	31- 4
A153 1777	Front Terminal	31- 6
A153 1778	Rear Terminal	31- 9
A153 1779	Thermostat - 121°C 250V 10A	31- 15
A153 1780	Exposure Lamp Harness	31- 10
A153 1781	Reflector	31- 16
A153 1790	1st Scanner Ass'y (120V)	31- 1
A153 1801	2nd Scanner Ass'y	33- 8
A153 1805	Front Mirror Holder	33- 5
A153 1806	Rear Mirror Holder	33- 7
A153 1807	Harness Guide	33- 2
A153 1808	2nd Mirror	33- 3
A153 1809	3rd Mirror	33- 9
A153 1840	Lens Magnification Unit	29- 1
A153 1841	Lens Drive Unit	29- 11
A153 1906	Adjust Shoe	33- 20
A153 1908	Shielding Plate	33- 17
A153 1912	3rd Scanner Stay	33- 26
A153 1914	3rd Scanner Rack	33- 19
A153 1947	Magnification Drive Unit Bracket	35- 24
A153 1952	Magnification Rail	35- 21
A153 1961	Lens Cover	29- 6
A153 1971	Original Sensor Bracket	29- 8
A153 1976	ADS Sensor Bracket	33- 25
A153 1986	Cooling Fan Duct	71- 7
A153 2060	Wire Pulley	73- 13
A153 2071	Cam Lever	73- 15

Part No.	Description	Page and Index No.
A153 2072	Release Link Lever	73- 5
A153 2073	Guide Rail	73- 9
A153 2075	Front Roller Cam	73- 11
A153 2076	Rear Roller Cam	73- 12
A153 2080	Eraser Lamp	73- 17
A153 2083	Left Drum Rail	73- 16
A153 2084	Spacer	73- 10
A153 2085	Spacer	73- 27
A153 2090	Quenching Lamp	73- 14
A153 2101	PTL Lamp	27- 9
A153 2110	Drum Change Roller Bracket	41- 2
A153 2116	Grounding Plate	41- 7
A153 2118	Charge Roller Terminal	41- 8
A153 2120	Drum Charge Roller Cleaner	41- 25
A153 2126	Swing Arm	41- 3
A153 2130	Receptacle Housing	63- 13
A153 2133	Thermistor Bracket	41- 23
A153 2142	Cam Lever	63- 32
A153 2143	Shielding Plate	41- 14
A153 2253	Drum Unit	41- *
A153 2275	Cleaning Blade	43- 5
A153 2303	Grounding Plate	43- 34
A153 2558	Upper Registration Guide	27- 19
A153 2560	Rear Guide Plate	21- 19
A153 2563	Middle Guide Plate	27- 18
A153 2570	Upper Support Plate	65- 10
A153 2572	Paper Feed Harness Bracket (A153)	65- 31
A153 2936	Tray Lift Motor	61- 15
A153 2995	Decal Paper Size - LT/DLT	15- 19
A153 2995	Decal Paper Size - LT/DLT	77- 1
A153 2996	Decal Paper Size - A4/A3	15- 19
A153 2996	Decal Paper Size - A4/A3	77- 1
A153 3051	Development Unit	39- *
A153 3080	Development Filter	39- 18
A153 3086	Bias Terminal	63- 12
A153 3087	Terminal Cap	63- 11
A153 3090	Development Position Plate	39- 16
A153 3095	Development Rail	27- 8
A153 3114	Transfer Entrance Guide	27- 10
A153 3149	Knob Screw - M4x12	39- 17
A153 3172	Shutter	37- 19
A153 3173	Shutter Guide	37- 16
A153 3174	Shutter Holder	37- 18
A153 3185	Toner Supply Gear (230V)	37- 1
A153 3187	Toner Supply Gear (115V)	37- 1
A153 3189	Toner Supply Gear (ASIA/TAIWAN)	37- 1
A153 3200	Toner Hopper Ass'y	39- 3
A153 3262	Bottle Unit Hinge	37- 29
A153 3264	Bottle Unit Upper Hinge	37- 33
A153 3265	Bottle Unit Lock Plate	37- 21
A153 3266	Bottle Unit Link Plate	37- 30
A153 3281	Bottle Bracket Cover	37- 14
A153 3554	Spring Plate	43- 24
A153 3555	Cleaning Entrance Seal	43- 32
A153 3558	Blade Seal	43- 22
A153 3580	Toner Collection Unit	41- 27
A153 3590	Density Sensor Bracket	43- 28
A153 3595	Pick-off Pawl Retainer	43- 3
A153 3598	Pin Bracket	73- 22
A153 3862	Transfer Belt Frame	45- 7
A153 3863	Front Side Plate	45- 4
A153 3864	Rear Side Plate	45- 9
A153 3866	Belt Drive Roller	45- 3
A153 3867	Belt Driven Roller	45- 14
A153 3869	Drive Roller Bushing	45- 10
A153 3870	Transfer Bias Roller	45- 8
A153 3873	Bias Roller Terminal	45- 5
A153 3874	Earth Terminal	45- 12
A153 3877	Spring Plate	45- 29
A153 3882	Transfer Belt Casing	45- 1

Part No.	Description	Page and Index No.
A153 3883	Toner Collection Cap	45- 33
A153 3884	Belt Guide Plate	45- 16
A153 3886	Belt Pressure Lever	45- 19
A153 3887	Belt Release Stay	45- 22
A153 3888	Earth Plate	45- 28
A153 3889	Connector Bracket	45- 20
A153 3892	Belt Cleaning Blade	45- 24
A153 3893	Belt Cleaning Stay	45- 25
A153 3894	Bushing	45- 23
A153 3895	Front Bushing	45- 27
A153 3897	Harness Clamp	45- 32
A153 3898	Entrance Guide Plate	45- 30
A153 3905	Support Plate	45- 15
A153 3911	Cam Shaft	63- 31
A153 3914	Magnetic Clutch Feeler	63- 28
A153 3915	Magnetic Clutch Bracket	63- 26
A153 3917	Magnetic Clutch Bracket	63- 35
A153 3918	Break Pad	63- 36
A153 3919	Spacer	63- 37
A153 3920	Belt Release Arm	73- 25
A153 3930	Belt Unit Handle	75- 12
A153 4053	Fusing Upper Stay	47- 2
A153 4055	Upper Fusing Guide	47- 26
A153 4062	Electrode Plate - Middle	47- 12
A153 4063	Front Terminal Plate	47- 14
A153 4074	Terminal Connector - 2p	47- 4
A153 4075	Front Holder	47- 15
A153 4077	Thermistor	47- 9
A153 4084	Fusing Connector Bracket	47- 6
A153 4085	Thermistor - 2	47- 8
A153 4102	Front Lamp Terminal Holder	47- 16
A153 4103	Rear Lamp Terminal Holder	47- 7
A153 4196	Lower Fusing Guide	49- 1
A153 4205	Cleaning Roller Bracket	49- 7
A153 4451	Upper Guide Plate	59- 6
A153 4453	Exit Driven Roller	59- 4
A153 4454	Lower Guide Plate	59- 3
A153 4458	Exit Unit Knob	59- 2
A153 5101	Main Control Board - 120V	69- 2
A153 5104	IC - 4MX16-120NS	69- 4
A153 5111	Main Control Board - 220V	69- 2
A153 5114	Ram Board	69- 15
A153 5132	Density Sensor	43- 29
A153 5141	Lens Drive Harness	29- 16
A153 5160	ADS Sensor Board	33- 18
A153 5211	Mirror Drive Motor - DC24V 8.6V	35- 25
A153 5212	Lens Drive Motor - Horizontal	29- 18
A153 5213	Lens Drive Motor - DC24V 8.6W	35- 5
A153 5266	Thermofuse - 169°C	47- 13
A153 5300	Fusing Unit Connector (120V)	47- 5
A153 5301	AC Main Harness - 120V	67- 3
A153 5311	Rear Lower Harness (A153)	69- 17
A153 5312	Optical Harness	69- 13
A153 5316	Paper Feed Harness (A153)	69- 3
A153 5320	Front Right Harness (A153)	67- 5
A153 5324	Sorter Relay Harness	71- 12
A153 5326	Fusing Relay Harness (115V)	71- 1
A153 5328	Ct Harness	59- 7
A153 5330	Ct Harness - 7p	39- 6
A153 5333	CT Harness	27- 16
A153 5334	CT Harness - 7p	75- 9
A153 5337	Fusing Relay Harness (230V)	71- 1
A153 5339	Density Sensor Harness	73- 20
A153 5340	CT Harness	63- 10
A153 5344	Power Supply Harness - 2 trays	69- 11
A153 5391	Optical Harness - 1	29- 10
A153 5392	Optical Harness - 2	29- 9
A153 5393	Optical Harness - 3	33- 23
A153 5395	Optical Harness - 5	29- 15
A153 5471	Power Supply Cord (ASIA)	71- 13

Part No.	Description	Page and Index No.
A153 5545	AC Drive Board - 120V	69- 7
A153 5546	AC Drive Board - 115V	69- 7
A153 5571	Power Supply Cord - 120V	71- 13
A153 5601	AC Relay Harness	71- 19
A153 5621	Noise Filter Board (230V)	71- 16
A153 5644	Tray Power Supply Harness (A153)	69- 16
A153 5645	AC Drive Board (230V)	69- 7
A153 5661	AC Main Harness (230V)	67- 3
A153 5665	Fusing Unit Connector (230V)	47- 5
A153 5671	Power Supply Cord (230V)	71- 13
A153 5801	DC Drive Board Bracket	69- 12
A153 5802	Lower Bracket - DC Drive Board	61- 1
A153 5803	Upper Bracket - DC Drive Board	35- 10
A153 5803	Upper Bracket - DC Drive Board	69- 6
A153 5810	Power Supply Cord Bracket	71- 17
A153 5811	Main Control Board Bracket	69- 1
A153 5812	Left Lower Bracket	65- 30
A153 5813	Main Control Board Bracket	65- 1
A153 5820	Total Counter Bracket	67- 11
A153 5888	Fusing Unit Joint Connector	71- 18
A153 8607	Operating Instructions - English LT	77- 6
A153 8608	Operating Instructions - English ASIA	77- 6
A153 9001	Scanner Adjustment Tool	79- 7
A153 9004	Wiping Cloth	79- 8
A153 9510	OPC Drum	41- 26
A153 9513	Harness - ADS	33- 24

Part No.	Description	Page and Index No
AA00 1373	Decal - Main Switch	9- 28
AA00 1373	Decal - Main Switch	77- 2
AA01 2080	Dust Filter	9- 26
AA04 3364	Timing Belt - S3M300	65- 17
AA04 3368	Timing Belt - S3M609	65- 28
AA04 3373	Timing Belt - S2M308	53- 23
AA04 3374	Timing Belt - S2M800	57- 17
AA04 3375	Timing Belt - S2M 300	61- 2
AA04 3386	Timing Belt - 40S2M1224	35- 2
AA04 3387	Timing Belt - 40S2M984	35- 1
AA04 3388	Timing Belt - 60S2M180	35- 11
AA04 3391	Timing Belt - 160S2M328	61- 7
AA04 3392	Drum Timing Belt	61- 3
AA04 3393	Timing Belt - 80S3M519	61- 5
AA04 3394	Timing Belt - 60S3M459	61- 4
AA04 3395	Timing Belt - 30S3M327	61- 19
AA04 3456	Timing Belt - S3M167	19- 12
AA05 0086	Lens Drive Wire - Horizontal	29- 20
AA05 0087	Lens Drive Wire - Vertical	35- 26
AA05 1023	Release Wire	61- 21
AA05 1023	Release Wire	67- 4
AA05 1025	Release Wire	73- 4
AA06 0103	Solenoid Spring	47- 18
AA06 0228	Spring - Transfer Drum Cleaning Sol	61- 13
AA06 0228	Spring - Transfer Drum Cleaning Sol	65- 14
AA06 0453	Relay Adjusting Spring	37- 31
AA06 0453	Relay Adjusting Spring	65- 11
AA06 0523	Pick-up Pressure Spring	23- 18
AA06 0523	Pick-up Pressure Spring	25- 18
AA06 0534	Tray Lock Spring - 19mm	75- 5
AA06 0572	Pressure spring	65- 6
AA06 0573	Release Spring	65- 4
AA06 0575	Release Spring	23- 30
AA06 0575	Release Spring	25- 30
AA06 0577	Release Spring	23- 10

Part No.	Description	Page and Index No.
AA06 0577	Release Spring	25- 10
AA06 0593	Spring	55- 9
AA06 0595	Tension Spring	35- 12
AA06 0598	Pressure Spring	43- 10
AA06 0602	Spring - Pressure - 66n	49- 4
AA06 0636	Pressure Spring	23- 28
AA06 0636	Pressure Spring	25- 28
AA06 2285	Release Spring	73- 3
AA06 2286	Pressure Spring	41- 10
AA06 2290	Spring	63- 33
AA06 2291	Pressure Spring	73- 2
AA06 3239	Spring - Handle	17- 20
AA06 3366	Chuck Spring	37- 8
AA06 3367	Pressure Spring	37- 12
AA06 3370	Spring	57- 16
AA06 3487	Spring - 10mm	23- 34
AA06 3487	Spring - 10mm	25- 34
AA06 3499	Pressure Spring	21- 25
AA06 3523	Adjust Spring	33- 21
AA06 3524	Pressure Spring	63- 20
AA06 3532	Spring	71- 14
AA06 3538	Spring - 10MM (A153)	13- 8
AA06 3539	Spring - Registration Roller	27- 5
AA06 6247	Torsion Spring	45- 26
AA06 6253	Pressure Spring	41- 22
AA06 6260	Shutter Spring	37- 17
AA08 0034	Bushing - 4x5x7 (A153)	13- 7
AA08 0034	Bushing - 4x5x7	17- 37
AA08 0037	Bushing - 6 mm	21- 24
AA08 0154	Rear Bushing	43- 11
AA08 0156	Bushing - M4	23- 33
AA08 0156	Bushing - M4	25- 33
AA08 0171	Bushing	27- 7
AA08 0172	Bushing	27- 6
AA08 0186	Bushing - 6mm	39- 12

Part No.	Description	Page and Index No
AA08 0188	Bushing - 5mm	39- 8
AA08 0191	Front Roller Bushing	41- 18
AA08 0193	Rear Roller Bushing	41- 5
AA08 0195	Bias Roller Bushing - Rear	45- 13
AA08 0197	Rear Roller Bushing	41- 9
AA08 0209	Rear Roller Housing	41- 11
AA08 2046	Bushing - 6x12x6	23- 13
AA08 2046	Bushing - 6x12x6	25- 13
AA08 2047	Bushing - 8x16x7	23- 20
AA08 2047	Bushing - 8x16x7	25- 20
AA08 2047	Bushing - 8x16x7 (A156)	27- 23
AA08 2047	Bushing - 8x16x7	63- 3
AA08 2058	Bushing - 6x10x9mm (A156)	59- 26
AA08 2061	Bias Roller Bushing - Front	45- 6
AA08 2063	Bushing - 8x10x5	49- 6
AA08 3009	Clutch Roller 8X18X11	23- 12
AA08 3011	Clutch Roller - 8x18x11	25- 12
AA08 3011	Clutch Roller - 8x18x11 (A156)	27- 21
AA08 3012	Clutch Roller - 6x14x10	21- 13
AA11 1208	Paper End Sensor Feeler	53- 5
AA12 0067	Anti Static Brush	51- 16
AA12 0071	Exit Antistatic Brush	59- 28
AA13 2184	Motor Cushion	55- 20
AA13 2186	Collar	73- 8
AA13 2187	Spacer - 11mm	73- 6
AA13 2188	Spacer - 16mm	73- 7
AA13 4100	Boss	63- 34
AA14 0291	Bottom Plate Shaft	57- 6
AA14 0321	Pick-off Pawl Shaft	43- 4
AA14 0534	Feed Shaft (A153)	21- 11
AA14 0542	Feed Roller Shaft	23- 6
AA14 0542	Feed Roller Shaft	25- 6
AA14 0557	Scanner Drive Shaft	35- 4
AA14 0560	Joint Shaft	43- 26
AA14 0575	Paper Feed Shaft (A156)	21- 11

Part No.	Description	Page and Index No.
AA14 0576	LCT Drive Shaft	19- 15
AA14 3025	Stepped Screw - M3	37- 22
AA14 3062	Shoulder Screw - M4	59- 15
AA14 3219	Stepped Screw	21- 35
AA14 3301	Stepped Screw - M3x4	71- 10
AA14 3307	Stepped Screw - M3x4	53- 4
AA14 3307	Stepped Screw - M3x4	55- 17
AA14 3410	Stepped Screw - M4	37- 11
AA14 3416	Stepped Screw - M4x3	9- 18
AA14 3417	Shoulder Screw - M4x4	9- 23
AA14 3444	Stepped Screw	73- 26
AA14 3452	Stepped Screw	71- 11
AA14 3459	Knob Screw	37- 34
AA14 3712	Chuck Shaft	37- 5
AA14 3715	Stepped Screw - M5	47- 10
AA14 3716	Stepped Screw	41- 19
AA14 3730	Stepped Screw	41- 29
AA14 5537	Belt Release Shaft	45- 21
AA14 5539	Solenoid Shaft	63- 4
AA14 5794	Front Support Shaft	41- 20
AA14 5795	Rear Support Shaft	41- 12
AA14 8413	Idle Gear Shaft	37- 25
AA14 8439	Thermistor Shaft	41- 21
AA15 0231	Seal - 15X30	39- 20
AA15 0234	Mylar Seal - Base	37- 28
AA15 0368	Shielding Plate - Cover - Lens	29- 4
AA15 0369	Original Sensor Seal	29- 2
AA15 0377	Shutter Seal	37- 20
AA15 0380	Seal Front Holder	43- 15
AA15 0381	Seal Rear Holder	43- 33
AA15 0382	Entrance Seal	39- 2
AA15 0389	Drum Guide Seal	43- 12
AA15 1809	Rear Seal	43- 9
AA15 1894	Seal - 67x53x2	37- 2
AA15 1935	Seal - 38x32x2.5	39- 4

Part No.	Description	Page and Index No
AA15 1941	Shield - Case - Development - Right	29- 3
AA15 1942	Side Seal	43- 23
AA15 1943	Front Seal	43- 6
AA15 1944	Rear Seal	43- 8
AA15 1945	Joint Seal	41- 28
AA15 1998	Cushion - 10x30x5	13- 28
AA15 2245	Front Drum Seal	43- 13
AA15 2246	Rear Drum Seal	43- 31
AA15 2330	Magnification Seal	29- 12
AA15 2332	Seal Caseing	45- 17
AA15 2333	Entrance Seal	39- 1
AA16 1067	Cushion - Motor	55- 19
AA16 2067	Platen Cover Pad	11- 12
AA16 2068	Guide Plate Pad	51- 12
AB01 0341	Gear - 18Z	43- 1
AB01 0342	Idle Gear - 20Z	41- 17
AB01 0343	Idle Gear - 14Z	41- 16
AB01 0344	Roller Gear - 20Z	41- 15
AB01 1133	Gear - 49Z	19- 14
AB01 1153	Idle Gear - 25Z	65- 18
AB01 1165	Gear - 32Z	55- 5
AB01 1166	Gear - 33Z	53- 11
AB01 1167	Gear - 25Z	55- 15
AB01 1343	Idle Gear - 23Z	21- 9
AB01 1344	Gear - 16Z	21- 27
AB01 1345	Gear - 20Z	21- 28
AB01 1346	Gear - 27Z	21- 31
AB01 1357	Collection Coil Gear	43- 30
AB01 1358	Driven Gear	41- 4
AB01 1359	Joint Drive Gear	43- 27
AB01 1360	Idle Gear	43- 20
AB01 1361	Drive Gear	43- 14
AB01 3343	Development Roller	39- 9
AB01 3420	Gear - 18Z	23- 22
AB01 3420	Gear - 18Z	25- 22

Part No.	Description	Page and Index No.
AB01 3485	Gear - 20Z	27- 3
AB01 3486	Gear - 14Z	27- 11
AB01 3868	Gear - 16Z	15- 14
AB01 3872	Fusing Cam Gear - 28Z	61- 17
AB01 3875	Reverse Gear - 27z	65- 26
AB01 3881	Gear - 31Z	57- 12
AB01 3882	Gear - 40Z	47- 23
AB01 3883	Idle Gear - 25Z	47- 3
AB01 3884	Exit Gear - 17Z	49- 3
AB01 3885	Idle Gear - 20Z	49- 2
AB01 3889	Gear - 24Z	59- 27
AB01 3909	Idle Gear	39- 10
AB01 3911	Gear	39- 11
AB01 3916	Belt Drive Gear - 25Z	45- 11
AB01 3917	Toner Supply Gear	63- 2
AB01 3918	Drive Gear - 35Z	65- 20
AB01 7129	Gear - 20Z AND 72Z	35- 17
AB01 7332	Gear - 24Z/41Z	55- 14
AB01 7335	Timing Pulley - 22Z/37Z	65- 21
AB01 7336	Timing Pulley - 30Z/35Z	65- 24
AB01 7337	Gear - 15Z/55Z	55- 4
AB01 7339	End Fence Gear - 22Z/58Z	57- 14
AB01 7345	Timing Pulley - 35Z	61- 18
AB01 7346	Exit Gear	61- 9
AB01 7347	Idle Gear	37- 24
AB01 7360	Gear Pulley	29- 19
AB01 7360	Gear Pulley	35- 8
AB01 7361	Gear - 24Z/56Z	29- 21
AB01 7361	Gear - 24Z/56Z	35- 18
AB01 7362	Gear - 25Z/32Z	35- 7
AB01 7366	Paddle Gear	39- 14
AB01 7367	Right Paddle Roller	39- 19
AB01 7368	Cleaning Drive Gear	63- 7
AB01 7369	Transfer Belt Pulley	63- 22
AB01 7370	Development Pulley	63- 24

Part No.	Description	Page and Index No
AB01 7372	Blade Cam	43- 19
AB01 7373	Idle Cam	43- 25
AB01 7374	Drive Gear	43- 18
AB01 7375	Drive Gear	43- 17
AB01 7376	Separation Pawl Cam	43- 21
AB01 7377	Gear - 25Z	65- 22
AB01 7385	Gear - 17Z/24Z	63- 29
AB01 7386	Cleaning Cam	63- 1
AB01 7400	Gear- 18Z/68Z	57- 13
AB03 0281	Timing Pulley - 28Z	19- 9
AB03 0455	Tightener Pulley - 8x20x13	65- 13
AB03 0463	Fusing Cam Pulley	61- 16
AB03 0464	Timing Pulley - 30Z	65- 29
AB03 0465	Timing Pulley - 25Z	65- 16
AB03 0466	Timing Pulley - 20Z	23- 14
AB03 0466	Timing Pulley - 20Z	25- 14
AB03 0473	End Fence Pulley - 22Z	57- 11
AB03 0474	Pulley - 24Z	53- 22
AB03 0475	Pulley - 18Z S2M	59- 14
AB03 0486	Timing Pulley - 24Z	35- 9
AB03 0487	Timing Pulley - 44Z	35- 16
AB03 0489	Timing Pulley - 22Z	35- 15
AB03 0492	Pulley - 25/25/34/125Z	61- 6
AB03 0494	Drum Pulley	63- 14
AB03 2059	Driven Pulley	29- 14
AB03 2059	Driven Pulley	35- 23
AB03 3063	Timing Pulley - 22Z/24Z	35- 3
AB03 3064	Drive Pulley	65- 19
AB04 0015	Spring Clutch - Tray Bottom Plate	55- 12
AC01 5017	Shield Glass	73- 23
AC03 0103	1st Mirror	31- 13
AC03 0106	4/5 Mirror	33- 16
AC03 0107	6th Mirror	35- 20
AC03 5022	Rear Mirror Clamp - 1st Mirror	31- 2
AC04 2112	Left Original Scale - A4	9- 19

Part No.	Description	Page and Index No.
AC04 2116	Left Original Scale - LT	9- 19
AC04 2120	Rear Original Scale (A4)	9- 22
AC04 2124	Rear Original Scale - LT	9- 22
AD02 5019	Drum Pick-off Pawl	43- 2
AD02 7001	Drum Charge Roller	41- 13
AD03 7045	Toner Collection Coil	39- 13
AD04 3035	Toner Collection Coil	43- 16
AE01 1027	Hot Roller	47- 22
AE02 0050	Pressure Roller	49- 9
AE03 0022	Bearing - 12x24x64m	49- 8
AE03 0023	Bearing - 30x42x7mm	47- 21
AE04 2018	Cleaning Roller	49- 5
AE04 4013	Hot Roller Stripper	47- 20
AF01 0018	Duplex Tray	57- 23
AF01 0066	Paper Tray	15- 8
AF01 3003	Bottom Plate Pad - Duplex	57- 2
AF01 3014	Bottom Plate Pad	15- 9
AF01 5027	Paper Size Slider	15- 13
AF01 6070	Front Side Fence	15- 3
AF01 6071	Rear Side Fence	15- 11
AF01 6160	Rear Side Fence	57- 3
AF01 6161	Front Side Fence	57- 4
AF01 7012	End Fence	15- 7
AF02 0316	Lower Registration Roller	27- 13
AF02 0317	Stack Roller	53- 15
AF02 0319	Transport Roller	53- 6
AF02 0320	Right Transport Roller	53- 7
AF02 0321	Paper Feed Drive Roller	25- 29
AF02 0321	Paper Feed Drive Roller (A156)	27- 24
AF02 0322	Lower Drive Roller - Transport	23- 29
AF02 0327	Exit Roller	59- 10
AF02 0328	Relay Drive Roller	59- 16
AF02 0329	Relay Roller	23- 32
AF02 0329	Relay Roller	25- 32
AF02 0330	Vertical Driven Roller (A153)	13- 9
AF02 0330	Vertical Driven Roller	17- 36
AF02 1052	Upper Registration Roller	27- 12
AF02 2077	Driven Roller	51- 7
AF02 2077	Driven Roller	53- 19
AF02 5023	Exit Pick-off Pawl	59- 11
AF03 0024	Pick-up Roller	21- 10
AF03 0025	Pick-up Feed Roller	23- 3
AF03 0025	Pick-up Feed Roller	25- 3
AF03 1024	Feed Roller	53- 17
AF03 1029	Paper Feed Roller	23- 39
AF03 1029	Paper Feed Roller	25- 39
AF03 1030	Feed Roller	21- 7
AF03 2025	Separation Roller	21- 21
AF03 2027	Separation Roller	23- 25
AF03 2027	Separation Roller	25- 25
AF04 0031	Upper Exit Roller	51- 11
AF04 0031	Upper Exit Roller	59- 5
AF04 3069	Copy Tray	9- 14
AF04 3076	Copy Tray Slide	9- 15
AF04 3077	Copy Tray Guide	9- 16
AG01 1310	Operation Panel Ass'y - LT (A153)	9- 12
AG01 1311	Operation Panel Ass'y - LT (A156)	9- 12
AG01 1312	Operation Panel Ass'y - A4 (A153)	9- 12
AG01 1313	Operation Panel Ass'y (A156 A4)	9- 12
AG05 0075	Middle Knob	9- 11
AG05 0075	Middle Knob	27- 1
AG05 0076	Fusing Knob	49- 10
AG05 0078	Registration Knob	9- 6
AG05 0078	Registration Knob	27- 2
AG07 0004	Magnetic Catch	9- 4
AG07 0004	Magnetic Catch (A153)	13- 5
AG07 0004	Magnetic Catch	19- 16
AG07 0004	Magnetic Catch	59- 20
AG07 0004	Magnetic Catch	73- 18
AG07 0009	Magnetic Catch	49- 15

Part No.	Description	Page and Index No.
AW01 0040	Original Sensor	33- 11
AW01 0042	Original Length Sensor	29- 5
AW02 0022	Photointerruptor	33- 13
AW02 0022	Photointerruptor	71- 8
AW02 0068	Photointerruptor	27- 15
AW02 0069	Photointerruptor (A153)	13- 10
AW02 0069	Photointerruptor	17- 28
AW02 0074	Sensor Actuator	59- 9
AW02 0075	Photointerrupter	19- 7
AW02 0075	Photointerrupter	21- 16
AW02 0075	Photointerrupter	23- 8
AW02 0075	Photointerrupter	25- 8
AW02 0075	Photointerrupter	29- 13
AW02 0075	Photointerrupter	55- 21
AW02 0075	Photointerrupter	57- 18
AW02 0075	Photointerrupter	63- 27
AW03 0054	Optical Fiber - 250mm	69- 9
AW03 0055	Optical Fiber - 420mm	69- 8
AW03 0056	Optical Fiber - 550mm	71- 9
AW10 0027	Thermister	9- 21
AW10 0027	Thermister	31- 12
AW10 0032	Thermistor - 25°C 10k Ω	41- 24
AW23 0008	ID Sensor	39- 7
AW23 0009	Toner End Sensor	39- 5
AW50 0012	Push Switch	21- 17
AW50 0012	Push Switch	71- 5
AX05 0090	Motor - DC 24V 36W	19- 8
AX07 0010	Motor - DC24V 63W (120V)	61- 10
AX07 0011	Motor - DC24V 63W (230V)	61- 10
AX20 0099	Magnetic Clutch - 7kgf.cm 26Z	65- 23
AX20 0100	Magnetic Clutch - 3.5kgf Cm 35Z	65- 27
AX20 0101	Magnetic Clutch - 2.5kgf 35Z	21- 12
AX20 0105	Magnetic Clutch - 15kgf 24Z	63- 6
AX20 0106	Magnetic Clutch - 15kgf 52Z	63- 9
AX20 0109	Magnetic Clutch - 10kgf.cm 35Z	65- 25

Part No.	Description	Page and Index No
AX21 0049	Magnetic Clutch - 5kgf 42Z	63- 30
AX31 0022	Total Counter	67- 9
AX40 0021	Anticondensation Heater - 115V 18W	67- 6
AX40 0022	Anticondecsation Heater - 240V 18W	67- 6
AX40 0047	Anti-condensation Heater - 115V 15W	33- 22
AX40 0048	Anti-condensation Heater - 240V 15W	33- 22
AX40 0063	Anticondensation Heater - 120V 9W	73- 1
AX40 0064	Anti Condensation Heater - 230V 9W	73- 1
AX43 0022	Fusing Lamp - 120V 550W	47- 25
AX43 0023	Fusing Lamp - 120V 350W	47- 24
AX43 0024	Fusing Lamp - 230V 550W 210mm	47- 25
AX43 0025	Fusing Lamp - 230V 350W 320mm	47- 24
AX52 0025	Exposure Lamp - 85V 280W (230V)	31- 7
AX52 0027	Exposure Lamp - 97V 280W (120V)	31- 7
AX64 0058	Fan Motor - DC 24V 4.32W	71- 6
AX64 0059	Fan Motor - DC24V 3.12W	59- 1
AZ02 0008	Coil - 10Mh 2A	71- 20
AZ13 0023	Transformer - 230V	69- 14
AZ23 0054	DC Drive Board - 120V 295W	69- 10
AZ23 0059	DC Drive Board - 220/240V	69- 10
AZ30 0041	Power Pack - Transfer Unit	45- 31
AZ32 0078	DC Power Pack	71- 2
AZ43 0020	High Voltage Supply Coard	63- 25
AZ43 0020	High Voltage Supply Coard	71- 3
AZ48 0029	Ct Harness	41- 1
C105 2352	Stepped Screw - M6x1.7	61- 14
G006 4317	Pressure Spring	43- 7
G011 3305	Gear - 16T	13- 25
G011 3305	Gear - 16T	57- 8
G012 3897	Harness Seal - Toner End Sensor	39- 15

Part No.	Description	Page and Index No.
A008 9502	Silicone Grease - G40m	79- 6
A028 9300	Grease Nok Barrierta - JFE 5 5/2	79- 3
A048 2838	Nylon Rivet	15- 10
A069 1883	Shoe - Scanner	29- 17
A069 1883	Shoe - Scanner	31- 3
A069 1883	Shoe - Scanner	33- 6
A075 1766	Adjusting Cam	35- 22
A077 1310	Snap Ring - M2	41- 6
A077 1673	Thermofuse Terminal	31- 5
A077 1690	Spring Plate - Mirror	33- 4
A077 1690	Spring Plate - Mirror	35- 19
A077 3918	Spring - T/S Unit	45- 18
A077 4162	Shoulder Screw - M3	49- 12
A079 3626	Stepped Screw - Swing Cleaning	55- 13
A085 1670	Exposure Adjusting Plate	31- 8
A096 1692	ADS Case	33- 15
A096 1693	ADS Cover	33- 14
A096 1873	Scanner Shoe Pin	33- 1
A096 5230	ADS Board	33- 27
A096 6266	Tray Lock Arm	75- 4
A111 1753	Seal - 0.1x18x49	29- 7
A130 2820	Front Upper Side Plate	25- 38
A130 2824	Rear Upper Side Plate	25- 15
A130 2845	Upper Guide Plate	25- 37
A130 2850	Upper Feed Stay	25- 16
A130 2871	Sensor Bracket	25- 9
A130 2876	Paper End Sensor Bracket	25- 7
A130 5314	Relay Harness - Paper Feed	25- 36
A134 1121	Joint Gear	61- 22
A134 1328	Small Cap	9- 29
A134 1394	Front Platen Cover	11- 4
A134 1395	Rear Platen Cover	11- 7
A134 1396	Original Holder	11- 8
A134 2554	Lower Registration Guide	27- 28
A134 2557	Regist Sensor Bracket	27- 14

Part No.	Description	Page and Index No
A134 2572	Middle Tightener	65- 15
A134 2575	Tightener Arm	65- 12
A134 2579	Stopper Bracket	65- 8
A134 2580	Vertical Transfer Hinge (A153)	27- 17
A134 2582	Sensor Bracket - Vertical Transfer (A153)	27- 27
A134 2585	Vertical Transfer Guide Plate (A153)	13- 6
A134 2586	Hinge Bracket (A153)	13- 1
A134 2587	Switch Bracket (A153)	13- 4
A134 2591	Vertical Transfer (A153)	13- 2
A134 2654	Pick-up Arm	21- 30
A134 2656	Stopper Plate	21- 6
A134 2658	Grounding Plate	21- 5
A134 2659	By-pass Feed Housing	21- 15
A134 2660	Paper Feed Feeler	21- 2
A134 2661	Feeler Roller	21- 3
A134 2662	Grounding Plate	21- 18
A134 2663	Separation Guide	21- 20
A134 2667	Separation Drive Shaft	21- 29
A134 2668	Separation Driven Shaft	21- 23
A134 2670	By-pass Feed Cover	21- 4
A134 2674	Torque Limitter - 400fg	21- 22
A134 2675	Solenoid Bracket (A153)	65- 5
A134 2678	Solenoid Link (A153)	65- 3
A134 2680	DC Solenoid (A153)	65- 7
A134 2688	Positioning Plate	21- 1
A134 2689	Gear Cover	21- 26
A134 2690	By-pass Feed Table Ass'y	13- 13
A134 2696	By-pass Feed Table	13- 21
A134 2701	By-pass Feed Guide	13- 20
A134 2705	Magnet Catch Plate	13- 22
A134 2706	Rear Fence Rack	13- 24
A134 2707	Front Fence Rack	13- 26
A134 2711	Front Side Fence	13- 17
A134 2716	Rear Side Fence	13- 19
A134 2721	Front Paper Guide	13- 16

Part No.	Description	Page and Index No.
A134 2726	Rear Paper Guide	13- 18
A134 2731	By-pass Feed Entrance Guide	13- 14
A134 2746	By-pass Feed Cover	13- 27
A134 2790	Reverse Stay	23- 26
A134 2790	Reverse Stay	25- 26
A134 2795	Pressure Lever	23- 27
A134 2795	Pressure Lever	25- 27
A134 2810	Release Solenoid	23- 31
A134 2810	Release Solenoid	25- 31
A134 2821	Front Side Plate	23- 38
A134 2826	Rear Side Plate	23- 15
A134 2830	Drive Shaft	23- 21
A134 2830	Drive Shaft	25- 21
A134 2832	Driven Shaft Ass'y	23- 23
A134 2832	Driven Shaft Ass'y	25- 23
A134 2834	Vertical Transport Guide	23- 35
A134 2834	Vertical Transport Guide	25- 35
A134 2840	Reverse Guide Plate	23- 1
A134 2840	Reverse Guide Plate	25- 1
A134 2846	Lower Guide Plate	23- 37
A134 2855	Lower Feed Stay	23- 16
A134 2860	Pick-up Arm	23- 5
A134 2860	Pick-up Arm	25- 5
A134 2862	Paper End Sensor Feeler	23- 17
A134 2862	Paper End Sensor Feeler	25- 17
A134 2863	Paper End Sensor Lever	23- 19
A134 2863	Paper End Sensor Lever	25- 19
A134 2866	Pick-up Solenoid	23- 11
A134 2866	Pick-up Solenoid	25- 11
A134 2868	Solenoid Bracket	23- 40
A134 2868	Solenoid Bracket	25- 40
A134 2873	Positioning Sensor Bracket	23- 9
A134 2878	Paper End Sensor Bracket	23- 7
A134 2885	Torque Limitter	23- 24
A134 2885	Torque Limitter	25- 24

Part No.	Description	Page and Index No
A134 2895	Vertical Relay Guide	27- 20
A134 2900	Duplex Stay (A156)	27- 22
A134 2903	Upper Guide Plate - Duplex Feed (A156)	27- 25
A134 2904	Lower Guide Plate - Duplex Feed (A156)	27- 26
A134 2921	Left Slide Rail	75- 6
A134 2926	Paper Feed Lock Bracket	75- 3
A134 2929	Slide Rail Bracket - Front Right	75- 14
A134 2930	Right Slide Rail	75- 13
A134 2941	Bracket - Paper Size Sensor	71- 4
A134 2947	Heater Cover	67- 10
A134 2952	Universal Tray	15- 20
A134 2956	Paper Feed Front Cover	15- 1
A134 2956	Paper Feed Front Cover	51- 1
A134 2966	Bottom Lift Shaft	15- 17
A134 2967	Bottom Lift Lever	15- 16
A134 2968	Grounding Plate	15- 15
A134 2975	Front Side Fence Guide	15- 6
A134 2976	Stopper Lever	15- 4
A134 2978	Spring Plate	15- 5
A134 2984	Rear Side Fence Guide	15- 12
A134 2986	Bottom Plate	15- 18
A134 2997	Decal - Paper Setting	15- 2
A134 2997	Decal - Paper Setting	77- 5
A134 3157	Bottle Holder Bracket	37- 27
A134 3161	Bottle Drive Bracket	37- 26
A134 3162	Bottle Drive Motor	37- 23
A134 3172	Toner Bottle Holder	37- 15
A134 3177	Toner Slider	37- 4
A134 3179	Chuck Shaft	37- 7
A134 3180	Bottle Chuck	37- 3
A134 3181	Chuck Roller	37- 6
A134 3190	Toner Bottle Stopper	37- 10
A134 3197	Bottle Holder	37- 13
A134 3201	Cam - Toner Bottle	37- 32
A134 3215	Rubber Cap	37- 9

Part No.	Description	Page and Index No.
A134 3850	Transfer Belt	45- 2
A134 4061	Rear Terminal Plate	47- 11
A134 4112	Stripper Bracket	47- 19
A134 4115	Fusing Seal	47- 17
A134 4130	Fusing Front Cover	47- 1
A134 4161	Pressure Lever	49- 13
A134 4253	Fusing Exit Guide	49- 14
A134 4301	Exit Guide Hinge	49- 11
A134 4352	Fusing Lock Lever	75- 1
A134 4355	Fusing Unit Stopper	75- 10
A134 4455	Upper Guide Bracket	59- 24
A134 4458	Exit Unit Knob (A156)	59- 23
A134 4459	Exit Cover	59- 12
A134 4464	Left Reverse Guide	59- 17
A134 4468	Lower Guide Plate (A156)	59- 25
A134 4471	Stripper Solenoid	59- 19
A134 4481	Tightener Bracket	61- 11
A134 4508	Inverter Guide Plate	55- 18
A134 4512	Feed Roller Shaft	53- 21
A134 4525	End Fence	57- 27
A134 4527	Separation Roller	55- 23
A134 4619	Guide Plate Link	51- 20
A134 4620	Grounding Plate	57- 19
A134 4649	Paper Guide Holder	53- 16
A134 4654	Bottom Pressure Plate	57- 5
A134 4658	Vibrating Plate	55- 16
A134 4662	Duplex Guide Plate	55- 24
A134 4676	Paper End Feeler	53- 8
A134 4688	Front Side Fence Rack	57- 10
A134 4689	Rear Side Fence Rack	57- 9
A134 4690	Clutch Stopper	53- 20
A134 4701	Front Upper Cover	51- 3
A134 4710	End Fence Actuator	57- 24
A134 4712	Right Cover Bracket	51- 19
A134 4714	Tightener	57- 15

Part No.	Description	Page and Index No
A134 4720	End Fence Upper Cover	51- 2
A134 4721	Connector Cover	51- 4
A134 4726	Guide Plate Knob	51- 10
A134 4728	Inverter Feeler	51- 5
A134 4730	Entrance Feeler	51- 14
A134 4732	Upper Guide Plate	51- 6
A134 4739	Lower Guide Plate Knob	51- 18
A134 4740	Lower Guide Plate	51- 15
A134 4751	Front Side Plate	53- 1
A134 4765	Grounding Plate	55- 22
A134 4781	Rear Side Plate	53- 3
A134 4790	Paper End Sensor Bracket	55- 8
A134 4799	Motor Bracket	55- 1
A134 4800	Motor Bracket	55- 2
A134 4804	Guide Plate Stopper	53- 9
A134 4808	Rear Guide Holder	53- 18
A134 4809	Front Guide Holder	53- 14
A134 4884	Decal - Duplex Misfeed Removal	51- 9
A134 4901	Duplex Right Rail	75- 11
A134 5254	Duplex control Board	57- 23
A134 5280	Paper Size Sensor Board	13- 23
A134 5290	Transport Drive Motor	55- 3
A134 5291	Jogger Drive Motor - Side Fence	57- 20
A134 5292	Jogger Drive Motor - End Fence	57- 21
A134 5311	By-pass Feed Harness	21- 14
A134 5315	Relay Harness - Lower Paper Feed	23- 36
A134 5316	Vertical Transfer Harness (A153)	13- 3
A134 5320	Duplex Tray Harness	57- 26
A134 5321	Sensor Relay Harness	57- 25
A134 5322	End Fence Harness	57- 30
A134 5323	Motor Harness	57- 22
A154 1360	Operating Sheet	9- 5
A154 4462	Reverse Guide Plate - Upper Right	59- 21
A154 4465	Reverse Guide Plate - Right Lower	59- 18
A154 4469	Reverse Roller Holder - Upper Right	59- 22

Part No.	Description	Page and Index No.
A154 4616	Paper Holder	51- 17
A154 4620	Bottom Plate	57- 1
A154 4621	Front Guide Plate	57- 28
A154 4622	Rear Guide Plate	57- 29
A154 5309	Duplex Rear Harness (A156)	69- 17
A154 5310	Duplex Unit Harness (A156)	69- 3
A154 5313	Front Right Harness (A156)	67- 5
A154 5319	Rear Upper Harness	69- 5
A154 5325	Duplex Unit Relay Harness	71- 15
A154 5343	Power Supply Cord - Duplex	69- 11
A155 2667	Lift Sensor Feeler	21- 34
A155 2675	Pick-up Bracket (A156)	65- 5
A155 2676	Pick-up Lever (A156)	65- 2
A155 2677	Pick-up Link (A156)	65- 3
A155 2680	DC Solenoid (A156)	65- 7
A155 2682	Lift Sensor Bracket	21- 32
A155 5165	LCT Main Board	19- 18
A155 5170	Push Switch	19- 27
A155 5314	LCT Relay Harness	19- 24
A155 5342	LCT Harness	19- 31
A155 5345	Ct Harness	21- 33
A155 5348	Paper End Sensor Harness	19- 4
A155 5349	LCT Vertical Harness	17- 33
A155 6101	LCT Upper Cover	17- 6
A155 6111	Front Side Plate	19- 29
A155 6113	Decal - Paper Set	17- 2
A155 6113	Decal - Paper Set	77- 3
A155 6114	Caution Decal - LCT	17- 35
A155 6116	Safety Switch Bracket	19- 21
A155 6117	Safety Switch Lever	19- 23
A155 6118	Spring Plate	19- 20
A155 6125	Rear Side Bracket	19- 28
A155 6136	Lift Sensor Bracket	19- 11
A155 6141	Tray Bottom Plate	19- 17
A155 6142	LCT Paper Tray	17- 14

Part No.	Description	Page and Index No
A155 6143	Left Bracket	19- 1
A155 6145	Tray Cover	19- 19
A155 6147	Paper End Sensor Bracket	19- 3
A155 6148	Paper Ding Sensor Feeler	19- 2
A155 6151	Vertical Transport Guide	17- 27
A155 6152	Switch Bracket	17- 29
A155 6153	Upper Hinge	19- 6
A155 6160	Lower Hinge	17- 31
A155 6162	Cushion	17- 34
A155 6164	Positioning Guide	27- 29
A155 6168	Vertical Support Guide	27- 30
A155 6169	Hinge Holder	17- 30
A155 6170	Hinge Bracket	17- 21
A155 6171	Grip Bracket	17- 19
A155 6175	LCT Positioning Plate	17- 32
A155 6181	Knob	17- 18
A155 6191	LCT Front Cover	17- 17
A155 6201	LCT Hinge Bracket	17- 8
A155 6203	Paper Tray Stay	19- 5
A155 6207	Cover Bracket	17- 3
A155 6215	Harness Guide	19- 30
A155 6221	LCT Rear Cover	17- 15
A155 6231	LCT Right Cover	17- 16
A155 6241	LCT Harness Cover	17- 26
A155 6251	Upper Stay	17- 9
A155 6302	Hinge Angle	17- 5
A155 6303	Fix Hinge	17- 4
A155 6306	Front Side Fence	17- 22
A155 6307	Rear Side Fence	17- 12
A155 6311	Front Paper Holder	17- 23
A155 6312	Rear Paper Holder	17- 10
A155 6313	Support Guide	17- 11
A155 6321	Front Spring Plate	17- 24
A155 6322	Rear Sprig Plate	17- 25
A155 6324	End Fence	17- 1

Part No.	Description	Page and Index No.
A155 6325	Drive Cover Bracket	65- 32
A156 1277	Front Cover (A156)	9- 2
A156 5643	Power Supply Harness (A156)	69- 16
A157 3900	Support Plate	75- 2
A300 3155	Stepped Screw - M25x32	19- 22
A334 4706	Disk - Bottom Plate Clutch	55- 11
A335 3251	Top Cover Hinge	17- 7
A335 4351	Guide Roller	19- 10
A335 4352	Timing Belt Clamp	19- 25
A421 2543	Friction Pad	17- 13
A470 1703	Shift Clutch	59- 8
A470 1704	Spring - Lower Exit Roller	59- 13
A491 4690	Bottom Plate Hook	57- 7
5053 0223	Bushing - 8mm	19- 26
5053 0223	Bushing - 8mm	65- 9
5053 0447	Bushing - 6mm	53- 2
5053 0447	Bushing - 6mm	55- 7
5203 1686	Screw - Slid Rail	75- 8
5203 3151	Roller Cover Spring	61- 20
5203 3151	Roller Cover Spring	63- 18
5203 9501	Grease 501	79- 1
5206 2686	Snap Ring	51- 8
5215 1667	Platen Cover Stud	11- 10
5215 1980	Exposure Glass - A3T-3.2	9- 20
5215 2621	Snap Ring - M6	13- 12
5215 2621	Snap Ring - M6	53- 13
5304 1639	Bushing - 8mm	53- 12
5414 4630	Bottle Spring (A156)	61- 23
5420 9507	Digital Multimeter - Beckman	79- 2
5420 9516	Test Chart - OS - A3 (10pcs/set)	79- 5
5442 1111	Spring - Main Drive Tightner	63- 17
5442 4467	Spring - Stripper Pawl Plate	67- 8
5442 4467	Spring - Stripper Pawl Plate	75- 7
5442 9103	Launa Oil	79- 4
5443 2668	Bushing - 4x6x7mm	53- 10
5443 2668	Bushing - 4x6x7mm	55- 6
5446 1239	Plate Nut - Key Counter	67- 7
5447 2681	Snap Ring (A153)	13- 11
5447 2681	Snap Ring	21- 8
5447 2681	Snap Ring	23- 2
5447 2681	Snap Ring	25- 2
5447 2681	Snap Ring	55- 10
5447 2706	Gear - 15T	23- 4
5447 2706	Gear - 15T	25- 4
5447 2768	Stepped Screw - M3	51- 13
5447 2927	Friction Pad - B	13- 15
5447 9078	Heat Resisting Grease MT-78	79- 3
5448 2804	Platen Cover Sheet	11- 2
5474 2152	Bushing - 8x12x12mm	27- 4
5925 2258	Stopper Chain	19- 13

Part No.	Description	Page and Index No.
0313 0040B	Philips Pan Head Screw - M3x4	9-104
0313 0040B	Philips Pan Head Screw - M3x4	27-105
0313 0040B	Philips Pan Head Screw - M3x4	31-107
0313 0040B	Philips Pan Head Screw - M3X4	73-105
0313 0050B	Philips Pan Head Screw - M3X5	47-107
0313 0050B	Philips Pan Head Screw - M3x5	55-102
0313 0050B	Philips Pan Head Screw - M3x5	65-101
0313 0060B	Philips Pan Head Screw - M3x6	31-108
0313 0060B	Philips Pan Head Screw - M3x6	41-103
0313 0080B	Philips Pan Head Screw - M3x8	43-106
0313 0140B	Philips Pan Head Screw - M3x14	13-106
0314 0060B	Philips Pan Head Screw - M4x6	31-109
0314 0060B	Philips Pan Head Screw - M4x6	39-102
0314 0060B	Philips Pan Head Screw - M4x6	43-101
0314 0060B	Philips Pan Head Screw - M4x6	47-104
0314 0060B	Philips Pan Head Screw - M4x6	67-106
0314 0100B	Philips Pan Head Screw - M4x10	33-101
0323 0060B	Philips Sunk Screw - M3x6	37-101
0323 0060B	Philips Sunk Screw - M3x6	69-108
0323 0060B	Philips Sunk Screw - M3x6	71-110
0323 0080B	Philips Sunk Screw - M3x8	67-104
0344 0060F	Philips Truss Head Screw - M4x6	15-104
0344 0080F	Philips Truss Head Screw - M4x8	51-101
0353 0040B	Screw - M3X4	23-107
0353 0300B	Bind Screw - M3x30	59-101
0413 0060W	Tapping Screw - M3x6	31-105
0413 0062B	Tapping Screw - M3x6	29-102
0413 0062W	Tapping Screw - M3x6	31-103
0414 0080B	Tapping Screw - M4x8	17-102
0414 0080B	Tapping Screw - M4x8	21-103
0414 0080B	Tapping Screw - M4x8	27-106
0414 0080B	Tapping Screw - M4x8	29-107
0414 0080B	Tapping Screw - M4x8	33-104
0414 0080B	Tapping Screw - M4x8	63-106
0414 0082W	Tapping Screw With Flat Washer - M4x8	13-102

Part No.	Description	Page and Index No
0414 0082W	Tapping Screw With Flat Washer - M4x8	31-102
0414 0122B	Philips Tapping Screw - M4x12	49-102
0414 0142B	Binding Self Tapping Screw - M4x14	11-101
0414 0142B	Binding Self Tapping Screw - M4x14	71-106
0433 0050B	Tapping Screw - M3x5	37-102
0433 0060W	Tapping Screw - M3x6	35-110
0434 0060B	Philips Tapping Screw - M4x6	15-102
0434 0060B	Philips Tapping Screw - M4x6	17-101
0434 0060B	Philips Tapping Screw - M4x6	19-101
0434 0060B	Philips Tapping Screw - M4x6	23-101
0434 0060B	Philips Tapping Screw - M4x6	25-101
0434 0060B	Philips Tapping Screw - M4x6	27-102
0434 0060B	Philips Tapping Screw - M4x6	33-107
0434 0060B	Philips Tapping Screw - M4x6	35-103
0434 0060B	Philips Tapping Screw - M4x6	37-108
0434 0060B	Philips Tapping Screw - M4x6	55-107
0434 0060B	Philips Tapping Screw - M4x6	59-107
0434 0060B	Philips Tapping Screw - M4x6	61-103
0434 0060B	Philips Tapping Screw - M4x6	63-105
0434 0060B	Philips Tapping Screw - M4x6	67-101
0434 0060B	Philips Tapping Screw - M4x6	69-107
0434 0060B	Philips Tapping Screw - M4x6	71-105
0434 0060B	Philips Tapping Screw - M4x6	73-101
0434 0060B	Philips Tapping Screw - M4x6	75-106
0434 0082B	Tapping Screw - M4x8	49-103
0434 0082B	Tapping Screw - M4x8	59-106
0434 0100B	Tapping Screw - M4x10	59-108
0434 0352W	Pan Head Self-tapping Screw - M4x35	71-107
0443 0060B	Hexagon Tapping Screw - M3x6	19-103
0443 0060B	Hexagon Tapping Screw - M3x6	45-109
0443 0060B	Hexagon Tapping Screw - M3x6	53-101
0443 0060B	Hexagon Tapping Screw - M3x6	55-104
0443 0060W	Hexagon Head Tapping Screw - M3x6	51-104
0443 0080B	Tapping Screw - M3x8	45-102
0443 0080W	Hexagon Head Tapping Screw - M3x8	33-102

Part No.	Description	Page and Index No.
0573 0040E	Hexagon Headless Set Screw - M3x4	35-101
0573 0040E	Hexagon Headless Set Screw - M3x4	63-102
0574 0050E	Hexagon Headless Set Screw - M4x5	35-105
0622 0100E	Spring Pin - 2x10mm	21-104
0623 0160E	Spring Pin - 3x16mm	19-106
0707 8140B	Bushing - 8x14mm	61-101
0720 0015E	Retaining Ring - 1.5	41-104
0720 0020E	Retaining Ring - M2	41-106
0720 0030E	Retaining Ring - M3	13-104
0720 0030E	Retaining Ring - M3	23-103
0720 0030E	Retaining Ring - M3	25-103
0720 0030E	Retaining Ring - M3	39-106
0720 0030E	Retaining Ring - M3	43-105
0720 0030E	Retaining Ring - M3	45-104
0720 0030E	Retaining Ring - M3	55-103
0720 0030E	Retaining Ring - M3	73-102
0720 0040E	Retaining Ring - M4	21-101
0720 0040E	Retaining Ring - M4	23-102
0720 0040E	Retaining Ring - M4	25-102
0720 0040E	Retaining Ring - M4	27-104
0720 0040E	Retaining Ring - M4	29-106
0720 0040E	Retaining Ring - M4	35-102
0720 0040E	Retaining Ring - M4	37-106
0720 0040E	Retaining Ring - M4	39-105
0720 0040E	Retaining Ring - M4	41-102
0720 0040E	Retaining Ring - M4	43-107
0720 0040E	Retaining Ring - M4	49-101
0720 0040E	Retaining Ring - M4	53-103
0720 0040E	Retaining Ring - M4	55-106
0720 0040E	Retaining Ring - M4	57-103
0720 0040E	Retaining Ring - M4	59-104
0720 0040E	Retaining Ring - M4	73-103
0720 0040E	Retaining Ring - M4	75-101
0720 0060	Retaining Ring - M6	63-111
0720 0060E	Retaining Ring - M6	15-103

Part No.	Description	Page and Index No
0720 0060E	Retaining Ring - M6	19-104
0720 0060E	Retaining Ring - M6	23-105
0720 0060E	Retaining Ring - M6	25-105
0720 0060E	Retaining Ring - M6	27-103
0720 0060E	Retaining Ring - M6	35-106
0720 0060E	Retaining Ring - M6	39-104
0720 0060E	Retaining Ring - M6	45-106
0720 0060E	Retaining Ring - M6	47-103
0720 0060E	Retaining Ring - M6	61-102
0720 0060E	Retaining Ring - M6	63-110
0725 0100E	Retaining Ring C - M10	37-107
0725 0120E	Retaining Ring C - M12	49-104
0725 0300E	Retaining Ring C - M30	47-106
0740 3008	Ball Bearing - 8x22x7	35-107
0740 3008	Ball Bearing - 8x22x7	63-101
0742 3808	Ball Bearing - 8x16x5	23-106
0800 0072	Philips Pan Head Screw - M2.6x4	37-105
0801 0137	Philips Pan Head Screw With Spring	69-109
0801 0137	Philips Pan Head Screw With Spring	71-109
0802 5085	Tapping Screw - M4x8	13-103
0802 5094	Tapping Truss Head Screw - M4x8	9-103
0802 5094	Tapping Truss Head Screw - M4x8	17-103
0802 5221	Tapping Screw - M3x10	63-108
0802 5231	Tapping Screw - M3x6	33-106
0802 5231	Tapping Screw - M3x6	37-103
0802 5231	Tapping Screw - M3x6	39-101
0802 5231	Tapping Screw - M3x6	51-103
0802 5232	Tapping Screw - M3x8	29-103
0802 5232	Tapping Screw - M3x8	45-103
0802 5232	Tapping Screw - M3x8	57-102
0802 5233	Tapping Screw - M3x10	37-104
0802 5233	Tapping Screw - M3x10	41-109
0802 5233	Tapping Screw - M3x10	43-102
0802 5234	Tapping Screw - M3x12	57-105
0802 5236	Tapping Screw - M4x8	19-102

Part No.	Description	Page and Index No.
0802 5236	Tapping Screw - M4x8	51-102
0802 5236	Tapping Screw - M4x8	55-105
0802 5236	Tapping Screw - M4x8	57-104
0802 5236	Tapping Screw - M4x8	59-103
0802 5236	Tapping Screw - M4x8	63-107
0802 5237	Tapping Screw - M4x10	29-101
0802 5237	Tappring Screw - M4X10	49-106
0803 0017	Knob Screw - M4x6.5	43-103
0805 0088	Retaining Ring - M6	23-104
0805 0088	Retaining Ring - M6	25-104
0805 3384	Bushing - 5mm	43-108
0805 3471	Bushing - M8x22x7	41-107
0805 3480	Bushing - 6mm	21-102
0805 3480	Bushing - 6mm	59-105
0805 3485	Bushing - 8x12x3.5mm	45-101
0807 4072	Washer - Core	59-109
0950 3005B	Philips Screw With Spring Washer - M3X5	31-104
0950 4006M	Philips Screw With Flat Washer - M4x6	47-105
0950 4008B	Philips Screw With Spring Washer - M4X8	49-105
0950 4008B	Philips Screw With Spring Washer - M4X8	63-109
0951 3005B	Philips Screw With Flat Washer M3x5	33-105
0951 3006B	Philips Screw With Flat Washer - M3x6	9-106
0951 3006B	Philips Screw With Flat Washer - M3x6	27-101
0951 3006B	Philips Screw With Flat Washer - M3x6	31-101
0951 3006B	Philips Screw With Flat Washer - M3x6	57-101
0951 3006B	Philips Screw With Flat Washer - M3x6	71-102
0951 3008B	Philips Screw With Flat Washer - M3x8	41-105
0951 4006B	Philips Screw With Washer - M4x6	29-104
0951 4006B	Philips Screw With Washer - M4x6	35-109
0951 4008B	Philips Screw With Washer - M4x8	35-104
0951 4008B	Philips Screw With Washer - M4x8	53-102
0951 4012B	Philips Screw With Flat Washer - M4X12	63-103
0951 4016B	Philips Screw With Flat Washer - M4	9-101
0951 5010B	Philips Screw With Washer - M5x10	41-108
0953 4008M	Screw - M4X8	9-105

Part No.	Description	Page and Index No
0954 3010B	Philips Screw - M3x10	47-101
0954 4012B	Double Sems Screw - M4 X 12	47-102
0960 4010B	Philips Flange Screw - M4 X 10	75-105
0964 4006B	Tapping Screw With Flat Washer - M4x6	73-104
0964 4008B	Tapping Screw With Flat Washer - M4x8	9-102
0964 4008B	Tapping Screw With Flat Washer - M4x8	31-106
0964 4008B	Tapping Screw With Flat Washer - M4x8	45-107
0964 4008B	Tapping Screw With Flat Washer - M4x8	61-105
0964 4008B	Tapping Screw With Flat Washer - M4x8	71-108
0964 4008B	Tapping Screw With Flat Washer - M4x8	75-102
0965 3006B	Tapping Screw With Flat Washer M3x6	13-105
0965 3008B	Tapping Screw With Washer - M3x8	45-108
0965 3008W	Tapping Screw With Flat Washer - M3x8	29-105
0965 3010B	Tapping Screw With Flat Washer - M3x6	43-104
0965 4008B	Tapping Screw - M4 X 8	15-101
0971 3006A	Philips Polycarbonate Screw - M3x6	43-109
1102 4052	Optional Connector	69-102
1102 4052	Optional Connector	71-104
1102 4473	Ct Connector - 2p	59-110
1102 4473	Ct Connector - 2p	71-103
1102 5194	Connector - 7p	45-110
1102 6613	Relay Terminal - 2P	41-101
1105 0192	Locking Support	71-101
1105 0196	Harness Clamp	19-107
1105 0196	Harness Clamp	45-105
1105 0199	Clamp	23-108
1105 0199	Clamp	25-106
1105 0199	Clamp	37-109
1105 0199	Clamp	39-103
1105 0199	Clamp	55-101
1105 0199	Clamp	59-102
1105 0199	Clamp	61-104
1105 0199	Clamp	63-104
1105 0199	Clamp	75-103
1105 0229	Clamp	67-105

Part No.	Description	Page and Index No.
1105 0230	Clamp	33-103
1105 0230	Clamp	35-108
1105 0231	Clamp	33-108
1105 0231	Clamp	67-107
1105 0367	Spacer	69-101
1105 0409	Spacer	69-103
1106 0193	Bushing - 7.9mm	75-104
1107 0393	Fuse - 8A,125V	69-105
1107 0752	Fuse - 5A 250V	69-106
1107 0753	Fuse - 6.3A 250V	69-104
1204 1545	Main Switch	67-102
1204 2355	Micro Switch - AM51632A531	19-105
1204 2356	Micro Switch - AM51612A531	13-101
1204 2356	Micro Switch - AM51612A531	17-104
1204 2397	Safety Switch	67-103

Part No.	Description	Page and Index No

A160/A157
PARTS CATALOG

A160/A157
PARTS LOCATION AND LIST

This section instructs you as to the numbers and names of parts on this machine.

LOCATION OF UNIT

1. EXTERIOR (A160/A157)

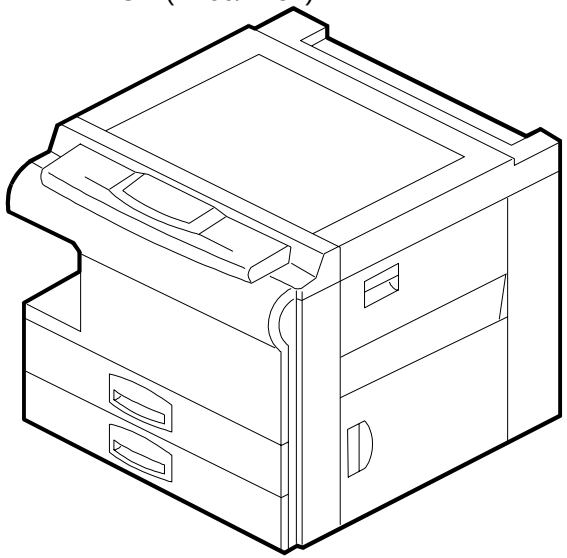

See Page 8

2. PLATEN COVER ASS'Y (A160/A157)

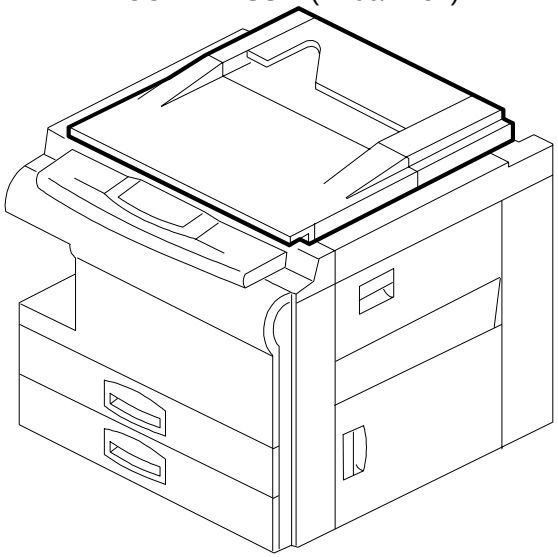

See Page 10

3. BY-PASS FEED SECTION (A160/A157)

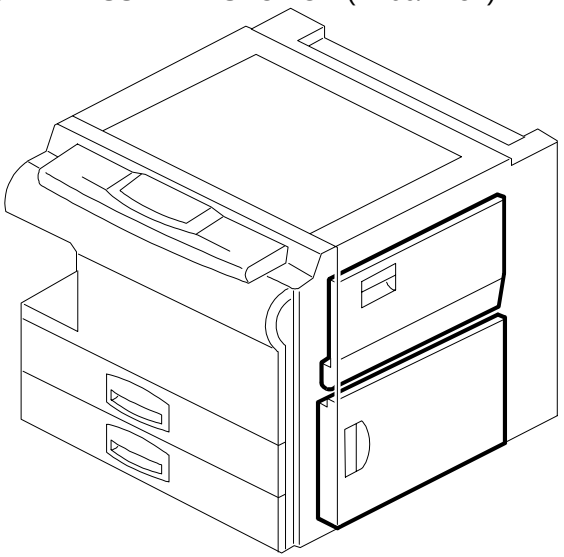

See Page 12

4. PAPER TRAY SECTION (A160/A157)

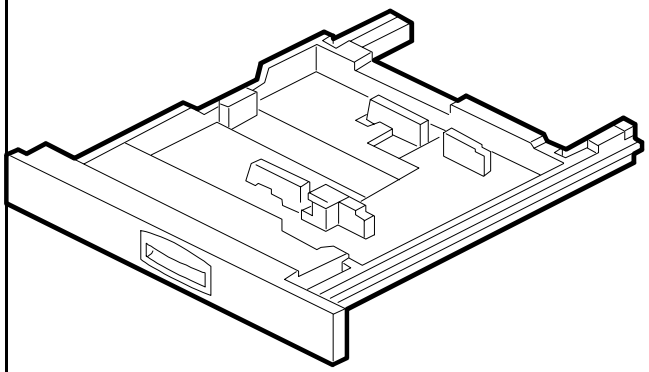

See Page 14

5. LCT UNIT 1 (A160)

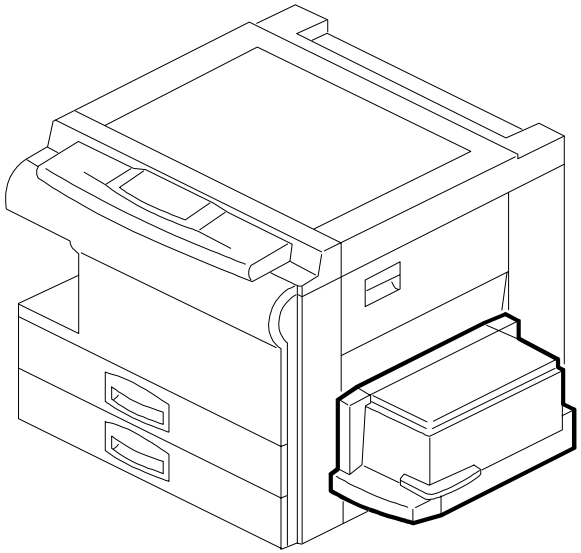

See Page 16

6. LCT UNIT 2 (A160)

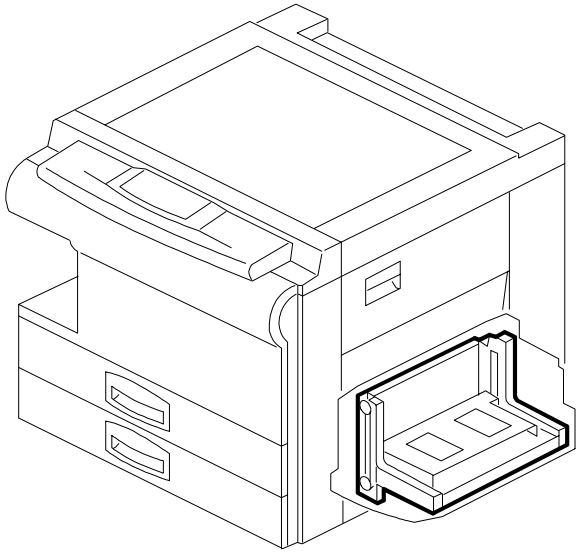

See Page 18

LOCATION OF UNIT

7. PAPER FEED SECTION 1 (A160/A157)

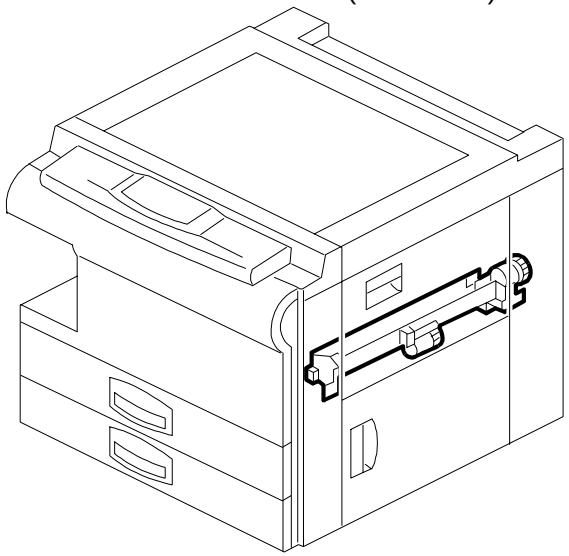

See Page 20

8. PAPER FEED SECTION 2 (A160/A157)

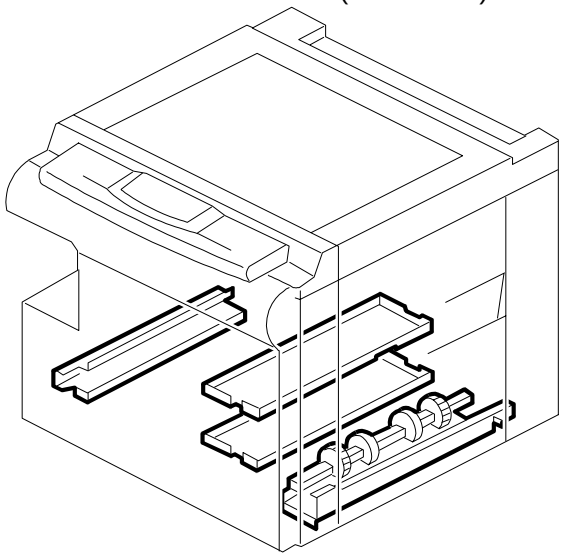

See Page 22

9. PAPER REGISTRATION (A160/A157)

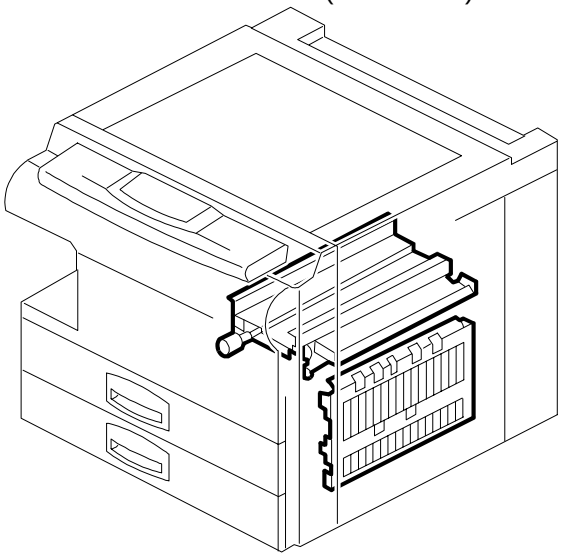

See Page 24

10. OPTICAL SECTION 1 (A160/A157)

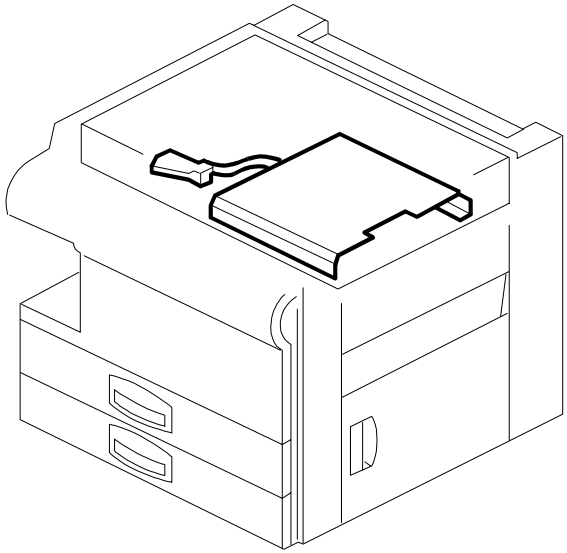

See Page 26

11. OPTICAL SECTION 2 (A160/A157)

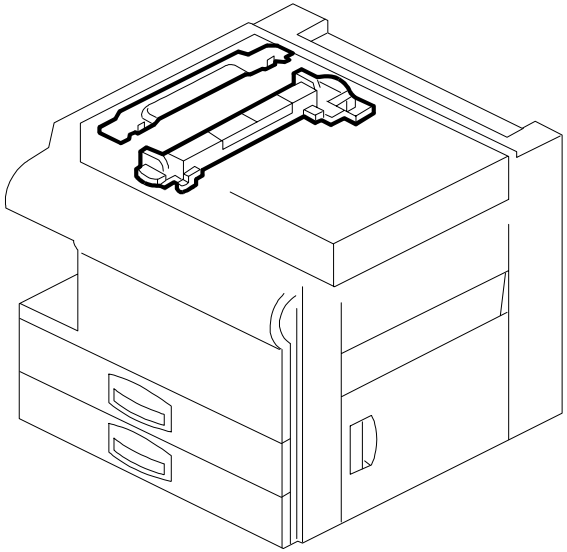

See Page 28

12. OPTICAL SECTION 3 (A160/A157)

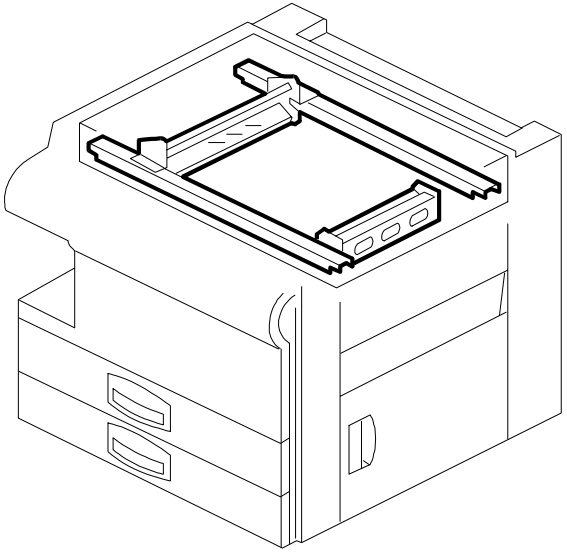

See Page 30

LOCATION OF UNIT

13. OPTICAL SECTION 4 (A160/A157)

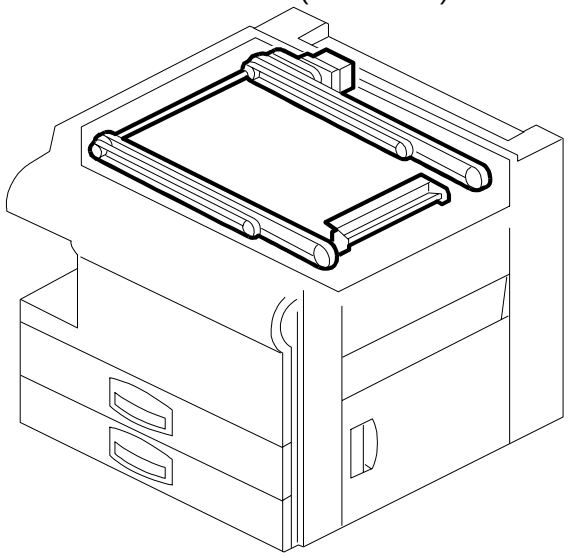

See Page 32

14. TONER SUPPLY UNIT (A160/A157)

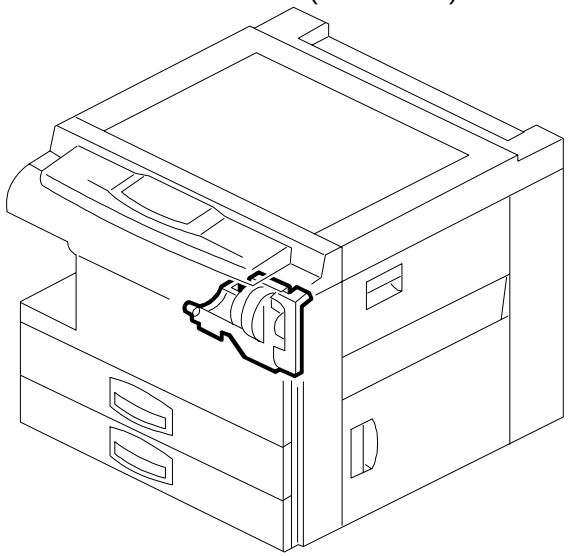

See Page 34

15. DEVELOPMENT UNIT (A160/A157)

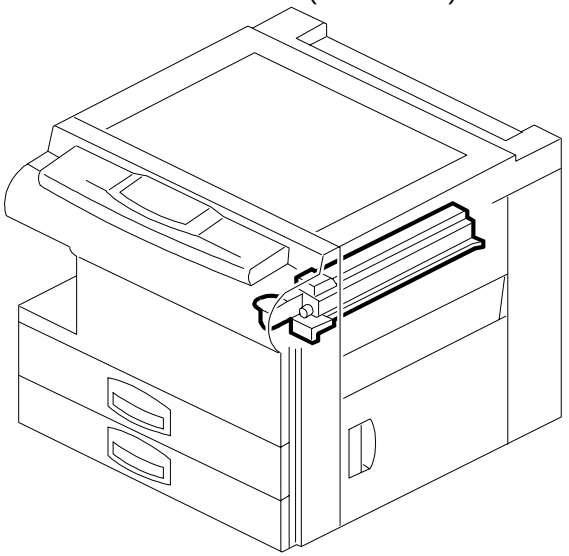

See Page 36

16. DRUM UNIT 1 (A160/A157)

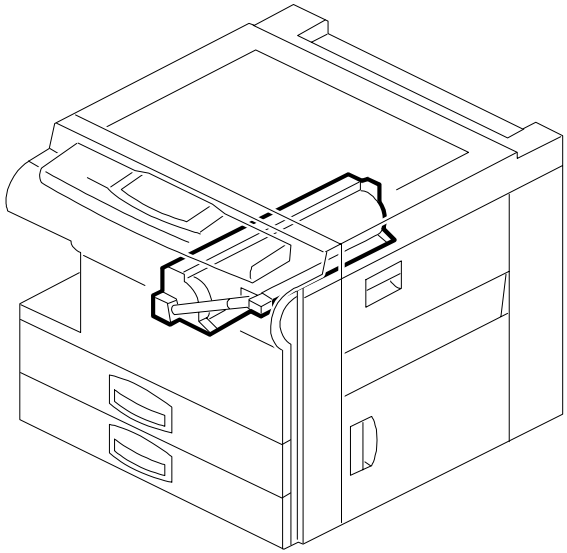

See Page 38

17. DRUM UNIT 2 (A160/A157)

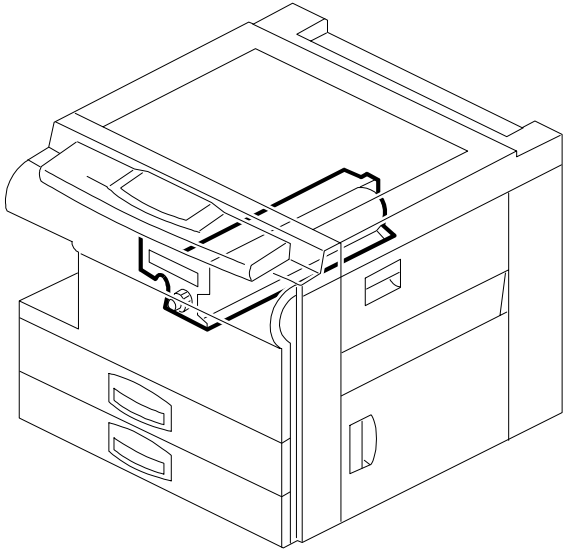

See Page 40

18. TRANSFER UNIT (A160/A157)

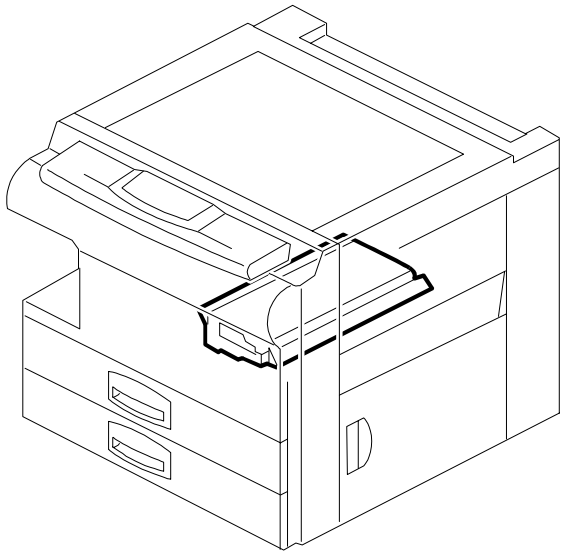

See Page 42

LOCATION OF UNIT

19. FUSING UNIT 1 (A160/A157)

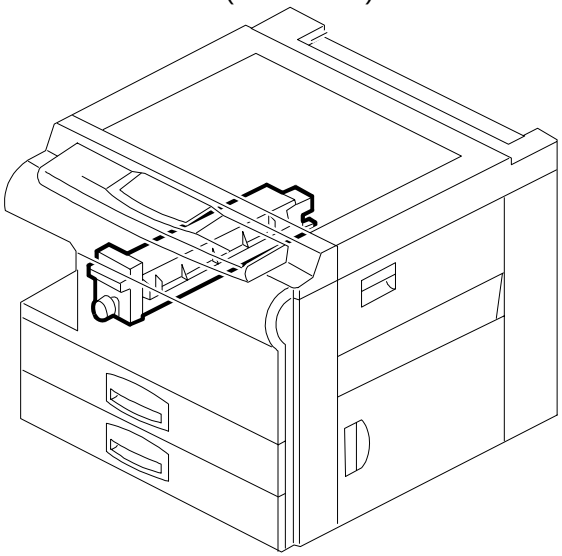

See Page 44

20. FUSING UNIT 2 (A160/A157)

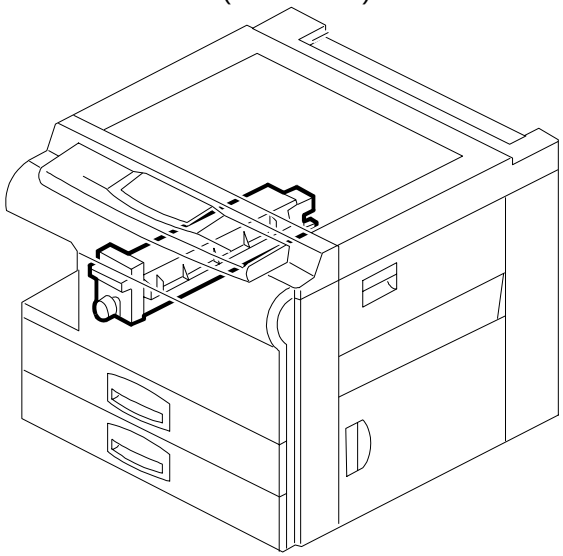

See Page 46

21. DUPLEX TRAY 1 (A160)

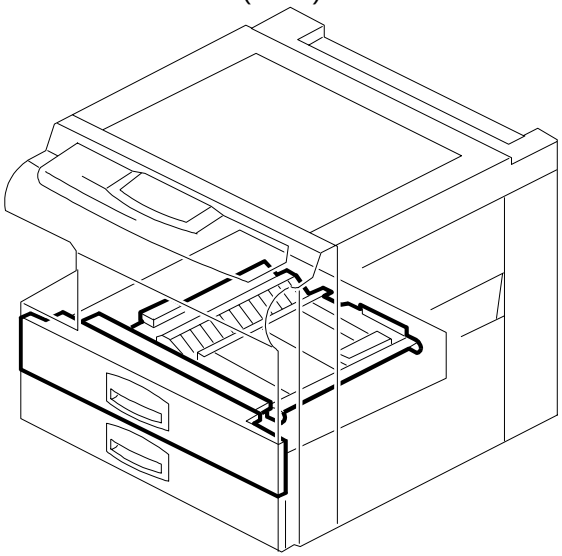

See Page 48

22. DUPLEX TRAY 2 (A160)

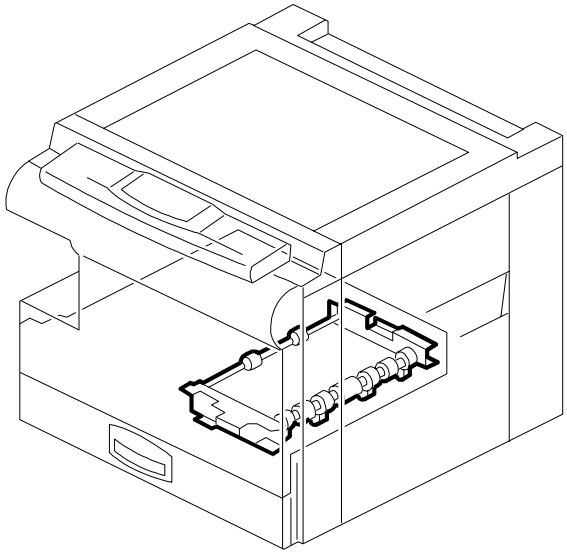

See Page 50

23. DUPLEX TRAY 3 (A160)

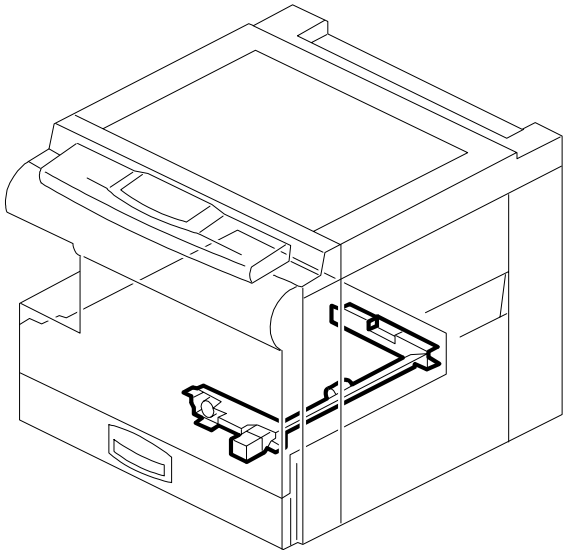

See Page 52

24. DUPLEX TRAY 4 (A160)

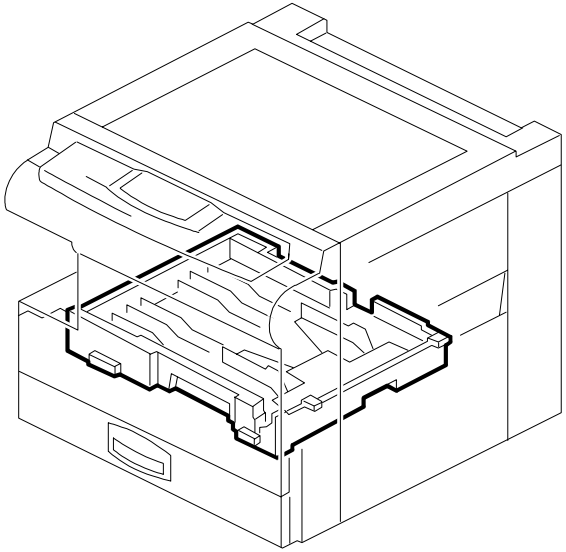

See Page 54

LOCATION OF UNIT

25. PAPER EXIT AND INVERTER (A160)

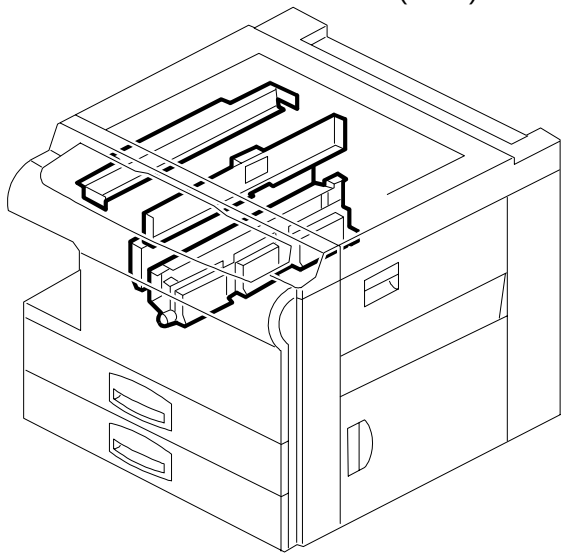

See Page 56

26. PAPER EXIT SECTION (A157)

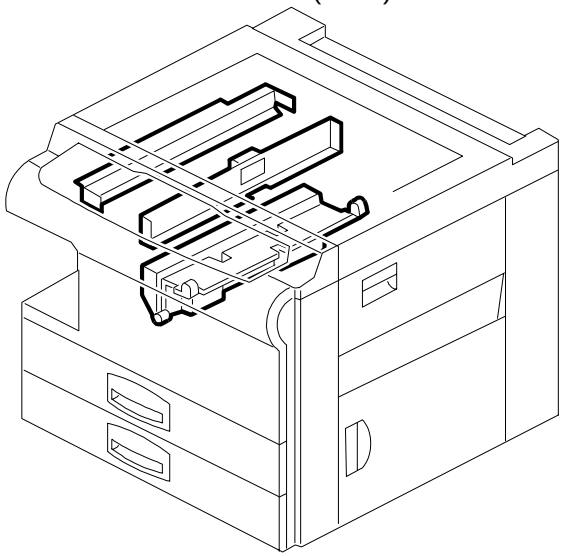

See Page 58

27. DRIVE SECTION 1 (A160/A157)

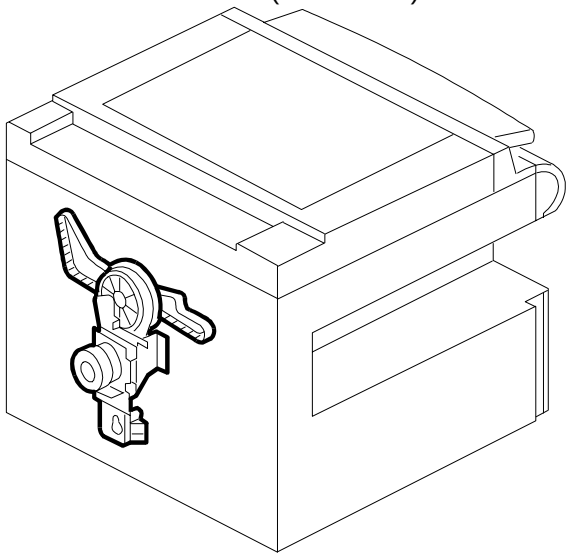

See Page 60

28. DRIVE SECTION 2 (A160/A157)

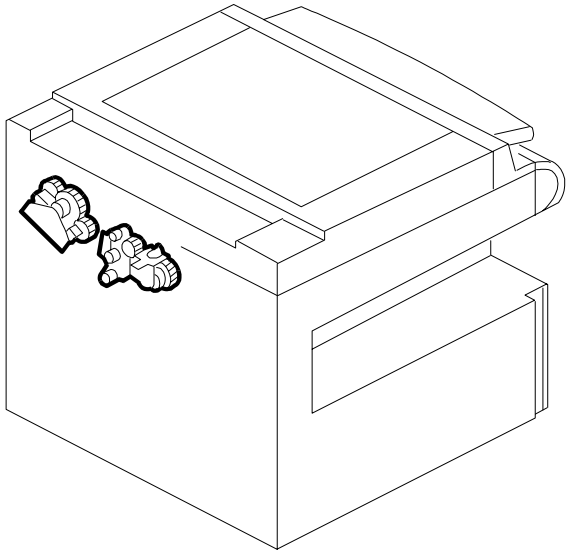

See Page 62

29. DRIVE SECTION 3 (A160/A157)

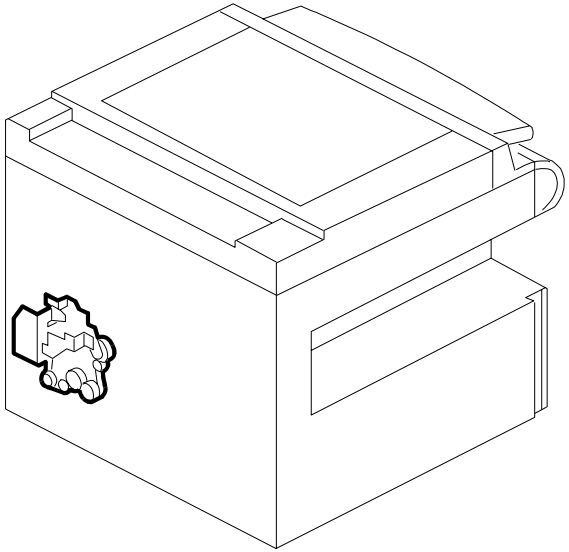

See Page 64

30. ELECTRICAL SECTION 1 (A160/A157)

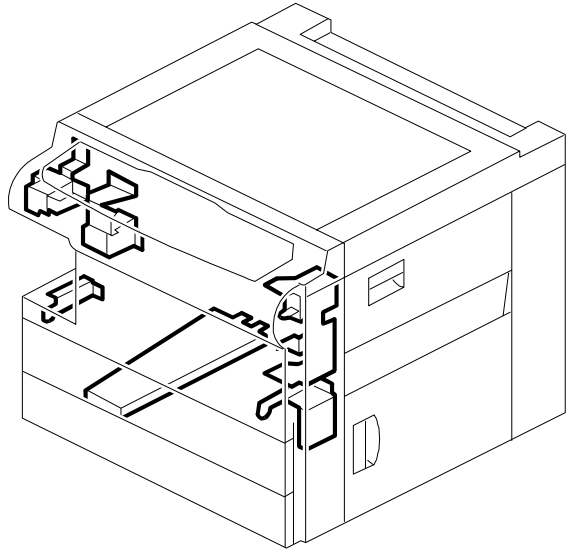

See Page 66

LOCATION OF UNIT

31. ELECTRICAL SECTION 2 (A160/A157)

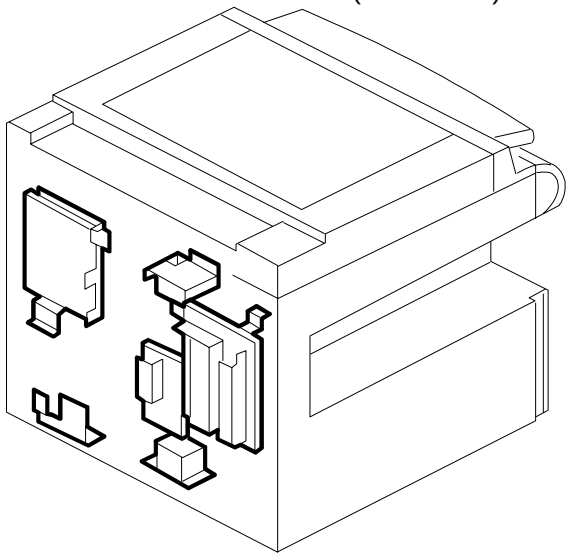

See Page 68

32. ELECTRICAL SECTION 3 (A160/A157)

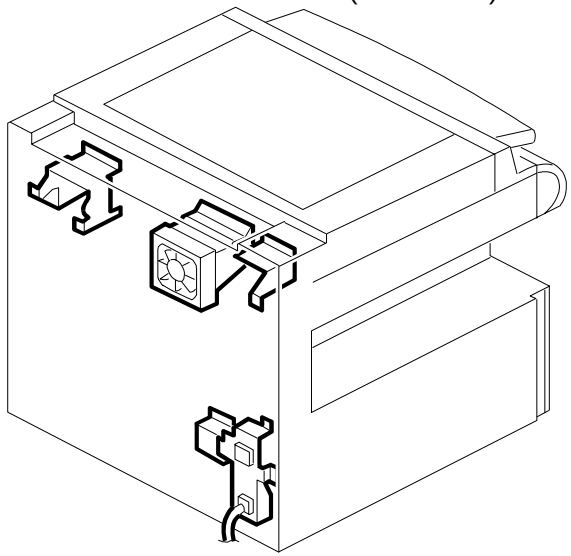

See Page 70

33. FRAME SECTION 1 (A160/A157)

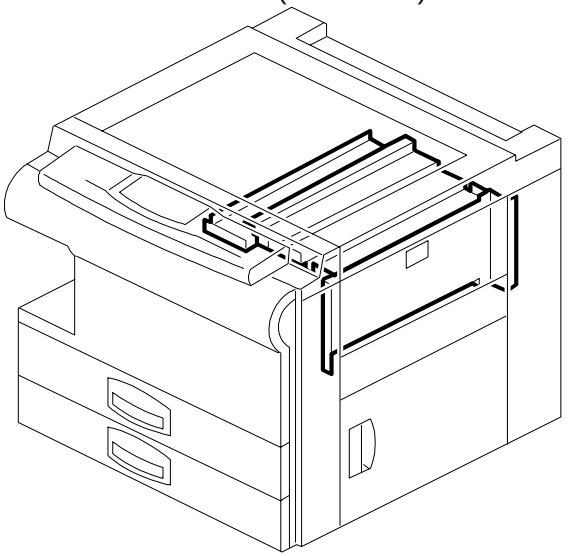

See Page 72

34. FRAME SECTION 2 (A160/A157)

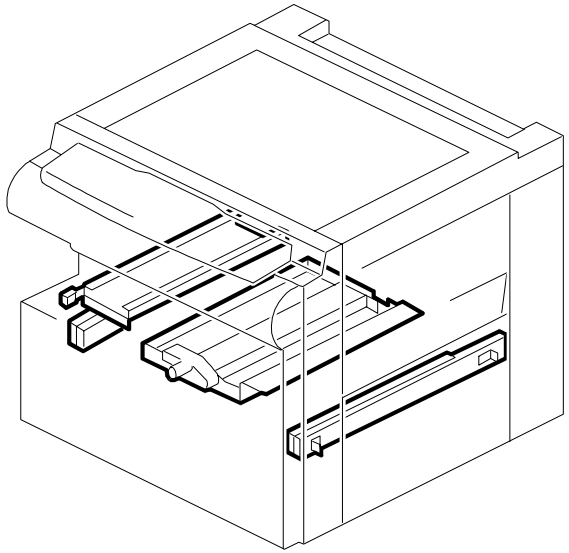

See Page 74

1. EXTERIOR (A160/A157)

Rev. 7/25/96

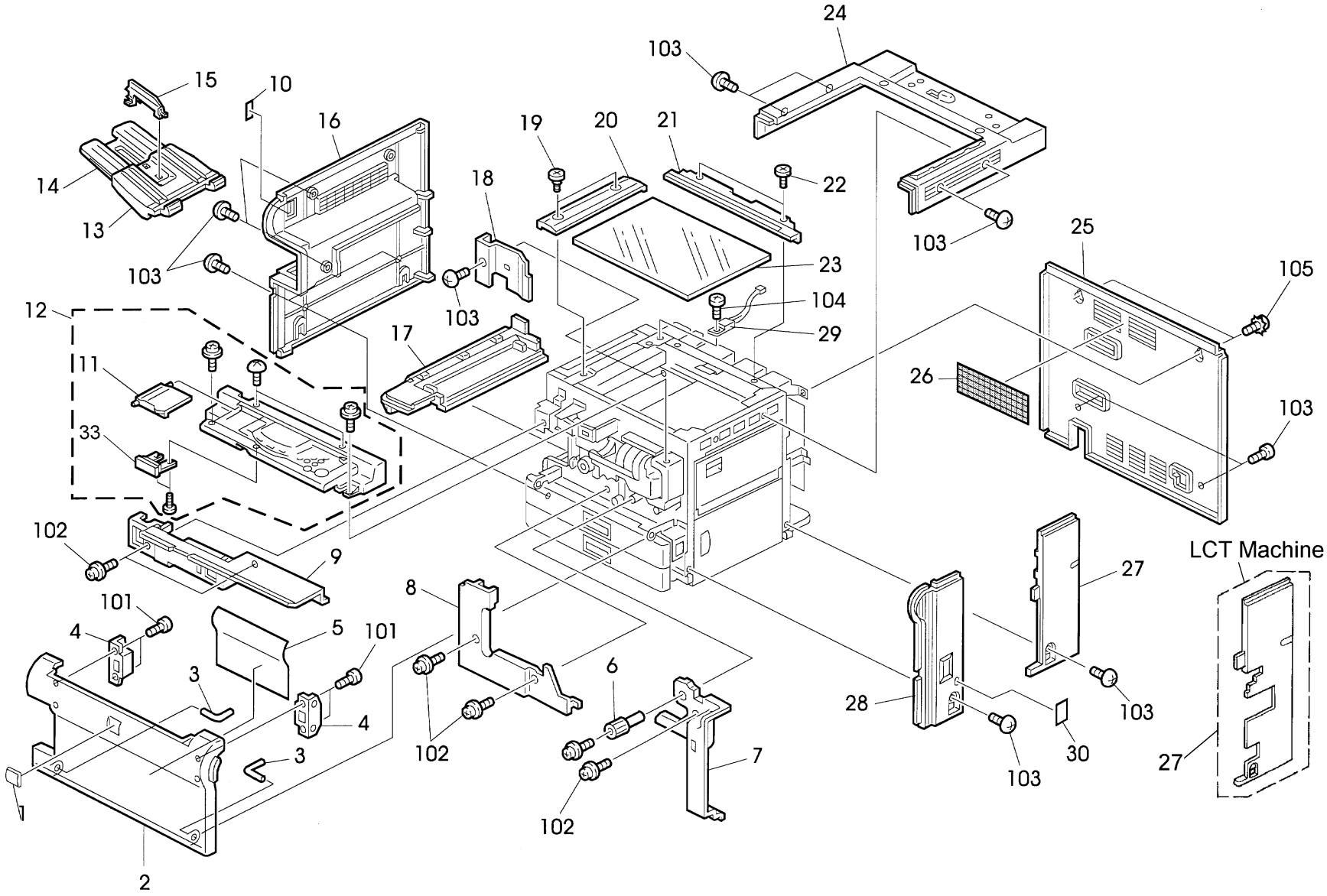

1. EXTERIOR (A160/A157)

Rev. 7/25/96

Index No.	Part No.	Description	Q'ty Per Assembly
1	A153 1285	Emblem	1
2	A157 1277	Front Cover (A157)	1
2	A160 1277	Front Cover (A160)	1
3	A153 1354	Hinge Pin	2
4	AG07 0004	Magnetic Catch	6
5	A157 1360	Operation Sheet (FT4027)	1
5	A158 1360	Operation Sheet (FT4527)	1
6	AG05 0078	Registration Knob	1
7	A157 1352	Right Lower Cover	1
8	A157 1339	Lower Inner Cover	1
9	A157 1351	Upper Inner Cover	1
10	AA00 1373	Decal - Main Switch	1
11	A153 1469	Panel Cover	1
12	AG01 1314	Operation Panel Ass'y - LT (A157)	1
12	AG01 1315	Operation Panel Ass'y - LT (A160)	1
12	AG01 1316	Operation Panel Ass'y - A4 (A157)	1
12	AG01 1317	Operation Panel Ass'y - A4 (A160)	1
13	AF04 3083	Copy Tray	1
14	AF04 3076	Copy Tray Slide	1
15	AF04 3077	Copy Tray Guide	1
16	A157 1302	Left Cover	1
17	A157 1311	Left Inner Cover	1
18	A157 1321	Left Inner Cover - Small	1
19	AA14 3416	Stepped Screw - M4x3	2
20	AC04 2113	Left Original Scale - A4	1
20	AC04 2117	Left Original Scale - LT	1
21	AC04 2120	Rear Original Scale (A4)	1
21	AC04 2124	Rear Original Scale - LT	1
22	AA14 3417	Shoulder Screw - M4x4	2
23	5215 1980	Exposure Glass - A3t-3.2	1
24	A153 1251	Upper Cover	1
25	A153 1291	Rear Cover	1
26	AA01 2080	Dust Filter	1
27	A153 1271	Rear Right Cover (A157)	1
27	A155 1331	LCT Rear Right Cover	1

Index No.	Part No.	Description	Q'ty Per Assembly
28	A153 1261	Front Right Cover	1
29	AW10 0027	Thermister	1
30	A134 1328	Small Cap	1
31	A153 1749	Scale Bracket	1
32			
33	AW01 0065	Auto Response Sensor	1
34	A159 5460	Printed Circuit Board	1
35	A160 5461	Printed Circuit Board	1
36	A159 5465	Printed Circuit Board	1
37	A160 5466	Printed Circuit Board	1
38	1204 1347	Push Switch B3F - 1000	1
39	1204 1294	Push Switch B3F - 4000	1
101	0434 0082B	Tapping Screw - M4x8	
102	0964 4008B	Tapping Screw With Flat Washer - M4x8	
103	0802 5094	Tapping Truss Head Screw - M4x8	
104	0313 0040B	Philips Pan Head Screw - M3x4	
105	0953 4008M	Screw - M4X8	

2. PLATEN COVER ASS'Y (A160/A157)

Rev. 2/28/97

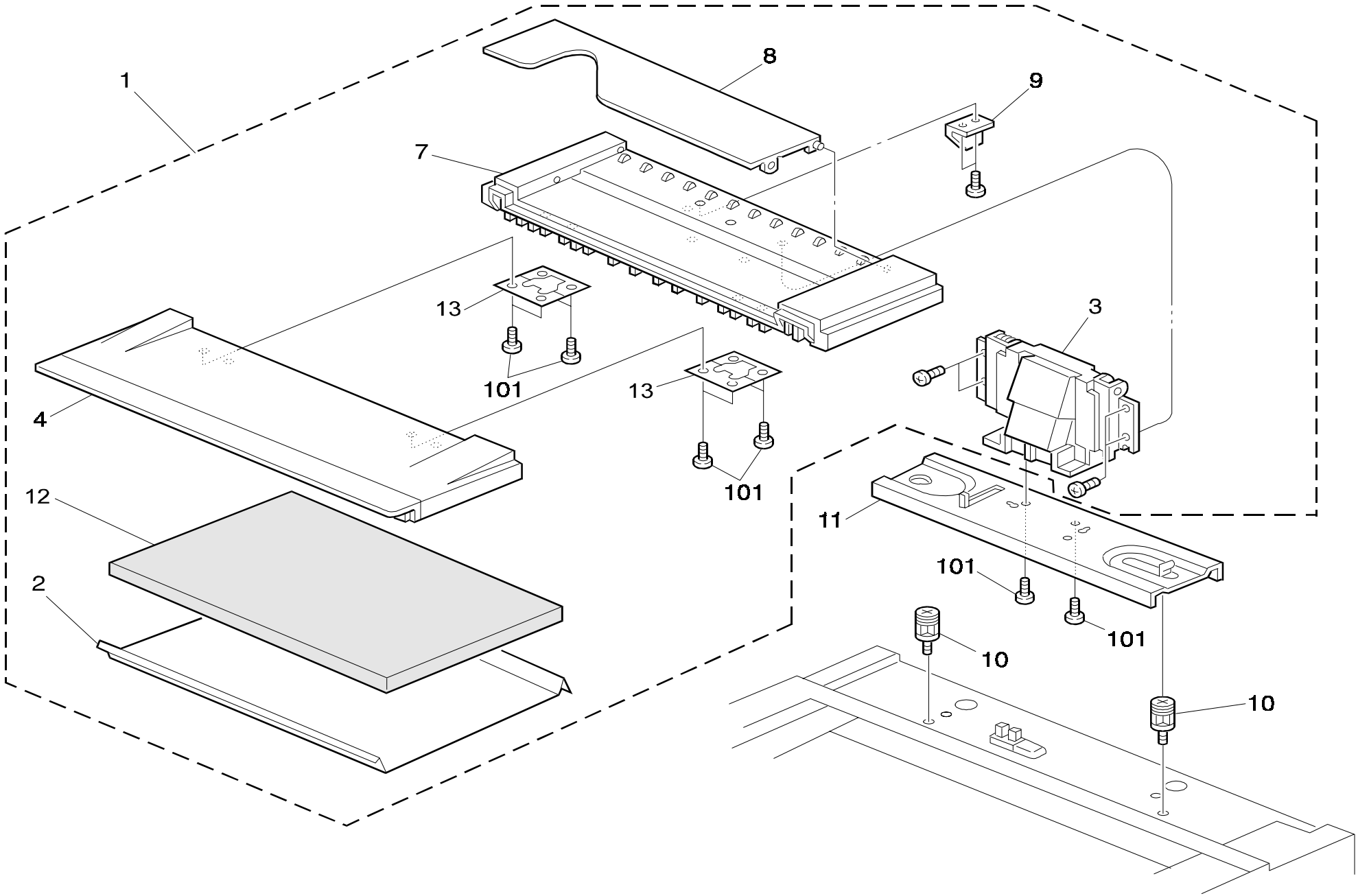

2. PLATEN COVER ASS'Y (A160/A157)

Index No.	Part No.	Description	Q'ty Per Assembly
1	A153 1637	Platen Cover Ass'y	1
2	5448 2804	Platen Cover Sheet	1
3	A153 1370	Platen Cover Hinge	1
4	A134 1394	Front Platen Cover	1
5			
6			
7	A134 1395	Rear Platen Cover	1
8	A134 1396	Original Holder	1
9	A153 1383	Platen Cover Feeler	1
10	5215 1667	Platen Cover Stud	1
11	A153 1380	Platen Cover Bracket	1
12	AA16 2067	Platen Cover Pad	1
13	A053 1957	Flex Hinge Platen Cover	2

Index No.	Part No.	Description	Q'ty Per Assembly
101	0414 0142B	Binding Self Tapping Screw - M4x14	

3. BY-PASS FEED SECTION (A160/A157)

Rev. 2/28/97

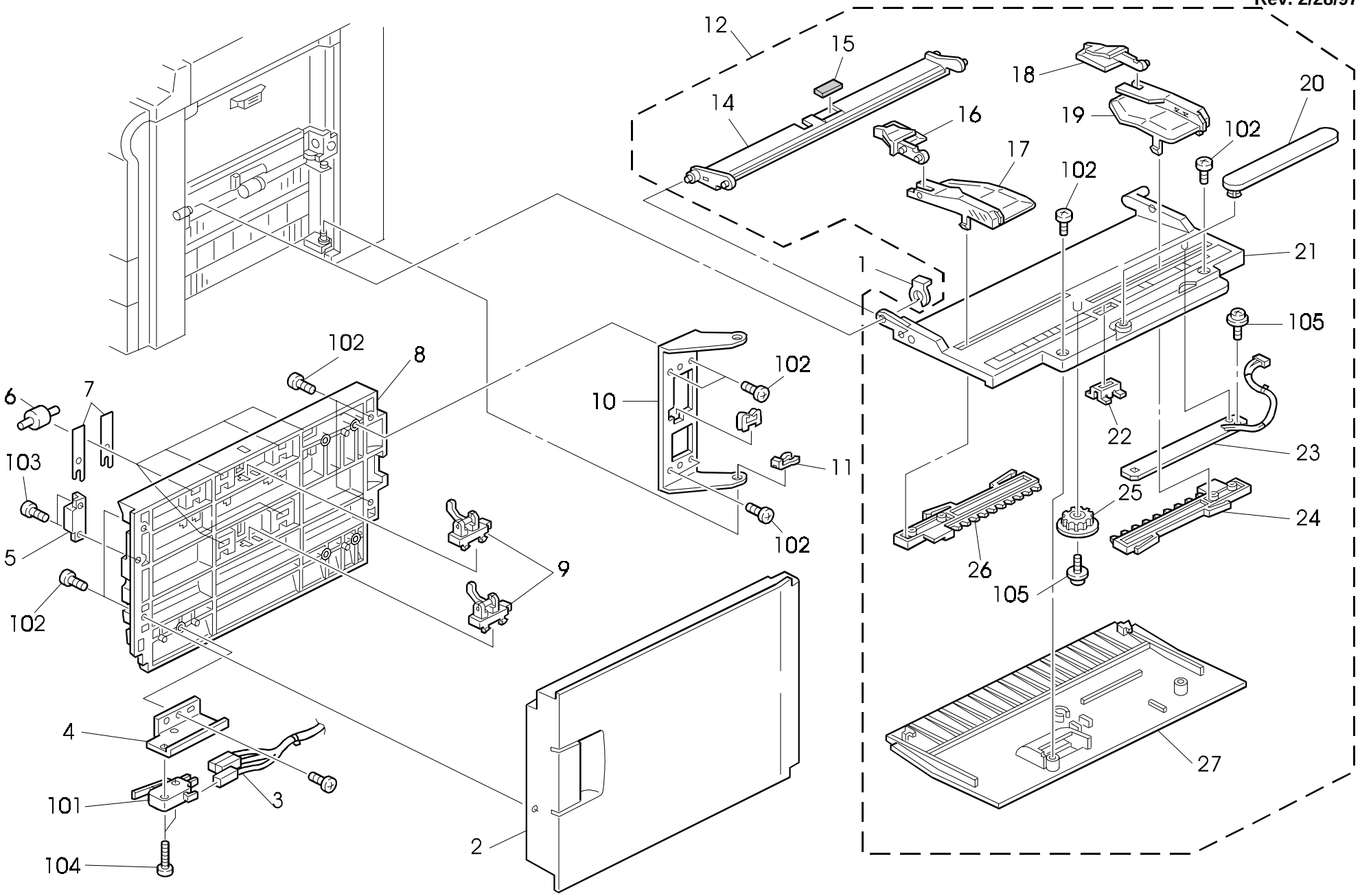

3. BY-PASS FEED SECTION (A160/A157)

Rev. 2/28/97

Index No.	Part No.	Description	Q'ty Per Assembly
1	5215 2621	Snap Ring - M6	3
2	A134 2591	Vertical Transfer	1
3	A157 5336	Vertical Transport Harness	1
4	A157 2559	Switch Bracket	1
5	AG07 0004	Magnetic Catch	6
6	AF02 2079	Vertical Driven Roller	6
7	A157 2557	Spring Plate	12
8	A157 2571	Vertical Transport Guide	1
9	AW02 0069	Photointerruptor	2
10	A134 2586	Hinge Bracket	1
11	5447 2681	Snap Ring	7
12	A134 2691	By-pass Feed Table Ass'y	1
13			
14	A134 2741	By-pass Feed Entrance Guide	1
15	5447 2927	Friction Pad - B	1
16	A134 2721	Front Paper Guide	1
17	A134 2711	Front Side Fence	1
18	A134 2726	Rear Paper Guide	1
19	A134 2716	Rear Side Fence	1
20	A134 2701	By-pass Feed Guide	1
21	A134 2696	By-pass Feed Table	1
22	A134 2705	Magnet Catch Plate	1
23	A134 5280	Paper Size Sensor Board	1
24	A134 2706	Rear Fence Rack	1
25	G011 3305	Gear - 16T	2
26	A134 2707	Front Fence Rack	2
27	A134 2746	By-pass Feed Cover	1

Index No.	Part No.	Description	Q'ty Per Assembly
101	1204 2356	Micro Switch - AM51612A531	
102	0414 0082W	Tapping Screw With Flat Washer - M4x8	
103	0802 5085	Tapping Screw - M4x8	
104	0313 0140B	Philips Pan Head Screw - M3x14	
105	0965 3006B	Tapping Screw With Flat Washer M3x6	

4. PAPER TRAY SECTION (A160/A157)

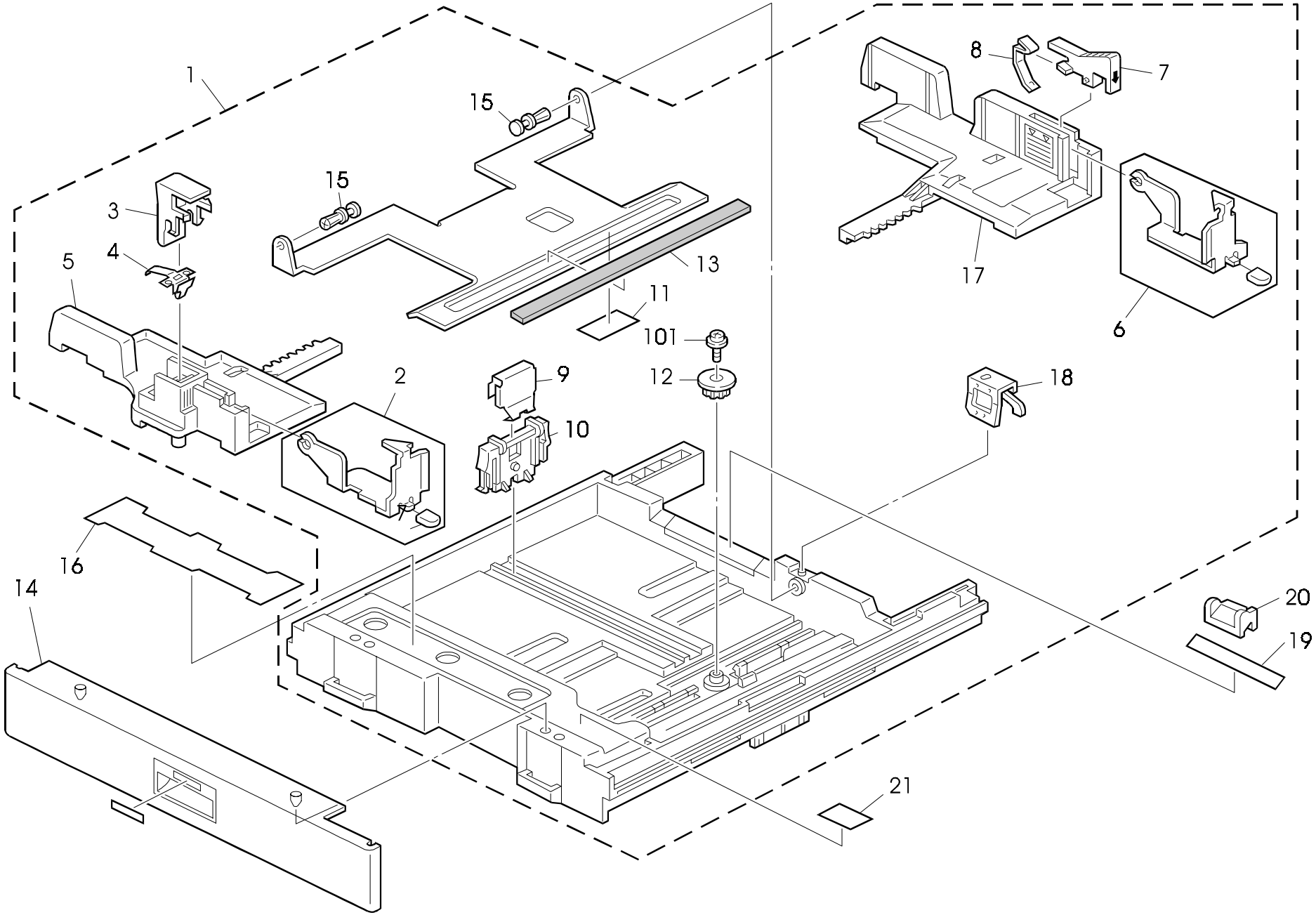

4. PAPER TRAY SECTION (A160/A157)

Index No.	Part No.	Description	Q'ty Per Assembly
1	A157 2751	Paper Tray	1
2	A157 2754	Front Paper Stripper	1
3	A157 2766	Front Stopper Lever	1
4	A157 2767	Front Stopper Spring	1
5	AF01 6072	Front Side Fence	1
6	A157 2755	Rear Paper Stripper	1
7	A157 2768	Rear Stopper Lever	1
8	A157 2769	Rear Stopper Spring	1
9	A157 2762	End Fence Spring	1
10	AF01 7015	Paper End Fence	1
11	A157 2764	Bottom Tray Sheet	1
12	AB01 3868	Gear - 16Z	1
13	AF01 3004	Bottom Plate Pad	1
14	A134 2956	Paper Feed Front Cover	2
15	A048 2838	Nylon Rivet	2
16	A157 2758	Decal - Paper Setting	1
17	AF01 6073	Rear Side Fence	1
18	A157 2765	Bottom Plate Spring	1
19	A153 2995	Decal Paper Size - LT/DLT	1
19	A153 2996	Decal Paper Size - A4/A3	1
20	AF01 5027	Paper Size Slider	1
21	A157 2805	Decal - Paper Set	1
101	0434 0060B	Philips Tapping Screw - M4x6	

Index No.	Part No.	Description	Q'ty Per Assembly

5. LCT UNIT 1 (A160)

Rev. 3/20/96

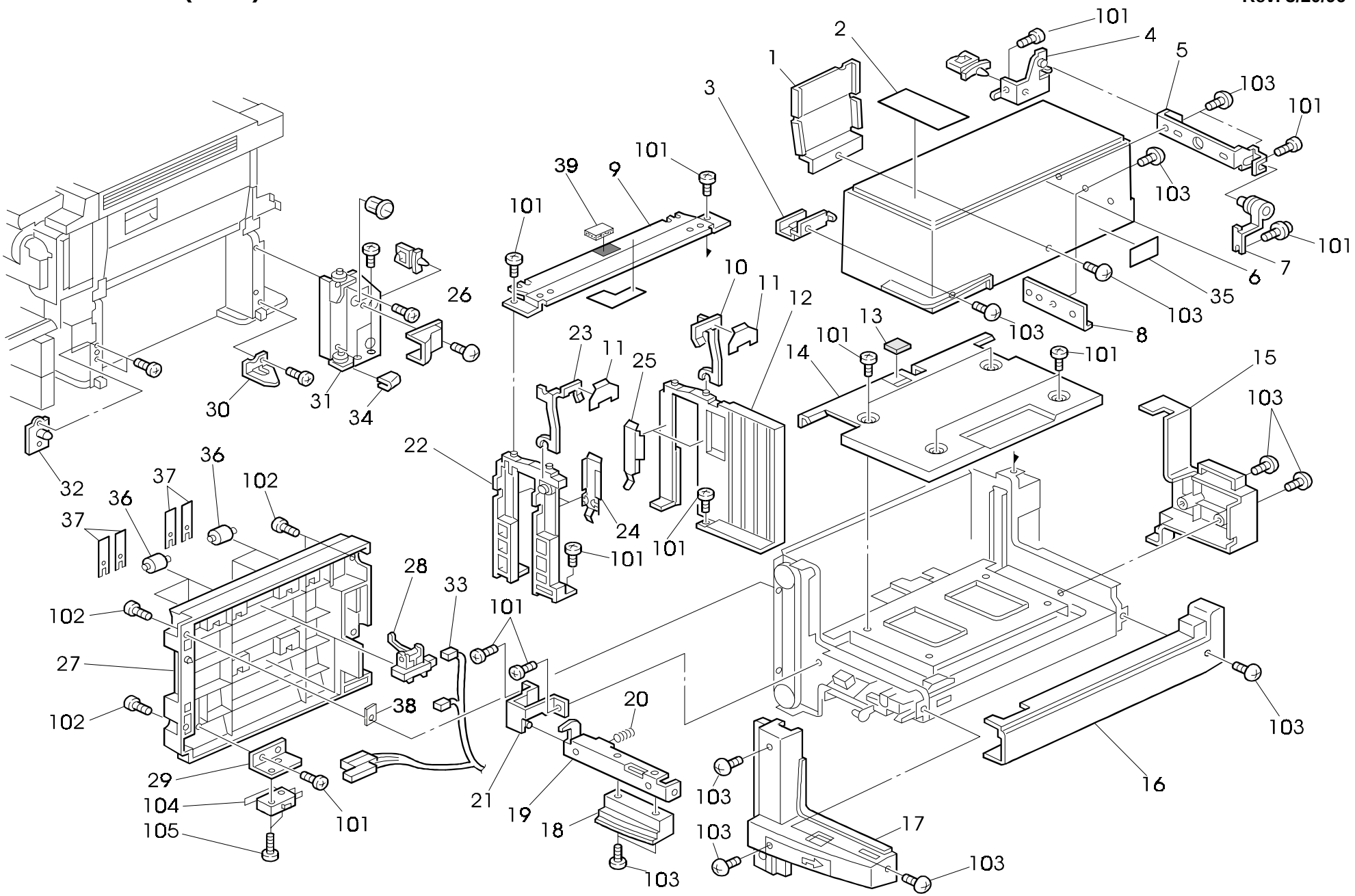

5. LCT UNIT 1 (A160)

Rev. 3/20/96

Index No.	Part No.	Description	Q'ty Per Assembly
1	A155 6324	End Fence	1
2	A155 6113	Decal - Paper Set	1
3	A155 6207	Cover Bracket	1
4	A155 6303	Fix Hinge	1
5	A155 6302	Hinge Angle	1
6	A155 6101	LCT Upper Cover	1
7	A335 3251	Top Cover Hinge	1
8	A155 6201	LCT Hinge Bracket	1
9	A155 6251	Upper Stay	1
10	A155 6312	Rear Paper Holder	1
11	A155 6313	Support Guide	2
12	A155 6307	Rear Side Fence	1
13	A421 2543	Friction Pad	1
14	A155 6142	LCT Paper Tray	1
15	A155 6221	LCT Rear Cover	1
16	A155 6231	LCT Right Cover	1
17	A155 6191	LCT Front Cover	1
18	A155 6181	Knob	1
19	A155 6171	Grip Bracket	1
20	AA06 3239	Spring - Handle	1
21	A155 6170	Hinge Bracket	1
22	A155 6306	Front Side Fence	1
23	A155 6311	Front Paper Holder	1
24	A155 6321	Front Spring Plate	2
25	A155 6322	Rear Sprig Plate	2
26	A155 6241	LCT Harness Cover	1
27	A159 6181	Vertical Guide Plate - LCT	1
28	AW02 0069	Photointerruptor	2
29	A159 6182	Switch Bracket	1
30	A155 6169	Hinge Holder	1
31	A155 6160	Lower Hinge	1
32	A155 6175	LCT Positioning Plate	1
33	A155 5349	LCT Vertical Harness	1
34	A155 6162	Cushion	1
35	A155 6114	Caution Decal - LCT	1
36	AF02 0330	Vertical Driven Roller	6
37	AA08 0034	Bushing - 4x5x7	4
38	A155 6112	Spacer - LCT	1
39	A155 6270	Cushion 20x30	1
101	0434 0060B	Philips Tapping Screw - M4x6	
102	0414 0080B	Tapping Screw - M4x8	
103	0802 5094	Tapping Truss Head Screw - M4x8	
104	1204 2356	Micro Switch - AM51612A531	

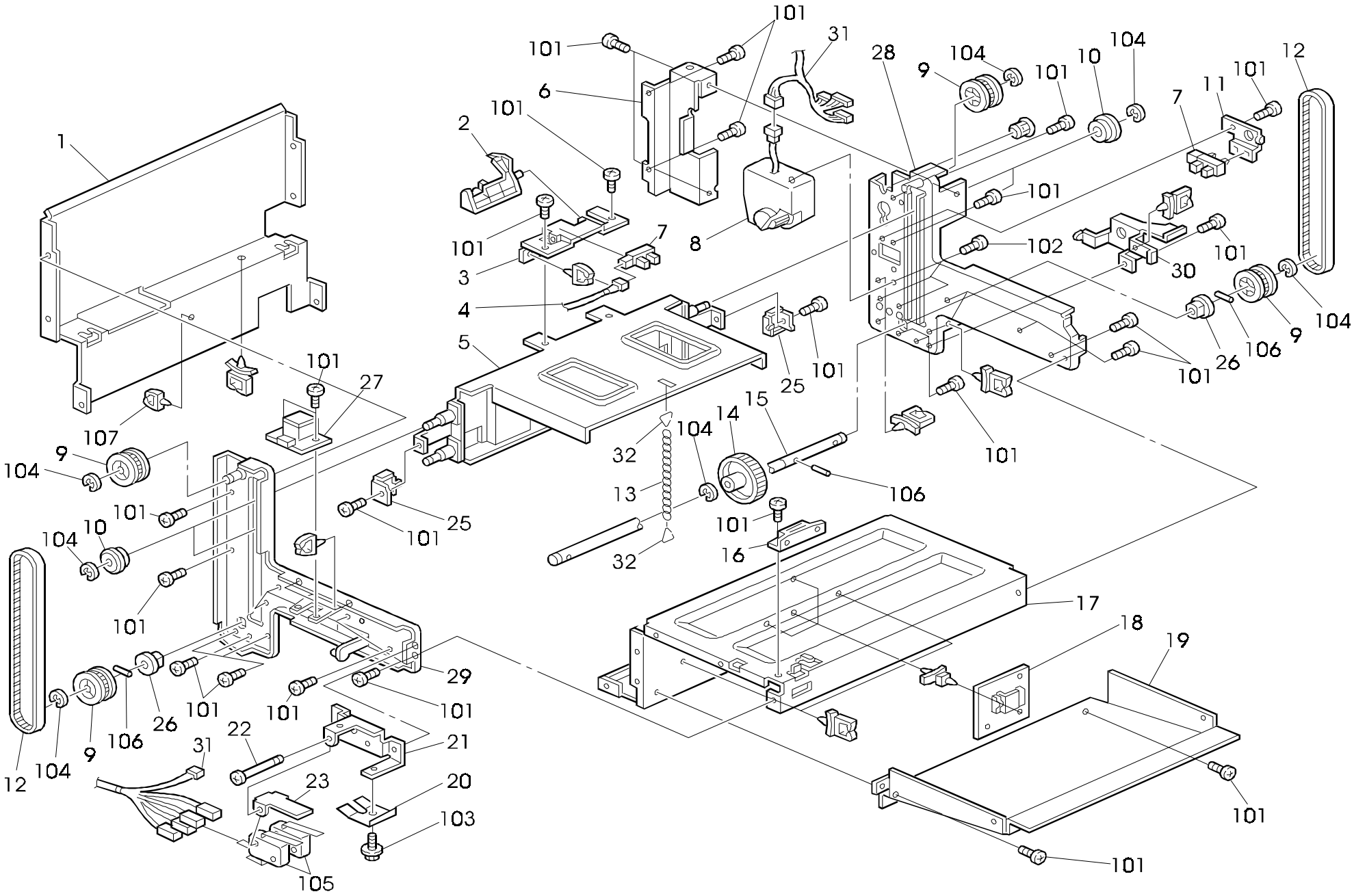
101
31
28
104
9
101
10
104
12
101
11
101
7
6
2
101
101
7
8
101
102
101
30
3
4
5
25
101
26
106
9
104
101
27
107
9
104
101
10
104
101
32
13
32
14
104
15
106
101
25
101
16
17
18
19
29
101
101
101
22
21
23
20
103
105
101
101
12
104
9
106
26
31

6. LCT UNIT 2 (A160)

Rev. 08/98

Index No.	Part No.	Description	Q'ty Per Assembly
1	A155 6143	Left Bracket	1
2	A155 6148	Paper Ding Sensor Feeler	1
3	A155 6147	Paper End Sensor Bracket	1
4	A155 5348	Paper End Sensor Harness	1
5	A155 6203	Paper Tray Stay	1
6	A155 6153	Upper Hinge	1
7	AW02 0075	Photointerrupter	2
8	AX05 0090	Motor - DC 24V 36W	1
9	AB03 0281	Timing Pulley - 28Z	4
10	A335 4351	Guide Roller	4
11	A155 6136	Lift Sensor Bracket	1
12	AA04 3456	Timing Belt - S3M167	2
13	5925 2258	Stopper Chain	1
14	AB01 1133	Gear - 49Z	1
15	AA14 0576	LCT Drive Shaft	1
16	AG07 0004	Magnetic Catch	1
17	A155 6141	Tray Bottom Plate	1
18	A155 5165	LCT Main Board	1
19	A155 6145	Tray Cover	1
20	A155 6118	Spring Plate	1
21	A155 6116	Safety Switch Bracket	1
22	A300 3155	Stepped Screw - M25x32	1
23	A155 6117	Safety Switch Lever	1
25	A335 4352	Timing Belt Clamp	2
26	5053 0223	Bushing - 8mm	2
27	A155 5170	Push Switch	1
28	A155 6125	Rear Side Bracket	1
29	A155 6110	Front Side Plate	1
30	A155 6215	Harness Guide	1
31	A155 5342	LCT Harness	1
32	A335 1341	Chain Hook	2

Index No.	Part No.	Description	Q'ty Per Assembly
101	0434 0060B	Philips Tapping Screw - M4x6	
102	0802 5236	Tapping Screw - M4x8	
103	0443 0060B	Hexagon Tapping Screw - M3x6	
104	0720 0060E	Retaining Ring - M6	
105	1204 2355	Micro Switch - AM51632A531	
106	0623 0160E	Spring Pin - 3x16mm	
107	1105 0199	Clamp	

7. PAPER FEED SECTION 1 (A160/A157)

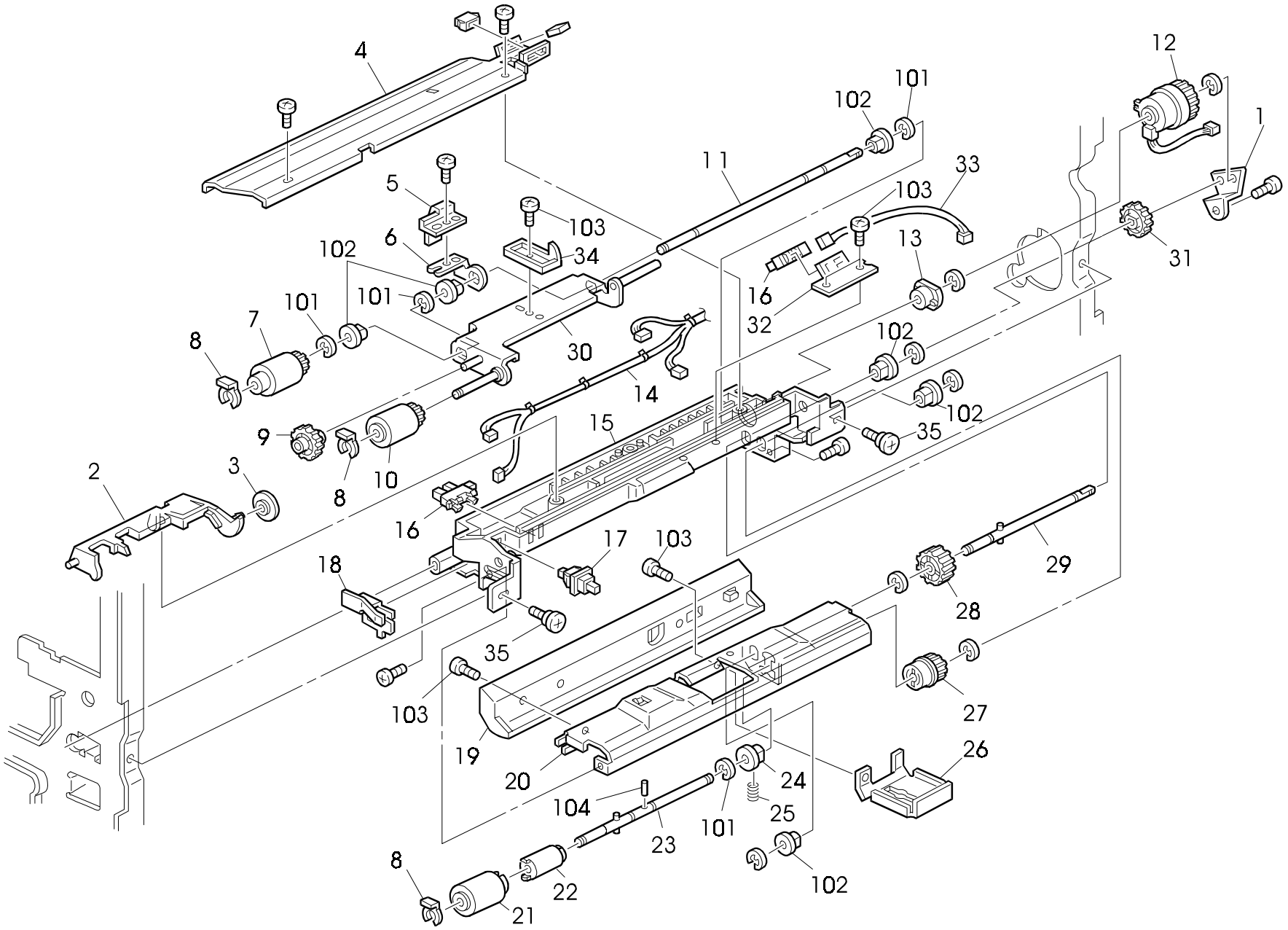

7. PAPER FEED SECTION 1 (A160/A157)

Index No.	Part No.	Description	Q'ty Per Assembly
1	A134 2688	Positioning Plate	1
2	A134 2660	Paper Feed Feeler	1
3	A134 2661	Feeler Roller	1
4	A134 2670	By-pass Feed Cover	1
5	A134 2658	Grounding Plate	1
6	A134 2656	Stopper Plate	2
7	AF03 1024	Feed Roller	1
7	AF03 1030	Feed Roller	1
8	5447 2681	Snap Ring	7
9	AB01 1343	Idle Gear - 23Z	1
10	AF03 0024	Pick-up Roller	1
11	AA14 0575	Paper Feed Shaft	1
12	AX20 0101	Magnetic Clutch - 2.5kgf 35Z	1
13	AA08 3012	Clutch Roller - 6x14x10	1
14	A134 5311	By-pass Feed Harness	1
15	A134 2659	By-pass Feed Housing	1
16	AW02 0075	Photointerrupter	15
17	AW50 0012	Push Switch	2
18	A134 2662	Grounding Plate	1
19	A153 2560	Rear Guide Plate	1
20	A134 2663	Separation Guide	1
21	AF03 2025	Separation Roller	1
22	A134 2674	Torque Limiter - 400fg	1
23	A134 2668	Separation Driven Shaft	1
24	AA08 0037	Bushing - 6 mm	1
25	AA06 3499	Pressure Spring	1
26	A134 2689	Gear Cover	1
27	AB01 1344	Gear - 16Z	1
28	AB01 1345	Gear - 20Z	1
29	A134 2667	Separation Drive Shaft	1
30	A134 2654	Pick-up Arm	1
31	AB01 1346	Gear - 27Z	1
32	A155 2682	Lift Sensor Bracket	1
33	A155 5345	Ct Harness	1
34	A155 2667	Lift Sensor Feeler	1

Index No.	Part No.	Description	Q'ty Per Assembly
35	AA14 3219	Stepped Screw	2
101	0720 0040E	Retaining Ring - M4	
102	0805 3480	Bushing - 6mm	
103	0414 0080B	Tapping Screw - M4x8	
104	0622 0100E	Spring Pin - 2x10mm	

8. PAPER FEED SECTION 2 (A160/A157)

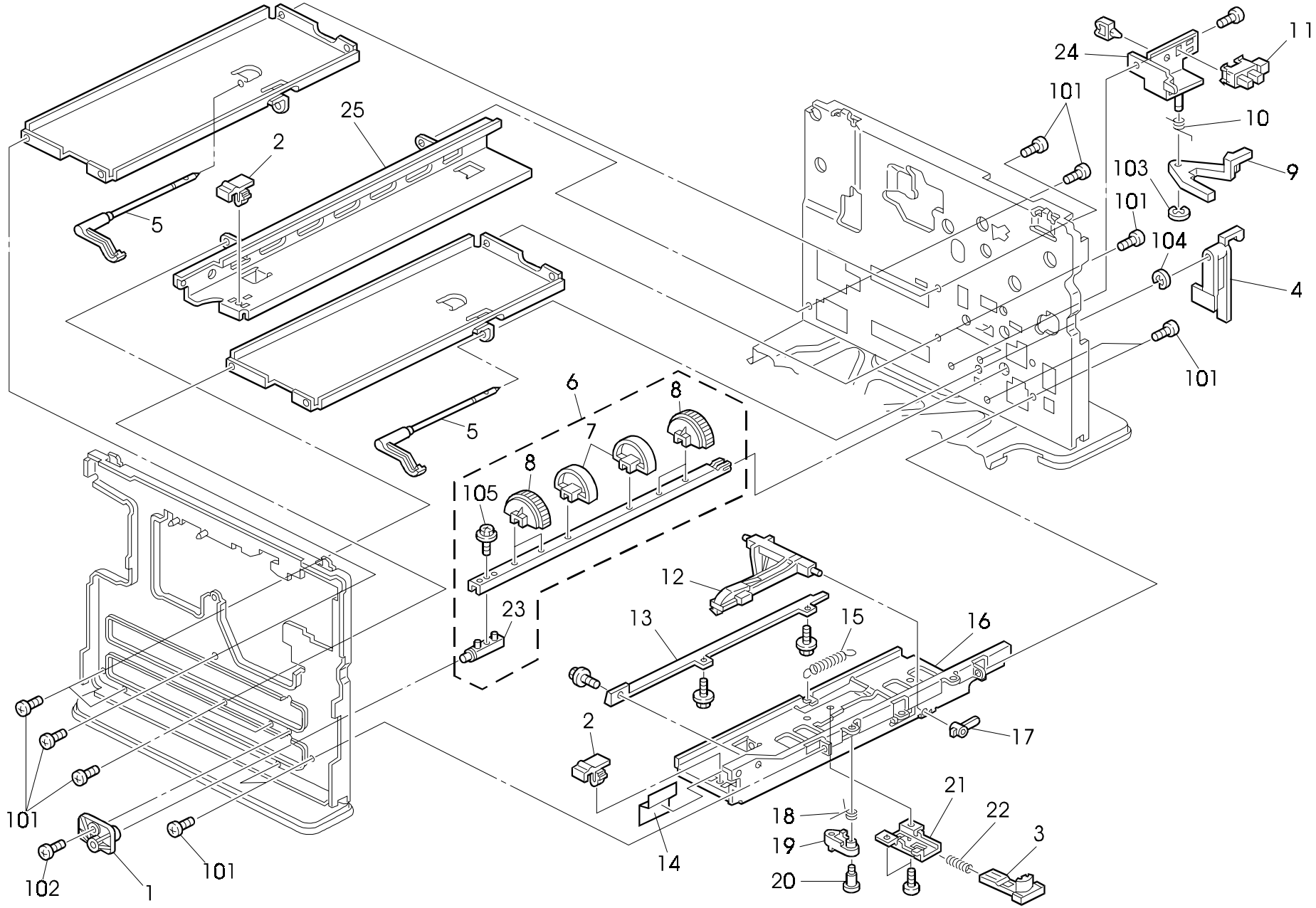

8. PAPER FEED SECTION 2 (A160/A157)

Index No.	Part No.	Description	Q'ty Per Assembly
1	AA08 0189	Feed Roller Bushing - Front	1
2	A157 2782	Paper Tray Holder	2
3	A157 2794	Lock Arm Stopper	1
4	A157 2804	Shield Plate - Paper End Sensor	1
5	A157 2802	Paper End Sensor F	1
6	A157 2775	Feed Roller Shaft	1
7	A157 2774	Feed Roller	2
8	AF03 1027	Paper Feed Roller	4
9	A048 2863	Release Arm - Paper End	1
10	AA06 6104	Spring	1
11	AW02 0075	Photointerrupter	15
12	A157 2788	Lift Arm	1
13	A157 2781	Tray Positioning Rail	1
14	AA15 0383	Right Rail Sheet	1
15	AA06 0640	Spring	1
16	A157 2785	Right Rail	1
17	AA08 0190	Lift Arm Bushing	1
18	AA06 6249	Spring	1
19	A157 2786	Lift Arm Stopper	1
20	AA14 3445	Stud - M4	1
21	A157 2795	Stopper Bracket	1
22	AA06 3205	Spring	1
23	A157 2773	Feed Roller Holder	1
24	A157 2800	Paper End Sensor Bracket	1
25	A157 2783	Left Rail	1

Index No.	Part No.	Description	Q'ty Per Assembly
101	0434 0060B	Philips Tapping Screw - M4x6	
102	0414 0080B	Tapping Screw - M4x8	
103	0720 0020E	Retaining Ring - M2	
104	0720 0030E	Retaining Ring - M3	
105	0413 0082B	Tapping Screw - M3X8	

9. PAPER REGISTRATION (A160/A157)

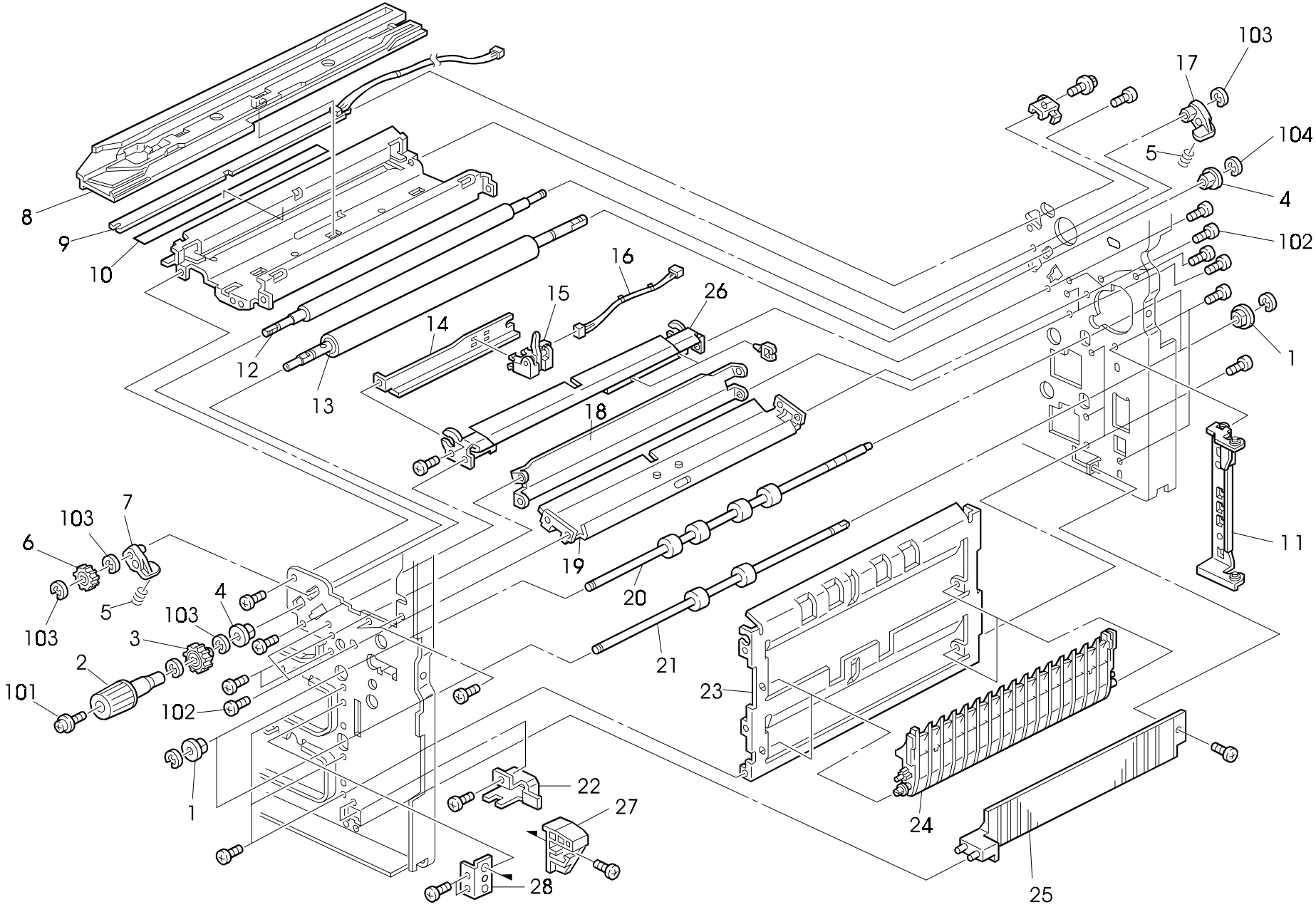

9. PAPER REGISTRATION (A160/A157)

Index No.	Part No.	Description	Q'ty Per Assembly
1	AA08 2047	Bushing - 8x16x7	9
2	AG05 0078	Registration Knob	1
3	AB01 3485	Gear - 20Z	1
4	5474 2152	Bushing - 8x12x12mm	2
5	AA06 3539	Spring - Registration Roller	2
6	AB01 3486	Gear - 14Z	1
7	AA08 0171	Bushing	1
8	A153 3095	Development Rail	1
9	A153 2101	Ptl Lamp	1
10	A153 3114	Transfer Entrance Guide	1
11	A134 2580	Vertical Transfer Hinge	1
12	AF02 1052	Upper Registration Roller	1
13	AF02 0316	Lower Registration Roller	1
14	A134 2557	Regist Sensor Bracket	1
15	AW02 0068	Photointerruptor	1
16	A153 5333	Ct Harness	1
17	AA08 0172	Bushing	1
18	A153 2563	Middle Guide Plate	1
19	A153 2558	Upper Registration Guide	1
20	AF02 0337	Upper Relay Roller	1
21	AF02 0338	Lower Relay Roller	1
22	A157 2553	Switch Actuator	1
23	A157 2550	Vertical Guide Plate	1
24	A157 2551	Lower Guide Plate	2
25	A157 2552	Vertical Relay Guide Plate	1
26	A134 2554	Lower Registration Guide	1
27	A159 6183	Positioning Guide	1
28	A159 6184	Guide Plate Bracket	1

Index No.	Part No.	Description	Q'ty Per Assembly
101	0951 3006B	Philips Screw With Flat Washer - M3x6	
102	0434 0060B	Philips Tapping Screw - M4x6	
103	0720 0040E	Retaining Ring - M4	
104	0720 0060E	Retaining Ring - M6	

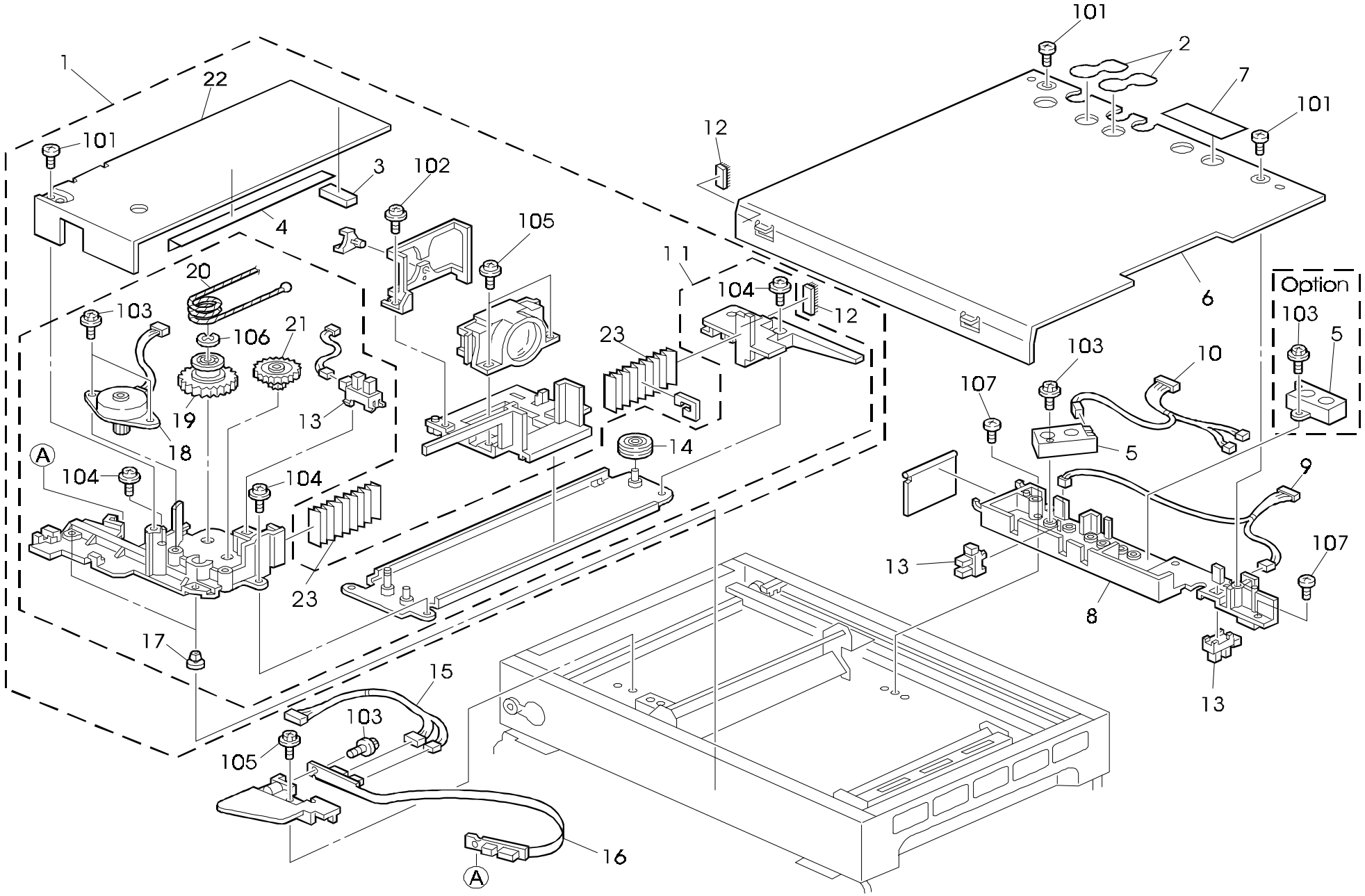
1
22
101
3
102
4
105
20
103
106
21
19
18
13
11
104
12
23
14
A
104
104
23
17
15
103
105
16
A
101
2
7
101
12
6
Option
103
5
103
10
107
5
9
13
107
8
13

10. OPTICAL SECTION 1 (A160/A157)

Rev. 7/25/97

Index No.	Part No.	Description	Q'ty Per Assembly
1	A153 1840	Lens Magnification Unit	1
2	AA15 0369	Original Sensor Seal	1
3	AA15 1941	Shield - Case - Development - Right	3
4	AA15 0368	Shielding Plate - Cover - Lens	1
5	AW01 0042	Original Length Sensor	2
6	A153 1961	Lens Cover	1
7	A111 1753	Seal - 0.1x18x49	1
8	A153 1971	Original Sensor Bracket	1
9	A153 5391	Optical Harness - 1	1
10	A153 5392	Optical Harness - 2	1
11	A153 1841	Lens Drive Unit	1
12	AA15 2330	Magnification Seal	2
13	AW02 0075	Photointerrupter	15
14	AB03 2059	Driven Pulley	2
15	A153 5395	Optical Harness - 5	1
16	A153 5141	Lens Drive Harness	1
17	A069 1883	Shoe - Scanner	10
18	A153 5212	Lens Drive Motor - Horizontal	1
19	AB01 7360	Gear Pulley	2
20	AA05 0086	Lens Drive Wire - Horizontal	1
21	AB01 7361	Gear - 24Z/56Z	2
22	A153 1850	Lens Cover	1
23	AA150367	Shielding Mylar	2

Index No.	Part No.	Description	Q'ty Per Assembly
101	0802 5237	Tapping Screw - M4x10	
102	0413 0062B	Tapping Screw - M3x6	
103	0802 5232	Tapping Screw - M3x8	
104	0951 4006B	Philips Screw With Washer - M4x6	
105	0965 3008W	Tapping Screw With Flat Washer - M3x8	
106	0720 0040E	Retaining Ring - M4	
107	0414 0080B	Tapping Screw - M4x8	

11. OPTICAL SECTION 2 (A160/A157)

Rev. 12/97

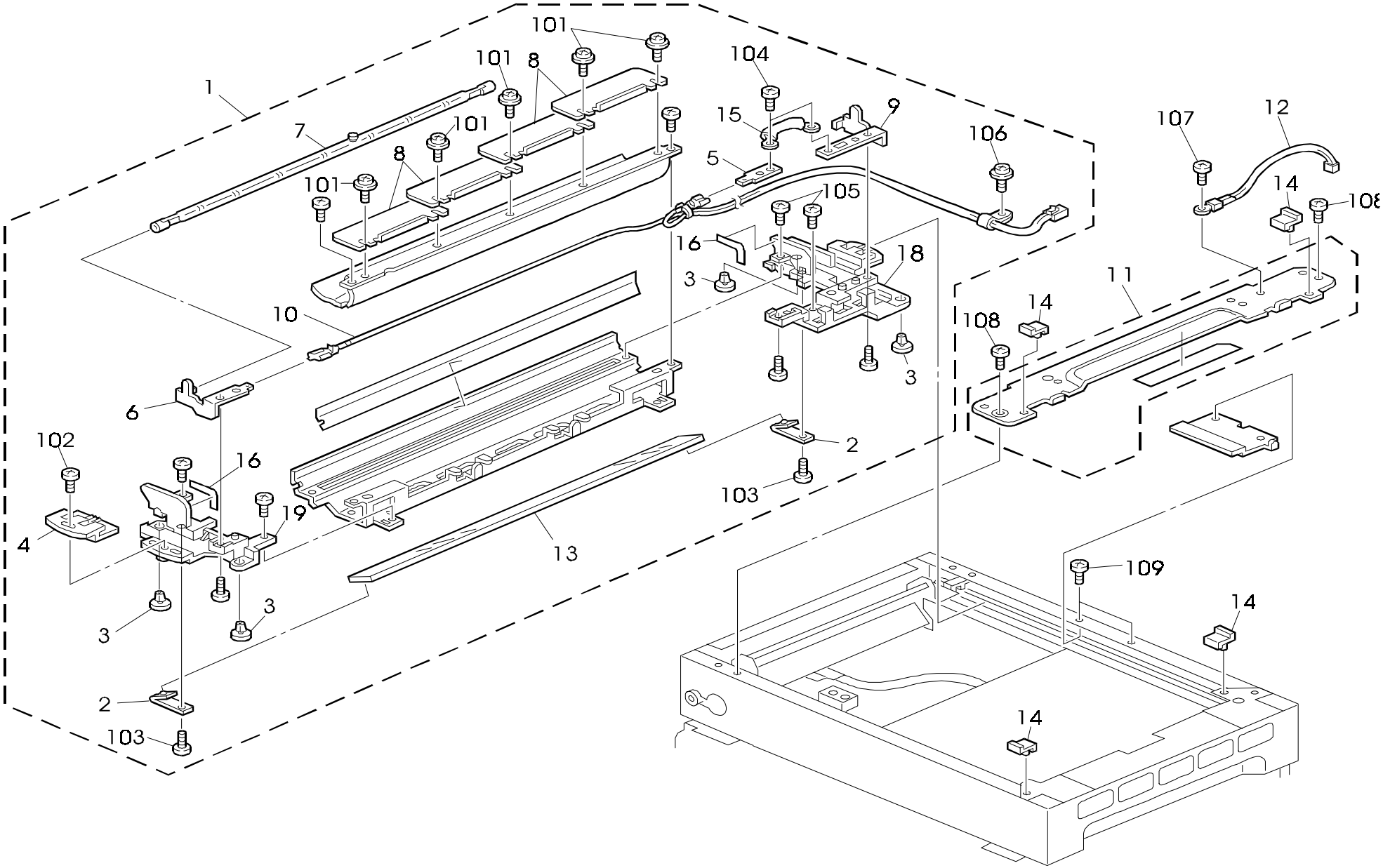

11. OPTICAL SECTION 2 (A160/A157)

Rev. 12/02/97

Index No.	Part No.	Description	Q'ty Per Assembly
1	A157 1790	1st Scanner Ass'y (120V)	1
1	A1571770	1st Scanner Ass'y (220V)	1
2	AC03 5022	Rear Mirror Clamp - 1st Mirror	2
3	A069 1883	Shoe - Scanner	10
4	A153 1776	Front Mirror Clamp - 1st Mirror	1
5	A077 1673	Thermofuse Terminal	1
6	A153 1777	Front Terminal	1
7	AX52 0026	Exposure Lamp - 85V 200W (230V)	1
7	AX52 0028	Exposure Lamp - 97V 200W (115V)	1
8	A085 1670	Exposure Adjusting Plate	4
9	A153 1778	Rear Terminal	1
10	A153 1780	Exposure Lamp Harness	1
11	A153 1750	Scale Bracket	1
12	AW10 0027	Thermister	1
13	AC03 0103	1st Mirror	1
14	A153 1754	Exposure Stay	4
15	A153 1779	Thermostat - 121°C 250V 10A	1
16	A153 1781	Reflector	2
17	A096 1873	Scanner Shoe Pin	4
18	A153 1773	Rear Scanner Stay	1
19	A153 1772	Front Scanner Stay	1

Index No.	Part No.	Description	Q'ty Per Assembly
101	0951 3006B	Philips Screw With Flat Washer - M3x6	
102	0414 0082W	Tapping Screw With Flat Washer - M4x8	
103	0413 0062W	Tapping Screw - M3x6	
104	0413 0050Z	Tapping Screw M3x5	
105	0413 0060W	Tapping Screw - M3x6	
106	0964 4008B	Tapping Screw With Flat Washer - M4x8	
107	0313 0040B	Philips Pan Head Screw - M3x4	
108	0313 0060B	Philips Pan Head Screw - M3x6	
109	0314 0060B	Philips Pan Head Screw - M4x6	
110	0703 0030M	Spring Washer	

12. OPTICAL SECTION 3 (A160/A157)

Rev. 3/29/96

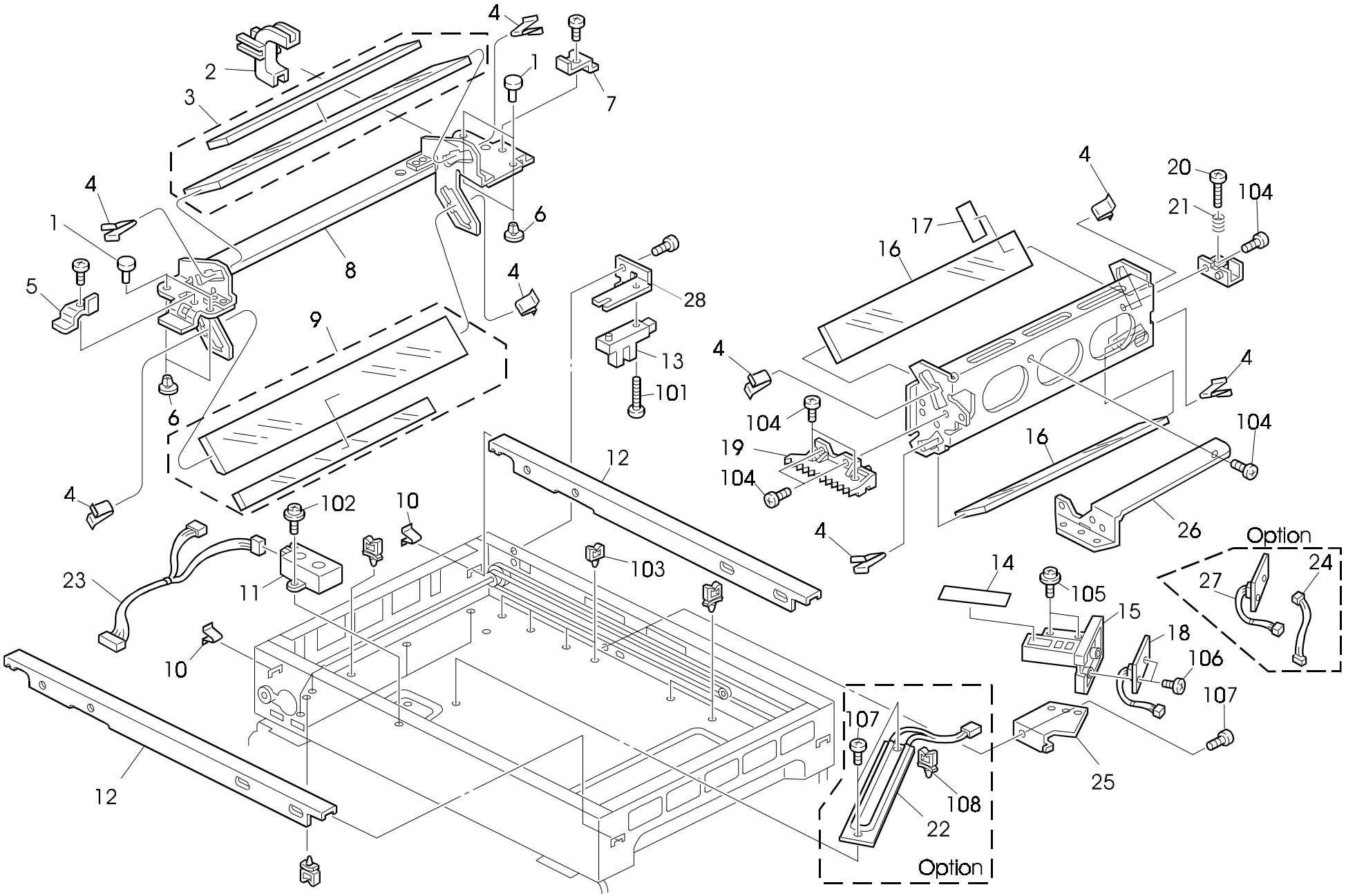

12. OPTICAL SECTION 3 (A160/A157)

Rev. 3/29/96

Index No.	Part No.	Description	Q'ty Per Assembly
1	A096 1873	Scanner Shoe Pin	8
2	A153 1807	Harness Guide	1
3	A153 1808	2nd Mirror	1
4	A077 1690	Spring Plate - Mirror	10
5	A153 1805	Front Mirror Holder	1
6	A069 1883	Shoe - Scanner	10
7	A153 1806	Rear Mirror Holder	1
8	A153 1801	2nd Scanner Ass'y	1
9	A153 1809	3rd Mirror	1
10	A153 1721	Spring Plate	2
11	AW01 0040	Original Sensor	1
12	A153 1720	Scanner Rail	2
13	AW02 0022	Photointerruptor	2
14	A096 1693	ADS Cover	1
15	A096 1692	ADS Case	1
16	AC03 0106	4/5 Mirror	2
17	A153 1908	Shielding Plate	1
18	A157 5160	ADS Sensor Board	1
19	A153 1914	3rd Scanner Rack	1
20	A153 1906	Adjust Shoe	1
21	AA06 3523	Adjust Spring	1
22	AX40 0047	Anticondensation Heater - 115V 15W	1
22	AX40 0048	Anticondensation Heater - 240V 15W	1
23	A153 5393	Optical Harness - 3	1
24	A153 9513	Harness - ADS	1
25	A153 1976	ADS Sensor Bracket	1
26	A153 1912	3rd Scanner Stay	1
27	A096 5230	ADS Board	1
28	A153 1981	Scanner Home Sensor Bracket	1

Index No.	Part No.	Description	Q'ty Per Assembly
101	0314 0100B	Philips Pan Head Screw - M4x10	
102	0443 0080W	Hexagon Head Tapping Screw - M3x8	
103	1105 0230	Clamp	
104	0414 0080B	Tapping Screw - M4x8	
105	0951 3005B	Philips Screw With Flat Washer M3x5	
106	0802 5231	Tapping Screw - M3x6	
107	0434 0060B	Philips Tapping Screw - M4x6	
108	1105 0231	Clamp	

13. OPTICAL SECTION 4 (A160/A157)

Rev. 2/21/96

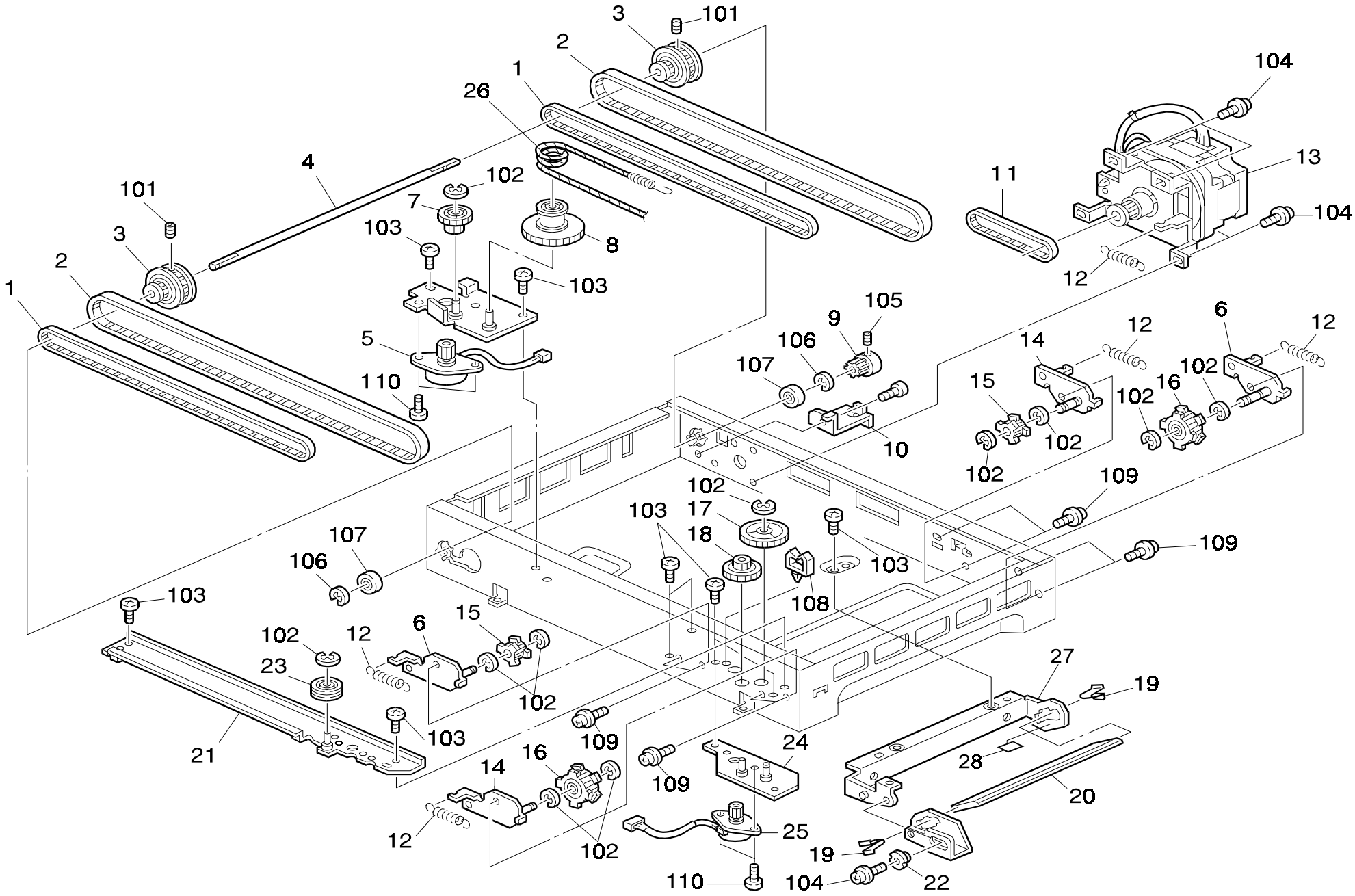

13. OPTICAL SECTION 4 (A160/A157)

Index No.	Part No.	Description	Q'ty Per Assembly
1	AA04 3387	Timing Belt - 40S2M984	2
2	AA04 3386	Timing Belt - 40S2M1224	2
3	AB03 3069	Timing Pulley - 22Z/24Z	2
4	AA14 0599	Scanner Drive Shaft	1
5	A153 5213	Lens Drive Motor - DC24V 8.6W	1
6	A153 1708	Tension Bracket - Short	2
7	AB01 7362	Gear - 25Z/32Z	1
8	AB01 7360	Gear Pulley	2
9	AB03 0486	Timing Pulley - 24Z	1
10	A153 5803	Upper Bracket - DC Drive Board	1
11	AA04 3388	Timing Belt - 60S2M180	1
12	AA06 0595	Tension Spring	5
13	A153 1700	Scanner Drive Motor - DC2.3V 13.5W	1
14	A153 1707	Tension Bracket - Long	2
15	AB03 0489	Timing Pulley - 22Z	2
16	AB03 0487	Timing Pulley - 44Z	2
17	AB01 7129	Gear - 20Z And 72Z	1
18	AB01 7361	Gear - 24Z/56Z	2
19	A077 1690	Spring Plate - Mirror	10
20	AC03 0107	6th Mirror	1
21	A153 1952	Magnification Rail	1
22	A075 1766	Adjusting Cam	1
23	AB03 2059	Driven Pulley	2
24	A153 1947	Magnification Drive Unit Bracket	1
25	A153 5211	Mirror Drive Motor - DC24V 8.6V	1
26	AA05 0087	Lens Drive Wire - Vertical	1
27	A153 1923	6th Mirror Bracket	1
28	A048 1801	Mirror Seal	1

Index No.	Part No.	Description	Q'ty Per Assembly
101	0573 0100E	Hexagon Headless Set Screw - M3x10	
102	0720 0040E	Retaining Ring - M4	
103	0434 0060B	Philips Tapping Screw - M4x6	
104	0951 4008B	Philips Screw With Washer - M4x8	
105	0574 0050E	Hexagon Headless Set Screw - M4x5	
106	0720 0060E	Retaining Ring - M6	
107	0740 3008	Ball Bearing - 8x22x7	
108	1105 0230	Clamp	
109	0951 4006B	Philips Screw With Washer - M4x6	
110	0433 0060W	Tapping Screw - M3x6	

14. TONER SUPPLY UNIT (A160/A157)

Rev. 7/25/97

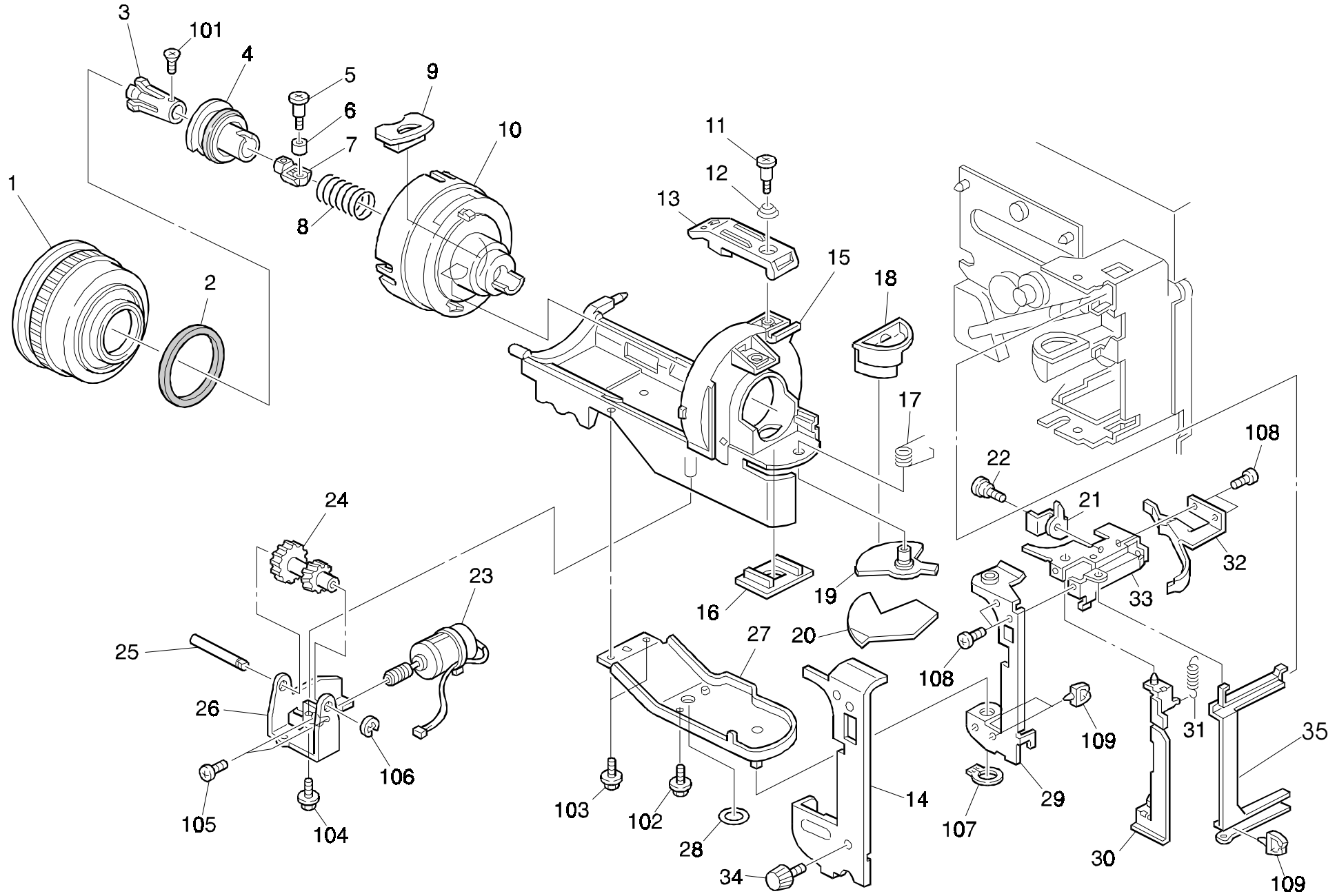

14. TONER SUPPLY UNIT (A160/A157)

Rev. 08/29/97

Index No.	Part No.	Description	Q'ty Per Assembly
1	A153 3185	Toner Supply Gear (230V)	1
1	A153 3187	Toner Supply Gear (115V)	1
1	A153 3189	Toner Supply Gear (ASIA/TIWAN)	1
2	AA15 1894	Seal - 67x53x2	1
3	A134 3180	Bottle Chuck	1
4	A134 3177	Toner Slider	1
5	AA14 3712	Chuck Shaft	1
6	A134 3181	Chuck Roller	1
7	A134 3179	Chuck Shaft	1
8	AA06 3366	Chuck Spring	1
9	A134 3215	Rubber Cap	1
10	A134 3190	Toner Bottle Stopper	1
11	AA14 3410	Stepped Screw - M4	1
12	AA06 3367	Pressure Spring	1
13	A134 3197	Bottle Holder	1
14	A153 3281	Bottle Bracket Cover	1
15	A134 3172	Toner Bottle Holder	1
16	A153 3173	Shutter Guide	1
17	AA06 6260	Shutter Spring	1
18	A153 3174	Shutter Holder	1
19	A153 3172	Shutter	1
20	AA15 0377	Shutter Seal	1
21	A153 3265	Bottle Unit Lock Plate	1
22	AA14 3025	Stepped Screw - M3	1
23	A134 3162	Bottle Drive Motor	1
24	AB01 7347	Idle Gear	1
25	AA14 8413	Idle Gear Shaft	1
26	A134 3161	Bottle Drive Bracket	1
27	A134 3157	Bottle Holder Bracket	1
28	AA15 0234	Mylar Seal - Base	1
29	A153 3262	Bottle Unit Hinge	1
30	A153 3266	Bottle Unit Link Plate	1
31	AA06 0453	Relay Adjusting Spring	2
32	A134 3201	Cam - Toner Bottle	1
33	A153 3264	Bottle Unit Upper Hinge	1
34	AA14 3459	Knob Screw	1
35	A153 3272	Bottle Unit Holder	1
101	0323 0060B	Philips Sunk Screw - M3x6	
102	0433 0050B	Tapping Screw - M3x5	
103	0802 5231	Tapping Screw - M3x6	
104	0802 5233	Tapping Screw - M3x10	
105	0800 0072	Philips Pan Head Screw - M2.6x4	
106	0720 0040E	Retaining Ring - M4	
107	0725 0100E	Retaining Ring C - M10	
108	0434 0060B	Philips Tapping Screw - M4x6	
109	1105 0199	Clamp	

15. DEVELOPMENT UNIT (A160/A157)

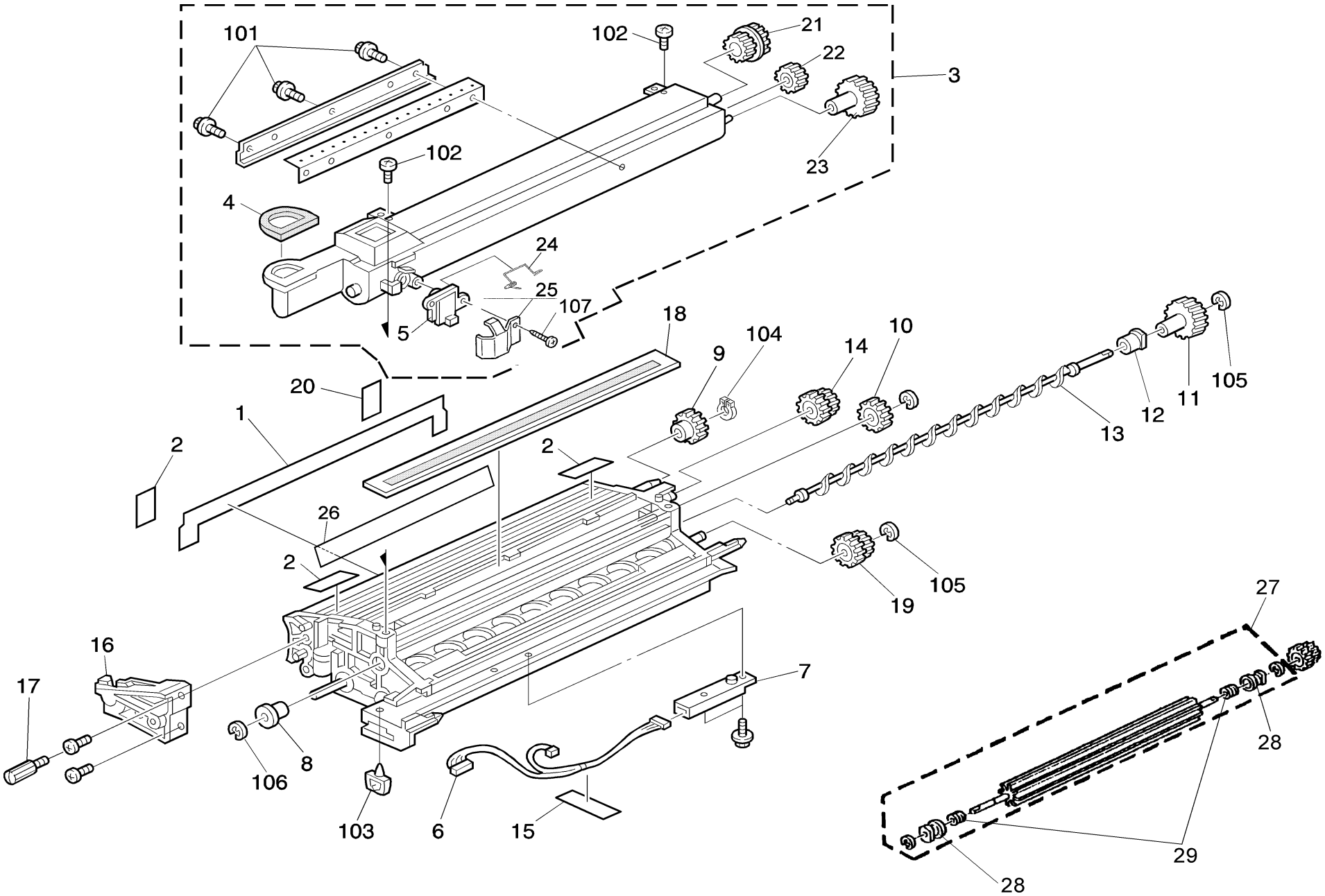

15. DEVELOPMENT UNIT (A160/A157)

Rev. 6/13/97

Index No.	Part No.	Description	Q'ty Per Assembly
*	A153 3051	Development Unit	1
1	AA15 2333	Entrance Seal	1
2	AA15 0382	Entrance Seal	4
3	A153 3200	Toner Hopper Ass'y	1
4	AA15 1935	Seal - 38x32x2.5	1
5	AW23 0009	Toner End Sensor	1
6	A153 5330	Ct Harness - 7p	1
7	AW23 0008	Toner Density Sensor	1
8	AA08 0188	Bushing - 5mm	1
9	AB01 3343	Development Roller	1
10	AB01 3909	Idle Gear	1
11	AB01 3911	Gear	1
12	AA08 0186	Bushing - 6mm	1
13	AD03 7045	Toner Collection Coil	1
14	AB01 7366	Paddle Gear	1
15	G012 3897	Relay Harness - Toner End Sensor	1
16	A153 3090	Development Position Plate	1
17	A153 3149	Knob Screw - M4x12	1
18	A153 3080	Development Filter	1
19	AB01 7367	Right Paddle Roller	1
20	AA15 0231	Seal - 15X30	1
21	AB01 7365	Coupled Gear 15Z/22Z	1
22	AB01 3914	Gear 17Z	1
23	AB01 3915	Gear 26Z	1
24	AA06 6246	Spring	1
25	A153 3227	Toner End Sensor Cover	1
26	AA15 2334	Second Mylar	1
27	A153 3063	Paddle Roller Ass'y	1
28	AA08 0200	Bushing 6x12x11	2
29	AA15 2331	V-Ring	2

Index No.	Part No.	Description	Q'ty Per Assembly
101	0802 5231	Tapping Screw - M3x6	
102	0314 0060B	Philips Pan Head Screw - M4x6	
103	1105 0199	Clamp	
104	0720 0090E	Retaining Ring - M9	
105	0720 0040E	Retaining Ring - M4	
106	0720 0030E	Retaining Ring - M3	
107	0452 3010B	Tapping Bind Screw - M3x10	

16. DRUM UNIT 1 (A160/A157)

Rev. 10/11/95

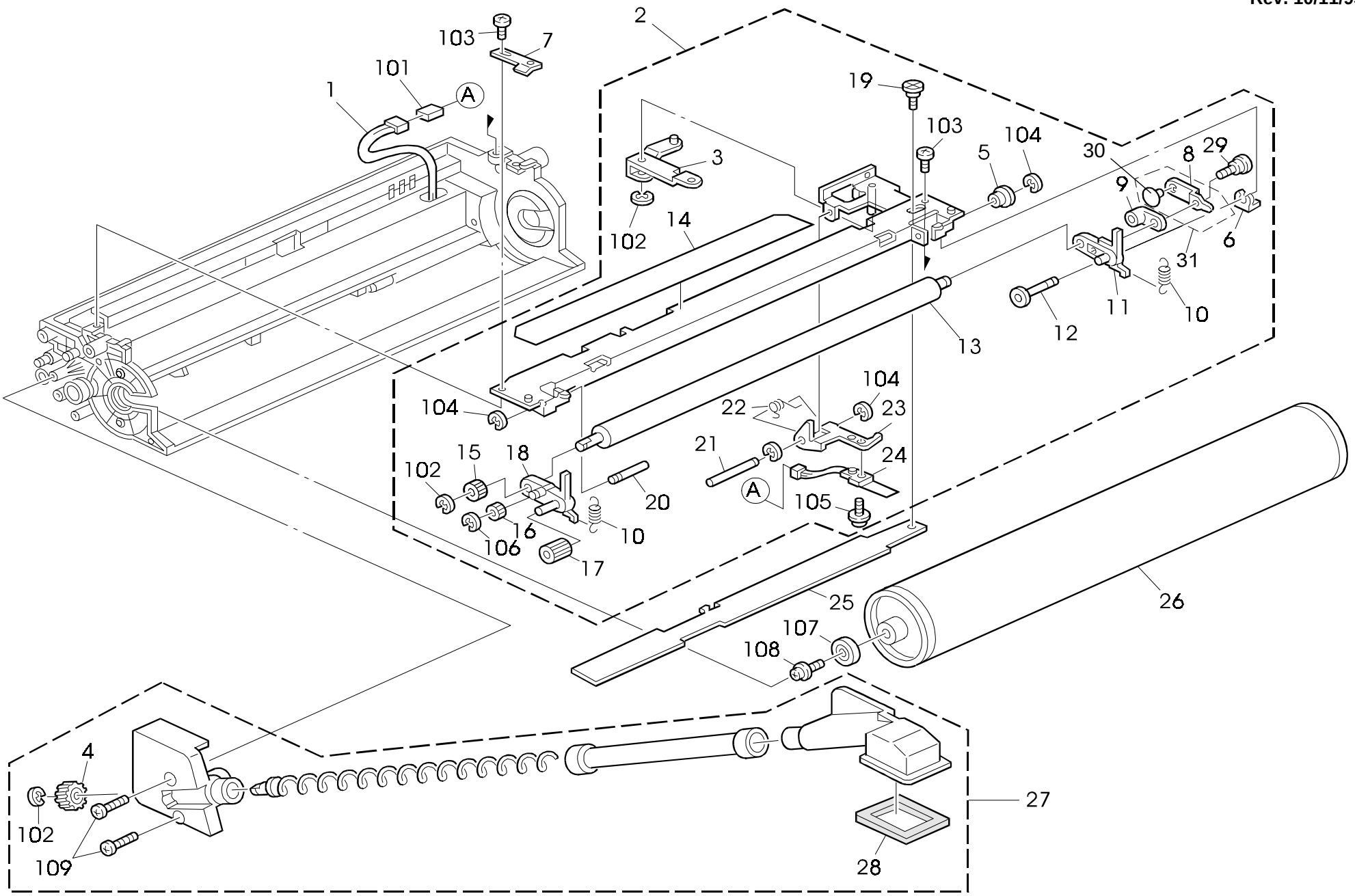

16. DRUM UNIT 1 (A160/A157)

Rev. 5/6/97

Index No.	Part No.	Description	Q'ty Per Assembly
*	A153 2255	Drum Unit	1
1	AZ48 0029	Ct Harness	1
2	A153 2110	Charge Roller Ass'y	1
3	A153 2126	Swing Arm	1
4	AB01 1358	Driven Gear	1
5	AA08 0219	Rear Roller Bushing	1
6	A077 1310	Snap Ring - M2	1
7	A153 2116	Grounding Plate	1
8	A153 2118	Charge Roller Terminal	1
9	AA08 0197	Rear Roller Bushing	1
10	AA06 2286	Pressure Spring	2
11	AA08 0209	Rear Roller Housing	1
12	AA14 5808	Rear Support Shaft	1
13	AD02 7001	Drum Charge Roller	1
14	A153 2143	Shielding Plate	1
15	AB01 0344	Roller Gear - 20Z	1
16	AB01 0343	Idle Gear - 14Z	1
17	AB01 0342	Idle Gear - 20Z	1
18	AA08 0191	Front Roller Bushing	1
19	AA14 3716	Stepped Screw	1
20	AA14 5794	Front Support Shaft	1
21	AA14 8439	Thermistor Shaft	1
22	AA06 6253	Pressure Spring	1
23	A153 2133	Thermistor Bracket	1
24	AW10 0032	Thermistor - 25°C 10k Ω	1
25	A153 2120	Drum Charge Roller Cleaner	1
26	A153 9510	Opc Drum	1
27	A153 3580	Toner Collection Unit	1
28	AA15 1945	Joint Seal	1
29	AA14 3730	Stepped Screw	1
30	A153 2117	Roller Terminal	1
31	A153 2119	Charge Roller Terminal Assembly	1

Index No.	Part No.	Description	Q'ty Per Assembly
101	1102 6613	Relay Terminal - 2P	
102	0720 0040E	Retaining Ring - M4	
103	0313 0060B	Philips Pan Head Screw - M3x6	
104	0720 0015E	Retaining Ring - 1.5	
105	0951 3008B	Philips Screw With Flat Washer - M3x8	
106	0720 0020E	Retaining Ring - M2	
107	0805 3471	Bushing - M8x22x7	
108	0951 5010B	Philips Screw With Washer - M5x10	
109	0802 5233	Tapping Screw - M3x10	

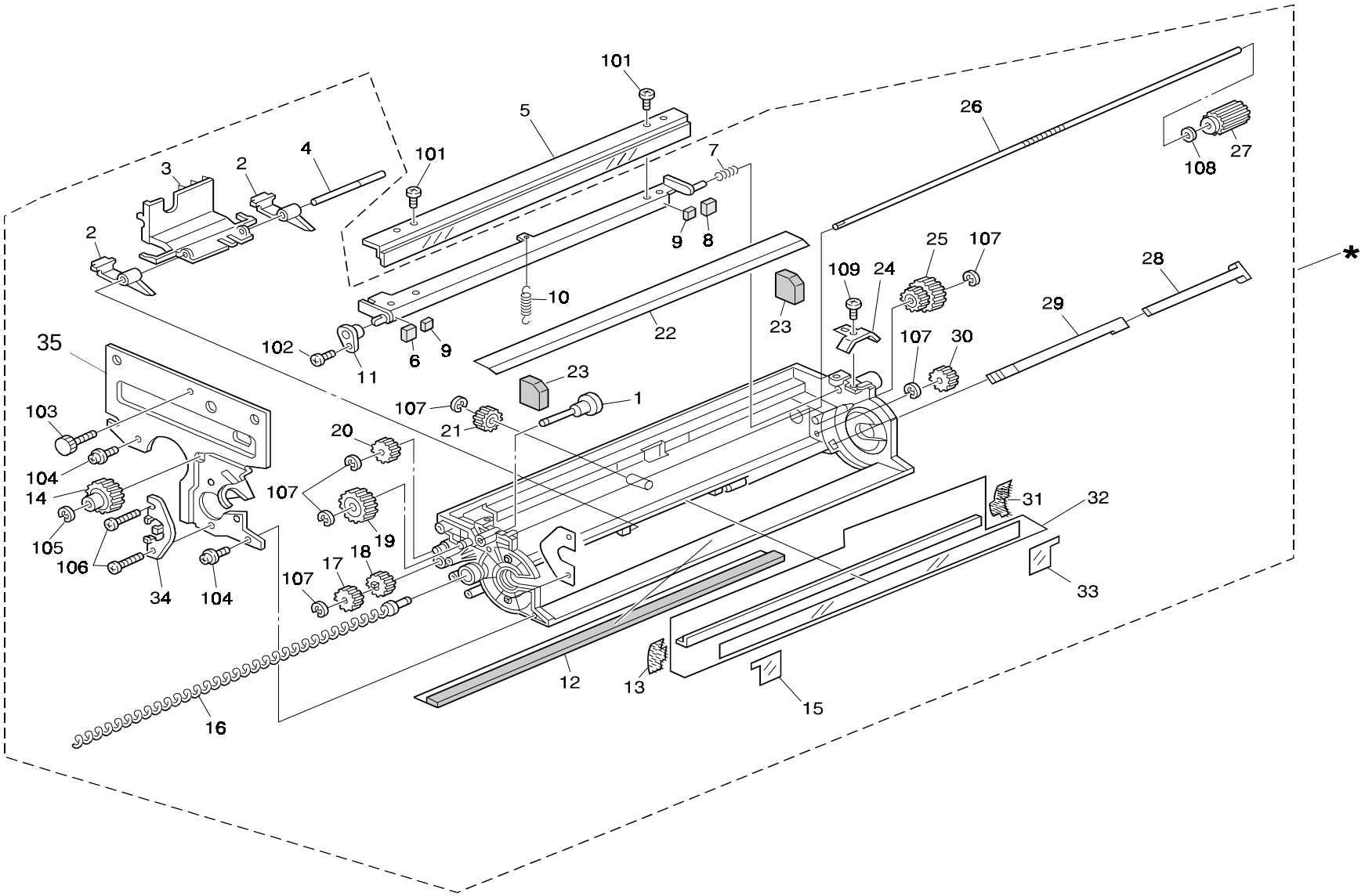
101
5
26
27
108
3
2
4
101
7
2
9
8
25
107
109
24
28
*
10
22
23
29
102
11
6
9
107
30
35
23
1
103
107
21
20
104
14
107
19
31
32
105
106
34
104
17
18
107
33
12
13
15
16

17. DRUM UNIT 2 (A160/A157)

Rev. 12/02/97

Index No.	Part No.	Description	Q'ty Per Assembly
*	A153 2255	Drum Unit	1
1	AB01 0341	Gear - 18Z	1
2	AD02 5019	Drum Pick-off Pawl	2
3	A153 3595	Pick-off Pawl Retainer	1
4	AA14 0321	Pick-off Pawl Shaft	1
5	A153 2275	Cleaning Blade	1
6	AA15 1943	Front Seal	1
7	G006 4317	Pressure Spring	1
8	AA15 1944	Rear Seal	1
9	AA15 1809	Rear Seal	2
10	AA06 0598	Pressure Spring	1
11	AA08 0154	Rear Bushing	1
12	AA15 0389	Drum Guide Seal	1
13	AA15 2245	Front Drum Seal	1
14	AB01 1361	Drive Gear	1
15	AA15 0380	Seal Front Holder	1
16	AD04 3035	Toner Collection Coil	1
17	AB01 7375	Drive Gear	1
18	AB01 7374	Drive Gear	1
19	AB01 7388	Blade Cam	1
20	AB01 1360	Idle Gear	1
21	AB01 7376	Separation Pawl Cam	1
22	A153 3558	Blade Seal	1
23	AA15 1942	Side Seal	2
24	A153 3570	Spring Plate	1
25	AB01 7373	Idle Cam	1
26	AA14 0560	Joint Shaft	1
27	AB01 1359	Joint Drive Gear	1
28	A153 3590	Density Sensor Bracket	1
29	A153 5132	ID Sensor	1
30	AB01 1357	Collection Coil Gear	1
31	AA15 2246	Rear Drum Seal	1
32	A153 3555	Cleaning Entrance Seal	1
33	AA15 0381	Seal Rear Holder	1
34	A153 2302	Drum Bearing Holder	1

Index No.	Part No.	Description	Q'ty Per Assembly
35	A1532301	Front Stay	1
101	0314 0060B	Philips Pan Head Screw - M4x6	
102	0802 5233	Tapping Screw - M3x10	
103	0803 0017	Knob Screw - M4x6.5	
104	0965 3010B	Tapping Screw With Flat Washer - M3x6	
105	0720 0030E	Retaining Ring - M3	
106	0313 0080B	Philips Pan Head Screw - M3x8	
107	0720 0040E	Retaining Ring - M4	
108	0805 3384	Bushing - 5mm	
109	0971 3006A	Philips Polycarbonate Screw - M3x6	

18. TRANSFER UNIT (A160/A157)

Rev. 11/18/96

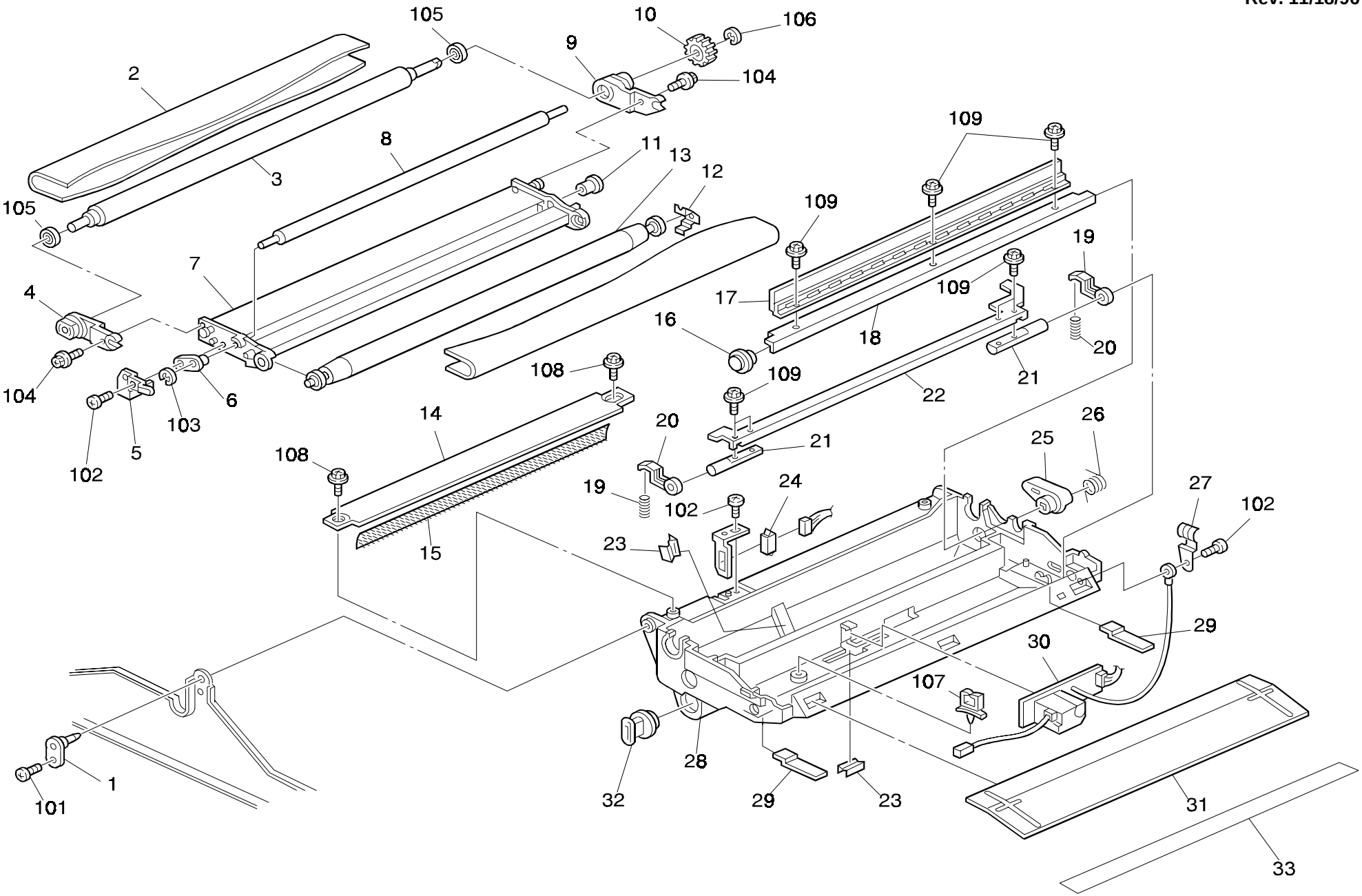

18. TRANSFER UNIT (A160/A157)

Rev. 11/18/96

Index No.	Part No.	Description	Q'ty Per Assembly
1	A157 3900	Support Plate	1
2	A157 3861	Transfer Belt	1
3	A153 3866	Belt Drive Roller	1
4	A157 3875	Front Side Plate	1
5	A153 3873	Bias Roller Terminal	1
6	AA08 2061	Bias Roller Bushing - Front	1
7	A157 3862	Transfer Belt Frame	1
8	A153 3870	Transfer Bias Roller	1
9	A157 3876	Rear Side Plate	1
10	AB01 3916	Belt Drive Gear - 25Z	1
11	AA08 0195	Bias Roller Bushing - Rear	1
12	A153 3874	Earth Terminal	1
13	A153 3865	Belt Driven Roller	1
14	A153 3884	Belt Guide Plate	1
15	AA15 2332	Casing	1
16	A153 3894	Bushing	1
17	A153 3892	Belt Cleaning Blade	1
18	A153 3893	Belt Cleaning Stay	1
19	A153 3886	Belt Pressure Lever	2
20	A077 3918	Spring - T/S Unit	2
21	AA14 5537	Belt Release Shaft	2
22	A153 3887	Belt Release Stay	1
23	A153 3897	Harness Clamp	2
24	A157 3889	Connector Bracket	1
25	A153 3895	Front Bushing	1
26	AA06 6247	Torsion Spring	1
27	A153 3888	Earth Plate	1
28	A157 3882	Transfer Belt Casing	1
29	A153 3877	Spring Plate	2
30	AZ30 0041	Power Pack - Transfer Unit	1
31	A153 3901	Entrance Guide Plate	1
32	A157 3883	Toner Collection Cap	1
33	A153 3591	Mylar - 17x335	1

Index No.	Part No.	Description	Q'ty Per Assembly
101	0434 0060B	Philips Tapping Screw - M4x6	
102	0802 5232	Tapping Screw - M3x8	
103	0720 0030E	Retaining Ring - M3	
104	0443 0080B	Tapping Screw - M3x8	
105	0805 3485	Bushing - 8x12x3.5mm	
106	0720 0060E	Retaining Ring - M6	
107	1105 0196	Harness Clamp	
108	0965 3008B	Tapping Screw With Washer - M3x8	
109	0443 0060B	Hexagon Tapping Screw - M3x6	

19. FUSING UNIT 1 (A160/A157)

Rev. 9/27/96

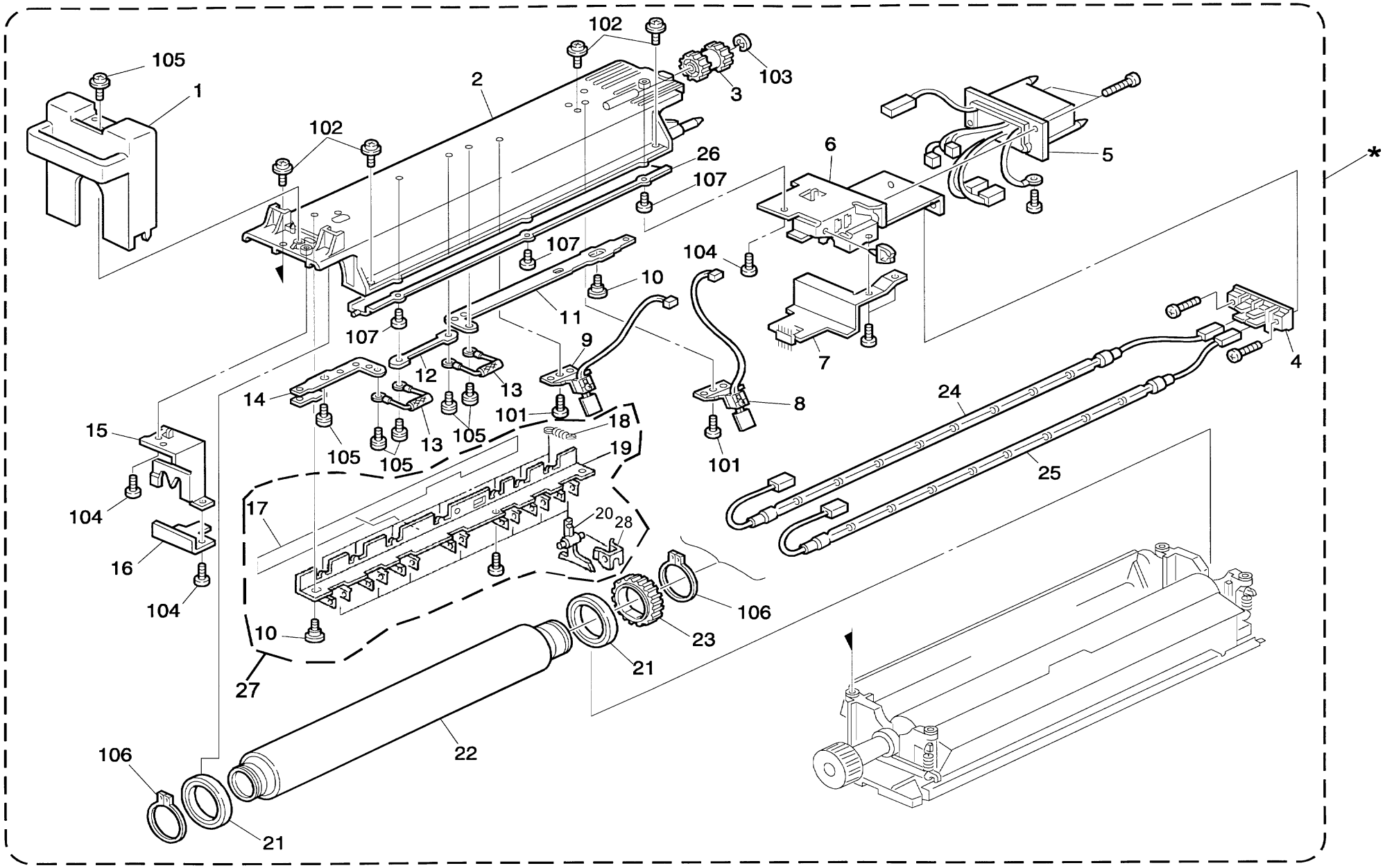

19. FUSING UNIT 1 (A160/A157)

Rev. 02/16/2001

Index No.	Part No.	Description	Q'ty Per Assembly
*	A157 4011	Fusing Unit - 115V	1
*	A157 4012	Fusing Unit - 230V	1
1	A134 4130	Fusing Front Cover	1
2	A208 4053	Fusing Upper Stay	1
3	AB01 3883	Idle Gear - 25Z	1
4	A204 4074	Terminal Connector - 2p	1
5	A153 5300	Fusing Unit Connector (115V)	1
5	A153 5665	Fusing Unit Connector (230V)	1
6	A208 4084	Fusing Connector Bracket	1
7	A208 4102	Rear Lamp Terminal Holder	1
8	A153 4089	Thermistor - 2	1
9	A153 4088	Thermistor	1
10	AA14 3715	Stepped Screw - M5	2
11	A134 4061	Rear Terminal Plate	1
12	A153 4062	Electrode Plate - Middle	1
13	A204 4160	Thermofuse - 172°C	1
14	A153 4063	Front Terminal Plate	1
15	A153 4075	Front Holder	1
16	A153 4102	Front Lamp Terminal Holder	1
17	A134 4115	Fusing Seal	1
18	AA06 0103	Solenoid Spring	5
19	A153 4112	Stripper Bracket	1
20	AE04 4019	Hot Roller Stripper	5
21	AE03 0023	Bearing - 30x42x7mm	2
22	AE01 1024	Hot Roller	1
23	AB01 3882	Gear - 40Z	1
24	AX43 0023	Fusing Lamp - 120V 350W	1
24	AX43 0025	Fusing Lamp - 230V 350W 320mm	1
25	AX43 0022	Fusing Lamp - 120V 550W	1
25	AX43 0024	Fusing Lamp - 230V 550W 210mm	1
26	A153 4055	Upper Fusing Guide	1
27	A153 9016	Stripper Bracket Ass'y	1
28	A153 4114	Retaining Clip	8

Index No.	Part No.	Description	Q'ty Per Assembly
101	0954 3010B	Philips Screw - M3x10	
102	0954 4012B	Double Sems Screw - M4 X 12	
103	0720 0060E	Retaining Ring - M6	
104	0314 0060B	Philips Pan Head Screw - M4x6	
105	0950 4006M	Philips Screw With Flat Washer - M4x6	
106	0725 0300E	Retaining Ring C - M30	
107	0313 0050B	Philips Pan Head Screw - M3X5	

20. FUSING UNIT 2 (A160/A157)

Rev. 3/20/96

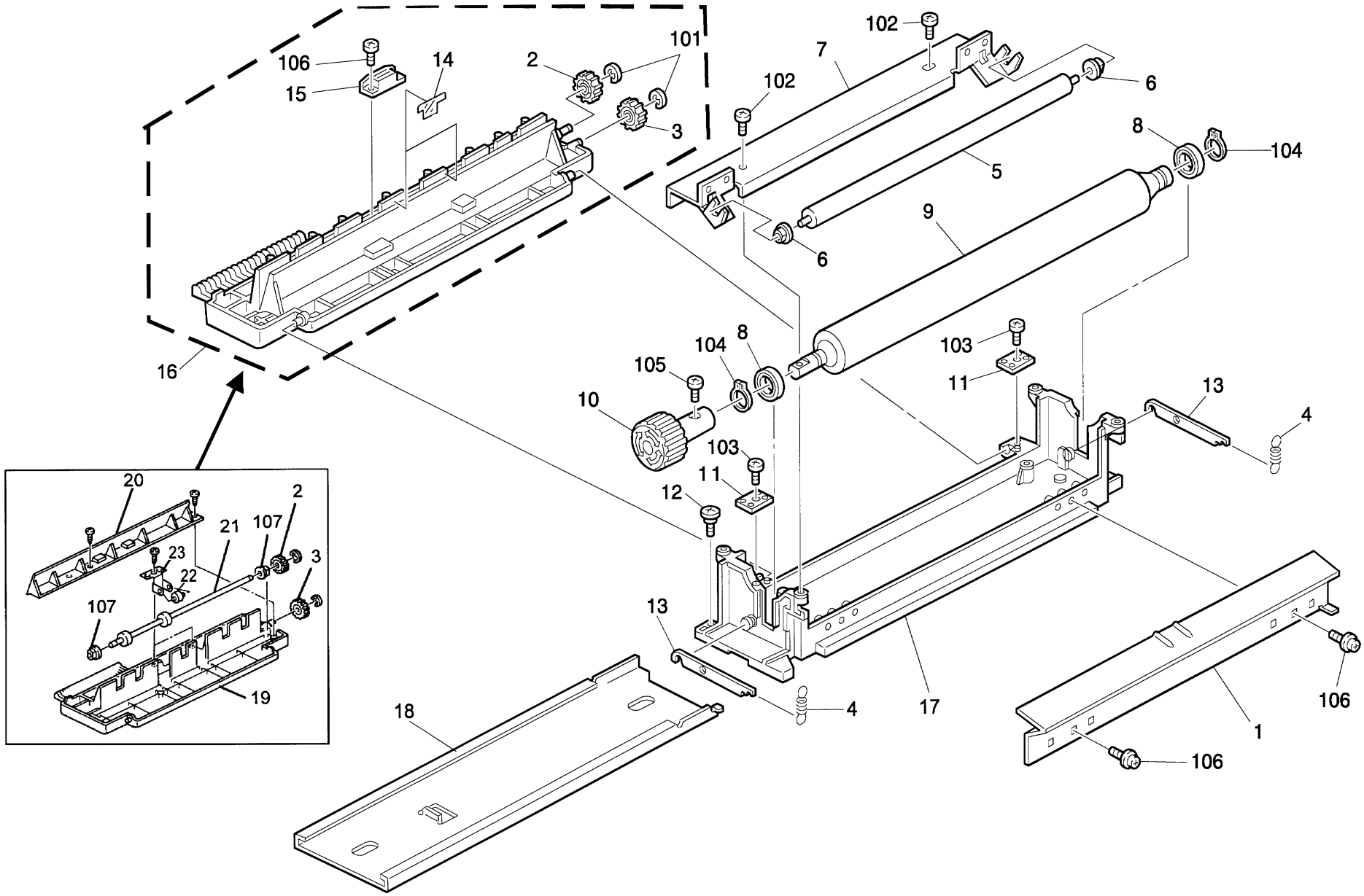

20. FUSING UNIT 2 (A160/A157)

Rev. 6/13/97

Index No.	Part No.	Description	Q'ty Per Assembly
1	A153 4197	Lower Fusing Guide	1
2	AB01 3885	Idle Gear - 20Z	1
3	AB01 3884	Exit Gear - 17Z	1
4	AA06 0659	Spring	2
5	AE04 2030	Cleaning Rooler	1
6	AE03 1028	Bushing - 8x10x5	2
7	A153 4205	Cleaning Roller Bracket	1
8	AE03 0022	Bearing - 12x24x64m	2
9	AE02 0050	Pressure Roller	1
10	AG05 0076	Fusing Knob	1
11	A134 4301	Exit Guide Hinge	2
12	A077 4162	Shoulder Screw - M3	1
13	A134 4161	Pressure Lever	2
14	A134 4254	Fusing Exit Guide - Rear	1
14	A134 4255	Fusing Exit Guide - Front	1
15	AG07 0009	Magnetic Catch	1
16	A134 4006	Fusing Exit Unit	1
17	A134 4151	Fusing Frame	1
18	A134 4153	Slide Rail - Fusing	1
19	A153 4250	Fusing Exit Frame	1
20	A134 4280	Fusing Exit Guide - Lower	1
21	AF02 0326	Exit Roller Assembly	1
22	AF04 0548	Exit Drive Roller	2
23	A134 4272	Roller Holder	2

Index No.	Part No.	Description	Q'ty Per Assembly
101	0720 0040E	Retaining Ring - M4	
102	0414 0122B	Philips Tapping Screw - M4x12	
103	0434 0082B	Tapping Screw - M4x8	
104	0725 0120E	Retaining Ring C - M12	
105	0950 4008B	Philips Screw With Spring Washer - M4x8	
106	0802 5237	Tapping Screw - M4X10	
107	0805 3480	Bushing - 6mm	

21. DUPLEX TRAY 1 (A160)

Rev. 01/23/98

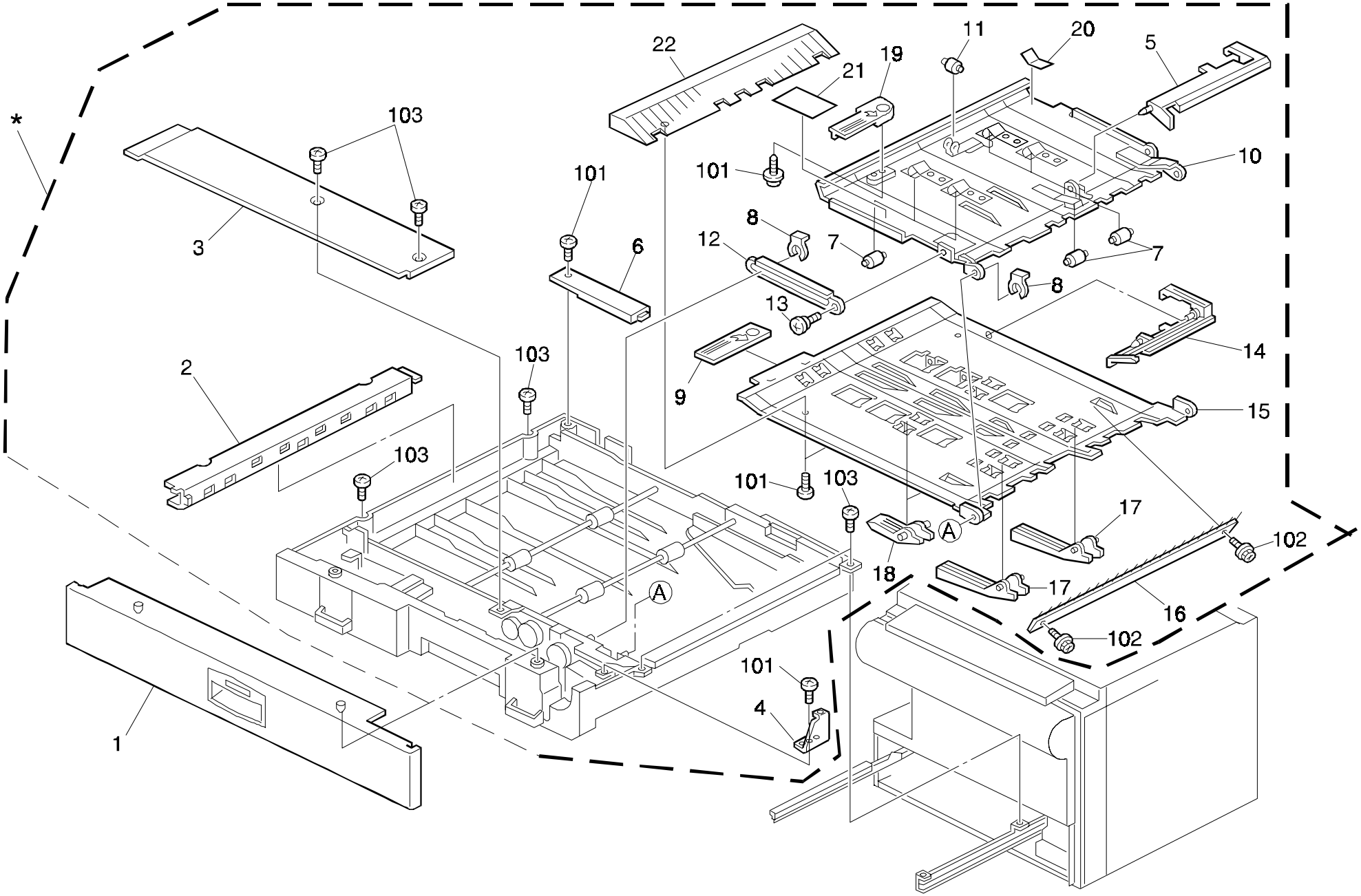

21. DUPLEX TRAY 1 (A160)

Rev. 05/30/2000

Index No.	Part No.	Description	Q'ty Per Assembly
*	A211 4620	Duplex Tray Ass'y	1
1	A134 2956	Paper Feed Front Cover	2
2	A134 4720	End Fence Upper Cover	1
3	A134 4701	Front Upper Cover	1
4	A134 4712	Right Cover Bracket	1
5	AE04 2030	Inverter Feeler	1
6	AE03 1028	Connector Cover	1
7	AF02 2077	Driven Roller	7
8	5206 2686	Snap Ring	2
9	A134 4739	Lower Guide Plate Knob	1
10	A158 4607	Upper Guide Plate	1
11	G694 4747	Upper Exit Roller	7
12	A134 4619	Guide Plate Link	1
13	5447 2768	Stepped Screw - M3	1
14	A134 4730	Entrance Feeler	1
15	A134 4740	Lower Guide Plate	1
16	AA12 0067	Anti Static Brush	1
17	A154 4616	Paper Holder	6
18	A158 4603	Paper Holder	2
19	A134 4726	Guide Plate Knob	1
20	AA16 2068	Guide Plate Pad	1
21	A134 4884	Decal - Duplex Misfeed Removal	1
22	A158 4604	Duplex Lower Guide	1

Index No.	Part No.	Description	Q'ty Per Assembly
101	0802 5236	Tapping Screw - M4x8	
102	0443 0060W	Hexagon Head Tapping Screw - M3x6	
103	0344 0080F	Philips Truss Head Screw - M4x8	

22. DUPLEX TRAY 2 (A160)

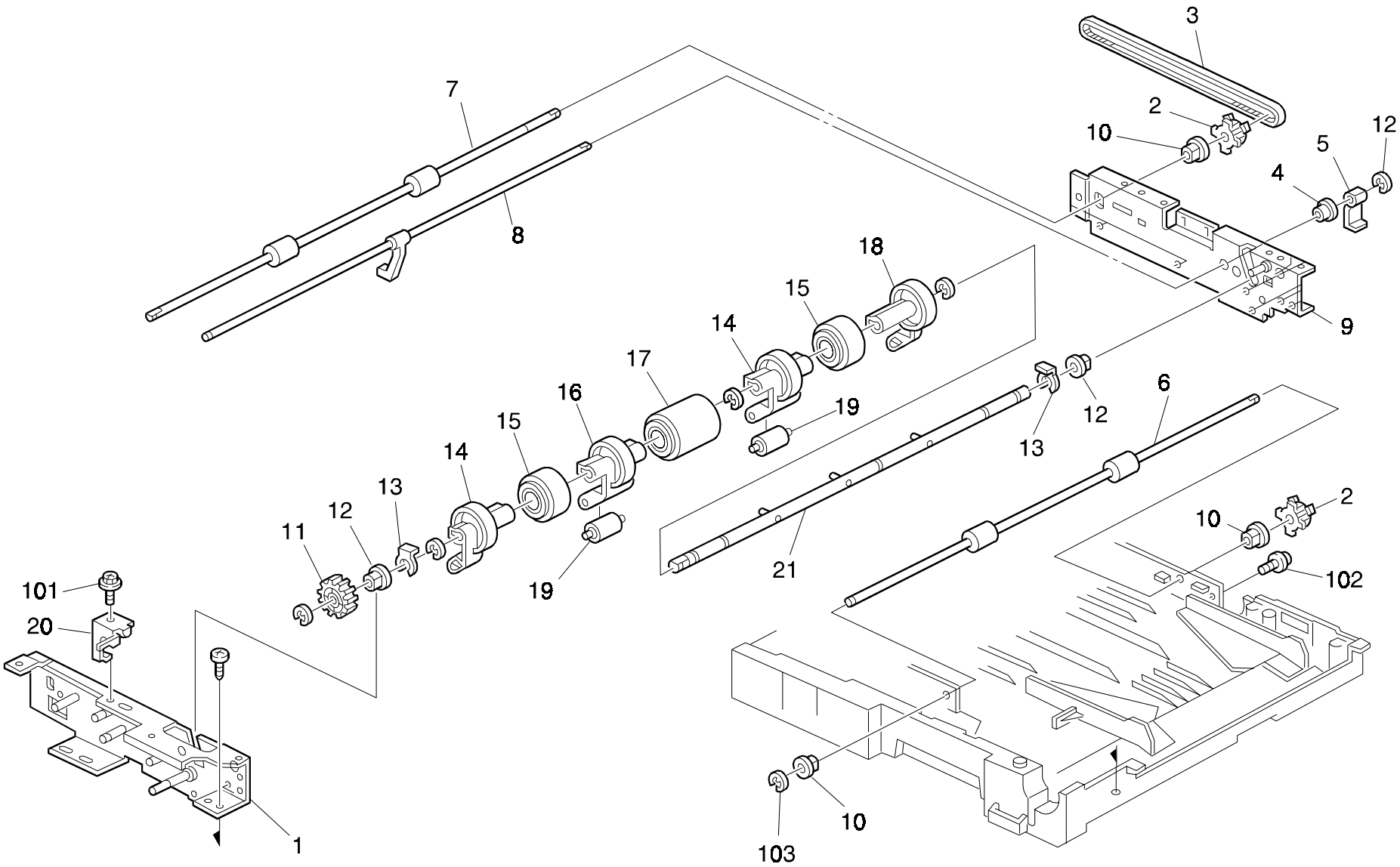

22. DUPLEX TRAY 2 (A160)

Index No.	Part No.	Description	Q'ty Per Assembly
1	A134 4751	Front Side Plate	1
2	AB03 0474	Pulley - 24Z	2
3	AA04 3390	Timing Belt - 40S2M192	1
4	5443 2668	Bushing - 4x6x7mm	2
5	AA11 1208	Paper End Sensor Feeler	1
6	AF02 0319	Transport Roller	1
7	AF02 0320	Right Transport Roller	1
8	A134 4676	Paper End Feeler	1
9	A134 4781	Rear Side Plate	1
10	5053 0447	Bushing - 6mm	4
11	AB01 1166	Gear - 33Z	1
12	5304 1639	Bushing - 8mm	2
13	5215 2621	Snap Ring - M6	3
14	A134 4809	Front Guide Holder	1
15	AF02 0317	Stack Roller	2
16	A134 4649	Paper Guide Holder	2
17	AF03 1024	Feed Roller	1
18	A134 4808	Rear Guide Holder	1
19	AF02 2077	Driven Roller	7
20	A134 4690	Clutch Stopper	1
21	A134 4512	Feed Roller Shaft	1

Index No.	Part No.	Description	Q'ty Per Assembly
101	0443 0060B	Hexagon Tapping Screw - M3x6	
102	0951 4008B	Philips Screw With Washer - M4x8	
103	0720 0040E	Retaining Ring - M4	

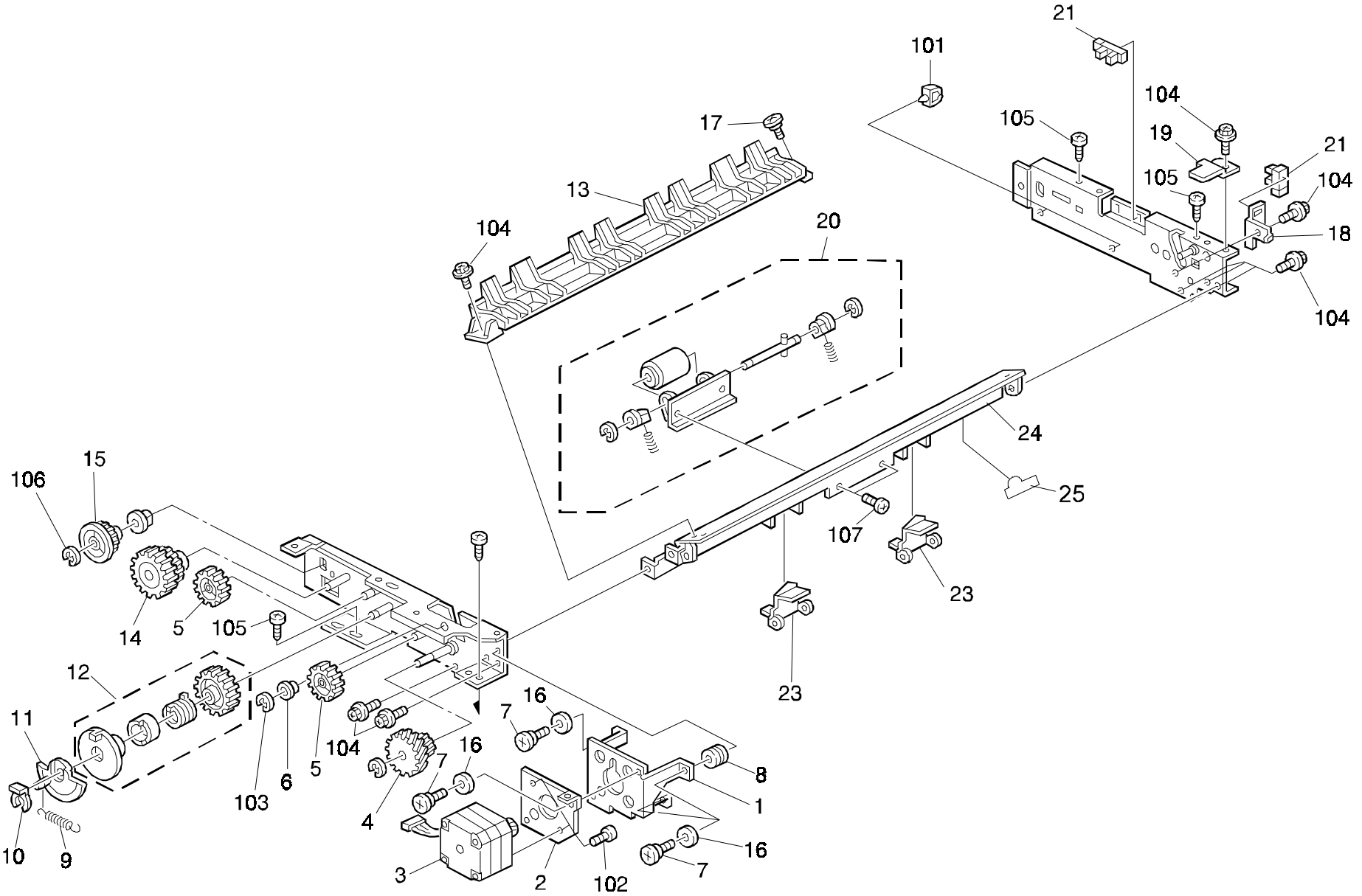
21
101
104
105
19
21
105
104
17
13
104
20
18
104
24
25
107
23
23
106
15
14
5
105
12
11
103
6
5
104
16
7
16
7
8
1
4
3
2
102
16
7
10
9

23. DUPLEX TRAY 3 (A160)

Rev. 7/25/97

Index No.	Part No.	Description	Q'ty Per Assembly
1	A134 4799	Motor Bracket	1
2	A134 4800	Motor Bracket	1
3	A134 5290	Transport Drive Motor	1
4	AB01 7337	Gear - 15Z/55Z	1
5	AB01 1165	Gear - 32Z	2
6	5443 2668	Bushing - 4x6x7mm	2
7	A079 3626	Stepped Screw - Swing Cleaning	3
8	AA16 1067	Cushion - Motor	3
9	AA06 0593	Spring	1
10	5447 2681	Snap Ring	7
11	A334 4706	Disk - Bottom Plate Clutch	1
12	AB04 0015	Spring Clutch - Tray Bottom Plate	1
13	A134 4508	Inverter Guide Plate	1
14	AB01 7332	Gear - 24Z/41Z	1
15	AB01 1167	Gear - 25Z	1
16	AA13 2184	Motor Cushion	3
17	AA14 3307	Stepped Screw - M3x4	1
18	A134 4790	Paper End Sensor	1
19	A134 4804	Guide Plate Stopper	1
20	A134 4527	Separation Roller	1
21	AW02 0075	Photointerrupter	15
22			
23	A134 4658	Vibrating Plate	2
24	A134 4662	Duplex Guide Plate	1
25	A134 4670	Duplex Guide Mylar	1

Index No.	Part No.	Description	Q'ty Per Assembly
101	1105 0199	Clamp	
102	0313 0050B	Philips Pan Head Screw - M3x5	
103	0720 0030E	Retaining Ring - M3	
104	0443 0060B	Hexagon Tapping Screw - M3x6	
105	0802 5236	Tapping Screw - M4x8	
106	0720 0040E	Retaining Ring - M4	
107	0434 0060B	Philips Tapping Screw - M4x6	

24. DUPLEX TRAY 4 (A160)

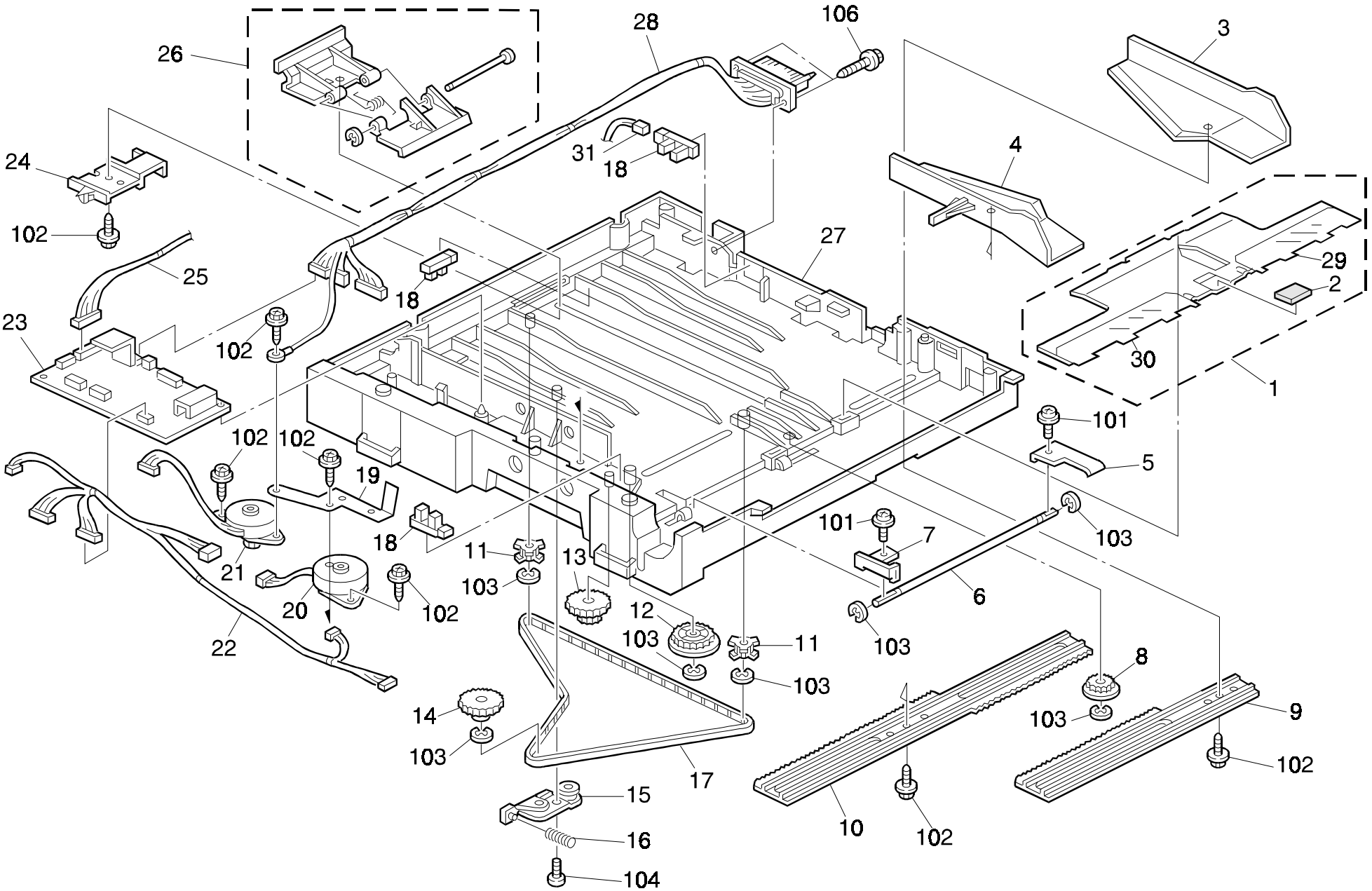

24. DUPLEX TRAY 4 (A160)

Rev. 7/25/97

Index No.	Part No.	Description	Q'ty Per Assembly
1	A154 4620	Bottom Plate	1
2	AF01 3003	Bottom Plate Pad - Duplex	1
3	AF01 6160	Rear Side Fence	1
4	AF01 6161	Front Side Fence	1
5	A204 4651	Bottom Pressure Plate	1
6	AA14 0291	Bottom Plate Shaft	1
7	A491 4690	Bottom Plate Hook	1
8	G011 3305	Gear - 16T	2
9	A134 4689	Rear Side Fence Rack	1
10	A134 4688	Front Side Fence Rack	1
11	AB03 0473	End Fence Pulley - 22Z	2
12	AB01 3881	Gear - 31Z	1
13	AB01 7400	Gear- 18Z/68Z	1
14	AB01 7339	End Fence Gear - 22Z/58Z	1
15	A134 4714	Tightener	1
16	AA06 3370	Spring	1
17	AA04 3374	Timing Belt - S2M800	1
18	AW02 0075	Photointerrupter	15
19	A134 4620	Grounding Plate	1
20	A134 5291	Jogger Drive Motor - Side Fence	1
21	A134 5292	Jogger Drive Motor - End Fence	1
22	A134 5323	Motor Harness	1
23	A134 5254	Duplex Control Board	1
24	A134 4710	End Fence Actuator	1
25	A134 5321	Sensor Relay Harness	1
26	A134 4525	End Fence	1
27	AF01 0018	Duplex Tray	1
28	A134 5320	Toner Bottle Cam	1
29	A154 4622	Rear Guide Plate	1
30	A154 4621	Front Guide Plate	1
31	A134 5322	End Fence Harness	1

Index No.	Part No.	Description	Q'ty Per Assembly
101	0951 3006B	Philips Screw With Flat Washer - M3x6	
102	0802 5232	Tapping Screw - M3x8	
103	0720 0040E	Retaining Ring - M4	
104	0802 5236	Tapping Screw - M4x8	
105	0802 5234	Tapping Screw - M3x12	

25. PAPER EXIT AND INVERTER (A160)

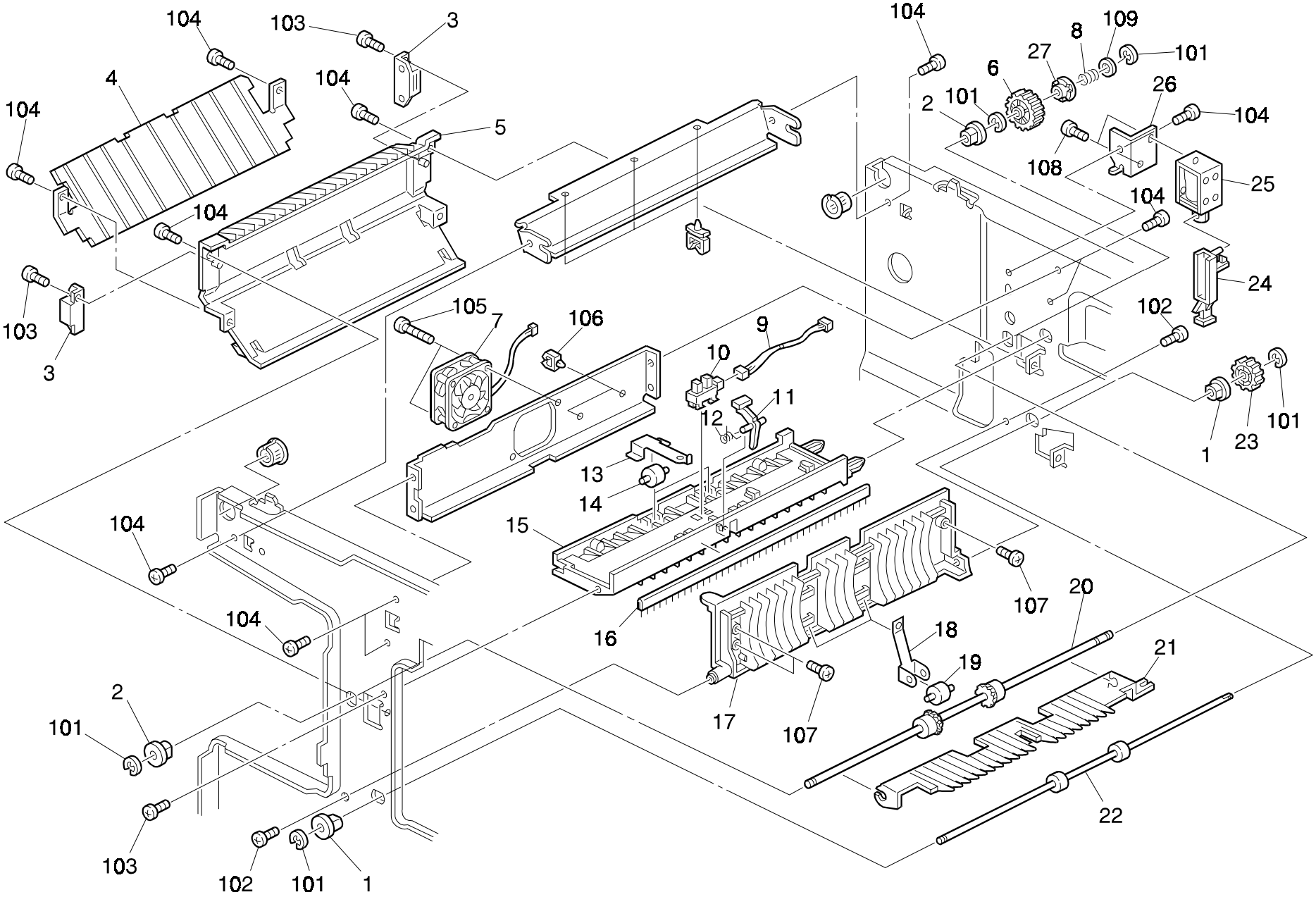

25. PAPER EXIT AND INVERTER (A160)

Index No.	Part No.	Description	Q'ty Per Assembly
1	5053 0447	Bushing - 6mm	4
2	AA08 2058	Bushing - 6x10x9mm	2
3	AG07 0004	Magnetic Catch	6
4	A158 4452	Lower Reverse Guide Plate	1
5	A158 4451	Reverse Guide Plate	1
6	AB01 3889	Gear - 24Z	1
7	AX64 0059	Fan Motor - DC24V 3.12W	2
8	A470 1704	Spring - Lower Exit Roller	1
9	A153 5328	Ct Harness	1
10	AW02 0075	Photointerrupter	15
11	A157 4459	Paper Exit Feeler	1
12	AA06 6274	Spring	1
13	A157 4456	Spring Plate	2
14	AF02 2042	Middle Pressure Roller	2
15	A157 4450	Upper Guide Plate	1
16	AA12 0071	Exit Antistatic Brush	1
17	A158 4453	Exit Cover	1
18	A158 4459	Spring Plate	2
19	AF04 0031	Upper Exit Roller	7
20	AF02 0327	Exit Roller	1
21	AF02 5024	Pick-off Pawl	1
22	AF02 0336	Inverter Drive Roller	1
23	AB01 3106	Gear - Drive - Third - Z18	1
24	A158 4463	Pick-off Pawl Arm	1
25	AX12 0039	DC SOL 24V 400GF	1
26	A158 4467	Solenoid Bracket	1
27	A470 1703	Shift Clutch	1

Index No.	Part No.	Description	Q'ty Per Assembly
101	0720 0040E	Retaining Ring - M4	
102	0434 0080B	Philips Tapping Screw - M4x8	
103	0434 0082B	Tapping Screw - M4x8	
104	0434 0060B	Philips Tapping Screw - M4x6	
105	0353 0300B	Bind Screw - M3x30	
106	1105 0199	Clamp	
107	0802 5236	Tapping Screw - M4x8	
108	0313 0040B	Philips Pan Head Screw - M3x4	
109	0807 4072	Washer - Core	

26. PAPER EXIT SECTION (A157)

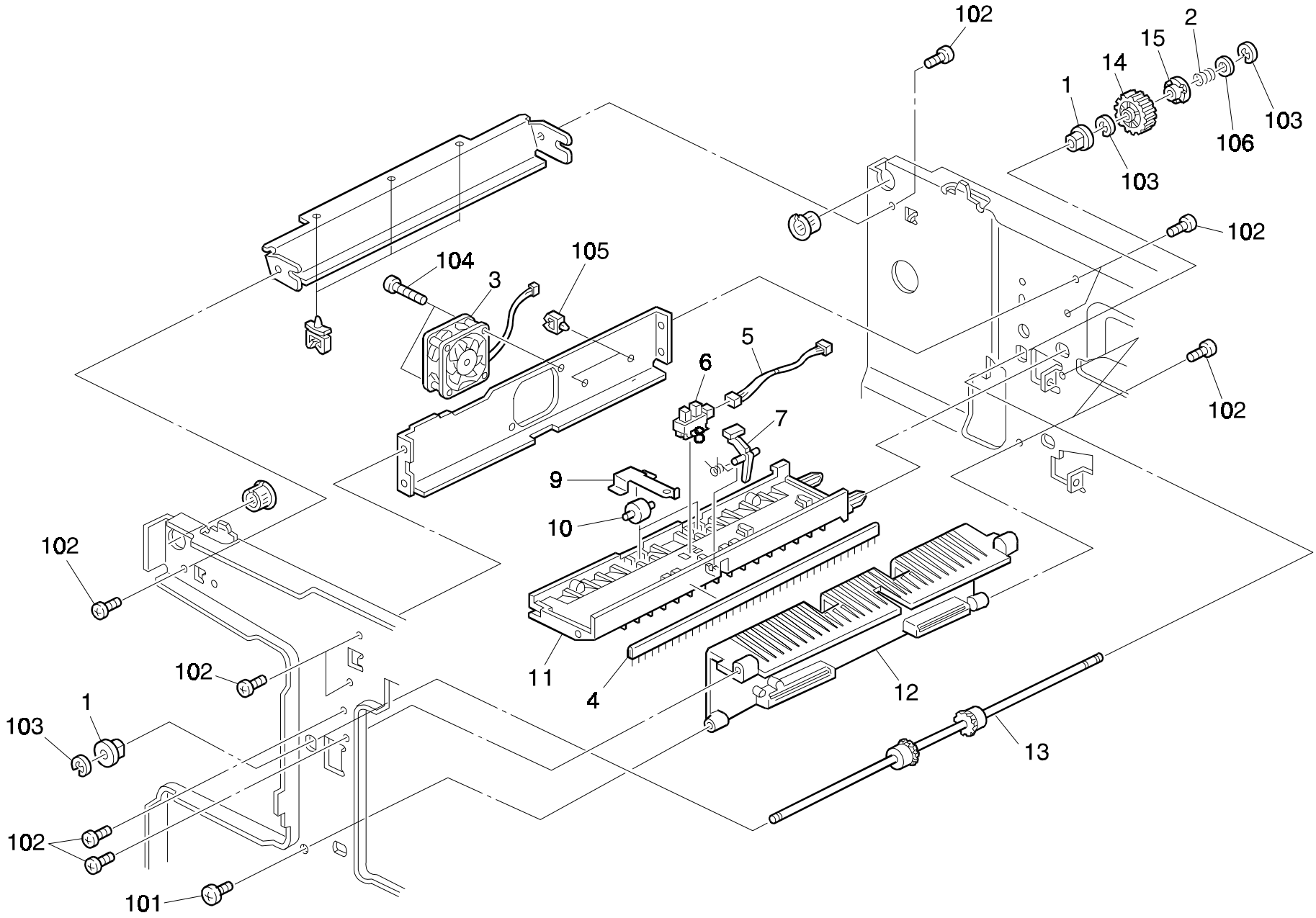

26. PAPER EXIT SECTION (A157)

Index No.	Part No.	Description	Q'ty Per Assembly
1	AA08 2058	Bushing - 6x10x9mm	2
2	A470 1704	Spring - Lower Exit Roller	1
3	AX64 0059	Fan Motor - DC24V 3.12W	2
4	AA12 0071	Exit Antistatic Brush	1
5	A153 5328	Ct Harness	1
6	AW02 0075	Photointerrupter	15
7	A157 4459	Paper Exit Feeler	1
8	AA06 6274	Spring	1
9	A157 4456	Spring Plate	2
10	AF02 2042	Middle Pressure Roller	2
11	A157 4451	Upper Guide Plate	1
12	A157 4460	Exit Cover	1
13	AF02 0327	Exit Roller	1
14	AB01 3889	Gear - 24Z	1
15	A470 1703	Shift Clutch	1

Index No.	Part No.	Description	Q'ty Per Assembly
101	0802 5236	Tapping Screw - M4x8	
102	0434 0060B	Philips Tapping Screw - M4x6	
103	0720 0040E	Retaining Ring - M4	
104	0353 0300B	Bind Screw - M3x30	
105	1105 0199	Clamp	
106	0807 4072	Washer - Core	

27. DRIVE SECTION 1 (A160/A157)

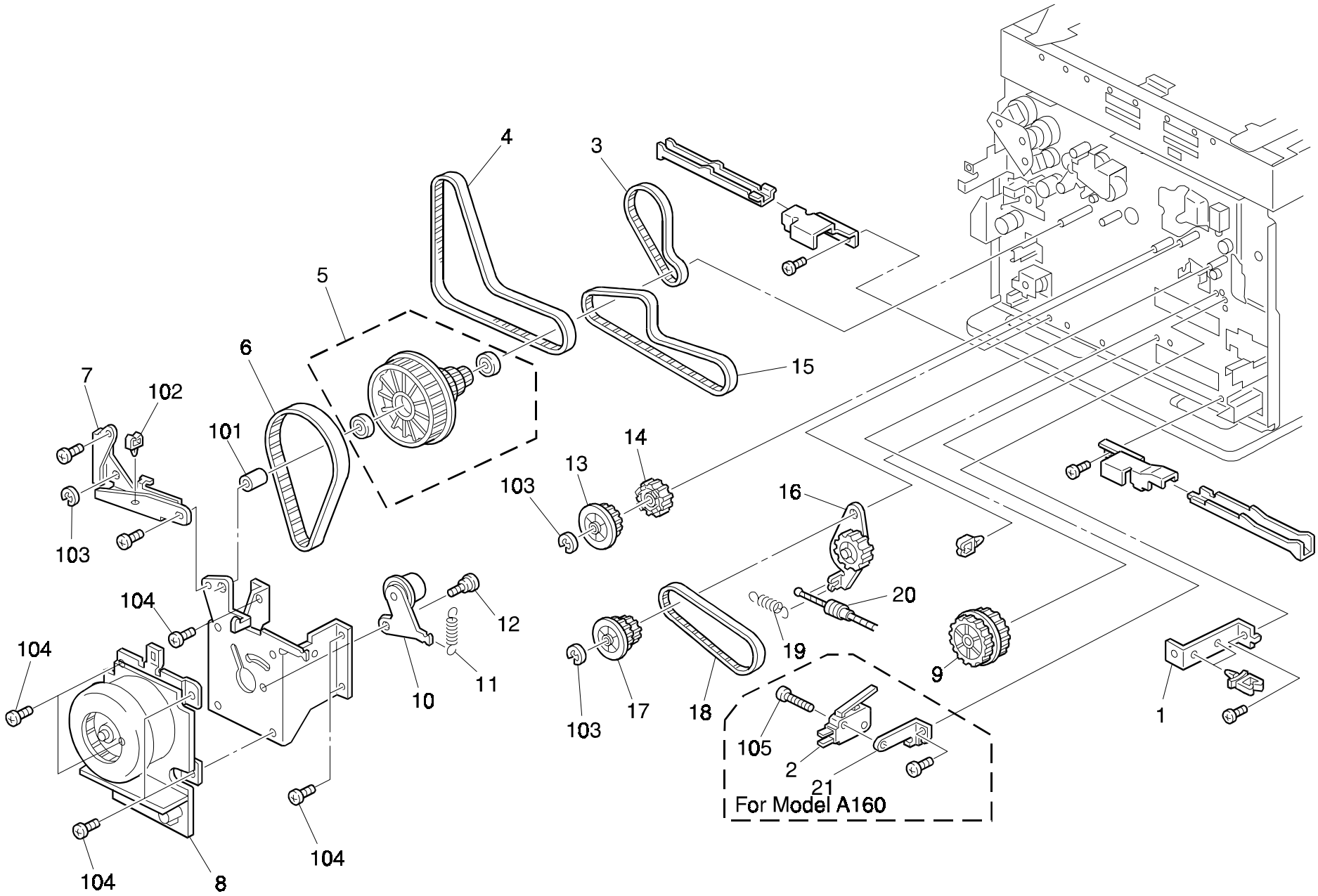

27. DRIVE SECTION 1 (A160/A157)

Rev. 2/21/96

Index No.	Part No.	Description	Q'ty Per Assembly
1	A153 5802	Lower Bracket - DC Drive Board	1
2	1204 2356	Micro Switch - AM51612A531	1
3	AA04 3392	Drum Timing Belt	1
4	AA04 3420	Timing Belt - 80S3M519	1
5	AB03 0492	Pulley - 25/25/34/125Z	1
6	AA04 3391	Timing Belt - 160S2M328	1
7	A153 1131	Development Support Plate	1
8	AX06 0108	Motor - DC24V 45W	1
9	AB01 7371	Exit Pulley	1
10	A153 1128	Tightener	1
11	AA06 0228	Spring - Transfer Drum Cleaning Sol	1
12	C105 2352	Stepped Screw - M6x1.7	1
13	AB03 0463	Fusing Cam Pulley	1
14	AB01 3872	Fusing Cam Gear - 28Z	1
15	AA04 3396	Timing Belt - 60S3M366	1
16	A134 1121	Joint Gear	1
17	AB01 7345	Timing Pulley - 35Z	1
18	AA04 3397	Timing Belt - 30S3M300	1
19	5203 3151	Roller Cover Spring	2
20	AA05 1024	Release Wire	1
21	A158 4466	Switch Bracket	1

Index No.	Part No.	Description	Q'ty Per Assembly
101	0707 8140B	Bushing - 8x14mm	
102	1105 0199	Clamp	
103	0720 0060E	Retaining Ring - M6	
104	0434 0060B	Philips Tapping Screw - M4x6	
105	0313 0140B	Philips Pan Head Screw - M3x14	

28. DRIVE SECTION 2 (A160/A157)

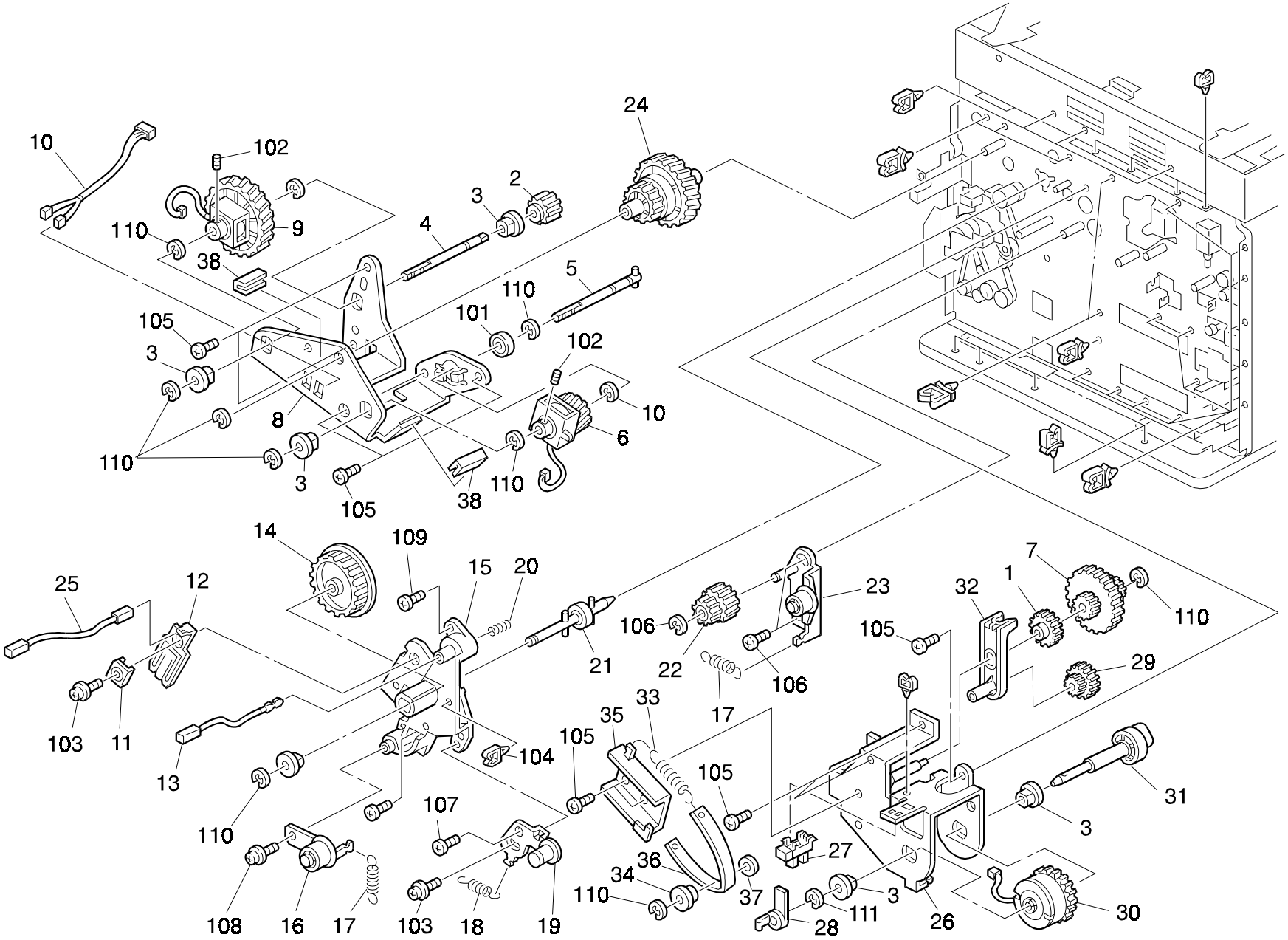

28. DRIVE SECTION 2 (A160/A157)

Index No.	Part No.	Description	Q'ty Per Assembly
1	AB01 7386	Cleaning Cam	1
2	AB01 3917	Toner Supply Gear	1
3	AA08 2047	Bushing - 8x16x7	9
4	AA14 5539	Solenoid Shaft	1
5	A153 1127	Clutch Shaft	1
6	AX20 0105	Magnetic Clutch - 15kgf 24Z	1
7	AB01 7368	Cleaning Drive Gear	1
8	A153 1125	Development Drive Bracket	1
9	AX20 0106	Magnetic Clutch - 15kgf 52Z	1
10	A153 5340	Ct Harness	1
11	A153 3087	Terminal Cap	1
12	A153 3086	Bias Terminal	1
13	A153 2130	Receptacle Housing	1
14	AB03 0494	Drum Pulley	1
15	A153 1112	Drive Gear Holder	1
16	A153 1132	Development Tightener	1
17	5442 1111	Spring - Main Drive Tightner	3
18	5203 3151	Roller Cover Spring	2
19	A153 1135	Drum Drive Tightener	1
20	AA06 3524	Pressure Spring	1
21	A153 1117	Drum Drive Shaft	1
22	AB01 7369	Transfer Belt Pulley	1
23	A157 1111	Belt Tightener	1
24	AB01 7370	Development Pulley	1
25	AZ43 0020	High Voltage Supply Cord	1
26	A153 3915	Magnetic Clutch Bracket	1
27	AW02 0075	Photointerrupter	15
28	A153 3914	Magnetic Clutch Feeler	1
29	AB01 7385	Gear - 17Z/24Z	1
30	AX21 0049	Magnetic Clutch - 5kgf 42Z	1
31	A153 3911	Cam Shaft	1
32	A153 2142	Cam Lever	1
33	AA06 2290	Spring	1
34	AA13 4100	Boss	1
35	A153 3917	Magnetic Clutch Bracket	1

Index No.	Part No.	Description	Q'ty Per Assembly
36	A153 3918	Break Pad	1
37	A153 3919	Spacer	1
38	A153 1126	Edging	2
101	0740 3008	Ball Bearing - 8x22x7	
102	0573 0040E	Hexagon Headless Set Screw - M3x4	
103	0951 4012B	Philips Screw With Flat Washer	
104	1105 0199	Clamp	
105	0434 0060B	Philips Tapping Screw - M4x6	
106	0414 0080B	Tapping Screw - M4x8	
107	0802 5236	Tapping Screw - M4x8	
108	0802 5221	Tapping Screw - M3x10	
109	0950 4008B	Philips Screw With Spring Washer - M4x8	
110	0720 0060E	Retaining Ring - M6	
111	0720 0060	Retaining Ring - M6	

29. DRIVE SECTION 3 (A160/A157)

Rev. 9/27/96

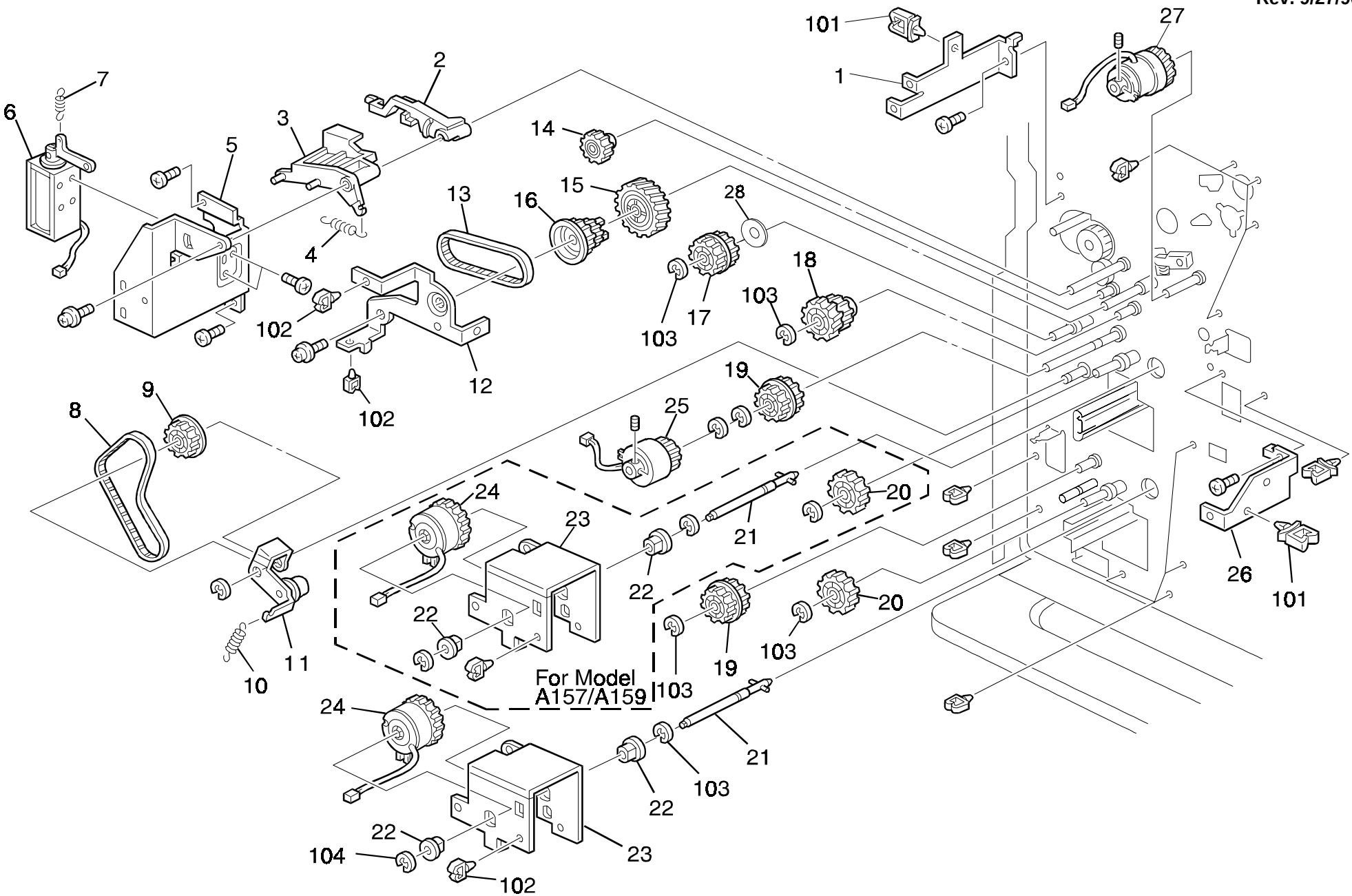

29. DRIVE SECTION 3 (A160/A157)

Rev. 10/15/96

Index No.	Part No.	Description	Q'ty Per Assembly
1	A153 5813	Main Control Board Bracket	1
2	A155 2676	Pick-up Lever	1
3	A134 2678	Solenoid Link (A157)	1
3	A155 2677	Pick-up Link (A160)	1
4	AA06 0573	Release Spring	1
5	A134 2675	Solenoid Bracket (A157)	1
5	A155 2675	Pick-up Bracket (A160)	1
6	A134 2680	DC Solenoid	1
7	AA06 0572	Pressure spring	1
8	AA04 3364	Timing Belt - S3M300	1
9	AB03 0491	Timing Pulley - 25Z	1
9	AX31 0022	Total Counter	1
10	AA06 0453	Relay Adjusting Spring	2
11	A157 2564	Tightener	1
12	A157 2560	Paper Feed Support Plate	1
13	AA04 3389	Timing Belt - 60S3M201	1
14	AB01 1153	Idle Gear - 25Z	1
15	AB01 3918	Drive Gear - 35Z	1
16	AB03 3064	Drive Pulley	1
17	AB01 7395	Timing Pulley	1
18	AB01 7377	Gear - 25Z	1
19	AB01 7364	Timing Pulley - 24Z/20Z	2
20	AB01 3908	Gear - 27Z	1
21	A157 2563	Feed Drive Shaft	1
22	AA08 2047	Bushing - 8x16x7	9
23	A157 2562	Solenoid Bracket	1
24	AX21 0058	Magnetic Clutch - 5kgf 42Z	1
25	AX20 0107	Magnetic Clutch - 10kgf 25Z	1
26	A153 5812	Left Lower Bracket	1
27	AX20 0109	Magnetic Clutch - 10kgf.cm 35Z	1
28	A157 2566	Spacer - 8x25x35	1

Index No.	Part No.	Description	Q'ty Per Assembly
101	1105 0192	Locking Support	
102	1105 0199	Clamp	
103	0720 0060E	Retaining Ring - M6	
104	0720 0040E	Retaining Ring - M4	

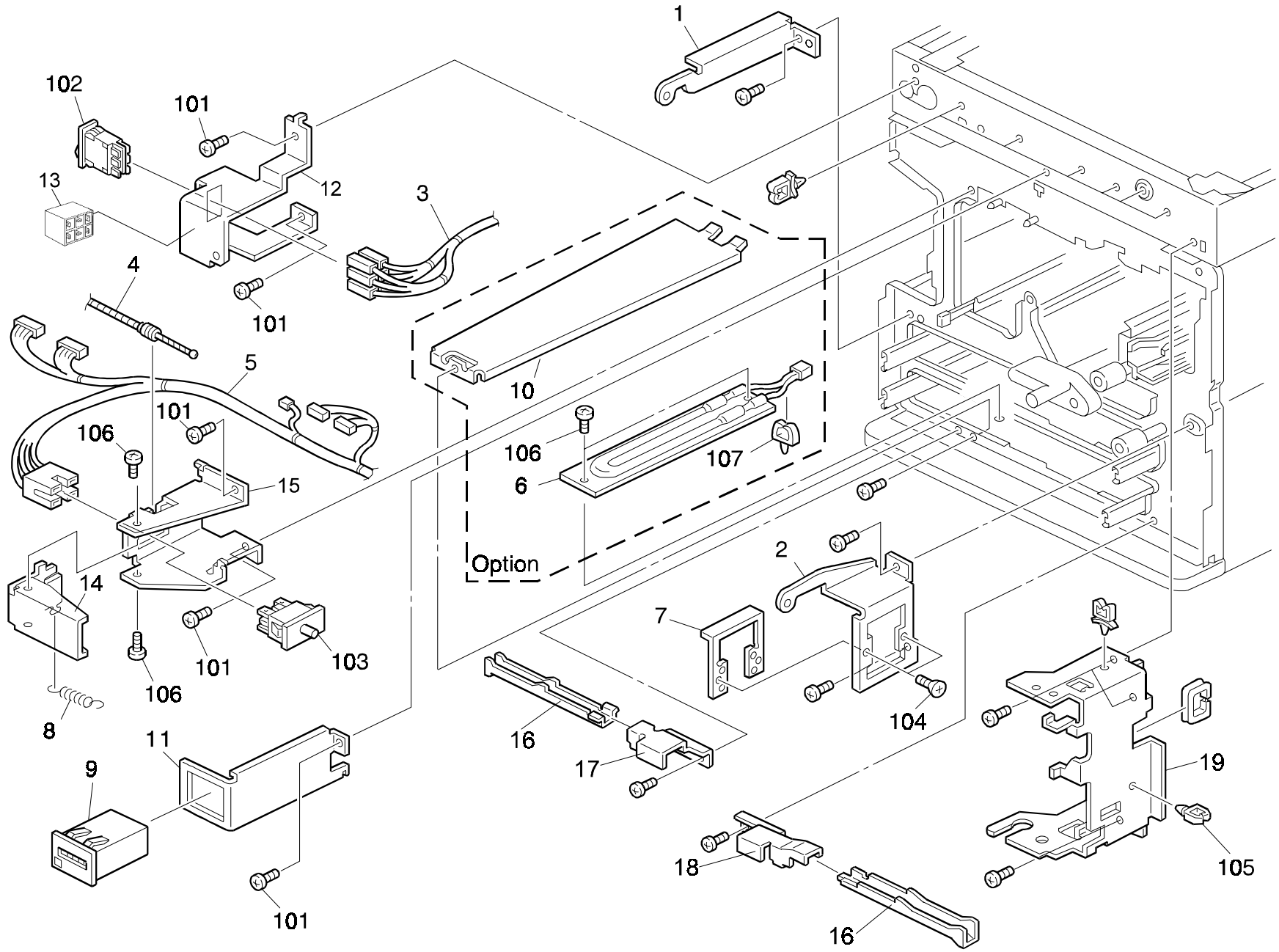
1
102
101
13
12
3
4
101
5
101
106
15
14
101
103
106
8
11
9
101
10
106
107
6
Option
2
7
104
16
17
19
18
105
16

30. ELECTRICAL SECTION 1 (A160/A157)

Rev. 06/30/2000

Index No.	Part No.	Description	Q'ty Per Assembly
1	A153 1353	Front Cover Hinge	1
2	A153 1355	Key Counter Bracket	1
3	A153 5501	AC Main Harness - 120V	1
3	A153 5661	AC Main Harness (230V)	1
4	AA05 1024	Release Wire	1
5	A153 5320	Front Right Harness	1
6	AX40 0021	Tray Anticondensation Heater - 115V 18W	1
6	AX40 0022	Tray Anticondensation Heater - 240V 18W	1
7	5446 1239	Plate Nut - Key Counter	1
8	5442 4467	Spring - Stripper Pawl Plate	2
10	A134 2947	Heater Cover	1
11	A153 5820	Total Counter Bracket	1
12	A153 5814	Main Switch Bracket	1
13	A153 5562	Main Switch Relay Harness	1
14	A153 5809	Interlock Switch Arm	1
15	A153 5808	Interlock Switch Bracket	1
16	A134 1071	Lift Grip Arm	4
17	A134 1072	Right Bracket - Grip Plate	1
18	A134 1073	Left Bracket - Grip Plate	1
19	A153 3270	Toner Supply Stay	1

Index No.	Part No.	Description	Q'ty Per Assembly
101	0434 0060B	Philips Tapping Screw - M4x6	
102	1204 2467	Main Switch	
103	1204 2397	Safety Switch	
104	0323 0080B	Philips Sunk Screw - M3x8	
105	1105 0229	Clamp	
106	0314 0060B	Philips Pan Head Screw - M4x6	
107	1105 0231	Clamp	

31. ELECTRICAL SECTION 2 (A160/A157)

Rev. 08/98

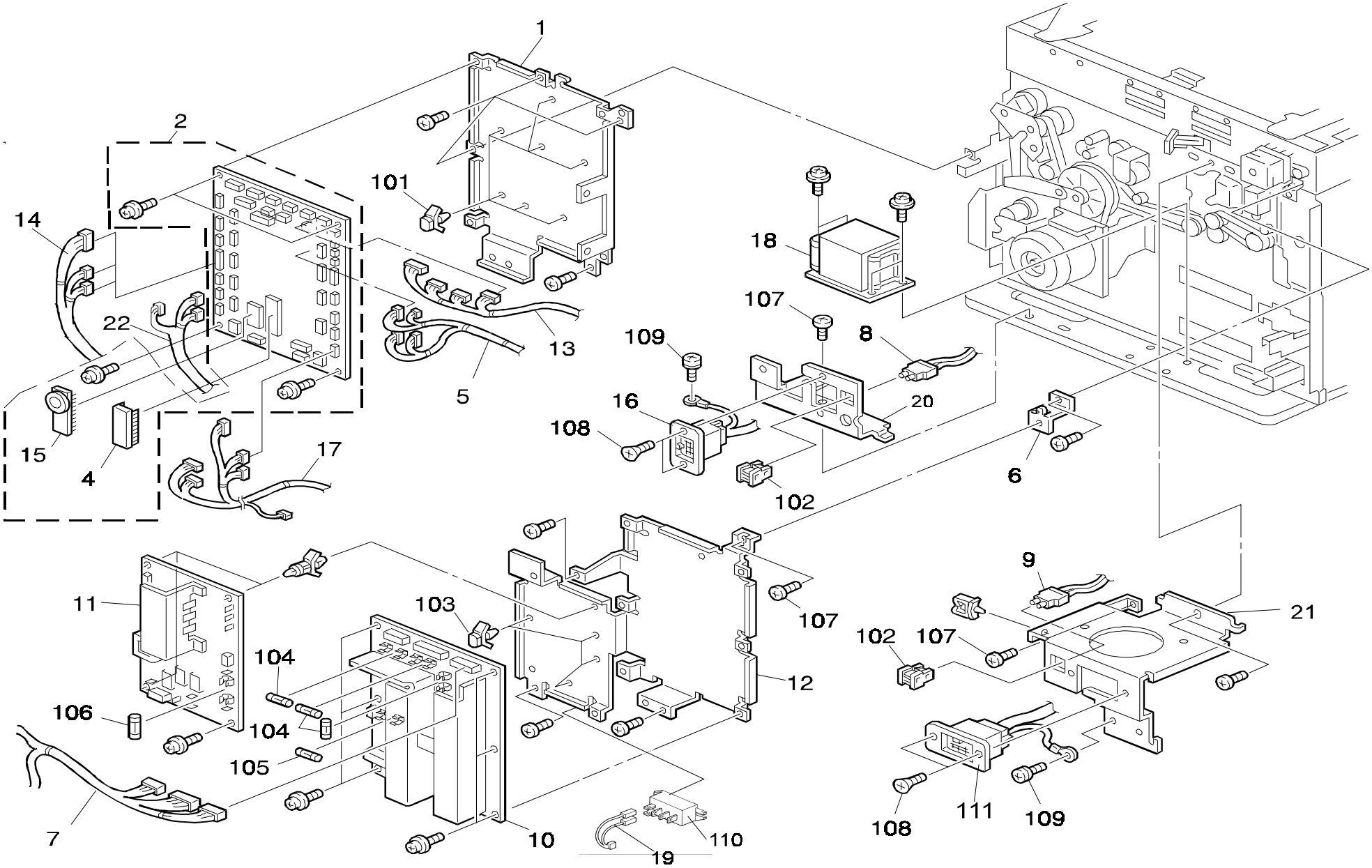

31. ELECTRICAL SECTION 2 (A160/A157)

Rev. 08/98

Index No.	Part No.	Description	Q'ty Per Assembly
1	A153 5811	Main Control Board Bracket	1
2	A157 5181	Main Control Board - 120V	1
2	A157 5111	Main Control Board - 220V	1
4	A153 5109	IC - 4MX16-120NS	1
5	A158 5319	Rear Upper Harness - Duplex	1
6	A153 5803	Upper Bracket - DC Drive Board	1
7	A153 5344	Power Supply Harness - 2 trays	1
7	A158 5343	Duplex Power Supply Harness	1
8	AW03 0055	Optical Fiber - 420mm	1
9	AW03 0054	Optical Fiber - 250mm	1
10	AZ23 0055	DC Drive Board - 100/120V	1
10	AZ23 0060	DC Drive Board - 220V/240V	1
11	A153 5545	AC Drive Board - 120V	1
11	A153 5550	AC Drive Board (230V)	1
12	A153 5801	DC Drive Board Bracket	1
13	A153 5312	Optical Harness	1
14	A157 5316	Paper Feed Harness - 2 trays	1
14	A158 5310	Duplex Paper Feed Harness	1
15	A153 5114	Ram Board	1
16	A153 5644	Tray Power Supply Harness	1
16	A160 5643	Power Supply Harness - Duplex 220/230V	1
17	A157 5511	Rear Lower Harness - 2 tray	1
17	A158 5309	Rear Lower Harness - Duplex	1
18	AZ13 0023	Transformer - 230V	1
19	A153 5561	Relay Harness	1
20	A153 5806	Tray Unit Bracket	1
21	A153 5807	ARDF Bracket	1
22	A153 5314	LCT Relay Harness	1

Index No.	Part No.	Description	Q'ty Per Assembly
101	1105 0367	Spacer	
102	1102 4052	Optional Connector	
103	1105 0409	Spacer	
104	1107 0392	Fuse - 6.3A	
105	1107 0393	Fuse - 8A,125V	
106	1107 0753	Fuse - 6.3A 250V	
107	0434 0060B	Philips Tapping Screw - M4x6	
108	0323 0060B	Philips Sunk Screw - M3x6	
109	0801 0137	Philips Pan Head Screw With Spring	
110	1208 1392	Relay	
111	1102 6739	Connector - 12P	

31-1. ELECTRICAL SECTION 2-A (A160/A157)

IC

Symbol No.	Index No.
IC2	127
IC3	100
IC4	101
IC5	102
IC6	103
IC7	104
IC8	105
IC9	106
IC10	107
IC11	108
IC12	109
IC13	109
IC14	110
IC15	111
IC16	112
IC17	113
IC18	113
IC19	113
IC20	113
IC21	114
IC22	114
IC23	114
IC24	115
IC25	116
IC26	117
IC31	118

OSCILLATOR

Symbol No.	Index No.
OSC1	124

DIODE

Symbol No.	Index No.
D3	119
D5	119
DA1	120
DA2	120
DA3	120
DA4	120
DA5	120
DA6	120
DA7	121
DA8	121
DA9	121
DA10	121
ZD1	122
ZD2	122
ZD3	122
ZD4	123

TRANSISTOR

Symbol No.	Index No.
Q1	125
Q2	126

31-1. ELECTRICAL SECTION 2-A (A160/A157)

Rev. 12/3/96

Index No.	Part No.	Description	Q'ty Per Assembly
100	1407 4401	LSI TE6250A	1
101	1408 0770	IC-L293D	1
102	1407 2496	IC-M5261L	1
103	1407 3708	IC-SLA7026M	1
104	1408 1135	IC-X9C104S	1
105	1408 0595	IC-NJM2904M	1
106	1407 2862	SWITCH	1
107	1408 0877	IC-LM339NS	1
108	1407 4137	IC-MM1035XF	1
109	1407 2187	IC-SN74LS07NS	1
110	1407 3257	IC-TC74HC14A	1
111	1407 2862	SWITCH	1
112	1408 0595	IC-NJM2904M	1
113	1407 2187	IC-SN74LS07NS	1
114	1407 2231	IC-TD62308AF	1
115	1408 0874	TRANSISTOR ARRAY-M54587F	1
116	1407 2231	IC-TD62308AF	1
117	1408 0875	TRANSISTOR ARRAY-TD62382	1
118	1408 0629	REGULATOR:NJM78M1:+12V	1
119	1402 1030	DIODE-1SS250	1
120	1402 0708	DIODE-1SS272	1
121	1402 0478	DIODE-1SS226TE85L	1
122	1402 1037	DIODE-U1ZB12	1
123	1402 0688	DIODE	1
124	1503 0435	OSCILLATOR AT-51 20MHZ	1
125	1400 0369	TRANSISTOR-2SA1213Y	1
126	1400 0558	TRANSISTOR-2SD780	1
127	A153 5117	MPU: HD635708A05F	1

Index No.	Part No.	Description	Q'ty Per Assembly

32. ELECTRICAL SECTION 3 (A160/A157)

Rev. 6/4/96

32. ELECTRICAL SECTION 3 (A160/A157)

Rev. 10/11/95

Index No.	Part No.	Description	Q'ty Per Assembly
1	AA15 0366	Rear Side Seal	1
2	AZ32 0078	DC Power Pack	1
3	AZ43 0020	High Voltage Supply Cord	1
4	A134 2941	Tray Sensor Bracket	1
5	AW50 0012	Push Switch	2
6	AX64 0058	Fan Motor - DC 24V 4.32W	2
7	A153 1986	Cooling Fan Duct	2
8	AW02 0022	Photointerruptor	2
9	AW03 0056	Optical Fiber - 550mm	1
10	A153 5326	Fusing Relay Harness (115V)	1
10	A153 5337	Fusing Relay Harness (230V)	1
11	AA14 3301	Stepped Screw - M3x4	2
12	A153 5324	Sorter Relay Harness	1
13	A153 5471	Power Supply Cord (110V)	1
13	A153 5571	Power Supply Cord - 120V	1
13	A153 5671	Power Supply Cord (230V)	1
14	AA14 3452	Stepped Screw	2
15	A154 5325	Duplex Unit Relay Harness	1
16	AA06 3532	Spring	2
17	A153 5810	Power Supply Cord Bracket	1
18	A153 5888	Fusing Unit Joint Connector	1
19	A153 5601	AC Relay Harness	1
20	A153 5621	Noise Filter Board	1
21	AZ02 0008	Coil - 1 0mh 2A	1
22	AA15 1177	Seal - 5x82x4	1
23	1102 5981	Fiber Connector	3

Index No.	Part No.	Description	Q'ty Per Assembly
101	1105 0192	Locking Support	
102	0951 3006B	Philips Screw With Flat Washer - M3x6	
103	1102 4473	Ct Connector - 2p	
104	1102 4052	Optional Connector	
105	0434 0352W	Pan Head Self-tapping Screw - M4x35	
106	0414 0142B	Binding Self Tapping Screw - M4x14	
107	0964 4008B	Tapping Screw With Flat Washer - M4x8	
108	0443 0060B	Hexagon Tapping Screw - M3x6	

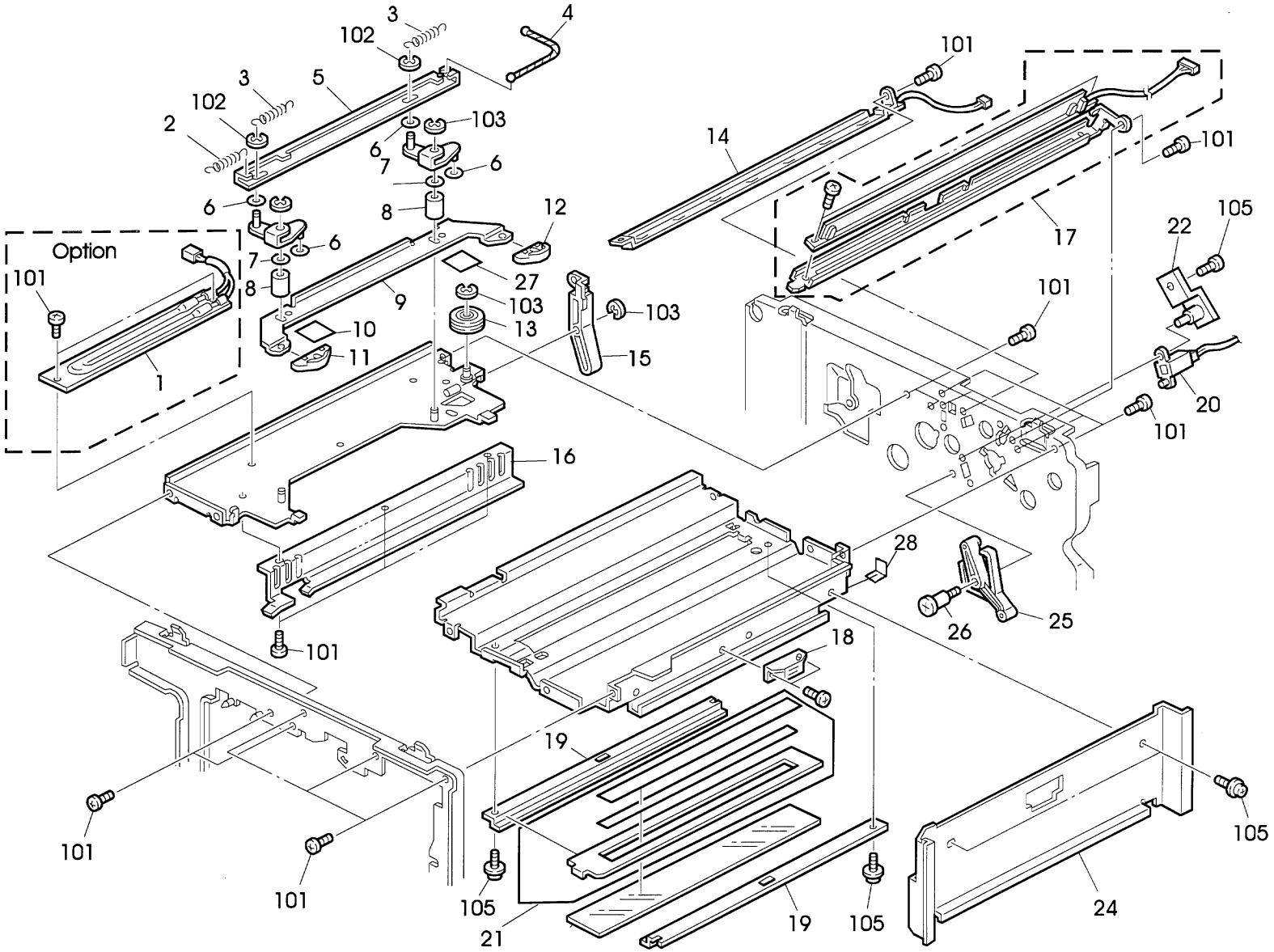
Option
1
2
3
4
5
6
7
8
9
10
11
12
13
14
15
16
17
18
19
20
21
22
24
25
26
27
28
101
102
103
105

33. FRAME SECTION 1 (A160/A157)

Rev. 08/29/97

Index No.	Part No.	Description	Q'ty Per Assembly
1	AX40 0063	Anticondensation Heater - 120V 9W	1
1	AX40 0064	Anti Condensation Heater - 230V 9W	1
2	AA06 2291	Pressure Spring	1
3	AA06 2285	Release Spring	2
4	AA05 1025	Release Wire	1
5	A153 2072	Release Link Lever	1
6	AA13 2187	Spacer - 11mm	4
7	AA13 2188	Spacer - 16mm	2
8	AA13 2186	Collar	2
9	A153 2073	Guide Rail	1
10	A153 2084	Spacer	2
11	A153 2075	Front Roller Cam	1
12	A153 2076	Rear Roller Cam	1
13	A153 2060	Wire Pulley	1
14	A153 2090	Quenching Lamp	1
15	A153 2071	Cam Lever	1
16	A153 2083	Left Drum Rail	1
17	A153 2080	Eraser Lamp	1
18	AG07 0004	Magnetic Catch	6
19	A204 1674	Shield Glass Guide	2
20	A153 5339	Density Sensor Harness	1
21	A204 1677	Optical Fiber	1
22	A153 3598	Pin Bracket	1
24	A153 1350	Right Middle Cover	1
25	A153 3920	Belt Release Arm	1
26	AA14 3444	Stepped Screw	1
27	A153 2085	Spacer	1
28	A153 1676	Harness Guard Seal	1

Index No.	Part No.	Description	Q'ty Per Assembly
101	0434 0060B	Philips Tapping Screw - M4x6	
102	0720 0030E	Retaining Ring - M3	
103	0720 0040E	Retaining Ring - M4	
104	0964 4006B	Tapping Screw With Flat Washer - M4x6	
105	0313 0040B	Philips Pan Head Screw - M3x4	

34. FRAME SECTION 2 (A160/A157)

Rev. 7/25/96

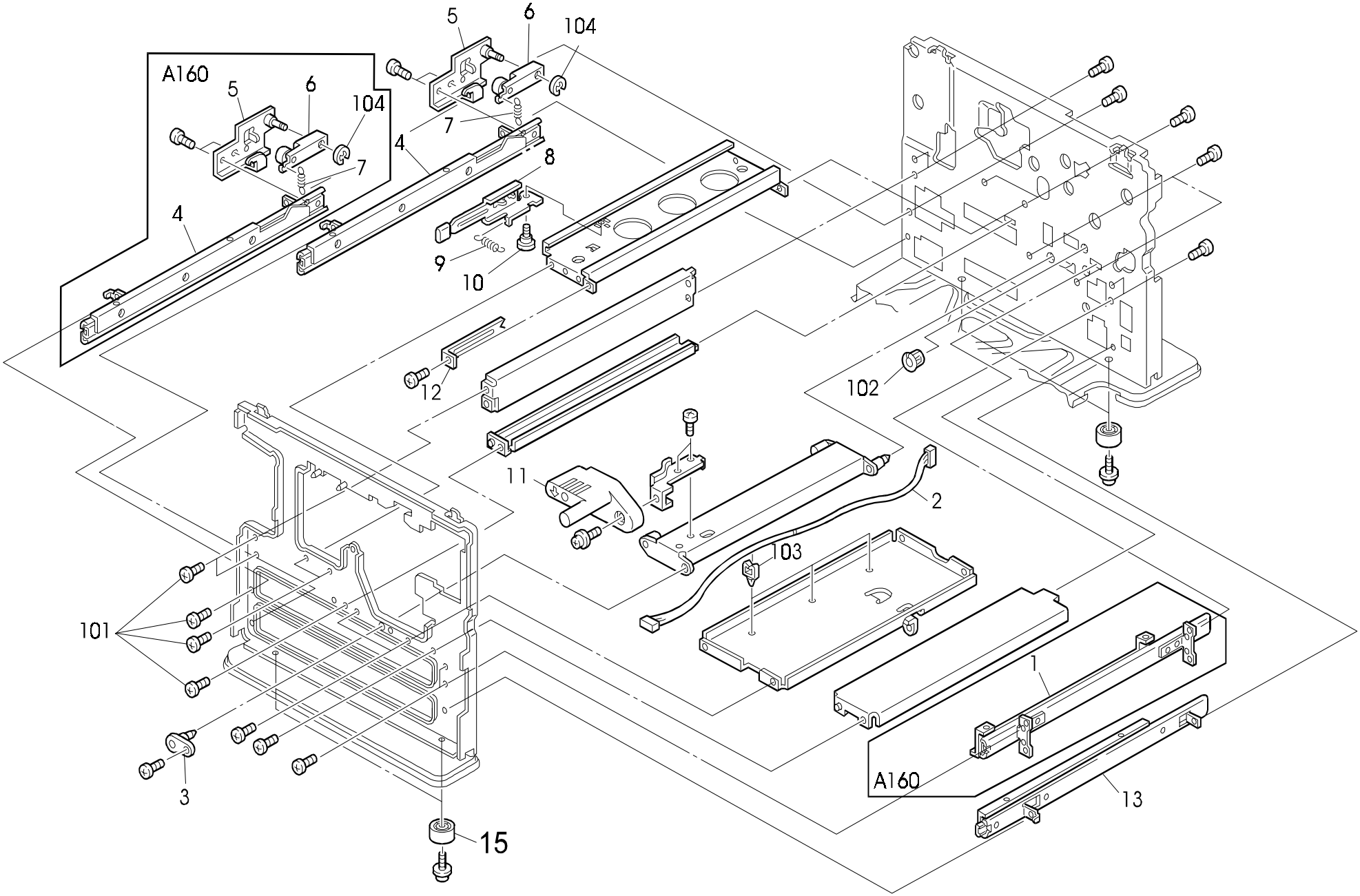

34. FRAME SECTION 2 (A160/A157)

Rev. 10/15/96

Index No.	Part No.	Description	Q'ty Per Assembly
1	A134 4901	Duplex Right Rail (A160)	1
2	A153 5334	Ct Harness - 7p	1
3	A157 3900	Support Plate	1
4	A157 2783	Left Rail (A157)	2
4	A134 2921	Left Slide Rail (A160)	1
5	A134 2926	Paper Feed Lock Bracket	2
6	A096 6266	Tray Lock Arm	2
7	AA06 0534	Tray Lock Spring - 19mm	2
8	A153 4352	Fusing Lock Lever	1
9	5442 4467	Spring - Stripper Pawl Plate	2
10	5203 1686	Screw - Slid Rail	1
11	A153 3930	Belt Unit Handle	1
12	A134 4355	Fusing Unit Stopper	1
13	A157 2785	Right Rail (A157)	2
14	A157 2777	Feed Roller Cover	1
15	AH01 0007	Rubber Foot	4

Index No.	Part No.	Description	Q'ty Per Assembly
101	0434 0060B	Philips Tapping Screw - M4x6	
102	1106 0193	Bushing - 7.9mm	
103	1105 0199	Clamp	
104	0720 0040E	Retaining Ring - M4	

1

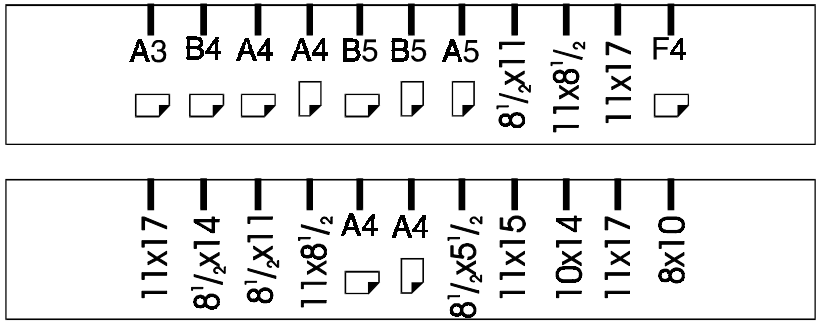

2

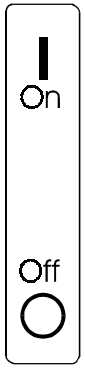

6

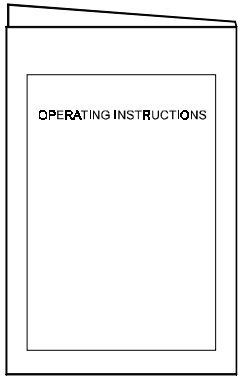

10

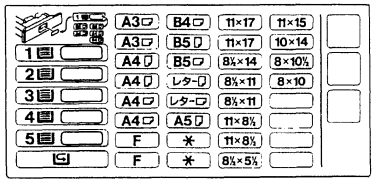

3

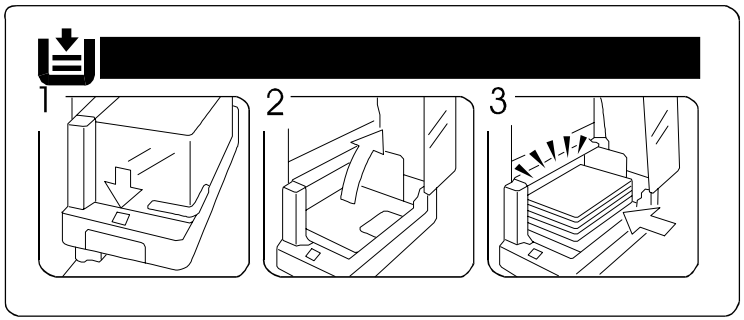

4



9

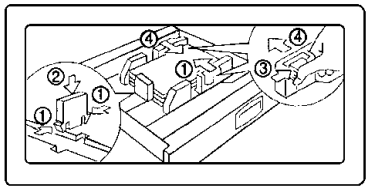

5

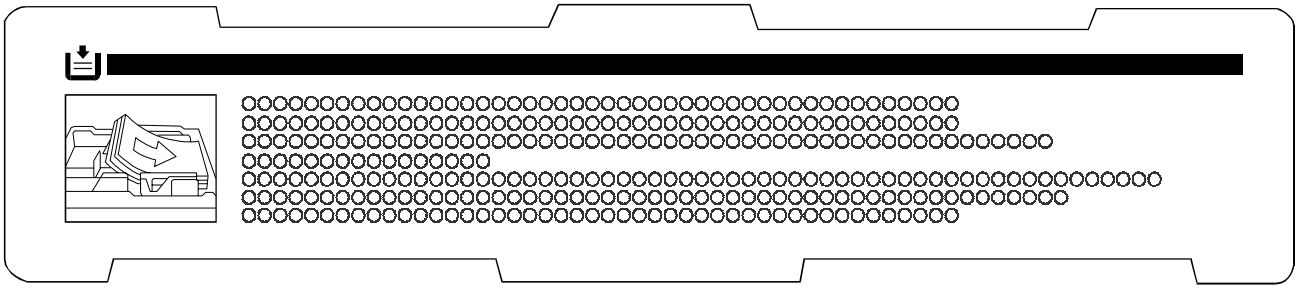

7

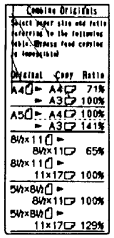

8



35. DECAL AND DOCUMENT (A160/A157)

Rev.10/15/96

Index No.	Part No.	Description	Q'ty Per Assembly
1	A153 2995	Decal Paper Size - LT/DLT	1
1	A153 2996	Decal Paper Size - A4/A3	1
2	AA00 1373	Decal - Main Switch	1
3	A155 6113	Decal - Paper Set	1
4	A153 1285	Emblem	1
5	A157 2758	Decal - Paper Setting	1
6	A157 8637	Operating Instructions - Energy Star	1
6	A157 8608	Operating Instructions - English ASIA	1
7	A156 1495	Decal - Copy Ratio	1
8	A153 1365	Symbol Explanation Decal	1
9	A157 2805	Decal - Paper Setting	1
10	AA00 2209	Decal - Paper Size	1

Index No.	Part No.	Description	Q'ty Per Assembly

36. SPECIAL TOOLS (A160/A157)

1

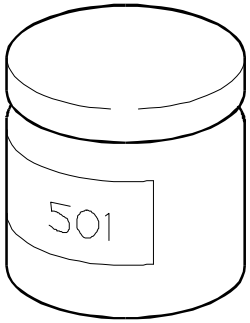

2

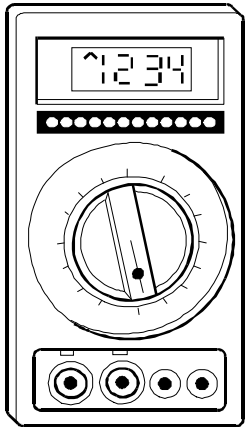

3

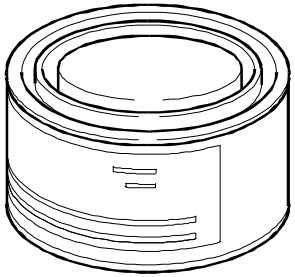

4

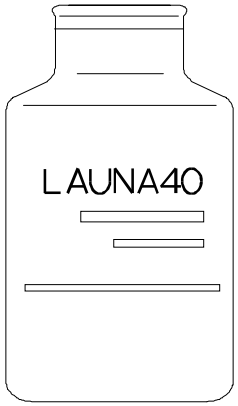

5

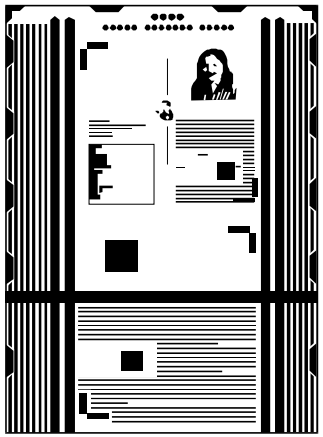

6

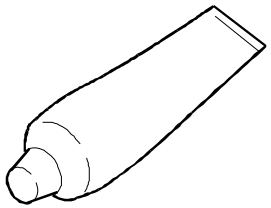

7

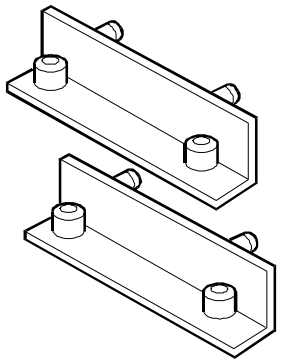

8

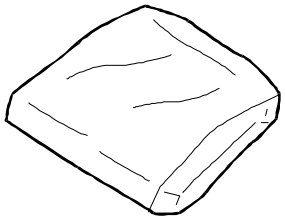

10



36. SPECIAL TOOLS (A160/A157)

Index No.	Part No.	Description	Q'ty Per Assembly
1	5203 9501	Grease 501	1
2	5420 9507	Digital Multimeter - Beckman	1
3	5447 9078	Heat Resisting Grease MT-78	1
3	A257 9300	Grease Barrierta - S552R	1
4	5442 9103	Launa Oil	1
5	5420 9516	Test Chart - OS -A3 (10PCS/SET)	1
6	A008 9502	Silicone Grease - G40M.	1
7	A153 9001	Scanner Adjustment Tool	2
8	A153 9004	Wiping Cloth	1
10	A153 9530	HR Cleaner	1

Index No.	Part No.	Description	Q'ty Per Assembly

A160/A157
PARTS INDEX

This section instructs you as to the numbers and names of parts on this machine.

Part No.	Description	Page and Index No.
A157 1111	Belt Tightener	63- 23
A157 1277	Front Cover (A157)	9- 2
A157 1301	Left Cover	9- 16
A157 1311	Left Inner Cover	9- 17
A157 1321	Left Inner Cover - Small	9- 18
A157 1351	Upper Inner Cover	9- 9
A157 1352	Right Lower Cover	9- 7
A157 1359	Lower Inner Cover	9- 8
A157 1360	Operation Sheet	9- 5
A157 1700	1st Scanner Ass'y	29- 1
A157 2550	Vertical Guide Plate	25- 23
A157 2551	Lower Guide Plate	25- 24
A157 2552	Vertical Relay Guide Plate	25- 25
A157 2553	Switch Actuator	25- 22
A157 2557	Spring Plate	13- 7
A157 2559	Switch Bracket	13- 4
A157 2560	Paper Feed Support Plate	65- 12
A157 2562	Solenoid Bracket	65- 23
A157 2563	Feed Drive Shaft	65- 21
A157 2564	Tightener	65- 11
A157 2571	Vertical Transport Guide	13- 8
A157 2751	Paper Tray	15- 1
A157 2754	Front Paper Stripper	15- 2
A157 2755	Rear Paper Stripper	15- 6
A157 2758	Decal - Paper Setting	15- 16
A157 2758	Decal - Paper Setting	77- 5
A157 2762	End Fence Spring	15- 9
A157 2764	Bottom Tray Sheet	15- 11
A157 2765	Bottom Plate Spring	15- 18
A157 2766	Front Stopper Lever	15- 3
A157 2767	Front Stopper Spring	15- 4
A157 2768	Rear Stopper Lever	15- 7
A157 2769	Rear Stopper Spring	15- 8
A157 2773	Feed Roller Holder	23- 23
A157 2774	Feed Roller	23- 7

Part No.	Description	Page and Index No
A157 2775	Feed Roller Shaft	23- 6
A157 2777	Feed Roller Cover	75- 14
A157 2781	Tray Positioning Rail	23- 13
A157 2782	Paper Tray Holder	23- 2
A157 2783	Left Rail	23- 25
A157 2783	Left Rail (A157)	75- 4
A157 2785	Right Rail	23- 16
A157 2785	Right Rail (A157)	75- 13
A157 2786	Lift Arm Stopper	23- 19
A157 2788	Lift Arm	23- 12
A157 2794	Lock Arm Stopper	23- 3
A157 2795	Stopper Bracket	23- 21
A157 2800	Paper End Sensor Bracket	23- 24
A157 2802	Paper End Sensor F	23- 5
A157 2804	Shield Plate - Paper End Sensor	23- 4
A157 2805	Decal - Paper Set	15- 21
A157 3861	Transfer Belt	43- 2
A157 3862	Transfer Belt Frame	43- 7
A157 3875	Front Side Plate	43- 4
A157 3876	Rear Side Plate	43- 9
A157 3882	Transfer Belt Casing	43- 28
A157 3883	Toner Collection Cap	43- 32
A157 3889	Connector Bracket	43- 24
A157 3900	Support Plate	43- 1
A157 3900	Support Plate	75- 3
A157 4450	Upper Guide Plate	57- 15
A157 4451	Upper Guide Plate	59- 11
A157 4456	Spring Plate	57- 13
A157 4456	Spring Plate	59- 9
A157 4459	Paper Exit Feeler	57- 11
A157 4459	Paper Exit Feeler	59- 7
A157 4460	Exit Cover	59- 12
A157 5101	Main Control Board - 120V	69- 2
A157 5111	Main Control Board - 220V	69- 2
A157 5160	ADS Sensor Board	31- 18

Part No.	Description	Page and Index No.
A157 5311	Rear Lower Harness - 2 tray	69- 17
A157 5316	Paper Feed Harness - 2 trays	69- 14
A157 5336	Vertical Transport Harness	13- 3
A157 8607	Operating Instructions - English LT	77- 6
A157 8608	Operating Instructions - English ASIA	77- 6
AA00 1373	Decal - Main Switch	9- 10
AA00 1373	Decal - Main Switch	77- 2
AA01 2080	Dust Filter	9- 26
AA04 3364	Timing Belt - S3M300	65- 8
AA04 3374	Timing Belt - S2M800	55- 17
AA04 3386	Timing Belt - 40S2M1224	33- 2
AA04 3387	Timing Belt - 40S2M984	33- 1
AA04 3388	Timing Belt - 60S2M180	33- 11
AA04 3389	Timing Belt - 60S3M201	65- 13
AA04 3390	Timing Belt - 40S2M192	51- 3
AA04 3391	Timing Belt - 160S2M328	61- 6
AA04 3392	Drum Timing Belt	61- 3
AA04 3393	Timing Belt - 80S3M519	61- 4
AA04 3396	Timing Belt - 60S3M366	61- 15
AA04 3397	Timing Belt - 30S3M300	61- 18
AA04 3456	Timing Belt - S3M167	19- 12
AA05 0086	Lens Drive Wire - Horizontal	27- 20
AA05 0087	Lens Drive Wire - Vertical	33- 26
AA05 1024	Release Wire	61- 20
AA05 1024	Release Wire	67- 4
AA05 1025	Release Wire	73- 4
AA06 0103	Solenoid Spring	45- 18
AA06 0228	Spring - Transfer Drum Cleaning Sol	61- 11
AA06 0453	Relay Adjusting Spring	35- 31
AA06 0453	Relay Adjusting Spring	65- 10
AA06 0534	Tray Lock Spring - 19mm	75- 7

Part No.	Description	Page and Index No
AA06 0572	Pressure spring	65- 7
AA06 0573	Release Spring	65- 4
AA06 0593	Spring	53- 9
AA06 0595	Tension Spring	33- 12
AA06 0598	Pressure Spring	41- 10
AA06 0605	Spring	47- 4
AA06 0640	Spring	23- 15
AA06 2285	Release Spring	73- 3
AA06 2286	Pressure Spring	39- 10
AA06 2290	Spring	63- 33
AA06 2291	Pressure Spring	73- 2
AA06 3205	Spring	23- 22
AA06 3239	Spring - Handle	17- 20
AA06 3366	Chuck Spring	35- 8
AA06 3367	Pressure Spring	35- 12
AA06 3370	Spring	55- 16
AA06 3499	Pressure Spring	21- 25
AA06 3523	Adjust Spring	31- 21
AA06 3524	Pressure Spring	63- 20
AA06 3532	Spring	71- 16
AA06 3539	Spring - Registration Roller	25- 5
AA06 6104	Spring	23- 10
AA06 6247	Torsion Spring	43- 26
AA06 6249	Spring	23- 18
AA06 6253	Pressure Spring	39- 22
AA06 6260	Shutter Spring	35- 17
AA06 6274	Spring	57- 12
AA06 6274	Spring	59- 8
AA08 0034	Bushing - 4x5x7	17- 37
AA08 0037	Bushing - 6 mm	21- 24
AA08 0154	Rear Bushing	41- 11
AA08 0171	Bushing	25- 7
AA08 0172	Bushing	25- 17
AA08 0186	Bushing - 6mm	37- 12
AA08 0188	Bushing - 5mm	37- 8

Part No.	Description	Page and Index No.
AA08 0189	Feed Roller Bushing - Front	23- 1
AA08 0190	Lift Arm Bushing	23- 17
AA08 0191	Front Roller Bushing	39- 18
AA08 0193	Rear Roller Bushing	39- 5
AA08 0195	Bias Roller Bushing - Rear	43- 11
AA08 0197	Rear Roller Bushing	39- 9
AA08 0209	Rear Roller Housing	39- 11
AA08 2047	Bushing - 8x16x7	25- 1
AA08 2047	Bushing - 8x16x7	63- 3
AA08 2047	Bushing - 8x16x7	65- 22
AA08 2058	Bushing - 6x10x9mm	57- 2
AA08 2058	Bushing - 6x10x9mm	59- 1
AA08 2061	Bias Roller Bushing - Front	43- 6
AA08 2063	Bushing - 8x10x5	47- 6
AA08 3012	Clutch Roller - 6x14x10	21- 13
AA11 1208	Paper End Sensor Feeler	51- 5
AA12 0067	Anti Static Brush	49- 16
AA12 0071	Exit Antistatic Brush	57- 16
AA12 0071	Exit Antistatic Brush	59- 4
AA13 2184	Motor Cushion	53- 16
AA13 2186	Collar	73- 8
AA13 2187	Spacer - 11mm	73- 6
AA13 2188	Spacer - 16mm	73- 7
AA13 4100	Boss	63- 34
AA14 0291	Bottom Plate Shaft	55- 6
AA14 0321	Pick-off Pawl Shaft	41- 4
AA14 0557	Scanner Drive Shaft	33- 4
AA14 0560	Joint Shaft	41- 26
AA14 0575	Paper Feed Shaft	21- 11
AA14 0576	LCT Drive Shaft	19- 15
AA14 3025	Stepped Screw - M3	35- 22
AA14 3219	Stepped Screw	21- 35
AA14 3301	Stepped Screw - M3x4	71- 11
AA14 3307	Stepped Screw - M3x4	53- 17
AA14 3410	Stepped Screw - M4	35- 11
AA14 3416	Stepped Screw - M4x3	9- 19
AA14 3417	Shoulder Screw - M4x4	9- 22
AA14 3444	Stepped Screw	73- 26
AA14 3445	Stud - M4	23- 20
AA14 3452	Stepped Screw	71- 14
AA14 3459	Knob Screw	35- 34
AA14 3712	Chuck Shaft	35- 5
AA14 3715	Stepped Screw - M5	45- 10
AA14 3716	Stepped Screw	39- 19
AA14 3730	Stepped Screw	39- 29
AA14 5537	Belt Release Shaft	43- 21
AA14 5539	Solenoid Shaft	63- 4
AA14 5794	Front Support Shaft	39- 20
AA14 5795	Rear Support Shaft	39- 12
AA14 8413	Idle Gear Shaft	35- 25
AA14 8439	Thermistor Shaft	39- 21
AA15 0231	Seal - 15X30	37- 20
AA15 0234	Mylar Seal - Base	35- 28
AA15 0366	Rear Side Seal	71- 1
AA15 0368	Shielding Plate - Cover - Lens	27- 4
AA15 0369	Original Sensor Seal	27- 2
AA15 0377	Shutter Seal	35- 20
AA15 0380	Seal Front Holder	41- 15
AA15 0381	Seal Rear Holder	41- 33
AA15 0382	Entrance Seal	37- 2
AA15 0383	Right Rail Sheet	23- 14
AA15 0389	Drum Guide Seal	41- 12
AA15 1809	Rear Seal	41- 9
AA15 1894	Seal - 67x53x2	35- 2
AA15 1935	Seal - 38x32x2.5	37- 4
AA15 1941	Shield - Case - Development - Right	27- 3
AA15 1942	Side Seal	41- 23
AA15 1943	Front Seal	41- 6
AA15 1944	Rear Seal	41- 8
AA15 1945	Joint Seal	39- 28

Part No.	Description	Page and Index No.
AA15 1998	Cushion - 10X30X5	13- 13
AA15 2245	Front Drum Seal	41- 13
AA15 2246	Rear Drum Seal	41- 31
AA15 2330	Magnification Seal	27- 12
AA15 2332	Casing	43- 15
AA15 2333	Entrance Seal	37- 1
AA16 1067	Cushion - Motor	53- 8
AA16 2067	Platen Cover Pad	11- 12
AA16 2068	Guide Plate Pad	49- 20
AB01 0341	Gear - 18Z	41- 1
AB01 0342	Idle Gear - 20Z	39- 17
AB01 0343	Idle Gear - 14Z	39- 16
AB01 0344	Roller Gear - 20Z	39- 15
AB01 1133	Gear - 49Z	19- 14
AB01 1153	Idle Gear - 25Z	65- 14
AB01 1165	Gear - 32Z	53- 5
AB01 1166	Gear - 33Z	51- 11
AB01 1167	Gear - 25Z	53- 15
AB01 1343	Idle Gear - 23Z	21- 9
AB01 1344	Gear - 16Z	21- 27
AB01 1345	Gear - 20Z	21- 28
AB01 1346	Gear - 27Z	21- 31
AB01 1357	Collection Coil Gear	41- 30
AB01 1358	Driven Gear	39- 4
AB01 1359	Joint Drive Gear	41- 27
AB01 1360	Idle Gear	41- 20
AB01 1361	Drive Gear	41- 14
AB01 3106	Gear - Drive - Third - Z18	57- 23
AB01 3343	Development Roller	37- 9
AB01 3485	Gear - 20Z	25- 3
AB01 3486	Gear - 14Z	25- 6
AB01 3868	Gear - 16Z	15- 12
AB01 3872	Fusing Cam Gear - 28Z	61- 14
AB01 3881	Gear - 31Z	55- 12
AB01 3882	Gear - 40Z	45- 23

Part No.	Description	Page and Index No
AB01 3883	Idle Gear - 25Z	45- 3
AB01 3884	Exit Gear - 17Z	47- 3
AB01 3885	Idle Gear - 20Z	47- 2
AB01 3889	Gear - 24Z	57- 6
AB01 3889	Gear - 24Z	59- 14
AB01 3908	Gear - 27Z	65- 20
AB01 3909	Idle Gear	37- 10
AB01 3911	Gear	37- 11
AB01 3916	Belt Drive Gear - 25Z	43- 10
AB01 3917	Toner Supply Gear	63- 2
AB01 3918	Drive Gear - 35Z	65- 15
AB01 7129	Gear - 20Z And 72Z	33- 17
AB01 7332	Gear - 24Z/41Z	53- 14
AB01 7337	Gear - 15Z/55Z	53- 4
AB01 7339	End Fence Gear - 22Z/58Z	55- 14
AB01 7345	Timing Pulley - 35Z	61- 17
AB01 7347	Idle Gear	35- 24
AB01 7360	Gear Pulley	27- 19
AB01 7360	Gear Pulley	33- 8
AB01 7361	Gear - 24Z/56Z	27- 21
AB01 7361	Gear - 24Z/56Z	33- 18
AB01 7362	Gear - 25Z/32Z	33- 7
AB01 7363	Timing Pulley	65- 17
AB01 7364	Timing Pulley - 24Z/20Z	65- 19
AB01 7366	Paddle Gear	37- 14
AB01 7367	Right Paddle Roller	37- 19
AB01 7368	Cleaning Drive Gear	63- 7
AB01 7369	Transfer Belt Pulley	63- 22
AB01 7370	Development Pulley	63- 24
AB01 7371	Exit Pulley	61- 9
AB01 7372	Blade Cam	41- 19
AB01 7373	Idle Cam	41- 25
AB01 7374	Drive Gear	41- 18
AB01 7375	Drive Gear	41- 17
AB01 7376	Separation Pawl Cam	41- 21

Part No.	Description	Page and Index No.
AB01 7377	Gear - 25Z	65- 18
AB01 7385	Gear - 17Z/24Z	63- 29
AB01 7386	Cleaning Cam	63- 1
AB01 7400	Gear- 18Z/68Z	55- 13
AB03 0281	Timing Pulley - 28Z	19- 9
AB03 0463	Fusing Cam Pulley	61- 13
AB03 0473	End Fence Pulley - 22Z	55- 11
AB03 0474	Pulley - 24Z	51- 2
AB03 0486	Timing Pulley - 24Z	33- 9
AB03 0487	Timing Pulley - 44Z	33- 16
AB03 0489	Timing Pulley - 22Z	33- 15
AB03 0491	Timing Pulley - 25Z	65- 9
AB03 0492	Pulley - 25/25/34/125Z	61- 5
AB03 0494	Drum Pulley	63- 14
AB03 2059	Driven Pulley	27- 14
AB03 2059	Driven Pulley	33- 23
AB03 3063	Timing Pulley - 22Z/24Z	33- 3
AB03 3064	Drive Pulley	65- 16
AB04 0015	Spring Clutch - Tray Bottom Plate	53- 12
AC01 5017	Shield Glass	73- 23
AC03 0103	1st Mirror	29- 13
AC03 0106	4/5 Mirror	31- 16
AC03 0107	6th Mirror	33- 20
AC03 5022	Rear Mirror Clamp - 1st Mirror	29- 2
AC04 2112	Left Original Scale - A4	9- 20
AC04 2116	Left Original Scale - LT	9- 20
AC04 2120	Rear Original Scale (A4)	9- 21
AC04 2124	Rear Original Scale - LT	9- 21
AD02 5019	Drum Pick-off Pawl	41- 2
AD02 7001	Drum Charge Roller	39- 13
AD03 7045	Toner Collection Coil	37- 13
AD04 3035	Toner Collection Coil	41- 16
AE01 1024	Hot Roller	45- 22
AE02 0050	Pressure Roller	47- 9
AE03 0022	Bearing - 12x24x64m	47- 8

Part No.	Description	Page and Index No
AE03 0023	Bearing - 30x42x7mm	45- 21
AE04 2018	Cleaning Rooler	47- 5
AE04 4013	Hot Roller Stripper	45- 20
AF01 0018	Duplex Tray	55- 27
AF01 3003	Bottom Plate Pad - Duplex	55- 2
AF01 3004	Bottom Plate Pad	15- 13
AF01 5027	Paper Size Slider	15- 20
AF01 6072	Front Side Fence	15- 5
AF01 6073	Rear Side Fence	15- 17
AF01 6160	Rear Side Fence	55- 3
AF01 6161	Front Side Fence	55- 4
AF01 7015	Paper End Fence	15- 10
AF02 0316	Lower Registration Roller	25- 13
AF02 0317	Stack Roller	51- 15
AF02 0319	Transport Roller	51- 6
AF02 0320	Right Transport Roller	51- 7
AF02 0327	Exit Roller	57- 20
AF02 0327	Exit Roller	59- 13
AF02 0330	Vertical Driven Roller	17- 36
AF02 0336	Inverter Drive Roller	57- 22
AF02 0337	Upper Relay Roller	25- 20
AF02 0338	Lower Relay Roller	25- 21
AF02 1052	Upper Registration Roller	25- 12
AF02 2042	Middle Pressure Roller	57- 14
AF02 2042	Middle Pressure Roller	59- 10
AF02 2077	Driven Roller	49- 7
AF02 2077	Driven Roller	51- 19
AF02 2079	Vertical Driven Roller	13- 6
AF02 5024	Pick-off Pawl	57- 21
AF03 0024	Pick-up Roller	21- 10
AF03 1024	Feed Roller	21- 7
AF03 1024	Feed Roller	51- 17
AF03 1027	Paper Feed Roller	23- 8
AF03 1030	Feed Roller	21- 7
AF03 2025	Separation Roller	21- 21

Part No.	Description	Page and Index No.
AF04 0031	Upper Exit Roller	49- 11
AF04 0031	Upper Exit Roller	57- 19
AF04 3076	Copy Tray Slide	9- 14
AF04 3077	Copy Tray Guide	9- 15
AF04 3083	Copy Tray	9- 13
AG01 1314	Operation Panel Ass'y - LT (A157)	9- 12
AG01 1315	Operation Panel Ass'y - LT (A160)	9- 12
AG01 1316	Operation Panel Ass'y - A4 (A157)	9- 12
AG01 1317	Operation Panel Ass'y - A4 (A160)	9- 12
AG05 0076	Fusing Knob	47- 10
AG05 0078	Registration Knob	9- 6
AG05 0078	Registration Knob	25- 2
AG07 0004	Magnetic Catch	9- 4
AG07 0004	Magnetic Catch	13- 5
AG07 0004	Magnetic Catch	19- 16
AG07 0004	Magnetic Catch	57- 3
AG07 0004	Magnetic Catch	73- 18
AG07 0009	Magnetic Catch	47- 15
AW01 0040	Original Sensor	31- 11
AW01 0042	Original Length Sensor	27- 5
AW02 0022	Photointerruptor	31- 13
AW02 0022	Photointerruptor	71- 8
AW02 0068	Photointerruptor	25- 15
AW02 0069	Photointerruptor	13- 9
AW02 0069	Photointerruptor	17- 28
AW02 0075	Photointerrupter	19- 7
AW02 0075	Photointerrupter	21- 16
AW02 0075	Photointerrupter	23- 11
AW02 0075	Photointerrupter	27- 13
AW02 0075	Photointerrupter	53- 21
AW02 0075	Photointerrupter	55- 18
AW02 0075	Photointerrupter	57- 10
AW02 0075	Photointerrupter	59- 6
AW02 0075	Photointerrupter	63- 27
AW03 0054	Optical Fiber - 250mm	69- 9
AW03 0055	Optical Fiber - 420mm	69- 8
AW03 0056	Optical Fiber - 550mm	71- 9
AW10 0027	Thermister	9- 29
AW10 0027	Thermister	29- 12
AW10 0032	Thermistor - 25°C 10k Ω	39- 24
AW23 0008	ID Sensor	37- 7
AW23 0009	Toner End Sensor	37- 5
AW50 0012	Push Switch	21- 17
AW50 0012	Push Switch	71- 5
AX05 0090	Motor - DC 24V 36W	19- 8
AX06 0108	Motor - DC24V 45W	61- 8
AX12 0039	DC SOL 24V 400GF	57- 25
AX20 0101	Magnetic Clutch - 2.5kgf 35Z	21- 12
AX20 0105	Magnetic Clutch - 15kgf 24Z	63- 6
AX20 0106	Magnetic Clutch - 15kgf 52Z	63- 9
AX20 0107	Magnetic Clutch - 10kgf 25Z	65- 25
AX20 0109	Magnetic Clutch - 10kgf.cm 35Z	65- 27
AX21 0047	Magnetic Clutch - 5kgf 42Z	65- 24
AX21 0049	Magnetic Clutch - 5kgf 42Z	63- 30
AX31 0022	Total Counter	65- 9
AX40 0021	Tray Anticondensation Heater - 115V 18W	67- 6
AX40 0022	Tray Anticondensation Heater - 240V 18W	67- 6
AX40 0047	Anticondensation Heater - 115V 15W	31- 22
AX40 0048	Anticondensation Heater - 240V 15W	31- 22
AX40 0063	Anticondensation Heater - 120V 9W	73- 1
AX40 0064	Anti Condensation Heater - 230V 9W	73- 1
AX43 0022	Fusing Lamp - 120V 550W	45- 25
AX43 0023	Fusing Lamp - 120V 350W	45- 24
AX43 0024	Fusing Lamp - 230V 550W 210mm	45- 25
AX43 0025	Fusing Lamp - 230V 350W 320mm	45- 24
AX52 0026	Exposure Lamp - 85V 200W	29- 7
AX52 0028	Exposure Lamp - 97V 200W	29- 7
AX64 0058	Fan Motor - DC 24V 4.32W	71- 6
AX64 0059	Fan Motor - DC24V 3.12W	57- 7
AX64 0059	Fan Motor - DC24V 3.12W	59- 3

Part No.	Description	Page and Index No.
AZ02 0008	Coil - 1 0mh 2A	71- 21
AZ13 0023	Transformer - 230V	69- 18
AZ23 0055	DC Drive Board - 100/120V	69- 10
AZ23 0060	DC Drive Board - 220V/240V	69- 10
AZ30 0041	Power Pack - Transfer Unit	43- 30
AZ32 0078	DC Power Pack	71- 2
AZ43 0020	High Voltage Supply Cord	63- 25
AZ43 0020	High Voltage Supply Cord	71- 3
AZ48 0029	Ct Harness	39- 1
C105 2352	Stepped Screw - M6x1.7	61- 12
G006 4317	Pressure Spring	41- 7
G011 3305	Gear - 16T	13- 25
G011 3305	Gear - 16T	55- 8
G012 3897	Relay Harness - Toner End Sensor	37- 15

Part No.	Description	Page and Index No
A008 9502	Silicone Grease - G40M.	79- 6
A028 9300	Grease Nok Barrierta - JFE 5 5/2	79- 3
A048 2838	Nylon Rivet	15- 15
A048 2863	Release Arm - Paper End	23- 9
A069 1883	Shoe - Scanner	27- 17
A069 1883	Shoe - Scanner	29- 3
A069 1883	Shoe - Scanner	31- 6
A075 1766	Adjusting Cam	33- 22
A077 1310	Snap Ring - M2	39- 6
A077 1673	Thermofuse Terminal	29- 5
A077 1690	Spring Plate - Mirror	31- 4
A077 1690	Spring Plate - Mirror	33- 19
A077 3918	Spring - T/S Unit	43- 20
A077 4162	Shoulder Screw - M3	47- 12
A079 3626	Stepped Screw - Swing Cleaning	53- 7
A085 1670	Exposure Adjusting Plate	29- 8
A096 1692	ADS Case	31- 15
A096 1693	ADS Cover	31- 14
A096 1873	Scanner Shoe Pin	31- 1
A096 5230	ADS Board	31- 27
A096 6266	Tray Lock Arm	75- 6
A111 1753	Seal - 0.1x18x49	27- 7
A134 1121	Joint Gear	61- 16
A134 1328	Small Cap	9- 30
A134 1394	Front Platen Cover	11- 4
A134 1395	Rear Platen Cover	11- 7
A134 1396	Original Holder	11- 8
A134 2554	Lower Registration Guide	25- 26
A134 2557	Regist Sensor Bracket	25- 14
A134 2580	Vertical Transfer Hinge	25- 11
A134 2586	Hinge Bracket	13- 10
A134 2591	Vertical Transfer	13- 2
A134 2654	Pick-up Arm	21- 30
A134 2656	Stopper Plate	21- 6
A134 2658	Grounding Plate	21- 5

Part No.	Description	Page and Index No.
A134 2659	By-pass Feed Housing	21- 15
A134 2660	Paper Feed Feeler	21- 2
A134 2661	Feeler Roller	21- 3
A134 2662	Grounding Plate	21- 18
A134 2663	Separation Guide	21- 20
A134 2667	Separation Drive Shaft	21- 29
A134 2668	Separation Driven Shaft	21- 23
A134 2670	By-pass Feed Cover	21- 4
A134 2674	Torque Limitter - 400fg	21- 22
A134 2675	Solenoid Bracket (A157)	65- 5
A134 2678	Solenoid Link (A157)	65- 3
A134 2680	DC Solenoid	65- 6
A134 2688	Positioning Plate	21- 1
A134 2689	Gear Cover	21- 26
A134 2690	By-pass Feed Table Ass'y	13- 12
A134 2696	By-pass Feed Table	13- 21
A134 2701	By-pass Feed Guide	13- 20
A134 2705	Magnet Catch Plate	13- 22
A134 2706	Rear Fence Rack	13- 24
A134 2707	Front Fence Rack	13- 26
A134 2711	Front Side Fence	13- 17
A134 2716	Rear Side Fence	13- 19
A134 2721	Front Paper Guide	13- 16
A134 2726	Rear Paper Guide	13- 18
A134 2731	By-pass Feed Entrance Guide	13- 14
A134 2746	By-pass Feed Cover	13- 27
A134 2921	Left Slide Rail (A160)	75- 4
A134 2926	Paper Feed Lock Bracket	75- 5
A134 2941	Tray Sensor Bracket	71- 4
A134 2947	Heater Cover	67- 10
A134 2956	Paper Feed Front Cover	15- 14
A134 2956	Paper Feed Front Cover	49- 1
A134 3157	Bottle Holder Bracket	35- 27
A134 3161	Bottle Drive Bracket	35- 26
A134 3162	Bottle Drive Motor	35- 23

Part No.	Description	Page and Index No
A134 3172	Toner Bottle Holder	35- 15
A134 3177	Toner Slider	35- 4
A134 3179	Chuck Shaft	35- 7
A134 3180	Bottle Chuck	35- 3
A134 3181	Chuck Roller	35- 6
A134 3190	Toner Bottle Stopper	35- 10
A134 3197	Bottle Holder	35- 13
A134 3201	Cam - Toner Bottle	35- 32
A134 3215	Rubber Cap	35- 9
A134 4061	Rear Terminal Plate	45- 11
A134 4112	Stripper Bracket	45- 19
A134 4115	Fusing Seal	45- 17
A134 4130	Fusing Front Cover	45- 1
A134 4161	Pressure Lever	47- 13
A134 4253	Fusing Exit Guide	47- 14
A134 4301	Exit Guide Hinge	47- 11
A134 4352	Fusing Lock Lever	75- 8
A134 4355	Fusing Unit Stopper	75- 12
A134 4508	Inverter Guide Plate	53- 13
A134 4512	Feed Roller Shaft	51- 21
A134 4525	End Fence	55- 26
A134 4527	Separation Roller	53- 20
A134 4619	Guide Plate Link	49- 12
A134 4620	Grounding Plate	55- 19
A134 4649	Paper Guide Holder	51- 16
A134 4654	Bottom Pressure Plate	55- 5
A134 4658	Vibrating Plate	53- 23
A134 4662	Duplex Guide Plate	53- 24
A134 4676	Paper End Feeler	51- 8
A134 4688	Front Side Fence Rack	55- 10
A134 4689	Rear Side Fence Rack	55- 9
A134 4690	Clutch Stopper	51- 20
A134 4701	Front Upper Cover	49- 3
A134 4710	End Fence Actuator	55- 24
A134 4712	Right Cover Bracket	49- 4

Part No.	Description	Page and Index No.
A134 4714	Tightener	55- 15
A134 4720	End Fence Upper Cover	49- 2
A134 4721	Connector Cover	49- 6
A134 4726	Guide Plate Knob	49- 19
A134 4728	Inverter Feeler	49- 5
A134 4730	Entrance Feeler	49- 14
A134 4739	Lower Guide Plate Knob	49- 9
A134 4740	Lower Guide Plate	49- 15
A134 4751	Front Side Plate	51- 1
A134 4765	Grounding Plate	53- 22
A134 4781	Rear Side Plate	51- 9
A134 4790	Paper End Sensor	53- 18
A134 4799	Motor Bracket	53- 1
A134 4800	Motor Bracket	53- 2
A134 4804	Guide Plate Stopper	53- 19
A134 4808	Rear Guide Holder	51- 18
A134 4809	Front Guide Holder	51- 14
A134 4884	Decal - Duplex Misfeed Removal	49- 21
A134 4901	Duplex Right Rail (A160)	75- 1
A134 5254	Duplex Control Board	55- 23
A134 5280	Paper Size Sensor Board	13- 23
A134 5290	Transport Drive Motor	53- 3
A134 5291	Jogger Drive Motor - Side Fence	55- 20
A134 5292	Jogger Drive Motor - End Fence	55- 21
A134 5311	By-pass Feed Harness	21- 14
A134 5320	Toner Bottle Cam	55- 28
A134 5321	Sensor Relay Harness	55- 25
A134 5322	End Fence Harness	55- 31
A134 5323	Motor Harness	55- 22
A153 1112	Drive Gear Holder	63- 15
A153 1117	Drum Drive Shaft	63- 21
A153 1125	Development Drive Bracket	63- 8
A153 1126	Edging	63- 38
A153 1127	Clutch Shaft	63- 5
A153 1128	Tightener	61- 10

Part No.	Description	Page and Index No
A153 1131	Development Support Plate	61- 7
A153 1132	Development Tightener	63- 16
A153 1135	Drum Drive Tightener	63- 19
A153 1251	Upper Cover	9- 24
A153 1261	Front Right Cover	9- 28
A153 1271	Rear Right Cover (A157)	9- 27
A153 1285	Emblem	9- 1
A153 1285	Emblem	77- 4
A153 1291	Rear Cover	9- 25
A153 1350	Right Middle Cover	73- 24
A153 1353	Front Cover Hinge	67- 1
A153 1354	Hinge Pin	9- 3
A153 1355	Key Counter Bracket	67- 2
A153 1370	Platen Cover Hinge	11- 3
A153 1377	Spring Plate	11- 6
A153 1378	Hinge Stopper	11- 5
A153 1380	Platen Cover Bracket	11- 11
A153 1383	Platen Cover Feeler	11- 9
A153 1469	Panel Cover	9- 11
A153 1637	Platen Cover Ass'y	11- 1
A153 1674	Shield Glass Guide	73- 19
A153 1677	Optical Fiber	73- 21
A153 1700	Scanner Drive Motor - DC2.3V 13.5W	33- 13
A153 1707	Tension Bracket - Long	33- 14
A153 1708	Tension Bracket - Short	33- 6
A153 1720	Scanner Rail	31- 12
A153 1721	Spring Plate	31- 10
A153 1750	Scale Bracket	29- 11
A153 1754	Exposure Stay	29- 14
A153 1776	Front Mirror Clamp - 1st Mirror	29- 4
A153 1777	Front Terminal	29- 6
A153 1778	Rear Terminal	29- 9
A153 1779	Thermostat - 121°C 250V 10A	29- 15
A153 1780	Exposure Lamp Harness	29- 10
A153 1781	Reflector	29- 16

Part No.	Description	Page and Index No.
A153 1801	2nd Scanner Ass'y	31- 8
A153 1805	Front Mirror Holder	31- 5
A153 1806	Rear Mirror Holder	31- 7
A153 1807	Harness Guide	31- 2
A153 1808	2nd Mirror	31- 3
A153 1809	3rd Mirror	31- 9
A153 1840	Lens Magnification Unit	27- 1
A153 1841	Lens Drive Unit	27- 11
A153 1906	Adjust Shoe	31- 20
A153 1908	Shielding Plate	31- 17
A153 1912	3rd Scanner Stay	31- 26
A153 1914	3rd Scanner Rack	31- 19
A153 1947	Magnification Drive Unit Bracket	33- 24
A153 1952	Magnification Rail	33- 21
A153 1961	Lens Cover	27- 6
A153 1971	Original Sensor Bracket	27- 8
A153 1976	ADS Sensor Bracket	31- 25
A153 1986	Cooling Fan Duct	71- 7
A153 2060	Wire Pulley	73- 13
A153 2071	Cam Lever	73- 15
A153 2072	Release Link Lever	73- 5
A153 2073	Guide Rail	73- 9
A153 2075	Front Roller Cam	73- 11
A153 2076	Rear Roller Cam	73- 12
A153 2080	Eraser Lamp	73- 17
A153 2083	Left Drum Rail	73- 16
A153 2084	Spacer	73- 10
A153 2085	Spacer	73- 27
A153 2090	Quenching Lamp	73- 14
A153 2101	Ptl Lamp	25- 9
A153 2110	Transfer Roller Bracket	39- 2
A153 2116	Grounding Plate	39- 7
A153 2118	Charge Roller Terminal	39- 8
A153 2120	Drum Charge Roller Cleaner	39- 25
A153 2126	Swing Arm	39- 3

Part No.	Description	Page and Index No
A153 2130	Receptacle Housing	63- 13
A153 2133	Thermistor Bracket	39- 23
A153 2142	Cam Lever	63- 32
A153 2143	Shielding Plate	39- 14
A153 2253	Drum Unit	39- 0
A153 2275	Cleaning Blade	41- 5
A153 2303	Grounding Plate	41- 34
A153 2558	Upper Registration Guide	25- 19
A153 2560	Rear Guide Plate	21- 19
A153 2563	Middle Guide Plate	25- 18
A153 2995	Decal Paper Size - LT/DLT	15- 19
A153 2995	Decal Paper Size - LT/DLT	77- 1
A153 2996	Decal Paper Size - A4/A3	15- 19
A153 2996	Decal Paper Size - A4/A3	77- 1
A153 3051	Development Unit	37- 0
A153 3080	Development Filter	37- 18
A153 3086	Bias Terminal	63- 12
A153 3087	Terminal Cap	63- 11
A153 3090	Development Position Plate	37- 16
A153 3095	Development Rail	25- 8
A153 3114	Transfer Entrance Guide	25- 10
A153 3149	Knob Screw - M4x12	37- 17
A153 3172	Shutter	35- 19
A153 3173	Shutter Guide	35- 16
A153 3174	Shutter Holder	35- 18
A153 3185	Toner Supply Gear (230V)	35- 1
A153 3187	Toner Supply Gear (115V)	35- 1
A153 3189	Toner Supply Gear (ASIA/TIWAN)	35- 1
A153 3200	Toner Hopper Ass'y	35- 0
A153 3200	Toner Hopper Ass'y	37- 3
A153 3262	Bottle Unit Hinge	35- 29
A153 3264	Bottle Unit Upper Hinge	35- 33
A153 3265	Bottle Unit Lock Plate	35- 21
A153 3266	Bottle Unit Link Plate	35- 30
A153 3281	Bottle Bracket Cover	35- 14

Part No.	Description	Page and Index No.
A153 3554	Spring Plate	41- 24
A153 3555	Cleaning Entrance Seal	41- 32
A153 3558	Blade Seal	41- 22
A153 3580	Toner Collection Unit	39- 27
A153 3590	Density Sensor Bracket	41- 28
A153 3595	Pick-off Pawl Retainer	41- 3
A153 3598	Pin Bracket	73- 22
A153 3866	Belt Drive Roller	43- 3
A153 3867	Belt Driven Roller	43- 13
A153 3870	Transfer Bias Roller	43- 8
A153 3873	Bias Roller Terminal	43- 5
A153 3874	Earth Terminal	43- 12
A153 3877	Spring Plate	43- 29
A153 3884	Belt Guide Plate	43- 14
A153 3886	Belt Pressure Lever	43- 19
A153 3887	Belt Release Stay	43- 22
A153 3888	Earth Plate	43- 27
A153 3892	Belt Cleaning Blade	43- 17
A153 3893	Belt Cleaning Stay	43- 18
A153 3894	Bushing	43- 16
A153 3895	Front Bushing	43- 25
A153 3897	Harness Clamp	43- 23
A153 3898	Entrance Guide Plate	43- 31
A153 3911	Cam Shaft	63- 31
A153 3914	Magnetic Clutch Feeler	63- 28
A153 3915	Magnetic Clutch Bracket	63- 26
A153 3917	Magnetic Clutch Bracket	63- 35
A153 3918	Break Pad	63- 36
A153 3919	Spacer	63- 37
A153 3920	Belt Release Arm	73- 25
A153 3930	Belt Unit Handle	75- 11
A153 4053	Fusing Upper Stay	45- 2
A153 4055	Upper Fusing Guide	45- 26
A153 4062	Electrode Plate - Middle	45- 12
A153 4063	Front Terminal Plate	45- 14

Part No.	Description	Page and Index No
A153 4074	Terminal Connector - 2p	45- 4
A153 4075	Front Holder	45- 15
A153 4077	Thermistor	45- 9
A153 4084	Fusing Connector Bracket	45- 6
A153 4085	Thermistor - 2	45- 8
A153 4102	Front Lamp Terminal Holder	45- 16
A153 4103	Rear Lamp Terminal Holder	45- 7
A153 4196	Lower Fusing Guide	47- 1
A153 4205	Cleaning Roller Bracket	47- 7
A153 5104	IC - 4MX16-120NS	69- 4
A153 5114	Ram Board	69- 15
A153 5132	Density Sensor	41- 29
A153 5141	Lens Drive Harness	27- 16
A153 5211	Mirror Drive Motor - DC24V 8.6V	33- 25
A153 5212	Lens Drive Motor - Horizontal	27- 18
A153 5213	Lens Drive Motor - DC24V 8.6W	33- 5
A153 5266	Thermofuse - 169°C	45- 13
A153 5300	Fusing Unit Connector (115V)	45- 5
A153 5301	AC Main Harness - 120V	67- 3
A153 5312	Optical Harness	69- 13
A153 5320	Front Right Harness	67- 5
A153 5324	Sorter Relay Harness	71- 12
A153 5326	Fusing Relay Harness (115V)	71- 10
A153 5328	Ct Harness	57- 9
A153 5328	Ct Harness	59- 5
A153 5330	Ct Harness - 7p	37- 6
A153 5333	Ct Harness	25- 16
A153 5334	Ct Harness - 7p	75- 2
A153 5337	Fusing Relay Harness (230V)	71- 10
A153 5339	Density Sensor Harness	73- 20
A153 5340	Ct Harness	63- 10
A153 5344	Power Supply Harness - 2 trays	69- 7
A153 5391	Optical Harness - 1	27- 9
A153 5392	Optical Harness - 2	27- 10
A153 5393	Optical Harness - 3	31- 23

Part No.	Description	Page and Index No.
A153 5395	Optical Harness - 5	27- 15
A153 5471	Power Supply Cord (110V)	71- 13
A153 5545	AC Drive Board - 120V	69- 11
A153 5571	Power Supply Cord - 120V	71- 13
A153 5601	AC Relay Harness	71- 19
A153 5621	Noise Filter Board	71- 20
A153 5644	Tray Power Supply Harness	69- 16
A153 5645	AC Drive Board (230V)	69- 11
A153 5661	AC Main Harness (230V)	67- 3
A153 5665	Fusing Unit Connector (230V)	45- 5
A153 5671	Power Supply Cord (230V)	71- 13
A153 5801	DC Drive Board Bracket	69- 12
A153 5802	Lower Bracket - DC Drive Board	61- 1
A153 5803	Upper Bracket - DC Drive Board	33- 10
A153 5803	Upper Bracket - DC Drive Board	69- 6
A153 5810	Power Supply Cord Bracket	71- 17
A153 5811	Main Control Board Bracket	69- 1
A153 5812	Left Lower Bracket	65- 26
A153 5813	Main Control Board Bracket	65- 1
A153 5820	Total Counter Bracket	67- 11
A153 5888	Fusing Unit Joint Connector	71- 18
A153 9001	Scanner Adjustment Tool	79- 7
A153 9004	Wiping Cloth	79- 8
A153 9510	Opc Drum	39- 26
A153 9513	Harness - ADS	31- 24
A154 4616	Paper Holder	49- 17
A154 4620	Bottom Plate	55- 1
A154 4621	Front Guide Plate	55- 30
A154 4622	Rear Guide Plate	55- 29
A154 5325	Duplex Unit Relay Harness	71- 15
A155 2667	Lift Sensor Feeler	21- 34
A155 2675	Pick-up Bracket (A159/A160)	65- 5
A155 2676	Pick-up Lever	65- 2
A155 2677	Pick-up Link (A159/A160)	65- 3
A155 2682	Lift Sensor Bracket	21- 32

Part No.	Description	Page and Index No
A155 5165	LCT Main Board	19- 18
A155 5170	Push Switch	19- 27
A155 5314	LCT Relay Harness	19- 24
A155 5342	LCT Harness	19- 31
A155 5345	Ct Harness	21- 33
A155 5348	Paper End Sensor Harness	19- 4
A155 5349	LCT Vertical Harness	17- 33
A155 6101	LCT Upper Cover	17- 6
A155 6111	Front Side Plate	19- 29
A155 6113	Decal - Paper Set	17- 2
A155 6113	Decal - Paper Set	77- 3
A155 6114	Caution Decal - LCT	17- 35
A155 6116	Safety Switch Bracket	19- 21
A155 6117	Safety Switch Lever	19- 23
A155 6118	Spring Plate	19- 20
A155 6125	Rear Side Bracket	19- 28
A155 6136	Lift Sensor Bracket	19- 11
A155 6141	Tray Bottom Plate	19- 17
A155 6142	LCT Paper Tray	17- 14
A155 6143	Left Bracket	19- 1
A155 6145	Tray Cover	19- 19
A155 6147	Paper End Sensor Bracket	19- 3
A155 6148	Paper Ding Sensor Feeler	19- 2
A155 6153	Upper Hinge	19- 6
A155 6160	Lower Hinge	17- 31
A155 6162	Cushion	17- 34
A155 6169	Hinge Holder	17- 30
A155 6170	Hinge Bracket	17- 21
A155 6171	Grip Bracket	17- 19
A155 6175	LCT Positioning Plate	17- 32
A155 6181	Knob	17- 18
A155 6191	LCT Front Cover	17- 17
A155 6201	LCT Hinge Bracket	17- 8
A155 6203	Paper Tray Stay	19- 5
A155 6207	Cover Bracket	17- 3

Part No.	Description	Page and Index No.
A155 6215	Harness Guide	19- 30
A155 6221	LCT Rear Cover	17- 15
A155 6231	LCT Right Cover	17- 16
A155 6241	LCT Harness Cover	17- 26
A155 6251	Upper Stay	17- 9
A155 6302	Hinge Angle	17- 5
A155 6303	Fix Hinge	17- 4
A155 6306	Front Side Fence	17- 22
A155 6307	Rear Side Fence	17- 12
A155 6311	Front Paper Holder	17- 23
A155 6312	Rear Paper Holder	17- 10
A155 6313	Support Guide	17- 11
A155 6321	Front Spring Plate	17- 24
A155 6322	Rear Sprig Plate	17- 25
A155 6324	End Fence	17- 1
A158 1360	Operation Sheet	9- 5
A158 4451	Reverse Guide Plate	57- 5
A158 4452	Lower Reverse Guide Plate	57- 4
A158 4453	Exit Cover	57- 17
A158 4459	Spring Plate	57- 18
A158 4463	Pick-off Pawl Arm	57- 24
A158 4466	Switch Bracket	61- 21
A158 4467	Solenoid Bracket	57- 26
A158 4603	Paper Holder	49- 18
A158 4604	Duplex Lower Guide	49- 22
A158 4607	Upper Guide Plate	49- 10
A158 5309	Rear Lower Harness - Duplex	69- 17
A158 5310	Duplex Paper Feed Harness	69- 14
A158 5319	Rear Upper Harness - Duplex	69- 5
A158 5343	Duplex Power Supply Harness	69- 7
A159 1277	Front Cover (A159)	9- 2
A159 6181	Vertical Guide Plate - LCT	17- 27
A159 6182	Switch Bracket	17- 29
A159 6183	Positioning Guide	25- 27
A159 6184	Guide Plate Bracket	25- 28

Part No.	Description	Page and Index No
A160 1277	Front Cover (A160)	9- 2
A160 5643	Power Supply Harness - Duplex 220/230V	69- 16
A300 3155	Stepped Screw - M25x32	19- 22
A334 4706	Disk - Bottom Plate Clutch	53- 11
A335 1341	Chain Hook	19- 32
A335 3251	Top Cover Hinge	17- 7
A335 4351	Guide Roller	19- 10
A335 4352	Timing Belt Clamp	19- 25
A421 2543	Friction Pad	17- 13
A470 1703	Shift Clutch	57- 27
A470 1703	Shift Clutch	59- 15
A470 1704	Spring - Lower Exit Roller	57- 8
A470 1704	Spring - Lower Exit Roller	59- 2
A491 4690	Bottom Plate Hook	55- 7
5053 0223	Bushing - 8mm	19- 26
5053 0447	Bushing - 6mm	51- 10
5053 0447	Bushing - 6mm	57- 1
5203 1686	Screw - Slid Rail	75- 10
5203 3151	Roller Cover Spring	61- 19
5203 3151	Roller Cover Spring	63- 18
5203 9501	Grease 501	79- 1
5206 2686	Snap Ring	49- 8
5215 1667	Platen Cover Stud	11- 10
5215 1980	Exposure Glass - A3t-3.2	9- 23
5215 2621	Snap Ring - M6	13- 1
5215 2621	Snap Ring - M6	51- 13
5304 1639	Bushing - 8mm	51- 12
5420 9507	Digital Multimeter - Beckman	79- 2
5420 9516	Test Chart - OS -A3 (10PCS/SET)	79- 5
5442 1111	Spring - Main Drive Tightner	63- 17
5442 4467	Spring - Stripper Pawl Plate	67- 8
5442 4467	Spring - Stripper Pawl Plate	75- 9
5442 9103	Launa Oil	79- 4
5443 2668	Bushing - 4x6x7mm	51- 4
5443 2668	Bushing - 4x6x7mm	53- 6

Part No.	Description	Page and Index No.
5446 1239	Plate Nut - Key Counter	67- 7
5447 2681	Snap Ring	13- 11
5447 2681	Snap Ring	21- 8
5447 2681	Snap Ring	53- 10
5447 2768	Stepped Screw - M3	49- 13
5447 2927	Friction Pad - B	13- 15
5447 9078	Heat Resisting Grease MT-78	79- 3
5448 2804	Platen Cover Sheet	11- 2
5474 2152	Bushing - 8x12x12mm	25- 4
5925 2258	Stopper Chain	19- 13

Part No.	Description	Page and Index No
0313 0040B	Philips Pan Head Screw - M3x4	9-104
0313 0040B	Philips Pan Head Screw - M3x4	29-107
0313 0040B	Philips Pan Head Screw - M3x4	57-108
0313 0040B	Philips Pan Head Screw - M3x4	73-105
0313 0050B	Philips Pan Head Screw - M3X5	45-107
0313 0050B	Philips Pan Head Screw - M3x5	53-102
0313 0060B	Philips Pan Head Screw - M3x6	29-108
0313 0060B	Philips Pan Head Screw - M3x6	39-103
0313 0080B	Philips Pan Head Screw - M3x8	41-106
0313 0140B	Philips Pan Head Screw - M3x14	13-104
0313 0140B	Philips Pan Head Screw - M3x14	61-105
0314 0060B	Philips Pan Head Screw - M4x6	29-109
0314 0060B	Philips Pan Head Screw - M4x6	37-102
0314 0060B	Philips Pan Head Screw - M4x6	41-101
0314 0060B	Philips Pan Head Screw - M4x6	45-104
0314 0060B	Philips Pan Head Screw - M4x6	67-106
0314 0100B	Philips Pan Head Screw - M4x10	31-101
0323 0060B	Philips Sunk Screw - M3x6	35-101
0323 0060B	Philips Sunk Screw - M3x6	69-108
0323 0080B	Philips Sunk Screw - M3x8	67-104
0344 0080F	Philips Truss Head Screw - M4x8	49-103
0353 0300B	Bind Screw - M3x30	57-105
0353 0300B	Bind Screw - M3x30	59-104
0413 0060W	Tapping Screw - M3x6	29-105
0413 0062B	Tapping Screw - M3x6	27-102
0413 0062W	Tapping Screw - M3x6	29-103
0413 0082B	Tapping Screw - M3X8	23-105
0414 0080B	Tapping Screw - M4x8	17-102
0414 0080B	Tapping Screw - M4x8	21-103
0414 0080B	Tapping Screw - M4x8	23-102
0414 0080B	Tapping Screw - M4x8	27-107
0414 0080B	Tapping Screw - M4x8	31-104
0414 0080B	Tapping Screw - M4x8	63-106
0414 0082W	Tapping Screw With Flat Washer - M4x8	13-102
0414 0082W	Tapping Screw With Flat Washer - M4x8	29-102

Part No.	Description	Page and Index No.
0414 0122B	Philips Tapping Screw - M4x12	47-102
0414 0142B	Binding Self Tapping Screw - M4x14	11-101
0414 0142B	Binding Self Tapping Screw - M4x14	71-106
0433 0050B	Tapping Screw - M3x5	35-102
0433 0060W	Tapping Screw - M3x6	33-110
0434 0060B	Philips Tapping Screw - M4x6	15-101
0434 0060B	Philips Tapping Screw - M4x6	17-101
0434 0060B	Philips Tapping Screw - M4x6	19-101
0434 0060B	Philips Tapping Screw - M4x6	23-101
0434 0060B	Philips Tapping Screw - M4x6	25-102
0434 0060B	Philips Tapping Screw - M4x6	31-107
0434 0060B	Philips Tapping Screw - M4x6	33-103
0434 0060B	Philips Tapping Screw - M4x6	35-108
0434 0060B	Philips Tapping Screw - M4x6	43-101
0434 0060B	Philips Tapping Screw - M4x6	53-107
0434 0060B	Philips Tapping Screw - M4x6	57-104
0434 0060B	Philips Tapping Screw - M4x6	59-102
0434 0060B	Philips Tapping Screw - M4x6	61-104
0434 0060B	Philips Tapping Screw - M4x6	63-105
0434 0060B	Philips Tapping Screw - M4x6	67-101
0434 0060B	Philips Tapping Screw - M4x6	69-107
0434 0060B	Philips Tapping Screw - M4x6	73-101
0434 0060B	Philips Tapping Screw - M4x6	75-101
0434 0080B	Philips Tapping Screw - M4x8	57-102
0434 0082B	Tapping Screw - M4x8	9-101
0434 0082B	Tapping Screw - M4x8	47-103
0434 0082B	Tapping Screw - M4x8	57-103
0434 0352W	Pan Head Self-tapping Screw - M4x35	71-105
0443 0060B	Hexagon Tapping Screw - M3x6	19-103
0443 0060B	Hexagon Tapping Screw - M3x6	43-109
0443 0060B	Hexagon Tapping Screw - M3x6	51-101
0443 0060B	Hexagon Tapping Screw - M3x6	53-104
0443 0060B	Hexagon Tapping Screw - M3x6	71-108
0443 0060W	Hexagon Head Tapping Screw - M3x6	49-102
0443 0080B	Tapping Screw - M3x8	43-104

Part No.	Description	Page and Index No
0443 0080W	Hexagon Head Tapping Screw - M3x8	31-102
0573 0040E	Hexagon Headless Set Screw - M3x4	33-101
0573 0040E	Hexagon Headless Set Screw - M3x4	63-102
0574 0050E	Hexagon Headless Set Screw - M4x5	33-105
0622 0100E	Spring Pin - 2x10mm	21-104
0623 0160E	Spring Pin - 3x16mm	19-106
0707 8140B	Bushing - 8x14mm	61-101
0720 0015E	Retaining Ring - 1.5	39-104
0720 0020E	Retaining Ring - M2	23-103
0720 0020E	Retaining Ring - M2	39-106
0720 0030E	Retaining Ring - M3	23-104
0720 0030E	Retaining Ring - M3	37-106
0720 0030E	Retaining Ring - M3	41-105
0720 0030E	Retaining Ring - M3	43-103
0720 0030E	Retaining Ring - M3	53-103
0720 0030E	Retaining Ring - M3	73-102
0720 0040E	Retaining Ring - M4	21-101
0720 0040E	Retaining Ring - M4	25-103
0720 0040E	Retaining Ring - M4	27-106
0720 0040E	Retaining Ring - M4	33-102
0720 0040E	Retaining Ring - M4	35-106
0720 0040E	Retaining Ring - M4	37-105
0720 0040E	Retaining Ring - M4	39-102
0720 0040E	Retaining Ring - M4	41-107
0720 0040E	Retaining Ring - M4	47-101
0720 0040E	Retaining Ring - M4	51-103
0720 0040E	Retaining Ring - M4	53-106
0720 0040E	Retaining Ring - M4	55-103
0720 0040E	Retaining Ring - M4	57-101
0720 0040E	Retaining Ring - M4	59-103
0720 0040E	Retaining Ring - M4	65-104
0720 0040E	Retaining Ring - M4	73-103
0720 0040E	Retaining Ring - M4	75-104
0720 0060	Retaining Ring - M6	63-111
0720 0060E	Retaining Ring - M6	19-104

Part No.	Description	Page and Index No.
0720 0060E	Retaining Ring - M6	25-104
0720 0060E	Retaining Ring - M6	33-106
0720 0060E	Retaining Ring - M6	43-106
0720 0060E	Retaining Ring - M6	45-103
0720 0060E	Retaining Ring - M6	61-103
0720 0060E	Retaining Ring - M6	63-110
0720 0060E	Retaining Ring - M6	65-103
0720 0090E	Retaining Ring - M9	37-104
0725 0100E	Retaining Ring C - M10	35-107
0725 0120E	Retaining Ring C - M12	47-104
0725 0300E	Retaining Ring C - M30	45-106
0740 3008	Ball Bearing - 8x22x7	33-107
0740 3008	Ball Bearing - 8x22x7	63-101
0800 0072	Philips Pan Head Screw - M2.6x4	35-105
0801 0137	Philips Pan Head Screw With Spring	69-109
0802 5085	Tapping Screw - M4x8	13-103
0802 5094	Tapping Truss Head Screw - M4x8	9-103
0802 5094	Tapping Truss Head Screw - M4x8	17-103
0802 5221	Tapping Screw - M3x10	63-108
0802 5231	Tapping Screw - M3x6	31-106
0802 5231	Tapping Screw - M3x6	35-103
0802 5231	Tapping Screw - M3x6	37-101
0802 5232	Tapping Screw - M3x8	27-103
0802 5232	Tapping Screw - M3x8	43-102
0802 5232	Tapping Screw - M3x8	55-102
0802 5233	Tapping Screw - M3x10	35-104
0802 5233	Tapping Screw - M3x10	39-109
0802 5233	Tapping Screw - M3x10	41-102
0802 5234	Tapping Screw - M3x12	55-105
0802 5236	Tapping Screw - M4x8	19-102
0802 5236	Tapping Screw - M4x8	49-101
0802 5236	Tapping Screw - M4x8	53-105
0802 5236	Tapping Screw - M4x8	55-104
0802 5236	Tapping Screw - M4x8	57-107
0802 5236	Tapping Screw - M4x8	59-101

Part No.	Description	Page and Index No
0802 5236	Tapping Screw - M4x8	63-107
0802 5237	Tapping Screw - M4x10	27-101
0802 5237	Tapping Screw - M4X10	47-106
0803 0017	Knob Screw - M4x6.5	41-103
0805 3384	Bushing - 5mm	41-108
0805 3471	Bushing - M8x22x7	39-107
0805 3480	Bushing - 6mm	21-102
0805 3485	Bushing - 8x12x3.5mm	43-105
0807 4072	Washer - Core	57-109
0807 4072	Washer - Core	59-106
0950 3005B	Philips Screw With Spring Washer - M3x5	29-104
0950 4006M	Philips Screw With Flat Washer - M4x6	45-105
0950 4008B	Philips Screw With Spring Washer - M4x8	47-105
0950 4008B	Philips Screw With Spring Washer - M4x8	63-109
0951 3005B	Philips Screw With Flat Washer M3x5	31-105
0951 3006B	Philips Screw With Flat Washer - M3x6	25-101
0951 3006B	Philips Screw With Flat Washer - M3x6	29-101
0951 3006B	Philips Screw With Flat Washer - M3x6	55-101
0951 3006B	Philips Screw With Flat Washer - M3x6	71-102
0951 3008B	Philips Screw With Flat Washer - M3x8	39-105
0951 4006B	Philips Screw With Washer - M4x6	27-104
0951 4006B	Philips Screw With Washer - M4x6	33-109
0951 4008B	Philips Screw With Washer - M4x8	33-104
0951 4008B	Philips Screw With Washer - M4x8	51-102
0951 4012B	Philips Screw With Flat Washer	63-103
0951 5010B	Philips Screw With Washer - M5x10	39-108
0953 4008M	Screw - M4X8	9-105
0954 3010B	Philips Screw - M3x10	45-101
0954 4012B	Double Sems Screw - M4 X 12	45-102
0964 4006B	Tapping Screw With Flat Washer - M4x6	73-104
0964 4008B	Tapping Screw With Flat Washer - M4x8	9-102
0964 4008B	Tapping Screw With Flat Washer - M4x8	29-106
0964 4008B	Tapping Screw With Flat Washer - M4x8	71-107
0965 3006B	Tapping Screw With Flat Washer M3x6	13-105
0965 3008B	Tapping Screw With Washer - M3x8	43-108

Part No.	Description	Page and Index No.
0965 3008W	Tapping Screw With Flat Washer - M3x8	27-105
0965 3010B	Tapping Screw With Flat Washer - M3x6	41-104
0971 3006A	Philips Polycarbonate Screw - M3x6	41-109
1102 4052	Optional Connector	69-102
1102 4052	Optional Connector	71-104
1102 4473	Ct Connector - 2p	71-103
1102 6613	Relay Terminal - 2P	39-101
1105 0192	Locking Support	65-101
1105 0192	Locking Support	71-101
1105 0196	Harness Clamp	43-107
1105 0199	Clamp	19-107
1105 0199	Clamp	35-109
1105 0199	Clamp	37-103
1105 0199	Clamp	53-101
1105 0199	Clamp	57-106
1105 0199	Clamp	59-105
1105 0199	Clamp	61-102
1105 0199	Clamp	63-104
1105 0199	Clamp	65-102
1105 0199	Clamp	75-103
1105 0229	Clamp	67-105
1105 0230	Clamp	31-103
1105 0230	Clamp	33-108
1105 0231	Clamp	31-108
1105 0231	Clamp	67-107
1105 0367	Spacer	69-101
1105 0409	Spacer	69-103
1106 0193	Bushing - 7.9mm	75-102
1107 0392	Fuse - 6.3A	69-104
1107 0393	Fuse - 8A,125V	69-105
1107 0753	Fuse - 6.3A 250V	69-106
1204 1545	Main Switch	67-102
1204 2355	Micro Switch - AM51632A531	19-105
1204 2356	Micro Switch - AM51612A531	13-101
1204 2356	Micro Switch - AM51612A531	17-104

Part No.	Description	Page and Index No
1204 2356	Micro Switch - AM51612A531	61- 2
1204 2397	Safety Switch	67-103

A162/A161
PARTS CATALOG

A162/A161
PARTS LOCATION AND LIST

This section instructs you as to the numbers and names of parts on this machine.

LOCATION OF UNIT

1. EXTERIOR (A161/A162)

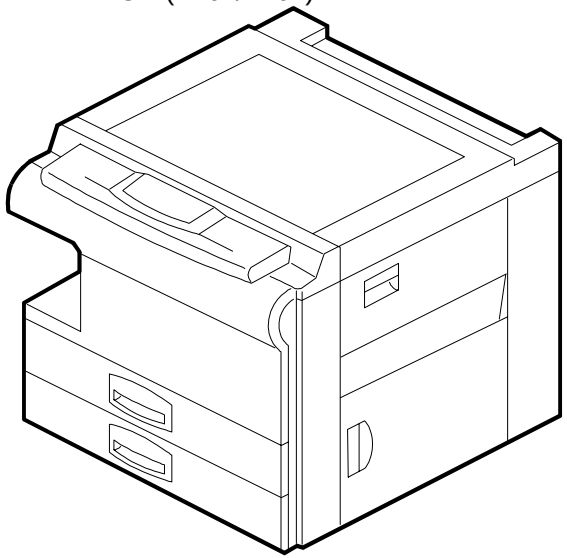

See Page 8

2. PLATEN COVER ASS'Y (A161/A162)

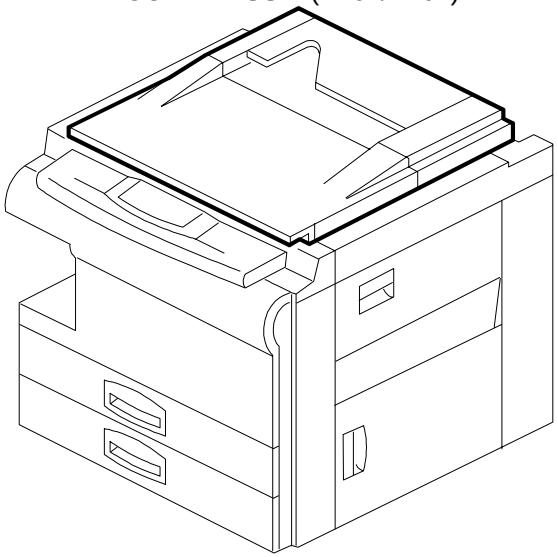

See Page 10

3. BY-PASS FEED SECTION (A161/A162)

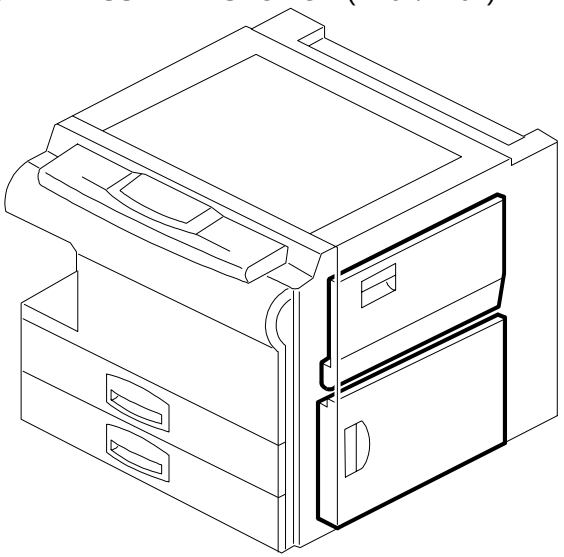

See Page 12

4. PAPER TRAY SECTION (A161/A162)

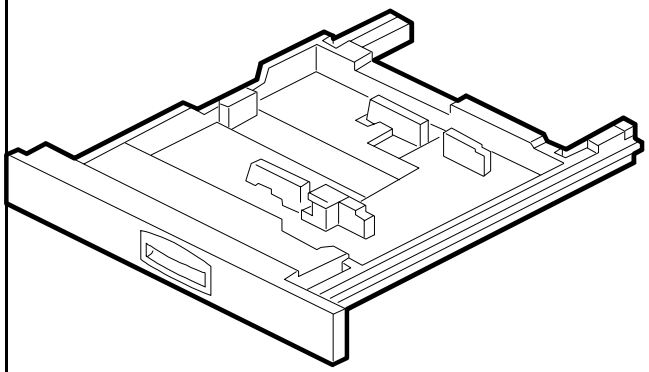

See Page 14

5. LCT UNIT 1 (A162)

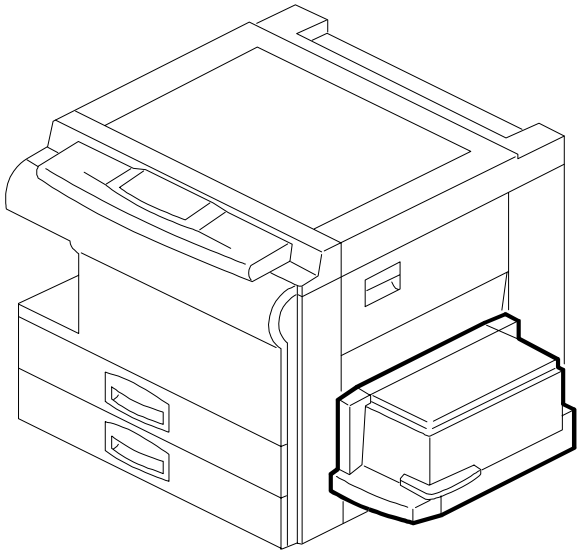

See Page 16

6. LCT UNIT 2 (A162)

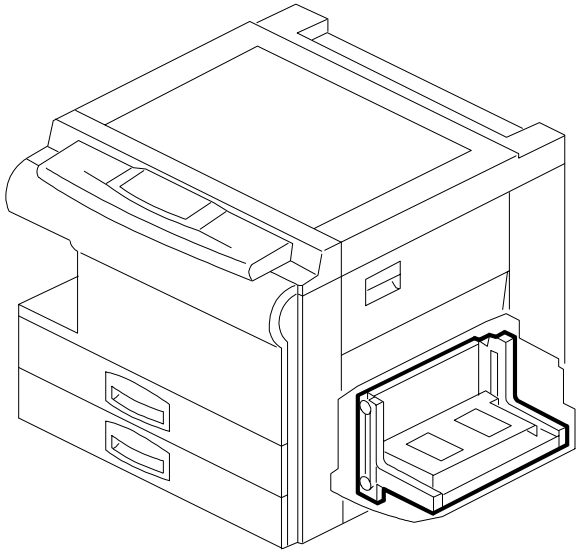

See Page 18

LOCATION OF UNIT

7. PAPER FEED SECTION 1 (A161/A162)

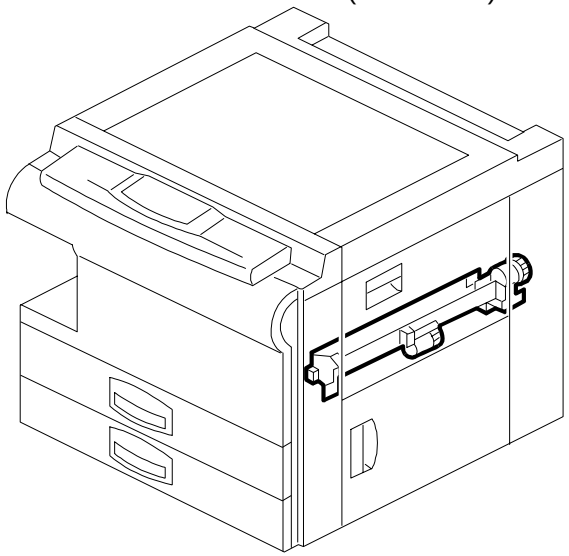

See Page 20

8. PAPER FEED SECTION 2 (A161/A162)

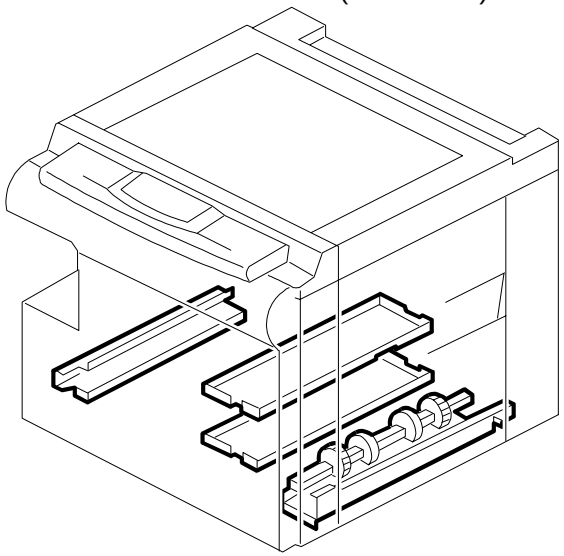

See Page 22

9. PAPER REGISTRATION (A161/A162)

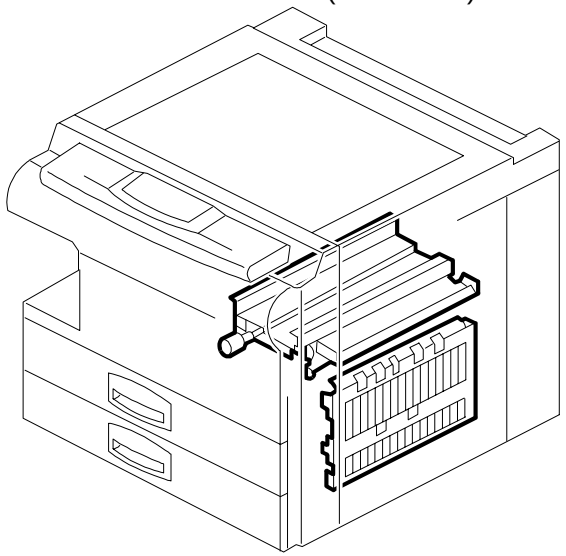

See Page 24

10. OPTICAL SECTION 1 (A161/A162)

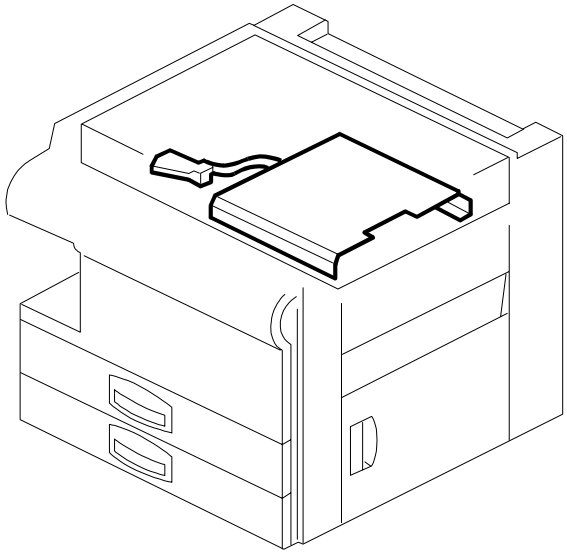

See Page 26

11. OPTICAL SECTION 2 (A161/A162)

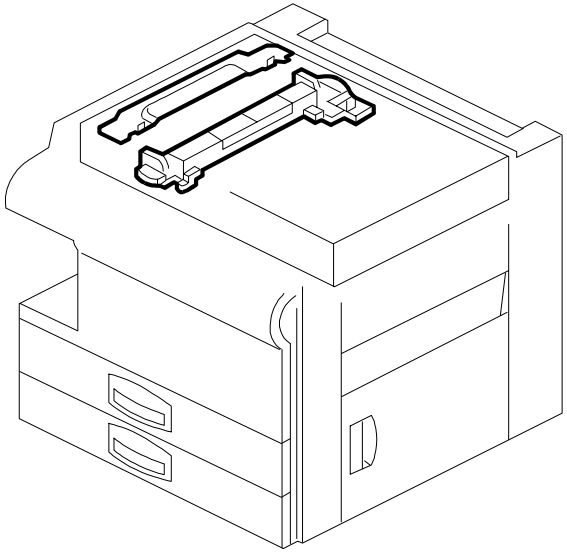

See Page 28

12. OPTICAL SECTION 3 (A161/A162)

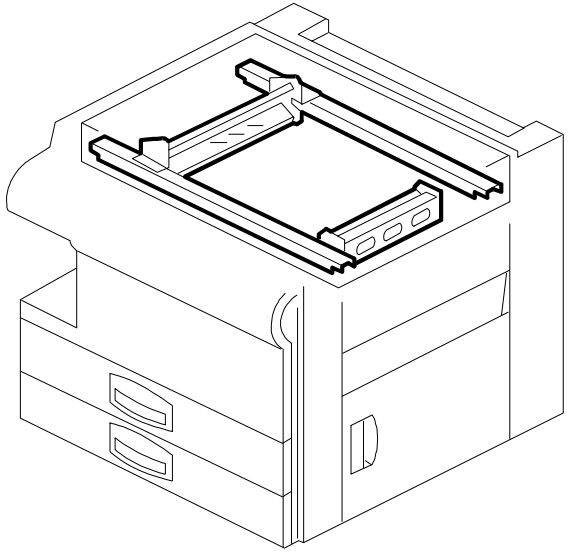

See Page 30

LOCATION OF UNIT

13. OPTICAL SECTION 4 (A161/A162)

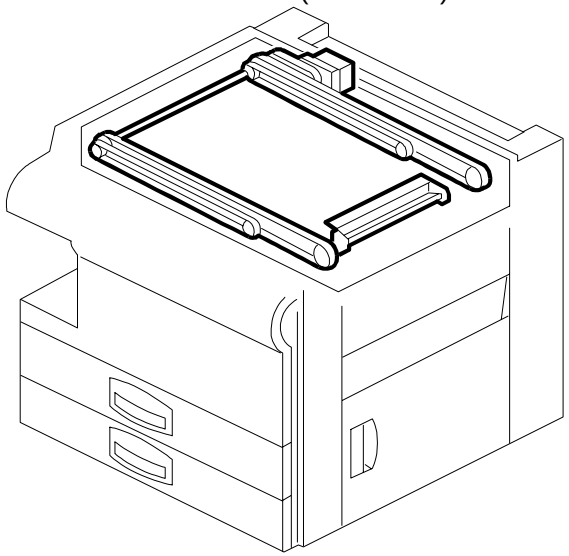

See Page 32

14. TONER SUPPLY UNIT (A161/A162)

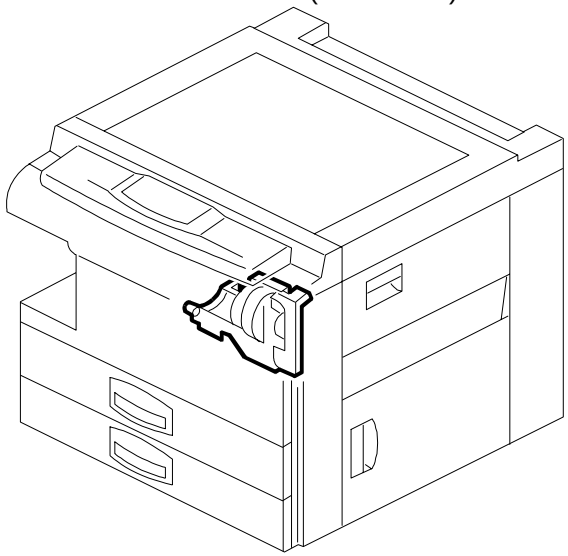

See Page 34

15. DEVELOPMENT UNIT (A161/A162)

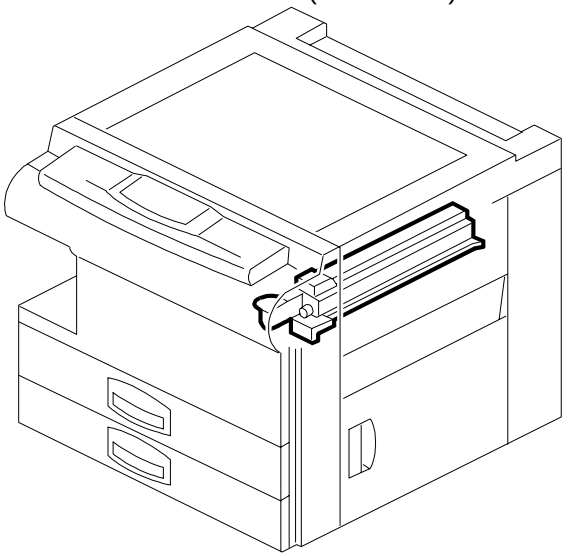

See Page 36

16. DRUM UNIT 1 (A161/A162)

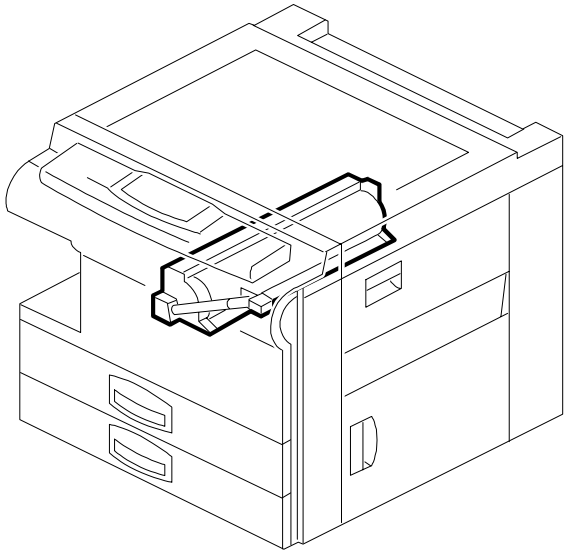

See Page 38

17. DRUM UNIT 2 (A161/A162)

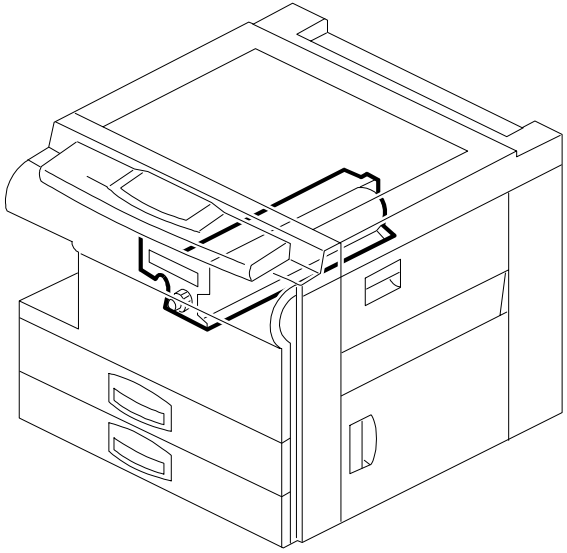

See Page 40

18. TRANSFER UNIT (A161/A162)

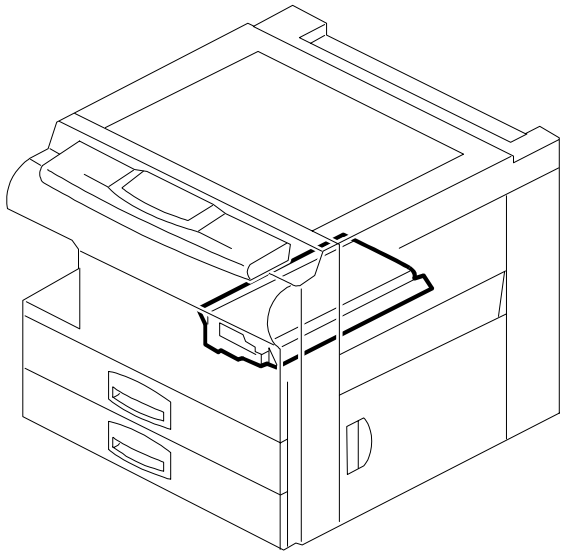

See Page 42

LOCATION OF UNIT

19. FUSING UNIT 1 (A161/A162)

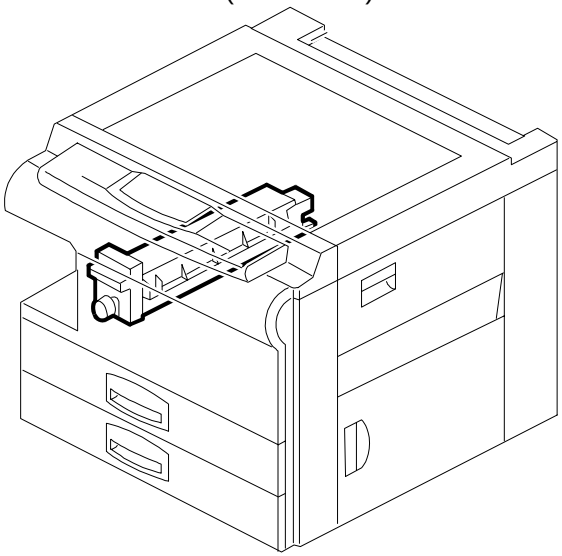

See Page 44

20. FUSING UNIT 2 (A161/A162)

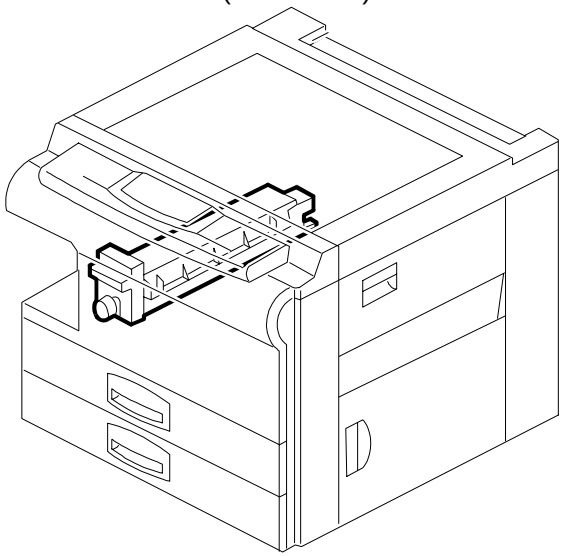

See Page 46

21. DUPLEX TRAY 1 (A162)

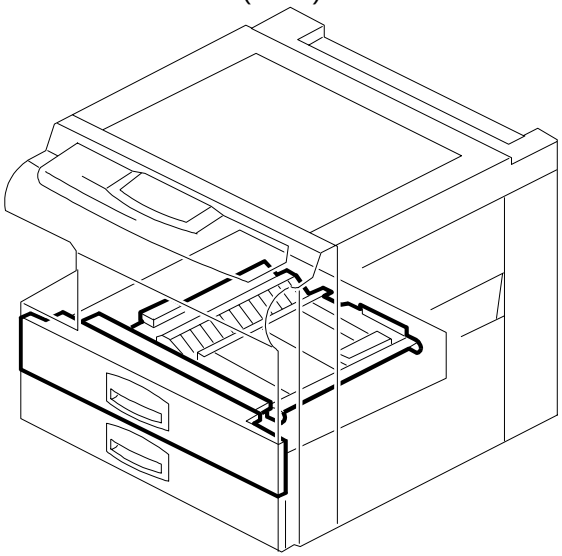

See Page 48

22. DUPLEX TRAY 2 (A162)

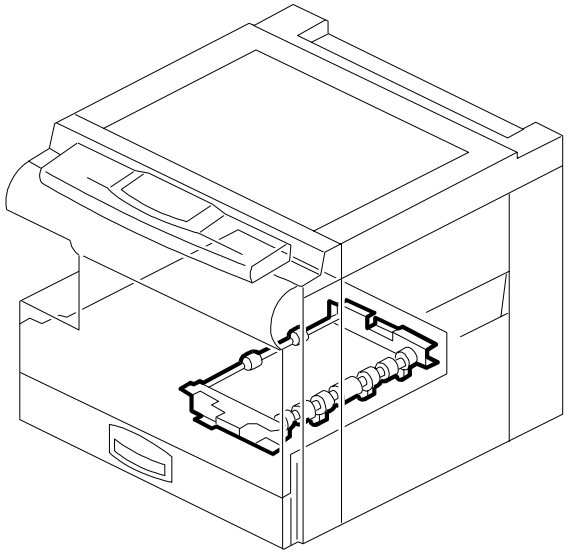

See Page 50

23. DUPLEX TRAY 3 (A162)

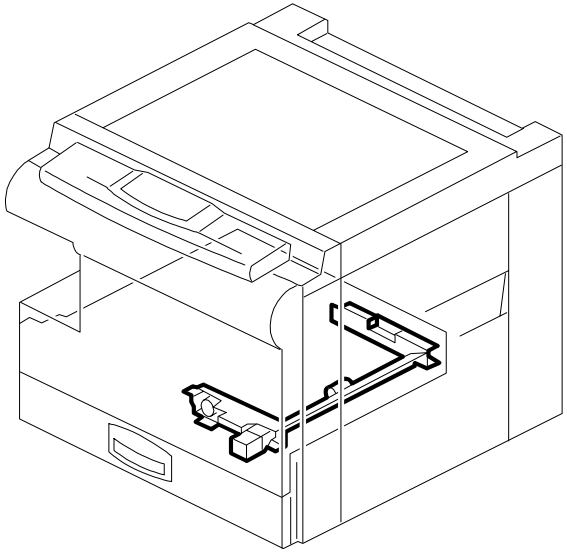

See Page 52

24. DUPLEX TRAY 4 (A162)

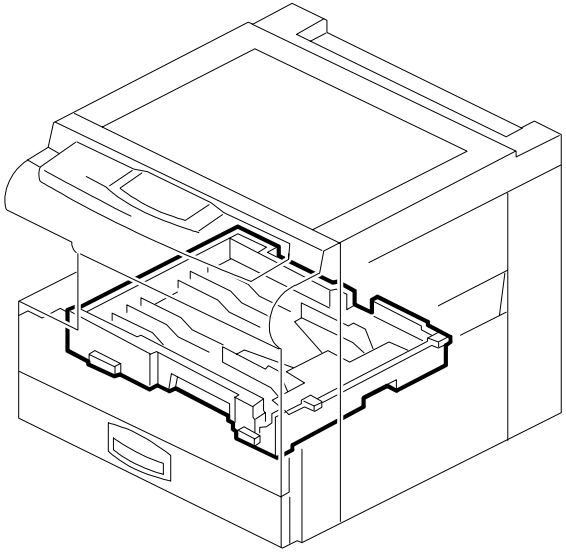

See Page 54

LOCATION OF UNIT

25. PAPER EXIT AND INVERTER (A162)

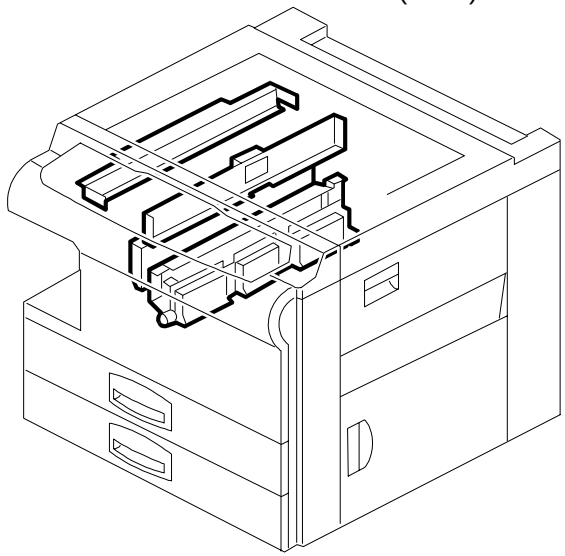

See Page 56

26. PAPER EXIT SECTION (A161)

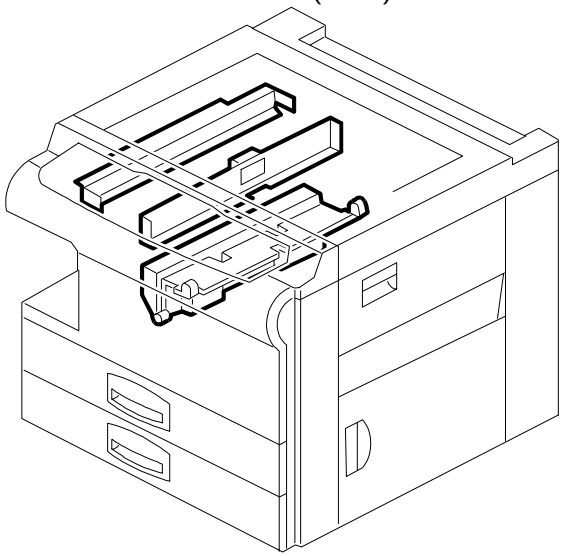

See Page 58

27. DRIVE SECTION 1 (A161/A162)

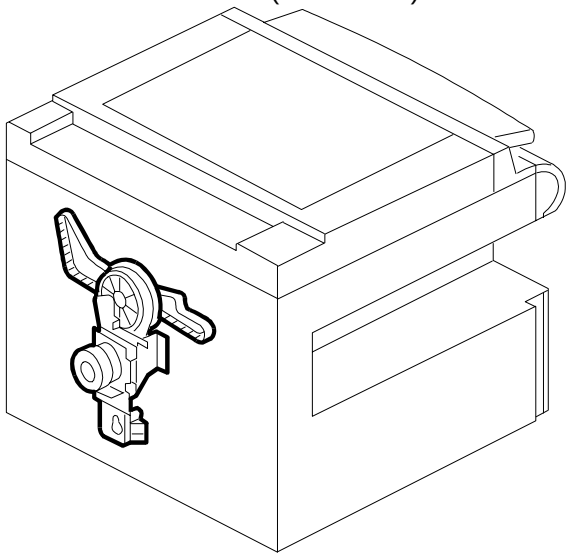

See Page 60

28. DRIVE SECTION 2 (A161/A162)

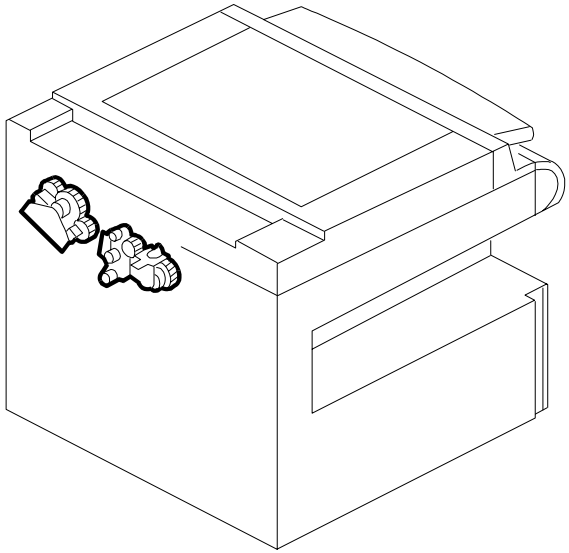

See Page 62

29. DRIVE SECTION 3 (A161/A162)

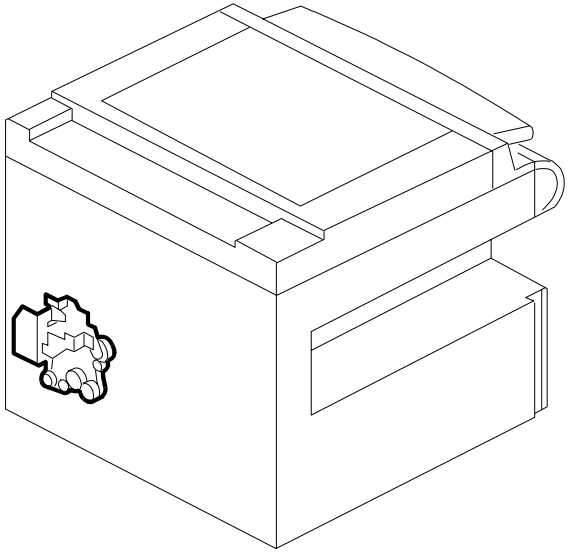

See Page 64

30. ELECTRICAL SECTION 1 (A161/A162)

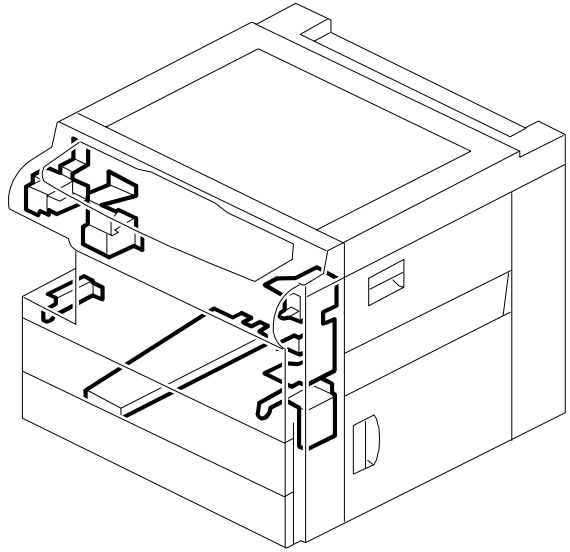

See Page 66

LOCATION OF UNIT

31. ELECTRICAL SECTION 2 (A161/A162)

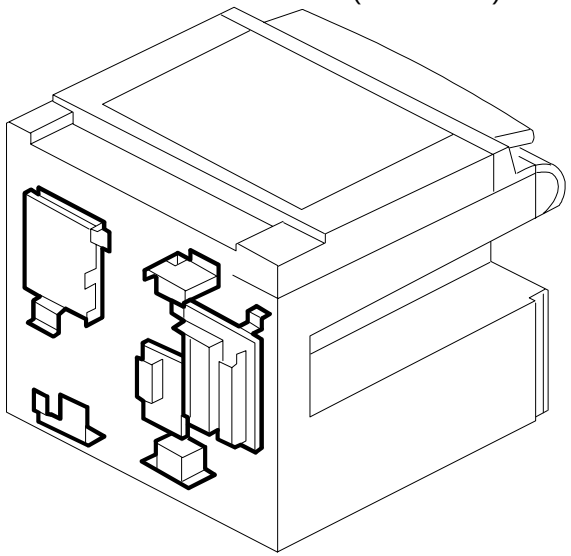

See Page 68

32. ELECTRICAL SECTION 3 (A161/A162)

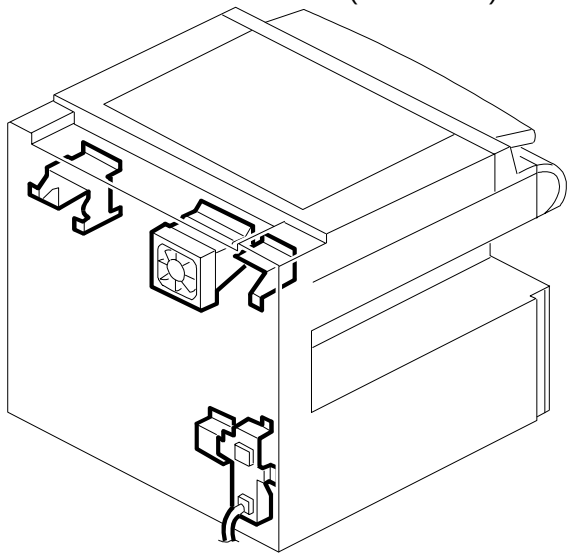

See Page 70

33. FRAME SECTION 1 (A161/A162)

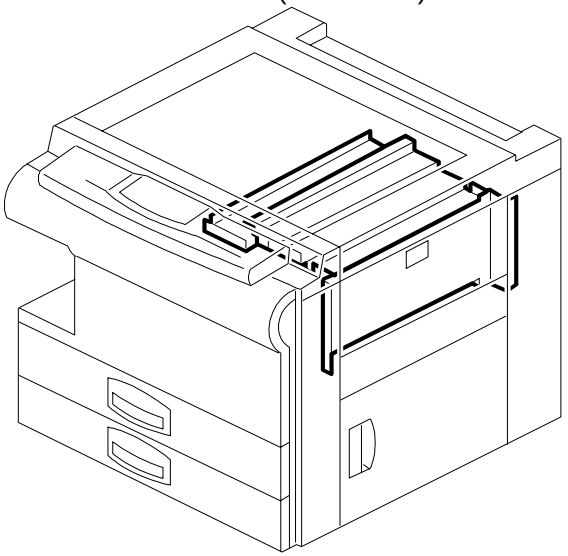

See Page 72

34. FRAME SECTION 2 (A161/A162)

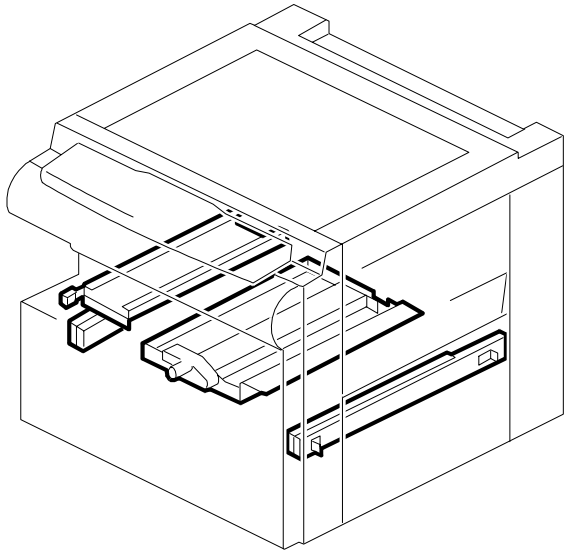

See Page 74

1. EXTERIOR (A161/A162)

Rev. 7/25/96

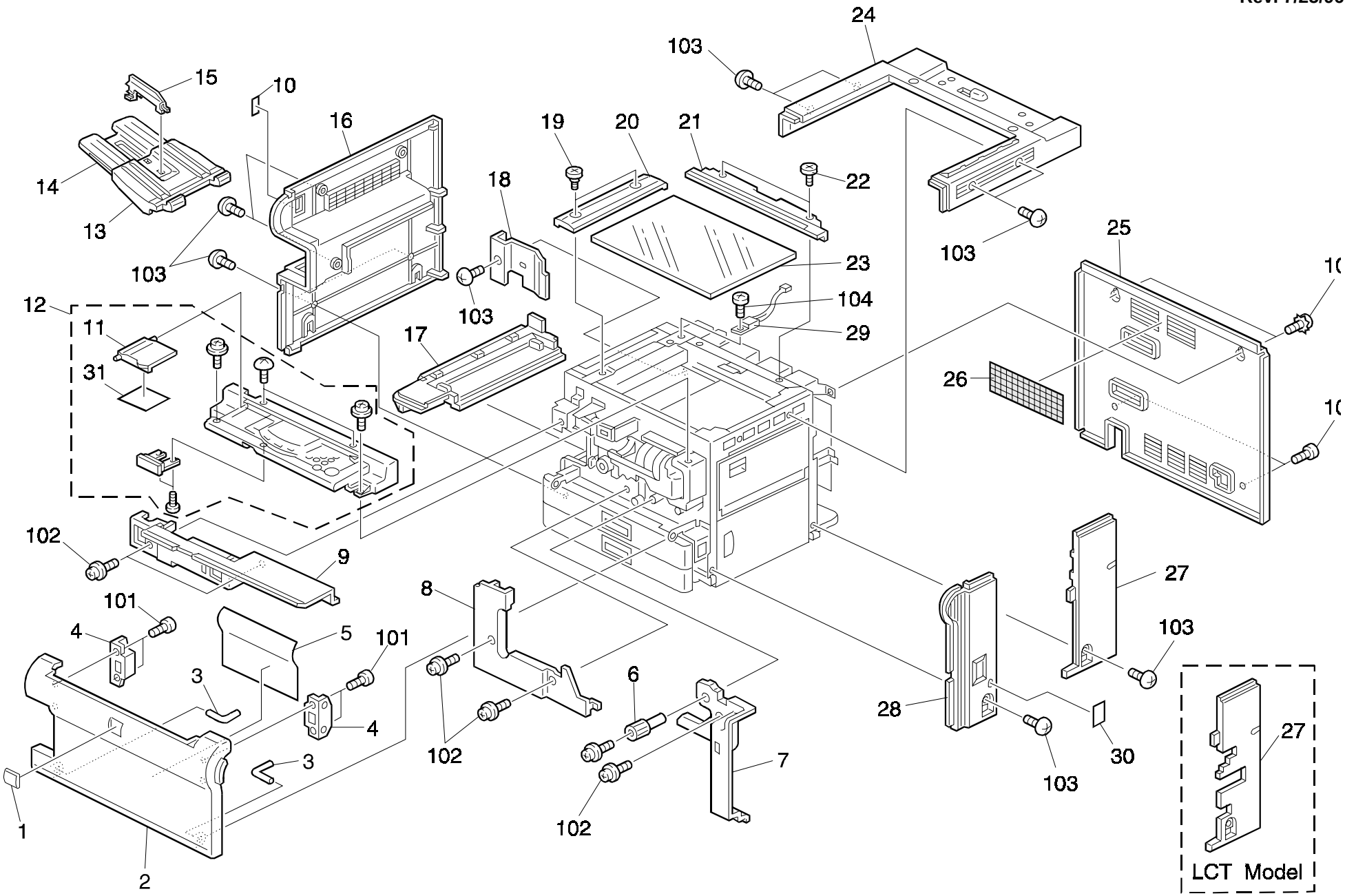

1. EXTERIOR (A161/A162)

Rev. 7/25/96

Index No.	Part No.	Description	Q'ty Per Assembly
1	A153 1285	Emblem	1
2	A161 1277	Front Cover (A161)	1
2	A162 1277	Front Cover (A162)	1
3	A153 1354	Hinge Pin	2
4	AG07 0004	Magnetic Catch	6
5	A157 1360	Operation Sheet	1
5	A158 1360	Operation Sheet	1
6	AG05 0078	Registration Knob	1
7	A157 1352	Right Lower Cover	1
8	A157 1339	Lower Inner Cover	1
9	A157 1351	Upper Inner Cover	1
10	AA00 1373	Decal - Main Switch	1
11	A153 1469	Panel Cover	1
12	AG01 1323	Operation Panel Ass'y - LT (A161)	1
12	AG01 1325	Operation Panel Ass'y - LT (A162)	1
12	AG01 1324	Operation Panel Ass'y - A4 (A161)	1
12	AG01 1326	Operation Panel Ass'y - A4 (A162)	1
13	AF04 3083	Copy Tray	1
14	AF04 3076	Copy Tray Slide	1
15	AF04 3077	Copy Tray Guide	1
16	A157 1302	Left Cover	1
17	A157 1311	Left Inner Cover	1
18	A157 1321	Left Inner Cover - Small	1
19	AA14 3416	Stepped Screw - M4x3	2
20	AC04 2113	Left Original Scale - A4	1
20	AC04 2117	Left Original Scale - LT	1
21	AC04 2120	Rear Original Scale (A4)	1
21	AC04 2124	Rear Original Scale - LT	1
22	AA14 3417	Shoulder Screw - M4x4	2
23	5215 1980	Exposure Glass - A3t-3.2	1
24	A153 1251	Upper Cover	1
25	A153 1291	Rear Cover	1
26	AA01 2080	Dust Filter	1
27	A153 1271	Rear Right Cover (A161)	1
27	A155 1331	Rear Right Cover (A162)	1

Index No.	Part No.	Description	Q'ty Per Assembly
28	A153 1261	Front Right Cover	1
29	AW10 0027	Thermister	1
30	A134 1328	Small Cap	1
31	A156 1495	Decal - Copy Ratio	1
32	A159 5460	Printed Circuit Board	1
33	A160 5461	Printed Circuit Board	1
34	A159 5465	Printed Circuit Board	1
35	A160 5466	Printed Circuit Board	1
36	1204 1347	Push Switch B3F - 1000	1
37	1204 1294	Push Switch B3F - 4000	1
101	0434 0082B	Tapping Screw - M4x8	
102	0964 4008B	Tapping Screw With Flat Washer - M4x8	
103	0802 5094	Tapping Truss Head Screw - M4x8	
104	0313 0040B	Philips Pan Head Screw - M3x4	
105	0953 4008M	Screw - M4X8	

2. PLATEN COVER ASS'Y (A161/A162)

Rev. 2/28/97

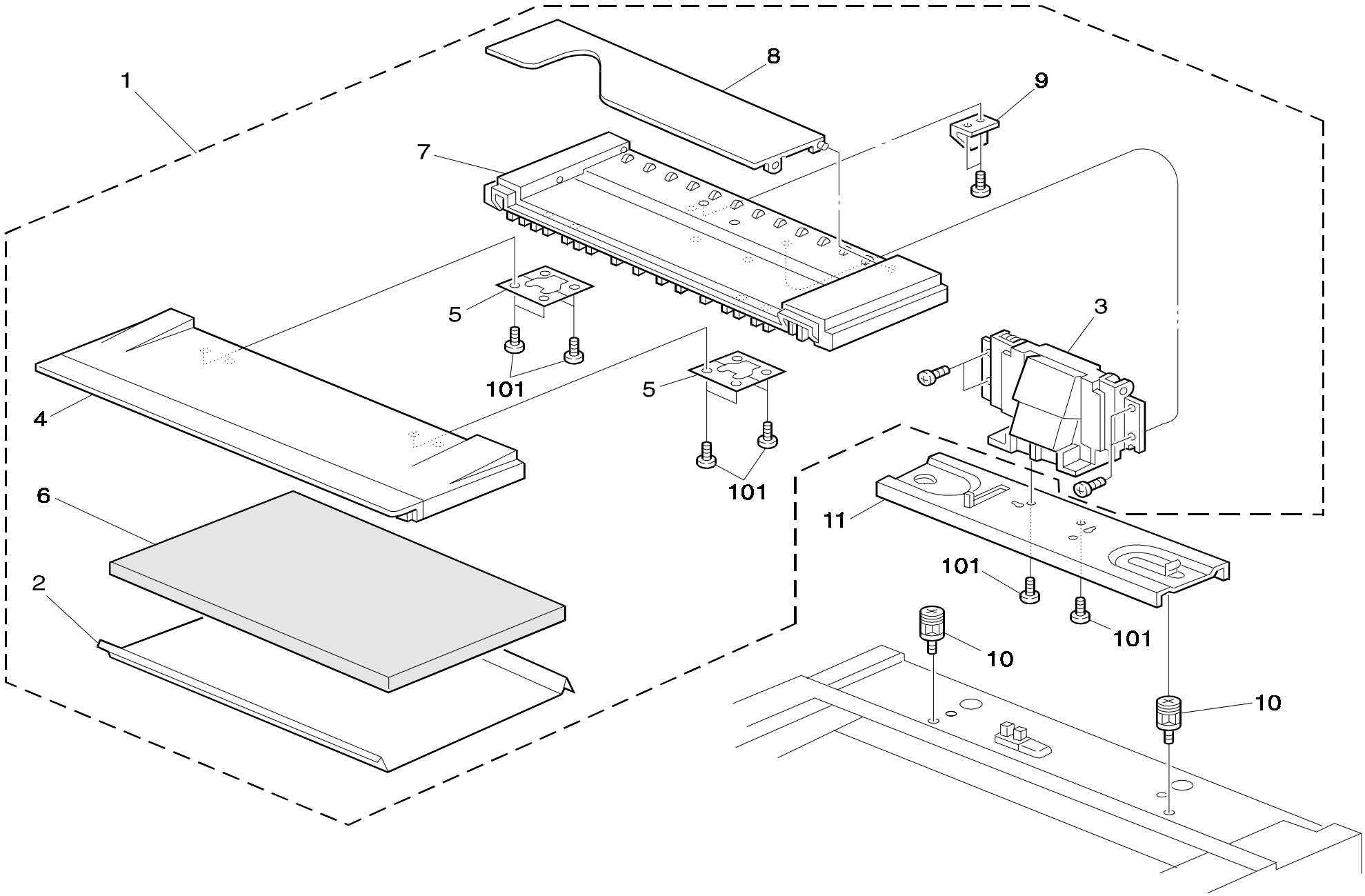

2. PLATEN COVER ASS'Y (A161/A162)

Index No.	Part No.	Description	Q'ty Per Assembly
1	A153 1637	Platen Cover Ass'y	1
2	5448 2804	Platen Cover Sheet	1
3	A153 1370	Platen Cover Hinge	1
4	A134 1394	Front Platen Cover	1
5	A053 1957	Flex Hinge - Platen Cover	2
6	AA16 2067	Platen Cover Pad	1
7	A134 1395	Rear Platen Cover	1
8	A134 1396	Original Holder	1
9	A153 1383	Platen Cover Feeler	1
10	5215 1667	Platen Cover Stud	1
11	A153 1380	Platen Cover Bracket	1

Index No.	Part No.	Description	Q'ty Per Assembly
101	0414 0142B	Binding Self Tapping Screw - M4x14	

3. BY-PASS FEED SECTION (A161/A162)

Rev. 2/28/97

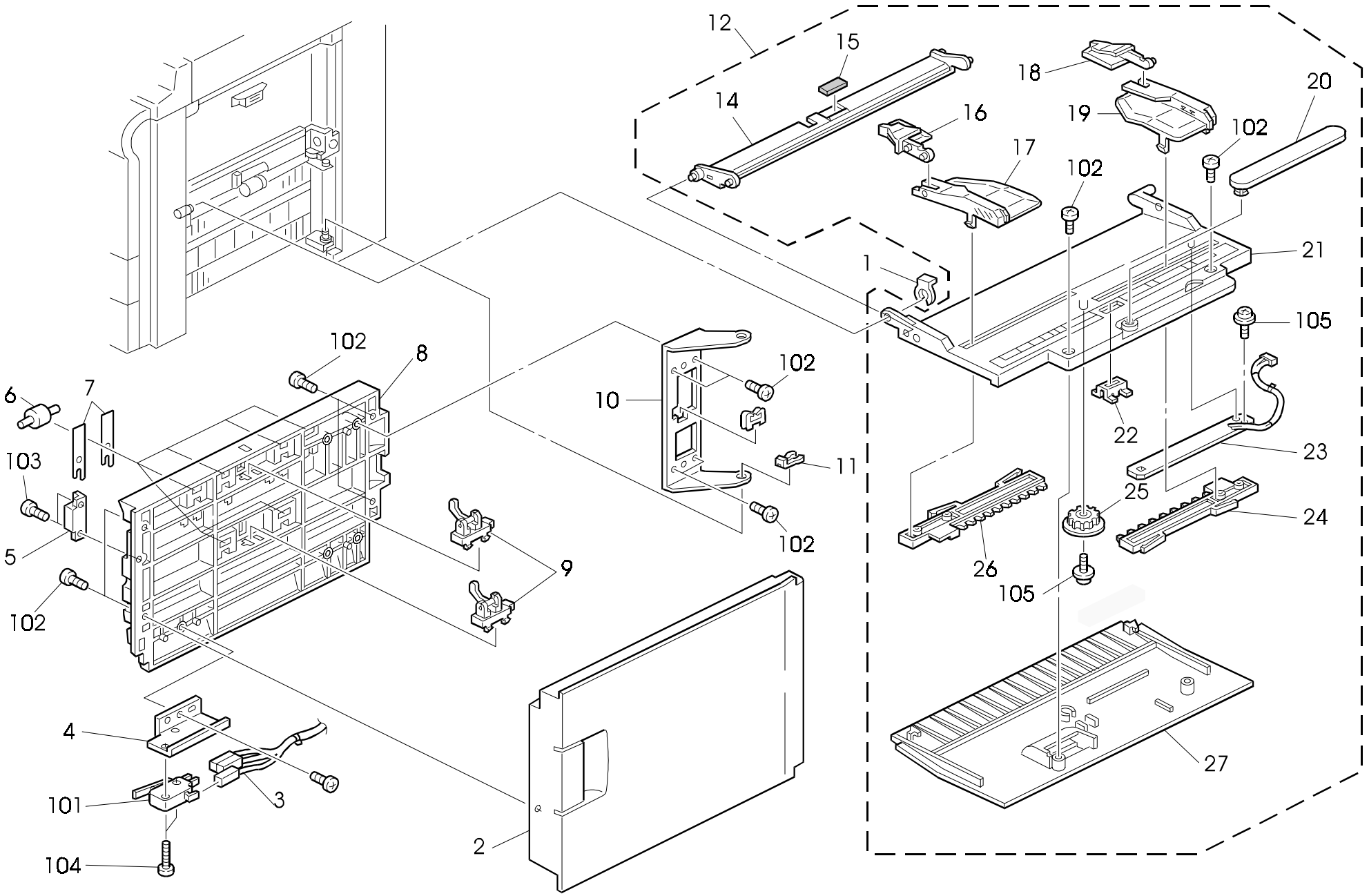

3. BY-PASS FEED SECTION (A161/A162)

Rev. 2/28/97

Index No.	Part No.	Description	Q'ty Per Assembly
1	5215 2621	Snap Ring - M6	3
2	A134 2591	Vertical Transfer	1
3	A157 5336	Vertical Transport Harness	1
4	A157 2559	Switch Bracket	1
5	AG07 0004	Magnetic Catch	6
6	AF02 2079	Vertical Driven Roller	6
7	A157 2557	Spring Plate	12
8	A157 2571	Vertical Transport Guide	1
9	AW02 0069	Photointerruptor	2
10	A134 2586	Hinge Bracket	1
11	5447 2681	Snap Ring	7
12	A134 2691	By-pass Feed Table Ass'y	1
13			
14	A134 2741	By-pass Feed Entrance Guide	1
15	5447 2927	Friction Pad - B	1
16	A134 2721	Front Paper Guide	1
17	A134 2711	Front Side Fence	1
18	A134 2726	Rear Paper Guide	1
19	A134 2716	Rear Side Fence	1
20	A134 2701	By-pass Feed Guide	1
21	A134 2696	By-pass Feed Table	1
22	A134 2705	Magnet Catch Plate	1
23	A134 5280	Paper Size Sensor Board	1
24	A134 2706	Rear Fence Rack	1
25	G011 3305	Gear - 16T	2
26	A134 2707	Front Fence Rack	2
27	A134 2746	By-pass Feed Cover	1

Index No.	Part No.	Description	Q'ty Per Assembly
101	1204 2356	Micro Switch - AM51612A531	
102	0414 0082W	Tapping Screw With Flat Washer - M4x8	
103	0802 5085	Tapping Screw - M4x8	
104	0313 0140B	Philips Pan Head Screw - M3x14	
105	0965 3006B	Tapping Screw With Flat Washer M3x6	

4. PAPER TRAY SECTION (A161/A162)

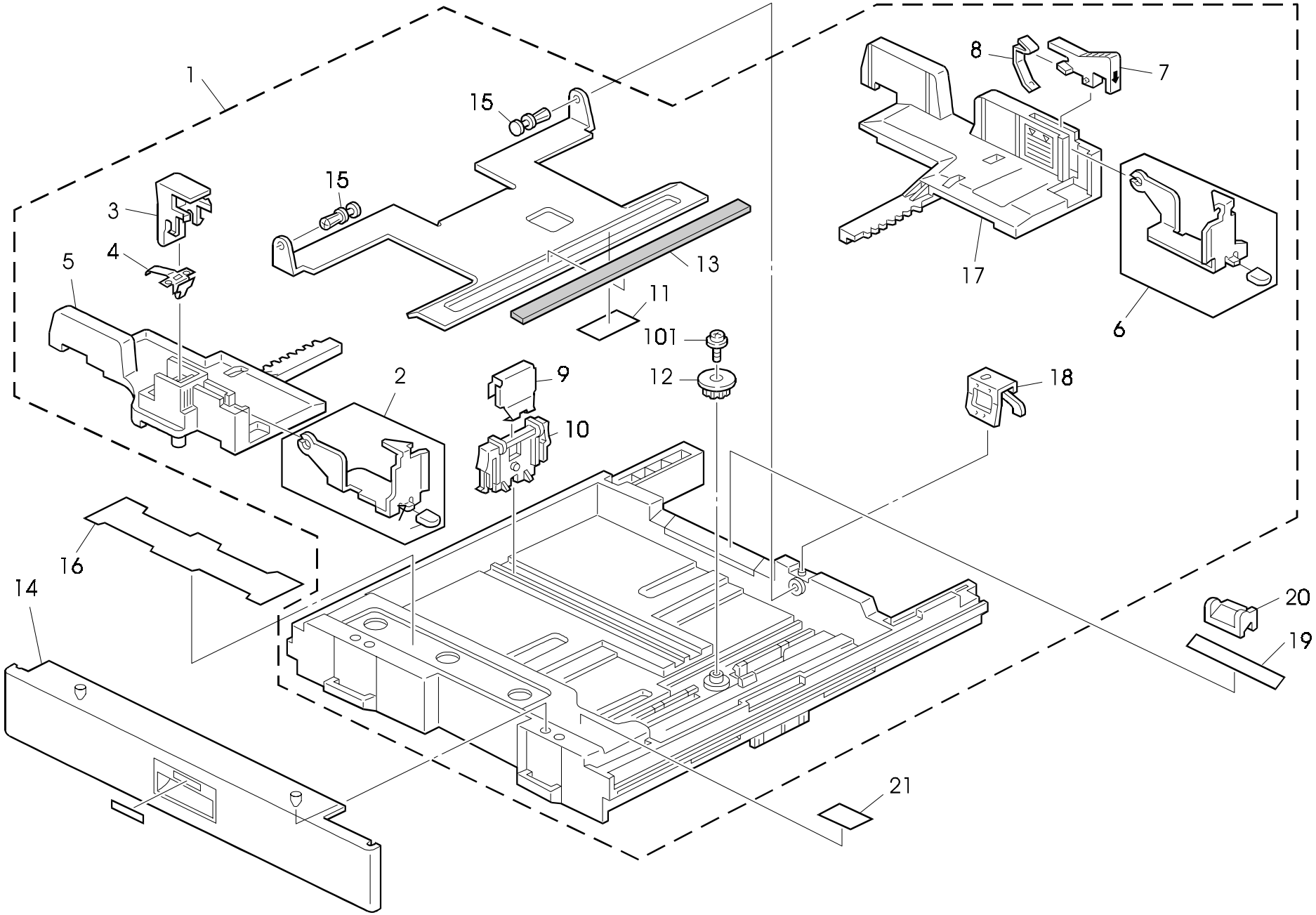

4. PAPER TRAY SECTION (A161/A162)

Index No.	Part No.	Description	Q'ty Per Assembly
1	A157 2751	Paper Tray	1
2	A157 2754	Front Paper Stripper	1
3	A157 2766	Front Stopper Lever	1
4	A157 2767	Front Stopper Spring	1
5	AF01 6072	Front Side Fence	1
6	A157 2755	Rear Paper Stripper	1
7	A157 2768	Rear Stopper Lever	1
8	A157 2769	Rear Stopper Spring	1
9	A157 2762	End Fence Spring	1
10	AF01 7015	Paper End Fence	1
11	A157 2806	Bottom Tray Sheet	1
12	AB01 3868	Gear - 16Z	1
13	AF01 3004	Bottom Plate Pad	1
14	A134 2956	Paper Feed Front Cover	2
15	A048 2838	Nylon Rivet	2
16	A157 2758	Decal - Paper Setting	1
17	AF01 6073	Rear Side Fence	1
18	A157 2765	Bottom Plate Spring	1
19	A153 2995	Decal Paper Size - LT/DLT	1
19	A153 2996	Decal Paper Size - A4/A3	1
20	AF01 5027	Paper Size Slider	1
21	A157 2805	Decal - Paper Set	1

Index No.	Part No.	Description	Q'ty Per Assembly
101	0434 0060B	Philips Tapping Screw - M4x6	

5. LCT UNIT 1 (A162)

Rev. 3/20/96

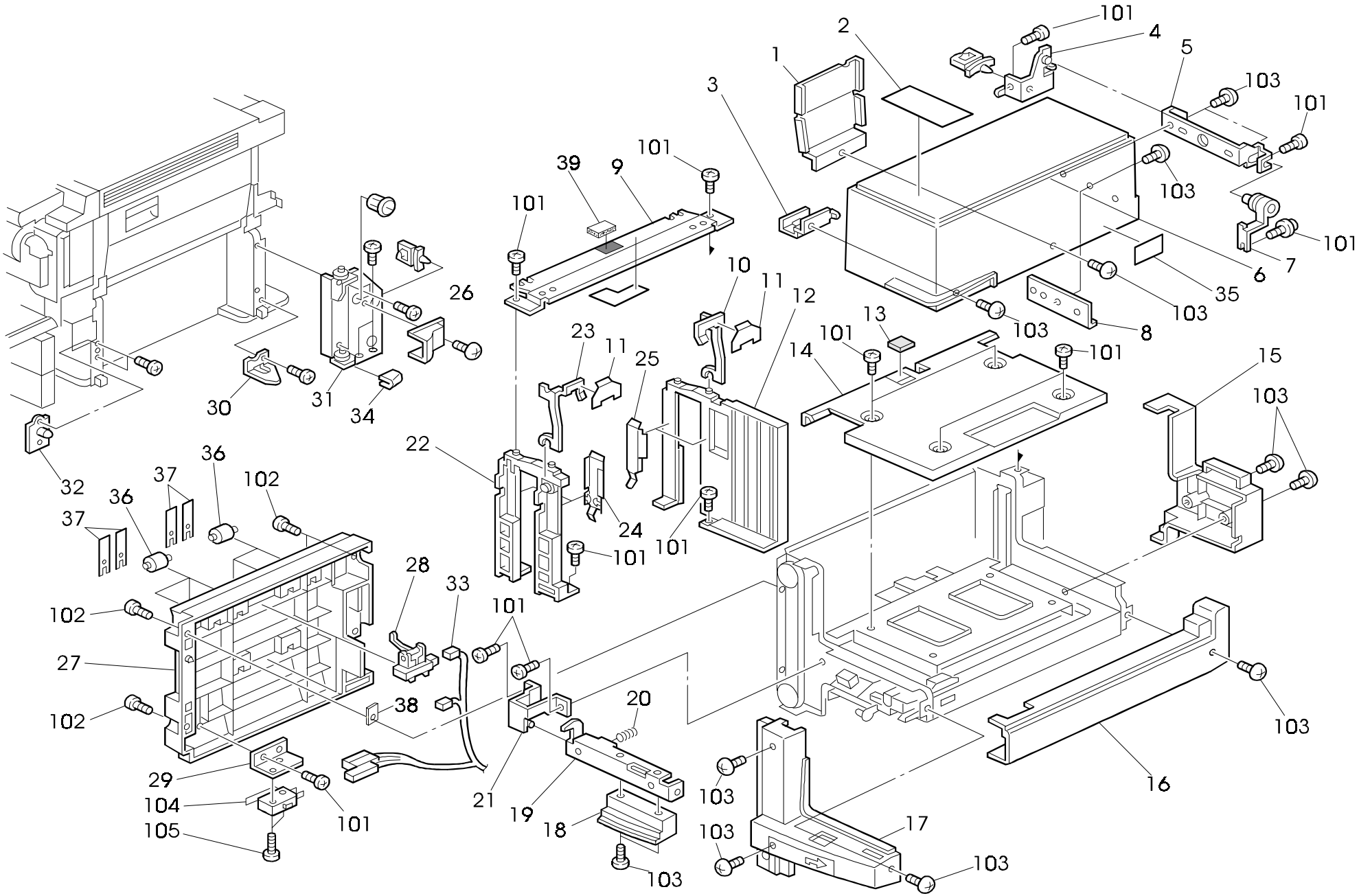

5. LCT UNIT 1 (A162)

Rev. 3/20/96

Index No.	Part No.	Description	Q'ty Per Assembly
1	A155 6324	End Fence	1
2	A155 6113	Decal - Paper Set	1
3	A155 6207	Cover Bracket	1
4	A155 6303	Fix Hinge	1
5	A155 6302	Hinge Angle	1
6	A155 6101	LCT Upper Cover	1
7	A335 3251	Top Cover Hinge	1
8	A155 6201	LCT Hinge Bracket	1
9	A155 6251	Upper Stay	1
10	A155 6312	Rear Paper Holder	1
11	A155 6313	Support Guide	2
12	A155 6307	Rear Side Fence	1
13	A421 2543	Friction Pad	1
14	A155 6142	LCT Paper Tray	1
15	A155 6221	LCT Rear Cover	1
16	A155 6231	LCT Right Cover	1
17	A155 6191	LCT Front Cover	1
18	A155 6181	Knob	1
19	A155 6171	Grip Bracket	1
20	AA06 3239	Spring - Handle	1
21	A155 6170	Hinge Bracket	1
22	A155 6306	Front Side Fence	1
23	A155 6311	Front Paper Holder	1
24	A155 6321	Front Spring Plate	2
25	A155 6322	Rear Sprig Plate	2
26	A155 6241	LCT Harness Cover	1
27	A159 6181	Vertical Guide Plate - LCT	1
28	AW02 0069	Photointerruptor	2
29	A159 6182	Switch Bracket	1
30	A155 6169	Hinge Holder	1
31	A155 6160	Lower Hinge	1
32	A155 6175	LCT Positioning Plate	1
33	A155 5349	LCT Vertical Harness	1
34	A155 6162	Cushion	1
35	A155 6114	Caution Decal - LCT	1
36	AF02 0330	Vertical Driven Roller	6
37	AA08 0034	Bushing - 4x5x7	4
38	A155 6112	Spacer - LCT	1
39	A155 6270	Cushion 20x30	1
101	0434 0060B	Philips Tapping Screw - M4x6	
102	0414 0080B	Tapping Screw - M4x8	
103	0802 5094	Tapping Truss Head Screw - M4x8	
104	1204 2356	Micro Switch - AM51612A531	

6. LCT UNIT 2 (A162)

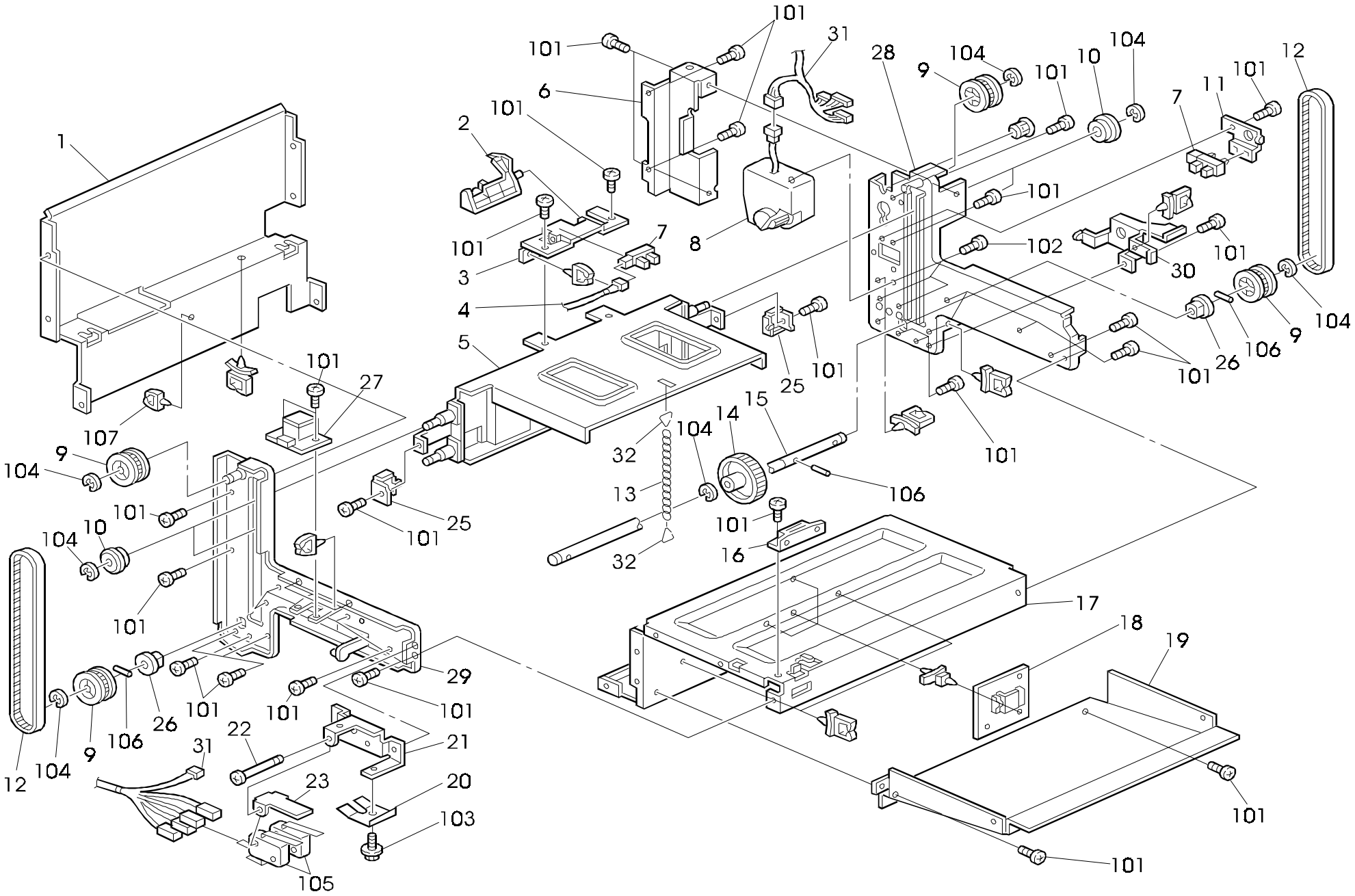

6. LCT UNIT 2 (A162)

Rev. 08/98

Index No.	Part No.	Description	Q'ty Per Assembly
1	A155 6143	Left Bracket	1
2	A155 6148	Paper Ding Sensor Feeler	1
3	A155 6147	Paper End Sensor Bracket	1
4	A155 5348	Paper End Sensor Harness	1
5	A155 6203	Paper Tray Stay	1
6	A155 6153	Upper Hinge	1
7	AW02 0075	Photointerrupter	2
8	AX05 0090	Motor - DC 24V 36W	1
9	AB03 0281	Timing Pulley - 28Z	4
10	A335 4351	Guide Roller	4
11	A155 6136	Lift Sensor Bracket	1
12	AA04 3456	Timing Belt - S3M167	2
13	5925 2258	Stopper Chain	1
14	AB01 1133	Gear - 49Z	1
15	AA14 0576	LCT Drive Shaft	1
16	AG07 0004	Magnetic Catch	1
17	A155 6141	Tray Bottom Plate	1
18	A155 5165	LCT Main Board	1
19	A155 6145	Tray Cover	1
20	A155 6118	Spring Plate	1
21	A155 6116	Safety Switch Bracket	1
22	A300 3155	Stepped Screw - M25x32	1
23	A155 6117	Safety Switch Lever	1
25	A335 4352	Timing Belt Clamp	2
26	5053 0223	Bushing - 8mm	2
27	A155 5170	Push Switch	1
28	A155 6125	Rear Side Bracket	1
29	A155 6110	Front Side Plate	1
30	A155 6215	Harness Guide	1
31	A155 5342	LCT Harness	1
32	A335 1341	Chain Hook	2

Index No.	Part No.	Description	Q'ty Per Assembly
101	0434 0060B	Philips Tapping Screw - M4x6	
102	0802 5236	Tapping Screw - M4x8	
103	0443 0060B	Hexagon Tapping Screw - M3x6	
104	0720 0060E	Retaining Ring - M6	
105	1204 2355	Micro Switch - AM51632A531	
106	0623 0160E	Spring Pin - 3x16mm	
107	1105 0199	Clamp	

7. PAPER FEED SECTION 1 (A161/A162)

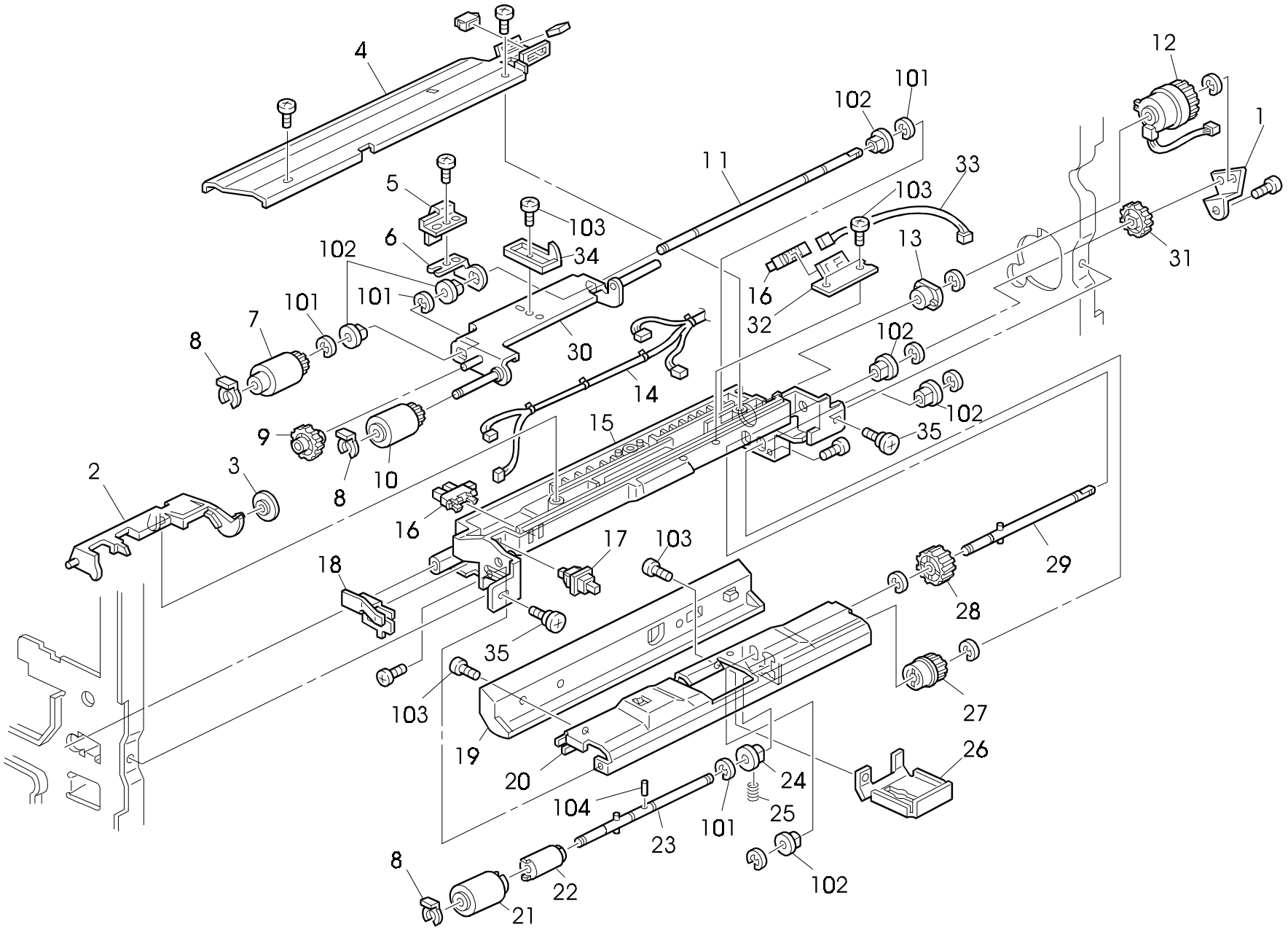

7. PAPER FEED SECTION 1 (A161/A162)

Index No.	Part No.	Description	Q'ty Per Assembly
1	A134 2688	Positioning Plate	1
2	A134 2660	Paper Feed Feeler	1
3	A134 2661	Feeler Roller	1
4	A134 2670	By-pass Feed Cover	1
5	A134 2658	Grounding Plate	1
6	A134 2656	Stopper Plate	2
7	AF03 1025	Feed Roller (A161)	1
7	AF03 1030	Feed Roller (A162)	1
8	5447 2681	Snap Ring	7
9	AB01 1343	Idle Gear - 23Z	1
10	AF03 0024	Pick-up Roller	1
11	AA14 0575	Paper Feed Shaft	1
12	AX20 0101	Magnetic Clutch - 2.5kgf 35Z	1
13	AA08 3012	Clutch Roller - 6x14x10	1
14	A134 5311	By-pass Feed Harness	1
15	A134 2659	By-pass Feed Housing	1
16	AW02 0075	Photointerrupter	15
17	AW50 0012	Push Switch	2
18	A134 2662	Grounding Plate	1
19	A153 2560	Rear Guide Plate	1
20	A134 2663	Separation Guide	1
21	AF03 2025	Separation Roller	1
22	A134 2674	Torque Limitter - 400fg	1
23	A134 2668	Separation Driven Shaft	1
24	AA08 0037	Bushing - 6 mm	1
25	AA06 3499	Pressure Spring	1
26	A134 2689	Gear Cover	1
27	AB01 1344	Gear - 16Z	1
28	AB01 1345	Gear - 20Z	1
29	A134 2667	Separation Drive Shaft	1
30	A134 2654	Pick-up Arm	1
31	AB01 1346	Gear - 27Z	1
32	A155 2682	Lift Sensor Bracket	1
33	A155 5345	CT Harness	1
34	A155 2667	Lift Sensor Feeler	1

Index No.	Part No.	Description	Q'ty Per Assembly
35	AA14 3219	Stepped Screw	2
101	0720 0040E	Retaining Ring - M4	
102	0805 3480	Bushing - 6mm	
103	0414 0080B	Tapping Screw - M4x8	
104	0622 0100E	Spring Pin - 2x10mm	

8. PAPER FEED SECTION 2 (A161/A162)

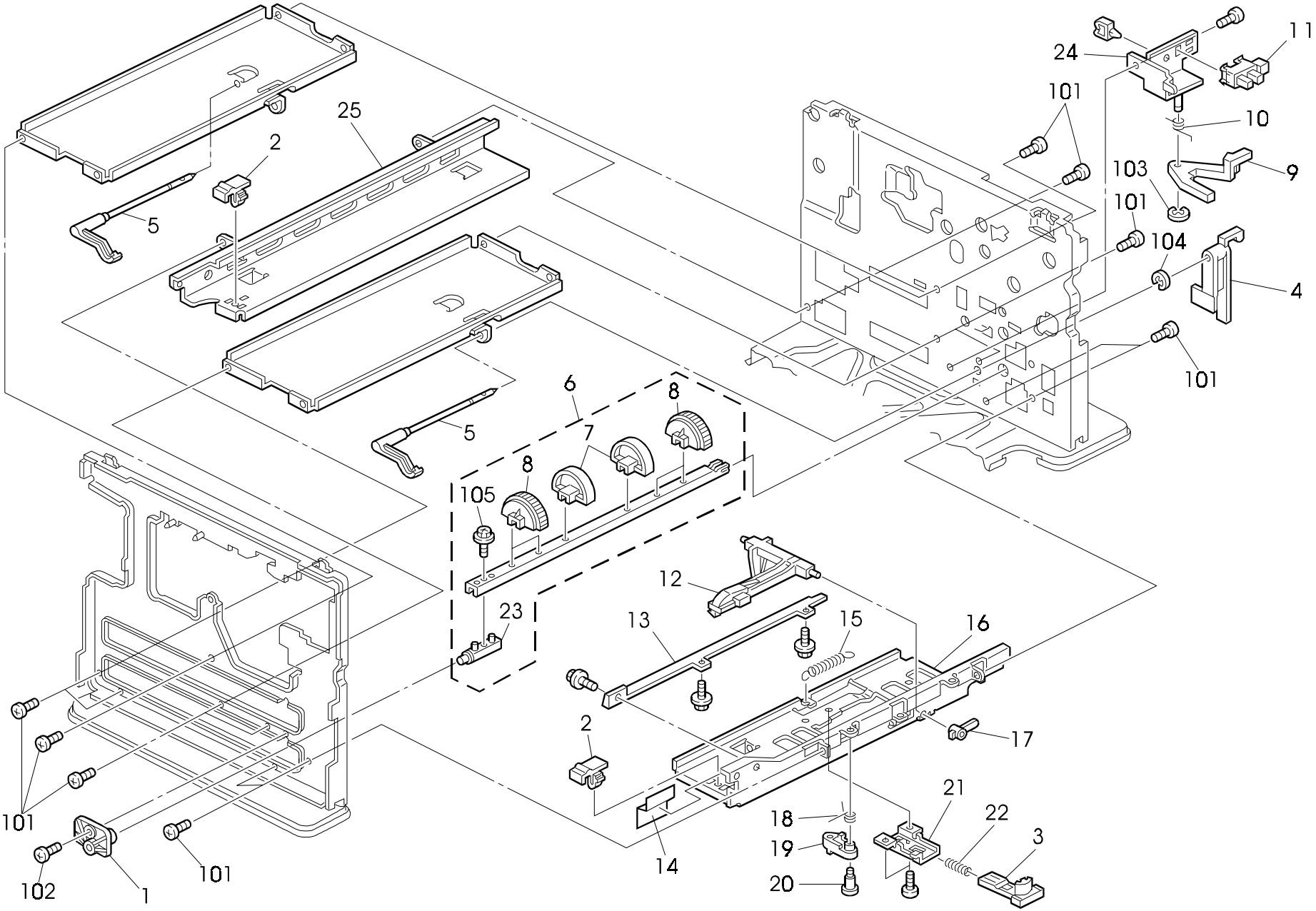

8. PAPER FEED SECTION 2 (A161/A162)

Index No.	Part No.	Description	Q'ty Per Assembly
1	AA08 0189	Feed Roller Bushing - Front	1
2	A157 2782	Paper Tray Holder	2
3	A157 2794	Lock Arm Stopper	1
4	A157 2804	Shield Plate - Paper End Sensor	1
5	A157 2802	Paper End Sensor F	1
6	A157 2775	Feed Roller Shaft	1
7	A157 2774	Feed Roller	2
8	AF03 1027	Paper Feed Roller	4
9	A048 2863	Release Arm - Paper End	1
10	AA06 6104	Spring	1
11	AW02 0075	Photointerrupter	15
12	A157 2788	Lift Arm	1
13	A157 2781	Tray Positioning Rail	1
14	AA15 0383	Right Rail Sheet	1
15	AA06 0640	Spring	1
16	A157 2785	Right Rail	1
17	AA08 0190	Lift Arm Bushing	1
18	AA06 6249	Spring	1
19	A157 2786	Lift Arm Stopper	1
20	AA14 3445	Stud - M4	1
21	A157 2795	Stopper Bracket	1
22	AA06 3205	Spring	1
23	A157 2773	Feed Roller Holder	1
24	A157 2800	Paper End Sensor Bracket	1
25	A157 2783	Left Rail	1

Index No.	Part No.	Description	Q'ty Per Assembly
101	0434 0060B	Philips Tapping Screw - M4x6	
102	0414 0080B	Tapping Screw - M4x8	
103	0720 0020E	Retaining Ring - M2	
104	0720 0030E	Retaining Ring - M3	
105	0413 0082B	Tapping Screw - M3X8	

9. PAPER REGISTRATION (A161/A162)

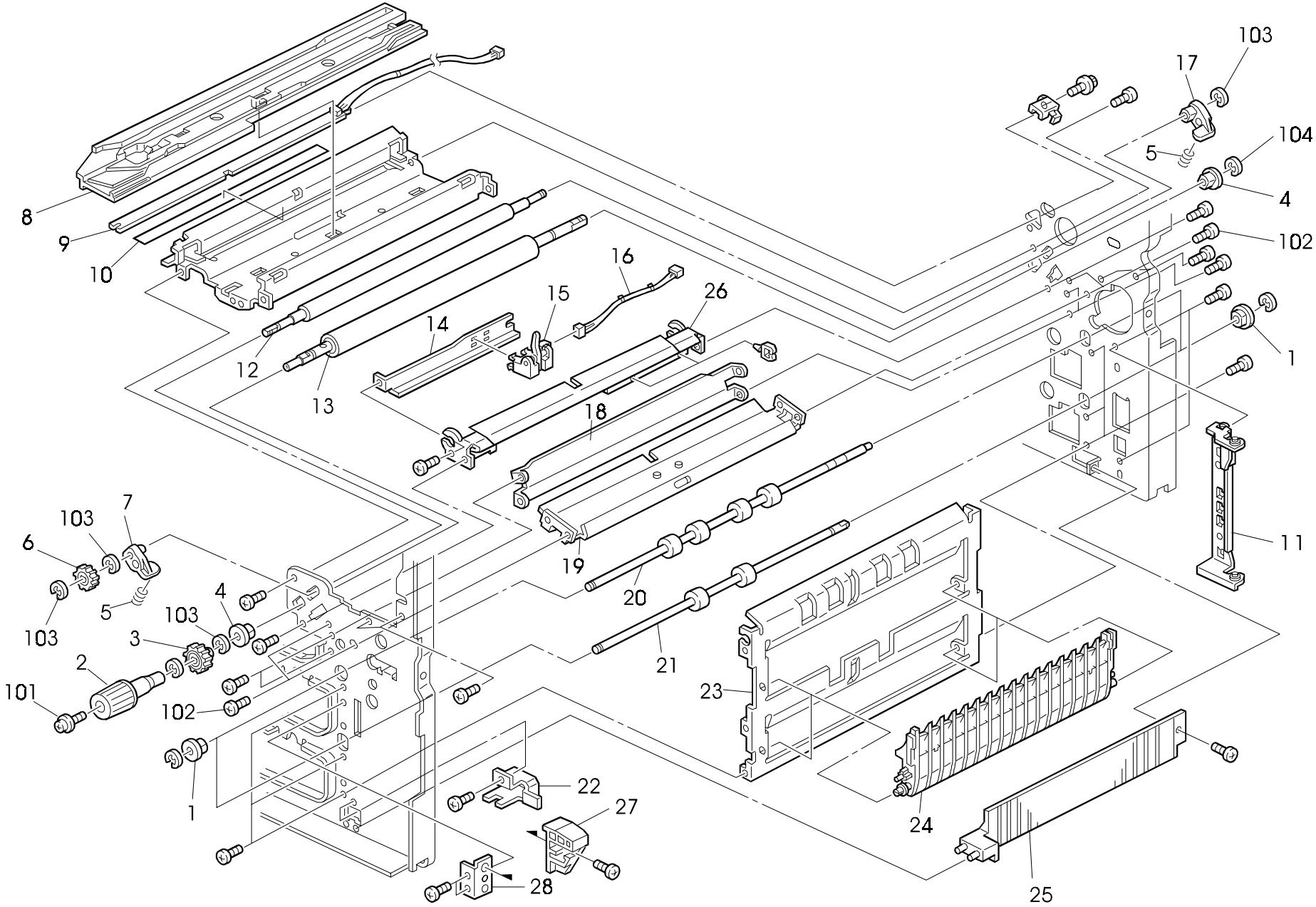

9. PAPER REGISTRATION (A161/A162)

Index No.	Part No.	Description	Q'ty Per Assembly
1	AA08 2047	Bushing - 8x16x7	9
2	AG05 0078	Registration Knob	1
3	AB01 3485	Gear - 20Z	1
4	5474 2152	Bushing - 8x12x12mm	2
5	AA06 3539	Spring - Registration Roller	2
6	AB01 3486	Gear - 14Z	1
7	AA08 0171	Bushing	1
8	A153 3095	Development Rail	1
9	A153 2101	PTL Lamp	1
10	A153 3114	Transfer Entrance Guide	1
11	A134 2580	Vertical Transfer Hinge	1
12	AF02 1052	Upper Registration Roller	1
13	AF02 0316	Lower Registration Roller	1
14	A134 2557	Regist Sensor Bracket	1
15	AW02 0068	Photointerruptor	1
16	A153 5333	CT Harness	1
17	AA08 0172	Bushing	1
18	A153 2563	Middle Guide Plate	1
19	A153 2558	Upper Registration Guide	1
20	AF02 0337	Upper Relay Roller	1
21	AF02 0338	Lower Relay Roller	1
22	A157 2553	Switch Actuator	1
23	A157 2550	Vertical Guide Plate	1
24	A157 2551	Lower Guide Plate	2
25	A157 2552	Vertical Relay Guide Plate	1
26	A134 2554	Lower Registration Guide	1
27	A159 6183	Positioning Guide	1
28	A159 6184	Guide Plate Bracket	1

Index No.	Part No.	Description	Q'ty Per Assembly
101	0951 3006B	Philips Screw With Flat Washer - M3x6	
102	0434 0060B	Philips Tapping Screw - M4x6	
103	0720 0040E	Retaining Ring - M4	
104	0720 0060E	Retaining Ring - M6	

10. OPTICAL SECTION 1 (A161/A162)

Rev. 7/25/97

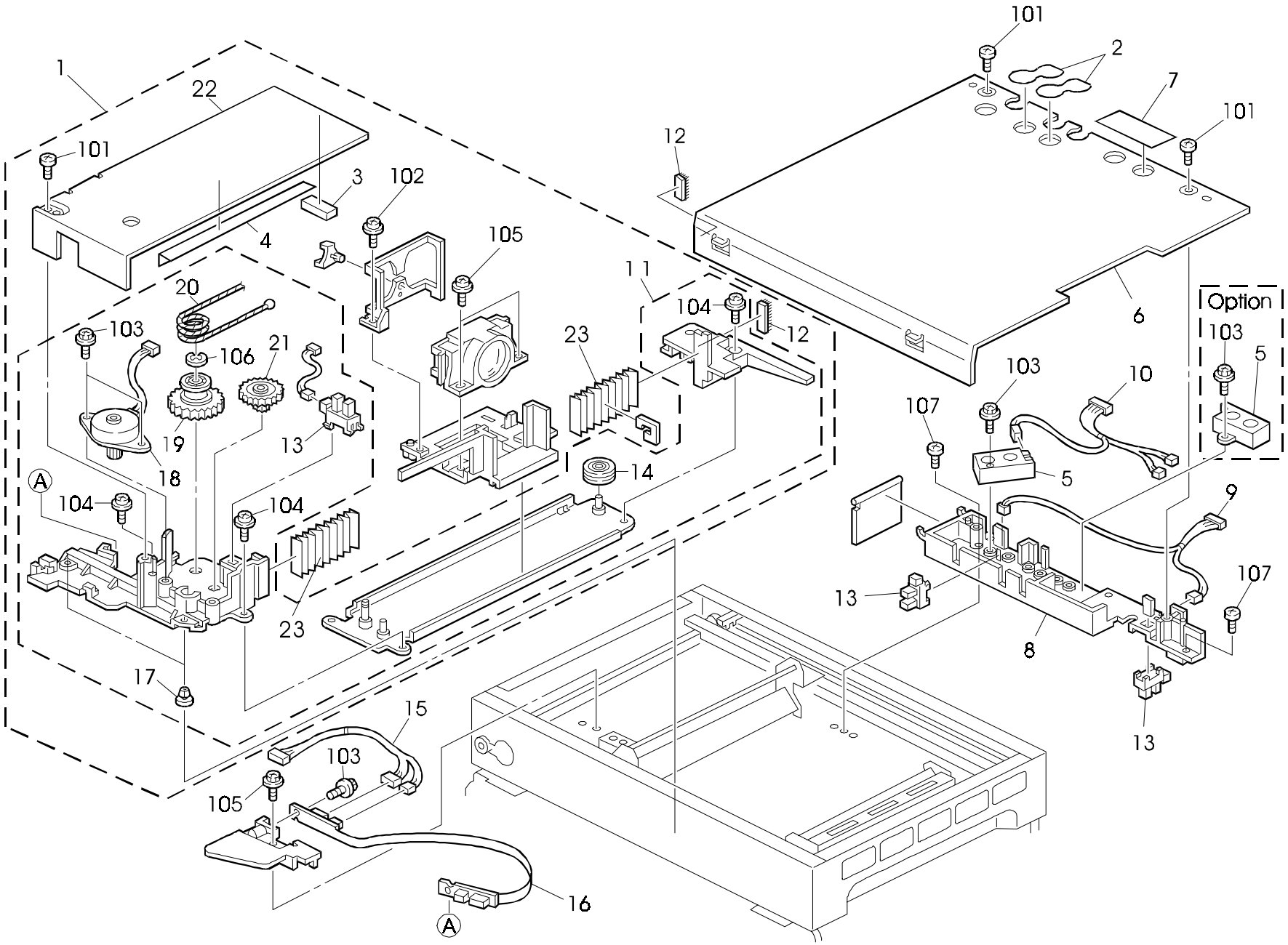

10. OPTICAL SECTION 1 (A161/A162)

Rev. 7/25/97

Index No.	Part No.	Description	Q'ty Per Assembly
1	A153 1840	Lens Magnification Unit	1
2	AA15 0369	Original Sensor Seal	1
3	AA15 1941	Shield - Case - Development - Right	3
4	AA15 0368	Shielding Plate - Cover - Lens	1
5	AW01 0042	Original Length Sensor	2
6	A153 1961	Lens Cover	1
7	A111 1753	Seal - 0.1x18x49	1
8	A153 1971	Original Sensor Bracket	1
9	A153 5391	Optical Harness - 1	1
10	A153 5392	Optical Harness - 2	1
11	A153 1841	Lens Drive Unit	1
12	AA15 2330	Magnification Seal	2
13	AW02 0075	Photointerrupter	15
14	AB03 2059	Driven Pulley	2
15	A153 5395	Optical Harness - 5	1
16	A153 5141	Lens Drive Harness	1
17	A069 1883	Shoe - Scanner	10
18	A153 5212	Lens Drive Motor - Horizontal	1
19	AB01 7360	Gear Pulley	2
20	AA05 0086	Lens Drive Wire - Horizontal	1
21	AB01 7361	Gear - 24Z/56Z	2
22	A153 1850	Lens Cover	1
23	AA150.64	Shielding Mylar	2

Index No.	Part No.	Description	Q'ty Per Assembly
101	0802 5237	Tapping Screw - M4x10	
102	0413 0062B	Tapping Screw - M3x6	
103	0802 5232	Tapping Screw - M3x8	
104	0951 4006B	Philips Screw With Washer - M4x6	
105	0965 3008W	Tapping Screw With Flat Washer - M3x8	
106	0720 0040E	Retaining Ring - M4	
107	0414 0080B	Tapping Screw - M4x8	

11. OPTICAL SECTION 2 (A161/A162)

Rev. 12/97

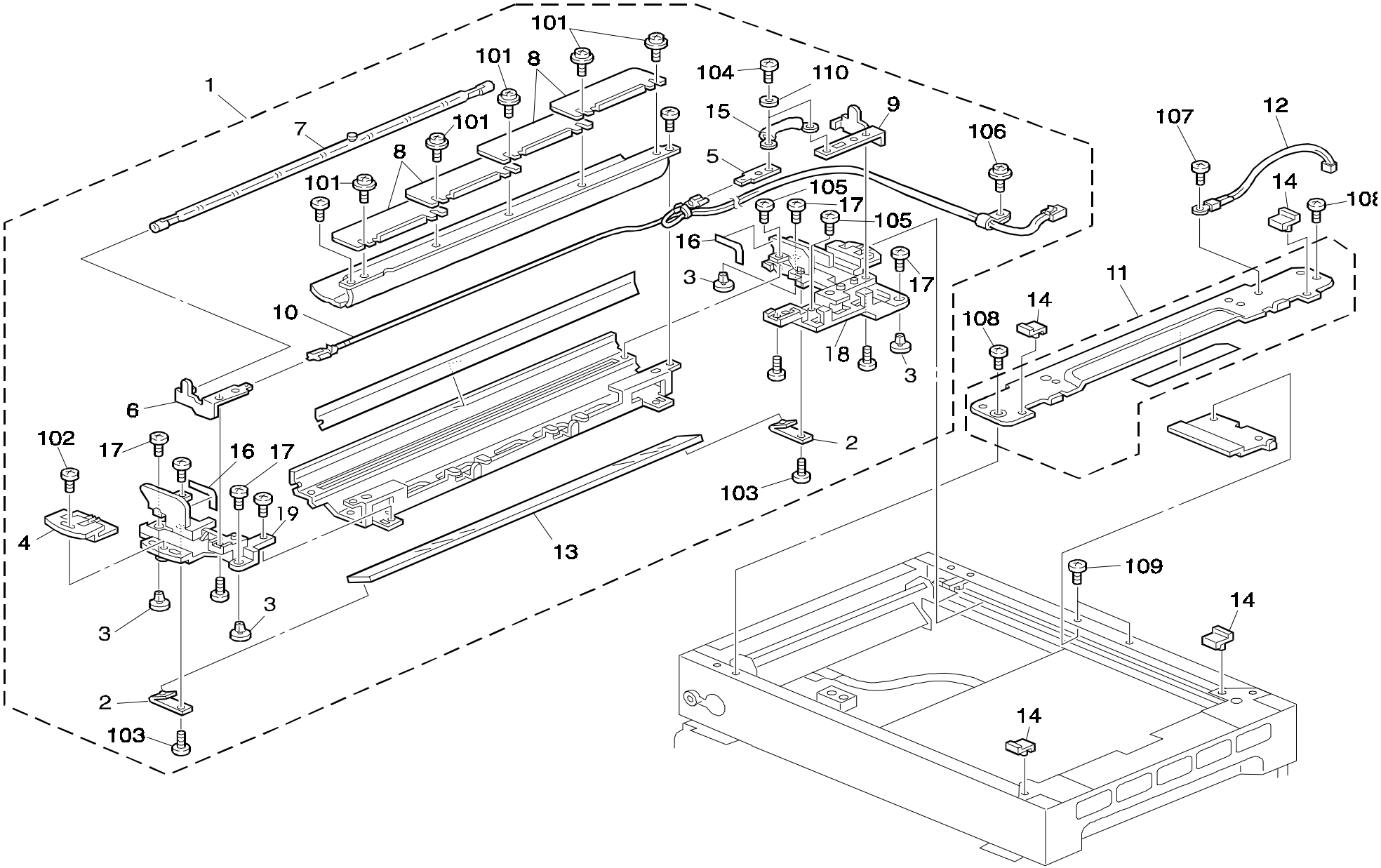

11. OPTICAL SECTION 2 (A161/A162)

Rev. 12/02/97

Index No.	Part No.	Description	Q'ty Per Assembly
1	A157 1790	1st Scanner Ass'y (120V)	1
1	A1571770	1st Scanner Ass'y (220V)	1
2	AC03 5022	Rear Mirror Clamp - 1st Mirror	2
3	A069 1883	Shoe - Scanner	10
4	A153 1776	Front Mirror Clamp - 1st Mirror	1
5	A077 1673	Thermofuse Terminal	1
6	A153 1777	Front Terminal	1
7	AX52 0028	Exposure Lamp - 97V 200W (115V)	1
7	AX52 0026	Exposure Lamp - 85V 200W (230V)	1
8	A085 1670	Exposure Adjusting Plate	4
9	A153 1778	Rear Terminal	1
10	A153 1780	Exposure Lamp Harness	1
11	A153 1749	Scale Bracket	1
12	AW10 0027	Thermister	1
13	AC03 0103	1st Mirror	1
14	A153 1754	Exposure Stay	4
15	A153 1779	Thermostat - 121°C 250V 10A	1
16	A153 1781	Reflector	2
17	A096 1873	Scanner Shoe Pin	4
18	A153 1773	Rear Scanner Stay	1
19	A153 1772	Front Scanner Stay	1

Index No.	Part No.	Description	Q'ty Per Assembly
101	0951 3006B	Philips Screw With Flat Washer - M3x6	
102	0414 0082W	Tapping Screw With Flat Washer - M4x8	
103	0413 0062W	Tapping Screw - M3x6	
104	0413 0050Z	Tapping Screw - M3x5	
105	0413 0060W	Tapping Screw - M3x6	
106	0964 4008W	Tapping Screw With Flat Washer - M4x8	
107	0313 0040B	Philips Pan Head Screw - M3x4	
108	0313 0060B	Philips Pan Head Screw - M3x6	
109	0314 0060B	Philips Pan Head Screw - M4x6	
110	0703 0030M	Spring Washer - M3	

12. OPTICAL SECTION 3 (A161/A162)

Rev. 3/29/96

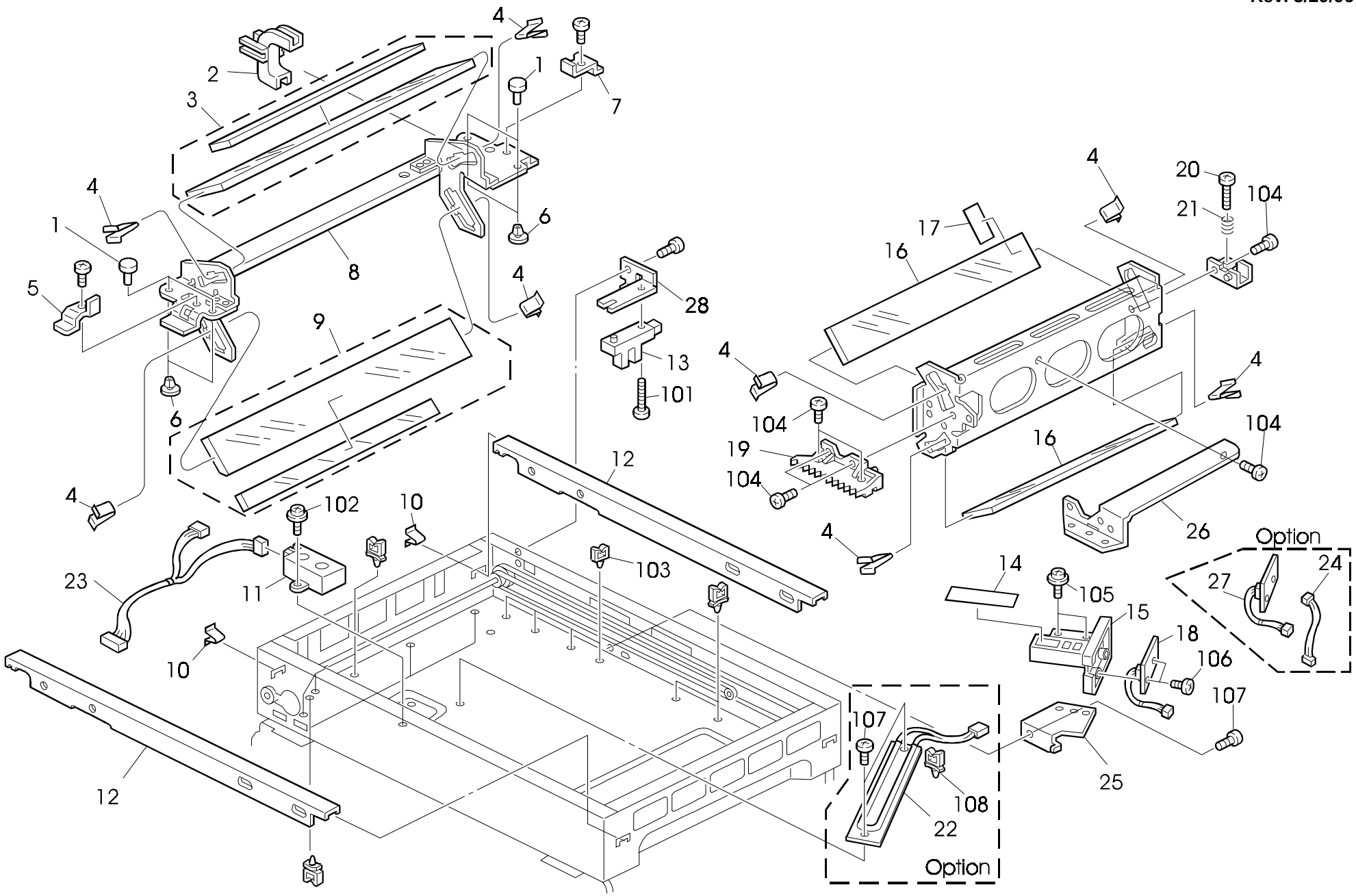

12. OPTICAL SECTION 3 (A161/A162)

Rev. 3/29/96

Index No.	Part No.	Description	Q'ty Per Assembly
1	A096 1873	Scanner Shoe Pin	8
2	A153 1807	Harness Guide	1
3	A153 1808	2nd Mirror	1
4	A077 1690	Spring Plate - Mirror	10
5	A153 1805	Front Mirror Holder	1
6	A069 1883	Shoe - Scanner	10
7	A153 1806	Rear Mirror Holder	1
8	A153 1801	2nd Scanner Ass'y	1
9	A153 1809	3rd Mirror	1
10	A153 1721	Spring Plate	2
11	AW01 0040	Original Sensor	1
12	A153 1720	Scanner Rail	2
13	AW02 0022	Photointerruptor	2
14	A096 1693	ADS Cover	1
15	A096 1692	ADS Case	1
16	AC03 0106	4/5 Mirror	2
17	A153 1908	Shielding Plate	1
18	A157 5160	ADS Sensor Board	1
19	A153 1914	3rd Scanner Rack	1
20	A153 1906	Adjust Shoe	1
21	AA06 3523	Adjust Spring	1
22	AX40 0047	Anticondensation Heater - 115V 15W	1
22	AX40 0048	Anticondensation Heater - 240V 15W	1
23	A153 5393	Optical Harness - 3	1
24	A153 9513	Harness - ADS	1
25	A153 1976	ADS Sensor Bracket	1
26	A153 1912	3rd Scanner Stay	1
27	A096 5230	ADS Board	1
28	A153 1981	Scanner Home Sensor Bracket	1

Index No.	Part No.	Description	Q'ty Per Assembly
101	0314 0100B	Philips Pan Head Screw - M4x10	
102	0443 0080W	Hexagon Head Tapping Screw - M3x8	
103	1105 0230	Clamp	
104	0414 0080B	Tapping Screw - M4x8	
105	0951 3005B	Philips Screw With Flat Washer M3x5	
106	0802 5231	Tapping Screw - M3x6	
107	0434 0060B	Philips Tapping Screw - M4x6	
108	1105 0231	Clamp	

13. OPTICAL SECTION 4 (A161/A162)

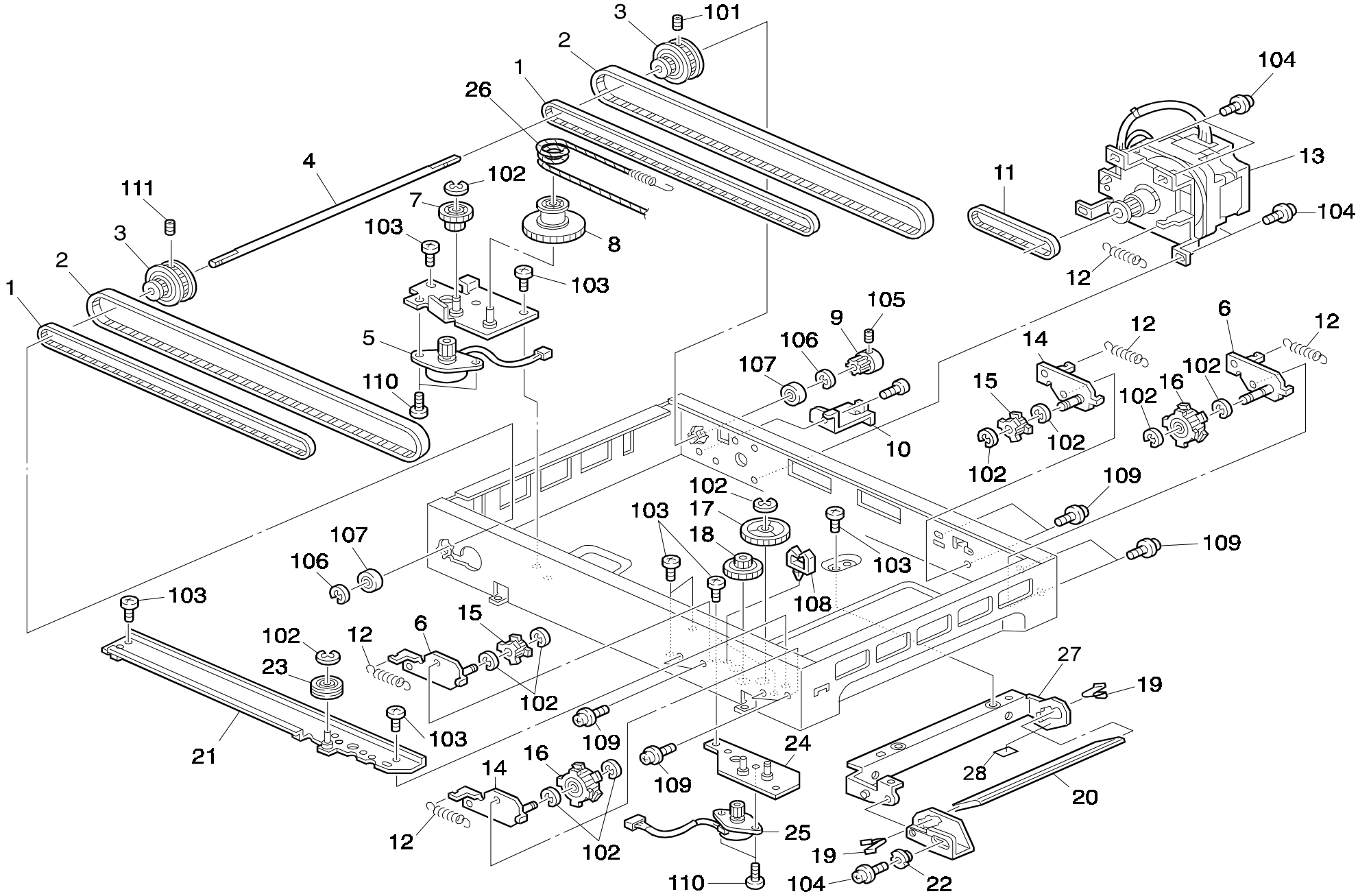

13. OPTICAL SECTION 4 (A161/A162)

Rev. 2/21/96

Index No.	Part No.	Description	Q'ty Per Assembly
1	AA04 3387	Timing Belt - 40S2M984	2
2	AA04 3386	Timing Belt - 40S2M1224	2
3	AB03 3069	Timing Pulley - 22Z/24Z	2
4	AA14 0559	Scanner Drive Shaft	1
5	A153 5213	Lens Drive Motor - DC24V 8.6W	1
6	A153 1708	Tension Bracket - Short	2
7	AB01 7362	Gear - 25Z/32Z	1
8	AB01 7360	Gear Pulley	2
9	AB03 0486	Timing Pulley - 24Z	1
10	A153 5803	Upper Bracket - DC Drive Board	1
11	AA04 3388	Timing Belt - 60S2M180	1
12	AA06 0595	Tension Spring	5
13	A153 1700	Scanner Drive Motor - DC2.3V 13.5W	1
14	A153 1707	Tension Bracket - Long	2
15	AB03 0489	Timing Pulley - 22Z	2
16	AB03 0487	Timing Pulley - 44Z	2
17	AB01 7129	Gear - 20Z And 72Z	1
18	AB01 7361	Gear - 24Z/56Z	2
19	A077 1690	Spring Plate - Mirror	10
20	AC03 0107	6th Mirror	1
21	A153 1952	Magnification Rail	1
22	A075 1766	Adjusting Cam	1
23	AB03 2059	Driven Pulley	2
24	A153 1947	Magnification Drive Unit Bracket	1
25	A153 5211	Mirror Drive Motor - DC24V 8.6V	1
26	AA05 0087	Lens Drive Wire - Vertical	1
27	A153 1923	6th Mirror Bracket	1
28	A048 1801	Mirror Seal	1

Index No.	Part No.	Description	Q'ty Per Assembly
101	0573 0040E	Hexagon Headless Set Screw - M3x4	
102	0720 0040E	Retaining Ring - M4	
103	0434 0060B	Philips Tapping Screw - M4x6	
104	0951 4008B	Philips Screw With Washer - M4x8	
105	0574 0050E	Hexagon Headless Set Screw - M4x5	
106	0720 0060E	Retaining Ring - M6	
107	0740 3008	Ball Bearing - 8x22x7	
108	1105 0230	Clamp	
109	0951 4006B	Philips Screw With Washer - M4x6	
110	0433 0060W	Tapping Screw - M3x6	
111	0573 0100E	Hexagon Headless Set Screw - M3x10	

14. TONER SUPPLY UNIT (A161/A162)

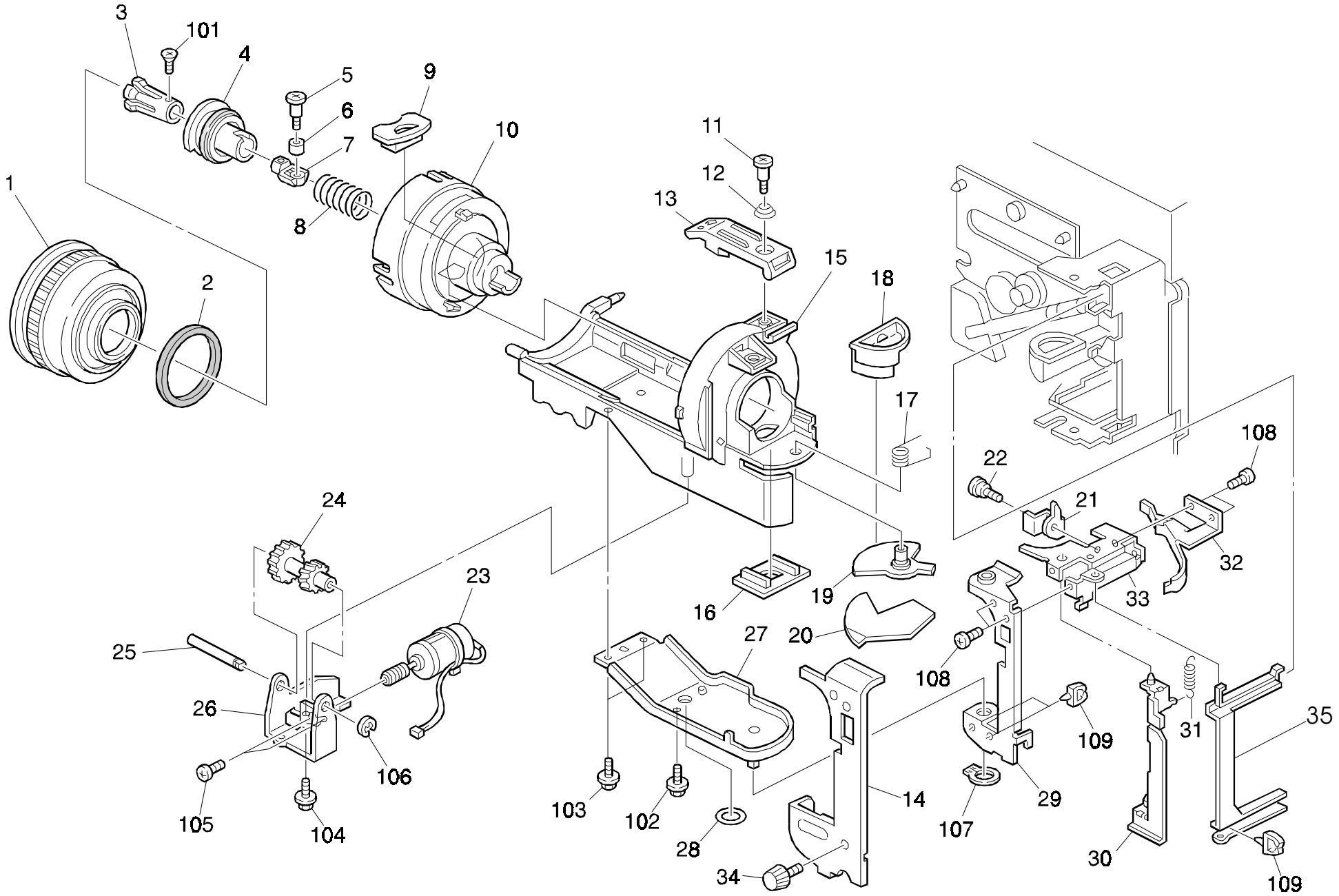

14. TONER SUPPLY UNIT (A160/A157)

Rev. 02/09/2001

Index No.	Part No.	Description	Q'ty Per Assembly
1	A153 3185	Toner Supply Gear (230V)	1
1	A153 3187	Toner Supply Gear (115V)	1
1	A153 3189	Toner Supply Gear (ASIA/TIWAN)	1
2	AA15 1894	Seal - 67x53x2	1
3	A134 3180	Bottle Chuck	1
4	A134 3177	Toner Slider	1
5	AA14 3712	Chuck Shaft	1
6	A134 3181	Chuck Roller	1
7	A134 3179	Chuck Shaft	1
8	AA06 3366	Chuck Spring	1
9	A134 3215	Rubber Cap	1
10	A134 3190	Toner Bottle Stopper	1
11	AA14 3410	Stepped Screw - M4	1
12	AA06 3367	Pressure Spring	1
13	A134 3197	Bottle Holder	1
14	A153 3281	Bottle Bracket Cover	1
15	A134 3172	Toner Bottle Holder	1
16	A153 3173	Shutter Guide	1
17	AA06 6260	Shutter Spring	1
18	A153 3174	Shutter Holder	1
19	A153 3172	Shutter	1
20	AA15 0377	Shutter Seal	1
21	A153 3265	Bottle Unit Lock Plate	1
22	AA14 3025	Stepped Screw - M3	1
23	A134 3162	Bottle Drive Motor	1
24	AB01 7347	Idle Gear	1
25	AA14 8413	Idle Gear Shaft	1
26	A134 3161	Bottle Drive Bracket	1
27	A134 3157	Bottle Holder Bracket	1
28	AA15 0234	Mylar Seal - Base	1
29	A153 3262	Bottle Unit Hinge	1
30	A153 3266	Bottle Unit Link Plate	1
31	AA06 0453	Relay Adjusting Spring	2
32	A134 3201	Cam - Toner Bottle	1
33	A153 3264	Bottle Unit Upper Hinge	1
34	AA14 3459	Knob Screw	1
35	A153 3272	Bottle Unit Holder	1
35	A153 3152	Toner Supply Unit - EU	1
101	0323 0060B	Philips Sunk Screw - M3x6	
102	0433 0050B	Tapping Screw - M3x5	
103	0802 5231	Tapping Screw - M3x6	
104	0802 5233	Tapping Screw - M3x10	
105	0800 0072	Philips Pan Head Screw - M2.6x4	
106	0720 0040E	Retaining Ring - M4	
107	0725 0100E	Retaining Ring C - M10	
108	0434 0060B	Philips Tapping Screw - M4x6	
109	1105 0199	Clamp	

15. DEVELOPMENT UNIT (A161/A162)

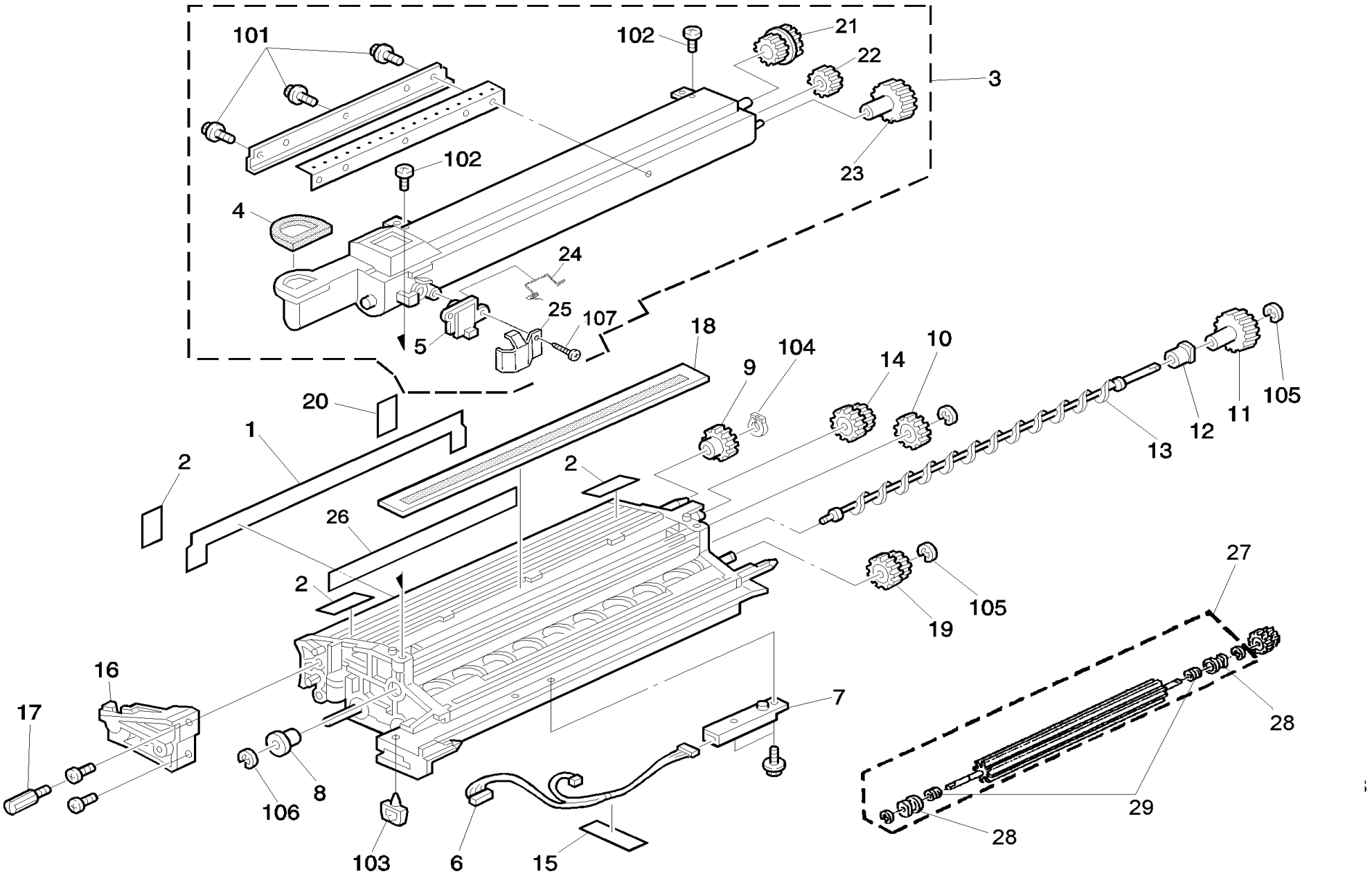

15. DEVELOPMENT UNIT (A161/A162)

Rev. 6/13/97

Index No.	Part No.	Description	Q'ty Per Assembly
*	A153 3051	Development Unit	1
1	AA15 2333	Entrance Seal	1
2	AA15 0382	Entrance Seal	4
3	A153 3200	Toner Hopper Ass'y	1
4	AA15 1935	Seal - 38x32x2.5	1
5	AW23 0009	Toner End Sensor	1
6	A153 5330	CT Harness - 7p	1
7	AW23 0008	Toner Density Sensor	1
8	AA08 0188	Bushing - 5mm	1
9	AB01 3343	Development Roller	1
10	AB01 3909	Idle Gear	1
11	AB01 3911	Gear	1
12	AA08 0186	Bushing - 6mm	1
13	AD03 7045	Toner Collection Coil	1
14	AB01 7366	Paddle Gear	1
15	G012 3897	Relay Harness - Toner End Sensor	1
16	A153 3090	Development Position Plate	1
17	A153 3149	Knob Screw - M4x12	1
18	A153 3080	Development Filter	1
19	AB01 7367	Right Paddle Roller	1
20	AA15 0231	Seal - 15X30	1
21	AB01 7365	Coupled Gear 15Z/22Z	1
22	AB01 3914	Gear 17Z	1
23	AB01 3915	Gear 22Z	1
24	AA06 6246	Spring	1
25	A153 3227	Toner End Sensor Cover	1
26	AA15 2334	Second Mylar	1
27	A153 3063	Paddle Roller Ass'y	1
28	AA08 0200	Bushing 6x12x11	2
29	AA15 2331	V-Ring	2

Index No.	Part No.	Description	Q'ty Per Assembly
101	0802 5231	Tapping Screw - M3x6	
102	0314 0060B	Philips Pan Head Screw - M4x6	
103	1105 0199	Clamp	
104	0720 0090E	Retaining Ring - M9	
105	0720 0040E	Retaining Ring - M4	
106	0720 0030E	Retaining Ring - M3	
107	0452 3010B	Tapping Bind Screw - M3x10	

16. DRUM UNIT 1 (A161/A162)

Rev. 10/11/95

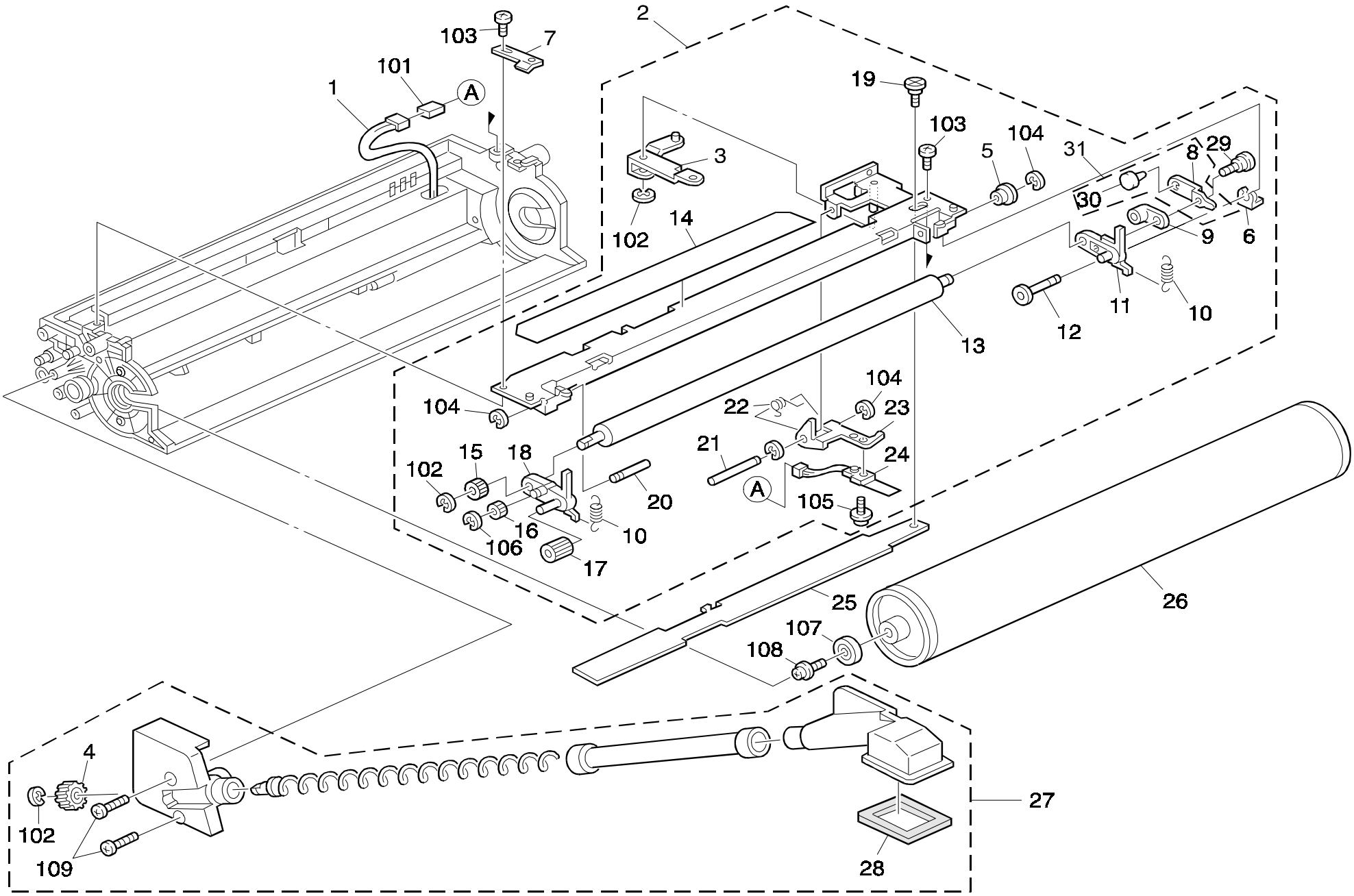

16. DRUM UNIT 1 (A161/A162)

Index No.	Part No.	Description	Q'ty Per Assembly
*	A153 2255	Drum Unit	1
1	AZ48 0029	CT Harness	1
2	A153 2110	Charge Roller Ass'y	1
3	A153 2126	Swing Arm	1
4	AB01 1358	Driven Gear	1
5	AA08 0219	Rear Roller Bushing	1
6	A077 1310	Snap Ring - M2	1
7	A153 2116	Grounding Plate	1
8	A153 2118	Charge Roller Terminal	1
9	AA08 0197	Rear Roller Bushing	1
10	AA06 2286	Pressure Spring	2
11	AA08 0209	Rear Roller Housing	1
12	AA14 5808	Rear Support Shaft	1
13	AD02 7001	Drum Charge Roller	1
14	A153 2143	Shielding Plate	1
15	AB01 0344	Roller Gear - 20Z	1
16	AB01 0343	Idle Gear - 14Z	1
17	AB01 0342	Idle Gear - 20Z	1
18	AA08 0191	Front Roller Bushing	1
19	AA14 3716	Stepped Screw	1
20	AA14 5794	Front Support Shaft	1
21	AA14 8439	Thermistor Shaft	1
22	AA06 6253	Pressure Spring	1
23	A153 2133	Thermistor Bracket	1
24	AW10 0032	Thermistor - 25°C 10k Ω	1
25	A153 2120	Drum Charge Roller Cleaner	1
26	A153 9510	Opc Drum	1
27	A153 3580	Toner Collection Unit	1
28	AA15 1945	Joint Seal	1
29	AA14 3730	Stepped Screw	1
30	A153 2117	Roller Terminal	1
31	A153 2119	Charge Roller Terminal Ass'y	1

Index No.	Part No.	Description	Q'ty Per Assembly
101	1102 6613	Relay Terminal - 2P	
102	0720 0040E	Retaining Ring - M4	
103	0313 0060B	Philips Pan Head Screw - M3x6	
104	0720 0015E	Retaining Ring - 1.5	
105	0951 3008B	Philips Screw With Flat Washer - M3x8	
106	0720 0020E	Retaining Ring - M2	
107	0805 3471	Bushing - M8x22x7	
108	0951 5010B	Philips Screw With Washer - M5x10	
109	0802 5233	Tapping Screw - M3x10	

17. DRUM UNIT 2 (A161/A162)

Rev. 12/02/97

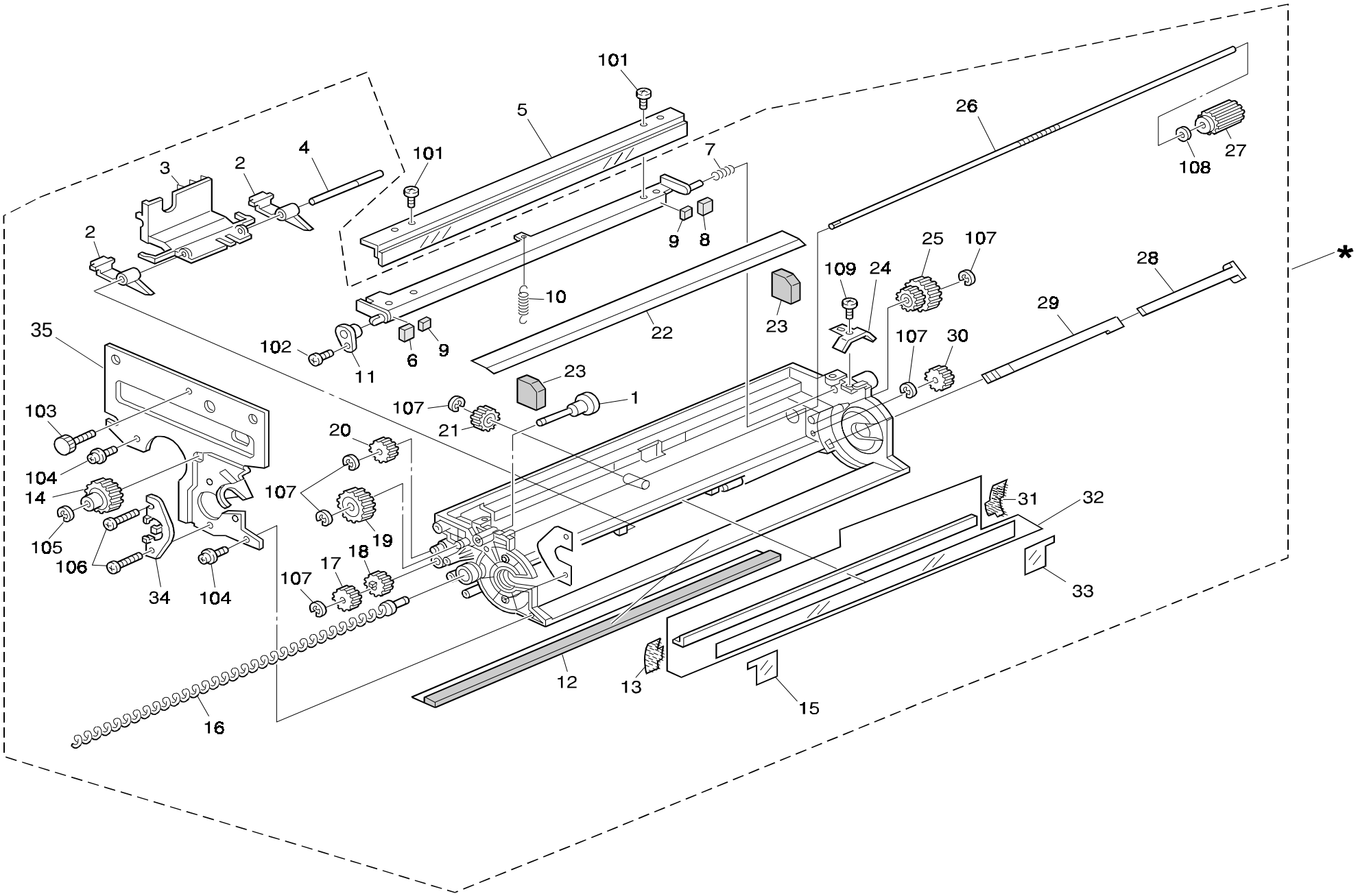

17. DRUM UNIT 2 (A161/A162)

Rev. 12/02/97

Index No.	Part No.	Description	Q'ty Per Assembly
*	A153 2255	Drum Unit	1
1	AB01 0341	Gear - 18Z	1
2	AD02 5019	Drum Pick-off Pawl	2
3	A153 3595	Pick-off Pawl Retainer	1
4	AA14 0321	Pick-off Pawl Shaft	1
5	A153 2275	Cleaning Blade	1
6	AA15 1943	Front Seal	1
7	G006 4317	Pressure Spring	1
8	AA15 1944	Rear Seal	1
9	AA15 1809	Rear Seal	2
10	AA06 0598	Pressure Spring	1
11	AA08 0154	Rear Bushing	1
12	AA15 0389	Drum Guide Seal	1
13	AA15 2245	Front Drum Seal	1
14	AB01 1361	Drive Gear	1
15	AA15 0380	Seal Front Holder	1
16	AD04 3035	Toner Collection Coil	1
17	AB01 7375	Drive Gear	1
18	AB01 7374	Drive Gear	1
19	AB01 7388	Blade Cam	1
20	AB01 1360	Idle Gear	1
21	AB01 7376	Separation Pawl Cam	1
22	A153 3558	Blade Seal	1
23	AA15 1942	Side Seal	2
24	A153 3570	Spring Plate	1
25	AB01 7373	Idle Cam	1
26	AA14 0560	Joint Shaft	1
27	AB01 1359	Joint Drive Gear	1
28	A153 3590	Density Sensor Bracket	1
29	A153 5132	ID Sensor	1
30	AB01 1357	Collection Coil Gear	1
31	AA15 2246	Rear Drum Seal	1
32	A153 3555	Cleaning Entrance Seal	1
33	AA15 0381	Seal Rear Holder	1
34	A153 2302	Drum Bearing Holder	1

Index No.	Part No.	Description	Q'ty Per Assembly
35	A1532301	Front Stay	1
101	0314 0060B	Philips Pan Head Screw - M4x6	
102	0802 5233	Tapping Screw - M3x10	
103	0803 0017	Knob Screw - M4x6.5	
104	0965 3010B	Tapping Screw With Flat Washer - M3x6	
105	0720 0030E	Retaining Ring - M3	
106	0313 0080B	Philips Pan Head Screw - M3x8	
107	0720 0040E	Retaining Ring - M4	
108	0805 3384	Bushing - 5mm	
109	0971 3006A	Philips Polycarbonate Screw - M3x6	

18. TRANSFER UNIT (A161/A162)

Rev. 11/18/96

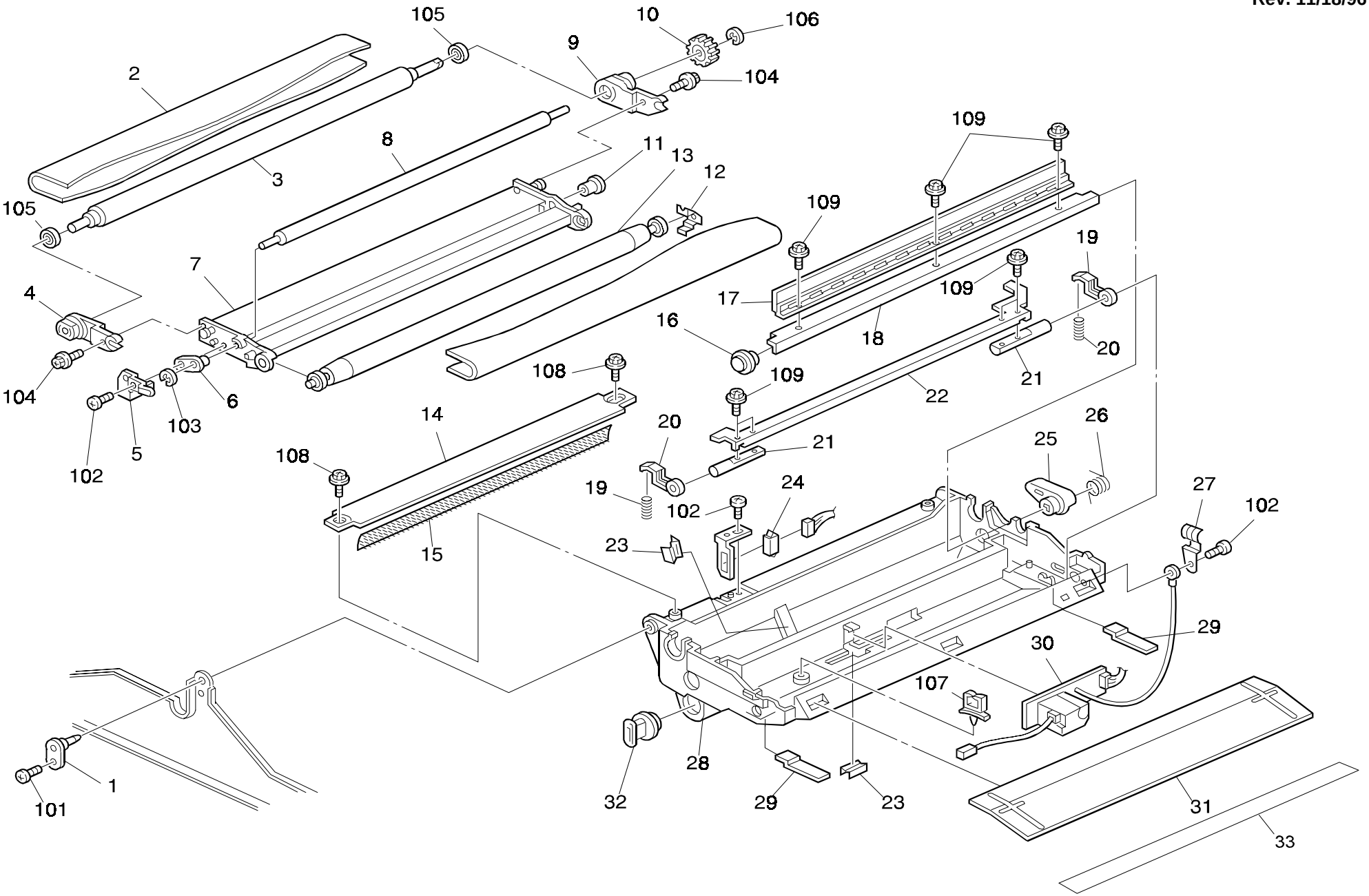

18. TRANSFER UNIT (A161/A162)

Rev. 11/18/96

Index No.	Part No.	Description	Q'ty Per Assembly
1	A157 3900	Support Plate	1
2	A157 3861	Transfer Belt	1
3	A153 3866	Belt Drive Roller	1
4	A157 3875	Front Side Plate	1
5	A153 3873	Bias Roller Terminal	1
6	AA08 2061	Bias Roller Bushing - Front	1
7	A157 3862	Transfer Belt Frame	1
8	A153 3870	Transfer Bias Roller	1
9	A157 3876	Rear Side Plate	1
10	AB01 3916	Belt Drive Gear - 25Z	1
11	AA08 0195	Bias Roller Bushing - Rear	1
12	A153 3874	Earth Terminal	1
13	A153 3865	Belt Driven Roller	1
14	A153 3884	Belt Guide Plate	1
15	AA15 2332	Seal - Casing	1
16	A153 3894	Bushing	1
17	A153 3892	Belt Cleaning Blade	1
18	A153 3893	Belt Cleaning Stay	1
19	A153 3886	Belt Pressure Lever	2
20	A077 3918	Spring - T/S Unit	2
21	AA14 5537	Belt Release Shaft	2
22	A153 3887	Belt Release Stay	1
23	A153 3897	Harness Clamp	2
24	A157 3889	Connector Bracket	1
25	A153 3895	Front Bushing	1
26	AA06 6247	Torsion Spring	1
27	A153 3888	Earth Plate	1
28	A157 3882	Transfer Belt Casing	1
29	A153 3877	Spring Plate	2
30	AZ30 0041	Power Pack - Transfer Unit	1
31	A153 3901	Entrance Guide Plate	1
32	A157 3883	Toner Collection Cap	1
33	A153 3591	Mylar - 17x335	1

Index No.	Part No.	Description	Q'ty Per Assembly
101	0434 0060B	Philips Tapping Screw - M4x6	
102	0802 5232	Tapping Screw - M3x8	
103	0720 0030E	Retaining Ring - M3	
104	0443 0080B	Tapping Screw - M3x8	
105	0805 3485	Bushing - 8x12x3.5mm	
106	0720 0060E	Retaining Ring - M6	
107	1105 0196	Harness Clamp	
108	0965 3008B	Tapping Screw With Washer - M3x8	
109	0443 0060B	Hexagon Tapping Screw - M3x6	

19. FUSING UNIT 1 (A161/A162)

Rev. 9/27/96

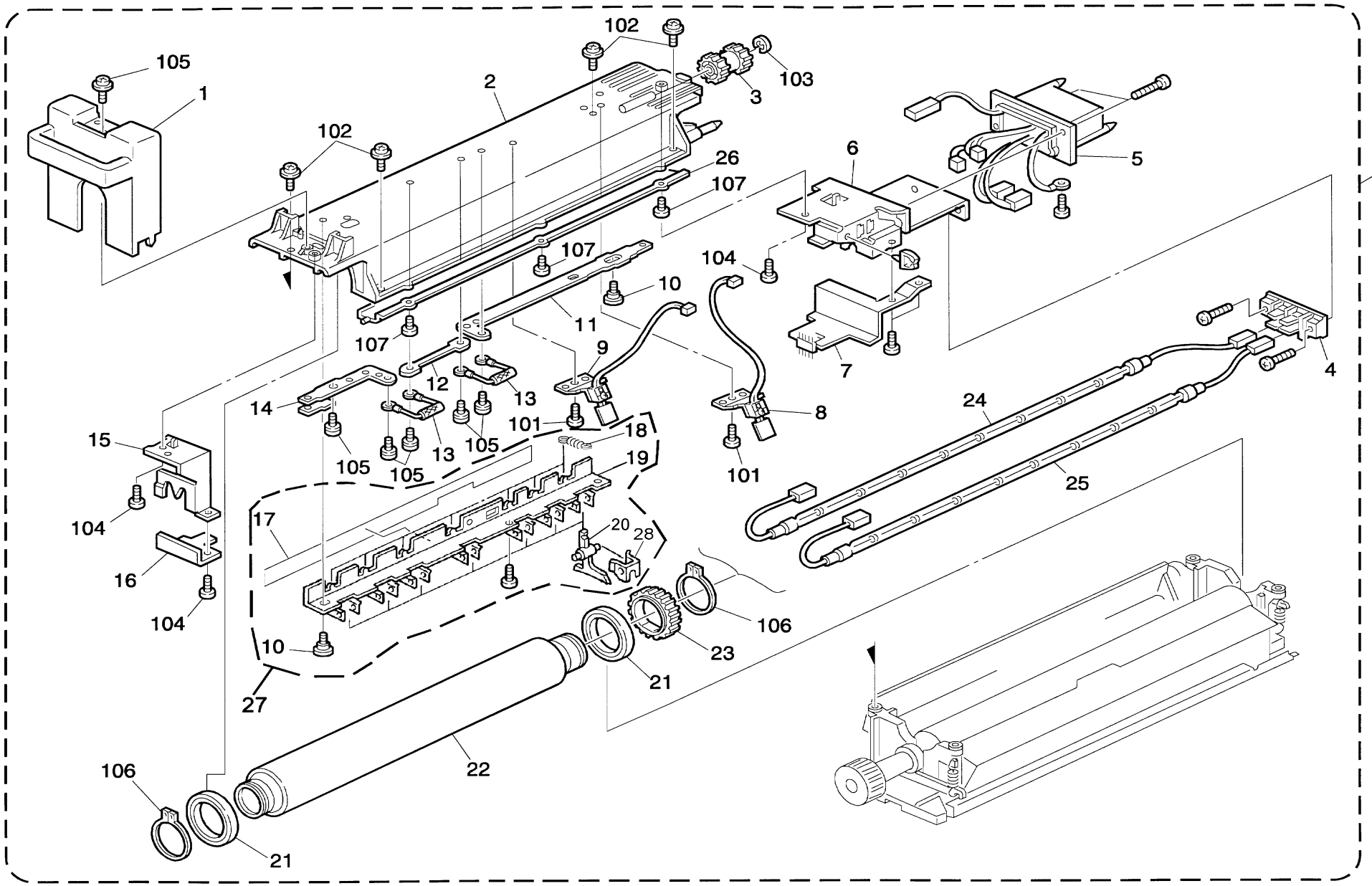

19. FUSING UNIT 1 (A161/A162)

Rev. 02/16/2001

Index No.	Part No.	Description	Q'ty Per Assembly
*	A161 4006	Fusing Unit - 115V	1
1	A134 4130	Fusing Front Cover	1
2	A208 4053	Fusing Upper Stay	1
3	AB01 3883	Idle Gear - 25Z	1
4	A153 4074	Terminal Connector - 2p	1
5	A153 5300	Fusing Unit Connector (120V)	1
5	A208 4102	Fusing Unit Connector (230V)	1
6	A208 4084	Fusing Connector Bracket	1
7	A208 4102	Rear Lamp Terminal Holder	1
8	A153 4089	Thermistor - 2	1
9	A153 4088	Thermistor	1
10	AA14 3715	Stepped Screw - M5	2
11	A134 4061	Rear Terminal Plate	1
12	A153 4062	Electrode Plate - Middle	1
13	A204 4160	Thermofuse - 172°C	2
14	A153 4063	Front Terminal Plate	1
15	A153 4075	Front Holder	1
16	A153 4102	Front Lamp Terminal Holder	1
17	A134 4115	Fusing Seal	1
18	AA06 0103	Solenoid Spring	5
19	A134 4112	Stripper Bracket	1
20	AE04 4019	Hot Roller Stripper	5
21	AE03 0023	Bearing - 30x42x7mm	2
22	AE01 1024	Hot Roller	1
23	AB01 3882	Gear - 40Z	1
24	AX43 0023	Fusing Lamp - 120V 350W	1
24	AX43 0025	Fusing Lamp - 230V 350W	1
25	AX43 0030	Main Fusing Lamp - 120V 550W	1
25	AX43 0031	Main Fusing Lamp - 230V 550W	1
26	A153 4055	Upper Fusing Guide	1
27	A153 9016	Stripper Bracket Ass'y	1
28	A153 4114	Stripper Stopper	8

Index No.	Part No.	Description	Q'ty Per Assembly
101	0954 3010B	Philips Screw - M3x10	
102	0954 4012B	Double Sems Screw - M4 X 12	
103	0720 0060E	Retaining Ring - M6	
104	0314 0060B	Philips Pan Head Screw - M4x6	
105	0950 4006M	Philips Screw With Flat Washer - M4x6	
106	0725 0300E	Retaining Ring C - M30	
107	0313 0050B	Philips Pan Head Screw - M3X5	

20. FUSING UNIT 2 (A161/A162)

Rev. 3/20/96

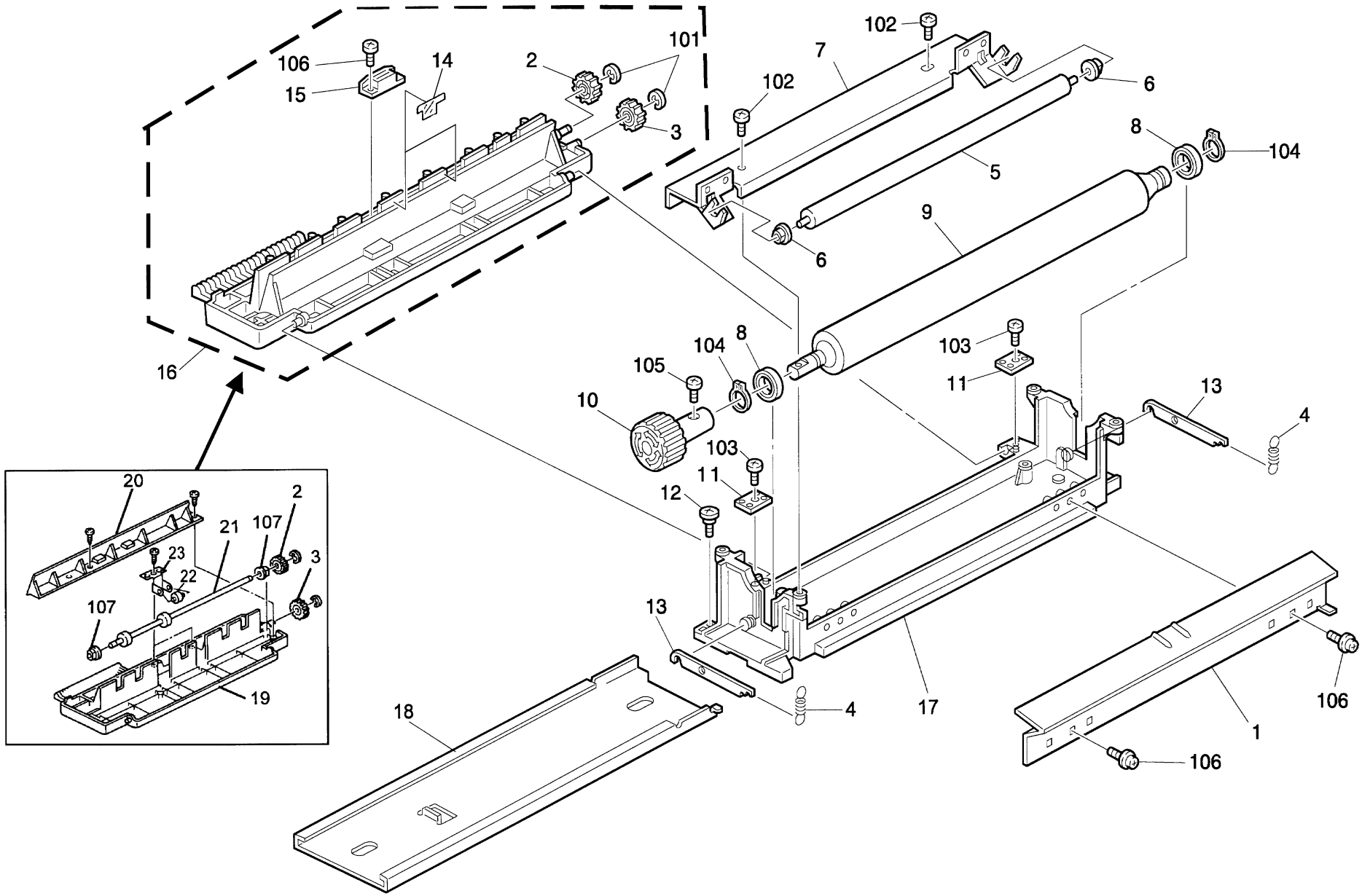

20. FUSING UNIT 2 (A161/A162)

Rev. 6/13/97

Index No.	Part No.	Description	Q'ty Per Assembly
1	A153 4197	Lower Fusing Guide	1
2	AB01 3885	Idle Gear - 20Z	1
3	AB01 3884	Exit Gear - 17Z	1
4	AA06 0659	Spring	2
5	AE04 2030	Cleaning Roller	1
6	AE03 1028	Bushing - 8x10x5	2
7	A153 4205	Cleaning Roller Bracket	1
8	AE03 0022	Bearing - 12x24x64m	2
9	AE02 0050	Pressure Roller	1
10	AG05 0076	Fusing Knob	1
11	A134 4301	Exit Guide Hinge	2
12	A077 4162	Shoulder Screw - M3	1
13	A134 4161	Pressure Lever	2
14	A134 4254	Fusing Exit Guide - Rear	1
14	A134 4255	Fusing Exit Guide - Front	1
15	AG07 0009	Magnetic Catch	1
16	A134 4006	Fusing Exit Frame	1
17	A134 4151	Fusing Frame	1
18	A134 4153	Slide Rail - Fusing	1
19	A153 4250	Fusing Exit Frame	1
20	A134 4280	Fusing Exit Guide - Lower	1
21	AF02 0326	Exit Roller Assembly	1
22	AF04 0548	Exit Drive Roller	2
23	A134 4272	Roller Holder	1

Index No.	Part No.	Description	Q'ty Per Assembly
101	0720 0040E	Retaining Ring - M4	
102	0414 0122B	Philips Tapping Screw - M4x12	
103	0434 0082B	Tapping Screw - M4x8	
104	0725 0120E	Retaining Ring C - M12	
105	0950 4008B	Philips Screw With Spring Washer - M4x8	
106	0802 5237	Tapping Screw - M4X10	
107	0805 3480	Bushing -6mm	

21. DUPLEX TRAY 1 (A162)

Rev. 01/23/98

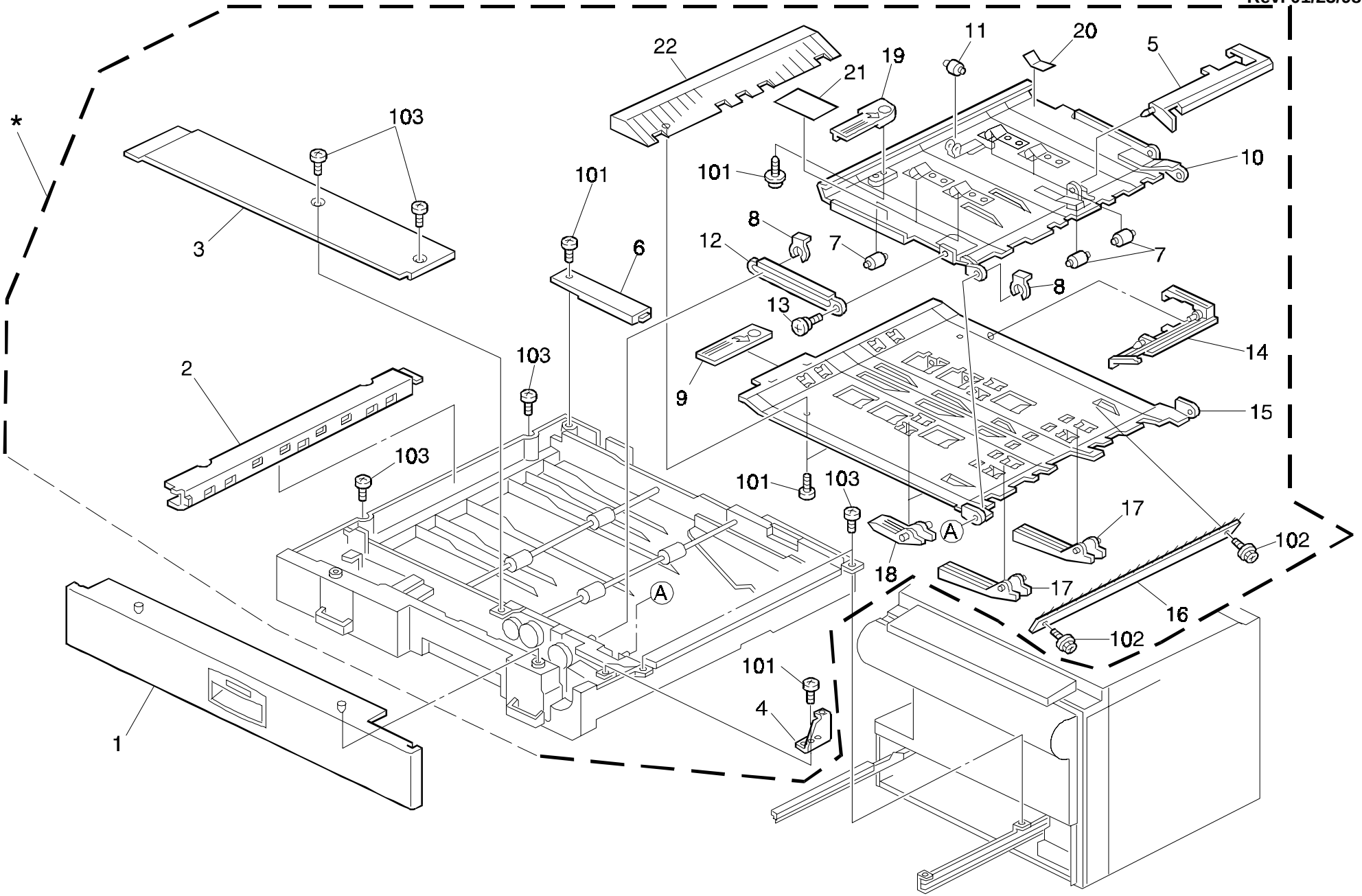

21. DUPLEX TRAY 1 (A162)

Rev. 7/25/97

Index No.	Part No.	Description	Q'ty Per Assembly
*	A158 4600	Duplex Tray Ass'y	1
1	A134 2956	Paper Feed Front Cover	2
2	A134 4720	End Fence Upper Cover	1
3	A134 4701	Front Upper Cover	1
4	A134 4712	Right Cover Bracket	1
5	A134 4728	Inverter Feeler	1
6	A134 4721	Connector Cover	1
7	AF02 2077	Driven Roller	7
8	5206 2686	Snap Ring	2
9	A134 4739	Lower Guide Plate Knob	1
10	A158 4607	Upper Guide Plate	1
11	G694 4747	Upper Exit Roller	7
12	A134 4619	Guide Plate Link	1
13	5447 2768	Stepped Screw - M3	1
14	A134 4730	Entrance Feeler	1
15	A134 4740	Lower Guide Plate	1
16	AA12 0067	Anti Static Brush	1
17	A154 4616	Paper Holder	6
18	A158 4603	Paper Holder	2
19	A134 4726	Guide Plate Knob	1
20	AA16 2068	Guide Plate Pad	1
21	A134 4884	Decal - Duplex Misfeed Removal	1
22	A158 4604	Duplex Lower Guide	1

Index No.	Part No.	Description	Q'ty Per Assembly
101	0802 5236	Tapping Screw - M4x8	
102	0443 0060W	Hexagon Head Tapping Screw - M3x6	
103	0344 0080F	Philips Truss Head Screw - M4x8	

22. DUPLEX TRAY 2 (A162)

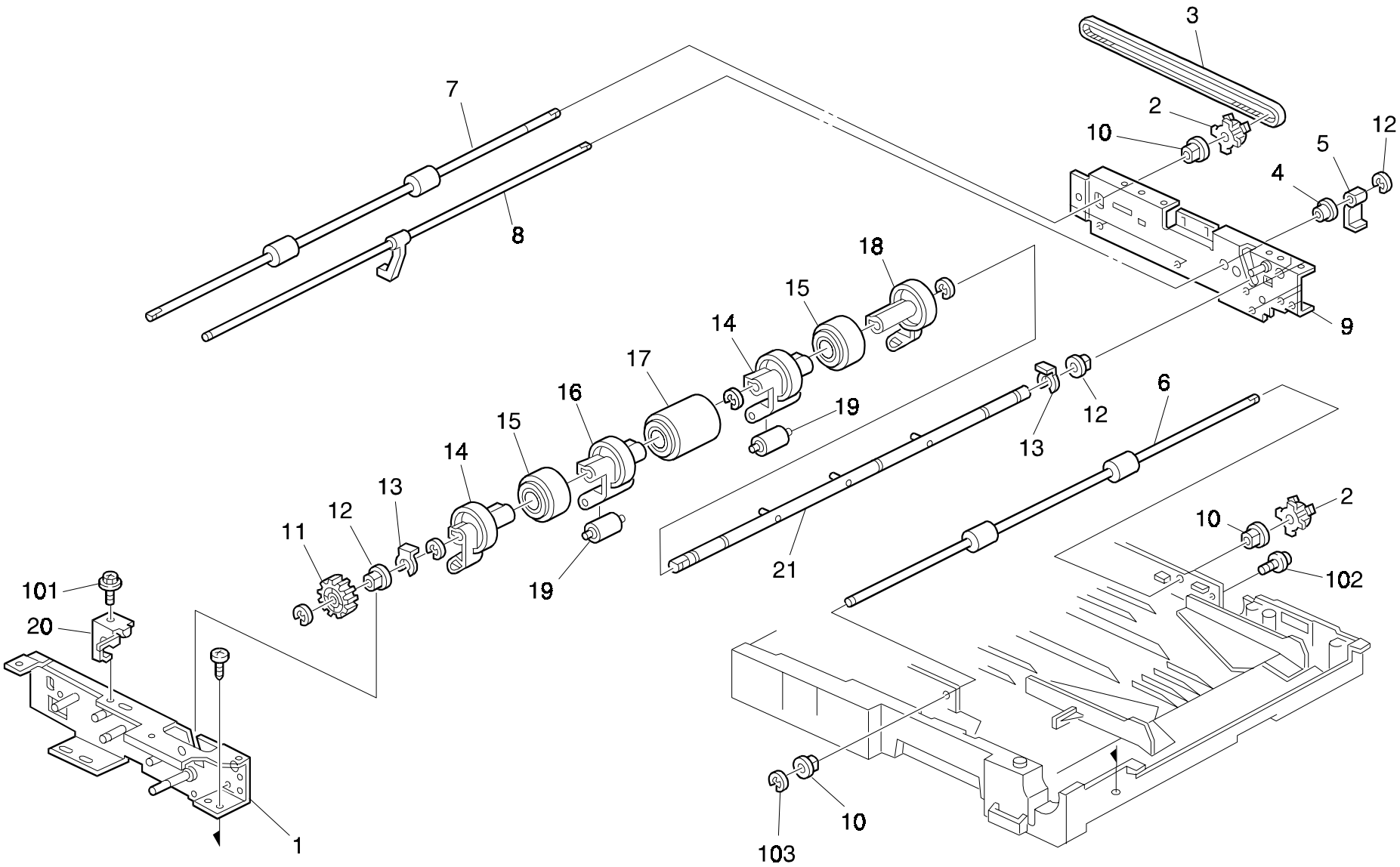

22. DUPLEX TRAY 2 (A162)

Index No.	Part No.	Description	Q'ty Per Assembly
1	A134 4751	Front Side Plate	1
2	AB03 0474	Pulley - 24Z	2
3	AA04 3390	Timing Belt - 40S2M192	1
4	5443 2668	Bushing - 4x6x7mm	2
5	AA11 1208	Paper End Sensor Feeler	1
6	AF02 0319	Transport Roller	1
7	AF02 0320	Right Transport Roller	1
8	A134 4676	Paper End Feeler	1
9	A134 4781	Rear Side Plate	1
10	5053 0447	Bushing - 6mm	4
11	AB01 1166	Gear - 33Z	1
12	5304 1639	Bushing - 8mm	2
13	5215 2621	Snap Ring - M6	3
14	A134 4809	Front Guide Holder	1
15	AF02 0317	Stack Roller	2
16	A134 4649	Paper Guide Holder	2
17	AF03 1024	Feed Roller	1
18	A134 4808	Rear Guide Holder	1
19	AF02 2077	Driven Roller	7
20	A134 4690	Clutch Stopper	1
21	A134 4512	Feed Roller Shaft	1

Index No.	Part No.	Description	Q'ty Per Assembly
101	0443 0060B	Hexagon Tapping Screw - M3x6	
102	0951 4008B	Philips Screw With Washer - M4x8	
103	0720 0040E	Retaining Ring - M4	

23. DUPLEX TRAY 3 (A162)

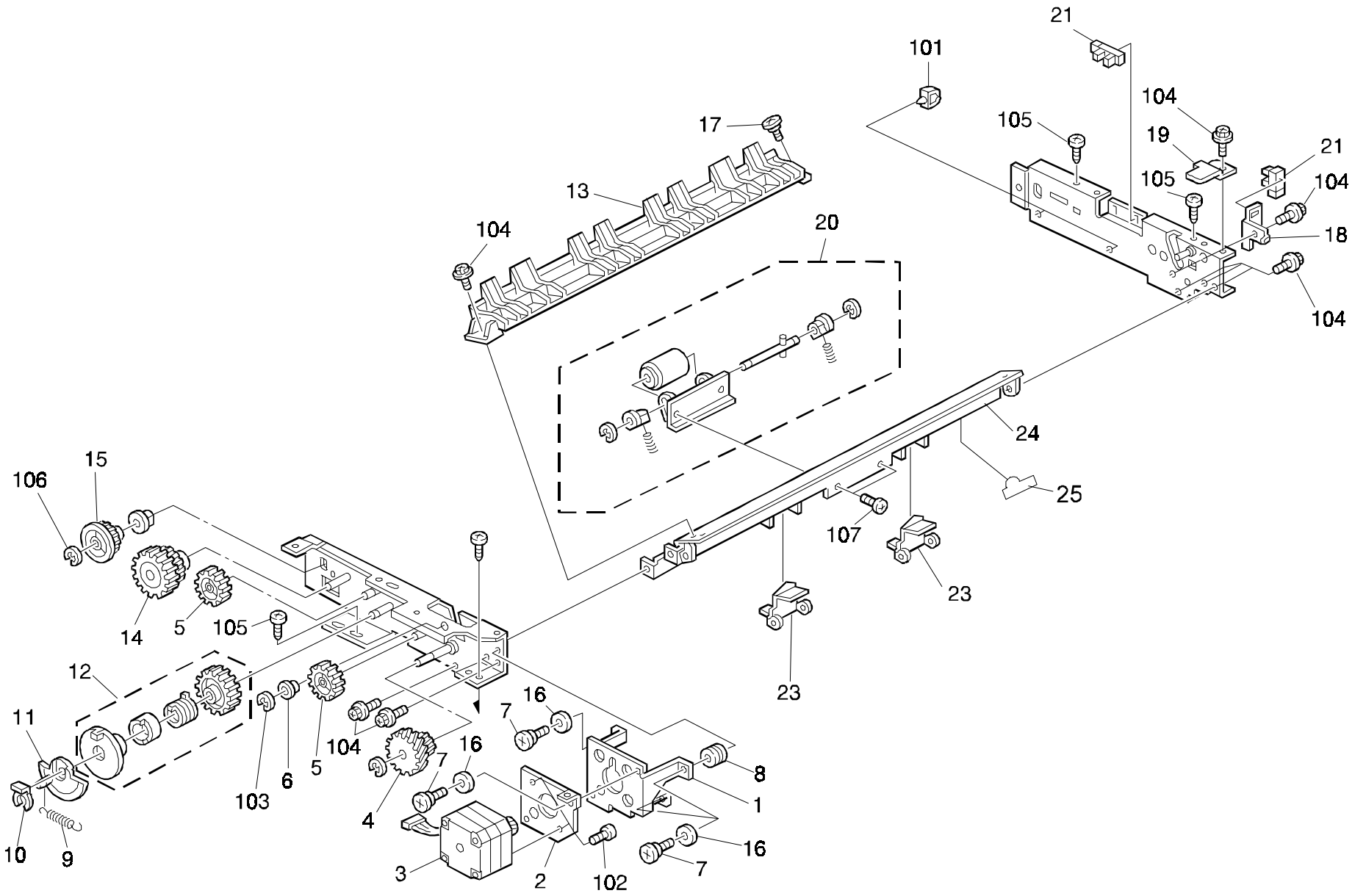

23. DUPLEX TRAY 3 (A162)

Rev. 7/25/97

Index No.	Part No.	Description	Q'ty Per Assembly
1	A134 4799	Motor Bracket	1
2	A134 4800	Motor Bracket	1
3	A134 5290	Transport Drive Motor	1
4	AB01 7337	Gear - 15Z/55Z	1
5	AB01 1165	Gear - 32Z	2
6	5443 2668	Bushing - 4x6x7mm	2
7	A079 3626	Stepped Screw - Swing Cleaning	3
8	AA16 1067	Cushion - Motor	3
9	AA06 0593	Spring	1
10	5447 2681	Snap Ring	7
11	A334 4706	Disk - Bottom Plate Clutch	1
12	AB04 0015	Spring Clutch - Tray Bottom Plate	1
13	A134 4508	Inverter Guide Plate	1
14	AB01 7332	Gear - 24Z/41Z	1
15	AB01 1167	Gear - 25Z	1
16	AA13 2184	Motor Cushion	3
17	AA14 3307	Stepped Screw - M3x4	1
18	A134 4790	Paper End Sensor	1
19	A134 4804	Guide Plate Stopper	1
20	A134 4527	Separation Roller	1
21	AW02 0075	Photointerrupter	15
22			
23	A134 4658	Vibrating Plate	2
24	A134 4662	Duplex Guide Plate	1
25	A134 4670	Duplex Guide Mylar	1

Index No.	Part No.	Description	Q'ty Per Assembly
101	1105 0199	Clamp	
102	0313 0050B	Philips Pan Head Screw - M3x5	
103	0720 0030E	Retaining Ring - M3	
104	0443 0060B	Hexagon Tapping Screw - M3x6	
105	0802 5236	Tapping Screw - M4x8	
106	0720 0040E	Retaining Ring - M4	
107	0434 0060B	Philips Tapping Screw - M4x6	

24. DUPLEX TRAY 4 (A162)

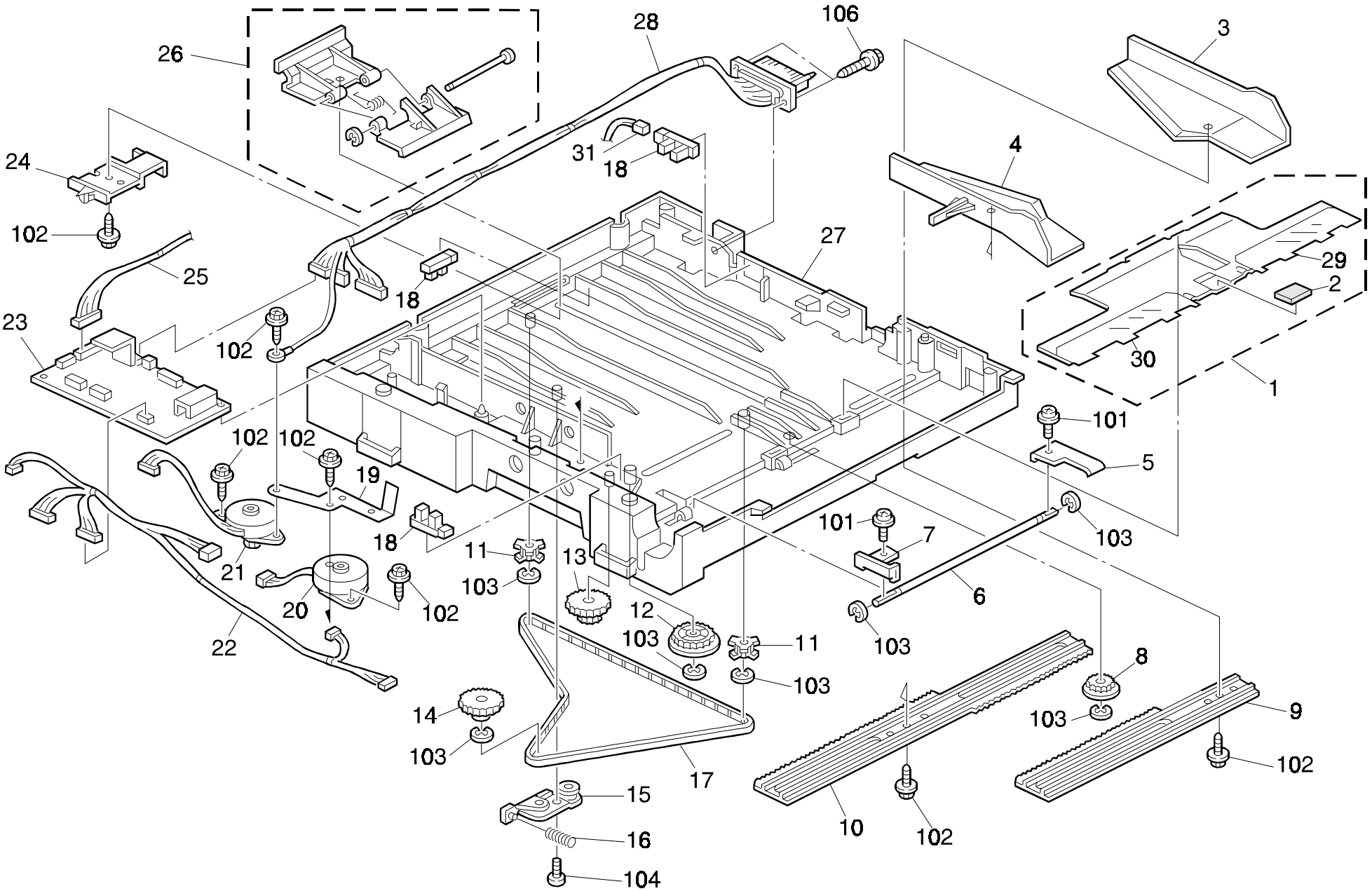

24. DUPLEX TRAY 4 (A162)

Rev. 7/25/97

Index No.	Part No.	Description	Q'ty Per Assembly
1	A154 4620	Bottom Plate	1
2	AF01 3003	Bottom Plate Pad - Duplex	1
3	AF01 6160	Rear Side Fence	1
4	AF01 6161	Front Side Fence	1
5	A204 4651	Bottom Pressure Plate	1
6	AA14 0291	Bottom Plate Shaft	1
7	A491 4690	Bottom Plate Hook	1
8	G011 3305	Gear - 16T	2
9	A134 4689	Rear Side Fence Rack	1
10	A134 4688	Front Side Fence Rack	1
11	AB03 0473	End Fence Pulley - 22Z	2
12	AB01 3881	Gear - 31Z	1
13	AB01 7400	Gear- 18Z/68Z	1
14	AB01 7339	End Fence Gear - 22Z/58Z	1
15	A134 4714	Tightener	1
16	AA06 3370	Spring	1
17	AA04 3374	Timing Belt - S2M800	1
18	AW02 0075	Photointerrupter	15
19	A134 4620	Grounding Plate	1
20	A134 5291	Jogger Drive Motor - Side Fence	1
21	A134 5292	Jogger Drive Motor - End Fence	1
22	A134 5323	Motor Harness	1
23	A134 5254	Duplex Control Board	1
24	A134 4710	End Fence Actuator	1
25	A134 5321	Sensor Relay Harness	1
26	A134 4525	End Fence	1
27	AF01 0018	Duplex Tray	1
28	A134 5320	Toner Bottle Cam	1
29	A154 4622	Rear Guide Plate	1
30	A154 4621	Front Guide Plate	1
31	A134 5322	End Fence Harness	1

Index No.	Part No.	Description	Q'ty Per Assembly
101	0951 3006B	Philips Screw With Flat Washer - M3x6	
102	0802 5232	Tapping Screw - M3x8	
103	0720 0040E	Retaining Ring - M4	
104	0802 5236	Tapping Screw - M4x8	
105	0802 5234	Tapping Screw - M3x12	

25. PAPER EXIT AND INVERTER (A162)

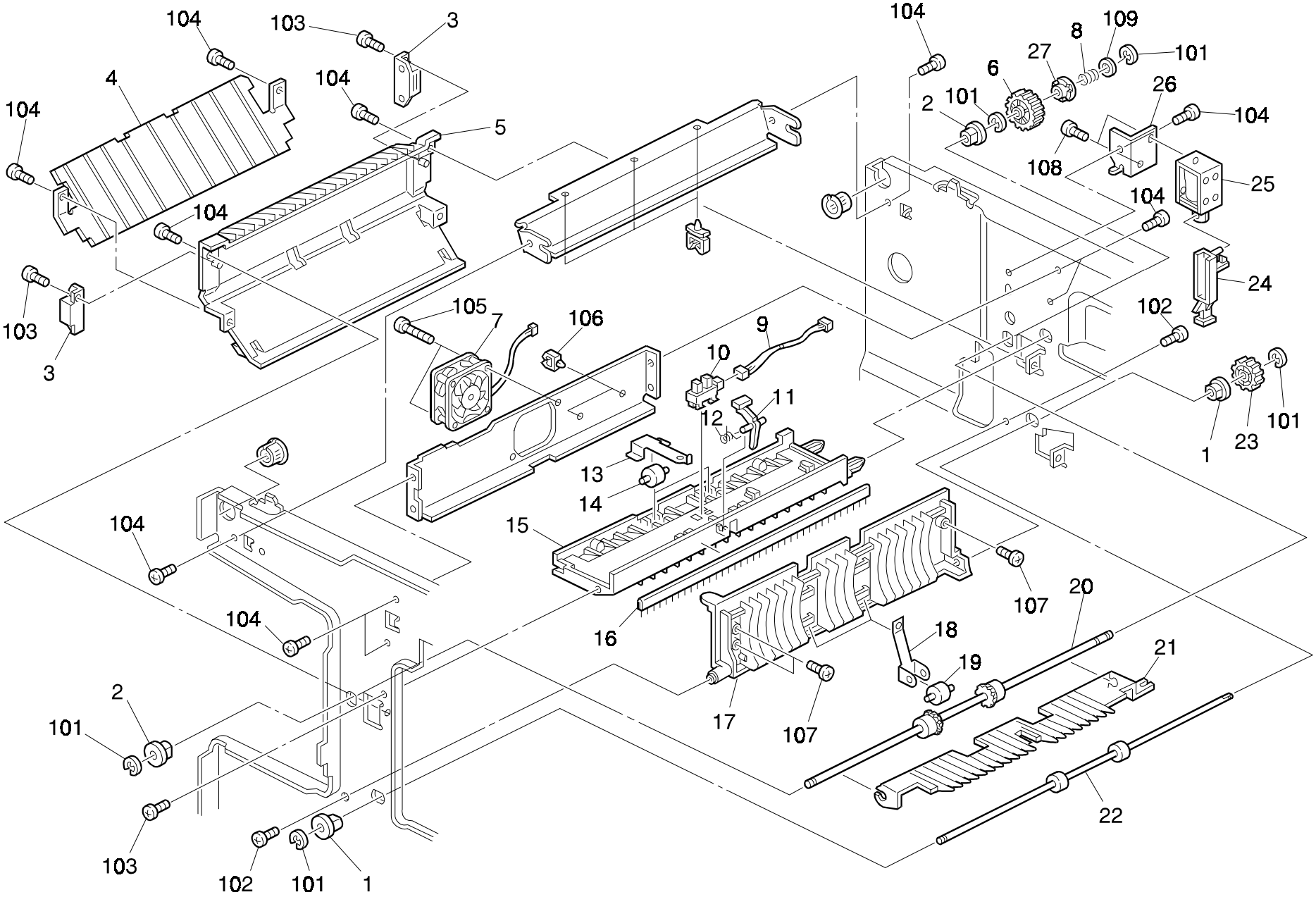

25. PAPER EXIT AND INVERTER (A162)

Index No.	Part No.	Description	Q'ty Per Assembly
1	5053 0447	Bushing - 6mm	4
2	AA08 2058	Bushing - 6x10x9mm	2
3	AG07 0004	Magnetic Catch	6
4	A158 4452	Lower Reverse Guide Plate	1
5	A158 4451	Reverse Guide Plate	1
6	AB01 3889	Gear - 24Z	1
7	AX64 0059	Fan Motor - DC24V 3.12W	2
8	A470 1704	Spring - Lower Exit Roller	1
9	A153 5328	CT Harness	1
10	AW02 0075	Photointerrupter	15
11	A157 4459	Paper Exit Feeler	1
12	AA06 6274	Spring	1
13	A157 4456	Spring Plate	2
14	AF02 2042	Middle Pressure Roller	2
15	A157 4450	Upper Guide Plate	1
16	AA12 0071	Exit Antistatic Brush	1
17	A158 4453	Exit Cover	1
18	A158 4459	Spring Plate	2
19	AF04 0031	Upper Exit Roller	7
20	AF02 0327	Exit Roller	1
21	AF02 5024	Pick-off Pawl	1
22	AF02 0336	Inverter Drive Roller	1
23	AB01 3106	Gear - Drive - Third - Z18	1
24	A158 4463	Pick-off Pawl Arm	1
25	AX12 0039	DC SOL 24V 400GF	1
26	A158 4467	Solenoid Bracket	1
27	A470 1703	Shift Clutch	1

Index No.	Part No.	Description	Q'ty Per Assembly
101	0720 0040E	Retaining Ring - M4	
102	0434 0080B	Philips Tapping Screw - M4x8	
103	0434 0082B	Tapping Screw - M4x8	
104	0434 0060B	Philips Tapping Screw - M4x6	
105	0353 0300B	Bind Screw - M3x30	
106	1105 0199	Clamp	
107	0802 5236	Tapping Screw - M4x8	
108	0313 0040B	Philips Pan Head Screw - M3x4	
109	0807 4072	Washer - Core	

26. PAPER EXIT SECTION (A161)

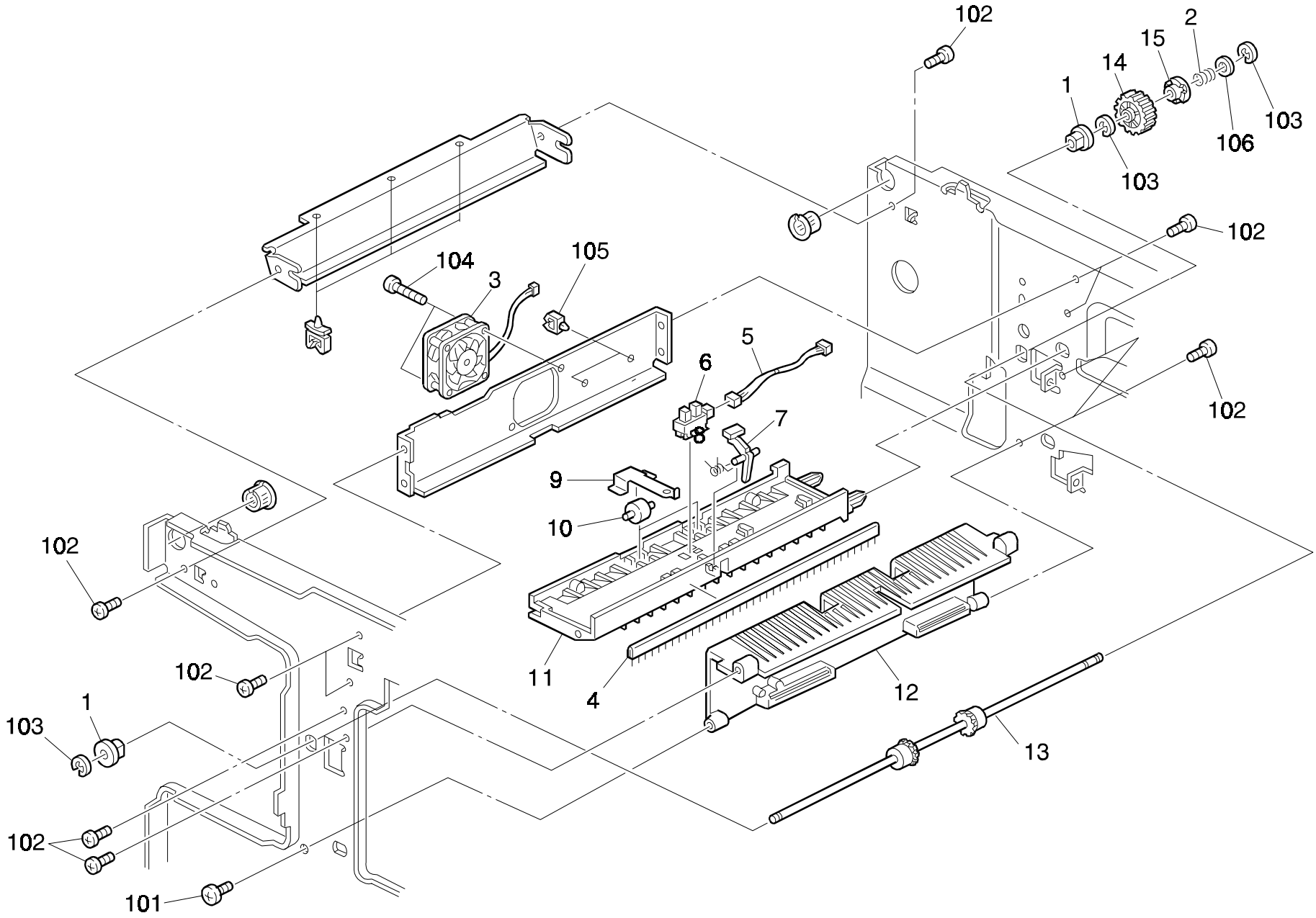

26. PAPER EXIT SECTION (A161)

Index No.	Part No.	Description	Q'ty Per Assembly
1	AA08 2058	Bushing - 6x10x9mm	2
2	A470 1704	Spring - Lower Exit Roller	1
3	AX64 0059	Fan Motor - DC24V 3.12W	2
4	AA12 0071	Exit Antistatic Brush	1
5	A153 5328	CT Harness	1
6	AW02 0075	Photointerrupter	15
7	A157 4459	Paper Exit Feeler	1
8	AA06 6274	Spring	1
9	A157 4456	Spring Plate	2
10	AF02 2042	Middle Pressure Roller	2
11	A157 4451	Upper Guide Plate	1
12	A157 4460	Exit Cover	1
13	AF02 0327	Exit Roller	1
14	AB01 3889	Gear - 24Z	1
15	A470 1703	Shift Clutch	1

Index No.	Part No.	Description	Q'ty Per Assembly
101	0802 5236	Tapping Screw - M4x8	
102	0434 0060B	Philips Tapping Screw - M4x6	
103	0720 0040E	Retaining Ring - M4	
104	0353 0300B	Bind Screw - M3x30	
105	1105 0199	Clamp	
106	0807 4072	Washer - Core	

27. DRIVE SECTION 1 (A161/A162)

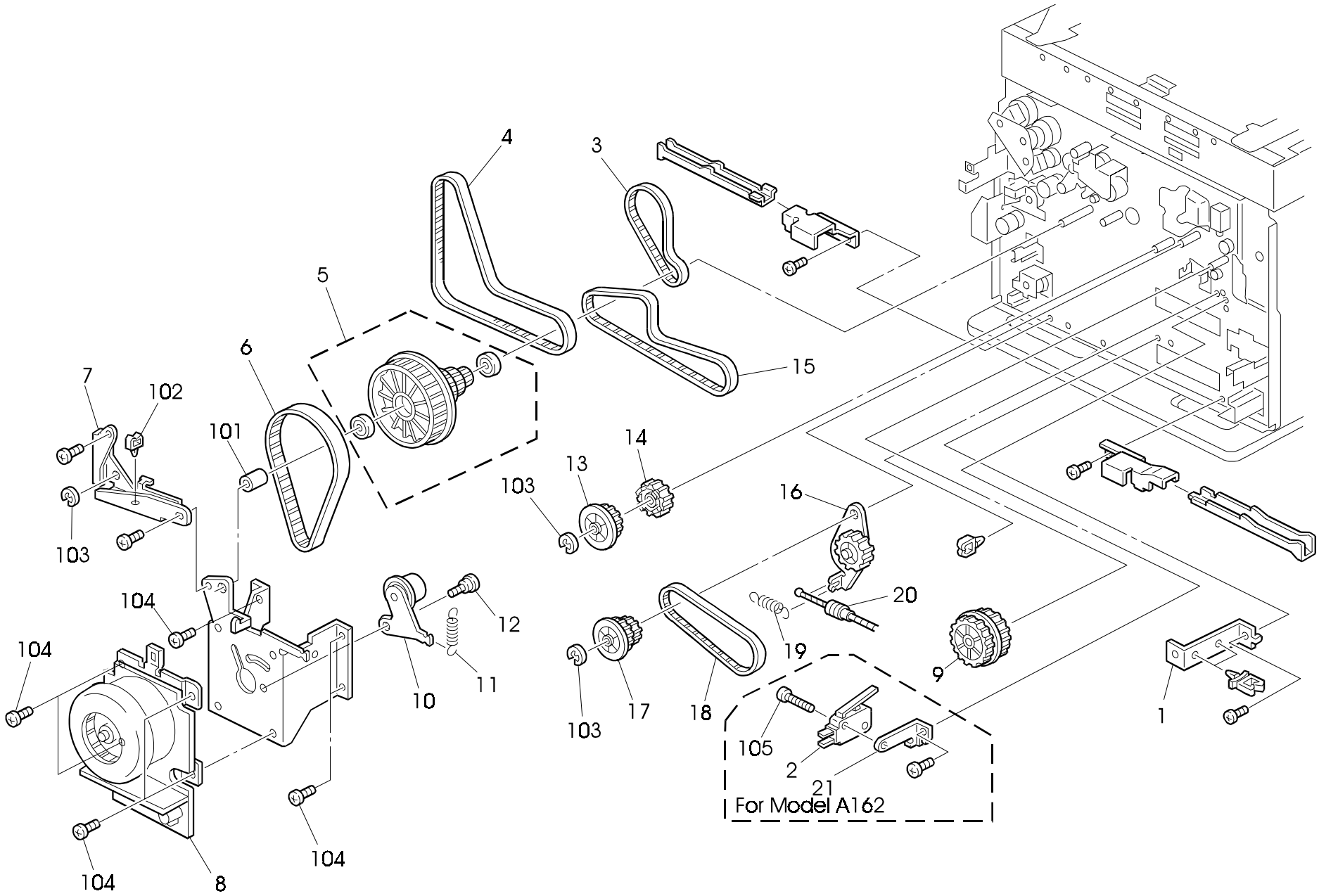

27. DRIVE SECTION 1 (A161/A162)

Rev. 2/21/96

Index No.	Part No.	Description	Q'ty Per Assembly
1	A153 5802	Lower Bracket - DC Drive Board	1
2	1204 2356	Micro Switch - AM51612A531	1
3	AA04 3392	Drum Timing Belt	1
4	AA04 3420	Timing Belt - 80S3M519	1
5	AB03 0492	Pulley - 25/25/34/125Z	1
6	AA04 3391	Timing Belt - 160S2M328	1
7	A153 1131	Development Support Plate	1
8	AX06 0108	Motor - DC24V 45W	1
9	AB01 7371	Exit Pulley	1
10	A153 1128	Tightener	1
11	AA06 0228	Spring - Transfer Drum Cleaning Sol	1
12	C105 2352	Stepped Screw - M6x1.7	1
13	AB03 0463	Fusing Cam Pulley	1
14	AB01 3872	Fusing Cam Gear - 28Z	1
15	AA04 3396	Timing Belt - 60S3M366	1
16	A134 1121	Joint Gear	1
17	AB01 7345	Timing Pulley - 35Z	1
18	AA04 3397	Timing Belt - 30S3M300	1
19	5203 3151	Roller Cover Spring	2
20	AA05 1024	Release Wire	1
21	A158 4466	Switch Bracket	1

Index No.	Part No.	Description	Q'ty Per Assembly
101	0707 8140B	Bushing - 8x14mm	
102	1105 0199	Clamp	
103	0720 0060E	Retaining Ring - M6	
104	0434 0060B	Philips Tapping Screw - M4x6	
105	0313 0140B	Philips Pan Head Screw - M3x14	

28. DRIVE SECTION 2 (A161/A162)

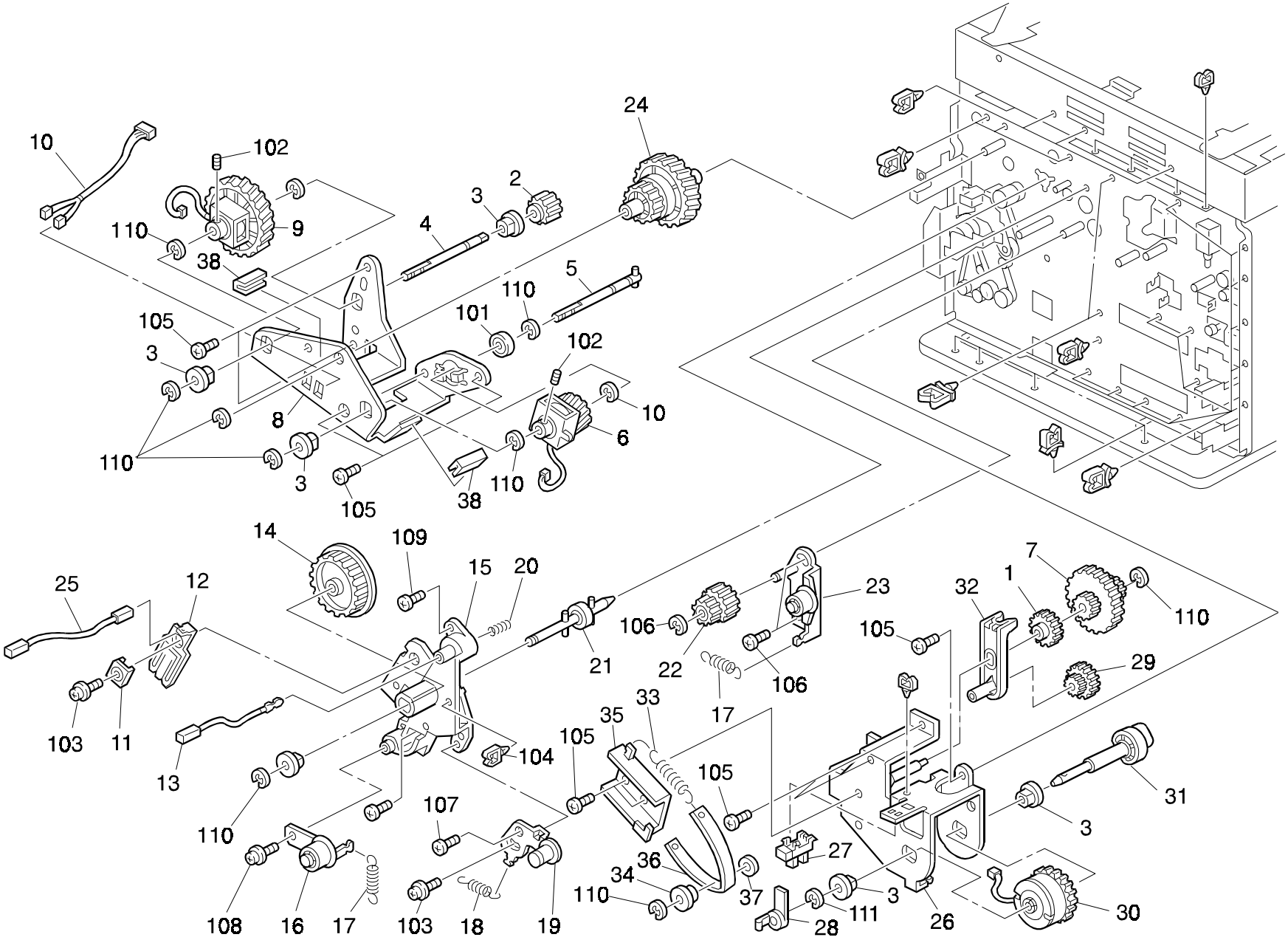

28. DRIVE SECTION 2 (A161/A162)

Index No.	Part No.	Description	Q'ty Per Assembly
1	AB01 7386	Cleaning Cam	1
2	AB01 3917	Toner Supply Gear	1
3	AA08 2047	Bushing - 8x16x7	9
4	AA14 5539	Solenoid Shaft	1
5	A153 1127	Clutch Shaft	1
6	AX20 0105	Magnetic Clutch - 15kgf 24Z	1
7	AB01 7368	Cleaning Drive Gear	1
8	A153 1125	Development Drive Bracket	1
9	AX20 0106	Magnetic Clutch - 15kgf 52Z	1
10	A153 5340	CT Harness	1
11	A153 3087	Terminal Cap	1
12	A153 3086	Bias Terminal	1
13	A153 2130	Receptacle Housing	1
14	AB03 0494	Drum Pulley	1
15	A153 1112	Drive Gear Holder	1
16	A153 1132	Development Tightener	1
17	5442 1111	Spring - Main Drive Tightener	3
18	5203 3151	Roller Cover Spring	2
19	A153 1135	Drum Drive Tightener	1
20	AA06 3524	Pressure Spring	1
21	A153 1117	Drum Drive Shaft	1
22	AB01 7369	Transfer Belt Pulley	1
23	A157 1111	Belt Tightener	1
24	AB01 7370	Development Pulley	1
25	AZ43 0020	High Voltage Supply Board	1
26	A153 3915	Magnetic Clutch Bracket	1
27	AW02 0075	Photointerrupter	15
28	A153 3914	Magnetic Clutch Feeler	1
29	AB01 7385	Gear - 17Z/24Z	1
30	AX21 0049	Magnetic Clutch - 5kgf 42Z	1
31	A153 3911	Cam Shaft	1
32	A153 2142	Cam Lever	1
33	AA06 2290	Spring	1
34	AA13 4100	Boss	1
35	A153 3917	Magnetic Clutch Bracket	1

Index No.	Part No.	Description	Q'ty Per Assembly
36	A153 3918	Break Pad	1
37	A153 3919	Spacer	1
38	A153 1126	Edging	2
101	0740 3008	Ball Bearing - 8x22x7	
102	0573 0040E	Hexagon Headless Set Screw - M3x4	
103	0951 4012B	Philips Screw With Flat Washer	
104	1105 0199	Clamp	
105	0434 0060B	Philips Tapping Screw - M4x6	
106	0414 0080B	Tapping Screw - M4x8	
107	0802 5236	Tapping Screw - M4x8	
108	0802 5221	Tapping Screw - M3x10	
109	0950 4008B	Philips Screw With Spring Washer - M4x8	
110	0720 0060E	Retaining Ring - M6	
111	0720 0060	Retaining Ring - M6	

29. DRIVE SECTION 3 (A161/A162)

Rev. 9/27/96

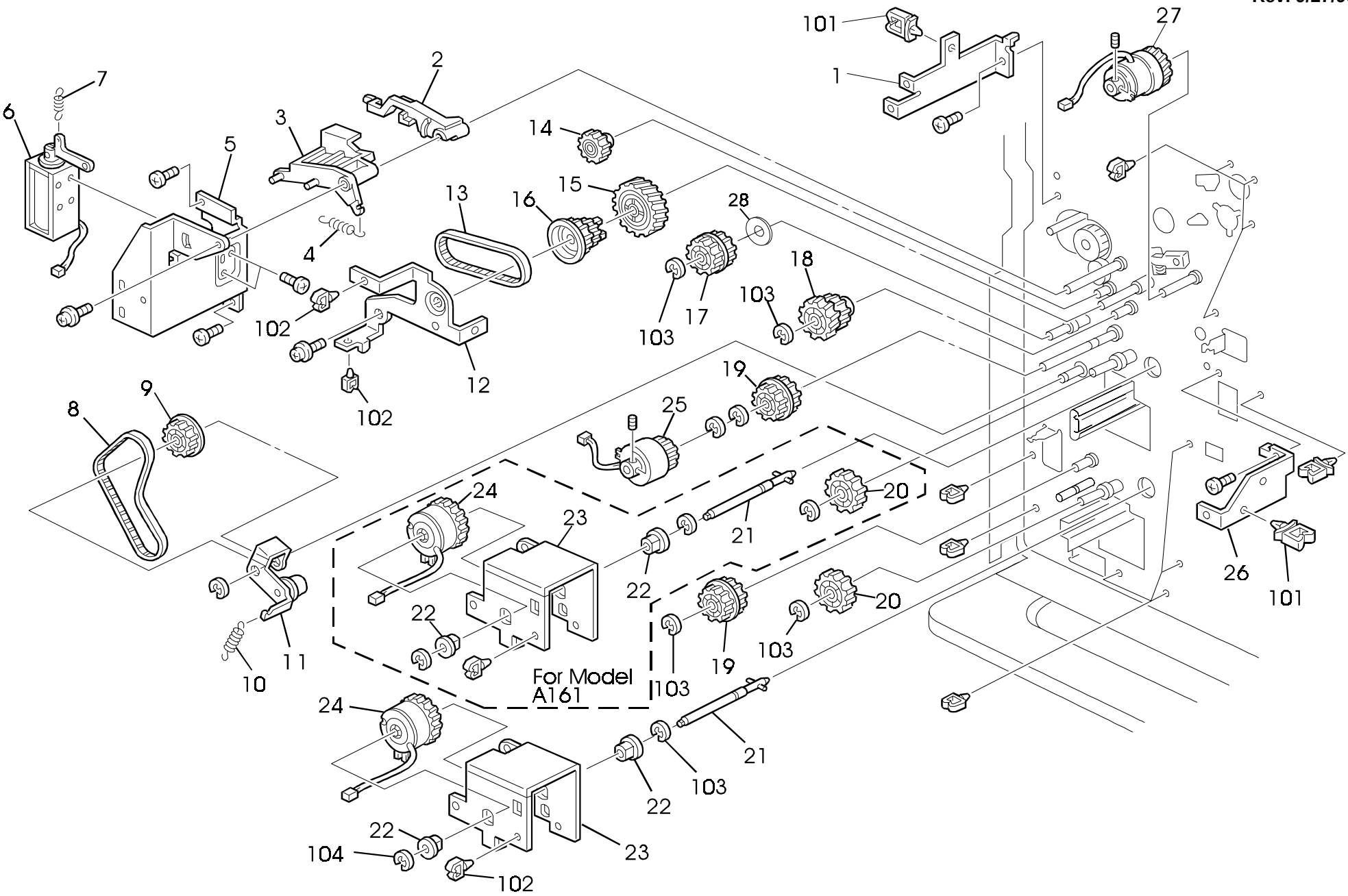

29. DRIVE SECTION 3 (A161/A162)

Rev. 10/15/96

Index No.	Part No.	Description	Q'ty Per Assembly
1	A153 5813	Main Control Board Bracket	1
2	A155 2676	Pick-up Lever	1
3	A134 2678	Solenoid Link (A161)	1
3	A155 2677	Pick-up Link (A162)	1
4	AA06 0573	Release Spring	1
5	A134 2675	Solenoid Bracket (A161)	1
5	A155 2675	Pick-up Bracket (A162)	1
6	A134 2680	DC Solenoid	1
7	AA06 0572	Pressure spring	1
8	AA04 3364	Timing Belt - S3M300	1
9	AB03 0491	Timing Pulley - 25Z	1
10	AA06 0453	Relay Adjusting Spring	2
11	A157 2564	Tightener	1
12	A157 2560	Paper Feed Support Plate	1
13	AA04 3389	Timing Belt - 60S3M201	1
14	AB01 1153	Idle Gear - 25Z	1
15	AB01 3918	Drive Gear - 35Z	1
16	AB03 3064	Drive Pulley	1
17	AB01 7395	Timing Pulley	1
18	AB01 7377	Gear - 25Z	1
19	AB01 7364	Timing Pulley - 24Z/20Z	2
20	AB01 3908	Gear - 27Z	1
21	A157 2563	Feed Drive Shaft	1
22	AA08 2047	Bushing - 8x16x7	9
23	A157 2562	Solenoid Bracket	1
24	AX21 0058	Magnetic Clutch - 5kgf 42Z	1
25	AX20 0107	Magnetic Clutch - 10kgf 25Z	1
26	A153 5812	Left Lower Bracket	1
27	AX20 0109	Magnetic Clutch - 10kgf.cm 35Z	1
28	A157 2566	Spacer - 8x25x35	1

Index No.	Part No.	Description	Q'ty Per Assembly
101	1105 0192	Locking Support	
102	1105 0199	Clamp	
103	0720 0060E	Retaining Ring - M6	
104	0720 0040E	Retaining Ring - M4	

30. ELECTRICAL SECTION 1 (A161/A162)

Rev.6/4/96

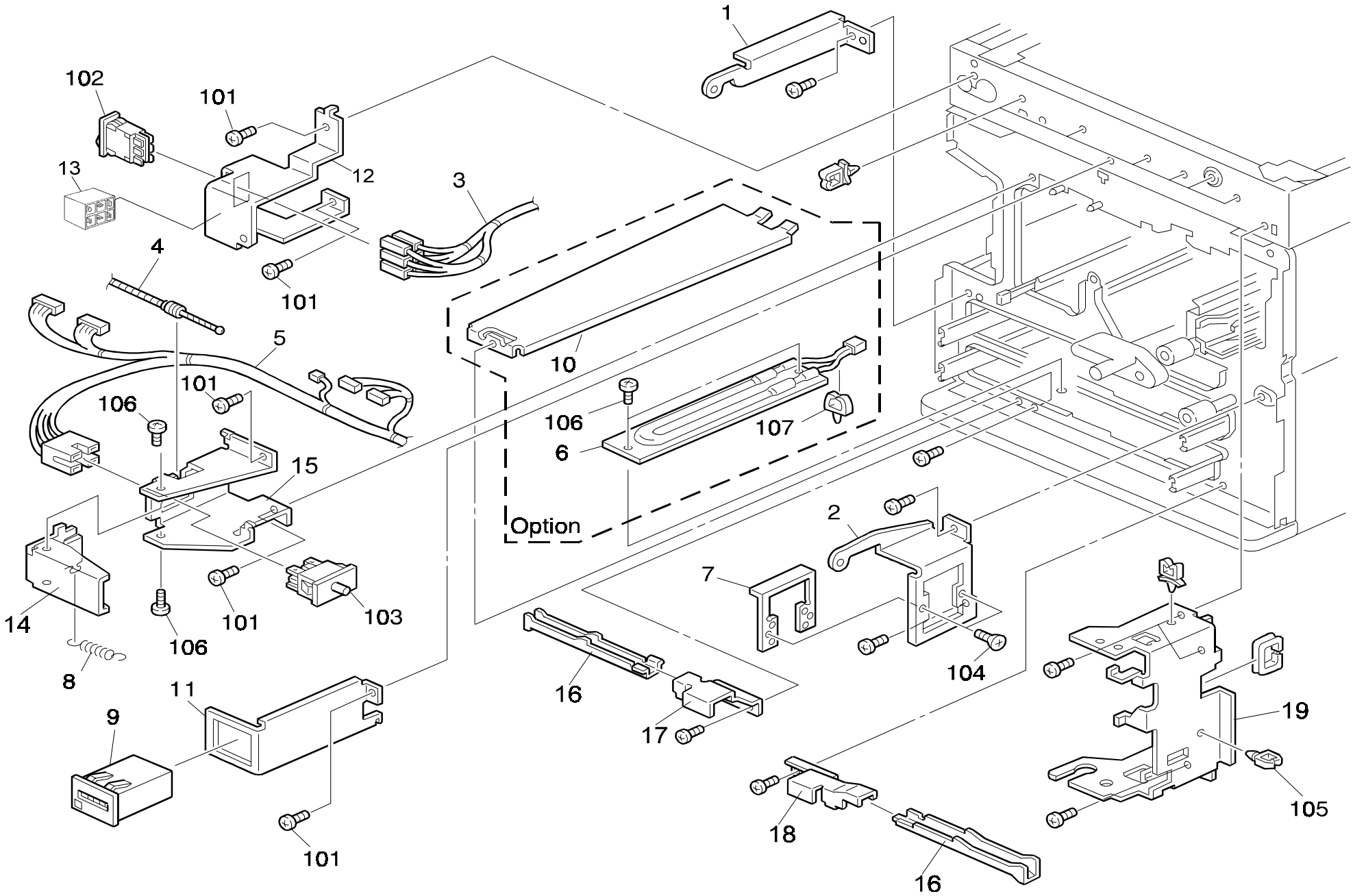

30. ELECTRICAL SECTION 1 (A161/A162)

Rev. 06/30/2000

Index No.	Part No.	Description	Q'ty Per Assembly
1	A153 1353	Front Cover Hinge	1
2	A153 1355	Key Counter Bracket	1
3	A153 5501	AC Main Harness - 120V	1
3	A153 5661	AC Main Harness (230V)	1
4	AA05 1024	Release Wire	1
5	A153 5320	Front Right Harness	1
6	AX40 0021	Tray Anticondensation Heater - 115V 18W	1
6	AX40 0022	Tray Anticondensation Heater - 240V 18W	1
7	5446 1239	Plate Nut - Key Counter	1
8	5442 4467	Spring - Stripper Pawl Plate	2
9	AX31 0022	Total Counter	1
10	A134 2947	Heater Cover	1
11	A153 5820	Total Counter Bracket	1
12	A153 5814	Main Switch Bracket	1
13	A153 5562	Main Switch Relay Harness	1
14	A153 5809	Interlock Switch Arm	1
15	A153 5808	Interlock Switch Bracket	1
16	A134 1071	Lift Grip Arm	4
17	A134 1072	Right Bracket - Grip Plate	2
18	A134 1073	Left Bracket - Grip Plate	2
19	A153 3270	Toner Supply Stay	1

Index No.	Part No.	Description	Q'ty Per Assembly
101	0434 0060B	Philips Tapping Screw - M4x6	
102	1204 2467	Main Switch	
103	1204 2397	Safety Switch	
104	0323 0080B	Philips Sunk Screw - M3x8	
105	1105 0229	Clamp	
106	0314 0060B	Philips Pan Head Screw - M4x6	
107	1105 0231	Clamp	

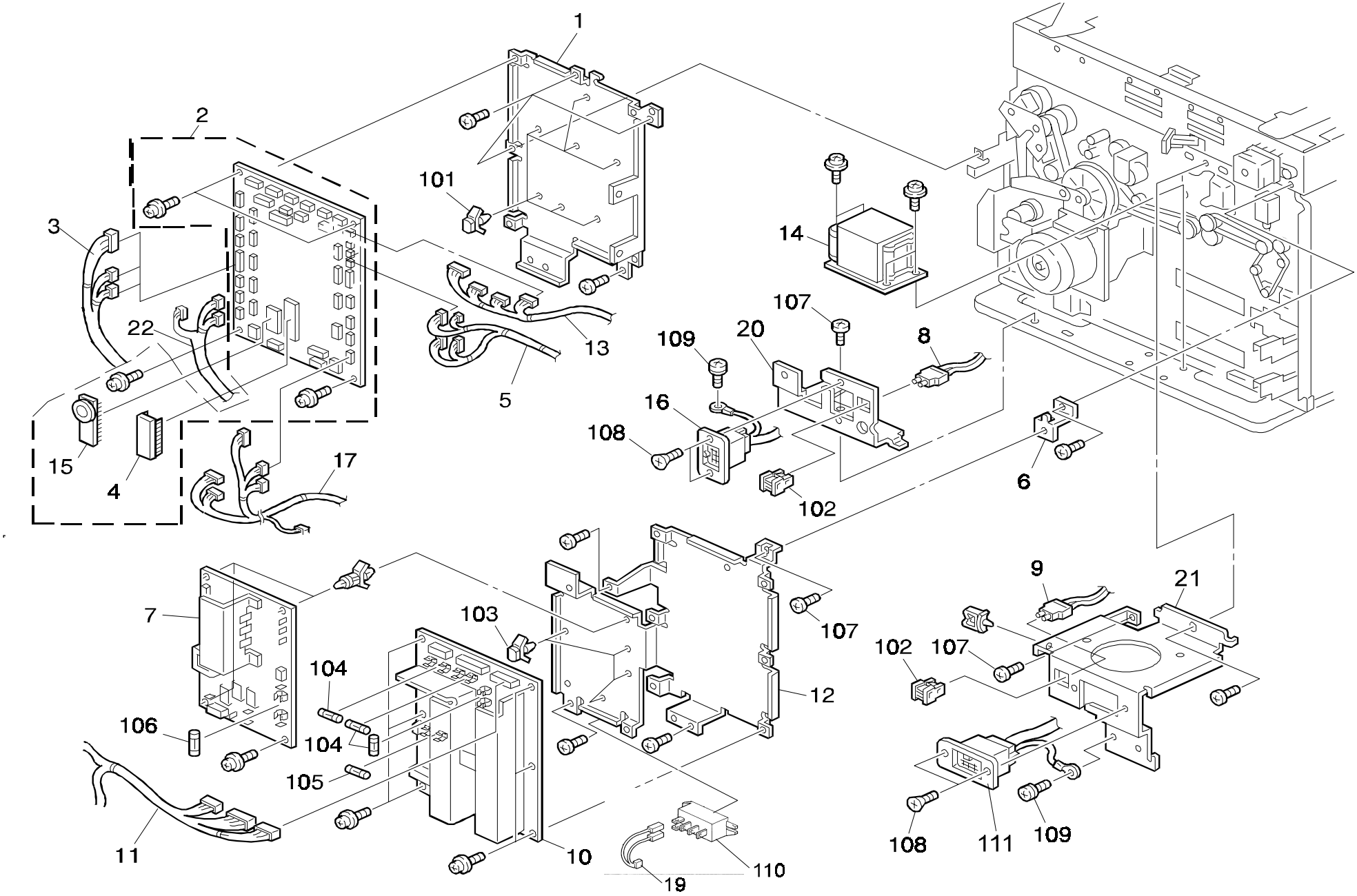
1
2
3
101
13
5
14
107
109
20
8
16
108
102
6
22
15
4
17
7
103
104
106
105
11
10
19
110
12
9
21
102
107
108
111
109

31. ELECTRICAL SECTION 2 (A161/A162)

Rev. 08/98

Index No.	Part No.	Description	Q'ty Per Assembly
1	A153 5811	Main Control Board Bracket	1
2	A157 5181	Main Control Board - 120V	1
2	A157 5111	Main Control Board - 220V	1
4	A153 5109	IC - 4MX16-120NS	1
5	A161 5319	Rear Upper Harness	1
6	A153 5803	Upper Bracket - DC Drive Board	1
7	A153 5344	Power Supply Harness - 2trays (A161)	1
7	A158 5343	Duplex Power Supply Harness (A162)	1
8	AW03 0055	Optical Fiber - 420mm	1
9	AW03 0054	Optical Fiber - 250mm	1
10	AZ23 0055	DC Drive Board - 100/120V	1
10	AZ23 0060	DC Drive Board - 220V/240V	1
11	A153 5550	AC Drive Board - 120V	1
11	A153 5645	AC Drive Board (230V)	1
12	A153 5801	DC Drive Board Bracket	1
13	A153 5312	Optical Harness	1
14	A157 5316	Paper Feed Harness - 2trays (A161)	1
14	A158 5310	Duplex Paper Feed Harness (A162)	1
15	A153 5114	Ram Board	1
16	A153 5644	Tray Power Supply Harness	1
16	A160 5643	Power Supply Harness - Duplex 220/230V	1
17	A157 5511	Rear Lower Harness - 2tray (A161)	1
17	A158 5309	Rear Lower Harness - Duplex (A162)	1
18	AZ13 0023	Transformer - 230V	1
19	A153 5561	Relay Harness	1
20	A153 5806	Tray Unit Bracket	1
21	A153 5807	ARDF Bracket	1
22	A155 5314	LCT Relay Harness	1

Index No.	Part No.	Description	Q'ty Per Assembly
101	1105 0367	Spacer	
102	1102 4052	Optional Connector	
103	1105 0409	Spacer	
104	1107 0392	Fuse - 6.3A	
105	1107 0393	Fuse - 8A,125V	
106	1107 0753	Fuse - 6.3A 250V	
107	0434 0060B	Philips Tapping Screw - M4x6	
108	0323 0060B	Philips Sunk Screw - M3x6	
109	0801 0137	Philips Pan Head Screw With Spring	
110	1208 1392	Relay	
111	1102 6739	Connector - 12P	

31-1. ELECTRICAL SECTION 2-A (A161/A162)

IC

Symbol No.	Index No.
IC2	127
IC3	100
IC4	101
IC5	102
IC6	103
IC7	104
IC8	105
IC9	106
IC10	107
IC11	108
IC12	109
IC13	109
IC14	110
IC15	111
IC16	112
IC17	113
IC18	113
IC19	113
IC20	113
IC21	114
IC22	114
IC23	114
IC24	115
IC25	116
IC26	117
IC31	118

OSCILLATOR

Symbol No.	Index No.
OSC1	124

DIODE

Symbol No.	Index No.
D3	119
D5	119
DA1	120
DA2	120
DA3	120
DA4	120
DA5	120
DA6	120
DA7	121
DA8	121
DA9	121
DA10	121
ZD1	122
ZD2	122
ZD3	122
ZD4	123

TRANSISTOR

Symbol No.	Index No.
Q1	125
Q2	126

31-1. ELECTRICAL SECTION 2-A (A161/A162)

Rev. 12/3/96

Index No.	Part No.	Description	Q'ty Per Assembly
100	1407 4401	LSI TE6250A	1
101	1408 0770	IC-L293D	1
102	1407 2496	IC-M5261L	1
103	1407 3708	IC-SLA7026M	1
104	1408 1135	IC-X9C104S	1
105	1408 0595	IC-NJM2904M	1
106	1407 2862	SWITCH	1
107	1408 0877	IC-LM339NS	1
108	1407 4137	IC-MM1035XF	1
109	1407 2187	IC-SN74LS07NS	1
110	1407 3257	IC-TC74HC14A	1
111	1407 2862	SWITCH	1
112	1408 0595	IC-NJM2904M	1
113	1407 2187	IC-SN74LS07NS	1
114	1407 2231	IC-TD62308AF	1
115	1408 0874	TRANSISTOR ARRAY-M54587F	1
116	1407 2231	IC-TD62308AF	1
117	1408 0875	TRANSISTOR ARRAY-TD62382	1
118	1408 0629	REGULATOR:NJM78M1:+12V	1
119	1402 1030	DIODE-1SS250	1
120	1402 0708	DIODE-1SS272	1
121	1402 0478	DIODE-1SS226TE85L	1
122	1402 1037	DIODE-U1ZB12	1
123	1402 0688	DIODE	1
124	1503 0435	OSCILLATOR AT-51 20MHZ	1
125	1400 0369	TRANSISTOR-2SA1213Y	1
126	1400 0558	TRANSISTOR-2SD780	1
127	A153 5117	MPU: HD6435708A05F	1

Index No.	Part No.	Description	Q'ty Per Assembly

32. ELECTRICAL SECTION 3 (A161/A162)

Rev. 10/11/95

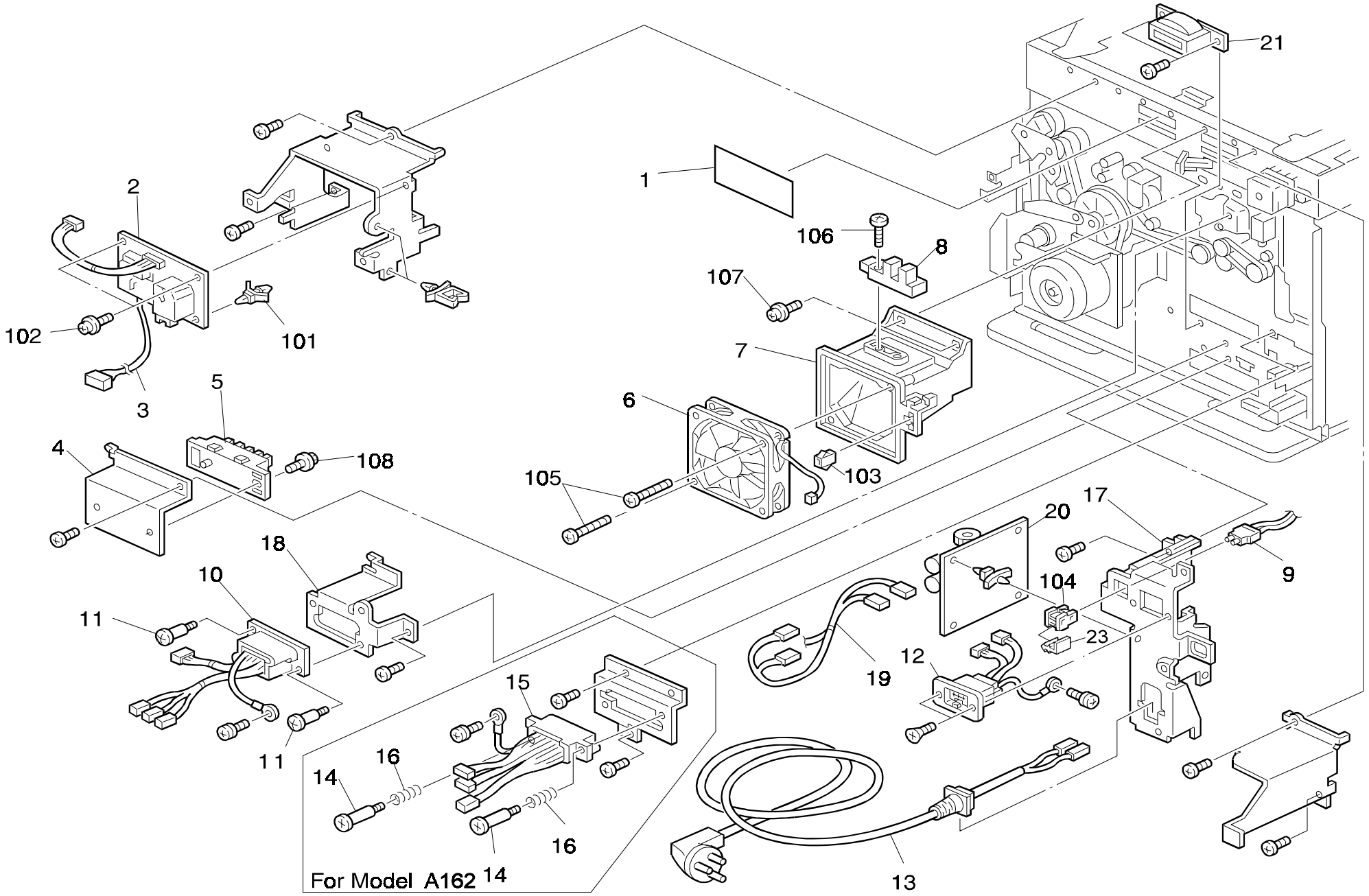

32. ELECTRICAL SECTION 3 (A161/A162)

Rev. 10/11/95

Index No.	Part No.	Description	Q'ty Per Assembly
1	AA15 0366	Rear Side Seal	1
2	AZ32 0078	DC Power Pack	1
3	AZ43 0020	High Voltage Supply Board	1
4	A134 2941	Tray Sensor Bracket	1
5	AW50 0010	Push Switch	2
6	AX64 0058	Fan Motor - DC 24V 4.32W	2
7	A153 1986	Cooling Fan Duct	2
8	AW02 0022	Photointerruptor	2
9	AW03 0056	Optical Fiber - 550mm	1
10	A153 5326	Fusing Relay Harness (120V)	1
10	A153 5337	Fusing Relay Harness (230V)	1
11	AA14 3301	Stepped Screw - M3x4	2
12	A153 5324	Sorter Relay Harness	1
13	A153 5471	Power Supply Cord (110V)	1
13	A153 5571	Power Supply Cord - 120V	1
13	A153 5671	Power Supply Cord (230V)	1
14	AA14 3452	Stepped Screw	2
15	A154 5325	Duplex Unit Relay Harness	1
16	AA06 3532	Spring	2
17	A153 5810	Power Supply Cord Bracket	1
18	A153 5888	Fusing Unit Joint Connector	1
19	A153 5601	AC Relay Harness	1
20	A153 5621	Noise Filter Board	1
21	AZ02 0008	Coil - 1 0mh 2A	1
22	AA15 1177	Seal - 5x82x4	1
23	1102 5981	Fiber Connector	3

Index No.	Part No.	Description	Q'ty Per Assembly
101	1105 0192	Locking Support	
102	0951 3006B	Philips Screw With Flat Washer - M3x6	
103	1102 4473	CT Connector - 2p	
104	1102 4052	Optional Connector	
105	0434 0352W	Pan Head Self-tapping Screw - M4x35	
106	0414 0142B	Binding Self Tapping Screw - M4x14	
107	0964 4008B	Tapping Screw With Flat Washer - M4x8	
108	0443 0060B	Hexagon Tapping Screw - M3x6	

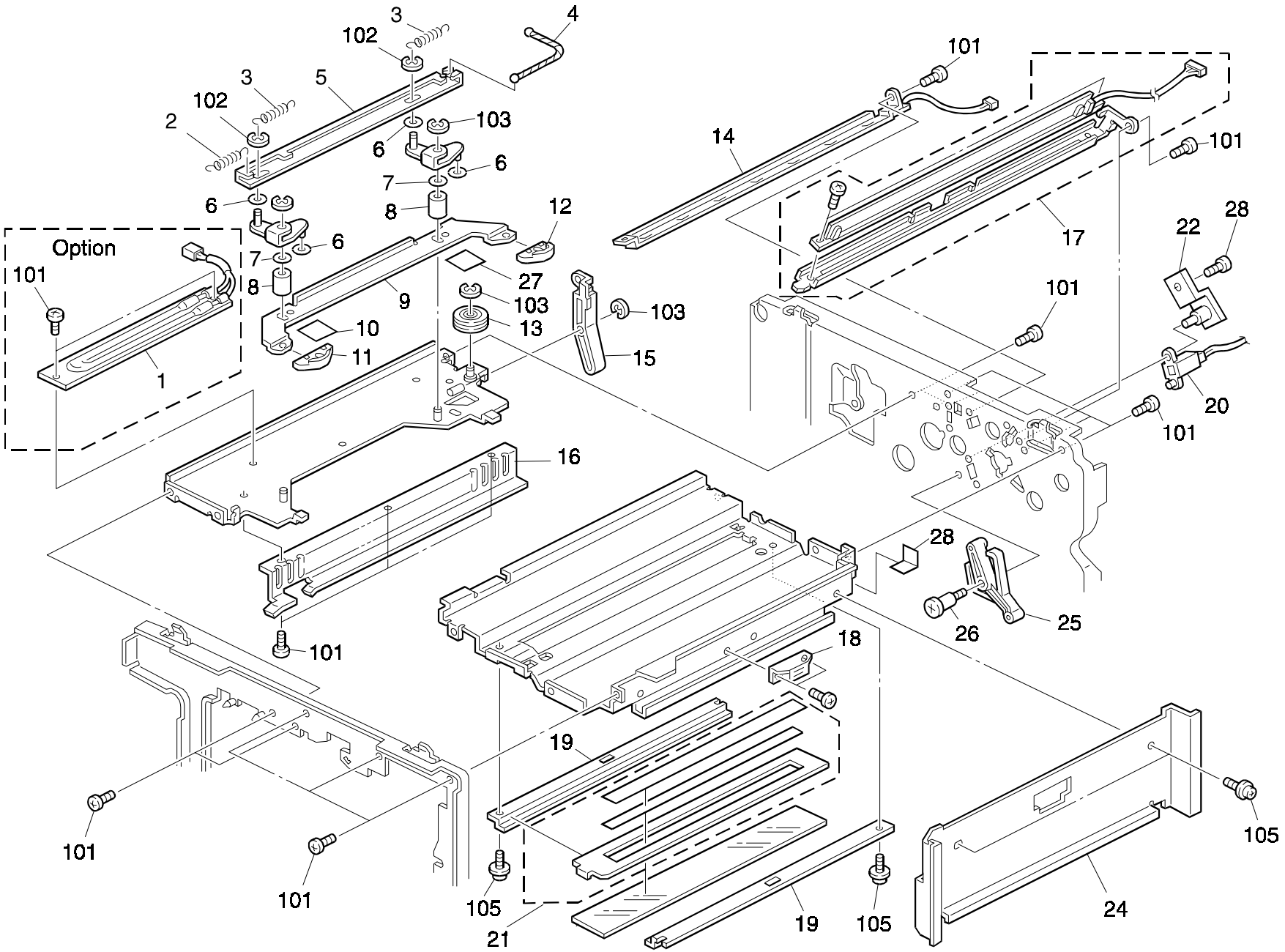
Option
1
2
3
4
5
6
7
8
9
10
11
12
13
14
15
16
17
18
19
20
21
22
24
25
26
27
28
101
102
103
105

33. FRAME SECTION 1 (A161/A162)

Index No.	Part No.	Description	Q'ty Per Assembly
1	AX40 0063	Anticondensation Heater - 120V 9W	1
1	AX40 0064	Anticondensation Heater - 230V 9W	1
2	AA06 2291	Pressure Spring	1
3	AA06 2285	Release Spring	2
4	AA05 1025	Release Wire	1
5	A153 2072	Release Link Lever	1
6	AA13 2187	Spacer - 11mm	4
7	AA13 2188	Spacer - 16mm	2
8	AA13 2186	Collar	2
9	A153 2073	Guide Rail	1
10	A153 2084	Spacer	2
11	A153 2075	Front Roller Cam	1
12	A153 2076	Rear Roller Cam	1
13	A153 2060	Wire Pulley	1
14	A153 2090	Quenching Lamp	1
15	A153 2071	Cam Lever	1
16	A153 2083	Left Drum Rail	1
17	A153 2080	Eraser Lamp	1
18	AG07 0004	Magnetic Catch	6
19	A204 1674	Shield Glass Guide	2
20	A153 5339	Density Sensor Harness	1
21	A204 1677	Optical Fiber	1
22	A153 3598	Pin Bracket	1
24	A153 1350	Right Middle Cover	1
25	A153 3920	Belt Release Arm	1
26	AA14 3444	Stepped Screw	1
27	A153 2085	Spacer	1
28	A153 1675	Harness Guard Seal	1

Index No.	Part No.	Description	Q'ty Per Assembly
101	0434 0060B	Philips Tapping Screw - M4x6	
102	0720 0030E	Retaining Ring - M3	
103	0720 0040E	Retaining Ring - M4	
104	0964 4006B	Tapping Screw With Flat Washer - M4x6	
105	0313 0040B	Philips Pan Head Screw - M3x4	

34. FRAME SECTION 2 (A161/A162)

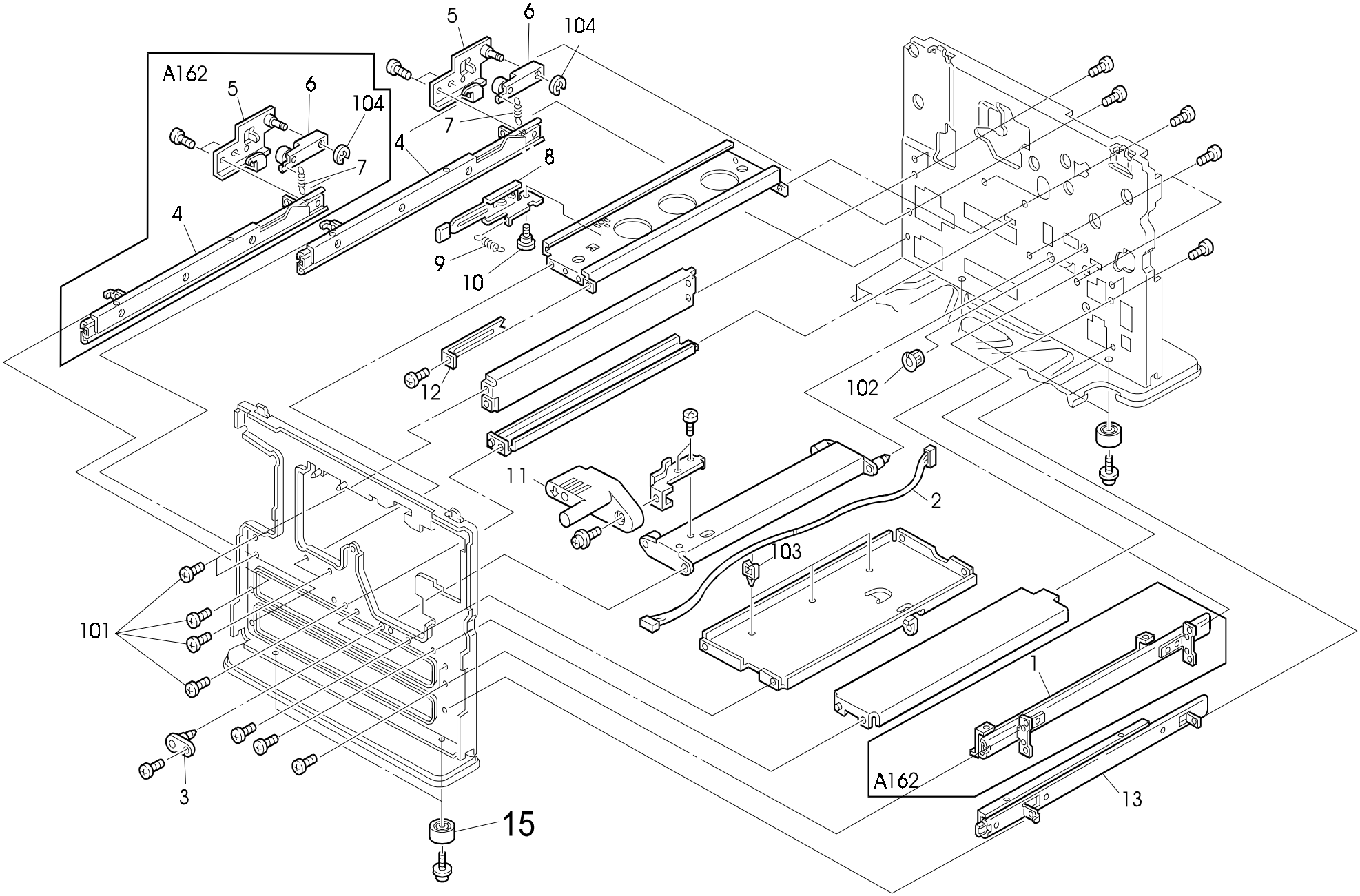

34. FRAME SECTION 2 (A161/A162)

Rev. 10/15/96

Index No.	Part No.	Description	Q'ty Per Assembly
1	A134 4901	Duplex Right Rail (A162)	1
2	A153 5334	CT Harness - 7p	1
3	A157 3900	Support Plate	1
4	A157 2783	Left Rail (A161)	2
4	A134 2921	Left Slide Rail (A162)	1
5	A134 2926	Paper Feed Lock Bracket	2
6	A096 6266	Tray Lock Arm	2
7	AA06 0534	Tray Lock Spring - 19mm	2
8	A153 4352	Fusing Lock Lever	1
9	5442 4467	Spring - Stripper Pawl Plate	2
10	5203 1686	Screw - Slid Rail	1
11	A153 3930	Belt Unit Handle	1
12	A134 4355	Fusing Unit Stopper	1
13	A157 2785	Right Rail (A161)	2
14	A157 2777	Feed Roller Cover	1
15	AH01 0007	Rubber Foot	4

Index No.	Part No.	Description	Q'ty Per Assembly
101	0434 0060B	Philips Tapping Screw - M4x6	
102	1106 0193	Bushing - 7.9mm	
103	1105 0199	Clamp	
104	0720 0040E	Retaining Ring - M4	

35. DECAL AND DOCUMENT (A161/A162)

Rev.10/15/96

1

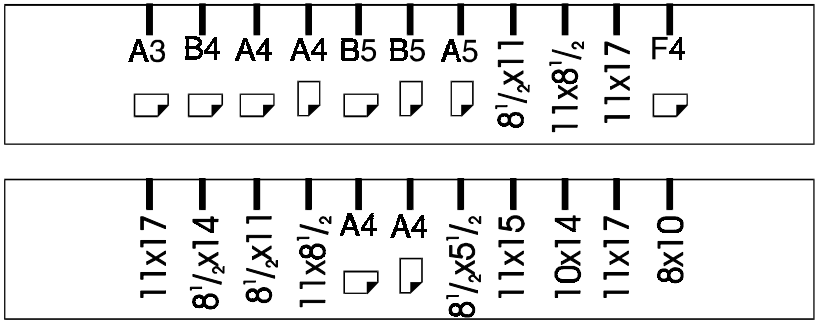

2

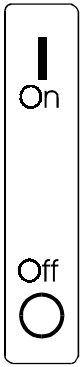

6

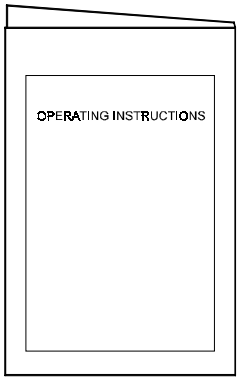

10

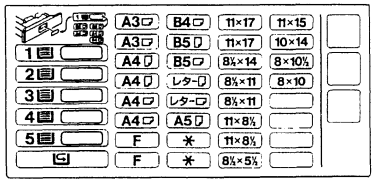

3

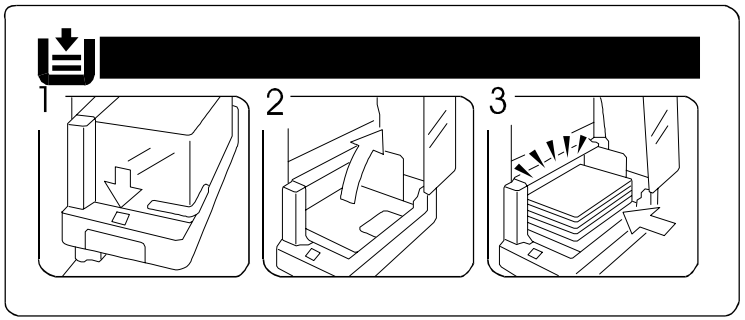

4



7

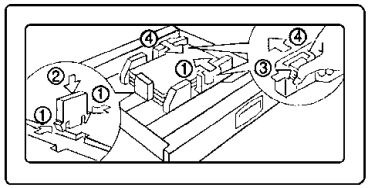

5

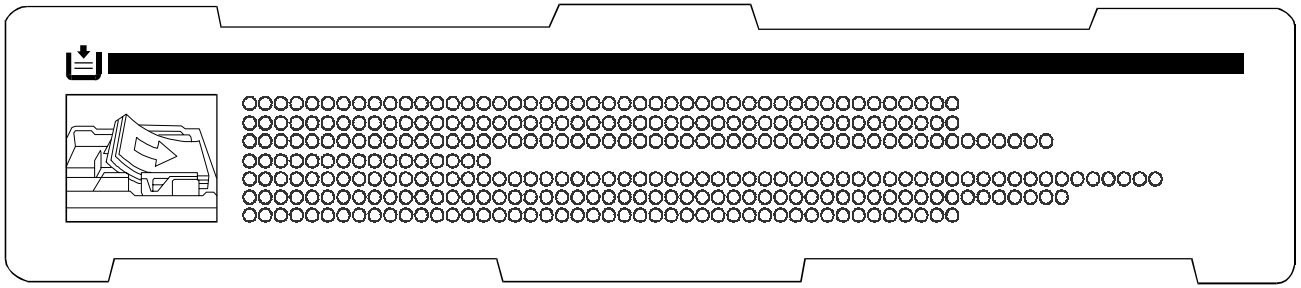

8

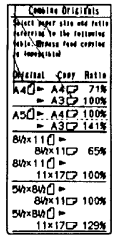

9



35. DECAL AND DOCUMENT (A161/A162)

Rev. 10/15/96

Index No.	Part No.	Description	Q'ty Per Assembly
1	A153 2995	Decal Paper Size - LT/DLT	1
1	A153 2996	Decal Paper Size - A4/A3	1
2	AA00 1373	Decal - Main Switch	1
3	A155 6113	Decal - Paper Set	1
4	A153 1285	Emblem	1
5	A157 2758	Decal - Paper Setting	1
6	A167 8637	Operating Instructions - Energy Star	1
6	A161 8607	Operating Instructions - English LT	1
7	A157 2805	Decal - Paper Set	1
8	A156 1495	Decal - Copy Ratio	1
9	A153 1365	Symbol Explanation Decal	1
10	AA00 2209	Decal - Paper Sizee	1

Index No.	Part No.	Description	Q'ty Per Assembly

36. SPECIAL TOOLS (A161/A162)

Rev. 01/98

1

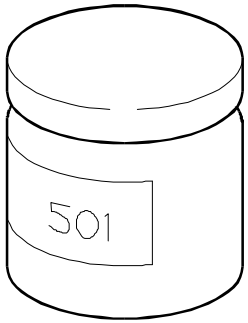

2

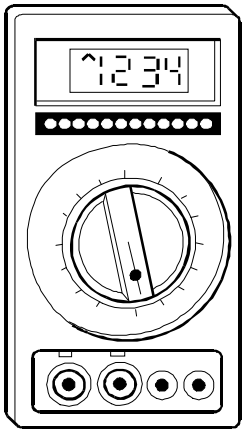

3

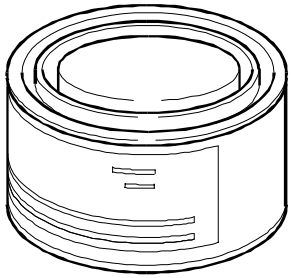

4



5

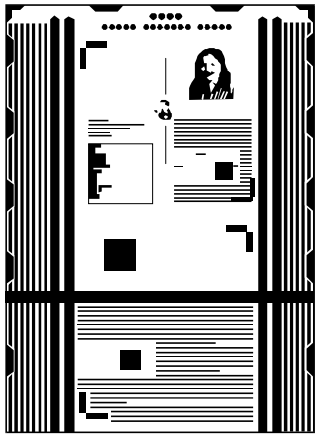

6

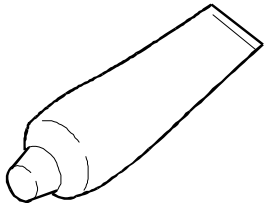

7

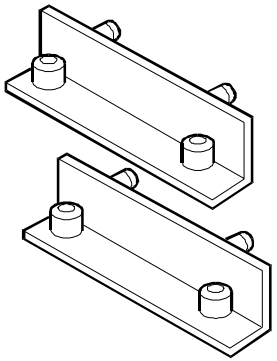

8

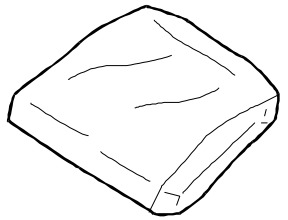

10



36. SPECIAL TOOLS (A161/A162)

Rev. 08/03/2000

Index No.	Part No.	Description	Q'ty Per Assembly
1	5203 9501	Grease 501	1
2	5420 9507	Digital Multimeter - Beckman	1
3	5447 9078	Heat Resisting Grease MT-78	1
3	A257 9300	Grease Barrierta - S552R	1
4	5442 9103	Launa Oil	1
5	5420 9516	Test Chart - OS -A3 (10PCS/SET)	1
6	A008 9502	Silicone Grease - G40M.	1
7	A153 9001	Scanner Adjustment Tool	2
8	A153 9004	Wiping Cloth	1
10	A153 9530	HR Cleaner	1

Index No.	Part No.	Description	Q'ty Per Assembly

A162/A161
PARTS INDEX

This section instructs you as to the numbers and names of parts on this machine.

Part No.	Description	Page and Index No.
A161 1277	Front Cover (A161)	25- 2
A161 5319	Rear Upper Harness	69- 5
A161 8607	Operating Instructions - English LT	77- 6

Part No.	Description	Page and Index No
AA00 1373	Decal - Main Switch	25- 10
AA00 1373	Decal - Main Switch	77- 2
AA01 2080	Dust Filter	25- 26
AA04 3364	Timing Belt - S3M300	65- 8
AA04 3374	Timing Belt - S2M800	55- 17
AA04 3386	Timing Belt - 40S2M1224	73- 2
AA04 3387	Timing Belt - 40S2M984	73- 1
AA04 3388	Timing Belt - 60S2M180	73- 11
AA04 3389	Timing Belt - 60S3M201	65- 13
AA04 3390	Timing Belt - 40S2M192	51- 3
AA04 3391	Timing Belt - 160S2M328	61- 6
AA04 3392	Drum Timing Belt	61- 3
AA04 3393	Timing Belt - 80S3M519	61- 4
AA04 3396	Timing Belt - 60S3M366	61- 15
AA04 3397	Timing Belt - 30S3M300	61- 18
AA04 3456	Timing Belt - S3M167	45- 12
AA05 0086	Lens Drive Wire - Horizontal	61- 20
AA05 0087	Lens Drive Wire - Vertical	73- 26
AA05 1024	Release Wire	61- 20
AA05 1024	Release Wire	67- 4
AA05 1025	Release Wire	73- 4
AA06 0103	Solenoid Spring	45- 18
AA06 0228	Spring - Transfer Drum Cleaning Sol	61- 11
AA06 0453	Relay Adjusting Spring	65- 10
AA06 0453	Relay Adjusting Spring	77- 31
AA06 0534	Tray Lock Spring - 19mm	75- 7
AA06 0572	Pressure spring	65- 7
AA06 0573	Release Spring	65- 4
AA06 0593	Spring	53- 9
AA06 0595	Tension Spring	73- 12
AA06 0598	Pressure Spring	41- 10
AA06 0605	Spring	47- 4
AA06 0640	Spring	53- 15
AA06 2285	Release Spring	73- 3
AA06 2286	Pressure Spring	39- 10

Part No.	Description	Page and Index No.
AA06 2290	Spring	63- 33
AA06 2291	Pressure Spring	73- 2
AA06 3205	Spring	53- 22
AA06 3239	Spring - Handle	41- 20
AA06 3366	Chuck Spring	77- 8
AA06 3367	Pressure Spring	77- 12
AA06 3370	Spring	55- 16
AA06 3499	Pressure Spring	49- 25
AA06 3523	Adjust Spring	69- 21
AA06 3524	Pressure Spring	63- 20
AA06 3532	Spring	71- 16
AA06 3539	Spring - Registration Roller	57- 5
AA06 6104	Spring	53- 10
AA06 6247	Torsion Spring	43- 26
AA06 6249	Spring	53- 18
AA06 6253	Pressure Spring	39- 22
AA06 6260	Shutter Spring	77- 17
AA06 6274	Spring	57- 12
AA06 6274	Spring	59- 8
AA08 0034	Bushing - 4x5x7	41- 37
AA08 0037	Bushing - 6 mm	49- 24
AA08 0154	Rear Bushing	41- 11
AA08 0171	Bushing	57- 7
AA08 0172	Bushing	57- 17
AA08 0186	Bushing - 6mm	37- 12
AA08 0188	Bushing - 5mm	37- 8
AA08 0189	Feed Roller Bushing - Front	53- 1
AA08 0190	Lift Arm Bushing	53- 17
AA08 0191	Front Roller Bushing	39- 18
AA08 0193	Rear Roller Bushing	39- 5
AA08 0195	Bias Roller Bushing - Rear	43- 11
AA08 0197	Rear Roller Bushing	39- 9
AA08 0209	Rear Roller Housing	39- 11
AA08 2047	Bushing - 8x16x7	57- 1
AA08 2047	Bushing - 8x16x7	63- 3

Part No.	Description	Page and Index No
AA08 2047	Bushing - 8x16x7	65- 22
AA08 2058	Bushing - 6x10x9mm	57- 2
AA08 2058	Bushing - 6x10x9mm	59- 1
AA08 2061	Bias Roller Bushing - Front	43- 6
AA08 2063	Bushing - 8x10x5	47- 6
AA08 3012	Clutch Roller - 6x14x10	49- 13
AA11 1208	Paper End Sensor Feeler	51- 5
AA12 0067	Anti Static Brush	49- 16
AA12 0071	Exit Antistatic Brush	57- 16
AA12 0071	Exit Antistatic Brush	59- 4
AA13 2184	Motor Cushion	53- 16
AA13 2186	Collar	73- 8
AA13 2187	Spacer - 11mm	73- 6
AA13 2188	Spacer - 16mm	73- 7
AA13 4100	Boss	63- 34
AA14 0291	Bottom Plate Shaft	55- 6
AA14 0321	Pick-off Pawl Shaft	41- 4
AA14 0559	Scanner Drive Shaft	73- 4
AA14 0560	Joint Shaft	41- 26
AA14 0575	Paper Feed Shaft	49- 11
AA14 0576	LCT Drive Shaft	45- 15
AA14 3025	Stepped Screw - M3	77- 22
AA14 3219	Stepped Screw	49- 35
AA14 3301	Stepped Screw - M3x4	71- 11
AA14 3307	Stepped Screw - M3x4	53- 17
AA14 3410	Stepped Screw - M4	77- 11
AA14 3416	Stepped Screw - M4x3	25- 19
AA14 3417	Shoulder Screw - M4x4	25- 22
AA14 3444	Stepped Screw	73- 26
AA14 3445	Stud - M4	53- 20
AA14 3452	Stepped Screw	71- 14
AA14 3459	Knob Screw	77- 34
AA14 3712	Chuck Shaft	77- 5
AA14 3715	Stepped Screw - M5	45- 10
AA14 3716	Stepped Screw	39- 19

Part No.	Description	Page and Index No.
AA14 3730	Stepped Screw	39- 29
AA14 5537	Belt Release Shaft	43- 21
AA14 5539	Solenoid Shaft	63- 4
AA14 5794	Front Support Shaft	39- 20
AA14 5795	Rear Support Shaft	39- 12
AA14 8413	Idle Gear Shaft	77- 25
AA14 8439	Thermistor Shaft	39- 21
AA15 0231	Seal - 15X30	37- 20
AA15 0234	Mylar Seal - Base	77- 28
AA15 0366	Rear Side Seal	71- 1
AA15 0368	Shielding Plate - Cover - Lens	61- 4
AA15 0369	Original Sensor Seal	61- 2
AA15 0377	Shutter Seal	77- 20
AA15 0380	Seal Front Holder	41- 15
AA15 0381	Seal Rear Holder	41- 33
AA15 0382	Entrance Seal	37- 2
AA15 0383	Right Rail Sheet	53- 14
AA15 0389	Drum Guide Seal	41- 12
AA15 1177	Seal - 5x82x4	71- 22
AA15 1809	Rear Seal	41- 9
AA15 1894	Seal - 67x53x2	77- 2
AA15 1935	Seal - 38x32x2.5	37- 4
AA15 1941	Shield - Case - Development - Right	61- 3
AA15 1942	Side Seal	41- 23
AA15 1943	Front Seal	41- 6
AA15 1944	Rear Seal	41- 8
AA15 1945	Joint Seal	39- 28
AA15 1998	Cushion - 10X30X5	33- 13
AA15 2245	Front Drum Seal	41- 13
AA15 2246	Rear Drum Seal	41- 31
AA15 2330	Magnification Seal	61- 12
AA15 2332	Seal - Casing	43- 15
AA15 2333	Entrance Seal	37- 1
AA16 1067	Cushion - Motor	53- 8
AA16 2067	Platen Cover Pad	29- 6

Part No.	Description	Page and Index No
AA16 2068	Guide Plate Pad	49- 20
AB01 0341	Gear - 18Z	41- 1
AB01 0342	Idle Gear - 20Z	39- 17
AB01 0343	Idle Gear - 14Z	39- 16
AB01 0344	Roller Gear - 20Z	39- 15
AB01 1133	Gear - 49Z	45- 14
AB01 1153	Idle Gear - 25Z	65- 14
AB01 1165	Gear - 32Z	53- 5
AB01 1166	Gear - 33Z	51- 11
AB01 1167	Gear - 25Z	53- 15
AB01 1343	Idle Gear - 23Z	49- 9
AB01 1344	Gear - 16Z	49- 27
AB01 1345	Gear - 20Z	49- 28
AB01 1346	Gear - 27Z	49- 31
AB01 1357	Collection Coil Gear	41- 30
AB01 1358	Driven Gear	39- 4
AB01 1359	Joint Drive Gear	41- 27
AB01 1360	Idle Gear	41- 20
AB01 1361	Drive Gear	41- 14
AB01 3106	Gear - Drive - Third - Z18	57- 23
AB01 3343	Development Roller	37- 9
AB01 3485	Gear - 20Z	57- 3
AB01 3486	Gear - 14Z	57- 6
AB01 3868	Gear - 16Z	37- 12
AB01 3872	Fusing Cam Gear - 28Z	61- 14
AB01 3881	Gear - 31Z	55- 12
AB01 3882	Gear - 40Z	45- 23
AB01 3883	Idle Gear - 25Z	45- 3
AB01 3884	Exit Gear - 17Z	47- 3
AB01 3885	Idle Gear - 20Z	47- 2
AB01 3889	Gear - 24Z	57- 6
AB01 3889	Gear - 24Z	59- 14
AB01 3908	Gear - 27Z	65- 20
AB01 3909	Idle Gear	37- 10
AB01 3911	Gear	37- 11

Part No.	Description	Page and Index No.
AB01 3916	Belt Drive Gear - 25Z	43- 10
AB01 3917	Toner Supply Gear	63- 2
AB01 3918	Drive Gear - 35Z	65- 15
AB01 7129	Gear - 20Z And 72Z	73- 17
AB01 7332	Gear - 24Z/41Z	53- 14
AB01 7337	Gear - 15Z/55Z	53- 4
AB01 7339	End Fence Gear - 22Z/58Z	55- 14
AB01 7345	Timing Pulley - 35Z	61- 17
AB01 7347	Idle Gear	77- 24
AB01 7360	Gear Pulley	61- 19
AB01 7360	Gear Pulley	73- 8
AB01 7361	Gear - 24Z/56Z	61- 21
AB01 7361	Gear - 24Z/56Z	73- 18
AB01 7362	Gear - 25Z/32Z	73- 7
AB01 7363	Timing Pulley	65- 17
AB01 7364	Timing Pulley - 24Z/20Z	65- 19
AB01 7366	Paddle Gear	37- 14
AB01 7367	Right Paddle Roller	37- 19
AB01 7368	Cleaning Drive Gear	63- 7
AB01 7369	Transfer Belt Pulley	63- 22
AB01 7370	Development Pulley	63- 24
AB01 7371	Exit Pulley	61- 9
AB01 7373	Idle Cam	41- 25
AB01 7374	Drive Gear	41- 18
AB01 7375	Drive Gear	41- 17
AB01 7376	Separation Pawl Cam	41- 21
AB01 7377	Gear - 25Z	65- 18
AB01 7385	Gear - 17Z/24Z	63- 29
AB01 7386	Cleaning Cam	63- 1
AB01 7388	Blade Cam	41- 19
AB01 7400	Gear- 18Z/68Z	55- 13
AB03 0281	Timing Pulley - 28Z	45- 9
AB03 0463	Fusing Cam Pulley	61- 13
AB03 0473	End Fence Pulley - 22Z	55- 11
AB03 0474	Pulley - 24Z	51- 2

Part No.	Description	Page and Index No
AB03 0486	Timing Pulley - 24Z	73- 9
AB03 0487	Timing Pulley - 44Z	73- 16
AB03 0489	Timing Pulley - 22Z	73- 15
AB03 0491	Timing Pulley - 25Z	65- 9
AB03 0492	Pulley - 25/25/34/125Z	61- 5
AB03 0494	Drum Pulley	63- 14
AB03 2059	Driven Pulley	61- 14
AB03 2059	Driven Pulley	73- 23
AB03 3064	Drive Pulley	65- 16
AB03 3069	Timing Pulley - 22Z/24Z	73- 3
AB04 0015	Spring Clutch - Tray Bottom Plate	53- 12
AC01 5017	Shield Glass	73- 23
AC03 0103	1st Mirror	65- 13
AC03 0106	4/5 Mirror	69- 16
AC03 0107	6th Mirror	73- 20
AC03 5022	Rear Mirror Clamp - 1st Mirror	65- 2
AC04 2113	Left Original Scale - A4	25- 20
AC04 2117	Left Original Scale - LT	25- 20
AC04 2120	Rear Original Scale (A4)	25- 21
AC04 2124	Rear Original Scale - LT	25- 21
AD02 5019	Drum Pick-off Pawl	41- 2
AD02 7001	Drum Charge Roller	39- 13
AD03 7045	Toner Collection Coil	37- 13
AD04 3035	Toner Collection Coil	41- 16
AE01 1024	Hot Roller	45- 22
AE02 0050	Pressure Roller	47- 9
AE03 0022	Bearing - 12x24x64m	47- 8
AE03 0023	Bearing - 30x42x7mm	45- 21
AE04 2018	Cleaning Roller	47- 5
AE04 4013	Hot Roller Stripper	45- 20
AF01 0018	Duplex Tray	55- 27
AF01 3003	Bottom Plate Pad - Duplex	55- 2
AF01 3004	Bottom Plate Pad	37- 13
AF01 5027	Paper Size Slider	37- 20
AF01 6072	Front Side Fence	37- 5

Part No.	Description	Page and Index No.
AF01 6073	Rear Side Fence	37- 17
AF01 6160	Rear Side Fence	55- 3
AF01 6161	Front Side Fence	55- 4
AF01 7015	Paper End Fence	37- 10
AF02 0316	Lower Registration Roller	57- 13
AF02 0317	Stack Roller	51- 15
AF02 0319	Transport Roller	51- 6
AF02 0320	Right Transport Roller	51- 7
AF02 0327	Exit Roller	57- 20
AF02 0327	Exit Roller	59- 13
AF02 0330	Vertical Driven Roller	41- 36
AF02 0336	Inverter Drive Roller	57- 22
AF02 0337	Upper Relay Roller	57- 20
AF02 0338	Lower Relay Roller	57- 21
AF02 1052	Upper Registration Roller	57- 12
AF02 2042	Middle Pressure Roller	57- 14
AF02 2042	Middle Pressure Roller	59- 10
AF02 2077	Driven Roller	49- 7
AF02 2077	Driven Roller	51- 19
AF02 2079	Vertical Driven Roller	33- 6
AF02 5024	Pick-off Pawl	57- 21
AF03 0024	Pick-up Roller	49- 10
AF03 1024	Feed Roller	51- 17
AF03 1025	Feed Roller (A161)	49- 7
AF03 1027	Paper Feed Roller	53- 8
AF03 1030	Feed Roller (A162)	49- 7
AF03 2025	Separation Roller	49- 21
AF04 0031	Upper Exit Roller	49- 11
AF04 0031	Upper Exit Roller	57- 19
AF04 3076	Copy Tray Slide	25- 14
AF04 3077	Copy Tray Guide	25- 15
AF04 3083	Copy Tray	25- 13
AG01 1323	Operation Panel Ass'y - LT (A161)	25- 12
AG01 1324	Operation Panel Ass'y - A4 (A161)	25- 12
AG01 1325	Operation Panel Ass'y - LT (A162)	25- 12

Part No.	Description	Page and Index No
AG01 1326	Operation Panel Ass'y - A4 (A162)	25- 12
AG05 0076	Fusing Knob	47- 10
AG05 0078	Registration Knob	25- 6
AG05 0078	Registration Knob	57- 2
AG07 0004	Magnetic Catch	25- 4
AG07 0004	Magnetic Catch	33- 5
AG07 0004	Magnetic Catch	45- 16
AG07 0004	Magnetic Catch	57- 3
AG07 0004	Magnetic Catch	73- 18
AG07 0009	Magnetic Catch	47- 15
AW01 0040	Original Sensor	69- 11
AW01 0042	Original Length Sensor	61- 5
AW02 0022	Photointerruptor	69- 13
AW02 0022	Photointerruptor	71- 8
AW02 0068	Photointerruptor	57- 15
AW02 0069	Photointerruptor	33- 9
AW02 0069	Photointerruptor	41- 28
AW02 0075	Photointerrupter	45- 7
AW02 0075	Photointerrupter	49- 16
AW02 0075	Photointerrupter	53- 11
AW02 0075	Photointerrupter	53- 21
AW02 0075	Photointerrupter	55- 18
AW02 0075	Photointerrupter	57- 10
AW02 0075	Photointerrupter	59- 6
AW02 0075	Photointerrupter	61- 13
AW02 0075	Photointerrupter	63- 27
AW03 0054	Optical Fiber - 250mm	69- 9
AW03 0055	Optical Fiber - 420mm	69- 8
AW03 0056	Optical Fiber - 550mm	71- 9
AW10 0027	Thermister	25- 29
AW10 0027	Thermister	65- 12
AW10 0032	Thermistor - 25°C 10k Ω	39- 24
AW23 0008	ID Sensor	37- 7
AW23 0009	Toner End Sensor	37- 5
AW50 0012	Push Switch	49- 17

Part No.	Description	Page and Index No.
AW50 0012	Push Switch	71- 5
AX05 0090	Motor - DC 24V 36W	45- 8
AX06 0108	Motor - DC24V 45W	61- 8
AX12 0039	DC SOL 24V 400GF	57- 25
AX20 0101	Magnetic Clutch - 2.5kgf 35Z	49- 12
AX20 0105	Magnetic Clutch - 15kgf 24Z	63- 6
AX20 0106	Magnetic Clutch - 15kgf 52Z	63- 9
AX20 0107	Magnetic Clutch - 10kgf 25Z	65- 25
AX20 0109	Magnetic Clutch - 10kgf.cm 35Z	65- 27
AX21 0047	Magnetic Clutch - 5kgf 42Z	65- 24
AX21 0049	Magnetic Clutch - 5kgf 42Z	63- 30
AX31 0022	Total Counter	67- 9
AX40 0021	Tray Anticondensation Heater - 115V 18W	67- 6
AX40 0022	Tray Anticondensation Heater - 240V 18W	67- 6
AX40 0047	Anticondensation Heater - 115V 15W	69- 22
AX40 0048	Anticondensation Heater - 240V 15W	69- 22
AX40 0063	Anticondensation Heater - 120V 9W	73- 1
AX40 0064	Anticondensation Heater - 230V 9W	73- 1
AX43 0023	Fusing Lamp - 120V 350W	45- 24
AX43 0025	Fusing Lamp - 230V 350W	45- 24
AX43 0030	Main Fusing Lamp - 120V 550W	45- 25
AX43 0031	Main Fusing Lamp - 230V 550W	45- 25
AX52 0026	Exposure Lamp - 85V 200W (230V)	65- 7
AX52 0028	Exposure Lamp - 97V 200W (115V)	65- 7
AX64 0058	Fan Motor - DC 24V 4.32W	71- 6
AX64 0059	Fan Motor - DC24V 3.12W	57- 7
AX64 0059	Fan Motor - DC24V 3.12W	59- 3
AZ02 0008	Coil - 1 0mh 2A	71- 21
AZ13 0023	Transformer - 230V	69- 18
AZ23 0055	DC Drive Board - 100/120V	69- 10
AZ23 0060	DC Drive Board - 220V/240V	69- 10
AZ30 0041	Power Pack - Transfer Unit	43- 30
AZ32 0078	DC Power Pack	71- 2
AZ43 0020	High Voltage Supply Cord	63- 25
AZ43 0020	High Voltage Supply Board	71- 3

Part No.	Description	Page and Index No
AZ48 0029	CT Harness	39- 1
C105 2352	Stepped Screw - M6x1.7	61- 12
G006 4317	Pressure Spring	41- 7
G011 3305	Gear - 16T	33- 25
G011 3305	Gear - 16T	55- 8
G012 3897	Relay Harness - Toner End Sensor	37- 15
A008 9502	Silicone Grease - G40M.	79- 6
A028 9300	Grease Nok Barrierta - JFE 5 5/2	79- 3
A048 2838	Nylon Rivet	37- 15
A048 2863	Release Arm - Paper End	53- 9
A053 1957	Flex Hinge - Platen Cover	29- 5
A069 1883	Shoe - Scanner	61- 17
A069 1883	Shoe - Scanner	65- 3
A069 1883	Shoe - Scanner	69- 6
A075 1766	Adjusting Cam	73- 22
A077 1310	Snap Ring - M2	39- 6
A077 1673	Thermofuse Terminal	65- 5
A077 1690	Spring Plate - Mirror	69- 4
A077 1690	Spring Plate - Mirror	73- 19
A077 3918	Spring - T/S Unit	43- 20
A077 4162	Shoulder Screw - M3	47- 12
A079 3626	Stepped Screw - Swing Cleaning	53- 7
A085 1670	Exposure Adjusting Plate	65- 8
A096 1692	ADS Case	69- 15
A096 1693	ADS Cover	69- 14
A096 1873	Scanner Shoe Pin	65- 17
A096 1873	Scanner Shoe Pin	69- 1
A096 5230	ADS Board	69- 27
A096 6266	Tray Lock Arm	75- 6
A111 1753	Seal - 0.1x18x49	61- 7
A134 1121	Joint Gear	61- 16
A134 1328	Small Cap	25- 30
A134 1394	Front Platen Cover	29- 4
A134 1395	Rear Platen Cover	29- 7

Part No.	Description	Page and Index No.
A134 1396	Original Holder	29- 8
A134 2554	Lower Registration Guide	57- 26
A134 2557	Regist Sensor Bracket	57- 14
A134 2580	Vertical Transfer Hinge	57- 11
A134 2586	Hinge Bracket	33- 10
A134 2591	Vertical Transfer	33- 2
A134 2654	Pick-up Arm	49- 30
A134 2656	Stopper Plate	49- 6
A134 2658	Grounding Plate	49- 5
A134 2659	By-pass Feed Housing	49- 15
A134 2660	Paper Feed Feeler	49- 2
A134 2661	Feeler Roller	49- 3
A134 2662	Grounding Plate	49- 18
A134 2663	Separation Guide	49- 20
A134 2667	Separation Drive Shaft	49- 29
A134 2668	Separation Driven Shaft	49- 23
A134 2670	By-pass Feed Cover	49- 4
A134 2674	Torque Limitter - 400fg	49- 22
A134 2675	Solenoid Bracket (A161)	65- 5
A134 2678	Solenoid Link (A161)	65- 3
A134 2680	DC Solenoid	65- 6
A134 2688	Positioning Plate	49- 1
A134 2689	Gear Cover	49- 26
A134 2690	By-pass Feed Table Ass'y	33- 12
A134 2696	By-pass Feed Table	33- 21
A134 2701	By-pass Feed Guide	33- 20
A134 2705	Magnet Catch Plate	33- 22
A134 2706	Rear Fence Rack	33- 24
A134 2707	Front Fence Rack	33- 26
A134 2711	Front Side Fence	33- 17
A134 2716	Rear Side Fence	33- 19
A134 2721	Front Paper Guide	33- 16
A134 2726	Rear Paper Guide	33- 18
A134 2731	By-pass Feed Entrance Guide	33- 14
A134 2746	By-pass Feed Cover	33- 27

Part No.	Description	Page and Index No
A134 2921	Left Slide Rail (A162)	75- 4
A134 2926	Paper Feed Lock Bracket	75- 5
A134 2941	Tray Sensor Bracket	71- 4
A134 2947	Heater Cover	67- 10
A134 2956	Paper Feed Front Cover	37- 14
A134 2956	Paper Feed Front Cover	49- 1
A134 3157	Bottle Holder Bracket	77- 27
A134 3161	Bottle Drive Bracket	77- 26
A134 3162	Bottle Drive Motor	77- 23
A134 3172	Toner Bottle Holder	77- 15
A134 3177	Toner Slider	77- 4
A134 3179	Chuck Shaft	77- 7
A134 3180	Bottle Chuck	77- 3
A134 3181	Chuck Roller	77- 6
A134 3190	Toner Bottle Stopper	77- 10
A134 3197	Bottle Holder	77- 13
A134 3201	Cam - Toner Bottle	77- 32
A134 3215	Rubber Cap	77- 9
A134 4061	Rear Terminal Plate	45- 11
A134 4112	Stripper Bracket	45- 19
A134 4115	Fusing Seal	45- 17
A134 4130	Fusing Front Cover	45- 1
A134 4161	Pressure Lever	47- 13
A134 4253	Fusing Exit Guide	47- 14
A134 4301	Exit Guide Hinge	47- 11
A134 4352	Fusing Lock Lever	75- 8
A134 4355	Fusing Unit Stopper	75- 12
A134 4508	Inverter Guide Plate	53- 13
A134 4512	Feed Roller Shaft	51- 21
A134 4525	End Fence	55- 26
A134 4527	Separation Roller	53- 20
A134 4619	Guide Plate Link	49- 12
A134 4620	Grounding Plate	55- 19
A134 4649	Paper Guide Holder	51- 16
A134 4654	Bottom Pressure Plate	55- 5

Part No.	Description	Page and Index No.
A134 4658	Vibrating Plate	53- 23
A134 4662	Duplex Guide Plate	53- 24
A134 4676	Paper End Feeler	51- 8
A134 4688	Front Side Fence Rack	55- 10
A134 4689	Rear Side Fence Rack	55- 9
A134 4690	Clutch Stopper	51- 20
A134 4701	Front Upper Cover	49- 3
A134 4710	End Fence Actuator	55- 24
A134 4712	Right Cover Bracket	49- 4
A134 4714	Tightener	55- 15
A134 4720	End Fence Upper Cover	49- 2
A134 4721	Connector Cover	49- 6
A134 4726	Guide Plate Knob	49- 19
A134 4728	Inverter Feeler	49- 5
A134 4730	Entrance Feeler	49- 14
A134 4739	Lower Guide Plate Knob	49- 9
A134 4740	Lower Guide Plate	49- 15
A134 4751	Front Side Plate	51- 1
A134 4765	Grounding Plate	53- 22
A134 4781	Rear Side Plate	51- 9
A134 4790	Paper End Sensor	53- 18
A134 4799	Motor Bracket	53- 1
A134 4800	Motor Bracket	53- 2
A134 4804	Guide Plate Stopper	53- 19
A134 4808	Rear Guide Holder	51- 18
A134 4809	Front Guide Holder	51- 14
A134 4884	Decal - Duplex Misfeed Removal	49- 21
A134 4901	Duplex Right Rail (A162)	75- 1
A134 5254	Duplex Control Board	55- 23
A134 5280	Paper Size Sensor Board	33- 23
A134 5290	Transport Drive Motor	53- 3
A134 5291	Jogger Drive Motor - Side Fence	55- 20
A134 5292	Jogger Drive Motor - End Fence	55- 21
A134 5311	By-pass Feed Harness	49- 14
A134 5320	Toner Bottle Cam	55- 28

Part No.	Description	Page and Index No
A134 5321	Sensor Relay Harness	55- 25
A134 5322	End Fence Harness	55- 31
A134 5323	Motor Harness	55- 22
A153 1112	Drive Gear Holder	63- 15
A153 1117	Drum Drive Shaft	63- 21
A153 1125	Development Drive Bracket	63- 8
A153 1126	Edging	63- 38
A153 1127	Clutch Shaft	63- 5
A153 1128	Tightener	61- 10
A153 1131	Development Support Plate	61- 7
A153 1132	Development Tightener	63- 16
A153 1135	Drum Drive Tightener	63- 19
A153 1251	Upper Cover	25- 24
A153 1261	Front Right Cover	25- 28
A153 1271	Rear Right Cover (A161)	25- 27
A153 1285	Emblem	25- 1
A153 1285	Emblem	77- 4
A153 1291	Rear Cover	25- 25
A153 1350	Right Middle Cover	73- 24
A153 1353	Front Cover Hinge	67- 1
A153 1354	Hinge Pin	25- 3
A153 1355	Key Counter Bracket	67- 2
A153 1370	Platen Cover Hinge	29- 3
A153 1380	Platen Cover Bracket	29- 11
A153 1383	Platen Cover Feeler	29- 9
A153 1469	Panel Cover	25- 11
A153 1637	Platen Cover Ass'y	29- 1
A153 1674	Shield Glass Guide	73- 19
A153 1675	Harness Guard Seal	73- 28
A153 1677	Optical Fiber	73- 21
A153 1700	Scanner Drive Motor - DC2.3V 13.5W	73- 13
A153 1707	Tension Bracket - Long	73- 14
A153 1708	Tension Bracket - Short	73- 6
A153 1720	Scanner Rail	69- 12
A153 1721	Spring Plate	69- 10

Part No.	Description	Page and Index No.
A153 1749	Scale Bracket	65- 11
A153 1754	Exposure Stay	65- 14
A153 1776	Front Mirror Clamp - 1st Mirror	65- 4
A153 1777	Front Terminal	65- 6
A153 1778	Rear Terminal	65- 9
A153 1779	Thermostat - 121°C 250V 10A	65- 15
A153 1780	Exposure Lamp Harness	65- 10
A153 1781	Reflector	65- 16
A153 1801	2nd Scanner Ass'y	69- 8
A153 1805	Front Mirror Holder	69- 5
A153 1806	Rear Mirror Holder	69- 7
A153 1807	Harness Guide	69- 2
A153 1808	2nd Mirror	69- 3
A153 1809	3rd Mirror	69- 9
A153 1840	Lens Magnification Unit	61- 1
A153 1841	Lens Drive Unit	61- 11
A153 1906	Adjust Shoe	69- 20
A153 1908	Shielding Plate	69- 17
A153 1912	3rd Scanner Stay	69- 26
A153 1914	3rd Scanner Rack	69- 19
A153 1947	Magnification Drive Unit Bracket	73- 24
A153 1952	Magnification Rail	73- 21
A153 1961	Lens Cover	61- 6
A153 1971	Original Sensor Bracket	61- 8
A153 1976	ADS Sensor Bracket	69- 25
A153 1986	Cooling Fan Duct	71- 7
A153 2060	Wire Pulley	73- 13
A153 2071	Cam Lever	73- 15
A153 2072	Release Link Lever	73- 5
A153 2073	Guide Rail	73- 9
A153 2075	Front Roller Cam	73- 11
A153 2076	Rear Roller Cam	73- 12
A153 2080	Eraser Lamp	73- 17
A153 2083	Left Drum Rail	73- 16
A153 2084	Spacer	73- 10
A153 2085	Spacer	73- 27
A153 2090	Quenching Lamp	73- 14
A153 2101	PTL Lamp	57- 9
A153 2110	Transfer Roller Bracket	39- 2
A153 2116	Grounding Plate	39- 7
A153 2117	Roller Terminal	39- 30
A153 2118	Charge Roller Terminal	39- 8
A153 2120	Drum Charge Roller Cleaner	39- 25
A153 2126	Swing Arm	39- 3
A153 2130	Receptacle Housing	63- 13
A153 2133	Thermistor Bracket	39- 23
A153 2142	Cam Lever	63- 32
A153 2143	Shielding Plate	39- 14
A153 2253	Drum Unit	39- 0
A153 2275	Cleaning Blade	41- 5
A153 2303	Grounding Plate	41- 34
A153 2558	Upper Registration Guide	57- 19
A153 2560	Rear Guide Plate	49- 19
A153 2563	Middle Guide Plate	57- 18
A153 2995	Decal Paper Size - LT/DLT	37- 19
A153 2995	Decal Paper Size - LT/DLT	77- 1
A153 2996	Decal Paper Size - A4/A3	37- 19
A153 2996	Decal Paper Size - A4/A3	77- 1
A153 3051	Development Unit	37- 0
A153 3080	Development Filter	37- 18
A153 3086	Bias Terminal	63- 12
A153 3087	Terminal Cap	63- 11
A153 3090	Development Position Plate	37- 16
A153 3095	Development Rail	57- 8
A153 3114	Transfer Entrance Guide	57- 10
A153 3149	Knob Screw - M4x12	37- 17
A153 3172	Shutter	77- 19
A153 3173	Shutter Guide	77- 16
A153 3174	Shutter Holder	77- 18
A153 3185	Toner Supply Gear (230V)	77- 1

Part No.	Description	Page and Index No.
A153 3187	Toner Supply Gear (115V)	77- 1
A153 3189	Toner Supply Gear (ASIA/TWN)	77- 1
A153 3200	Toner Hopper Ass'y	37- 3
A153 3200	Toner Hopper Ass'y	77- 0
A153 3262	Bottle Unit Hinge	77- 29
A153 3264	Bottle Unit Upper Hinge	77- 33
A153 3265	Bottle Unit Lock Plate	77- 21
A153 3266	Bottle Unit Link Plate	77- 30
A153 3281	Bottle Bracket Cover	77- 14
A153 3555	Cleaning Entrance Seal	41- 32
A153 3558	Blade Seal	41- 22
A153 3570	Spring Plate	41- 24
A153 3580	Toner Collection Unit	39- 27
A153 3590	Density Sensor Bracket	41- 28
A153 3595	Pick-off Pawl Retainer	41- 3
A153 3598	Pin Bracket	73- 22
A153 3866	Belt Drive Roller	43- 3
A153 3867	Belt Driven Roller	43- 13
A153 3870	Transfer Bias Roller	43- 8
A153 3873	Bias Roller Terminal	43- 5
A153 3874	Earth Terminal	43- 12
A153 3877	Spring Plate	43- 29
A153 3884	Belt Guide Plate	43- 14
A153 3886	Belt Pressure Lever	43- 19
A153 3887	Belt Release Stay	43- 22
A153 3888	Earth Plate	43- 27
A153 3892	Belt Cleaning Blade	43- 17
A153 3893	Belt Cleaning Stay	43- 18
A153 3894	Bushing	43- 16
A153 3895	Front Bushing	43- 25
A153 3897	Harness Clamp	43- 23
A153 3898	Entrance Guide Plate	43- 31
A153 3911	Cam Shaft	63- 31
A153 3914	Magnetic Clutch Feeler	63- 28
A153 3915	Magnetic Clutch Bracket	63- 26

Part No.	Description	Page and Index No
A153 3917	Magnetic Clutch Bracket	63- 35
A153 3918	Break Pad	63- 36
A153 3919	Spacer	63- 37
A153 3920	Belt Release Arm	73- 25
A153 3930	Belt Unit Handle	75- 11
A153 4053	Fusing Upper Stay	45- 2
A153 4055	Upper Fusing Guide	45- 26
A153 4062	Electrode Plate - Middle	45- 12
A153 4063	Front Terminal Plate	45- 14
A153 4074	Terminal Connector - 2p	45- 4
A153 4075	Front Holder	45- 15
A153 4077	Thermistor	45- 9
A153 4084	Fusing Connector Bracket	45- 6
A153 4085	Thermistor - 2	45- 8
A153 4102	Front Lamp Terminal Holder	45- 16
A153 4103	Rear Lamp Terminal Holder	45- 7
A153 4197	Lower Fusing Guide	47- 1
A153 4205	Cleaning Roller Bracket	47- 7
A153 5104	IC - 4MX16-120NS	69- 4
A153 5114	Ram Board	69- 15
A153 5132	Density Sensor	41- 29
A153 5141	Lens Drive Harness	61- 16
A153 5211	Mirror Drive Motor - DC24V 8.6V	73- 25
A153 5212	Lens Drive Motor - Horizontal	61- 18
A153 5213	Lens Drive Motor - DC24V 8.6W	73- 5
A153 5266	Thermofuse - 169°C	45- 13
A153 5300	Fusing Unit Connector (120V)	45- 5
A153 5301	AC Main Harness - 120V	67- 3
A153 5312	Optical Harness	69- 13
A153 5320	Front Right Harness	67- 5
A153 5324	Sorter Relay Harness	71- 12
A153 5326	Fusing Relay Harness (120V)	71- 10
A153 5328	CT Harness	57- 9
A153 5328	CT Harness	59- 5
A153 5330	CT Harness - 7p	37- 6

Part No.	Description	Page and Index No.
A153 5333	CT Harness	57- 16
A153 5334	CT Harness - 7p	75- 2
A153 5337	Fusing Relay Harness (230V)	71- 10
A153 5339	Density Sensor Harness	73- 20
A153 5340	CT Harness	63- 10
A153 5344	Power Supply Harness - 2trays (A161)	69- 7
A153 5391	Optical Harness - 1	61- 9
A153 5392	Optical Harness - 2	61- 10
A153 5393	Optical Harness - 3	69- 23
A153 5395	Optical Harness - 5	61- 15
A153 5471	Power Supply Cord (110V)	71- 13
A153 5545	AC Drive Board - 120V	69- 11
A153 5571	Power Supply Cord - 120V	71- 13
A153 5601	AC Relay Harness	71- 19
A153 5621	Noise Filter Board	71- 20
A153 5644	Tray Power Supply Harness	69- 16
A153 5645	AC Drive Board (230V)	69- 11
A153 5661	AC Main Harness (230V)	67- 3
A153 5665	Fusing Unit Connector (230V)	45- 5
A153 5671	Power Supply Cord (230V)	71- 13
A153 5801	DC Drive Board Bracket	69- 12
A153 5802	Lower Bracket - DC Drive Board	61- 1
A153 5803	Upper Bracket - DC Drive Board	69- 6
A153 5803	Upper Bracket - DC Drive Board	73- 10
A153 5810	Power Supply Cord Bracket	71- 17
A153 5811	Main Control Board Bracket	69- 1
A153 5812	Left Lower Bracket	65- 26
A153 5813	Main Control Board Bracket	65- 1
A153 5820	Total Counter Bracket	67- 11
A153 5888	Fusing Unit Joint Connector	71- 18
A153 9001	Scanner Adjustment Tool	79- 7
A153 9004	Wiping Cloth	79- 8
A153 9510	Opc Drum	39- 26
A153 9513	Harness - ADS	69- 24
A154 4616	Paper Holder	49- 17

Part No.	Description	Page and Index No
A154 4620	Bottom Plate	55- 1
A154 4621	Front Guide Plate	55- 30
A154 4622	Rear Guide Plate	55- 29
A154 5325	Duplex Unit Relay Harness	71- 15
A155 1331	Rear Right Cover (A162)	25- 27
A155 2667	Lift Sensor Feeler	49- 34
A155 2675	Pick-up Bracket (A162)	65- 5
A155 2676	Pick-up Lever	65- 2
A155 2677	Pick-up Link (A162)	65- 3
A155 2682	Lift Sensor Bracket	49- 32
A155 5165	LCT Main Board	45- 18
A155 5170	Push Switch	45- 27
A155 5314	LCT Relay Harness	45- 24
A155 5342	LCT Harness	45- 31
A155 5345	CT Harness	49- 33
A155 5348	Paper End Sensor Harness	45- 4
A155 5349	LCT Vertical Harness	41- 33
A155 6101	LCT Upper Cover	41- 6
A155 6111	Front Side Plate	45- 29
A155 6112	Spacer - LCT	41- 38
A155 6113	Decal - Paper Set	41- 2
A155 6113	Decal - Paper Set	77- 3
A155 6114	Caution Decal - LCT	41- 35
A155 6116	Safety Switch Bracket	45- 21
A155 6117	Safety Switch Lever	45- 23
A155 6118	Spring Plate	45- 20
A155 6125	Rear Side Bracket	45- 28
A155 6136	Lift Sensor Bracket	45- 11
A155 6141	Tray Bottom Plate	45- 17
A155 6142	LCT Paper Tray	41- 14
A155 6143	Left Bracket	45- 1
A155 6145	Tray Cover	45- 19
A155 6147	Paper End Sensor Bracket	45- 3
A155 6148	Paper Ding Sensor Feeler	45- 2
A155 6153	Upper Hinge	45- 6

Part No.	Description	Page and Index No.
A155 6160	Lower Hinge	41- 31
A155 6162	Cushion	41- 34
A155 6169	Hinge Holder	41- 30
A155 6170	Hinge Bracket	41- 21
A155 6171	Grip Bracket	41- 19
A155 6175	LCT Positioning Plate	41- 32
A155 6181	Knob	41- 18
A155 6191	LCT Front Cover	41- 17
A155 6201	LCT Hinge Bracket	41- 8
A155 6203	Paper Tray Stay	45- 5
A155 6207	Cover Bracket	41- 3
A155 6215	Harness Guide	45- 30
A155 6221	LCT Rear Cover	41- 15
A155 6231	LCT Right Cover	41- 16
A155 6241	LCT Harness Cover	41- 26
A155 6251	Upper Stay	41- 9
A155 6302	Hinge Angle	41- 5
A155 6303	Fix Hinge	41- 4
A155 6306	Front Side Fence	41- 22
A155 6307	Rear Side Fence	41- 12
A155 6311	Front Paper Holder	41- 23
A155 6312	Rear Paper Holder	41- 10
A155 6313	Support Guide	41- 11
A155 6321	Front Spring Plate	41- 24
A155 6322	Rear Sprig Plate	41- 25
A155 6324	End Fence	41- 1
A156 1495	Decal - Copy Ratio	25- 31
A156 1495	Decal - Copy Ratio	77- 8
A157 1111	Belt Tightener	63- 23
A157 1301	Left Cover	25- 16
A157 1311	Left Inner Cover	25- 17
A157 1321	Left Inner Cover - Small	25- 18
A157 1351	Upper Inner Cover	25- 9
A157 1352	Right Lower Cover	25- 7
A157 1359	Lower Inner Cover	25- 8

Part No.	Description	Page and Index No
A157 1360	Operation Sheet	25- 5
A157 1700	1st Scanner Ass'y	65- 1
A157 2550	Vertical Guide Plate	57- 23
A157 2551	Lower Guide Plate	57- 24
A157 2552	Vertical Relay Guide Plate	57- 25
A157 2553	Switch Actuator	57- 22
A157 2557	Spring Plate	33- 7
A157 2559	Switch Bracket	33- 4
A157 2560	Paper Feed Support Plate	65- 12
A157 2562	Solenoid Bracket	65- 23
A157 2563	Feed Drive Shaft	65- 21
A157 2564	Tightener	65- 11
A157 2571	Vertical Transport Guide	33- 8
A157 2751	Paper Tray	37- 1
A157 2754	Front Paper Stripper	37- 2
A157 2755	Rear Paper Stripper	37- 6
A157 2758	Decal - Paper Setting	37- 16
A157 2758	Decal - Paper Setting	77- 5
A157 2762	End Fence Spring	37- 9
A157 2765	Bottom Plate Spring	37- 18
A157 2766	Front Stopper Lever	37- 3
A157 2767	Front Stopper Spring	37- 4
A157 2768	Rear Stopper Lever	37- 7
A157 2769	Rear Stopper Spring	37- 8
A157 2773	Feed Roller Holder	53- 23
A157 2774	Feed Roller	53- 7
A157 2775	Feed Roller Shaft	53- 6
A157 2777	Feed Roller Cover	75- 14
A157 2781	Tray Positioning Rail	53- 13
A157 2782	Paper Tray Holder	53- 2
A157 2783	Left Rail	53- 25
A157 2783	Left Rail (A161)	75- 4
A157 2785	Right Rail	53- 16
A157 2785	Right Rail (A161)	75- 13
A157 2786	Lift Arm Stopper	53- 19

Part No.	Description	Page and Index No.
A157 2788	Lift Arm	53- 12
A157 2794	Lock Arm Stopper	53- 3
A157 2795	Stopper Bracket	53- 21
A157 2800	Paper End Sensor Bracket	53- 24
A157 2802	Paper End Sensor F	53- 5
A157 2804	Shield Plate - Paper End Sensor	53- 4
A157 2805	Decal - Paper Set	37- 21
A157 2805	Decal - Paper Set	77- 7
A157 2806	Bottom Tray Sheet	37- 11
A157 3861	Transfer Belt	43- 2
A157 3862	Transfer Belt Frame	43- 7
A157 3875	Front Side Plate	43- 4
A157 3876	Rear Side Plate	43- 9
A157 3882	Transfer Belt Casing	43- 28
A157 3883	Toner Collection Cap	43- 32
A157 3889	Connector Bracket	43- 24
A157 3900	Support Plate	43- 1
A157 3900	Support Plate	75- 3
A157 4450	Upper Guide Plate	57- 15
A157 4451	Upper Guide Plate	59- 11
A157 4456	Spring Plate	57- 13
A157 4456	Spring Plate	59- 9
A157 4459	Paper Exit Feeler	57- 11
A157 4459	Paper Exit Feeler	59- 7
A157 4460	Exit Cover	59- 12
A157 5101	Main Control Board - 120V	69- 2
A157 5111	Main Control Board - 220V	69- 2
A157 5160	ADS Sensor Board	69- 18
A157 5311	Rear Lower Harness - 2 tray (A161)	69- 17
A157 5316	Paper Feed Harness - 2trays (A161)	69- 14
A157 5336	Vertical Transport Harness	33- 3
A158 1360	Operation Sheet	25- 5
A158 4451	Reverse Guide Plate	57- 5
A158 4452	Lower Reverse Guide Plate	57- 4
A158 4453	Exit Cover	57- 17

Part No.	Description	Page and Index No
A158 4459	Spring Plate	57- 18
A158 4463	Pick-off Pawl Arm	57- 24
A158 4466	Switch Bracket	61- 21
A158 4467	Solenoid Bracket	57- 26
A158 4603	Paper Holder	49- 18
A158 4604	Duplex Lower Guide	49- 22
A158 4607	Upper Guide Plate	49- 10
A158 5309	Rear Lower Harness - Duplex (A162)	69- 17
A158 5310	Duplex Paper Feed Harness (A162)	69- 14
A158 5343	Duplex Power Supply Harness (A162)	69- 7
A159 6181	Vertical Guide Plate - LCT	41- 27
A159 6182	Switch Bracket	41- 29
A159 6183	Positioning Guide	57- 27
A159 6184	Guide Plate Bracket	57- 28
A160 5643	Power Supply Harness - Duplex 220/230V	69- 16
A162 1277	Front Cover (A162)	25- 2
A300 3155	Stepped Screw - M25x32	45- 22
A334 4706	Disk - Bottom Plate Clutch	53- 11
A335 1341	Chain Hook	45- 32
A335 3251	Top Cover Hinge	41- 7
A335 4351	Guide Roller	45- 10
A335 4352	Timing Belt Clamp	45- 25
A421 2543	Friction Pad	41- 13
A470 1703	Shift Clutch	57- 27
A470 1703	Shift Clutch	59- 15
A470 1704	Spring - Lower Exit Roller	57- 8
A470 1704	Spring - Lower Exit Roller	59- 2
A491 4690	Bottom Plate Hook	55- 7
5053 0223	Bushing - 8mm	45- 26
5053 0447	Bushing - 6mm	51- 10
5053 0447	Bushing - 6mm	57- 1
5203 1686	Screw - Slid Rail	75- 10
5203 3151	Roller Cover Spring	61- 19
5203 3151	Roller Cover Spring	63- 18
5203 9501	Grease 501	79- 1

Part No.	Description	Page and Index No.
5206 2686	Snap Ring	49- 8
5215 1667	Platen Cover Stud	29- 10
5215 1980	Exposure Glass - A3t-3.2	25- 23
5215 2621	Snap Ring - M6	33- 1
5215 2621	Snap Ring - M6	51- 13
5304 1639	Bushing - 8mm	51- 12
5420 9507	Digital Multimeter - Beckman	79- 2
5420 9516	Test Chart - OS -A3 (10PCS/SET)	79- 5
5442 1111	Spring - Main Drive Tightener	63- 17
5442 4467	Spring - Stripper Pawl Plate	67- 8
5442 4467	Spring - Stripper Pawl Plate	75- 9
5442 9103	Launa Oil	79- 4
5443 2668	Bushing - 4x6x7mm	51- 4
5443 2668	Bushing - 4x6x7mm	53- 6
5446 1239	Plate Nut - Key Counter	67- 7
5447 2681	Snap Ring	33- 11
5447 2681	Snap Ring	49- 8
5447 2681	Snap Ring	53- 10
5447 2768	Stepped Screw - M3	49- 13
5447 2927	Friction Pad - B	33- 15
5447 9078	Heat Resisting Grease MT-78	79- 3
5448 2804	Platen Cover Sheet	29- 2
5474 2152	Bushing - 8x12x12mm	57- 4
5925 2258	Stopper Chain	45- 13

Part No.	Description	Page and Index No
0313 0040B	Philips Pan Head Screw - M3x4	25-104
0313 0040B	Philips Pan Head Screw - M3x4	57-108
0313 0040B	Philips Pan Head Screw - M3x4	65-107
0313 0040B	Philips Pan Head Screw - M3x4	73-105
0313 0050B	Philips Pan Head Screw - M3X5	45-107
0313 0050B	Philips Pan Head Screw - M3x5	53-102
0313 0060B	Philips Pan Head Screw - M3x6	39-103
0313 0060B	Philips Pan Head Screw - M3x6	65-108
0313 0080B	Philips Pan Head Screw - M3x8	41-106
0313 0140B	Philips Pan Head Screw - M3x14	33-104
0313 0140B	Philips Pan Head Screw - M3x14	61-105
0314 0060B	Philips Pan Head Screw - M4x6	37-102
0314 0060B	Philips Pan Head Screw - M4x6	41-101
0314 0060B	Philips Pan Head Screw - M4x6	45-104
0314 0060B	Philips Pan Head Screw - M4x6	65-109
0314 0060B	Philips Pan Head Screw - M4x6	67-106
0314 0100B	Philips Pan Head Screw - M4x10	69-101
0323 0060B	Philips Sunk Screw - M3x6	69-108
0323 0060B	Philips Sunk Screw - M3x6	77-101
0323 0080B	Philips Sunk Screw - M3x8	67-104
0344 0080F	Philips Truss Head Screw - M4x8	49-103
0353 0300B	Bind Screw - M3x30	57-105
0353 0300B	Bind Screw - M3x30	59-104
0413 0050Z	Tapping Screw - M3x5	65-104
0413 0060W	Tapping Screw - M3x6	65-105
0413 0062B	Tapping Screw - M3x6	61-102
0413 0062W	Tapping Screw - M3x6	65-103
0413 0082B	Tapping Screw - M3X8	53-105
0414 0080B	Tapping Screw - M4x8	41-102
0414 0080B	Tapping Screw - M4x8	49-103
0414 0080B	Tapping Screw - M4x8	53-102
0414 0080B	Tapping Screw - M4x8	61-107
0414 0080B	Tapping Screw - M4x8	63-106
0414 0080B	Tapping Screw - M4x8	69-104
0414 0082W	Tapping Screw With Flat Washer - M4x8	33-102

Part No.	Description	Page and Index No.
0414 0082W	Tapping Screw With Flat Washer - M4x8	65-102
0414 0122B	Philips Tapping Screw - M4x12	47-102
0414 0142B	Binding Self Tapping Screw - M4x14	29-101
0414 0142B	Binding Self Tapping Screw - M4x14	71-106
0433 0050B	Tapping Screw - M3x5	77-102
0433 0060W	Tapping Screw - M3x6	73-110
0434 0060B	Philips Tapping Screw - M4x6	37-101
0434 0060B	Philips Tapping Screw - M4x6	41-101
0434 0060B	Philips Tapping Screw - M4x6	43-101
0434 0060B	Philips Tapping Screw - M4x6	45-101
0434 0060B	Philips Tapping Screw - M4x6	53-101
0434 0060B	Philips Tapping Screw - M4x6	53-107
0434 0060B	Philips Tapping Screw - M4x6	57-102
0434 0060B	Philips Tapping Screw - M4x6	57-104
0434 0060B	Philips Tapping Screw - M4x6	59-102
0434 0060B	Philips Tapping Screw - M4x6	61-104
0434 0060B	Philips Tapping Screw - M4x6	63-105
0434 0060B	Philips Tapping Screw - M4x6	67-101
0434 0060B	Philips Tapping Screw - M4x6	69-107
0434 0060B	Philips Tapping Screw - M4x6	73-101
0434 0060B	Philips Tapping Screw - M4x6	73-103
0434 0060B	Philips Tapping Screw - M4x6	75-101
0434 0060B	Philips Tapping Screw - M4x6	77-108
0434 0080B	Philips Tapping Screw - M4x8	57-102
0434 0082B	Tapping Screw - M4x8	25-101
0434 0082B	Tapping Screw - M4x8	47-103
0434 0082B	Tapping Screw - M4x8	57-103
0434 0352W	Pan Head Self-tapping Screw - M4x35	71-105
0443 0060B	Hexagon Tapping Screw - M3x6	43-109
0443 0060B	Hexagon Tapping Screw - M3x6	45-103
0443 0060B	Hexagon Tapping Screw - M3x6	51-101
0443 0060B	Hexagon Tapping Screw - M3x6	53-104
0443 0060B	Hexagon Tapping Screw - M3x6	71-108
0443 0060W	Hexagon Head Tapping Screw - M3x6	49-102
0443 0080B	Tapping Screw - M3x8	43-104

Part No.	Description	Page and Index No
0443 0080W	Hexagon Head Tapping Screw - M3x8	69-102
0573 0040E	Hexagon Headless Set Screw - M3x4	63-102
0573 0040E	Hexagon Headless Set Screw - M3x4	73-101
0573 0100E	Hexagon Headless Set Screw - M3x10	73-111
0574 0050E	Hexagon Headless Set Screw - M4x5	73-105
0622 0100E	Spring Pin - 2x10mm	49-104
0623 0160E	Spring Pin - 3x16mm	45-106
0703 0030M	Spring Washer - M3	65-110
0707 8140B	Bushing - 8x14mm	61-101
0720 0015E	Retaining Ring - 1.5	39-104
0720 0020E	Retaining Ring - M2	39-106
0720 0020E	Retaining Ring - M2	53-103
0720 0030E	Retaining Ring - M3	37-106
0720 0030E	Retaining Ring - M3	41-105
0720 0030E	Retaining Ring - M3	43-103
0720 0030E	Retaining Ring - M3	53-103
0720 0030E	Retaining Ring - M3	53-104
0720 0030E	Retaining Ring - M3	73-102
0720 0040E	Retaining Ring - M4	37-105
0720 0040E	Retaining Ring - M4	39-102
0720 0040E	Retaining Ring - M4	41-107
0720 0040E	Retaining Ring - M4	47-101
0720 0040E	Retaining Ring - M4	49-101
0720 0040E	Retaining Ring - M4	51-103
0720 0040E	Retaining Ring - M4	53-106
0720 0040E	Retaining Ring - M4	55-103
0720 0040E	Retaining Ring - M4	57-101
0720 0040E	Retaining Ring - M4	57-103
0720 0040E	Retaining Ring - M4	59-103
0720 0040E	Retaining Ring - M4	61-106
0720 0040E	Retaining Ring - M4	65-104
0720 0040E	Retaining Ring - M4	73-102
0720 0040E	Retaining Ring - M4	73-103
0720 0040E	Retaining Ring - M4	75-104
0720 0040E	Retaining Ring - M4	77-106

Part No.	Description	Page and Index No.
0720 0060	Retaining Ring - M6	63-111
0720 0060E	Retaining Ring - M6	43-106
0720 0060E	Retaining Ring - M6	45-103
0720 0060E	Retaining Ring - M6	45-104
0720 0060E	Retaining Ring - M6	57-104
0720 0060E	Retaining Ring - M6	61-103
0720 0060E	Retaining Ring - M6	63-110
0720 0060E	Retaining Ring - M6	65-103
0720 0060E	Retaining Ring - M6	73-106
0720 0090E	Retaining Ring - M9	37-104
0725 0100E	Retaining Ring C - M10	77-107
0725 0120E	Retaining Ring C - M12	47-104
0725 0300E	Retaining Ring C - M30	45-106
0740 3008	Ball Bearing - 8x22x7	63-101
0740 3008	Ball Bearing - 8x22x7	73-107
0800 0072	Philips Pan Head Screw - M2.6x4	77-105
0801 0137	Philips Pan Head Screw With Spring	69-109
0802 5085	Tapping Screw - M4x8	33-103
0802 5094	Tapping Truss Head Screw - M4x8	25-103
0802 5094	Tapping Truss Head Screw - M4x8	41-103
0802 5221	Tapping Screw - M3x10	63-108
0802 5231	Tapping Screw - M3x6	37-101
0802 5231	Tapping Screw - M3x6	69-106
0802 5231	Tapping Screw - M3x6	77-103
0802 5232	Tapping Screw - M3x8	43-102
0802 5232	Tapping Screw - M3x8	55-102
0802 5232	Tapping Screw - M3x8	61-103
0802 5233	Tapping Screw - M3x10	39-109
0802 5233	Tapping Screw - M3x10	41-102
0802 5233	Tapping Screw - M3x10	77-104
0802 5234	Tapping Screw - M3x12	55-105
0802 5236	Tapping Screw - M4x8	45-102
0802 5236	Tapping Screw - M4x8	49-101
0802 5236	Tapping Screw - M4x8	53-105
0802 5236	Tapping Screw - M4x8	55-104

Part No.	Description	Page and Index No
0802 5236	Tapping Screw - M4x8	57-107
0802 5236	Tapping Screw - M4x8	59-101
0802 5236	Tapping Screw - M4x8	63-107
0802 5237	Tapping Screw - M4X10	47-106
0802 5237	Tapping Screw - M4x10	61-101
0803 0017	Knob Screw - M4x6.5	41-103
0805 3384	Bushing - 5mm	41-108
0805 3471	Bushing - M8x22x7	39-107
0805 3480	Bushing - 6mm	49-102
0805 3485	Bushing - 8x12x3.5mm	43-105
0807 4072	Washer - Core	57-109
0807 4072	Washer - Core	59-106
0950 4006M	Philips Screw With Flat Washer - M4x6	45-105
0950 4008B	Philips Screw With Spring Washer - M4x8	47-105
0950 4008B	Philips Screw With Spring Washer - M4x8	63-109
0951 3005B	Philips Screw With Flat Washer M3x5	69-105
0951 3006B	Philips Screw With Flat Washer - M3x6	55-101
0951 3006B	Philips Screw With Flat Washer - M3x6	57-101
0951 3006B	Philips Screw With Flat Washer - M3x6	65-101
0951 3006B	Philips Screw With Flat Washer - M3x6	71-102
0951 3008B	Philips Screw With Flat Washer - M3x8	39-105
0951 4006B	Philips Screw With Washer - M4x6	61-104
0951 4006B	Philips Screw With Washer - M4x6	73-109
0951 4008B	Philips Screw With Washer - M4x8	51-102
0951 4008B	Philips Screw With Washer - M4x8	73-104
0951 4012B	Philips Screw With Flat Washer	63-103
0951 5010B	Philips Screw With Washer - M5x10	39-108
0953 4008M	Screw - M4X8	25-105
0954 3010B	Philips Screw - M3x10	45-101
0954 4012B	Double Sems Screw - M4 X 12	45-102
0964 4006B	Tapping Screw With Flat Washer - M4x6	73-104
0964 4008B	Tapping Screw With Flat Washer - M4x8	25-102
0964 4008B	Tapping Screw With Flat Washer - M4x8	71-107
0964 4008W	Tapping Screw With Flat Washer - M4x8	65-106
0965 3006B	Tapping Screw With Flat Washer M3x6	33-105

Part No.	Description	Page and Index No.
0965 3008B	Tapping Screw With Washer - M3x8	43-108
0965 3008W	Tapping Screw With Flat Washer - M3x8	61-105
0965 3010B	Tapping Screw With Flat Washer - M3x6	41-104
0971 3006A	Philips Polycarbonate Screw - M3x6	41-109
1102 4052	Optional Connector	69-102
1102 4052	Optional Connector	71-104
1102 4473	CT Connector - 2p	71-103
1102 6613	Relay Terminal - 2P	39-101
1105 0192	Locking Support	65-101
1105 0192	Locking Support	71-101
1105 0196	Harness Clamp	43-107
1105 0199	Clamp	37-103
1105 0199	Clamp	45-107
1105 0199	Clamp	53-101
1105 0199	Clamp	57-106
1105 0199	Clamp	59-105
1105 0199	Clamp	61-102
1105 0199	Clamp	63-104
1105 0199	Clamp	65-102
1105 0199	Clamp	75-103
1105 0199	Clamp	77-109
1105 0229	Clamp	67-105
1105 0230	Clamp	69-103
1105 0230	Clamp	73-108
1105 0231	Clamp	67-107
1105 0231	Clamp	69-108
1105 0367	Spacer	69-101
1105 0409	Spacer	69-103
1106 0193	Bushing - 7.9mm	75-102
1107 0392	Fuse - 6.3A	69-104
1107 0393	Fuse - 8A,125V	69-105
1107 0753	Fuse - 6.3A 250V	69-106
1204 1545	Main Switch	67-102
1204 2355	Micro Switch - AM51632A531	45-105
1204 2356	Micro Switch - AM51612A531	33-101

Part No.	Description	Page and Index No
1204 2356	Micro Switch - AM51612A531	41-104
1204 2356	Micro Switch - AM51612A531	61- 2
1204 2397	Safety Switch	67-103

Gestetner® RICOH® savin®



A208/A206/A210...SERIES

PARTS CATALOG

RICOH GROUP COMPANIES

PN: RCPC5840

Gestetner®

RICOH®

savin®

A208/A206/A210...SERIES

PARTS CATALOG

RICOH GROUP COMPANIES

Gestetner® RICOH® savin®

A207/A208/A211/A212/A214
PARTS CATALOG

PN: RCPC5840

LEGEND

PRODUCT CODE	COMPANY		
	GESTETNER	RICOH	SAVIN
A207	CMR402	FT5840	9400D
A208	CMR321	FT5632	9032
A211	CMR322	FT5832	9032D
A206	CMR401A	N/A(FT5740)	9400L
A204	CMR401	N/A(FT5640)	9400
A210	CMR321A	N/A(FT5732)	9032L
A212	CMR221D	FT4622	9122
A214	CMR222E	FT4822	9122DL
A663	Auto Reverse Document Feeder		
A550/A549	Paper Feed Unit		
A658	Sorter Stapler		
A664	Sorter Stapler		
A555	Sorter Stapler		
A556	Sorter		
A557	Sorter		
A568	Sorter Adapter		

DOCUMENTATION HISTORY

REV. NO	DATE	COMMENT
*	5/15/97	Original Printing
1	12/97	A212/A214 (FT4622/4822) Addition
2	6/98	Reprint

A207/A208/A211/A212/A214
PARTS CATALOG

TABLE OF CONTENTS

A207 PARTS LOCATION AND LIST

LOCATION OF UNIT..... 2
1. EXTERIOR (A204/A206/A207)..... 8
2. PLATEN COVER ASS'Y (A204/A206/A207)..... 10
3. OPERATION PANEL UNIT (A204/A206/A207)..... 12
4. BY-PASS FEED SECTION (A204/A206/A207)..... 14
5. PAPER TRAY SECTION (A204/A206/A207) 16
6. LCT UNIT 1 (A206/A207) 18
7. LCT UNIT 2 (A206/A207) 20
8. PAPER FEED SECTION 1 (A204/A206/A207) 22
9. PAPER FEED SECTION 2 (A204/A206/A207) 24
10. PAPER FEED SECTION 3 (A204/A206)..... 26
11. PAPER REGISTRATION (A204/A206/A207)..... 28
12. OPTICAL SECTION 1 (A204/A206/A207)..... 30
13. OPTICAL SECTION 2 (A204/A206/A207)..... 32
14. OPTICAL SECTION 3 (A204/A206/A207)..... 34
15. OPTICAL SECTION 4 (A204/A206/A207)..... 36
16. TONER SUPPLY UNIT (A204/A206/A207)..... 38
17. DEVELOPMENT UNIT (A204/A206/A207) 40
18. DRUM UNIT 1 (A204/A206/A207)..... 42
19. DRUM UNIT 2 (A204/A206/A207)..... 44
20. TRANSFER UNIT (A204/A206/A207) 46
21. FUSING UNIT 1 (A204/A206/A207) 48
22. FUSING UNIT 2 (A204/A206/A207)..... 50
23. DUPLEX TRAY 1 (A207) 52
24. DUPLEX TRAY 2 (A207) 54
25. DUPLEX TRAY 3 (A207) 56
26. DUPLEX TRAY 4 (A207) 58
27. PAPER EXIT SECTION (A204/A206/A207) 60
28. DRIVE SECTION 1 (A204/A206/A207) 62
29. DRIVE SECTION 2 (A204/A206/A207) 64
30. DRIVE SECTION 3 (A204/A206/A207) 66
31. ELECTRICAL SECTION 1 (A204/A206/A207) 68
32. ELECTRICAL SECTION 2 (A204/A206/A207) 70
33. ELECTRICAL SECTION 3 (A204/A206/A207) 72
34. FRAME SECTION 1 (A204/A206/A207)..... 74
35. FRAME SECTION 2 (A204/A206/A207)..... 76
36. MAIN CONTROL BOARD (A204/A206/A207) 78
37. DECAL AND DOCUMENT (A204/A206/A207) 82
38. SPECIAL TOOLS (A204/A206/A207) 84

A207 PARTS INDEX

PARTS INDEX..... 87

A208/A211 PARTS LOCATION AND LIST

LOCATION OF UNIT 2
1. EXTERIOR (A208/A210/A211) 8
2. PLATEN COVER ASS'Y (A208/A210/A211) 10
3. OPERATION PANEL ASS'Y(A208/A210/A211) 12
4. BY-PASS FEED SECTION (A208/A210/A211) 14
5. PAPER TRAY SECTION (A208/A210/A211) 16
6. LCT UNIT 1 (A210/A211) 18
7. LCT UNIT 2 (A210/A211) 20
8. PAPER FEED SECTION 1 (A208/A210/A211) 22
9. PAPER FEED SECTION 2 (A208/A210/A211) 24
10. PAPER FEED SECTION 3 (A208/A210/A211) 26
11. PAPER REGISTRATION (A208/A210/A211) 28
12. OPTICAL SECTION 1 (A208/A210/A211) 30
13. OPTICAL SECTION 2 (A208/A210/A211) 32
14. OPTICAL SECTION 3 (A208/A210/A211) 34
15. OPTICAL SECTION 4 (A208/A210/A211) 36
16. TONER SUPPLY UNIT (A208/A210/A211) 38
17. DEVELOPMENT UNIT (A208/A210/A211) 40
18. DRUM UNIT 1 (A208/A210/A211) 42
19. DRUM UNIT 2 (A208/A210/A211) 44
20. TRANSFER UNIT (A208/A210/A211) 46
21. FUSING UNIT 1 (A208/A210/A211) 48
22. FUSING UNIT 2 (A208/A210/A211) 50
23. DUPLEX TRAY 1 (A211) 52
24. DUPLEX TRAY 2 (A211) 54
25. DUPLEX TRAY 3 (A211) 56
26. DUPLEX TRAY 4 (A211) 58
27. PAPER EXIT AND INVERTER (A211) 60
28. PAPER EXIT SECTION (A208/A210) 62
29. DRIVE SECTION 1 (A208/A210/A211) 64
30. DRIVE SECTION 2 (A208/A210/A211) 66
31. DRIVE SECTION 3 (A208/A210/A211) 68
32. ELECTRICAL SECTION 1 (A208/A210/A211) 70
33. ELECTRICAL SECTION 2 (A208/A210/A211) 72
34. ELECTRICAL SECTION 3 (A208/A210/A211) 74
35. FRAME SECTION 1 (A208/A210/A211) 76
36. FRAME SECTION 2 (A208/A210/A211) 78
37. MAIN CONTROL BOARD (A208/A210/A211) 80
38. DECAL AND DOCUMENT (A208/A210/A211) 84
39. SPECIAL TOOLS (A208/A210/A211) 86

A208/A211 PARTS INDEX

PARTS INDEX 2

A212/A214 PARTS LOCATION AND LIST

LOCATION OF UNIT 2
1. EXTERIOR (A212/A214) 8
2. PLATEN COVER ASS'Y (A212/A214) 10
3. OPERATION PANEL UNIT (A212/A214) 12
4. BY-PASS FEED SECTION (A212/A214) 14
5. PAPER TRAY SECTION (A212/A214) 16
6. LCT UNIT 1 (A214) 18
7. LCT UNIT 2 (A214) 20
8. PAPER FEED SECTION 1 (A212/A214) 22
9. PAPER FEED SECTION 2 (A212/A214) 24
10. PAPER REGISTRATION (A212/A214) 26
11. OPTICAL SECTION 1 (A212/A214) 28
12. OPTICAL SECTION 2 (A212/A214) 30
13. OPTICAL SECTION 3 (A212/A214) 32
14. OPTICAL SECTION 4 (A212/A214) 34
15. TONER SUPPLY UNIT (A212/A214) 36
16. DEVELOPMENT UNIT (A212/A214) 38
17. DRUM UNIT 1 (A212/A214) 40
18. DRUM UNIT 2 (A212/A214) 42
19. TRANSFER UNIT (A212/A214) 44
20. FUSING UNIT 1 (A212/A214) 46
21. FUSING UNIT 2 (A212/A214) 48
22. DUPLEX TRAY 1 (A214) 50

23. DUPLEX TRAY 2 (A214) 52
24. DUPLEX TRAY 3 (A214) 54
25. DUPLEX TRAY 4 (A214) 56
26. PAPER EXIT SECTION (A214) 58
27. PAPER EXIT SECTION (A212) 60
28. DRIVE SECTION 1 (A212/A214) 62
29. DRIVE SECTION 2 (A212/A214) 64
30. DRIVE SECTION 3 (A212/A214) 66
31. ELECTRICAL SECTION 1 (A212/A214) 68
32. ELECTRICAL SECTION 2 (A212/A214) 70
33. ELECTRICAL SECTION 3 (A212/A214) 72
34. FRAME SECTION 1 (A212/A214) 74
35. FRAME SECTION 2 (A212/A214) 76
36. MAIN CONTROL BOARD (A212/A214) 78
37. DECAL AND DOCUMENT (A212/A214) 84
38. SPECIAL TOOLS (A212/A214) 86

A212/A214 PARTS INDEX
PARTS INDEX 2

A663 AUTO REVERSE DOCUMENT FEEDER PARTS LOCATION AND LIST
1. EXTERIOR (A663) 2
2. PAPER FEED SECTION 1 (A663) 4
3. PAPER FEED SECTION 2 (A663) 6
4. TRANSFER BELT UNIT (A663) 8
5. PAPER EXIT SECTION (A663) 10
6. DRIVE SECTION (A663) 12
7. DECAL AND DOCUMENT (A663) 14

A663 AUTO REVERSE DOCUMENT FEEDER PARTS INDEX
PARTS INDEX 2

A550/A549 PAPER FEED UNIT PARTS LOCATION AND LIST
1. EXTERIOR (A549/A550) 2
2. PAPER FEED SECTION (A549/A550) 4
3. ELECTRICAL SECTION (A549/A550) 6
4. DRIVE SECTION (A549/A550) 8
5. PAPER TRAY UNIT (A549/A550) 10
6. DECAL AND DOCUMENT (A549/A550) 12

A550/A549 PAPER FEED UNIT PARTS INDEX
PARTS INDEX 2

A658 SORTER STAPLER PARTS LOCATION AND LIST
1. EXTERIOR (A658) 2
2. STAPLE UNIT (A658) 4
3. TRANSPORT SECTION (A658) 6
4. BIN DRIVE SECTION (A658) 8
5. FRAME AND ELECTRICAL (A658) 10
6. DECAL AND DOCUMENT (A658) 12

A658 SORTER STAPLER PARTS INDEX
PARTS INDEX 2

A664 SORTER STAPLER PARTS LOCATION AND LIST
LOCATION OF UNIT 2
1. EXTERIOR (A664) 4
2. STAPLER SECTION 1 (A664) 6
3. STAPLER SECTION 2 (A664) 8
4. ELECTRICAL SECTION (A664) 10
5. BIN DRIVE SECTION (A664) 12
6. STAPLER DRIVE SECTION (A664) 14
7. TRANSPORT SECTION (A664) 16
8. PAPER EXIT SECTION (A664) 18
9. FRAME SECTION (A664) 20
10. DECAL AND DOCUMENT (A664) 22

A664 SORTER STAPLER PARTS INDEX
PARTS INDEX 2

A555 SORTER STAPLER PARTS LOCATION AND LIST

1. EXTERIOR (A555) 2
2. STAPLE UNIT (A555) 4
3. TRAY DRIVE SECTION (A555) 6
4. COPY TRAY SECTION (A555) 8
5. ELECTRICAL SECTION (A555) 10
6. JOINT UNIT (A555) 12
7. DECAL AND DOCUMENT (A555) 14

A555 SORTER STAPLER PARTS INDEX

PARTS INDEX 2

A556 SORTER PARTS LOCATION AND LIST

1. SORTER UNIT 1 (A556) 2
2. SORTER UNIT 2 (A556) 4
3. DECAL AND DOCUMENT (A556) 6

A556 SORTER PARTS INDEX

PARTS INDEX 2

A557 SORTER PARTS LOCATION AND LIST

1. SORTER UNIT 1 (A557) 2
2. SORTER UNIT 2 (A557) 4
3. DECAL AND DOCUMENT (A557) 6

A557 SORTER PARTS INDEX

PARTS INDEX 2

A568 SORTER ADAPTER PARTS LOCATION AND LIST

1. SORTER ADAPTER (A568) 2

A568 SORTER ADAPTER TYPE PARTS INDEX

PARTS INDEX 2

A207
PARTS LOCATION AND LIST

This section instructs you as to the numbers and names of parts on this machine.

LOCATION OF UNIT

1. EXTERIOR (A204/A206/A207)

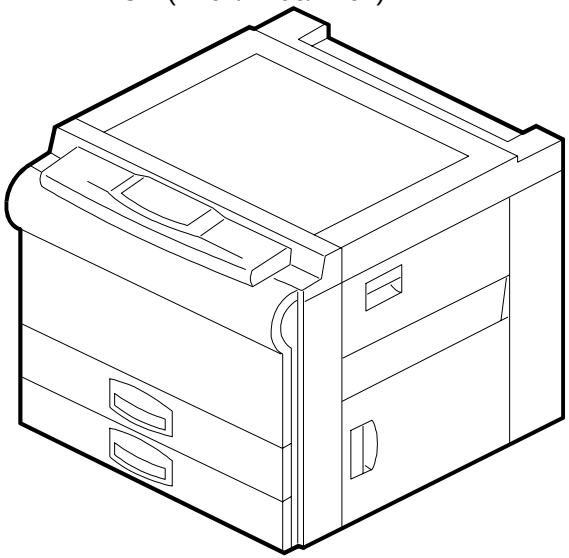

See Page 8

2. PLATEN COVER ASS'Y (A204/A206/A207)

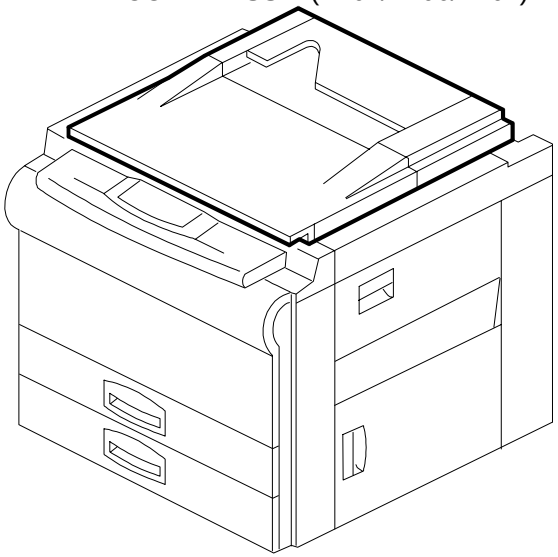

See Page 10

3. OPERATION PANEL UNIT (A204/A206/A207)

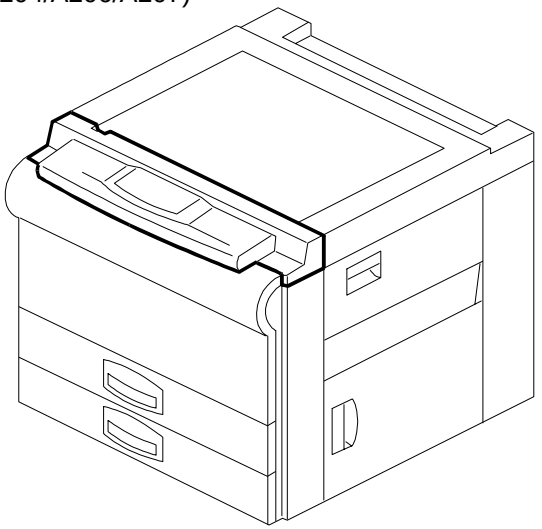

See Page 12

4. BY-PASS FEED SECTION (A204/A206/A207)

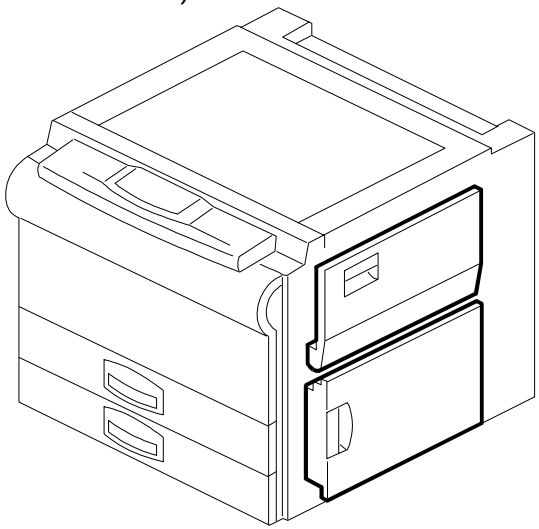

See Page 14

5. PAPER TRAY SECTION (A204/A206/A207)

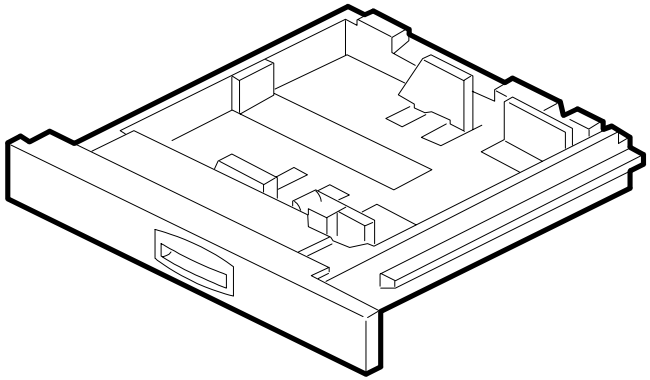

See Page 16

6. LCT UNIT 1 (A206/A207)

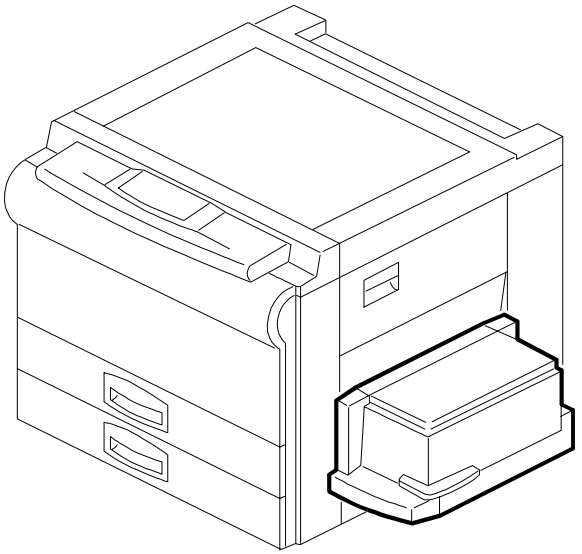

See Page 18

LOCATION OF UNIT

7. LCT UNIT 2 (A206/A207)

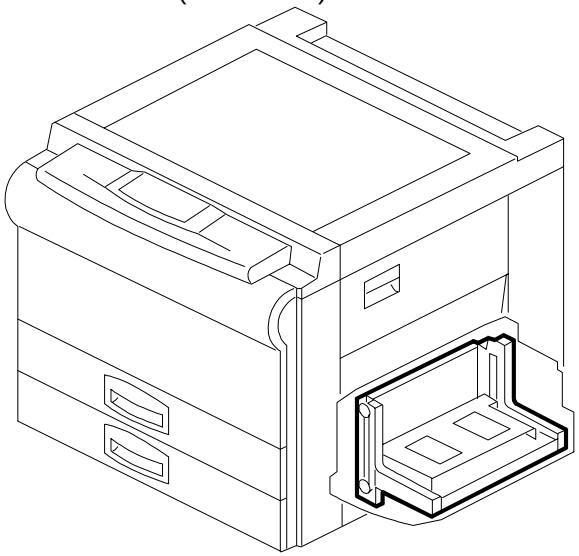

See Page 20

8. PAPER FEED SECTION 1 (A204/A206/A207)

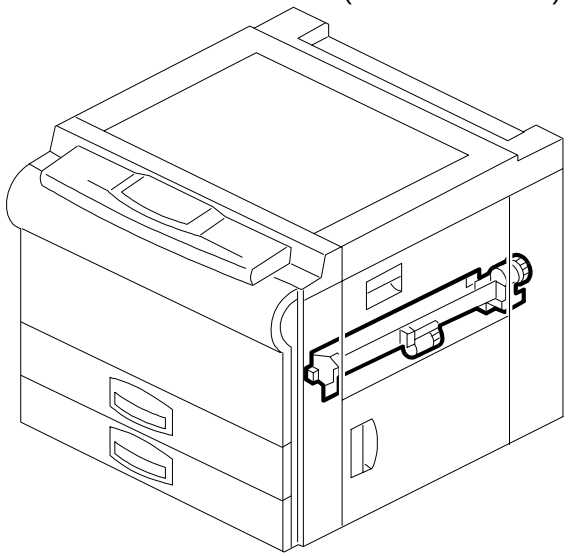

See Page 22

9. PAPER FEED SECTION 2 (A204/A206/A207)

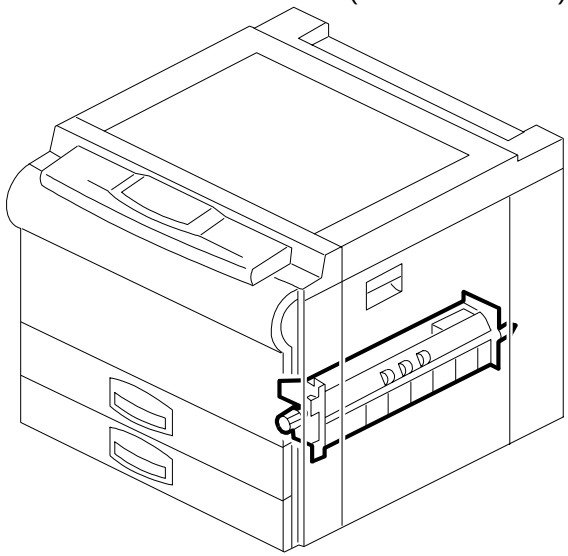

See Page 24

10. PAPER FEED SECTION 3 (A204/A206)

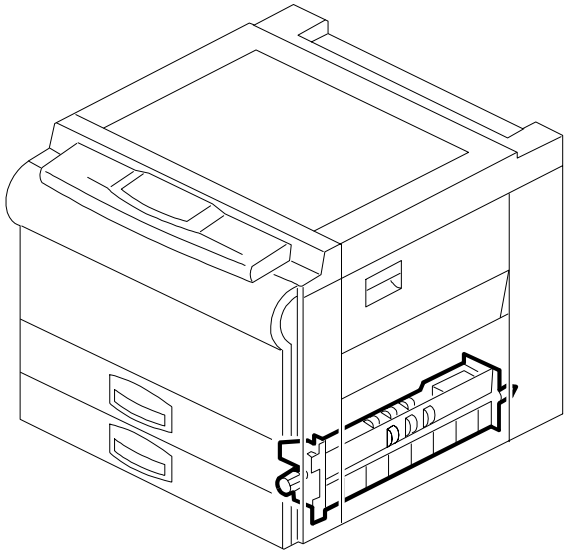

See Page 26

11. PAPER REGISTRATION (A204/A206/A207)

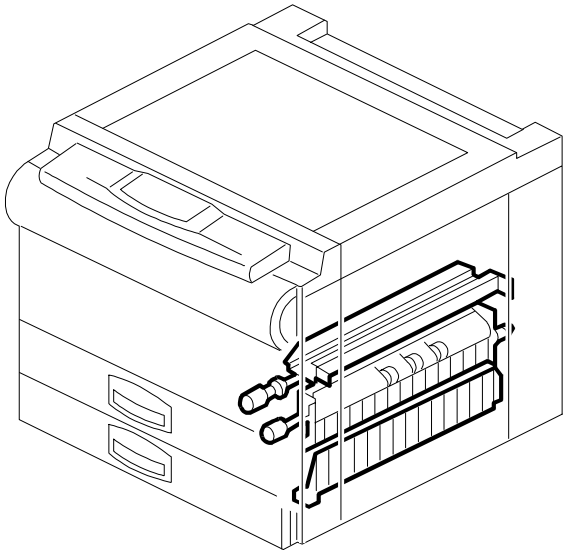

See Page 28

12. OPTICAL SECTION 1 (A204/A206/A207)

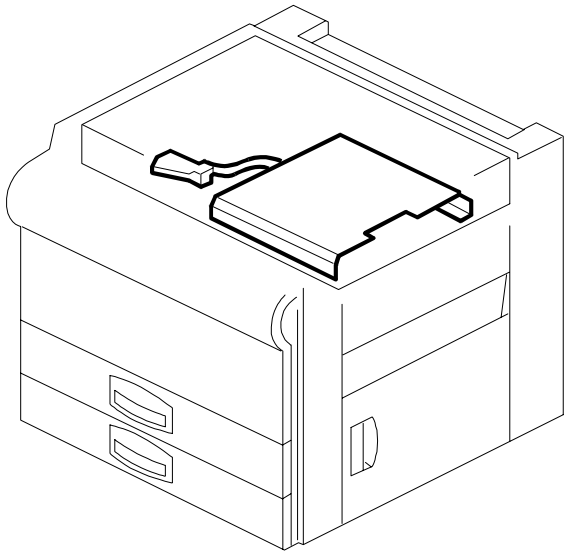

See Page 30

LOCATION OF UNIT

13. OPTICAL SECTION 2 (A204/A206/A207)

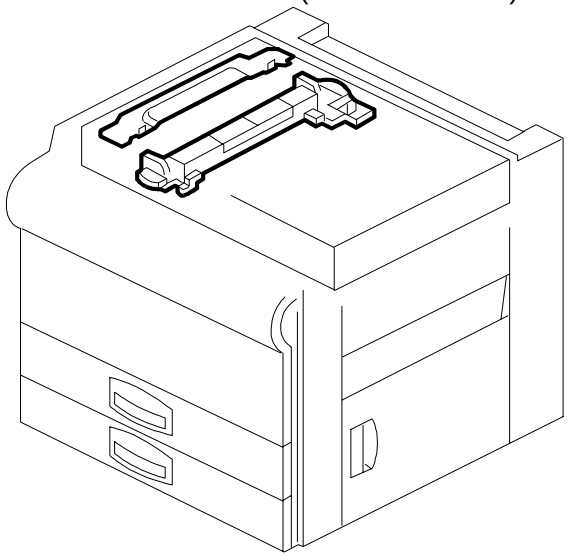

See Page 32

14. OPTICAL SECTION 3 (A204/A206/A207)

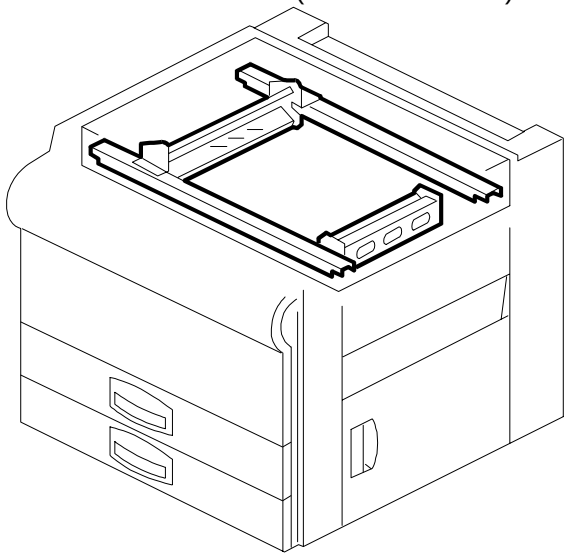

See Page 34

15. OPTICAL SECTION 4 (A204/A206/A207)

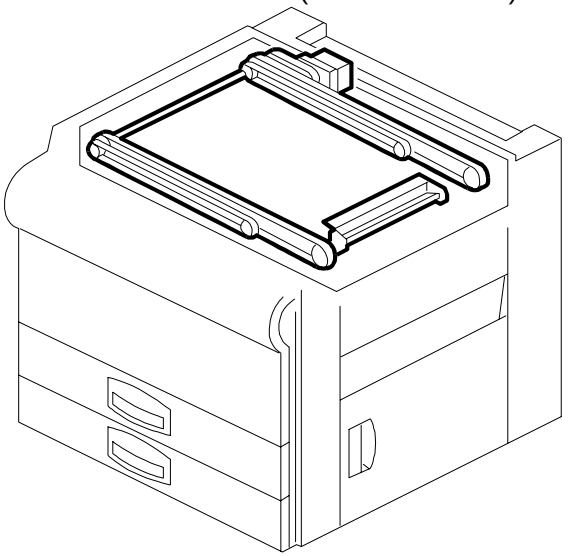

See Page 36

16. TONER SUPPLY UNIT (A204/A206/A207)

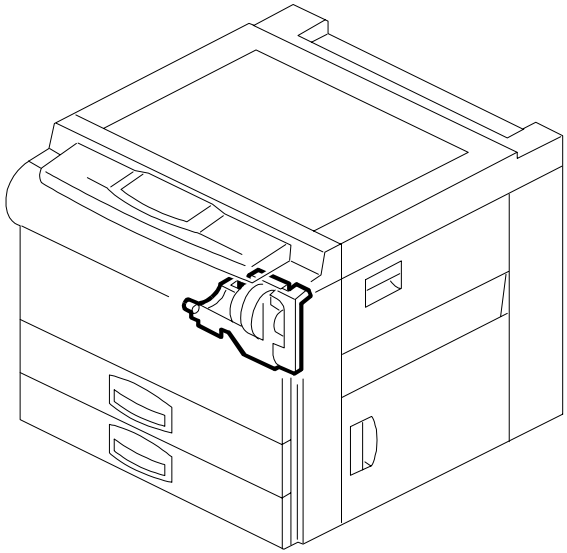

See Page 38

17. DEVELOPMENT UNIT (A204/A206/A207)

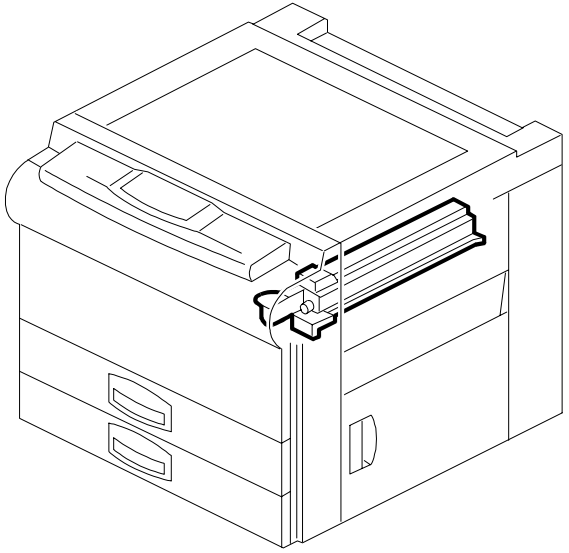

See Page 40

18. DRUM UNIT 1 (A204/A206/A207)

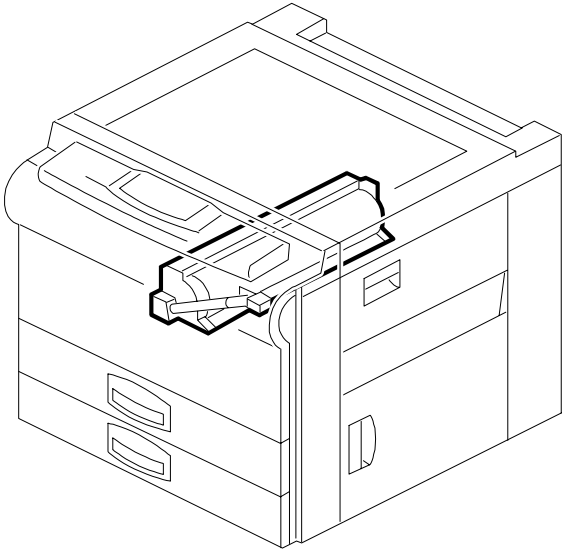

See Page 42

LOCATION OF UNIT

19. DRUM UNIT 2 (A204/A206/A207)

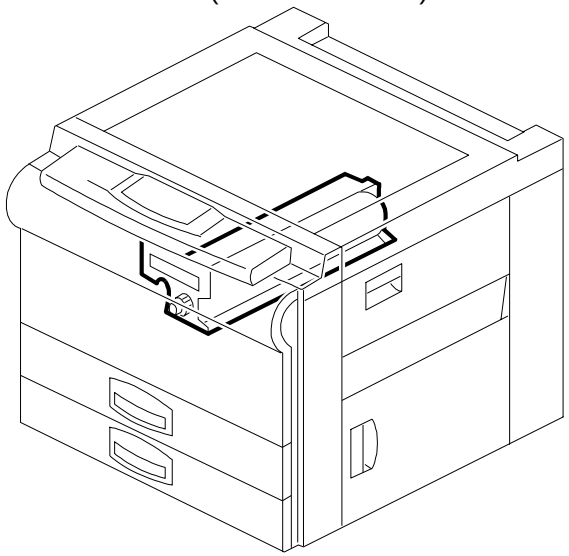

See Page 44

20. TRANSFER UNIT (A204/A206/A207)

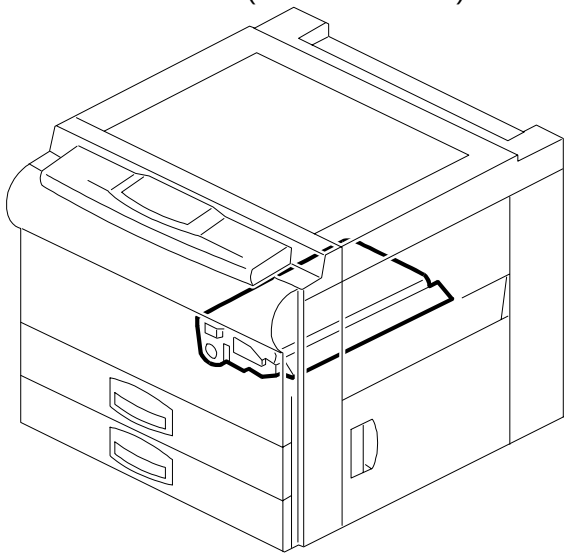

See Page 46

21. FUSING UNIT 1 (A204/A206/A207)

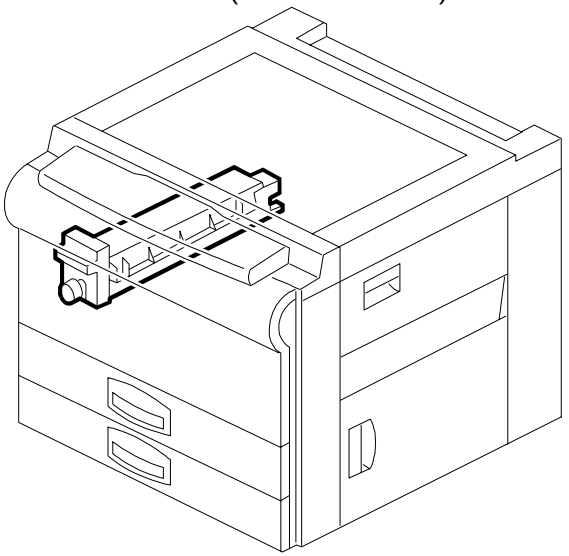

See Page 48

22. FUSING UNIT 2 (A204/A206/A207)

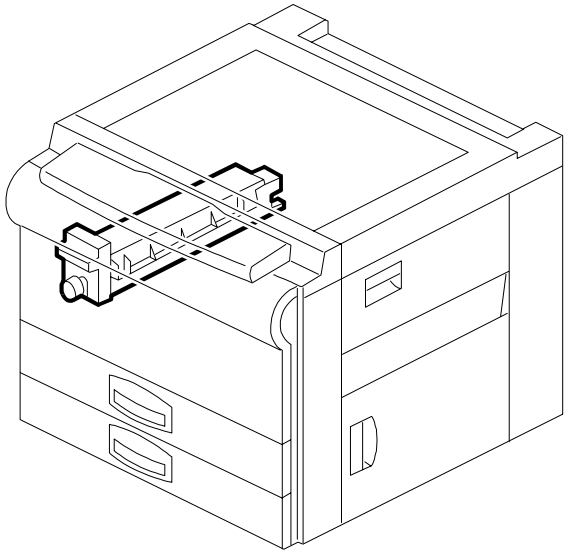

See Page 50

23. DUPLEX TRAY 1 (A207)

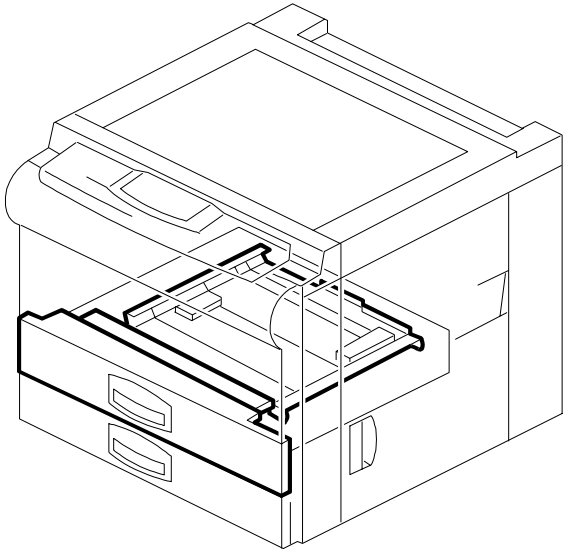

See Page 52

24. DUPLEX TRAY 2 (A207)

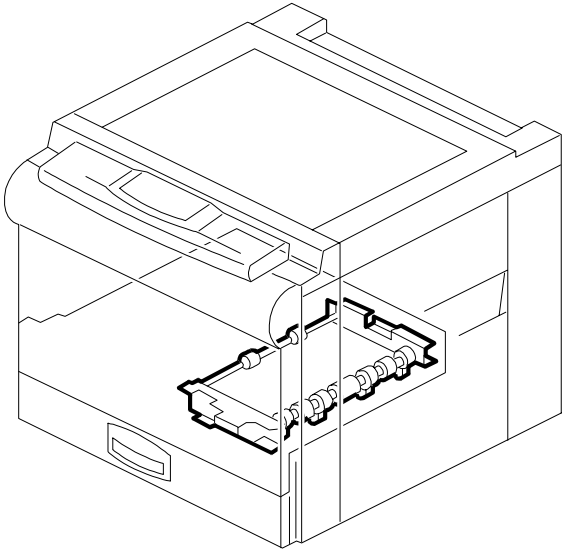

See Page 54

LOCATION OF UNIT

25. DUPLEX TRAY 3 (A207)

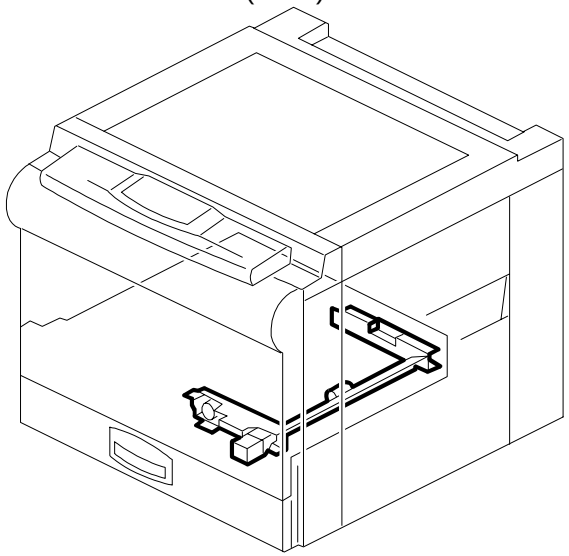

See Page 56

26. DUPLEX TRAY 4 (A207)

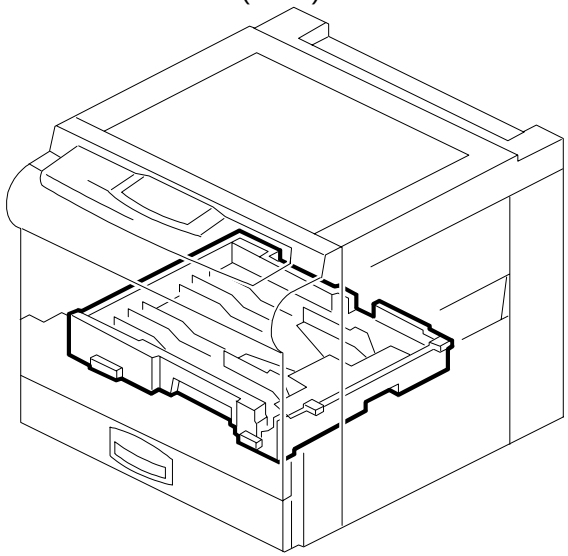

See Page 58

27. PAPER EXIT SECTION (A204/A206/A207)

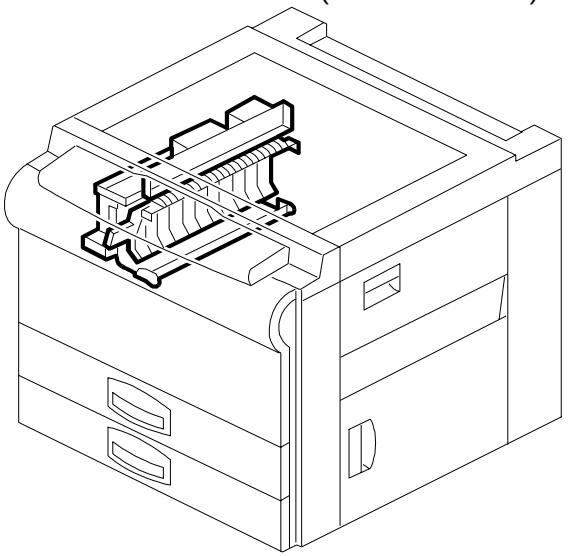

See Page 60

28. DRIVE SECTION 1 (A204/A206/A207)

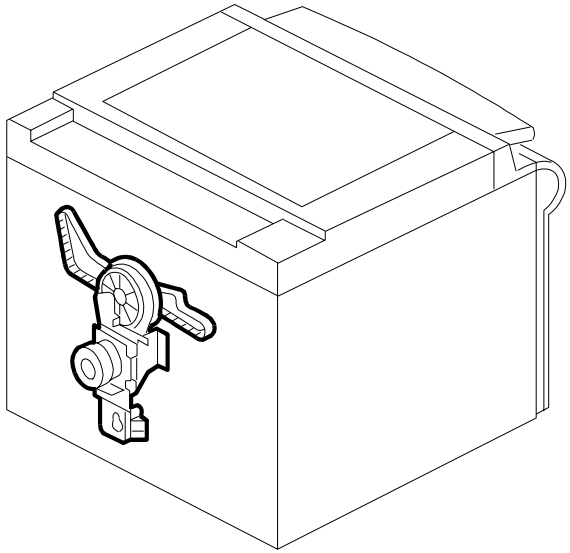

See Page 62

29. DRIVE SECTION 2 (A204/A206/A207)

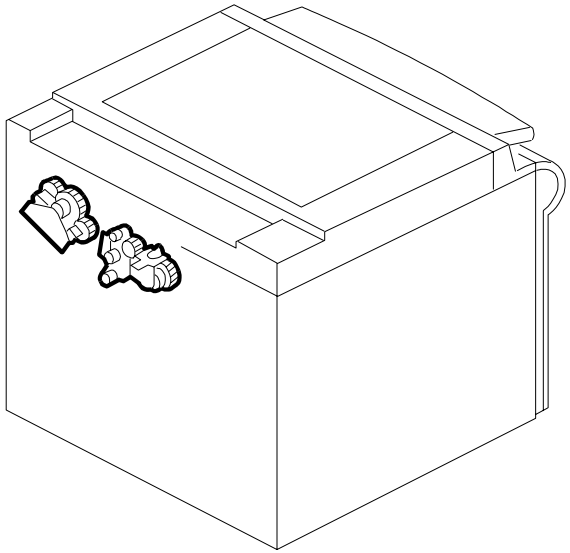

See Page 64

30. DRIVE SECTION 3 (A204/A206/A207)

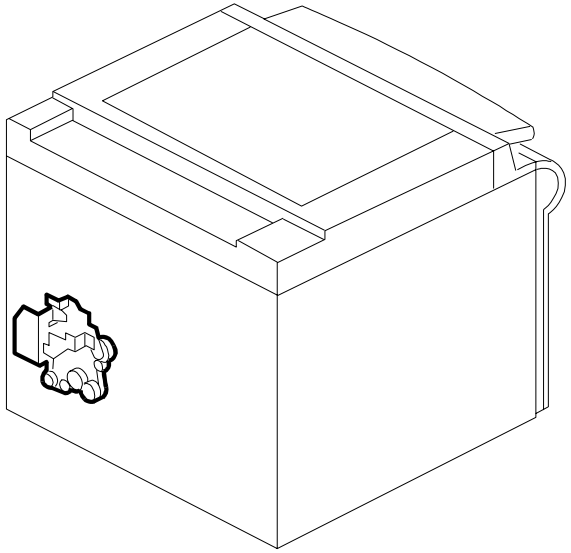

See Page 66

LOCATION OF UNIT

31. ELECTRICAL SECTION 1 (A204/A206/A207)

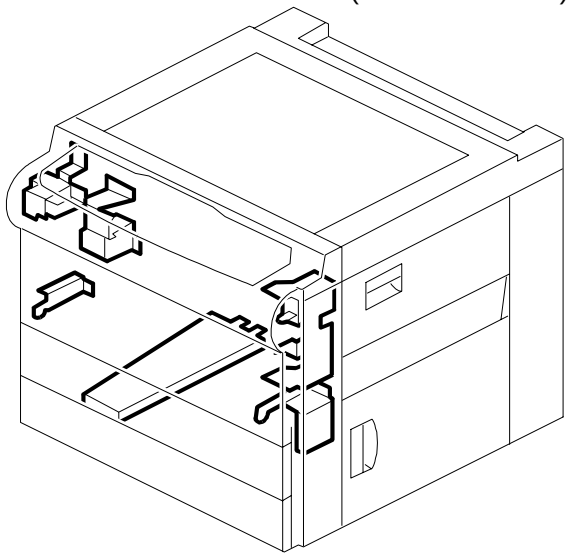

See Page 68

32. ELECTRICAL SECTION 2 (A204/A206/A207)

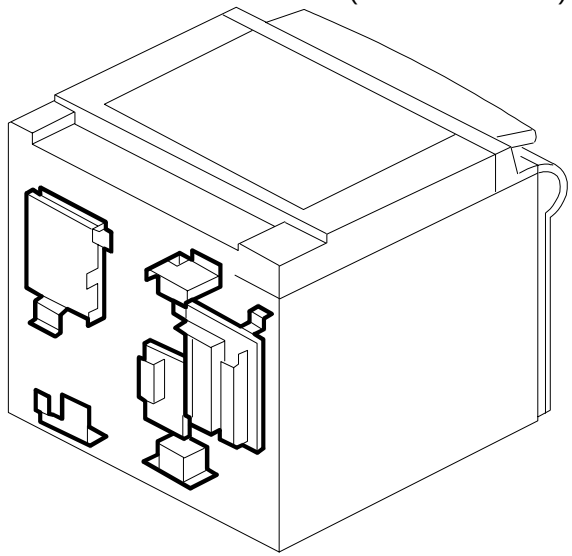

See Page 70

33. ELECTRICAL SECTION 3 (A204/A206/A207)

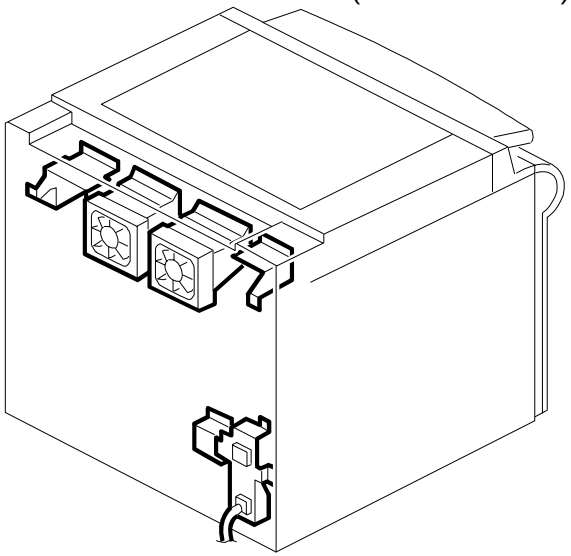

See Page 72

34. FRAME SECTION 1 (A204/A206/A207)

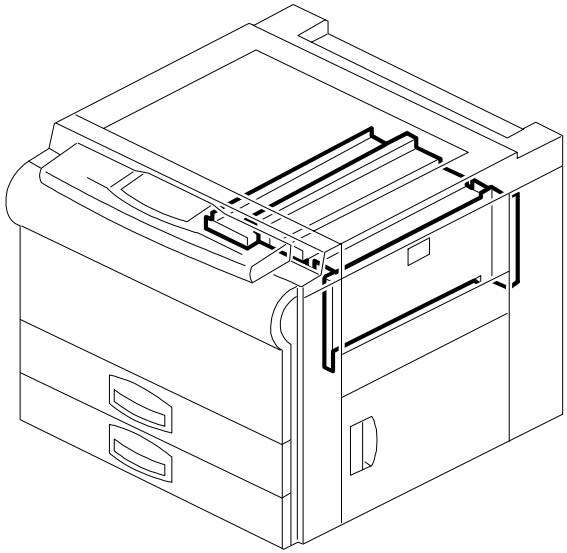

See Page 74

35. FRAME SECTION 2 (A204/A206/A207)

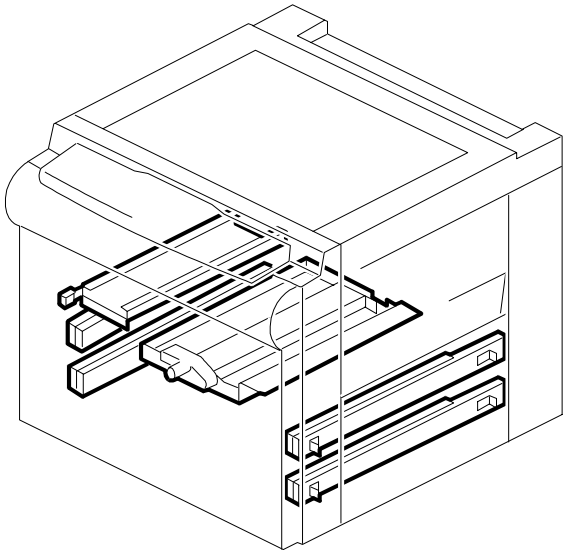

See Page 76

1. EXTERIOR (A204/A206/A207)

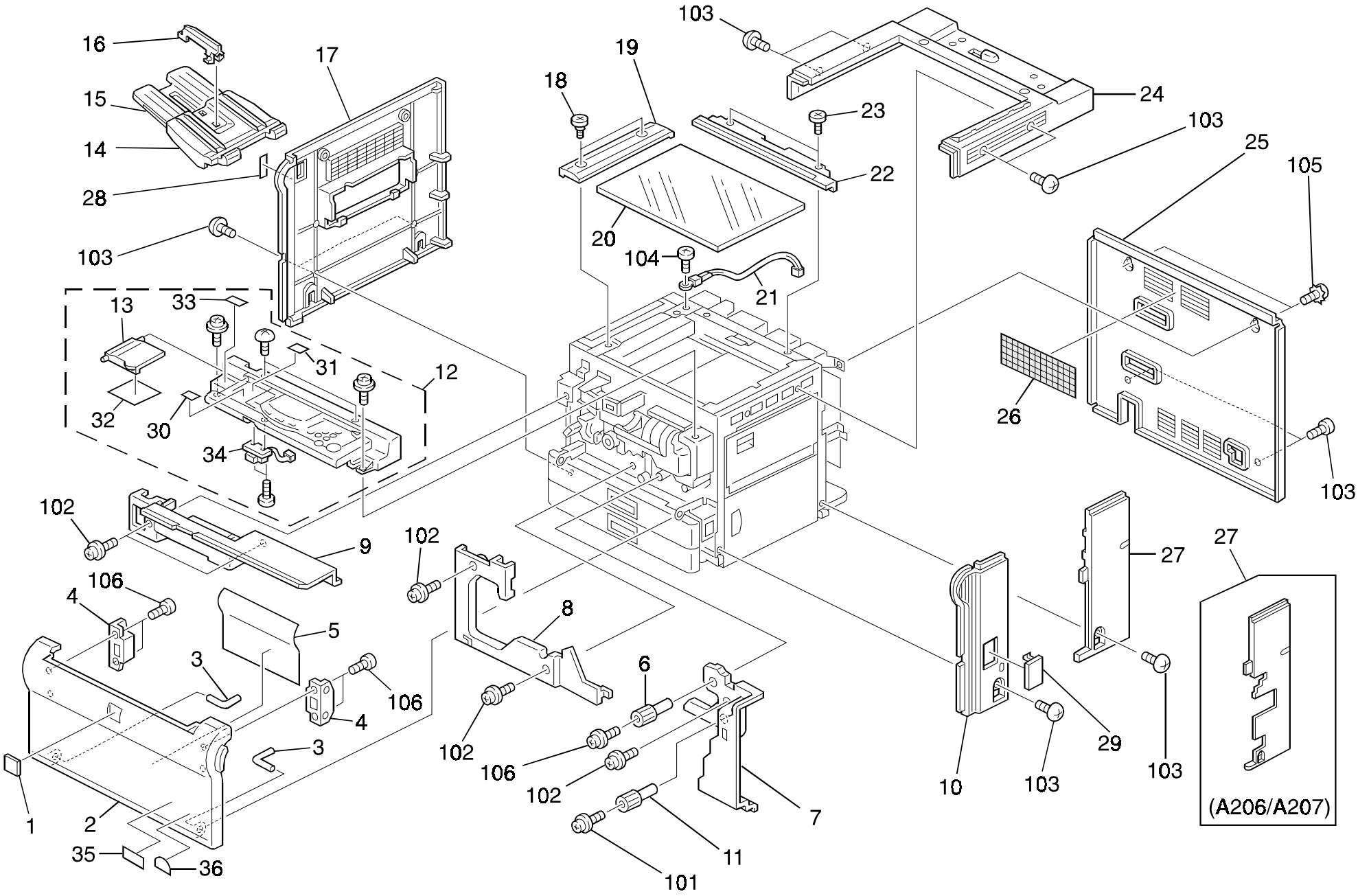

1. EXTERIOR (A204/A206/A207)

Index No.	Part No.	Description	Q'ty Per Assembly
1	A153 1285	Emblem (RIC)	1
1	A156 6413	Emblem (SVN)	1
1	A153 6423	Support Cover (INF)	1
2	A204 1277	Front Cover (A204)(RIC)	1
2	A204 6412	Front Cover (A204)(SVN)	1
2	A204 6422	Front Cover (A204)(INF)	1
2	A206 1277	Front Cover (A206)(RIC)	1
2	A206 6412	Front Cover (A206)(SVN)	1
2	A206 6422	Front Cover (A206)(INF)	1
2	A207 1277	Front Cover (A207)(RIC)	1
2	A207 6412	Front Cover (A207)(SVN)	1
2	A207 6422	Front Cover (A207)(INF)	1
2	A153 6403	Front Cover (NRG)	1
3	A153 1354	Hinge Pin	2
4	AG07 0004	Magnetic Catch	2
5	A153 1360	Operating Sheet (A204/A206)	1
5	A154 1360	Operating Sheet (A207)	1
6	AG05 0074	Registration Knob	1
7	A153 1352	Right Lower Cover	1
8	A153 1339	Lower Inner Cover	1
9	A153 1351	Upper Inner Cover	1
10	A153 1261	Front Right Cover	1
11	AG05 0075	Middle Knob	1
12	AG01 1344	Operation Panel Ass'y - A4 (A204/A206)	1
12	AG01 1345	Operation Panel Ass'y - A4 (A207)	1
12	AG01 1340	Operation Panel Ass'y - LT (A204/A206)	1
12	AG01 1341	Operation Panel Ass'y - LT (A207)	1
12	AG01 1350	Operation Panel Ass'y (A204/A206)(SVN)	1
12	AG01 1351	Operation Panel Ass'y (A207)(SVN)	1
13	A153 1469	Panel Cover	1
14	AF04 3069	Copy Tray	1
15	AF04 3076	Copy Tray Slide	1
16	AF04 3077	Copy Tray Guide	1
17	A153 1301	Left Cover - A4	1
17	A153 1302	Left Cover - LT	1

Index No.	Part No.	Description	Q'ty Per Assembly
18	AA14 3416	Stepped Screw - M4x3	2
19	AC04 2113	Left Original Scale - A4	1
19	AC04 2117	Left Original Scale - LT	1
20	AC01 2060	Exposure Glass - A3t-3.2	1
21	AW10 0027	Thermister	1
22	AC04 2120	Rear Original Scale - A4	1
22	AC04 2124	Rear Original Scale - LT	1
23	AA14 3417	Shoulder Screw - M4x4	2
24	A153 1251	Upper Cover	1
25	A204 1291	Rear Cover	1
26	AA01 2080	Dust Filter	1
27	A155 1331	LCT Rear Right Cover	1
27	A153 1271	Rear Right Cover	1
28	AA00 1373	Decal - Main Switch	1
29	A134 1328	Small Cap	1
30	A153 1478	Decal - 10key Zoom - A4/A3	1
30	A153 1475	Decal - 10key Zoom -lT/DLT	1
31	A153 1476	Decal - Margin Adjustment - LT/DLT	1
31	A153 1479	Decal - Margin Adjustment - A4/A3	1
32	A204 1486	Operation Panel Sheet - LT (A204/A206)	1
32	A204 1487	Operation Panel Sheet - A4 (A204/A206)	1
33	C225 2867	Decal - Cover - Panel - Nashua	1
33	C225 2866	Decal - Key Top Cover	1
33	A153 6409	Decal - Keytop Cover	1
34	AW01 0065	Auto Response Sensor	1
35	A204 6404	Decal - Model Name - GES (A204)	1
35	A204 6407	Decal - Model Name - NST (A204)	1
35	A204 6414	Decal - Model Name - REX (A204)	1
35	A206 6404	Model Name Plate - GES (A206)	1
35	A206 6407	Model Name Plate - NST (A206)	1
35	A206 6414	Model Name Plate - REX (A206)	1
35	A207 6404	Model Name Plate - GES (A207)	1
35	A207 6407	Model Name Plate - NST (A207)	1
35	A207 6414	Model Name Plate - REX (A207)	1
36	AA00 1389	Large Decal - Energy Star	1

Index No.	Part No.	Description	Q'ty Per Assembly
101	0951 4016B	Philips Screw With Flat Washer - M4	
102	0964 4008B	Tapping Screw With Flat Washer-m4x8	
103	0802 5094	Tapping Truss Head Screw - M4x8	
104	0313 0040B	Philips Pan Head Screw - M3x4	
105	0953 4008M	Screw - M4X8	
106	0951 3006B	Philips Screw With Flat Washer-m3x6	

Index No.	Part No.	Description	Q'ty Per Assembly

2. PLATEN COVER ASS'Y (A204/A206/A207)

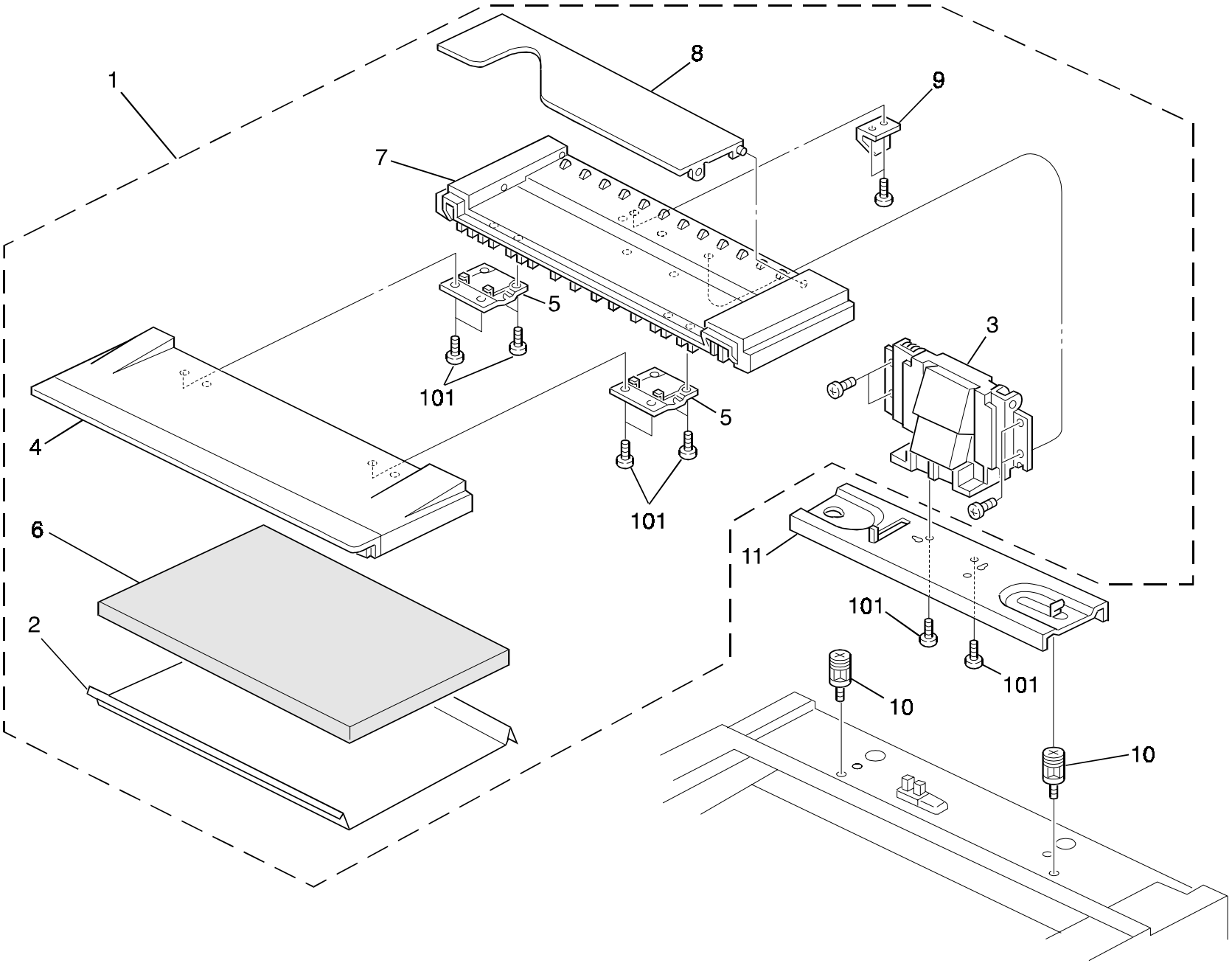

2. PLATEN COVER ASS'Y (A204/A206/A207)

Index No.	Part No.	Description	Q'ty Per Assembly
1	A153 1369	Platen cover Ass'y	1
2	5448 2804	Platen Cover Sheet	1
3	A153 1370	Platen Cover Hinge	1
4	A134 1394	Front Platen Cover	1
5	A053 1957	Flex Hinge - Platen Cover	2
6	AA16 2067	Platen Cover Pad	1
7	A134 1395	Rear Platen Cover	1
8	A134 1396	Original Holder	1
9	A153 1383	Platen Cover Feeler	1
10	AA14 8447	Guide Pin - Platen Cover	2
11	A153 1380	Platen Cover Bracket	1

Index No.	Part No.	Description	Q'ty Per Assembly
101	0414 0142B	Binding Self Tapping Screw - M4x14	

3. OPERATION PANEL UNIT (A204/A206/A207)

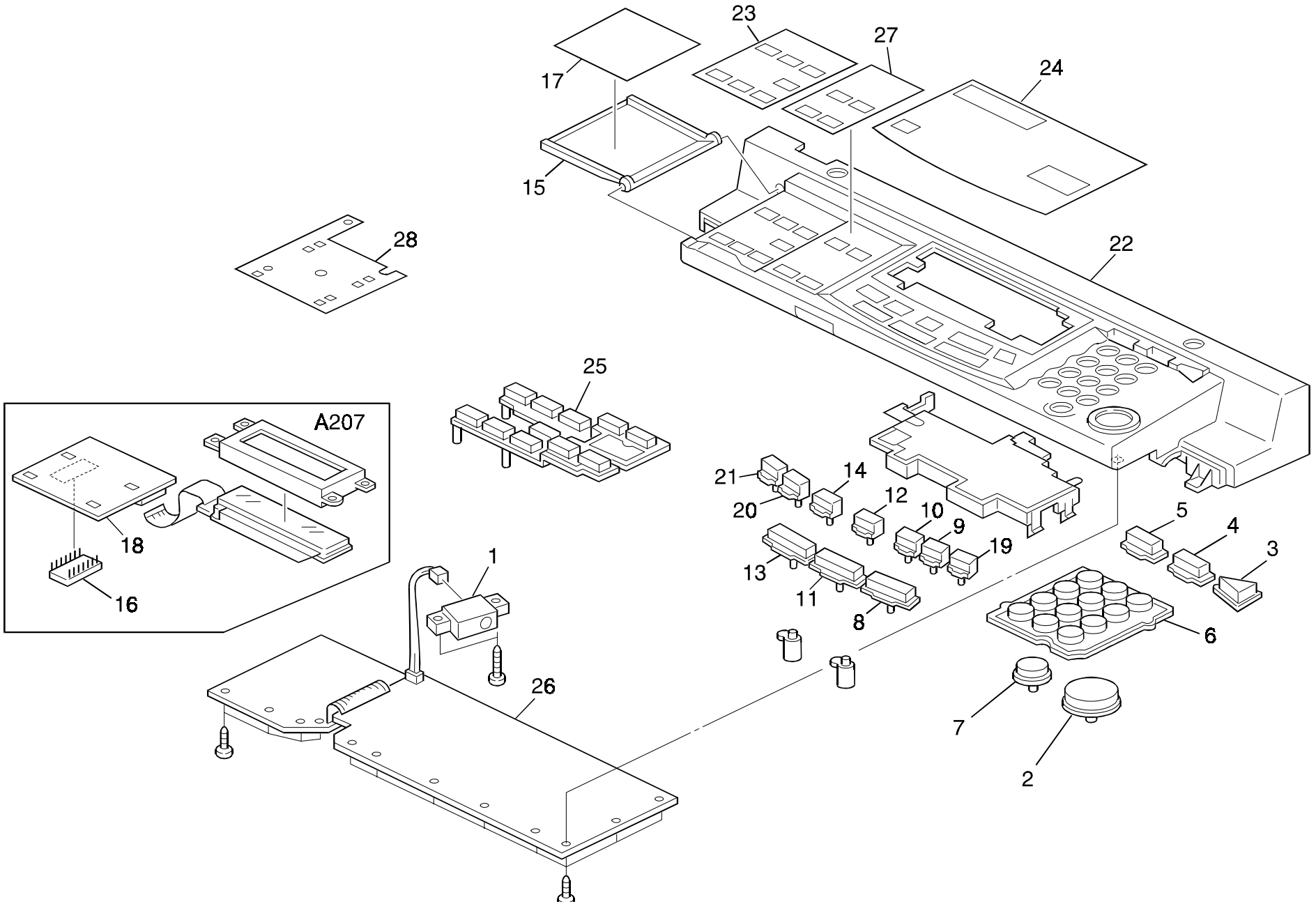

3. OPERATION PANEL UNIT (A204/A206/A207)

Index No.	Part No.	Description	Q'ty Per Assembly
*	AG01 1344	Operation Panel Ass'y - A4 (A204/A206)	1
*	AG01 1345	Operation Panel Ass'y - A4 (A207)	1
*	AG01 1340	Operation Panel Ass'y - LT (A204/A206)	1
*	AG01 1341	Operation Panel Ass'y - LT (A207)	1
*	AG01 1350	Operation Panel Ass'y (A204/A206) (SVN)	1
*	AG01 1351	Operation Panel Ass'y (A207) (SVN)	1
1	AW01 0073	Optics Sensor	1
2	A153 1452	Key-top Start	1
2	A156 1452	Key-top Start (SVN)	1
3	A153 1453	Key-top Interrupt	1
3	A156 1453	Key-top Interrupt (SVN)	1
4	A153 1454	Key-top Mode Clear	1
4	A156 1454	Key-top Mode Clear (SVN)	1
5	A153 1455	Key-top Program	1
5	A156 1455	Key-top Program (SVN)	1
6	A153 1456	Key-top 10 Key	1
6	A156 1456	Key-top 10 Key (SVN)	1
7	A153 1457	Key-top Cler/Stop	1
7	A156 1457	Key-top Cler/Stop (SVN)	1
8	A153 1458	Key-top Auto Density	1
8	A156 1458	Key-top Auto Density (SVN)	1
9	A153 1459	Key-top Darker	1
9	A156 1459	Key-top Darker (SVN)	1
10	A153 1460	Key-top Lighter	1
10	A156 1460	Key-top Lighter (SVN)	1
11	A153 1461	Key-top Auto Paper Select	1
11	A156 1461	Key-top Auto Paper Select (SVN)	1
12	A153 1462	Key-top Paper Select	1
12	A156 1462	Key-top Paper Select (SVN)	1
13	A153 1463	Key-top Full Size	1
13	A156 1463	Key-top Full Size (SVN)	1
14	A153 1464	Key-top Auto Reduce/Enlarge	1
14	A156 1464	Key-top Auto Reduce/Enlarge (SVN)	1
15	A153 1469	Panel Cover	1
16	A154 5458	IC - Operation (A207)	1

Index No.	Part No.	Description	Q'ty Per Assembly
17	A204 1486	Operation Panel Sheet - LT (A204/A206)	1
17	A204 1487	Operation Panel Sheet - A4 (A204/A206)	1
18	A156 5462	Guidance Board (A207)	1
19	A204 1471	Keytop - Halftone	1
19	A207 1471	Keytop - Halftone (SVN)	1
20	A204 1472	Keytop - Enlarge	1
20	A207 1472	Keytop - Enlarge (SVN)	1
21	A204 1473	Keytop - Reduce	1
21	A207 1473	Keytop - Reduce (SVN)	1
22	A204 1475	Operation Panel Case - LT	1
22	A204 1476	Operation Panel Case - A4	1
23	A204 1481	Sheet - LT	1
23	A204 1482	Sheet - A4	1
24	A204 1477	Display Panel - LT (A204/A206)	1
24	A204 1478	Display Panel - A4 (A204/A206)	1
24	A207 1477	Display Panel - LT (A207)	1
24	A207 1478	Display Panel - A4 (A207)	1
25	A204 1465	Key-top - Sorter	1
25	A207 1465	Key-top - Sorter (SVN)	1
26	A206 5465	Operation Panel Board - A4 (A204/A206)	1
26	A206 5460	Operation Panel Board - LT (A204/A206)	1
26	A207 5466	Operation Panel Board - A4 (A207)	1
26	A207 5461	Operation Panel Board - LT (A207)	1
27	A207 1467	Paper Exit Sheet - LT (A207)	1
27	A207 1480	Paper Exit Sheet - A4 (A207)	1
27	A204 1480	Sorter Sheet - A4 (A204/A206)	1
27	A204 1479	Sheet Sorter - LT (A204/A206)	1
28	A205 5831	Grounding Plate(A4)(A207)	1
101	0802 5094	Tapping Truss Head Screw - M4x8	
102	0964 4006B	Tapping Screw With Flat Washer-m4x6	

4. BY-PASS FEED SECTION (A204/A206/A207)

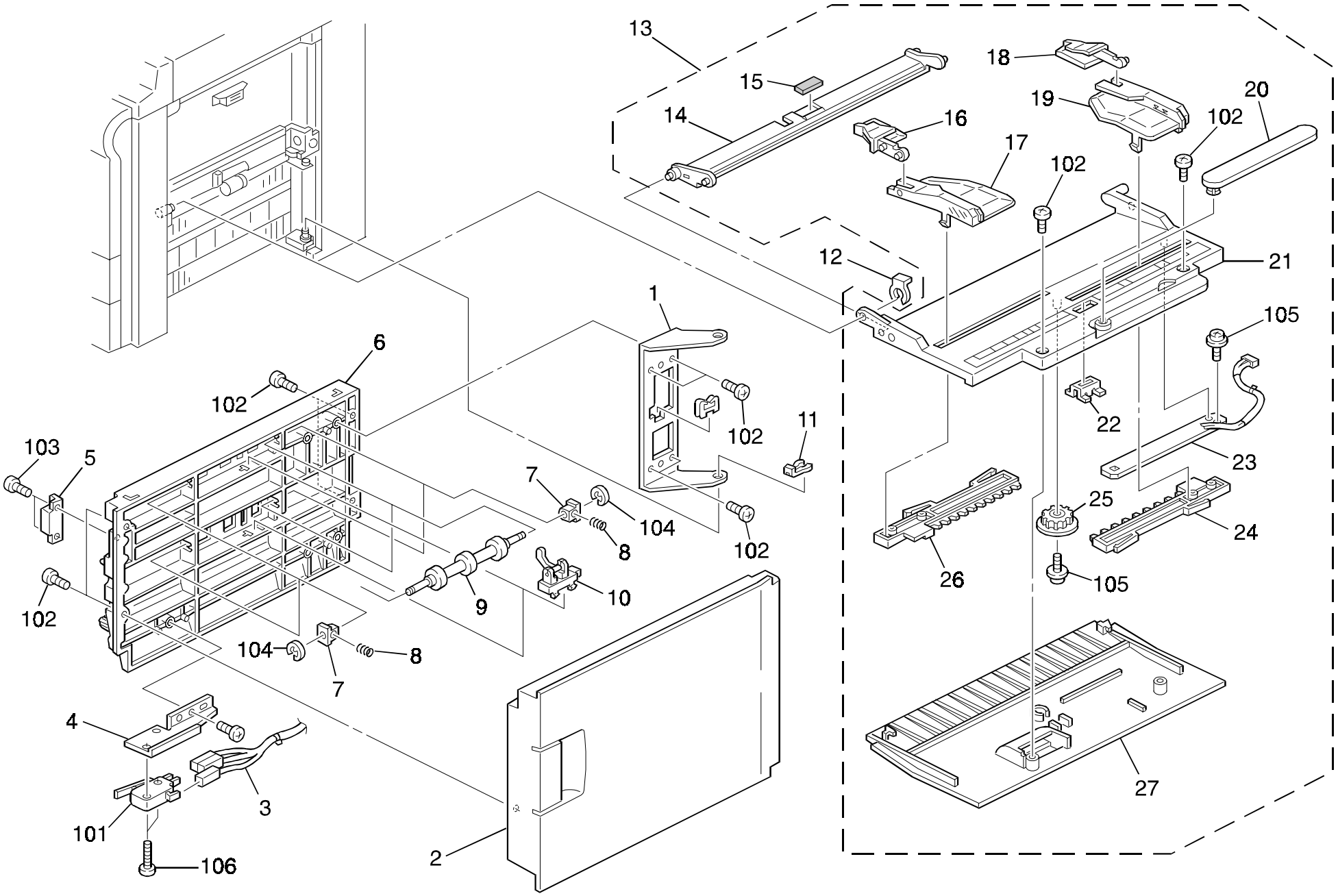

4. BY-PASS FEED SECTION (A204/A206/A207)

Index No.	Part No.	Description	Q'ty Per Assembly
1	A134 2586	Hinge Bracket (A204)	1
2	A134 2591	Vertical Transfer (A204)	1
3	A134 5316	Vertical Transfer Harness (A204)	1
4	A134 2587	Switch Bracket (A204)	1
5	AG07 0004	Magnetic Catch (A204)	1
6	A134 2585	Vertical Transfer Guide Plate (A204)	1
7	AA08 0034	Bushing - 4x5x7 (A204)	4
8	AA06 3538	Spring - 10mm (A204)	4
9	AF02 0330	Vertical Driven Roller (A204)	2
10	AW02 0069	Photointerruptor (A204)	2
11	5447 2681	Snap Ring (A204)	1
12	5215 2621	Snap Ring - M6	1
13	A134 2692	By-pass Feed Table Ass'y	1
14	A134 2741	By-pass Feed Entrance Guide	1
15	**5447 2927**	**Friction Pad - B**	**1**
16	A134 2721	Front Paper Guide	1
17	A134 2711	Front Side Fence	1
18	A134 2726	Rear Paper Guide	1
19	A134 2716	Rear Side Fence	1
20	A134 2701	By-pass Feed Guide	1
21	A134 2697	By-pass Feed Table	1
22	A134 2705	Magnet Catch Plate	1
23	A134 5282	Paper Size Sensor Board	1
24	A134 2706	Rear Fence Rack	1
25	G011 3305	Gear - 16T	2
26	A134 2707	Front Fence Rack	1
27	A134 2746	By-pass Feed Cover	1

Index No.	Part No.	Description	Q'ty Per Assembly
101	1204 2356	Micro Switch - Am51612a531	
102	0414 0082W	Tapping Screw With Flat Washer-m4x8	
103	0802 5085	Tapping Screw - M4x8	
104	0720 0030E	Retaining Ring - M3	
105	0965 3006B	Tapping Screw With Flat Washer M3x6	
106	0313 0140B	Philips Pan Head Screw - M3x14	

5. PAPER TRAY SECTION (A204/A206/A207)

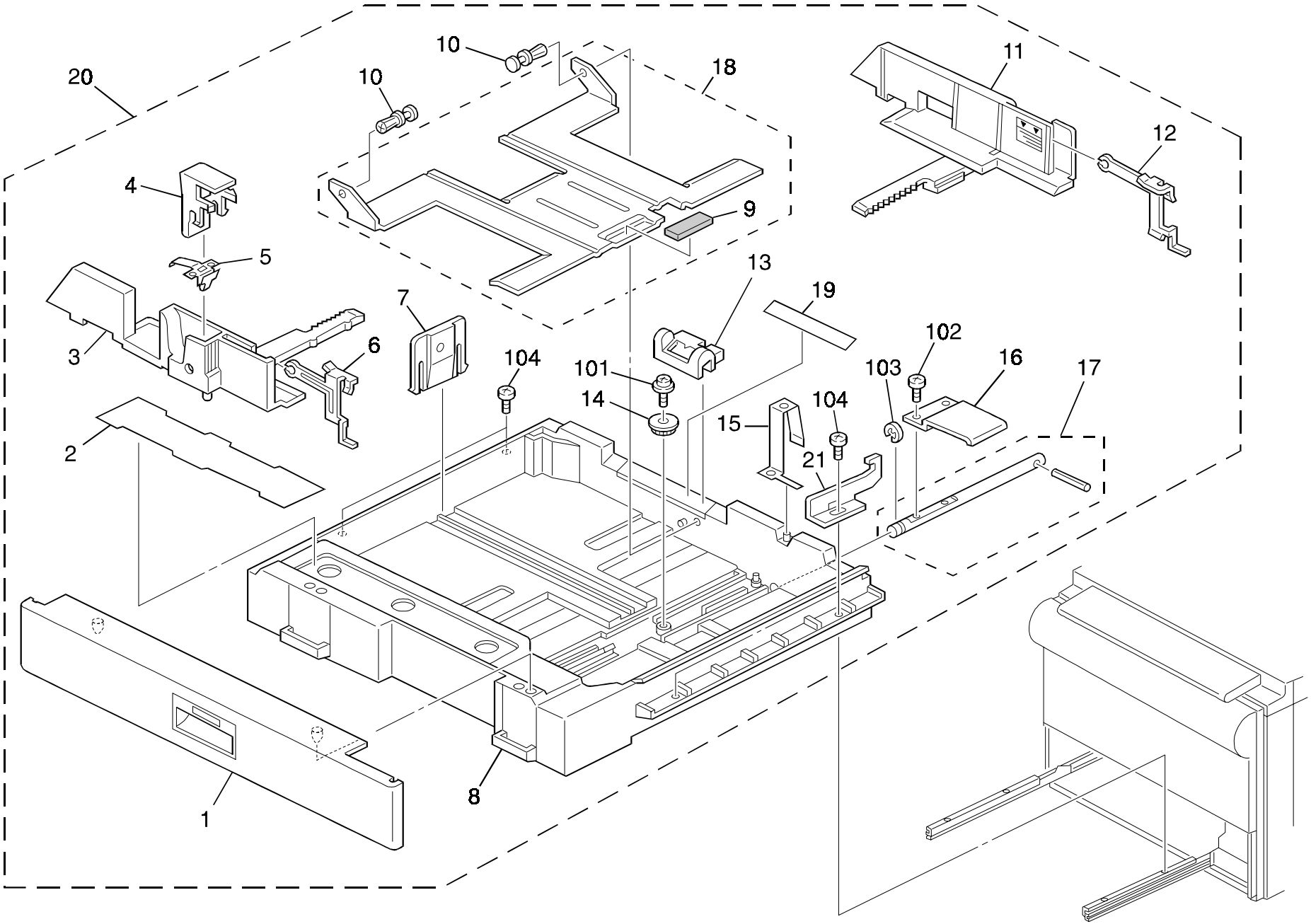

5. PAPER TRAY SECTION (A204/A206/A207)

Index No.	Part No.	Description	Q'ty Per Assembly
1	A134 2956	Paper Feed Front Cover	1
2	A134 2997	Decal - Paper Setting	1
3	AF01 6084	Front Side Fence	1
4	A134 2976	Stopper Lever	1
5	A134 2978	Spring Plate	1
6	A153 2991	Front Side Fence Guide	1
7	AF01 7012	End Fence	1
8	A204 2953	Paper Tray	1
9	**AF01 3014**	**Bottom Plate Pad**	**1**
10	A048 2838	Nylon Rivet	2
11	AF01 6085	Rear Side Fence	1
12	A153 2992	Rear Side Fence Guide	1
13	AF01 5027	Paper Size Slider	1
14	AB01 3868	Gear - 16Z	1
15	A134 2968	Grounding Plate	1
16	A204 2972	Bottom Lift Lever	1
17	A204 2971	Bottom Lift Shaft	1
18	A134 2986	Bottom Plate	1
19	A153 2995	Decal Paper Size - LT	1
19	A153 2996	Decal Paper Size - A4	1
20	A134 2952	Universal Tray	1
21	A134 2960	Paper Tray Stopper	1

Index No.	Part No.	Description	Q'ty Per Assembly
101	0965 4008B	Tapping Screw - M4 X 8	
102	0434 0060B	Pan Head Self-tapping Screw - M4x6	
103	0720 0060E	Retaining Ring - M6	
104	0344 0060F	Philips Truss Head Screw - M4x6	

6. LCT UNIT 1 (A206/A207)

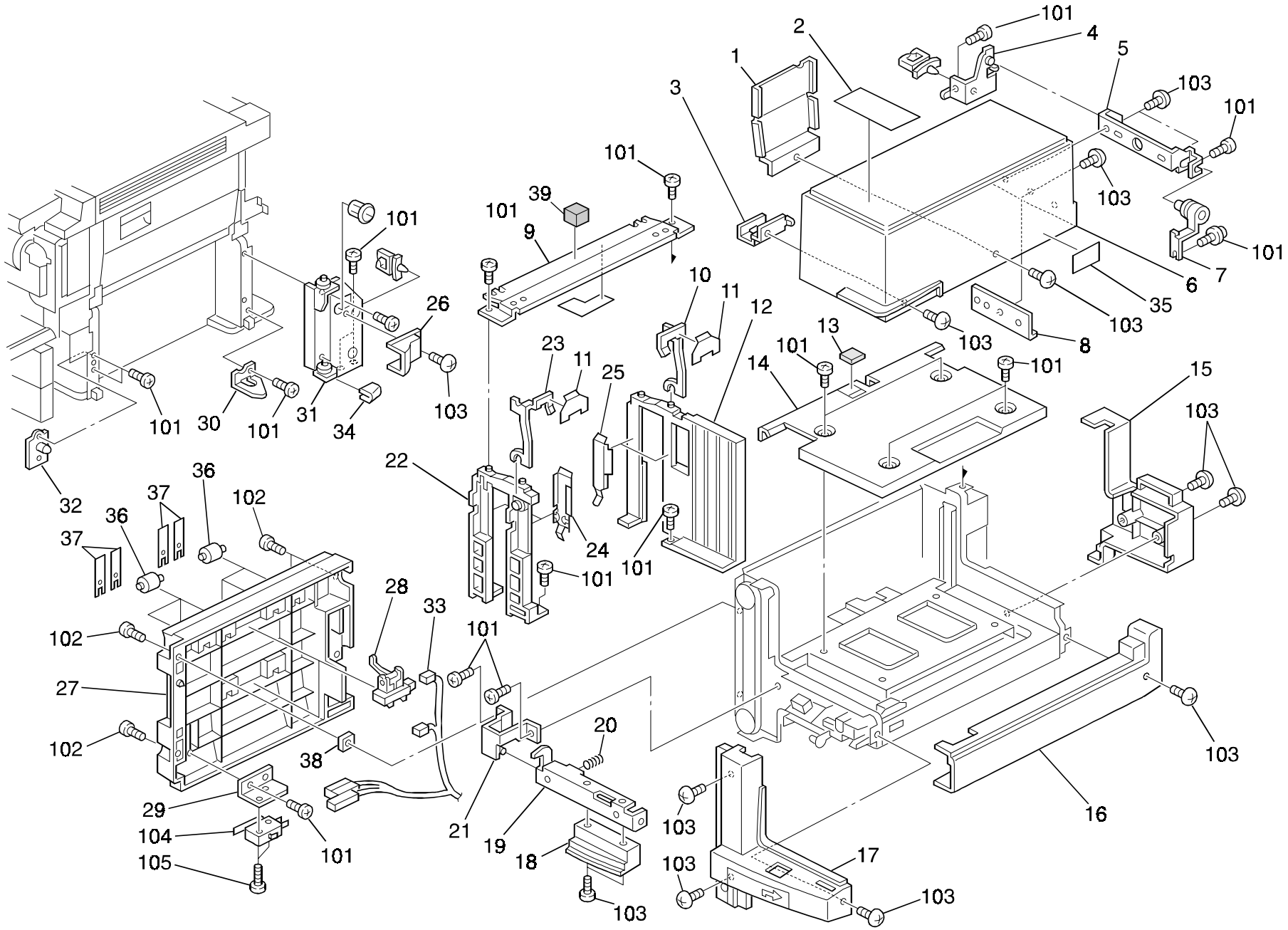

6. LCT UNIT 1 (A206/A207)

Index No.	Part No.	Description	Q'ty Per Assembly
1	A155 6324	End Fence	1
2	A155 6113	Decal - Paper Set	1
3	A155 6207	Cover Bracket	1
4	A155 6303	Fix Hinge	1
5	A155 6302	Hinge Angle	1
6	A155 6101	LCT Upper Cover	1
7	A335 3251	Top Cover Hinge	1
8	A155 6201	LCT Hinge Bracket	1
9	A155 6251	Upper Stay	1
10	A155 6312	Rear Paper Holder	1
11	A155 6313	Support Guide	2
12	A155 6307	Rear Side Fence	1
13	**A421 2543**	**Friction Pad**	**1**
14	A155 6142	LCT Paper Tray	1
15	A155 6221	LCT Rear Cover	1
16	A155 6231	LCT Right Cover	1
17	A155 6191	LCT Front Cover	1
18	A155 6181	Knob	1
19	A155 6171	Grip Bracket	1
20	AA06 3239	Spring - Handle	1
21	A155 6170	Hinge Bracket	1
22	A155 6306	Front Side Fence	1
23	A155 6311	Front Paper Holder	1
24	A155 6321	Front Spring Plate	1
25	A155 6322	Rear Sprig Plate	1
26	A155 6241	LCT Harness Cover	1
27	A155 6151	Vertical Transport Guide	1
28	AW02 0069	Photointerruptor	1
29	A155 6152	Switch Bracket	1
30	A155 6169	Hinge Holder	1
31	A155 6160	Lower Hinge	1
32	A155 6175	LCT Positioning Plate	1
33	A155 5349	LCT Vertical Harness	1
34	A155 6162	Cushion	1
35	A155 6114	Caution Decal - LCT	1

Index No.	Part No.	Description	Q'ty Per Assembly
36	AF02 0330	Vertical Driven Roller	6
37	AA08 0034	Bushing - 4x5x7	6
38	A155 6112	Spacer - LCT	1
39	A155 6270	Cushion 20 X 30	1
101	0434 0060B	Pan Head Self-tapping Screw - M4x6	
102	0414 0080B	Binding Self-tapping Screw - M4x8	
103	0802 5094	Tapping Truss Head Screw - M4x8	
104	1204 2356	Micro Switch - Am51612a531	
105	0433 0140B	Pan Head Self-tapping Screw - M3x14	

7. LCT UNIT 2 (A206/A207)

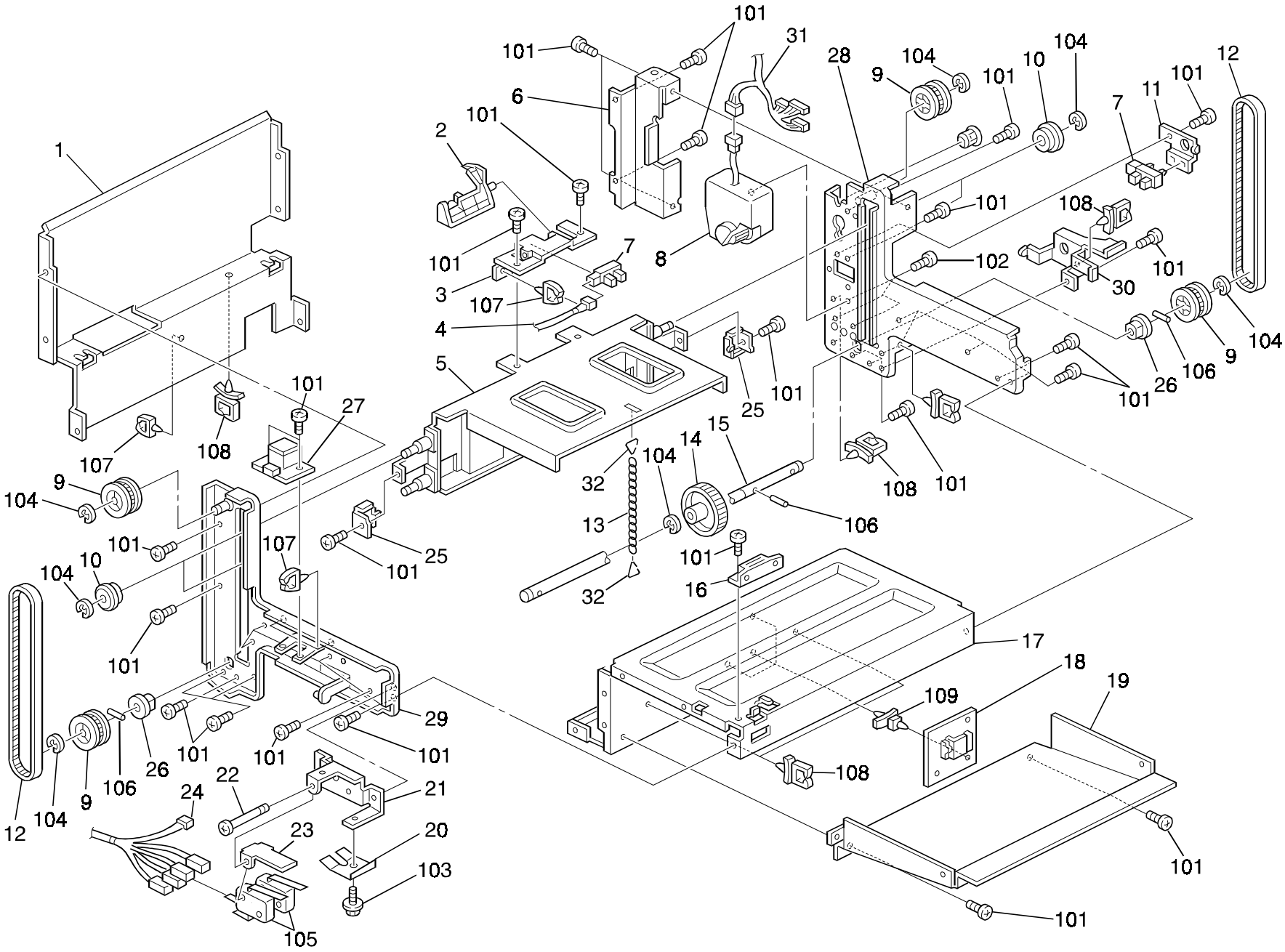

7. LCT UNIT 2 (A206/A207)

Index No.	Part No.	Description	Q'ty Per Assembly
1	A155 6143	Left Bracket	1
2	A155 6148	Paper End Sensor Feeler	1
3	A155 6147	Paper End Sensor Bracket	1
4	A155 5348	Paper End Sensor Harness	1
5	A155 6203	Paper Tray Stay	1
6	A155 6153	Upper Hinge	1
7	AW02 0075	Photointerrupter	1
8	AX05 0090	Motor - DC 24v 36w	1
9	AB03 0281	Timing Pulley - 28Z	4
10	A335 4351	Guide Roller	2
11	A155 6136	Lift Sensor Bracket	1
12	AA04 3456	Timing Belt - S3M167	2
13	5925 2258	Stopper Chain	1
14	AB01 1133	Gear - 49Z	1
15	AA14 0576	LCT Drive Shaft	1
16	AG07 0004	Magnetic Catch	1
17	A155 6141	Tray Bottom Plate	1
18	A155 5165	LCT Main Board	1
19	A155 6145	Tray Cover	1
20	A155 6118	Spring Plate	1
21	A155 6116	Safety Switch Bracket	1
22	A300 3155	Stepped Screw - M25x32	1
23	A155 6117	Safety Switch Lever	1
24	A155 5314	LCT Relay Harness	1
25	A335 4352	Timing Belt Clamp	2
26	5053 0223	Bushing - 8mm	2
27	A155 5170	Push Switch	1
28	A155 6125	Rear Side Bracket	1
29	A155 6110	Front Side Plate - LCT	1
30	A155 6215	Harness Guide	1
31	A155 5342	LCT Harness	1
32	A335 1341	Chain Hook	2

Index No.	Part No.	Description	Q'ty Per Assembly
101	0434 0060B	Pan Head Self-tapping Screw - M4x6	
102	0802 5236	Binding Self-tapping Screw - M4x8	
103	0443 0060B	Hexagon Tapping Screw - M3x6	
104	0720 0060E	Retaining Ring - M6	
105	1204 2355	Micro Switch - Am51632a531	
106	0623 0160E	Spring Pin - 3x16mm	
107	1105 0196	Harness Clamp	
108	1105 0197	Wire Saddle	
109	1105 0192	Locking Support	

8. PAPER FEED SECTION 1 (A204/A206/A207)

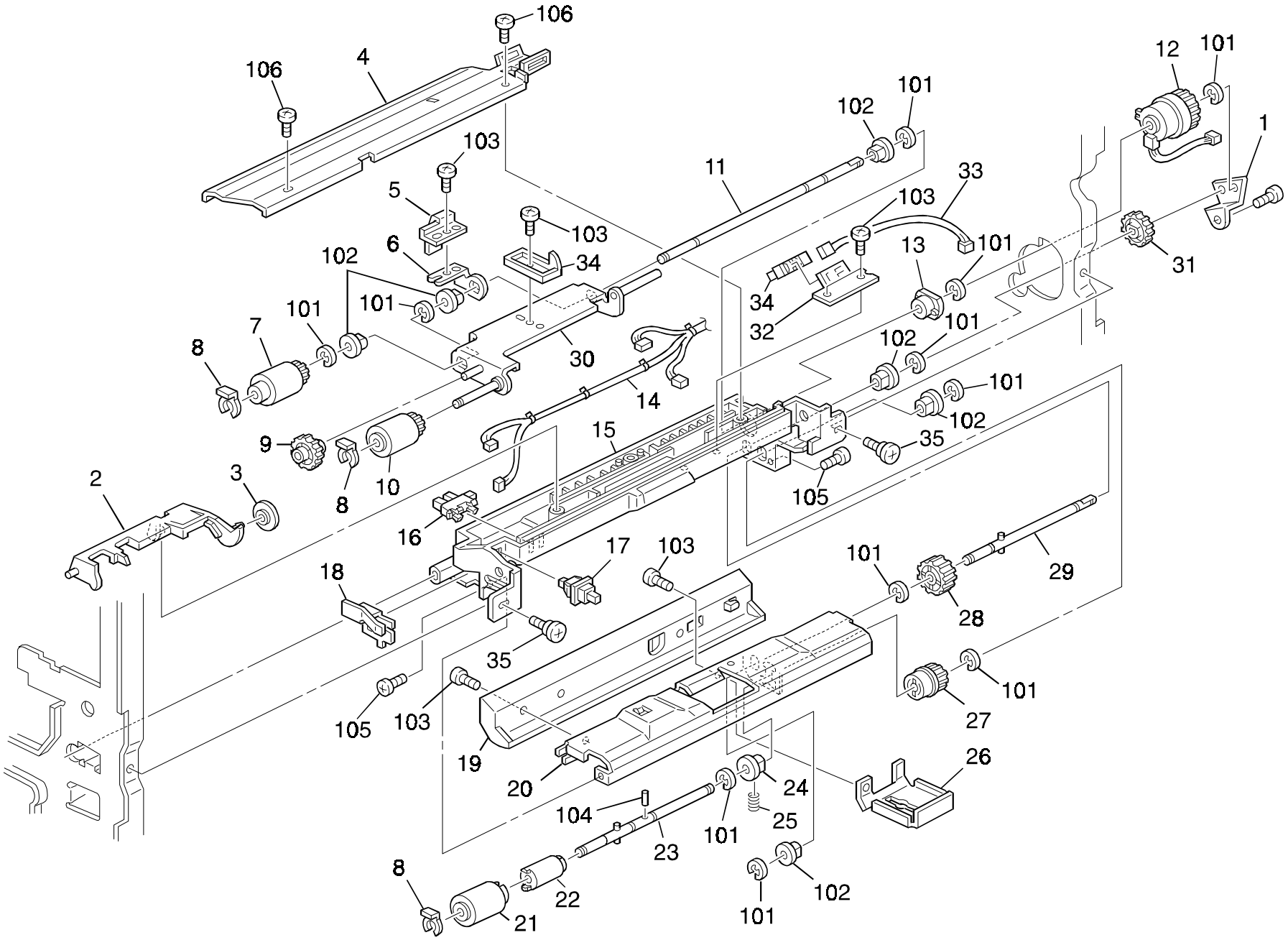

8. PAPER FEED SECTION 1 (A204/A206/A207)

Index No.	Part No.	Description	Q'ty Per Assembly
*	A206 2651	Bypass Feed Unit	1
1	A134 2688	Positioning Plate	1
2	A134 2660	Paper Feed Feeler	1
3	A134 2661	Feeler Roller	1
4	A134 2670	By-pass Feed Cover	1
5	A134 2658	Grounding Plate	1
6	A134 2656	Stopper Plate	1
7	**AF03 1025**	**Feed Roller**	**1**
8	5447 2681	Snap Ring	3
9	AB01 1343	Idle Gear - 23z	1
10	**AF03 0024**	**Pick-up Roller**	**1**
11	AA14 0534	Feed Shaft (A204)	1
11	AA14 0575	Paper Feed Shaft (A206/A207)	1
12	AX20 0101	Magnetic Clutch - 2.5kgf 35z	1
13	AA08 3010	Clutch Roller - 6x14x10	1
14	A134 5311	By-pass Feed Harness	1
15	A134 2659	By-pass Feed Housing	1
16	AW02 0075	Photointerrupter	1
17	AW50 0012	Push Switch	1
18	A134 2662	Grounding Plate	1
19	A153 2560	Rear Guide Plate	1
20	A134 2663	Separation Guide	1
21	**AF03 2025**	**Separation Roller**	**1**
22	**A134 2674**	**Torque Limitter - 400fg (A204)**	**1**
22	A206 2804	Torque-limiter (A206/A207)	1
23	A134 2668	Separation Driven Shaft	1
24	AA08 0037	Bushing - 6 Mm	1
25	AA06 3499	Pressure Spring	1
26	A134 2689	Gear Cover	1
27	AB01 1344	Gear - 16Z	1
28	AB01 1345	Gear - 20Z	1
29	A134 2667	Separation Drive Shaft	1
30	A134 2654	Pick-up Arm	1
31	AB01 1346	Gear - 27Z	1
32	A155 2682	Lift Sensor Bracket	1

Index No.	Part No.	Description	Q'ty Per Assembly
33	A155 5345	Ct Harness	1
34	A155 2667	Lift Sensor Feeler	1
35	AA14 3219	Stepped Screw	2
101	0720 0040E	Retaining Ring - M4	
102	0805 3480	Bushing - 6mm	
103	0414 0080B	Binding Self-tapping Screw - M4x8	
104	0622 0100E	Spring Pin - 2x10mm	
105	0802 5237	Binding Self-tapping Screw - M4x10	
106	0434 0060B	Pan Head Self-tapping Screw - M4x6	

9. PAPER FEED SECTION 2 (A204/A206/A207)

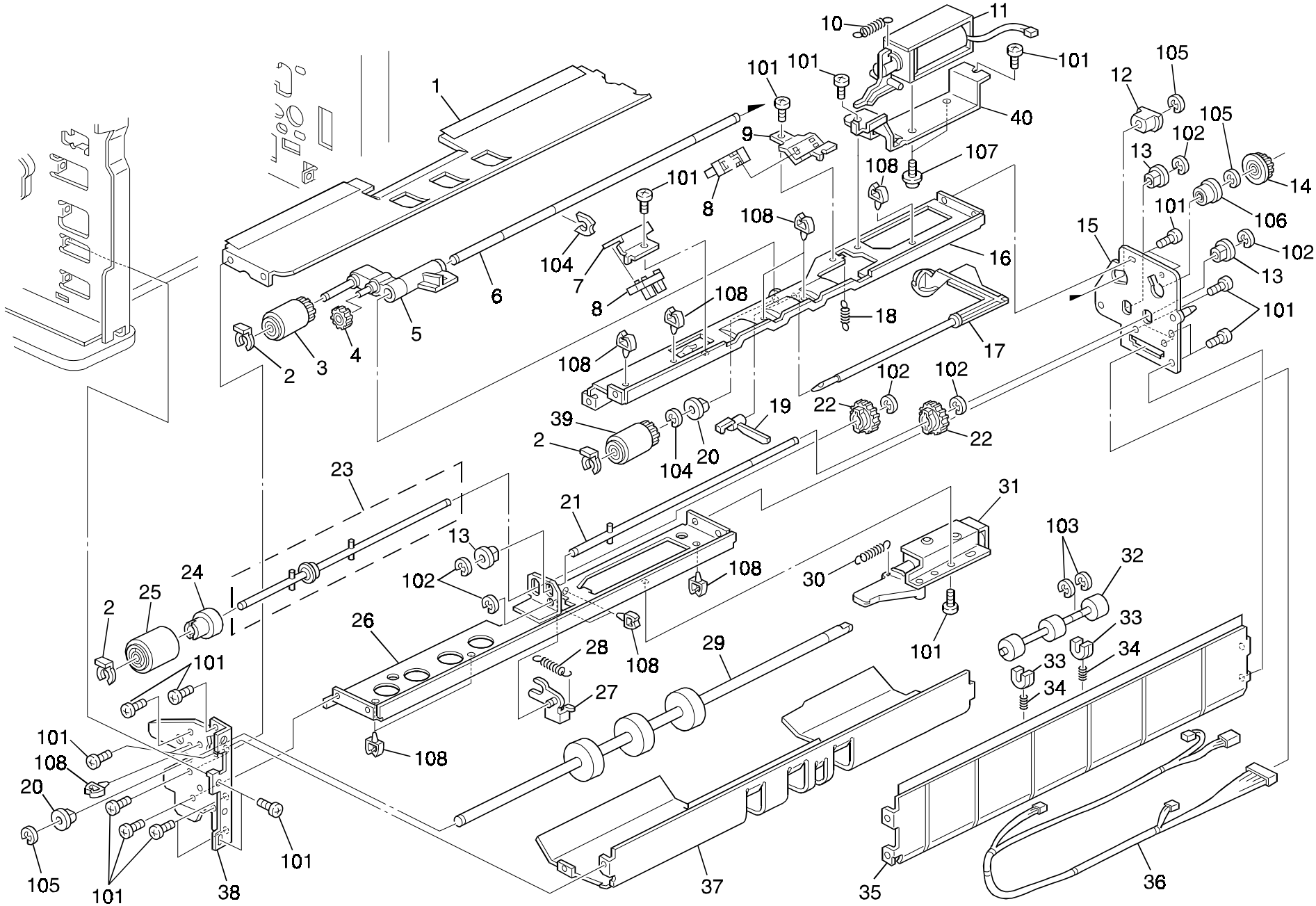

9. PAPER FEED SECTION 2 (A204/A206/A207)

Index No.	Part No.	Description	Q'ty Per Assembly
*	A204 2850	Lower Paper Feed Unit	1
1	A134 2839	Reverse Guide Plate	1
2	5447 2681	Snap Ring	3
3	**AF03 0025**	**Pick-up Feed Roller**	**1**
4	5447 2706	Gear - 15T	1
5	A204 2860	Pickup Arm	1
6	AA14 0542	Feed Roller Shaft	1
7	A130 2876	Paper End Sensor Bracket	1
8	AW02 0075	Photointerrupter	2
9	A134 2873	Positioning Sensor Bracket	1
10	AA06 0577	Release Spring	1
11	A134 2866	Pick-up Solenoid	1
12	AA08 3009	Clutch Roller - 8x18x11	1
13	AA08 2046	Bushing - 6x12x6	3
14	AB03 0466	Timing Pulley - 20Z	1
15	A134 2826	Rear Side Plate	1
16	A134 2855	Lower Feed Stay	1
17	A134 2862	Paper End Sensor Feeler	1
18	AA06 0523	Pick-up Pressure Spring	1
19	A134 2863	Paper End Sensor Lever	1
20	AA08 2047	Bushing - 8x16x7	2
21	A134 2830	Drive Shaft	1
22	AB01 3420	Gear - 18Z	2
23	A134 2832	Driven Shaft Ass'y	1
24	A134 2885	Torque Limitter	1
25	**AF03 2027**	**Separation Roller**	**1**
26	A134 2790	Reverse Stay	1
27	A134 2795	Pressure Lever	1
28	AA06 0636	Pressure Spring	1
29	AF02 0322	Lower Drive Roller - Transport	1
30	AA06 0575	Release Spring	1
31	A134 2810	Release Solenoid	1
32	AF02 0329	Relay Roller	1
33	AA08 0156	Bushing - M4	2
34	AA06 3487	Spring - 10mm	2

Index No.	Part No.	Description	Q'ty Per Assembly
35	A134 2834	Vertical Transport Guide	1
36	A134 5315	Relay Harness - Lower Paper Feed	1
37	A134 2846	Lower Guide Plate	1
38	A134 2821	Front Side Plate	1
39	**AF03 1026**	**Paper Feed Roller**	**1**
40	A134 2868	Solenoid Bracket	1
101	0434 0060B	Pan Head Self-tapping Screw - M4x6	
102	0720 0040E	Retaining Ring - M4	
103	0720 0030E	Retaining Ring - M3	
104	0805 0088	Retaining Ring - M6	
105	0720 0060E	Retaining Ring - M6	
106	0742 3808	Ball Bearing - 8x16x5	
107	0353 0040B	Screw - M3X4	
108	1105 0199	Clamp	

10. PAPER FEED SECTION 3 (A204/A206)

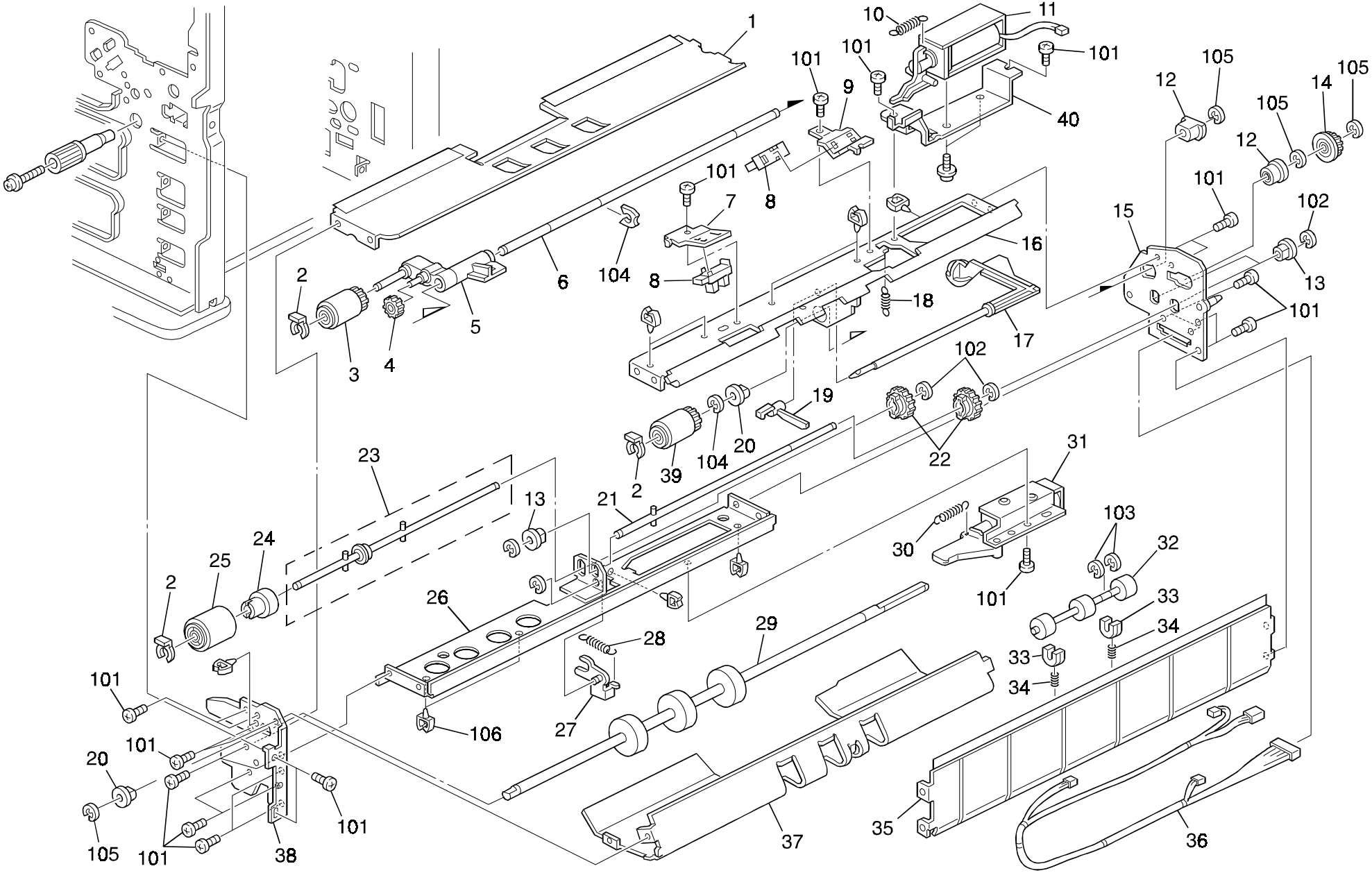

10. PAPER FEED SECTION 3 (A204/A206)

Index No.	Part No.	Description	Q'ty Per Assembly
*	A204 2800	Upper Paper Feed Unit	1
1	A134 2839	Reverse Guide Plate	1
2	5447 2681	Snap Ring	3
3	**AF03 0025**	**Pick-up Feed Roller**	**1**
4	5447 2706	Gear - 15T	1
5	A134 2654	Pick-up Arm	1
6	AA14 0542	Feed Roller Shaft	1
7	A130 2876	Paper End Sensor Bracket	1
8	AW02 0075	Photointerrupter	2
9	A130 2871	Sensor Bracket	1
10	AA06 0577	Release Spring	1
11	A134 2866	Pick-up Solenoid	1
12	AA08 3009	Clutch Roller - 8x18x11	1
13	AA08 2046	Bushing - 6x12x6	2
14	AB03 0466	Timing Pulley - 20Z	1
15	A130 2824	Rear Upper Side Plate	1
16	A130 2850	Upper Feed Stay	1
17	A134 2862	Paper End Sensor Feeler	1
18	AA06 0523	Pick-up Pressure Spring	1
19	A134 2863	Paper End Sensor Lever	1
20	AA08 2047	Bushing - 8x16x7	2
21	A134 2830	Drive Shaft	1
22	AB01 3420	Gear - 18Z	2
23	A134 2832	Driven Shaft Ass'y	1
24	A134 2885	Torque Limitter	1
25	**AF03 2027**	**Separation Roller**	**1**
26	A134 2790	Reverse Stay	1
27	A134 2795	Pressure Lever	1
28	AA06 0636	Pressure Spring	1
29	AF02 0321	Paper Feed Drive Roller	1
30	AA06 0575	Release Spring	1
31	A134 2810	Release Solenoid	1
32	AF02 0329	Relay Roller	1
33	AA08 0156	Bushing - M4	2
34	AA06 3487	Spring - 10mm	2

Index No.	Part No.	Description	Q'ty Per Assembly
35	A134 2834	Vertical Transport Guide	1
36	A130 5314	Relay Harness - Paper Feed	1
37	A130 2845	Upper Guide Plate	1
38	A130 2820	Front Upper Side Plate	1
39	**AF03 1026**	**Paper Feed Roller**	**1**
40	A134 2868	Solenoid Bracket	1
101	0434 0060B	Pan Head Self-tapping Screw - M4x6	
102	0720 0040E	Retaining Ring - M4	
103	0720 0030E	Retaining Ring - M3	
104	0805 0088	Retaining Ring - M6	
105	0720 0060E	Retaining Ring - M6	
106	1105 0199	Clamp	

11. PAPER REGISTRATION (A204/A206/A207)

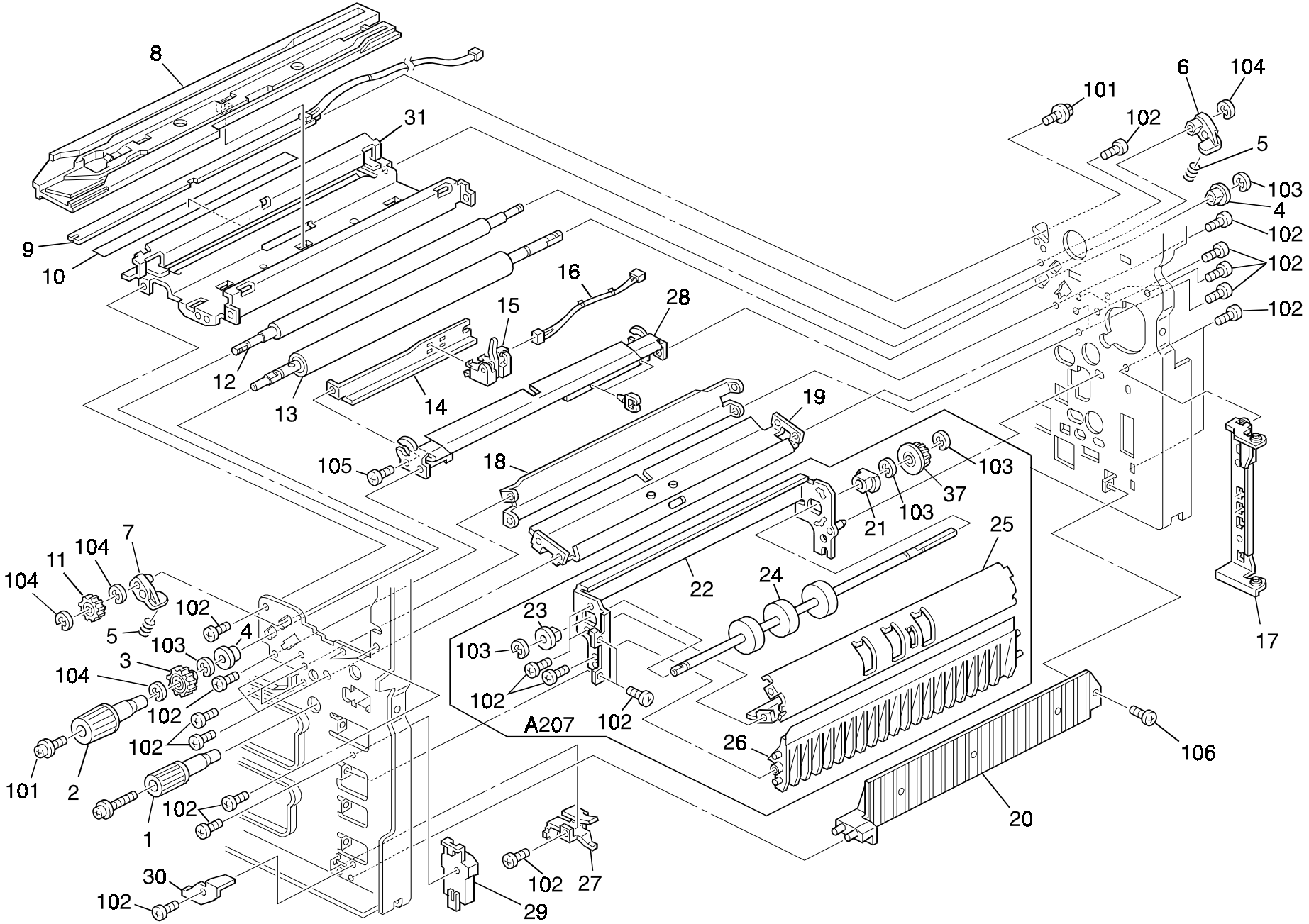

11. PAPER REGISTRATION (A204/A206/A207)

Index No.	Part No.	Description	Q'ty Per Assembly
1	AG05 0075	Middle Knob	1
2	AG05 0074	Registration Knob	1
3	AB01 3485	Gear - 20Z	1
4	5474 2152	Bushing - 8x12x12mm	2
5	AA06 3539	Spring - Registration Roller	2
6	AA08 0172	Bushing	1
7	AA08 0171	Bushing	1
8	A153 3095	Development Rail	1
9	A204 2101	P.T.L. Lamp Ass'y	1
10	A153 3114	Transfer Entrance Guide	1
11	AB01 3486	Gear - 14Z	1
12	AF02 1052	Upper Registration Roller	1
13	AF02 0316	Lower Registration Roller	1
14	A134 2557	Regist Sensor Bracket	1
15	AW02 0068	Photointerruptor	1
16	A153 5333	Ct Harness	1
17	A134 2580	Vertical Transfer Hunge (A204)	1
18	A153 2563	Middle Guide Plate	1
19	A153 2558	Upper Registration Guide	1
20	A134 2895	Vertical Relay Guide	1
21	AA08 3009	Clutch Roller - 8x18x11 (A207)	1
22	A134 2900	Duplex Stay (A207)	1
23	AA08 2047	Bushing - 8x16x7 (A207)	9
24	AF02 0321	Paper Feed Drive Roller (A207)	1
25	A134 2903	Upper Guide Plate - Duplex Feed (A207)	1
26	A204 2904	Lower Guide Plate - Duplex Feed (A207)	1
27	A134 2582	Sensor Bracket - Vertical Transfer (A204)	1
28	A134 2554	Lower Registration Guide	1
29	A155 6164	Positioning Guide	1
30	A155 6168	Vertical Support Guide	1
31	A153 3110	Upper Resist Guide Plate	1
32	AB03 0466	Timing Pulley - 20Z	1

Index No.	Part No.	Description	Q'ty Per Assembly
101	0951 3006B	Philips Screw With Flat Washer-m3x6	
102	0434 0060B	Pan Head Self-tapping Screw - M4x6	
103	0720 0060E	Retaining Ring - M6	
104	0720 0040E	Retaining Ring - M4	
105	0313 0040B	Philips Pan Head Screw - M3x4	
106	0414 0080B	Binding Self-tapping Screw - M4x8	

12. OPTICAL SECTION 1 (A204/A206/A207)

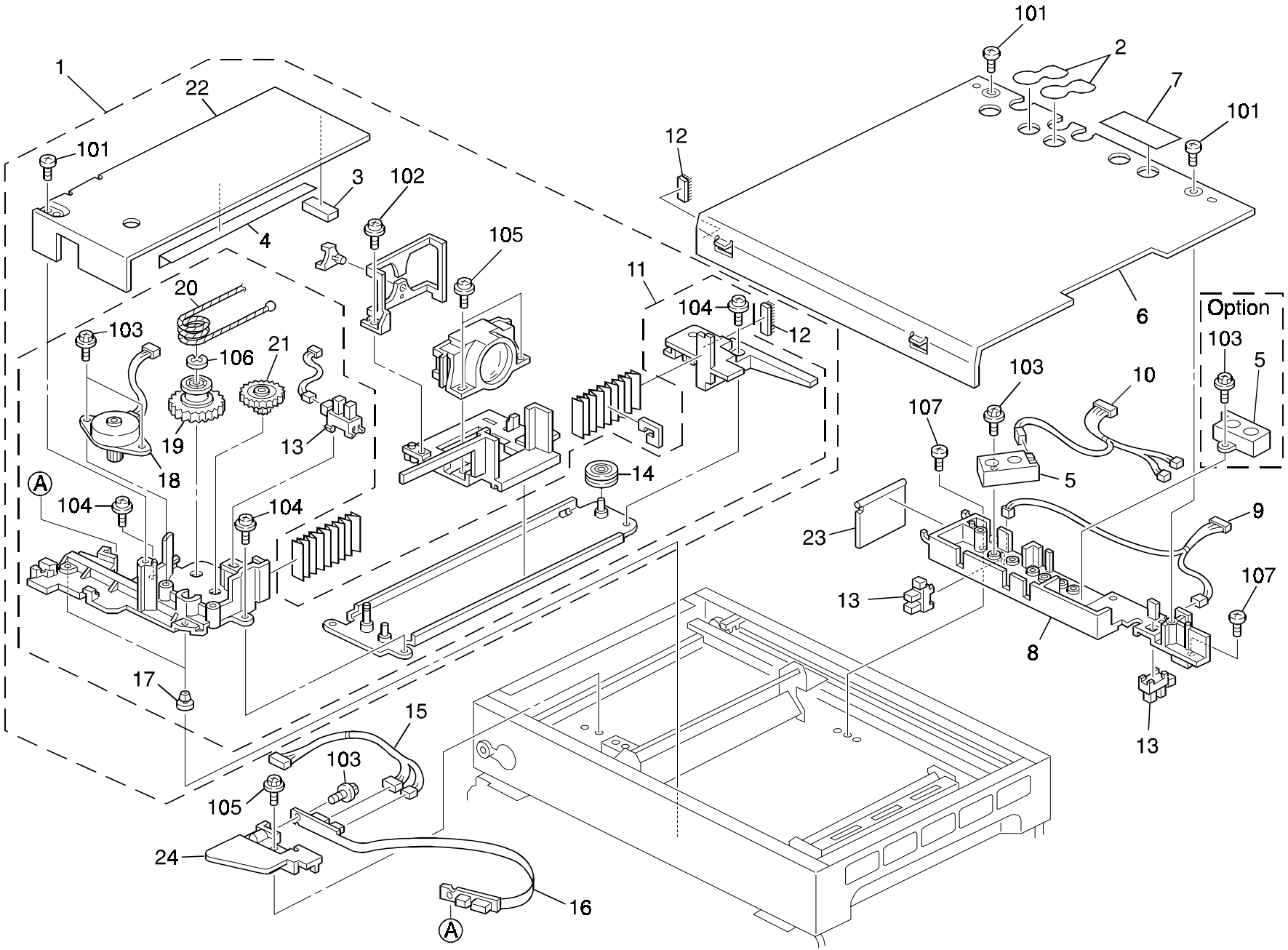

12. OPTICAL SECTION 1 (A204/A206/A207)

Index No.	Part No.	Description	Q'ty Per Assembly
1	A204 1840	Lens Magnification Unit	1
2	AA15 0369	Original Sensor Seal	1
3	AA15 1941	Right Shield - Development Case	1
4	AA15 0368	Shielding Plate - Lens Cover	1
5	AW01 0068	Original Length Sensor	2
6	A153 1961	Lens Cover	1
7	A111 1753	Seal - 0.1x18x49	1
8	A153 1971	Original Sensor Bracket	1
9	A153 5392	Optical Harness - 2	1
10	A153 5391	Optical Harness - 1	1
11	A204 1844	Lens Drive Unit	1
12	AA15 2330	Magnification Seal	2
13	AW02 0075	Photointerrupter	3
14	AB03 2059	Driven Pulley	2
15	A153 5395	Optical Harness - 5	1
16	A153 5141	Lens Drive Harness	1
17	A069 1883	Shoe - Scanner	2
18	A204 5212	Lens Drive Motor - DC24V 38W	1
19	AB01 7360	Gear Pulley	1
20	AA05 0086	Lens Drive Wire - Horizontal	1
21	AB01 7361	Gear - 24Z/56Z	1
22	A153 1850	Lens Cover	1
23	A153 1974	Original Sensor Sheading Plate	1
24	A153 1861	Harness Bracket	1

Index No.	Part No.	Description	Q'ty Per Assembly
101	0802 5237	Binding Self-tapping Screw - M4x10	
102	0413 0062B	Tapping Screw - M3x6	
103	0802 5232	Binding Self-tapping Screw - M3x8	
104	0951 4006B	Philips Screw With Washer - M4x6	
105	0965 3008W	Tapping Screw With Flat Washer-m3x8	
106	0720 0040E	Retaining Ring - M4	
107	0414 0080B	Binding Self-tapping Screw - M4x8	

13. OPTICAL SECTION 2 (A204/A206/A207)

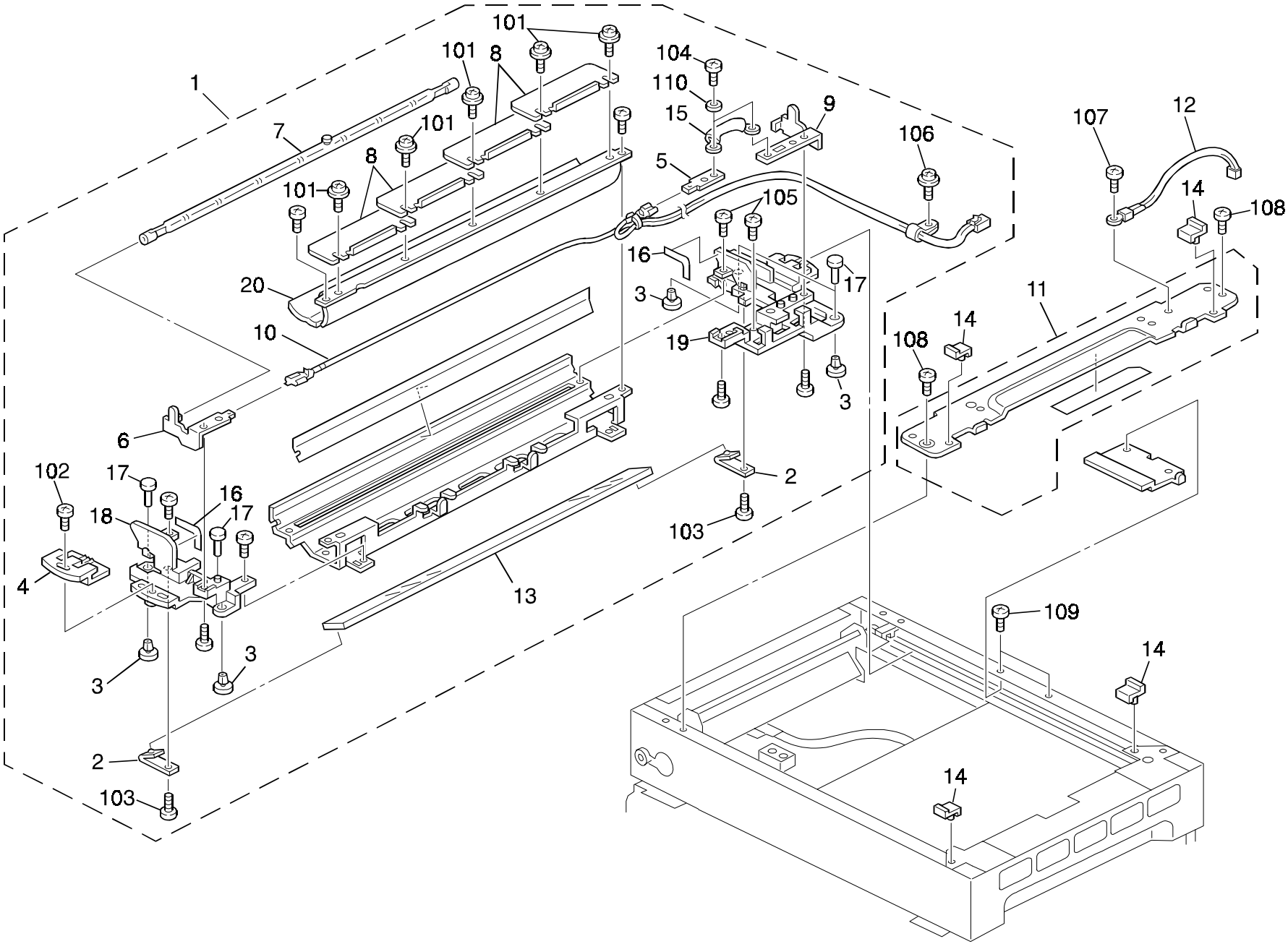

13. OPTICAL SECTION 2 (A204/A206/A207)

REV. 02/99

Index No.	Part No.	Description	Q'ty Per Assembly
1	A204 1790	Scanner Unit -97V 310W (120V)	1
1	A204 1770	Scanner Unit - 85V 310W (230V)	1
2	AC03 5022	Rear Mirror Clamp - 1st Mirror	2
3	A069 1883	Shoe - Scanner	4
4	A153 1776	Front Mirror Clamp - 1st Mirror	1
5	A077 1673	Thermofuse Terminal	1
6	A153 1777	Front Terminal	1
7	AX53 0014	Exposure Lamp - 85V 310W (230V)	1
7	AX53 0015	Exposure Lamp - 97V 310W (120V)	1
8	A085 1670	Exposure Adjusting Plate	4
9	A153 1778	Rear Terminal	1
10	A153 1780	Exposure Lamp Harness	1
11	A153 1749	Scale Bracket	1
12	AW10 0027	Thermister	1
13	AC03 0103	1st Mirror	1
14	A153 1754	Exposure Stay	4
15	A153 1779	Thermostat - 121°C 250V 10A	1
16	A153 1781	Reflector	2
17	A096 1873	Scanner Shoe Pin	4
18	A153 1772	Stay Scanner Front	1
19	A153 1773	Stay Scanner Rear	1
20	A085 1861	Reflector - Main	1

Index No.	Part No.	Description	Q'ty Per Assembly
101	0951 3006B	Philips Screw With Flat Washer - M3x6	
102	0414 0082W	Tapping Screw With Flat Washer - M4x8	
103	0413 0062W	Tapping Screw - M3x6	
104	0413 0050Z	Tapping Screw - M3x5	
105	0413 0060W	Tapping Screw - M3x6	
106	0964 4008B	Tapping Screw With Flat Washer - M4x8	
107	0313 0040B	Philips Pan Head Screw - M3x4	
108	0313 0060B	Philips Pan Head Screw - M3x6	
109	0314 0060B	Philips Pan Head Screw - M4x6	
110	0703 0030M	Spring Washer - M3	

14. OPTICAL SECTION 3 (A204/A206/A207)

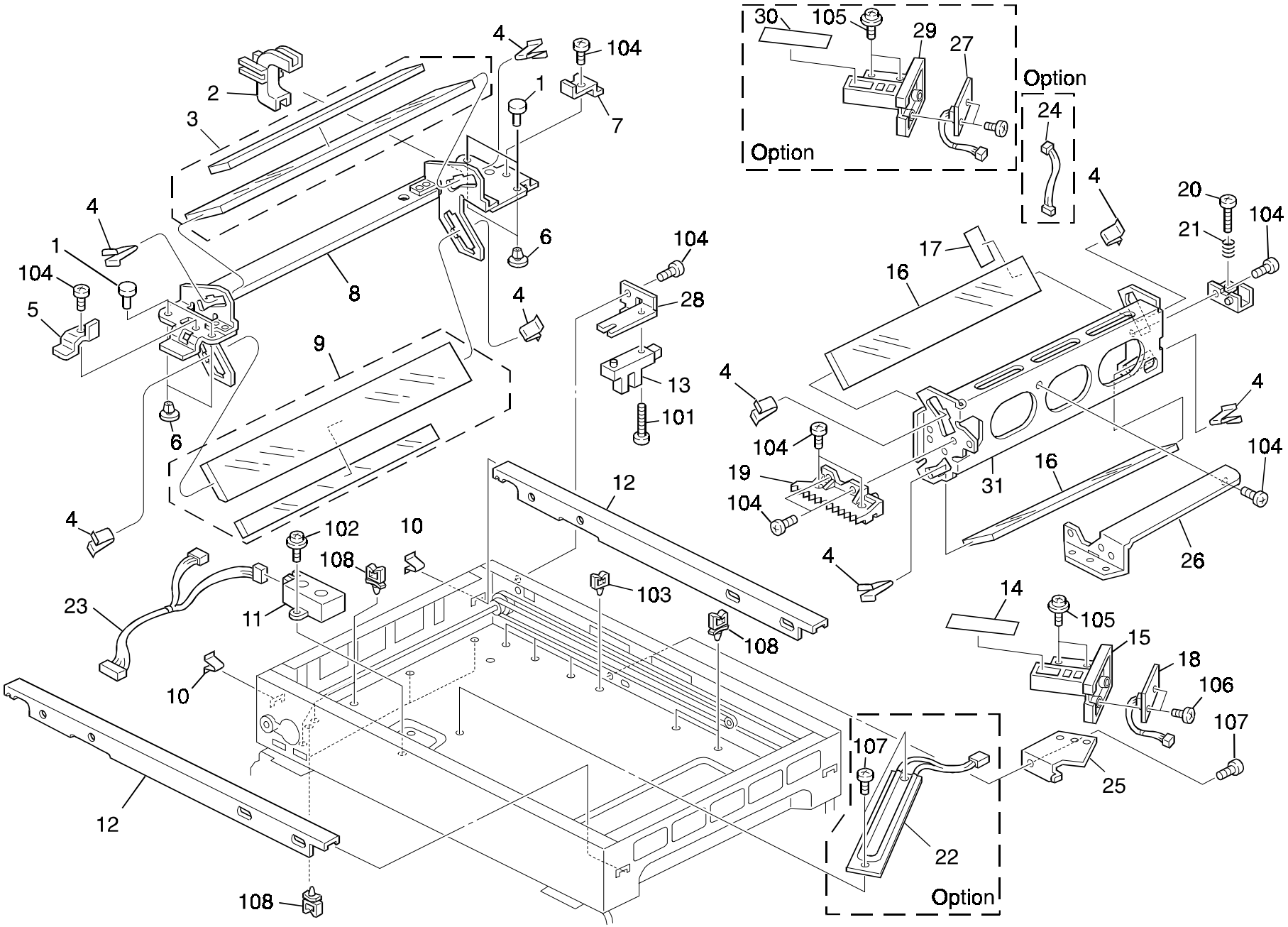

14. OPTICAL SECTION 3 (A204/A206/A207)

Index No.	Part No.	Description	Q'ty Per Assembly
1	A096 1873	Scanner Shoe Pin	4
2	A153 1807	Harness Guide	1
3	A153 1808	2nd Mirror	1
4	A077 1690	Spring Plate - Mirror	8
5	A153 1805	Front Mirror Holder	1
6	A069 1883	Shoe - Scanner	4
7	A153 1806	Rear Mirror Holder	1
8	A153 1801	2nd Scanner Ass'y	1
9	A153 1809	3rd Mirror	1
10	A153 1721	Spring Plate	2
11	AW01 0040	Original Sensor	1
12	A153 1720	Scanner Rail	2
13	AW02 0022	Photointerruptor	1
14	A204 1977	Density Sensor Cover	1
15	A204 1976	Density Sensor Case	1
16	AC03 0106	4/5 Mirror	2
17	A153 1908	Shielding Plate	1
18	A204 5160	ADS Sensor Board	1
19	A153 1914	3rd Scanner Rack	1
20	A153 1906	Adjust Shoe	1
21	AA06 3523	Adjust Spring	1
22	AX40 0047	Anticondensation Heater - 115V 15W (Option)	1
22	AX40 0048	Anticondensation Heater - 240V 15W (Option)	1
23	A153 5393	Optical Harness - 3	1
24	A153 9513	Harness - ADS (Option)	1
25	A153 3590	Density Sensor Bracket	1
26	A153 1912	3rd Scanner Stay	1
27	A096 5230	ADS Board (Option)	1
28	A153 1981	Scanner Home Sensor Bracket	1
29	A096 1692	ADS Case (Option)	1
30	A096 1693	ADS Cover (Option)	1
31	A153 1903	3rd Scanner Ass'y	1

Index No.	Part No.	Description	Q'ty Per Assembly
101	0314 0100B	Philips Pan Head Screw - M4x10	
102	0443 0080W	Hexagon Head Tapping Screw - M3x8	
103	1105 0231	Clamp	
104	0414 0080B	Binding Self-tapping Screw - M4x8	
105	0951 3005B	Philips Screw With Flat Washer	
106	0802 5231	Binding Self-tapping Screw - M3x6	
107	0434 0060B	Pan Head Self-tapping Screw - M4x6	
108	1105 0196	Harness Clamp	

15. OPTICAL SECTION 4 (A204/A206/A207)

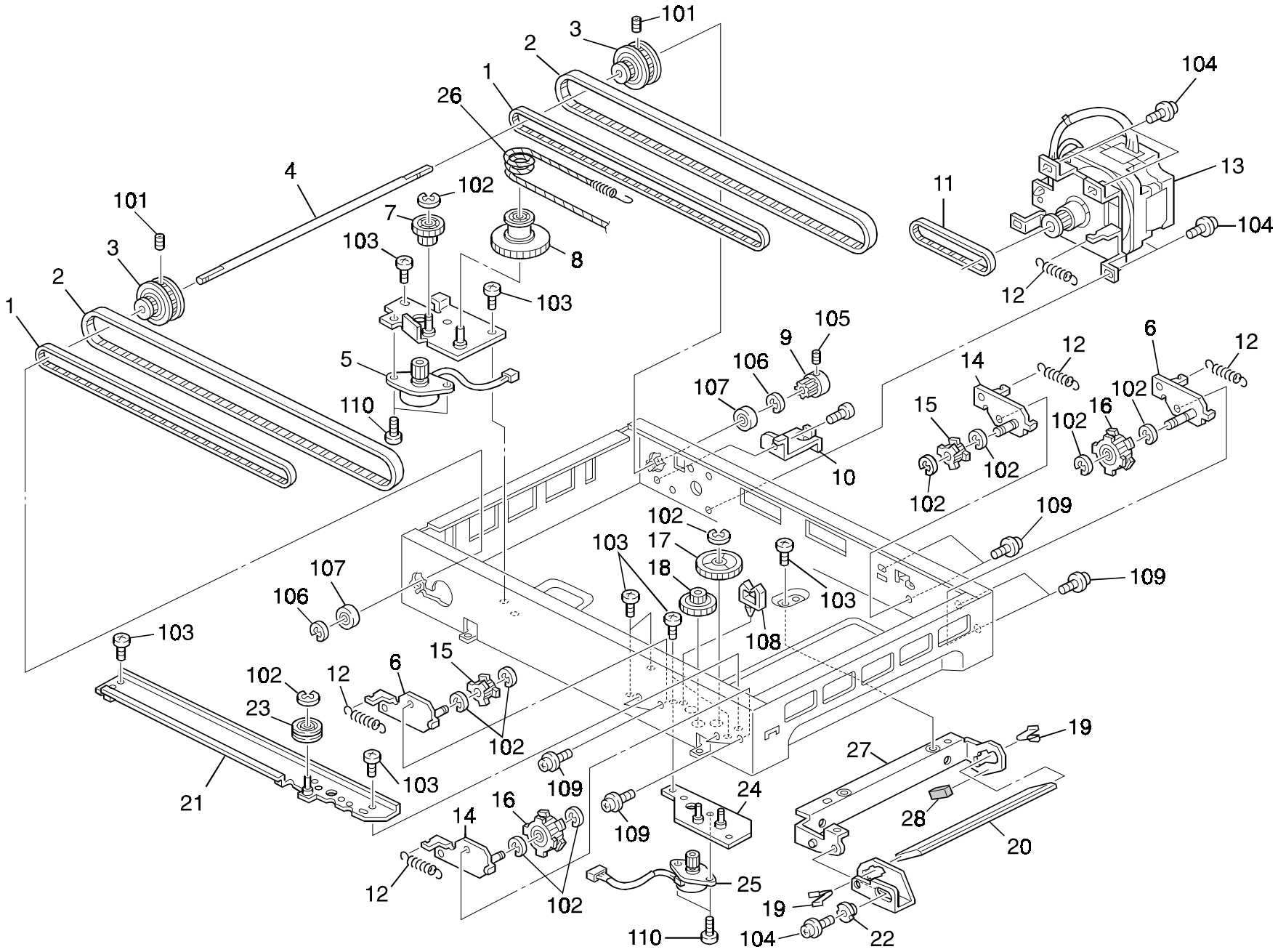

15. OPTICAL SECTION 4 (A204/A206/A207)

Index No.	Part No.	Description	Q'ty Per Assembly
1	AA04 3387	Timing Belt - 40S2M984	2
2	AA04 3386	Timing Belt - 40S2M1224	2
3	AB03 3069	Timimng Pulley - 22z/44z	2
4	AA14 0599	Scanner Drive Shaft	1
5	A153 5213	Lens Drive Motor - DC24V 8.6W	1
6	A153 1708	Tension Bracket - Short	2
7	AB01 7362	Gear - 25Z/32Z	1
8	AB01 7360	Gear Pulley	1
9	AB03 0486	Timing Pulley - 24Z	1
10	A153 5803	Upper Bracket - DC Drive Board	1
11	AA04 3388	Timing Belt - 60S2M180	1
12	AA06 0595	Tension Spring	5
13	A153 1700	Scanner Drive Motor - DC2.3V 13.5W	1
14	A153 1707	Tension Bracket - Long	2
15	AB03 0489	Timing Pulley - 22Z	2
16	AB03 0487	Timing Pulley - 44Z	2
17	AB01 7129	Gear - 20Z AND 72Z	1
18	AB01 7361	Gear - 24Z/56Z	1
19	A077 1690	Spring Plate - Mirror	2
20	AC03 0107	6th Mirror	1
21	A153 1952	Magnification Rail	1
22	A075 1766	Adjusting Cam	1
23	AB03 2059	Driven Pulley	1
24	A153 1947	Magnification Drive Unit Bracket	1
25	A153 5211	Mirror Drive Motor - DC24V 8.6V	1
26	AA05 0087	Lens Drive Wire - Vertical	1
27	A153 1923	6th Mirror Bracket	1
28	A048 1801	Mirror Seal	1

Index No.	Part No.	Description	Q'ty Per Assembly
101	0573 0100E	Hexagon Headless Set Screw - M3x10	
102	0720 0040E	Retaining Ring - M4	
103	0434 0060B	Pan Head Self-tapping Screw - M4x6	
104	0951 4008B	Philips Screw With Washer - M4x8	
105	0574 0050E	Hexagon Headless Set Screw - M4x5	
106	0720 0060E	Retaining Ring - M6	
107	0740 3008	Ball Bearing - 8x22x7	
108	1105 0230	Clamp	
109	0951 4006B	Philips Screw With Washer - M4x6	
110	0433 0060W	Tapping Screw - M3x6	

16. TONER SUPPLY UNIT (A204/A206/A207)

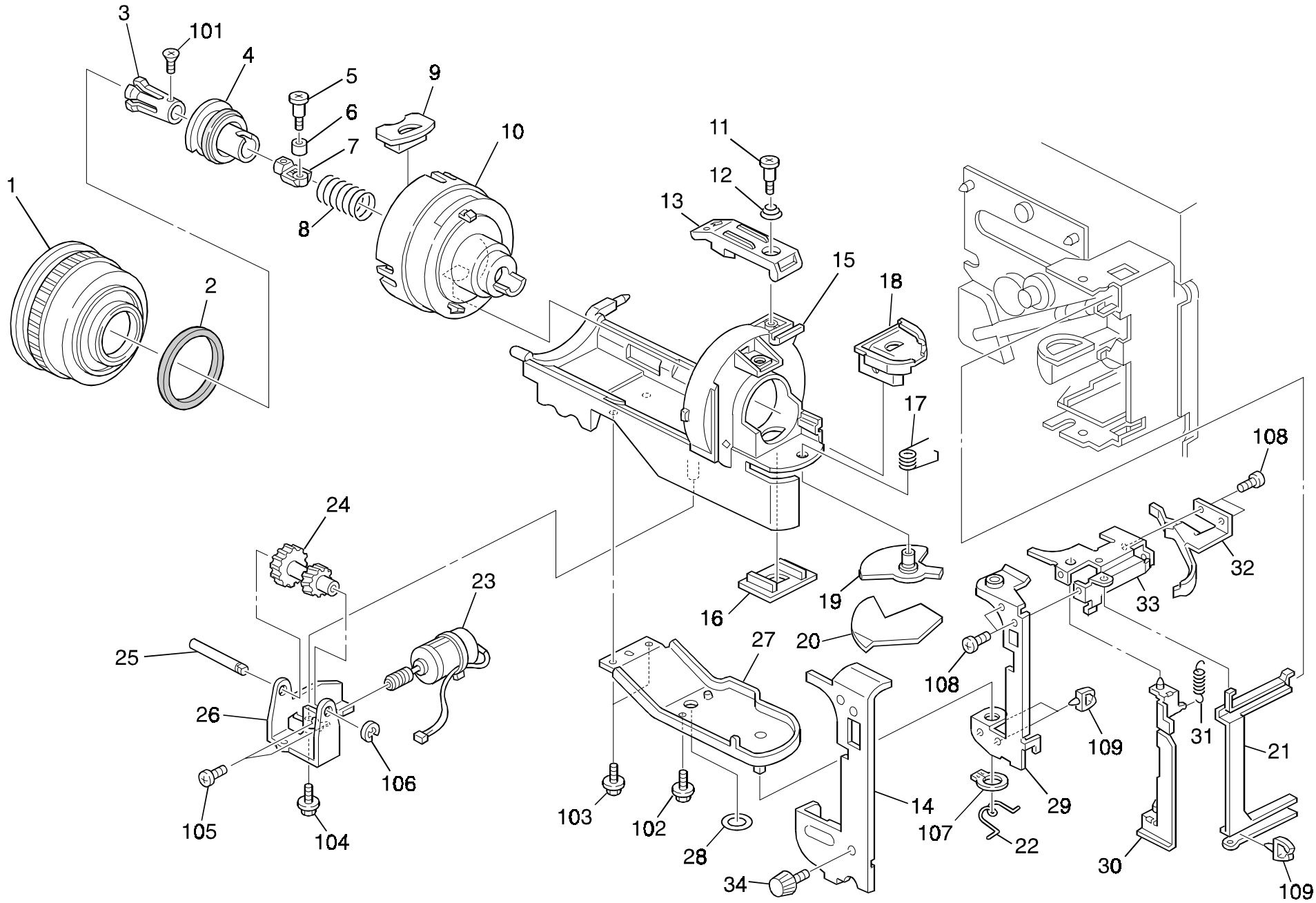

16. TONER SUPPLY UNIT (A204/A206/A207)

Index No.	Part No.	Description	Q'ty Per Assembly
*	A204 3150	Toner Bottle Drive (RIC NA)	1
*	A204 3151	Toner Bottle Drive (RIC EU)	1
*	A204 3153	Toner Bottle Drive (Others)	1
1	A153 3187	Toner Supply Gear (RIC NA)	1
1	A153 3185	Toner Supply Gear (RIC EU)	1
1	A153 3189	Toner Supply Gear (Others)	1
2	AA15 1894	Seal - 67x53x2	1
3	A134 3180	Bottle Chuck	1
4	A134 3177	Toner Slider	1
5	AA14 3712	Chuck Shaft	1
6	A134 3181	Chuck Roller	1
7	A134 3179	Chuck Shaft	1
8	AA06 3366	Chuck Spring	1
9	A134 3215	Rubber Cap	1
10	A134 3190	Toner Bottle Stopper	1
11	AA14 3410	Stepped Screw - M4	1
12	AA06 3367	Pressure Spring	1
13	A134 3197	Bottle Holder	1
14	A204 3281	Bottle Bracket Cover	1
15	A134 3172	Toner Bottle Holder	1
16	A153 3173	Shutter Guide	1
17	AA06 6260	Shutter Spring	1
18	A153 3174	Shutter Holder	1
19	A153 3172	Shutter	1
20	AA15 0377	Shutter Seal	1
21	A153 3272	Hinge Slide Rail	1
22	AA06 6284	Torsion Spring	1
23	A134 3162	DC Motor - DC24V 5.85W	1
24	AB01 7347	Idle Gear	1
25	AA14 8413	Idle Gear Shaft	1
26	A134 3161	Bottle Drive Bracket	1
27	A217 3157	Toner Bottle Bracket	1
28	AA15 0234	Mylar Seal - Base	1
29	A204 3261	Release Bracket	1
30	A153 3266	Bottle Unit Link Plate	1

Index No.	Part No.	Description	Q'ty Per Assembly
31	AA06 0453	Relay Adjusting Spring	1
32	A134 3201	Cam - Toner Bottle	1
33	A153 3264	Bottle Unit Upper Hinge	1
34	AA14 3459	Knob Serew	1
101	0323 0060B	Philips Sunk Screw - M3x6	
102	0433 0050B	Pan Head Self-tapping Screw - M3x5	
103	0802 5231	Binding Self-tapping Screw - M3x6	
104	0413 0102B	Tapping Screw - M3x10	
105	0800 0072	Philips Pan Head Screw - M2.6x4	
106	0720 0040E	Retaining Ring - M4	
107	0725 0100E	Retaining Ring C - M10	
108	0434 0060B	Pan Head Self-tapping Screw - M4x6	
109	1105 0199	Clamp	

17. DEVELOPMENT UNIT (A204/A206/A207)

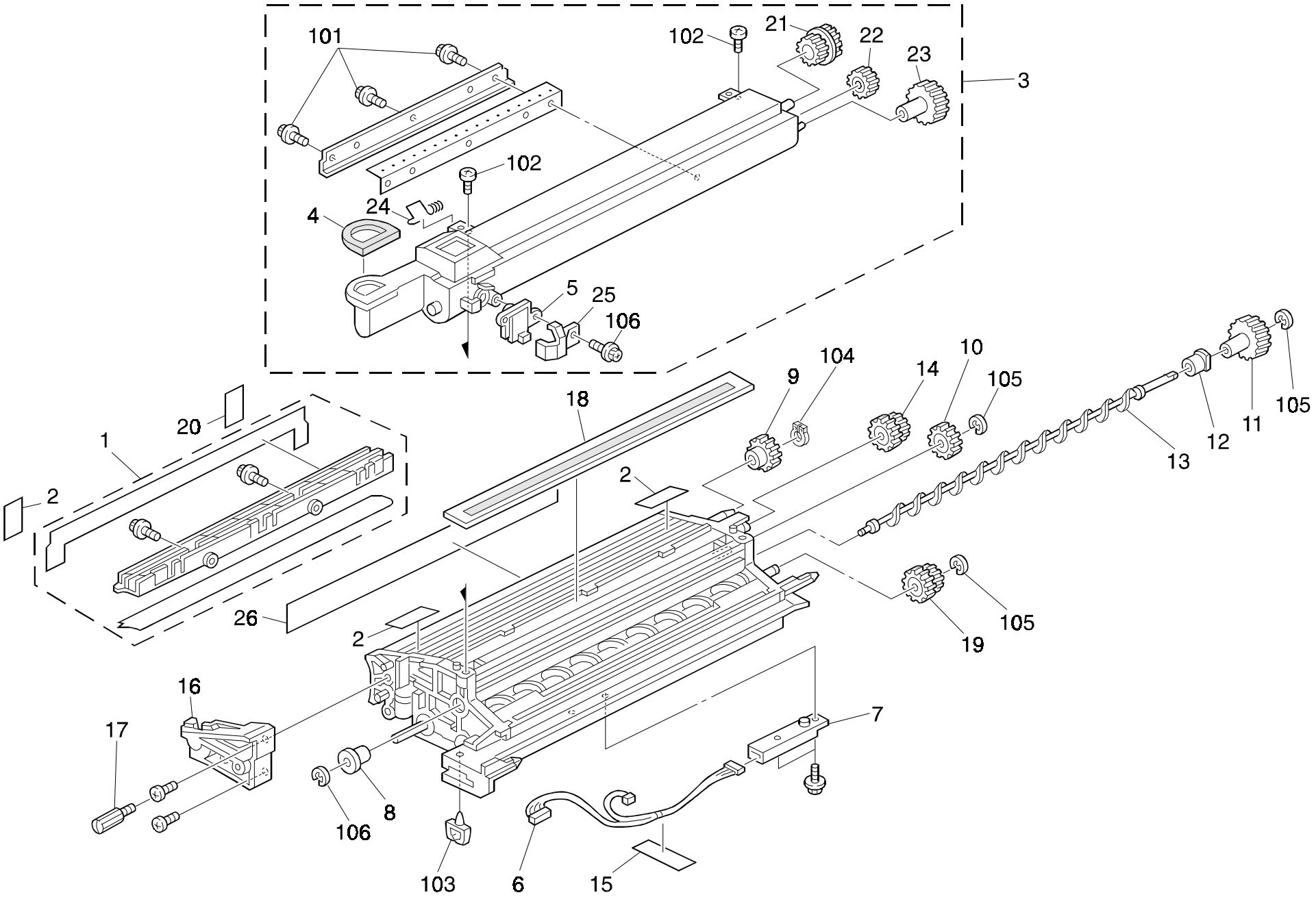

17. DEVELOPMENT UNIT (A204/A206/A207)

Index No.	Part No.	Description	Q'ty Per Assembly
*	A204 3051	Development Unit	1
1	A153 3075	Entrance Seal	1
2	AA15 0382	Entrance Seal	4
3	A204 3200	Toner Hopper Ass'y	1
4	AA15 1935	Seal - 38x32x2.5	1
5	AW23 0009	Toner End Sensor	1
6	A153 5330	Ct Harness - 7p	1
7	AW23 0008	Toner Density Sensor	1
8	AA08 0188	Bushing - 5mm	1
9	AB01 3343	Gear - 22Z	1
10	AB01 3909	Idle Gear	1
11	AB01 3911	Gear	1
12	AA08 0186	Bushing - 6mm	1
13	AD03 7045	Toner Collection Coil	1
14	AB01 7366	Paddle Gear	1
15	G012 3897	Relay Harness - Toner End Sensor	1
16	A153 3090	Development Position Plate	1
17	A153 3149	Knob Screw - M4x12	1
18	**A204 3080**	**Development Filter**	**1**
19	AB01 7367	Right Paddle Roller	1
20	AA15 0231	Seal - 15x30	1
21	AB01 7365	Coupled Gear - 15z/22z	1
22	AB01 3914	Gear - 17Z	1
23	AB01 3915	Gear - 26Z	1
24	AA06 6246	Spring	1
25	A153 3227	Toner End Sensor Cover	1
26	AA15 2334	Second Mylar	1

Index No.	Part No.	Description	Q'ty Per Assembly
101	0802 5231	Binding Self-tapping Screw - M3x6	
102	0314 0060B	Philips Pan Head Screw - M4x6	
103	1105 0199	Clamp	
104	0720 0060E	Retaining Ring - M6	
105	0720 0040E	Retaining Ring - M4	
106	0720 0030E	Retaining Ring - M3	
107	0452 3010B	Tapping Screw - M3x10	

18. DRUM UNIT 1 (A204/A206/A207)

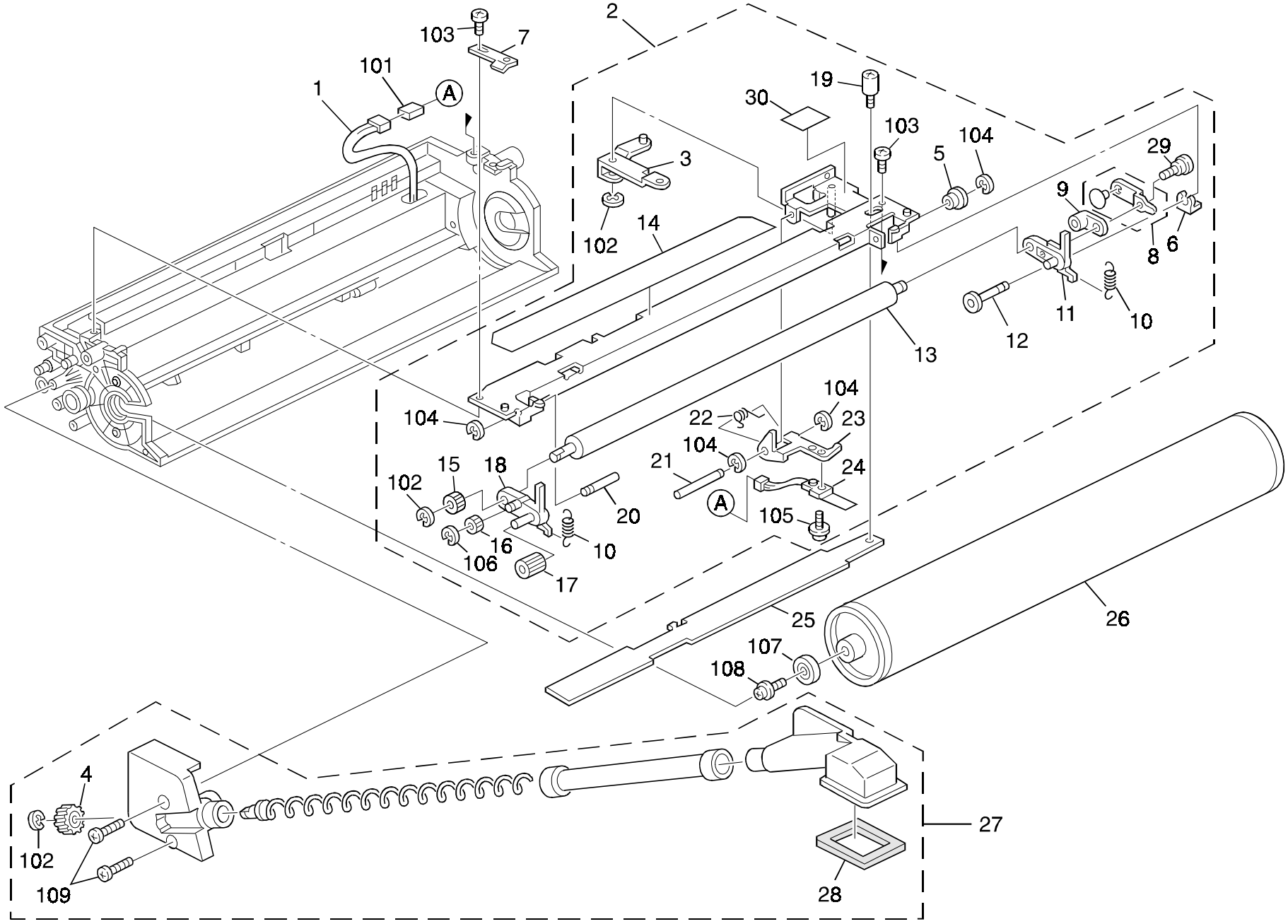

18. DRUM UNIT 1 (A204/A206/A207)

Index No.	Part No.	Description	Q'ty Per Assembly
1	AZ48 0029	Ct Harness	1
2	A204 2110	Charge Roller Ass'y	1
3	A153 2126	Swing Arm	1
4	AB01 1358	Driven Gear	1
5	AA08 0219	Rear Roller Bushing	1
6	A077 1310	Snap Ring - M2	1
7	A153 2116	Grounding Plate	1
8	**A153 2135**	**Charge Roller Terminal Ass'y**	**1**
9	AA08 0197	Rear Roller Bushing	1
10	AA06 2286	Pressure Spring	2
11	AA08 0209	Rear Roller Housing	1
12	AA14 5808	Rear Support Shaft	1
13	**AD02 7004**	**Charge Roller**	**1**
14	A153 2143	Shielding Plate	1
15	AB01 0344	Roller Gear - 20Z	1
16	AB01 0343	Idle Gear - 14z	1
17	AB01 0342	Idle Gear - 20z	1
18	AA08 0191	Front Roller Bushing	1
19	AA14 3744	Stepped Screw	1
20	AA14 5794	Front Support Shaft	1
21	AA14 8439	Thermistor Shaft	1
22	AA06 6286	Pressure Spring	1
23	A153 2133	Thermistor Bracket	1
24	AW10 0032	Thermistor - 25°c 10k Ω	1
25	**A204 2120**	**Drum Charge Roller Cleaner**	**1**
26	A153 9510	OPC Drum	1
27	A204 3580	Toner Collection Unit	1
28	AA15 1945	Joint Seal	1
29	AA14 3730	Stepped Screw	1
30	A204 2155	Decal - Caution	1

Index No.	Part No.	Description	Q'ty Per Assembly
101	1102 6613	Relay Terminal - 2P	
102	0720 0040E	Retaining Ring - M4	
103	0313 0060B	Philips Pan Head Screw - M3x6	
104	0720 0015E	Retaining Ring - 1.5	
105	0951 3008B	Philips Screw With Flat Washer - M3x8	
106	0720 0020E	Retaining Ring - M2	
107	0805 3471	Bushing - M8x22x7	
108	0951 5010B	Philips Screw With Washer - M5x10	
109	0802 5233	Binding Self-tapping Screw - M3x10	

19. DRUM UNIT 2 (A204/A206/A207)

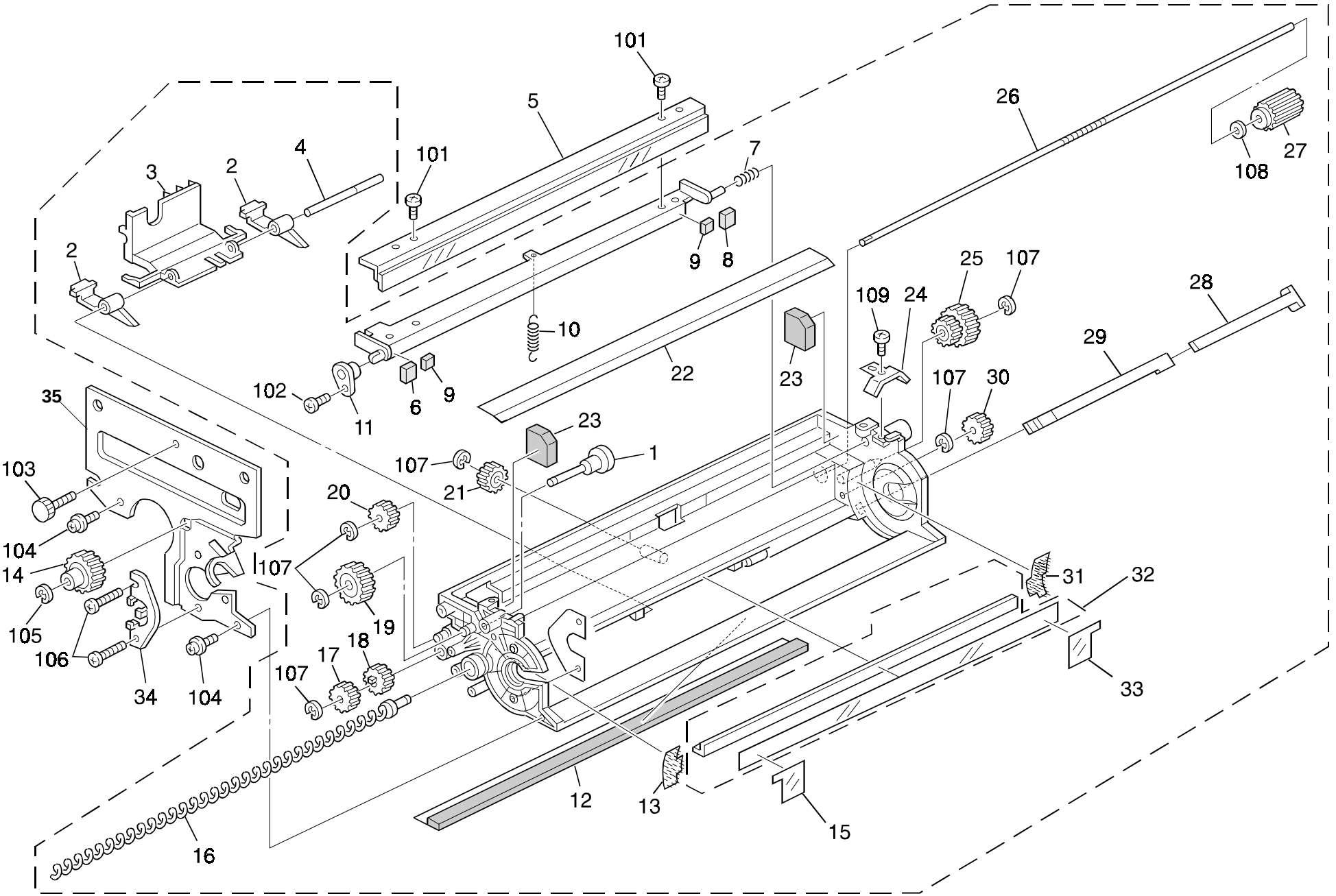

19. DRUM UNIT 2 (A204/A206/A207)

Rev. 12/02/97

Index No.	Part No.	Description	Q'ty Per Assembly
*	A204 2256	Drum Unit	1
1	AB01 0341	Gear - 18Z	1
2	**AD02 5019**	**Drum Pick-off Pawl**	**2**
3	A153 3595	Pick-off Pawl Retainer	1
4	AA14 0321	Pick-off Pawl Shaft	1
5	**A153 2277**	**Cleaning Blade**	**1**
6	AA15 1943	Front Seal	1
7	G006 4317	Pressure Spring	1
8	AA15 1944	Rear Seal	1
9	AA15 1809	Rear Seal	2
10	AA06 0598	Pressure Spring	1
11	A204 3568	Rear Bushing	1
12	AA15 0389	Drum Guide Seal	1
13	AA15 2245	Front Drum Seal	1
14	AB01 1361	Drive Gear - 33Z	1
15	AA15 0380	Seal Front Holder	1
16	AD04 3035	Toner Collection Coil	1
17	AB01 7375	Drive Gear - 16Z	1
18	AB01 7374	Drive Gear - 12Z	1
19	AB01 7388	Blade Cam - 40Z	1
20	AB01 1360	Idle Gear - 19Z	1
21	AB01 7376	Separation Pawl Cam - 40Z	1
22	A153 3558	Blade Seal	1
23	AA15 1942	Side Seal	2
24	A153 3570	Spring Plate	1
25	AB01 7373	Idle Cam - 16/28Z	1
26	AA14 0560	Joint Shaft	1
27	AB01 1359	Joint Drive Gear - 20Z	1
28	A153 3590	Density Sensor Bracket	1
29	A153 5132	Density Sensor	1
30	AB01 1357	Collection Coil Gear - 15Z	1
31	AA15 2246	Rear Drum Seal	1
32	A153 3555	Cleaning Entrance Seal	1
33	AA15 0381	Seal Rear Holder	1
34	A153 2303	Grounding Plate	1

Index No.	Part No.	Description	Q'ty Per Assembly
35	A1532301	Front Stay	1
101	0314 0060B	Philips Pan Head Screw - M4x6	
102	0802 5233	Binding Self-tapping Screw - M3x10	
103	0803 0017	Knob Screw - M4x6.5	
104	0965 3010B	Tapping Screw With Flat Washer M3x6	
105	0720 0030E	Retaining Ring - M3	
106	0313 0080B	Philips Pan Head Screw - M3x8	
107	0720 0040E	Retaining Ring - M4	
108	0805 3384	Bushing - 5mm	
109	0971 3006A	Philips Polycarbonate Screw - M3x6	

20. TRANSFER UNIT (A204/A206/A207)

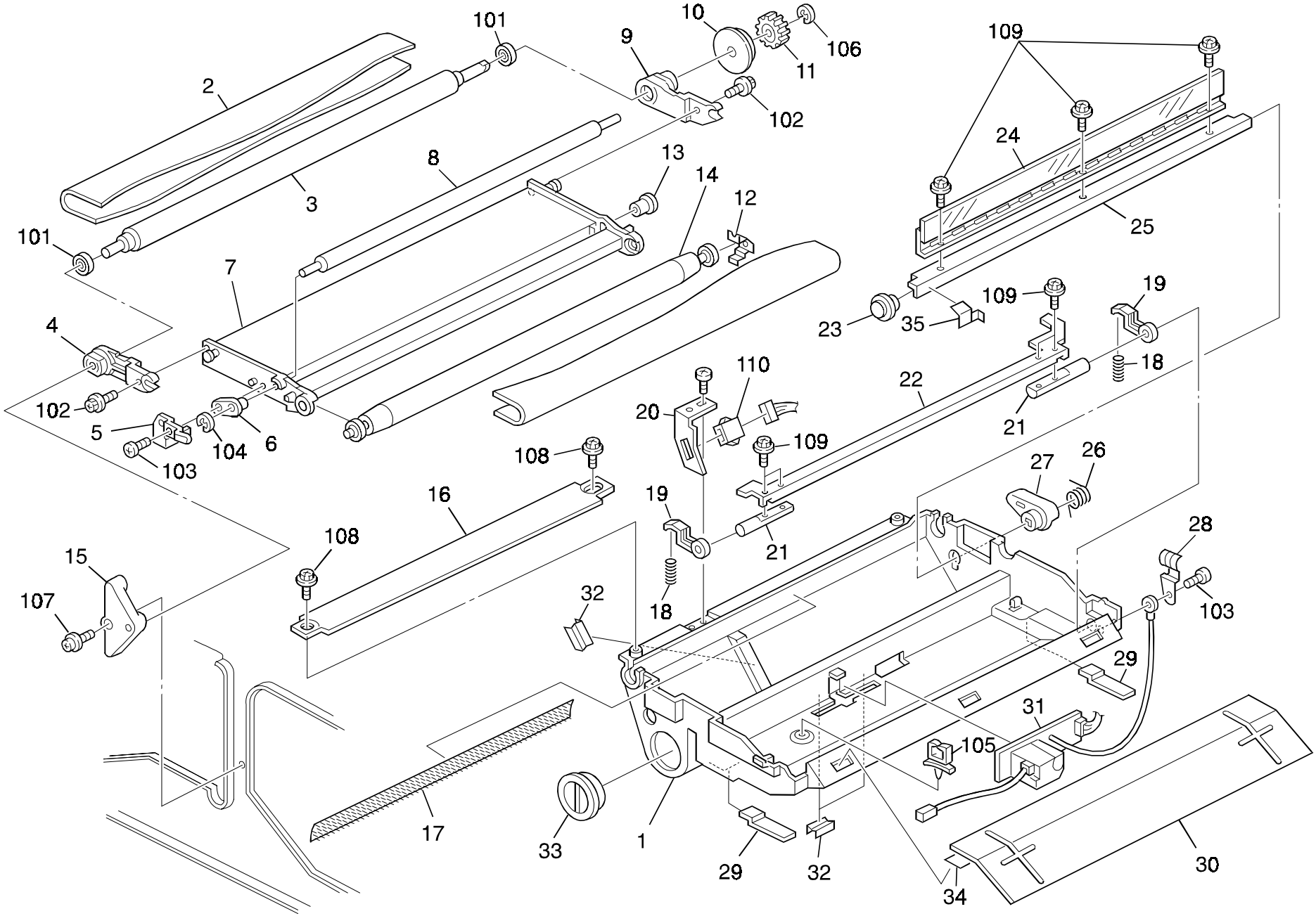

20. TRANSFER UNIT (A204/A206/A207)

Index No.	Part No.	Description	Q'ty Per Assembly
1	A153 3882	Transfer Belt Casing	1
2	**A134 3850**	**Transfer Belt**	**1**
3	A153 3866	Belt Drive Roller	1
4	A153 3863	Front Side Plate	1
5	A153 3873	Bias Roller Terminal	1
6	AA08 2061	Bias Roller Bushing - Front	1
7	A153 3862	Transfer Belt Frame	1
8	A153 3870	Transfer Bias Roller	1
9	A153 3864	Rear Side Plate	1
10	A153 3869	Drive Roller Bushing	1
11	AB01 3916	Belt Drive Gear - 25z	1
12	A153 3874	Earth Terminal	1
13	AA08 0195	Bias Roller Bushing - Rear	1
14	A153 3865	Belt Drive Roller	1
15	A153 3906	Support Plate	1
16	A153 3884	Belt Guide Plate	1
17	AA15 2332	Seal - 9x351	1
18	A077 3918	Spring - T/S Unit	2
19	A153 3886	Belt Pressure Lever	2
20	A153 3889	Connector Bracket	1
21	AA14 5537	Belt Release Shaft	2
22	A153 3887	Belt Release Stay	1
23	A153 3894	Bushing	1
24	**A153 3892**	**Belt Cleaning Blade**	**1**
25	A153 3893	Belt Cleaning Stay	1
26	AA06 6247	Torsion Spring	1
27	A153 3895	Front Bushing	1
28	A153 3888	Earth Plate	1
29	A153 3877	Spring Plate	2
30	A153 3901	Entrance Guide Plate	1
31	AZ30 0041	Power Pack - Transfer Unit	1
32	A153 3897	Harness Clamp	3
33	A153 3883	Toner Collection Cap	1
34	A153 3591	Mylar - 17x335	1
35	A153 3923	Spacer:bearing:cleaning:transfer Be	1

Index No.	Part No.	Description	Q'ty Per Assembly
101	0805 3485	Bushing - 8x12x3.5mm	
102	0443 0080B	Tapping Screw - M3x8	
103	0802 5232	Binding Self-tapping Screw - M3x8	
104	0720 0030E	Retaining Ring - M3	
105	1105 0196	Harness Clamp	
106	0720 0060E	Retaining Ring - M6	
107	0964 4008B	Tapping Screw With Flat Washer - M4x8	
108	0965 3008B	Tapping Screw With Washer - M3x8	
109	0443 0060B	Hexagon Tapping Screw - M3x6	
110	1102 5194	Connector - 7p	

21. FUSING UNIT 1 (A204/A206/A207)

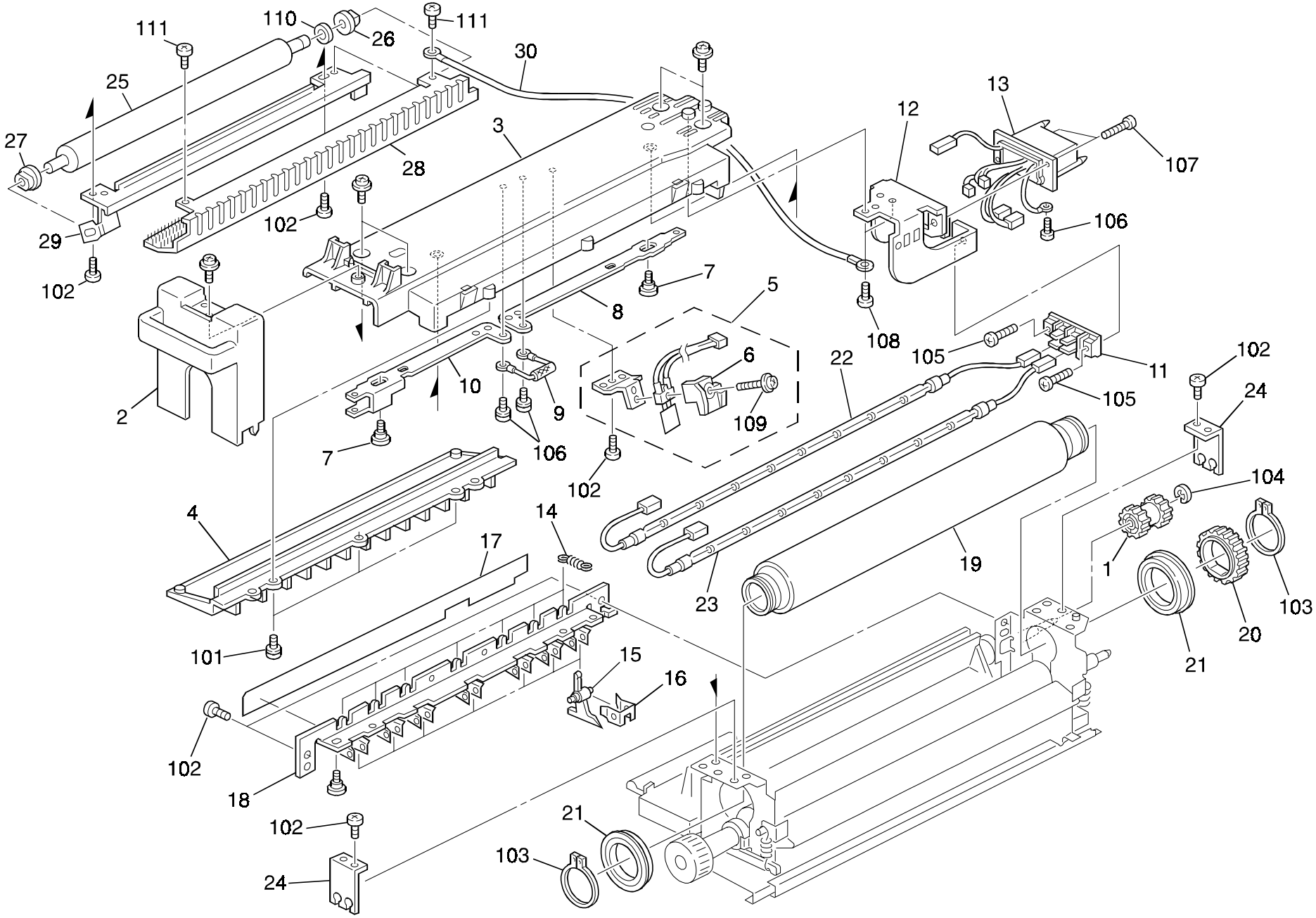

21. FUSING UNIT 1 (A204/A206/A207)

Rev. 02/16/2001

Index No.	Part No.	Description	Q'ty Per Assembly
*	A204 4006	Fusing Unit - 120V (NA)	1
*	A204 4007	Fusing Unit - 110V (TWN)	1
*	A204 4008	Fusing Unit - 230V (EU)	1
1	AB01 3883	Idle Gear - 25z	1
2	A134 4130	Fusing Front Cover	1
3	A204 4200	Upper Frame	1
4	A204 4055	Upper Plate - Fusing Entrance Guide	1
5	A153 4088	Thermistor	1
6	A153 4087	Thermistor holder	1
7	AA14 3715	Stepped Screw - M5	2
8	A134 4061	Rear Terminal Plate	1
9	A204 4160	Thermofuse - 172c	1
10	A204 4063	Front Terminal	1
11	A153 4074	Terminal Connector - 2p	1
12	A204 4084	Fusing Connector Bracket	1
13	A204 5300	Fusing Unit Connector - 120V	1
13	A204 5665	Fusing Unit Connector - 230V	1
14	AA06 0103	Solenoid Spring	7
15	AE04 4019	Hot Roller Stripper	7
16	A153 4114	Stripper Stopper	7
17	A204 4115	Shielding Plate	1
18	A204 4312	Stripper Pawl Bracket	1
19	AE01 1045	Hot Roller	1
20	AB01 3882	Gear - 40Z	1
21	AE03 0026	Ball Bearing - 30x42x7	2
22	AX43 0039	Fusing Lamp - 230V 350W (EU)	1
22	AX43 0038	Fusing Lamp - 120V 350W (NA)	1
22	AX43 0043	Fusing Lamp - 110V 350W (TWN)	1
23	AX44 0099	Fusing Lamp - 230V 800W (EU)	1
23	AX44 0098	Fusing Lamp - 120V 800W (NA)	1
23	AX44 0102	Fusing Lamp - 110V 800W (TWN)	1
24	A204 4171	Heater Holder	2
25	AE04 0019	Oil Supply Roller	1
26	AA08 3016	Roller Clutch:6x14x10	1
27	AE03 1028	Bushing - 4mm	1
28	A204 4213	Cleaning Brush - Oil Supply Roller	1
29	A204 4217	Support Bracket-oil Supply Roller	1
30	A204 4221	Grounding Wire Oil Supply	1
101	0957 3006B	Screw - M3x6	
102	0314 0060B	Philips Pan Head Screw - M4x6	
103	0725 0300E	Retaining Ring C - M30	
104	0720 0060E	Retaining Ring - M6	
105	0313 0080B	Philips Pan Head Screw - M3x8	
106	0950 4006M	Philips Screw With Flat Washer - M4x6	
107	0314 0120B	Philips Pan Head Screw - M4x12	
108	0954 4008B	Philips Screw - M4x8	
109	0954 3012B	Screw - M3x12	
110	0807 4072	Washer - Core	
111	0314 0040B	Philips Pan Head Screw - M4x4	

22. FUSING UNIT 2 (A204/A206/A207)

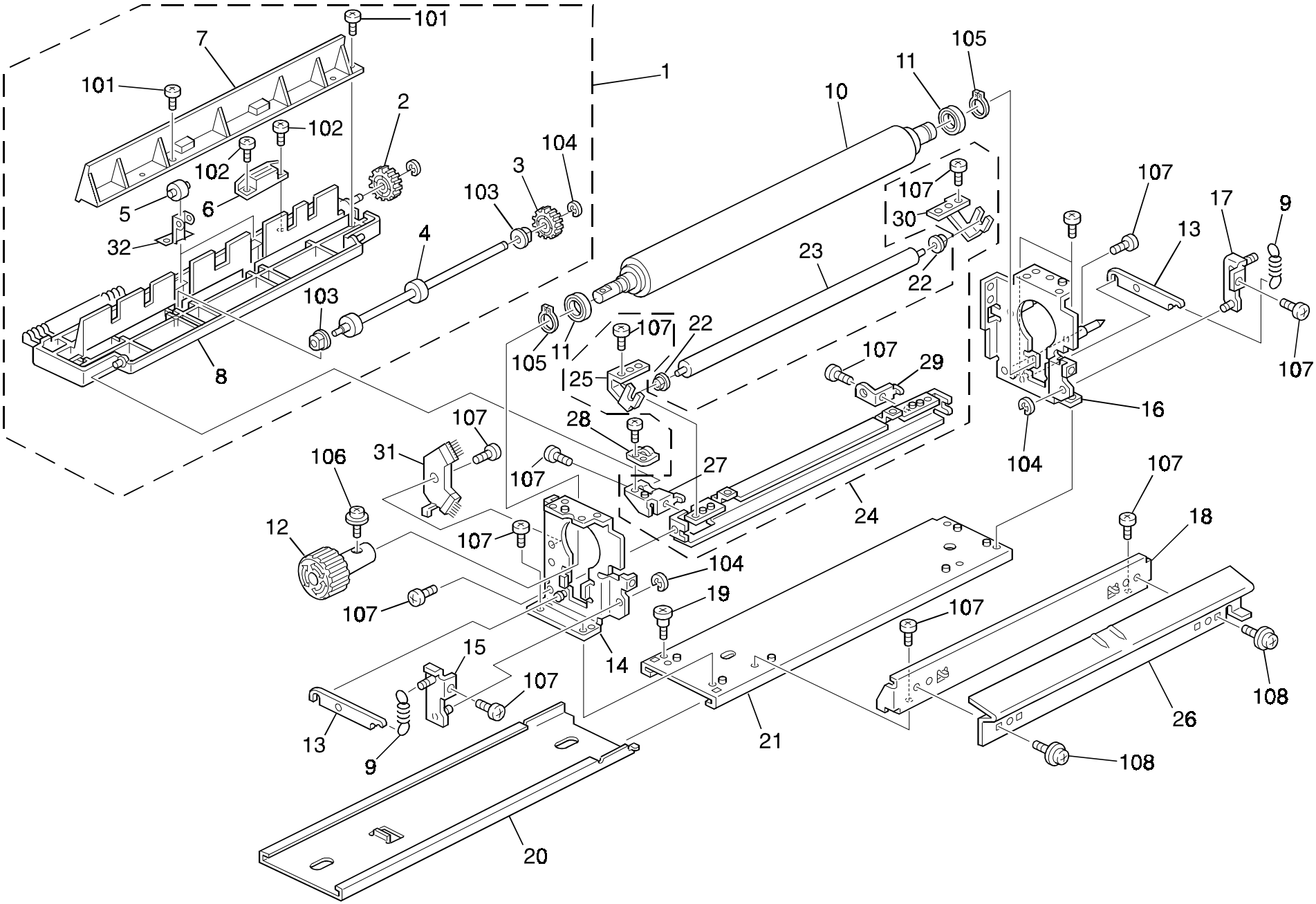

22. FUSING UNIT 2 (A204/A206/A207)

Index No.	Part No.	Description	Q'ty Per Assembly
1	A134 4006	Fusing Exit Unit	1
2	AB01 3885	Idle Gear - 20z	1
3	AB01 3884	Exit Gear - 17z	1
4	AF02 0326	Exit Roller Ass'y	1
5	AF04 0548	Exit Drive Roller	2
6	AG07 0009	Magnetic Catch	1
7	A134 4280	Fusing Exit Guide - Lower	1
8	A153 4250	Fusing Exit Frame	1
9	AA06 2292	Tension Spring	2
10	**AE02 0050**	**Pressure Roller**	**1**
11	AE03 0022	Bearing - 12x24x64m	2
12	AG05 0076	Fusing Knob	1
13	A134 4161	Pressure Lever	2
14	A204 4101	Front Side Plate	1
15	A204 4181	Front Release Lever	1
16	A204 4110	Rear Side Plate	1
17	A204 4185	Rear Release Lever	1
18	A204 4116	Entrance Guide Stay	1
19	A077 4162	Shoulder Screw - M3	1
20	A134 4153	Slide Rail - Fusing	1
21	A204 4151	Fusing Unit Base	1
22	AE03 1028	Bushing - 4mm	2
23	**AE04 2030**	**Cleaning Roller**	**1**
24	A204 4270	Cleaning Roller Bracket	1
25	A153 4207	Front Guide Plate	1
26	A153 4197	Lower Fusing Guide	1
28	A204 4072	Front Holder	1
29	A204 4073	Rear Holder	1
30	A153 4208	Rear Guide Plate	1
31	A217 4123	Discharge Brush	1
32	A134 4272	Roller Holder	2

Index No.	Part No.	Description	Q'ty Per Assembly
101	0802 5236	Binding Self-tapping Screw - M4x8	
102	0434 0082B	Tapping Screw - M4x8	
103	0805 3480	Bushing - 6mm	
104	0720 0040E	Retaining Ring - M4	
105	0725 0120E	Retaining Ring C - M12	
106	0950 4008B	Philips Screw With Spring Washer	
107	0314 0060B	Philips Pan Head Screw - M4x6	
108	0951 4008B	Philips Screw With Washer - M4x8	

23. DUPLEX TRAY 1 (A207)

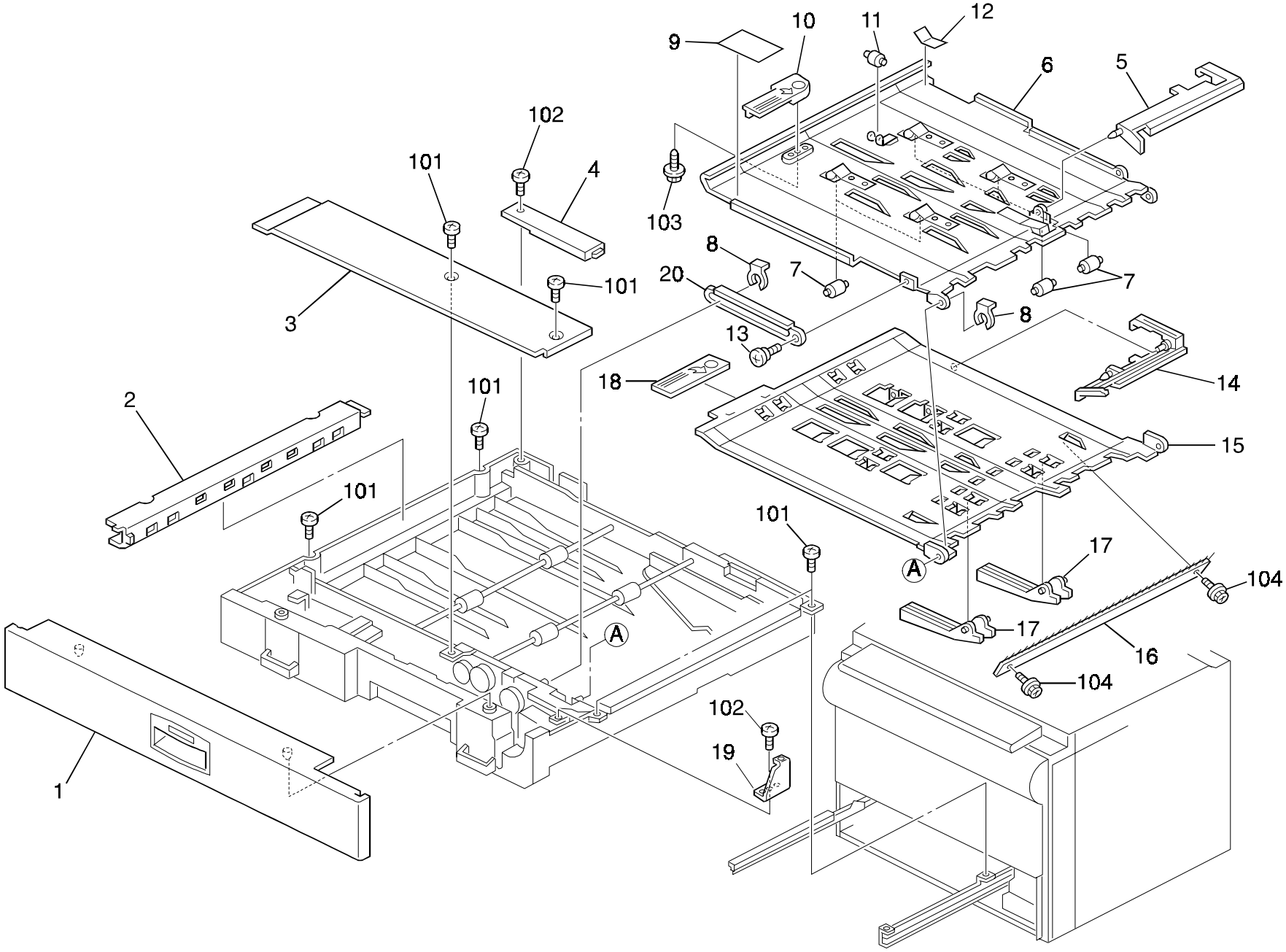

23. DUPLEX TRAY 1 (A207)

Rev. 05/30/2000

Index No.	Part No.	Description	Q'ty Per Assembly
*	A207 4610	Duplex Tray Ass'y	1
1	A134 2956	Paper Feed Front Cover	1
2	A134 4720	End Fence Upper Cover	1
3	A134 4701	Front Upper Cover	1
4	A134 4721	Connector Cover	1
5	A134 4728	Inverter Feeler	1
6	A134 4732	Upper Guide Plate	1
7	AF02 2077	Driven Roller	7
8	5206 2686	Snap Ring	2
9	A134 4884	Decal - Duplex Misfeed Removal	1
10	A134 4726	Guide Plate Knob	1
11	G694 4747	Guide Plate Holder	1
12	AA16 2068	Guide Plate Pad	1
13	5447 2768	Stepped Screw - M3	1
14	A134 4730	Entrance Feeler	1
15	A134 4740	Lower Guide Plate	1
16	AA12 0067	Anti Static Brush	1
17	A154 4616	Paper Holder	6
18	A134 4739	Lower Guide Plate Knob	1
19	A134 4712	Right Cover Bracket	1
20	A134 4619	Guide Plate Link	1

Index No.	Part No.	Description	Q'ty Per Assembly
101	0344 0080F	Philips Truss Head Screw - M4x8	
102	0802 5236	Binding Self-tapping Screw - M4x8	
103	0802 5231	Binding Self-tapping Screw - M3x6	
104	0443 0060W	Hexagon Head Tapping Screw - M3x6	

24. DUPLEX TRAY 2 (A207)

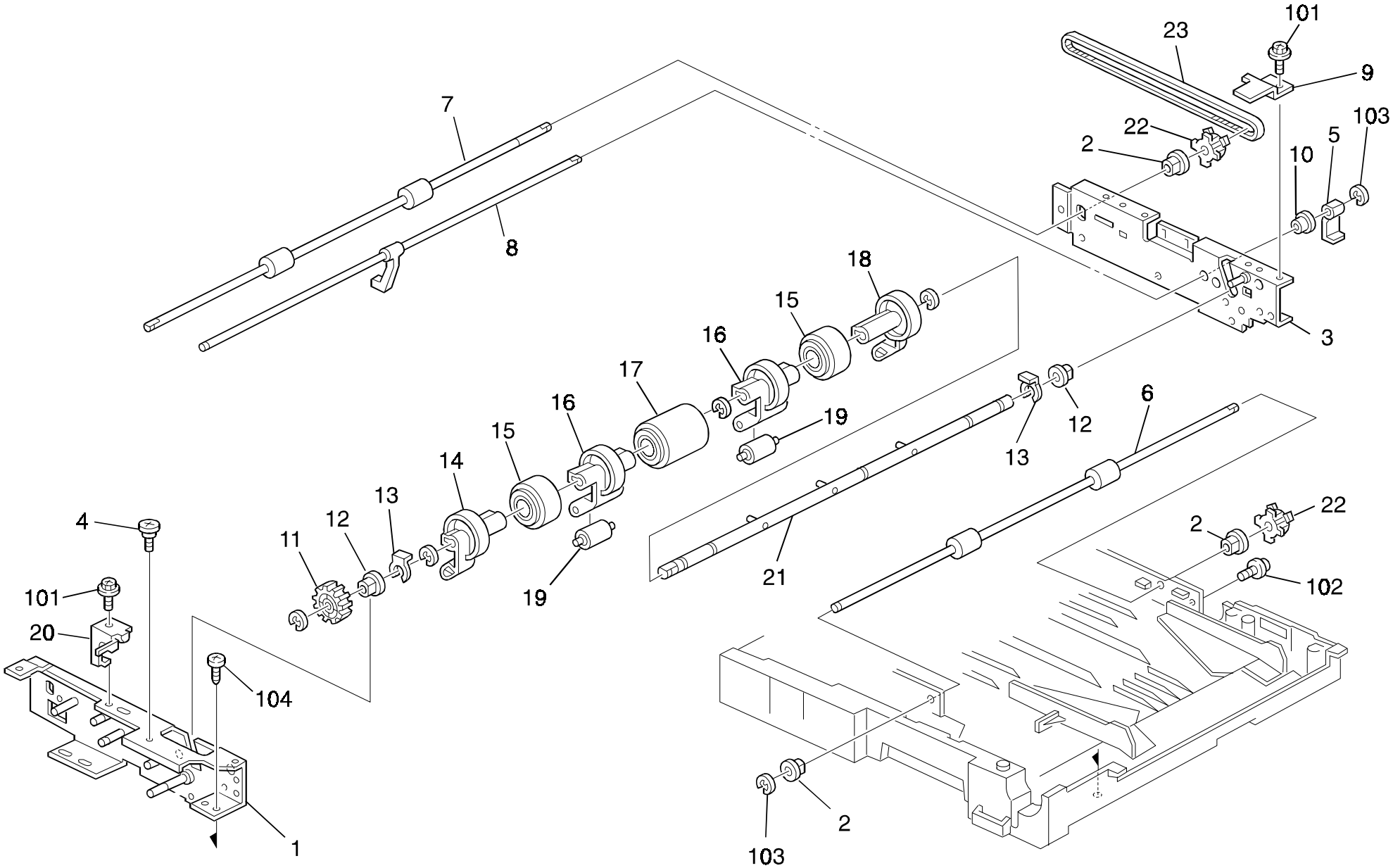

24. DUPLEX TRAY 2 (A207)

Index No.	Part No.	Description	Q'ty Per Assembly
1	A134 4751	Front Side Plate	1
2	5053 0447	Bushing - 6mm	3
3	A134 4781	Rear Side Plate	1
4	AA14 3307	Stepped Screw - M3x4	1
5	AA11 1208	Paper End Sensor Feeler	1
6	AF02 0319	Transport Roller	1
7	AF02 0320	Right Transport Roller	1
8	A134 4676	Paper End Feeler	1
9	A134 4804	Guide Plate Stopper	1
10	5443 2668	Bushing - 4x6x7mm	1
11	AB01 1166	Gear - 33Z	1
12	5304 1639	Bushing - 8mm	2
13	5215 2621	Snap Ring - M6	2
14	A134 4809	Front Guide Holder	1
15	AF02 0317	Stack Roller	2
16	A134 4649	Paper Guide Holder	2
17	**AF03 1024**	**Feed Roller**	**1**
18	A134 4808	Rear Guide Holder	1
19	AF02 2077	Driven Roller	2
20	A134 4690	Clutch Stopper	1
21	A134 4512	Feed Roller Shaft	1
22	AB03 0474	Pulley - 24Z	2
23	AA04 3373	Timing Belt - S2M308	1

Index No.	Part No.	Description	Q'ty Per Assembly
101	0443 0060B	Hexagon Tapping Screw - M3x6	
102	0951 4008B	Philips Screw With Washer - M4x8	
103	0720 0040E	Retaining Ring - M4	
104	0802 5236	Binding Self-tapping Screw - M4x8	

25. DUPLEX TRAY 3 (A207)

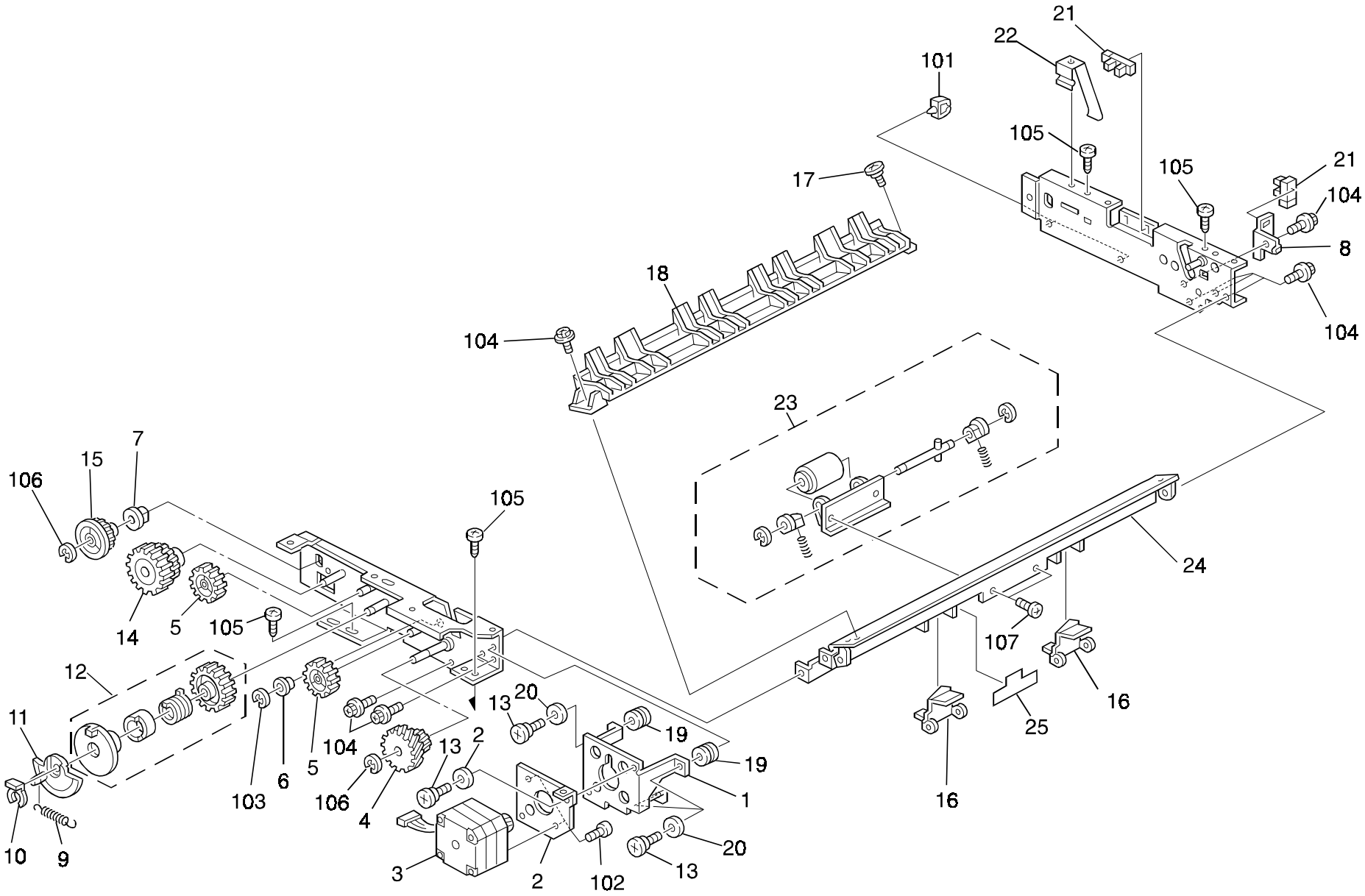

25. DUPLEX TRAY 3 (A207)

Index No.	Part No.	Description	Q'ty Per Assembly
1	A134 4799	Motor Bracket	1
2	A134 4800	Motor Bracket	1
3	A134 5290	Transport Drive Motor - DC3.15V 8.82W	1
4	AB01 7337	Gear - 15Z/55Z	1
5	AB01 1165	Gear - 32Z	2
6	5443 2668	Bushing - 4x6x7mm	1
7	5053 0447	Bushing - 6mm	4
8	A134 4790	Paper End Sensor Bracket	1
9	AA06 0593	Spring	1
10	5447 2681	Snap Ring	1
11	A334 4706	Disk - Bottom Plate Clutch	1
12	AB04 0015	Spring Clutch - Tray Bottom Plate	1
13	A079 3626	Stepped Screw - Swing Cleaning	3
14	AB01 7332	Gear - 24Z/41Z	1
15	AB01 1167	Gear - 25Z	1
16	A154 4623	Vibrating Plate	2
17	AA14 3307	Stepped Screw - M3x4	1
18	A134 4508	Inverter Guide Plate	1
19	AA16 1067	Cushion - Motor	3
20	AA13 2184	Motor Cushion	3
21	AW02 0075	Photointerrupter	2
22	A134 4765	Grounding Plate	1
23	A134 4527	Separation Roller	1
24	A134 4662	Duplex Guide Plate	1
25	A134 4670	Duplex Guide Mylar	1

Index No.	Part No.	Description	Q'ty Per Assembly
101	1105 0199	Clamp	
102	0313 0050B	Philips Pan Head Screw - M3x5	
103	0720 0030E	Retaining Ring - M3	
104	0443 0060B	Hexagon Tapping Screw - M3x6	
105	0802 5236	Binding Self-tapping Screw - M4x8	
106	0720 0040E	Retaining Ring - M4	
107	0434 0060B	Pan Head Self-tapping Screw - M4x6	

26. DUPLEX TRAY 4 (A207)

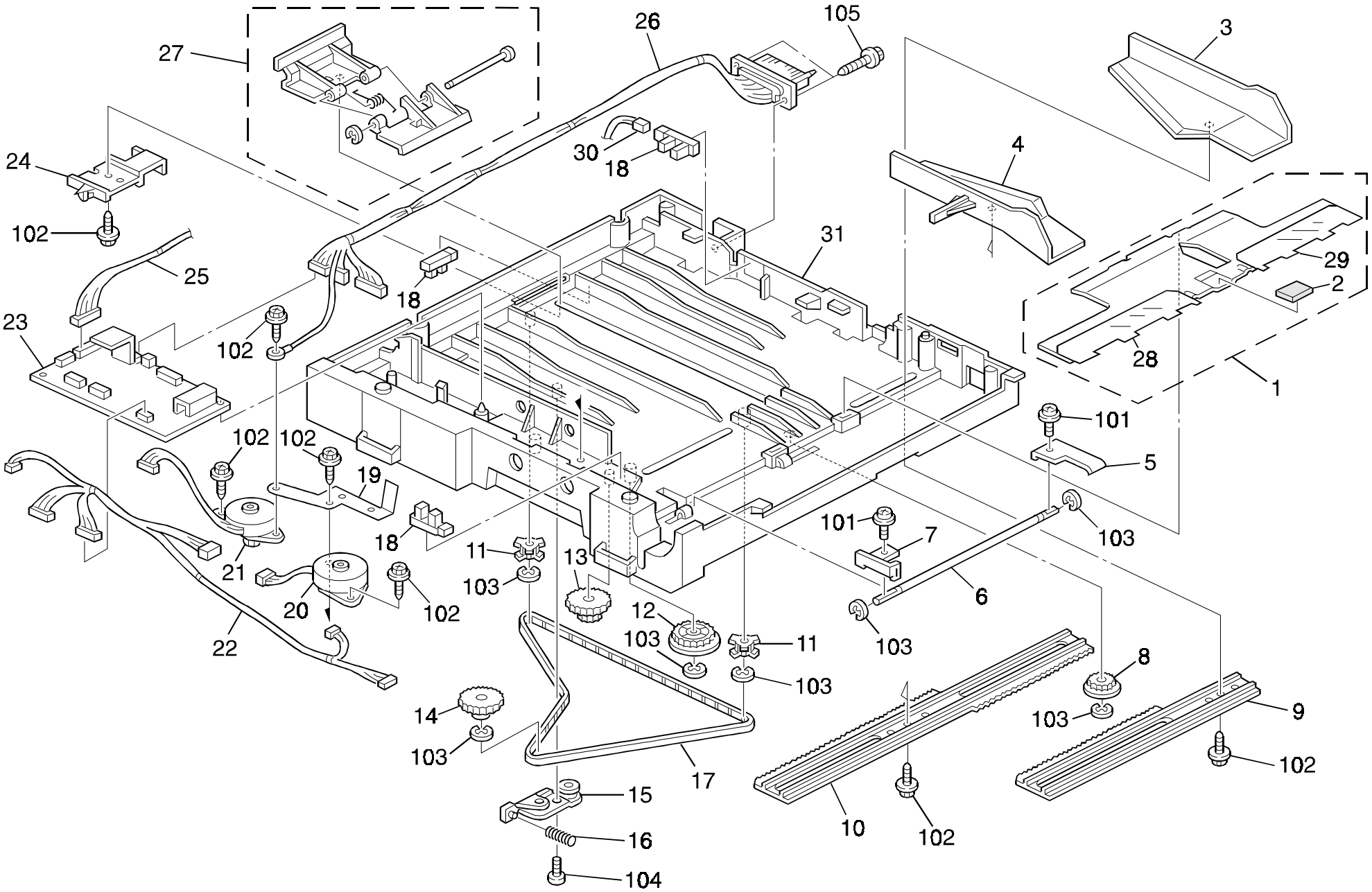

26. DUPLEX TRAY 4 (A207)

Index No.	Part No.	Description	Q'ty Per Assembly
1	A154 4620	Bottom Plate	1
2	**AF01 3003**	**Bottom Plate Pad - Duplex**	**1**
3	AF01 6160	Rear Side Fence	1
4	AF01 6161	Front Side Fence	1
5	A204 4651	Bottom Pressure Plate	1
6	AA14 0291	Bottom Plate Shaft	1
7	A491 4690	Bottom Plate Hook	1
8	G011 3305	Gear - 16T	1
9	A134 4689	Rear Side Fence Rack	1
10	A134 4688	Front Side Fence Rack	1
11	AB03 0473	End Fence Pulley - 22z	2
12	AB01 3881	Gear - 31Z	1
13	AB01 7400	Gear- 18z/68z	1
14	AB01 7339	End Fence Gear - 22z/58z	1
15	A134 4714	Tightener	1
16	AA06 3370	Spring	1
17	AA04 3374	Timing Belt - S2M800	1
18	AW02 0075	Photointerrupter	3
19	A134 4620	Grounding Plate	1
20	A134 5291	Jogger Drive Motor DC 6.48W	1
21	A134 5292	Jogger Drive Motor DC 10.56W	1
22	A134 5323	Motor Harness	1
23	A158 5191	Duplex Control Board	1
24	A134 4710	End Fence Actuator	1
25	A134 5321	Sensor Relay Harness	1
26	A134 5320	Duplex Main Harness	1
27	A134 4525	End Fence	1
28	A154 4621	Front Guide Plate	1
29	A154 4622	Rear Guide Plate	1
30	A134 5322	End Fence Harness	1
31	AF01 0018	Duplex Tray	1

Index No.	Part No.	Description	Q'ty Per Assembly
101	0951 3006B	Philips Screw With Flat Washer - M3x6	
102	0802 5232	Binding Self-tapping Screw - M3x8	
103	0720 0040E	Retaining Ring - M4	
104	0802 5236	Binding Self-tapping Screw - M4x8	
105	0802 5234	Tapping Screw - M3x12	

27. PAPER EXIT SECTION (A204/A206/A207)

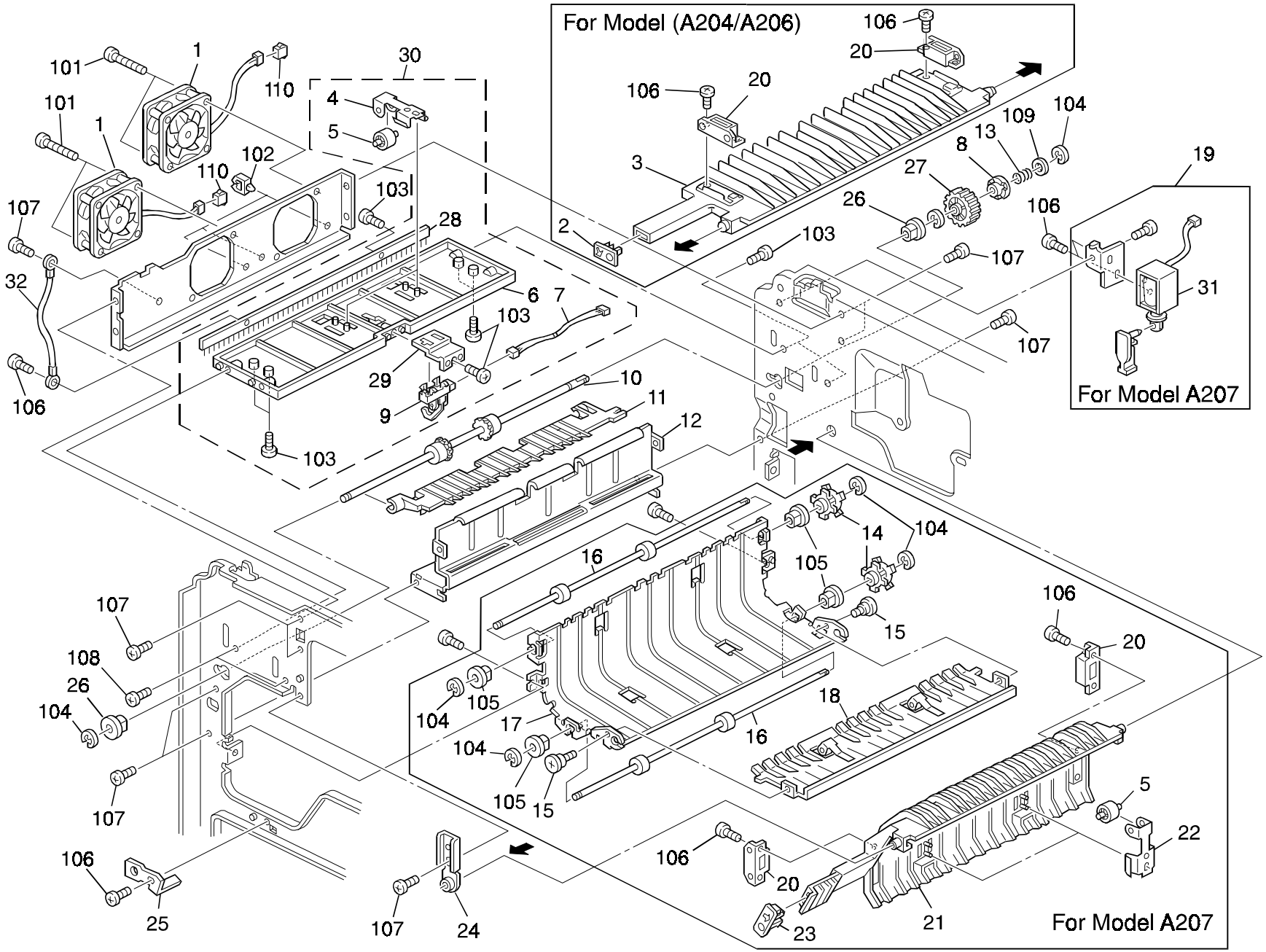

27. PAPER EXIT SECTION (A204/A206/A207)

Index No.	Part No.	Description	Q'ty Per Assembly
1	AX64 0059	Fan Motor - DC24V 3.12W	2
2	A153 4458	Exit Unit Knob (A204/A206)	1
3	A153 4454	Lower Guide Plate	1
4	A153 4453	Exit Driven Roller	2
5	AF04 0031	Upper Exit Roller	2
6	A153 4451	Upper Guide Plate	1
7	A153 5328	Ct Harness	1
8	A470 1703	Shift Clutch	1
9	AW02 0074	Sensor Actuator	1
10	AF02 0327	Exit Roller	1
11	AF02 5023	Exit Pick-off Pawl	1
12	A134 4459	Exit Cover	1
13	A470 1704	Spring - Lower Exit Roller	1
14	AB03 0536	Pulley - 18T S2M	2
15	AA14 3062	Shoulder Screw - M4	2
16	AF02 0328	Relay Drive Roller	2
17	A134 4464	Left Reverse Guide	1
18	A154 4465	Reverse Guide Plate - Right Lower	1
19	A134 4471	Stripper Solenoid	1
20	AG07 0004	Magnetic Catch	2
21	A154 4462	Reverse Guide Plate - Upper Right	1
22	A154 4469	Reverse Roller Holder - Upper Right	2
23	A134 4458	Exit Unit Knob (A207)	1
24	A134 4455	Upper Guide Bracket	1
25	A134 4468	Lower Guide Plate Bracket	1
26	AA08 2058	Bushing - 6x10x9mm	2
27	AB01 3889	Gear - 24Z	1
28	AA12 0071	Exit Antistatic Brush	1
29	A153 4456	Photointerruptor Bracket	1
30	A153 4451	Upper Guide Plate	1
31	AX12 0039	DC Solenoid - 24V - 400gf	1
32	A204 4452	Grounding Wire	1

Index No.	Part No.	Description	Q'ty Per Assembly
101	0353 0300B	Bind Screw - M3x30	
102	1105 0199	Clamp	
103	0802 5236	Binding Self-tapping Screw - M4x8	
104	0720 0040E	Retaining Ring - M4	
105	0805 3480	Bushing - 6mm	
106	0434 0082B	Tapping Screw - M4x8	
107	0434 0060B	Pan Head Self-tapping Screw - M4x6	
108	0434 0100B	Pan Head Self-tapping Screw - M4x10	
109	0807 4072	Washer - Core	
110	1102 4473	Ct Connector - 2p	

28. DRIVE SECTION 1 (A204/A206/A207)

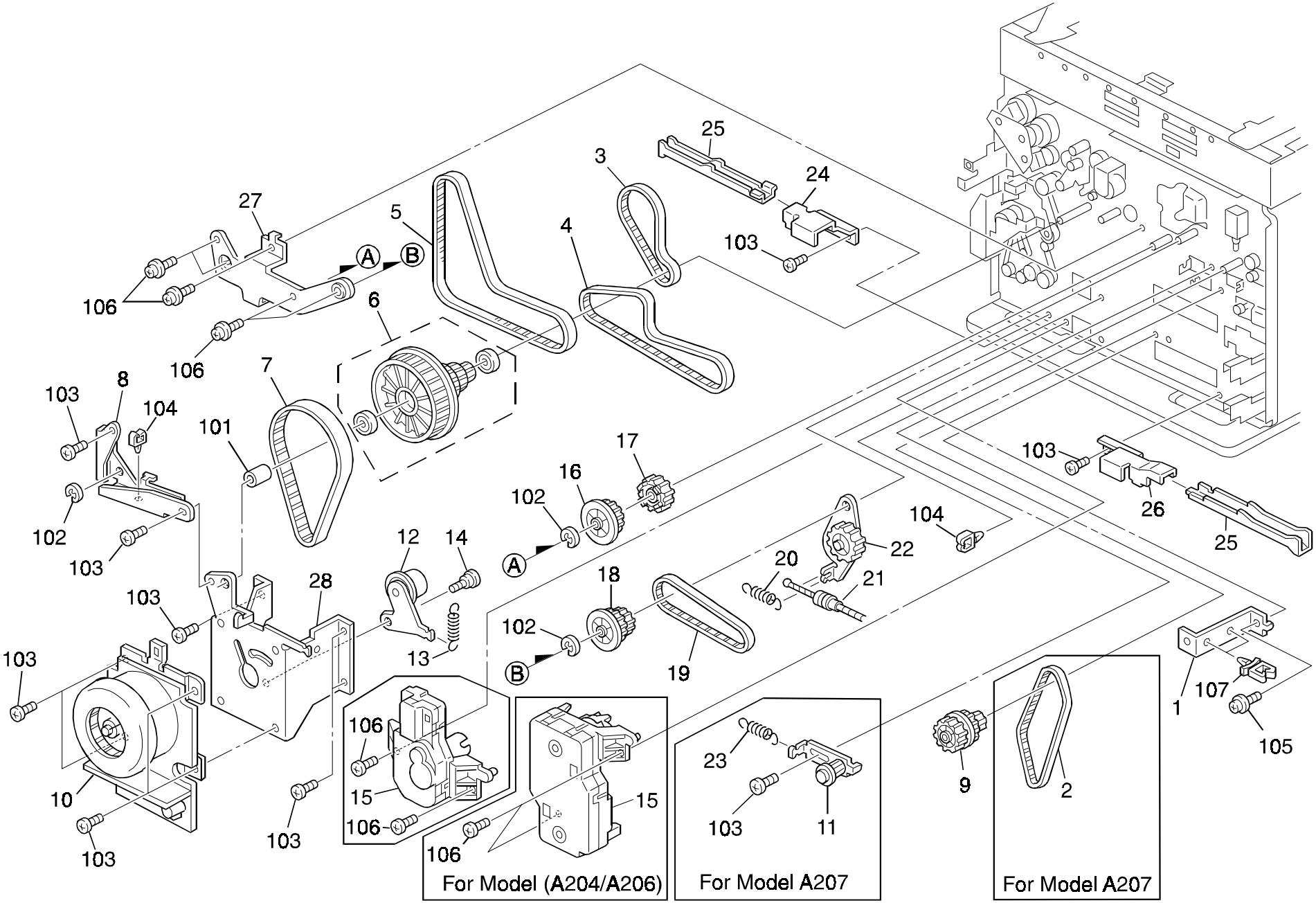

28. DRIVE SECTION 1 (A204/A206/A207)

Index No.	Part No.	Description	Q'ty Per Assembly
1	A153 5802	Lower Bracket - DC Drive Board	1
2	AA04 3411	Timing Belt - S2M 300 (A207)	1
3	AA04 3392	Drum Timing Belt	1
4	AA04 3394	Timing Belt - 60S3M459	1
5	AA04 3420	Timing Belt - 80S3M519	1
6	AB03 0492	Pulley - 25/25/34/125Z	1
7	AA04 3430	Timing Belt - 160S2M330	1
8	A204 1131	Development Support Plate	1
9	AB01 7346	Exit Gear	1
10	AX07 0020	Brushless Motor - DC24V 86W	1
11	A134 4481	Tightener Bracket (A207)	1
12	A153 1128	Tightener	1
13	AA06 0228	Spring - Transfer Drum Cleaning Sol	1
14	C105 2352	Stepped Screw - M6x1.7	1
15	A153 2936	Tray Lift Motor (A207)	1
15	A204 2936	Tray Lift Motor (A204/A206)	1
16	AB03 0463	Fusing Cam Pulley - 35Z	1
17	AB01 3872	Fusing Cam Gear - 28z	1
18	AB01 7345	Timing Pulley - 35Z	1
19	AA04 3395	Timing Belt - 30S3M327	1
20	5203 3151	Roller Cover Spring	1
21	AA05 1023	Release Plate	1
22	A134 1121	Joint Gear	1
23	5414 4630	Bottle Spring (A207)	1
24	A134 1072	Right Bracket - Grip Plate	1
25	A134 1071	Left Grip Plate	2
26	A134 1073	Left Bracket - Grip Plate	1
27	A204 1135	Fusing Unit Support Plate	1
28	A153 1107	Bracket - Brushless Motor	1

Index No.	Part No.	Description	Q'ty Per Assembly
101	0707 8140B	Bushing - 8x14mm	
102	0720 0060E	Retaining Ring - M6	
103	0434 0060B	Pan Head Self-tapping Screw - M4x6	
104	1105 0199	Clamp	
105	0964 4008B	Tapping Screw With Flat Washer - M4x8	
106	0960 3006B	Philips Flange Screw - M3 X 6	
107	1105 0328	Harness Clamp - ES-0505	

29. DRIVE SECTION 2 (A204/A206/A207)

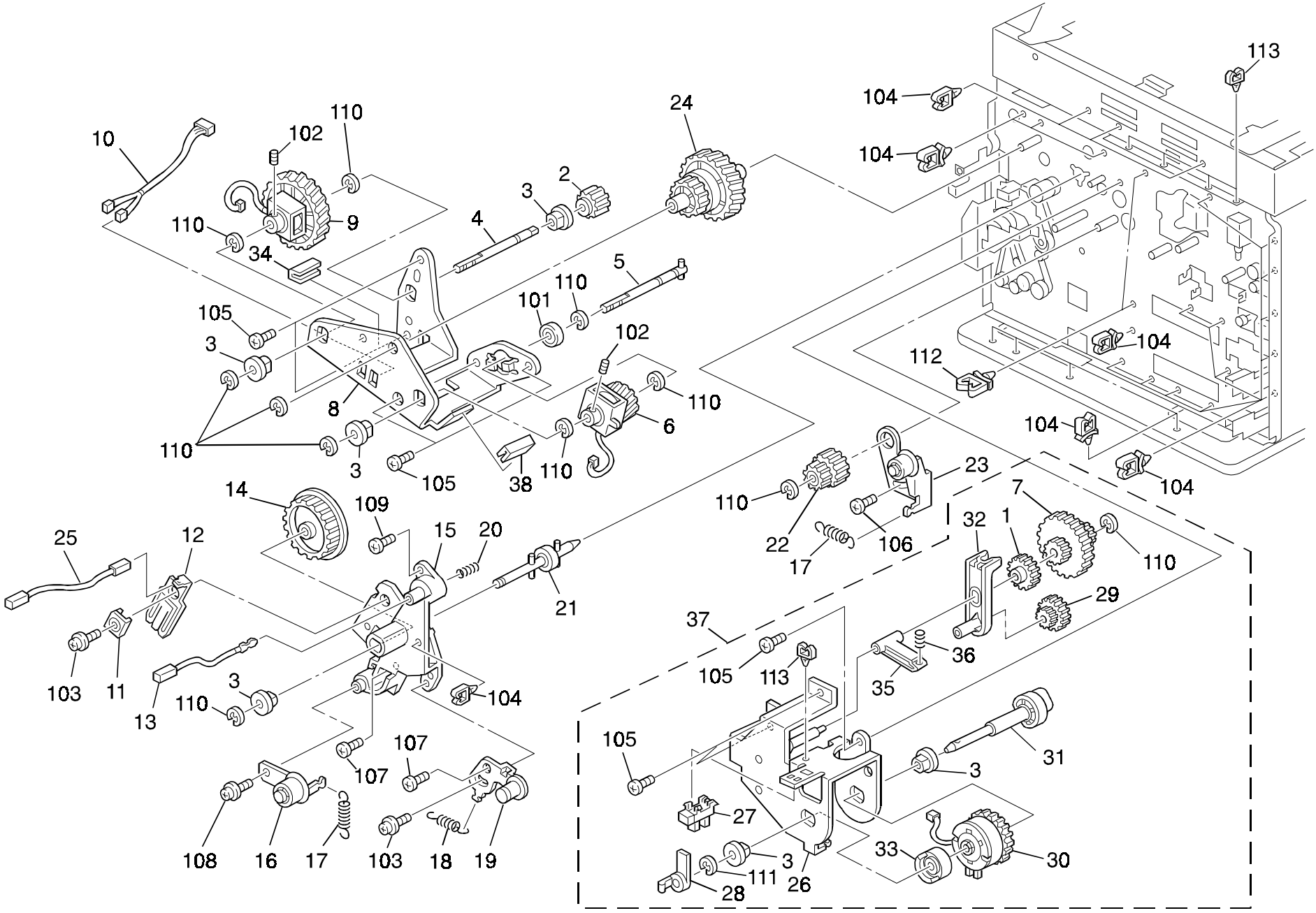

29. DRIVE SECTION 2 (A204/A206/A207)

Index No.	Part No.	Description	Q'ty Per Assembly
1	AB01 7386	Cleaning Cam - 24Z	1
2	AB01 3917	Toner Supply Gear - 14Z	1
3	AA08 2047	Bushing - 8x16x7	6
4	AA14 5539	Solenoid Shaft	1
5	A153 1127	Clutch Shaft	1
6	AX20 0105	Magnetic Clutch - 15kgf 24z	1
7	AB01 7368	Cleaning Drive Gear - 17Z/46Z/18Z	1
8	A153 1125	Development Drive Bracket	1
9	AX20 0106	Magnetic Clutch - 15kgf 52z	1
10	A153 5340	Ct Harness	1
11	A153 3087	Terminal Cap	1
12	A153 3086	Bias Terminal	1
13	A153 2130	Receptacle Housing	1
14	AB03 0494	Drum Pulley - 75Z	1
15	A153 1114	Drive Gear Holder	1
16	A153 1132	Development Tightener	1
17	5442 1111	Spring - Main Drive Tightner	2
18	AA06 2293	Roller Cover Spring	1
19	A153 1135	Drum Drive Tightener	1
20	AA06 3552	Driven Roller Spring	1
21	A153 1117	Drum Drive Shaft	1
22	AB01 7369	Transfer Belt Pulley - 24Z/20Z	1
23	A153 1119	Fusing Drive Tightener	1
24	AB01 7370	Development Pulley - 46Z/31Z	1
25	AZ43 0020	High Voltage Supply Cord	1
26	A204 3915	Magnet Clutch Bracket	1
27	AW02 0075	Photointerrupter	1
28	A153 3914	Magnetic Clutch Feeler	1
29	AB01 7385	Gear - 17Z/24Z	1
30	AX21 0059	Spring Clutch - 5kgf	1
31	A204 3911	Cam Shaft	1
32	A153 2142	Cam Lever	28
33	A204 3922	Brake Cam	1
34	A153 1126	Edging	1
35	A204 3921	Clutch Arm	1

Index No.	Part No.	Description	Q'ty Per Assembly
36	A077 3918	Spring - T/S Unit	1
37	A204 3801	Spring Clutch - Transfer Belt	1
38	A153 1126	Edging	1
101	0740 3008	Ball Bearing - 8x22x7	
102	0573 0040E	Hexagon Headless Set Screw - M3x4	
103	0951 4012B	Philips Screw With Flat Washer	
104	1105 0197	Wire Saddle	
105	0434 0060B	Pan Head Self-tapping Screw - M4x6	
106	0414 0080B	Binding Self-tapping Screw - M4x8	
107	0802 5236	Binding Self-tapping Screw - M4x8	
108	0802 5221	Tapping Screw - M3x10	
109	0950 4008B	Philips Screw With Spring Washer	
110	0720 0060E	Retaining Ring - M6	
111	0720 0060	Retaining Ring - M6	
112	1105 0196	Harness Clamp	
113	1105 0199	Clamp	

30. DRIVE SECTION 3 (A204/A206/A207)

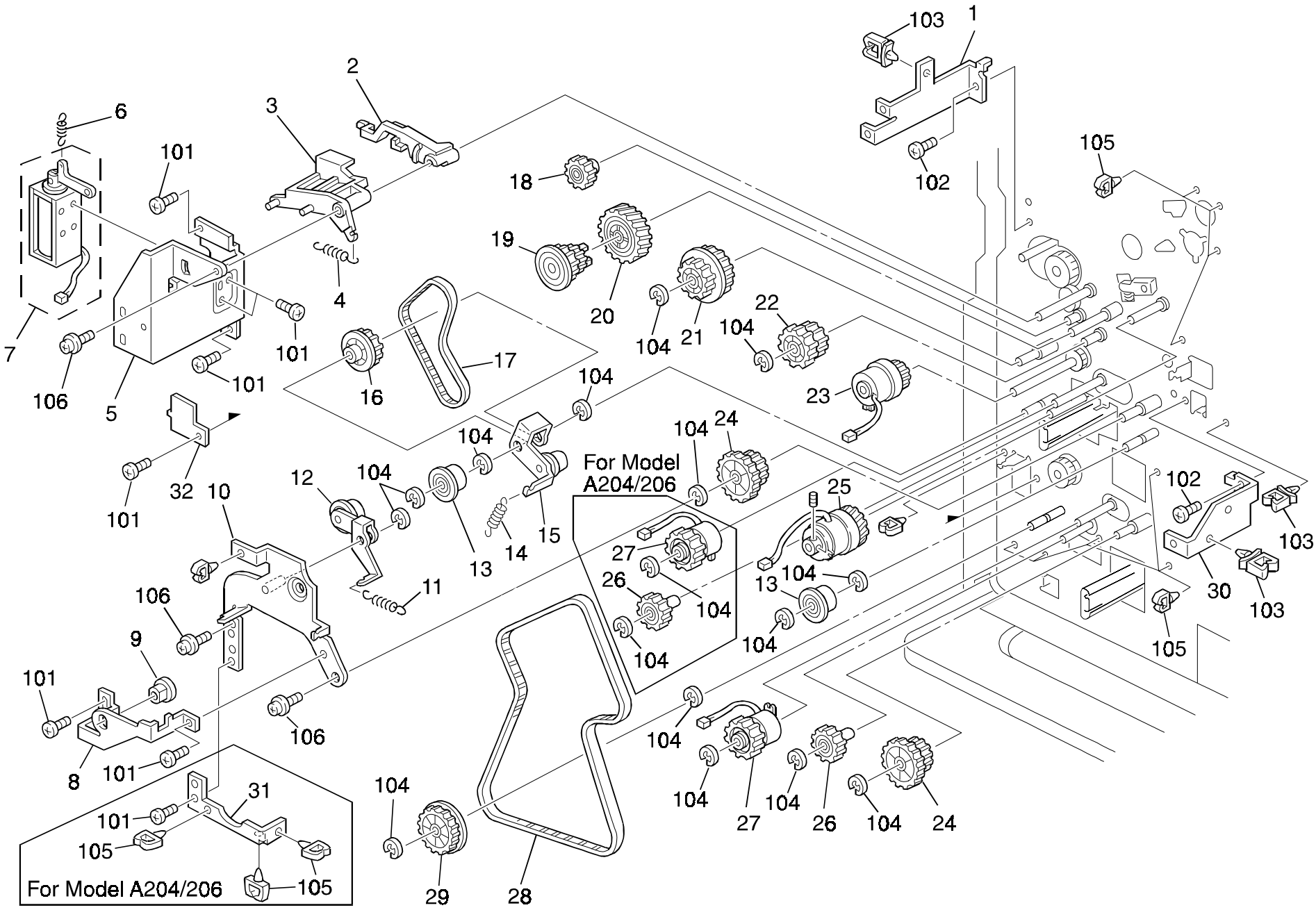

30. DRIVE SECTION 3 (A204/A206/A207)

Index No.	Part No.	Description	Q'ty Per Assembly
1	A153 5813	Main Control Board Bracket	1
2	A155 2676	Pick-up Lever (A206/A207)	1
3	A134 2678	Solenoid Link (A204)	1
3	A155 2677	Pick-up Link (A206/A207)	1
4	AA06 0573	Release Spring	1
5	A134 2675	Solenoid Bracket (A204)	1
5	A155 2675	Pick-up Bracket (A206/A207)	1
6	AA06 0572	Pressure Spring	1
7	A134 2680	DC Solenoid (A204)	1
7	A155 2680	DC Solenoid - 24V - 510gf (A206/A207)	1
8	A134 2579	Stopper Bracket	1
9	5053 0223	Bushing - 8mm	1
10	A153 2570	Upper Support Plate	1
11	AA06 0664	Spring - Tightener	1
12	A134 2575	Tightener Arm	1
13	AB03 0455	Tightener Pulley - 8x20x13	2
14	AA06 0228	Spring - Transfer Drum Cleaning Sol	1
15	A134 2572	Middle Tightener	1
16	AB03 0465	Timing Pulley - 25Z	1
17	AA04 3364	Timing Belt - S3M300	1
18	AB01 1153	Idle Gear - 25z	1
19	AB03 3064	Drive Pulley - 34Z/25Z	1
20	AB01 3918	Drive Gear - 35z	1
21	AB01 7335	Timing Pulley - 22Z/37Z	1
22	AB01 7377	Gear - 25Z	1
23	AX20 0099	Magnetic Clutch - 7kgf.cm 26z	1
24	AB01 7336	Timing Pulley - 30Z/35Z	2
25	AX20 0098	Magnetic Clutch - 7kg Cm 35z	1
26	AB01 3875	Reverse Gear - 27z	1
27	AX20 0100	Magnetic Clutch - 3.5kgf Cm 35z	1
28	AA04 3368	Timing Belt - S3M609	1
29	AB03 0464	Timing Pulley - 30Z	1
30	A153 5812	Left Lower Bracket	1
31	A153 2572	Paper Feed Harness Bracket (A204/A206)	1
32	A155 6325	Drive Cover Bracket	1

Index No.	Part No.	Description	Q'ty Per Assembly
101	0313 0050B	Philips Pan Head Screw - M3x5	
102	0951 3006B	Philips Screw With Flat Washer - M3x6	
103	1105 0197	Wire Saddle	
104	0720 0040E	Retaining Ring - M4	
105	1105 0199	Clamp	
106	0951 4006B	Philips Screw With Washer - M4x6	

31. ELECTRICAL SECTION 1 (A204/A206/A207)

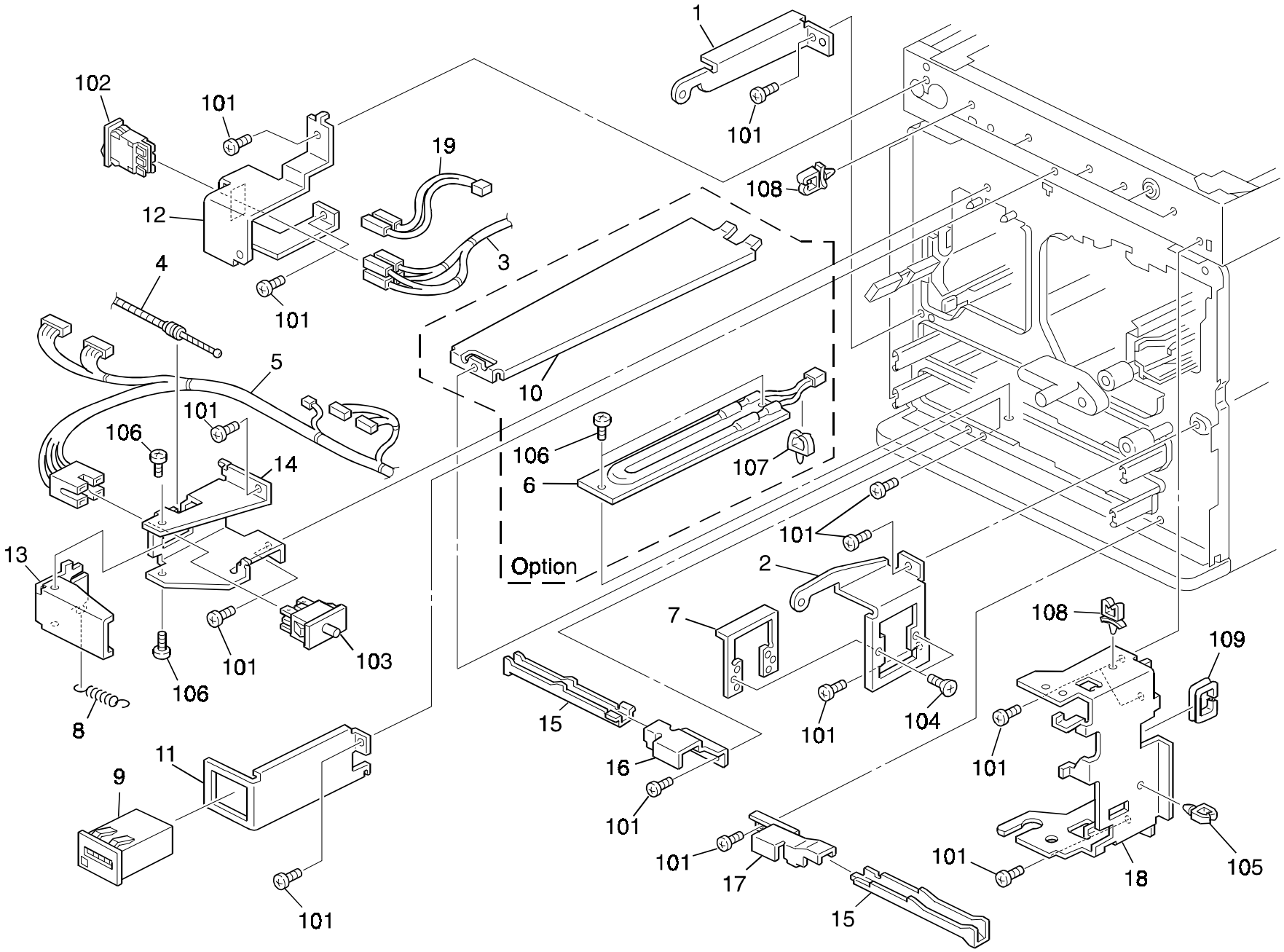

31. ELECTRICAL SECTION 1 (A204/A206/A207)

Rev. 06/30/2000

Index No.	Part No.	Description	Q'ty Per Assembly
1	A153 1353	Front Cover Hinge	1
2	A153 1355	Key Counter Bracket	1
3	A153 5501	AC Main Harness (NA)	1
3	A153 5661	AC Main Harness (EU/ASIA)	1
3	A153 5301	AC Main Harness (TWN)	1
4	AA05 1023	Release Plate	1
5	A153 5520	Front Right Harness (NA)(A204/A206)	1
5	A153 5320	Front Right Harness (EU/ASIA/TWN) (A204/A206)	1
5	A156 5513	Front Right Harness (NA)(A207)	1
5	A154 5313	Front Right Harness (EU/ASIA/TWN)(A207)	1
6	AX40 0021	Anti-condensation Heater - 115V 18W (Option)	1
6	AX40 0022	Anti-condensation Heater - 240V 18W (Option)	1
7	5446 1239	Plate Nut - Key Counter	1
8	5442 4467	Spring - Stripper Pawl Plate	1
9	AX31 0022	Total Counter	1
10	A134 2947	Heater Cover (Option)	1
11	A153 5820	Total Counter Bracket	1
12	A153 5814	Main Switch Bracket (NA)	1
12	A153 5804	Main Switch Bracket (EU/ASIA/TWN)	1
13	A153 5809	Arm Interlock SW	1
14	A153 5808	Bracket - Safety Switch	1
15	A134 1071	Left Grip Plate	2
16	A134 1072	Right Bracket - Grip Plate	1
17	A134 1073	Left Bracket - Grip Plate	1
18	A153 3270	Stay Toner Supply	1
19	A153 5562	Main Switch Relay Harness	1

Index No.	Part No.	Description	Q'ty Per Assembly
101	0434 0060B	Pan Head Self-tapping Screw - M4x6	
102	1204 2467	Main Switch (NA)	
102	1204 2501	Main Switch (EU/ASIA/TWN)	
103	1204 2397	Safety Switch	
104	0323 0080B	Philips Sunk Screw - M3x8	
105	1105 0229	Clamp	
106	0314 0060B	Philips Pan Head Screw - M4x6	
107	1105 0231	Clamp	
108	1105 0196	Harness Clamp	
109	1105 0329	Clamp - ES-0510	

32. ELECTRICAL SECTION 2 (A204/A206/A207)

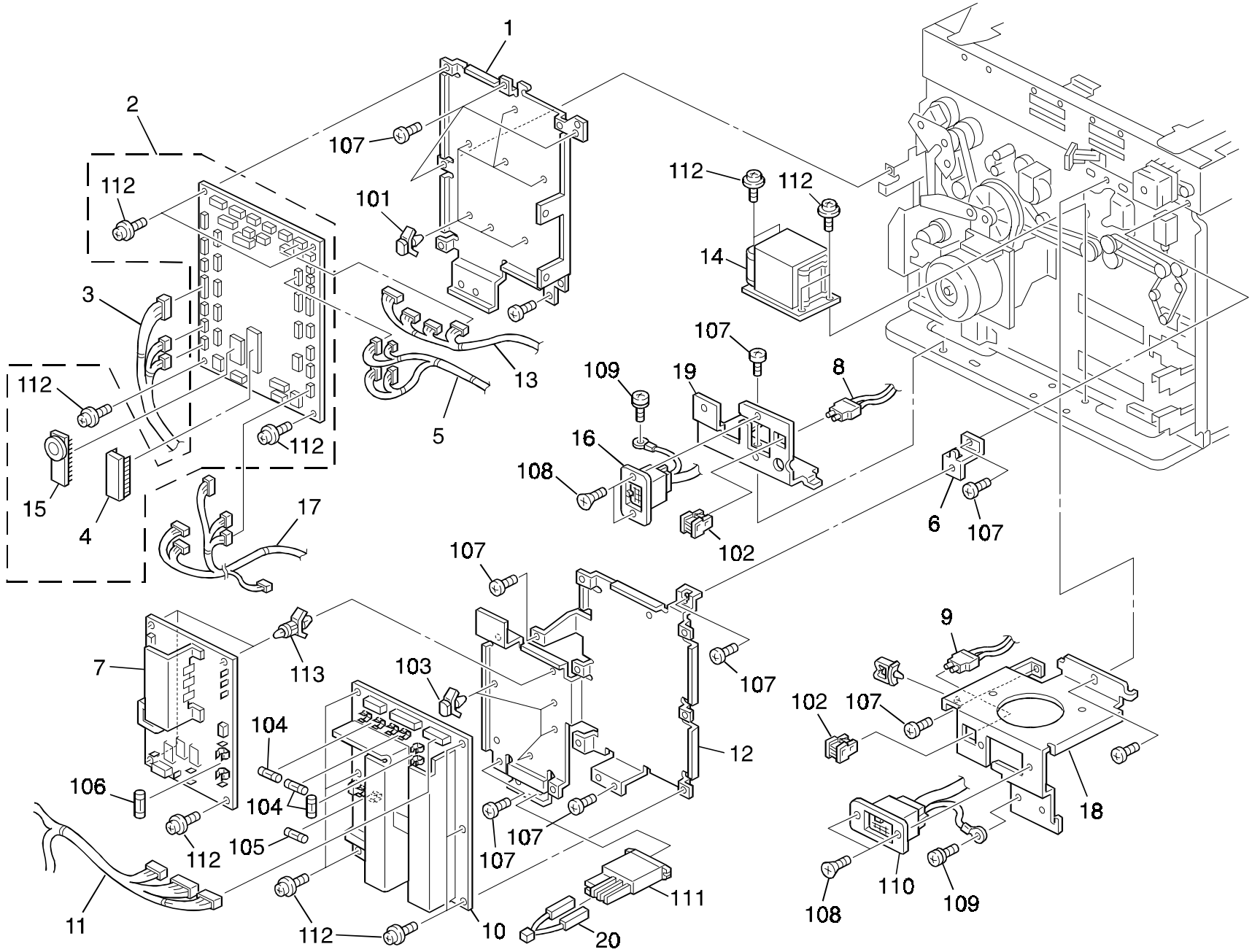

32. ELECTRICAL SECTION 2 (A204/A206/A207)

Rev. 04/25/2000

Index No.	Part No.	Description	Q'ty Per Assembly
1	A204 5811	Main Board Bracket	1
2	A204 5101	Main Control Board (NA)	1
2	A204 5181	Main Control Board (EU/ASIA/TWN)	1
3	A153 5316	Paper Feed Harness (A204/A206)	1
3	A154 5310	Duplex Unit Harness (A207)	1
4	A204 5121	Ic-4m X16 100ns	1
5	A205 5319	Rear Upper Harness	1
6	A153 5803	Upper Bracket - DC Drive Board	1
7	A153 5645	AC Drive Board - 230V	1
7	A153 5550	AC Drive Board - 120V	1
8	AW03 0055	Optical Fiber - 420mm	1
9	AW03 0054	Optical Fiber - 250mm	1
10	AZ23 0054	DC Drive Board - 120V 295W	1
10	AZ24 0042	DC Power Supply Unit - 220/240V 315W	1
11	A153 5344	Power Supply Harness - 120V (A204/A206)	1
11	A153 5644	Power Supply Harness - 230V (A204/A206)	1
11	A154 5343	Power Supply Cord - 120V (A207)	1
11	A156 5643	Power Supply Harness - 230V(A207)	1
12	A153 5801	DC Drive Board Bracket	1
13	A153 5312	Optical Harness	1
14	AZ13 0023	Transformer - 230V	1
15	A153 5114	Ram Board	1
17	A204 5311	Rear Lower Harness (NA) (A204/A206)	1
17	A204 5611	Rear Lower Harness (EU/ASIA/TWN) (A204/A206)	1
17	A205 5309	Duplex Relay Harness (NA)(A207)	1
17	A207 5609	Duplex Relay Harness (EU/ASIA/TWN) (A207)	1
18	A153 5807	Bracket ARDF	1
19	A153 5806	Bracket Paper Tray Unit	1
20	A153 5561	Relay Harness	1

Index No.	Part No.	Description	Q'ty Per Assembly
101	1105 0367	Spacer	
102	1102 4052	Optional Connector	
103	1105 0409	Spacer	
104	1107 0753	Fuse (Glass Case) - 6.3A - 250V	
105	1107 0392	Fuse (Glass Case) - 6.3A - 125V	
106	1107 0752	Fuse (Glass Case) - 5A - 250V	
107	0434 0060B	Pan Head Self-tapping Screw - M4x6	
108	0323 0060B	Philips Sunk Screw - M3x6	
109	0801 0137	Philips Pan Head Screw With Spring	
110	1102 6739	Connector - 12p	
111	1208 1392	Relay - G2r-1-t-tu - DC24V	
112	0951 4006B	Philips Screw With Washer - M4x6	
113	1105 0192	Locking Support	

33. ELECTRICAL SECTION 3 (A204/A206/A207)

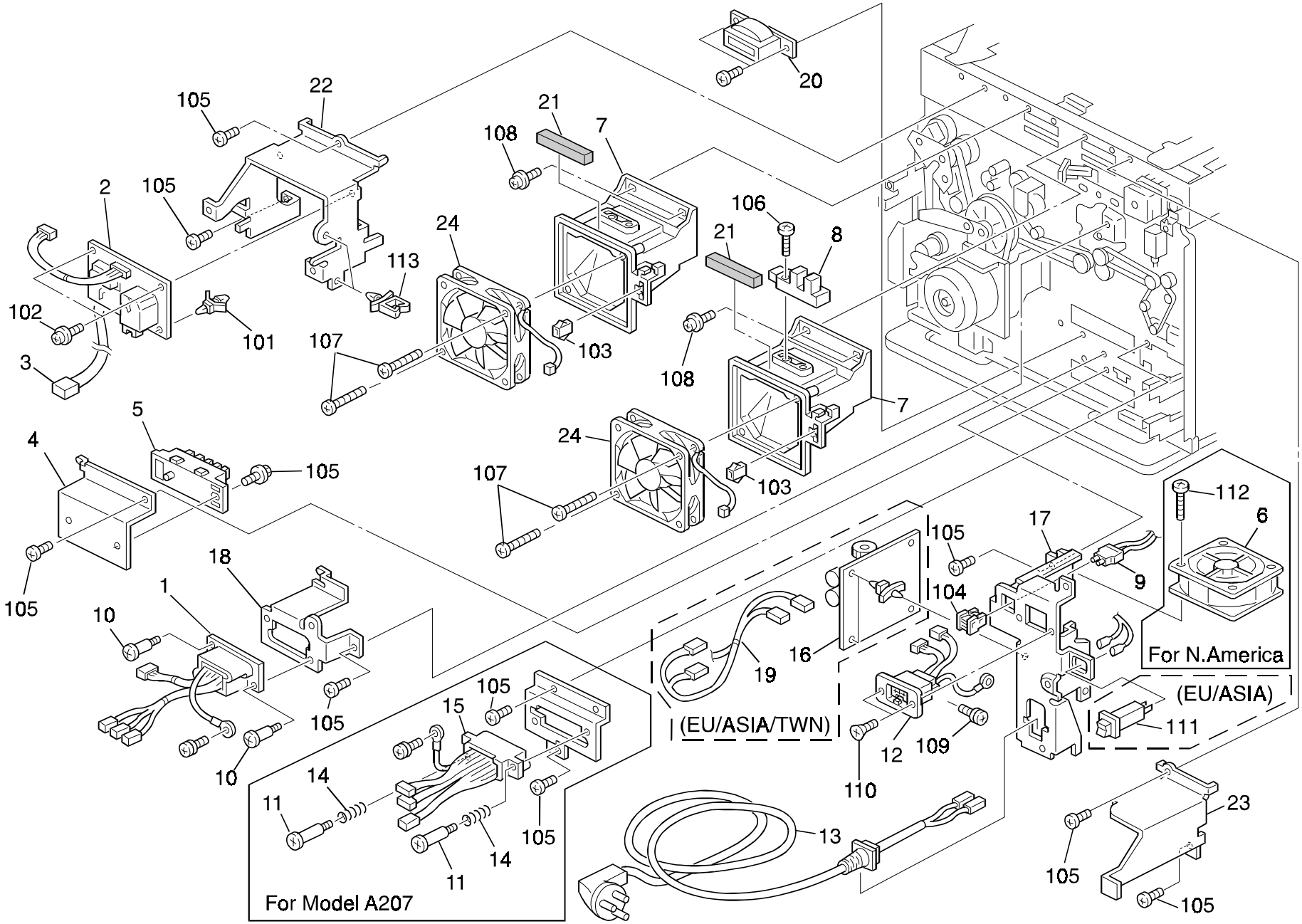

33. ELECTRICAL SECTION 3 (A204/A206/A207)

Index No.	Part No.	Description	Q'ty Per Assembly
1	A204 5326	Fusing Relay Harness	1
2	AZ32 0078	DC Power Pack	1
3	AZ43 0020	High Voltage Supply Cord	1
4	A134 2941	Bracket - Paper Size Sensor	1
5	AW50 0012	Push Switch	2
6	AX64 0058	Fan Motor - DC 24V 4.32W	2
7	A153 1986	Cooling Fan Duct	2
8	AW02 0022	Photointerruptor	1
9	AW03 0056	Optical Fiber - 550mm	1
10	AA14 3301	Stepped Screw - M3x4	2
11	AA14 3452	Stepped Screw	2
12	A153 5324	Sorter Relay Harness	1
13	A153 5571	Power Supply Cord (NA)	1
13	A153 5671	Power Supply Cord (EU/ASIA)	1
13	A153 5471	Power Supply Cord (TWN)	1
14	AA06 3532	Spring	2
15	A154 5325	Duplex Unit Relay Harness	1
16	A153 5621	Noise Filter Board (EU/ASIA)	1
16	A204 5521	Noise Filter Board (TWN)	1
17	A204 5810	Power Supply Cord Bracket	1
18	A153 5888	Fusing Unit Joint Connector Bracket	1
19	A153 5601	AC Relay Harness (EU/ASIA/TWN)	1
20	AZ02 0008	Coil - 10Mh 2A	1
21	AA15 1177	Seal - 5x82x4	2
22	A153 1258	Platen Cover Bracket - Right	1
23	A153 1259	Platen Cover Bracket - Left	1
24	AX64 0075	Fan Motor - DC24V 4.32W	1

Index No.	Part No.	Description	Q'ty Per Assembly
101	1105 0192	Locking Support	
102	0951 3006B	Philips Screw With Flat Washer - M3x6	
103	1102 4473	Ct Connector - 2p	
104	1102 4052	Optional Connector	
105	0434 0060B	Pan Head Self-tapping Screw - M4x6	
106	0414 0142B	Binding Self Tapping Screw - M4x14	
107	0434 0352W	Pan Head Self-tapping Screw - M4x35	
108	0964 4008B	Tapping Screw With Flat Washer - M4x8	
109	0801 0137	Philips Pan Head Screw With Spring	
110	0323 0060B	Philips Sunk Screw - M3x6	
111	1107 0472	Circuit Breaker - 250V/8A (EU/ASIA)	
112	0314 0300B	Philips Pan Head Screw - M4x30	
113	1105 0197	Wire Saddle	

34. FRAME SECTION 1 (A204/A206/A207)

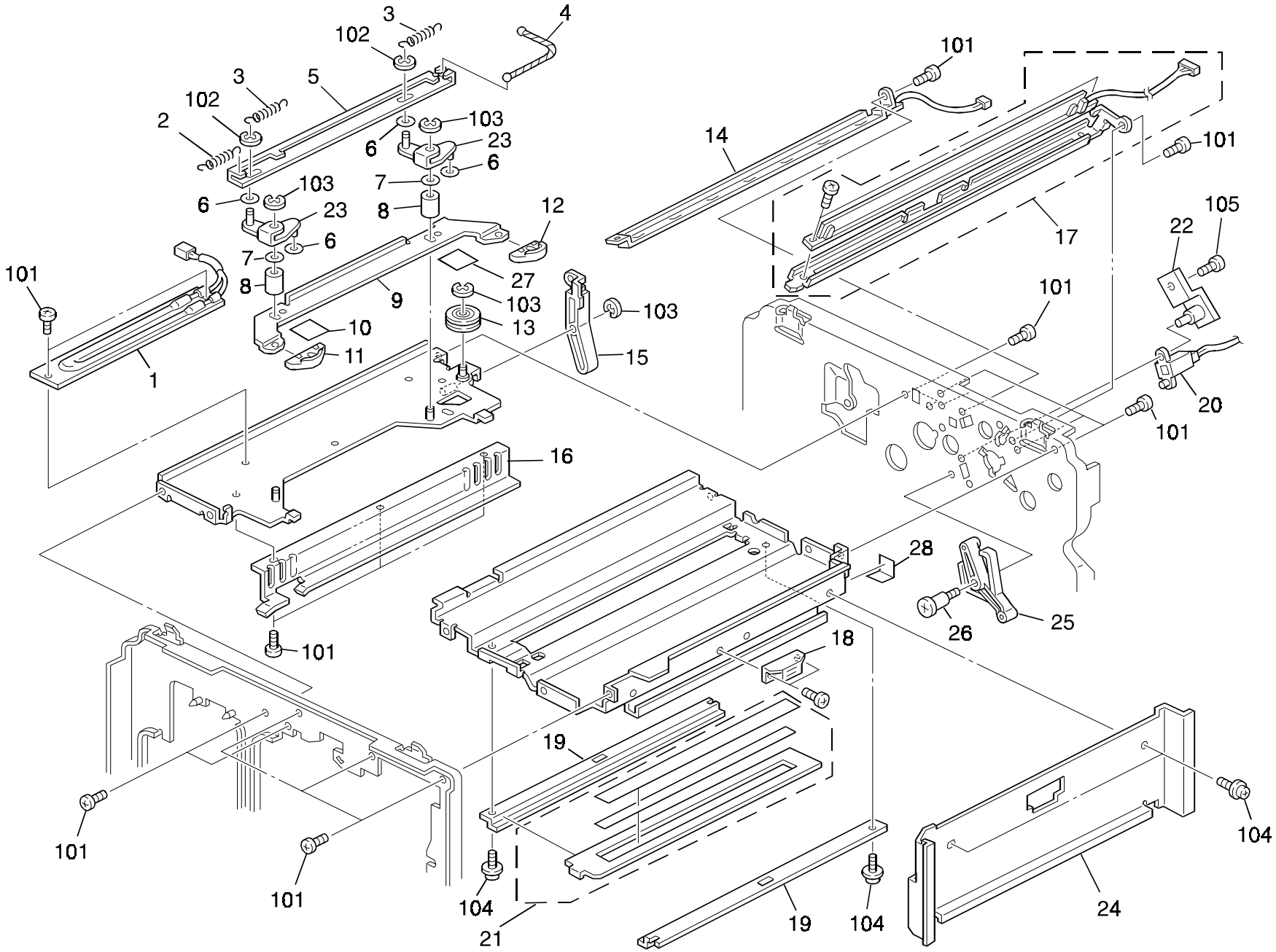

34. FRAME SECTION 1 (A204/A206/A207)

Index No.	Part No.	Description	Q'ty Per Assembly
1	AX40 0094	Anticondensation Heater - 120V 9W	1
1	AX40 0095	Anticondedsation Heater - 230V 9W	1
2	AA06 2291	Pressure Spring	1
3	AA06 2285	Release Spring	2
4	AA05 1025	Release Wire	1
5	A153 2072	Release Link Lever	1
6	A204 2187	Spacer-11mm	4
7	A204 2188	Spacer-15mm	2
8	AA13 2186	Collar	2
9	A153 2073	Guide Rail	1
10	A153 2084	Spacer	1
11	A153 2075	Front Roller Cam	1
12	A153 2076	Rear Roller Cam	1
13	A153 2060	Wire Pulley	1
14	A153 2090	Quenching Lamp	1
15	A153 2071	Cam Lever	1
16	A153 2083	Left Drum Rail	1
17	A153 2080	Eraser Lamp	1
18	AG07 0004	Magnetic Catch	1
19	A204 1674	Shield Glass Guide	2
20	A153 5339	Density Sensor Harness	1
21	A204 1677	Optical Filter	1
22	A153 3598	Pin Bracket	1
23	A153 2061	Release Lever	2
24	A153 1350	Right Middle Cover	1
25	A153 3920	Belt Release Arm	1
26	AA14 3444	Stepped Screw	1
27	A153 2085	Spacer	1
28	A153 1676	Harness Guard Seal	1

Index No.	Part No.	Description	Q'ty Per Assembly
101	0434 0060B	Pan Head Self-tapping Screw - M4x6	
102	0720 0030E	Retaining Ring - M3	
103	0720 0040E	Retaining Ring - M4	
104	0964 4006B	Tapping Screw With Flat Washer - M4x6	

35. FRAME SECTION 2 (A204/A206/A207)

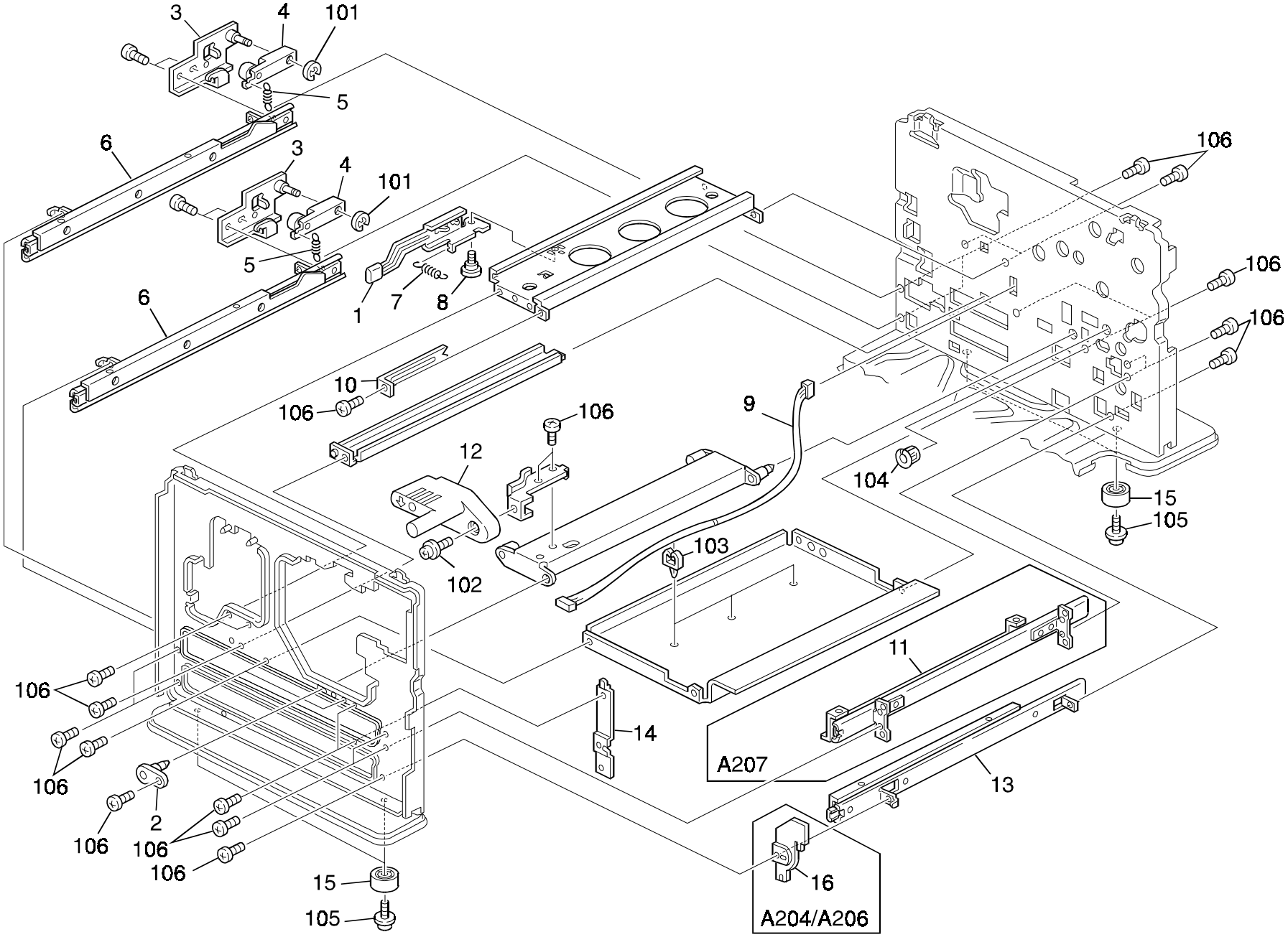

35. FRAME SECTION 2 (A204/A206/A207)

Index No.	Part No.	Description	Q'ty Per Assembly
1	A153 4352	Fusing Lock Lever	1
2	A157 3900	Support Plate	1
3	A134 2926	Paper Feed Lock Bracket	2
4	A096 6266	Tray Lock Arm	2
5	AA06 0534	Tray Lock Spring - 19mm	2
6	A134 2921	Left Slide Rail	2
7	5442 4467	Spring - Stripper Pawl Plate	1
8	5203 1686	Screw - Slide Rail	1
9	A153 5334	Ct Harness - 7p	1
10	A134 4355	Fusing Unit Stopper	1
11	A134 4901	Duplex Right Rail	1
12	A153 3930	Belt Unit Handle	1
13	A134 2930	Right Slide Rail	1
14	A134 2929	Slide Rail Bracket - Front Right	1
15	AH01 0007	Rubber Foot	4
16	A130 2929	Slide Rail Bracket	1

Index No.	Part No.	Description	Q'ty Per Assembly
101	0720 0040E	Retaining Ring - M4	
102	0964 4008B	Tapping Screw With Flat Washer - M4x8	
103	1105 0199	Clamp	
104	1106 0193	Bushing - 7.9mm	
105	0960 4010B	Philips Flange Screw - M4 x 10	
106	0434 0060B	Pan Head Self-tapping Screw - M4x6	

36. MAIN CONTROL BOARD (A204/A206/A207)

CAPACITOR

SYMBOL NO.	INDEX NO.	SYMBOL NO.	INDEX NO.	SYMBOL NO.	INDEX NO.	SYMBOL NO.	INDEX NO.	SYMBOL NO.	INDEX NO.	SYMBOL NO.	INDEX NO.	SYMBOL NO.	INDEX NO.
C101	197	C111	198	C121	200	C131	204	C141	202	C151	204	C161	202
C102	196	C112	201	C122	201	C132	202	C142	202	C152	203	C162	201
C103	196	C113	201	C123	201	C133	168	C143	202	C153	201	C163	203
C104	202	C114	202	C124	202	C134	198	C144	202	C154	204	C164	202
C105	204	C115	202	C125	202	C135	202	C145	202	C155	202	C165	202
C106	196	C116	201	C126	202	C136	204	C146	202	C156	204	C166	201
C107	201	C117	201	C127	202	C137	198	C147	201	C157	201	C167	202
C108	198	C118	201	C128	202	C138	202	C148	202	C158	204	C168	199
C109	204	C119	202	C129	202	C139	201	C149	201	C159	201	C169	199
C110	198	C120	202	C130	202	C140	204	C150	202	C160	202	C170	204

CAPACITOR

SYMBOL NO.	INDEX NO.	SYMBOL NO.	INDEX NO.	SYMBOL NO.	INDEX NO.
C171	202	C181	204	C191	200
C172	201	C182	202	C192	200
C173	202	C183	202	C193	200
C174	202	C184	202	C194	200
C175	204	C185	202		
C176	202	C186	202		
C177	201	C187	202		
C178	202	C188	202		
C179	204	C189	202		
C180	202	C190	204		

CONNECTOR

SYMBOL NO.	INDEX NO.	SYMBOL NO.	INDEX NO.	SYMBOL NO.	INDEX NO.	SYMBOL NO.	INDEX NO.
CN101	128	CN111	132	CN121	133	CN131	118
CN102	116	CN112	106	CN122	112	CN132	129
CN103	101	CN113	123	CN123	124	CN133	102
CN104	111	CN114	116	CN124	119	CN134	109
CN105	129	CN115	107	CN125	104	CN135	130
CN106	115	CN116	105	CN126	127	CN136	131
CN107	105	CN117	114	CN127	120	CN137	107
CN108	103	CN118	109	CN128	108	CN138	117
CN109	126	CN119	118	CN129	122	CN139	122
CN110	130	CN120	108	CN130	130	CN140	110

36. MAIN CONTROL BOARD (A204/A206/A207)

CONNECTOR

SYMBOL NO.	INDEX NO.
CN141	103
CN142	113
CN143	125
CN144	-
CN145	134
CN146	-
CN147	-
CN148	-
CN149	-
CN150	121

DAY

SYMBOL NO.	INDEX NO.
DAY101	144
DAY102	139
DAY103	139
DAY104	144
DAY105	144
DAY106	139
DAY107	139
DAY108	139
DAY109	139
DAY110	139

DIODE

SYMBOL NO.	INDEX NO.
D101	141
D102	141
D103	140

FIL

SYMBOL NO.	INDEX NO.
FIL101	167

IC

SYMBOL NO.	INDEX NO.
IC101	145
IC102	145
IC103	155
IC104	156
IC105	145
IC106	159
IC107	150
IC108	3
IC109	149
IC110	145

SYMBOL NO.	INDEX NO.
IC111	2
(socket)	135
IC112	160
IC113	152
IC114	145
IC115	148
IC116	147
IC117	156
IC118	154
IC119	151

OSC

SYMBOL NO.	INDEX NO.
OSC101	161

Q

SYMBOL NO.	INDEX NO.
Q101	136
Q102	138
Q103	136
Q104	137
Q105	137
Q106	146
Q107	158
Q108	153
Q109	146
Q110	146

SYMBOL NO.	INDEX NO.
Q111	146
Q112	146
Q113	153
Q114	153

REG

SYMBOL NO.	INDEX NO.
REG101	157

RESISTOR

SYMBOL NO.	INDEX NO.
R101	169
R102	176
R103	176
R104	169
R105	182
R106	173
R107	172
R108	163
R109	181
R110	173

SYMBOL NO.	INDEX NO.
R111	170
R112	162
R113	172
R114	162
R115	172
R116	173
R117	173
R118	173
R119	182
R120	181

SYMBOL NO.	INDEX NO.
R121	179
R122	172
R123	173
R124	179
R125	181
R126	173
R127	181
R128	182
R129	182
R130	182

SYMBOL NO.	INDEX NO.
R131	173
R132	182
R133	182
R134	182
R135	173
R136	182
R137	173
R138	170
R139	170
R140	173

RESISTOR

SYMBOL NO.	INDEX NO.
R141	173
R142	173
R143	173
R144	182
R145	170
R146	170
R147	170
R148	170
R149	170
R150	184

SYMBOL NO.	INDEX NO.
R151	176
R152	172
R153	169
R154	173
R155	182
R156	189
R157	171
R158	172
R159	172
R160	172

SYMBOL NO.	INDEX NO.
R161	172
R162	179
R163	172
R164	171
R165	173
R166	181
R167	177
R168	182
R169	182
R170	179

SYMBOL NO.	INDEX NO.
R171	172
R172	192
R173	191
R174	173
R175	172
R176	185
R177	177
R178	181
R179	172
R180	179

SYMBOL NO.	INDEX NO.
R181	179
R182	179
R183	183
R184	193
R185	193
R186	187
R187	191
R188	182
R189	191
R190	172

SYMBOL NO.	INDEX NO.
R191	172
R192	172
R193	173
R194	173
R195	173
R196	178
R197	194
R198	178
R199	178
R200	183

SYMBOL NO.	INDEX NO.
R201	-
R202	190
R203	172
R204	178
R205	188
R206	195
R207	186
R208	173
R209	173
R210	173

RESISTOR

SYMBOL NO.	INDEX NO.
R211	178
R212	178
R213	173
R214	173
R215	182
R216	182
R217	171
R218	173
R219	182
R220	173

SYMBOL NO.	INDEX NO.
R221	174
R222	172
R223	172
R224	175
R225	173
R226	182
R227	182
R228	172
R229	-
R230	-

SYMBOL NO.	INDEX NO.
R231	180
R232	173
R233	173
R234	173
R235	173
R236	179
R237	173
R238	182
R239	182
R240	182

SYMBOL NO.	INDEX NO.
R241	182
R242	171
R243	170
R244	170
R245	173
R246	182
R247	173
R248	181
R249	182
R250	182

SYMBOL NO.	INDEX NO.
R251	173
R252	182
R253	182
R254	182
R255	182
R256	172

RN

SYMBOL NO.	INDEX NO.
RN101	164
RN102	166
RN103	164
RN104	166
RN105	166
RN106	164
RN107	166
RN108	166
RN109	164
RN110	164

SYMBOL NO.	INDEX NO.
RN111	166
RN112	164
RN113	166
RN114	166
RN115	164
RN116	164
RN117	164
RN118	164
RN119	164
RN120	164

36. MAIN CONTROL BOARD (A204/A206/A207)

RN

SYMBOL NO.	INDEX NO.
RN121	164
RN122	166
RN123	165
RN124	166
RN125	164
RN126	166
RN127	166
RN128	166
RN129	164
RN130	166

SYMBOL NO.	INDEX NO.
RN131	166
RN132	166
RN133	166
RN134	166
RN135	164
RN136	164
RN137	166
RN138	166
RN139	166
RN140	166

SYMBOL NO.	INDEX NO.
RN141	164
RN142	164
RN143	164
RN144	164
RN145	164
RN146	164
RN147	166
RN148	166
RN149	166
RN150	166

ZD

SYMBOL NO.	INDEX NO.
ZD101	143
ZD102	142
ZD103	142
ZD104	142

36. MAIN CONTROL BOARD (A204/A206/A207)

Rev. 04/25/2000

Index No.	Part No.	Description	Q'ty Per Assembly
*	A204 5181	Main Control Board (EU/ASIA/TWN)	1
*	A204 5101	Main Control Board (NA)	1
1	A153 5114	RAM Board	1
2	A204 5121	IC-4M X16 100NS	1
3	A204 5117	IC - RF5A230	1
101	1102 3822	Connector - 20p	
102	1102 4201	Connector - 2p	
103	1102 4202	Connector - 3p	
104	1102 4203	CT Header - 4p	
105	1102 4205	CT Header - 6p	
106	1102 4206	Connector - 7p	
107	1102 4207	Connector - 8p	
108	1102 4208	Connector - 9p	
109	1102 4210	Connector - 11p	
110	1102 4211	CT Header - 12p	
111	1102 4212	CT Header - 15p	
112	1102 4497	Connector - 13p	
113	1102 4619	Connector - 2p	
114	1102 4621	CT Header - 4p	
115	1102 4623	CT Connector - 6p	
116	1102 4624	CT Connector - 7p	
117	1102 4625	Ct Connector 8p	
118	1102 4628	Connector - 11p	
119	1102 4629	Connector - 12p	
120	1102 4630	CT Connector	
121	1102 4631	Ct Connector - 2p	
122	1102 4637	Ct Connector - 8p	
123	1102 4639	Ct Connector - 10p	
124	1102 4640	Ct Connector - 11p	
125	1102 4643	Ct Connector - 2p	
126	1102 4651	Ct Connector - 10p	
127	1102 5007	CT Header - 14p	
128	1102 5305	Connector - 6p	
129	1102 5605	Connector - 13p	
130	1102 5718	Optical Fiber Connector	
131	1102 6408	Connector - 30p	
132	1103 1772	Pin Header - 6p	
133	1103 1774	Pin Header - 8p	
134	1104 0588	Dip Socket - 28p	
135	1104 0612	Connector - 40p	
136	1400 0369	Transistor - 2sa1213y	
137	1400 0550	Transistor - BA1L3N	

Index No.	Part No.	Description	Q'ty Per Assembly
138	1400 0558	Transistor - 2sd780	
139	1402 0708	Diode - 1SS272	
140	1402 0780	Diode - 200V 1A 11ES2	
141	1402 1030	Diode - 1SS250	
142	1402 1378	Diode - PTZ12A	
143	1402 1380	Diode - PTZ 6.2A	
144	1402 1387	Diode - HSM123	
145	1407 2187	TTLIC - SN74LS07NS	
146	1407 2231	IC - TD62308AF	
147	1407 2496	IC - M5261L	
148	1407 3173	Driver - 16bit - M66311fp	
149	1407 3257	Cmosic - Tc74hc14af	
150	1407 3708	IC - SLA7026M	
151	1407 3764	IC - TC7SU04F	
152	1407 4164	IC - MMID75XF	
153	1407 4316	IC - TD52308BF	
154	1407 4686	IC - M54992FP	
155	1407 4687	IC - TA8083F	
156	1408 0595	IC - NJM2904M	
157	1408 0629	IC - 78M12A	
158	1408 0874	Transistor Array - M54587fp	
159	1408 1065	Comparator Ba10339f	
160	1408 1135	IC - X9C104S	
161	1503 0777	Oscillator - 32mhz 9.6pf	
162	1600 1499	Resistor - 0.33 Ω ±2% 2W	
163	1600 1660	Resistor - ERG2SJ101	
164	1601 7793	Resistor - 10K Ω	
165	1601 7798	Resistor Array - 68Ω ±55 1/16W	
166	1601 7799	Resistor Array - 4.7KΩ ±5% 1/16W	
167	1602 7032	Filter - EMI-2200pf	
168	1604 4511	Capacitor - 0.15µF ±10% 50V	
169	1630 1101	Resistor - 100 Ω 1/4W ±5%	
170	1630 1161	Resistor - 160 Ω ±5% 1/8W	
171	1630 3101	Resistor - 100 Ω 1/10W	
172	1630 3102	Resistor - 1k Ω 1/10W ±5%	

Index No.	Part No.	Description	Q'ty Per Assembly
173	1630 3103	Resistor - 10k Ω 1/10W ±5%	
174	1630 3104	Resistor - 100k Ω 1/10W ±5%	
175	1630 3155	Resistor - 1.5MΩ ±5% 1/10W	
176	1630 3222	Resistor - 2.2k Ω 1/10W ±5%	
177	1630 3223	Resistor - 22k Ω 1/10W	
178	1630 3242	Resistor - 2.4k Ω ±5% 1/10W	
179	1630 3330	Resistor - 33 Ω ±5% 1/10W	
180	1630 3334	Resistor - 330K Ω ±5% 1/10W	
181	1630 3393	Resistor - 39K Ω 1/10W	
182	1630 3472	Resistor - 47K Ω 1/10W ±5%	
183	1630 3473	Resistor - 47K Ω 1/10W ±5%	
184	1630 3682	Resistor - 6.8K Ω 1/10W	
185	1630 3824	Resistor - 820 Ω ±5% 1/10W	
186	1633 1000	Resistor - 100 Ω ±1% 1/10W	
187	1633 1002	Resistor - 10k Ω ±1% 1/10W	
188	1633 2150	Resistor - 215Ω ±1% 1/10W	
189	1633 4701	Resistor - 4.7k Ω ±1% 1/10W	
190	1633 4702	Resistor - 47k Ω ±1/10W	
191	1633 4871	Resistor - 4.87k Ω ±1% 1/10W	
192	1633 5100	Resistor - 510 Ω ±1% 1/10W	
193	1633 5231	Resistor - 5.23k Ω ±1% 1/10W	
194	1633 6490	Resistor - 649 Ω ±1% 1/10W	
195	1633 8209	Resistor - 820Ω ±1% 1/10W	
196	1640 5101	Capacitor - 100µF ±20% 50V	
197	1640 5470	Capacitor - 47µF ±20% 50V	
198	1642 5100	Capacitor - 10µF ±20% 50V	
199	1660 1100	Capacitor - 10PF 50V	
200	1660 3470	Capacitor - 47PF ±5% 50V	
201	1660 3471	Capacitor - 470PF 50V	
202	1660 5103	Capacitor - 10000PF ±10% 50V	
203	1660 5222	Capacitor - 2200PF ±10% 50V	
204	1660 7104	Capacitor - 100000PF 50V	

37. DECAL AND DOCUMENT (A204/A206/A207)

1

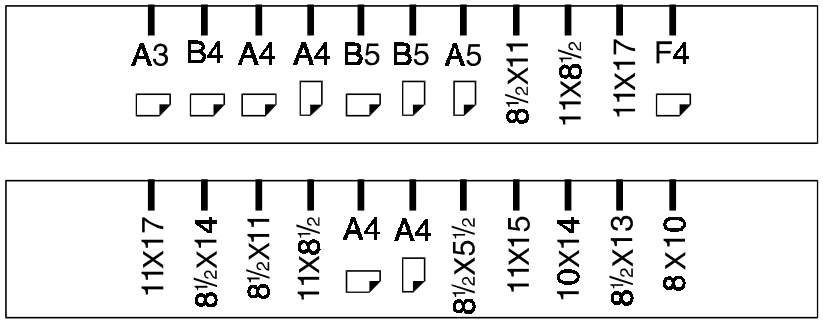

2

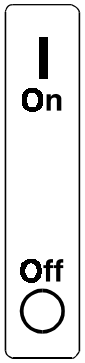

6

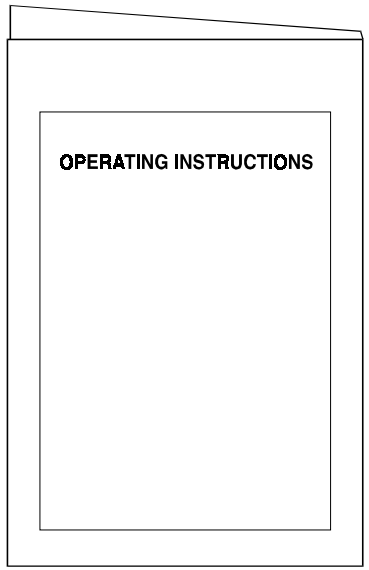

3

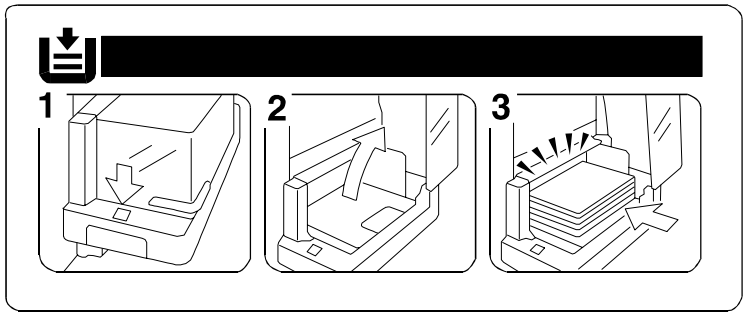

4



5

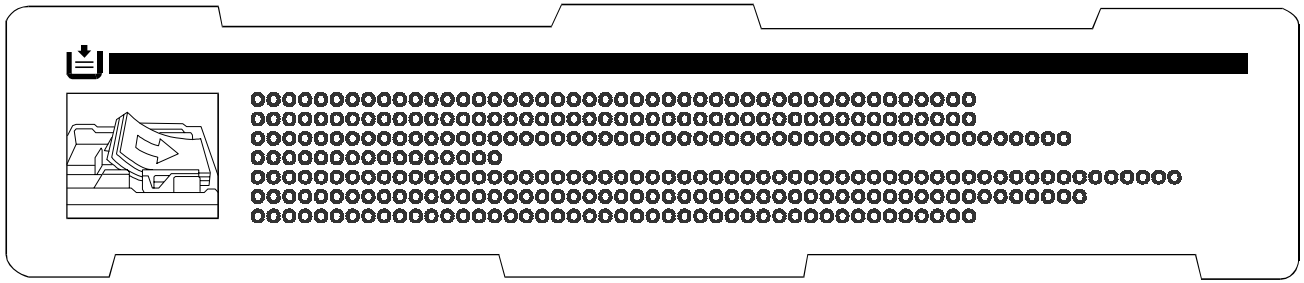

7

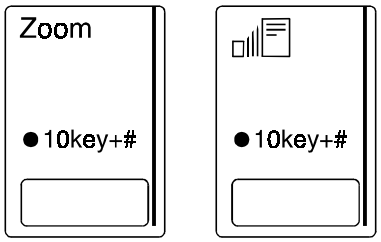

8

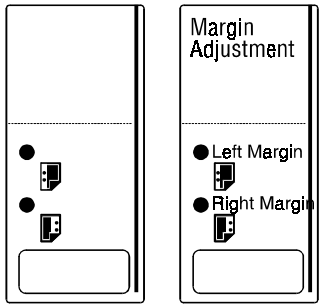

9

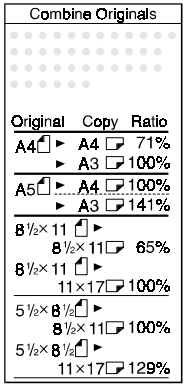

10

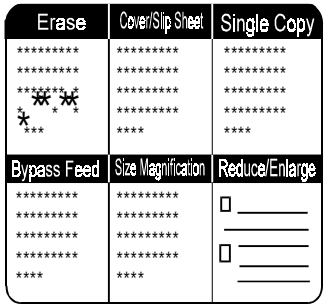

11

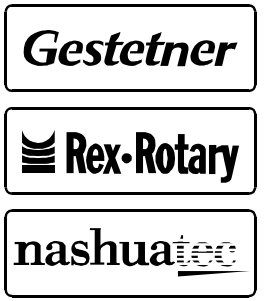

12

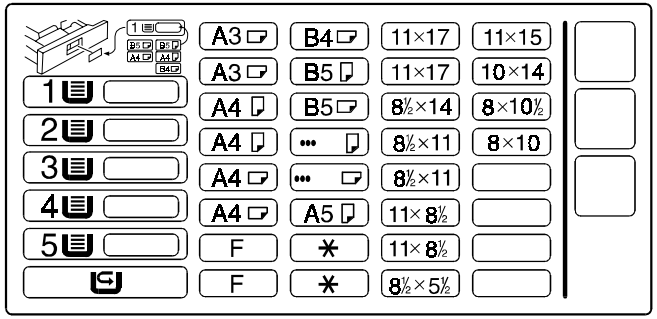

14

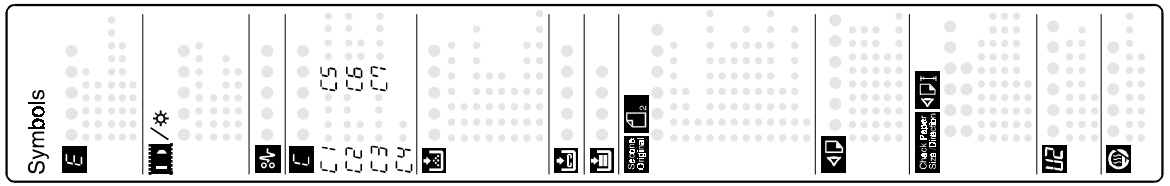

15

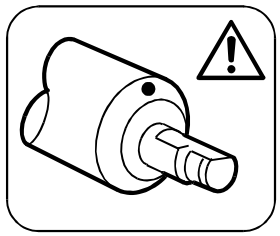

16



17

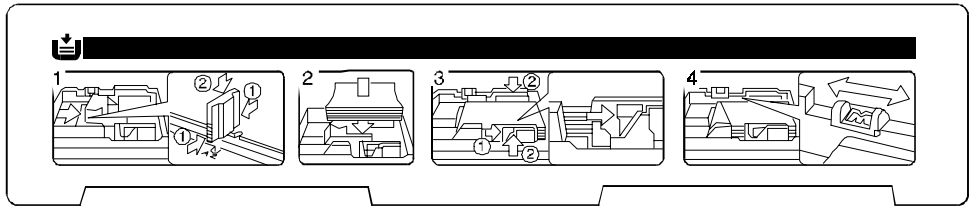

18

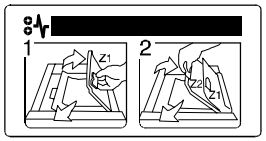

19

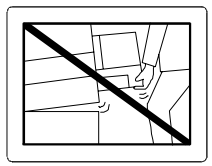

37. DECAL AND DOCUMENT (A204/A206/A207)

Index No.	Part No.	Description	Q'ty Per Assembly
*	A204 1386	Multi Decal - German (RIC)(NRG)	1
*	A204 1387	Multi Decal - French (RIC)(NRG)	1
*	A204 1388	Multi Decal - Spanish (RIC)(NRG)	1
*	A204 1389	Multi Decal - Italian (RIC)(NRG)	1
*	A204 1396	Multi Decal - German (INF)	1
*	A204 1397	Multi Decal - French (INF)	1
*	A204 1398	Multi Decal - Spanish (INF)	1
*	A204 1399	Multi Decal - Italian (INF)	1
1	A153 2995	Decal Paper Size - LT/DLT	1
1	A153 2996	Decal Paper Size - A4/A3	1
2	AA00 1373	Decal - Main Switch	1
3	A155 6113	Decal - Paper Set	1
4	A153 1285	Emblem (RIC)	1
4	A156 6413	Emblem (SVN)	1
4	A153 6423	Support Cover (INF)	1
5	A134 2997	Decal - Paper Setting	1
6	A204 8607	Operating Instructions - English LT (RIC)	1
6	A204 8650	Operating Instructions - English LT (SVN)	1
6	A204 8661	Operating Instructions - German (INF)	1
6	A204 8662	Operating Instructions - French (INF)	1
6	A204 8663	Operating Instructions - Italian(INF)	1
6	A204 8664	Operating Instructions - Spanish(INF)	1
6	A204 8660	Operating Instructions - English A4 (INF)	1
6	A204 8690	Operating Instructions - English A4 (NRG)	1
6	A204 8697	Operating Instructions - English LT (NRG)	1
6	A204 8608	Operating Instructions - English A4 (RIC)	1
6	A204 8609	Operating Instructions - Chinese (RIC)	1
6	A204 8600	Operating Instructions English - A4 (RIC)	1
7	A153 1475	Decal - 10key Zoom -LT/DLT	1
7	A153 1478	Decal - 10key Zoom - A4/A3	1
8	A153 1476	Decal - Margin Adjustment - LT/DLT	1
8	A153 1479	Decal - Margin Adjustment - A4/A3	1
9	A156 1495	Decal Copy Ratio	1
10	A204 1486	Operation Panel Sheet - LT (A204/A206)	1
10	A204 1487	Operation Panel Sheet - A4 (A204/A206)	1

Index No.	Part No.	Description	Q'ty Per Assembly
11	C225 2867	Decal - Cover - Panel - Nashua	1
11	C225 2866	Decal - Key Top Cover	1
11	A153 6409	Decal - Keytop Cover	1
12	AA00 2209	Decal - Paper Size	1
13	A204 6404	Decal - Model Name - GES (A204)	1
13	A204 6407	Decal - Model Name - NST (A204)	1
13	A204 6414	Decal - Model Name - REX (A204)	1
13	A206 6404	Model Name Plate - GES (A206)	1
13	A206 6407	Model Name Plate - NST (A206)	1
13	A206 6414	Model Name Plate - REX (A206)	1
13	A207 6404	Model Name Plate - GES (A207)	1
13	A207 6407	Model Name Plate - NST (A207)	1
13	A207 6414	Model Name Plate - REX (A207)	1
14	A153 1365	Symbol Explanation Decal	1
15	A204 2155	Decal - Caution	1
16	AA00 1389	Large Decal - Energy Star	1
17	A134 2997	Decal - Paper Setting	1
18	A134 4884	Decal - Duplex Misfeed Removal	1
19	A155 6114	Caution Decal - LCT	1

38. SPECIAL TOOLS (A204/A206/A207)

Rev. 10/30/2000

1

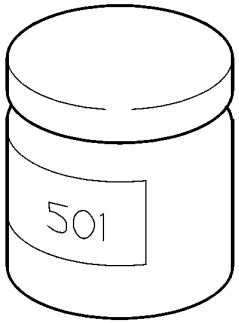

2

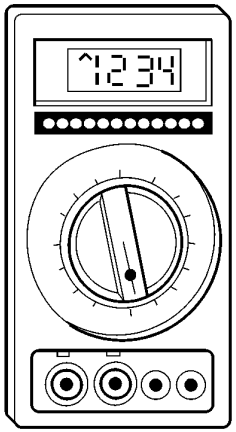

3

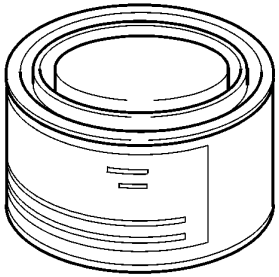

4

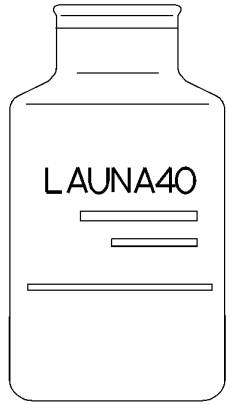

5

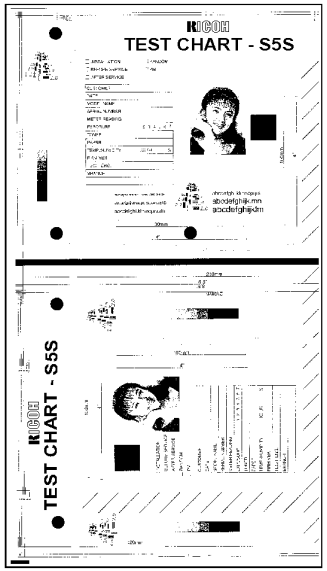

6

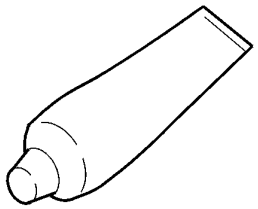

7

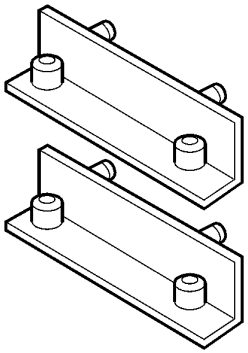

8

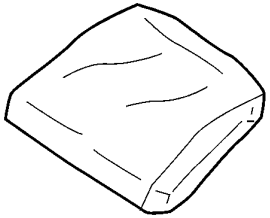

9

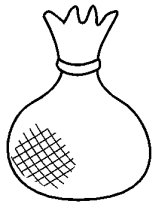

10

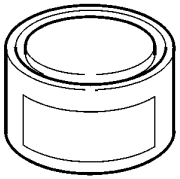

38. SPECIAL TOOLS (A204/A206/A207)

Rev. 10/30/2000

Index No.	Part No.	Description	Q'ty Per Assembly
1	5203 9501	Grease 501	1
2	5420 9507	Digital Multimeter - Beckman	1
3	5447 9078	Heat Resisting Grease Mt-78	1
4	5442 9103	Launa Oil 40	1
5	A292 9500	Test Chart - S5S (10pcs/set)	1
6	A008 9502	Silicone Grease - G40m	1
7	A153 9001	Scanner Adjustment Tool	2
8	A153 9004	Wiping Cloth(100pcs/set)	1
9	5442 9101	Setting Powder	1
10	A257 9300	Grease Barrierta S552R	1

Index No.	Part No.	Description	Q'ty Per Assembly

A207
PARTS INDEX

This section instructs you as to the numbers and names of parts of this machine

PM Parts Index

Section Name	Part No.	Description in Service Manual	Description in Parts Catalog	Q'ty Per Assembly	Page and Index No
By-pass Feed Section (A204/A206/A207)	5447 2927	Bottom Plate Pad (By-pass feed)	Friction Pad - B	1	15- 15
Paper Tray Section (A204/A206/A207)	AF01 3014	Bottom Plate Pad (Paper Tray)	Bottom Plate Pad	1	17- 9
LCT Unit 1 (A206/A207)	A421 2543	Bottom Plate Pad (LCT)	Friction Pad	1	19- 13
Paper Feed Section 1 (A204/A206/A207)	A134 2674	Torque Limitter	Torque Limitter - 400fg	1	23- 22
	AF03 0024	Pick-up Roller (By-pass feed,LCT)	Pick-up Roller	1	23- 10
	AF03 1025	Feed Roller (By-pass feed,LCT)	Feed Roller	1	23- 7
	AF03 2025	Separation Roller(By-pass feed,LCT)	Separation Roller	1	23- 21
Paper Feed Section 2 (A204/A206/A207)	AF03 0025	Pick-up Roller	Pick-up Feed Roller	1	25- 3
	AF03 1026	Feed Roller	Paper Feed Roller	1	25- 39
	AF03 2027	Separation Roller	Separation Roller	1	25- 25
Paper Feed Section 3 (A204/A206)	AF03 0025	Pick-up Roller	Pick-up Feed Roller	1	27- 3
	AF03 1026	Feed Roller	Paper Feed Roller	1	27- 39
	AF03 2027	Separation Roller	Separation Roller	1	27- 25
Development Unit (A204/A206/A207)	A204 3080	Development Filter	Development Filter	1	41- 18
Drum Unit 1 (A204/A206/A207)	A153 2135	Drum Roller Terminal	Charge Roller Terminal Ass'y	1	43- 8
	A204 2120	Drum Charge Roller Cleaner	Drum Charge Roller Cleaner	1	43- 25
	AD02 7004	Drum Charge Roller	Charge Roller	1	43- 13
Drum Unit 2 (A204/A206/A207)	A153 2277	Cleaning Blade	Cleaning Blade	1	45- 5
	AD02 5019	Pick-off Pawl	Drum Pick-off Pawl	2	45- 2
Transfer Unit (A204/A206/A207)	A134 3850	Transfer Belt	Transfer Belt	1	47- 2
	A153 3892	Transfer Belt Cleaning Blade	Belt Cleaning Blade	1	47- 24
Fusing Unit 1 (A204/A206/A207)	A204 4213	Oil Supply Roller - Cleaning Brush	Cleaning Brush - Oil Supply Roller	1	49- 28
	AE01 1045	Hot Roller	Hot Roller	1	49- 19
	AE04 0019	Oil Supply Roller	Oil Supply Roller	1	49- 25
	AE04 4019	Hot Roller Stripper	Hot Roller Stripper	5	49- 15
Fusing Unit 2 (A207)	AE02 0050	Pressure Roller	Pressure Roller	1	51- 10
	AE04 2030	Cleaning Roller	Cleaning Roller	1	51- 23
Duplex Tray 2 (A207)	AF03 1024	Feed Roller	Feed Roller	1	55- 17
Duplex Tray 4 (A207)	AF01 3003	Bottom Plate Pad	Bottom Plate Pad - Duplex	1	59- 2

Part No.	Description	Page and Index No.
A204 1131	Development Support Plate	63- 8
A204 1135	Fusing Unit Support Plate	63- 27
A204 1277	Front Cover (A204)(RIC)	9- 2
A204 1291	Rear Cover	9- 25
A204 1386	Multi Decal - German (RIC)(NRG)	83- *
A204 1387	Multi Decal - French (RIC)(NRG)	83- *
A204 1388	Multi Decal - Spanish (RIC)(NRG)	83- *
A204 1389	Multi Decal - Italian (RIC)(NRG)	83- *
A204 1396	Multi Decal - German (INF)	83- *
A204 1397	Multi Decal - French (INF)	83- *
A204 1398	Multi Decal - Spanish (INF)	83- *
A204 1399	Multi Decal - Italian (INF)	83- *
A204 1465	Key-top - Sorter	13- 25
A204 1471	Keytop - Halftone	13- 19
A204 1472	Keytop - Enlarge	13- 20
A204 1473	Keytop - Reduce	13- 21
A204 1475	Operation Panel Case - LT	13- 22
A204 1476	Operation Panel Case - A4	13- 22
A204 1477	Display Panel - LT (A204/A206)	13- 24
A204 1478	Display Panel - A4 (A204/A206)	13- 24
A204 1479	Sheet Sorter - LT (A204/A206)	13- 27
A204 1480	Sorter Sheet - A4 (A204/A206)	13- 27
A204 1481	Sheet - LT	13- 23
A204 1482	Sheet - A4	13- 23
A204 1486	Operation Panel Sheet - LT (A204/A206)	9- 32
A204 1486	Operation Panel Sheet - LT (A204/A206)	13- 17
A204 1486	Operation Panel Sheet - LT (A204/A206)	83- 10
A204 1487	Operation Panel Sheet - A4 (A204/A206)	9- 32
A204 1487	Operation Panel Sheet - A4 (A204/A206)	13- 17
A204 1487	Operation Panel Sheet - A4 (A204/A206)	83- 10
A204 1674	Shield Glass Guide	75- 19
A204 1677	Optical Filter	75- 21
A204 1770	Scanner Unit - 85V 310W (230V)	33- 1
A204 1790	Scanner Unit -97V 310W (120V)	33- 1
A204 1840	Lens Magnification Unit	31- 1

Part No.	Description	Page and Index No
A204 1844	Lens Drive Unit	31- 11
A204 1976	Density Sensor Case	35- 15
A204 1977	Density Sensor Cover	35- 14
A204 2101	P.T.L. Lamp Ass'y	29- 9
A204 2110	Charge Roller Ass'y	43- 2
A204 2120	Drum Charge Roller Cleaner	43- 25
A204 2155	Decal - Caution	43- 30
A204 2155	Decal - Caution	83- 15
A204 2187	Spacer-11mm	75- 6
A204 2188	Spacer-15mm	75- 7
A204 2256	Drum Unit	45- *
A204 2800	Upper Paper Feed Unit	27- *
A204 2850	Lower Paper Feed Unit	25- *
A204 2860	Pickup Arm	25- 5
A204 2904	Lower Guide Plate - Duplex Feed (A207)	29- 26
A204 2936	Tray Lift Motor (A204/A206)	63- 15
A204 2953	Paper Tray	17- 8
A204 2971	Bottom Lift Shaft	17- 17
A204 2972	Bottom Lift Lever	17- 16
A204 3051	Development Unit	41- *
A204 3080	Development Filter	41- 18
A204 3150	Toner Bottle Drive (RIC NA)	39- *
A204 3151	Toner Bottle Drive (RIC EU)	39- *
A204 3153	Toner Bottle Drive (Others)	39- *
A204 3200	Toner Hopper Ass'y	41- 3
A204 3261	Release Bracket	39- 29
A204 3281	Bottle Bracket Cover	39- 14
A204 3568	Rear Bushing	45- 11
A204 3580	Toner Collection Unit	43- 27
A204 3801	Spring Clutch - Transfer Belt	65- 37
A204 3911	Cam Shaft	65- 31
A204 3915	Magnet Clutch Bracket	65- 26
A204 3921	Clutch Arm	65- 35
A204 3922	Brake Cam	65- 33
A204 4006	Fusing Unit - 120V (NA)	49- *

Part No.	Description	Page and Index No.
A204 4007	Fusing Unit - 110V (TWN)	49- *
A204 4008	Fusing Unit - 230V (EU)	49- *
A204 4055	Upper Plate - Fusing Entrance Guide	49- 4
A204 4063	Front Terminal	49- 10
A204 4072	Front Holder	51- 28
A204 4073	Rear Holder	51- 29
A204 4084	Fusing Connector Bracket	49- 12
A204 4101	Front Side Plate	51- 14
A204 4110	Rear Side Plate	51- 16
A204 4115	Shielding Plate	49- 17
A204 4116	Entrance Guide Stay	51- 18
A204 4151	Fusing Unit Base	51- 21
A204 4171	Heater Holder	49- 24
A204 4181	Front Release Lever	51- 15
A204 4185	Rear Release Lever	51- 17
A204 4200	Upper Frame	49- 3
A204 4213	Cleaning Brush - Oil Supply Roller	49- 28
A204 4217	Support Bracket-oil Supply Roller	49- 29
A204 4221	Grounding Wire Oil Supply	49- 30
A204 4270	Cleaning Roller Bracket	51- 24
A204 4312	Stripper Pawl Bracket	49- 18
A204 4452	Grounding Wire	61- 32
A204 4651	Bottom Pressure Plate	59- 5
A204 5101	Main Control Board (NA)	71- 2
A204 5101	Main Control Board (NA)	81- *
A204 5107	Ic-4m X16 100ns	71- 4
A204 5107	IC-4M X16 100NS	81- 2
A204 5117	IC - RF5A230	81- 3
A204 5160	ADS Sensor Board	35- 18
A204 5181	Main Control Board (EU/ASIA/TWN)	71- 2
A204 5181	Main Control Board (EU/ASIA/TWN)	81- *
A204 5212	Lens Drive Motor - DC24V 38W	31- 18
A204 5300	Fusing Unit Connector - 120V	49- 13
A204 5311	Rear Lower Harness (NA) (A204/A206)	71- 17
A204 5326	Fusing Relay Harness	73- 1

Part No.	Description	Page and Index No
A204 5521	Noise Filter Board (TWN)	73- 16
A204 5611	Rear Lower Harness (EU/ASIA/TWN)	71- 17
A204 5665	Fusing Unit Connector - 230V	49- 13
A204 5810	Power Supply Cord Bracket	73- 17
A204 5811	Main Board Bracket	71- 1
A204 6404	Decal - Model Name - GES (A204)	9- 35
A204 6404	Decal - Model Name - GES (A204)	83- 13
A204 6407	Decal - Model Name - NST (A204)	9- 35
A204 6407	Decal - Model Name - NST (A204)	83- 13
A204 6412	Front Cover (A204)(SVN)	9- 2
A204 6414	Decal - Model Name - REX (A204)	9- 35
A204 6414	Decal - Model Name - REX (A204)	83- 13
A204 6422	Front Cover (A204)(INF)	9- 2
A204 8600	Operating Instructions English - A4 (RIC)	83- 6
A204 8607	Operating Instructions - English LT (RIC)	83- 6
A204 8608	Operating Instructions - English A4 (RIC)	83- 6
A204 8609	Operating Instructions - Chinese (RIC)	83- 6
A204 8650	Operating Instructions - English LT (SVN)	83- 6
A204 8660	Operating Instructions - English A4 (INF)	83- 6
A204 8661	Operating Instructions - German (INF)	83- 6
A204 8662	Operating Instructions - French (INF)	83- 6
A204 8663	Operating Instructions - Italian(INF)	83- 6
A204 8664	Operating Instructions - Spanish(INF)	83- 6
A204 8690	Operating Instructions - English A4 (NRG)	83- 6
A204 8697	Operating Instructions - English LT (NRG)	83- 6

Part No.	Description	Page and Index No.
AA00 1373	Decal - Main Switch	9- 28
AA00 1373	Decal - Main Switch	83- 2
AA00 1389	Large Decal - Energy Star	9- 36
AA00 1389	Large Decal - Energy Star	83- 16
AA00 2209	Decal - Paper Size	83- 12
AA01 2080	Dust Filter	9- 26
AA04 3364	Timing Belt - S3M300	67- 17
AA04 3368	Timing Belt - S3M609	67- 28
AA04 3373	Timing Belt - S2M308	55- 23
AA04 3374	Timing Belt - S2M800	59- 17
AA04 3386	Timing Belt - 40S2M1224	37- 2
AA04 3387	Timing Belt - 40S2M984	37- 1
AA04 3388	Timing Belt - 60S2M180	37- 11
AA04 3392	Drum Timing Belt	63- 3
AA04 3394	Timing Belt - 60S3M459	63- 4
AA04 3395	Timing Belt - 30S3M327	63- 19
AA04 3411	Timing Belt - S2M 300 (A207)	63- 2
AA04 3420	Timing Belt - 80S3M519	63- 5
AA04 3430	Timing Belt - 160S2M330	63- 7
AA04 3456	Timing Belt - S3M167	21- 12
AA05 0086	Lens Drive Wire - Horizontal	31- 20
AA05 0087	Lens Drive Wire - Vertical	37- 26
AA05 1023	Release Plate	63- 21
AA05 1023	Release Plate	69- 4
AA05 1025	Release Wire	75- 4
AA06 0103	Solenoid Spring	49- 14
AA06 0228	Spring - Transfer Drum Cleaning Sol	63- 13
AA06 0228	Spring - Transfer Drum Cleaning Sol	67- 14
AA06 0453	Relay Adjusting Spring	39- 31
AA06 0523	Pick-up Pressure Spring	25- 18
AA06 0523	Pick-up Pressure Spring	27- 18
AA06 0534	Tray Lock Spring - 19mm	77- 5
AA06 0572	Pressure Spring	67- 6
AA06 0573	Release Spring	67- 4
AA06 0575	Release Spring	25- 30

Part No.	Description	Page and Index No
AA06 0575	Release Spring	27- 30
AA06 0577	Release Spring	25- 10
AA06 0577	Release Spring	27- 10
AA06 0593	Spring	57- 9
AA06 0595	Tension Spring	37- 12
AA06 0598	Pressure Spring	45- 10
AA06 0636	Pressure Spring	25- 28
AA06 0636	Pressure Spring	27- 28
AA06 0664	Spring - Tightener	67- 11
AA06 2285	Release Spring	75- 3
AA06 2286	Pressure Spring	43- 10
AA06 2291	Pressure Spring	75- 2
AA06 2292	Tension Spring	51- 9
AA06 2293	Roller Cover Spring	65- 18
AA06 3239	Spring - Handle	19- 20
AA06 3366	Chuck Spring	39- 8
AA06 3367	Pressure Spring	39- 12
AA06 3370	Spring	59- 16
AA06 3487	Spring - 10mm	25- 34
AA06 3487	Spring - 10mm	27- 34
AA06 3499	Pressure Spring	23- 25
AA06 3523	Adjust Spring	35- 21
AA06 3532	Spring	73- 14
AA06 3538	Spring - 10mm (A204)	15- 8
AA06 3539	Spring - Registration Roller	29- 5
AA06 3552	Driven Roller Spring	65- 20
AA06 6246	Spring	41- 24
AA06 6247	Torsion Spring	47- 26
AA06 6260	Shutter Spring	39- 17
AA06 6284	Torsion Spring	39- 22
AA06 6286	Pressure Spring	43- 22
AA08 0034	Bushing - 4x5x7 (A204)	15- 7
AA08 0034	Bushing - 4x5x7	19- 37
AA08 0037	Bushing - 6 Mm	23- 24
AA08 0156	Bushing - M4	25- 33

Part No.	Description	Page and Index No.
AA08 0156	Bushing - M4	27- 33
AA08 0171	Bushing	29- 7
AA08 0172	Bushing	29- 6
AA08 0186	Bushing - 6mm	41- 12
AA08 0188	Bushing - 5mm	41- 8
AA08 0191	Front Roller Bushing	43- 18
AA08 0195	Bias Roller Bushing - Rear	47- 13
AA08 0197	Rear Roller Bushing	43- 9
AA08 0209	Rear Roller Housing	43- 11
AA08 0219	Rear Roller Bushing	43- 5
AA08 2046	Bushing - 6x12x6	25- 13
AA08 2046	Bushing - 6x12x6	27- 13
AA08 2047	Bushing - 8x16x7	25- 20
AA08 2047	Bushing - 8x16x7	27- 20
AA08 2047	Bushing - 8x16x7 (A207)	29- 23
AA08 2047	Bushing - 8x16x7	65- 3
AA08 2058	Bushing - 6x10x9mm	61- 26
AA08 2061	Bias Roller Bushing - Front	47- 6
AA08 3009	Clutch Roller - 8x18x11	25- 12
AA08 3009	Clutch Roller - 8x18x11	27- 12
AA08 3009	Clutch Roller - 8x18x11 (A207)	29- 21
AA08 3010	Clutch Roller - 6x14x10	23- 13
AA08 3016	Roller Clutch:6x14x10	49- 26
AA11 1208	Paper End Sensor Feeler	55- 5
AA12 0067	Anti Static Brush	53- 16
AA12 0071	Exit Antistatic Brush	61- 28
AA13 2184	Motor Cushion	57- 20
AA13 2186	Collar	75- 8
AA14 0291	Bottom Plate Shaft	59- 6
AA14 0321	Pick-off Pawl Shaft	45- 4
AA14 0534	Feed Shaft (A204)	23- 11
AA14 0542	Feed Roller Shaft	25- 6
AA14 0542	Feed Roller Shaft	27- 6
AA14 0560	Joint Shaft	45- 26
AA14 0575	Paper Feed Shaft (A206/A207)	23- 11

Part No.	Description	Page and Index No
AA14 0576	LCT Drive Shaft	21- 15
AA14 0599	Scanner Drive Shaft	37- 4
AA14 3062	Shoulder Screw - M4	61- 15
AA14 3219	Stepped Screw	23- 35
AA14 3301	Stepped Screw - M3x4	73- 10
AA14 3307	Stepped Screw - M3x4	55- 4
AA14 3307	Stepped Screw - M3x4	57- 17
AA14 3410	Stepped Screw - M4	39- 11
AA14 3416	Stepped Screw - M4x3	9- 18
AA14 3417	Shoulder Screw - M4x4	9- 23
AA14 3444	Stepped Screw	75- 26
AA14 3452	Stepped Screw	73- 11
AA14 3459	Knob Serew	39- 34
AA14 3712	Chuck Shaft	39- 5
AA14 3715	Stepped Screw - M5	49- 7
AA14 3730	Stepped Screw	43- 29
AA14 3744	Stepped Screw	43- 19
AA14 5537	Belt Release Shaft	47- 21
AA14 5539	Solenoid Shaft	65- 4
AA14 5794	Front Support Shaft	43- 20
AA14 5808	Rear Support Shaft	43- 12
AA14 8413	Idle Gear Shaft	39- 25
AA14 8439	Thermistor Shaft	43- 21
AA14 8447	Guide Pin - Platen Cover	11- 10
AA15 0231	Seal - 15x30	41- 20
AA15 0234	Mylar Seal - Base	39- 28
AA15 0368	Shielding Plate - Lens Cover	31- 4
AA15 0369	Original Sensor Seal	31- 2
AA15 0377	Shutter Seal	39- 20
AA15 0380	Seal Front Holder	45- 15
AA15 0381	Seal Rear Holder	45- 33
AA15 0382	Entrance Seal	41- 2
AA15 0389	Drum Guide Seal	45- 12
AA15 1177	Seal - 5x82x4	73- 21
AA15 1809	Rear Seal	45- 9

Part No.	Description	Page and Index No.
AA15 1894	Seal - 67x53x2	39- 2
AA15 1935	Seal - 38x32x2.5	41- 4
AA15 1941	Right Shield - Development Case	31- 3
AA15 1942	Side Seal	45- 23
AA15 1943	Front Seal	45- 6
AA15 1944	Rear Seal	45- 8
AA15 1945	Joint Seal	43- 28
AA15 2245	Front Drum Seal	45- 13
AA15 2246	Rear Drum Seal	45- 31
AA15 2330	Magnification Seal	31- 12
AA15 2332	Seal - 9x351	47- 17
AA15 2334	Second Mylar	41- 26
AA16 1067	Cushion - Motor	57- 19
AA16 2067	Platen Cover Pad	11- 6
AA16 2068	Guide Plate Pad	53- 12
AB01 0341	Gear - 18Z	45- 1
AB01 0342	Idle Gear - 20z	43- 17
AB01 0343	Idle Gear - 14z	43- 16
AB01 0344	Roller Gear - 20Z	43- 15
AB01 1133	Gear - 49Z	21- 14
AB01 1153	Idle Gear - 25z	67- 18
AB01 1165	Gear - 32Z	57- 5
AB01 1166	Gear - 33Z	55- 11
AB01 1167	Gear - 25Z	57- 15
AB01 1343	Idle Gear - 23z	23- 9
AB01 1344	Gear - 16Z	23- 27
AB01 1345	Gear - 20Z	23- 28
AB01 1346	Gear - 27Z	23- 31
AB01 1357	Collection Coil Gear - 15Z	45- 30
AB01 1358	Driven Gear	43- 4
AB01 1359	Joint Drive Gear - 20Z	45- 27
AB01 1360	Idle Gear - 19Z	45- 20
AB01 1361	Drive Gear - 33Z	45- 14
AB01 3343	Gear - 22Z	41- 9
AB01 3420	Gear - 18Z	25- 22

Part No.	Description	Page and Index No
AB01 3420	Gear - 18Z	27- 22
AB01 3485	Gear - 20Z	29- 3
AB01 3486	Gear - 14Z	29- 11
AB01 3868	Gear - 16Z	17- 14
AB01 3872	Fusing Cam Gear - 28z	63- 17
AB01 3875	Reverse Gear - 27z	67- 26
AB01 3881	Gear - 31Z	59- 12
AB01 3882	Gear - 40Z	49- 20
AB01 3883	Idle Gear - 25z	49- 1
AB01 3884	Exit Gear - 17z	51- 3
AB01 3885	Idle Gear - 20z	51- 2
AB01 3889	Gear - 24Z	61- 27
AB01 3909	Idle Gear	41- 10
AB01 3911	Gear	41- 11
AB01 3914	Gear - 17Z	41- 22
AB01 3915	Gear - 26Z	41- 23
AB01 3916	Belt Drive Gear - 25z	47- 11
AB01 3917	Toner Supply Gear - 14Z	65- 2
AB01 3918	Drive Gear - 35z	67- 20
AB01 7129	Gear - 20Z AND 72Z	37- 17
AB01 7332	Gear - 24Z/41Z	57- 14
AB01 7335	Timing Pulley - 22Z/37Z	67- 21
AB01 7336	Timing Pulley - 30Z/35Z	67- 24
AB01 7337	Gear - 15Z/55Z	57- 4
AB01 7339	End Fence Gear - 22z/58z	59- 14
AB01 7345	Timing Pulley - 35Z	63- 18
AB01 7346	Exit Gear	63- 9
AB01 7347	Idle Gear	39- 24
AB01 7360	Gear Pulley	31- 19
AB01 7360	Gear Pulley	37- 8
AB01 7361	Gear - 24Z/56Z	31- 21
AB01 7361	Gear - 24Z/56Z	37- 18
AB01 7362	Gear - 25Z/32Z	37- 7
AB01 7365	Coupled Gear - 15z/22z	41- 21
AB01 7366	Paddle Gear	41- 14

Part No.	Description	Page and Index No.
AB01 7367	Right Paddle Roller	41- 19
AB01 7368	Cleaning Drive Gear - 17Z/46Z/18Z	65- 7
AB01 7369	Transfer Belt Pulley - 24Z/20Z	65- 22
AB01 7370	Development Pulley - 46Z/31Z	65- 24
AB01 7373	Idle Cam - 16/28Z	45- 25
AB01 7374	Drive Gear - 12Z	45- 18
AB01 7375	Drive Gear - 16Z	45- 17
AB01 7376	Separation Pawl Cam - 40Z	45- 21
AB01 7377	Gear - 25Z	67- 22
AB01 7385	Gear - 17Z/24Z	65- 29
AB01 7386	Cleaning Cam - 24Z	65- 1
AB01 7388	Blade Cam - 40Z	45- 19
AB01 7400	Gear- 18z/68z	59- 13
AB03 0281	Timing Pulley - 28Z	21- 9
AB03 0455	Tightener Pulley - 8x20x13	67- 13
AB03 0463	Fusing Cam Pulley - 35Z	63- 16
AB03 0464	Timing Pulley - 30Z	67- 29
AB03 0465	Timing Pulley - 25Z	67- 16
AB03 0466	Timing Pulley - 20Z	25- 14
AB03 0466	Timing Pulley - 20Z	27- 14
AB03 0466	Timing Pulley - 20Z	29- 32
AB03 0473	End Fence Pulley - 22z	59- 11
AB03 0474	Pulley - 24Z	55- 22
AB03 0486	Timing Pulley - 24Z	37- 9
AB03 0487	Timing Pulley - 44Z	37- 16
AB03 0489	Timing Pulley - 22Z	37- 15
AB03 0492	Pulley - 25/25/34/125Z	63- 6
AB03 0494	Drum Pulley - 75Z	65- 14
AB03 0536	Pulley - 18T S2M	61- 14
AB03 2059	Driven Pulley	31- 14
AB03 2059	Driven Pulley	37- 23
AB03 3064	Drive Pulley - 34Z/25Z	67- 19
AB03 3069	Timimng Pulley - 22z/44z	37- 3
AB04 0015	Spring Clutch - Tray Bottom Plate	57- 12
AC01 2060	Exposure Glass - A3t-3.2	9- 20

Part No.	Description	Page and Index No
AC03 0103	1st Mirror	33- 13
AC03 0106	4/5 Mirror	35- 16
AC03 0107	6th Mirror	37- 20
AC03 5022	Rear Mirror Clamp - 1st Mirror	33- 2
AC04 2113	Left Original Scale - A4	9- 19
AC04 2117	Left Original Scale - LT	9- 19
AC04 2120	Rear Original Scale - A4	9- 22
AC04 2124	Rear Original Scale - LT	9- 22
AD02 5019	Drum Pick-off Pawl	45- 2
AD02 7004	Charge Roller	43- 13
AD03 7045	Toner Collection Coil	41- 13
AD04 3035	Toner Collection Coil	45- 16
AE01 1045	Hot Roller	49- 19
AE02 0050	Pressure Roller	51- 10
AE03 0022	Bearing - 12x24x64m	51- 11
AE03 0026	Ball Bearing - 30x42x7	49- 21
AE03 1028	Bushing - 4mm	49- 27
AE03 1028	Bushing - 4mm	51- 22
AE04 0019	Oil Supply Roller	49- 25
AE04 2030	Cleaning Roller	51- 23
AE04 4019	Hot Roller Stripper	49- 15
AF01 0018	Duplex Tray	59- 31
AF01 3003	Bottom Plate Pad - Duplex	59- 2
AF01 3014	Bottom Plate Pad	17- 9
AF01 5027	Paper Size Slider	17- 13
AF01 6084	Front Side Fence	17- 3
AF01 6085	Rear Side Fence	17- 11
AF01 6160	Rear Side Fence	59- 3
AF01 6161	Front Side Fence	59- 4
AF01 7012	End Fence	17- 7
AF02 0316	Lower Registration Roller	29- 13
AF02 0317	Stack Roller	55- 15
AF02 0319	Transport Roller	55- 6
AF02 0320	Right Transport Roller	55- 7
AF02 0321	Paper Feed Drive Roller	27- 29

Part No.	Description	Page and Index No.
AF02 0321	Paper Feed Drive Roller (A207)	29- 24
AF02 0322	Lower Drive Roller - Transport	25- 29
AF02 0326	Exit Roller Ass'y	51- 4
AF02 0327	Exit Roller	61- 10
AF02 0328	Relay Drive Roller	61- 16
AF02 0329	Relay Roller	25- 32
AF02 0329	Relay Roller	27- 32
AF02 0330	Vertical Driven Roller (A204)	15- 9
AF02 0330	Vertical Driven Roller	19- 36
AF02 1052	Upper Registration Roller	29- 12
AF02 2077	Driven Roller	53- 7
AF02 2077	Driven Roller	55- 19
AF02 5023	Exit Pick-off Pawl	61- 11
AF03 0024	Pick-up Roller	23- 10
AF03 0025	Pick-up Feed Roller	25- 3
AF03 0025	Pick-up Feed Roller	27- 3
AF03 1024	Feed Roller	55- 17
AF03 1025	Feed Roller	23- 7
AF03 1026	Paper Feed Roller	25- 39
AF03 1026	Paper Feed Roller	27- 39
AF03 2025	Separation Roller	23- 21
AF03 2027	Separation Roller	25- 25
AF03 2027	Separation Roller	27- 25
AF04 0031	Upper Exit Roller	61- 5
AF04 0548	Exit Drive Roller	51- 5
AF04 3069	Copy Tray	9- 14
AF04 3076	Copy Tray Slide	9- 15
AF04 3077	Copy Tray Guide	9- 16
AG01 1340	Operation Panel Ass'y - LT (A204/A206)	9- 12
AG01 1340	Operation Panel Ass'y - LT (A204/A206)	13- 0
AG01 1341	Operation Panel Ass'y - LT (A207)	9- 12
AG01 1341	Operation Panel Ass'y - LT (A207)	13- 0
AG01 1344	Operation Panel Ass'y - A4 (A204/A206)	9- 12
AG01 1344	Operation Panel Ass'y - A4 (A204/A206)	13- 0
AG01 1345	Operation Panel Ass'y - A4 (A207)	9- 12
AG01 1345	Operation Panel Ass'y - A4 (A207)	13- 0
AG01 1350	Operation Panel Ass'y (A204/A206)(SVN)	9- 12
AG01 1350	Operation Panel Ass'y (A204/A206) (SVN)	13- 0
AG01 1351	Operation Panel Ass'y (A207)(SVN)	9- 12
AG01 1351	Operation Panel Ass'y (A207) (SVN)	13- 0
AG05 0074	Registration Knob	9- 6
AG05 0074	Registration Knob	29- 2
AG05 0075	Middle Knob	9- 11
AG05 0075	Middle Knob	29- 1
AG05 0076	Fusing Knob	51- 12
AG07 0004	Magnetic Catch	9- 4
AG07 0004	Magnetic Catch (A204)	15- 5
AG07 0004	Magnetic Catch	21- 16
AG07 0004	Magnetic Catch	61- 20
AG07 0004	Magnetic Catch	75- 18
AG07 0009	Magnetic Catch	51- 6
AH01 0007	Rubber Foot	77- 15
AW01 0040	Original Sensor	35- 11
AW01 0065	Auto Response Sensor	9- 34
AW01 0068	Original Length Sensor	31- 5
AW01 0073	Optics Sensor	13- 1
AW02 0022	Photointerruptor	35- 13
AW02 0022	Photointerruptor	73- 8
AW02 0068	Photointerruptor	29- 15
AW02 0069	Photointerruptor (A204)	15- 10
AW02 0069	Photointerruptor	19- 28
AW02 0074	Sensor Actuator	61- 9
AW02 0075	Photointerrupter	21- 7
AW02 0075	Photointerrupter	23- 16
AW02 0075	Photointerrupter	25- 8
AW02 0075	Photointerrupter	27- 8
AW02 0075	Photointerrupter	31- 13
AW02 0075	Photointerrupter	57- 21
AW02 0075	Photointerrupter	59- 18
AW02 0075	Photointerrupter	65- 27

Part No.	Description	Page and Index No.
AW03 0054	Optical Fiber - 250mm	71- 9
AW03 0055	Optical Fiber - 420mm	71- 8
AW03 0056	Optical Fiber - 550mm	73- 9
AW10 0027	Thermister	9- 21
AW10 0027	Thermister	33- 12
AW10 0032	Thermistor - 25°c 10k Ω	43- 24
AW23 0008	Toner Density Sensor	41- 7
AW23 0009	Toner End Sensor	41- 5
AW50 0012	Push Switch	23- 17
AW50 0012	Push Switch	73- 5
AX05 0090	Motor - DC 24v 36w	21- 8
AX07 0020	Brushless Motor - DC24V 86W	63- 10
AX12 0039	DC Solenoid - 24V - 400gf	61- 31
AX20 0098	Magnetic Clutch - 7kg Cm 35z	67- 25
AX20 0099	Magnetic Clutch - 7kgf.cm 26z	67- 23
AX20 0100	Magnetic Clutch - 3.5kgf Cm 35z	67- 27
AX20 0101	Magnetic Clutch - 2.5kgf 35z	23- 12
AX20 0105	Magnetic Clutch - 15kgf 24z	65- 6
AX20 0106	Magnetic Clutch - 15kgf 52z	65- 9
AX21 0059	Spring Clutch - 5kgf	65- 30
AX31 0022	Total Counter	69- 9
AX40 0021	Anti-condensation Heater - 115V 18W	69- 6
AX40 0022	Anti-condensation Heater - 240V 18W	69- 6
AX40 0047	Anticondensation Heater - 115V 15W (Option)	35- 22
AX40 0048	Anticondensation Heater - 240V 15W (Option)	35- 22
AX40 0094	Anticondensation Heater - 120V 9W	75- 1
AX40 0095	Anticondedsation Heater - 230V 9W	75- 1
AX43 0038	Fusing Lamp - 120V 350W (NA)	49- 22
AX43 0039	Fusing Lamp - 230V 350W (EU)	49- 22
AX43 0043	Fusing Lamp - 110V 350W (TWN)	49- 22
AX44 0098	Fusing Lamp - 120V 800W (NA)	49- 23
AX44 0099	Fusing Lamp - 230V 800W (EU)	49- 23
AX44 0102	Fusing Lamp - 110V 800W (TWN)	49- 23
AX53 0014	Exposure Lamp - 85V 310W (230V)	33- 7
AX53 0015	Exposure Lamp - 97V 310W (120V)	33- 7

Part No.	Description	Page and Index No
AX64 0058	Fan Motor - DC 24V 4.32W	73- 6
AX64 0059	Fan Motor - DC24V 3.12W	61- 1
AX64 0075	Fan Motor - DC24V 4.32W	73- 24
AZ02 0008	Coil - 10Mh 2A	73- 20
AZ13 0023	Transformer - 230V	71- 14
AZ23 0054	DC Drive Board - 120V 295W	71- 10
AZ24 0042	DC Power Supply Unit - 220/240V 315W	71- 10
AZ30 0041	Power Pack - Transfer Unit	47- 31
AZ32 0078	DC Power Pack	73- 2
AZ43 0020	High Voltage Supply Cord	65- 25
AZ43 0020	High Voltage Supply Cord	73- 3
AZ48 0029	Ct Harness	43- 1
C105 2352	Stepped Screw - M6x1.7	63- 14
C225 2866	Decal - Key Top Cover	9- 33
C225 2866	Decal - Key Top Cover	83- 11
C225 2867	Decal - Cover - Panel - Nashua	9- 33
C225 2867	Decal - Cover - Panel - Nashua	83- 11
G006 4317	Pressure Spring	45- 7
G011 3305	Gear - 16T	15- 25
G011 3305	Gear - 16T	59- 8
G012 3897	Relay Harness - Toner End Sensor	41- 15
G694 4747	Guide Plate Holder	53- 11

Part No.	Description	Page and Index No.
A008 9502	Silicone Grease - G40m	85- 6
A028 9300	Grease Barrierta Jfe 55/2	85- 10
A048 1801	Mirror Seal	37- 28
A048 2838	Nylon Rivet	17- 10
A053 1957	Flex Hinge - Platen Cover	11- 5
A069 1883	Shoe - Scanner	31- 17
A069 1883	Shoe - Scanner	33- 3
A069 1883	Shoe - Scanner	35- 6
A075 1766	Adjusting Cam	37- 22
A077 1310	Snap Ring - M2	43- 6
A077 1673	Thermofuse Terminal	33- 5
A077 1690	Spring Plate - Mirror	35- 4
A077 1690	Spring Plate - Mirror	37- 19
A077 3918	Spring - T/S Unit	47- 18
A077 3918	Spring - T/S Unit	65- 36
A077 4162	Shoulder Screw - M3	51- 19
A079 3626	Stepped Screw - Swing Cleaning	57- 13
A085 1670	Exposure Adjusting Plate	33- 8
A096 1692	ADS Case (Option)	35- 29
A096 1693	ADS Cover (Option)	35- 30
A096 1873	Scanner Shoe Pin	33- 17
A096 1873	Scanner Shoe Pin	35- 1
A096 5230	ADS Board (Option)	35- 27
A096 6266	Tray Lock Arm	77- 4
A111 1753	Seal - 0.1x18x49	31- 7
A130 2820	Front Upper Side Plate	27- 38
A130 2824	Rear Upper Side Plate	27- 15
A130 2845	Upper Guide Plate	27- 37
A130 2850	Upper Feed Stay	27- 16
A130 2871	Sensor Bracket	27- 9
A130 2876	Paper End Sensor Bracket	25- 7
A130 2876	Paper End Sensor Bracket	27- 7
A130 2929	Slide Rail Bracket	77- 16
A130 5314	Relay Harness - Paper Feed	27- 36
A134 1071	Left Grip Plate	63- 25

Part No.	Description	Page and Index No
A134 1071	Left Grip Plate	69- 15
A134 1072	Right Bracket - Grip Plate	63- 24
A134 1072	Right Bracket - Grip Plate	69- 16
A134 1073	Left Bracket - Grip Plate	63- 26
A134 1073	Left Bracket - Grip Plate	69- 17
A134 1121	Joint Gear	63- 22
A134 1328	Small Cap	9- 29
A134 1394	Front Platen Cover	11- 4
A134 1395	Rear Platen Cover	11- 7
A134 1396	Original Holder	11- 8
A134 2554	Lower Registration Guide	29- 28
A134 2557	Regist Sensor Bracket	29- 14
A134 2572	Middle Tightener	67- 15
A134 2575	Tightener Arm	67- 12
A134 2579	Stopper Bracket	67- 8
A134 2580	Vertical Transfer Hunge (A204)	29- 17
A134 2582	Sensor Bracket - Vertical Transfer (A204)	29- 27
A134 2585	Vertical Transfer Guide Plate (A204)	15- 6
A134 2586	Hinge Bracket (A204)	15- 1
A134 2587	Switch Bracket (A204)	15- 4
A134 2591	Vertical Transfer (A204)	15- 2
A134 2654	Pick-up Arm	23- 30
A134 2654	Pick-up Arm	27- 5
A134 2656	Stopper Plate	23- 6
A134 2658	Grounding Plate	23- 5
A134 2659	By-pass Feed Housing	23- 15
A134 2660	Paper Feed Feeler	23- 2
A134 2661	Feeler Roller	23- 3
A134 2662	Grounding Plate	23- 18
A134 2663	Separation Guide	23- 20
A134 2667	Separation Drive Shaft	23- 29
A134 2668	Separation Driven Shaft	23- 23
A134 2670	By-pass Feed Cover	23- 4
A134 2674	Torque Limitter - 400fg (A204)	23- 22
A134 2675	Solenoid Bracket (A204)	67- 5

Part No.	Description	Page and Index No.
A134 2678	Solenoid Link (A204)	67- 3
A134 2680	DC Solenoid (A204)	67- 7
A134 2688	Positioning Plate	23- 1
A134 2689	Gear Cover	23- 26
A134 2692	By-pass Feed Table Ass'y	15- 13
A134 2697	By-pass Feed Table	15- 21
A134 2701	By-pass Feed Guide	15- 20
A134 2705	Magnet Catch Plate	15- 22
A134 2706	Rear Fence Rack	15- 24
A134 2707	Front Fence Rack	15- 26
A134 2711	Front Side Fence	15- 17
A134 2716	Rear Side Fence	15- 19
A134 2721	Front Paper Guide	15- 16
A134 2726	Rear Paper Guide	15- 18
A134 2741	By-pass Feed Entrance Guide	15- 14
A134 2746	By-pass Feed Cover	15- 27
A134 2790	Reverse Stay	25- 26
A134 2790	Reverse Stay	27- 26
A134 2795	Pressure Lever	25- 27
A134 2795	Pressure Lever	27- 27
A134 2810	Release Solenoid	25- 31
A134 2810	Release Solenoid	27- 31
A134 2821	Front Side Plate	25- 38
A134 2826	Rear Side Plate	25- 15
A134 2830	Drive Shaft	25- 21
A134 2830	Drive Shaft	27- 21
A134 2832	Driven Shaft Ass'y	25- 23
A134 2832	Driven Shaft Ass'y	27- 23
A134 2834	Vertical Transport Guide	25- 35
A134 2834	Vertical Transport Guide	27- 35
A134 2839	Reverse Guide Plate	25- 1
A134 2839	Reverse Guide Plate	27- 1
A134 2846	Lower Guide Plate	25- 37
A134 2855	Lower Feed Stay	25- 16
A134 2862	Paper End Sensor Feeler	25- 17
A134 2862	Paper End Sensor Feeler	27- 17
A134 2863	Paper End Sensor Lever	25- 19
A134 2863	Paper End Sensor Lever	27- 19
A134 2866	Pick-up Solenoid	25- 11
A134 2866	Pick-up Solenoid	27- 11
A134 2868	Solenoid Bracket	25- 40
A134 2868	Solenoid Bracket	27- 40
A134 2873	Positioning Sensor Bracket	25- 9
A134 2885	Torque Limitter	25- 24
A134 2885	Torque Limitter	27- 24
A134 2895	Vertical Relay Guide	29- 20
A134 2900	Duplex Stay (A207)	29- 22
A134 2903	Upper Guide Plate - Duplex Feed (A207)	29- 25
A134 2921	Left Slide Rail	77- 6
A134 2926	Paper Feed Lock Bracket	77- 3
A134 2929	Slide Rail Bracket - Front Right	77- 14
A134 2930	Right Slide Rail	77- 13
A134 2941	Bracket - Paper Size Sensor	73- 4
A134 2947	Heater Cover (Option)	69- 10
A134 2952	Universal Tray	17- 20
A134 2956	Paper Feed Front Cover	17- 1
A134 2956	Paper Feed Front Cover	53- 1
A134 2960	Paper Tray Stopper	17- 21
A134 2968	Grounding Plate	17- 15
A134 2976	Stopper Lever	17- 4
A134 2978	Spring Plate	17- 5
A134 2986	Bottom Plate	17- 18
A134 2997	Decal - Paper Setting	17- 2
A134 2997	Decal - Paper Setting	83- 5
A134 2997	Decal - Paper Setting	83- 17
A134 3161	Bottle Drive Bracket	39- 26
A134 3162	DC Motor - DC24V 5.85W	39- 23
A134 3172	Toner Bottle Holder	39- 15
A134 3177	Toner Slider	39- 4
A134 3179	Chuck Shaft	39- 7

Part No.	Description	Page and Index No.
A134 3180	Bottle Chuck	39- 3
A134 3181	Chuck Roller	39- 6
A134 3190	Toner Bottle Stopper	39- 10
A134 3197	Bottle Holder	39- 13
A134 3201	Cam - Toner Bottle	39- 32
A134 3215	Rubber Cap	39- 9
A134 3850	Transfer Belt	47- 2
A134 4006	Fusing Exit Unit	51- 1
A134 4061	Rear Terminal Plate	49- 8
A134 4130	Fusing Front Cover	49- 2
A134 4153	Slide Rail - Fusing	51- 20
A134 4161	Pressure Lever	51- 13
A134 4272	Roller Holder	51- 32
A134 4280	Fusing Exit Guide - Lower	51- 7
A134 4355	Fusing Unit Stopper	77- 10
A134 4455	Upper Guide Bracket	61- 24
A134 4458	Exit Unit Knob (A207)	61- 23
A134 4459	Exit Cover	61- 12
A134 4464	Left Reverse Guide	61- 17
A134 4468	Lower Guide Plate Bracket	61- 25
A134 4471	Stripper Solenoid	61- 19
A134 4481	Tightener Bracket (A207)	63- 11
A134 4508	Inverter Guide Plate	57- 18
A134 4512	Feed Roller Shaft	55- 21
A134 4525	End Fence	59- 27
A134 4527	Separation Roller	57- 23
A134 4619	Guide Plate Link	53- 20
A134 4620	Grounding Plate	59- 19
A134 4649	Paper Guide Holder	55- 16
A134 4662	Duplex Guide Plate	57- 24
A134 4670	Duplex Guide Mylar	57- 25
A134 4676	Paper End Feeler	55- 8
A134 4688	Front Side Fence Rack	59- 10
A134 4689	Rear Side Fence Rack	59- 9
A134 4690	Clutch Stopper	55- 20

Part No.	Description	Page and Index No
A134 4701	Front Upper Cover	53- 3
A134 4710	End Fence Actuator	59- 24
A134 4712	Right Cover Bracket	53- 19
A134 4714	Tightener	59- 15
A134 4720	End Fence Upper Cover	53- 2
A134 4721	Connector Cover	53- 4
A134 4726	Guide Plate Knob	53- 10
A134 4728	Inverter Feeler	53- 5
A134 4730	Entrance Feeler	53- 14
A134 4732	Upper Guide Plate	53- 6
A134 4739	Lower Guide Plate Knob	53- 18
A134 4740	Lower Guide Plate	53- 15
A134 4751	Front Side Plate	55- 1
A134 4765	Grounding Plate	57- 22
A134 4781	Rear Side Plate	55- 3
A134 4790	Paper End Sensor Bracket	57- 8
A134 4799	Motor Bracket	57- 1
A134 4800	Motor Bracket	57- 2
A134 4804	Guide Plate Stopper	55- 9
A134 4808	Rear Guide Holder	55- 18
A134 4809	Front Guide Holder	55- 14
A134 4884	Decal - Duplex Misfeed Removal	53- 9
A134 4884	Decal - Duplex Misfeed Removal	83- 18
A134 4901	Duplex Right Rail	77- 11
A134 5282	Paper Size Sensor Board	15- 23
A134 5290	Transport Drive Motor - DC3.15V 8.82W	57- 3
A134 5291	Jogger Drive Motor DC 6.48W	59- 20
A134 5292	Jogger Drive Motor DC 10.56W	59- 21
A134 5311	By-pass Feed Harness	23- 14
A134 5315	Relay Harness - Lower Paper Feed	25- 36
A134 5316	Vertical Transfer Harness (A204)	15- 3
A134 5320	Duplex Main Harness	59- 26
A134 5321	Sensor Relay Harness	59- 25
A134 5322	End Fence Harness	59- 30
A134 5323	Motor Harness	59- 22

Part No.	Description	Page and Index No.
A153 1107	Bracket - Brushless Motor	63- 28
A153 1114	Drive Gear Holder	65- 15
A153 1117	Drum Drive Shaft	65- 21
A153 1119	Fusing Drive Tightener	65- 23
A153 1125	Development Drive Bracket	65- 8
A153 1126	Edging	65- 34
A153 1126	Edging	65- 38
A153 1127	Clutch Shaft	65- 5
A153 1128	Tightener	63- 12
A153 1132	Development Tightener	65- 16
A153 1135	Drum Drive Tightener	65- 19
A153 1251	Upper Cover	9- 24
A153 1258	Platen Cover Bracket - Right	73- 22
A153 1259	Platen Cover Bracket - Left	73- 23
A153 1261	Front Right Cover	9- 10
A153 1271	Rear Right Cover	9- 27
A153 1285	Emblem (RIC)	9- 1
A153 1285	Emblem (RIC)	83- 4
A153 1301	Left Cover - A4	9- 17
A153 1302	Left Cover - LT	9- 17
A153 1339	Lower Inner Cover	9- 8
A153 1350	Right Middle Cover	75- 24
A153 1351	Upper Inner Cover	9- 9
A153 1352	Right Lower Cover	9- 7
A153 1353	Front Cover Hinge	69- 1
A153 1354	Hinge Pin	9- 3
A153 1355	Key Counter Bracket	69- 2
A153 1360	Operating Sheet (A204/A206)	9- 5
A153 1365	Symbol Explanation Decal	83- 14
A153 1369	Platen cover Ass'y	11- 1
A153 1370	Platen Cover Hinge	11- 3
A153 1380	Platen Cover Bracket	11- 11
A153 1383	Platen Cover Feeler	11- 9
A153 1452	Key-top Start	13- 2
A153 1453	Key-top Interrupt	13- 3

Part No.	Description	Page and Index No
A153 1454	Key-top Mode Clear	13- 4
A153 1455	Key-top Program	13- 5
A153 1456	Key-top 10 Key	13- 6
A153 1457	Key-top Cler/Stop	13- 7
A153 1458	Key-top Auto Density	13- 8
A153 1459	Key-top Darker	13- 9
A153 1460	Key-top Lighter	13- 10
A153 1461	Key-top Auto Paper Select	13- 11
A153 1462	Key-top Paper Select	13- 12
A153 1463	Key-top Full Size	13- 13
A153 1464	Key-top Auto Reduce/Enlarge	13- 14
A153 1469	Panel Cover	9- 13
A153 1469	Panel Cover	13- 15
A153 1475	Decal - 10key Zoom -lT/DLT	9- 30
A153 1475	Decal - 10key Zoom -LT/DLT	83- 7
A153 1476	Decal - Margin Adjustment - LT/DLT	9- 31
A153 1476	Decal - Margin Adjustment - LT/DLT	83- 8
A153 1478	Decal - 10key Zoom - A4/A3	9- 30
A153 1478	Decal - 10key Zoom - A4/A3	83- 7
A153 1479	Decal - Margin Adjustment - A4/A3	9- 31
A153 1479	Decal - Margin Adjustment - A4/A3	83- 8
A153 1676	Harness Guard Seal	75- 28
A153 1700	Scanner Drive Motor - DC2.3V 13.5W	37- 13
A153 1707	Tension Bracket - Long	37- 14
A153 1708	Tension Bracket - Short	37- 6
A153 1720	Scanner Rail	35- 12
A153 1721	Spring Plate	35- 10
A153 1749	Scale Bracket	33- 11
A153 1754	Exposure Stay	33- 14
A153 1772	Stay Scanner Front	33- 18
A153 1773	Stay Scanner Rear	33- 19
A153 1774	Reflector - Main	33- 20
A153 1776	Front Mirror Clamp - 1st Mirror	33- 4
A153 1777	Front Terminal	33- 6
A153 1778	Rear Terminal	33- 9

Part No.	Description	Page and Index No.
A153 1779	Thermostat - 121°C 250V 10A	33- 15
A153 1780	Exposure Lamp Harness	33- 10
A153 1781	Reflector	33- 16
A153 1801	2nd Scanner Ass'y	35- 8
A153 1805	Front Mirror Holder	35- 5
A153 1806	Rear Mirror Holder	35- 7
A153 1807	Harness Guide	35- 2
A153 1808	2nd Mirror	35- 3
A153 1809	3rd Mirror	35- 9
A153 1850	Lens Cover	31- 22
A153 1861	Harness Bracket	31- 24
A153 1903	3rd Scanner Ass'y	35- 31
A153 1906	Adjust Shoe	35- 20
A153 1908	Shielding Plate	35- 17
A153 1912	3rd Scanner Stay	35- 26
A153 1914	3rd Scanner Rack	35- 19
A153 1923	6th Mirror Bracket	37- 27
A153 1947	Magnification Drive Unit Bracket	37- 24
A153 1952	Magnification Rail	37- 21
A153 1961	Lens Cover	31- 6
A153 1971	Original Sensor Bracket	31- 8
A153 1974	Original Sensor Sheading Plate	31- 23
A153 1981	Scanner Home Sensor Bracket	35- 28
A153 1986	Cooling Fan Duct	73- 7
A153 2060	Wire Pulley	75- 13
A153 2061	Release Lever	75- 23
A153 2071	Cam Lever	75- 15
A153 2072	Release Link Lever	75- 5
A153 2073	Guide Rail	75- 9
A153 2075	Front Roller Cam	75- 11
A153 2076	Rear Roller Cam	75- 12
A153 2080	Eraser Lamp	75- 17
A153 2083	Left Drum Rail	75- 16
A153 2084	Spacer	75- 10
A153 2085	Spacer	75- 27

Part No.	Description	Page and Index No
A153 2090	Quenching Lamp	75- 14
A153 2116	Grounding Plate	43- 7
A153 2126	Swing Arm	43- 3
A153 2130	Receptacle Housing	65- 13
A153 2133	Thermistor Bracket	43- 23
A153 2135	Charge Roller Terminal Ass'y	43- 8
A153 2142	Cam Lever	65- 32
A153 2143	Shielding Plate	43- 14
A153 2277	Cleaning Blade	45- 5
A153 2303	Grounding Plate	45- 34
A153 2558	Upper Registration Guide	29- 19
A153 2560	Rear Guide Plate	23- 19
A153 2563	Middle Guide Plate	29- 18
A153 2570	Upper Support Plate	67- 10
A153 2572	Paper Feed Harness Bracket (A204/A206)	67- 31
A153 2936	Tray Lift Motor (A207)	63- 15
A153 2991	Front Side Fence Guide	17- 6
A153 2992	Rear Side Fence Guide	17- 12
A153 2995	Decal Paper Size - LT	17- 19
A153 2995	Decal Paper Size - LT/DLT	83- 1
A153 2996	Decal Paper Size - A4	17- 19
A153 2996	Decal Paper Size - A4/A3	83- 1
A153 3075	Entrance Seal	41- 1
A153 3086	Bias Terminal	65- 12
A153 3087	Terminal Cap	65- 11
A153 3090	Development Position Plate	41- 16
A153 3095	Development Rail	29- 8
A153 3110	Upper Resist Guide Plate	29- 31
A153 3114	Transfer Entrance Guide	29- 10
A153 3149	Knob Screw - M4x12	41- 17
A153 3172	Shutter	39- 19
A153 3173	Shutter Guide	39- 16
A153 3174	Shutter Holder	39- 18
A153 3185	Toner Supply Gear (RIC EU)	39- 1
A153 3187	Toner Supply Gear (RIC NA)	39- 1

Part No.	Description	Page and Index No.
A153 3189	Toner Supply Gear (Others)	39- 1
A153 3227	Toner End Sensor Cover	41- 25
A153 3264	Bottle Unit Upper Hinge	39- 33
A153 3266	Bottle Unit Link Plate	39- 30
A153 3270	Stay Toner Supply	69- 18
A153 3272	Hinge Slide Rail	39- 21
A153 3555	Cleaning Entrance Seal	45- 32
A153 3558	Blade Seal	45- 22
A153 3570	Spring Plate	45- 24
A153 3590	Density Sensor Bracket	35- 25
A153 3590	Density Sensor Bracket	45- 28
A153 3591	Mylar - 17x335	47- 34
A153 3595	Pick-off Pawl Retainer	45- 3
A153 3598	Pin Bracket	75- 22
A153 3862	Transfer Belt Frame	47- 7
A153 3863	Front Side Plate	47- 4
A153 3864	Rear Side Plate	47- 9
A153 3865	Belt Drive Roller	47- 14
A153 3866	Belt Drive Roller	47- 3
A153 3869	Drive Roller Bushing	47- 10
A153 3870	Transfer Bias Roller	47- 8
A153 3873	Bias Roller Terminal	47- 5
A153 3874	Earth Terminal	47- 12
A153 3877	Spring Plate	47- 29
A153 3882	Transfer Belt Casing	47- 1
A153 3883	Toner Collection Cap	47- 33
A153 3884	Belt Guide Plate	47- 16
A153 3886	Belt Pressure Lever	47- 19
A153 3887	Belt Release Stay	47- 22
A153 3888	Earth Plate	47- 28
A153 3889	Connector Bracket	47- 20
A153 3892	Belt Cleaning Blade	47- 24
A153 3893	Belt Cleaning Stay	47- 25
A153 3894	Bushing	47- 23
A153 3895	Front Bushing	47- 27

Part No.	Description	Page and Index No
A153 3897	Harness Clamp	47- 32
A153 3901	Entrance Guide Plate	47- 30
A153 3906	Support Plate	47- 15
A153 3914	Magnetic Clutch Feeler	65- 28
A153 3920	Belt Release Arm	75- 25
A153 3923	Spacer:bearing:cleaning:transfer Be	47- 35
A153 3930	Belt Unit Handle	77- 12
A153 4074	Terminal Connector - 2p	49- 11
A153 4087	Thermistor holder	49- 6
A153 4088	Thermistor	49- 5
A153 4114	Stripper Stopper	49- 16
A153 4197	Lower Fusing Guide	51- 26
A153 4207	Front Guide Plate	51- 25
A153 4208	Rear Guide Plate	51- 30
A153 4250	Fusing Exit Frame	51- 8
A153 4352	Fusing Lock Lever	77- 1
A153 4451	Upper Guide Plate	61- 6
A153 4451	Upper Guide Plate	61- 30
A153 4453	Exit Driven Roller	61- 4
A153 4454	Lower Guide Plate	61- 3
A153 4456	Photointerruptor Bracket	61- 29
A153 4458	Exit Unit Knob (A204/A206)	61- 2
A153 5114	Ram Board	71- 15
A153 5114	RAM Board	81- 1
A153 5132	Density Sensor	45- 29
A153 5141	Lens Drive Harness	31- 16
A153 5211	Mirror Drive Motor - DC24V 8.6V	37- 25
A153 5213	Lens Drive Motor - DC24V 8.6W	37- 5
A153 5265	Thermofuse - 169c	49- 9
A153 5301	AC Main Harness (TWN)	69- 3
A153 5312	Optical Harness	71- 13
A153 5316	Paper Feed Harness (A204/A206)	71- 3
A153 5320	Front Right Harness (EU/ASIA/TWN)	69- 5
A153 5324	Sorter Relay Harness	73- 12
A153 5328	Ct Harness	61- 7

Part No.	Description	Page and Index No.
A153 5330	Ct Harness - 7p	41- 6
A153 5333	Ct Harness	29- 16
A153 5334	Ct Harness - 7p	77- 9
A153 5339	Density Sensor Harness	75- 20
A153 5340	Ct Harness	65- 10
A153 5344	Power Supply Harness - 120V	71- 11
A153 5391	Optical Harness - 1	31- 10
A153 5392	Optical Harness - 2	31- 9
A153 5393	Optical Harness - 3	35- 23
A153 5395	Optical Harness - 5	31- 15
A153 5471	Power Supply Cord (TWN)	73- 13
A153 5501	AC Main Harness (NA)	69- 3
A153 5520	Front Right Harness (NA)(A204/A206)	69- 5
A153 5550	AC Drive Board - 120V	71- 7
A153 5561	Relay Harness	71- 20
A153 5562	Main Switch Relay Harness	69- 19
A153 5571	Power Supply Cord (NA)	73- 13
A153 5601	AC Relay Harness (EU/ASIA/TWN)	73- 19
A153 5621	Noise Filter Board (EU/ASIA)	73- 16
A153 5644	Power Supply Harness - 230V	71- 11
A153 5645	AC Drive Board - 230V	71- 7
A153 5661	AC Main Harness (EU/ASIA)	69- 3
A153 5671	Power Supply Cord (EU/ASIA)	73- 13
A153 5801	DC Drive Board Bracket	71- 12
A153 5802	Lower Bracket - DC Drive Board	63- 1
A153 5803	Upper Bracket - DC Drive Board	37- 10
A153 5803	Upper Bracket - DC Drive Board	71- 6
A153 5804	Main Switch Bracket (EU/ASIA/TWN)	69- 12
A153 5806	Bracket Paper Tray Unit	71- 19
A153 5807	Bracket ARDF	71- 18
A153 5808	Bracket - Safety Switch	69- 14
A153 5809	Arm Interlock SW	69- 13
A153 5812	Left Lower Bracket	67- 30
A153 5813	Main Control Board Bracket	67- 1
A153 5814	Main Switch Bracket (NA)	69- 12

Part No.	Description	Page and Index No
A153 5820	Total Counter Bracket	69- 11
A153 5888	Fusing Unit Joint Connector Bracket	73- 18
A153 6403	Front Cover (NRG)	9- 2
A153 6409	Decal - Keytop Cover	9- 33
A153 6409	Decal - Keytop Cover	83- 11
A153 6423	Support Cover (INF)	9- 1
A153 6423	Support Cover (INF)	83- 4
A153 9001	Scanner Adjustment Tool	85- 7
A153 9004	Wiping Cloth(100pcs/set)	85- 8
A153 9510	OPC Drum	43- 26
A153 9513	Harness - ADS (Option)	35- 24
A154 1360	Operating Sheet (A207)	9- 5
A154 4462	Reverse Guide Plate - Upper Right	61- 21
A154 4465	Reverse Guide Plate - Right Lower	61- 18
A154 4469	Reverse Roller Holder - Upper Right	61- 22
A154 4616	Paper Holder	53- 17
A154 4620	Bottom Plate	59- 1
A154 4621	Front Guide Plate	59- 28
A154 4622	Rear Guide Plate	59- 29
A154 4623	Vibrating Plate	57- 16
A154 5310	Duplex Unit Harness (A207)	71- 3
A154 5313	Front Right Harness (EU/ASIA/TWN)(A207)	69- 5
A154 5325	Duplex Unit Relay Harness	73- 15
A154 5343	Power Supply Cord - 120V (A207)	71- 11
A154 5458	IC - Operation (A207)	13- 16
A155 1331	LCT Rear Right Cover	9- 27
A155 2667	Lift Sensor Feeler	23- 34
A155 2675	Pick-up Bracket (A206/A207)	67- 5
A155 2676	Pick-up Lever (A206/A207)	67- 2
A155 2677	Pick-up Link (A206/A207)	67- 3
A155 2680	DC Solenoid - 24V - 510gf (A206/A207)	67- 7
A155 2682	Lift Sensor Bracket	23- 32
A155 5165	LCT Main Board	21- 18
A155 5170	Push Switch	21- 27
A155 5314	LCT Relay Harness	21- 24

Part No.	Description	Page and Index No.
A155 5342	LCT Harness	21- 31
A155 5345	Ct Harness	23- 33
A155 5348	Paper End Sensor Harness	21- 4
A155 5349	LCT Vertical Harness	19- 33
A155 6101	LCT Upper Cover	19- 6
A155 6110	Front Side Plate - LCT	21- 29
A155 6112	Spacer - LCT	19- 38
A155 6113	Decal - Paper Set	19- 2
A155 6113	Decal - Paper Set	83- 3
A155 6114	Caution Decal - LCT	19- 35
A155 6114	Caution Decal - LCT	83- 19
A155 6116	Safety Switch Bracket	21- 21
A155 6117	Safety Switch Lever	21- 23
A155 6118	Spring Plate	21- 20
A155 6125	Rear Side Bracket	21- 28
A155 6136	Lift Sensor Bracket	21- 11
A155 6141	Tray Bottom Plate	21- 17
A155 6142	LCT Paper Tray	19- 14
A155 6143	Left Bracket	21- 1
A155 6145	Tray Cover	21- 19
A155 6147	Paper End Sensor Bracket	21- 3
A155 6148	Paper End Sensor Feeler	21- 2
A155 6151	Vertical Transport Guide	19- 27
A155 6152	Switch Bracket	19- 29
A155 6153	Upper Hinge	21- 6
A155 6160	Lower Hinge	19- 31
A155 6162	Cushion	19- 34
A155 6164	Positioning Guide	29- 29
A155 6168	Vertical Support Guide	29- 30
A155 6169	Hinge Holder	19- 30
A155 6170	Hinge Bracket	19- 21
A155 6171	Grip Bracket	19- 19
A155 6175	LCT Positioning Plate	19- 32
A155 6181	Knob	19- 18
A155 6191	LCT Front Cover	19- 17

Part No.	Description	Page and Index No
A155 6201	LCT Hinge Bracket	19- 8
A155 6203	Paper Tray Stay	21- 5
A155 6207	Cover Bracket	19- 3
A155 6215	Harness Guide	21- 30
A155 6221	LCT Rear Cover	19- 15
A155 6231	LCT Right Cover	19- 16
A155 6241	LCT Harness Cover	19- 26
A155 6251	Upper Stay	19- 9
A155 6270	Cushion 20 X 30	19- 39
A155 6302	Hinge Angle	19- 5
A155 6303	Fix Hinge	19- 4
A155 6306	Front Side Fence	19- 22
A155 6307	Rear Side Fence	19- 12
A155 6311	Front Paper Holder	19- 23
A155 6312	Rear Paper Holder	19- 10
A155 6313	Support Guide	19- 11
A155 6321	Front Spring Plate	19- 24
A155 6322	Rear Sprig Plate	19- 25
A155 6324	End Fence	19- 1
A155 6325	Drive Cover Bracket	67- 32
A156 1452	Key-top Start (SVN)	13- 2
A156 1453	Key-top Interrupt (SVN)	13- 3
A156 1454	Key-top Mode Clear (SVN)	13- 4
A156 1455	Key-top Program (SVN)	13- 5
A156 1456	Key-top 10 Key (SVN)	13- 6
A156 1457	Key-top Cler/Stop (SVN)	13- 7
A156 1458	Key-top Auto Density (SVN)	13- 8
A156 1459	Key-top Darker (SVN)	13- 9
A156 1460	Key-top Lighter (SVN)	13- 10
A156 1461	Key-top Auto Paper Select (SVN)	13- 11
A156 1462	Key-top Paper Select (SVN)	13- 12
A156 1463	Key-top Full Size (SVN)	13- 13
A156 1464	Key-top Auto Reduce/Enlarge (SVN)	13- 14
A156 1495	Decal Copy Ratio	83- 9
A156 4610	Duplex Tray Ass'y	53- 0

Part No.	Description	Page and Index No.
A156 5462	Guidance Board (A207)	13- 18
A156 5513	Front Right Harness (NA)(A207)	69- 5
A156 5643	Power Supply Harness - 230V(A207)	71- 11
A156 6413	Emblem (SVN)	9- 1
A156 6413	Emblem (SVN)	83- 4
A157 3900	Support Plate	77- 2
A158 5191	Duplex Control Board	59- 23
A205 5309	Duplex Relay Harness (NA)(A207)	71- 17
A205 5319	Rear Upper Harness	71- 5
A205 5831	Grounding Plate(A4)(A207)	13- 28
A206 1277	Front Cover (A206)(RIC)	9- 2
A206 2651	Bypass Feed Unit	23- *
A206 2804	Torque-limiter (A206/A207)	23- 22
A206 5460	Operation Panel Board - LT (A204/A206)	13- 26
A206 5465	Operation Panel Board - A4 (A204/A206)	13- 26
A206 6404	Model Name Plate - GES (A206)	9- 35
A206 6404	Model Name Plate - GES (A206)	83- 13
A206 6407	Model Name Plate - NST (A206)	9- 35
A206 6407	Model Name Plate - NST (A206)	83- 13
A206 6412	Front Cover (A206)(SVN)	9- 2
A206 6414	Model Name Plate - REX (A206)	9- 35
A206 6414	Model Name Plate - REX (A206)	83- 13
A206 6422	Front Cover (A206)(INF)	9- 2
A207 1277	Front Cover (A207)(RIC)	9- 2
A207 1465	Key-top - Sorter (SVN)	13- 25
A207 1467	Paper Exit Sheet - LT (A207)	13- 27
A207 1471	Keytop - Halftone (SVN)	13- 19
A207 1472	Keytop - Enlarge (SVN)	13- 20
A207 1473	Keytop - Reduce (SVN)	13- 21
A207 1477	Display Panel - LT (A207)	13- 24
A207 1478	Display Panel - A4 (A207)	13- 24
A207 1480	Paper Exit Sheet - A4 (A207)	13- 27
A207 5461	Operation Panel Board - LT (A207)	13- 26
A207 5466	Operation Panel Board - A4 (A207)	13- 26
A207 5609	Duplex Relay Harness (EU/ASIA/TWN) (A207)	71- 17

Part No.	Description	Page and Index No
A207 6404	Model Name Plate - GES (A207)	9- 35
A207 6404	Model Name Plate - GES (A207)	83- 13
A207 6407	Model Name Plate - NST (A207)	9- 35
A207 6407	Model Name Plate - NST (A207)	83- 13
A207 6412	Front Cover (A207)(SVN)	9- 2
A207 6414	Model Name Plate - REX (A207)	9- 35
A207 6414	Model Name Plate - REX (A207)	83- 13
A207 6422	Front Cover (A207)(INF)	9- 2
A217 3157	Toner Bottle Bracket	39- 27
A217 4123	Discharge Brush	51- 31
A300 3155	Stepped Screw - M25x32	21- 22
A334 4706	Disk - Bottom Plate Clutch	57- 11
A335 1341	Chain Hook	21- 32
A335 3251	Top Cover Hinge	19- 7
A335 4351	Guide Roller	21- 10
A335 4352	Timing Belt Clamp	21- 25
A421 2543	Friction Pad	19- 13
A470 1703	Shift Clutch	61- 8
A470 1704	Spring - Lower Exit Roller	61- 13
A491 4690	Bottom Plate Hook	59- 7
5053 0223	Bushing - 8mm	21- 26
5053 0223	Bushing - 8mm	67- 9
5053 0447	Bushing - 6mm	55- 2
5053 0447	Bushing - 6mm	57- 7
5203 1686	Screw - Slide Rail	77- 8
5203 3151	Roller Cover Spring	63- 20
5203 9501	Grease 501	85- 1
5206 2686	Snap Ring	53- 8
5215 2621	Snap Ring - M6	15- 12
5215 2621	Snap Ring - M6	55- 13
5304 1639	Bushing - 8mm	55- 12
5414 4630	Bottle Spring (A207)	63- 23
5420 9507	Digital Multimeter - Beckman	85- 2
5420 9516	Test Chart - Os - A3 (10psc/set)	85- 5
5442 1111	Spring - Main Drive Tightner	65- 17

Part No.	Description	Page and Index No.
5442 4467	Spring - Stripper Pawl Plate	69- 8
5442 4467	Spring - Stripper Pawl Plate	77- 7
5442 9101	Setting Powder	85- 9
5442 9103	Launa Oil 40	85- 4
5443 2668	Bushing - 4x6x7mm	55- 10
5443 2668	Bushing - 4x6x7mm	57- 6
5446 1239	Plate Nut - Key Counter	69- 7
5447 2681	Snap Ring (A204)	15- 11
5447 2681	Snap Ring	23- 8
5447 2681	Snap Ring	25- 2
5447 2681	Snap Ring	27- 2
5447 2681	Snap Ring	57- 10
5447 2706	Gear - 15T	25- 4
5447 2706	Gear - 15T	27- 4
5447 2768	Stepped Screw - M3	53- 13
5447 2927	Friction Pad - B	15- 15
5447 9078	Heat Resisting Grease Mt-78	85- 3
5448 2804	Platen Cover Sheet	11- 2
5474 2152	Bushing - 8x12x12mm	29- 4
5925 2258	Stopper Chain	21- 13

Part No.	Description	Page and Index No
0313 0040B	Philips Pan Head Screw - M3x4	9-104
0313 0040B	Philips Pan Head Screw - M3x4	29-105
0313 0040B	Philips Pan Head Screw - M3x4	33-107
0313 0050B	Philips Pan Head Screw - M3x5	57-102
0313 0050B	Philips Pan Head Screw - M3x5	67-101
0313 0060B	Philips Pan Head Screw - M3x6	33-108
0313 0060B	Philips Pan Head Screw - M3x6	43-103
0313 0080B	Philips Pan Head Screw - M3x8	45-106
0313 0080B	Philips Pan Head Screw - M3x8	49-105
0313 0140B	Philips Pan Head Screw - M3x14	15-106
0314 0040B	Philips Pan Head Screw - M4x4	49-111
0314 0060B	Philips Pan Head Screw - M4x6	33-109
0314 0060B	Philips Pan Head Screw - M4x6	41-102
0314 0060B	Philips Pan Head Screw - M4x6	45-101
0314 0060B	Philips Pan Head Screw - M4x6	49-102
0314 0060B	Philips Pan Head Screw - M4x6	51-107
0314 0060B	Philips Pan Head Screw - M4x6	69-106
0314 0100B	Philips Pan Head Screw - M4x10	35-101
0314 0120B	Philips Pan Head Screw - M4x12	49-107
0314 0300B	Philips Pan Head Screw - M4x30	73-112
0323 0060B	Philips Sunk Screw - M3x6	39-101
0323 0060B	Philips Sunk Screw - M3x6	71-108
0323 0060B	Philips Sunk Screw - M3x6	73-110
0323 0080B	Philips Sunk Screw - M3x8	69-104
0344 0060F	Philips Truss Head Screw - M4x6	17-104
0344 0080F	Philips Truss Head Screw - M4x8	53-101
0353 0040B	Screw - M3X4	25-107
0353 0300B	Bind Screw - M3x30	61-101
0413 0050Z	Tapping Screw - M3x5	33-104
0413 0060W	Tapping Screw - M3x6	33-105
0413 0062B	Tapping Screw - M3x6	31-102
0413 0062W	Tapping Screw - M3x6	33-103
0413 0102B	Tapping Screw - M3x10	39-104
0414 0080B	Binding Self-tapping Screw - M4x8	19-102
0414 0080B	Binding Self-tapping Screw - M4x8	23-103

Part No.	Description	Page and Index No.
0414 0080B	Binding Self-tapping Screw - M4x8	29-106
0414 0080B	Binding Self-tapping Screw - M4x8	31-107
0414 0080B	Binding Self-tapping Screw - M4x8	35-104
0414 0080B	Binding Self-tapping Screw - M4x8	65-106
0414 0082W	Tapping Screw With Flat Washer-m4x8	15-102
0414 0082W	Tapping Screw With Flat Washer - M4x8	33-102
0414 0142B	Binding Self Tapping Screw - M4x14	11-101
0414 0142B	Binding Self Tapping Screw - M4x14	73-106
0433 0050B	Pan Head Self-tapping Screw - M3x5	39-102
0433 0060W	Tapping Screw - M3x6	37-110
0433 0140B	Pan Head Self-tapping Screw - M3x14	19-105
0434 0060B	Pan Head Self-tapping Screw - M4x6	17-102
0434 0060B	Pan Head Self-tapping Screw - M4x6	19-101
0434 0060B	Pan Head Self-tapping Screw - M4x6	21-101
0434 0060B	Pan Head Self-tapping Screw - M4x6	23-106
0434 0060B	Pan Head Self-tapping Screw - M4x6	25-101
0434 0060B	Pan Head Self-tapping Screw - M4x6	27-101
0434 0060B	Pan Head Self-tapping Screw - M4x6	29-102
0434 0060B	Pan Head Self-tapping Screw - M4x6	35-107
0434 0060B	Pan Head Self-tapping Screw - M4x6	37-103
0434 0060B	Pan Head Self-tapping Screw - M4x6	39-108
0434 0060B	Pan Head Self-tapping Screw - M4x6	57-107
0434 0060B	Pan Head Self-tapping Screw - M4x6	61-107
0434 0060B	Pan Head Self-tapping Screw - M4x6	63-103
0434 0060B	Pan Head Self-tapping Screw - M4x6	65-105
0434 0060B	Pan Head Self-tapping Screw - M4x6	69-101
0434 0060B	Pan Head Self-tapping Screw - M4x6	71-107
0434 0060B	Pan Head Self-tapping Screw - M4x6	73-105
0434 0060B	Pan Head Self-tapping Screw - M4x6	75-101
0434 0060B	Pan Head Self-tapping Screw - M4x6	77-106
0434 0082B	Tapping Screw - M4x8	51-102
0434 0082B	Tapping Screw - M4x8	61-106
0434 0100B	Pan Head Self-tapping Screw - M4x10	61-108
0434 0352W	Pan Head Self-tapping Screw - M4x35	73-107
0443 0060B	Hexagon Tapping Screw - M3x6	21-103

Part No.	Description	Page and Index No
0443 0060B	Hexagon Tapping Screw - M3x6	47-109
0443 0060B	Hexagon Tapping Screw - M3x6	55-101
0443 0060B	Hexagon Tapping Screw - M3x6	57-104
0443 0060W	Hexagon Head Tapping Screw - M3x6	53-104
0443 0080B	Tapping Screw - M3x8	47-102
0443 0080W	Hexagon Head Tapping Screw - M3x8	35-102
0452 3010B	Tapping Screw - M3x10	41-107
0573 0040E	Hexagon Headless Set Screw - M3x4	65-102
0573 0100E	Hexagon Headless Set Screw - M3x10	37-101
0574 0050E	Hexagon Headless Set Screw - M4x5	37-105
0622 0100E	Spring Pin - 2x10mm	23-104
0623 0160E	Spring Pin - 3x16mm	21-106
0703 0030M	Spring Washer - M3	33-110
0707 8140B	Bushing - 8x14mm	63-101
0720 0015E	Retaining Ring - 1.5	43-104
0720 0020E	Retaining Ring - M2	43-106
0720 0030E	Retaining Ring - M3	15-104
0720 0030E	Retaining Ring - M3	25-103
0720 0030E	Retaining Ring - M3	27-103
0720 0030E	Retaining Ring - M3	41-106
0720 0030E	Retaining Ring - M3	45-105
0720 0030E	Retaining Ring - M3	47-104
0720 0030E	Retaining Ring - M3	57-103
0720 0030E	Retaining Ring - M3	75-102
0720 0040E	Retaining Ring - M4	23-101
0720 0040E	Retaining Ring - M4	25-102
0720 0040E	Retaining Ring - M4	27-102
0720 0040E	Retaining Ring - M4	29-104
0720 0040E	Retaining Ring - M4	31-106
0720 0040E	Retaining Ring - M4	37-102
0720 0040E	Retaining Ring - M4	39-106
0720 0040E	Retaining Ring - M4	41-105
0720 0040E	Retaining Ring - M4	43-102
0720 0040E	Retaining Ring - M4	45-107
0720 0040E	Retaining Ring - M4	51-104

Part No.	Description	Page and Index No.
0720 0040E	Retaining Ring - M4	55-103
0720 0040E	Retaining Ring - M4	57-106
0720 0040E	Retaining Ring - M4	59-103
0720 0040E	Retaining Ring - M4	61-104
0720 0040E	Retaining Ring - M4	67-104
0720 0040E	Retaining Ring - M4	75-103
0720 0040E	Retaining Ring - M4	77-101
0720 0060	Retaining Ring - M6	65-111
0720 0060E	Retaining Ring - M6	17-103
0720 0060E	Retaining Ring - M6	21-104
0720 0060E	Retaining Ring - M6	25-105
0720 0060E	Retaining Ring - M6	27-105
0720 0060E	Retaining Ring - M6	29-103
0720 0060E	Retaining Ring - M6	37-106
0720 0060E	Retaining Ring - M6	41-104
0720 0060E	Retaining Ring - M6	47-106
0720 0060E	Retaining Ring - M6	49-104
0720 0060E	Retaining Ring - M6	63-102
0720 0060E	Retaining Ring - M6	65-110
0725 0100E	Retaining Ring C - M10	39-107
0725 0120E	Retaining Ring C - M12	51-105
0725 0300E	Retaining Ring C - M30	49-103
0740 3008	Ball Bearing - 8x22x7	37-107
0740 3008	Ball Bearing - 8x22x7	65-101
0742 3808	Ball Bearing - 8x16x5	25-106
0800 0072	Philips Pan Head Screw - M2.6x4	39-105
0801 0137	Philips Pan Head Screw With Spring	71-109
0801 0137	Philips Pan Head Screw With Spring	73-109
0802 5085	Tapping Screw - M4x8	15-103
0802 5094	Tapping Truss Head Screw - M4x8	9-103
0802 5094	Tapping Truss Head Screw - M4x8	13-101
0802 5094	Tapping Truss Head Screw - M4x8	19-103
0802 5221	Tapping Screw - M3x10	65-108
0802 5231	Binding Self-tapping Screw - M3x6	35-106
0802 5231	Binding Self-tapping Screw - M3x6	39-103

Part No.	Description	Page and Index No
0802 5231	Binding Self-tapping Screw - M3x6	41-101
0802 5231	Binding Self-tapping Screw - M3x6	53-103
0802 5232	Binding Self-tapping Screw - M3x8	31-103
0802 5232	Binding Self-tapping Screw - M3x8	47-103
0802 5232	Binding Self-tapping Screw - M3x8	59-102
0802 5233	Binding Self-tapping Screw - M3x10	43-109
0802 5233	Binding Self-tapping Screw - M3x10	45-102
0802 5234	Tapping Screw - M3x12	59-105
0802 5236	Binding Self-tapping Screw - M4x8	21-102
0802 5236	Binding Self-tapping Screw - M4x8	51-101
0802 5236	Binding Self-tapping Screw - M4x8	53-102
0802 5236	Binding Self-tapping Screw - M4x8	55-104
0802 5236	Binding Self-tapping Screw - M4x8	57-105
0802 5236	Binding Self-tapping Screw - M4x8	59-104
0802 5236	Binding Self-tapping Screw - M4x8	61-103
0802 5236	Binding Self-tapping Screw - M4x8	65-107
0802 5237	Binding Self-tapping Screw - M4x10	23-105
0802 5237	Binding Self-tapping Screw - M4x10	31-101
0803 0017	Knob Screw - M4x6.5	45-103
0805 0088	Retaining Ring - M6	25-104
0805 0088	Retaining Ring - M6	27-104
0805 3384	Bushing - 5mm	45-108
0805 3471	Bushing - M8x22x7	43-107
0805 3480	Bushing - 6mm	23-102
0805 3480	Bushing - 6mm	51-103
0805 3480	Bushing - 6mm	61-105
0805 3485	Bushing - 8x12x3.5mm	47-101
0807 4072	Washer - Core	49-110
0807 4072	Washer - Core	61-109
0950 4006M	Philips Screw With Flat Washer - M4x6	49-106
0950 4008B	Philips Screw With Spring Washer	51-106
0950 4008B	Philips Screw With Spring Washer	65-109
0951 3005B	Philips Screw With Flat Washer	35-105
0951 3006B	Philips Screw With Flat Washer-m3x6	9-106
0951 3006B	Philips Screw With Flat Washer-m3x6	29-101

Part No.	Description	Page and Index No.
0951 3006B	Philips Screw With Flat Washer - M3x6	33-101
0951 3006B	Philips Screw With Flat Washer - M3x6	59-101
0951 3006B	Philips Screw With Flat Washer - M3x6	67-102
0951 3006B	Philips Screw With Flat Washer - M3x6	73-102
0951 3008B	Philips Screw With Flat Washer - M3x8	43-105
0951 4006B	Philips Screw With Washer - M4x6	31-104
0951 4006B	Philips Screw With Washer - M4x6	37-109
0951 4006B	Philips Screw With Washer - M4x6	67-106
0951 4006B	Philips Screw With Washer - M4x6	71-112
0951 4008B	Philips Screw With Washer - M4x8	37-104
0951 4008B	Philips Screw With Washer - M4x8	51-108
0951 4008B	Philips Screw With Washer - M4x8	55-102
0951 4012B	Philips Screw With Flat Washer	65-103
0951 4016B	Philips Screw With Flat Washer - M4	9-101
0951 5010B	Philips Screw With Washer - M5x10	43-108
0953 4008M	Screw - M4X8	9-105
0954 3012B	Screw - M3x12	49-109
0954 4008B	Philips Screw - M4x8	49-108
0957 3006B	Screw - M3x6	49-101
0960 3006B	Philips Flange Screw - M3 X 6	63-106
0960 4010B	Philips Flange Screw - M4 x 10	77-105
0964 4006B	Tapping Screw With Flat Washer-m4x6	13-102
0964 4006B	Tapping Screw With Flat Washer - M4x6	75-104
0964 4008B	Tapping Screw With Flat Washer-m4x8	9-102
0964 4008B	Tapping Screw With Flat Washer - M4x8	33-106
0964 4008B	Tapping Screw With Flat Washer - M4x8	47-107
0964 4008B	Tapping Screw With Flat Washer - M4x8	63-105
0964 4008B	Tapping Screw With Flat Washer - M4x8	73-108
0964 4008B	Tapping Screw With Flat Washer - M4x8	77-102
0965 3006B	Tapping Screw With Flat Washer M3x6	15-105
0965 3008B	Tapping Screw With Washer - M3x8	47-108
0965 3008W	Tapping Screw With Flat Washer-m3x8	31-105
0965 3010B	Tapping Screw With Flat Washer M3x6	45-104
0965 4008B	Tapping Screw - M4 X 8	17-101
0971 3006A	Philips Polycarbonate Screw - M3x6	45-109

Part No.	Description	Page and Index No
1102 3822	Connector - 20p	81-101
1102 4052	Optional Connector	71-102
1102 4052	Optional Connector	73-104
1102 4201	Connector - 2p	81-102
1102 4202	Connector - 3p	81-103
1102 4203	CT Header - 4p	81-104
1102 4205	CT Header - 6p	81-105
1102 4206	Connector - 7p	81-106
1102 4207	Connector - 8p	81-107
1102 4208	Connector - 9p	81-108
1102 4210	Connector - 11p	81-109
1102 4211	CT Header - 12p	81-110
1102 4212	CT Header - 15p	81-111
1102 4473	Ct Connector - 2p	61-110
1102 4473	Ct Connector - 2p	73-103
1102 4497	Connector - 13p	81-112
1102 4619	Connector - 2p	81-113
1102 4621	CT Header - 4p	81-114
1102 4623	CT Connector - 6p	81-115
1102 4624	CT Connector - 7p	81-116
1102 4625	Ct Connector 8p	81-117
1102 4628	Connector - 11p	81-118
1102 4629	Connector - 12p	81-119
1102 4630	CT Connector	81-120
1102 4631	Ct Connector - 2p	81-121
1102 4637	Ct Connector - 8p	81-122
1102 4639	Ct Connector - 10p	81-123
1102 4640	Ct Connector - 11p	81-124
1102 4643	Ct Connector - 2p	81-125
1102 4651	Ct Connector - 10p	81-126
1102 5007	CT Header - 14p	81-127
1102 5194	Connector - 7p	47-110
1102 5305	Connector - 6p	81-128
1102 5605	Connector - 13p	81-129
1102 5718	Optical Fiber Connector	81-130

Part No.	Description	Page and Index No.
1102 6408	Connector - 30p	81-131
1102 6613	Relay Terminal - 2P	43-101
1102 6739	Connector - 12p	71-110
1103 1772	Pin Header - 6p	81-132
1103 1774	Pin Header - 8p	81-133
1104 0588	Dip Socket - 28p	81-134
1104 0612	Connector - 40p	81-135
1105 0192	Locking Support	21-109
1105 0192	Locking Support	71-113
1105 0192	Locking Support	73-101
1105 0196	Harness Clamp	21-107
1105 0196	Harness Clamp	35-108
1105 0196	Harness Clamp	47-105
1105 0196	Harness Clamp	65-112
1105 0196	Harness Clamp	69-108
1105 0197	Wire Saddle	21-108
1105 0197	Wire Saddle	65-104
1105 0197	Wire Saddle	67-103
1105 0197	Wire Saddle	73-113
1105 0199	Clamp	25-108
1105 0199	Clamp	27-106
1105 0199	Clamp	39-109
1105 0199	Clamp	41-103
1105 0199	Clamp	57-101
1105 0199	Clamp	61-102
1105 0199	Clamp	63-104
1105 0199	Clamp	65-113
1105 0199	Clamp	67-105
1105 0199	Clamp	77-103
1105 0229	Clamp	69-105
1105 0230	Clamp	37-108
1105 0231	Clamp	35-103
1105 0231	Clamp	69-107
1105 0328	Harness Clamp - ES-0505	63-107
1105 0329	Clamp - ES-0510	69-109

Part No.	Description	Page and Index No
1105 0367	Spacer	71-101
1105 0409	Spacer	71-103
1106 0193	Bushing - 7.9mm	77-104
1107 0392	Fuse (Glass Case) - 6.3A - 125V	71-105
1107 0472	Circuit Breaker - 250V/8A (EU/ASIA)	73-111
1107 0752	Fuse (Glass Case) - 5A - 250V	71-106
1107 0753	Fuse (Glass Case) - 6.3A - 250V	71-104
1204 1545	Main Switch (EU/ASIA/TWN)	69-102
1204 2355	Micro Switch - Am51632a531	21-105
1204 2356	Micro Switch - Am51612a531	15-101
1204 2356	Micro Switch - Am51612a531	19-104
1204 2397	Safety Switch	69-103
1204 2421	Main Switch (NA)	69-102
1208 1392	Relay - G2r-1-t-tu - DC24V	71-111
1400 0369	Transistor - 2sa1213y	81-136
1400 0550	Transistor - BA1L3N	81-137
1400 0558	Transistor - 2sd780	81-138
1402 0708	Diode - 1SS272	81-139
1402 0780	Diode - 200V 1A 11ES2	81-140
1402 1030	Diode - 1SS250	81-141
1402 1378	Diode - PTZ12A	81-142
1402 1380	Diode - PTZ 6.2A	81-143
1402 1387	Diode - HSM123	81-144
1407 2187	TTLIC - SN74LS07NS	81-145
1407 2231	IC - TD62308AF	81-146
1407 2496	IC - M5261L	81-147
1407 3173	Driver - 16bit - M66311fp	81-148
1407 3257	Cmosic - Tc74hc14af	81-149
1407 3708	IC - SLA7026M	81-150
1407 3764	IC - TC7SU04F	81-151
1407 4164	IC - MMID75XF	81-152
1407 4316	IC - TD52308BF	81-153
1407 4686	IC - M54992FP	81-154
1407 4687	IC - TA8083F	81-155
1408 0595	IC - NJM2904M	81-156

Part No.	Description	Page and Index No.
1408 0629	IC - 78M12A	81-157
1408 0874	Transistor Array - M54587fp	81-158
1408 1065	Comparator Ba10339f	81-159
1408 1135	IC - X9C104S	81-160
1503 0777	Oscillator - 32mhz 9.6pf	81-161
1600 1499	Resistor - 0.33 Ω ±2% 2W	81-162
1600 1660	Resistor - ERG2SJ101	81-163
1601 7793	Resistor - 10K Ω	81-164
1601 7798	Resistor Array - 68Ω ±55 1/16W	81-165
1601 7799	Resistor Array - 4.7KΩ ±5% 1/16W	81-166
1602 7032	Filter - EMI-2200pf	81-167
1604 4511	Capacitor - 0.15µF ±10% 50V	81-168
1630 1101	Resistor - 100 Ω 1/4W ±5%	81-169
1630 1161	Resistor - 160 Ω ±5% 1/8W	81-170
1630 3101	Resistor - 100 Ω 1/10W	81-171
1630 3102	Resistor - 1k Ω 1/10W ±5%	81-172
1630 3103	Resistor - 10k Ω 1/10W ±5%	81-173
1630 3104	Resistor - 100k Ω 1/10W ±5%	81-174
1630 3155	Resistor - 1.5MΩ ±5% 1/10W	81-175
1630 3222	Resistor - 2.2k Ω 1/10W ±5%	81-176
1630 3223	Resistor - 22k Ω 1/10W	81-177
1630 3242	Resistor - 2.4k Ω ±5% 1/10W	81-178
1630 3330	Resistor - 33 Ω ±5% 1/10W	81-179
1630 3334	Resistor - 330K Ω ±5% 1/10W	81-180
1630 3393	Resistor - 39K Ω 1/10W	81-181
1630 3472	Resistor - 47K Ω 1/10W ±5%	81-182
1630 3473	Resistor - 47K Ω 1/10W ±5%	81-183
1630 3682	Resistor - 6.8K Ω 1/10W	81-184
1630 3824	Resistor - 820 Ω ±5% 1/10W	81-185
1633 1000	Resistor - 100 Ω ±1% 1/10W	81-186
1633 1002	Resistor - 10k Ω ±1% 1/10W	81-187
1633 2150	Resistor - 215Ω ±1% 1/10W	81-188
1633 4701	Resistor - 4.7k Ω ±1% 1/10W	81-189
1633 4702	Resistor - 47k Ω ±1/10W	81-190

Part No.	Description	Page and Index No
1633 4871	Resistor - 4.87k Ω ±1% 1/10W	81-191
1633 5100	Resistor - 510 Ω ±1% 1/10W	81-192
1633 5231	Resistor - 5.23k Ω ±1% 1/10W	81-193
1633 6490	Resistor - 649 Ω ±1% 1/10W	81-194
1633 8209	Resistor - 820Ω ±1% 1/10W	81-195
1640 5101	Capacitor - 100µF ±20% 50V	81-196
1640 5470	Capacitor - 47µF ±20% 50V	81-197
1642 5100	Capacitor - 10µF ±20% 50V	81-198
1660 1100	Capacitor - 10PF 50V	81-199
1660 3470	Capacitor - 47PF ±5% 50V	81-200
1660 3471	Capacitor - 470PF 50V	81-201
1660 5103	Capacitor - 10000PF ±10% 50V	81-202
1660 5222	Capacitor - 2200PF ±10% 50V	81-203
1660 7104	Capacitor - 100000PF 50V	81-204

Gestetner® RICOH® savin®

A208/A211
PARTS CATALOG

A208/A211
PARTS LOCATION AND LIST

This section instructs you as to the number and names of the parts of this machine

LOCATION OF UNIT

1. EXTERIOR (A208/A210/A211)

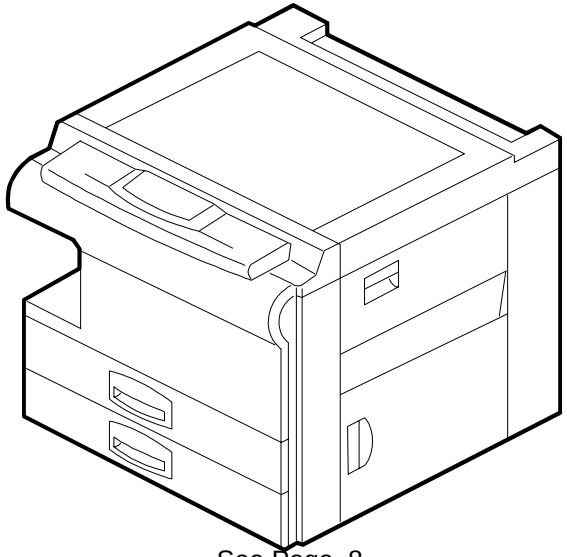

See Page 8

2. PLATEN COVER ASS'Y (A208/A210/A211)

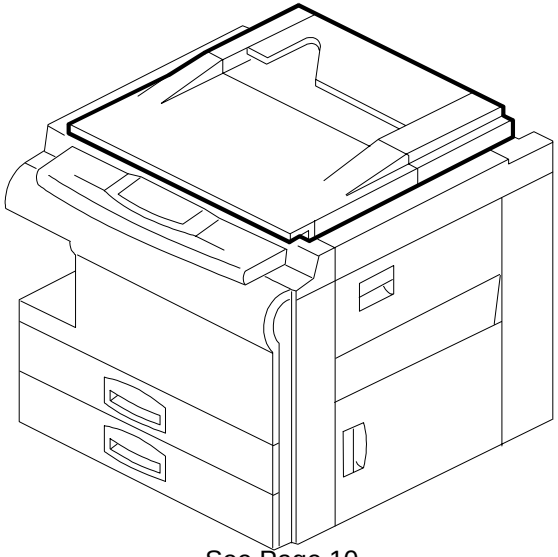

See Page 10

3. OPERATION PANEL ASS'Y(A208/A210/A211)

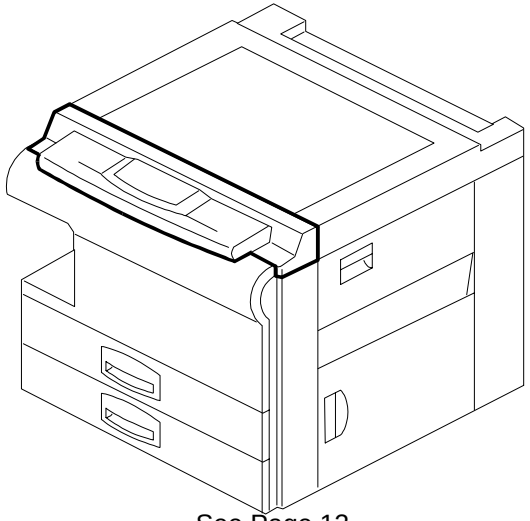

See Page 12

4. BY-PASS FEED SECTION (A208/A210/A211)

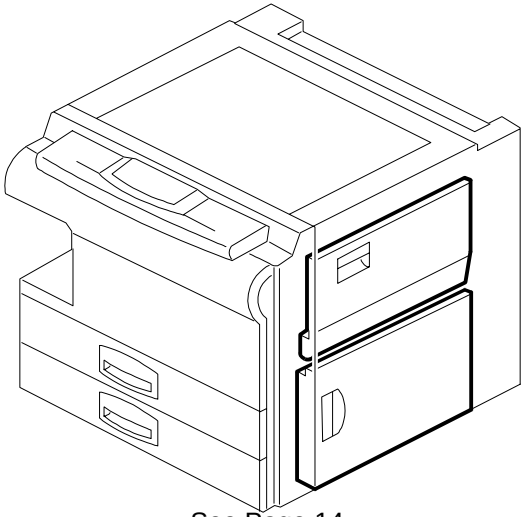

See Page 14

5. PAPER TRAY SECTION (A208/A210/A211)

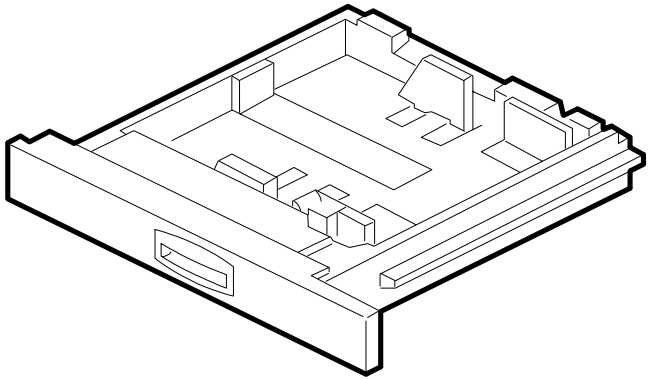

See Page 16

6. LCT UNIT 1 (A210/A211)

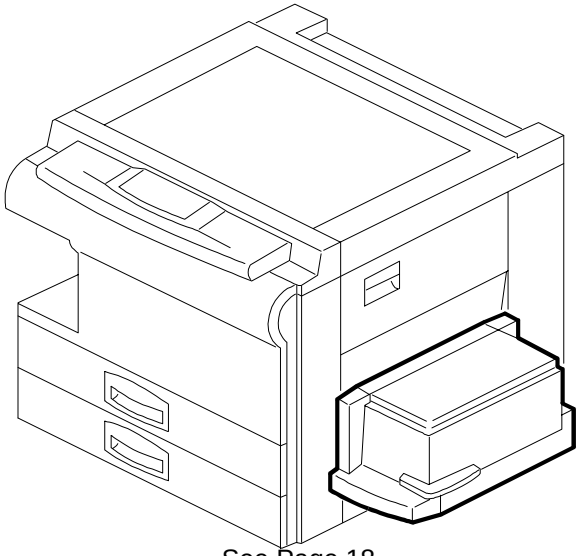

See Page 18

LOCATION OF UNIT

7. LCT UNIT 2 (A210/A211)

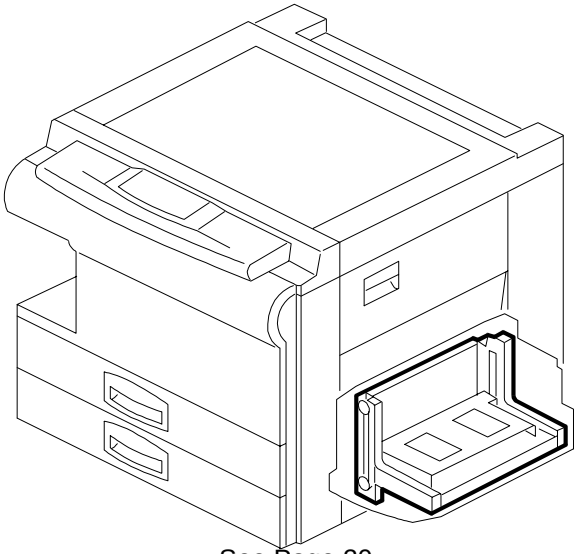

See Page 20

8. PAPER FEED SECTION 1 (A208/A210/A211)

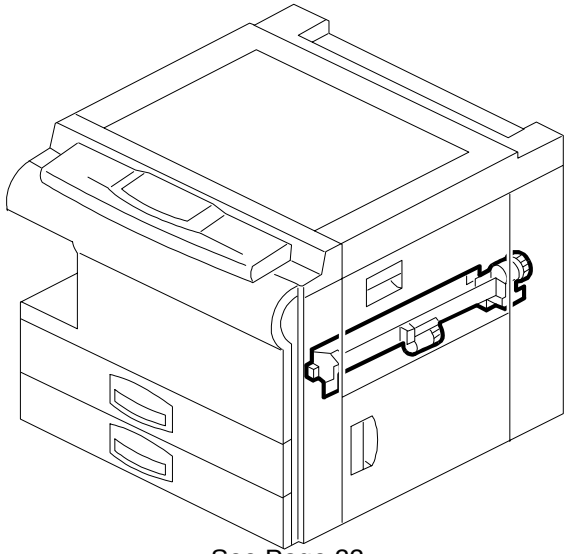

See Page 22

9. PAPER FEED SECTION 2 (A208/A210/A211)

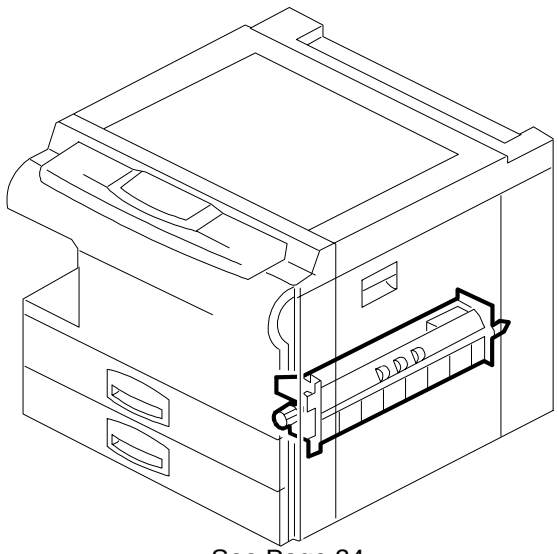

See Page 24

10. PAPER FEED SECTION 3 (A208/A210/A211)

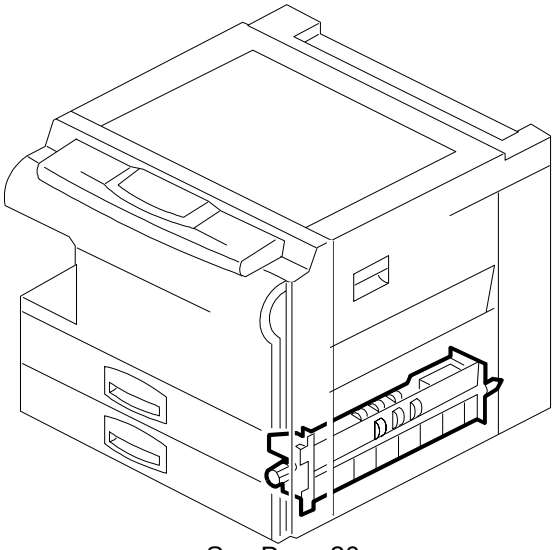

See Page 26

11. PAPER REGISTRATION (A208/A210/A211)

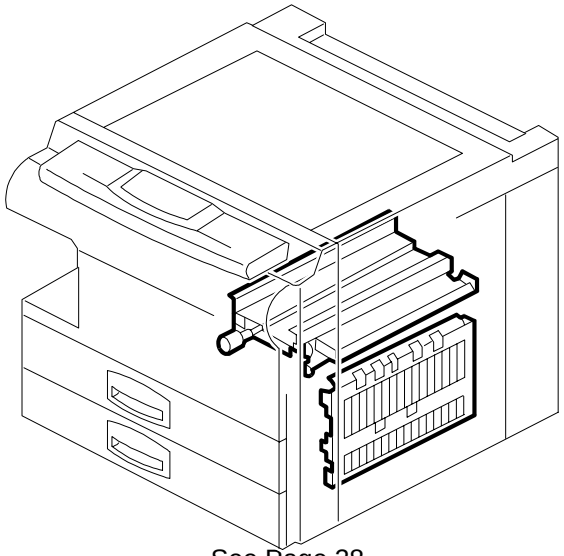

See Page 28

12. OPTICAL SECTION 1 (A208/A210/A211)

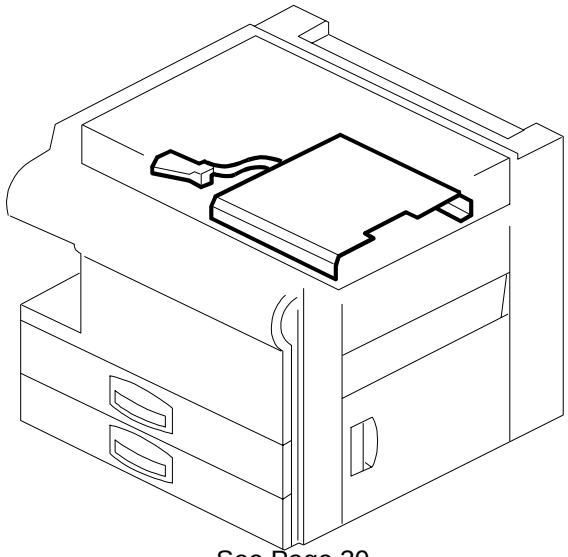

See Page 30

LOCATION OF UNIT

13. OPTICAL SECTION 2 (A208/A210/A211)

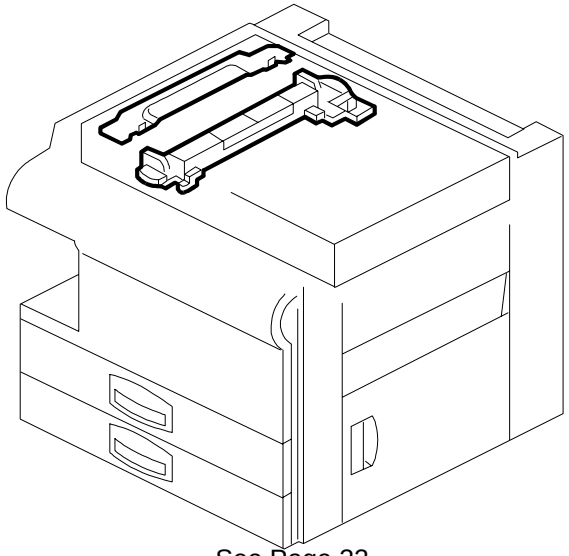

See Page 32

14. OPTICAL SECTION 3 (A208/A210/A211)

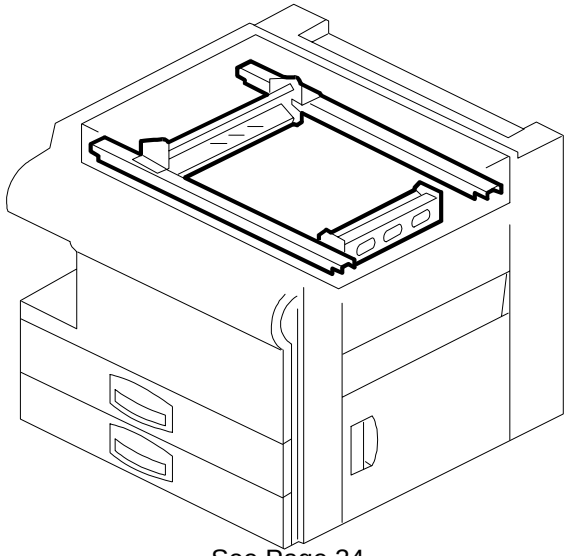

See Page 34

15. OPTICAL SECTION 4 (A208/A210/A211)

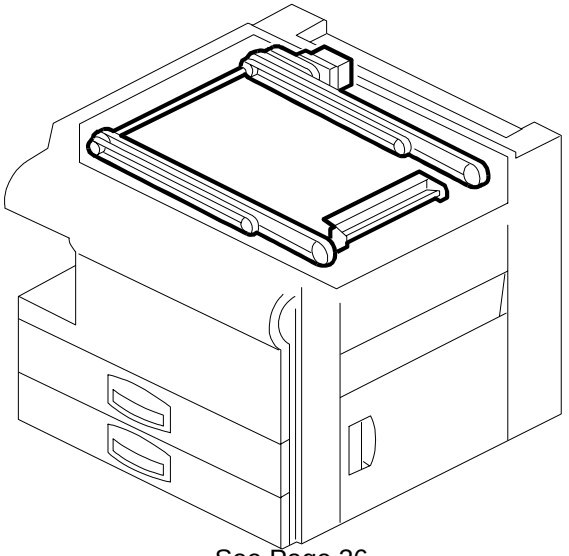

See Page 36

16. TONER SUPPLY UNIT (A208/A210/A211)

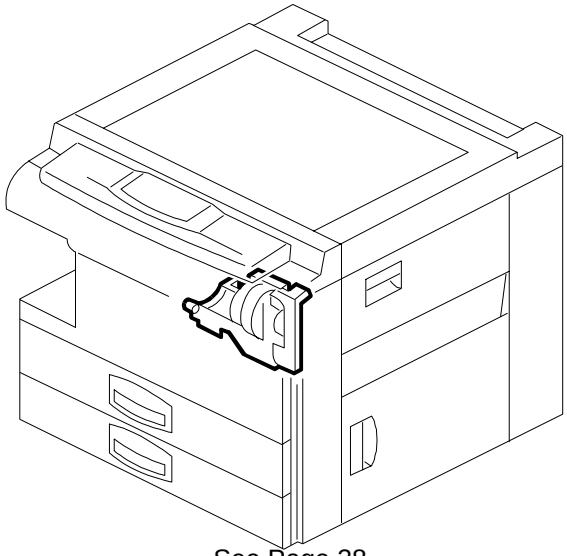

See Page 38

17. DEVELOPMENT UNIT (A208/A210/A211)

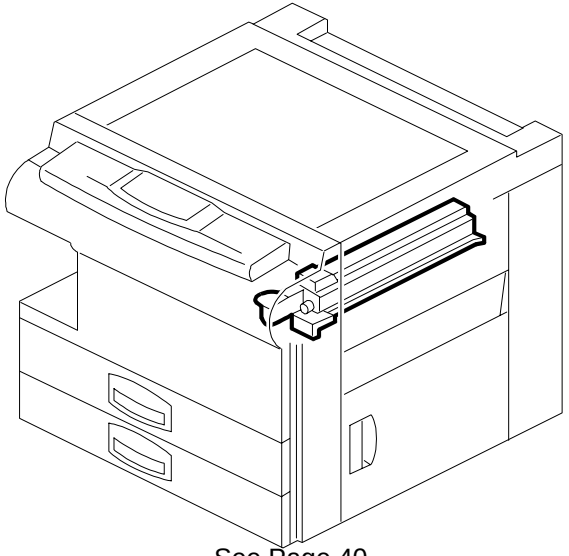

See Page 40

18. DRUM UNIT 1 (A208/A210/A211)

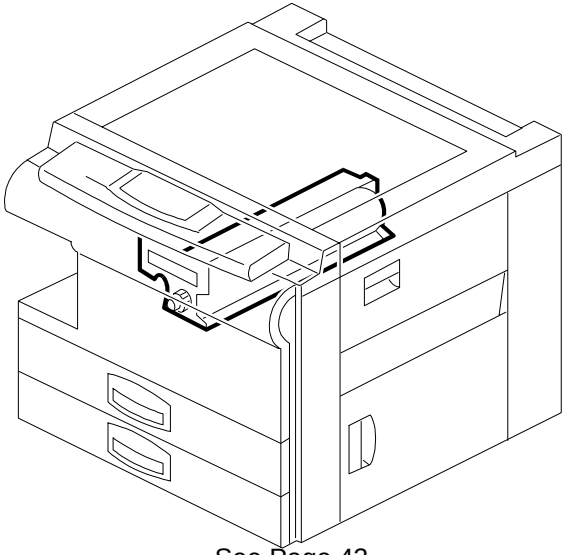

See Page 42

LOCATION OF UNIT

19. DRUM UNIT 2 (A208/A210/A211)

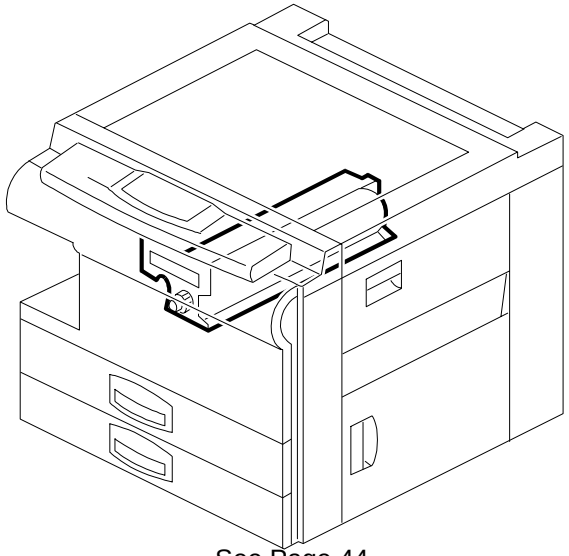

See Page 44

20. TRANSFER UNIT (A208/A210/A211)

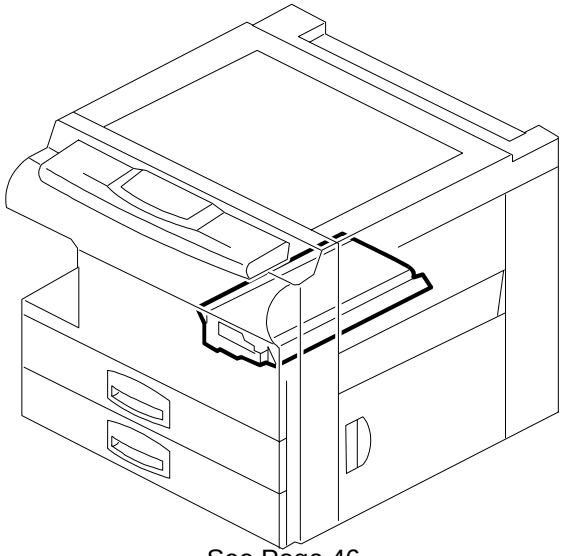

See Page 46

21. FUSING UNIT 1 (A208/A210/A211)

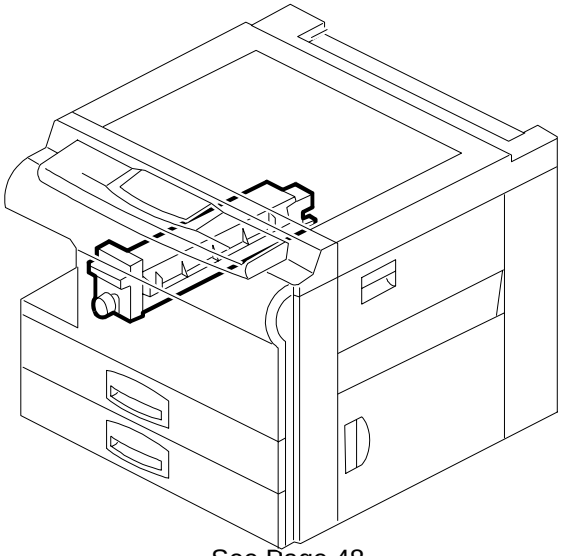

See Page 48

22. FUSING UNIT 2 (A208/A210/A211)

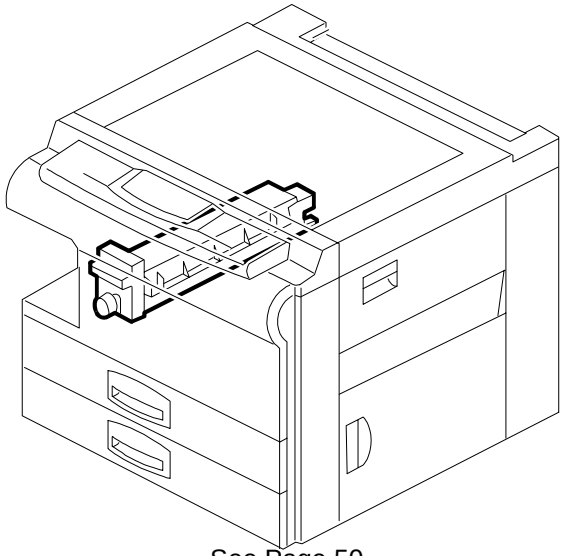

See Page 50

23. DUPLEX TRAY 1 (A211)

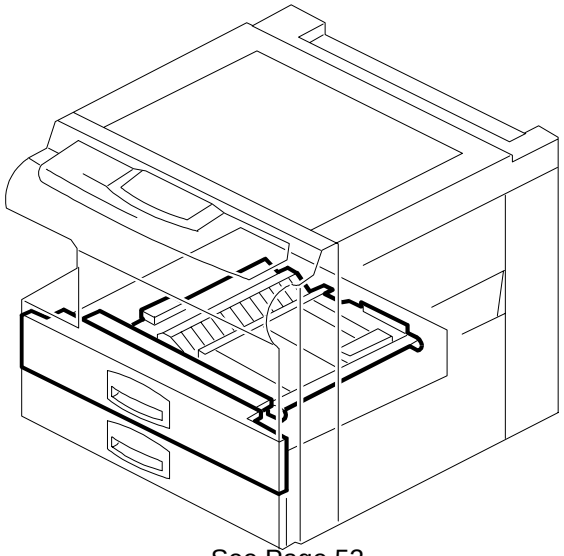

See Page 52

24. DUPLEX TRAY 2 (A211)

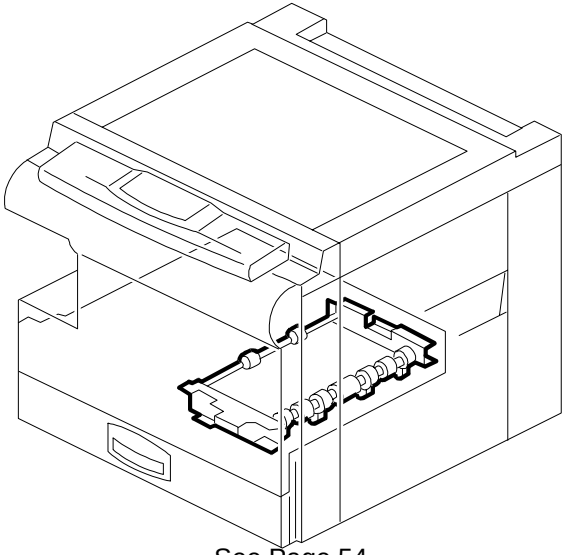

See Page 54

LOCATION OF UNIT

25. DUPLEX TRAY 3 (A211)

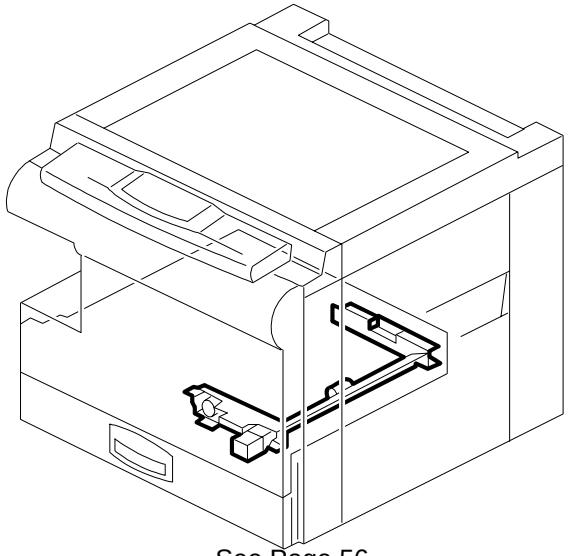

See Page 56

26. DUPLEX TRAY 4 (A211)

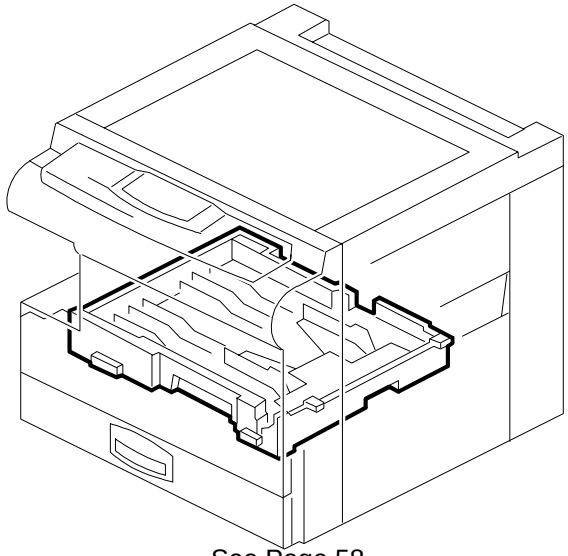

See Page 58

27. PAPER EXIT AND INVERTER (A211)

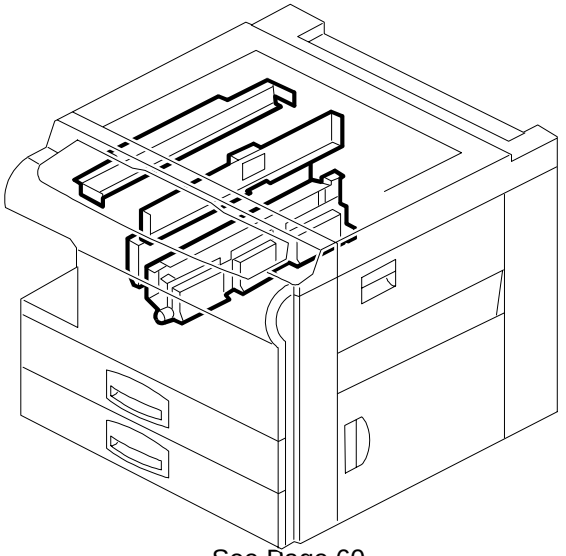

See Page 60

28. PAPER EXIT SECTION (A208/A210)

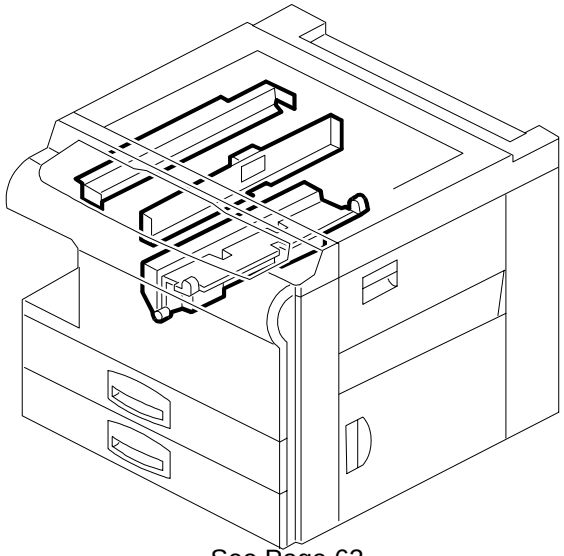

See Page 62

29. DRIVE SECTION 1 (A208/A210/A211)

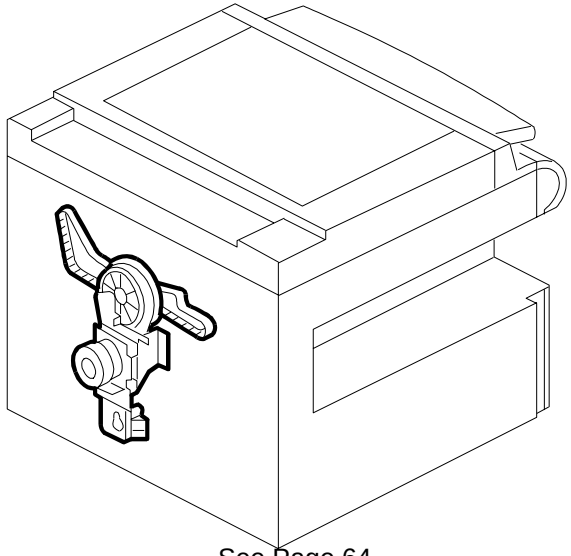

See Page 64

30. DRIVE SECTION 2 (A208/A210/A211)

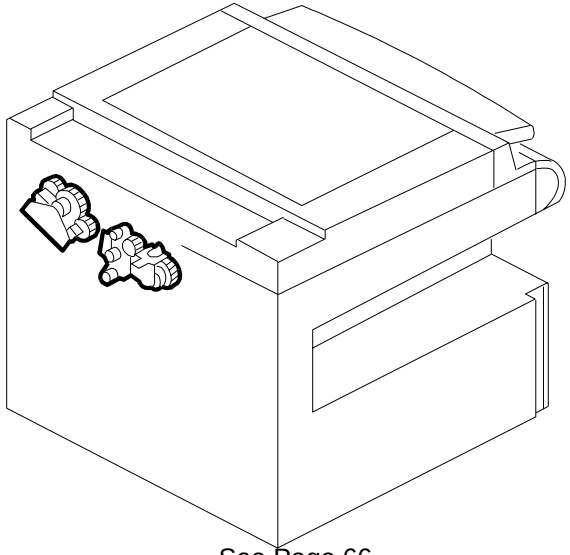

See Page 66

LOCATION OF UNIT

31. DRIVE SECTION 3 (A208/A210/A211)

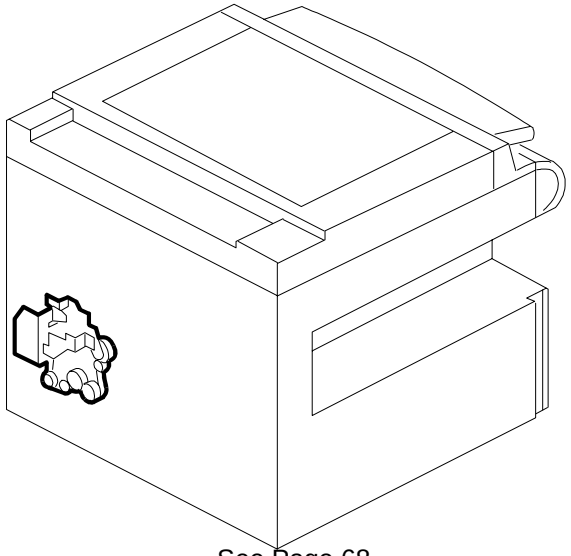

See Page 68

32. ELECTRICAL SECTION 1 (A208/A210/A211)

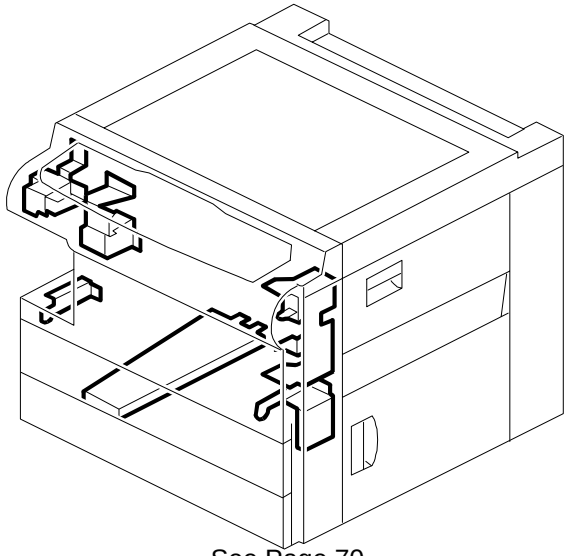

See Page 70

33. ELECTRICAL SECTION 2 (A208/A210/A211)

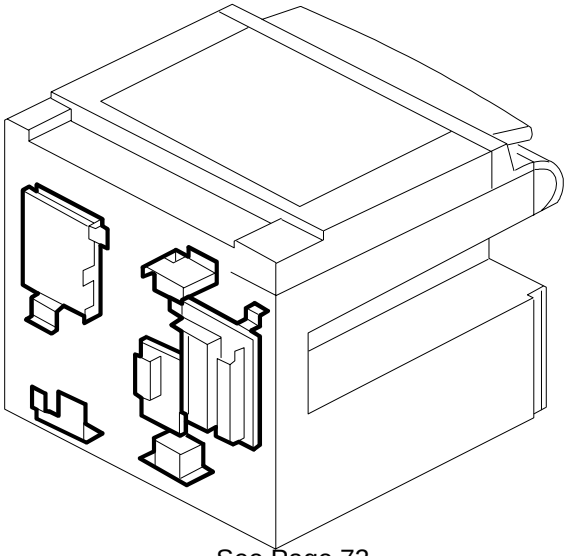

See Page 72

34. ELECTRICAL SECTION 3 (A208/A210/A211)

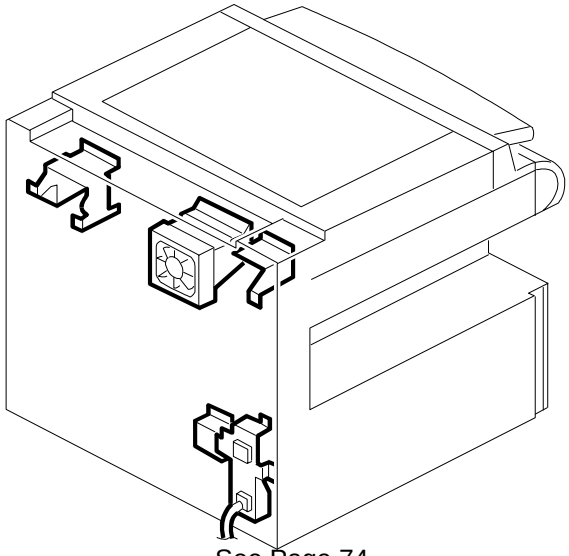

See Page 74

35. FRAME SECTION 1 (A208/A210/A211)

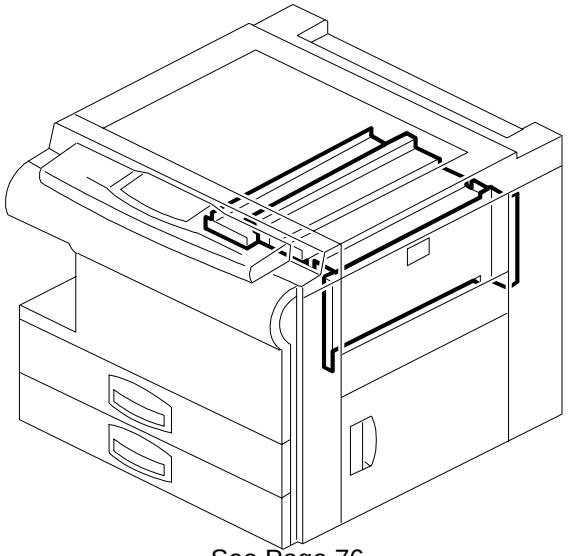

See Page 76

36. FRAME SECTION 2 (A208/A210/A211)

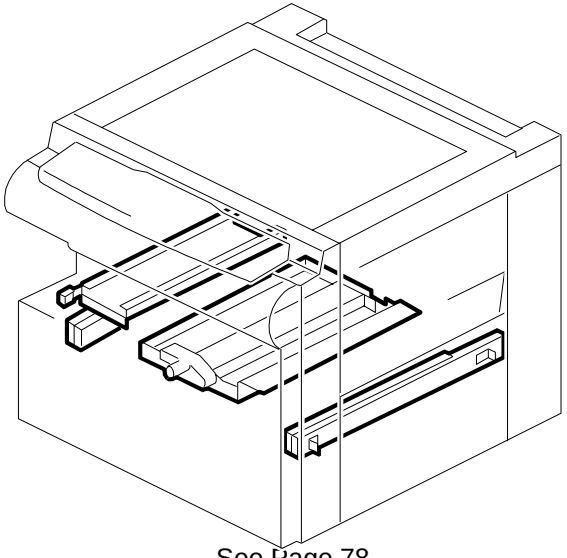

See Page 78

1. EXTERIOR (A208/A210/A211)

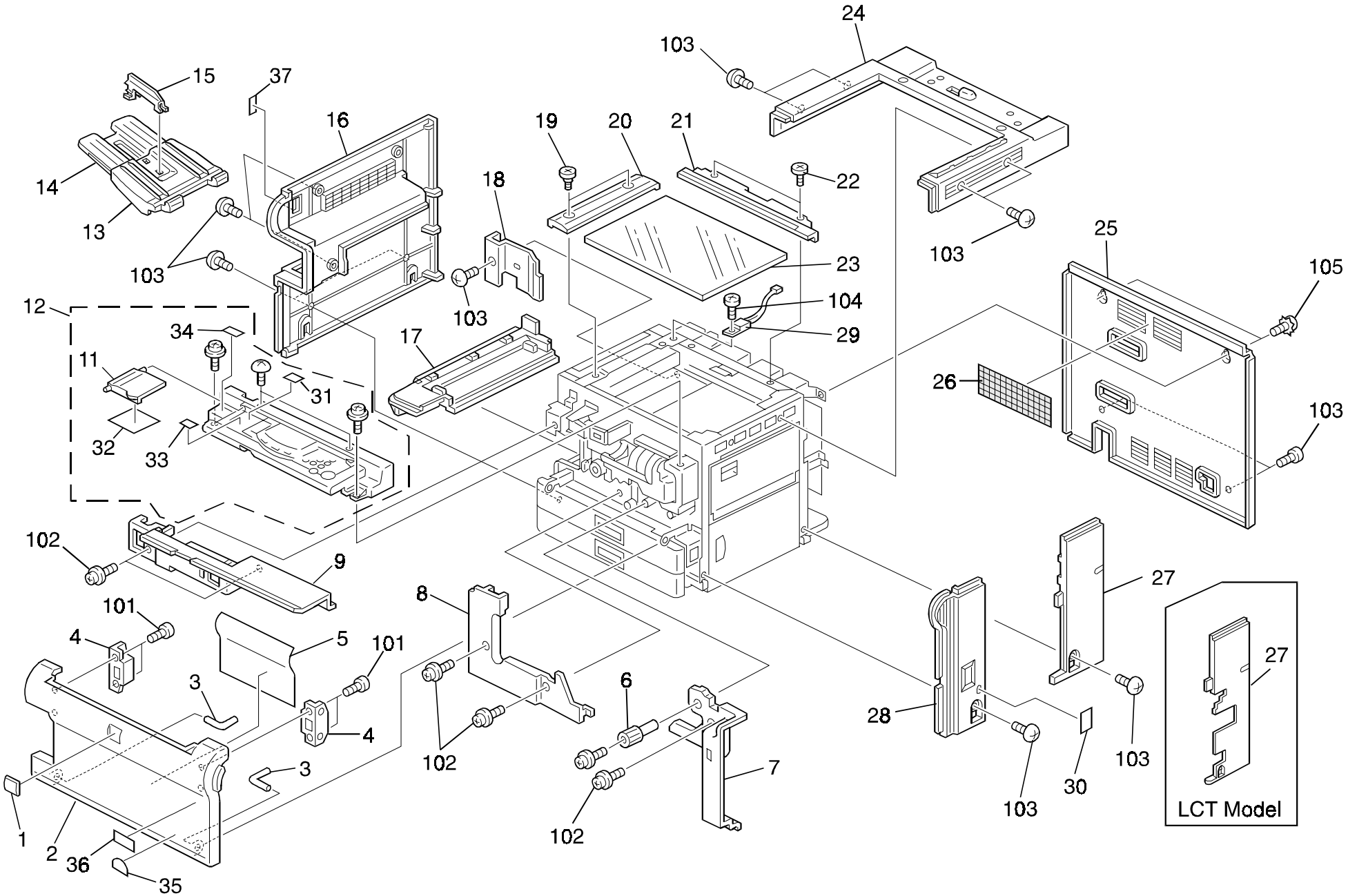

1. EXTERIOR (A208/A210/A211)

Index No.	Part No.	Description	Q'ty Per Assembly
1	A153 1285	Emblem (RIC)	1
1	A156 6413	Emblem (SVN)	1
1	A153 6423	Support Cover (INF)	1
2	A208 1277	Front Cover (A208) (RIC)	1
2	A208 6412	Front Cover (A208) (SVN)	1
2	A208 6422	Front Cover (A208) (INF)	1
2	A210 1277	Front Cover (A210) (RIC)	1
2	A210 6412	Front Cover (A210) (SVN)	1
2	A210 6422	Front Cover (A210) (INF)	1
2	A211 1277	Front Cover (A211) (RIC)	1
2	A211 6412	Front Cover (A211) (SVN)	1
2	A211 6422	Front Cover (A211) (INF)	1
2	A157 6403	Front Cover (NRG)	1
3	A153 1354	Hinge Pin	2
4	AG07 0004	Magnetic Catch	6
5	A157 1360	Operation Sheet (A208/A210)	1
5	A158 1360	Operation Sheet (A211)	1
6	AG05 0074	Registration Knob	1
7	A153 1352	Right Lower Cover	1
8	A157 1339	Lower Inner Cover	1
9	A157 1351	Upper Inner Cover	1
10	AA00 1373	Decal - Main Switch	1
11	A153 1469	Panel Cover	1
12	AG01 1342	Operation Panel Ass'y - LT (A208/A210)	1
12	AG01 1343	Operation Panel Ass'y - LT (A211)	1
12	AG01 1346	Operation Panel Ass'y - A4 (A208/A210)	1
12	AG01 1347	Operation Panel Ass'y - A4 (A211)	1
12	AG01 1348	Operation Panel Ass'y (SVN) (A208/A210)	1
12	AG01 1349	Operation Panel Ass'y (SVN) (A211)	1
13	AF04 3083	Copy Tray	1
14	AF04 3076	Copy Tray Slide	1
15	AF04 3077	Copy Tray Guide	1
16	A157 1301	Left Cover	1
17	A157 1311	Left Inner Cover	1
18	A157 1321	Left Inner Cover - Small	1

Index No.	Part No.	Description	Q'ty Per Assembly
19	AA14 3416	Stepped Screw - M4x3	2
20	AC04 2117	Left Original Scale - LT	1
20	AC04 2113	Left Original Scale - A4	1
21	AC04 2124	Rear Original Scale - LT	1
21	AC04 2120	Rear Original Scale - A4	1
22	AA14 3417	Shoulder Screw - M4x4	2
23	AC01 2060	Exposure Glass - A3T-3.2	1
24	A153 1251	Upper Cover	1
25	A204 1291	Rear Cover	1
26	AA01 2080	Dust Filter	1
27	A153 1271	Rear Right Cover (A208)	1
27	A155 1331	LCT Rear Right Cover (A210/A211)	1
28	A153 1261	Front Right Cover	1
29	AW10 0027	Thermistor	1
30	A134 1328	Small Cap	1
31	A153 1476	Decal - Margin Adjustment - LT/DLT	1
31	A153 1479	Decal - Margin Adjustment - A4/A3	1
32	A204 1486	Operation Panel Sheet - LT	1
32	A204 1487	Operation Panel Sheet - L4	1
33	A153 1475	Decal - 10key Zoom -LT/DLT	1
33	A153 1478	Decal - 10key Zoom - A4/A3	1
34	C225 2867	Decal - Cover - Panel - Nashua	1
34	A153 6409	Decal - Keytop Cover (NRG)	1
34	C225 2866	Decal - Key Top Cover (NST)	1
35	AA00 1389	Large Decal - Energy Star	1
36	A208 6404	Model Name Plate - GES (A208)	1
36	A208 6407	Model Name Plate - NSA (A208)	1
36	A208 6414	Model Name Plate - REX (A208)	1
36	A210 6404	Model Name Plate - GES (A210)	1
36	A210 6407	Model Name Plate - NSA (A210)	1
36	A210 6414	Model Name Plate - REX (A210)	1
36	A211 6404	Model Name Plate - GES (A211)	1
36	A211 6407	Model Name Plate - NSA (A211)	1
36	A211 6414	Model Name Plate - REX (A211)	1
37	AA00 1373	Decal Main Switch	1

Index No.	Part No.	Description	Q'ty Per Assembly
101	0434 0082B	Tapping Screw - M4x8	
102	0964 4008B	Tapping Screw With Flat Washer-m4x8	
103	0802 5094	Tapping Truss Head Screw - M4x8	
104	0313 0040B	Philips Pan Head Screw - M3x4	
105	0953 4008M	Screw - M4X8	

Index No.	Part No.	Description	Q'ty Per Assembly

2. PLATEN COVER ASS'Y (A208/A210/A211)

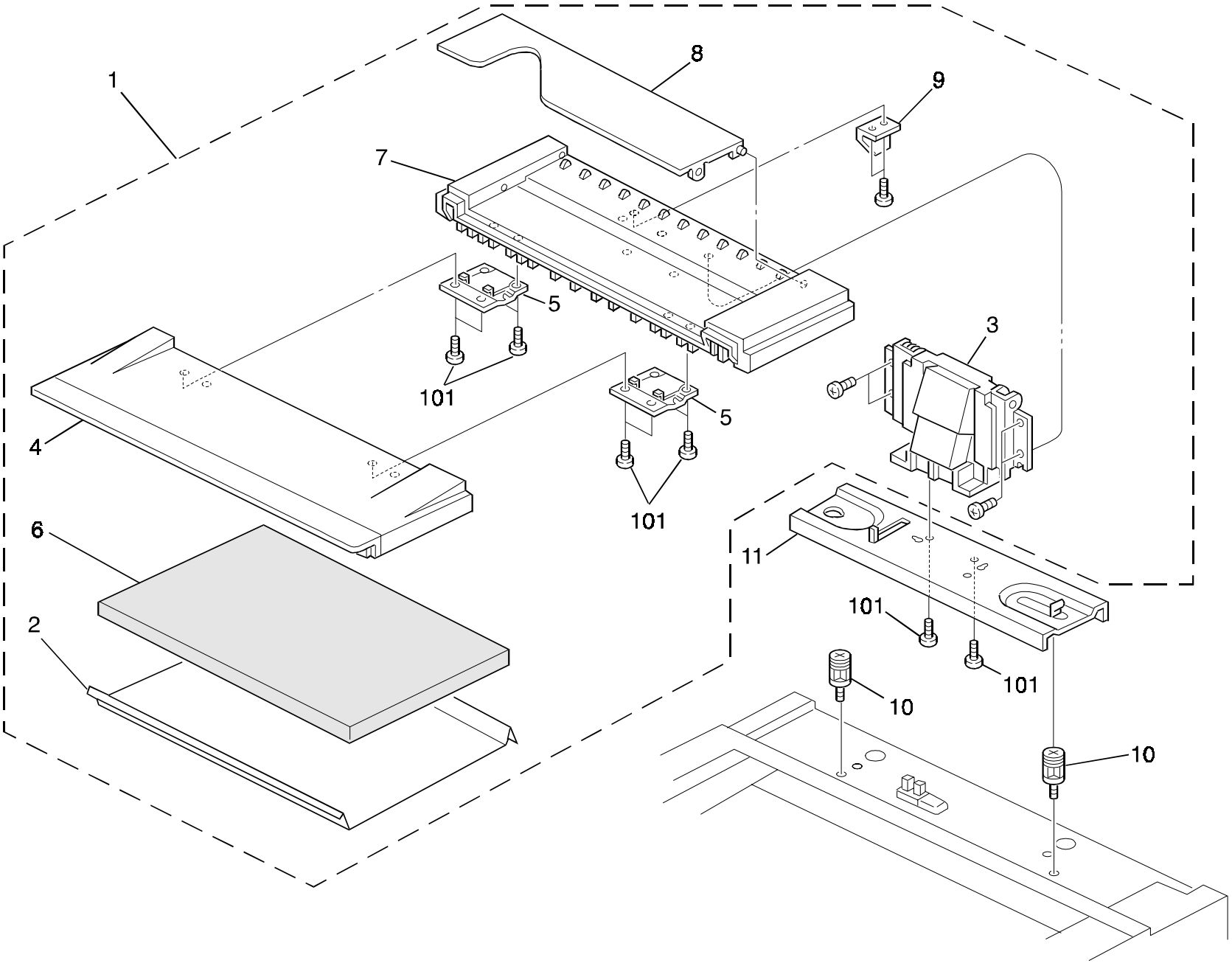

2. PLATEN COVER ASS'Y (A208/A210/A211)

Rev. 08/98

Index No.	Part No.	Description	Q'ty Per Assembly
1	A153 1369	Platen Cover Ass'y	1
2	5448 2804	Platen Cover Sheet	1
3	A153 1370	Platen Cover Hinge	1
4	A134 1394	Front Platen Cover	1
6	AA16 2067	Platen Cover Pad	1
7	A134 1395	Rear Platen Cover	1
8	A134 1396	Original Holder	1
9	A153 1383	Platen Cover Feeler	1
10	AA14 8447	Platen Cover Stud	1
11	A153 1380	Platen Cover Bracket	1

Index No.	Part No.	Description	Q'ty Per Assembly
101	0414 0142B	Binding Self Tapping Screw - M4x14	

3. OPERATION PANEL ASS'Y(A208/A210/A211)

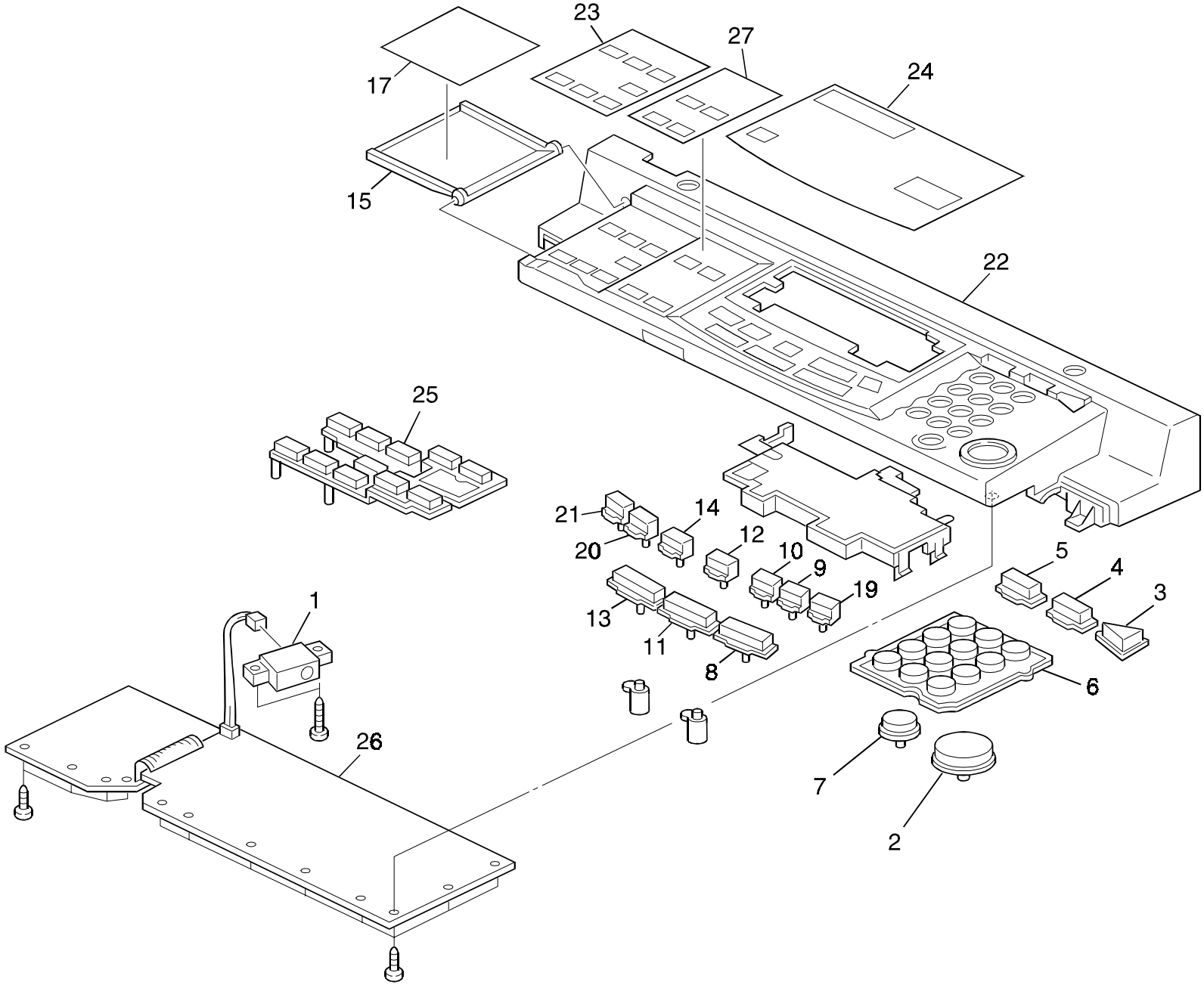

3. OPERATION PANEL ASS'Y(A208/A210/A211)

Index No.	Part No.	Description	Q'ty Per Assembly
*	AG01 1342	Operation Panel Ass'y - LT (A208/A210)	1
*	AG01 1343	Operation Panel Ass'y - LT (A211)	1
*	AG01 1346	Operation Panel Ass'y - A4 (A208/A210)	1
*	AG01 1347	Operation Panel Ass'y - A4 (A211)	1
*	AG01 1348	Operation Panel Ass'y (A208/A210) (SVN)	1
*	AG01 1349	Operation Panel Ass'y (A211) (SVN)	1
1	AW01 0073	Optics Sensor	1
2	A153 1452	Key-top Start	1
2	A156 1452	Key-top Start (SVN)	1
3	A153 1453	Key-top Interrupt	1
3	A156 1453	Key-top Interrupt (SVN)	1
4	A153 1454	Key-top Mode Clear	1
4	A156 1454	Key-top Mode Clear (SVN)	1
5	A153 1455	Key-top Program	1
5	A156 1455	Key-top Program (SVN)	1
6	A153 1456	Key-top 10 Key	1
6	A156 1456	Key-top 10 Key (SVN)	1
7	A153 1457	Key-top Clear/Stop	1
7	A156 1457	Key-top Clear/Stop (SVN)	1
8	A153 1458	Key-top Auto Density	1
8	A156 1458	Key-top Auto Density (SVN)	1
9	A153 1459	Key-top Darker	1
9	A156 1459	Key-top Darker (SVN)	1
10	A153 1460	Key-top Lighter	1
10	A156 1460	Key-top Lighter (SVN)	1
11	A153 1461	Key-top Auto Paper Select	1
11	A156 1461	Key-top Auto Paper Select (SVN)	1
12	A153 1462	Key-top Paper Select	1
12	A156 1462	Key-top Paper Select (SVN)	1
13	A153 1463	Key-top Full Size	1
13	A156 1463	Key-top Full Size (SVN)	1
14	A153 1464	Key-top Auto Reduce/Enlarge	1
14	A156 1464	Key-top Auto Reduce/Enlarge (SVN)	1
15	A153 1469	Panel Cover	1
17	A204 1486	Operation Panes Sheet - LT	1
17	A204 1487	Operation Panes Sheet - A4	1
19	A204 1471	Keytop - Halftone	1
19	A207 1471	Keytop - Halftone (SVN)	1
20	A204 1472	Keytop - Enlarge	1
20	A207 1472	Keytop - Enlarge (SVN)	1
21	A204 1473	Keytop - Reduce	1
21	A207 1473	Keytop - Reduce (SVN)	1
22	A204 1475	Operation Panel Case - LT	1
22	A204 1476	Operation Panel Case - A4	1
23	A204 1481	Sheet - LT	1
23	A204 1482	Sheet - A4	1
24	A208 1477	Display Panel - LT (A208/A210)	1
24	A208 1478	Display Panel - A4 (A208/A210)	1
24	A211 1477	Display Panel - LT (A211)	1
24	A211 1478	Display Panel - A4 (A211)	1
25	A204 1465	Key-top - Sorter	1
25	A207 1465	Key-top - Sorter (SVN)	1
26	A210 5460	Operation Panel Board - LT (A208/A210)	1
26	A210 5465	Operation Panel Board - A4 (A208/A210)	1
26	A211 5461	Operation Panel Board - LT (A211)	1
26	A211 5466	Operation Panel Board - A4 (A211)	1
27	A207 1467	Paper Exit Sheet - LT (A211)	1
27	A207 1480	Paper Exit Sheet - A4 (A211)	1
27	A204 1479	Sheet Sorter - LT (A208/A210)	1
27	A204 1480	Sorter Sheet - A4 (A208/A210)	1
101	0802 5094	Tapping Truss Head Screw - M4x8	
102	0964 4006B	Tapping Screw With Flat Washer-m4x6	

4. BY-PASS FEED SECTION (A208/A210/A211)

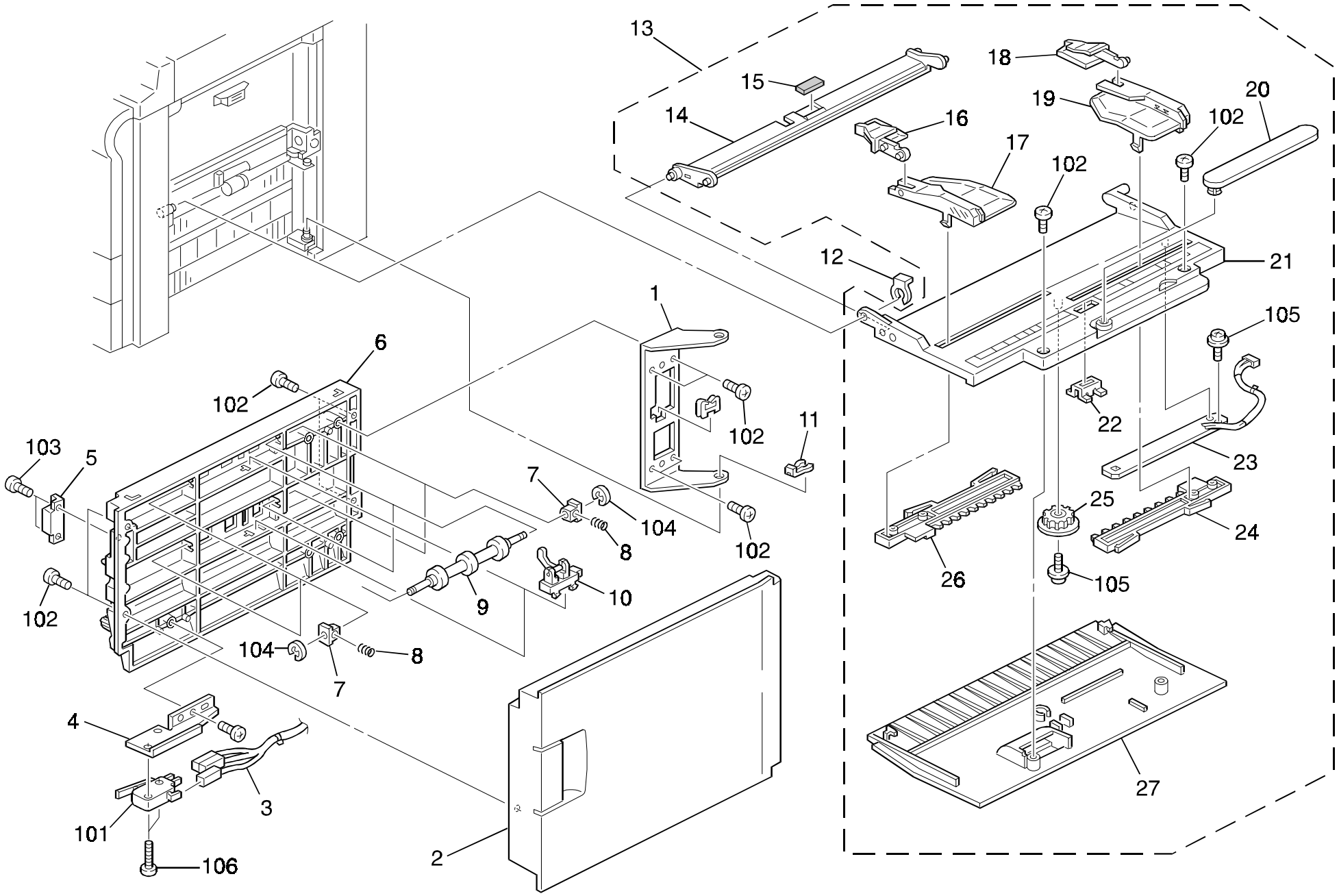

4. BY-PASS FEED SECTION (A208/A210/A211)

Index No.	Part No.	Description	Q'ty Per Assembly
1	A134 2586	Hinge Bracket (A208)	1
2	A134 2591	Vertical Transfer (A208)	1
3	A134 5316	Vertical Transfer Harness	1
4	A134 2587	Switch Bracket	1
5	AG07 0004	Magnetic Catch (A208)	1
6	A134 2585	Vertical Transfer Guide Plate	1
8	AA06 3538	Spring - 10mm	2
9	AF02 0330	Vertical Driven Roller	2
10	AW02 0069	Photointerruptor (A208)	2
11	5447 2681	Snap Ring (A208)	7
12	5215 2621	Snap Ring - M6	3
13	A134 2692	By-pass Feed Table Ass'y	1
14	A134 2741	By-pass Feed Entrance Guide	1
15	**5447 2927**	**Friction Pad - B**	**1**
16	A134 2721	Front Paper Guide	1
17	A134 2711	Front Side Fence	1
18	A134 2726	Rear Paper Guide	1
19	A134 2716	Rear Side Fence	1
20	A134 2701	By-pass Feed Guide	1
21	A134 2697	By-pass Feed Table	1
22	A134 2705	Magnet Catch Plate	1
23	A134 5282	Paper Size Sensor Board	1
24	A134 2706	Rear Fence Rack	1
25	G011 3305	Gear - 16T	2
26	A134 2707	Front Fence Rack	2
27	A134 2746	By-pass Feed Cover	1

Index No.	Part No.	Description	Q'ty Per Assembly
101	1204 2356	Micro Switch - Am51612a531	
102	0414 0082W	Tapping Screw With Flat Washer-m4x8	
103	0802 5085	Tapping Screw - M4x8	
104	0720 0030E	Retaining Ring - M3	
105	0965 3006B	Tapping Screw With Flat Washer M3x6	
106	0313 0140B	Philips Pan Head Screw - M3x14	

5. PAPER TRAY SECTION (A208/A210/A211)

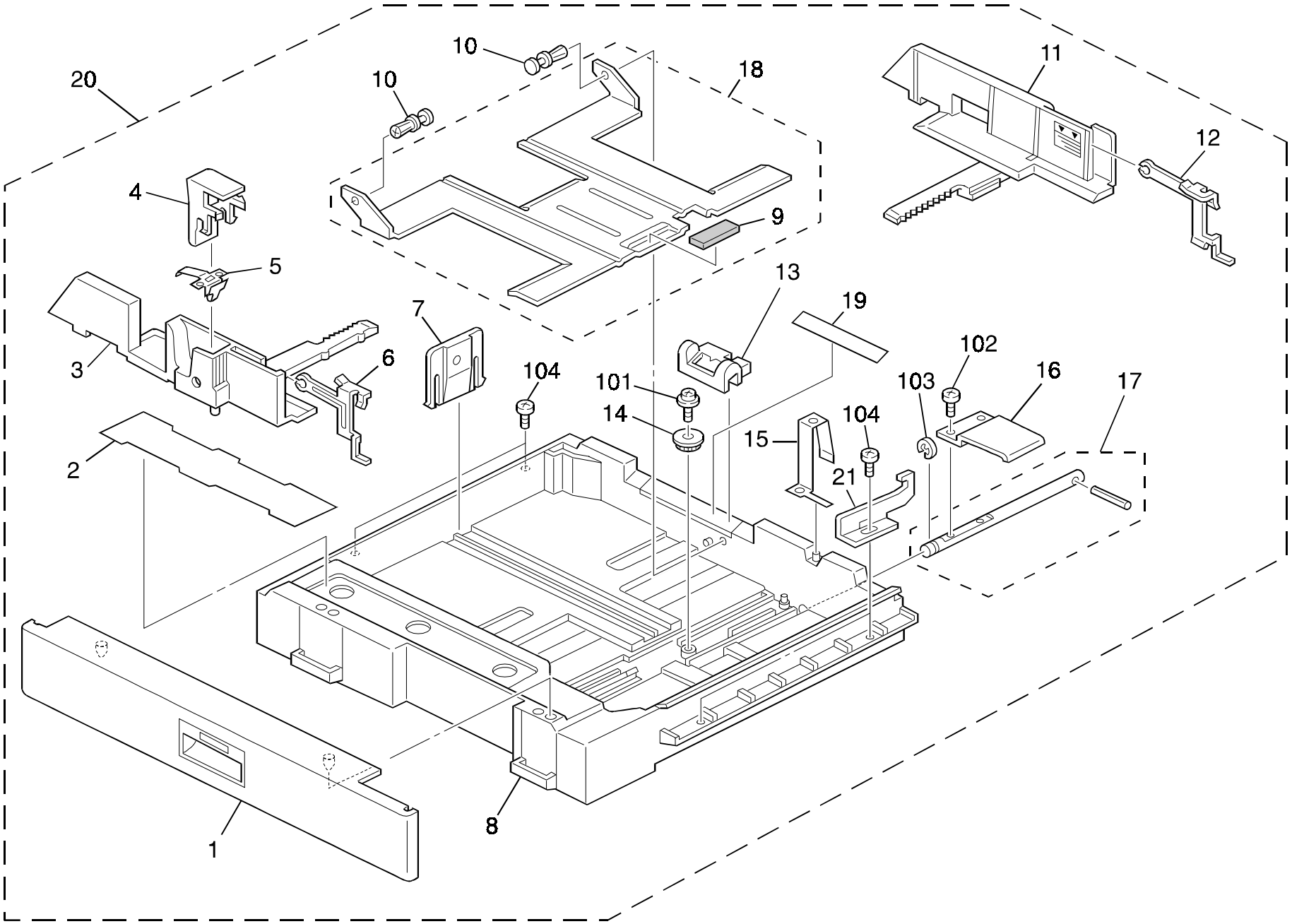

5. PAPER TRAY SECTION (A208/A210/A211)

Index No.	Part No.	Description	Q'ty Per Assembly
1	A134 2956	Paper Feed Front Cover	1
2	A134 2997	Decal - Paper Setting	1
3	AF01 6084	Front Side Fence	1
4	A134 2976	Stopper Lever	1
5	A134 2978	Spring Plate	1
6	A153 2991	Front Side Fence Guide	1
7	AF01 7012	End Fence	1
8	A204 2953	Paper Tray	1
9	**AF01 3014**	**Bottom Plate Pad**	**1**
10	A048 2838	Nylon Rivet	1
11	AF01 6085	Rear Side Fence	1
12	A153 2992	Rear Side Fence Guide	1
13	AF01 5027	Paper Size Slider	1
14	AB01 3868	Gear - 16Z	2
15	A134 2968	Grounding Plate	2
16	A204 2972	Bottom Lift Lever	1
17	A204 2971	Bottom Lift Shaft	1
18	A134 2986	Bottom Plate	1
19	A153 2995	Decal Paper Size - LT/DLT	1
19	A153 2996	Decal Paper Size - A4	1
20	A134 2952	Universal Tray	1
21	A134 2960	Paper Tray Stopper	1

Index No.	Part No.	Description	Q'ty Per Assembly
101	0965 4008B	Tapping Screw - M4x8	
102	0434 0060B	Pan Head Self-tapping Screw - M4x6	
103	0720 0060E	Retaining Ring - M6	
104	0344 0060F	Philips Truss Head Screw - M4x6	

6. LCT UNIT 1 (A210/A211)

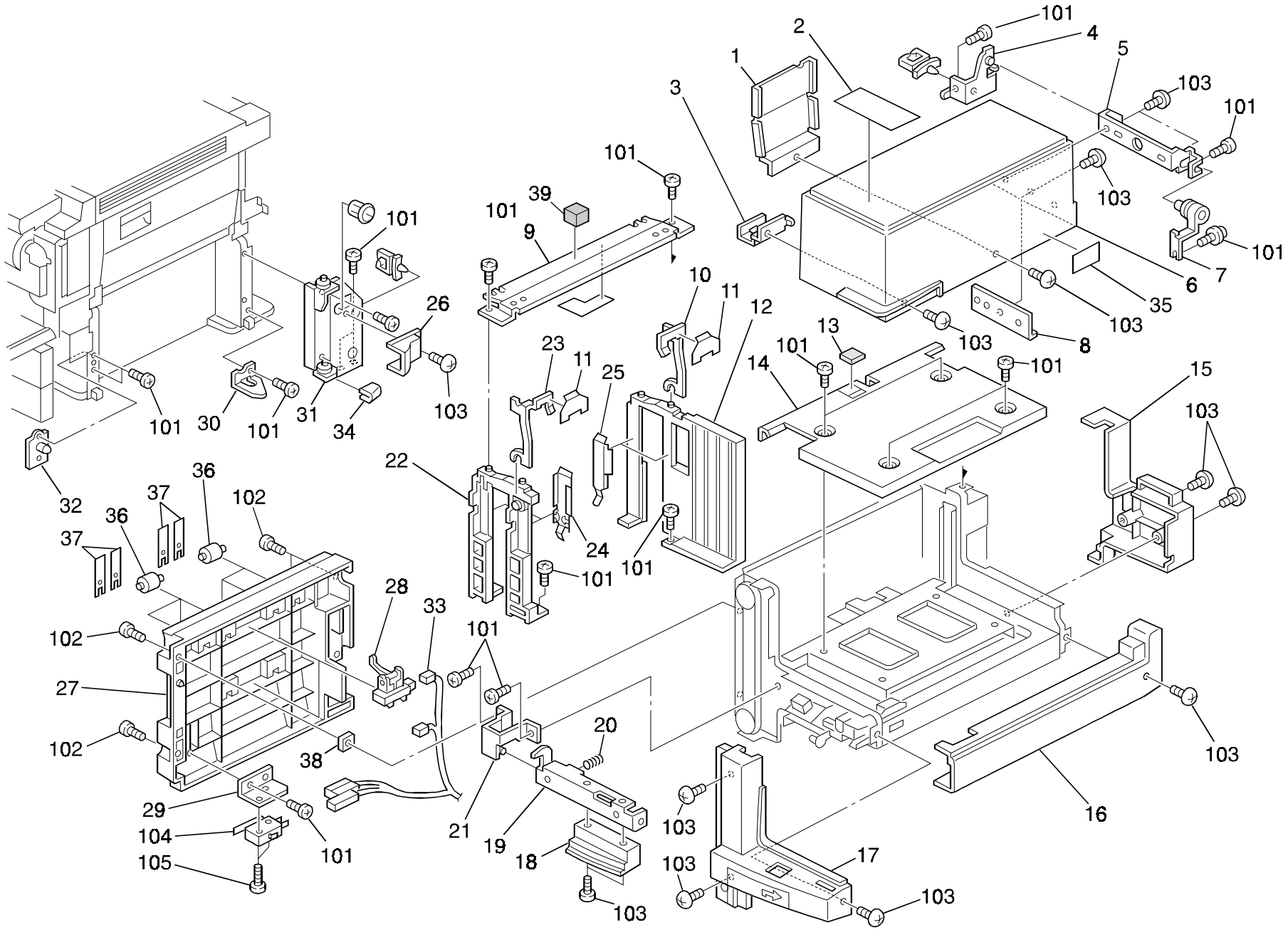

6. LCT UNIT 1 (A210/A211)

Index No.	Part No.	Description	Q'ty Per Assembly
1	A155 6324	End Fence	1
2	A155 6113	Decal - Paper Set	1
3	A155 6207	Cover Bracket	1
4	A155 6303	Fix Hinge	1
5	A155 6302	Hinge Angle	1
6	A155 6101	LCT Upper Cover	1
7	A335 3251	Top Cover Hinge	1
8	A155 6201	LCT Hinge Bracket	1
9	A155 6251	Upper Stay	1
10	A155 6312	Rear Paper Holder	1
11	A155 6313	Support Guide	2
12	A155 6307	Rear Side Fence	1
13	**A421 2543**	**Friction Pad**	**1**
14	A155 6142	LCT Paper Tray	1
15	A155 6221	LCT Rear Cover	1
16	A155 6231	LCT Right Cover	1
17	A155 6191	LCT Front Cover	1
18	A155 6181	Knob	1
19	A155 6171	Grip Bracket	1
20	AA06 3239	Spring - Handle	1
21	A155 6170	Hinge Bracket	1
22	A155 6306	Front Side Fence	1
23	A155 6311	Front Paper Holder	1
24	A155 6321	Front Spring Plate	2
25	A155 6322	Rear Sprig Plate	2
26	A155 6241	LCT Harness Cover	1
27	A155 6151	Vertical Transport Guide	1
28	AW02 0069	Photointerruptor	2
29	A155 6152	Switch Bracket	1
30	A155 6169	Hinge Holder	1
31	A155 6160	Lower Hinge	1
32	A155 6175	LCT Positioning Plate	1
33	A155 5349	LCT Vertical Harness	1
34	A155 6162	Cushion	1
35	A155 6114	Caution Decal - LCT	1

Index No.	Part No.	Description	Q'ty Per Assembly
36	AF02 0330	Vertical Driven Roller	6
37	AA08 0034	Bushing - 4x5x7	4
38	A155 6112	Spacer - LCT	1
39	A155 6270	Cushion 20 X 30	1
101	0434 0060B	Pan Head Self-tapping Screw - M4x6	
102	0414 0080B	Binding Self-tapping Screw - M4x8	
103	0802 5094	Tapping Truss Head Screw - M4x8	
104	1204 2356	Micro Switch - Am51612a531	
105	0433 0140B	Pan head Self Tapping Screw - M3x14	

7. LCT UNIT 2 (A210/A211)

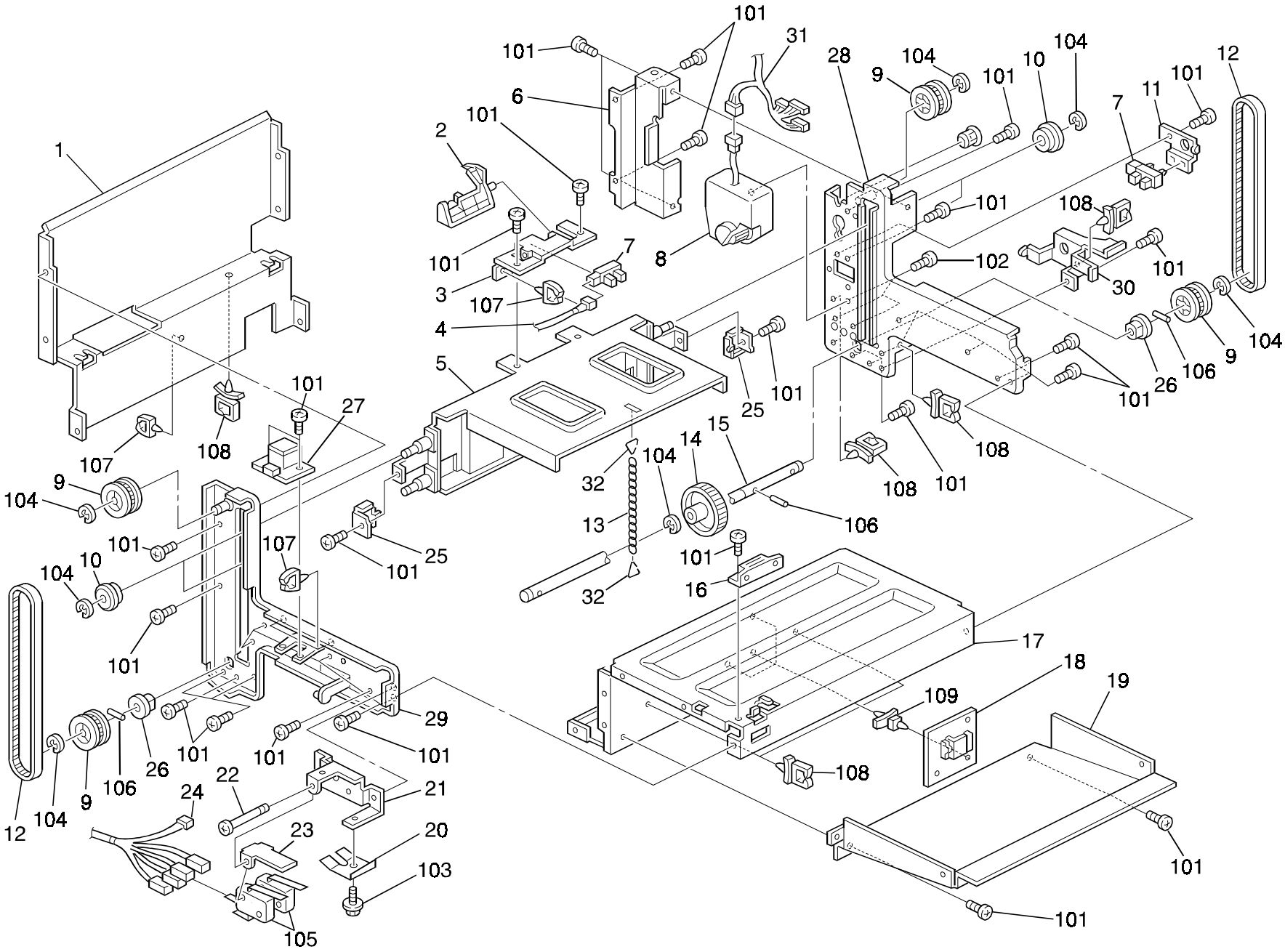

7. LCT UNIT 2 (A210/A211)

Index No.	Part No.	Description	Q'ty Per Assembly
1	A155 6143	Left Bracket	1
2	A155 6148	Paper End Sensor Feeler	1
3	A155 6147	Paper End Sensor Bracket	1
4	A155 5348	Paper End Sensor Harness	1
5	A155 6203	Paper Tray Stay	1
6	A155 6153	Upper Hinge	1
7	AW02 0075	Photointerrupter	2
8	AX05 0090	Motor - DC 24V 36W	1
9	AB03 0281	Timing Pulley - 28Z	4
10	A335 4351	Guide Roller	4
11	A155 6136	Lift Sensor Bracket	1
12	AA04 3456	Timing Belt - S3M167	2
13	5925 2258	Stopper Chain	1
14	AB01 1133	Gear - 49Z	1
15	AA14 0576	LCT Drive Shaft	1
16	AG07 0004	Magnetic Catch	1
17	A155 6141	Tray Bottom Plate	1
18	A155 5165	LCT Main Board	1
19	A155 6145	Tray Cover	1
20	A155 6118	Spring Plate	1
21	A155 6116	Safety Switch Bracket	1
22	A300 3155	Stepped Screw - M25x32	1
23	A155 6117	Safety Switch Lever	1
24	A155 5314	LCT Relay Harness	1
25	A335 4352	Timing Belt Clamp	2
26	5053 0223	Bushing - 8mm	2
27	A155 5170	Push Switch	1
28	A155 6125	Rear Side Bracket	1
29	A155 6110	Front Side Plate - LCT	1
30	A155 6215	Harness Guide	1
31	A155 5342	LCT Harness	1
32	A335 1341	Chain Hook	2

Index No.	Part No.	Description	Q'ty Per Assembly
101	0434 0060B	Pan Head Self-tapping Screw - M4x6	
102	0802 5236	Binding Self-tapping Screw - M4x8	
103	0443 0060B	Hexagon Tapping Screw - M3x6	
104	0720 0060E	Retaining Ring - M6	
105	1204 2355	Micro Switch - Am51632a531	
106	0623 0160E	Spring Pin - 3x16mm	
107	1105 0199	Clamp	
108	1105 0197	Wire Saddle	
109	1105 0192	Locking Support	

8. PAPER FEED SECTION 1 (A208/A210/A211)

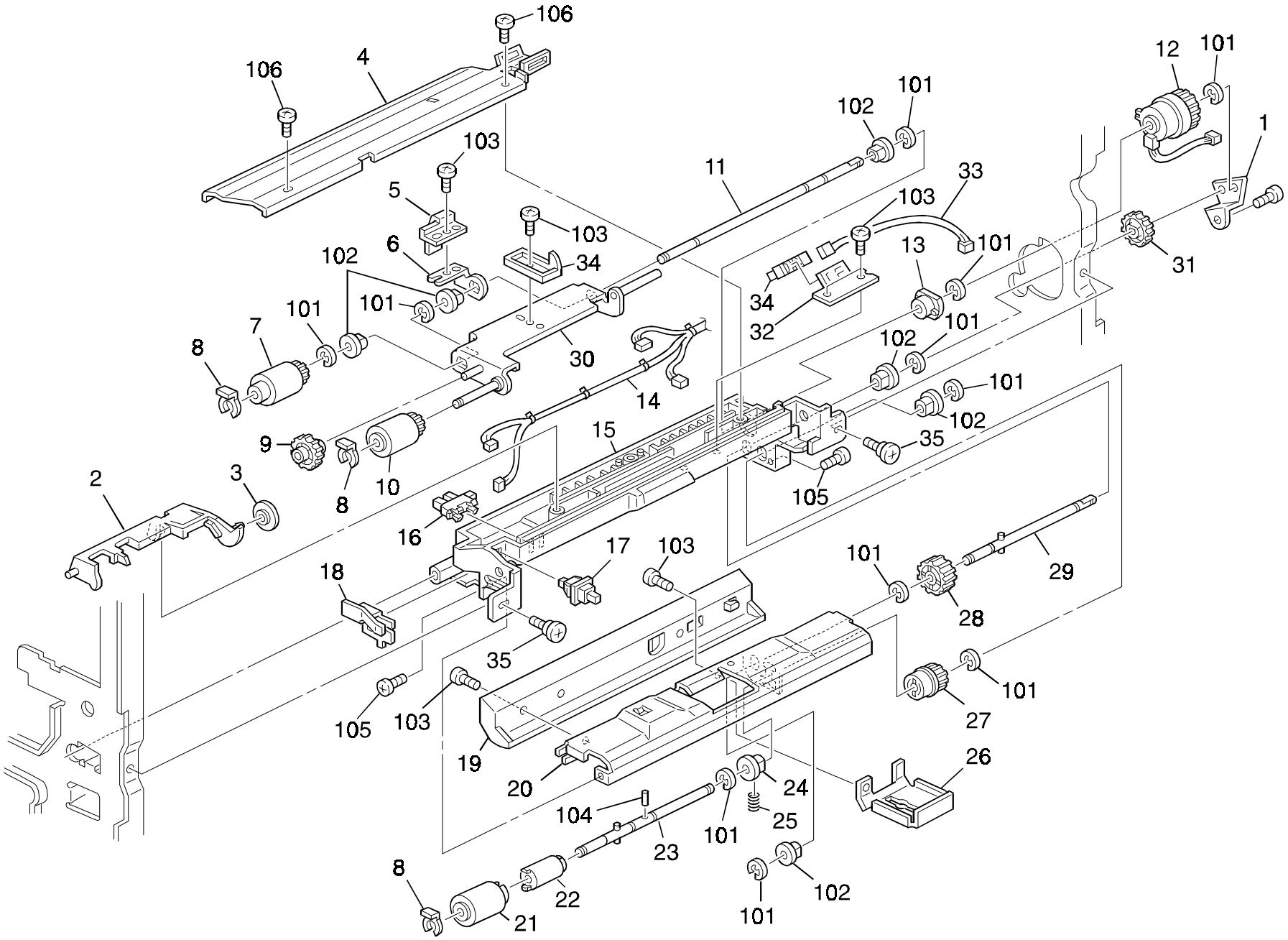

8. PAPER FEED SECTION 1 (A208/A210/A211)

Index No.	Part No.	Description	Q'ty Per Assembly
*	A134 2651	Bypass Feed Unit (A208)	1
*	A206 2651	Bypass Feed Unit (A210/A211)	1
1	A134 2688	Positioning Plate	1
2	A134 2660	Paper Feed Feeler	1
3	A134 2661	Feeler Roller	1
4	A134 2670	By-pass Feed Cover	1
5	A134 2658	Grounding Plate	1
6	A134 2656	Stopper Plate	2
7	**AF03 1025**	**Feed Roller (A208)**	**1**
7	**AF03 1024**	**Feed Roller (A210/A211)**	**1**
8	5447 2681	Snap Ring	7
9	AB01 1343	Idle Gear - 23z	1
10	**AF03 0024**	**Pick-up Roller**	**1**
11	AA14 0575	Paper Feed Shaft	1
12	AX20 0101	Magnetic Clutch - 2.5kgf 35z	1
13	AA08 3010	Clutch Roller - 6x14x10	1
14	A134 5311	By-pass Feed Harness	1
15	A134 2659	By-pass Feed Housing	1
16	AW02 0075	Photointerrupter	15
17	AW50 0012	Push Switch	2
18	A134 2662	Grounding Plate	1
19	A153 2560	Rear Guide Plate	1
20	A134 2663	Separation Guide	1
21	**AF03 2025**	**Separation Roller**	**1**
22	A206 2804	Torque-Limiter (A211)	1
23	A134 2668	Separation Driven Shaft	1
24	AA08 0037	Bushing - 6 Mm	1
25	AA06 3499	Pressure Spring	1
26	A134 2689	Gear Cover	1
27	AB01 1344	Gear - 16Z	1
28	AB01 1345	Gear - 20Z	1
29	A134 2667	Separation Drive Shaft	1
30	A134 2654	Pick-up Arm	1
31	AB01 1346	Gear - 27Z	1
32	A155 2682	Lift Sensor Bracket	1

Index No.	Part No.	Description	Q'ty Per Assembly
33	A155 5345	Ct Harness	1
34	A155 2667	Lift Sensor Feeler	1
35	AA14 3219	Stepped Screw	2
101	0720 0040E	Retaining Ring - M4	
102	0805 3480	Bushing - 6mm	
103	0414 0080B	Binding Self-tapping Screw - M4x8	
104	0622 0100E	Spring Pin - 2x10mm	
105	0802 5237	Binding Self Tapping Screw - M4x10	
106	0434 0060B	Pan Head Self-tapping Screw - M4x6	

9. PAPER FEED SECTION 2 (A208/A210/A211)

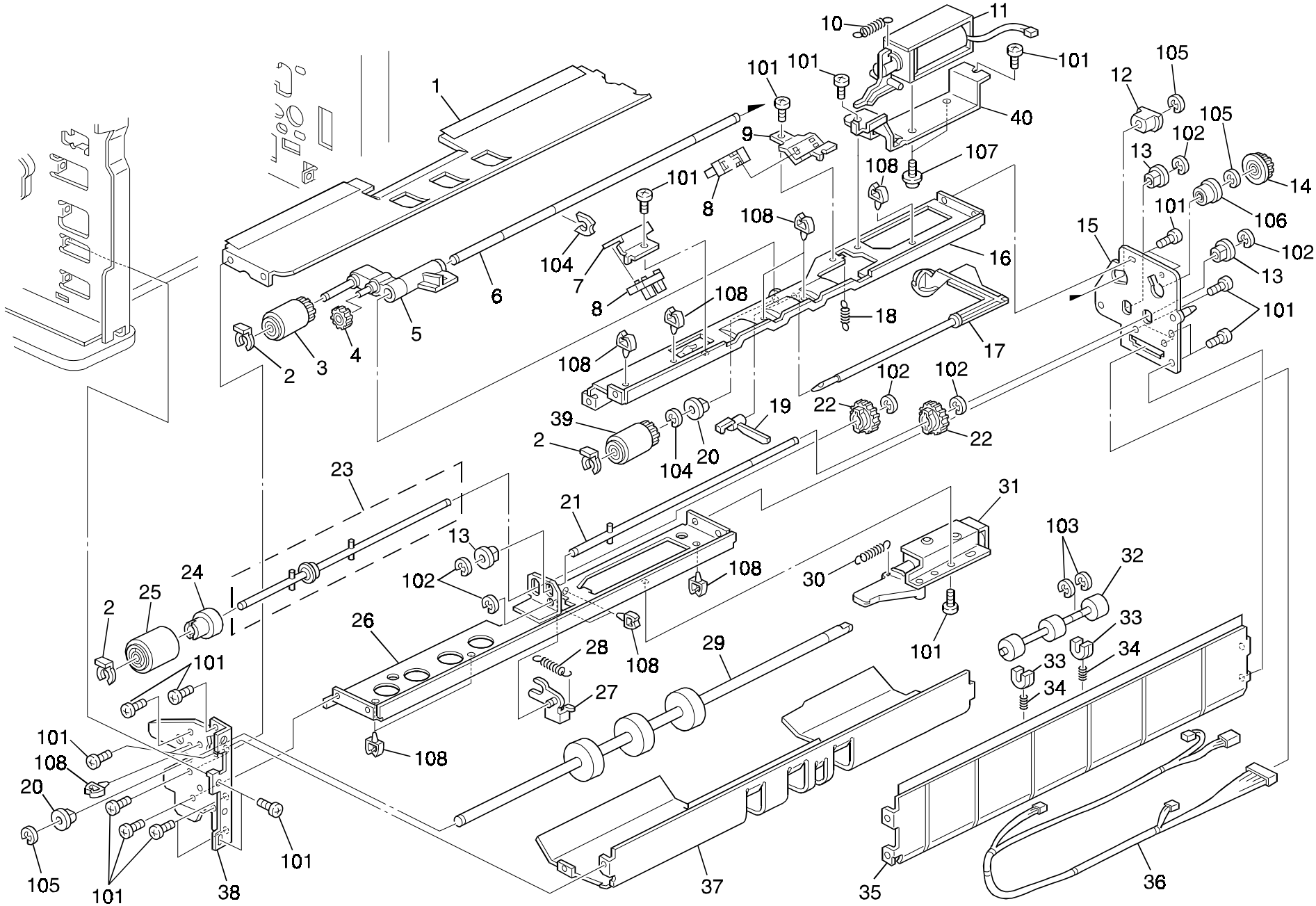

9. PAPER FEED SECTION 2 (A208/A210/A211)

Index No.	Part No.	Description	Q'ty Per Assembly
*	A204 2850	Lower Paper Feed Unit	1
1	A134 2839	Reverse Guide Plate	1
2	5447 2681	Snap Ring	2
3	**AF03 0025**	**Pick-up Feed Roller**	**1**
4	5447 2706	Gear - 15T	1
5	A204 2860	Pickup Arm	1
6	AA14 0542	Feed Roller Shaft	1
7	A130 2876	Paper End Sensor Bracket	2
8	AW02 0075	Photointerrupter	4
9	A134 2873	Positioning Sensor Bracket	1
10	AA06 0577	Release Spring	1
11	A134 2866	Pick-up Solenoid	15
12	AA08 3009	Clutch Roller - 8x18x11	1
13	AA08 2046	Bushing - 6x12x6	1
14	AB03 0466	Timing Pulley - 20Z	1
15	A134 2826	Rear Side Plate	1
16	A134 2855	Lower Feed Stay	1
17	A134 2862	Paper End Sensor Feeler	1
18	AA06 0523	Pick-up Pressure Spring	1
19	A134 2863	Paper End Sensor Lever	1
20	AA08 2047	Bushing - 8x16x7	1
21	A134 2830	Drive Shaft	1
22	AB01 3420	Gear - 18Z	1
23	A134 2832	Driven Shaft Ass'y	1
24	A134 2885	Torque Limitter	1
25	**AF03 2027**	**Separation Roller**	**1**
26	A134 2790	Reverse Stay	1
27	A134 2795	Pressure Lever	1
28	AA06 0636	Pressure Spring	1
29	AF02 0322	Lower Drive Roller - Transport	1
30	AA06 0575	Release Spring	1
31	A134 2810	Pressure Solenoid	1
32	AF02 0329	Relay Roller	1
33	AA08 0156	Bushing - M4	1
34	AA06 3487	Spring - 10mm	1

Index No.	Part No.	Description	Q'ty Per Assembly
35	A134 2834	Vertical Transport Guide	1
36	A134 5315	Relay Harness - Lower Paper Feed	1
37	A134 2846	Lower Guide Plate	1
38	A134 2821	Front Side Plate	1
39	**AF03 1026**	**Paper Feed Roller**	**1**
40	A134 2868	Solenoid Bracket	1
101	0434 0060B	Pan Head Self-tapping Screw - M4x6	
102	0414 0080B	Binding Self-tapping Screw - M4x8	
103	0720 0020E	Retaining Ring - M2	
104	0720 0030E	Retaining Ring - M3	
105	0413 0082B	Tapping Screw - M3x8	

10. PAPER FEED SECTION 3 (A208/A210)

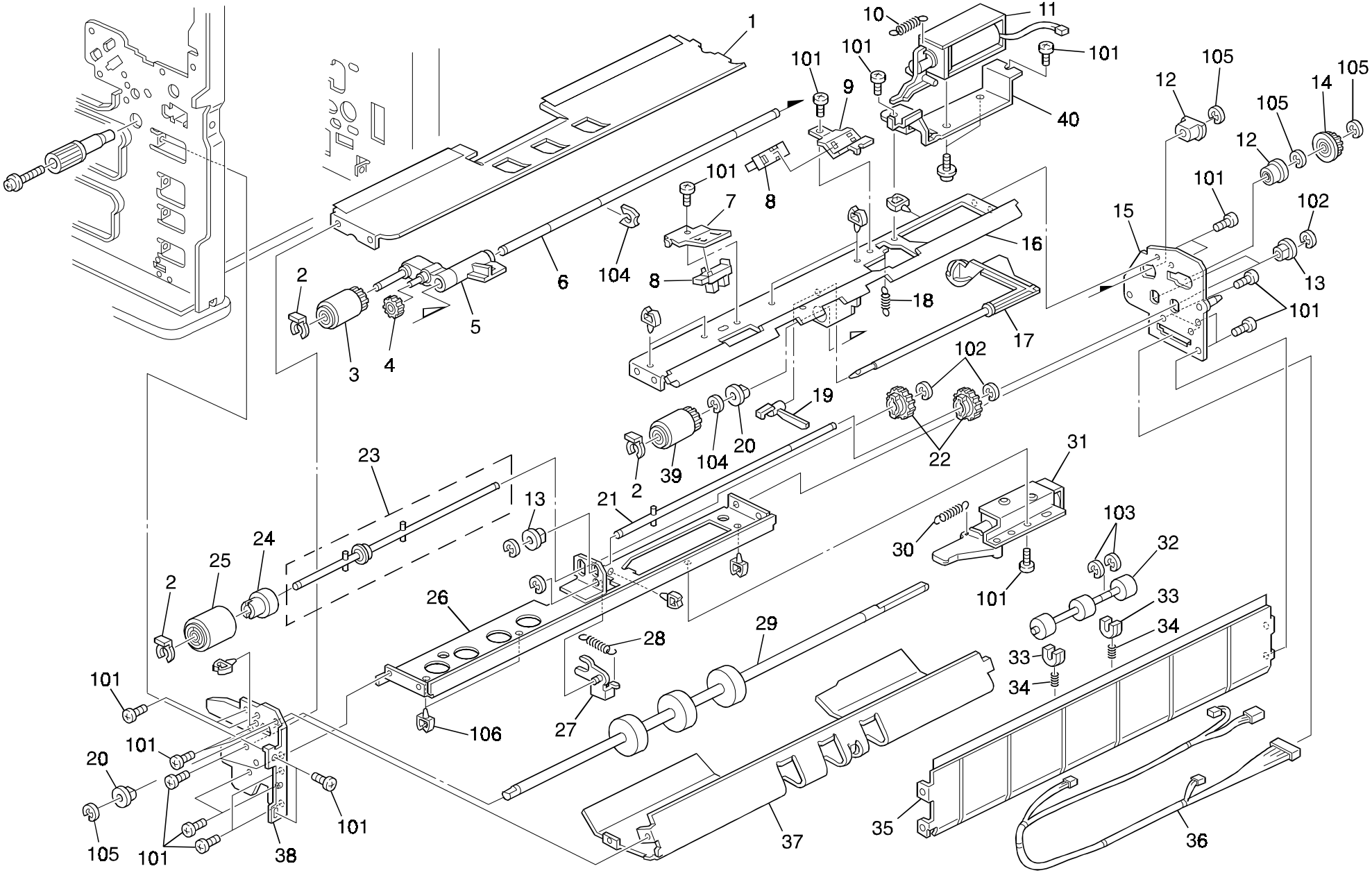

10. PAPER FEED SECTION 3 (A208/A210)

Index No.	Part No.	Description	Q'ty Per Assembly
*	A204 2800	Upper Paper Feed Unit	1
1	A134 2839	Reverse Guide Plate	1
2	5447 2681	Snap Ring	3
3	**AF03 0025**	**Pick-up Feed Roller**	**1**
4	5447 2706	Gear - 15T	1
5	A134 2654	Pick-up Arm	1
6	AA14 0542	Feed Roller Shaft	1
7	A130 2876	Paper End Sensor Bracket	1
8	AW02 0075	Photointerrupter	2
9	A130 2871	Sensor Bracket	1
10	AA06 0577	Release Spring	1
11	A134 2866	Pick-up Solenoid	1
12	AA08 3009	Clutch Roller - 8x18x11	1
13	AA08 2046	Bushing - 6x12x6	2
14	AB03 0466	Timing Pulley - 20Z	1
15	A130 2824	Rear Upper Side Plate	1
16	A130 2850	Upper Feed Stay	1
17	A134 2862	Paper End Sensor Feeler	1
18	AA06 0523	Pick-up Pressure Spring	1
19	A134 2863	Paper End Sensor Lever	1
20	AA08 2047	Bushing - 8x16x7	2
21	A134 2830	Drive Shaft	1
22	AB01 3420	Gear - 18Z	2
23	A134 2832	Driven Shaft Ass'y	1
24	A134 2885	Torque Limitter	1
25	**AF03 2027**	**Separation Roller**	**1**
26	A134 2790	Reverse Stay	1
27	A134 2795	Pressure Lever	1
28	AA06 0636	Pressure Spring	1
29	AF02 0321	Paper Feed Drive Roller	1
30	AA06 0575	Release Spring	1
31	A134 2810	Release Solenoid	1
32	AF02 0329	Relay Roller	1
33	AA08 0156	Bushing - M4	2
34	AA06 3487	Spring - 10mm	2

Index No.	Part No.	Description	Q'ty Per Assembly
35	A134 2834	Vertical Transport Guide	1
36	A130 5314	Relay Harness - Paper Feed	1
37	A130 2845	Upper Guide Plate	1
38	A130 2820	Front Upper Side Plate	1
39	**AF03 1026**	**Paper Feed Roller**	**1**
40	A134 2868	Solenoid Bracket	1
101	0434 0060B	Pan Head Self-tapping Screw - M4x6	
102	0720 0040E	Retaining Ring - M4	
103	0720 0030E	Retaining Ring - M3	
104	0805 0088	Retaining Ring - M6	
105	0720 0060E	Retaining Ring - M6	
106	1105 0199	Clamp	

11. PAPER REGISTRATION (A208/A210/A211)

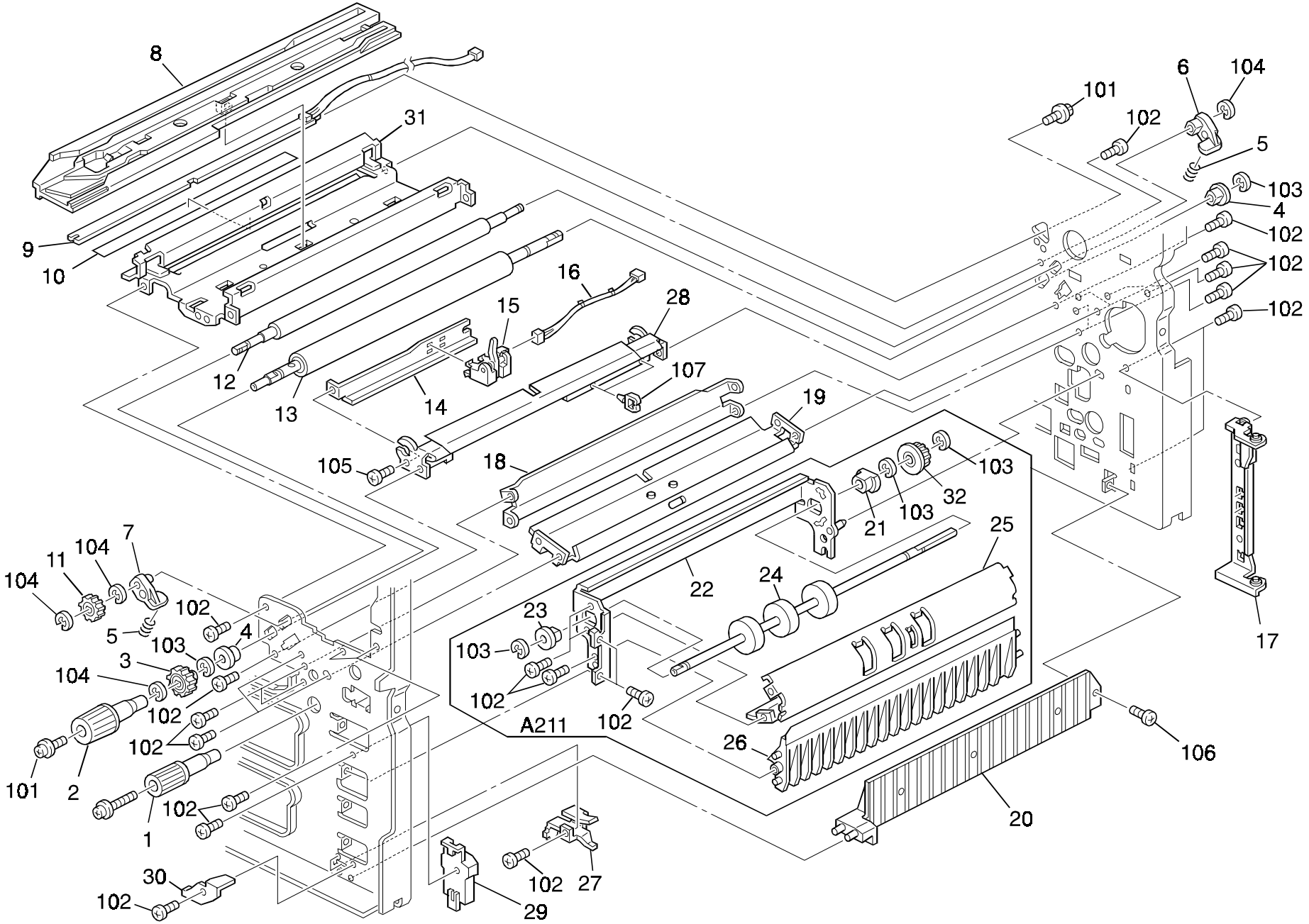

11. PAPER REGISTRATION (A208/A210/A211)

Index No.	Part No.	Description	Q'ty Per Assembly
1	AG05 0075	Middle Knob	1
2	AG05 0074	Registration Knob	1
3	AB01 3485	Gear - 20Z	1
4	5474 2152	Bushing - 8x12x12mm	2
5	AA06 3539	Spring - Registration Roller	2
6	AA08 0172	Bushing	1
7	AA08 0171	Bushing	1
8	A153 3095	Development Rail	1
9	A204 2101	P.T.L. Lamp Ass'y	1
10	A153 3114	Transfer Entrance Guide	1
11	AB01 3486	Gear - 14Z	1
12	AF02 1052	Upper Registration Roller	1
13	AF02 0316	Lower Registration Roller	1
14	A134 2557	Regist Sensor Bracket	1
15	AW02 0068	Photointerruptor	1
16	A153 5333	CT Harness	1
17	A134 2580	Vertical Transfer Hinge (A208)	1
18	A153 2563	Middle Guide Plate	1
19	A153 2558	Upper Registration Guide	1
20	A134 2895	Vertical Relay Guide	1
21	AA08 3009	Clutch Roller - 8x18x11 (A211)	1
22	A134 2900	Duplex Stay (A211)	1
23	AA08 2047	Bushing - 8x16x7 (A211)	9
24	AF02 0321	Paper Feed Drive Roller (A211)	1
25	A134 2903	Upper Guide Plate - Duplex Feed (A211)	1
26	A204 2904	Lower Guide Plate - Duplex Feed (A211)	1
27	A134 2582	Sensor Bracket - Vertical Transfer (A208)	1
28	A134 2554	Lower Registration Guide	1
29	A155 6164	Positioning Guide	1
30	A155 6168	Vertical Support Guide	1
31	A153 3110	Upper Resist Guide Plate	1
32	AB03 0466	Timing Pulley - 20Z	1

Index No.	Part No.	Description	Q'ty Per Assembly
101	0951 3006B	Philips Screw With Flat Washer-m3x6	
102	0434 0060B	Pan Head Self-tapping Screw - M4x6	
103	0720 0060E	Retaining Ring - M6	
104	0720 0040E	Retaining Ring - M4	
105	0313 0040B	Philips Pan Head Screw - M3x4	
106	0414 0080B	Binding Self-tapping Screw - M4x8	
107	1105 0199	Clamp	

12. OPTICAL SECTION 1 (A208/A210/A211)

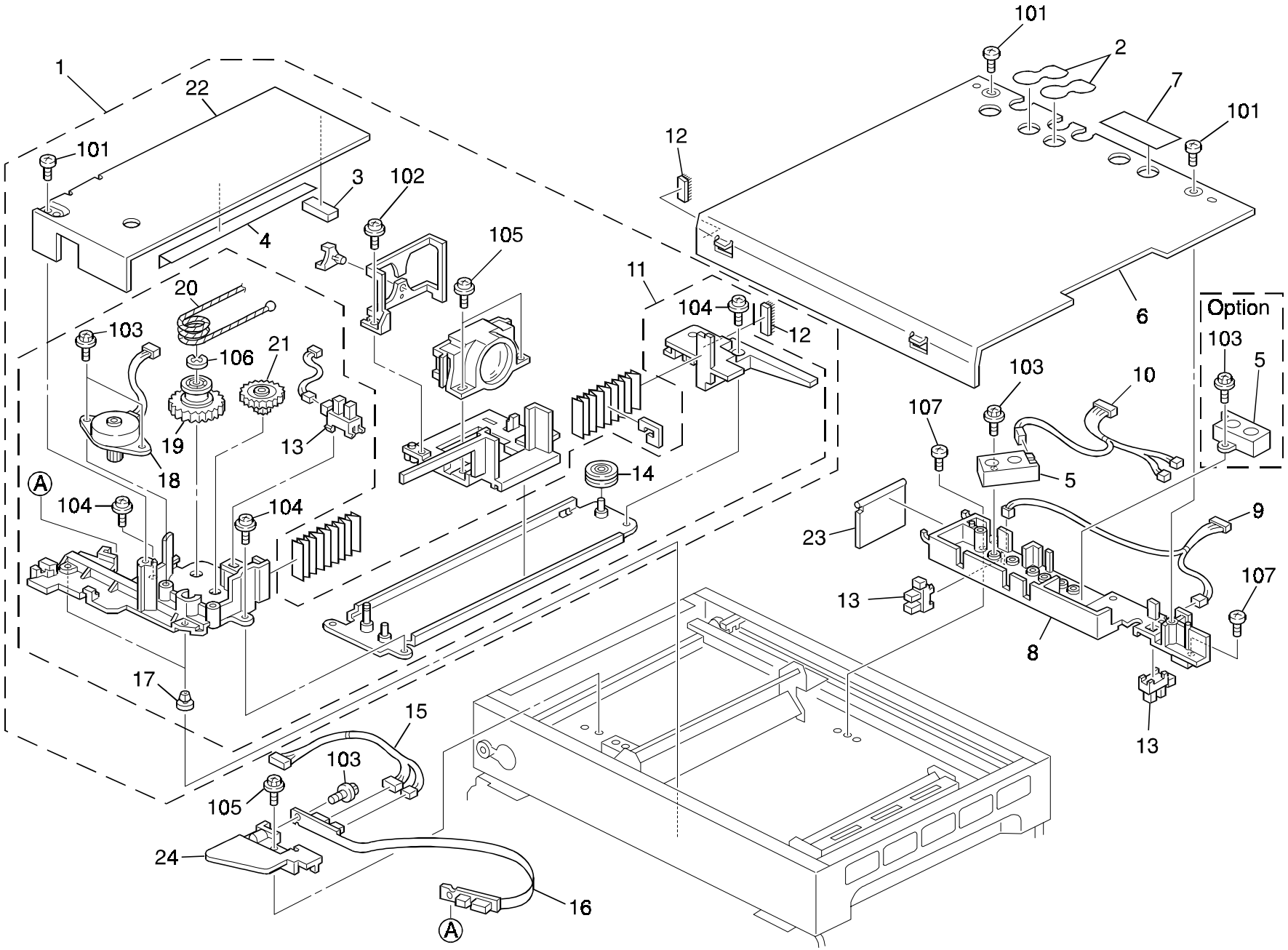

12. OPTICAL SECTION 1 (A208/A210/A211)

Index No.	Part No.	Description	Q'ty Per Assembly
1	A204 1840	Lens Magnification Unit	1
2	AA15 0369	Original Sensor Seal	2
3	AA15 1941	Right Shield - Development Case	1
4	AA15 0368	Shielding Plate - Lens Cover	1
5	AW01 0068	Original Length Sensor	2
6	A153 1961	Lens Cover	1
7	A111 1753	Seal - 0.1x18x49	1
8	A153 1971	Original Sensor Bracket	1
9	A153 5391	Optical Harness - 1	1
10	A153 5392	Optical Harness - 2	1
11	A204 1844	Lens Drive Unit	1
12	AA15 2330	Magnification Seal	2
13	AW02 0075	Photointerrupter	3
14	AB03 2059	Driven Pulley	2
15	A153 5395	Optical Harness - 5	1
16	A153 5141	Lens Drive Harness	1
17	A069 1883	Shoe - Scanner	2
18	A204 5212	Lens Drive Motor	1
19	AB01 7360	Gear Pulley	1
20	AA05 0086	Lens Drive Wire - Horizontal	1
21	AB01 7361	Gear - 24Z/56Z	1
22	A153 1850	Lens Cover	1
23	A153 1974	Original Sensor Sheading Plate	
24	A153 1861	Harness Bracket	

Index No.	Part No.	Description	Q'ty Per Assembly
101	0802 5237	Binding Self-tapping Screw - M4x10	
102	0413 0062B	Tapping Screw - M3x6	
103	0802 5232	Binding Self-tapping Screw - M3x8	
104	0951 4006B	Philips Screw With Washer - M4x6	
105	0965 3008W	Tapping Screw With Flat Washer-m3x8	
106	0720 0040E	Retaining Ring - M4	
107	0414 0080B	Binding Self-tapping Screw - M4x8	

13. OPTICAL SECTION 2 (A208/A210/A211)

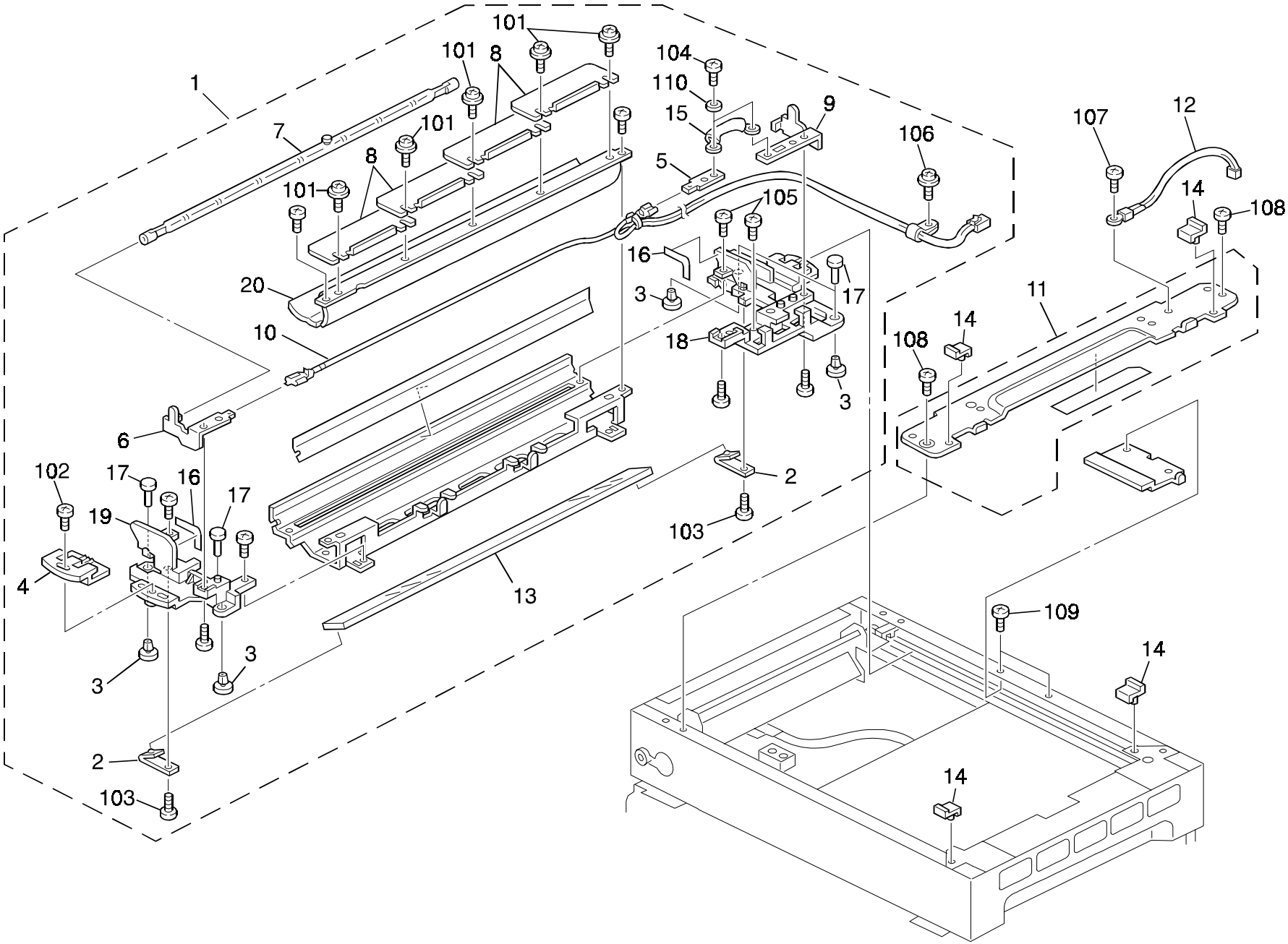

13. OPTICAL SECTION 2 (A208/A210/A211)

Rev. 02/99

Index No.	Part No.	Description	Q'ty Per Assembly
1	A153 1790	1st Scanner Ass'y (120V)	1
1	A153 1770	1st Scanner Ass'y (230V)	1
2	AC03 5022	Rear Mirror Clamp - 1st Mirror	2
3	A069 1883	Shoe - Scanner	4
4	A153 1776	Front Mirror Clamp - 1st Mirror	1
5	A077 1673	Thermofuse Terminal	1
6	A153 1777	Front Terminal	1
7	AX52 0025	Exposure Lamp - 85V 280W (230V)	1
7	AX52 0027	Exposure Lamp - 97V 280W (115V)	1
8	A085 1670	Exposure Adjusting Plate	4
9	A153 1778	Rear Terminal	1
10	A153 1780	Exposure Lamp Harness	1
11	A153 1749	Scale Bracket	1
12	AW10 0027	Thermister	1
13	AC03 0103	1st Mirror	1
14	A153 1754	Exposure Stay	4
15	A153 1779	Thermostat - 121°c 250V 10A	1
16	A153 1781	Reflector	2
17	A096 1873	Scanner Shoe Pin	4
18	A153 1773	Stay Scanner Rear	1
19	A153 1772	Stay Scanner Front	1
20	A085 1861	Reflector - Main	1

Index No.	Part No.	Description	Q'ty Per Assembly
101	0951 3006B	Philips Screw With Flat Washer-m3x6	
102	0414 0082W	Tapping Screw With Flat Washer-m4x8	
103	0413 0062W	Tapping Screw - M3x6	
104	0413 0050Z	Tapping Screw - M3x5	
105	0413 0060W	Tapping Screw - M3x6	
106	0964 4008B	Tapping Screw With Flat Washer-m4x8	
107	0313 0040B	Philips Pan Head Screw - M3x4	
108	0313 0060B	Philips Pan Head Screw - M3x6	
109	0314 0060B	Philips Pan Head Screw - M4x6	
110	0703 0030M	Spring Washer - M3	

14. OPTICAL SECTION 3 (A208/A210/A211)

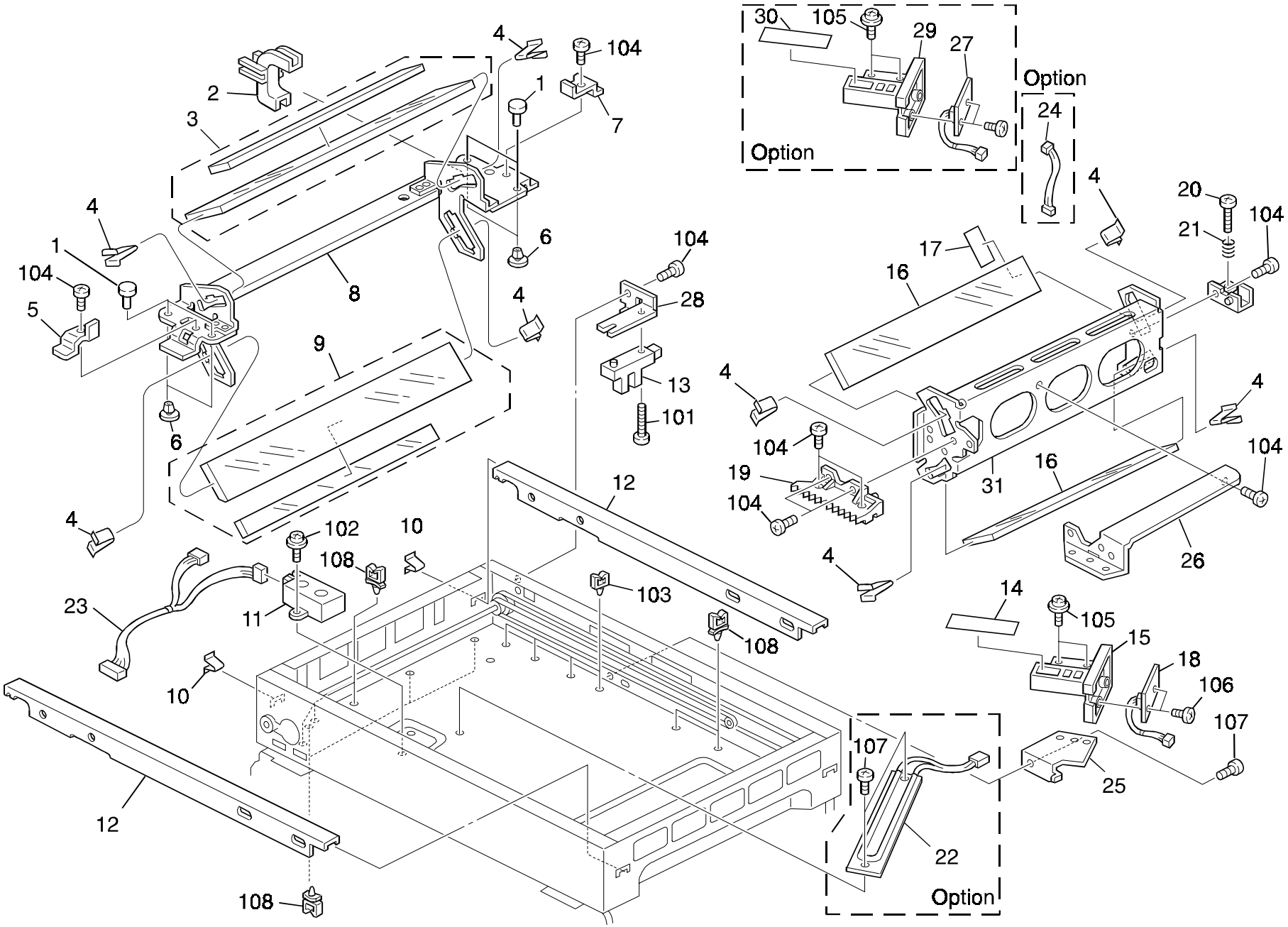

14. OPTICAL SECTION 3 (A208/A210/A211)

Index No.	Part No.	Description	Q'ty Per Assembly
1	A096 1873	Scanner Shoe Pin	8
2	A153 1807	Harness Guide	1
3	A153 1808	2nd Mirror	1
4	A077 1690	Spring Plate - Mirror	10
5	A153 1805	Front Mirror Holder	1
6	A069 1883	Shoe - Scanner	10
7	A153 1806	Rear Mirror Holder	1
8	A153 1801	2nd Scanner Ass'y	1
9	A153 1809	3rd Mirror	1
10	A153 1721	Spring Plate	2
11	AW01 0040	Original Sensor	1
12	A153 1720	Scanner Rail	2
13	AW02 0022	Photointerruptor	2
14	A204 1977	Density Sensor Cover	1
15	A204 1976	Density Sensor Case	1
16	AC03 0106	4/5 Mirror	2
17	A153 1908	Shielding Plate	1
18	A204 5160	ADS Sensor Board	1
19	A153 1914	3rd Scanner Rack	1
20	A153 1906	Adjust Shoe	1
21	AA06 3523	Adjust Spring	1
22	AX40 0047	Anticondensation Heater - 115V 15W (Option)	1
22	AX40 0048	Anticondensation Heater - 240V 15W (Option)	1
23	A153 5393	Optical Harness - 3	1
24	A153 9513	Harness - ADS (Option)	1
25	A153 3590	Density Sensor Bracket	1
26	A153 1912	3rd Scanner Stay	1
27	A096 5230	ADS Board (Option)	1
28	A153 1981	Scanner Home Sensor Bracket	1
29	A096 1692	ADS Case (Option)	1
30	A096 1693	ADS Cover (Option)	1

Index No.	Part No.	Description	Q'ty Per Assembly
101	0314 0100B	Philips Pan Head Screw - M4x10	
102	0443 0080W	Hexagon Head Tapping Screw - M3x8	
103	1105 0231	Clamp	
104	0414 0080B	Binding Self-tapping Screw - M4x8	
105	0951 3005B	Philips Screw With Flat Washer	
106	0802 5231	Binding Self-tapping Screw - M3x6	
107	0434 0060B	Pan Head Self-tapping Screw - M4x6	
108	1105 0196	Harness Clamp	

15. OPTICAL SECTION 4 (A208/A210/A211)

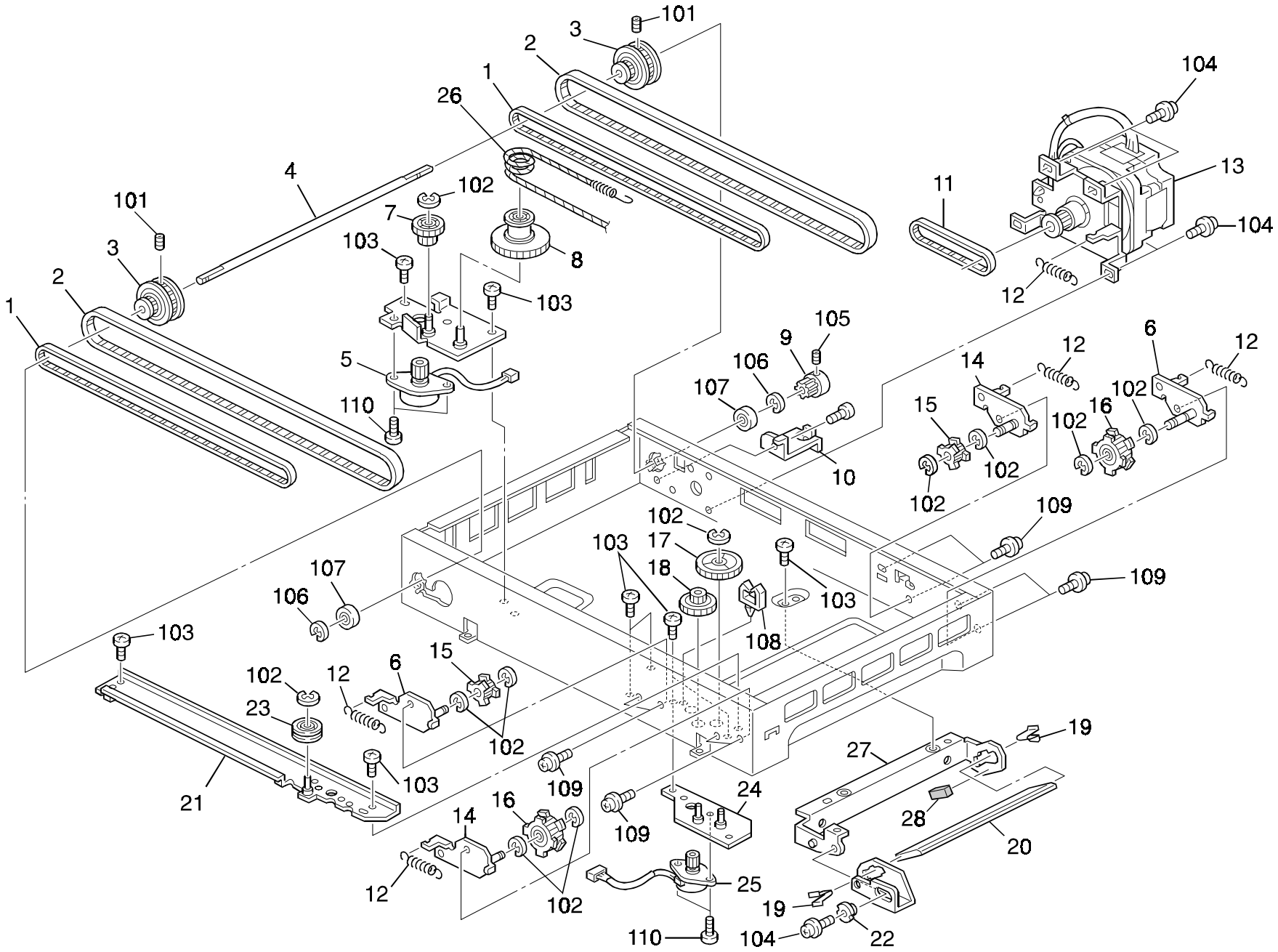

15. OPTICAL SECTION 4 (A208/A210/A211)

Index No.	Part No.	Description	Q'ty Per Assembly
1	AA04 3387	Timing Belt - 40S2M984	2
2	AA04 3386	Timing Belt - 40S2M1224	2
3	AB03 3069	Timing Pulley - 22z/44z	2
4	AA14 0599	Scanner Drive Shaft	1
5	A153 5213	Lens Drive Motor - DC24V 8.6W	1
6	A153 1708	Tension Bracket - Short	2
7	AB01 7362	Gear - 25Z/32Z	1
8	AB01 7360	Gear Pulley	2
9	AB03 0486	Timing Pulley - 24Z	1
10	A153 5803	Upper Bracket - DC Drive Board	1
11	AA04 3388	Timing Belt - 60S2M180	1
12	AA06 0595	Tension Spring	5
13	A153 1700	Scanner Drive Motor - DC2.3V 13.5W	1
14	A153 1707	Tension Bracket - Long	2
15	AB03 0489	Timing Pulley - 22Z	2
16	AB03 0487	Timing Pulley - 44Z	2
17	AB01 7129	Gear - 20Z AND 72Z	1
18	AB01 7361	Gear - 24Z/56Z	2
19	A077 1690	Spring Plate - Mirror	10
20	AC03 0107	6th Mirror	1
21	A153 1952	Magnification Rail	1
22	A075 1766	Adjusting Cam	1
23	AB03 2059	Driven Pulley	2
24	A153 1947	Magnification Drive Unit Bracket	1
25	A153 5211	Mirror Drive Motor - DC24V 8.6W	1
26	AA05 0087	Lens Drive Wire - Vertical	1
27	A048 1801	Mirror Seal	1
28	A153 1923	6th Mirror Bracket	1

Index No.	Part No.	Description	Q'ty Per Assembly
101	0573 0040E	Hexagon Headless Set Screw - M3x4	
102	0720 0040E	Retaining Ring - M4	
103	0434 0060B	Pan Head Self-tapping Screw - M4x6	
104	0951 4008B	Philips Screw With Washer - M4x8	
105	0574 0050E	Hexagon Headless Set Screw - M4x5	
106	0720 0060E	Retaining Ring - M6	
107	0740 3008	Ball Bearing - 8x22x7	
108	1105 0230	Clamp	
109	0951 4006B	Philips Screw With Washer - M4x6	
110	0433 0060W	Tapping Screw - M3x6	

16. TONER SUPPLY UNIT (A208/A210/A211)

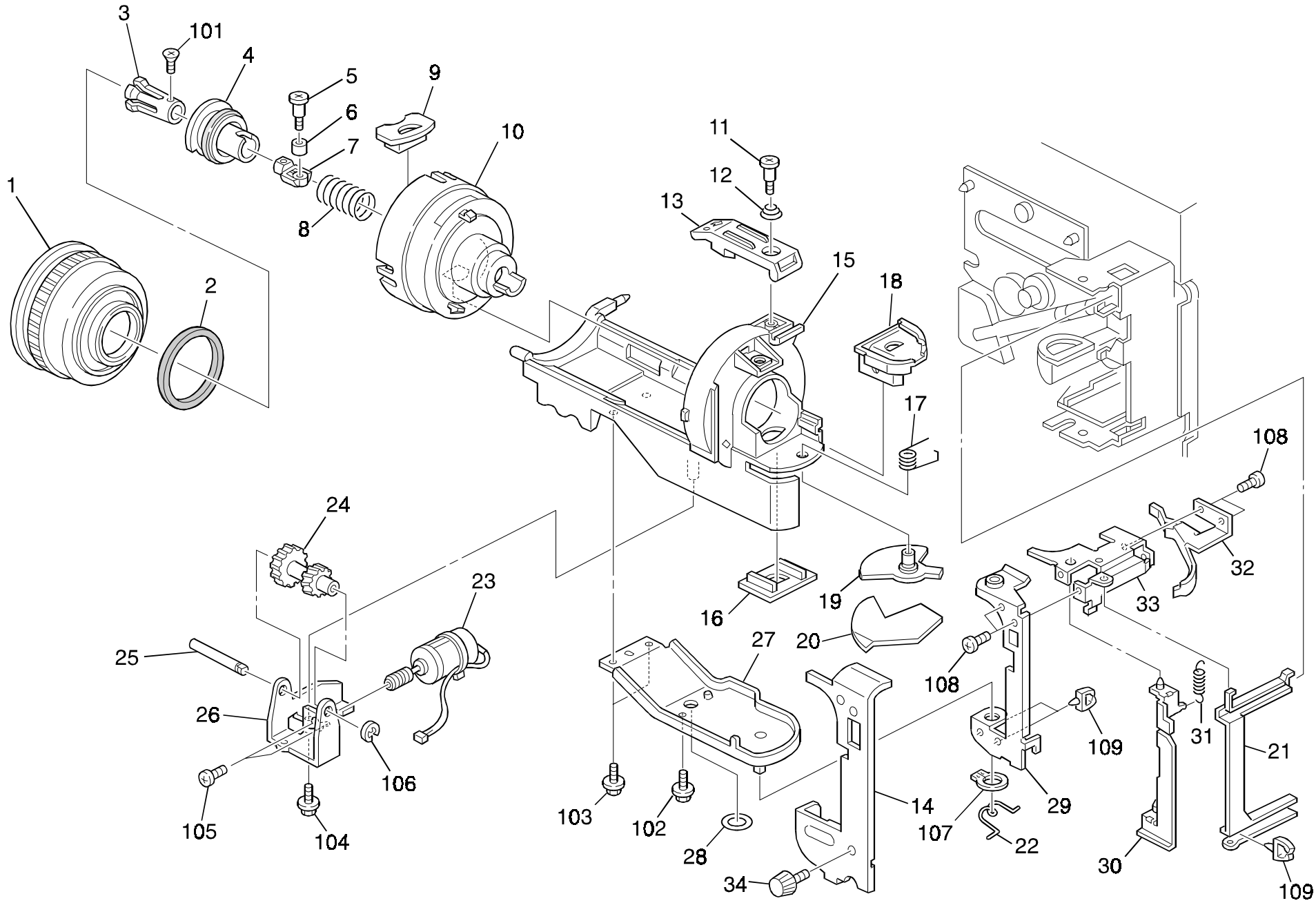

16. TONER SUPPLY UNIT (A208/A210/A211)

Index No.	Part No.	Description	Q'ty Per Assembly
*	A204 3150	Toner Bottle Drive (RIC NA)	1
*	A204 3151	Toner Bottle Drive (RIC EU)	1
*	A204 3153	Toner Bottle Drive (Others)	1
1	A153 3185	Toner Supply Gear (RIC EU)	1
1	A153 3187	Toner Supply Gear (RIC NA)	1
1	A153 3189	Toner Supply Gear (Others)	1
2	AA15 1894	Seal - 67x53x2	1
3	A134 3180	Bottle Chuck	1
4	A134 3177	Toner Slider	1
5	AA14 3712	Chuck Shaft	1
6	A134 3181	Chuck Roller	1
7	A134 3179	Chuck Shaft	1
8	AA06 3366	Chuck Spring	1
9	A134 3215	Rubber Cap	1
10	A134 3190	Toner Bottle Stopper	1
11	AA14 3410	Stepped Screw - M4	1
12	AA06 3367	Pressure Spring	1
13	A134 3197	Bottle Holder	1
14	A204 3281	Bottle Bracket Cover	1
15	A134 3172	Toner Bottle Holder	1
16	A153 3173	Shutter Guide	1
17	AA06 6260	Shutter Spring	1
18	A153 3174	Shutter Holder	1
19	A153 3172	Shutter	1
20	AA15 0377	Shutter Seal	1
21	A153 3272	Hinge Slide Rail	14
22	AA06 6284	Torsion Spring	1
23	A134 3162	DC Motor - 5.85W DC24V	1
24	AB01 7347	Idle Gear	1
25	AA14 8413	Idle Gear Shaft	1
26	A134 3161	Bottle Drive Bracket	1
27	A217 3157	Toner Bottle Bracket	1
28	AA15 0234	Mylar Seal - Base	1
29	A204 3261	Release Bracket	1
30	A153 3266	Bottle Unit Link Plate	1

Index No.	Part No.	Description	Q'ty Per Assembly
31	AA06 0453	Relay Adjusting Spring	2
32	A134 3201	Cam - Toner Bottle	1
33	A153 3264	Bottle Unit Upper Hinge	1
34	AA14 3459	Knob Screw	1
101	0323 0060B	Philips Sunk Screw - M3x6	
102	0433 0050B	Pan Head Self-tapping Screw - M3x5	
103	0802 5231	Binding Self-tapping Screw - M3x6	
104	0802 5233	Tapping Screw - M3x10	
105	0800 0072	Philips Pan Head Screw - M2.6x4	
106	0720 0040E	Retaining Ring - M4	
107	0725 0100E	Retaining Ring C - M10	
108	0434 0060B	Pan Head Self-tapping Screw - M4x6	
109	1105 0199	Clamp	

17. DEVELOPMENT UNIT (A208/A210/A211)

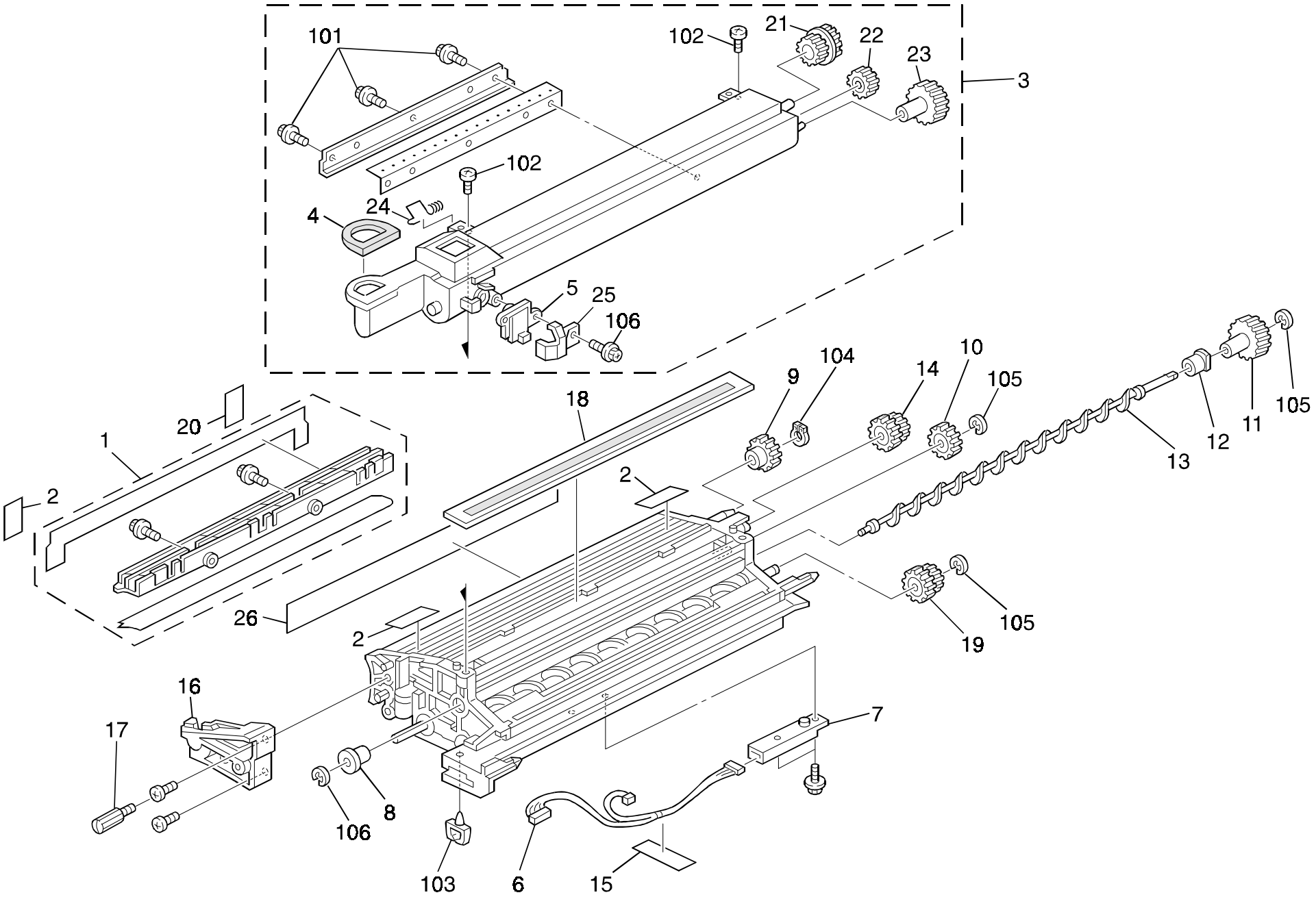

17. DEVELOPMENT UNIT (A208/A210/A211)

Index No.	Part No.	Description	Q'ty Per Assembly
*	A204 3051	Development Unit	1
1	A153 3075	Entrance Seal	1
2	AA15 0382	Entrance Seal	4
3	A204 3200	Toner Hopper Ass'y	1
4	AA15 1935	Seal - 38x32x2.5	1
5	AW23 0009	Toner End Sensor	1
6	A153 5330	Ct Harness - 7p	1
7	AW23 0008	Toner Density Sensor	1
8	AA08 0188	Bushing - 5mm	1
9	AB01 3343	Gear - 22Z	1
10	AB01 3909	Idle Gear	1
11	AB01 3911	Gear	1
12	AA08 0186	Bushing - 6mm	1
13	AD03 7045	Toner Collection Coil	1
14	AB01 7366	Paddle Gear	1
15	G012 3897	Relay Harness - Toner End Sensor	1
16	A153 3090	Development Position Plate	1
17	A153 3149	Knob Screw - M4x12	1
18	**A204 3080**	**Development Filter**	**1**
19	AB01 7367	Right Paddle Roller	1
20	AA15 0231	Seal - 15x30	1
21	AB01 7365	Coupled Gear - 15z/22z	1
22	AB01 3914	Gear - 17Z	1
23	AB01 3915	Gear - 26Z	1
24	AA06 6246	Spring	1
25	A153 3227	Toner End Sensor Cover	1
26	AA15 2334	Second Mylar	1

Index No.	Part No.	Description	Q'ty Per Assembly
101	0802 5231	Binding Self-tapping Screw - M3x6	
102	0314 0060B	Philips Pan Head Screw - M4x6	
103	1105 0199	Clamp	
104	0720 0090E	Retaining Ring - M9	
105	0720 0040E	Retaining Ring - M4	
106	0720 0030E	Retaining Ring - M3	
107	0452 3010B	Tapping Bind Screw - M3x10	

18. DRUM UNIT 1 (A208/A210/A211)

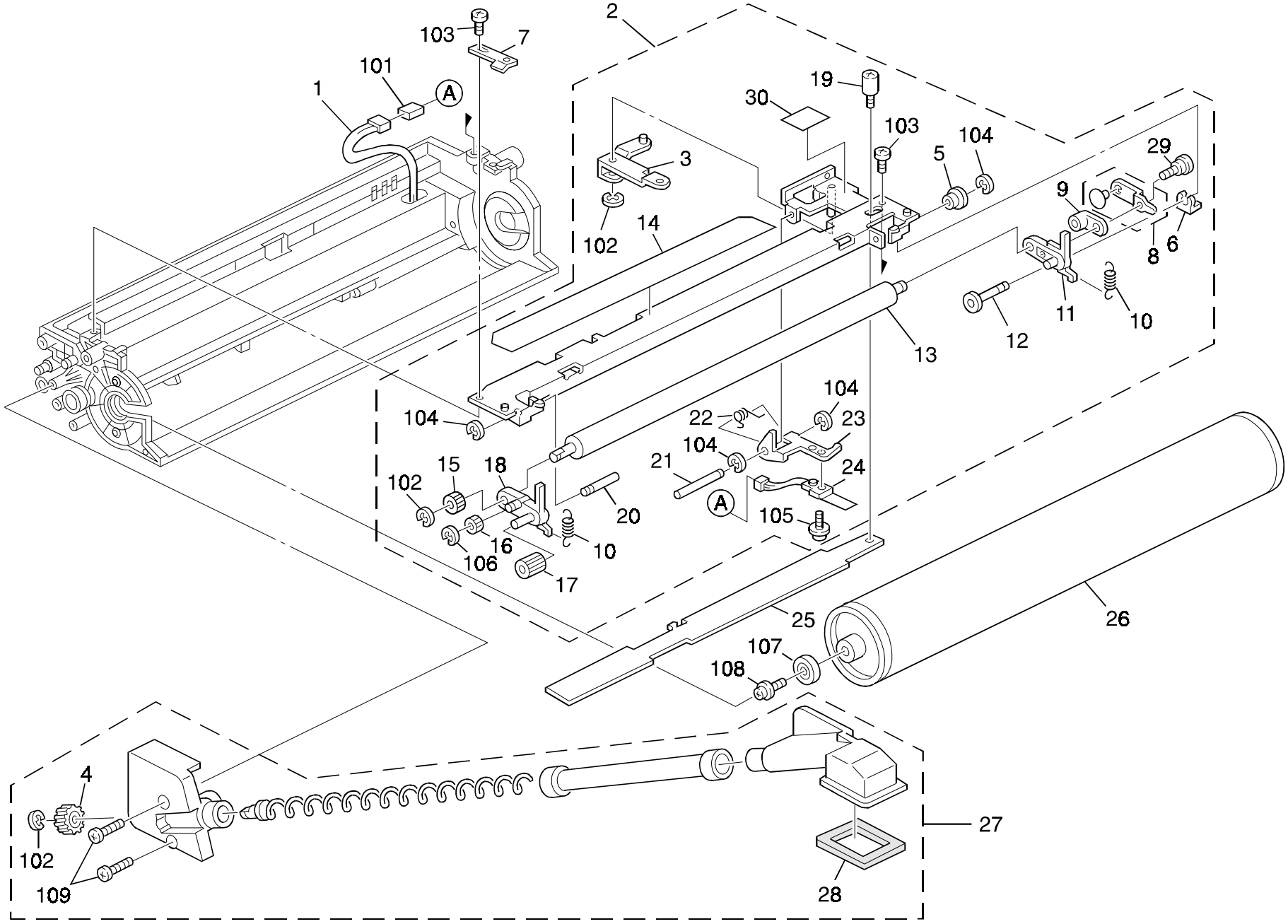

18. DRUM UNIT 1 (A208/A210/A211)

Index No.	Part No.	Description	Q'ty Per Assembly
1	AZ48 0029	Ct Harness	1
2	A204 2110	Charge Roller Ass'y	1
3	A153 2126	Swing Arm	1
4	AB01 1358	Driven Gear	1
5	AA08 0219	Rear Roller Bushing	1
6	A077 1310	Snap Ring - M2	1
7	A153 2116	Grounding Plate	1
8	**A153 2135**	**Charge Roller Terminal Ass'y**	**1**
9	AA08 0197	Rear Roller Bushing	1
10	AA06 2286	Pressure Spring	2
11	AA08 0209	Rear Roller Housing	1
12	AA14 5808	Rear Support Shaft	1
13	**AD02 7004**	**Charge Roller**	**1**
14	A153 2143	Shielding Plate	1
15	AB01 0348	Gear - 20Z	1
16	AB01 0343	Idle Gear - 14z	1
17	AB01 0342	Idle Gear - 20z	1
18	AA08 0191	Front Roller Bushing	1
19	AA14 3744	Stepped Screw	1
20	AA14 5794	Front Support Shaft	1
21	AA14 8439	Thermistor Shaft	1
22	AA06 6286	Pressure Spring	1
23	A153 2133	Thermistor Bracket	1
24	AW10 0032	Thermistor - 25°C 10k Ω	1
25	**A204 2120**	**Drum Charge Roller Cleaner**	**1**
26	A153 9510	OPC Drum	1
27	A204 3580	Toner Collection Unit	1
28	AA15 1945	Joint Seal	1
29	AA14 3730	Stepped Screw	1
30	A204 2155	Decal - Caution	

Index No.	Part No.	Description	Q'ty Per Assembly
101	1102 6613	Relay Terminal - 2P	
102	0720 0040E	Retaining Ring - M4	
103	0313 0060B	Philips Pan Head Screw - M3x6	
104	0720 0015E	Retaining Ring - 1.5	
105	0951 3008B	Philips Screw With Flat Washer-m3x8	
106	0720 0020E	Retaining Ring - M2	
107	0805 3471	Bushing - M8x22x7	
108	0951 5010B	Philips Screw With Washer - M5x10	
109	0802 5233	Binding Self-tapping Screw - M3x10	

19. DRUM UNIT 2 (A208/A210/A211)

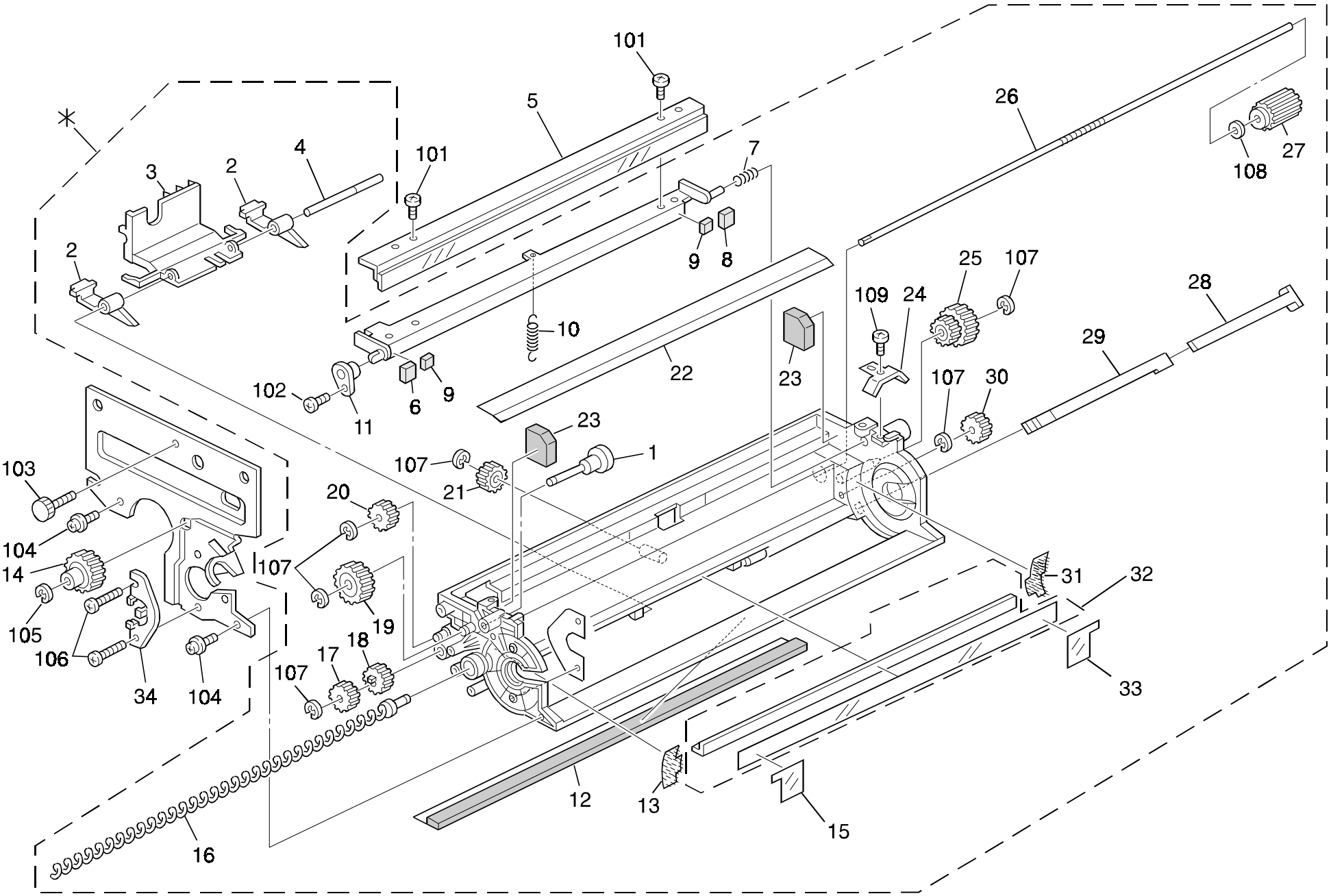

19. DRUM UNIT 2 (A208/A210/A211)

Index No.	Part No.	Description	Q'ty Per Assembly
*	A204 2256	Drum Unit	
1	AB01 0341	Gear - 18Z	1
2	**AD02 5019**	**Drum Pick-off Pawl**	**2**
3	A153 3595	Pick-off Pawl Retainer	1
4	AA14 0321	Pick-off Pawl Shaft	1
5	**A153 2277**	**Cleaning Blade**	**1**
6	AA15 1943	Front Seal	1
7	G006 4317	Pressure Spring	1
8	AA15 1944	Rear Seal	1
9	AA15 1809	Rear Seal	2
10	AA06 0598	Pressure Spring	1
11	A204 3568	Rear Bushing	1
12	AA15 0389	Drum Guide Seal	1
13	AA15 2245	Front Drum Seal	1
14	AB01 1361	Drive Gear - 33Z	1
15	AA15 0380	Seal Front Holder	1
16	AD04 3035	Toner Collection Coil	1
17	AB01 7375	Drive Gear - 16Z	1
18	AB01 7374	Drive Gear - 12Z	1
19	AB01 7388	Blade Cam - 40Z	1
20	AB01 1360	Idle Gear - 19Z	1
21	AB01 7376	Separation Pawl Cam - 40Z	1
22	A153 3558	Blade Seal	1
23	AA15 1942	Side Seal	2
24	A153 3570	Spring Plate	1
25	AB01 7373	Idle Cam - 16/28Z	1
26	AA14 0560	Joint Shaft	1
27	AB01 1359	Joint Drive Gear - 20Z	1
28	A153 3590	Density Sensor Bracket	1
29	A153 5132	Density Sensor	1
30	AB01 1357	Collection Coil Gear - 15Z	1
31	AA15 2246	Rear Drum Seal	1
32	A153 3555	Cleaning Entrance Seal	1
33	AA15 0381	Seal Rear Holder	1
34	A153 2303	Grounding Plate	1

Index No.	Part No.	Description	Q'ty Per Assembly
101	0314 0060B	Philips Pan Head Screw - M4x6	
102	0802 5233	Binding Self-tapping Screw - M3x10	
103	0803 0017	Knob Screw - M4x6.5	
104	0965 3010B	Tapping Screw With Flat Washer m3x6	
105	0720 0030E	Retaining Ring - M3	
106	0313 0080B	Philips Pan Head Screw - M3x8	
107	0720 0040E	Retaining Ring - M4	
108	0805 3384	Bushing - 5mm	
109	0971 3006A	Philips Polycarbonate Screw - M3x6	

20. TRANSFER UNIT (A208/A210/A211)

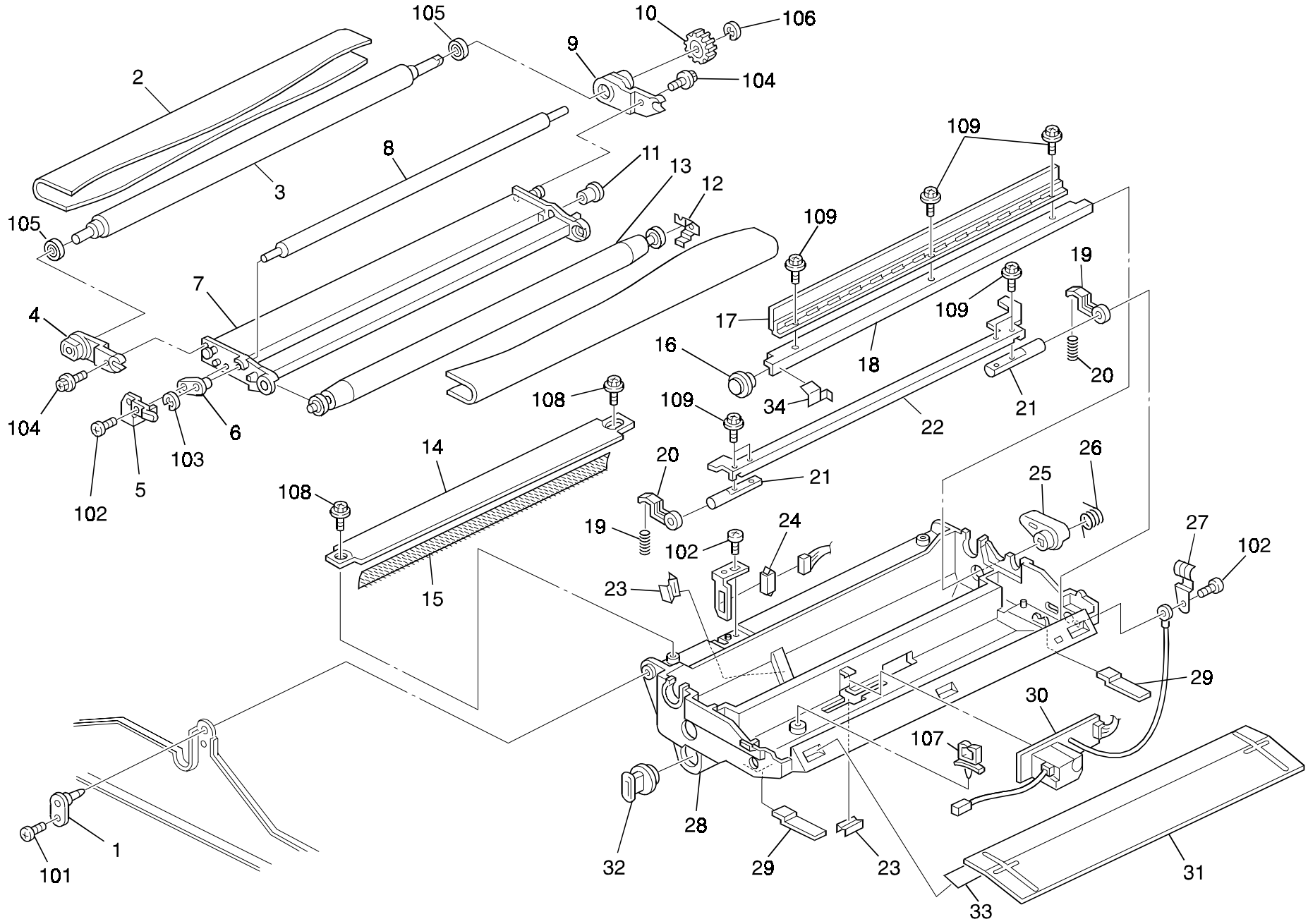

20. TRANSFER UNIT (A208/A210/A211)

Index No.	Part No.	Description	Q'ty Per Assembly
1	A157 3900	Support Plate	1
2	**A157 3861**	**Transfer Belt**	**1**
3	A153 3866	Belt Drive Roller	1
4	A157 3875	Front Side Plate	1
5	A153 3873	Bias Roller Terminal	1
6	AA08 2061	Bias Roller Bushing - Front	1
7	A157 3862	Transfer Belt Frame	1
8	A153 3870	Transfer Bias Roller	1
9	A157 3876	Rear Side Plate	1
10	AB01 3916	Belt Drive Gear - 25z	1
11	AA08 0195	Bias Roller Bushing - Rear	1
12	A153 3874	Earth Terminal	1
13	A153 3865	Belt Drive Roller	1
14	A153 3884	Belt Guide Plate	1
15	AA15 2332	Seal - 9x351	1
16	A153 3894	Bushing	1
17	**A153 3892**	**Belt Cleaning Blade**	**1**
18	A153 3893	Belt Cleaning Stay	1
19	A153 3886	Belt Pressure Lever	2
20	A077 3918	Spring - T/S Unit	2
21	AA14 5537	Belt Release Shaft	2
22	A153 3887	Belt Release Stay	1
23	A153 3897	Harness Clamp	2
24	A157 3889	Connector Bracket	1
25	A153 3895	Front Bushing	1
26	AA06 6247	Torsion Spring	1
27	A153 3888	Earth Plate	1
28	A157 3882	Transfer Belt Casing	1
29	A153 3877	Spring Plate	2
30	AZ30 0041	Power Pack - Transfer Unit	1
31	A153 3901	Entrance Guide Plate	1
32	A157 3883	Toner Collection Cap	1
33	A153 3591	Mylar - 17x335	
34	A153 3923	Spacer:bearing:cleaning:transfer Be	

Index No.	Part No.	Description	Q'ty Per Assembly
101	0434 0060B	Pan Head Self-tapping Screw - M4x6	
102	0802 5232	Binding Self-tapping Screw - M3x8	
103	0720 0030E	Retaining Ring - M3	
104	0443 0080B	Tapping Screw - M3x8	
105	0805 3485	Bushing - 8x12x3.5mm	
106	0720 0060E	Retaining Ring - M6	
107	1105 0196	Harness Clamp	
108	0965 3008B	Tapping Screw With Washer - M3x8	
109	0443 0060B	Hexagon Tapping Screw - M3x6	

21. FUSING UNIT 1 (A208/A210/A211)

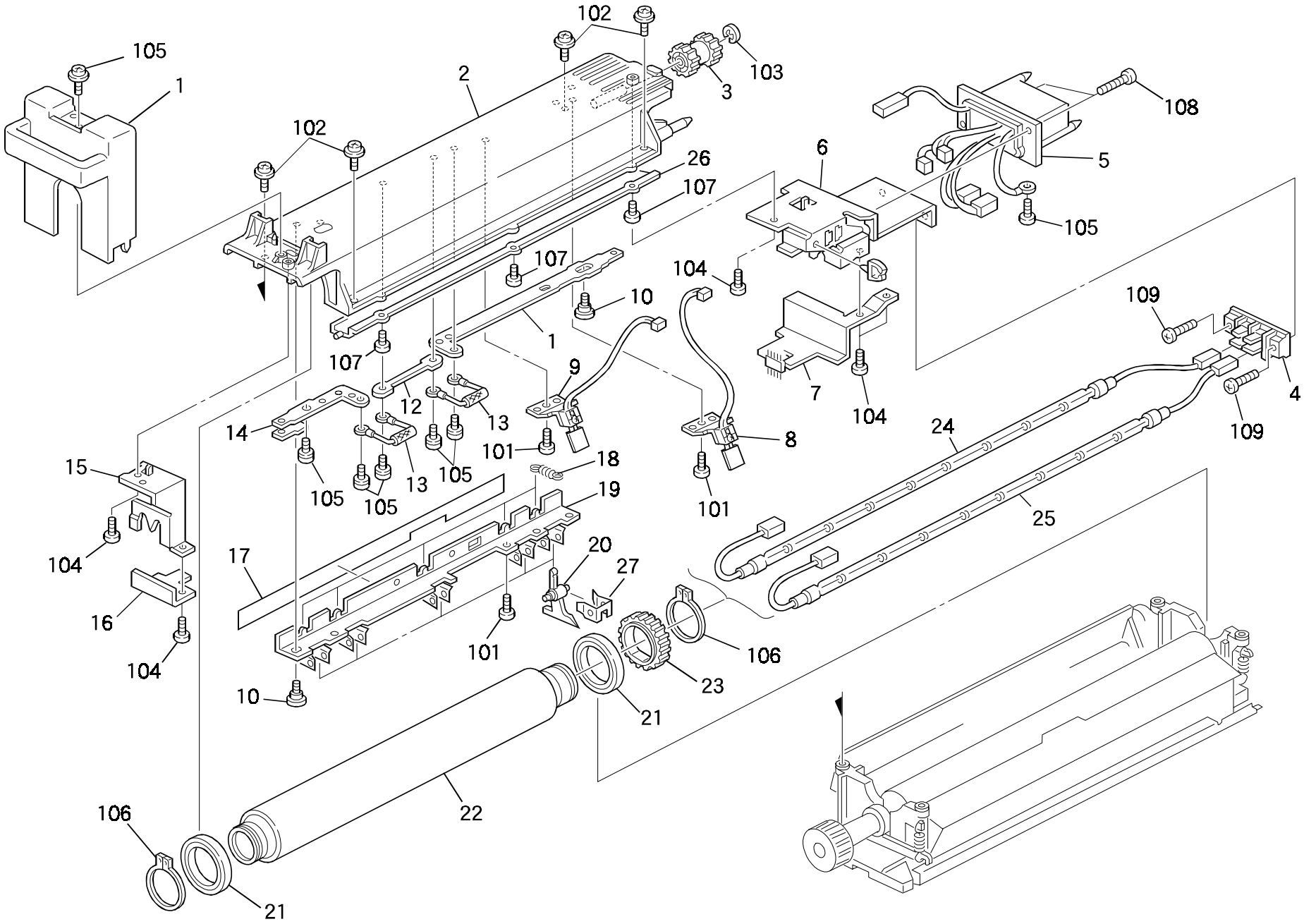

21. FUSING UNIT 1 (A208/A210/A211)

Rev. 02/16/2001

Index No.	Part No.	Description	Q'ty Per Assembly
*	A208 4006	Fusing Unit (115V)	1
*	A208 4008	Fusing Unit (230V)	1
1	A134 4130	Fusing Front Cover	1
2	A153 4053	Fusing Upper Stay	1
3	AB01 3883	Idle Gear - 25z	1
4	A153 4074	Terminal Connector - 2p	1
5	A204 5300	Fusing Unit Connector - 115V	1
5	A204 5665	Fusing Unit Connector - 230V	1
6	A208 4084	Fusing Connector Bracket	1
7	A208 4102	Rear Lamp Terminal Holder	1
8	A153 4089	Thermistor - 2	1
9	A153 4088	Thermistor	1
10	AA14 3715	Stepped Screw - M5	2
11	A134 4061	Rear Terminal Plate	1
12	A153 4062	Electrode Plate - Middle	1
13	A204 4160	Thermofuse - 172c	1
14	A153 4063	Front Terminal Plate	1
15	A153 4075	Front Holder	1
16	A153 4102	Front Lamp Terminal Holder	1
17	A134 4115	Fusing Seal	1
18	AA06 0103	Solenoid Spring	5
19	A153 4112	Stripper Bracket	1
20	AE04 4019	Hot Roller Stripper	5
21	AE03 0023	Bearing - 30x42x7mm	2
22	AE01 1027	Hot Roller	1
23	AB01 3882	Gear - 40Z	1
24	AX43 0023	Fusing Lamp - 120V 350W	1
24	AX43 0025	Fusing Lamp - 230V 350W 320mm	1
25	AX43 0022	Fusing Lamp - 120V 550W	1
25	AX43 0024	Fusing Lamp - 230V 550W 210mm	1
26	A153 4055	Upper Fusing Guide	1
27	A153 4114	Stripper Stopper	1

Index No.	Part No.	Description	Q'ty Per Assembly
101	0954 3010B	Philips Screw - M3x10	
102	0954 4012B	Double Sems Screw - M4 X 12	
103	0720 0060E	Retaining Ring - M6	
104	0314 0060B	Philips Pan Head Screw - M4x6	
105	0950 4006M	Philips Screw With Flat Washer - M4x6	
106	0725 0300E	Retaining Ring C - M30	
107	0313 0050B	Philips Pan Head Screw - M3x5	
108	0314 0120B	Philips Pan Head Screw - M4x12	
109	0313 0080B	Philips Pan Head Screw - M3x8	

22. FUSING UNIT 2 (A208/A210/A211)

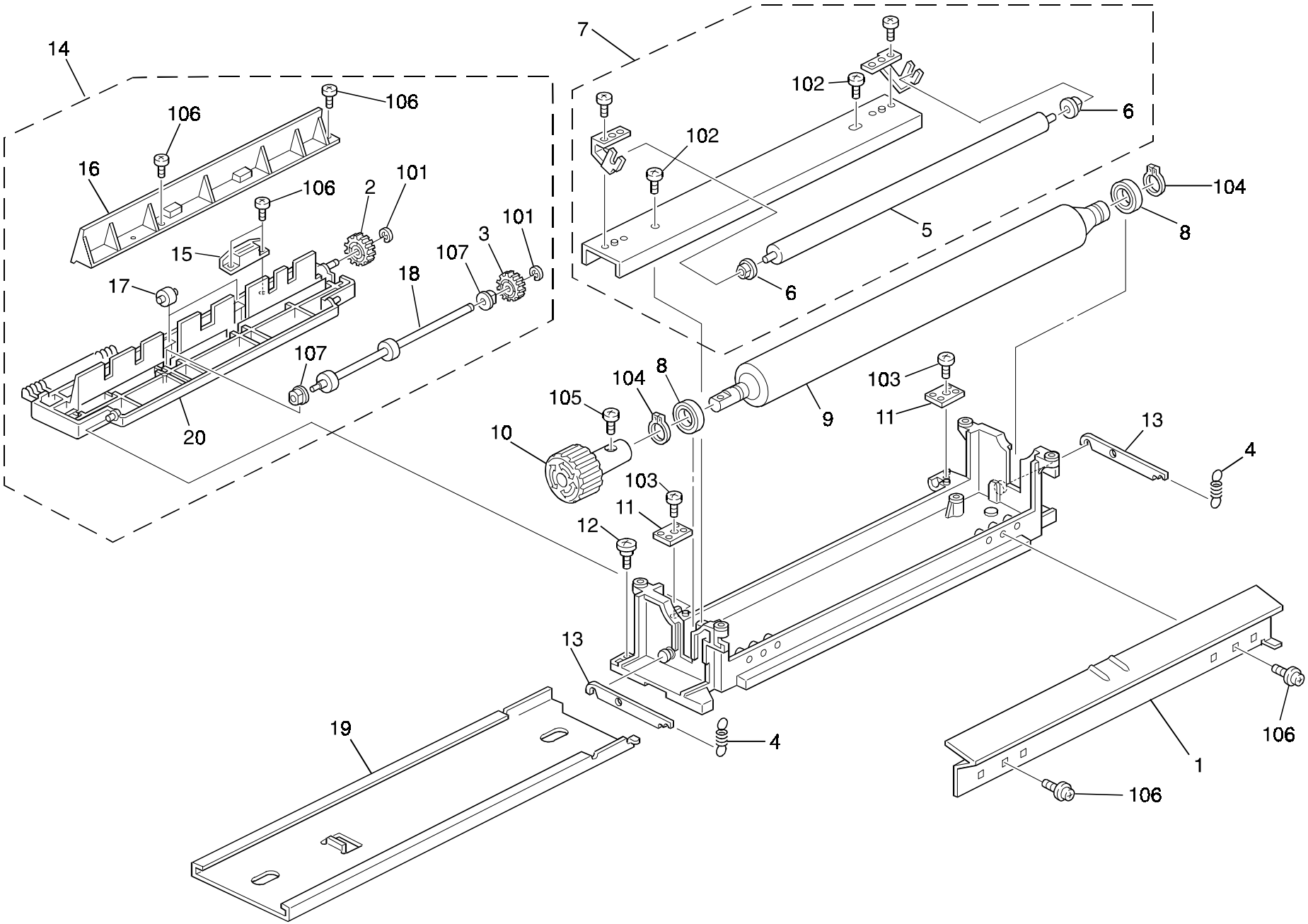

22. FUSING UNIT 2 (A208/A210/A211)

Index No.	Part No.	Description	Q'ty Per Assembly
1	A153 4197	Lower Fusing Guide	1
2	AB01 3885	Idle Gear - 20z	1
3	AB01 3884	Exit Gear - 17z	1
4	AA06 0658	Spring	2
5	**AE04 2030**	**Cleaning Roller**	**1**
6	AE03 1028	Bushing - 4mm	2
7	A153 4205	Cleaning Roller Bracket	1
8	AE03 0022	Bearing - 12x24x64m	2
9	**AE02 0050**	**Pressure Roller**	**1**
10	AG05 0076	Fusing Knob	1
11	A134 4301	Exit Guide Hinge	2
12	A077 4162	Shoulder Screw - M3	1
13	A134 4161	Pressure Lever	2
14	A134 4006	Fusing Exit Unit	1
15	AG07 0009	Magnetic Catch	1
16	A134 4280	Fusing Exit Guide - Lower	1
17	AF04 0548	Exit Drive Roller	1
18	AF02 0326	Exit Roller Ass'y	1
19	A134 4153	Slide Rail - Fusing	1
20	A153 4250	Fusing Exit Frame	1

Index No.	Part No.	Description	Q'ty Per Assembly
101	0720 0040E	Retaining Ring - M4	
102	0414 0122B	Philips Tapping Screw - M4x12	
103	0434 0082B	Tapping Screw - M4x8	
104	0725 0120E	Retaining Ring C - M12	
105	0950 4008B	Philips Screw With Spring Washer -	
106	0802 5237	Binding Self-tapping Screw - M4x10	
107	0805 3480	Bushing - 6mm	

23. DUPLEX TRAY 1 (A211)

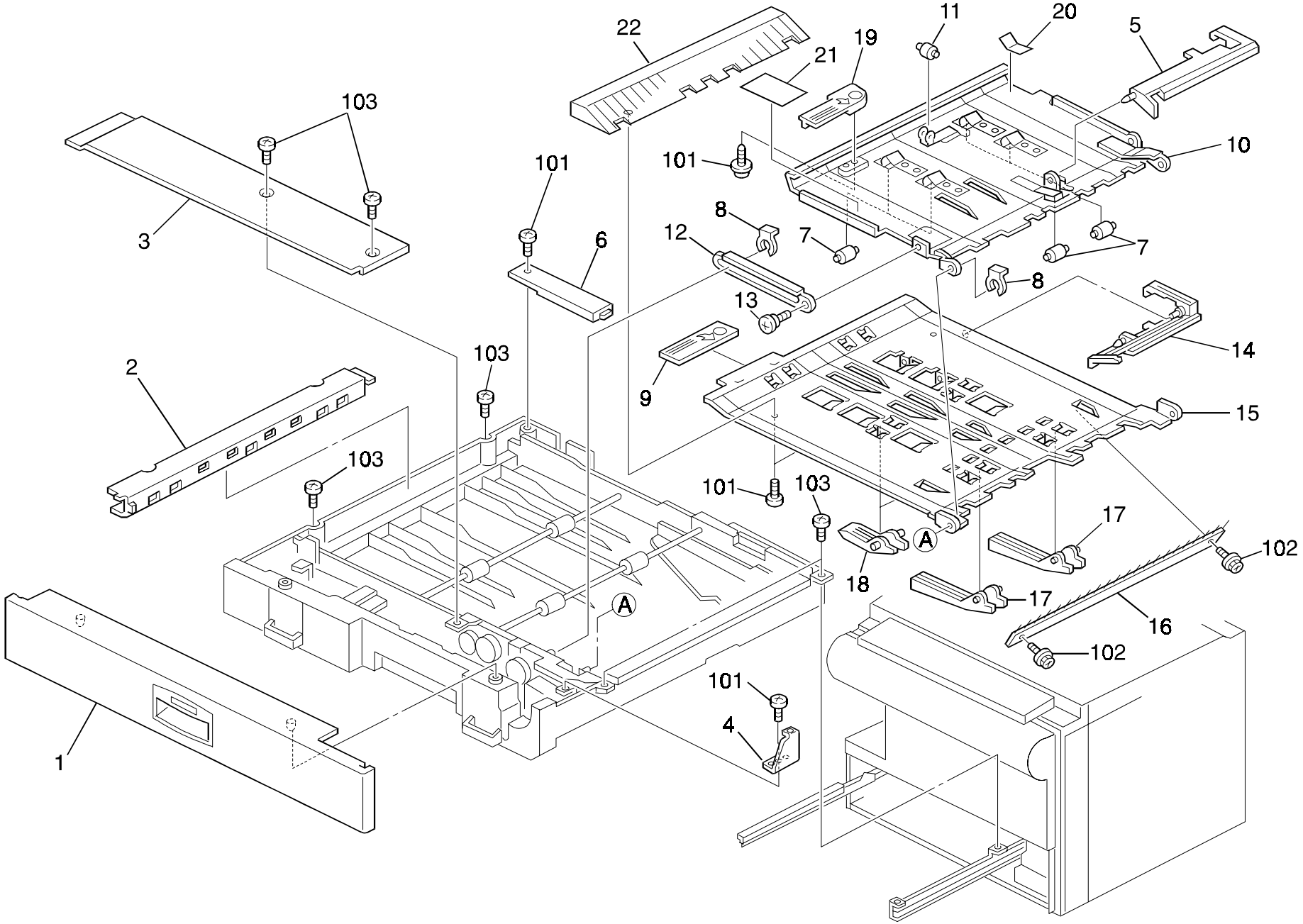

23. DUPLEX TRAY 1 (A211)

Rev. 05/30/2000

Index No.	Part No.	Description	Q'ty Per Assembly
*	A211 4620	Duplex Tray Ass'y	1
1	A134 2956	Paper Feed Front Cover	2
2	A134 4720	End Fence Upper Cover	1
3	A134 4701	Front Upper Cover	1
4	A134 4712	Right Cover Bracket	1
5	A134 4728	Inverter Feeler	1
6	A134 4721	Connector Cover	1
7	AF02 2077	Driven Roller	7
8	5206 2686	Snap Ring	2
9	A134 4739	Lower Guide Plate Knob	1
10	A158 4607	Upper Guide Plate	1
11	G694 4747	Guide Plate Holder	1
12	A134 4619	Guide Plate Link	1
13	5447 2768	Stepped Screw - M3	1
14	A134 4730	Entrance Feeler	1
15	A134 4740	Lower Guide Plate	1
16	AA12 0067	Anti Static Brush	1
17	A154 4616	Paper Holder	6
18	A158 4603	Paper Holder	2
19	A134 4726	Guide Plate Knob	1
20	AA16 2068	Guide Plate Pad	1
21	A134 4884	Decal - Duplex Misfeed Removal	1
22	A158 4604	Duplex Lower Guide	1

Index No.	Part No.	Description	Q'ty Per Assembly
101	0802 5236	Binding Self-tapping Screw - M4x8	
102	0443 0060W	Hexagon Head Tapping Screw - M3x6	
103	0344 0080F	Philips Truss Head Screw - M4x8	

24. DUPLEX TRAY 2 (A211)

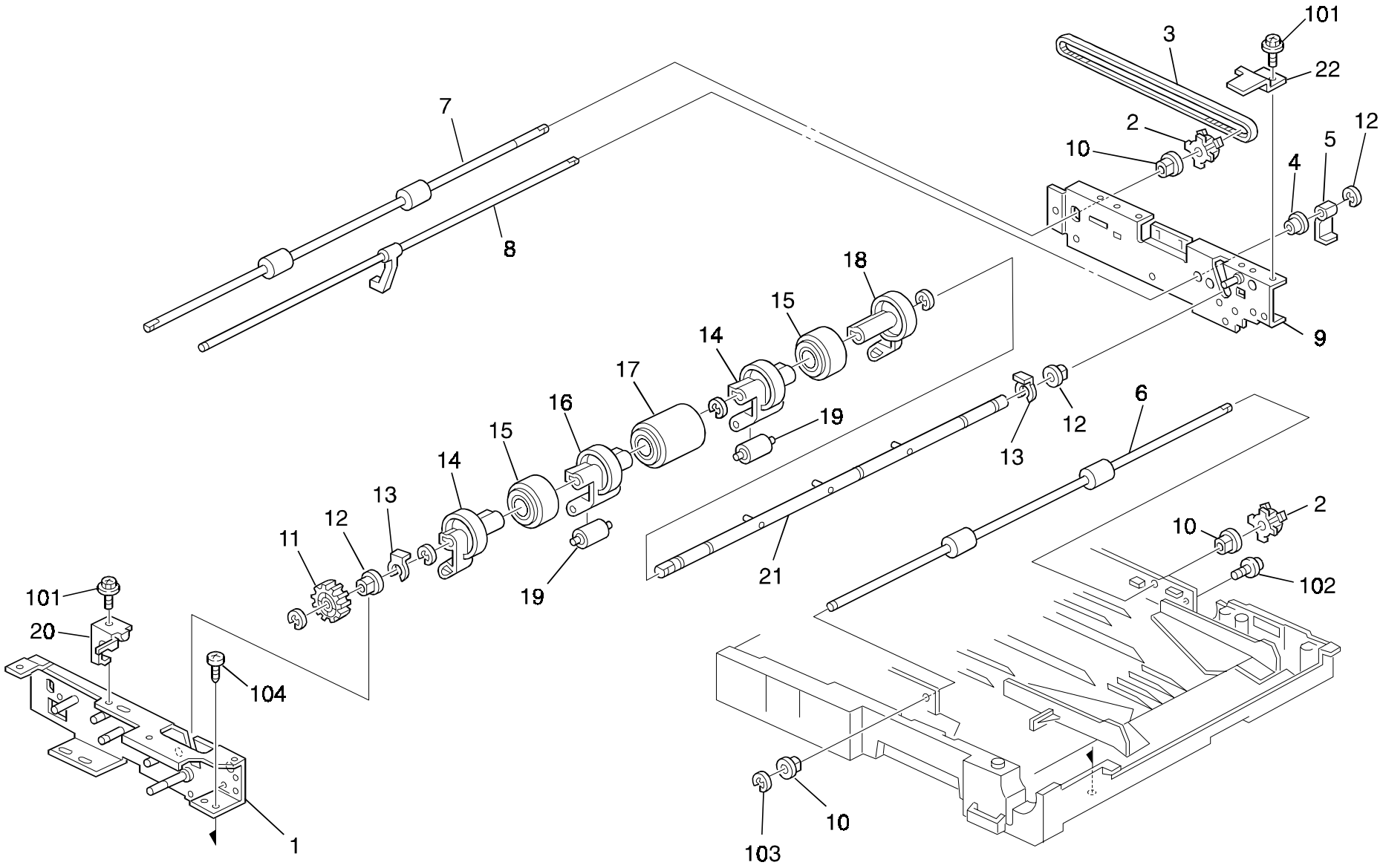

24. DUPLEX TRAY 2 (A211)

Index No.	Part No.	Description	Q'ty Per Assembly
1	A134 4751	Front Side Plate	1
2	AB03 0474	Pulley - 24Z	2
3	AA04 3390	Timing Belt - 40S2M192	1
4	5443 2668	Bushing - 4x6x7mm	2
5	AA11 1208	Paper End Sensor Feeler	1
6	AF02 0319	Transport Roller	1
7	AF02 0320	Right Transport Roller	1
8	A134 4676	Paper End Feeler	1
9	A134 4781	Rear Side Plate	1
10	5053 0447	Bushing - 6mm	4
11	AB01 1166	Gear - 33Z	1
12	5304 1639	Bushing - 8mm	2
13	5215 2621	Snap Ring - M6	3
14	A134 4809	Front Guide Holder	1
15	AF02 0317	Stack Roller	2
16	A134 4649	Paper Guide Holder	2
17	**AF03 1024**	**Feed Roller**	**1**
18	A134 4808	Rear Guide Holder	1
19	AF02 2077	Driven Roller	7
20	A134 4690	Clutch Stopper	1
21	A134 4512	Feed Roller Shaft	1
22	A134 4804	Guide Plate Stopper	1

Index No.	Part No.	Description	Q'ty Per Assembly
101	0443 0060B	Hexagon Tapping Screw - M3x6	
102	0951 4008B	Philips Screw With Washer - M4x8	
103	0720 0040E	Retaining Ring - M4	
104	0802 5236	Binding Self-tapping Screw - M4x8	

25. DUPLEX TRAY 3 (A211)

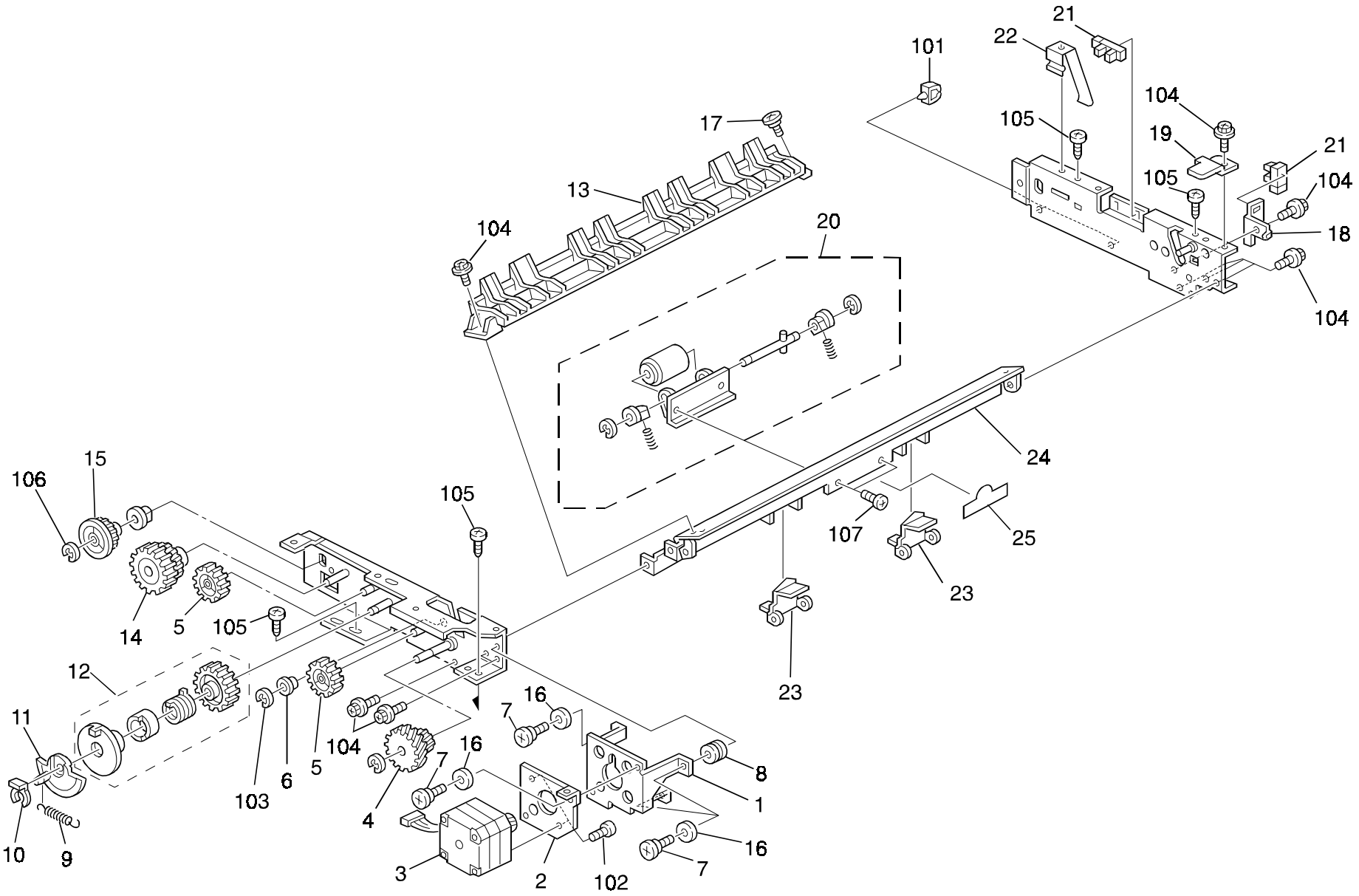

25. DUPLEX TRAY 3 (A211)

Index No.	Part No.	Description	Q'ty Per Assembly
1	A134 4799	Motor Bracket	1
2	A134 4800	Motor Bracket	1
3	A134 5290	Transport Drive Motor	1
4	AB01 7337	Gear - 15Z/55Z	1
5	AB01 1165	Gear - 32Z	2
6	5443 2668	Bushing - 4x6x7mm	1
7	A079 3626	Stepped Screw - Swing Cleaning	3
8	AA16 1067	Cushion - Motor	3
9	AA06 0593	Spring	1
10	5447 2681	Snap Ring	1
11	A334 4706	Disk - Bottom Plate Clutch	1
12	AB04 0015	Spring Clutch - Tray Bottom Plate	1
13	A134 4508	Inverter Guide Plate	1
14	AB01 7332	Gear - 24Z/41Z	1
15	AB01 1167	Gear - 25Z	1
16	AA13 2184	Motor Cushion	3
17	AA14 3307	Stepped Screw - M3x4	1
18	A134 4790	Paper End Sensor	1
19	A134 4804	Guide Plate Stopper	1
20	A134 4527	Separation Roller	1
21	AW02 0075	Photointerrupter	15
22	A134 4765	Grounding Plate	1
23	A154 4623	Vibrating Plate	2
24	A134 4662	Duplex Guide Plate	1
25	A134 4670	Duplex Guide Mylar	1

Index No.	Part No.	Description	Q'ty Per Assembly
101	1105 0199	Clamp	
102	0313 0050B	Philips Pan Head Screw - M3x5	
103	0720 0030E	Retaining Ring - M3	
104	0443 0060B	Hexagon Tapping Screw - M3x6	
105	0802 5236	Binding Self-tapping Screw - M4x8	
106	0720 0040E	Retaining Ring - M4	
107	0434 0060B	Pan Head Self-tapping Screw - M4x6	

26. DUPLEX TRAY 4 (A211)

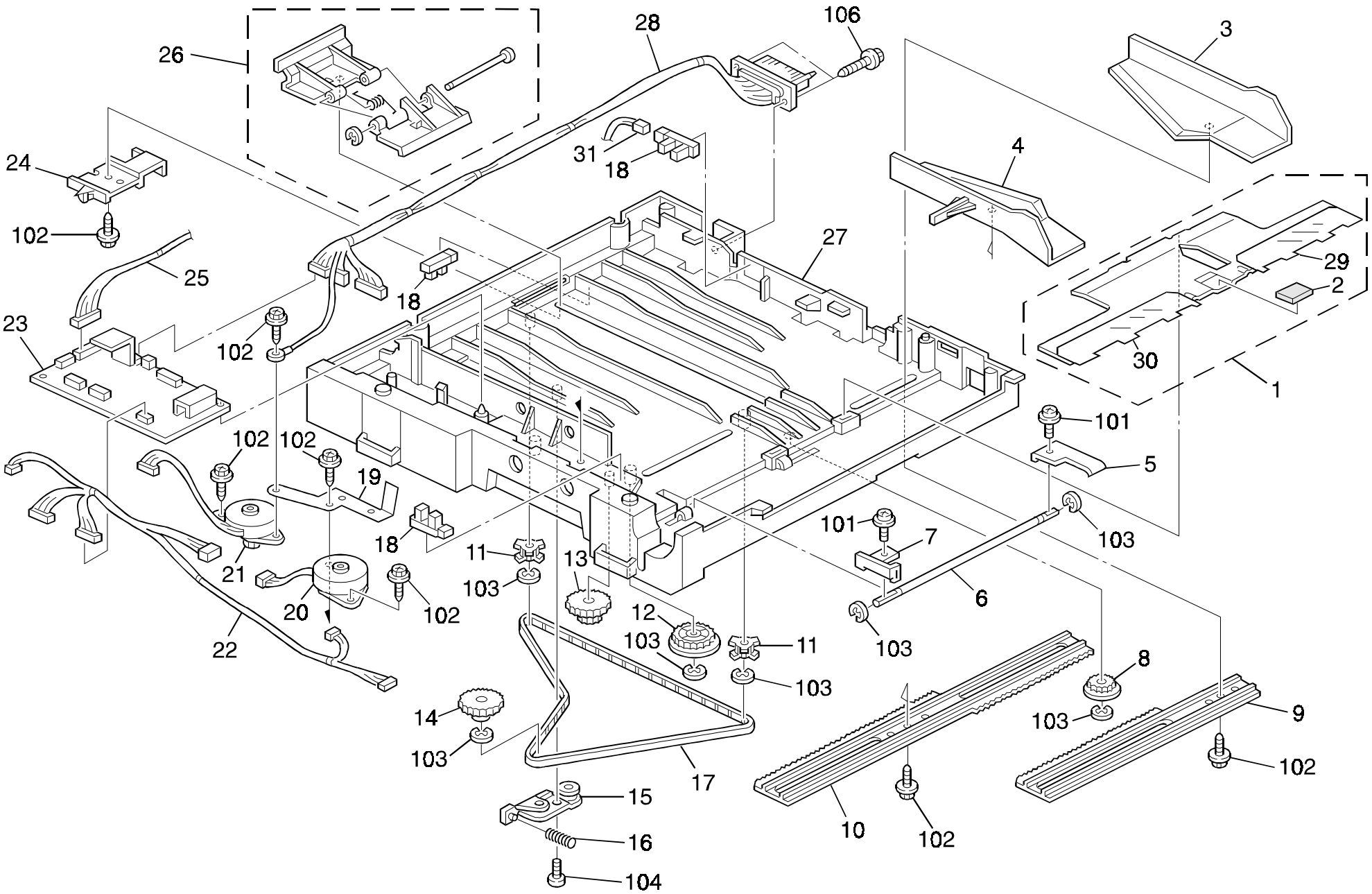

26. DUPLEX TRAY 4 (A211)

Index No.	Part No.	Description	Q'ty Per Assembly
1	A154 4620	Bottom Plate	1
2	**AF01 3003**	**Bottom Plate Pad - Duplex**	**1**
3	AF01 6160	Rear Side Fence	1
4	AF01 6161	Front Side Fence	1
5	A204 4651	Bottom Pressure Plate	1
6	AA14 0291	Bottom Plate Shaft	1
7	A491 4690	Bottom Plate Hook	1
8	G011 3305	Gear - 16T	1
9	A134 4689	Rear Side Fence Rack	1
10	A134 4688	Front Side Fence Rack	1
11	AB03 0473	End Fence Pulley - 22z	2
12	AB01 3881	Gear - 31Z	1
13	AB01 7400	Gear- 18z/68z	1
14	AB01 7339	End Fence Gear - 22z/58z	1
15	A134 4714	Tightener	1
16	AA06 3370	Spring	1
17	AA04 3374	Timing Belt - S2M800	1
18	AW02 0075	Photointerrupter	3
19	A134 4620	Grounding Plate	1
20	A134 5291	Jogger Drive Motor DC 6.48W	1
21	A134 5292	Jogger Drive Motor DC 10.56W	1
22	A134 5323	Motor Harness	1
23	A158 5191	Duplex Control Board	1
24	A134 4710	End Fence Actuator	1
25	A134 5321	Sensor Relay Harness	1
26	A134 4525	End Fence	1
27	AF01 0018	Duplex Tray	1
28	A134 5320	Duplex Main Harness	1
29	A154 4622	Rear Guide Plate	1
30	A154 4621	Front Guide Plate	1
31	A134 5322	End Fence Harness	1

Index No.	Part No.	Description	Q'ty Per Assembly
101	0951 3006B	Philips Screw With Flat Washer-m3x6	
102	0802 5232	Binding Self-tapping Screw - M3x8	
103	0720 0040E	Retaining Ring - M4	
104	0802 5236	Binding Self-tapping Screw - M4x8	
105	0802 5234	Tapping Screw - M3x12	

27. PAPER EXIT AND INVERTER (A211)

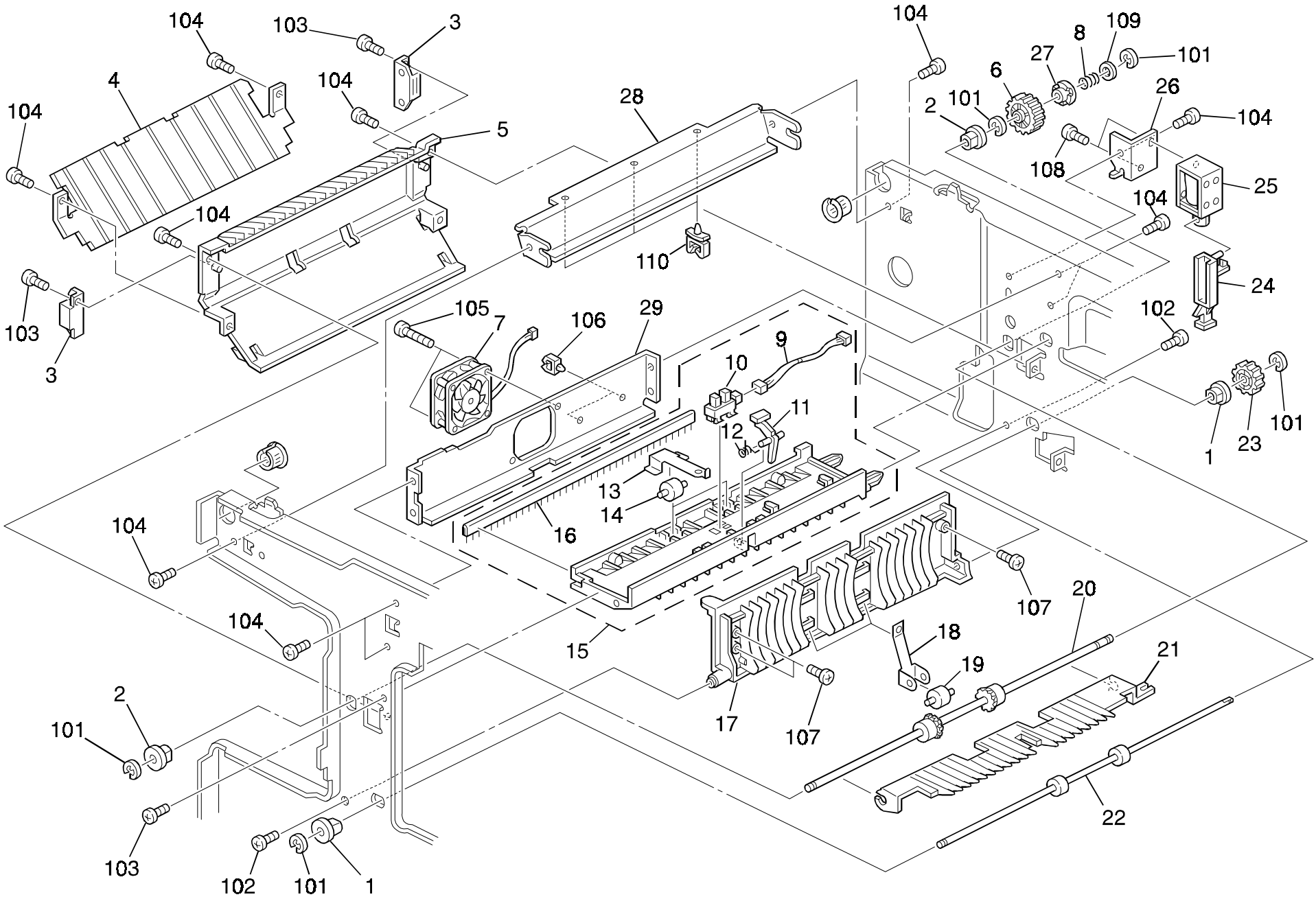

27. PAPER EXIT AND INVERTER (A211)

Index No.	Part No.	Description	Q'ty Per Assembly
1	5053 0447	Bushing - 6mm	4
2	AA08 2058	Bushing - 6x10x9mm	2
3	AG07 0004	Magnetic Catch	6
4	A158 4452	Lower Reverse Guide Plate	1
5	A158 4451	Reverse Guide Plate	1
6	AB01 3889	Gear - 24Z	1
7	AX64 0059	Fan Motor - DC24V 3.12W	2
8	A470 1704	Spring - Lower Exit Roller	1
9	A153 5328	Ct Harness	1
10	AW02 0075	Photointerrupter	15
11	A157 4459	Paper Exit Feeler	1
12	AA06 6274	Spring	1
13	A157 4456	Spring Plate	2
14	AF02 2042	Middle Pressure Roller	2
15	A157 4451	Upper Guide Plate	1
16	AA12 0071	Exit Antistatic Brush	1
17	A158 4453	Exit Cover	1
18	A158 4459	Spring Plate	2
19	AF04 0031	Upper Exit Roller	7
20	AF02 0327	Exit Roller	1
21	AF02 5024	Pick-off Pawl	1
22	AF02 0336	Inverter Drive Roller	1
23	AB01 3106	Drive Gear - 18z	1
24	A158 4463	Pick-off Pawl Arm	1
25	AX12 0039	DC Solenoid - 24v - 400gf	1
26	A158 4467	Solenoid Bracket	1
27	A470 1703	Shift Clutch	1
28	A157 1080		1
29	A157 1084		1

Index No.	Part No.	Description	Q'ty Per Assembly
101	0720 0040E	Retaining Ring - M4	
102	0434 0080B	Pan Head Self-tapping Screw - M4x8	
103	0434 0082B	Tapping Screw - M4x8	
104	0434 0060B	Pan Head Self-tapping Screw - M4x6	
105	0353 0300B	Bind Screw - M3x30	
106	1105 0199	Clamp	
107	0802 5236	Binding Self-tapping Screw - M4x8	
108	0313 0040B	Philips Pan Head Screw - M3x4	
109	0807 4072	Washer - Core	
110	1105 0196	Harness Clamp	

28. PAPER EXIT SECTION (A208/A210)

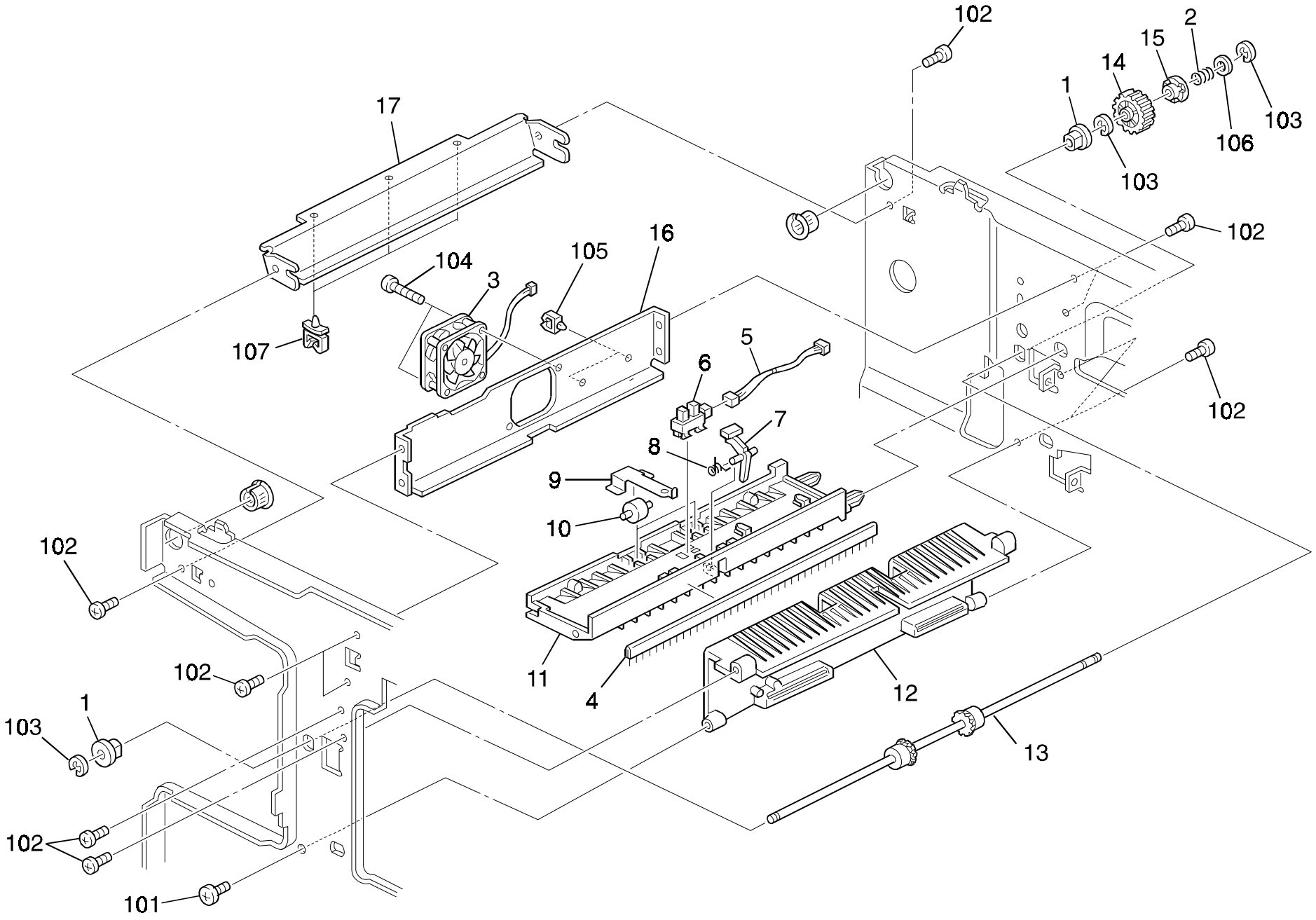

28. PAPER EXIT SECTION (A208/A210)

Index No.	Part No.	Description	Q'ty Per Assembly
1	AA08 2058	Bushing - 6x10x9mm	2
2	A470 1704	Spring - Lower Exit Roller	1
3	AX64 0059	Fan Motor - DC24V 3.12W	2
4	AA12 0071	Exit Antistatic Brush	1
5	A153 5328	Ct Harness	1
6	AW02 0075	Photointerrupter	15
7	A157 4459	Paper Exit Feeler	1
8	AA06 6274	Spring	1
9	A157 4456	Spring Plate	2
10	AF02 2042	Middle Pressure Roller	2
11	A157 4451	Upper Guide Plate	1
12	A157 4460	Exit Cover	1
13	AF02 0327	Exit Roller	1
14	AB01 3889	Gear - 24Z	1
15	A470 1703	Shift Clutch	1
16	A157 1084	Left Upper Stay	1
17	A157 1080	Fan Motor Stay	1

Index No.	Part No.	Description	Q'ty Per Assembly
101	0802 5236	Binding Self-tapping Screw - M4x8	
102	0434 0060B	Pan Head Self-tapping Screw - M4x6	
103	0720 0040E	Retaining Ring - M4	
104	0353 0300B	Bind Screw - M3x30	
105	1105 0199	Clamp	
106	0807 4072	Washer - Core	
107	1105 0196	Harness Clamp	

29. DRIVE SECTION 1 (A208/A210/A211)

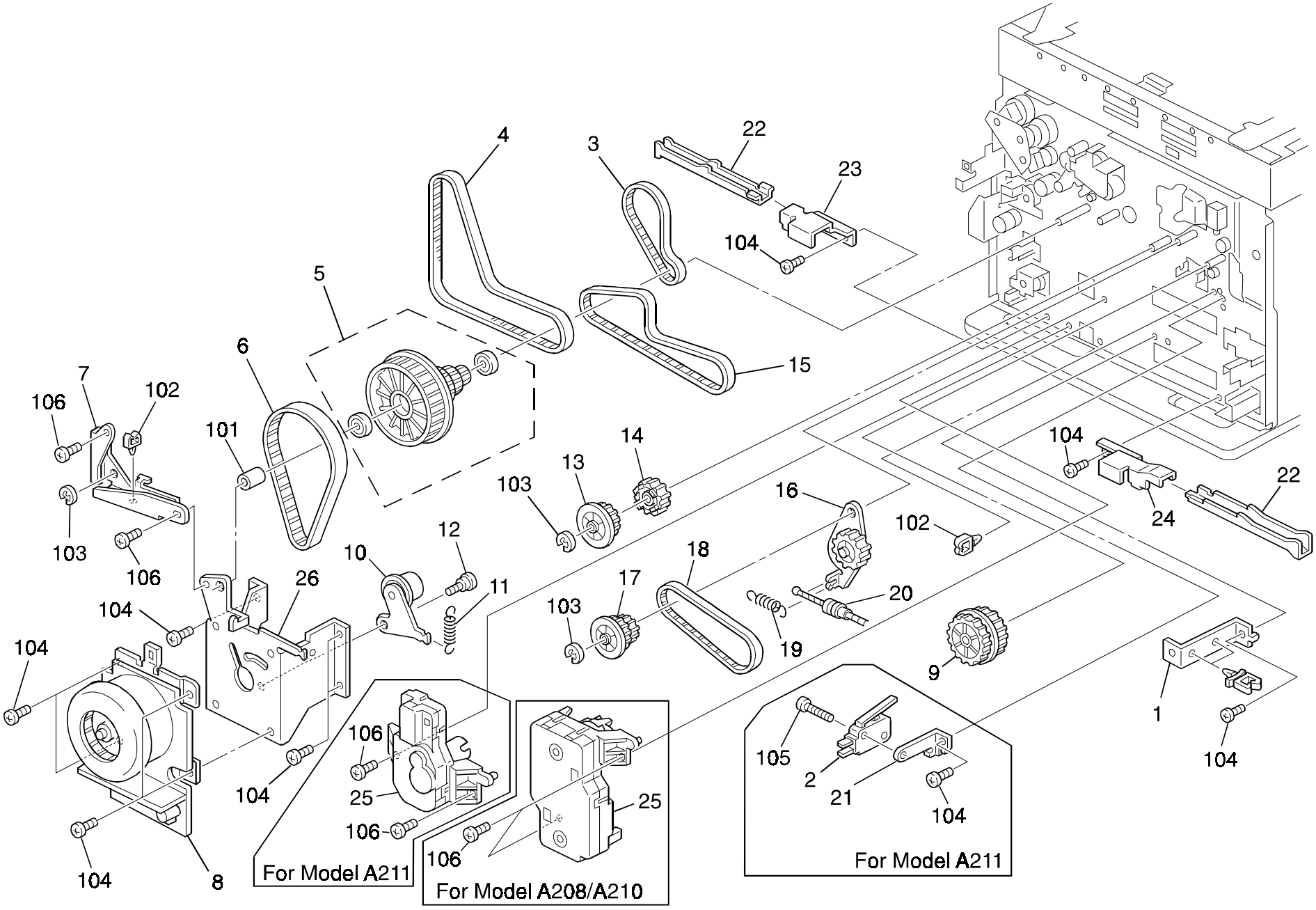

29. DRIVE SECTION 1 (A208/A210/A211)

Index No.	Part No.	Description	Q'ty Per Assembly
1	A153 5802	Lower Bracket - DC Drive Board	1
2	1204 2356	Micro Switch - AM51612A531	1
3	AA04 3392	Drum Timing Belt	1
4	AA04 3420	Timing Belt - 80S3M519	1
5	AB03 0492	Pulley - 25/25/34/125Z	1
6	AA04 3430	Timing Belt - 160S2M330	1
7	A204 1131	Development Support Plate	1
8	AX07 0010	Motor - DC24V 63W	1
9	AB01 7371	Exit Pulley	1
10	A153 1128	Tightener	1
11	AA06 0228	Spring - Transfer Drum Cleaning Sol	1
12	C105 2352	Stepped Screw - M6x1.7	1
13	AB03 0463	Fusing Cam Pulley	1
14	AB01 3872	Fusing Cam Gear - 28z	1
15	AA04 3396	Timing Belt - 60S3M366	1
16	A134 1121	Joint Gear	1
17	AB01 7345	Timing Pulley - 35Z	1
18	AA04 3397	Timing Belt - 30S3M300	1
19	5203 3151	Roller Cover Spring	2
20	AA05 1024	Release Wire	1
21	A158 4466	Switch Bracket	1
22	A134 1071	Left Grip Plate	2
23	A134 1072	Right Bracket - Grip Plate	1
24	A134 1073	Left Bracket - Grip Plate	1
25	A153 2936	Tray Lift Motor (A211)	1
25	A204 2936	Tray Lift Motor (A208/A210)	1
26	A153 1107	Bracket - Brushless Motor	1

Index No.	Part No.	Description	Q'ty Per Assembly
101	0707 8140B	Bushing - 8x14mm	
102	1105 0199	Clamp	
103	0720 0060E	Retaining Ring - M6	
104	0434 0060B	Pan Head Self-tapping Screw - M4x6	
105	0313 0140B	Philips Pan Head Screw - M3x14	
106	0960 3006B	Philips Flange Screw - M3 X 6	

30. DRIVE SECTION 2 (A208/A210/A211)

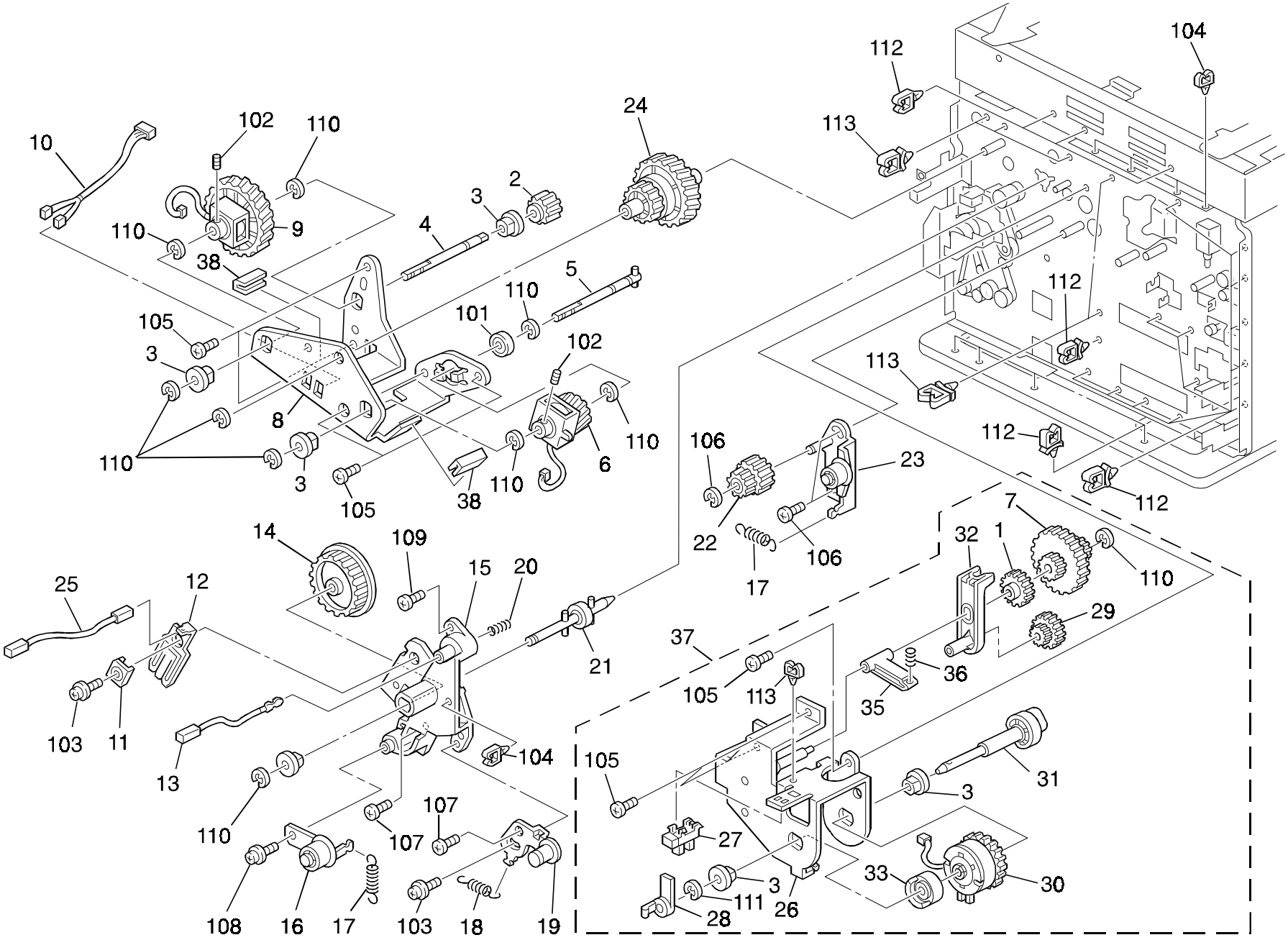

30. DRIVE SECTION 2 (A208/A210/A211)

Index No.	Part No.	Description	Q'ty Per Assembly
1	AB01 7386	Cleaning Cam - 24Z	1
2	AB01 3917	Toner Supply Gear - 14Z	1
3	AA08 2047	Bushing - 8x16x7	9
4	AA14 5539	Solenoid Shaft	1
5	A153 1127	Clutch Shaft	1
6	AX20 0105	Magnetic Clutch - 15kgf 24z	1
7	AB01 7368	Cleaning Drive Gear - 17Z/46Z/18Z	1
8	A153 1125	Development Drive Bracket	1
9	AX20 0106	Magnetic Clutch - 15kgf 52z	1
10	A153 5340	Ct Harness	1
11	A153 3087	Terminal Cap	1
12	A153 3086	Bias Terminal	1
13	A153 2130	Receptacle Housing	1
14	AB03 0494	Drum Pulley - 75Z	1
15	A153 1114	Drive Gear Holder	1
16	A153 1132	Development Tightener	1
17	5442 1111	Spring - Main Drive Tightner	3
18	AA06 2293	Roller Cover Spring	2
19	A153 1135	Drum Drive Tightener	1
20	AA06 3552	Driven Roller Spring	1
21	A153 1117	Drum Drive Shaft	1
22	AB01 7369	Transfer Belt Pulley - 24Z/20Z	1
23	A157 1111	Belt Tightener	1
24	AB01 7370	Development Pulley - 46Z/31Z	1
25	AZ43 0020	High Voltage Supply Cord	1
26	A204 3915	Magnet Clutch Bracket	1
27	AW02 0075	Photointerrupter	15
28	A153 3914	Magnetic Clutch Feeler	1
29	AB01 7385	Gear - 17Z/24Z	1
30	AX21 0059	Spring Clutch - 5kgf	1
31	A204 3911	Cam Shaft	1
32	A153 2142	Cam Lever	1
33	A204 3922	Brake Cam	1
34	A153 1126	Edging	1
35	A204 3921	Clutch Arm	1
36	A077 3918	Spring - T/S Unit	1
37	A204 3801	Spring Clutch - Transfer Belt	1
38	A153 1126	Edging	1
101	0740 3008	Ball Bearing - 8x22x7	
102	0573 0040E	Hexagon Headless Set Screw - M3x4	
103	0951 4012B	Philips Screw With Flat Washer	
104	1105 0199	Clamp	
105	0434 0060B	Pan Head Self-tapping Screw - M4x6	
106	0414 0080B	Binding Self-tapping Screw - M4x8	
107	0802 5236	Binding Self-tapping Screw - M4x8	
108	0802 5221	Tapping Screw - M3x10	
109	0950 4008B	Philips Screw With Spring Washer -	
110	0720 0060E	Retaining Ring - M6	
111	0720 0060	Retaining Ring - M6	
112	1105 0197	Wire Saddle	
113	1105 0196	Harness Clamp	

31. DRIVE SECTION 3 (A208/A210/A211)

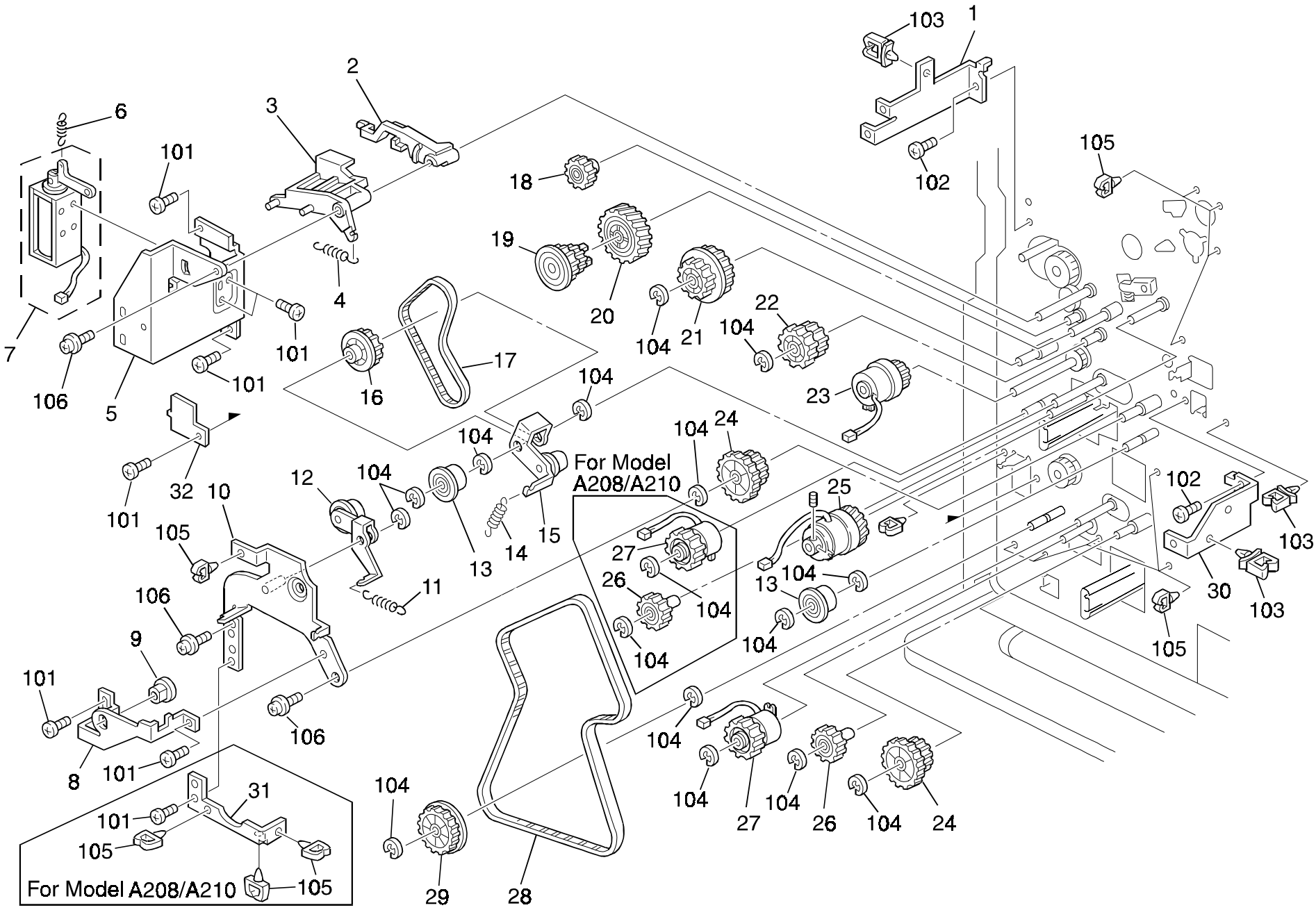

31. DRIVE SECTION 3 (A208/A210/A211)

Index No.	Part No.	Description	Q'ty Per Assembly
1	A153 5813	Main Control Board Bracket	1
2	A155 2676	Pick-up Lever (A210/A211)	1
3	A134 2678	Solenoid Link (A208)	1
3	A155 2677	Pick-up Link (A210/A211)	1
4	AA06 0573	Release Spring	1
5	A134 2675	Solenoid Bracket (A208)	1
5	A155 2675	Pick-up Bracket (A210/A211)	1
6	AA06 0572	Pressure Spring	1
7	A134 2680	DC Solenoid (A208)	1
7	A155 2680	DC Solenoid - 24V - 510gf (A210/A211)	1
8	A134 2579	Stopper Bracket	1
9	5053 0223	Bushing - 8mm	1
10	A153 2570	Upper Support Plate	1
11	AA06 0664	Spring - Tightener	1
12	A134 2575	Tightener Arm	1
13	AB03 0455	Tightener Pulley - 8x20x13	2
14	AA06 0228	Spring - Transfer Drum Cleaning Sol	1
15	A134 2572	Middle Tightener	1
16	AB03 0465	Timing Pulley - 25Z	1
17	AA04 3364	Timing Belt - S3M300	1
18	AB01 1153	Idle Gear - 25z	1
19	AB03 3064	Drive Pulley - 34Z/25Z	1
20	AB01 3918	Drive Gear - 35z	1
21	AB01 7335	Timing Pulley - 22Z/37Z	1
22	AB01 7377	Gear - 25Z	1
23	AX20 0099	Magnetic Clutch - 7kgf.cm 26z	1
24	AB01 7336	Timing Pulley - 30Z/35Z	2
25	AX20 0098	Magnetic Clutch - 7kg Cm 35z	1
26	AB01 3875	Reverse Gear - 27z	1
27	AX20 0100	Magnetic Clutch - 3.5kgf Cm 35z	1
28	AA04 3368	Timing Belt - S3M609	1
29	AB03 0464	Timing Pulley - 30Z	1
30	A153 5812	Left Lower Bracket	1
31	A153 2572	Paper Feed Harness Bracket (A208)	1
32	A155 6325	Drive Cover Bracket	1

Index No.	Part No.	Description	Q'ty Per Assembly
101	0313 0050B	Philips Pan Head Screw - M3x5	
102	0951 3006B	Philips Screw With Flat Washer-m3x6	
103	1105 0197	Wire Saddle	
104	0720 0040E	Retaining Ring - M4	
105	1105 0199	Clamp	
106	0951 4006B	Philips Screw With Washer - M4x6	

32. ELECTRICAL SECTION 1 (A208/A210/A211)

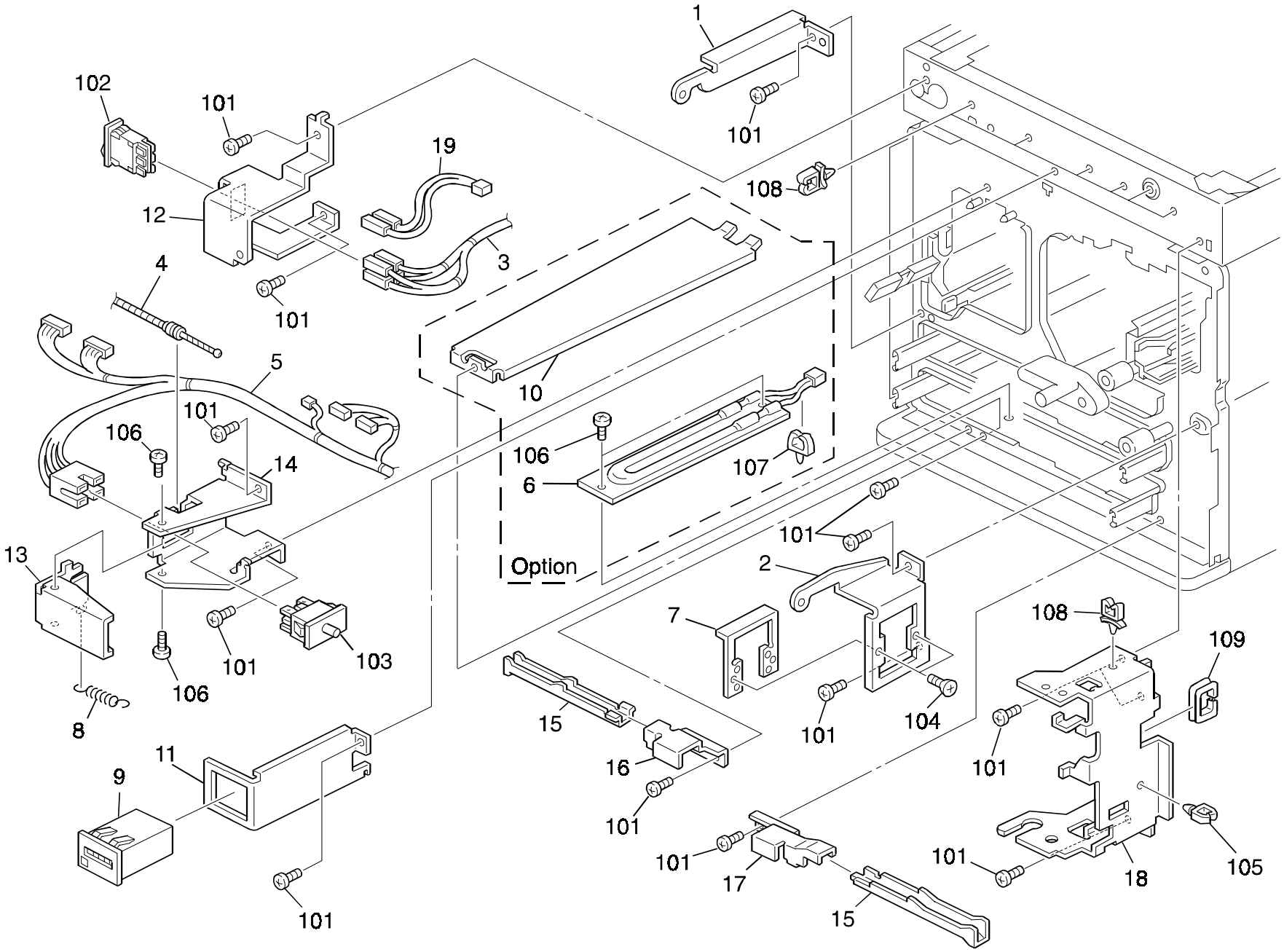

32. ELECTRICAL SECTION 1 (A208/A210/A211)

Rev. 06/30/2000

Index No.	Part No.	Description	Q'ty Per Assembly
1	A153 1353	Front Cover Hinge	1
2	A153 1355	Key Counter Bracket	1
3	A153 5501	AC Main Harness - 120V	1
3	A153 5661	AC Main Harness - 230V	1
4	AA05 1024	Release Wire	1
5	A153 5520	Front Right Harness (NA) (A208/A210)	1
5	A153 5320	Front Right Harness (EU/ASIA/TWN) (A208/A210)	1
5	A156 5513	Front Right Harness (NA) (A211)	1
5	A154 5313	Front Right Harness (EU/ASIA/TWN) (A211)	1
6	AX40 0021	Anti-condensation Heater - 115V 18W (Option)	1
6	AX40 0022	Anti-condensation Heater - 240V 18W (Option)	1
7	5446 1239	Plate Nut - Key Counter	1
8	5442 4467	Spring - Stripper Pawl Plate	2
9	AX31 0022	Total Counter	1
10	A134 2947	Heater Cover (Option)	1
11	A153 5820	Total Counter Bracket	1
12	A153 5804	Main Switch Bracket (EU/ASIA/TWN)	1
12	A153 5814	Main Switch Bracket (NA)	1
13	A153 5809	Arm Interlock SW	1
14	A153 5808	Bracket - Safety Switch	1
15	A134 1071	Left Grip Plate	1
16	A134 1072	Right Bracket - Grip Plate	1
17	A134 1073	Left Bracket - Grip Plate	1
18	A153 3270	Stay Toner Supply	1
19	A153 5562	Main Switch Relay Harness	1

Index No.	Part No.	Description	Q'ty Per Assembly
101	0434 0060B	Pan Head Self-tapping Screw - M4x6	
102	1204 2467	Main Switch (NA)	
103	1204 2397	Safety Switch	
104	0323 0080B	Philips Sunk Screw - M3x8	
105	1105 0229	Clamp	
106	0314 0060B	Philips Pan Head Screw - M4x6	
107	1105 0231	Clamp	
108	1105 0196	Harness Clamp	
109	1105 0329	Clamp - ES-0510	

33. ELECTRICAL SECTION 2 (A208/A210/A211)

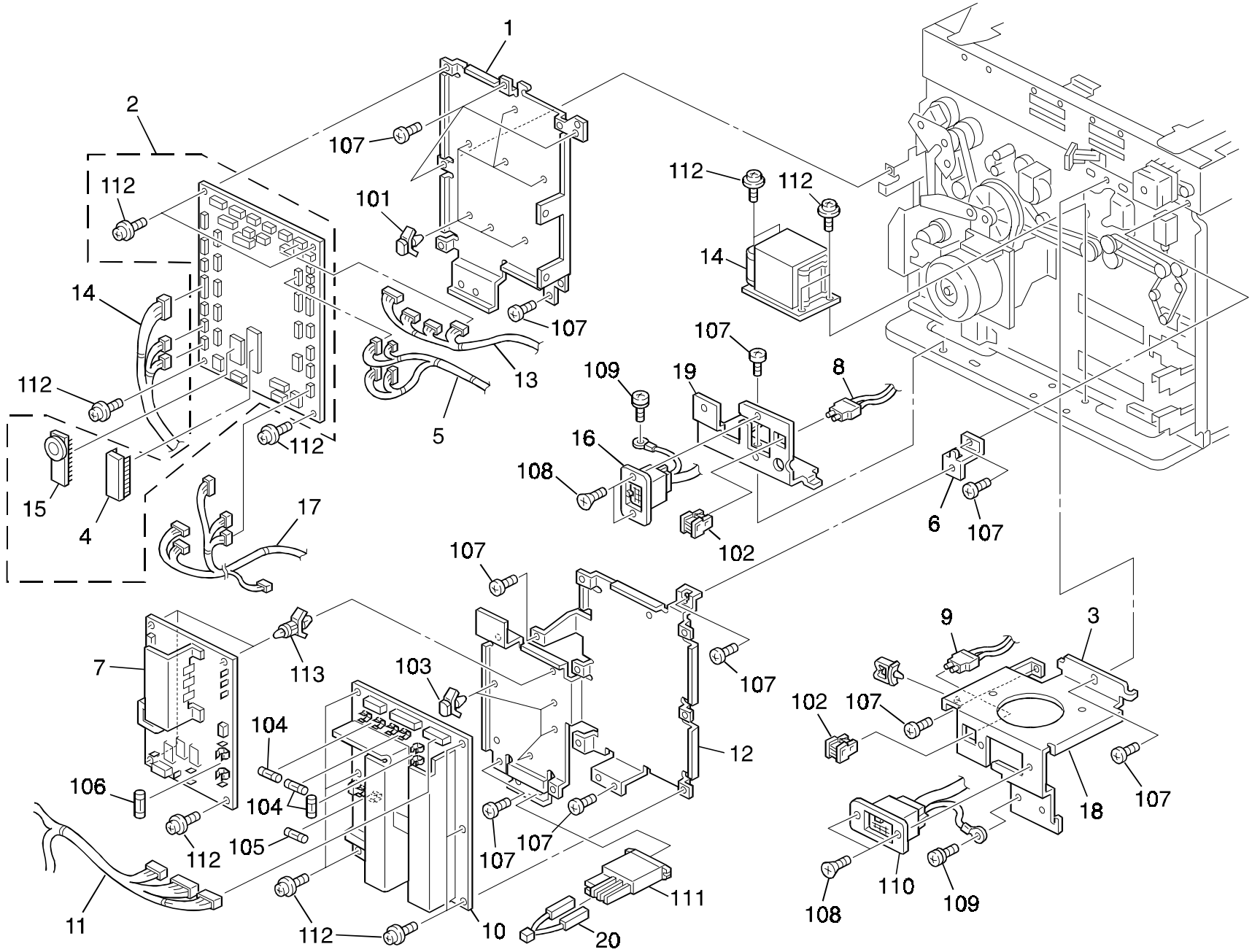

33. ELECTRICAL SECTION 2 (A208/A210/A211)

Rev. 04/25/2000

Index No.	Part No.	Description	Q'ty Per Assembly
1	A204 5811	Main Board Bracket	1
2	A204 5101	Main Control Board (NA)	1
2	A204 5181	Main Control Board (EU/ASIA/TWN)	1
3	A153 5807	Bracket ARDF	1
4	A204 5121	IC-4M X16 100NS	1
5	A209 5319	Rear Upper Harness Duplex	1
6	A153 5803	Upper Bracket - DC Drive Board	1
7	A153 5550	AC Drive Board - 120V	1
7	A153 5645	AC Drive Board - 230V	1
8	AW03 0055	Optical Fiber - 420mm	1
9	AW03 0054	Optical Fiber - 250mm	1
10	AZ23 0055	DC Drive Board (NA)	1
10	AZ24 0041	DC Drive Board (EU/ASIA)	1
10	AZ23 0054	DC Drive Board (TWN)	1
11	A153 5344	Power Supply Harness - 120V (A208/A210)	1
11	A153 5644	Power Supply Harness - 230V (A208/A210)	1
11	A158 5343	Power Supply Harness - 120V (A211)	1
11	A160 5643	Power Supply Harness - 230V (A211)	1
12	A153 5801	DC Drive Board Bracket	1
13	A153 5312	Optical Harness	1
14	A153 5316	Paper Feed Harness	1
14	A154 5310	Duplex Unit Harness	1
15	A153 5114	Ram Board	1
16	A153 5644	Tray Power Supply Harness	1
16	A160 5643	Power Supply Harness - Duplex	1
17	A208 5311	Rear Lower Harness (NA) (A208/A210)	1
17	A204 5611	Rear Lower Harness (EU/ASIA/TWN) (A208/A210)	1
17	A209 5309	Duplex Rear Lower Harness (NA) (A211)	1
17	A207 5609	Duplex Relay Harness (EU/ASIA/TWN) (A211)	1
18	AZ13 0023	Transformer - 230V	1
19	A153 5806	Bracket Paper Tray Unit	1
20	A153 5561	Relay Harness	1

Index No.	Part No.	Description	Q'ty Per Assembly
101	1105 0367	Spacer	
102	1102 4052	Optional Connector	
103	1105 0409	Spacer	
104	1107 0392	Fuse (Glass Case) - 6.3A - 125V	
105	1107 0393	Fuse (Glass Case) - 8A - 125V	
106	1107 0753	Fuse (Glass Case) - 6.3A - 250V	
107	0434 0060B	Pan Head Self-tapping Screw - M4x6	
108	0323 0060B	Philips Sunk Screw - M3x6	
109	0801 0137	Philips Pan Head Screw With Spring	
110	1102 6739	Connector - 12p	
111	1208 1392	Relay - G2r-1-t-tu - DC24V	
112	0951 4006B	Philips Screw With Washer - M4x6	
113	1105 0192	Locking Support	

34. ELECTRICAL SECTION 3 (A208/A210/A211)

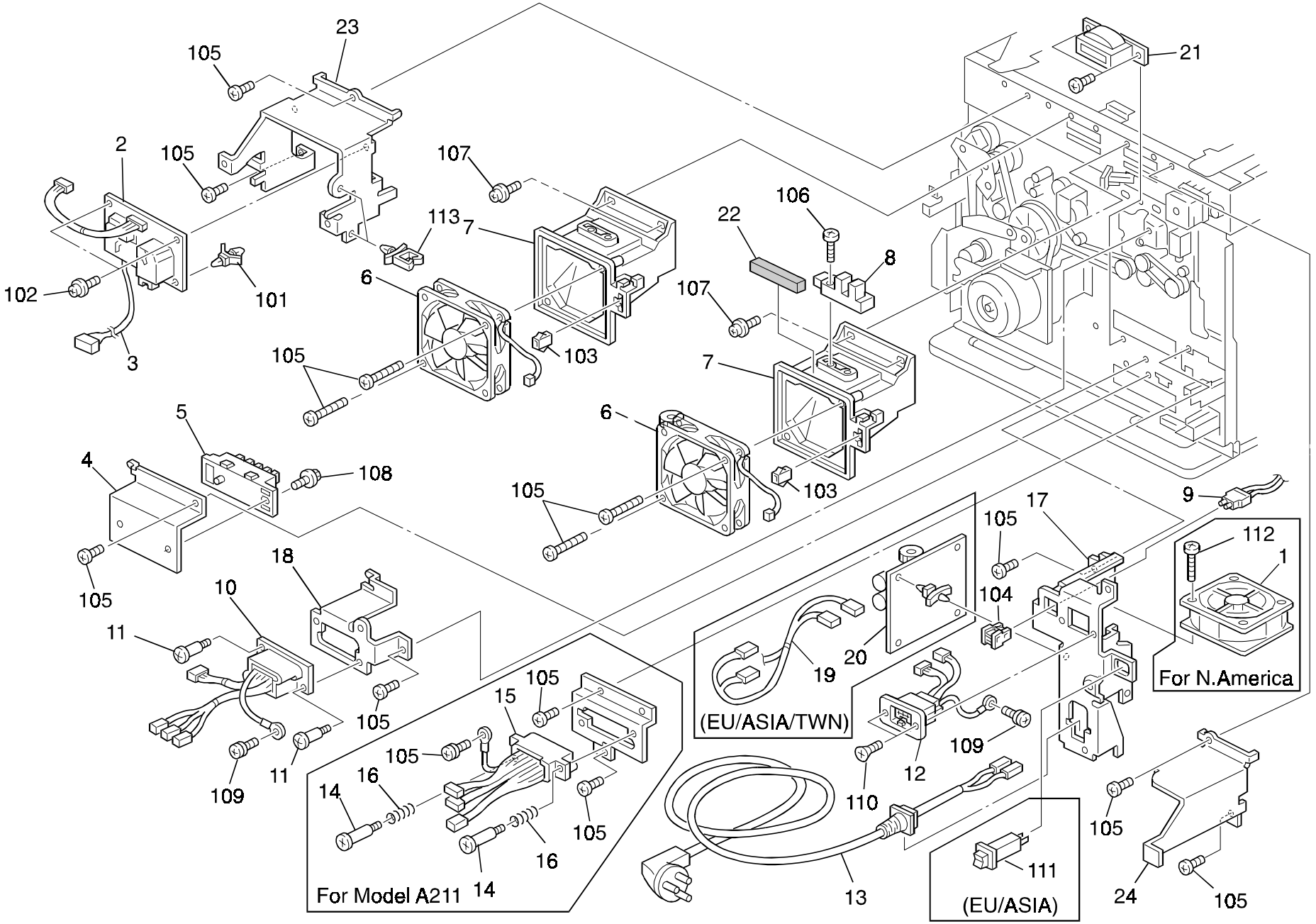

34. ELECTRICAL SECTION 3 (A208/A210/A211)

Index No.	Part No.	Description	Q'ty Per Assembly
1	AX64 0058	Fan Motor - DC 24V 4.32W	1
2	AZ32 0078	DC Power Pack	1
3	AZ43 0020	High Voltage Supply Cord	1
4	A134 2941	Bracket - Paper Size Sensor	1
5	AW50 0010	Push Switch	2
6	AX64 0058	Fan Motor - DC 24v 4.32w	2
7	A153 1986	Cooling Fan Duct	2
8	AW02 0022	Photointerruptor	2
9	AW03 0056	Optical Fiber - 550mm	1
10	A204 5326	Fusing Relay Harness	1
11	AA14 3301	Stepped Screw - M3x4	2
12	A153 5324	Sorter Relay Harness	1
13	A153 5571	Power Supply Cord (NA)	1
13	A153 5671	Power Supply Cord (EU/ASIA)	1
13	A153 5471	Power Supply Cord (TWN)	1
14	AA14 3452	Stepped Screw	2
15	A154 5325	Duplex Unit Relay Harness	1
16	AA06 3532	Spring	2
17	A153 5810	Power Supply Cord Bracket	1
18	A153 5888	Fusing Unit Joint Connector Bracket	1
19	A153 5601	AC Relay Harness	1
20	A153 5621	Noise Filter Board	1
21	AZ02 0008	Coil - 1 0mh 2A	1
22	AA15 1177	Seal - 5x82x4	1
23	A153 1258	Platen Cover Bracket - Right	1
24	A153 1259	Platen Cover Bracket - Left	1

Index No.	Part No.	Description	Q'ty Per Assembly
101	1105 0192	Locking Support	
102	0951 3006B	Philips Screw With Flat Washer-m3x6	
103	1102 4473	Ct Connector - 2p	
104	1102 4052	Optional Connector	
105	0434 0352W	Pan Head Self-tapping Screw - M4x35	
106	0414 0142B	Binding Self Tapping Screw - M4x14	
107	0964 4008B	Tapping Screw With Flat Washer-m4x8	
108	0443 0060B	Hexagon Tapping Screw - M3x6	
109	0801 0137	Philips Pan Head Screw With Spring	
110	0323 0060B	Philips Sunk Screw - M3x6	
111	1107 0472	Circuit Breaker - 250v/8a	
112	0314 0300B	Philips Pan Head Screw - M4x30	
113	1105 0197	Wire Saddle	

35. FRAME SECTION 1 (A208/A210/A211)

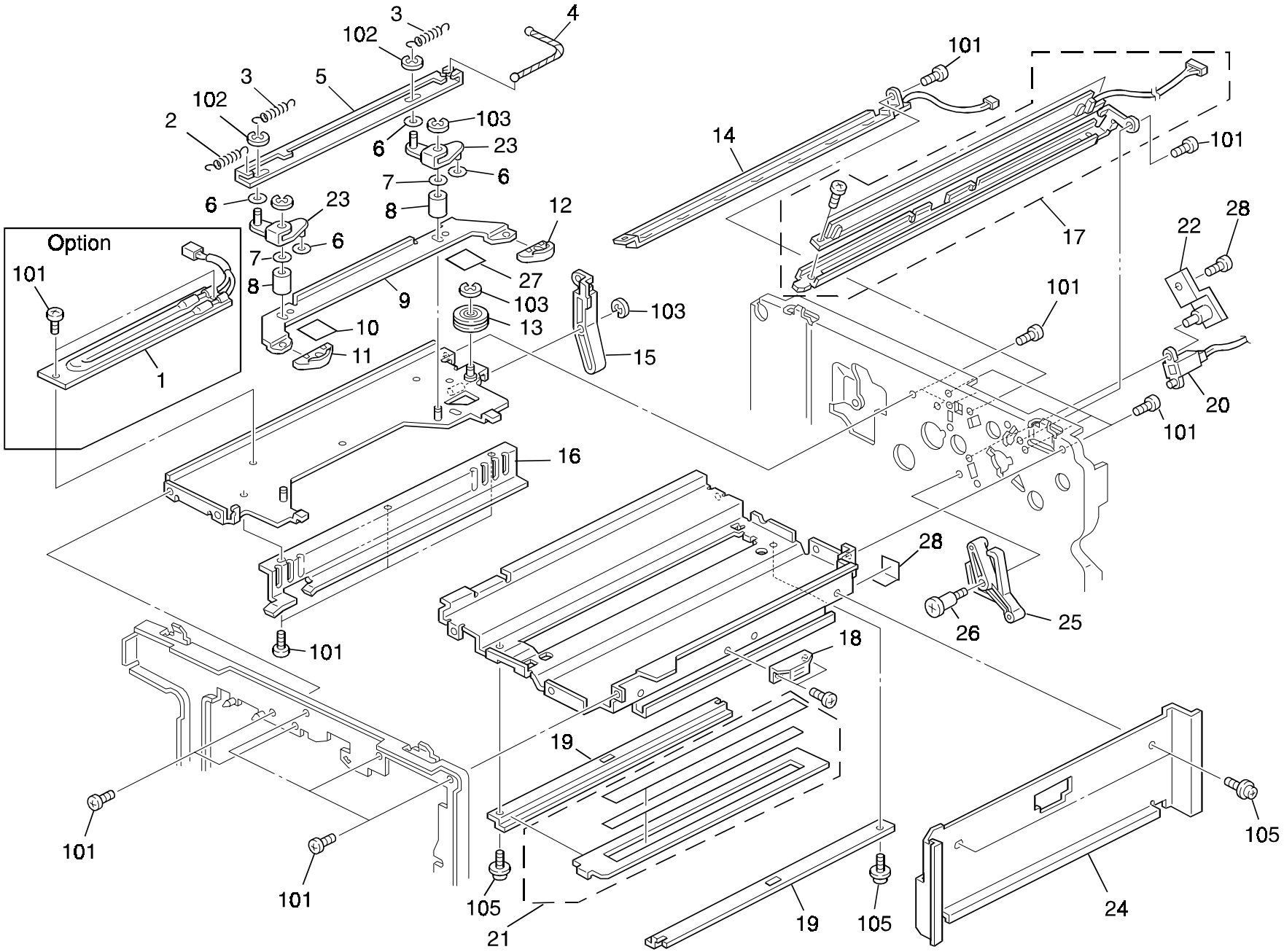

35. FRAME SECTION 1 (A208/A210/A211)

Index No.	Part No.	Description	Q'ty Per Assembly
1	AX40 0094	Anticondensation Heater - 120V 9W (Option)	1
1	AX40 0095	Anticondedsation Heater - 230V 9W (Option)	1
2	AA06 2291	Pressure Spring	1
3	AA06 2285	Release Spring	2
4	AA05 1025	Release Wire	1
5	A153 2072	Release Link Lever	1
6	A204 2187	Spacer-11mm	4
7	A204 2188	Spacer-15mm	2
8	AA13 2186	Collar	2
9	A153 2073	Guide Rail	1
10	A153 2084	Spacer	2
11	A153 2075	Front Roller Cam	1
12	A153 2076	Rear Roller Cam	1
13	A153 2060	Wire Pulley	1
14	A153 2090	Quenching Lamp	1
15	A153 2071	Cam Lever	1
16	A153 2083	Left Drum Rail	1
17	A153 2080	Eraser Lamp	1
18	AG07 0004	Magnetic Catch	6
19	A204 1674	Shield Glass Guide	2
20	A153 5339	Density Sensor Harness	1
21	A204 1677	Optical Filter	1
22	A153 3598	Pin Bracket	1
23	A153 2061	Release Lever	1
24	A153 1350	Right Middle Cover	1
25	A153 3920	Belt Release Arm	1
26	AA14 3444	Stepped Screw	1
27	A153 2085	Spacer	1
28	A153 1676	Harness Guard Seal	1

Index No.	Part No.	Description	Q'ty Per Assembly
101	0434 0060B	Pan Head Self-tapping Screw - M4x6	
102	0720 0030E	Retaining Ring - M3	
103	0720 0040E	Retaining Ring - M4	
104	0964 4006B	Tapping Screw With Flat Washer-m4x6	
105	0313 0040B	Philips Pan Head Screw - M3x4	

36. FRAME SECTION 2 (A208/A210/A211)

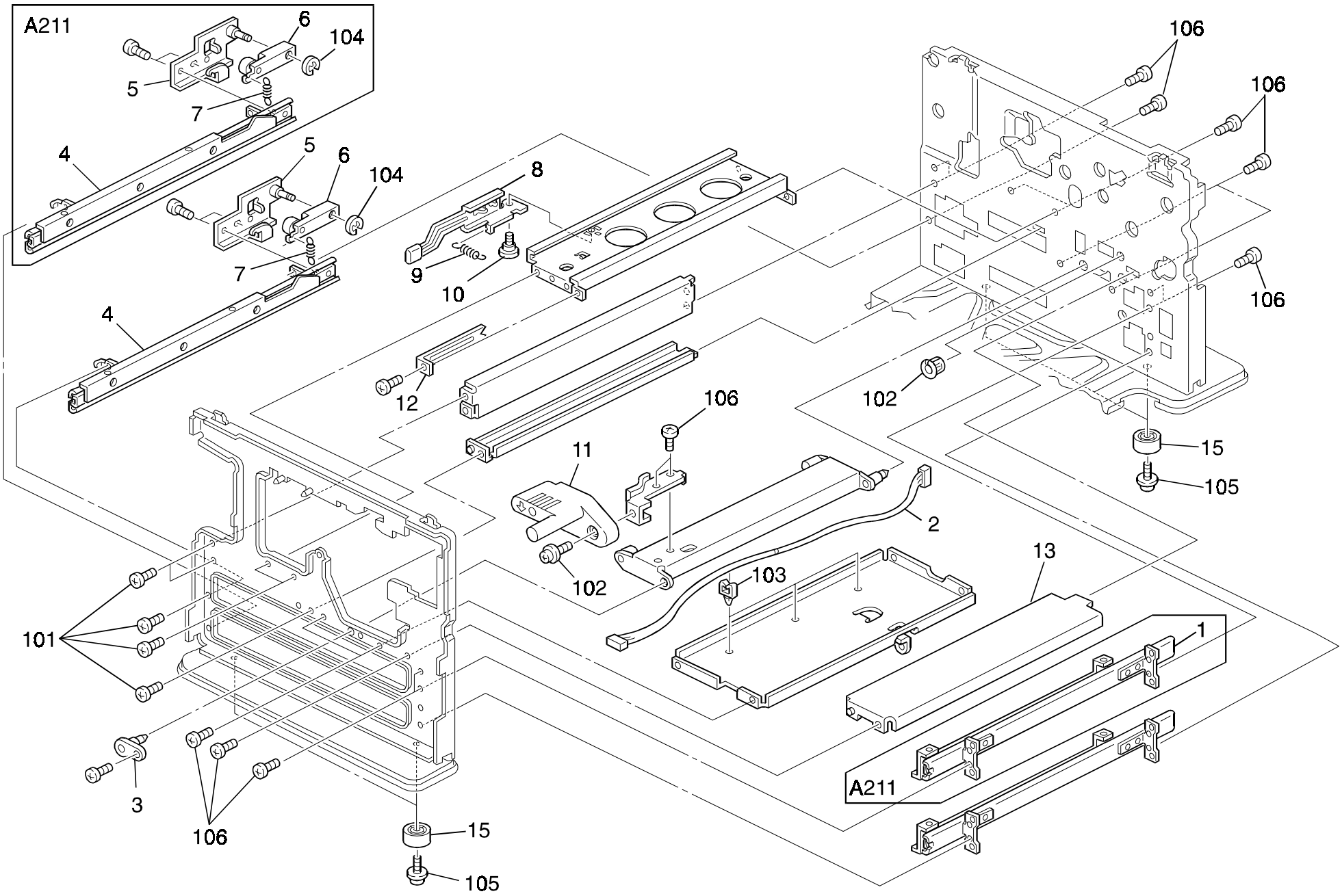

36. FRAME SECTION 2 (A208/A210/A211)

Index No.	Part No.	Description	Q'ty Per Assembly
1	A134 4901	Duplex Right Rail	1
2	A153 5334	Ct Harness - 7p	1
3	A157 3900	Support Plate	1
4	A134 2921	Left Slide Rail	1
5	A134 2926	Paper Feed Lock Bracket	2
6	A096 6266	Tray Lock Arm	2
7	AA06 0534	Tray Lock Spring - 19mm	2
8	A153 4352	Fusing Lock Lever	1
9	5442 4467	Spring - Stripper Pawl Plate	2
10	5203 1686	Screw - SLID RAIL	1
11	A153 3930	Belt Unit Handle	1
12	A134 4355	Fusing Unit Stopper	1
13	A134 2930	Right Slide Rail	2
14	A134 2929	Slide Rail Bracket - Front Right	1
15	AH01 0007	Rubber Foot	4
16	A130 2929	Slide Rail Bracket	1

Index No.	Part No.	Description	Q'ty Per Assembly
101	0434 0060B	Pan Head Self-tapping Screw - M4x6	
102	1106 0193	Bushing - 7.9mm	
103	1105 0199	Clamp	
104	0720 0040E	Retaining Ring - M4	
105	0960 4010B	Philips Flange Screw - M4 x 10	
106	0434 0060B	Pan Head Self-tapping Screw - M4x6	

37. MAIN CONTROL BOARD (A208/A210/A211)

CAPACITOR

SYMBOL NO.	INDEX NO.
C101	197
C102	196
C103	196
C104	202
C105	204
C106	196
C107	201
C108	198
C109	204
C110	198

SYMBOL NO.	INDEX NO.
C111	198
C112	201
C113	201
C114	202
C115	202
C116	201
C117	201
C118	201
C119	202
C120	202

SYMBOL NO.	INDEX NO.
C121	200
C122	201
C123	201
C124	202
C125	202
C126	202
C127	202
C128	202
C129	202
C130	202

SYMBOL NO.	INDEX NO.
C131	204
C132	202
C133	168
C134	198
C135	202
C136	204
C137	198
C138	202
C139	201
C140	204

SYMBOL NO.	INDEX NO.
C141	202
C142	202
C143	202
C144	202
C145	202
C146	202
C147	201
C148	202
C149	201
C150	202

SYMBOL NO.	INDEX NO.
C151	204
C152	203
C153	201
C154	204
C155	202
C156	204
C157	201
C158	204
C159	201
C160	202

SYMBOL NO.	INDEX NO.
C161	202
C162	201
C163	203
C164	202
C165	202
C166	201
C167	202
C168	199
C169	199
C170	204

CAPACITOR

SYMBOL NO.	INDEX NO.
C171	202
C172	201
C173	202
C174	202
C175	204
C176	202
C177	201
C178	202
C179	204
C180	202

SYMBOL NO.	INDEX NO.
C181	204
C182	202
C183	202
C184	202
C185	202
C186	202
C187	202
C188	202
C189	202
C190	204

SYMBOL NO.	INDEX NO.
C191	200
C192	200
C193	200
C194	200

CONNECTOR

SYMBOL NO.	INDEX NO.
CN101	128
CN102	116
CN103	101
CN104	111
CN105	129
CN106	115
CN107	105
CN108	103
CN109	126
CN110	130

SYMBOL NO.	INDEX NO.
CN111	132
CN112	106
CN113	123
CN114	116
CN115	107
CN116	105
CN117	114
CN118	109
CN119	118
CN120	108

SYMBOL NO.	INDEX NO.
CN121	133
CN122	112
CN123	124
CN124	119
CN125	104
CN126	127
CN127	120
CN128	108
CN129	122
CN130	130

SYMBOL NO.	INDEX NO.
CN131	118
CN132	129
CN133	102
CN134	109
CN135	130
CN136	131
CN137	107
CN138	117
CN139	122
CN140	110

CONNECTOR

SYMBOL NO.	INDEX NO.
CN141	103
CN142	113
CN143	125
CN144	-
CN145	134
CN146	-
CN147	-
CN148	-
CN149	-
CN150	121

DAY

SYMBOL NO.	INDEX NO.
DAY101	144
DAY102	139
DAY103	139
DAY104	144
DAY105	144
DAY106	139
DAY107	139
DAY108	139
DAY109	139
DAY110	139

DIODE

SYMBOL NO.	INDEX NO.
D101	141
D102	141
D103	140

FIL

SYMBOL NO.	INDEX NO.
FIL101	167

IC

SYMBOL NO.	INDEX NO.
IC101	145
IC102	145
IC103	155
IC104	156
IC105	145
IC106	159
IC107	150
IC108	3
IC109	149
IC110	145

SYMBOL NO.	INDEX NO.
IC111	2
(socket)	135
IC112	160
IC113	152
IC114	145
IC115	148
IC116	147
IC117	156
IC118	154
IC119	151

OSC

SYMBOL NO.	INDEX NO.
OSC101	161

Q

SYMBOL NO.	INDEX NO.
Q101	136
Q102	138
Q103	136
Q104	137
Q105	137
Q106	146
Q107	158
Q108	153
Q109	146
Q110	146

SYMBOL NO.	INDEX NO.
Q111	146
Q112	146
Q113	153
Q114	153

REG

SYMBOL NO.	INDEX NO.
REG101	157

RESISTOR

SYMBOL NO.	INDEX NO.
R101	169
R102	176
R103	176
R104	169
R105	182
R106	173
R107	172
R108	163
R109	181
R110	173

SYMBOL NO.	INDEX NO.
R111	170
R112	162
R113	172
R114	162
R115	172
R116	173
R117	173
R118	173
R119	182
R120	181

SYMBOL NO.	INDEX NO.
R121	179
R122	172
R123	173
R124	179
R125	181
R126	173
R127	181
R128	182
R129	182
R130	182

SYMBOL NO.	INDEX NO.
R131	173
R132	182
R133	182
R134	182
R135	173
R136	182
R137	173
R138	170
R139	170
R140	173

37. MAIN CONTROL BOARD (A208/A210/A211)

RESISTOR

SYMBOL NO.	INDEX NO.
R141	173
R142	173
R143	173
R144	182
R145	170
R146	170
R147	170
R148	170
R149	170
R150	184

SYMBOL NO.	INDEX NO.
R151	176
R152	172
R153	169
R154	173
R155	182
R156	189
R157	171
R158	172
R159	172
R160	172

SYMBOL NO.	INDEX NO.
R161	172
R162	179
R163	172
R164	171
R165	173
R166	181
R167	177
R168	182
R169	182
R170	179

SYMBOL NO.	INDEX NO.
R171	172
R172	192
R173	191
R174	173
R175	172
R176	185
R177	177
R178	181
R179	172
R180	179

SYMBOL NO.	INDEX NO.
R181	179
R182	179
R183	183
R184	193
R185	193
R186	187
R187	191
R188	182
R189	191
R190	172

SYMBOL NO.	INDEX NO.
R191	172
R192	172
R193	173
R194	173
R195	173
R196	178
R197	194
R198	178
R199	178
R200	183

SYMBOL NO.	INDEX NO.
R201	–
R202	190
R203	172
R204	178
R205	188
R206	195
R207	186
R208	173
R209	173
R210	173

RESISTOR

SYMBOL NO.	INDEX NO.
R211	178
R212	178
R213	173
R214	173
R215	182
R216	182
R217	171
R218	173
R219	182
R220	173

SYMBOL NO.	INDEX NO.
R221	174
R222	172
R223	172
R224	175
R225	173
R226	182
R227	182
R228	172
R229	–
R230	–

SYMBOL NO.	INDEX NO.
R231	180
R232	173
R233	173
R234	173
R235	173
R236	179
R237	173
R238	182
R239	182
R240	182

SYMBOL NO.	INDEX NO.
R241	182
R242	171
R243	170
R244	170
R245	173
R246	182
R247	173
R248	181
R249	182
R250	182

SYMBOL NO.	INDEX NO.
R251	173
R252	182
R253	182
R254	182
R255	182
R256	172

RN

SYMBOL NO.	INDEX NO.
RN101	164
RN102	166
RN103	164
RN104	166
RN105	166
RN106	164
RN107	166
RN108	166
RN109	164
RN110	164

SYMBOL NO.	INDEX NO.
RN111	166
RN112	164
RN113	166
RN114	166
RN115	164
RN116	164
RN117	164
RN118	164
RN119	164
RN120	164

37. MAIN CONTROL BOARD (A208/A210/A211)

RN

SYMBOL NO.	INDEX NO.
RN121	164
RN122	166
RN123	165
RN124	166
RN125	164
RN126	166
RN127	166
RN128	166
RN129	164
RN130	166

SYMBOL NO.	INDEX NO.
RN131	166
RN132	166
RN133	166
RN134	166
RN135	164
RN136	164
RN137	166
RN138	166
RN139	166
RN140	166

SYMBOL NO.	INDEX NO.
RN141	164
RN142	164
RN143	164
RN144	164
RN145	164
RN146	164
RN147	166
RN148	166
RN149	166
RN150	166

ZD

SYMBOL NO.	INDEX NO.
ZD101	143
ZD102	142
ZD103	142
ZD104	142

37. MAIN CONTROL BOARD (A208/A210/A211)

Rev. 04/25/2000

Index No.	Part No.	Description	Q'ty Per Assembly
*	A204 5101	Main Control Board (NA)	1
*	A204 5181	Main Control Board (EU/ASIA/TWN)	1
1	A153 5114	Ram Board	1
2	A204 5121	Ic-4m X16 100ns	1
3	A204 5117	IC - RF5A230	1
101	1102 3822	Connector - 20p	
102	1102 4201	Connector - 2p	
103	1102 4202	Connector - 3p	
104	1102 4203	CT Header - 4p	
105	1102 4205	CT Header - 6p	
106	1102 4206	Connector - 7p	
107	1102 4207	Connector - 8p	
108	1102 4208	Connector - 9p	
109	1102 4210	Connector - 11p	
110	1102 4211	CT Header - 12p	
111	1102 4212	CT Header - 15p	
112	1102 4497	Connector - 13p	
113	1102 4619	Connector - 2p	
114	1102 4621	CT Header - 4p	
115	1102 4623	CT Connector - 6p	
116	1102 4624	CT Connector - 7p	
117	1102 4625	Ct Connector 8p	
118	1102 4628	Connector - 11p	
119	1102 4629	Connector - 12p	
120	1102 4630	CT Connector	
121	1102 4631	Ct Connector - 2p	
122	1102 4637	Ct Connector - 8p	
123	1102 4639	Ct Connector - 10p	
124	1102 4640	Ct Connector - 11p	
125	1102 4643	Ct Connector - 2p	
126	1102 4651	Ct Connector - 10p	
127	1102 5007	CT Header - 14p	
128	1102 5305	Connector - 6p	
129	1102 5605	Connector - 13p	
130	1102 5718	Optical Fiber Connector	
131	1102 6408	Connector - 30p	
132	1103 1772	Pin Header - 6p	
133	1103 1774	Pin Header - 8p	
134	1104 0588	Dip Socket - 28p	
135	1104 0612	Connector - 40p	
136	1400 0369	Transistor - 2sa1213y	
137	1400 0550	Transistor - BA1L3N	

Index No.	Part No.	Description	Q'ty Per Assembly
138	1400 0558	Transistor - 2sd780	
139	1402 0708	Diode - 1SS272	
140	1402 0780	Diode - 200V 1A 11ES2	
141	1402 1030	Diode - 1SS250	
142	1402 1378	Diode - PTZ12A	
143	1402 1380	Diode - PTZ 6.2A	
144	1402 1387	Diode - HSM123	
145	1407 2187	TTLIC - SN74LS07NS	
146	1407 2231	IC - TD62308AF	
147	1407 2496	IC - M5261L	
148	1407 3173	Driver - 16bit - M66311fp	
149	1407 3257	Cmosic - Tc74hc14af	
150	1407 3708	IC - SLA7026M	
151	1407 3764	IC - TC7SU04F	
152	1407 4164	IC - MMID75XF	
153	1407 4316	IC - TD52308BF	
154	1407 4686	IC - M54992FP	
155	1407 4687	IC - TA8083F	
156	1408 0595	IC - NJM2904M	
157	1408 0629	IC - 78M12A	
158	1408 0874	Transistor Array - M54587fp	
159	1408 1065	Comparator Ba10339f	
160	1408 1135	IC - X9C104S	
161	1503 0777	Oscillator - 32mhz 9.6pf	
162	1600 1499	Resistor - 0.33 Ω ±2% 2W	
163	1600 1660	Resistor - ERG2SJ101	
164	1601 7793	Resistor - 10K Ω	
165	1601 7798	Resistor Array - 68Ω ±55 1/16W	
166	1601 7799	Resistor Array - 4.7KΩ ±5% 1/16W	
167	1602 7032	Filter - EMI-2200pf	
168	1604 4511	Capacitor - 0.15µF ±10% 50V	
169	1630 1101	Resistor - 100 Ω 1/4W ±5%	
170	1630 1161	Resistor - 160 Ω ±5% 1/8W	
171	1630 3101	Resistor - 100 Ω 1/10W	
172	1630 3102	Resistor - 1k Ω 1/10W ±5%	

Index No.	Part No.	Description	Q'ty Per Assembly
173	1630 3103	Resistor - 10k Ω 1/10W ±5%	
174	1630 3104	Resistor - 100k Ω 1/10W ±5%	
175	1630 3155	Resistor - 1.5MΩ ±5% 1/10W	
176	1630 3222	Resistor - 2.2k Ω 1/10W ±5%	
177	1630 3223	Resistor - 22k Ω 1/10W	
178	1630 3242	Resistor - 2.4k Ω ±5% 1/10W	
179	1630 3330	Resistor - 33 Ω ±5% 1/10W	
180	1630 3334	Resistor - 330K Ω ±5% 1/10W	
181	1630 3393	Resistor - 39K Ω 1/10W	
182	1630 3472	Resistor - 47K Ω 1/10W ±5%	
183	1630 3473	Resistor - 47K Ω 1/10W ±5%	
184	1630 3682	Resistor - 6.8K Ω 1/10W	
185	1630 3824	Resistor - 820 Ω ±5% 1/10W	
186	1633 1000	Resistor - 100 Ω ±1% 1/10W	
187	1633 1002	Resistor - 10k Ω ±1% 1/10W	
188	1633 2150	Resistor - 215Ω ±1% 1/10W	
189	1633 4701	Resistor - 4.7k Ω ±1% 1/10W	
190	1633 4702	Resistor - 47k Ω ±1/10W	
191	1633 4871	Resistor - 4.87k Ω ±1% 1/10W	
192	1633 5100	Resistor - 510 Ω ±1% 1/10W	
193	1633 5231	Resistor - 5.23k Ω ±1% 1/10W	
194	1633 6490	Resistor - 649 Ω ±1% 1/10W	
195	1633 8209	Resistor - 820Ω ±1% 1/10W	
196	1640 5101	Capacitor - 100µF ±20% 50V	
197	1640 5470	Capacitor - 47µF ±20% 50V	
198	1642 5100	Capacitor - 10µF ±20% 50V	
199	1660 1100	Capacitor - 10PF 50V	
200	1660 3470	Capacitor - 47PF ±5% 50V	
201	1660 3471	Capacitor - 470PF 50V	
202	1660 5103	Capacitor - 10000PF ±10% 50V	
203	1660 5222	Capacitor - 2200PF ±10% 50V	
204	1660 7104	Capacitor - 100000PF 50V	

38. DECAL AND DOCUMENT (A208/A210/A211)

1

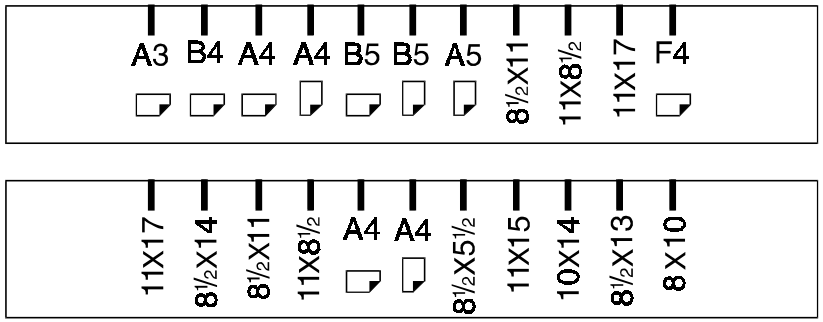

2

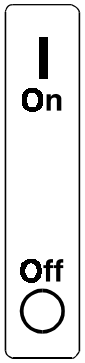

6

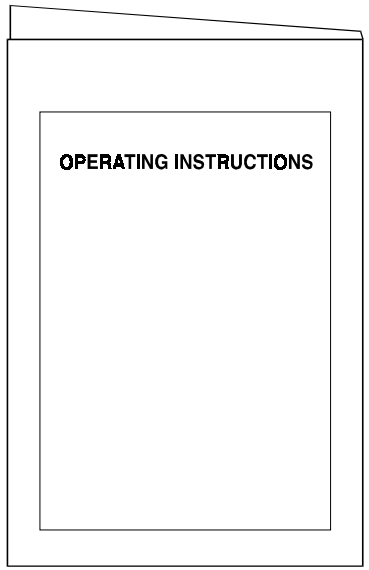

3

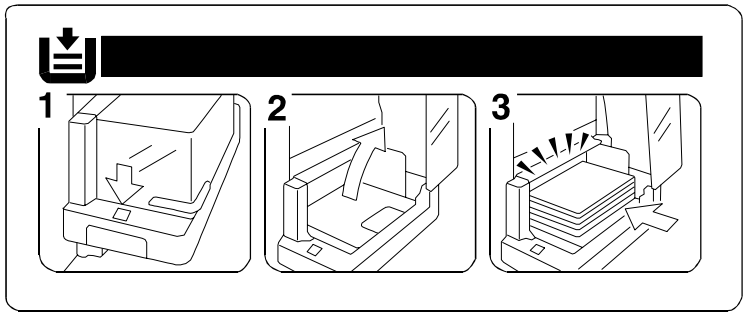

4



5

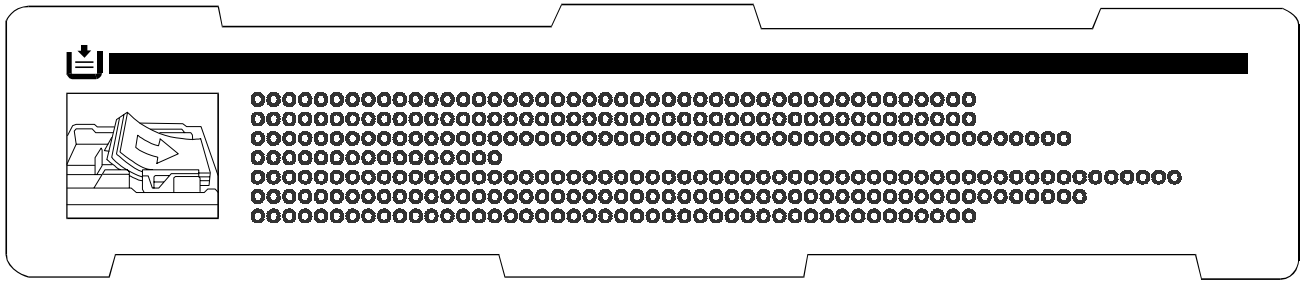

7

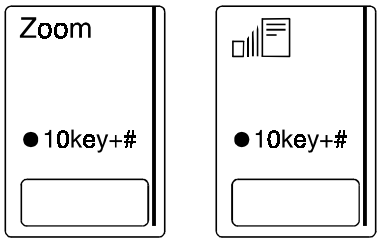

8

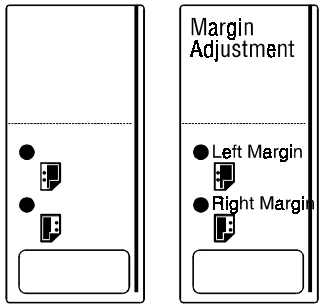

9

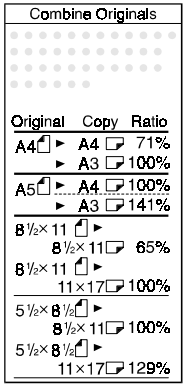

10

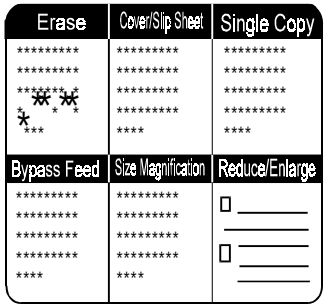

11

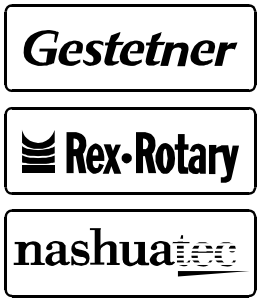

12

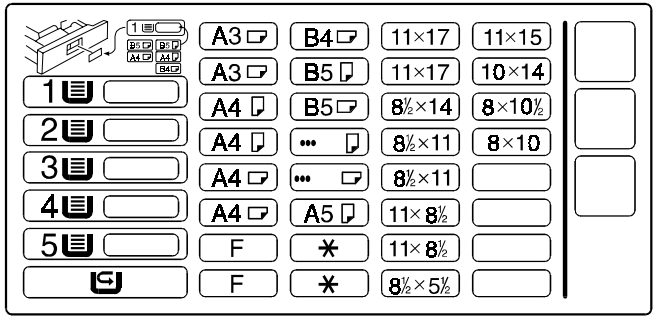

14

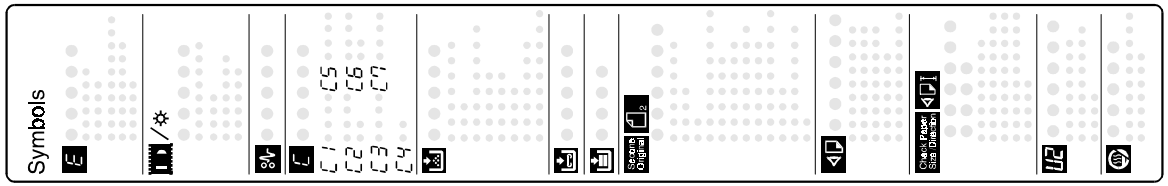

15

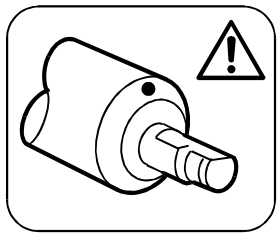

16



17

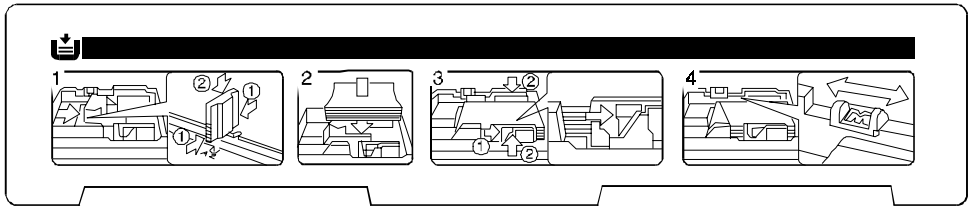

18

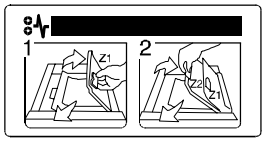

19

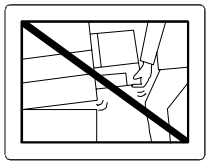

38. DECAL AND DOCUMENT (A208/A210/A211)

Index No.	Part No.	Description	Q'ty Per Assembly
*	A204 1386	Multi Decal - German (RIC/NRG)	1
*	A204 1387	Multi Decal - French (RIC/NRG)	1
*	A204 1388	Multi Decal - Spanish (RIC/NRG)	1
*	A204 1389	Multi Decal - Italian (RIC/NRG)	1
*	A204 1396	Multi Decal - German (INF)	1
*	A204 1397	Multi Decal - French (INF)	1
*	A204 1398	Multi Decal - Spanish (INF)	1
*	A204 1399	Multi Decal - Italian (INF)	1
1	A153 2995	Decal Paper Size - LT/DLT	1
1	A153 2996	Decal Paper Size - A4/A3	1
2	AA00 1373	Decal - Main Switch	1
3	A155 6113	Decal - Paper Set	1
4	A153 1285	Emblem (RIC)	1
4	A156 6413	Emblem (SVN)	1
4	A153 6423	Support Cover (INF)	1
5	A134 2997	Decal - Paper Setting	1
6	A208 8607	Operating Instructions - English LT (RIC)	1
6	A208 8650	Operating Instructions - English LT (SNV)	1
6	A208 8660	Operating Instructions - English A4 (INF)	1
6	A208 8690	Operating Instructions - English A4 (NRG)	1
6	A208 8697	Operating Instructions - English LT (NRG)	1
6	A208 8661	Operating Instructions - Germ (INF)	1
6	A208 8662	Operating Instructions - French (INF)	1
6	A208 8663	Operating Instructions - Italian (INF)	1
6	A208 8664	Operating Instructions - Spanish (INF)	1
7	A153 1475	Decal - 10key Zoom - LT/DLT	1
7	A153 1478	Decal - 10key Zoom - A4/A3	1
8	A153 1476	Decal - Margin Adjustment - LT/DLT	1
8	A153 1479	Decal - Margin Adjustment - A4/A3	1
9	A156 1495	Decal Copy Ratio	1
10	A204 1486	Operation Panel Sheet - LT	1
10	A204 1487	Operation Panel Sheet - A4	1
11	C225 2867	Decal - Cover - Panel - Nashua	1
11	C225 2866	Decal - Key Top Cover	1
11	A153 6409	Decal - Keytop Cover	1

Index No.	Part No.	Description	Q'ty Per Assembly
12	AA00 2209	Decal - Paper Size	1
13	A208 6404	Model Name Plate - GES (A208)	1
13	A208 6407	Model Name Plate - NST (A208)	1
13	A208 6414	Model Name Plate - REX (A208)	1
13	A210 6404	Model Name Plate - GES (A210)	1
13	A210 6407	Model Name Plate - NST (A210)	1
13	A210 6414	Model Name Plate - REX (A210)	1
13	A211 6404	Model Name Plate - GES (A211)	1
13	A211 6407	Model Name Plate - NSA (A211)	1
13	A211 6414	Model Name Plate - REX (A211)	1
14	A153 1365	Symbol Explanation Decal	1
15	A204 2155	Decal - Caution	1
16	AA00 1389	Large Decal - Energy Star	1
17	A134 2997	Decal - Paper Setting	1
18	A134 4884	Decal - Duplex Misfeed Removal	1
19	A155 6114	Caution Decal - LCT	1

39. SPECIAL TOOLS (A208/A210/A211)

1

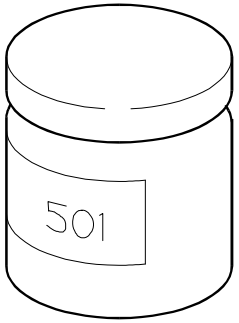

2

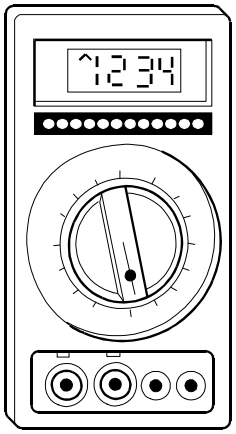

3

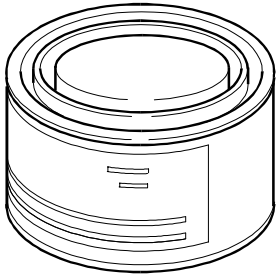

4

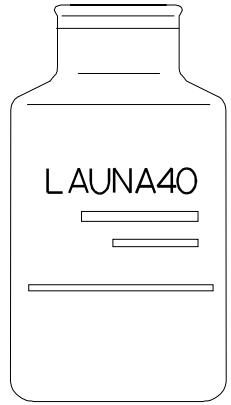

5

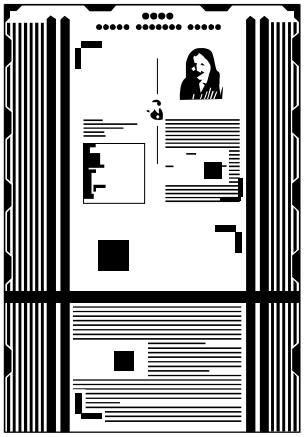

6

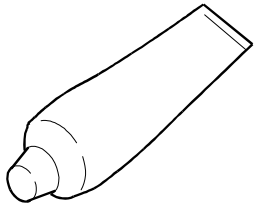

7

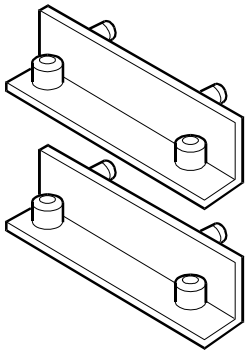

8

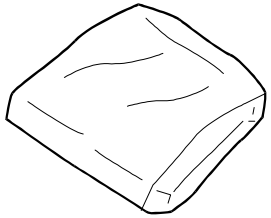

9

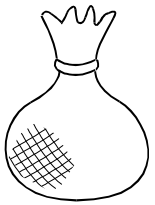

10

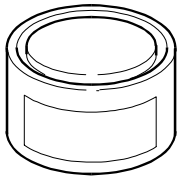

39. SPECIAL TOOLS (A208/A210/A211)

Rev. 08/03/2000

Index No.	Part No.	Description	Q'ty Per Assembly
1	5203 9501	Grease 501	1
2	5420 9507	Digital Multimeter - Beckman	1
3	5447 9078	Heat Resisting Grease Mt-78	1
4	5442 9103	Launa Oil 40	1
5	5420 9516	Test Chart - Os - A3 (10psc/set)	1
6	A008 9502	Silicone Grease - G40m	1
7	A153 9001	Scanner Adjustment Tool	2
8	A153 9004	Wiping Cloth(100pcs/set)	1
9	5442 9101	Setting Powder	1
10	A257 9300	Grease Barrierta S552R	1

Index No.	Part No.	Description	Q'ty Per Assembly

A208/A211
PARTS INDEX

This section instructs you as to the numbers and names of the parts of this machine.

PM Parts Index

Section Name	Part No.	Description in Service Manual	Description in Parts Catalog	Q'ty Per Assembly	Page and Index No
By-pass Feed Section (A208/A210/A211)	5447 2927	Bottom Plate Pad (By-pass feed)	Friction Pad - B	1	15- 15
Paper Tray Section (A208/A210/A211)	AF01 3014	Bottom Plate Pad (Paper Tray)	Bottom Plate Pad	1	17- 9
LCT Unit 1 (A210/A211)	A421 2543	Bottom Plate Pad (LCT)	Friction Pad	1	19- 13
Paper Feed Section 1 (A208/A210/A211)	AF03 0024	Pick-up Roller (By-pass feed,LCT)	Pick-up Roller	1	23- 10
Duplex Tray 2 (A211)	AF03 1024	Feed Roller	Feed Roller (A210/A211)	1	23- 7
Paper Feed Section 1 (A208/A210/A211)	AF03 1025	Feed Roller (By-pass feed,LCT)	Feed Roller (A208)	1	23- 7
	AF03 2025	Separation Roller(By-pass feed,LCT)	Separation Roller	1	23- 21
Paper Feed Section 2 (A208/A210/A211)	AF03 0025	Pick-up Roller	Pick-up Feed Roller	1	25- 3
	AF03 1026	Feed Roller	Paper Feed Roller	1	25- 39
	AF03 2027	Separation Roller	Separation Roller	1	25- 25
Paper Feed Section 3 (A208/A210/A211)	AF03 0025	Pick-up Roller	Pick-up Feed Roller	1	27- 3
	AF03 1026	Feed Roller	Paper Feed Roller	1	27- 39
	AF03 2027	Separation Roller	Separation Roller	1	27- 25
Development Unit (A208/A210/A211)	A204 3080	Development Filter	Development Filter	1	41- 18
Drum Unit 1 (A208/A210/A211)	A153 2135	Drum Roller Terminal	Charge Roller Terminal Ass'y	1	43- 8
	A204 2120	Drum Charge Roller Cleaner	Drum Charge Roller Cleaner	1	43- 25
	AD02 7004	Drum Charge Roller	Charge Roller	1	43- 13
Drum Unit 2 (A208/A210/A211)	A153 2277	Cleaning Blade	Cleaning Blade	1	45- 5
	AD02 5019	Pick-off Pawl	Drum Pick-off Pawl	2	45- 2
Transfer Unit (A208/A210/A211)	A153 3892	Transfer Belt Cleaning Blade	Belt Cleaning Blade	1	47- 17
	A157 3861	Transfer Belt	Transfer Belt	1	47- 2
Fusing Unit 1 (A208/A210/A211)	AE01 1027	Hot Roller	Hot Roller	1	49- 22
	AE04 4019	Hot Roller Stripper	Hot Roller Stripper	5	49- 20
Fusing Unit 2 (A208/A210/A211)	AE02 0050	Pressure Roller	Pressure Roller	1	51- 9
	AE04 2030	Cleaning Roller	Cleaning Roller	1	51- 5
Duplex Tray 4 (A211)	AF01 3003	Bottom Plate Pad	Bottom Plate Pad - Duplex	1	59- 2

Part No.	Description	Page and Index No.
A211 1277	Front Cover (A211) (RIC)	9- 2
A211 5461	Operation Panel Board - LT (A211)	13- 26
A211 5466	Operation Panel Board - A4 (A211)	13- 26
A211 6404	Model Name Plate - GES (A211)	9- 36
A211 6404	Model Name Plate - GES (A211)	85- 13
A211 6407	Model Name Plate - NSA (A211)	9- 36
A211 6407	Model Name Plate - NSA (A211)	85- 13
A211 6412	Front Cover (A211) (SVN)	9- 2
A211 6414	Model Name Plate - REX (A211)	9- 36
A211 6414	Model Name Plate - REX (A211)	85- 13
A211 6422	Front Cover (A211) (INF)	9- 2

Part No.	Description	Page and Index No
AA00 1373	Decal - Main Switch	9- 10
AA00 1373	Decal Main Switch	9- 37
AA00 1373	Decal - Main Switch	85- 2
AA00 1389	Large Decal - Energy Star	9- 35
AA00 1389	Large Decal - Energy Star	85- 16
AA00 2209	Decal - Paper Size	85- 12
AA01 2080	Dust Filter	9- 26
AA04 3364	Timing Belt - S3M300	69- 17
AA04 3368	Timing Belt - S3M609	69- 28
AA04 3374	Timing Belt - S2M800	59- 17
AA04 3386	Timing Belt - 40S2M1224	37- 2
AA04 3387	Timing Belt - 40S2M984	37- 1
AA04 3388	Timing Belt - 60S2M180	37- 11
AA04 3390	Timing Belt - 40S2M192	55- 3
AA04 3392	Drum Timing Belt	65- 3
AA04 3396	Timing Belt - 60S3M366	65- 15
AA04 3397	Timing Belt - 30S3M300	65- 18
AA04 3420	Timing Belt - 80S3M519	65- 4
AA04 3430	Timing Belt - 160S2M330	65- 6
AA04 3456	Timing Belt - S3M167	21- 12
AA05 0086	Lens Drive Wire - Horizontal	31- 20
AA05 0087	Lens Drive Wire - Vertical	37- 26
AA05 1024	Release Wire	65- 20
AA05 1024	Release Wire	71- 4
AA05 1025	Release Wire	77- 4
AA06 0103	Solenoid Spring	49- 18
AA06 0228	Spring - Transfer Drum Cleaning Sol	65- 11
AA06 0228	Spring - Transfer Drum Cleaning Sol	69- 14
AA06 0453	Relay Adjusting Spring	39- 31
AA06 0523	Pick-up Pressure Spring	25- 18
AA06 0523	Pick-up Pressure Spring	27- 18
AA06 0534	Tray Lock Spring - 19mm	79- 7
AA06 0572	Pressure Spring	69- 6
AA06 0573	Release Spring	69- 4
AA06 0575	Release Spring	25- 30

Part No.	Description	Page and Index No.
AA06 0575	Release Spring	27- 30
AA06 0577	Release Spring	25- 10
AA06 0577	Release Spring	27- 10
AA06 0593	Spring	57- 9
AA06 0595	Tension Spring	37- 12
AA06 0598	Pressure Spring	45- 10
AA06 0636	Pressure Spring	25- 28
AA06 0636	Pressure Spring	27- 28
AA06 0658	Spring	51- 4
AA06 0664	Spring - Tightener	69- 11
AA06 2285	Release Spring	77- 3
AA06 2286	Pressure Spring	43- 10
AA06 2291	Pressure Spring	77- 2
AA06 2293	Roller Cover Spring	67- 18
AA06 3239	Spring - Handle	19- 20
AA06 3366	Chuck Spring	39- 8
AA06 3367	Pressure Spring	39- 12
AA06 3370	Spring	59- 16
AA06 3487	Spring - 10mm	25- 34
AA06 3487	Spring - 10mm	27- 34
AA06 3499	Pressure Spring	23- 25
AA06 3523	Adjust Spring	35- 21
AA06 3532	Spring	75- 16
AA06 3538	Spring - 10mm	15- 8
AA06 3539	Spring - Registration Roller	29- 5
AA06 3552	Driven Roller Spring	67- 20
AA06 6246	Spring	41- 24
AA06 6247	Torsion Spring	47- 26
AA06 6260	Shutter Spring	39- 17
AA06 6274	Spring	61- 12
AA06 6274	Spring	63- 8
AA06 6284	Torsion Spring	39- 22
AA06 6286	Pressure Spring	43- 22
AA08 0034	Bushing - 4x5x7	19- 37
AA08 0037	Bushing - 6 Mm	23- 24

Part No.	Description	Page and Index No
AA08 0156	Bushing - M4	25- 33
AA08 0156	Bushing - M4	27- 33
AA08 0171	Bushing	29- 7
AA08 0172	Bushing	29- 6
AA08 0186	Bushing - 6mm	41- 12
AA08 0188	Bushing - 5mm	41- 8
AA08 0191	Front Roller Bushing	43- 18
AA08 0195	Bias Roller Bushing - Rear	47- 11
AA08 0197	Rear Roller Bushing	43- 9
AA08 0209	Rear Roller Housing	43- 11
AA08 0219	Rear Roller Bushing	43- 5
AA08 2046	Bushing - 6x12x6	25- 13
AA08 2046	Bushing - 6x12x6	27- 13
AA08 2047	Bushing - 8x16x7	25- 20
AA08 2047	Bushing - 8x16x7	27- 20
AA08 2047	Bushing - 8x16x7 (A211)	29- 23
AA08 2047	Bushing - 8x16x7	67- 3
AA08 2058	Bushing - 6x10x9mm	61- 2
AA08 2058	Bushing - 6x10x9mm	63- 1
AA08 2061	Bias Roller Bushing - Front	47- 6
AA08 3009	Clutch Roller - 8x18x11	25- 12
AA08 3009	Clutch Roller - 8x18x11	27- 12
AA08 3009	Clutch Roller - 8x18x11 (A211)	29- 21
AA08 3010	Clutch Roller - 6x14x10	23- 13
AA11 1208	Paper End Sensor Feeler	55- 5
AA12 0067	Anti Static Brush	53- 16
AA12 0071	Exit Antistatic Brush	61- 16
AA12 0071	Exit Antistatic Brush	63- 4
AA13 2184	Motor Cushion	57- 16
AA13 2186	Collar	77- 8
AA14 0291	Bottom Plate Shaft	59- 6
AA14 0321	Pick-off Pawl Shaft	45- 4
AA14 0542	Feed Roller Shaft	25- 6
AA14 0542	Feed Roller Shaft	27- 6
AA14 0560	Joint Shaft	45- 26

Part No.	Description	Page and Index No.
AA14 0575	Paper Feed Shaft	23- 11
AA14 0576	LCT Drive Shaft	21- 15
AA14 0599	Scanner Drive Shaft	37- 4
AA14 3219	Stepped Screw	23- 35
AA14 3301	Stepped Screw - M3x4	75- 11
AA14 3307	Stepped Screw - M3x4	57- 17
AA14 3410	Stepped Screw - M4	39- 11
AA14 3416	Stepped Screw - M4x3	9- 19
AA14 3417	Shoulder Screw - M4x4	9- 22
AA14 3444	Stepped Screw	77- 26
AA14 3452	Stepped Screw	75- 14
AA14 3459	Knob Screw	39- 34
AA14 3712	Chuck Shaft	39- 5
AA14 3715	Stepped Screw - M5	49- 10
AA14 3730	Stepped Screw	43- 29
AA14 3744	Stepped Screw	43- 19
AA14 5537	Belt Release Shaft	47- 21
AA14 5539	Solenoid Shaft	67- 4
AA14 5794	Front Support Shaft	43- 20
AA14 5808	Rear Support Shaft	43- 12
AA14 8413	Idle Gear Shaft	39- 25
AA14 8439	Thermistor Shaft	43- 21
AA14 8447	Platen Cover Stud	11- 10
AA15 0231	Seal - 15x30	41- 20
AA15 0234	Mylar Seal - Base	39- 28
AA15 0368	Shielding Plate - Lens Cover	31- 4
AA15 0369	Original Sensor Seal	31- 2
AA15 0377	Shutter Seal	39- 20
AA15 0380	Seal Front Holder	45- 15
AA15 0381	Seal Rear Holder	45- 33
AA15 0382	Entrance Seal	41- 2
AA15 0389	Drum Guide Seal	45- 12
AA15 1177	Seal - 5x82x4	75- 22
AA15 1809	Rear Seal	45- 9
AA15 1894	Seal - 67x53x2	39- 2

Part No.	Description	Page and Index No
AA15 1935	Seal - 38x32x2.5	41- 4
AA15 1941	Right Shield - Development Case	31- 3
AA15 1942	Side Seal	45- 23
AA15 1943	Front Seal	45- 6
AA15 1944	Rear Seal	45- 8
AA15 1945	Joint Seal	43- 28
AA15 2245	Front Drum Seal	45- 13
AA15 2246	Rear Drum Seal	45- 31
AA15 2330	Magnification Seal	31- 12
AA15 2332	Seal - 9x351	47- 15
AA15 2334	Second Mylar	41- 26
AA16 1067	Cushion - Motor	57- 8
AA16 2067	Platen Cover Pad	11- 6
AA16 2068	Guide Plate Pad	53- 20
AB01 0341	Gear - 18Z	45- 1
AB01 0342	Idle Gear - 20z	43- 17
AB01 0343	Idle Gear - 14z	43- 16
AB01 0348	Gear - 20Z	43- 15
AB01 1133	Gear - 49Z	21- 14
AB01 1153	Idle Gear - 25z	69- 18
AB01 1165	Gear - 32Z	57- 5
AB01 1166	Gear - 33Z	55- 11
AB01 1167	Gear - 25Z	57- 15
AB01 1343	Idle Gear - 23z	23- 9
AB01 1344	Gear - 16Z	23- 27
AB01 1345	Gear - 20Z	23- 28
AB01 1346	Gear - 27Z	23- 31
AB01 1357	Collection Coil Gear - 15Z	45- 30
AB01 1358	Driven Gear	43- 4
AB01 1359	Joint Drive Gear - 20Z	45- 27
AB01 1360	Idle Gear - 19Z	45- 20
AB01 1361	Drive Gear - 33Z	45- 14
AB01 3106	Drive Gear - 18z	61- 23
AB01 3343	Gear - 22Z	41- 9
AB01 3420	Gear - 18Z	25- 22

Part No.	Description	Page and Index No.
AB01 3420	Gear - 18Z	27- 22
AB01 3485	Gear - 20Z	29- 3
AB01 3486	Gear - 14Z	29- 11
AB01 3868	Gear - 16Z	17- 14
AB01 3872	Fusing Cam Gear - 28z	65- 14
AB01 3875	Reverse Gear - 27z	69- 26
AB01 3881	Gear - 31Z	59- 12
AB01 3882	Gear - 40Z	49- 23
AB01 3883	Idle Gear - 25z	49- 3
AB01 3884	Exit Gear - 17z	51- 3
AB01 3885	Idle Gear - 20z	51- 2
AB01 3889	Gear - 24Z	61- 6
AB01 3889	Gear - 24Z	63- 14
AB01 3909	Idle Gear	41- 10
AB01 3911	Gear	41- 11
AB01 3914	Gear - 17Z	41- 22
AB01 3915	Gear - 26Z	41- 23
AB01 3916	Belt Drive Gear - 25z	47- 10
AB01 3917	Toner Supply Gear - 14Z	67- 2
AB01 3918	Drive Gear - 35z	69- 20
AB01 7129	Gear - 20Z AND 72Z	37- 17
AB01 7332	Gear - 24Z/41Z	57- 14
AB01 7335	Timing Pulley - 22Z/37Z	69- 21
AB01 7336	Timing Pulley - 30Z/35Z	69- 24
AB01 7337	Gear - 15Z/55Z	57- 4
AB01 7339	End Fence Gear - 22z/58z	59- 14
AB01 7345	Timing Pulley - 35Z	65- 17
AB01 7347	Idle Gear	39- 24
AB01 7360	Gear Pulley	31- 19
AB01 7360	Gear Pulley	37- 8
AB01 7361	Gear - 24Z/56Z	31- 21
AB01 7361	Gear - 24Z/56Z	37- 18
AB01 7362	Gear - 25Z/32Z	37- 7
AB01 7365	Coupled Gear - 15z/22z	41- 21
AB01 7366	Paddle Gear	41- 14

Part No.	Description	Page and Index No
AB01 7367	Right Paddle Roller	41- 19
AB01 7368	Cleaning Drive Gear - 17Z/46Z/18Z	67- 7
AB01 7369	Transfer Belt Pulley - 24Z/20Z	67- 22
AB01 7370	Development Pulley - 46Z/31Z	67- 24
AB01 7371	Exit Pulley	65- 9
AB01 7373	Idle Cam - 16/28Z	45- 25
AB01 7374	Drive Gear - 12Z	45- 18
AB01 7375	Drive Gear - 16Z	45- 17
AB01 7376	Separation Pawl Cam - 40Z	45- 21
AB01 7377	Gear - 25Z	69- 22
AB01 7385	Gear - 17Z/24Z	67- 29
AB01 7386	Cleaning Cam - 24Z	67- 1
AB01 7388	Blade Cam - 40Z	45- 19
AB01 7400	Gear- 18z/68z	59- 13
AB03 0281	Timing Pulley - 28Z	21- 9
AB03 0455	Tightener Pulley - 8x20x13	69- 13
AB03 0463	Fusing Cam Pulley	65- 13
AB03 0464	Timing Pulley - 30Z	69- 29
AB03 0465	Timing Pulley - 25Z	69- 16
AB03 0466	Timing Pulley - 20Z	25- 14
AB03 0466	Timing Pulley - 20Z	27- 14
AB03 0466	Timing Pulley - 20Z	29- 32
AB03 0473	End Fence Pulley - 22z	59- 11
AB03 0474	Pulley - 24Z	55- 2
AB03 0486	Timing Pulley - 24Z	37- 9
AB03 0487	Timing Pulley - 44Z	37- 16
AB03 0489	Timing Pulley - 22Z	37- 15
AB03 0492	Pulley - 25/25/34/125Z	65- 5
AB03 0494	Drum Pulley - 75Z	67- 14
AB03 2059	Driven Pulley	31- 14
AB03 2059	Driven Pulley	37- 23
AB03 3064	Drive Pulley - 34Z/25Z	69- 19
AB03 3069	Timing Pulley - 22z/44z	37- 3
AB04 0015	Spring Clutch - Tray Bottom Plate	57- 12
AC01 2060	Exposure Glass - A3T-3.2	9- 23

Part No.	Description	Page and Index No.
AC03 0103	1st Mirror	33- 13
AC03 0106	4/5 Mirror	35- 16
AC03 0107	6th Mirror	37- 20
AC03 5022	Rear Mirror Clamp - 1st Mirror	33- 2
AC04 2113	Left Original Scale - A4	9- 20
AC04 2117	Left Original Scale - LT	9- 20
AC04 2120	Rear Original Scale - A4	9- 21
AC04 2124	Rear Original Scale - LT	9- 21
AD02 5019	Drum Pick-off Pawl	45- 2
AD02 7004	Charge Roller	43- 13
AD03 7045	Toner Collection Coil	41- 13
AD04 3035	Toner Collection Coil	45- 16
AE01 1027	Hot Roller	49- 22
AE02 0050	Pressure Roller	51- 9
AE03 0022	Bearing - 12x24x64m	51- 8
AE03 0023	Bearing - 30x42x7mm	49- 21
AE03 1028	Bushing - 4mm	51- 6
AE04 2030	Cleaning Roller	51- 5
AE04 4019	Hot Roller Stripper	49- 20
AF01 0018	Duplex Tray	59- 27
AF01 3003	Bottom Plate Pad - Duplex	59- 2
AF01 3014	Bottom Plate Pad	17- 9
AF01 5027	Paper Size Slider	17- 13
AF01 6084	Front Side Fence	17- 3
AF01 6085	Rear Side Fence	17- 11
AF01 6160	Rear Side Fence	59- 3
AF01 6161	Front Side Fence	59- 4
AF01 7012	End Fence	17- 7
AF02 0316	Lower Registration Roller	29- 13
AF02 0317	Stack Roller	55- 15
AF02 0319	Transport Roller	55- 6
AF02 0320	Right Transport Roller	55- 7
AF02 0321	Paper Feed Drive Roller	27- 29
AF02 0321	Paper Feed Drive Roller (A211)	29- 24
AF02 0322	Lower Drive Roller - Transport	25- 29

Part No.	Description	Page and Index No
AF02 0326	Exit Roller Ass'y	51- 18
AF02 0327	Exit Roller	61- 20
AF02 0327	Exit Roller	63- 13
AF02 0329	Relay Roller	25- 32
AF02 0329	Relay Roller	27- 32
AF02 0330	Vertical Driven Roller	15- 9
AF02 0330	Vertical Driven Roller	19- 36
AF02 0336	Inverter Drive Roller	61- 22
AF02 1052	Upper Registration Roller	29- 12
AF02 2042	Middle Pressure Roller	61- 14
AF02 2042	Middle Pressure Roller	63- 10
AF02 2077	Driven Roller	53- 7
AF02 2077	Driven Roller	55- 19
AF02 5024	Pick-off Pawl	61- 21
AF03 0024	Pick-up Roller	23- 10
AF03 0025	Pick-up Feed Roller	25- 3
AF03 0025	Pick-up Feed Roller	27- 3
AF03 1024	Feed Roller (A210/A211)	23- 7
AF03 1024	Feed Roller	55- 17
AF03 1025	Feed Roller (A208)	23- 7
AF03 1026	Paper Feed Roller	25- 39
AF03 1026	Paper Feed Roller	27- 39
AF03 2025	Separation Roller	23- 21
AF03 2027	Separation Roller	25- 25
AF03 2027	Separation Roller	27- 25
AF04 0031	Upper Exit Roller	61- 19
AF04 0548	Exit Drive Roller	51- 17
AF04 3076	Copy Tray Slide	9- 14
AF04 3077	Copy Tray Guide	9- 15
AF04 3083	Copy Tray	9- 13
AG01 1342	Operation Panel Ass'y - LT (A208/A210)	9- 12
AG01 1342	Operation Panel Ass'y - LT (A208/A210)	13- 0
AG01 1343	Operation Panel Ass'y - LT (A211)	9- 12
AG01 1343	Operation Panel Ass'y - LT (A211)	13- 0
AG01 1346	Operation Panel Ass'y - A4 (A208/A210)	9- 12

Part No.	Description	Page and Index No.
AG01 1346	Operation Panel Ass'y - A4 (A208/A210)	13- 0
AG01 1347	Operation Panel Ass'y - A4 (A211)	9- 12
AG01 1347	Operation Panel Ass'y - A4 (A211)	13- 0
AG01 1348	Operation Panel Ass'y (SVN) (A208/A210)	9- 12
AG01 1348	Operation Panel Ass'y (A208/A210) (SVN)	13- 0
AG01 1349	Operation Panel Ass'y (SVN) (A211)	9- 12
AG01 1349	Operation Panel Ass'y (A211) (SVN)	13- 0
AG05 0074	Registration Knob	9- 6
AG05 0074	Registration Knob	29- 2
AG05 0075	Middle Knob	29- 1
AG05 0076	Fusing Knob	51- 10
AG07 0004	Magnetic Catch	9- 4
AG07 0004	Magnetic Catch (A208)	15- 5
AG07 0004	Magnetic Catch	21- 16
AG07 0004	Magnetic Catch	61- 3
AG07 0004	Magnetic Catch	77- 18
AG07 0009	Magnetic Catch	51- 15
AH01 0007	Rubber Foot	79- 15
AW01 0040	Original Sensor	35- 11
AW01 0068	Original Length Sensor	31- 5
AW01 0073	Optics Sensor	13- 1
AW02 0022	Photointerruptor	35- 13
AW02 0022	Photointerruptor	75- 8
AW02 0068	Photointerruptor	29- 15
AW02 0069	Photointerruptor (A208)	15- 10
AW02 0069	Photointerruptor	19- 28
AW02 0075	Photointerrupter	21- 7
AW02 0075	Photointerrupter	23- 16
AW02 0075	Photointerrupter	25- 8
AW02 0075	Photointerrupter	27- 8
AW02 0075	Photointerrupter	31- 13
AW02 0075	Photointerrupter	57- 21
AW02 0075	Photointerrupter	59- 18
AW02 0075	Photointerrupter	61- 10
AW02 0075	Photointerrupter	63- 6

Part No.	Description	Page and Index No
AW02 0075	Photointerrupter	67- 27
AW03 0054	Optical Fiber - 250mm	73- 9
AW03 0055	Optical Fiber - 420mm	73- 8
AW03 0056	Optical Fiber - 550mm	75- 9
AW10 0027	Thermistor	9- 29
AW10 0027	Thermister	33- 12
AW10 0032	Thermistor - 25°C 10k Ω	43- 24
AW23 0008	Toner Density Sensor	41- 7
AW23 0009	Toner End Sensor	41- 5
AW50 0010	Push Switch	75- 5
AW50 0012	Push Switch	23- 17
AX05 0090	Motor - DC 24V 36W	21- 8
AX07 0010	Motor - DC24V 63W	65- 8
AX12 0039	DC Solenoid - 24v - 400gf	61- 25
AX20 0098	Magnetic Clutch - 7kg Cm 35z	69- 25
AX20 0099	Magnetic Clutch - 7kgf.cm 26z	69- 23
AX20 0100	Magnetic Clutch - 3.5kgf Cm 35z	69- 27
AX20 0101	Magnetic Clutch - 2.5kgf 35z	23- 12
AX20 0105	Magnetic Clutch - 15kgf 24z	67- 6
AX20 0106	Magnetic Clutch - 15kgf 52z	67- 9
AX21 0059	Spring Clutch - 5kgf	67- 30
AX31 0022	Total Counter	71- 9
AX40 0021	Anti-condensation Heater - 115V 18W (Option)	71- 6
AX40 0022	Anti-condensation Heater - 240V 18W (Option)	71- 6
AX40 0047	Anticondensation Heater - 115V 15W (Option)	35- 22
AX40 0048	Anticondensation Heater - 240V 15W (Option)	35- 22
AX40 0094	Anticondensation Heater - 120V 9W	77- 1
AX40 0095	Anticondedsation Heater - 230V 9W	77- 1
AX43 0022	Fusing Lamp - 120V 550W	49- 25
AX43 0023	Fusing Lamp - 120V 350W	49- 24
AX43 0024	Fusing Lamp - 230V 550W 210mm	49- 25
AX43 0025	Fusing Lamp - 230V 350W 320mm	49- 24
AX52 0025	Exposure Lamp - 85V 280W (230V)	33- 7
AX52 0027	Exposure Lamp - 97V 280W (115V)	33- 7
AX64 0058	Fan Motor - DC 24V 4.32W	75- 1

Part No.	Description	Page and Index No.
AX64 0058	Fan Motor - DC 24v 4.32w	75- 6
AX64 0059	Fan Motor - DC24V 3.12W	61- 7
AX64 0059	Fan Motor - DC24V 3.12W	63- 3
AZ02 0008	Coil - 1 0mh 2A	75- 21
AZ13 0023	Transformer - 230V	73- 18
AZ23 0054	DC Drive Board (TWN)	73- 10
AZ23 0055	DC Drive Board (NA)	73- 10
AZ24 0041	DC Drive Board (EU/ASIA)	73- 10
AZ30 0041	Power Pack - Transfer Unit	47- 30
AZ32 0078	DC Power Pack	75- 2
AZ43 0020	High Voltage Supply Cord	67- 25
AZ43 0020	High Voltage Supply Cord	75- 3
AZ48 0029	Ct Harness	43- 1
C105 2352	Stepped Screw - M6x1.7	65- 12
C225 2866	Decal - Key Top Cover (NST)	9- 34
C225 2866	Decal - Key Top Cover	85- 11
C225 2867	Decal - Cover - Panel - Nashua	9- 34
C225 2867	Decal - Cover - Panel - Nashua	85- 11
G006 4317	Pressure Spring	45- 7
G011 3305	Gear - 16T	15- 25
G011 3305	Gear - 16T	59- 8
G012 3897	Relay Harness - Toner End Sensor	41- 15
G694 4747	Guide Plate Holder	53- 11

Part No.	Description	Page and Index No
A008 9502	Silicone Grease - G40m	87- 6
A028 9300	Grease Barrierta Jfe 55/2	87- 10
A048 1801	Mirror Seal	37- 27
A048 2838	Nylon Rivet	17- 10
A069 1883	Shoe - Scanner	31- 17
A069 1883	Shoe - Scanner	33- 3
A069 1883	Shoe - Scanner	35- 6
A075 1766	Adjusting Cam	37- 22
A077 1310	Snap Ring - M2	43- 6
A077 1673	Thermofuse Terminal	33- 5
A077 1690	Spring Plate - Mirror	35- 4
A077 1690	Spring Plate - Mirror	37- 19
A077 3918	Spring - T/S Unit	47- 20
A077 3918	Spring - T/S Unit	67- 36
A077 4162	Shoulder Screw - M3	51- 12
A079 3626	Stepped Screw - Swing Cleaning	57- 7
A085 1670	Exposure Adjusting Plate	33- 8
A096 1692	ADS Case (Option)	35- 29
A096 1693	ADS Cover (Option)	35- 30
A096 1873	Scanner Shoe Pin	33- 17
A096 1873	Scanner Shoe Pin	35- 1
A096 5230	ADS Board (Option)	35- 27
A096 6266	Tray Lock Arm	79- 6
A111 1753	Seal - 0.1x18x49	31- 7
A130 2820	Front Upper Side Plate	27- 38
A130 2824	Rear Upper Side Plate	27- 15
A130 2845	Upper Guide Plate	27- 37
A130 2850	Upper Feed Stay	27- 16
A130 2871	Sensor Bracket	27- 9
A130 2876	Paper End Sensor Bracket	25- 7
A130 2876	Paper End Sensor Bracket	27- 7
A130 2929	Slide Rail Bracket	79- 16
A130 5314	Relay Harness - Paper Feed	27- 36
A134 1071	Left Grip Plate	65- 22
A134 1071	Left Grip Plate	71- 15

Part No.	Description	Page and Index No.
A134 1072	Right Bracket - Grip Plate	65- 23
A134 1072	Right Bracket - Grip Plate	71- 16
A134 1073	Left Bracket - Grip Plate	65- 24
A134 1073	Left Bracket - Grip Plate	71- 17
A134 1121	Joint Gear	65- 16
A134 1328	Small Cap	9- 30
A134 1394	Front Platen Cover	11- 4
A134 1395	Rear Platen Cover	11- 7
A134 1396	Original Holder	11- 8
A134 2554	Lower Registration Guide	29- 28
A134 2557	Regist Sensor Bracket	29- 14
A134 2572	Middle Tightener	69- 15
A134 2575	Tightener Arm	69- 12
A134 2579	Stopper Bracket	69- 8
A134 2580	Vertical Transfer Hinge (A208)	29- 17
A134 2582	Sensor Bracket - Vertical Transfer (A208)	29- 27
A134 2585	Vertical Transfer Guide Plate	15- 6
A134 2586	Hinge Bracket (A208)	15- 1
A134 2587	Switch Bracket	15- 4
A134 2591	Vertical Transfer (A208)	15- 2
A134 2651	Bypass Feed Unit (A208)	23- 0
A134 2654	Pick-up Arm	23- 30
A134 2654	Pick-up Arm	27- 5
A134 2656	Stopper Plate	23- 6
A134 2658	Grounding Plate	23- 5
A134 2659	By-pass Feed Housing	23- 15
A134 2660	Paper Feed Feeler	23- 2
A134 2661	Feeler Roller	23- 3
A134 2662	Grounding Plate	23- 18
A134 2663	Separation Guide	23- 20
A134 2667	Separation Drive Shaft	23- 29
A134 2668	Separation Driven Shaft	23- 23
A134 2670	By-pass Feed Cover	23- 4
A134 2675	Solenoid Bracket (A208)	69- 5
A134 2678	Solenoid Link (A208)	69- 3

Part No.	Description	Page and Index No
A134 2680	DC Solenoid (A208)	69- 7
A134 2688	Positioning Plate	23- 1
A134 2689	Gear Cover	23- 26
A134 2692	By-pass Feed Table Ass'y	15- 13
A134 2697	By-pass Feed Table	15- 21
A134 2701	By-pass Feed Guide	15- 20
A134 2705	Magnet Catch Plate	15- 22
A134 2706	Rear Fence Rack	15- 24
A134 2707	Front Fence Rack	15- 26
A134 2711	Front Side Fence	15- 17
A134 2716	Rear Side Fence	15- 19
A134 2721	Front Paper Guide	15- 16
A134 2726	Rear Paper Guide	15- 18
A134 2741	By-pass Feed Entrance Guide	15- 14
A134 2746	By-pass Feed Cover	15- 27
A134 2790	Reverse Stay	25- 26
A134 2790	Reverse Stay	27- 26
A134 2795	Pressure Lever	25- 27
A134 2795	Pressure Lever	27- 27
A134 2810	Pressure Solenoid	25- 31
A134 2810	Release Solenoid	27- 31
A134 2821	Front Side Plate	25- 38
A134 2826	Rear Side Plate	25- 15
A134 2830	Drive Shaft	25- 21
A134 2830	Drive Shaft	27- 21
A134 2832	Driven Shaft Ass'y	25- 23
A134 2832	Driven Shaft Ass'y	27- 23
A134 2834	Vertical Transport Guide	25- 35
A134 2834	Vertical Transport Guide	27- 35
A134 2839	Reverse Guide Plate	25- 1
A134 2839	Reverse Guide Plate	27- 1
A134 2846	Lower Guide Plate	25- 37
A134 2855	Lower Feed Stay	25- 16
A134 2862	Paper End Sensor Feeler	25- 17
A134 2862	Paper End Sensor Feeler	27- 17

Part No.	Description	Page and Index No.
A134 2863	Paper End Sensor Lever	25- 19
A134 2863	Paper End Sensor Lever	27- 19
A134 2866	Pick-up Solenoid	25- 11
A134 2866	Pick-up Solenoid	27- 11
A134 2868	Solenoid Bracket	25- 40
A134 2868	Solenoid Bracket	27- 40
A134 2873	Positioning Sensor Bracket	25- 9
A134 2885	Torque Limitter	25- 24
A134 2885	Torque Limitter	27- 24
A134 2895	Vertical Relay Guide	29- 20
A134 2900	Duplex Stay (A211)	29- 22
A134 2903	Upper Guide Plate - Duplex Feed (A211)	29- 25
A134 2921	Left Slide Rail	79- 4
A134 2926	Paper Feed Lock Bracket	79- 5
A134 2929	Slide Rail Bracket - Front Right	79- 14
A134 2930	Right Slide Rail	79- 13
A134 2941	Bracket - Paper Size Sensor	75- 4
A134 2947	Heater Cover (Option)	71- 10
A134 2952	Universal Tray	17- 20
A134 2956	Paper Feed Front Cover	17- 1
A134 2956	Paper Feed Front Cover	53- 1
A134 2960	Paper Tray Stopper	17- 21
A134 2968	Grounding Plate	17- 15
A134 2976	Stopper Lever	17- 4
A134 2978	Spring Plate	17- 5
A134 2986	Bottom Plate	17- 18
A134 2997	Decal - Paper Setting	17- 2
A134 2997	Decal - Paper Setting	85- 5
A134 2997	Decal - Paper Setting	85- 17
A134 3161	Bottle Drive Bracket	39- 26
A134 3162	DC Motor - 5.85W DC24V	39- 23
A134 3172	Toner Bottle Holder	39- 15
A134 3177	Toner Slider	39- 4
A134 3179	Chuck Shaft	39- 7
A134 3180	Bottle Chuck	39- 3

Part No.	Description	Page and Index No
A134 3181	Chuck Roller	39- 6
A134 3190	Toner Bottle Stopper	39- 10
A134 3197	Bottle Holder	39- 13
A134 3201	Cam - Toner Bottle	39- 32
A134 3215	Rubber Cap	39- 9
A134 4006	Fusing Exit Unit	51- 14
A134 4061	Rear Terminal Plate	49- 11
A134 4115	Fusing Seal	49- 17
A134 4130	Fusing Front Cover	49- 1
A134 4153	Slide Rail - Fusing	51- 19
A134 4161	Pressure Lever	51- 13
A134 4280	Fusing Exit Guide - Lower	51- 16
A134 4301	Exit Guide Hinge	51- 11
A134 4355	Fusing Unit Stopper	79- 12
A134 4508	Inverter Guide Plate	57- 13
A134 4512	Feed Roller Shaft	55- 21
A134 4525	End Fence	59- 26
A134 4527	Separation Roller	57- 20
A134 4619	Guide Plate Link	53- 12
A134 4620	Grounding Plate	59- 19
A134 4649	Paper Guide Holder	55- 16
A134 4662	Duplex Guide Plate	57- 24
A134 4670	Duplex Guide Mylar	57- 25
A134 4676	Paper End Feeler	55- 8
A134 4688	Front Side Fence Rack	59- 10
A134 4689	Rear Side Fence Rack	59- 9
A134 4690	Clutch Stopper	55- 20
A134 4701	Front Upper Cover	53- 3
A134 4710	End Fence Actuator	59- 24
A134 4712	Right Cover Bracket	53- 4
A134 4714	Tightener	59- 15
A134 4720	End Fence Upper Cover	53- 2
A134 4721	Connector Cover	53- 6
A134 4726	Guide Plate Knob	53- 19
A134 4728	Inverter Feeler	53- 5

Part No.	Description	Page and Index No.
A134 4730	Entrance Feeler	53- 14
A134 4739	Lower Guide Plate Knob	53- 9
A134 4740	Lower Guide Plate	53- 15
A134 4751	Front Side Plate	55- 1
A134 4765	Grounding Plate	57- 22
A134 4781	Rear Side Plate	55- 9
A134 4790	Paper End Sensor	57- 18
A134 4799	Motor Bracket	57- 1
A134 4800	Motor Bracket	57- 2
A134 4804	Guide Plate Stopper	55- 22
A134 4804	Guide Plate Stopper	57- 19
A134 4808	Rear Guide Holder	55- 18
A134 4809	Front Guide Holder	55- 14
A134 4884	Decal - Duplex Misfeed Removal	53- 21
A134 4884	Decal - Duplex Misfeed Removal	85- 18
A134 4901	Duplex Right Rail	79- 1
A134 5282	Paper Size Sensor Board	15- 23
A134 5290	Transport Drive Motor	57- 3
A134 5291	Jogger Drive Motor DC 6.48W	59- 20
A134 5292	Jogger Drive Motor DC 10.56W	59- 21
A134 5311	By-pass Feed Harness	23- 14
A134 5315	Relay Harness - Lower Paper Feed	25- 36
A134 5316	Vertical Transfer Harness	15- 3
A134 5320	Duplex Main Harness	59- 28
A134 5321	Sensor Relay Harness	59- 25
A134 5322	End Fence Harness	59- 31
A134 5323	Motor Harness	59- 22
A153 1107	Bracket - Brushless Motor	65- 26
A153 1114	Drive Gear Holder	67- 15
A153 1117	Drum Drive Shaft	67- 21
A153 1125	Development Drive Bracket	67- 8
A153 1126	Edging	67- 34
A153 1126	Edging	67- 38
A153 1127	Clutch Shaft	67- 5
A153 1128	Tightener	65- 10

Part No.	Description	Page and Index No
A153 1132	Development Tightener	67- 16
A153 1135	Drum Drive Tightener	67- 19
A153 1251	Upper Cover	9- 24
A153 1258	Platen Cover Bracket - Right	75- 23
A153 1259	Platen Cover Bracket - Left	75- 24
A153 1261	Front Right Cover	9- 28
A153 1271	Rear Right Cover (A208)	9- 27
A153 1285	Emblem (RIC)	9- 1
A153 1285	Emblem (RIC)	85- 4
A153 1350	Right Middle Cover	77- 24
A153 1352	Right Lower Cover	9- 7
A153 1353	Front Cover Hinge	71- 1
A153 1354	Hinge Pin	9- 3
A153 1355	Key Counter Bracket	71- 2
A153 1365	Symbol Explanation Decal	85- 14
A153 1370	Platen Cover Hinge	11- 3
A153 1380	Platen Cover Bracket	11- 11
A153 1383	Platen Cover Feeler	11- 9
A153 1452	Key-top Start	13- 2
A153 1453	Key-top Interrupt	13- 3
A153 1454	Key-top Mode Clear	13- 4
A153 1455	Key-top Program	13- 5
A153 1456	Key-top 10 Key	13- 6
A153 1457	Key-top Clear/Stop	13- 7
A153 1458	Key-top Auto Density	13- 8
A153 1459	Key-top Darker	13- 9
A153 1460	Key-top Lighter	13- 10
A153 1461	Key-top Auto Paper Select	13- 11
A153 1462	Key-top Paper Select	13- 12
A153 1463	Key-top Full Size	13- 13
A153 1464	Key-top Auto Reduce/Enlarge	13- 14
A153 1469	Panel Cover	9- 11
A153 1469	Panel Cover	13- 15
A153 1475	Decal - 10key Zoom -LT/DLT	9- 33
A153 1475	Decal - 10key Zoom - LT/DLT	85- 7

Part No.	Description	Page and Index No.
A153 1476	Decal - Margin Adjustment - LT/DLT	9- 31
A153 1476	Decal - Margin Adjustment - LT/DLT	85- 8
A153 1478	Decal - 10key Zoom - A4/A3	9- 33
A153 1478	Decal - 10key Zoom - A4/A3	85- 7
A153 1479	Decal - Margin Adjustment - A4/A3	9- 31
A153 1479	Decal - Margin Adjustment - A4/A3	85- 8
A153 1637	Platen Cover Ass'y	11- 1
A153 1676	Harness Guard Seal	77- 28
A153 1700	Scanner Drive Motor - DC2.3V 13.5W	37- 13
A153 1707	Tension Bracket - Long	37- 14
A153 1708	Tension Bracket - Short	37- 6
A153 1720	Scanner Rail	35- 12
A153 1721	Spring Plate	35- 10
A153 1749	Scale Bracket	33- 11
A153 1754	Exposure Stay	33- 14
A153 1770	1st Scanner Ass'y (230V)	33- 1
A153 1772	Stay Scanner Front	33- 19
A153 1773	Stay Scanner Rear	33- 18
A153 1774	Reflector - Main	33- 20
A153 1776	Front Mirror Clamp - 1st Mirror	33- 4
A153 1777	Front Terminal	33- 6
A153 1778	Rear Terminal	33- 9
A153 1779	Thermostat - 121°c 250V 10A	33- 15
A153 1780	Exposure Lamp Harness	33- 10
A153 1781	Reflector	33- 16
A153 1790	1st Scanner Ass'y (120V)	33- 1
A153 1801	2nd Scanner Ass'y	35- 8
A153 1805	Front Mirror Holder	35- 5
A153 1806	Rear Mirror Holder	35- 7
A153 1807	Harness Guide	35- 2
A153 1808	2nd Mirror	35- 3
A153 1809	3rd Mirror	35- 9
A153 1850	Lens Cover	31- 22
A153 1861	Harness Bracket	31- 24
A153 1906	Adjust Shoe	35- 20

Part No.	Description	Page and Index No
A153 1908	Shielding Plate	35- 17
A153 1912	3rd Scanner Stay	35- 26
A153 1914	3rd Scanner Rack	35- 19
A153 1923	6th Mirror Bracket	37- 28
A153 1947	Magnification Drive Unit Bracket	37- 24
A153 1952	Magnification Rail	37- 21
A153 1961	Lens Cover	31- 6
A153 1971	Original Sensor Bracket	31- 8
A153 1974	Original Sensor Sheading Plate	31- 23
A153 1981	Scanner Home Sensor Bracket	35- 28
A153 1986	Cooling Fan Duct	75- 7
A153 2060	Wire Pulley	77- 13
A153 2061	Release Lever	77- 23
A153 2071	Cam Lever	77- 15
A153 2072	Release Link Lever	77- 5
A153 2073	Guide Rail	77- 9
A153 2075	Front Roller Cam	77- 11
A153 2076	Rear Roller Cam	77- 12
A153 2080	Eraser Lamp	77- 17
A153 2083	Left Drum Rail	77- 16
A153 2084	Spacer	77- 10
A153 2085	Spacer	77- 27
A153 2090	Quenching Lamp	77- 14
A153 2116	Grounding Plate	43- 7
A153 2126	Swing Arm	43- 3
A153 2130	Receptacle Housing	67- 13
A153 2133	Thermistor Bracket	43- 23
A153 2135	Charge Roller Terminal Ass'y	43- 8
A153 2142	Cam Lever	67- 32
A153 2143	Shielding Plate	43- 14
A153 2277	Cleaning Blade	45- 5
A153 2303	Grounding Plate	45- 34
A153 2558	Upper Registration Guide	29- 19
A153 2560	Rear Guide Plate	23- 19
A153 2563	Middle Guide Plate	29- 18

Part No.	Description	Page and Index No.
A153 2570	Upper Support Plate	69- 10
A153 2572	Paper Feed Harness Bracket (A208)	69- 31
A153 2936	Tray Lift Motor (A211)	65- 25
A153 2991	Front Side Fence Guide	17- 6
A153 2992	Rear Side Fence Guide	17- 12
A153 2995	Decal Paper Size - LT/DLT	17- 19
A153 2995	Decal Paper Size - LT/DLT	85- 1
A153 2996	Decal Paper Size - A4	17- 19
A153 2996	Decal Paper Size - A4/A3	85- 1
A153 3075	Entrance Seal	41- 1
A153 3086	Bias Terminal	67- 12
A153 3087	Terminal Cap	67- 11
A153 3090	Development Position Plate	41- 16
A153 3095	Development Rail	29- 8
A153 3110	Upper Resist Guide Plate	29- 31
A153 3114	Transfer Entrance Guide	29- 10
A153 3149	Knob Screw - M4x12	41- 17
A153 3172	Shutter	39- 19
A153 3173	Shutter Guide	39- 16
A153 3174	Shutter Holder	39- 18
A153 3185	Toner Supply Gear (RIC EU)	39- 1
A153 3187	Toner Supply Gear (RIC NA)	39- 1
A153 3189	Toner Supply Gear (Others)	39- 1
A153 3227	Toner End Sensor Cover	41- 25
A153 3264	Bottle Unit Upper Hinge	39- 33
A153 3266	Bottle Unit Link Plate	39- 30
A153 3270	Stay Toner Supply	71- 18
A153 3272	Hinge Slide Rail	39- 21
A153 3555	Cleaning Entrance Seal	45- 32
A153 3558	Blade Seal	45- 22
A153 3570	Spring Plate	45- 24
A153 3590	Density Sensor Bracket	35- 25
A153 3590	Density Sensor Bracket	45- 28
A153 3591	Mylar - 17x335	47- 33
A153 3595	Pick-off Pawl Retainer	45- 3

Part No.	Description	Page and Index No
A153 3598	Pin Bracket	77- 22
A153 3865	Belt Drive Roller	47- 13
A153 3866	Belt Drive Roller	47- 3
A153 3870	Transfer Bias Roller	47- 8
A153 3873	Bias Roller Terminal	47- 5
A153 3874	Earth Terminal	47- 12
A153 3877	Spring Plate	47- 29
A153 3884	Belt Guide Plate	47- 14
A153 3886	Belt Pressure Lever	47- 19
A153 3887	Belt Release Stay	47- 22
A153 3888	Earth Plate	47- 27
A153 3892	Belt Cleaning Blade	47- 17
A153 3893	Belt Cleaning Stay	47- 18
A153 3894	Bushing	47- 16
A153 3895	Front Bushing	47- 25
A153 3897	Harness Clamp	47- 23
A153 3901	Entrance Guide Plate	47- 31
A153 3914	Magnetic Clutch Feeler	67- 28
A153 3920	Belt Release Arm	77- 25
A153 3923	Spacer:bearing:cleaning:transfer Be	47- 34
A153 3930	Belt Unit Handle	79- 11
A153 4053	Fusing Upper Stay	49- 2
A153 4055	Upper Fusing Guide	49- 26
A153 4062	Electrode Plate - Middle	49- 12
A153 4063	Front Terminal Plate	49- 14
A153 4074	Terminal Connector - 2p	49- 4
A153 4075	Front Holder	49- 15
A153 4084	Fusing Connector Bracket	49- 6
A153 4088	Thermistor	49- 9
A153 4089	Thermistor - 2	49- 8
A153 4102	Front Lamp Terminal Holder	49- 16
A153 4103	Rear Lamp Terminal Holder	49- 7
A153 4112	Stripper Bracket	49- 19
A153 4114	Stripper Stopper	49- 27
A153 4197	Lower Fusing Guide	51- 1

Part No.	Description	Page and Index No.
A153 4205	Cleaning Roller Bracket	51- 7
A153 4250	Fusing Exit Frame	51- 20
A153 4352	Fusing Lock Lever	79- 8
A153 5114	Ram Board	73- 15
A153 5114	Ram Board	83- 1
A153 5132	Density Sensor	45- 29
A153 5141	Lens Drive Harness	31- 16
A153 5211	Mirror Drive Motor - DC24V 8.6W	37- 25
A153 5213	Lens Drive Motor - DC24V 8.6W	37- 5
A153 5265	Thermofuse - 169c	49- 13
A153 5312	Optical Harness	73- 13
A153 5316	Paper Feed Harness	73- 14
A153 5320	Front Right Harness (EU/ASIA/TWN)	71- 5
A153 5324	Sorter Relay Harness	75- 12
A153 5328	Ct Harness	61- 9
A153 5328	Ct Harness	63- 5
A153 5330	Ct Harness - 7p	41- 6
A153 5333	CT Harness	29- 16
A153 5334	Ct Harness - 7p	79- 2
A153 5339	Density Sensor Harness	77- 20
A153 5340	Ct Harness	67- 10
A153 5344	Power Supply Harness - 120V (A208/A210)	73- 11
A153 5391	Optical Harness - 1	31- 9
A153 5392	Optical Harness - 2	31- 10
A153 5393	Optical Harness - 3	35- 23
A153 5395	Optical Harness - 5	31- 15
A153 5471	Power Supply Cord (TWN)	75- 13
A153 5501	AC Main Harness - 120V	71- 3
A153 5520	Front Right Harness (NA) (A208/A210)	71- 5
A153 5550	AC Drive Board - 120V	73- 7
A153 5561	Relay Harness	73- 20
A153 5562	Main Switch Relay Harness	71- 19
A153 5571	Power Supply Cord (NA)	75- 13
A153 5601	AC Relay Harness	75- 19
A153 5621	Noise Filter Board	75- 20

Part No.	Description	Page and Index No
A153 5644	Power Supply Harness - 230V (A208/A210)	73- 11
A153 5644	Tray Power Supply Harness	73- 16
A153 5645	AC Drive Board - 230V	73- 7
A153 5661	AC Main Harness - 230V	71- 3
A153 5671	Power Supply Cord (EU/ASIA)	75- 13
A153 5801	DC Drive Board Bracket	73- 12
A153 5802	Lower Bracket - DC Drive Board	65- 1
A153 5803	Upper Bracket - DC Drive Board	37- 10
A153 5803	Upper Bracket - DC Drive Board	73- 6
A153 5804	Main Switch Bracket (EU/ASIA/TWN)	71- 12
A153 5806	Bracket Paper Tray Unit	73- 19
A153 5807	Bracket ARDF	73- 3
A153 5808	Bracket - Safety Switch	71- 14
A153 5809	Arm Interlock SW	71- 13
A153 5810	Power Supply Cord Bracket	75- 17
A153 5812	Left Lower Bracket	69- 30
A153 5813	Main Control Board Bracket	69- 1
A153 5814	Main Switch Bracket (NA)	71- 12
A153 5820	Total Counter Bracket	71- 11
A153 5888	Fusing Unit Joint Connector Bracket	75- 18
A153 6409	Decal - Keytop Cover (NRG)	9- 34
A153 6409	Decal - Keytop Cover	85- 11
A153 6423	Support Cover (INF)	9- 1
A153 6423	Support Cover (INF)	85- 4
A153 9001	Scanner Adjustment Tool	87- 7
A153 9004	Wiping Cloth(100pcs/set)	87- 8
A153 9510	OPC Drum	43- 26
A153 9513	Harness - ADS (Option)	35- 24
A154 4616	Paper Holder	53- 17
A154 4620	Bottom Plate	59- 1
A154 4621	Front Guide Plate	59- 30
A154 4622	Rear Guide Plate	59- 29
A154 4623	Vibrating Plate	57- 23
A154 5310	Duplex Unit Harness	73- 14
A154 5313	Front Right Harness (EU/ASIA/TWN) (A211)	71- 5

Part No.	Description	Page and Index No.
A154 5325	Duplex Unit Relay Harness	75- 15
A154 5831	Grounding Plate	13- 28
A155 1331	LCT Rear Right Cover (A210/A211)	9- 27
A155 2667	Lift Sensor Feeler	23- 34
A155 2675	Pick-up Bracket (A210/A211)	69- 5
A155 2676	Pick-up Lever (A210/A211)	69- 2
A155 2677	Pick-up Link (A210/A211)	69- 3
A155 2680	DC Solenoid - 24V - 510gf (A210/A211)	69- 7
A155 2682	Lift Sensor Bracket	23- 32
A155 5165	LCT Main Board	21- 18
A155 5170	Push Switch	21- 27
A155 5314	LCT Relay Harness	21- 24
A155 5342	LCT Harness	21- 31
A155 5345	Ct Harness	23- 33
A155 5348	Paper End Sensor Harness	21- 4
A155 5349	LCT Vertical Harness	19- 33
A155 6101	LCT Upper Cover	19- 6
A155 6110	Front Side Plate - LCT	21- 29
A155 6112	Spacer - LCT	19- 38
A155 6113	Decal - Paper Set	19- 2
A155 6113	Decal - Paper Set	85- 3
A155 6114	Caution Decal - LCT	19- 35
A155 6114	Caution Decal - LCT	85- 19
A155 6116	Safety Switch Bracket	21- 21
A155 6117	Safety Switch Lever	21- 23
A155 6118	Spring Plate	21- 20
A155 6125	Rear Side Bracket	21- 28
A155 6136	Lift Sensor Bracket	21- 11
A155 6141	Tray Bottom Plate	21- 17
A155 6142	LCT Paper Tray	19- 14
A155 6143	Left Bracket	21- 1
A155 6145	Tray Cover	21- 19
A155 6147	Paper End Sensor Bracket	21- 3
A155 6148	Paper End Sensor Feeler	21- 2
A155 6151	Vertical Transport Guide	19- 27

Part No.	Description	Page and Index No
A155 6152	Switch Bracket	19- 29
A155 6153	Upper Hinge	21- 6
A155 6160	Lower Hinge	19- 31
A155 6162	Cushion	19- 34
A155 6164	Positioning Guide	29- 29
A155 6168	Vertical Support Guide	29- 30
A155 6169	Hinge Holder	19- 30
A155 6170	Hinge Bracket	19- 21
A155 6171	Grip Bracket	19- 19
A155 6175	LCT Positioning Plate	19- 32
A155 6181	Knob	19- 18
A155 6191	LCT Front Cover	19- 17
A155 6201	LCT Hinge Bracket	19- 8
A155 6203	Paper Tray Stay	21- 5
A155 6207	Cover Bracket	19- 3
A155 6215	Harness Guide	21- 30
A155 6221	LCT Rear Cover	19- 15
A155 6231	LCT Right Cover	19- 16
A155 6241	LCT Harness Cover	19- 26
A155 6251	Upper Stay	19- 9
A155 6270	Cushion 20 X 30	19- 39
A155 6302	Hinge Angle	19- 5
A155 6303	Fix Hinge	19- 4
A155 6306	Front Side Fence	19- 22
A155 6307	Rear Side Fence	19- 12
A155 6311	Front Paper Holder	19- 23
A155 6312	Rear Paper Holder	19- 10
A155 6313	Support Guide	19- 11
A155 6321	Front Spring Plate	19- 24
A155 6322	Rear Sprig Plate	19- 25
A155 6324	End Fence	19- 1
A155 6325	Drive Cover Bracket	69- 32
A156 1452	Key-top Start (SVN)	13- 2
A156 1453	Key-top Interrupt (SVN)	13- 3
A156 1454	Key-top Mode Clear (SVN)	13- 4

Part No.	Description	Page and Index No.
A156 1455	Key-top Program (SVN)	13- 5
A156 1457	Key-top Clear/Stop (SVN)	13- 7
A156 1458	Key-top Auto Density (SVN)	13- 8
A156 1459	Key-top Darker (SVN)	13- 9
A156 1460	Key-top Lighter (SVN)	13- 10
A156 1461	Key-top Auto Paper Select (SVN)	13- 11
A156 1462	Key-top Paper Select (SVN)	13- 12
A156 1463	Key-top Full Size (SVN)	13- 13
A156 1464	Key-top Auto Reduce/Enlarge (SVN)	13- 14
A156 1495	Decal Copy Ratio	85- 9
A156 5513	Front Right Harness (NA) (A211)	71- 5
A156 6413	Emblem (SVN)	9- 1
A156 6413	Emblem (SVN)	85- 4
A157 1080	Fan Motor Stay	61- 28
A157 1080	Fan Motor Stay	63- 17
A157 1084	Left Upper Stay	61- 29
A157 1084	Left Upper Stay	63- 16
A157 1111	Belt Tightener	67- 23
A157 1301	Left Cover	9- 16
A157 1311	Left Inner Cover	9- 17
A157 1321	Left Inner Cover - Small	9- 18
A157 1339	Lower Inner Cover	9- 8
A157 1351	Upper Inner Cover	9- 9
A157 1360	Operation Sheet (A208/A210)	9- 5
A157 3861	Transfer Belt	47- 2
A157 3862	Transfer Belt Frame	47- 7
A157 3875	Front Side Plate	47- 4
A157 3876	Rear Side Plate	47- 9
A157 3882	Transfer Belt Casing	47- 28
A157 3883	Toner Collection Cap	47- 32
A157 3889	Connector Bracket	47- 24
A157 3900	Support Plate	47- 1
A157 3900	Support Plate	79- 3
A157 4451	Upper Guide Plate	61- 15
A157 4451	Upper Guide Plate	63- 11

Part No.	Description	Page and Index No
A157 4456	Spring Plate	61- 13
A157 4456	Spring Plate	63- 9
A157 4459	Paper Exit Feeler	61- 11
A157 4459	Paper Exit Feeler	63- 7
A157 4460	Exit Cover	63- 12
A157 6403	Front Cover (NRG)	9- 2
A158 1360	Operation Sheet (A211)	9- 5
A158 4451	Reverse Guide Plate	61- 5
A158 4452	Lower Reverse Guide Plate	61- 4
A158 4453	Exit Cover	61- 17
A158 4459	Spring Plate	61- 18
A158 4463	Pick-off Pawl Arm	61- 24
A158 4466	Switch Bracket	65- 21
A158 4467	Solenoid Bracket	61- 26
A158 4603	Paper Holder	53- 18
A158 4604	Duplex Lower Guide	53- 22
A158 4607	Upper Guide Plate	53- 10
A158 4620	Duplex Tray Ass'y	53- 0
A158 5191	Duplex Control Board	59- 23
A158 5343	Power Supply Harness - 120V (A211)	73- 11
A160 5643	Power Supply Harness - 230V (A211)	73- 11
A160 5643	Power Supply Harness - Duplex	73- 16
A204 1131	Development Support Plate	65- 7
A204 1291	Rear Cover	9- 25
A204 1386	Multi Decal - German (RIC/NRG)	85- 0
A204 1387	Multi Decal - French (RIC/NRG)	85- 0
A204 1388	Multi Decal - Spanish (RIC/NRG)	85- 0
A204 1389	Multi Decal - Italian (RIC/NRG)	85- 0
A204 1396	Multi Decal - German (INF)	85- 0
A204 1397	Multi Decal - French (INF)	85- 0
A204 1398	Multi Decal - Spanish (INF)	85- 0
A204 1399	Multi Decal - Italian (INF)	85- 0
A204 1465	Key-top - Sorter	13- 25
A204 1471	Keytop - Halftone	13- 19
A204 1472	Keytop - Enlarge	13- 20

Part No.	Description	Page and Index No.
A204 1473	Keytop - Reduce	13- 21
A204 1475	Operation Panel Case - LT	13- 22
A204 1476	Operation Panel Case - A4	13- 22
A204 1479	Sheet Sorter - LT (A208/A210)	13- 27
A204 1480	Sorter Sheet - A4 (A208/A210)	13- 27
A204 1481	Sheet - LT	13- 23
A204 1482	Sheet - A4	13- 23
A204 1486	Operation Panel Sheet - LT	9- 32
A204 1486	Operation Panes Sheet - LT	13- 17
A204 1486	Operation Panel Sheet - LT	85- 10
A204 1487	Operation Panel Sheet - L4	9- 32
A204 1487	Operation Panes Sheet - A4	13- 17
A204 1487	Operation Panel Sheet - A4	85- 10
A204 1674	Shield Glass Guide	77- 19
A204 1677	Optical Filter	77- 21
A204 1840	Lens Magnification Unit	31- 1
A204 1844	Lens Drive Unit	31- 11
A204 1976	Density Sensor Case	35- 15
A204 1977	Density Sensor Cover	35- 14
A204 2101	P.T.L. Lamp Ass'y	29- 9
A204 2110	Charge Roller Ass'y	43- 2
A204 2120	Drum Charge Roller Cleaner	43- 25
A204 2155	Decal - Caution	43- 30
A204 2155	Decal - Caution	85- 15
A204 2187	Spacer-11mm	77- 6
A204 2188	Spacer-15mm	77- 7
A204 2256	Drum Unit	45- 0
A204 2800	Upper Paper Feed Unit	27- 0
A204 2850	Lower Paper Feed Unit	25- 0
A204 2860	Pickup Arm	25- 5
A204 2904	Lower Guide Plate - Duplex Feed (A211)	29- 26
A204 2936	Tray Lift Motor (A208/A210)	65- 25
A204 2953	Paper Tray	17- 8
A204 2971	Bottom Lift Shaft	17- 17
A204 2972	Bottom Lift Lever	17- 16

Part No.	Description	Page and Index No
A204 3051	Development Unit	41- 0
A204 3080	Development Filter	41- 18
A204 3150	Toner Bottle Drive (RIC NA)	39- 0
A204 3151	Toner Bottle Drive (RIC EU)	39- 0
A204 3153	Toner Bottle Drive (Others)	39- 0
A204 3200	Toner Hopper Ass'y	41- 3
A204 3261	Release Bracket	39- 29
A204 3281	Bottle Bracket Cover	39- 14
A204 3568	Rear Bushing	45- 11
A204 3580	Toner Collection Unit	43- 27
A204 3801	Spring Clutch - Transfer Belt	67- 37
A204 3911	Cam Shaft	67- 31
A204 3915	Magnet Clutch Bracket	67- 26
A204 3921	Clutch Arm	67- 35
A204 3922	Brake Cam	67- 33
A204 4651	Bottom Pressure Plate	59- 5
A204 5101	Main Control Board (NA)	73- 2
A204 5101	Main Control Board (NA)	83- 0
A204 5107	IC-4M X16 100NS	73- 4
A204 5107	Ic-4m X16 100ns	83- 2
A204 5117	IC - RF5A230	83- 3
A204 5160	ADS Sensor Board	35- 18
A204 5181	Main Control Board (EU/ASIA/TWN)	73- 2
A204 5181	Main Control Board (EU/ASIA/TWN)	83- 0
A204 5212	Lens Drive Motor	31- 18
A204 5300	Fusing Unit Connector - 115V	49- 5
A204 5326	Fusing Relay Harness	75- 10
A204 5611	Rear Lower Harness (EU/ASIA/TWN) (A208/A210)	73- 17
A204 5665	Fusing Unit Connector - 230V	49- 5
A204 5811	Main Board Bracket	73- 1
A206 2651	Bypass Feed Unit (A210/A211)	23- 0
A206 2804	Torque-Limiter (A211)	23- 22
A207 1465	Key-top - Sorter (SVN)	13- 25
A207 1467	Paper Exit Sheet - LT (A211)	13- 27
A207 1471	Keytop - Halftone (SVN)	13- 19

Part No.	Description	Page and Index No.
A207 1472	Keytop - Enlarge (SVN)	13- 20
A207 1473	Keytop - Reduce (SVN)	13- 21
A207 1480	Paper Exit Sheet - A4 (A211)	13- 27
A207 5609	Duplex Relay Harness (EU/ASIA/TWN) (A211)	73- 17
A208 1277	Front Cover (A208) (RIC)	9- 2
A208 1477	Display Panel - LT (A208/A210)	13- 24
A208 1478	Display Panel - A4 (A208/A210)	13- 24
A208 4006	Fusing Unit (115V)	49- 0
A208 4008	Fusing Unit (230V)	49- 0
A208 5311	Rear Lower Harness (NA) (A208/A210)	73- 17
A208 6404	Model Name Plate - GES (A208)	9- 36
A208 6404	Model Name Plate - GES (A208)	85- 13
A208 6407	Model Name Plate - NSA (A208)	9- 36
A208 6407	Model Name Plate - NST (A208)	85- 13
A208 6412	Front Cover (A208) (SVN)	9- 2
A208 6414	Model Name Plate - REX (A208)	9- 36
A208 6414	Model Name Plate - REX (A208)	85- 13
A208 6422	Front Cover (A208) (INF)	9- 2
A208 8607	Operating Instructions - English LT (RIC)	85- 6
A208 8650	Operating Instructions - English LT (SNV)	85- 6
A208 8660	Operating Instructions - English A4 (INF)	85- 6
A208 8661	Operating Instructions - Germ (INF)	85- 6
A208 8662	Operating Instructions - French (INF)	85- 6
A208 8663	Operating Instructions - Italian (INF)	85- 6
A208 8664	Operating Instructions - Spanish (INF)	85- 6
A208 8690	Operating Instructions - English A4 (NRG)	85- 6
A208 8697	Operating Instructions - English LT (NRG)	85- 6
A209 5309	Duplex Rear Lower Harness (NA) (A211)	73- 17
A209 5319	Rear Upper Harness Duplex	73- 5
A210 1277	Front Cover (A210) (RIC)	9- 2
A210 5460	Operation Panel Board - LT (A208/A210)	13- 26
A210 5465	Operation Panel Board - A4 (A208/A210)	13- 26
A210 6404	Model Name Plate - GES (A210)	9- 36
A210 6404	Model Name Plate - GES (A210)	85- 13
A210 6407	Model Name Plate - NSA (A210)	9- 36

Part No.	Description	Page and Index No
A210 6407	Model Name Plate - NST (A210)	85- 13
A210 6412	Front Cover (A210) (SVN)	9- 2
A210 6414	Model Name Plate - REX (A210)	9- 36
A210 6414	Model Name Plate - REX (A210)	85- 13
A210 6422	Front Cover (A210) (INF)	9- 2
A217 3157	Toner Bottle Bracket	39- 27
A300 3155	Stepped Screw - M25x32	21- 22
A334 4706	Disk - Bottom Plate Clutch	57- 11
A335 1341	Chain Hook	21- 32
A335 3251	Top Cover Hinge	19- 7
A335 4351	Guide Roller	21- 10
A335 4352	Timing Belt Clamp	21- 25
A421 2543	Friction Pad	19- 13
A470 1703	Shift Clutch	61- 27
A470 1703	Shift Clutch	63- 15
A470 1704	Spring - Lower Exit Roller	61- 8
A470 1704	Spring - Lower Exit Roller	63- 2
A491 4690	Bottom Plate Hook	59- 7
5053 0223	Bushing - 8mm	21- 26
5053 0223	Bushing - 8mm	69- 9
5053 0447	Bushing - 6mm	55- 10
5053 0447	Bushing - 6mm	61- 1
5203 1686	Screw - SLID RAIL	79- 10
5203 3151	Roller Cover Spring	65- 19
5203 9501	Grease 501	87- 1
5206 2686	Snap Ring	53- 8
5215 2621	Snap Ring - M6	15- 12
5215 2621	Snap Ring - M6	55- 13
5304 1639	Bushing - 8mm	55- 12
5420 9507	Digital Multimeter - Beckman	87- 2
5420 9516	Test Chart - Os - A3 (10psc/set)	87- 5
5442 1111	Spring - Main Drive Tightner	67- 17
5442 4467	Spring - Stripper Pawl Plate	71- 8
5442 4467	Spring - Stripper Pawl Plate	79- 9
5442 9101	Setting Powder	87- 9

Part No.	Description	Page and Index No.
5442 9103	Launa Oil 40	87- 4
5443 2668	Bushing - 4x6x7mm	55- 4
5443 2668	Bushing - 4x6x7mm	57- 6
5446 1239	Plate Nut - Key Counter	71- 7
5447 2681	Snap Ring (A208)	15- 11
5447 2681	Snap Ring	23- 8
5447 2681	Snap Ring	25- 2
5447 2681	Snap Ring	27- 2
5447 2681	Snap Ring	57- 10
5447 2706	Gear - 15T	25- 4
5447 2706	Gear - 15T	27- 4
5447 2768	Stepped Screw - M3	53- 13
5447 2927	Friction Pad - B	15- 15
5447 9078	Heat Resisting Grease Mt-78	87- 3
5448 2804	Platen Cover Sheet	11- 2
5474 2152	Bushing - 8x12x12mm	29- 4
5925 2258	Stopper Chain	21- 13

Part No.	Description	Page and Index No
0313 0040B	Philips Pan Head Screw - M3x4	9-104
0313 0040B	Philips Pan Head Screw - M3x4	29-105
0313 0040B	Philips Pan Head Screw - M3x4	33-107
0313 0040B	Philips Pan Head Screw - M3x4	61-108
0313 0040B	Philips Pan Head Screw - M3x4	77-105
0313 0050B	Philips Pan Head Screw - M3x5	49-107
0313 0050B	Philips Pan Head Screw - M3x5	57-102
0313 0050B	Philips Pan Head Screw - M3x5	69-101
0313 0060B	Philips Pan Head Screw - M3x6	33-108
0313 0060B	Philips Pan Head Screw - M3x6	43-103
0313 0080B	Philips Pan Head Screw - M3x8	45-106
0313 0080B	Philips Pan Head Screw - M3x8	49-109
0313 0140B	Philips Pan Head Screw - M3x14	15-106
0313 0140B	Philips Pan Head Screw - M3x14	65-105
0314 0060B	Philips Pan Head Screw - M4x6	33-109
0314 0060B	Philips Pan Head Screw - M4x6	41-102
0314 0060B	Philips Pan Head Screw - M4x6	45-101
0314 0060B	Philips Pan Head Screw - M4x6	49-104
0314 0060B	Philips Pan Head Screw - M4x6	71-106
0314 0100B	Philips Pan Head Screw - M4x10	35-101
0314 0120B	Philips Pan Head Screw - M4x12	49-108
0314 0300B	Philips Pan Head Screw - M4x30	75-112
0323 0060B	Philips Sunk Screw - M3x6	39-101
0323 0060B	Philips Sunk Screw - M3x6	73-108
0323 0060B	Philips Sunk Screw - M3x6	75-110
0323 0080B	Philips Sunk Screw - M3x8	71-104
0344 0060F	Philips Truss Head Screw - M4x6	17-104
0344 0080F	Philips Truss Head Screw - M4x8	53-103
0353 0300B	Bind Screw - M3x30	61-105
0353 0300B	Bind Screw - M3x30	63-104
0413 0050Z	Tapping Screw - M3x5	33-104
0413 0060W	Tapping Screw - M3x6	33-105
0413 0062B	Tapping Screw - M3x6	31-102
0413 0062W	Tapping Screw - M3x6	33-103
0413 0082B	Tapping Screw - M3x8	25-105

Part No.	Description	Page and Index No.
0414 0080B	Binding Self-tapping Screw - M4x8	19-102
0414 0080B	Binding Self-tapping Screw - M4x8	23-103
0414 0080B	Binding Self-tapping Screw - M4x8	25-102
0414 0080B	Binding Self-tapping Screw - M4x8	29-106
0414 0080B	Binding Self-tapping Screw - M4x8	31-107
0414 0080B	Binding Self-tapping Screw - M4x8	35-104
0414 0080B	Binding Self-tapping Screw - M4x8	67-106
0414 0082W	Tapping Screw With Flat Washer-m4x8	15-102
0414 0082W	Tapping Screw With Flat Washer-m4x8	33-102
0414 0122B	Philips Tapping Screw - M4x12	51-102
0414 0142B	Binding Self Tapping Screw - M4x14	11-101
0414 0142B	Binding Self Tapping Screw - M4x14	75-106
0433 0050B	Pan Head Self-tapping Screw - M3x5	39-102
0433 0060W	Tapping Screw - M3x6	37-110
0433 0140B	Pan head Self Tapping Screw - M3x14	19-105
0434 0060B	Pan Head Self-tapping Screw - M4x6	17-102
0434 0060B	Pan Head Self-tapping Screw - M4x6	19-101
0434 0060B	Pan Head Self-tapping Screw - M4x6	21-101
0434 0060B	Pan Head Self-tapping Screw - M4x6	23-106
0434 0060B	Pan Head Self-tapping Screw - M4x6	25-101
0434 0060B	Pan Head Self-tapping Screw - M4x6	27-101
0434 0060B	Pan Head Self-tapping Screw - M4x6	29-102
0434 0060B	Pan Head Self-tapping Screw - M4x6	35-107
0434 0060B	Pan Head Self-tapping Screw - M4x6	37-103
0434 0060B	Pan Head Self-tapping Screw - M4x6	39-108
0434 0060B	Pan Head Self-tapping Screw - M4x6	47-101
0434 0060B	Pan Head Self-tapping Screw - M4x6	57-107
0434 0060B	Pan Head Self-tapping Screw - M4x6	61-104
0434 0060B	Pan Head Self-tapping Screw - M4x6	63-102
0434 0060B	Pan Head Self-tapping Screw - M4x6	65-104
0434 0060B	Pan Head Self-tapping Screw - M4x6	67-105
0434 0060B	Pan Head Self-tapping Screw - M4x6	71-101
0434 0060B	Pan Head Self-tapping Screw - M4x6	73-107
0434 0060B	Pan Head Self-tapping Screw - M4x6	77-101
0434 0060B	Pan Head Self-tapping Screw - M4x6	79-101

Part No.	Description	Page and Index No
0434 0060B	Pan Head Self-tapping Screw - M4x6	79-106
0434 0080B	Pan Head Self-tapping Screw - M4x8	61-102
0434 0082B	Tapping Screw - M4x8	9-101
0434 0082B	Tapping Screw - M4x8	51-103
0434 0082B	Tapping Screw - M4x8	61-103
0434 0352W	Pan Head Self-tapping Screw - M4x35	75-105
0443 0060B	Hexagon Tapping Screw - M3x6	21-103
0443 0060B	Hexagon Tapping Screw - M3x6	47-109
0443 0060B	Hexagon Tapping Screw - M3x6	55-101
0443 0060B	Hexagon Tapping Screw - M3x6	57-104
0443 0060B	Hexagon Tapping Screw - M3x6	75-108
0443 0060W	Hexagon Head Tapping Screw - M3x6	53-102
0443 0080B	Tapping Screw - M3x8	47-104
0443 0080W	Hexagon Head Tapping Screw - M3x8	35-102
0452 3010B	Tapping Bind Screw - M3x10	41-107
0573 0040E	Hexagon Headless Set Screw - M3x4	37-101
0573 0040E	Hexagon Headless Set Screw - M3x4	67-102
0574 0050E	Hexagon Headless Set Screw - M4x5	37-105
0622 0100E	Spring Pin - 2x10mm	23-104
0623 0160E	Spring Pin - 3x16mm	21-106
0703 0030M	Spring Washer - M3	33-110
0707 8140B	Bushing - 8x14mm	65-101
0720 0015E	Retaining Ring - 1.5	43-104
0720 0020E	Retaining Ring - M2	25-103
0720 0020E	Retaining Ring - M2	43-106
0720 0030E	Retaining Ring - M3	15-104
0720 0030E	Retaining Ring - M3	25-104
0720 0030E	Retaining Ring - M3	27-103
0720 0030E	Retaining Ring - M3	41-106
0720 0030E	Retaining Ring - M3	45-105
0720 0030E	Retaining Ring - M3	47-103
0720 0030E	Retaining Ring - M3	57-103
0720 0030E	Retaining Ring - M3	77-102
0720 0040E	Retaining Ring - M4	23-101
0720 0040E	Retaining Ring - M4	27-102

Part No.	Description	Page and Index No.
0720 0040E	Retaining Ring - M4	29-104
0720 0040E	Retaining Ring - M4	31-106
0720 0040E	Retaining Ring - M4	37-102
0720 0040E	Retaining Ring - M4	39-106
0720 0040E	Retaining Ring - M4	41-105
0720 0040E	Retaining Ring - M4	43-102
0720 0040E	Retaining Ring - M4	45-107
0720 0040E	Retaining Ring - M4	51-101
0720 0040E	Retaining Ring - M4	55-103
0720 0040E	Retaining Ring - M4	57-106
0720 0040E	Retaining Ring - M4	59-103
0720 0040E	Retaining Ring - M4	61-101
0720 0040E	Retaining Ring - M4	63-103
0720 0040E	Retaining Ring - M4	69-104
0720 0040E	Retaining Ring - M4	77-103
0720 0040E	Retaining Ring - M4	79-104
0720 0060	Retaining Ring - M6	67-111
0720 0060E	Retaining Ring - M6	17-103
0720 0060E	Retaining Ring - M6	21-104
0720 0060E	Retaining Ring - M6	27-105
0720 0060E	Retaining Ring - M6	29-103
0720 0060E	Retaining Ring - M6	37-106
0720 0060E	Retaining Ring - M6	47-106
0720 0060E	Retaining Ring - M6	49-103
0720 0060E	Retaining Ring - M6	65-103
0720 0060E	Retaining Ring - M6	67-110
0720 0090E	Retaining Ring - M9	41-104
0725 0100E	Retaining Ring C - M10	39-107
0725 0120E	Retaining Ring C - M12	51-104
0725 0300E	Retaining Ring C - M30	49-106
0740 3008	Ball Bearing - 8x22x7	37-107
0740 3008	Ball Bearing - 8x22x7	67-101
0800 0072	Philips Pan Head Screw - M2.6x4	39-105
0801 0137	Philips Pan Head Screw With Spring	73-109
0801 0137	Philips Pan Head Screw With Spring	75-109

Part No.	Description	Page and Index No
0802 5085	Tapping Screw - M4x8	15-103
0802 5094	Tapping Truss Head Screw - M4x8	9-103
0802 5094	Tapping Truss Head Screw - M4x8	13-101
0802 5094	Tapping Truss Head Screw - M4x8	19-103
0802 5221	Tapping Screw - M3x10	67-108
0802 5231	Binding Self-tapping Screw - M3x6	35-106
0802 5231	Binding Self-tapping Screw - M3x6	39-103
0802 5231	Binding Self-tapping Screw - M3x6	41-101
0802 5232	Binding Self-tapping Screw - M3x8	31-103
0802 5232	Binding Self-tapping Screw - M3x8	47-102
0802 5232	Binding Self-tapping Screw - M3x8	59-102
0802 5233	Tapping Screw - M3x10	39-104
0802 5233	Binding Self-tapping Screw - M3x10	43-109
0802 5233	Binding Self-tapping Screw - M3x10	45-102
0802 5234	Tapping Screw - M3x12	59-105
0802 5236	Binding Self-tapping Screw - M4x8	21-102
0802 5236	Binding Self-tapping Screw - M4x8	53-101
0802 5236	Binding Self-tapping Screw - M4x8	55-104
0802 5236	Binding Self-tapping Screw - M4x8	57-105
0802 5236	Binding Self-tapping Screw - M4x8	59-104
0802 5236	Binding Self-tapping Screw - M4x8	61-107
0802 5236	Binding Self-tapping Screw - M4x8	63-101
0802 5236	Binding Self-tapping Screw - M4x8	67-107
0802 5237	Binding Self Tapping Screw - M4x10	23-105
0802 5237	Binding Self-tapping Screw - M4x10	31-101
0802 5237	Binding Self-tapping Screw - M4x10	51-106
0803 0017	Knob Screw - M4x6.5	45-103
0805 0088	Retaining Ring - M6	27-104
0805 3384	Bushing - 5mm	45-108
0805 3471	Bushing - M8x22x7	43-107
0805 3480	Bushing - 6mm	23-102
0805 3480	Bushing - 6mm	51-107
0805 3485	Bushing - 8x12x3.5mm	47-105
0807 4072	Washer - Core	61-109
0807 4072	Washer - Core	63-106

Part No.	Description	Page and Index No.
0950 4006M	Philips Screw With Flat Washer - M4x6	49-105
0950 4008B	Philips Screw With Spring Washer -	51-105
0950 4008B	Philips Screw With Spring Washer -	67-109
0951 3005B	Philips Screw With Flat Washer	35-105
0951 3006B	Philips Screw With Flat Washer-m3x6	29-101
0951 3006B	Philips Screw With Flat Washer-m3x6	33-101
0951 3006B	Philips Screw With Flat Washer-m3x6	59-101
0951 3006B	Philips Screw With Flat Washer-m3x6	69-102
0951 3006B	Philips Screw With Flat Washer-m3x6	75-102
0951 3008B	Philips Screw With Flat Washer-m3x8	43-105
0951 4006B	Philips Screw With Washer - M4x6	31-104
0951 4006B	Philips Screw With Washer - M4x6	37-109
0951 4006B	Philips Screw With Washer - M4x6	69-106
0951 4006B	Philips Screw With Washer - M4x6	73-112
0951 4008B	Philips Screw With Washer - M4x8	37-104
0951 4008B	Philips Screw With Washer - M4x8	55-102
0951 4012B	Philips Screw With Flat Washer	67-103
0951 5010B	Philips Screw With Washer - M5x10	43-108
0953 4008M	Screw - M4X8	9-105
0954 3010B	Philips Screw - M3x10	49-101
0954 4012B	Double Sems Screw - M4 X 12	49-102
0960 3006B	Philips Flange Screw - M3 X 6	65-106
0960 4010B	Philips Flange Screw - M4 x 10	79-105
0964 4006B	Tapping Screw With Flat Washer-m4x6	13-102
0964 4006B	Tapping Screw With Flat Washer-m4x6	77-104
0964 4008B	Tapping Screw With Flat Washer-m4x8	9-102
0964 4008B	Tapping Screw With Flat Washer-m4x8	33-106
0964 4008B	Tapping Screw With Flat Washer-m4x8	75-107
0965 3006B	Tapping Screw With Flat Washer M3x6	15-105
0965 3008B	Tapping Screw With Washer - M3x8	47-108
0965 3008W	Tapping Screw With Flat Washer-m3x8	31-105
0965 3010B	Tapping Screw With Flat Washer 3x6	45-104
0965 4008B	Tapping Screw - M4x8	17-101
0971 3006A	Philips Polycarbonate Screw - M3x6	45-109
1102 3822	Connector - 20p	83-101

Part No.	Description	Page and Index No
1102 4052	Optional Connector	73-102
1102 4052	Optional Connector	75-104
1102 4201	Connector - 2p	83-102
1102 4202	Connector - 3p	83-103
1102 4203	CT Header - 4p	83-104
1102 4205	CT Header - 6p	83-105
1102 4206	Connector - 7p	83-106
1102 4207	Connector - 8p	83-107
1102 4208	Connector - 9p	83-108
1102 4210	Connector - 11p	83-109
1102 4211	CT Header - 12p	83-110
1102 4212	CT Header - 15p	83-111
1102 4473	Ct Connector - 2p	75-103
1102 4497	Connector - 13p	83-112
1102 4619	Connector - 2p	83-113
1102 4621	CT Header - 4p	83-114
1102 4623	CT Connector - 6p	83-115
1102 4624	CT Connector - 7p	83-116
1102 4625	Ct Connector 8p	83-117
1102 4628	Connector - 11p	83-118
1102 4629	Connector - 12p	83-119
1102 4630	CT Connector	83-120
1102 4631	Ct Connector - 2p	83-121
1102 4637	Ct Connector - 8p	83-122
1102 4639	Ct Connector - 10p	83-123
1102 4640	Ct Connector - 11p	83-124
1102 4643	Ct Connector - 2p	83-125
1102 4651	Ct Connector - 10p	83-126
1102 5007	CT Header - 14p	83-127
1102 5305	Connector - 6p	83-128
1102 5605	Connector - 13p	83-129
1102 5718	Optical Fiber Connector	83-130
1102 6408	Connector - 30p	83-131
1102 6613	Relay Terminal - 2P	43-101
1102 6739	Connector - 12p	73-110

Part No.	Description	Page and Index No.
1103 1772	Pin Header - 6p	83-132
1103 1774	Pin Header - 8p	83-133
1104 0588	Dip Socket - 28p	83-134
1104 0612	Connector - 40p	83-135
1105 0192	Locking Support	21-109
1105 0192	Locking Support	73-113
1105 0192	Locking Support	75-101
1105 0196	Harness Clamp	35-108
1105 0196	Harness Clamp	47-107
1105 0196	Harness Clamp	61-110
1105 0196	Harness Clamp	63-107
1105 0196	Harness Clamp	67-113
1105 0196	Harness Clamp	71-108
1105 0197	Wire Saddle	21-108
1105 0197	Wire Saddle	67-112
1105 0197	Wire Saddle	69-103
1105 0197	Wire Saddle	75-113
1105 0199	Clamp	21-107
1105 0199	Clamp	27-106
1105 0199	Clamp	29-107
1105 0199	Clamp	39-109
1105 0199	Clamp	41-103
1105 0199	Clamp	57-101
1105 0199	Clamp	61-106
1105 0199	Clamp	63-105
1105 0199	Clamp	65-102
1105 0199	Clamp	67-104
1105 0199	Clamp	69-105
1105 0199	Clamp	79-103
1105 0229	Clamp	71-105
1105 0230	Clamp	37-108
1105 0231	Clamp	35-103
1105 0231	Clamp	71-107
1105 0329	Clamp - ES-0510	71-109
1105 0367	Spacer	73-101

Part No.	Description	Page and Index No
1105 0409	Spacer	73-103
1106 0193	Bushing - 7.9mm	79-102
1107 0392	Fuse (Glass Case) - 6.3A - 125V	73-104
1107 0393	Fuse (Glass Case) - 8A - 125V	73-105
1107 0472	Circuit Breaker - 250v/8a	75-111
1107 0753	Fuse (Glass Case) - 6.3A - 250V	73-106
1204 1545	Main Switch (NA)	71-102
1204 2355	Micro Switch - Am51632a531	21-105
1204 2356	Micro Switch - Am51612a531	15-101
1204 2356	Micro Switch - Am51612a531	19-104
1204 2356	Micro Switch - AM51612A531	65- 2
1204 2397	Safety Switch (EU/ASIA/TWN)	71-103
1208 1392	Relay - G2r-1-t-tu - DC24V	73-111
1400 0369	Transistor - 2sa1213y	83-136
1400 0550	Transistor - BA1L3N	83-137
1400 0558	Transistor - 2sd780	83-138
1402 0708	Diode - 1SS272	83-139
1402 0780	Diode - 200V 1A 11ES2	83-140
1402 1030	Diode - 1SS250	83-141
1402 1378	Diode - PTZ12A	83-142
1402 1380	Diode - PTZ 6.2A	83-143
1402 1387	Diode - HSM123	83-144
1407 2187	TTLIC - SN74LS07NS	83-145
1407 2231	IC - TD62308AF	83-146
1407 2496	IC - M5261L	83-147
1407 3173	Driver - 16bit - M66311fp	83-148
1407 3257	Cmosic - Tc74hc14af	83-149
1407 3708	IC - SLA7026M	83-150
1407 3764	IC - TC7SU04F	83-151
1407 4164	IC - MMID75XF	83-152
1407 4316	IC - TD52308BF	83-153
1407 4686	IC - M54992FP	83-154
1407 4687	IC - TA8083F	83-155
1408 0595	IC - NJM2904M	83-156
1408 0629	IC - 78M12A	83-157

Part No.	Description	Page and Index No.
1408 0874	Transistor Array - M54587fp	83-158
1408 1065	Comparator Ba10339f	83-159
1408 1135	IC - X9C104S	83-160
1503 0777	Oscillator - 32mhz 9.6pf	83-161
1600 1499	Resistor - 0.33 Ω ±2% 2W	83-162
1600 1660	Resistor - ERG2SJ101	83-163
1601 7793	Resistor - 10K Ω	83-164
1601 7798	Resistor Array - 68Ω ±55 1/16W	83-165
1601 7799	Resistor Array - 4.7KΩ ±5% 1/16W	83-166
1602 7032	Filter - EMI-2200pf	83-167
1604 4511	Capacitor - 0.15µF ±10% 50V	83-168
1630 1101	Resistor - 100 Ω 1/4W ±5%	83-169
1630 1161	Resistor - 160 Ω ±5% 1/8W	83-170
1630 3101	Resistor - 100 Ω 1/10W	83-171
1630 3102	Resistor - 1k Ω 1/10W ±5%	83-172
1630 3103	Resistor - 10k Ω 1/10W ±5%	83-173
1630 3104	Resistor - 100k Ω 1/10W ±5%	83-174
1630 3155	Resistor - 1.5MΩ ±5% 1/10W	83-175
1630 3222	Resistor - 2.2k Ω 1/10W ±5%	83-176
1630 3223	Resistor - 22k Ω 1/10W	83-177
1630 3242	Resistor - 2.4k Ω ±5% 1/10W	83-178
1630 3330	Resistor - 33 Ω ±5% 1/10W	83-179
1630 3334	Resistor - 330K Ω ±5% 1/10W	83-180
1630 3393	Resistor - 39K Ω 1/10W	83-181
1630 3472	Resistor - 47K Ω 1/10W ±5%	83-182
1630 3473	Resistor - 47K Ω 1/10W ±5%	83-183
1630 3682	Resistor - 6.8K Ω 1/10W	83-184
1630 3824	Resistor - 820 Ω ±5% 1/10W	83-185
1633 1000	Resistor - 100 Ω ±1% 1/10W	83-186
1633 1002	Resistor - 10k Ω ±1% 1/10W	83-187
1633 2150	Resistor - 215Ω ±1% 1/10W	83-188
1633 4701	Resistor - 4.7k Ω ±1% 1/10W	83-189
1633 4702	Resistor - 47k Ω ±1/10W	83-190
1633 4871	Resistor - 4.87k Ω ±1% 1/10W	83-191
1633 5100	Resistor - 510 Ω ±1% 1/10W	83-192
1633 5231	Resistor - 5.23k Ω ±1% 1/10W	83-193
1633 6490	Resistor - 649 Ω ±1% 1/10W	83-194
1633 8209	Resistor - 820Ω ±1% 1/10W	83-195
1640 5101	Capacitor - 100µF ±20% 50V	83-196
1640 5470	Capacitor - 47µF ±20% 50V	83-197
1642 5100	Capacitor - 10µF ±20% 50V	83-198
1660 1100	Capacitor - 10PF 50V	83-199
1660 3470	Capacitor - 47PF ±5% 50V	83-200
1660 3471	Capacitor - 470PF 50V	83-201
1660 5103	Capacitor - 10000PF ±10% 50V	83-202
1660 5222	Capacitor - 2200PF ±10% 50V	83-203
1660 7104	Capacitor - 100000PF 50V	83-204

Gestetner® RICOH® savin®

A212/A214
PARTS CATALOG

PN:RCPC5840

A212/A214
PARTS LOCATION AND LIST

This section instructs you as the numbers and names of parts on this machine.

LOCATION OF UNIT

1. EXTERIOR (A212/A214)

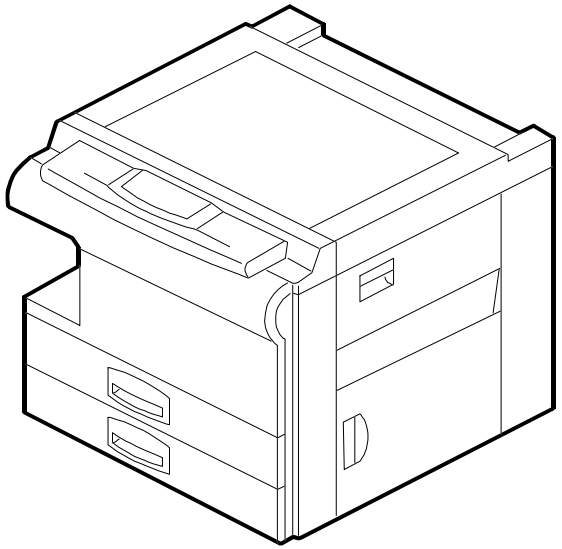

See Page 9

2. PLATEN COVER ASS'Y (A212/A214)

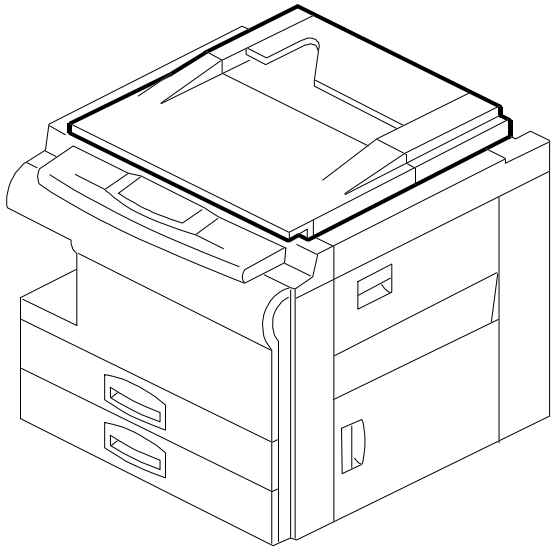

See Page 11

3. OPERATION PANEL UNIT (A212/A214)

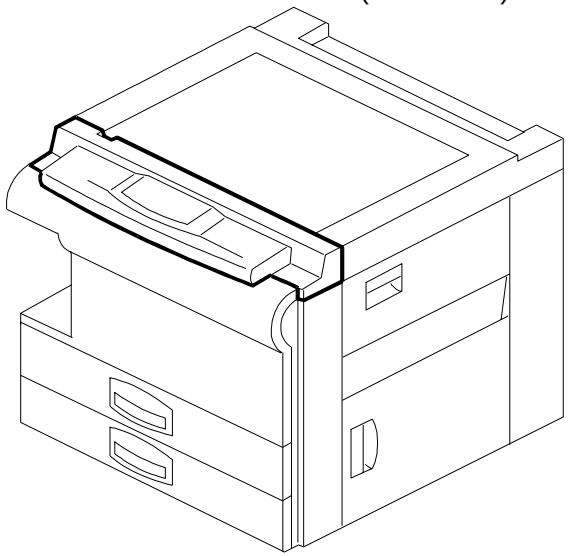

See Page 13

4. BY-PASS FEED SECTION (A212/A214)

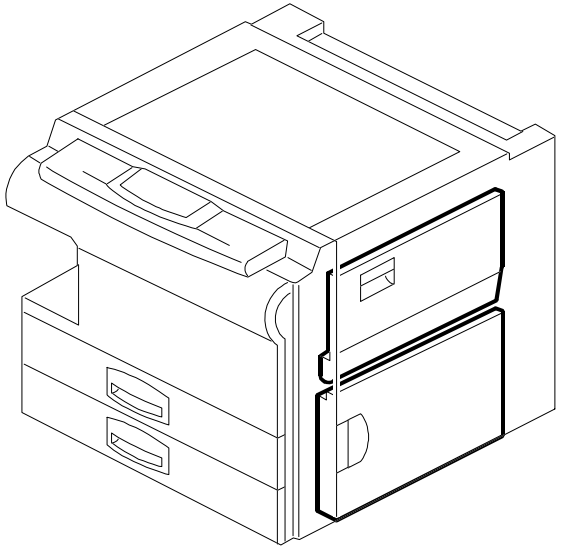

See Page 15

5. PAPER TRAY SECTION (A212/A214)

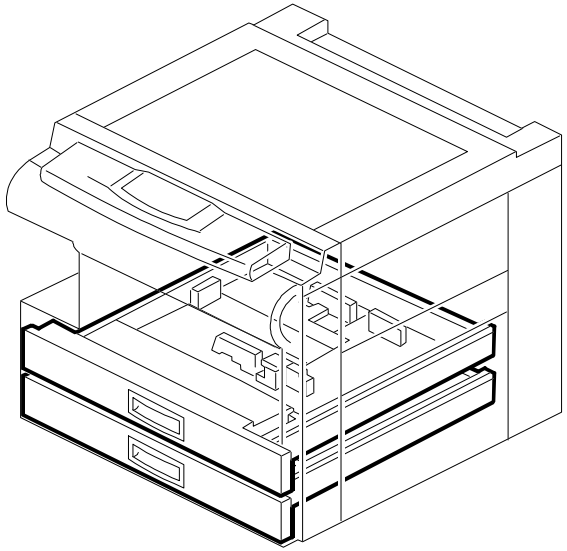

See Page 17

6. LCT UNIT 1 (A214)

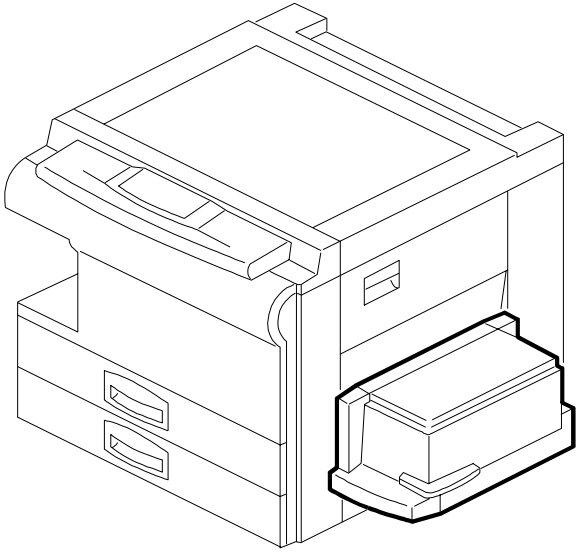

See Page 19

LOCATION OF UNIT

7. LCT UNIT 2 (A214)

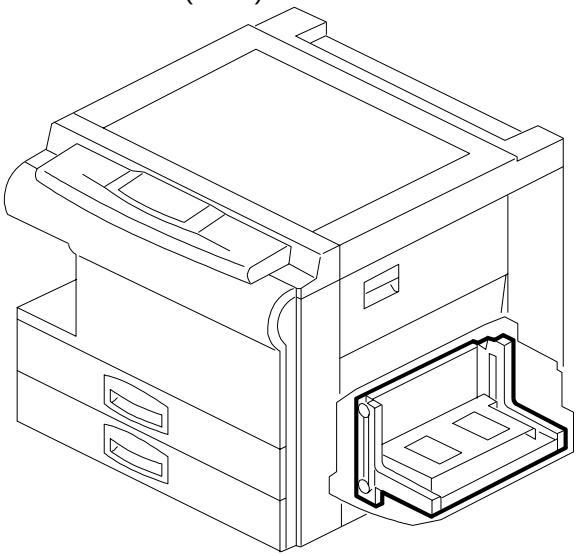

See Page 21

8. PAPER FEED SECTION 1 (A212/A214)

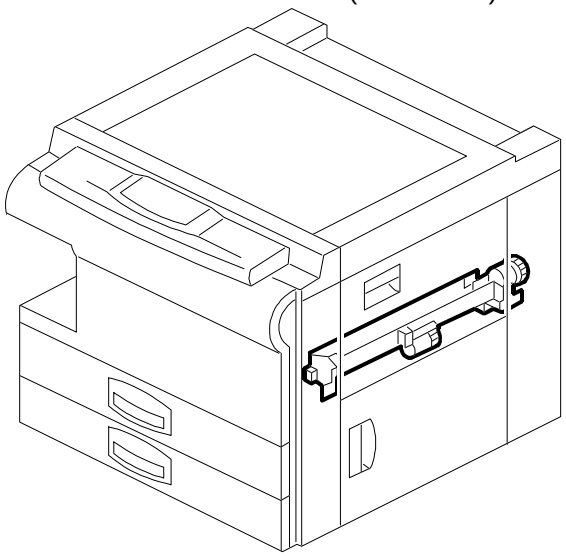

See Page 23

9. PAPER FEED SECTION 2 (A212/A214)

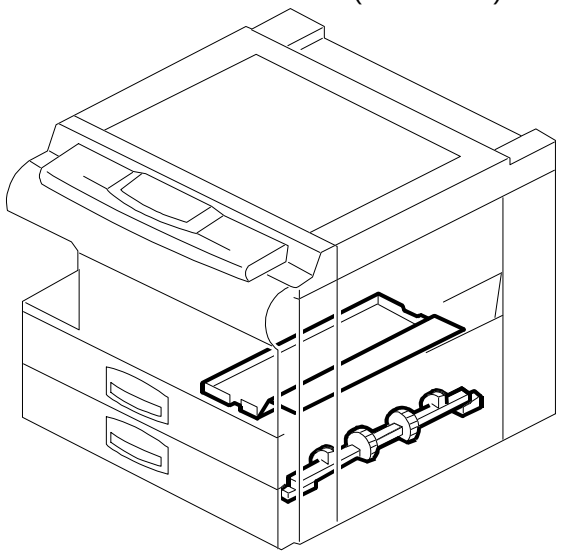

See Page 25

10. PAPER REGISTRATION (A212/A214)

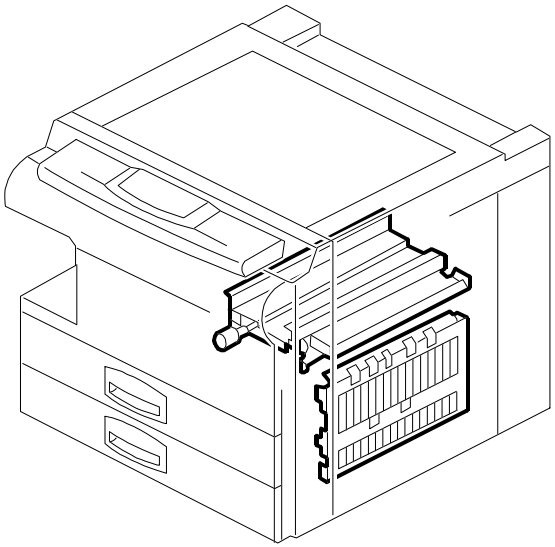

See Page 27

11. OPTICAL SECTION 1 (A212/A214)

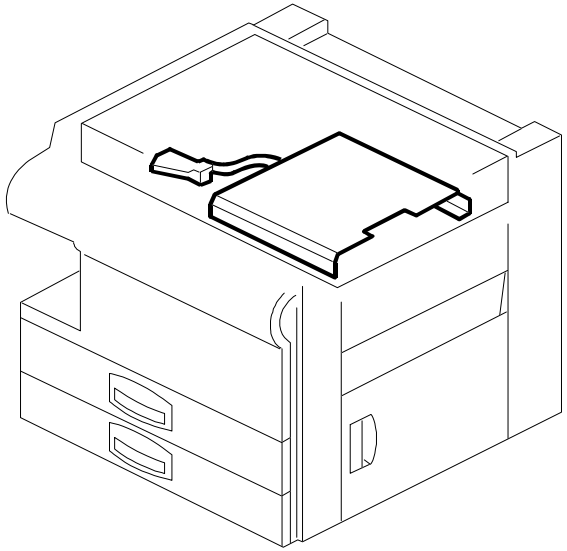

See Page 29

12. OPTICAL SECTION 2 (A212/A214)

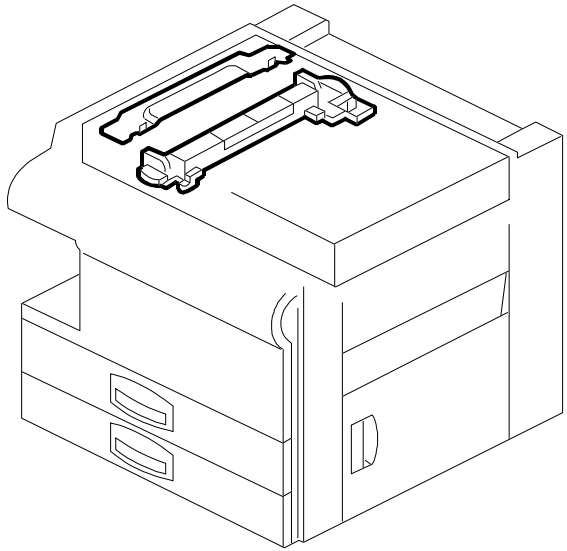

See Page 31

LOCATION OF UNIT

13. OPTICAL SECTION 3 (A212/A214)

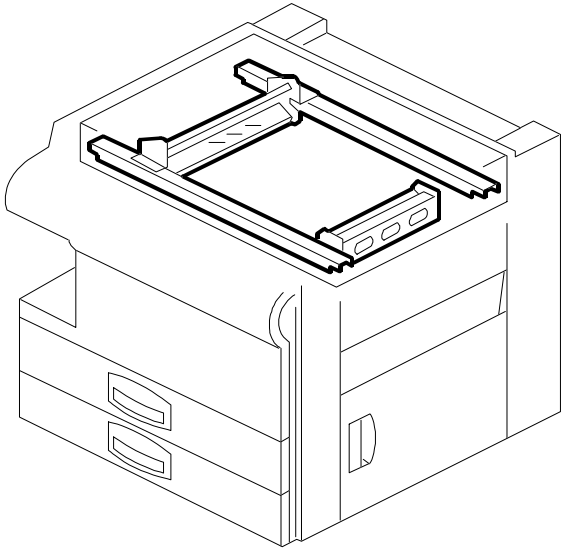

See Page 33

14. OPTICAL SECTION 4 (A212/A214)

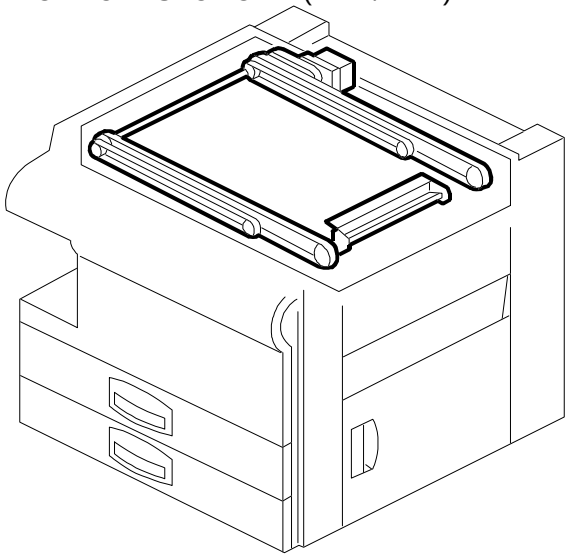

See Page 35

15. TONER SUPPLY UNIT (A212/A214)

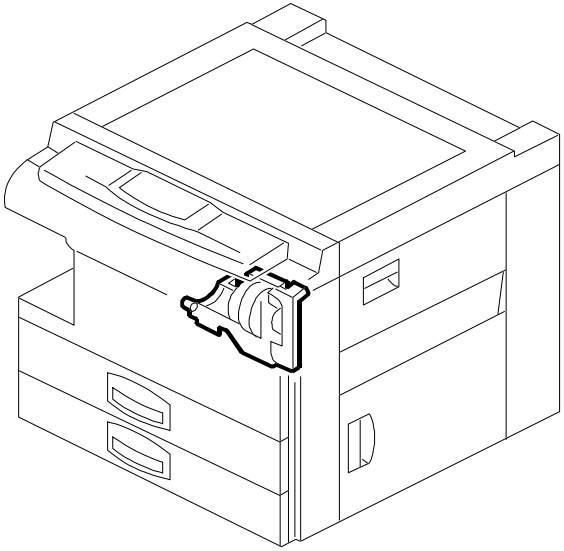

See Page 37

16. DEVELOPMENT UNIT (A212/A214)

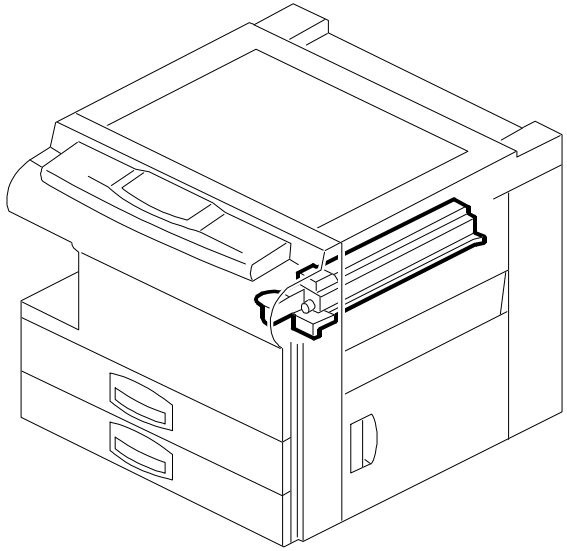

See Page 39

17. DRUM UNIT 1 (A212/A214)

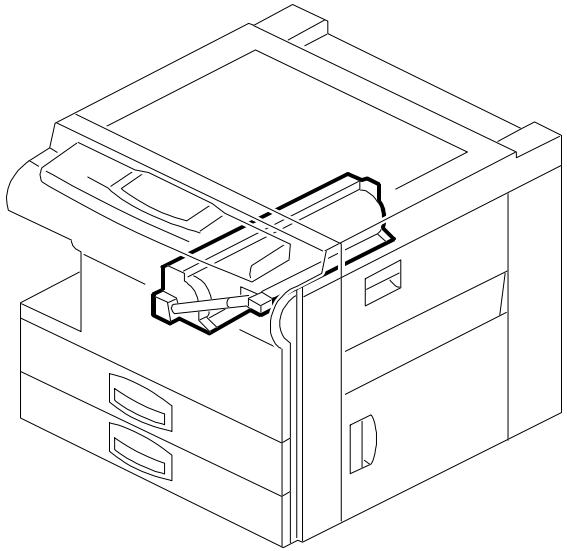

See Page 41

18. DRUM UNIT 2 (A212/A214)

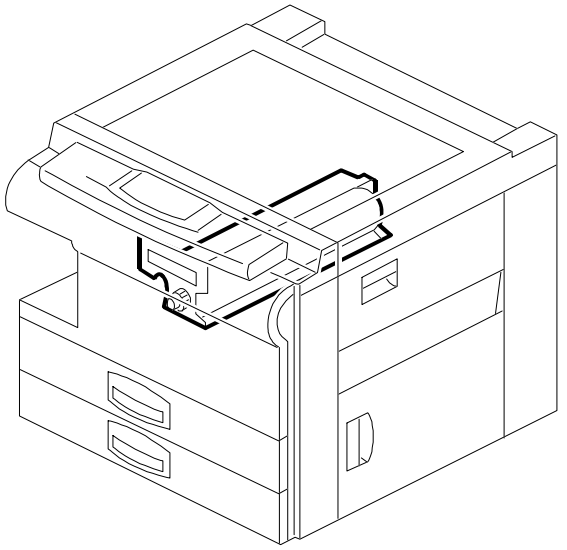

See Page 43

LOCATION OF UNIT

19. TRANSFER UNIT (A212/A214)

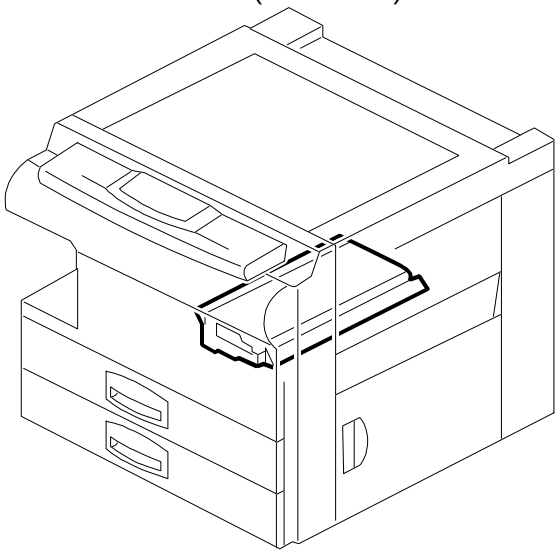

See Page 45

20. FUSING UNIT 1 (A212/A214)

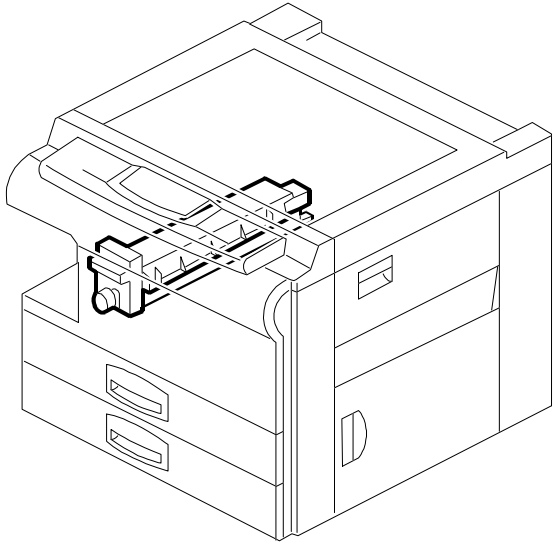

See Page 47

21. FUSING UNIT 2 (A212/A214)

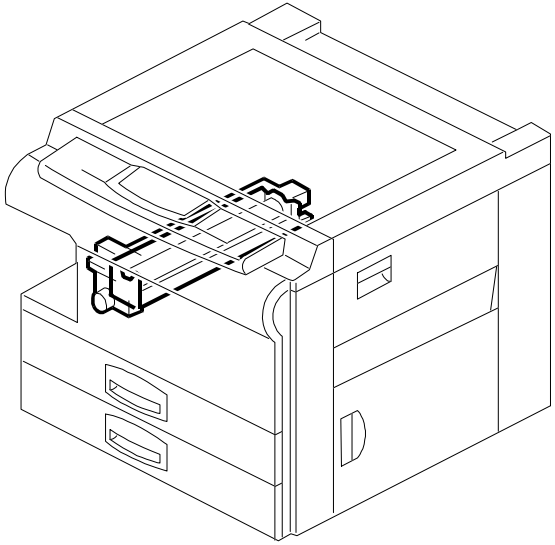

See Page 49

22. DUPLEX TRAY 1 (A214)

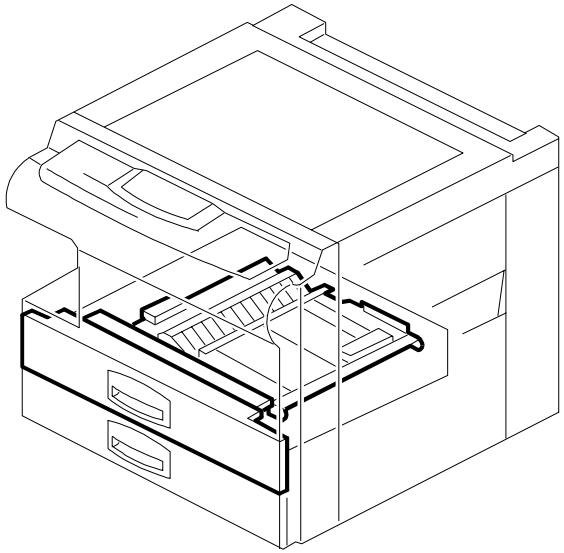

See Page 51

23. DUPLEX TRAY 2 (A214)

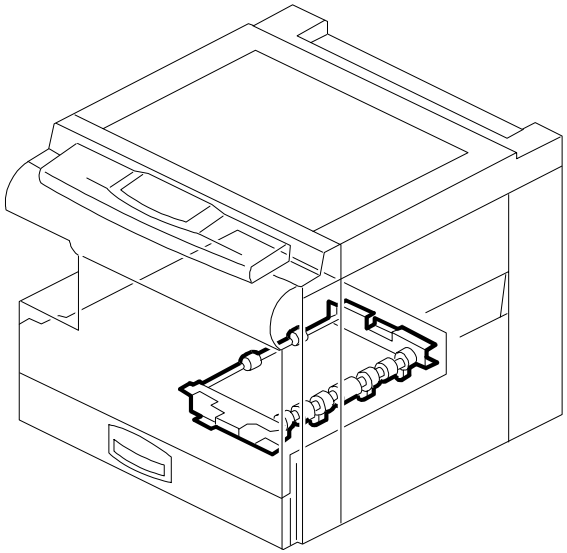

See Page 53

24. DUPLEX TRAY 3 (A214)

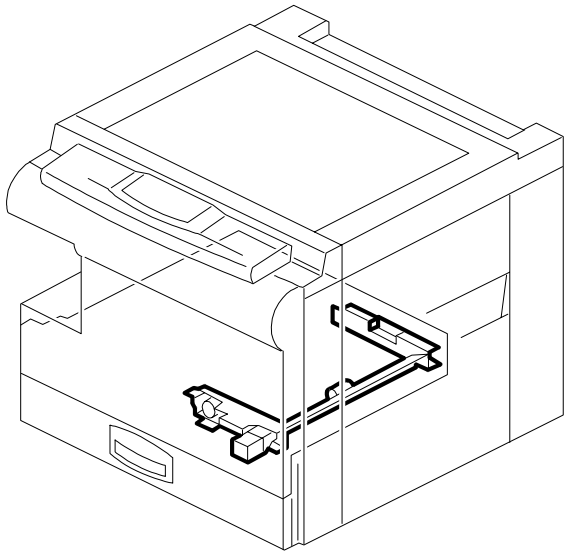

See Page 55

LOCATION OF UNIT

25. DUPLEX TRAY 4 (A214)

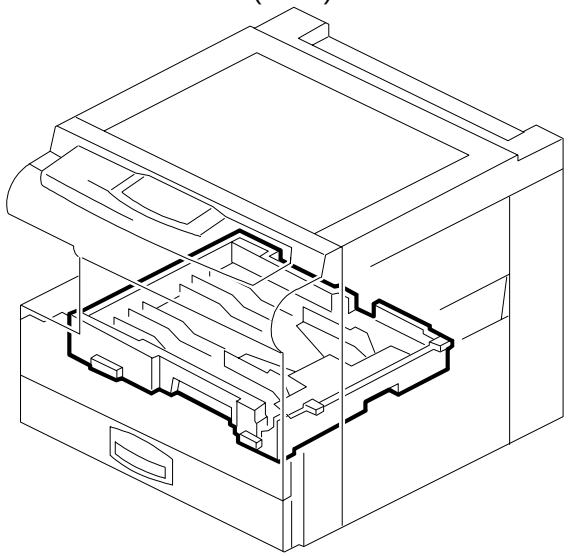

See Page 57

26. PAPER EXIT SECTION (A214)

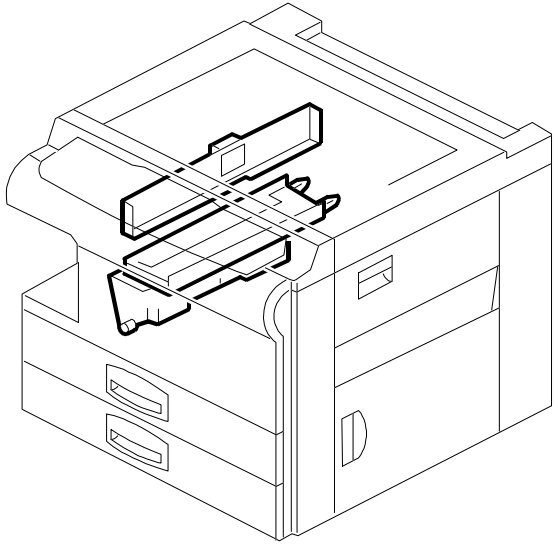

See Page 59

27. PAPER EXIT SECTION (A212)

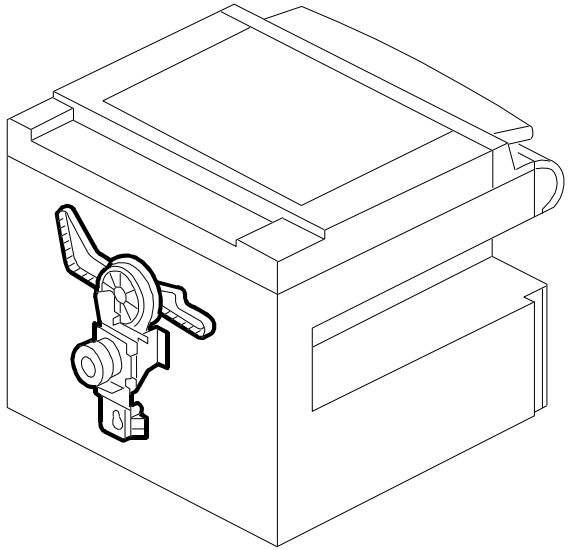

See Page 61

28. DRIVE SECTION 1 (A212/A214)

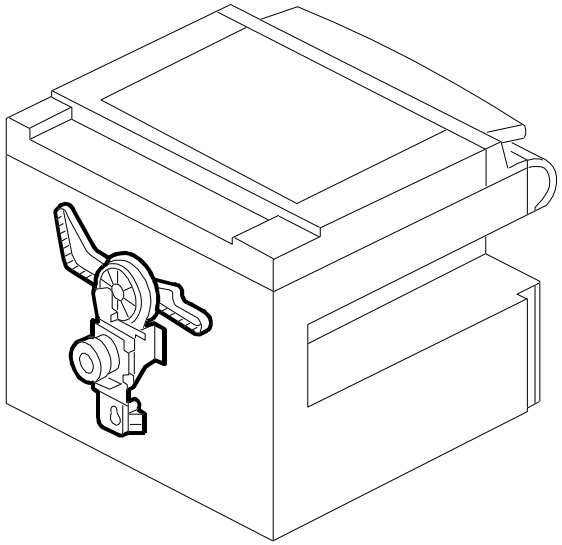

See Page 63

29. DRIVE SECTION 2 (A212/A214)

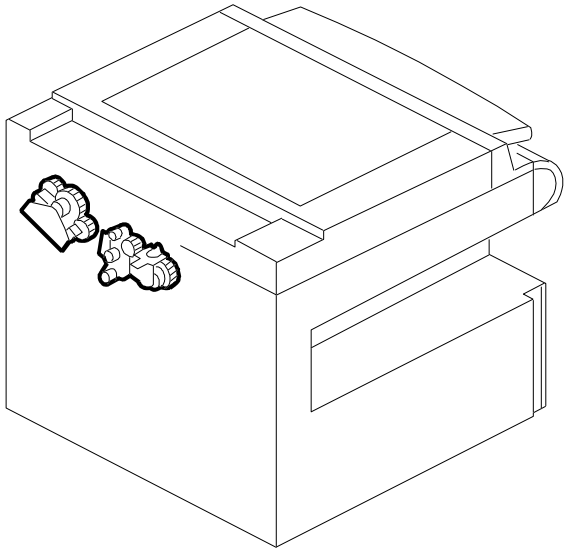

See Page 65

30. DRIVE SECTION 3 (A212/A214)

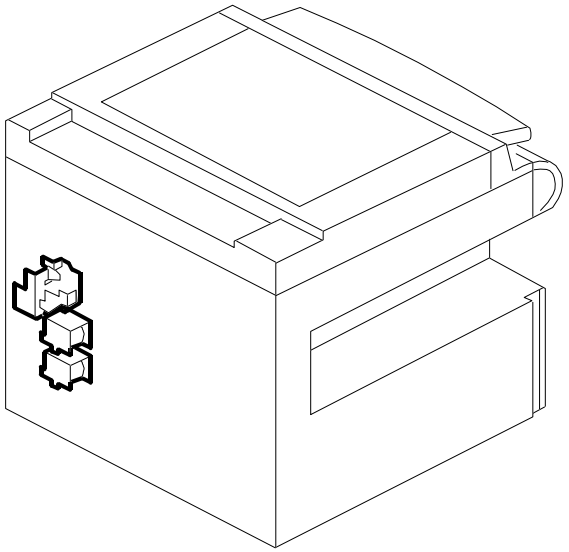

See Page 67

LOCATION OF UNIT

31. ELECTRICAL SECTION 1 (A212/A214)

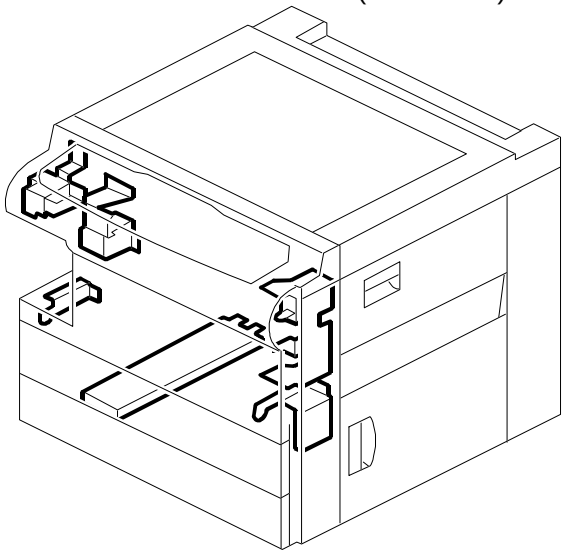

See Page 69

32. ELECTRICAL SECTION 2 (A212/A214)

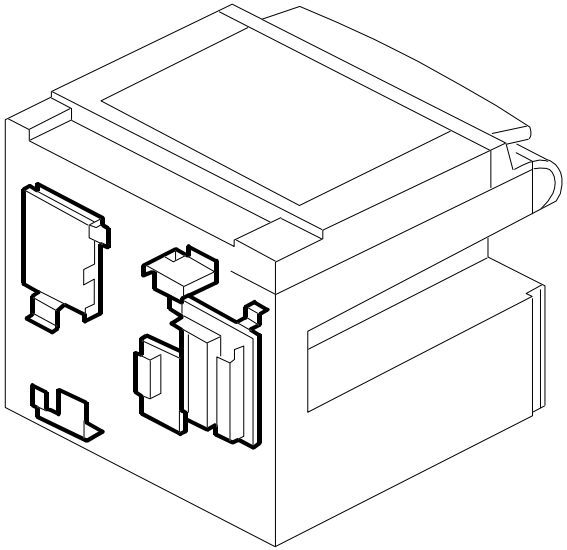

See Page 71

33. ELECTRICAL SECTION 3 (A212/A214)

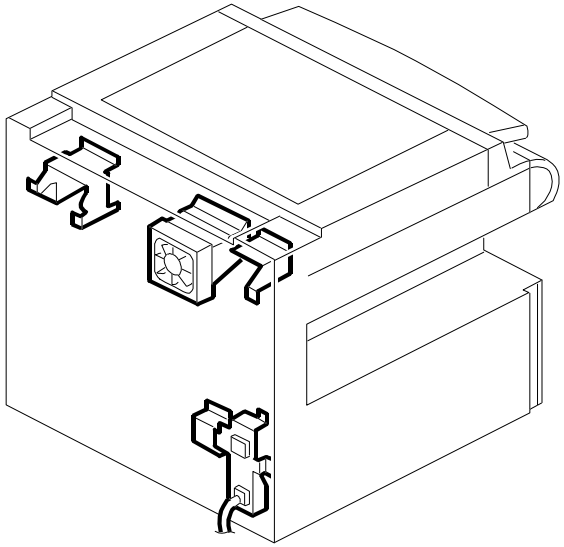

See Page 73

34. FRAME SECTION 1 (A212/A214)

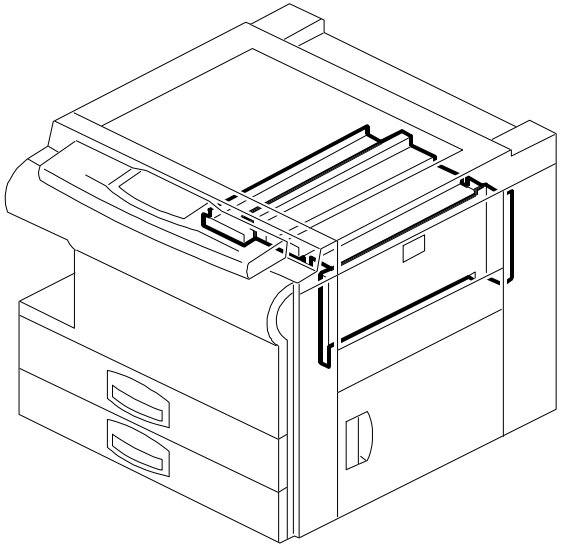

See Page 75

35. FRAME SECTION 2 (A212/A214)

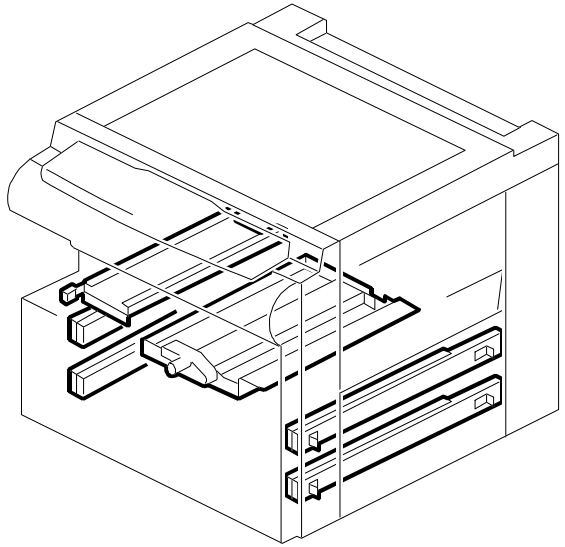

See Page 77

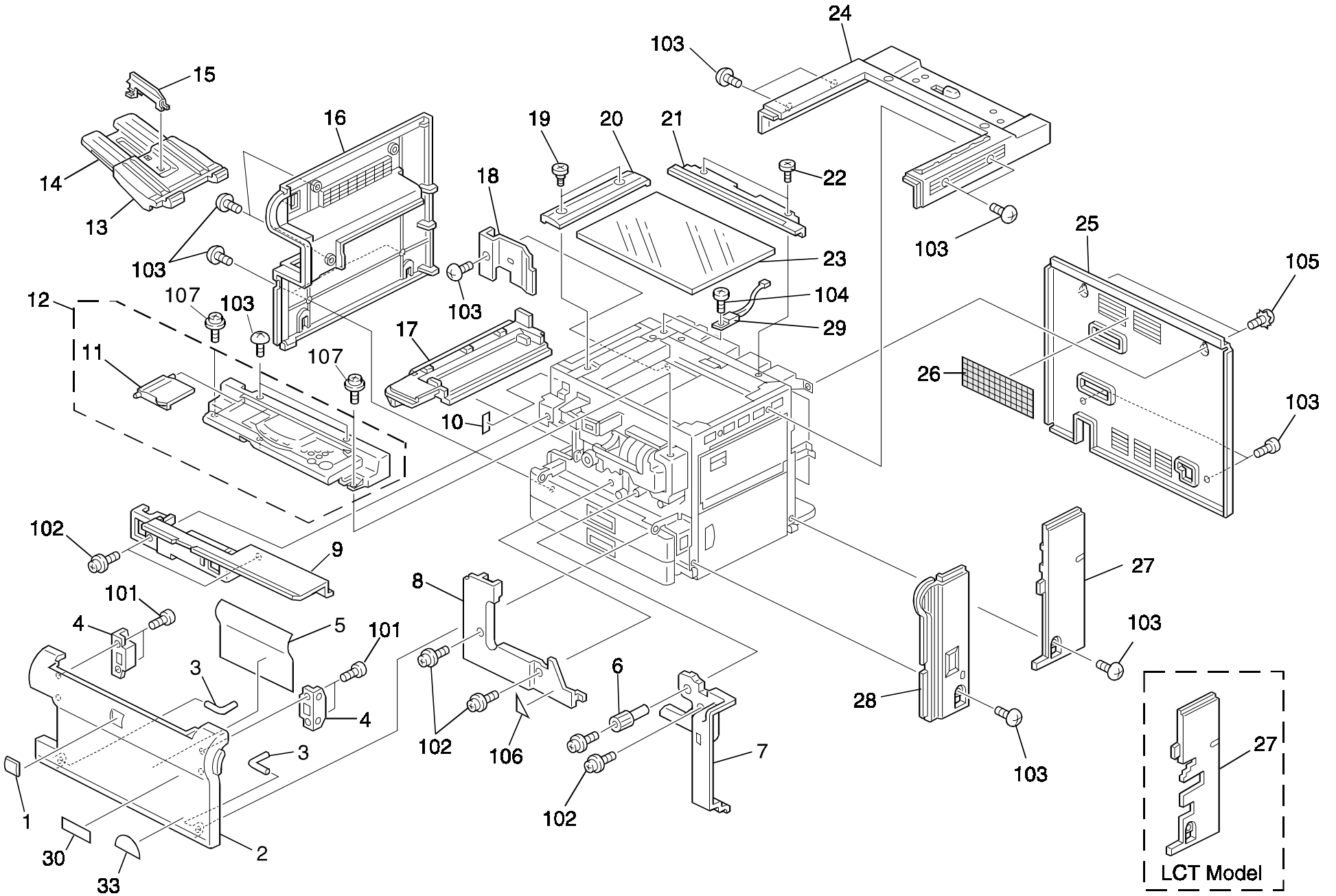
24
103
15
16
19
20
21
22
14
13
18
103
103
23
104
29
12
107
103
17
107
11
10
25
105
26
103
102
9
101
4
5
101
3
8
6
27
103
28
4
3
102
106
7
102
103
1
30
33
2
27
LCT Model

1. EXTERIOR (A212/A214)

Rev. 03/99

Index No.	Part No.	Description	Q'ty Per Assembly
1	A153 1285	Emblem (RIC)	1
1	A156 6413	Emblem (SVN)	1
1	A153 6423	Support Cover (INF)	1
2	A212 1282	Front Cover (A212)(RIC)	1
2	A212 6412	Front Cover (A212)(SVN)	1
2	A212 6422	Front Cover (A212)(INF)	1
2	A214 1277	Front Cover (A214)(RIC)	1
2	A214 6412	Front Cover (A214)(SVN)	1
2	A214 6422	Front Cover (A214)(INF)	1
2	A157 6403	Front Cover (NRG)	1
3	A153 1354	Hinge Pin	2
4	AG07 0004	Magnetic Catch	6
5	A157 1360	Operation Sheet (A212)	1
5	A158 1360	Operation Sheet (A214)	1
6	AG05 0074	Registration Knob	1
7	A212 1352	Inner Cover - Right Lower	1
8	A157 1339	Lower Inner Cover	1
9	A157 1351	Upper Inner Cover	1
10	A212 5830	Decal - Main Switch Cover (EU/ASIA/TWN)	
11	A153 1469	Panel Cover	1
12	A212 1323	Operation Panel Ass'y - LT (A212)	1
12	A214 1325	Operation Panel Ass'y - LT (A214)	1
12	A212 1324	Operation Panel Ass'y - A4 (A212)	1
12	A214 1326	Operation Panel Ass'y - A4 (A214)	1
12	A212 1328	Operation Panel Ass'y (A212)(SVN)	1
12	A214 1328	Operation Panel Ass'y (A214)(SVN)	1
13	AF04 3083	Copy Tray	1
14	AF04 3076	Copy Tray Slide	1
15	AF04 3077	Copy Tray Guide	1
16	A212 1302	Left Cover	1
17	A157 1311	Left Inner Cover	1
18	A157 1321	Left Inner Cover - Small	1
19	AA14 3416	Stepped Screw - M4x3	2
20	AC04 2113	Left Original Scale - A4	1
20	AC04 2117	Left Original Scale - LT	1

Index No.	Part No.	Description	Q'ty Per Assembly
21	AC04 2120	Rear Original Scale (A4)	1
21	AC04 2124	Rear Original Scale - LT	1
22	AA14 3417	Shoulder Screw - M4x4	2
23	AC01 2060	Exposure Glass - A3T-3.2	1
24	A153 1251	Upper Cover	1
25	A212 1291	Rear Cover	1
26	AA01 2080	Dust Filter	1
27	A212 1271	Rear Right Cover (A212)	1
27	A214 1331	Rear Right Cover (A214)	1
28	A212 1261	Front Right Cover	1
29	AW10 0027	Thermister	1
30	A212 6404	Decal - Model Name - GES (A212)	1
30	A212 6407	Decal - Model Name - NSA (A212)	1
30	A212 6414	Decal - Model Name - REX (A212)	1
30	A214 6404	Decal - Model Name - GES (A214)	1
30	A214 6407	Decal - Model Name - NSA (A214)	1
30	A214 6414	Decal - Model Name - REX (A214)	1
31	A212 8834	Operation panel Sheet - LT	1
31	A212 1485	Operation panel Sheet - A4	1
33	AA00 1389	Large Decal - Energy Star (NA)	1
101	0434 0082B	Tapping Screw - M4x8	
102	0964 4008B	Tapping Screw With Flat Washer - M4x8	
103	0802 5094	Tapping Truss Head Screw - M4x8	
104	0313 0040B	Philips Pan Head Screw - M3x4	
105	0953 4008M	Screw - M4X8	
106	1005 0890	Decal - TUV	
107	0964 4006B	Tapping Screw With Flat Washer - M4X6	

2. PLATEN COVER ASS'Y (A212/A214)

Rev. 03/99

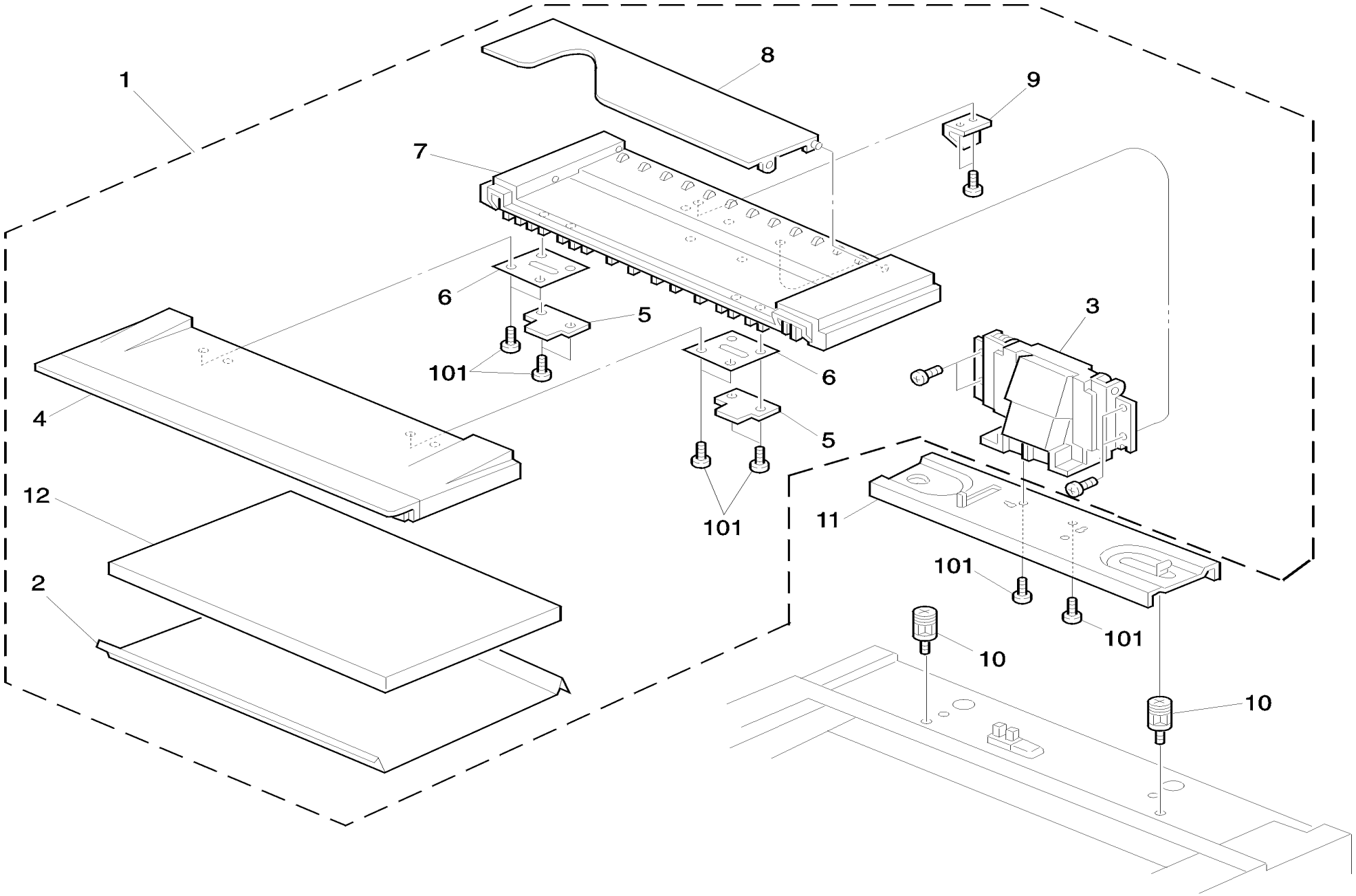

2. PLATEN COVER ASS'Y (A212/A214)

Index No.	Part No.	Description	Q'ty Per Assembly
1	A153 1369	Platen Cover Ass'y	1
2	5448 2804	Platen Cover Sheet	1
3	A153 1370	Platen Cover Hinge	1
4	A134 1394	Front Platen Cover	1
5	A053 1957	Flex Hinge - Platen Cover	2
6	AA16 2067	Platen Cover Pad	1
7	A134 1395	Rear Platen Cover	1
8	A134 1396	Original Holder	1
9	A153 1383	Platen Cover Feeler	1
10	AA14 8447	Platen Cover Stud	1
11	A153 1380	Platen Cover Bracket	1

Index No.	Part No.	Description	Q'ty Per Assembly
101	0414 0142B	Binding Self Tapping Screw - M4x14	

3. OPERATION PANEL UNIT (A212/A214)

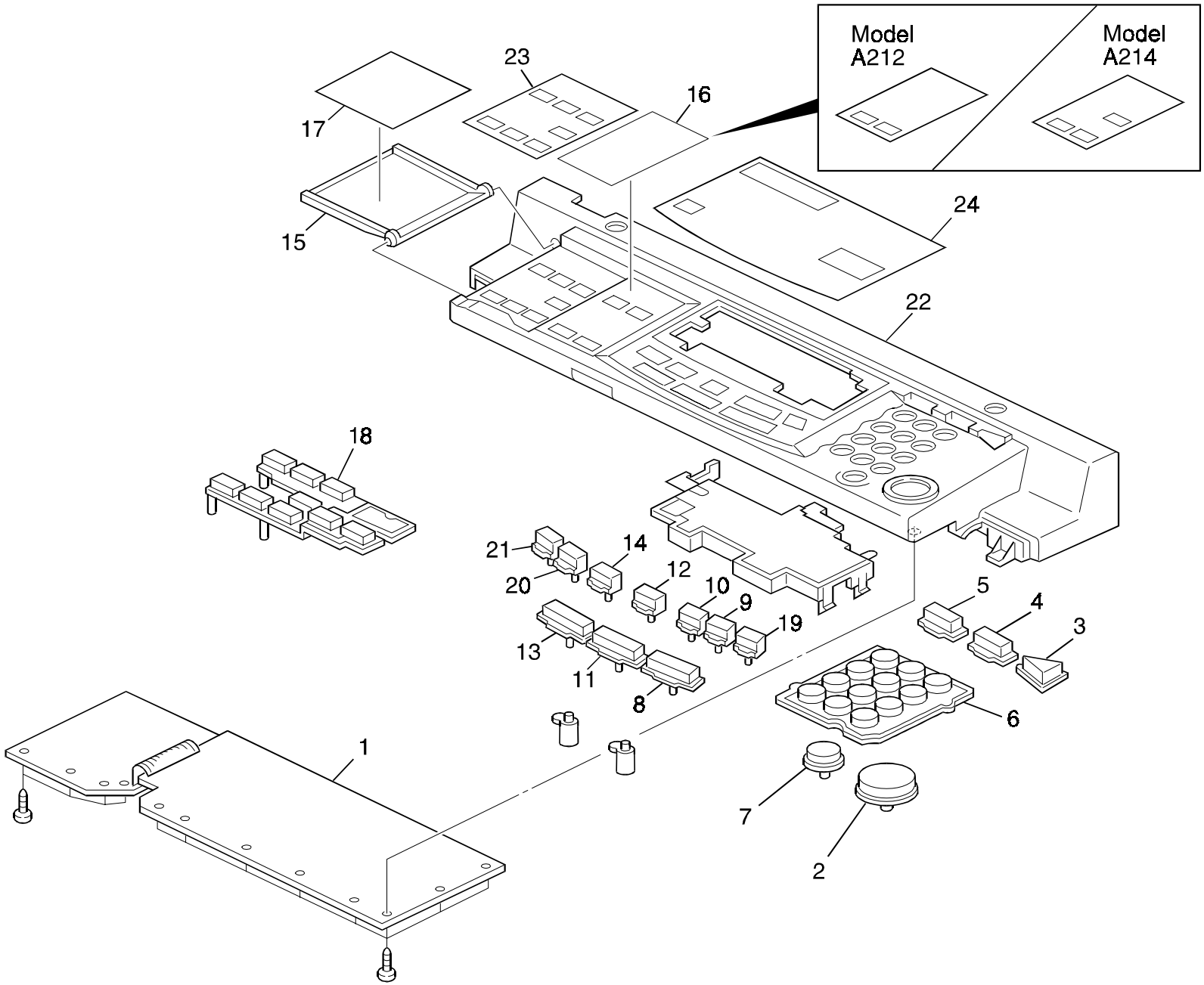

3. OPERATION PANEL UNIT (A212/A214)

Rev. 03/99

Index No.	Part No.	Description	Q'ty Per Assembly
*	A212 1323	Operation Panel Ass'y - LT (A212)	1
*	A214 1325	Operation Panel Ass'y - LT (A214)	1
*	A212 1324	Operation Panel Ass'y - A4 (A212)	1
*	A214 1326	Operation Panel Ass'y - A4 (A214)	1
*	A212 1328	Operation Panel Ass'y - LT (A212)(SVN)	1
*	A214 1328	Operation Panel Ass'y - LT (A214)(SVN)	1
1	A212 5460	Operation Panel Board - LT (A212)	1
1	A212 5465	Operation Panel Board - A4 (A212)	1
1	A214 5460	Operation Panel Board - LT (A214)	1
1	A214 5465	Operation Panel Board - A4 (A214)	1
2	A153 1452	Key-top Start	1
2	A156 1452	Key-top Start (SVN)	1
3	A153 1453	Key-top Interrupt	1
3	A156 1453	Key-top Interrupt (SVN)	1
4	A153 1454	Key-top Mode Clear	1
4	A156 1454	Key-top Mode Clear (SVN)	1
5	A153 1455	Key-top Program	1
5	A156 1455	Key-top Program (SVN)	1
6	A153 1456	Key-top 10 Key	1
6	A156 1456	Key-top 10 Key (SVN)	1
7	A153 1457	Key-top Clear/Stop	1
7	A156 1457	Key-top Clear/Stop (SVN)	1
8	A153 1458	Key-top Auto Density	1
8	A156 1458	Key-top Auto Density (SVN)	1
9	A153 1459	Key-top Darker	1
9	A156 1459	Key-top Darker (SVN)	1
10	A153 1460	Key-top Lighter	1
10	A156 1460	Key-top Lighter (SVN)	1
11	A153 1461	Key-top Auto Paper Select	1
11	A156 1461	Key-top Auto Paper Select (SVN)	1
12	A153 1462	Key-top Paper Select	1
12	A156 1462	Key-top Paper Select (SVN)	1
13	A153 1463	Key-top Full Size	1
13	A156 1463	Key-top Full Size (SVN)	1
14	A153 1464	Key-top Auto Reduce/Enlarge	1
14	A156 1464	Key-top Auto Reduce/Enlarge (SVN)	1
15	A153 1469	Panel Cover	1
16	A214 1493	Paper Exit Sheet - LT (A214)	1
16	A214 1483	Paper Exit Sheet - A4 (A214)	1
16	A212 1493	Sheet Sorter - LT (A212)	1
16	A212 1483	Sorter Sheet - A4 (A212)	1
17	A212 1486	Operation Panel Sheet - LT	1
17	A214 1487	Operation Sheet - A4	1
18	A204 1465	Key-top - Sorter	1
18	A204 1475	Key-top - Sorter (SVN)	1
19	A204 1471	Keytop - Halftone	1
19	A207 1471	Keytop - Halftone (SVN)	1
20	A204 1472	Keytop - Enlarge	1
20	A207 1472	Keytop - Enlarge (SVN)	1
21	A204 1473	Keytop - Reduce	1
21	A207 1473	Keytop - Reduce (SVN)	1
22	A204 1475	Operation Panel Case - LT	1
22	A204 1476	Operation Panel Case - A4	1
23	A204 1481	Sheet-LT	1
23	A2041482	Sheet-A4	1
24	A212 1492	Display Panel - LT (A212)	1
24	A212 1482	Display Panel - A4 (A212)	1
24	A214 1492	Display Panel - LT (A214)	1
24	A214 1482	Display Panel - A4 (A214)	1

4. BY-PASS FEED SECTION (A212/A214)

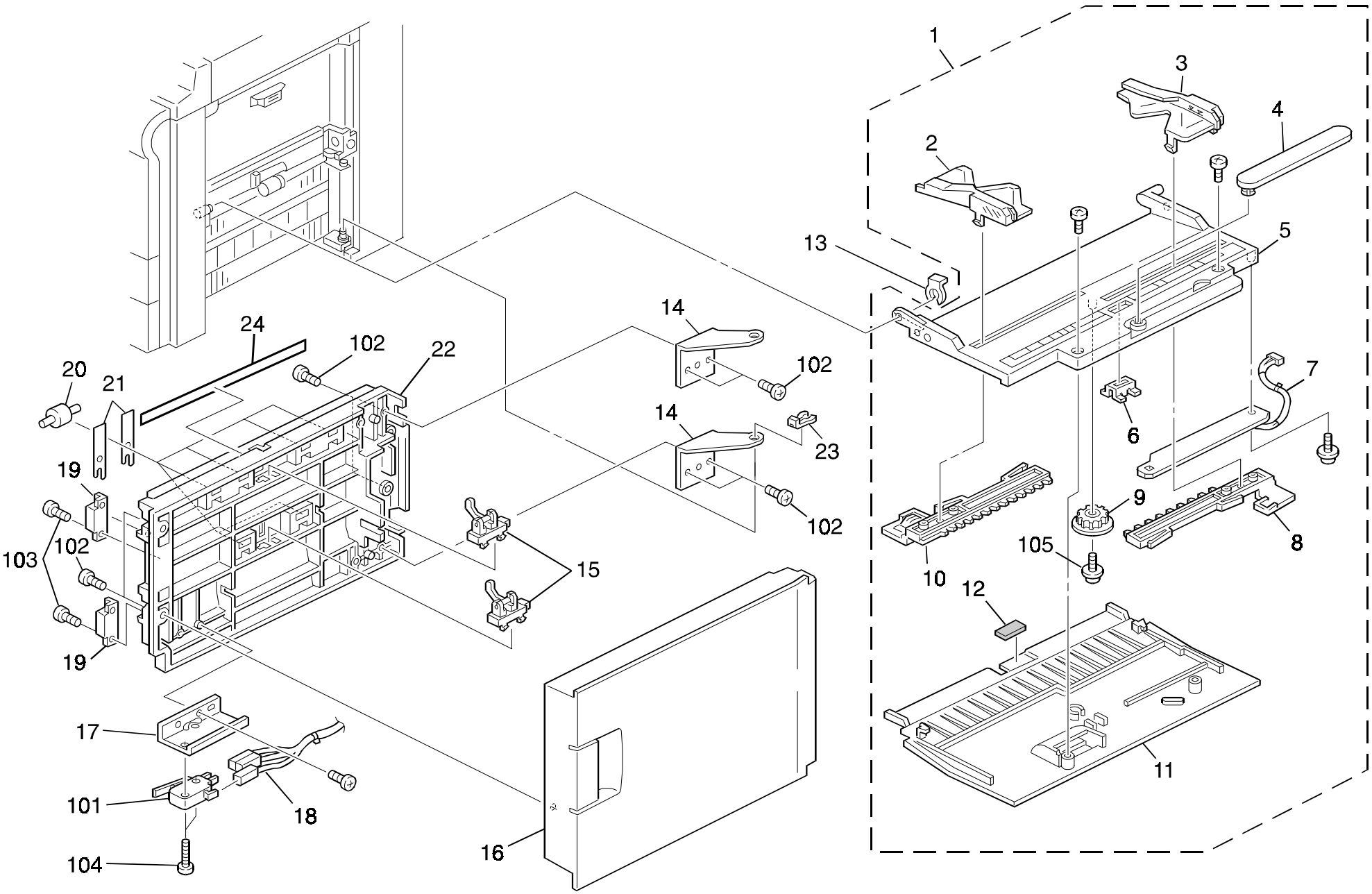

4. BY-PASS FEED SECTION (A212/A214)

Rev. 03/99

Index No.	Part No.	Description	Q'ty Per Assembly
1	A212 2692	By-pass Feed Table Ass'y	1
2	A212 2711	Front Side Fence	1
3	A212 2716	Rear Side Fence	1
4	A134 2701	By-pass Feed Guide	1
5	A212 2697	By-pass Feed Table	1
6	A212 2705	Magnet Catch Plate	1
7	A212 2534	Paper Size Sensor Board	1
8	A212 2706	Rear Fence Rack	1
9	G011 3305	Gear - 16T	2
10	A212 2707	Front Fence Rack	2
11	A212 2746	By-pass Feed Cover	1
12	5447 2927	Friction Pad - B	1
13	5215 2621	Snap Ring - M6	3
14	A212 2586	Hinge Bracket (A212)	1
15	AW02 0069	Photointerruptor	2
16	A212 2591	Vertical Transfer (A212)	1
17	A212 2559	Switch Bracket	1
18	A157 5336	Vertical Transport Harness (A212)	1
19	AG07 0004	Magnetic Catch	6
20	AF02 2079	Vertical Driven Roller	6
21	A157 2557	Spring Plate	12
22	A212 2571	Vertical Transport Guide (A212)	1
23	5447 2681	Snap Ring (A212)	7
24	A212 2878	Mylar - Paper Guide (EU)	1

Index No.	Part No.	Description	Q'ty Per Assembly
101	1204 2356	Micro Switch - AM51612A531	
102	0414 0082W	Tapping Screw With Flat Washer - M4x8	
103	0802 5085	Tapping Screw - M4x8	
104	0313 0140B	Philips Pan Head Screw - M3x14	
105	0965 3006B	Tapping Screw With Flat Washer M3x6	

5. PAPER TRAY SECTION (A212/A214)

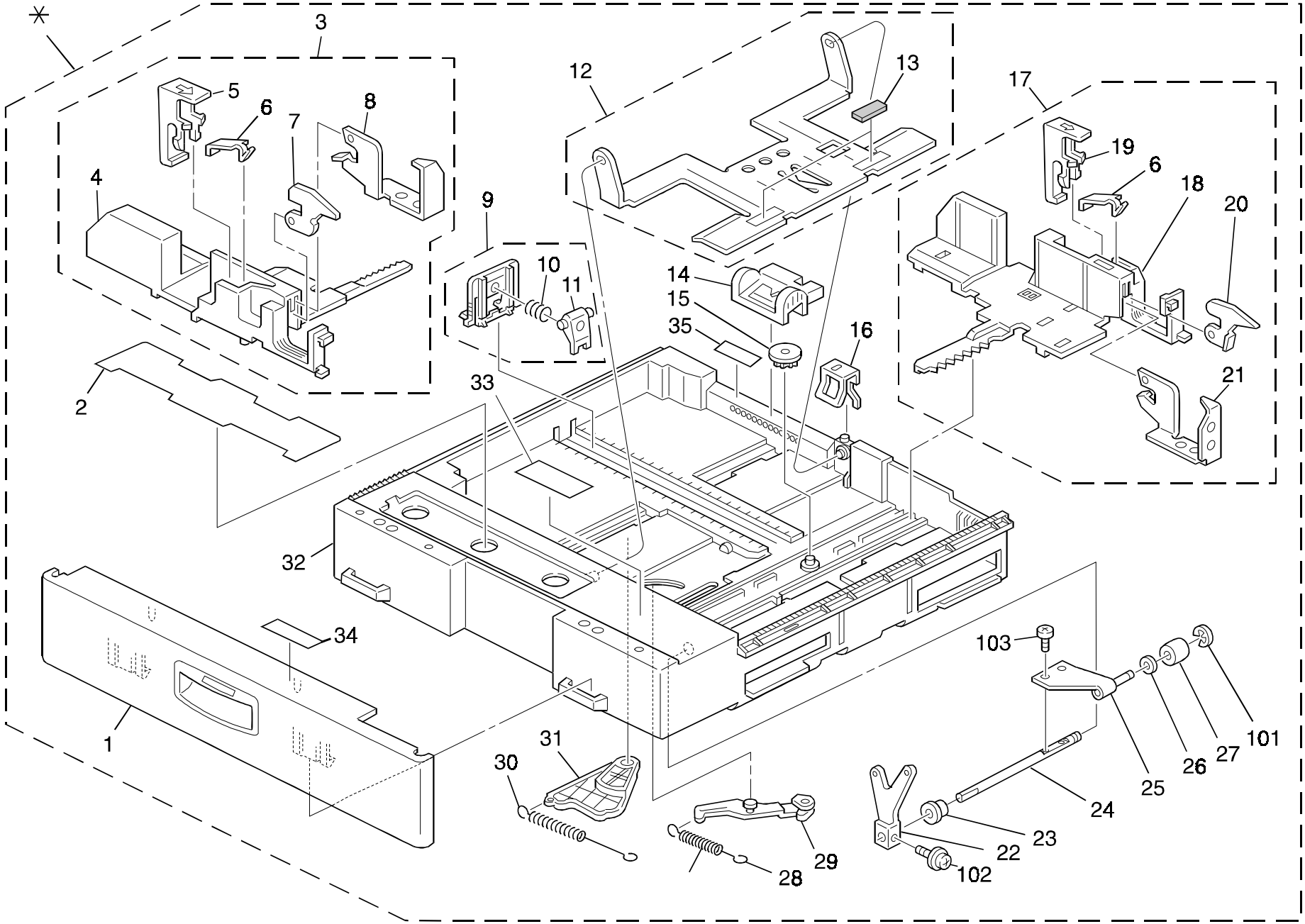

5. PAPER TRAY SECTION (A212/A214)

Rev. 01/11/2000

Index No.	Part No.	Description	Q'ty Per Assembly
*	A212 2762	Paper Tray Ass'y (LT)	1
*	A212 2761	Paper Tray Ass'y (A4)	1
1	A212 2956	Paper Feed Front Cover	1
2	A212 2758	Decal - Paper Set Detection	1
3	A212 2592	Front Side Fence Ass'y	1
4	A212 2661	Adjusting Plate - Front	1
5	A219 2664	Front Stopper Lever	1
6	A212 2769	Rear Stopper Spring	1
7	A212 2871	Adjusting Plate Front	1
8	A212 2598	Front Corner Separator	1
9	A212 2844	End Fence Ass'y	1
10	A219 2656	End Fence Spring	1
11	A219 2558	End Fence Guide	1
12	A212 2542	Bottom Plate Ass'y	1
13	G020 2645	Friction Pad	1
14	AF01 5027	Paper Size Slider	1
15	AB01 3868	Gear - 16Z	1
16	A212 2765	Spring Plate - Gear Side Fence	1
17	A212 2595	Rear Side Fence Ass'y	1
18	A212 2567	Rear Side Fence	1
19	A219 2642	Rear Lever Stopper	1
20	A212 2870	Adjusting Plate Rear	1
21	A212 2596	Rear Corner Separator	1
22	A219 2597	Bottom Plate Lever	1
23	AA08 0111	Bushing - 8x12x7	1
24	A219 2591	Paper Lift Shaft	1
25	A219 2574	Paper Lift Arm Ass'y	1
26	A096 3863	Spacer - 4x6x1	1
27	A219 2577	Paper Lift Roller	1
28	A219 2543	Spring	1
29	A212 2987	Lever	1
30	A219 2541	Spring	1
31	A212 2982	Paper Lift Shutter	1
32	A212 2590	Paper Tray	1
33	A212 2805	Tray Bottom Plate Sheet	1

Index No.	Part No.	Description	Q'ty Per Assembly
34	A219 2692	Decal - Operating	1
35	A153 2996	Decal Paper Size - A4/A3	1
35	A153 2995	Decal Paper Size - LT/DLT	1
101	0720 0030E	Retaining Ring - M3	
102	0960 4012W	Philips Flange Screw - M4x12	
103	0453 4006B	Tapping Screw - 4x6	

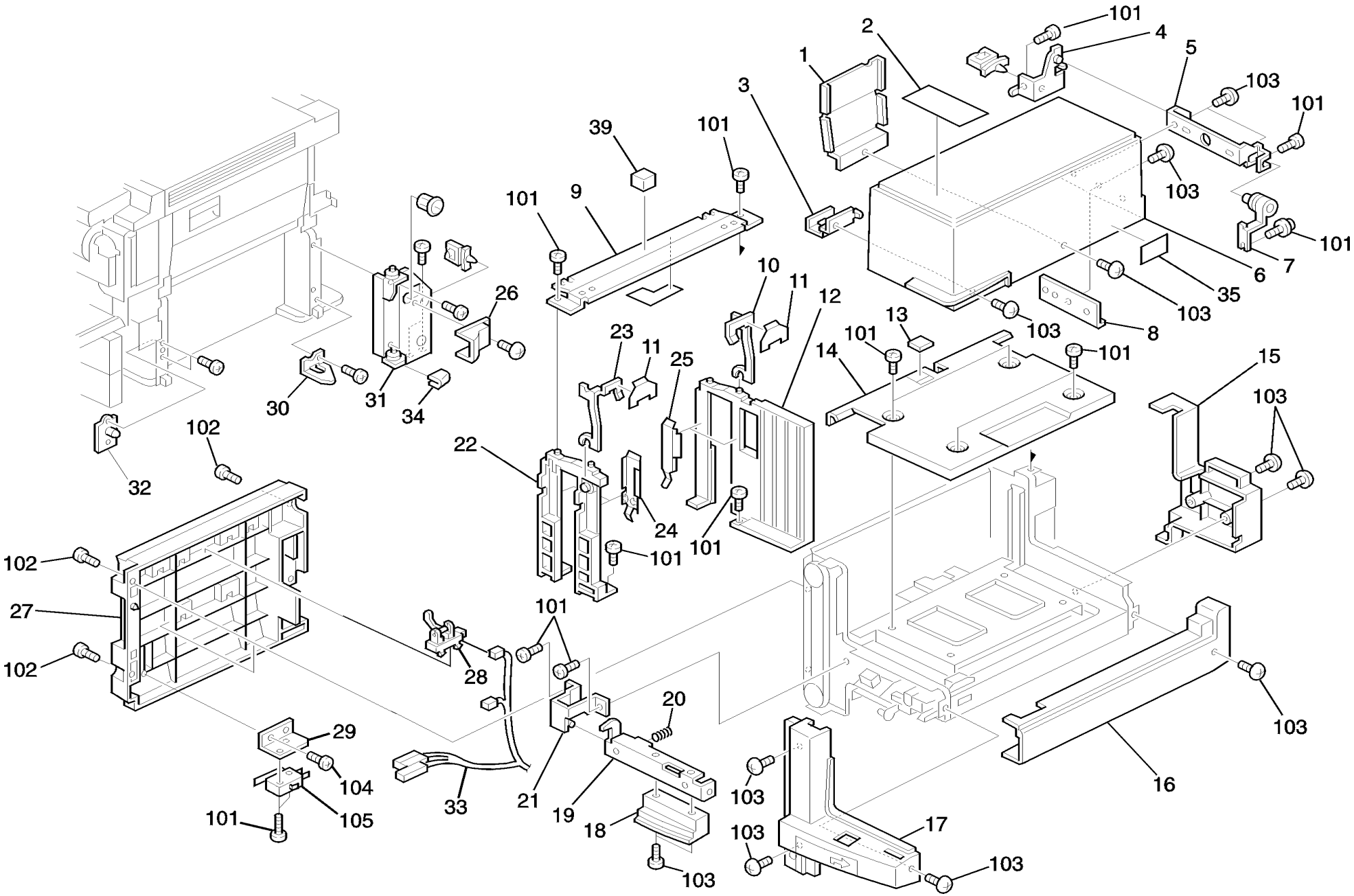
101
2
4
1
5
103
3
101
39
101
9
103
101
6
7
103
35
103
8
10
11
12
26
23
11
25
13
101
101
14
15
103
30
31
34
22
24
101
101
102
32
102
27
102
28
101
20
29
104
105
101
33
21
19
18
103
103
103
17
103
16
103

6. LCT UNIT 1 (A214)

Rev. 03/99

Index No.	Part No.	Description	Q'ty Per Assembly
1	A155 6324	End Fence	1
2	A155 6113	Decal - Paper Set	1
3	A155 6207	Cover Bracket	1
4	A155 6303	Fix Hinge	1
5	A155 6302	Hinge Angle	1
6	A155 6101	LCT Upper Cover	1
7	A335 3251	Top Cover Hinge	1
8	A155 6201	LCT Hinge Bracket	1
9	A155 6251	Upper Stay	1
10	A155 6312	Rear Paper Holder	1
11	A155 6313	Support Guide	2
12	A155 6307	Rear Side Fence	1
13	A421 2543	Friction Pad	1
14	A155 6142	LCT Paper Tray	1
15	A155 6221	LCT Rear Cover	1
16	A155 6231	LCT Right Cover	1
17	A155 6191	LCT Front Cover	1
18	A155 6181	Knob	1
19	A155 6171	Grip Bracket	1
20	AA06 3239	Spring - Handle	1
21	A155 6170	Hinge Bracket	1
22	A155 6306	Front Side Fence	1
23	A155 6311	Front Paper Holder	1
24	A155 6321	Front Spring Plate	2
25	A155 6322	Rear Sprig Plate	2
26	A155 6241	LCT Harness Cover	1
27	A214 2571	Vertical Transport Guide	1
28	AW02 0069	Photointerruptor	2
29	A212 2559	Switch Bracket	1
30	A155 6169	Hinge Holder	1
31	A214 6410	Lower Hinge	1
32	A214 6175	LCT Positioning Plate	1
33	A155 5349	LCT Vertical Harness	1
34	A155 6162	Cushion	1
35	A155 6114	Caution Decal - LCT	1

Index No.	Part No.	Description	Q'ty Per Assembly
101	0434 0060B	Philips Tapping Screw - M4x6	
102	0414 0080B	Tapping Screw - M4x8	
103	0802 5094	Tapping Truss Head Screw - M4x8	
104	1204 2356	Micro Switch - AM51612A531	

7. LCT UNIT 2 (A214)

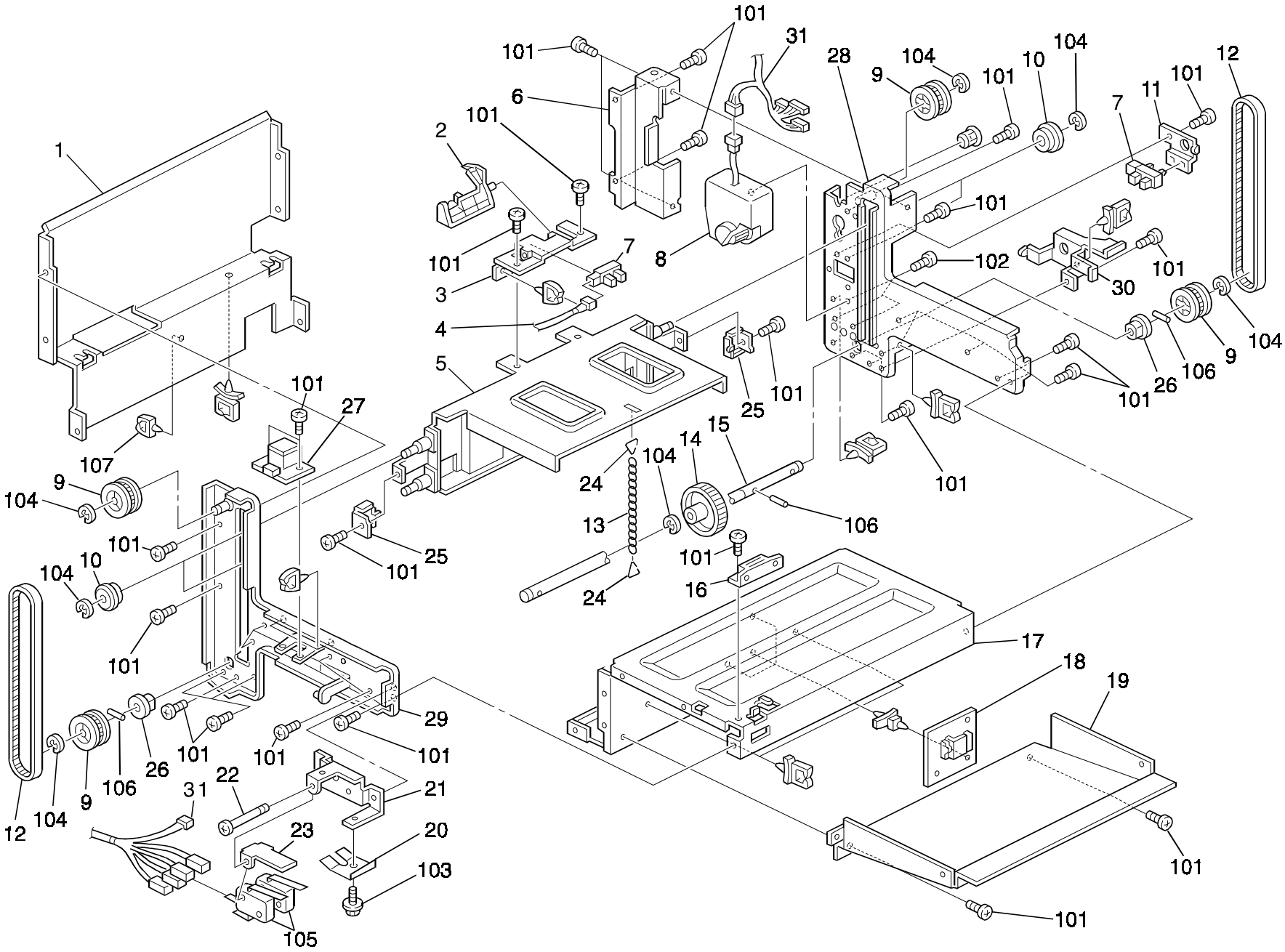

7. LCT UNIT 2 (A214)

Rev. 03/99

Index No.	Part No.	Description	Q'ty Per Assembly
1	A155 6143	Left Bracket	1
2	A155 6148	Paper End Sensor Feeler	1
3	A155 6147	Paper End Sensor Bracket	1
4	A155 5348	Paper End Sensor Harness	1
5	A155 6203	Paper Tray Stay	1
6	A155 6153	Upper Hinge	1
7	AW02 0075	Photointerrupter	2
8	AX05 0090	Motor - DC 24V 36W	1
9	AB03 0281	Timing Pulley - 28Z	4
10	A335 4351	Guide Roller	4
11	A155 6136	Lift Sensor Bracket	1
12	AA04 3456	Timing Belt - S3M167	2
13	5925 2258	Stopper Chain	1
14	AB01 1133	Gear - 49Z	1
15	AA14 0576	LCT Drive Shaft	1
16	AG07 0004	Magnetic Catch	1
17	A155 6141	Tray Bottom Plate	1
18	A155 5165	LCT Main Board	1
19	A155 6145	Tray Cover	1
20	A155 6118	Spring Plate	1
21	A155 6116	Safety Switch Bracket	1
22	A300 3155	Stepped Screw - M25x32	1
23	A155 6117	Safety Switch Lever	1
24	A335 1341	Chain Hook	2
25	A335 4352	Timing Belt Clamp	2
26	5053 0223	Bushing - 8mm	2
27	A155 5170	Push Switch	1
28	A155 6125	Rear Side Bracket	1
29	A155 6110	Front Side Plate	1
30	A155 6215	Harness Guide	1
31	A155 5342	LCT Harness	1

Index No.	Part No.	Description	Q'ty Per Assembly
101	0434 0060B	Philips Tapping Screw - M4x6	
102	0802 5236	Tapping Screw - M4x8	
103	0443 0060B	Hexagon Tapping Screw - M3x6	
104	0720 0060E	Retaining Ring - M6	
105	1204 2355	Micro Switch - AM51632A531	
106	0623 0160E	Spring Pin - 3x16mm	
107	1105 0199	Clamp	

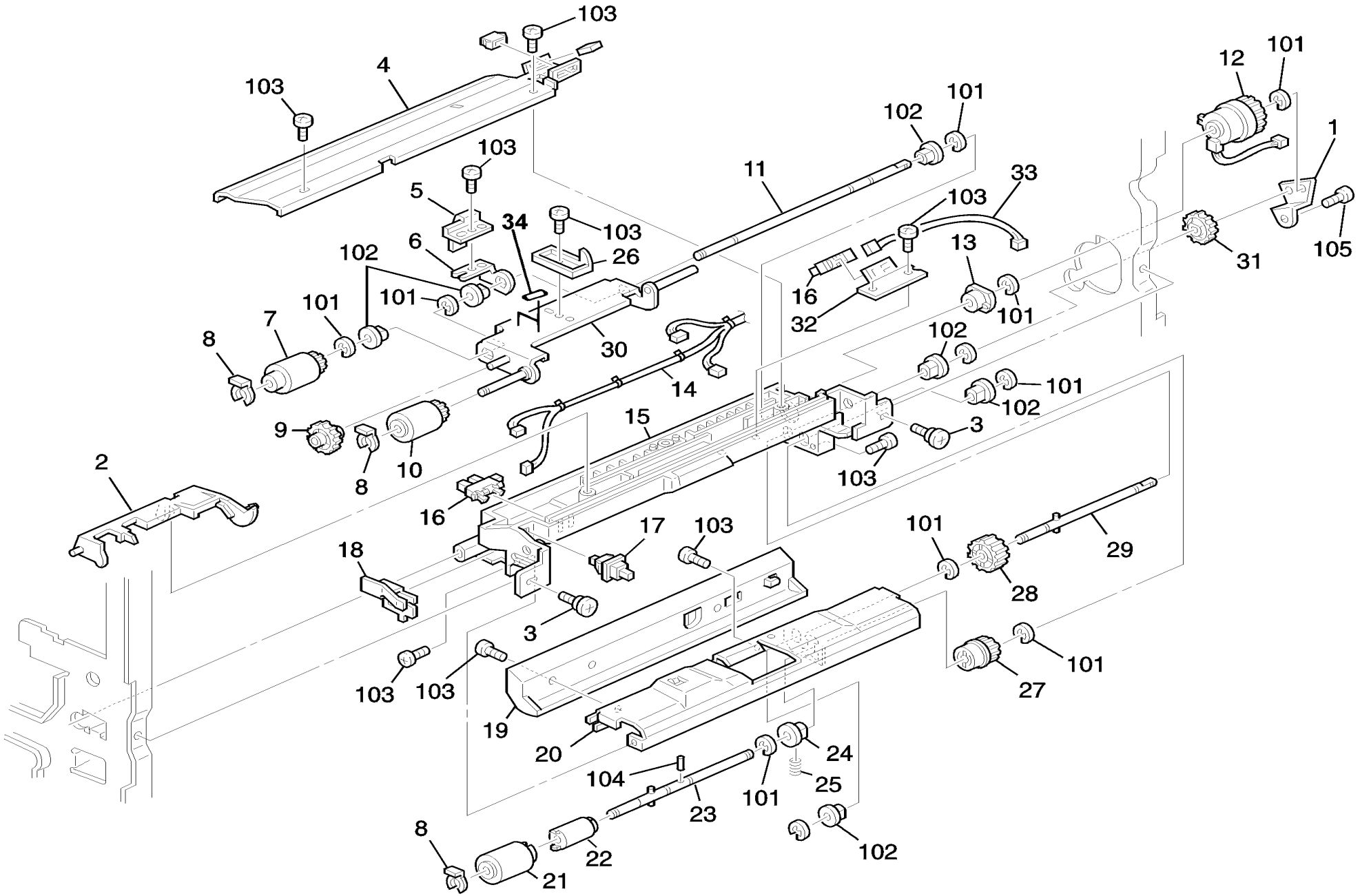
103
4
103
103
5
34
103
26
6
102
101
101
7
8
30
11
102
101
33
103
16
32
13
101
12
101
1
31
105
102
101
14
9
8
10
15
3
103
2
16
17
103
18
3
103
103
19
20
104
23
101
24
25
8
22
21
102
101
28
29
27
101

8. PAPER FEED SECTION 1 (A212/A214)

Rev. 03/99

Index No.	Part No.	Description	Q'ty Per Assembly
1	A134 2688	Positioning Plate	1
2	A212 2660	Paper End Feeler	1
3	AA14 3219	Stepped Screw	2
4	A212 2671	By-pass Feed Cover	1
5	A134 2658	Grounding Plate	1
6	A134 2656	Stopper Plate	2
7	AF03 1025	Feed Roller	1
8	5447 2681	Snap Ring	7
9	AB01 1343	Idle Gear - 23Z	1
10	AF03 0024	Pick-up Roller	1
11	AA14 0534	Feed Shaft	1
12	AX20 0101	Magnetic Clutch - 2.5kgf 35Z	1
13	AA08 3010	Clutch Roller - 6x14x10	1
14	A134 5311	By-pass Feed Harness	1
15	A212 2659	By-pass Feed Housing	1
16	AW02 0075	Photointerrupter	1
17	AW50 0012	Push Switch	2
18	A134 2662	Grounding Plate	1
19	A212 2670	Rear Guide Plate	1
20	A212 2663	Separation Guide	1
21	AF03 2025	Separation Roller	1
22	A134 2674	Torque Limitter - 400fg	1
23	A134 2668	Separation Driven Shaft	1
24	AA08 0037	Bushing - 6 mm	1
25	AA06 3499	Pressure Spring	1
26	A155 2667	Lift Sensor Feeler (A214)	1
27	AB01 1344	Gear - 16Z	1
28	AB01 1345	Gear - 20Z	1
29	A134 2667	Separation Drive Shaft	1
30	A134 2654	Pick-up Arm	1
31	AB01 1346	Gear - 27Z	1
32	A155 2682	Lift Sensor Bracket (A214)	1
33	A155 5345	LCT Harness (A214)	1
34	AA15 1144	Shield - Guide Plate	2

Index No.	Part No.	Description	Q'ty Per Assembly
101	0720 0040E	Retaining Ring - M4	
102	0805 3480	Bushing - 6mm	
103	0414 0080B	Tapping Screw - M4x8	
104	0622 0100E	Spring Pin - 2x10mm	

9. PAPER FEED SECTION 2 (A212/A214)

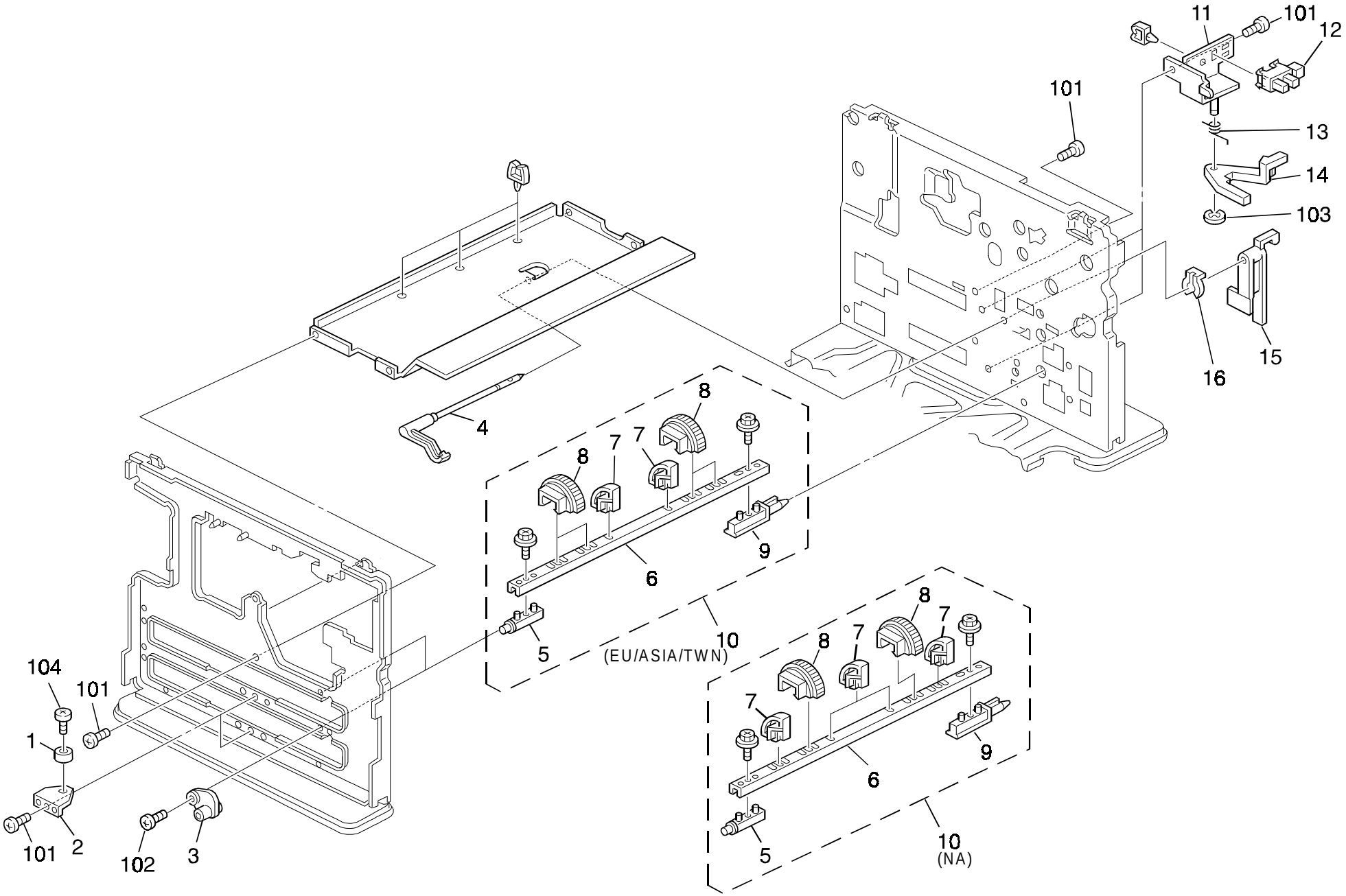

9. PAPER FEED SECTION 2 (A212/A214)

Rev. 03/99

Index No.	Part No.	Description	Q'ty Per Assembly
1	A212 1099	Stopper	1
2	A212 1073	Stopper Bracket	2
3	A212 2587	Feed Roller Bushing - Front	1
4	A212 2802	Feeler Paper End Sensor	1
5	G020 2585	Front Pin - Paper Feed Roller	1
6	A212 2575	Shaft - Paper Feed Roller (EU/ASIA/TWN)	1
6	G020 2570	Shaft - Paper Feed Roller (NA)	1
7	G020 2565	Paper Guide	2
8	G020 2555	Paper Feed Roller	4
9	G020 2586	Rear Pin - Paper Feed Roller	1
10	A212 2570	Paper Feed Roller Ass'y (EU/ASIA/TWN)	1
10	G020 2554	Paper Feed Roller Ass'y (NA)	1
11	A157 2800	Paper End Sensor Bracket	1
12	AW02 0086	Photointerruptor	1
13	A212 2524	Spring	1
14	A212 2905	Release Arm - Paper End	1
15	A157 2804	Shield Plate - Paper End Sensor	1
16	5447 2681	Snap Ring	1
17	A212 1087	Middle Upper Stay	1

Index No.	Part No.	Description	Q'ty Per Assembly
101	0434 0060B	Philips Tapping Screw - M4x6	
102	0414 0080B	Tapping Screw - M4x8	
103	0720 0040E	Retaining Ring - M4	
104	0443 0080W	Hexagon Head Tapping Screw - M3x6	

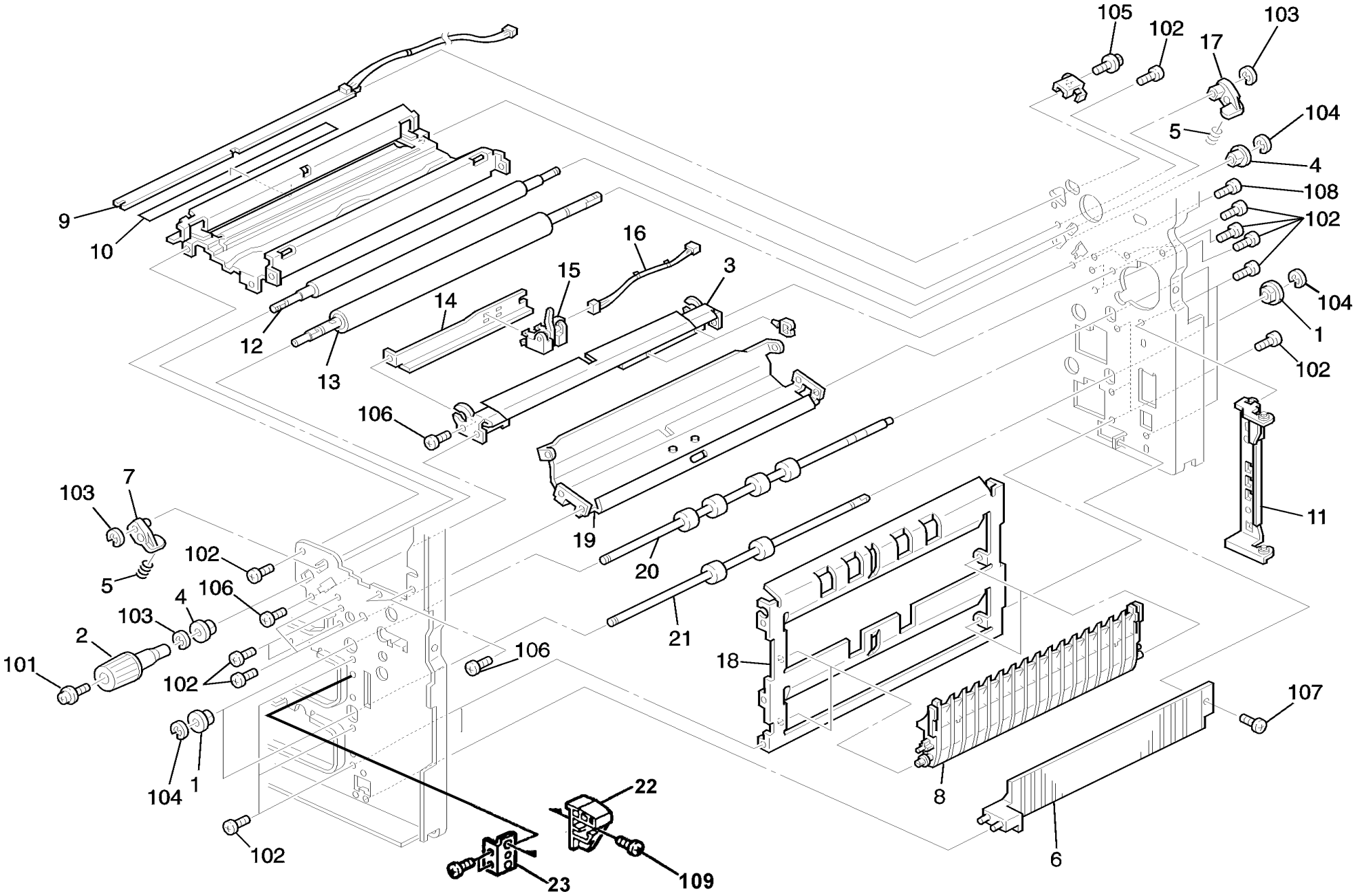
105
102
17
103
104
5
4
108
102
104
1
102
9
10
12
13
14
15
16
3
106
19
20
21
18
11
103
7
5
102
4
106
103
2
101
102
106
104
1
102
22
23
109
8
6
107

10. PAPER REGISTRATION (A212/A214)

Rev. 03/99

Index No.	Part No.	Description	Q'ty Per Assembly
1	AA08 2047	Bushing - 8x16x7	9
2	AG05 0074	Registration Knob	1
3	A212 2563	Lower Registration Guide	1
4	5474 2152	Bushing - 8x12x12mm	2
5	A212 2539	Spring - Registration Roller	2
6	A212 2552	Vertical Relay Guide Plate	1
7	A212 2537	Bushing	1
8	A212 2551	Lower Guide Plate	2
9	A204 2101	P.T.L. Lamp Ass'y	1
10	A153 3114	Transfer Entrance Guide	1
11	A212 2580	Vertical Transfer Hinge (A212)	1
12	AF02 1052	Upper Registration Roller	1
13	AF02 0316	Lower Registration Roller	1
14	A134 2557	Regist Sensor Bracket	1
15	AW02 0068	Photointerruptor	1
16	A212 5333	CT Harness	1
17	A212 2538	Bushing	1
18	A212 2550	Vertical Guide Plate	1
19	A212 2558	Upper Registration Guide	1
20	AF02 0337	Upper Relay Roller	1
21	AF02 0338	Lower Relay Roller	1
22	A159 6183	Positioning Guide	1
23	A214 6184	Guide Plate Bracket	1

Index No.	Part No.	Description	Q'ty Per Assembly
101	0951 3006B	Philips Screw With Flat Washer - M3x6	
102	0434 0060B	Philips Tapping Screw - M4x6	
103	0720 0040E	Retaining Ring - M4	
104	0720 0060E	Retaining Ring - M6	
105	0443 0050B	Philips Pan Head Screw - M3x6	
106	0313 0040B	Philips Pan Head Screw - M3x4	
107	0414 0080B	Binding Self-tapping Screw - M4x8	
108	0434 0080B	Pan Head Self-tapping Screw - M4x8	
109	03140060B	Philips Pan Head Screw -M4x6	

11. OPTICAL SECTION 1 (A212/A214)

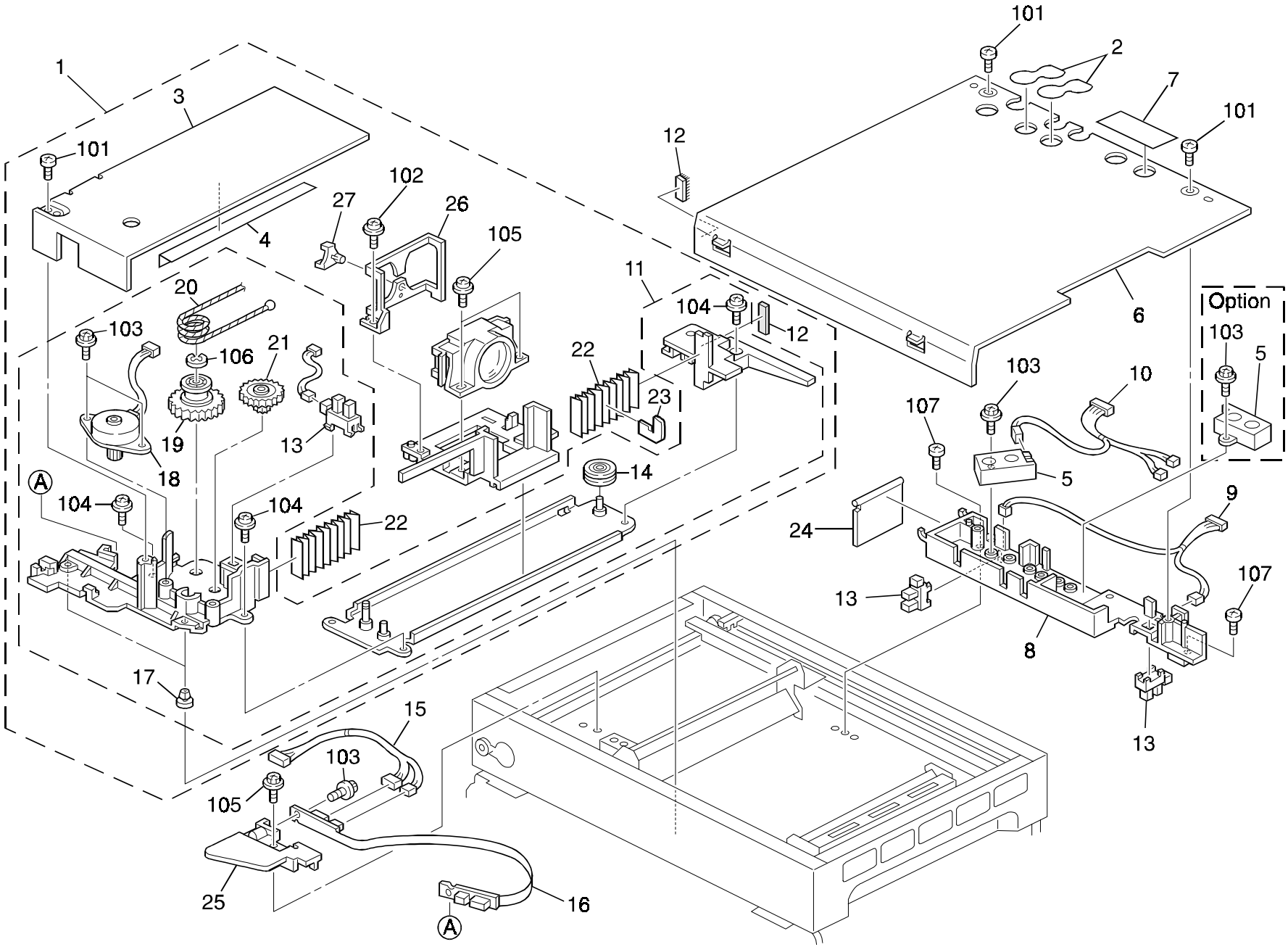

11. OPTICAL SECTION 1 (A212/A214)

Index No.	Part No.	Description	Q'ty Per Assembly
1	A212 1840	Lens Magnification Unit	1
2	AA15 0369	Original Sensor Seal	1
3	A153 1851	Lens Cover	3
4	AA15 0368	Shielding Plate - Cover - Lens	1
5	AW01 0068	Original Length Sensor	2
6	A153 1961	Lens Cover	1
7	A111 1753	Seal - 0.1x18x49	1
8	A153 1971	Original Sensor Bracket	1
9	A153 5391	Optical Harness - 1	1
10	A153 5392	Optical Harness - 2	1
11	A212 1841	Lens Drive Unit	1
12	AA15 2330	Magnification Seal	2
13	AW02 0086	Photointerruptor	15
14	AB03 2059	Driven Pulley	2
15	A153 5395	Optical Harness - 5	1
16	A153 5141	Lens Drive Harness	1
17	A069 1883	Shoe - Scanner	10
18	A153 5212	Lens Drive Motor - Horizontal	1
19	AB01 7360	Gear Pulley	2
20	AA05 0086	Lens Drive Wire - Horizontal	1
21	AB01 7361	Gear - 24Z/56Z	2
22	AA15 0367	Shielding Mylar	2
23	A153 1859	Shielding Sheet Guide	1
24	A153 1974	Original Sensor Bracket	1
25	A153 1861	Bracket - Flexible Board	1
26	A153 1855	Shading Plate	1
27	A153 1854	Wire Guide	1
28	AZ48 0021	Relay Harness - 3P	1

Index No.	Part No.	Description	Q'ty Per Assembly
101	0802 5237	Tapping Screw - M4x10	
102	0413 0062B	Tapping Screw - M3x6	
103	0802 5232	Tapping Screw - M3x8	
104	0951 4006B	Philips Screw With Washer - M4x6	
105	0965 3008W	Tapping Screw With Flat Washer - M3x8	
106	0720 0040E	Retaining Ring - M4	
107	0414 0080B	Tapping Screw - M4x8	

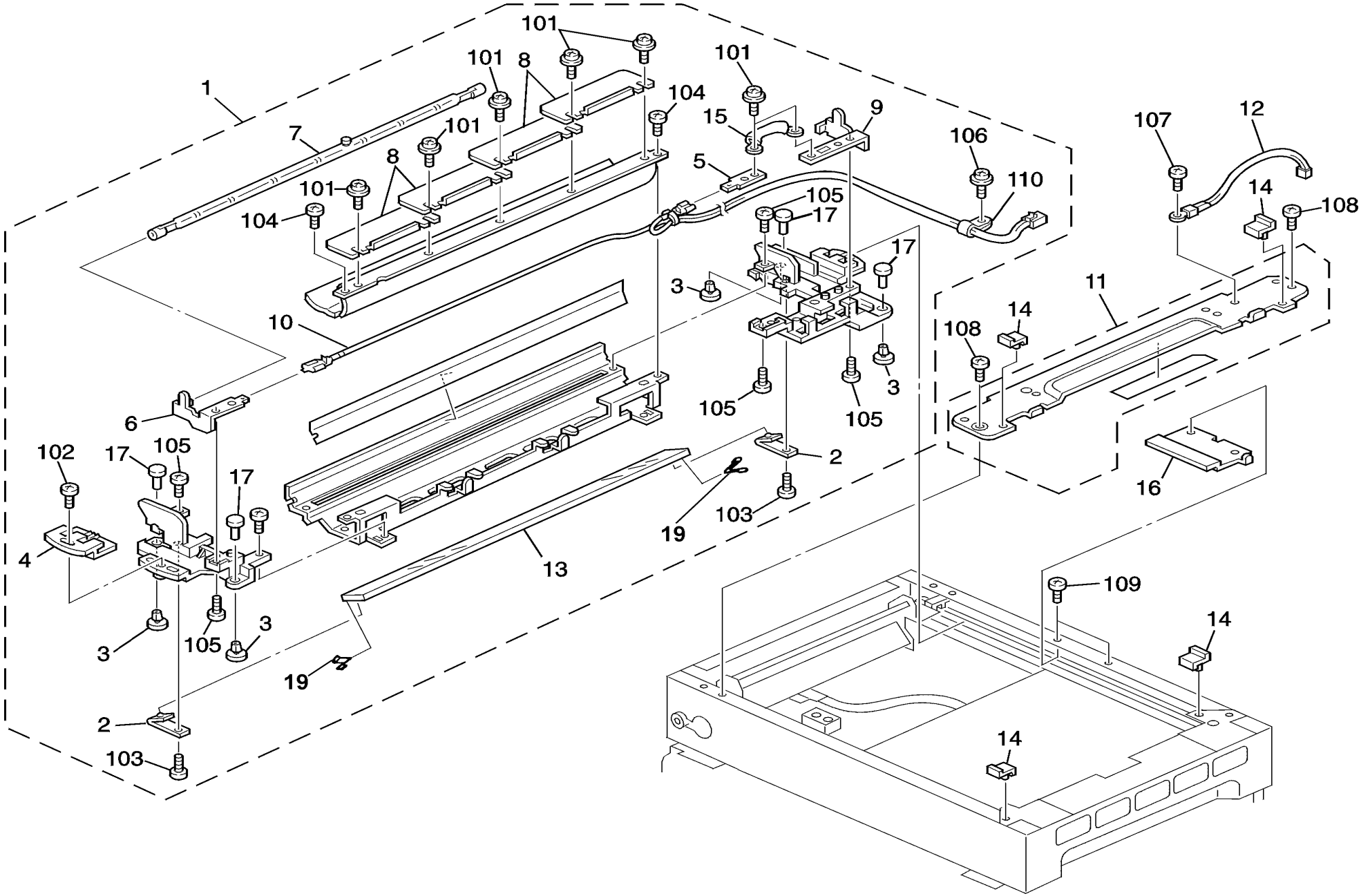
1
7
8
101
104
15
9
106
110
107
12
14
108
5
105
17
3
10
11
6
102
4
2
103
19
13
16
109

12. OPTICAL SECTION 2 (A212/A214)

Rev. 03/99

Index No.	Part No.	Description	Q'ty Per Assembly
1	A157 1790	1st Scanner Ass'y (NA)	1
1	A157 1770	1st Scanner Ass'y (EU/ASIA/TWN)	1
2	AC03 5022	Rear Mirror Clamp - 1st Mirror	2
3	A069 1883	Shoe - Scanner	10
4	A153 1776	Front Mirror Clamp - 1st Mirror	1
5	A077 1673	Thermofuse Terminal	1
6	A153 1777	Front Terminal	1
7	AX52 0028	Exposure Lamp - 97V 200W (NA)	1
7	AX52 0026	Exposure Lamp - 85V 200W (EU/ASIA/TWN)	1
8	A085 1670	Exposure Adjusting Plate	4
9	A153 1778	Rear Terminal	1
10	A153 1780	Exposure Lamp Harness	1
11	A153 1749	Scale Bracket	1
12	AW10 0027	Thermister	1
13	AC03 0103	1st Mirror	1
14	A153 1754	Exposure Stay	4
15	A153 1779	Thermostat - 121°C 250V 10A	1
16	A153 1757	Contact Grass Holder	2
17	A096 1873	Scanner Shoe Pin	4
18	A085 1861	Main Reflector	1
19	A048 1721	Spring Plate	2

Index No.	Part No.	Description	Q'ty Per Assembly
101	0951 3006B	Philips Screw With Flat Washer - M3x6	
102	0414 0082W	Tapping Screw With Flat Washer - M4x8	
103	0413 0062W	Tapping Screw - M3x6	
104	0413 0050Z	Tapping Screw - M3x5	
105	0413 0060W	Tapping Screw - M3x6	
106	0964 4008W	Tapping Screw With Flat Washer - M4x8	
107	0313 0040B	Philips Pan Head Screw - M3x4	
108	0313 0060B	Philips Pan Head Screw - M3x6	
109	0314 0060B	Philips Pan Head Screw - M4x6	
110	1105 0008	Nylon Clamp - 2n	

13. OPTICAL SECTION 3 (A212/A214)

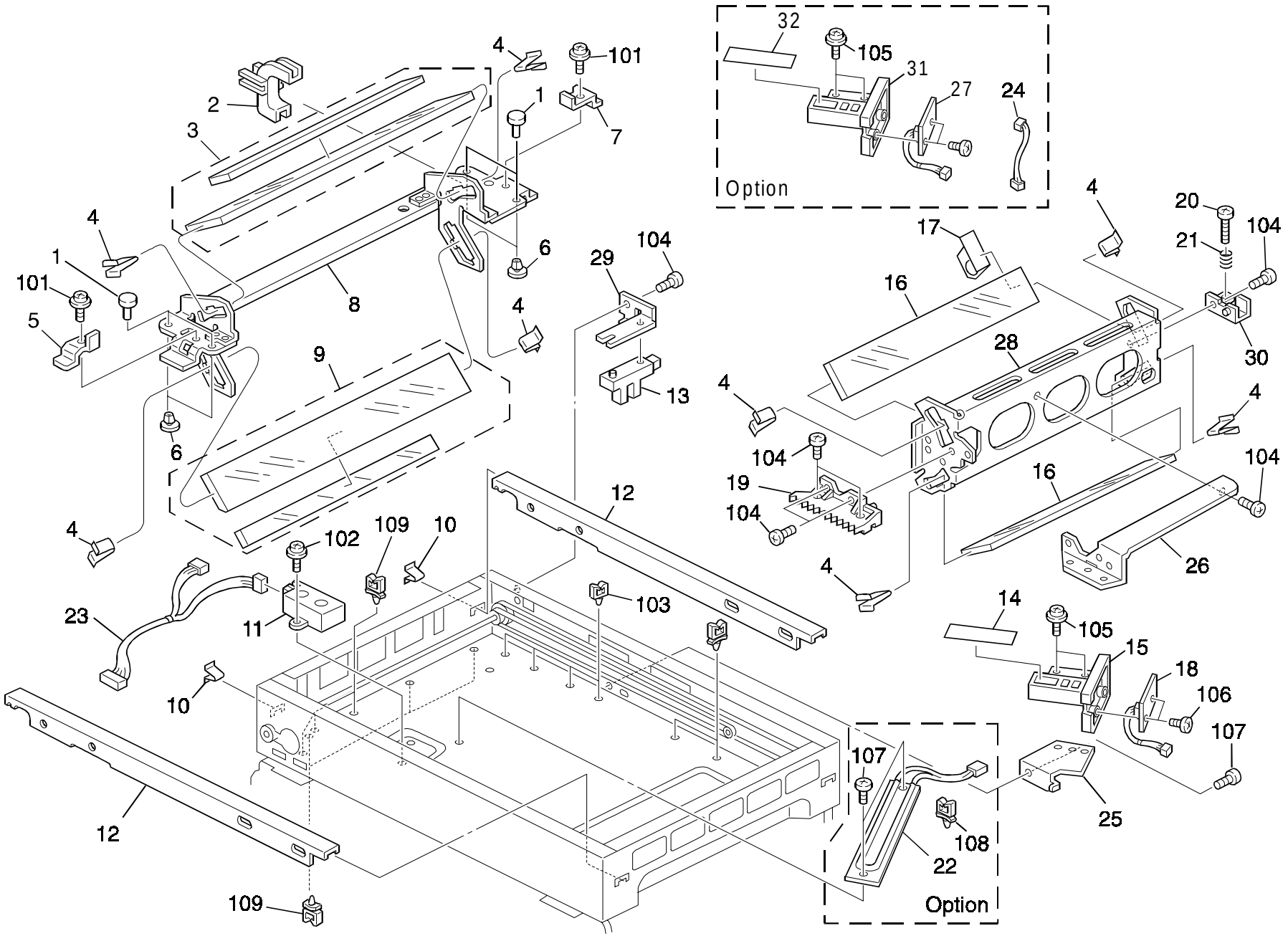

13. OPTICAL SECTION 3 (A212/A214)

Index No.	Part No.	Description	Q'ty Per Assembly
1	A096 1873	Scanner Shoe Pin	8
2	A212 1807	Harness Guide	1
3	A153 1808	2nd Mirror	1
4	A077 1690	Spring Plate - Mirror	10
5	A153 1805	Front Mirror Holder	1
6	A069 1883	Shoe - Scanner	10
7	A153 1806	Rear Mirror Holder	1
8	A153 1801	2nd Scanner Ass'y	1
9	A153 1809	3rd Mirror	1
10	A153 1721	Spring Plate	2
11	AW01 0040	Original Sensor	1
12	A153 1720	Scanner Rail	2
13	AW02 0022	Photointerruptor	2
14	A096 1693	ADS Cover	1
15	A096 1692	ADS Case	1
16	AC03 0106	4/5 Mirror	2
17	A153 1908	Shielding Plate	1
18	A212 5160	ADS Board	1
19	A212 1914	3rd Scanner Rack	1
20	A153 1906	Adjust Shoe	1
21	AA06 3523	Adjust Spring	1
22	AX40 0047	Anticondensation Heater - 115V 15W (Option)	1
22	AX40 0048	Anticondensation Heater - 240V 15W (Option)	1
23	A212 5393	Optical Harness 3	1
24	A153 9513	Harness - ADS (Option)	1
25	A153 1976	ADS Sensor Bracket	1
26	A153 1912	3rd Scanner Stay	1
27	A096 5230	ADS Board (Option)	1
28	A212 1903	3rd Scanner Bracket	1
29	A212 1981	Scanner Home Sensor Bracket	1
30	A153 1905	3rd Scanner Filler	1
31	A096 1692	ADS Case (Option)	1
32	A096 1693	ADS Cover (Option)	1

Index No.	Part No.	Description	Q'ty Per Assembly
101	0960 4005B	Philips Flange Screw - M4 X 5	
102	0443 0080W	Hexagon Head Tapping Screw - M3x8	
103	1105 0230	Clamp	
104	0414 0080B	Tapping Screw - M4x8	
105	0951 3005B	Philips Screw With Flat Washer M3x5	
106	0802 5231	Tapping Screw - M3x6	
107	0434 0060B	Philips Tapping Screw - M4x6	
108	1105 0231	Clamp	
109	1105 0229	Clamp	

14. OPTICAL SECTION 4 (A212/A214)

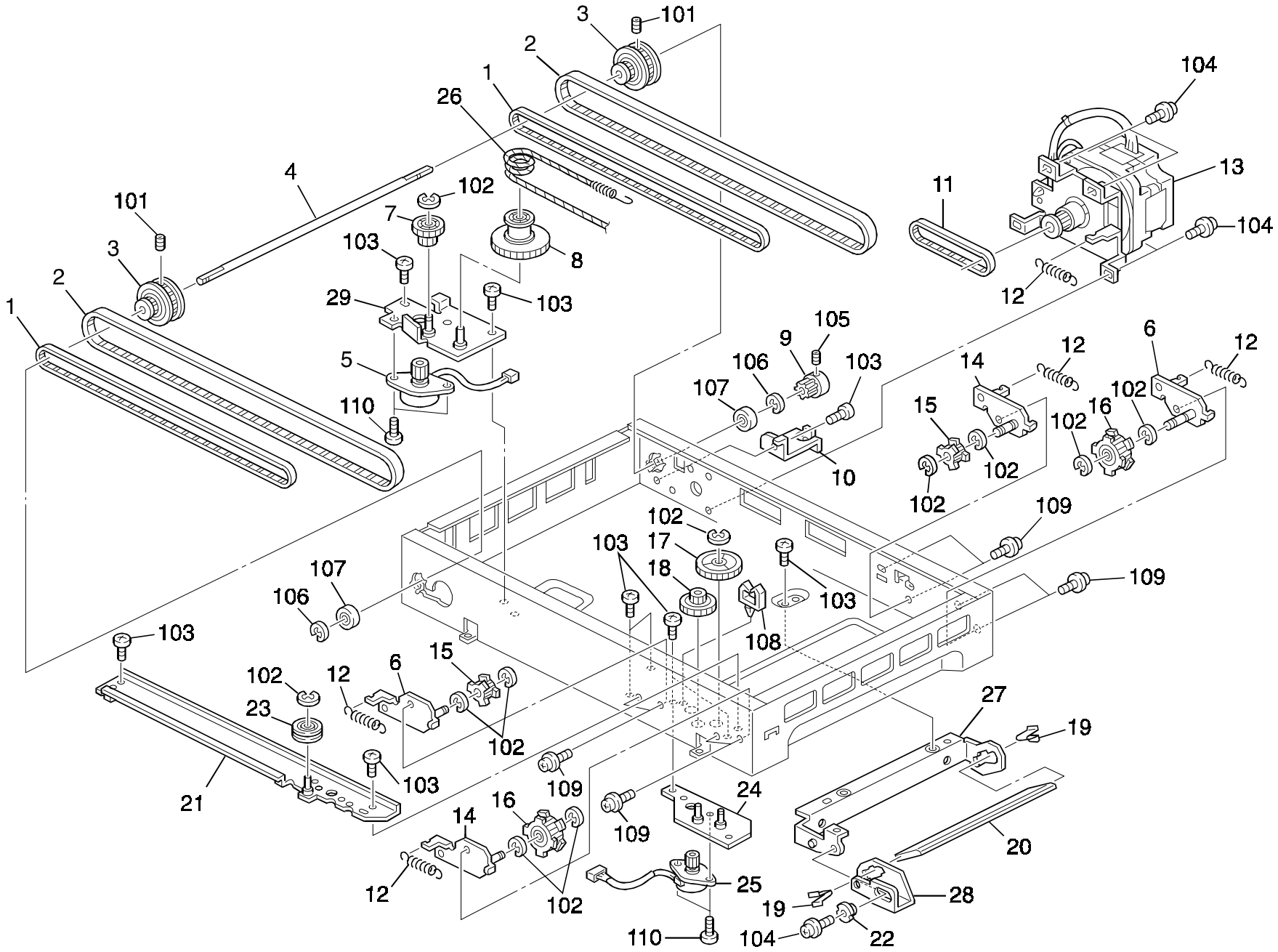

14. OPTICAL SECTION 4 (A212/A214)

Index No.	Part No.	Description	Q'ty Per Assembly
1	AA04 3387	Timing Belt - 40S2M984	2
2	AA04 3386	Timing Belt - 40S2M1224	2
3	AB03 3069	Timing Pulley - 22Z/24Z	2
4	AA14 0599	Scanner Drive Shaft	1
5	A153 5213	Lens Drive Motor - DC24V 8.6W	1
6	A212 1708	Tension Bracket - Short	2
7	AB01 7362	Gear - 25Z/32Z	1
8	AB01 7360	Gear Pulley	2
9	AB03 0486	Timing Pulley - 24Z	1
10	A153 5803	Upper Bracket - DC Drive Board	1
11	AA04 3388	Timing Belt - 60S2M180	1
12	A212 1695	Tension Spring	5
13	A153 1700	Scanner Drive Motor - DC2.3V 13.5W	1
14	A212 1707	Tension Bracket - Long	2
15	AB03 0489	Timing Pulley - 22Z	2
16	A212 1710	Timing Pulley - 44Z	2
17	AB01 7129	Gear - 20Z And 72Z	1
18	AB01 7361	Gear - 24Z/56Z	2
19	A077 1690	Spring Plate - Mirror	10
20	AC03 0107	6th Mirror	1
21	A153 1952	Magnification Rail	1
22	A075 1766	Adjusting Cam	1
23	AB03 2059	Driven Pulley	2
24	A153 1947	Magnification Drive Unit Bracket	1
25	A153 5211	Mirror Drive Motor - DC24V 8.6V	1
26	AA05 0087	Lens Drive Wire - Vertical	1
27	A153 1923	6th Mirror Bracket	1
28	A153 1924	6th Mirror Plate	1
29	A153 1935	Lens Drive Bracket	1

Index No.	Part No.	Description	Q'ty Per Assembly
101	0573 0040E	Hexagon Headless Set Screw - M3x4	
102	0720 0040E	Retaining Ring - M4	
103	0434 0060B	Philips Tapping Screw - M4x6	
104	0951 4008B	Philips Screw With Washer - M4x8	
105	0574 0050E	Hexagon Headless Set Screw - M4x5	
106	0720 0060E	Retaining Ring - M6	
107	0740 3008	Ball Bearing - 8x22x7	
108	1105 0230	Clamp	
109	0951 4006B	Philips Screw With Washer - M4x6	
110	0433 0060W	Tapping Screw - M3x6	
111	0573 0100E	Hexagon Headless Set Screw - M3x10	

15. TONER SUPPLY UNIT (A212/A214)

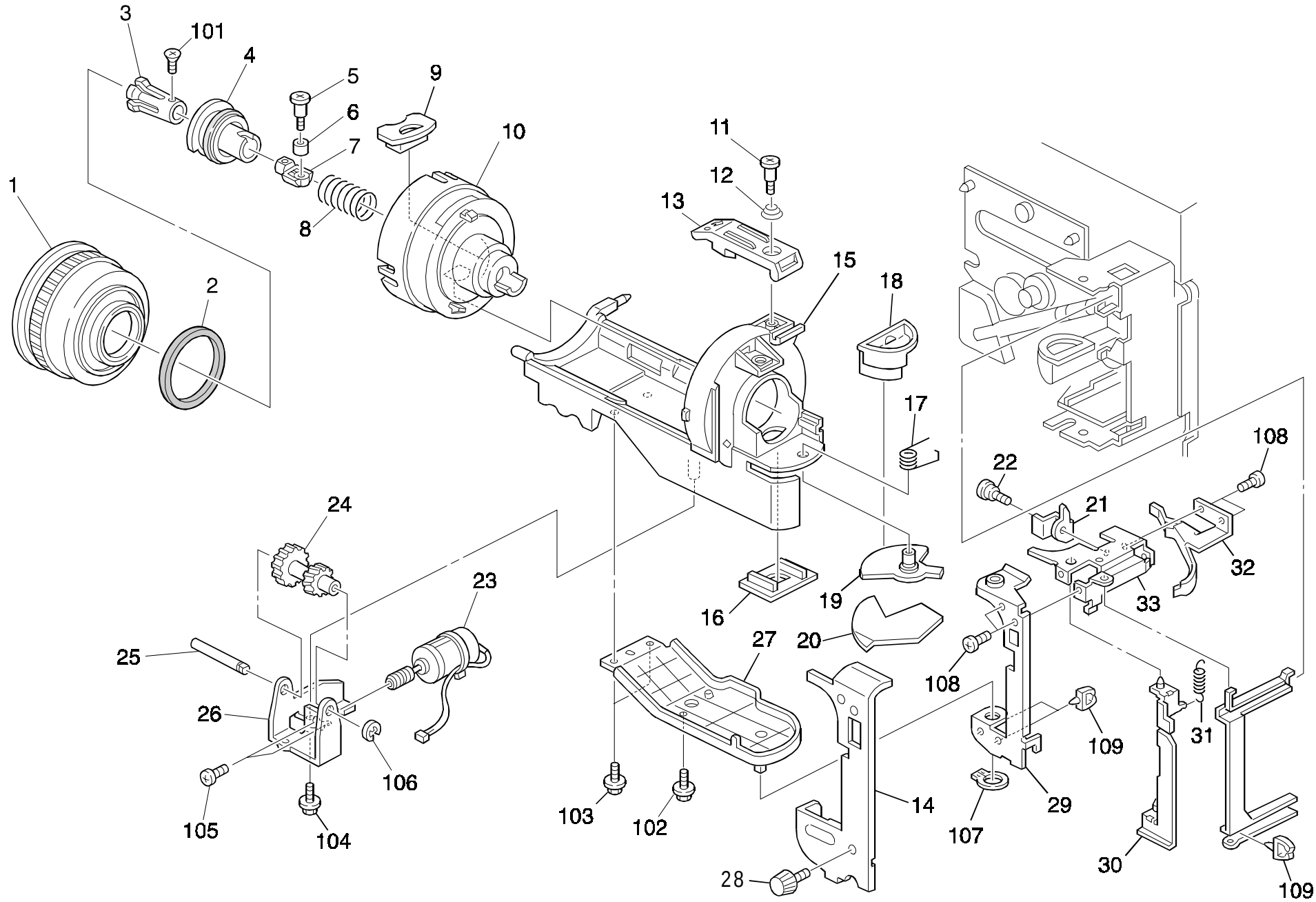

15. TONER SUPPLY UNIT (A212/A214)

Rev. 03/99

Index No.	Part No.	Description	Q'ty Per Assembly
*	A212 3151	Toner Supply Unit (RIC-NA)	1
*	A212 3150	Toner Supply Unit (RIC-EU)	1
*	A212 3153	Toner Supply Unit (OEM/RIC-AA)	1
1	A212 3187	Toner Supply Gear (RIC-NA)	1
1	A212 3185	Toner Supply Gear (RIC-EU)	1
1	A212 3189	Toner Supply Gear (OEM/RIC-AA)	1
2	AA15 1894	Seal - 67x53x2	1
3	A134 3180	Bottle Chuck	1
4	A212 3177	Toner Slider	1
5	AA14 3712	Chuck Shaft	1
6	A134 3181	Chuck Roller	1
7	A212 3179	Chuck Shaft	1
8	A212 3073	Chuck Spring	1
9	A134 3215	Rubber Cap	1
10	A212 3190	Toner Bottle Stopper	1
11	AA14 3410	Stepped Screw - M4	1
12	AA06 3367	Pressure Spring	1
13	A212 3197	Bottle Holder	1
14	A212 3281	Bottle Bracket Cover	1
15	A212 3068	Toner Bottle Holder	1
16	A212 3173	Shutter Guide	1
17	A212 3078	Shutter Spring	1
18	A212 3174	Shutter Holder	1
19	A212 3172	Shutter	1
20	AA15 0377	Shutter Seal	1
21	A153 3265	Bottle Unit Lock Plate	1
22	AA14 3025	Stepped Screw - M3	1
23	A134 3162	Bottle Drive Motor	1
24	AB01 7347	Idle Gear	1
25	AA14 8413	Idle Gear Shaft	1
26	A134 3161	Bottle Drive Bracket	1
27	A212 3157	Bottle Holder Bracket	1
28	AA14 3459	Knob Screw	1
29	A153 3262	Bottle Unit Hinge	1
30	A153 3266	Bottle Unit Link Plate	1

Index No.	Part No.	Description	Q'ty Per Assembly
31	A212 3072	Relay Adjusting Spring	2
32	A134 3201	Cam - Toner Bottle	1
33	A153 3264	Bottle Unit Upper Hinge	1
101	0323 0060B	Philips Sunk Screw - M3x6	
102	0433 0082B	Tapping Screw - M3x5	
103	0434 0060B	Tapping Screw - M3x6	
104	0802 5233	Tapping Screw - M3x10	
105	0800 0072	Philips Pan Head Screw - M2.6x4	
106	0720 0040E	Retaining Ring - M4	
107	0725 0100E	Retaining Ring C - M10	
108	0434 0060B	Philips Tapping Screw - M4x6	
109	1105 0199	Clamp	

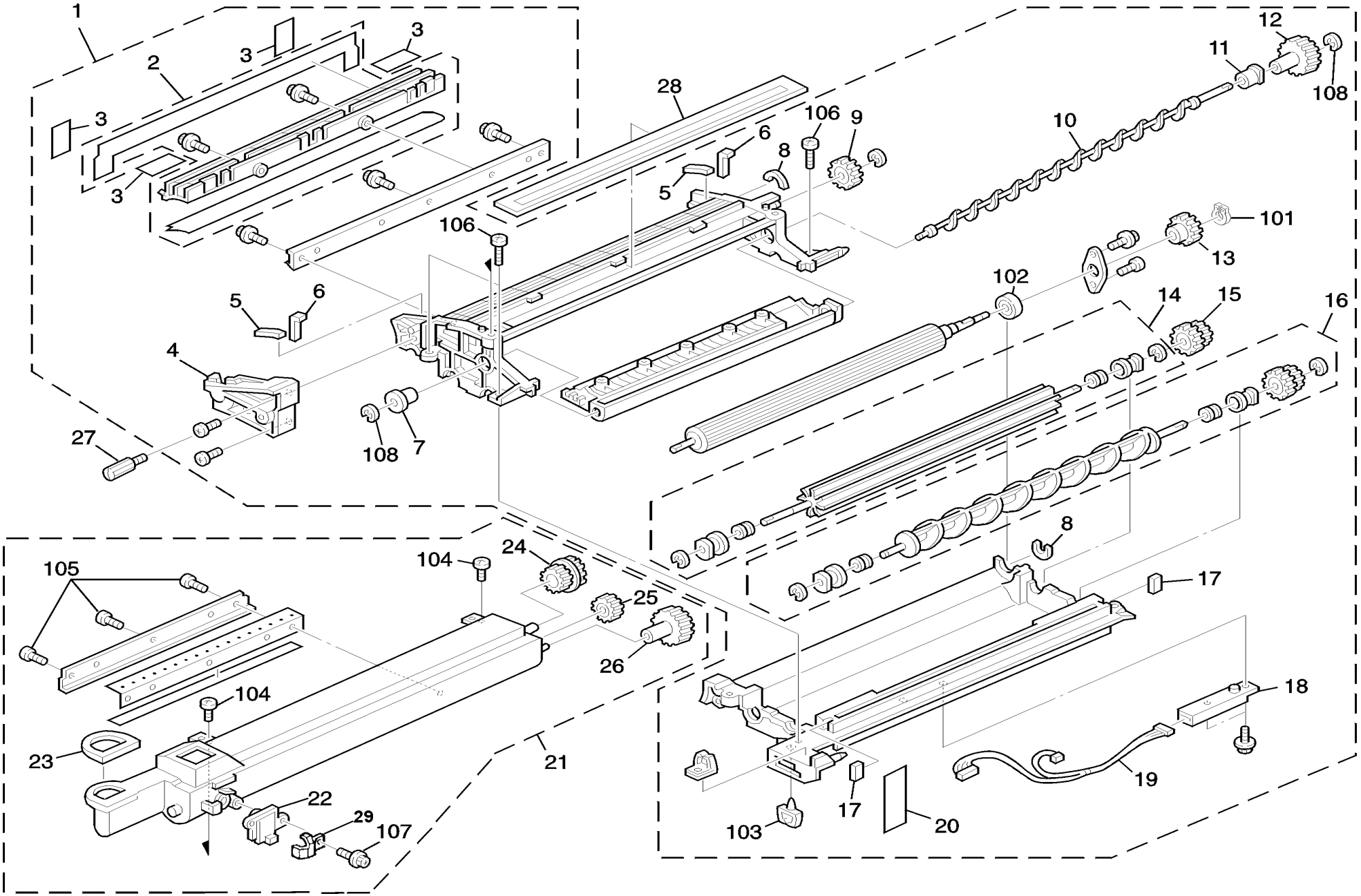
1
2
3
3
3
3
3
28
106
9
6
8
5
106
10
11
12
108
101
13
102
14
15
16
5
6
4
27
108
7
8
17
105
104
24
25
26
104
23
22
29
107
21
18
19
17
103
20

16. DEVELOPMENT UNIT (A212/A214)

Rev. 03/99

Index No.	Part No.	Description	Q'ty Per Assembly
1	A212 3051	Development Unit	1
2	A153 3075	Entrance Seal	1
3	AA15 0382	Entrance Seal	1
4	A212 3090	Development Position Plate	1
5	AA15 1940	Left Upper Seal	1
6	AA15 1144	Shield - Guide Plate	1
7	AA08 0188	Bushing - 5mm	1
8	AA15 2136	Shield - Development Roller	1
9	AB01 3909	Idle Gear	1
10	AD03 7045	Toner Collection Coil	1
11	AA08 0186	Bushing - 6mm	1
12	AB01 3911	Gear	1
13	AB01 3343	Gear - 22Z	1
14	A212 3063	Paddle Roller	1
15	AB01 7366	Paddle Gear	1
16	A153 3065	Right Paddle Roller	1
17	AA15 1941	Right Shield - Development Case	1
18	AW23 0008	ID Sensor	1
19	A153 5330	CT Harness - 7p	1
20	G012 3897	Relay Harness - Toner End Sensor	1
21	A212 3200	Toner Hopper Ass'y	1
22	AW23 0009	Toner End Sensor	1
23	AA15 1935	Seal - 38x32x2.5	1
24	A212 3057	Gear - 17Z	1
25	A212 3056	Coupled Gear - 15z/22z	1
26	A212 3058	Gear - 26Z	1
27	A153 3149	Knob Screw - M4x12	1
28	A204 3080	Development Filter	1
29	A153 3227	Toner End Sensor Cover	1

Index No.	Part No.	Description	Q'ty Per Assembly
101	0727 0090E	Retaining Ring C - M9	
102	0805 3415	Ball Bearing - 9x20x6	
103	1105 0199	Clamp	
104	0314 0060B	Philips Pan Head Screw - M4x6	
105	0802 5231	Binding Self-tapping Screw - M3x6	
106	0802 5238	Tapping Screw - M4x12	
107	0452 3010B	Tapping Bind Screw - M3x10	
108	0720 0040E	Retaining Ring - M4	

17. DRUM UNIT 1 (A212/A214)

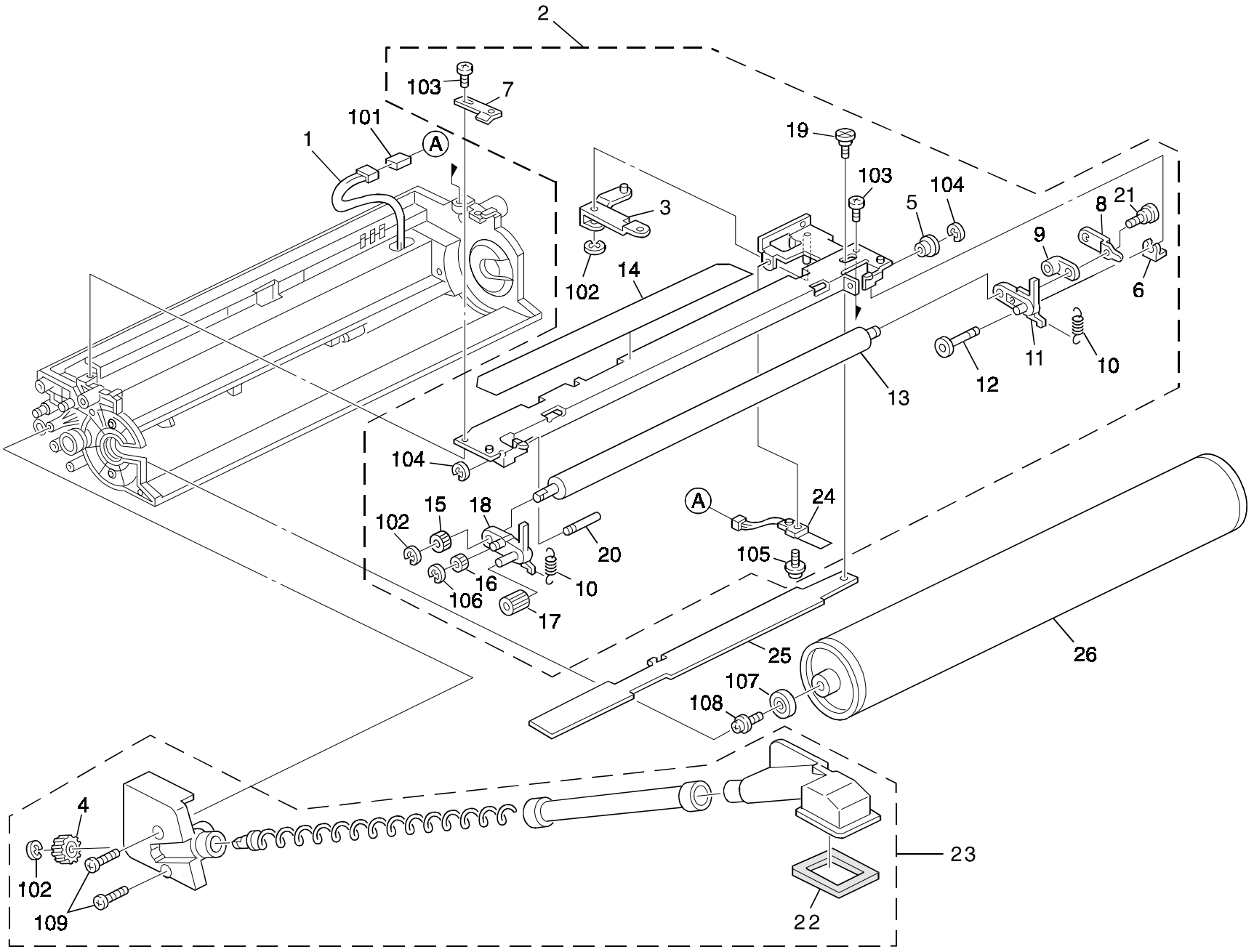

17. DRUM UNIT 1 (A212/A214)

Index No.	Part No.	Description	Q'ty Per Assembly
1	AZ48 0029	CT Harness	1
2	A212 2110	Charge Roller Ass'y	1
3	A153 2126	Swing Arm	1
4	AB01 1358	Driven Gear	1
5	A212 2351	Rear Roller Bushing	1
6	A077 1310	Snap Ring - M2	1
7	A153 2116	Grounding Plate	1
8	**A153 2135**	**Charge Roller Terminal Ass'y**	**1**
9	AA08 0197	Rear Roller Bushing	1
10	A212 2252	Pressure Roller Spring	2
11	A212 2352	Rear Roller Housing	1
12	AA14 5808	Rear Support Shaft	1
13	**AD02 7004**	**Charge Roller**	**1**
14	A153 2143	Shielding Plate	1
15	AB01 0348	Gear - 20Z	1
16	A212 2131	Idle Gear 14z	1
17	A212 2132	Idle Gear 20z	1
18	A212 2353	Front Roller Bushing	1
19	AA14 3744	Stepped Screw	1
20	AA14 5794	Front Support Shaft	1
21	AA14 3730	Stepped Screw	1
22	AA15 1945	Joint Seal	1
23	A212 3580	Toner Collection Unit	1
24	AW10 0032	Thermistor - 25°C 10k Ω	1
25	**A204 2120**	**Drum Charge Roller Cleaner**	**1**
26	A153 9510	OPC Drum	1

Index No.	Part No.	Description	Q'ty Per Assembly
101	1102 6613	Relay Terminal - 2P	
102	0720 0040E	Retaining Ring - M4	
103	0313 0060B	Philips Pan Head Screw - M3x6	
104	0720 0015E	Retaining Ring - 1.5	
105	0951 3008B	Philips Screw With Flat Washer - M3x8	
106	0720 0020E	Retaining Ring - M2	
107	0805 3471	Bushing - M8x22x7	
108	0951 5010B	Philips Screw With Washer - M5x10	
109	0802 5233	Tapping Screw - M3x10	

18. DRUM UNIT 2 (A212/A214)

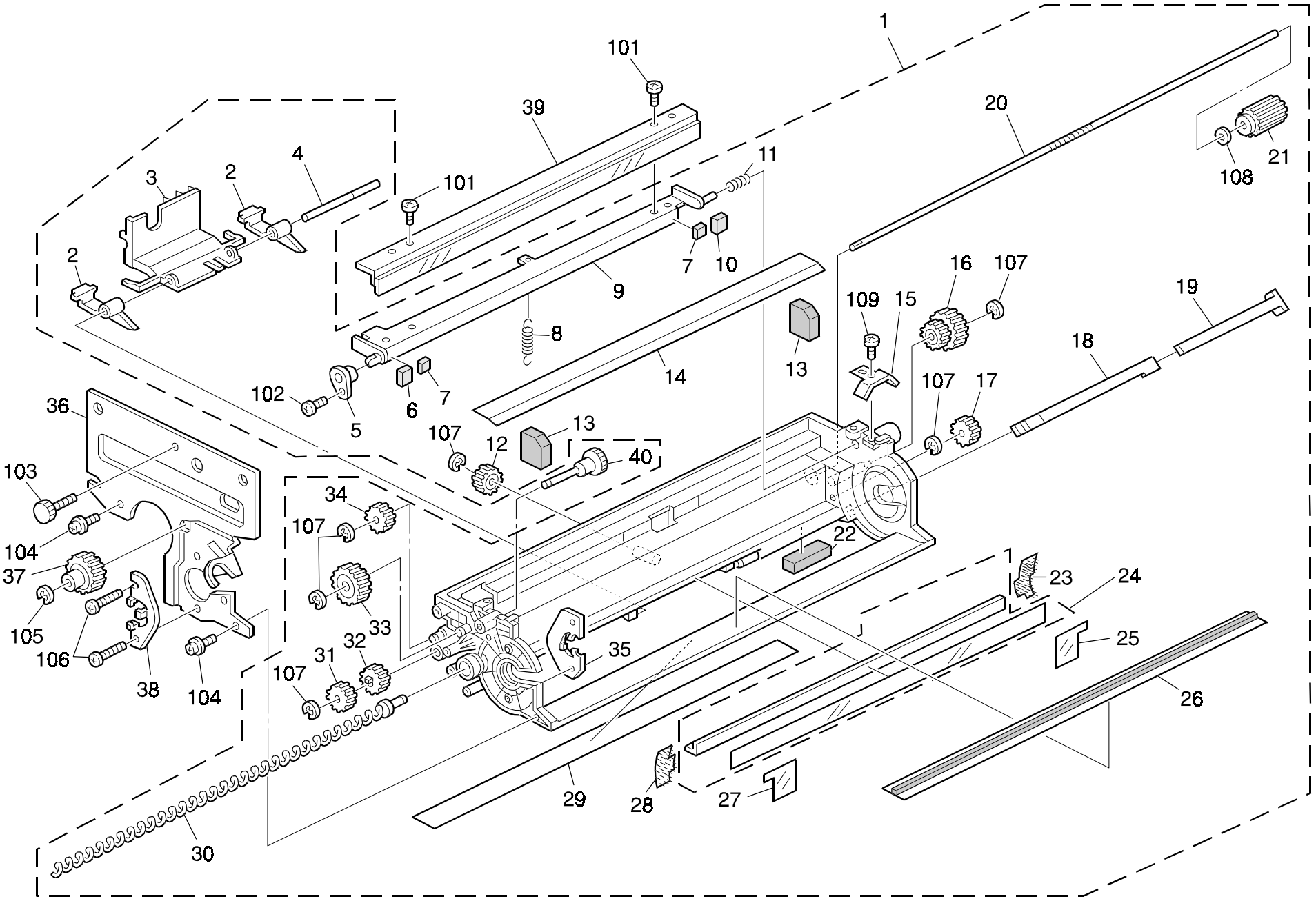

18. DRUM UNIT 2 (A212/A214)

Rev. 03/99

Index No.	Part No.	Description	Q'ty Per Assembly
1	A212 2255	Drum Unit	1
2	AD02 5019	Drum Pick-off Pawl	1
3	A212 3595	Pick-off Pawl Retainer	1
4	AA14 0321	Pick-off Pawl Shaft	1
5	A204 3568	Rear Bushing	1
6	AA15 1943	Front Seal	1
7	AA15 1809	Rear Seal	1
8	A212 2251	Pressure Blade Spring	1
9	A153 3561	Cleaning Blade Bracket	1
10	AA15 1944	Rear Seal	1
11	A212 2354	Pad Pressure Spring	1
12	A212 3567	Separation Pawl Cam	1
13	AA15 1942	Side Seal	1
14	A153 3558	Blade Seal	1
15	A153 3570	Spring Plate	1
16	AB01 7373	Idle Cam	1
17	AB01 1357	Collection Coil Gear	1
18	A212 5132	Density Sensor	1
19	A212 3590	ADS Plate	1
20	AA14 0560	Joint Shaft	1
21	AB01 1359	Joint Drive Gear	1
22	AA16 1107	Cushion	1
23	AA15 2246	Rear Drum Seal	1
24	A153 3555	Cleaning Entrance Seal	1
25	AA15 0381	Seal Rear Holder	1
26	AA15 0389	Drum Guide Seal	1
27	AA15 0380	Seal Front Holder	1
28	AA15 2245	Front Drum Seal	1
29	A153 3591	Mylar - 17x335	1
30	AD04 3035	Toner Collection Coil	1
31	AB01 7375	Drive Gear	1
32	AB01 7374	Drive Gear	1
33	AB01 7388	Blade Cam	1
34	AB01 1360	Idle Gear	1
35	A153 2303	Grounding Plate	1
36	A153 2301	Front Stay	1
37	AB01 1361	Drive Gear	1
38	A153 2302	Drum Bearing Holder	1
39	A153 2277	Cleaning Blade	1
40	AB01 0341	Gear - 18Z	1
101	0314 0060B	Philips Pan Head Screw - M4x6	
102	0802 5233	Binding Self-tapping Screw - M3x10	
103	0803 0017	Knob Screw - M4x6.5	
104	0965 3010B	Tapping Screw - M3X10	
105	0720 0030E	Retaining Ring - M3	
106	0313 0080B	Philips Pan Head Screw - M3x8	
107	0720 0040E	Retaining Ring - M4	
108	0805 3384	Bushing - 5mm	
109	0971 3006A	Philips Polycarbonate Screw - M3x6	

19. TRANSFER UNIT (A212/A214)

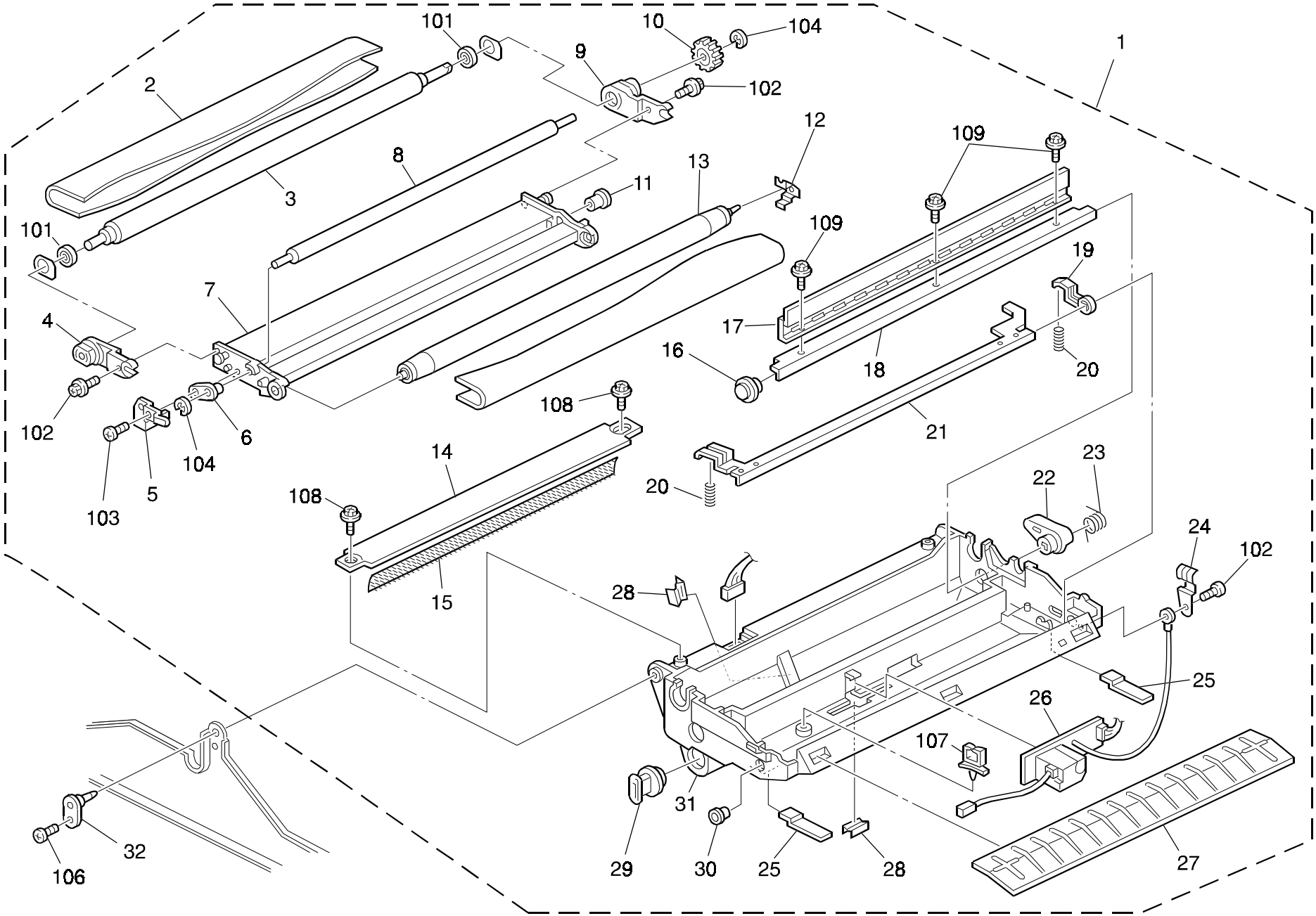

19. TRANSFER UNIT (A212/A214)

Index No.	Part No.	Description	Q'ty Per Assembly
1	A212 3850	Transfer Unit	1
2	**A157 3861**	**Transfer Belt**	**1**
3	A153 3866	Belt Drive Roller	1
4	A212 3863	Front Side Plate	1
5	A153 3873	Bias Roller Terminal	1
6	AA08 2061	Bias Roller Bushing - Front	1
7	A212 3862	Transfer Belt Frame	1
8	A153 3870	Transfer Bias Roller	1
9	A212 3876	Rear Side Plate	1
10	A212 3865	Belt Drive Gear - 25z	1
11	A212 3853	Bias Roller Bushing - Rear	1
12	A153 3874	Earth Terminal	1
13	A153 3865	Belt Drive Roller	1
14	A212 3884	Belt Guide Plate	1
15	AA15 2332	Seal - 9x351	1
16	A212 3894	Bushing	1
17	**A153 3892**	**Belt Cleaning Blade**	**1**
18	A153 3893	Belt Cleaning Stay	1
19	A212 3886	Belt Pressure Lever	1
20	A212 3851	Spring - T/S Unit	1
21	A212 3887	Belt Release Stay	1
22	A212 3895	Bushing	1
23	AA06 6247	Spring	1
24	A153 3888	Earth Plate	1
25	A153 3877	Spring Plate	1
26	AZ30 0041	Power Pack - Transfer Unit	1
27	A212 3901	Entrance Guide Plate	1
28	A153 3897	Harness Clamp	1
29	A212 3883	Toner Collection Cap	1
30	A212 3888	Earth Plate	1
31	A212 3882	Transfer Belt Casing	1
32	A157 3900	Support Plate	1

Index No.	Part No.	Description	Q'ty Per Assembly
101	0805 3485	Bushing - 8x12x3.5mm	
102	0443 0080B	Tapping Screw - M3x8	
103	0802 5232	Binding Self-tapping Screw - M3x8	
104	0720 0030E	Retaining Ring - M3	
105	0805 3490	Bushing - 5x10x4 mm	
106	0414 0080B	Binding Self-tapping Screw - M4x8	
107	1105 0196	Wire Clamp	
108	0965 3008B	Tapping Screw With Washer - M3x8	
109	0443 0060B	Hexagon Tapping Screw - M3x6	

20. FUSING UNIT 1 (A212/A214)

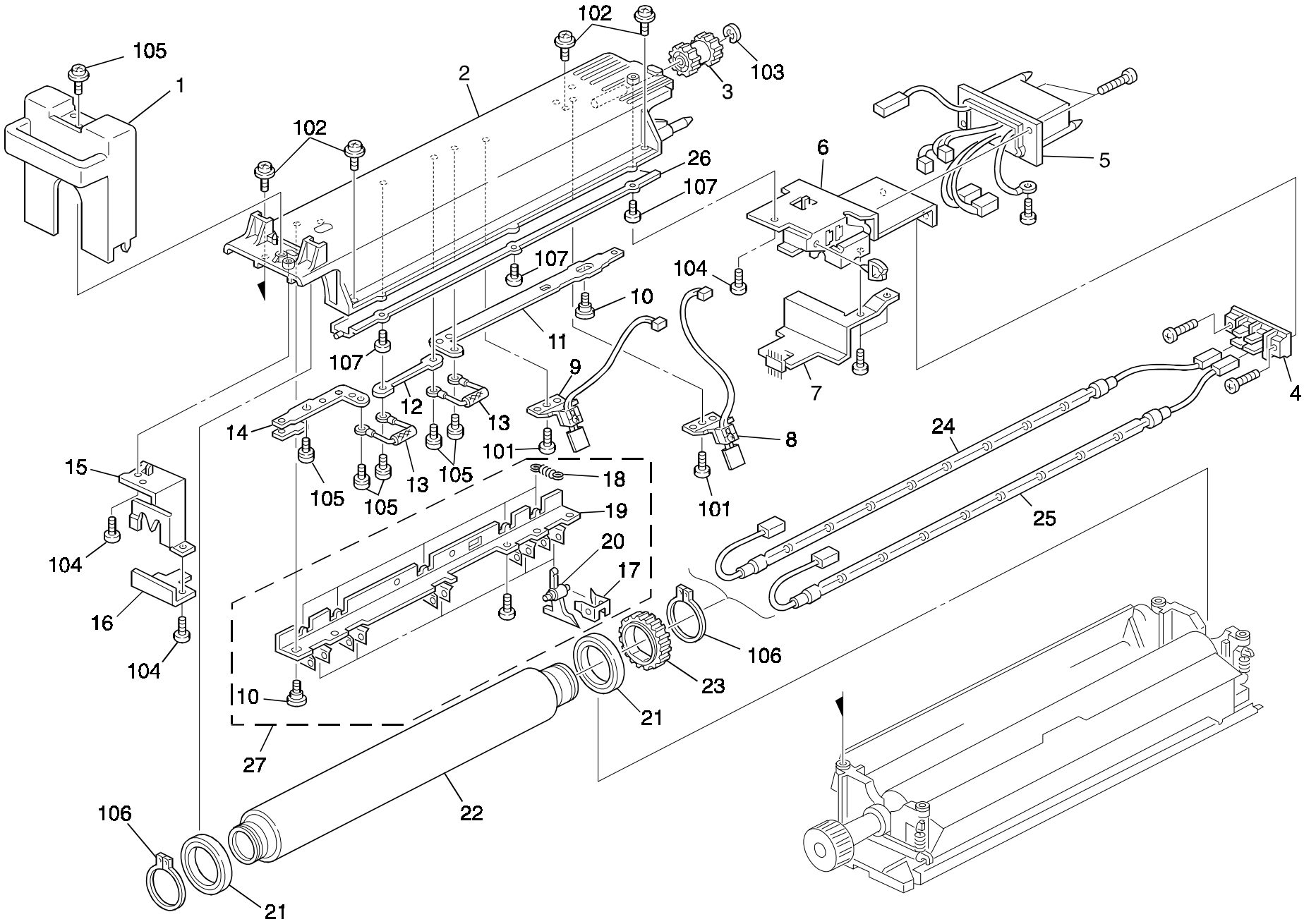

20. FUSING UNIT 1 (A212/A214)

Index No.	Part No.	Description	Q'ty Per Assembly
*	A212 4005	Fusing Unit (NA)	1
*	A212 4007	Fusing Unit (EU/ASIA/TWN)	1
1	A212 4130	Fusing Front Cover	1
2	A212 4053	Fusing Upper Stay	1
3	AB01 3883	Idle Gear - 25Z	1
4	A153 4074	Terminal Connector - 2p	1
5	A204 5300	Fusing Unit Connector - 115V	1
5	A204 5665	Fusing Unit Connector - 230V	1
6	A208 4084	Fusing Connector Bracket	1
7	A208 4102	Rear Lamp Terminal Holder	1
8	A153 4089	Thermister - 2	1
9	A153 4088	Thermister	1
10	AA14 3715	Stepped Screw - M5	2
11	A134 4061	Rear Terminal Plate	1
12	A153 4062	Electrode Plate - Middle	1
13	A204 4160	Thermofuse - 172°c	2
14	A153 4063	Front Terminal Plate	1
15	A153 4075	Front Holder	1
16	A153 4102	Front Lamp Terminal Holder	1
17	A153 4114	Stripper Stopper	5
18	A212 4103	Solenoid Spring	5
19	A153 4112	Stripper Bracket	1
20	AE04 4019	Hot Roller Stripper	5
21	AE03 0023	Bearing - 30x42x7mm	2
22	AE01 1024	Hot Roller	1
23	AB01 3882	Gear - 40Z	1
24	AX43 0023	Fusing Lamp - 120V 350W	1
24	AX43 0025	Fusing Lamp - 230V 350W	1
25	AX43 0030	Main Fusing Lamp - 120V 550W	1
25	AX43 0031	Main Fusing Lamp - 230V 550W	1
26	A153 4055	Upper Fusing Guide	1
27	A212 4110	Fuser Stripper Ass'y	1

Index No.	Part No.	Description	Q'ty Per Assembly
101	0954 3010B	Philips Screw - M3x10	
102	0954 4012B	Double Sems Screw - M4 X 12	
103	0720 0060E	Retaining Ring - M6	
104	0314 0060B	Philips Pan Head Screw - M4x6	
105	0950 4006M	Philips Screw With Flat Washer - M4x6	
106	0725 0300E	Retaining Ring C - M30	
107	0313 0050B	Philips Pan Head Screw - M3X5	

21. FUSING UNIT 2 (A212/A214)

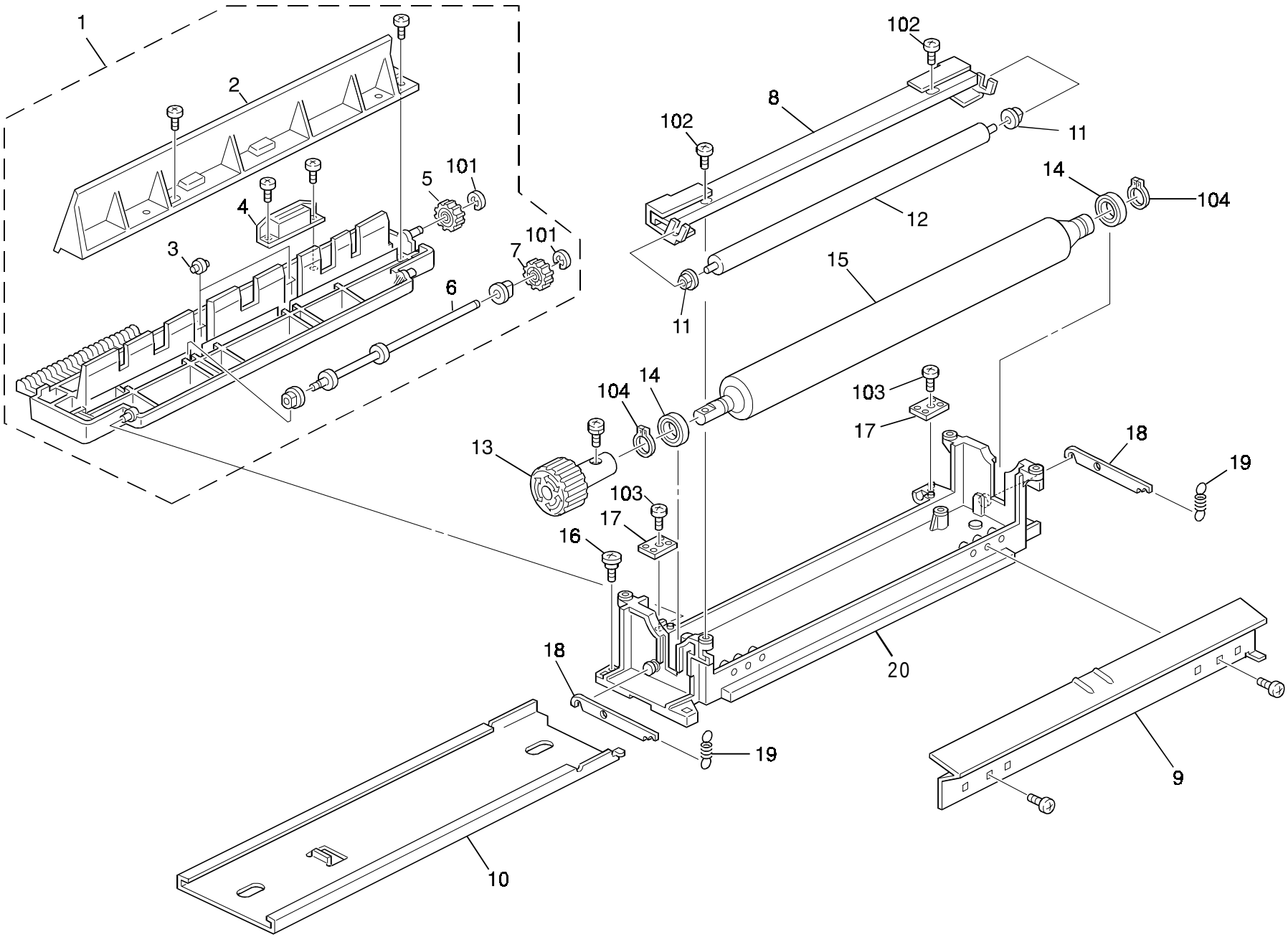

21. FUSING UNIT 2 (A212/A214)

Index No.	Part No.	Description	Q'ty Per Assembly
1	A212 4006	Fusing Exit Unit	1
2	A134 4280	Fusing Exit Guide - Lower	1
3	AF04 0548	Exit Driven Roller	1
4	AG07 0009	Magnetic Catch	1
5	AB01 3885	Idle Gear - 20z	1
6	A212 4326	Exit Roller Ass'y	1
7	AB01 3884	Exit Gear - 17z	1
8	A212 4205	Cleaning Roller Bracket	1
9	A153 4197	Lower Fusing Guide	1
10	A134 4153	Slide Rail - Fusing	1
11	AE03 1028	Bushing - 4mm	1
12	**AE04 2030**	**Cleaning Roller**	**1**
13	AG05 0076	Fusing Knob	1
14	AE03 0022	Bearing - 12x24x64m	1
15	**AE02 0050**	**Pressure Roller**	**1**
16	A077 4162	Shoulder Screw - M3	1
17	A212 4301	Exit Plate	1
18	A134 4161	Pressure Lever	1
19	A212 4459	Pressure Spring	1
20	A212 4151	Fusing Unit Frame	1

Index No.	Part No.	Description	Q'ty Per Assembly
101	0720 0040E	Retaining Ring - M4	
102	0414 0122B	Philips Tapping Screw - M4x12	
103	0434 0082B	Tapping Screw - M4x8	
104	0725 0120E	Retaining Ring C - M12	

22. DUPLEX TRAY 1 (A214)

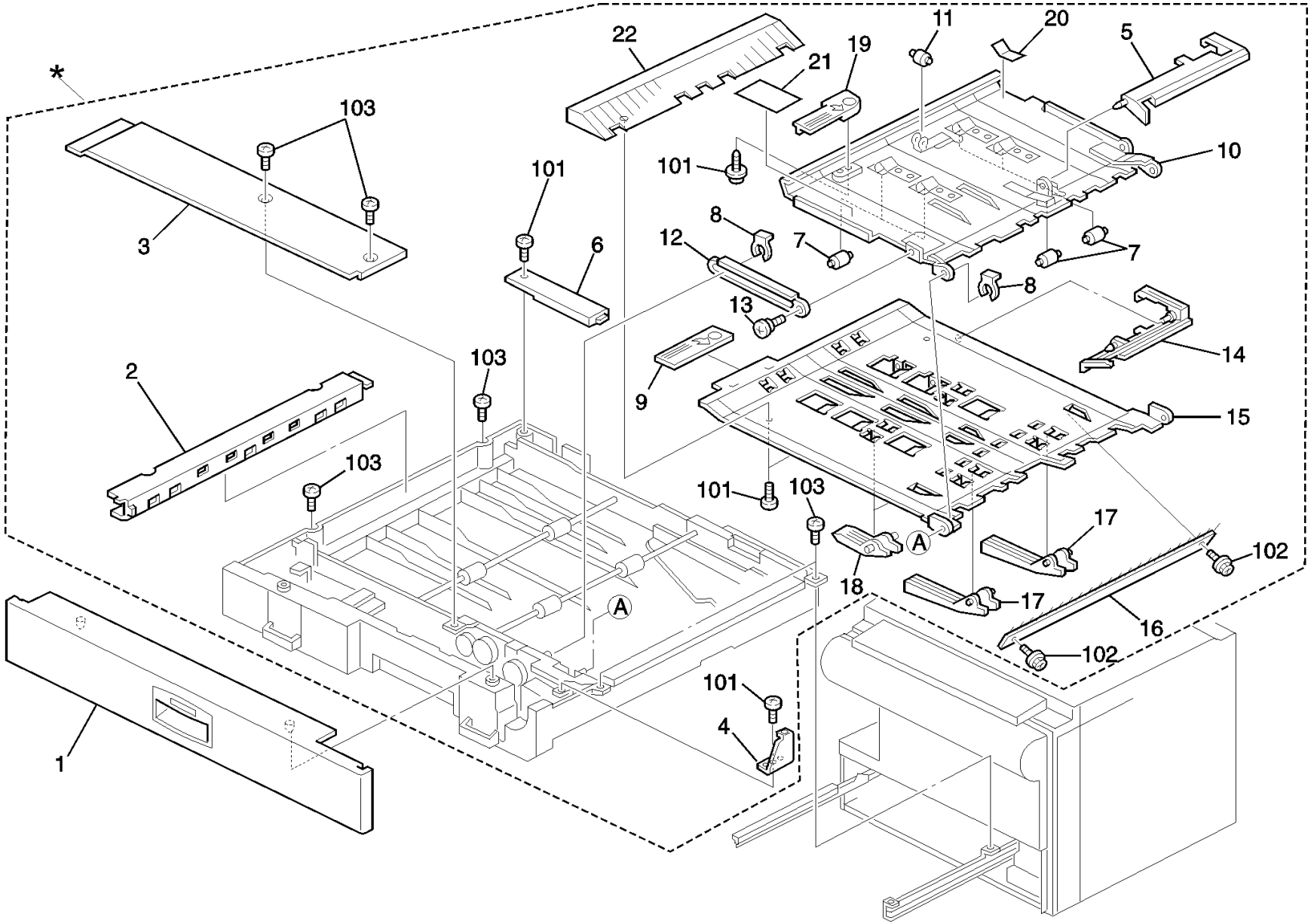

22. DUPLEX TRAY 1 (A214)

Index No.	Part No.	Description	Q'ty Per Assembly
*	A211 4620	Duplex Tray Ass'y	1
1	A212 2956	Paper Feed Front Cover	2
2	A134 4720	End Fence Upper Cover	1
3	A134 4701	Front Upper Cover	1
4	A134 4712	Right Cover Bracket	1
5	A134 4728	Inverter Feeler	1
6	A134 4721	Connector Cover	1
7	AF02 2077	Driven Roller	7
8	5206 2686	Snap Ring	2
9	A134 4739	Lower Guide Plate Knob	1
10	A158 4607	Upper Guide Plate	1
11	AF04 0031	Upper Exit Roller	7
12	A134 4619	Guide Plate Link	1
13	5447 2768	Stepped Screw - M3	1
14	A134 4730	Entrance Feeler	1
15	A158 4611	Lower Guide Plate	1
16	AA12 0067	Anti Static Brush	1
17	A154 4616	Paper Holder	6
18	A158 4603	Paper Holder	2
19	A134 4726	Guide Plate Knob	1
20	AA16 2068	Guide Plate Pad	1
21	A134 4884	Decal - Duplex Misfeed Removal	1
22	A158 4604	Duplex Lower Guide	1

Index No.	Part No.	Description	Q'ty Per Assembly
101	0802 5236	Tapping Screw - M4x8	
102	0443 0060W	Hexagon Head Tapping Screw - M3x6	
103	0344 0080F	Philips Truss Head Screw - M4x8	

23. DUPLEX TRAY 2 (A214)

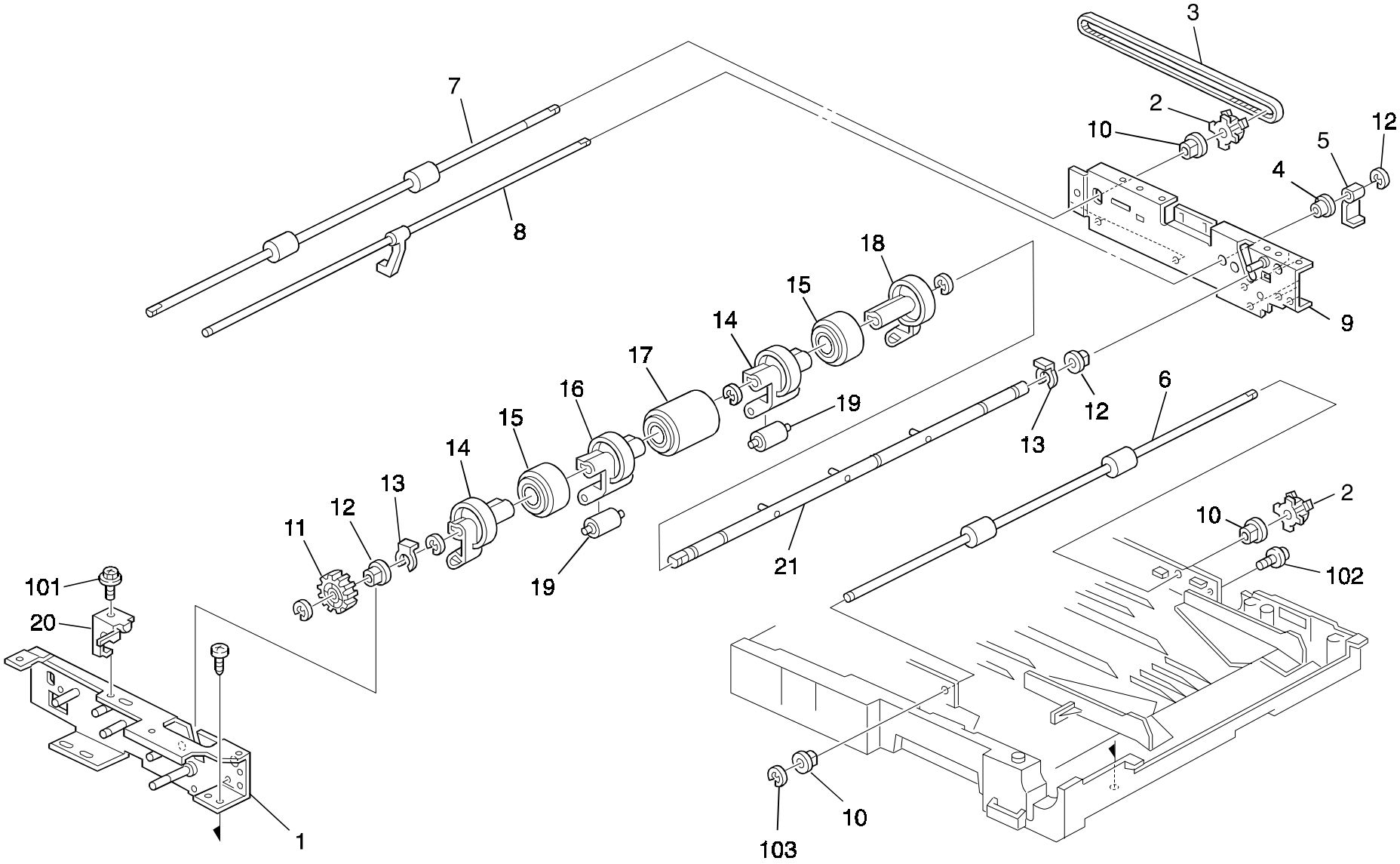

23. DUPLEX TRAY 2 (A214)

Index No.	Part No.	Description	Q'ty Per Assembly
1	A134 4751	Front Side Plate	1
2	AB03 0474	Pulley - 24Z	2
3	AA04 3390	Timing Belt - 40S2M192	1
4	5443 2668	Bushing - 4x6x7mm	2
5	AA11 1208	Paper End Sensor Feeler	1
6	AF02 0319	Transport Roller	1
7	AF02 0320	Right Transport Roller	1
8	A134 4676	Paper End Feeler	1
9	A134 4781	Rear Side Plate	1
10	5053 0447	Bushing - 6mm	4
11	AB01 1166	Gear - 33Z	1
12	5304 1639	Bushing - 8mm	2
13	5215 2621	Snap Ring - M6	3
14	A134 4809	Front Guide Holder	1
15	AF02 0317	Stack Roller	2
16	A134 4649	Paper Guide Holder	2
17	**AF03 1024**	**Feed Roller**	**1**
18	A134 4808	Rear Guide Holder	1
19	AF02 2077	Driven Roller	7
20	A134 4690	Clutch Stopper	1
21	A134 4512	Feed Roller Shaft	1

Index No.	Part No.	Description	Q'ty Per Assembly
101	0443 0060B	Hexagon Tapping Screw - M3x6	
102	0951 4008B	Philips Screw With Washer - M4x8	
103	0720 0040E	Retaining Ring - M4	

24. DUPLEX TRAY 3 (A214)

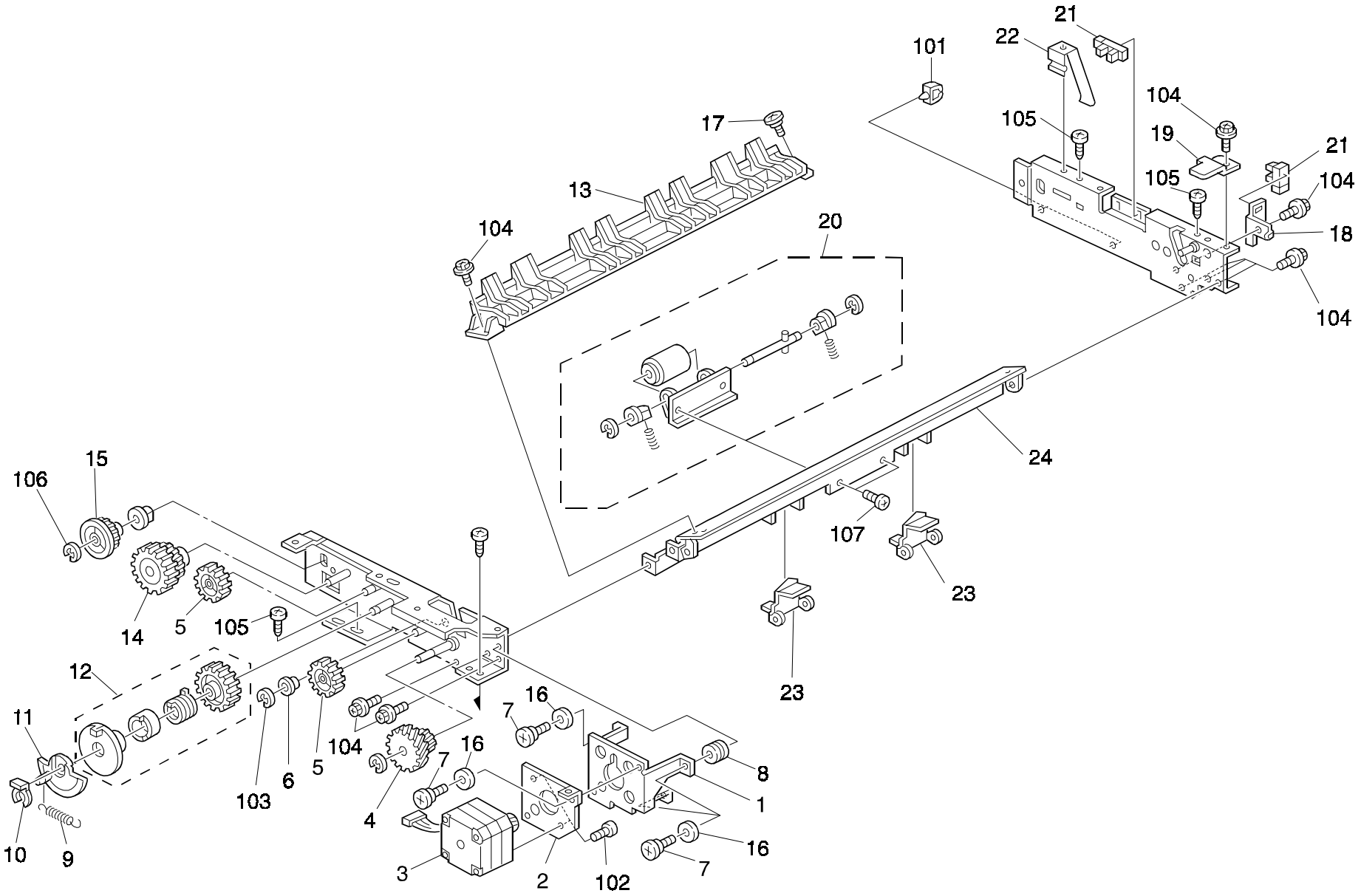

24. DUPLEX TRAY 3 (A214)

Rev. 03/99

Index No.	Part No.	Description	Q'ty Per Assembly
1	A134 4799	Motor Bracket	1
2	A134 4800	Motor Bracket	1
3	A134 5290	Transport Drive Motor	1
4	AB01 7337	Gear - 15Z/55Z	1
5	AB01 1165	Gear - 32Z	2
6	5443 2668	Bushing - 4x6x7mm	2
7	A079 3626	Stepped Screw - Swing Cleaning	3
8	AA16 1067	Cushion - Motor	3
9	AA06 0593	Spring	1
10	5447 2681	Snap Ring	7
11	A334 4706	Disk - Bottom Plate Clutch	1
12	AB04 0017	Spring Clutch - Tray Bottom Plate	1
13	A134 4508	Inverter Guide Plate	1
14	AB01 7332	Gear - 24Z/41Z	1
15	AB01 1167	Gear - 25Z	1
16	AA13 2184	Motor Cushion	3
17	AA14 3307	Stepped Screw - M3x4	1
18	A134 4790	Paper End Sensor	1
19	A134 4804	Guide Plate Stopper	1
20	A134 4527	Separation Roller	1
21	AW02 0075	Photointerrupter	15
22	A134 4765	Grounding Plate	1
23	A154 4626	Vibrating Plate	2
24	A134 4662	Duplex Guide Plate	1

Index No.	Part No.	Description	Q'ty Per Assembly
101	1105 0199	Clamp	
102	0313 0050B	Philips Pan Head Screw - M3x5	
103	0720 0030E	Retaining Ring - M3	
104	0443 0060B	Hexagon Tapping Screw - M3x6	
105	0802 5236	Tapping Screw - M4x8	
106	0720 0040E	Retaining Ring - M4	
107	0434 0060B	Philips Tapping Screw - M4x6	

25. DUPLEX TRAY 4 (A214)

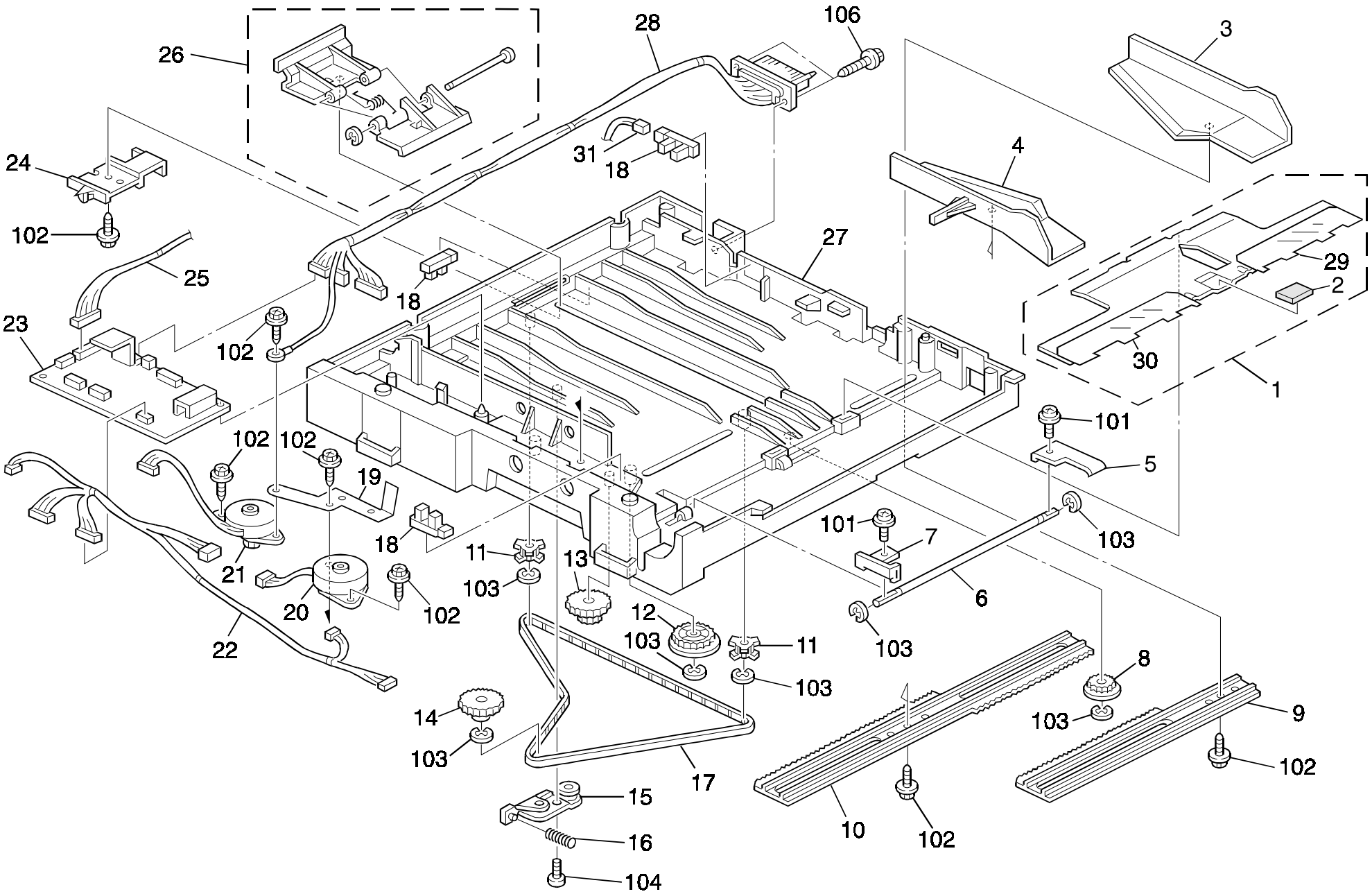

25. DUPLEX TRAY 4 (A214)

Rev. 03/99

Index No.	Part No.	Description	Q'ty Per Assembly
1	A154 4620	Bottom Plate	1
2	**AF01 3003**	**Bottom Plate Pad - Duplex**	**1**
3	AF01 6160	Rear Side Fence	1
4	AF01 6161	Front Side Fence	1
5	A204 4651	Bottom Pressure Plate	1
6	AA14 0291	Bottom Plate Shaft	1
7	A491 4690	Bottom Plate Hook	1
8	G011 3305	Gear - 16T	2
9	A134 4689	Rear Side Fence Rack	1
10	A134 4688	Front Side Fence Rack	1
11	AB03 0473	End Fence Pulley - 22Z	2
12	AB01 3881	Gear - 31Z	1
13	AB01 7400	Gear- 18Z/68Z	1
14	AB01 7339	End Fence Gear - 22Z/58Z	1
15	A134 4714	Tightener	1
16	AA06 3370	Spring	1
17	AA04 3374	Timing Belt - S2M800	1
18	AW02 0075	Photointerrupter	15
19	A134 4620	Grounding Plate	1
20	A134 5291	Jogger Drive Motor - Side Fence	1
21	A134 5292	Jogger Drive Motor - End Fence	1
22	A134 5323	Motor Harness	1
23	A158 5191	Duplex Control Board	1
24	A134 4710	End Fence Actuator	1
25	A134 5321	Sensor Relay Harness	1
26	A134 4525	End Fence	1
27	AF01 0018	Duplex Tray	1
28	A134 5320	Toner Bottle Cam	1
29	A154 4622	Rear Guide Plate	1
30	A154 4621	Front Guide Plate	1
31	A134 5322	End Fence Harness	1

Index No.	Part No.	Description	Q'ty Per Assembly
101	0951 3006B	Philips Screw With Flat Washer - M3x6	
102	0802 5232	Tapping Screw - M3x8	
103	0720 0040E	Retaining Ring - M4	
104	0802 5236	Tapping Screw - M4x8	
105	0802 5234	Tapping Screw - M3x12	

26. PAPER EXIT SECTION (A214)

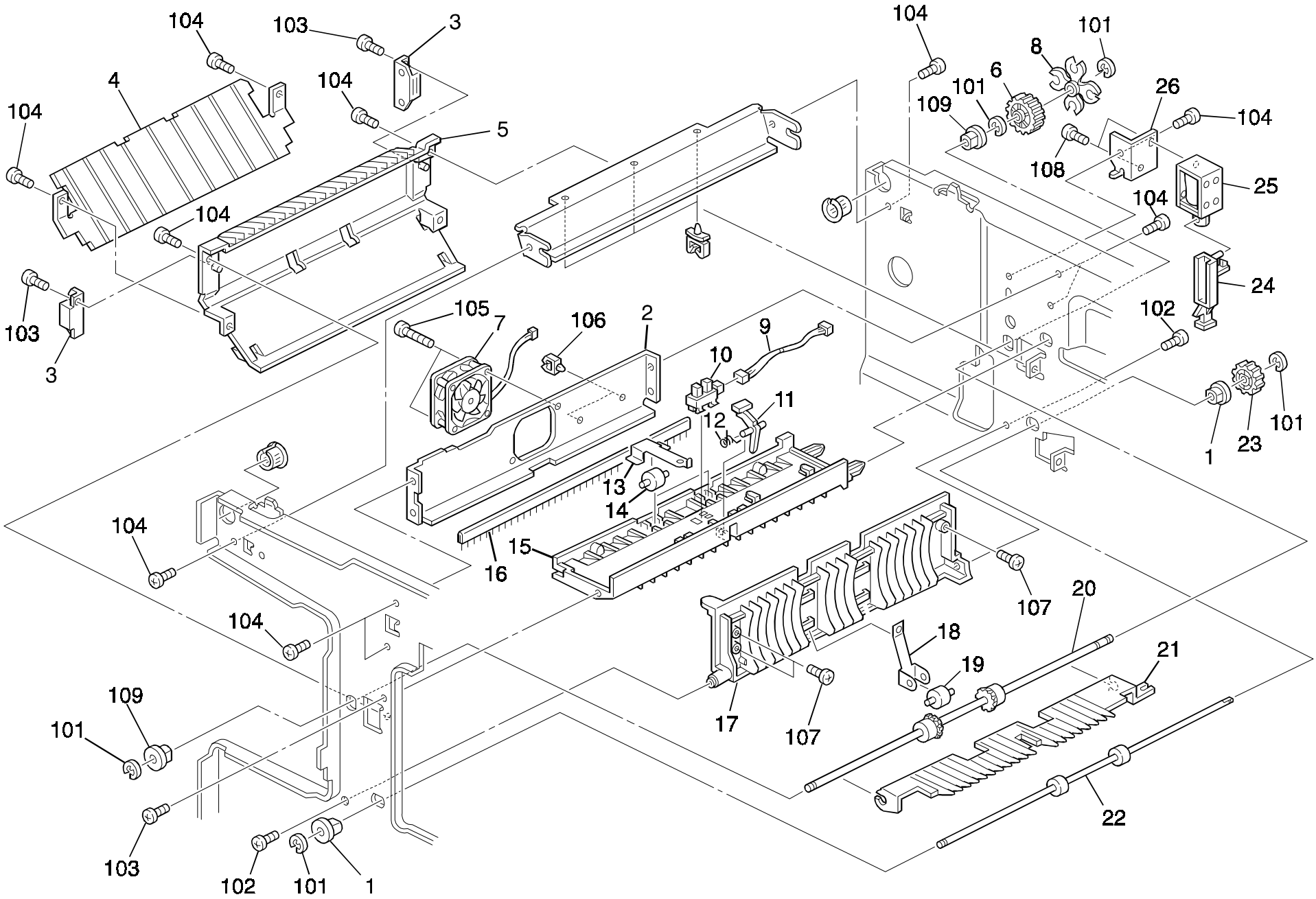

26. PAPER EXIT SECTION (A214)

Rev. 03/99

Index No.	Part No.	Description	Q'ty Per Assembly
1	5053 0447	Bushing - 6mm	4
2	A157 1084	Motor Stay	1
3	AG07 0004	Magnetic Catch	6
4	A158 4452	Lower Reverse Guide Plate	1
5	A158 4451	Reverse Guide Plate	1
6	A212 4496	Gear - 24Z	1
7	AX64 0059	Fan Motor - DC24V 3.12W	2
8	A212 4495	Shift Clutch	1
9	A153 5328	CT Harness	1
10	AW02 0086	Photointerruptor	15
11	A212 4453	Paper Exit Feeler	1
12	AA06 6274	Spring	1
13	A157 4456	Spring Plate	2
14	AF02 2042	Middle Pressure Roller	2
15	A212 4450	Upper Guide Plate	1
16	AA12 0071	Exit Antistatic Brush	1
17	A158 4453	Exit Cover	1
18	A158 4459	Spring Plate	2
19	AF04 0031	Upper Exit Roller	7
20	AF02 0327	Exit Roller	1
21	AF02 5024	Pick-off Pawl	1
22	AF02 0336	Inverter Drive Roller	1
23	AB01 3106	Gear - Drive - Third - Z18	1
24	A158 4463	Pick-off Pawl Arm	1
25	AX12 0039	DC SOL 24V 400GF	1
26	A158 4467	Solenoid Bracket	1

Index No.	Part No.	Description	Q'ty Per Assembly
101	0720 0040E	Retaining Ring - M4	
102	0434 0080B	Philips Tapping Screw - M4x8	
103	0434 0082B	Tapping Screw - M4x8	
104	0434 0060B	Philips Tapping Screw - M4x6	
105	0353 0300B	Bind Screw - M3x30	
106	1105 0199	Clamp	
107	0802 5236	Tapping Screw - M4x8	
108	0313 0040B	Philips Pan Head Screw - M3x4	
109	0805 3480	Bushing - 6mm	

27. PAPER EXIT SECTION (A212)

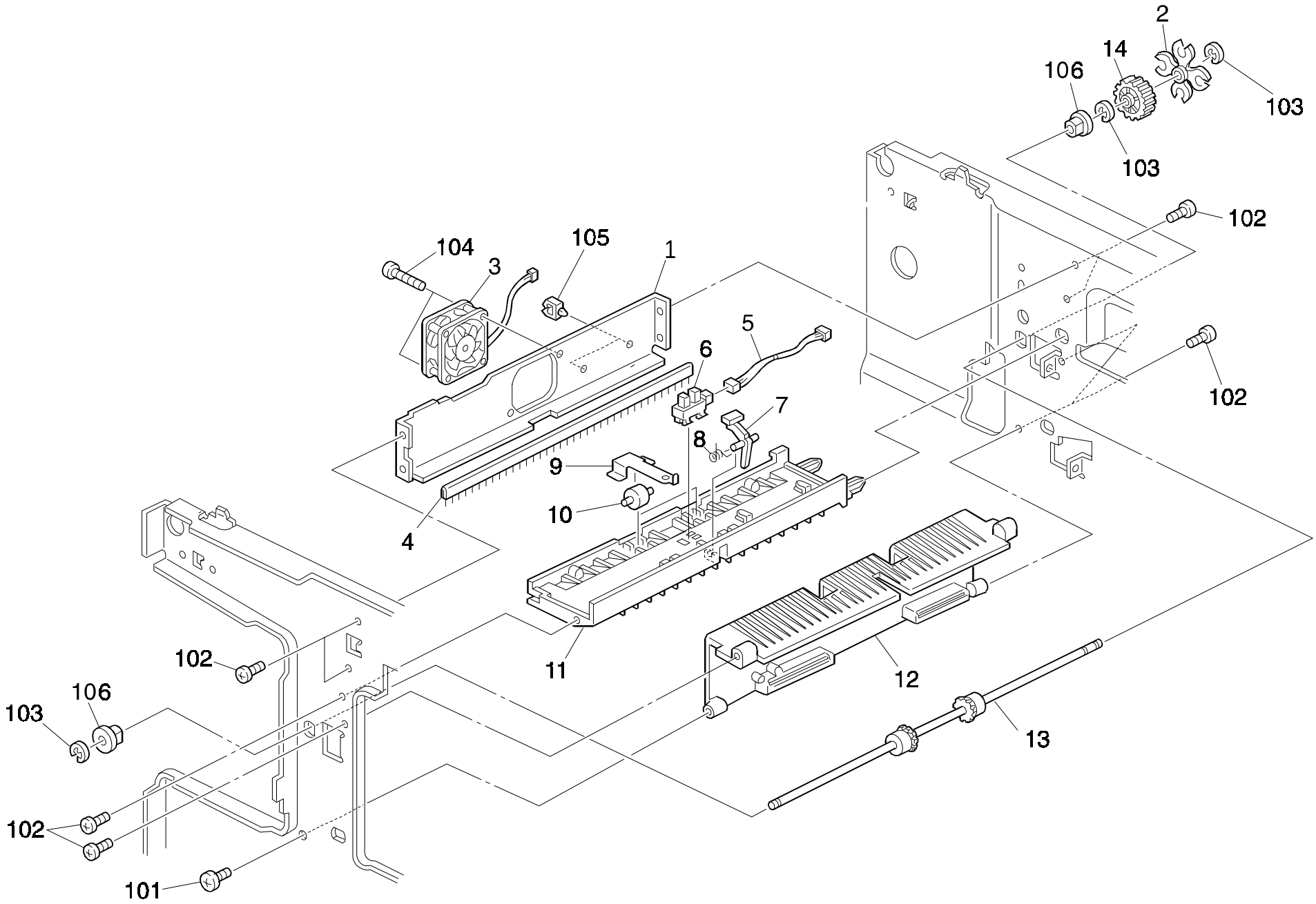

27. PAPER EXIT SECTION (A212)

Rev. 03/99

Index No.	Part No.	Description	Q'ty Per Assembly
1	A157 1084	Motor Stay	1
2	A212 4495	Shift Clutch	1
3	AX64 0059	Fan Motor - DC24V 3.12W	2
4	AA12 0071	Exit Antistatic Brush	1
5	A153 5328	CT Harness	1
6	AW02 0075	Photointerrupter	15
7	A212 4453	Paper Exit Feeler	1
8	AA06 6274	Spring	1
9	A157 4456	Spring Plate	2
10	AF02 2042	Middle Pressure Roller	2
11	A212 4450	Upper Guide Plate	1
12	A212 4460	Exit Cover	1
13	AF02 0327	Exit Roller	1
14	A212 4496	Gear - 24Z	1

Index No.	Part No.	Description	Q'ty Per Assembly
101	0802 5236	Tapping Screw - M4x8	
102	0434 0060B	Philips Tapping Screw - M4x6	
103	0720 0040E	Retaining Ring - M4	
104	0353 0300B	Bind Screw - M3x30	
105	1105 0199	Clamp	
106	0805 3480	Bushing - 6mm	

28. DRIVE SECTION 1 (A212/A214)

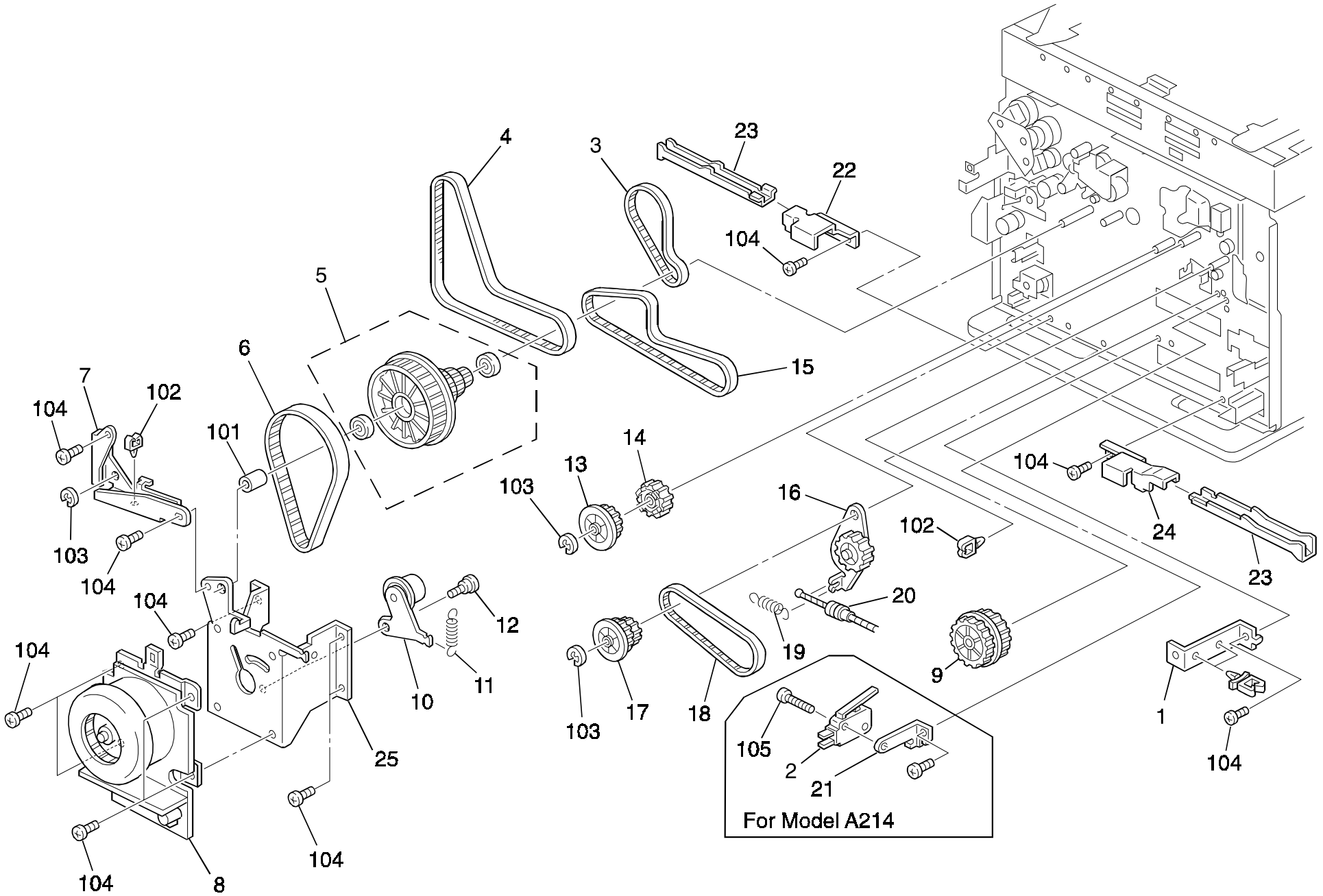

28. DRIVE SECTION 1 (A212/A214)

Rev. 03/99

Index No.	Part No.	Description	Q'ty Per Assembly
1	A153 5802	Lower Bracket - DC Drive Board	1
2	1204 2356	Micro Switch - AM51612A531	1
3	AA04 3392	Drum Timing Belt	1
4	AA04 3420	Timing Belt - 80S3M519	1
5	AB03 0492	Pulley - 25/25/34/125Z	1
6	AA04 3391	Timing Belt - 160S2M328	1
7	A153 1131	Development Support Plate	1
8	AX06 0109	Motor - Dc24v 45w	1
9	AB01 7371	Exit Pulley	1
10	A153 1128	Tightener	1
11	AA06 0228	Spring - Transfer Drum Cleaning Sol	1
12	C105 2352	Stepped Screw - M6x1.7	1
13	AB03 0463	Fusing Cam Pulley	1
14	AB01 3872	Fusing Cam Gear - 28Z	1
15	AA04 3396	Timing Belt - 60S3M366	1
16	A134 1121	Joint Gear	1
17	AB01 7345	Timing Pulley - 35Z	1
18	AA04 3397	Timing Belt - 30S3M300	1
19	A212 1151	Tension Spring	2
20	AA05 1024	Release Wire	1
21	A158 4466	Switch Bracket	1
22	A134 1072	Right Bracket - Grip Plate	1
23	A134 1071	Left Grip Plate	2
24	A134 1073	Left Bracket - Grip Plate	1
25	A153 1107	Motor Bracket	1

Index No.	Part No.	Description	Q'ty Per Assembly
101	0707 8140B	Bushing - 8x14mm	
102	1105 0199	Clamp	
103	0720 0060E	Retaining Ring - M6	
104	0434 0060B	Philips Tapping Screw - M4x6	
105	0313 0140B	Philips Pan Head Screw - M3x14	

29. DRIVE SECTION 2 (A212/A214)

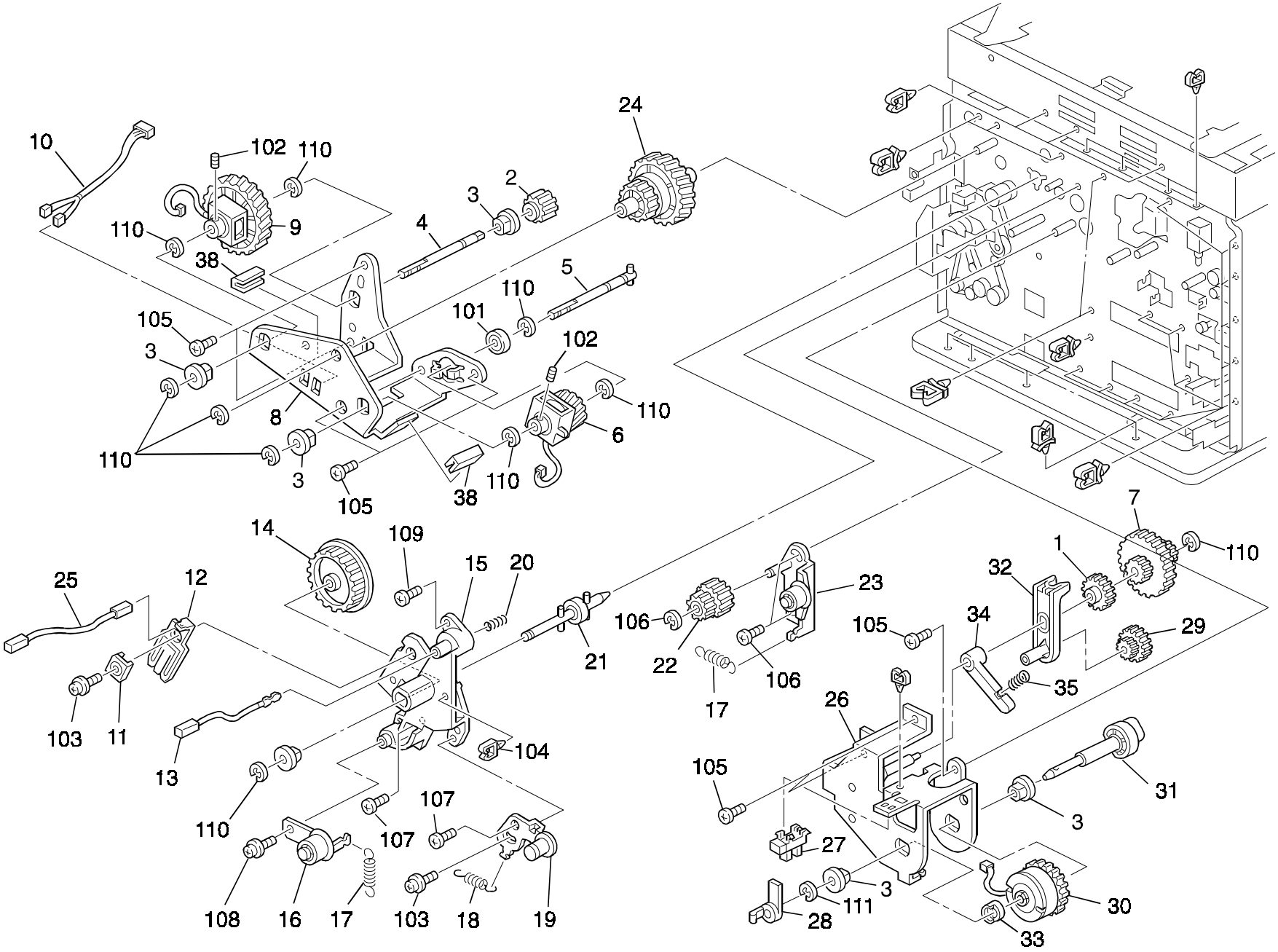

29. DRIVE SECTION 2 (A212/A214)

Rev. 03/99

Index No.	Part No.	Description	Q'ty Per Assembly
1	AB01 7386	Cleaning Cam	1
2	AB01 3917	Toner Supply Gear	1
3	AA08 2047	Bushing - 8x16x7	9
4	AA14 5539	Solenoid Shaft	1
5	A153 1127	Clutch Shaft	1
6	AX20 0105	Magnetic Clutch - 15kgf 24Z	1
7	AB01 7368	Cleaning Drive Gear	1
8	A153 1125	Development Drive Bracket	1
9	AX20 0106	Magnetic Clutch - 15kgf 52Z	1
10	A153 5340	CT Harness	1
11	A212 3087	Terminal Cap	1
12	A153 3086	Bias Terminal	1
13	A153 2130	Receptacle Housing	1
14	AB03 0494	Drum Pulley	1
15	A153 1114	Drive Gear Holder	1
16	A153 1132	Development Tightener	1
17	A212 1151	Tension Spring	3
18	A212 1111	Spring Cover	2
19	A153 1135	Drum Drive Tightener	1
20	AA06 3552	Pressure Spring	1
21	A153 1117	Drum Drive Shaft	1
22	AB01 7369	Transfer Belt Pulley	1
23	A157 1111	Belt Tightener	1
24	AB01 7370	Development Pulley	1
25	AZ43 0020	High Voltage Supply Cord	1
26	A204 3915	Magnet Clutch Bracket	1
27	AW02 0086	Photointerrupter	15
28	A212 3914	Magnetic Clutch Feeler	1
29	AB01 7385	Gear - 17Z/24Z	1
30	AX21 0059	Spring Clutch	1
31	A204 3911	Cam Shaft	1
32	A212 2142	Cam Lever	1
33	A204 3922	Brake Cam	1
34	A204 3921	Clutch Arm	1
35	A212 3851	Spring - T/S Unit	1

Index No.	Part No.	Description	Q'ty Per Assembly
101	0740 3008	Ball Bearing - 8x22x7	
102	0573 0040E	Hexagon Headless Set Screw - M3x4	
103	0951 4012B	Philips Screw With Flat Washer	
104	1105 0199	Clamp	
105	0434 0060B	Philips Tapping Screw - M4x6	
106	0414 0080B	Tapping Screw - M4x8	
107	0802 5236	Tapping Screw - M4x8	
108	0802 5221	Tapping Screw - M3x10	
109	0952 4008B	Sem's Screw - M4x8	
110	0720 0060E	Retaining Ring - M6	
111	0720 0060	Retaining Ring - M6	

30. DRIVE SECTION 3 (A212/A214)

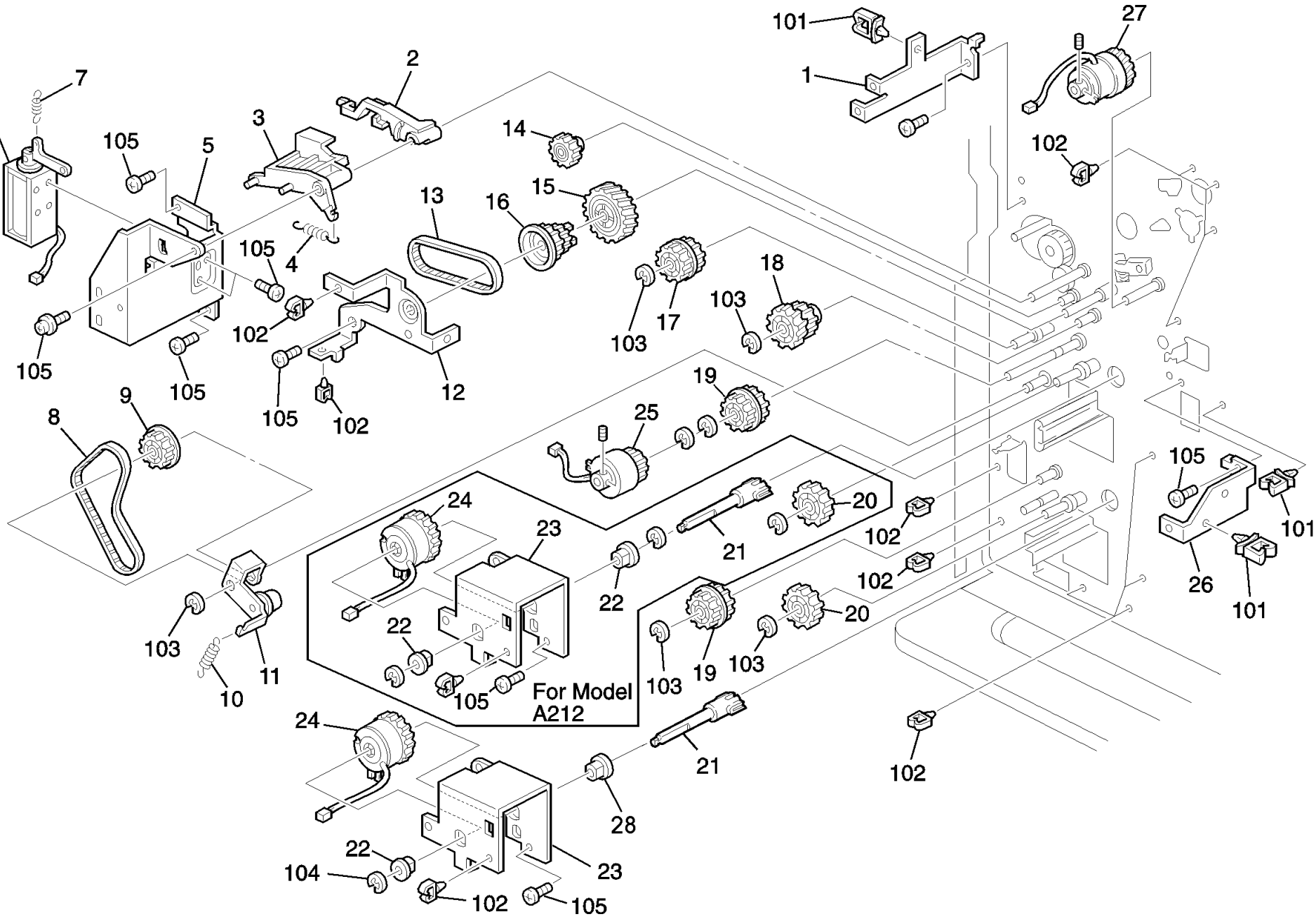

30. DRIVE SECTION 3 (A212/A214)

Rev. 01/11/2000

Index No.	Part No.	Description	Q'ty Per Assembly
1	A153 5813	Main Control Board Bracket	1
2	A134 2679	Pick-up Lever	1
3	A134 2678	Solenoid Link (A212)	1
3	A155 2677	Pick-up Link (A214)	1
4	A212 2673	Release Spring	1
5	A134 2676	Solenoid Bracket (A212)	1
5	A155 2675	Pick-up Bracket (A214)	1
6	A134 2680	DC Solenoid (A212)	1
6	A155 2680	DC Solenoid (A214)	1
7	A212 2672	Pressure Spring	1
8	A212 2531	Timing Belt - S3M 300	1
9	AB03 0491	Timing Pulley - 25Z	1
10	A212 3072	Relay Adjusting Spring	2
11	A212 2564	Tightener	1
12	A157 2560	Paper Feed Support Plate	1
13	AA04 3389	Timing Belt - 60S3M201	1
14	AB01 1153	Idle Gear - 25Z	1
15	AB01 3918	Drive Gear - 35Z	1
16	AB03 3064	Drive Pulley	1
17	AB01 7395	Timing Pulley	1
18	AB01 7377	Gear - 25Z	1
19	AB01 7394	Timing Pulley - 24T/20Z	2
20	AB01 3908	Gear - 27Z	1
21	A212 2584	Paper Feed Drive Shaft	1
22	0805 3386	Bushing - 8mm	9
23	A212 2562	Solenoid Bracket	1
24	A100 5205	Magnetic Clutch - 42z	1
25	AX20 0107	Magnetic Clutch - 10kgf 25Z	1
26	A153 5812	Left Lower Bracket	1
27	AX20 0109	Magnetic Clutch - 10kgf.cm 35Z	1
28	A212 2814	Busing	1

Index No.	Part No.	Description	Q'ty Per Assembly
101	1105 0192	Locking Support	
102	1105 0199	Clamp	
104	5447 2681	Snap Ring	
105	0434 0060B	Pan Head Self-tapping Screw - M4x6	

31. ELECTRICAL SECTION 1 (A212/A214)

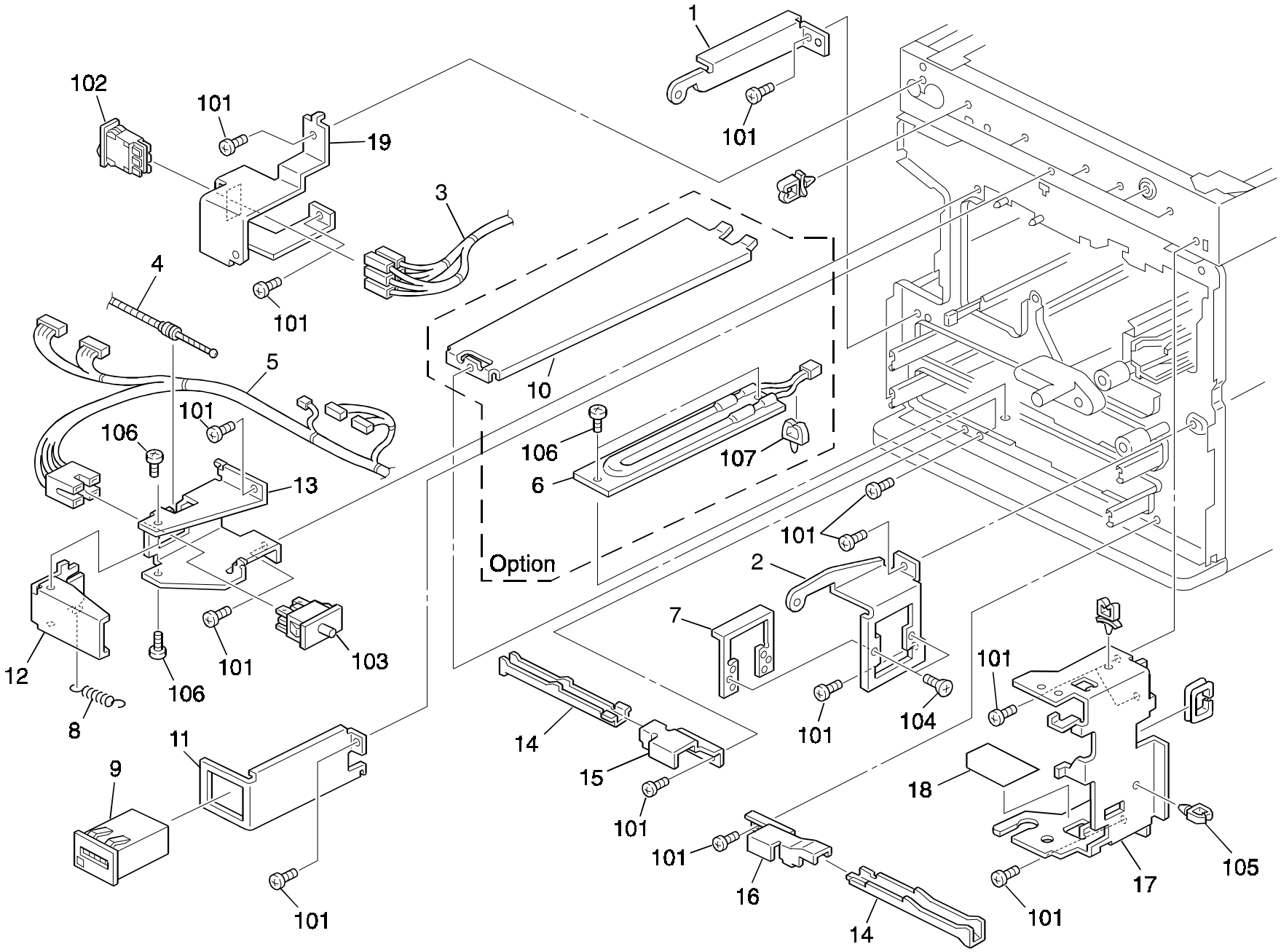

31. ELECTRICAL SECTION 1 (A212/A214)

Index No.	Part No.	Description	Q'ty Per Assembly
1	A153 1353	Front Cover Hinge	1
2	A153 1355	Key Counter Bracket	1
3	A212 5661	AC Main Harness	1
4	AA05 1024	Release Wire	1
5	A212 5520	Front Right Harness (NA)	1
5	A212 5320	Front Right Harness (EU/ASIA/TWN)	1
6	AX40 0021	Tray Anticondensation Heater - 115V 18W (Option)	1
6	AX40 0022	Tray Anticondensation Heater - 240V 18W (Option)	1
7	5446 1239	Plate Nut - Key Counter	1
8	A212 4467	Spring - Stripper Pawl Release	2
9	AX31 0024	Total Counter	1
10	A134 2947	Heater Cover (Option)	1
11	A212 5820	Total Counter Bracket	1
12	A153 5809	Arm Interlock SW	1
13	A153 5808	Bracket - Safety Switch	1
14	A134 1071	Left Grip Plate	2
15	A134 1072	Right Bracket - Grip Plate	1
16	A134 1073	Left Bracket - Grip Plate	1
17	A212 3270	Stay - Toner Supply	1
18	A212 3071	Developer Rail Seal	1
19	A212 5814	Main Switch Bracket (NA)	1
19	A212 5804	Main Switch Bracket (EU/ASIA/TWN)	1

Index No.	Part No.	Description	Q'ty Per Assembly
101	0434 0060B	Philips Tapping Screw - M4x6	
102	1204 2444	Main Switch (NA)	
102	1204 1545	Main Switch (EU/ASIA/TWN)	
103	1204 2397	Safety Switch	
104	0323 0080B	Philips Sunk Screw - M3x8	
105	1105 0229	Clamp	
106	0314 0060B	Philips Pan Head Screw - M4x6	
107	1105 0231	Clamp	

32. ELECTRICAL SECTION 2 (A212/A214)

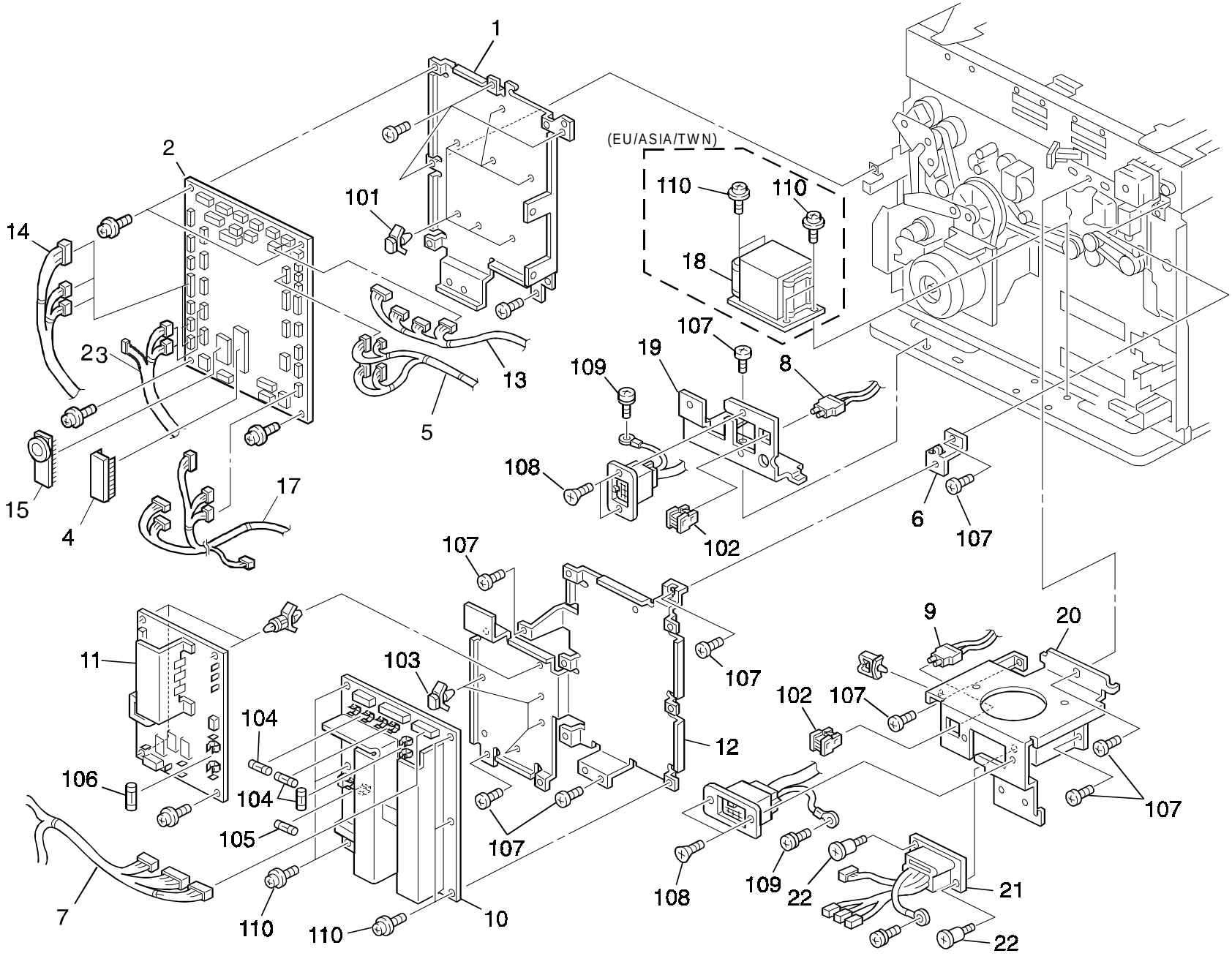

32. ELECTRICAL SECTION 2 (A212/A214)

Rev. 03/99

Index No.	Part No.	Description	Q'ty Per Assembly
1	A212 5811	Main Control Board Bracket	1
2	A212 5101	Main Control Board (NA)	1
2	A212 5201	Main Control Board (EU/ASIA/TWN)	1
4	A212 5103	IC - 4MX16 - 120NS	1
5	A212 5319	Rear Upper Harness	1
6	A153 5803	Upper Bracket - DC Drive Board	1
7	A212 5644	Tray Power Supply Harness (A212)	1
7	A214 5643	Tray Power Supply Harness (A214)	1
8	AW03 0055	Optical Fiber - 420mm	1
9	AW03 0054	Optical Fiber - 250mm	1
10	AZ23 0055	DC Drive Board - 100/120V (NA)	1
10	AZ23 0060	DC Drive Board - 220V/240V (EU/ASIA/TWN)	1
11	A153 5545	AC Drive Board - 120V (NA)	1
11	A153 5645	AC Drive Board (230V)(EU/AISA/TWN)	1
12	A153 5801	DC Drive Board Bracket	1
13	A212 5312	Optical Harness	1
14	A212 5316	Paper Feed Harness -2trays (A212)	1
14	A158 5310	Duplex Paper Feed Harness (A214)	1
15	A153 5114	RAM Board	1
17	A157 5311	Rear Lower Harness - 2tray (A212)	1
17	A214 5309	Rear Lower Harness - Duplex (A214)	1
18	AZ13 0023	Transformer - 230V	1
19	A153 5806	Bracket Paper Tray Unit	1
20	A212 5807	Bracket Ardf	1
21	A204 5326	Fusing Relay Harness	1
22	AA14 3301	Stepped Screw - M3x4	2
23	A155 5314	LCT Relay Harness (A214)	1
101	1105 0367	Spacer	
102	1102 4052	Optional Connector	
103	1105 0409	Spacer	
104	1107 0392	Fuse - 6.3A - 125V (NA)	

Index No.	Part No.	Description	Q'ty Per Assembly
104	1107 0752	Fuse - 5A - 250V (EU/AISA/TWN)	
105	1107 0393	Fuse - 8A - 125V (NA)	
105	1107 0753	Fuse - 6.3A - 250V (EU/AISA/TWN)	
106	1107 0629	Fuse - 17A - 125V (NA)	
107	0434 0060B	Philips Tapping Screw - M4x6	
108	0323 0060B	Philips Sunk Screw - M3x6	
109	0801 0137	Philips Pan Head Screw With Spring	
110	0951 3006B	Philips Screw With Flat Washer - M3x6	

33. ELECTRICAL SECTION 3 (A212/A214)

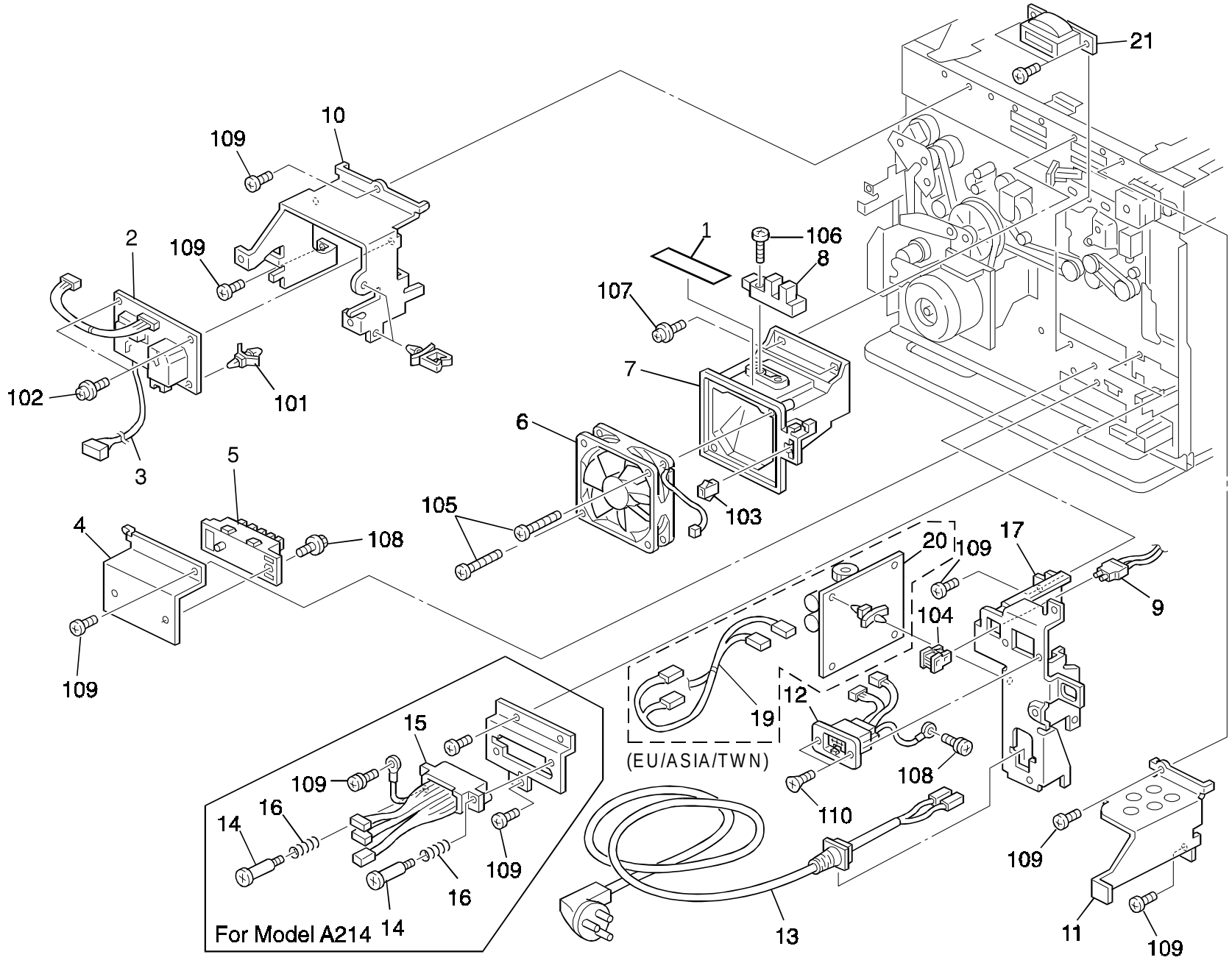

33. ELECTRICAL SECTION 3 (A212/A214)

Index No.	Part No.	Description	Q'ty Per Assembly
1	AA15 1177	Seal - 5x82x4	1
2	AZ32 0078	DC Power Pack	1
3	AZ43 0020	High Voltage Supply Cord	1
4	A134 2941	Tray Sensor Bracket	1
5	AW50 0010	Push Switch	2
6	AX64 0058	Fan Motor - DC 24V 4.32W	2
7	A153 1986	Cooling Fan Duct	2
8	AW02 0022	Photointerruptor	2
9	AW03 0056	Optical Fiber - 550mm	1
10	A212 1258	Right Bracket - Platen Cover	1
11	A153 1259	Platen Cover Bracket - Left	1
12	A212 5324	Sorter Relay Harness	1
13	A153 5571	Power Supply Cord - 120V (NA)	1
13	A153 5671	Power Supply Cord (EU/ASIA/TWN)	1
14	AA14 3452	Stepped Screw	2
15	A154 5325	Duplex Unit Relay Harness	1
16	AA06 3532	Spring	2
17	A212 5810	Power Supply Cord Bracket	1
19	A153 5601	AC Relay Harness	1
20	A153 5621	Noise Filter Board	1
21	AZ02 0008	Coil - 1 0mh 2A	1

Index No.	Part No.	Description	Q'ty Per Assembly
101	1105 0192	Locking Support	
102	0951 3006B	Philips Screw With Flat Washer - M3x6	
103	1102 4473	CT Connector - 2p	
104	1102 4052	Optional Connector	
105	0434 0352W	Pan Head Self-tapping Screw - M4x35	
106	0414 0142B	Binding Self Tapping Screw - M4x14	
107	0964 4008B	Tapping Screw With Flat Washer - M4x8	
108	0443 0060B	Hexagon Tapping Screw - M3x6	
109	0443 0080B	Tapping Screw - M3x8	
110	0323 0060B	Philips Sunk Screw - M3x6	

34. FRAME SECTION 1 (A212/A214)

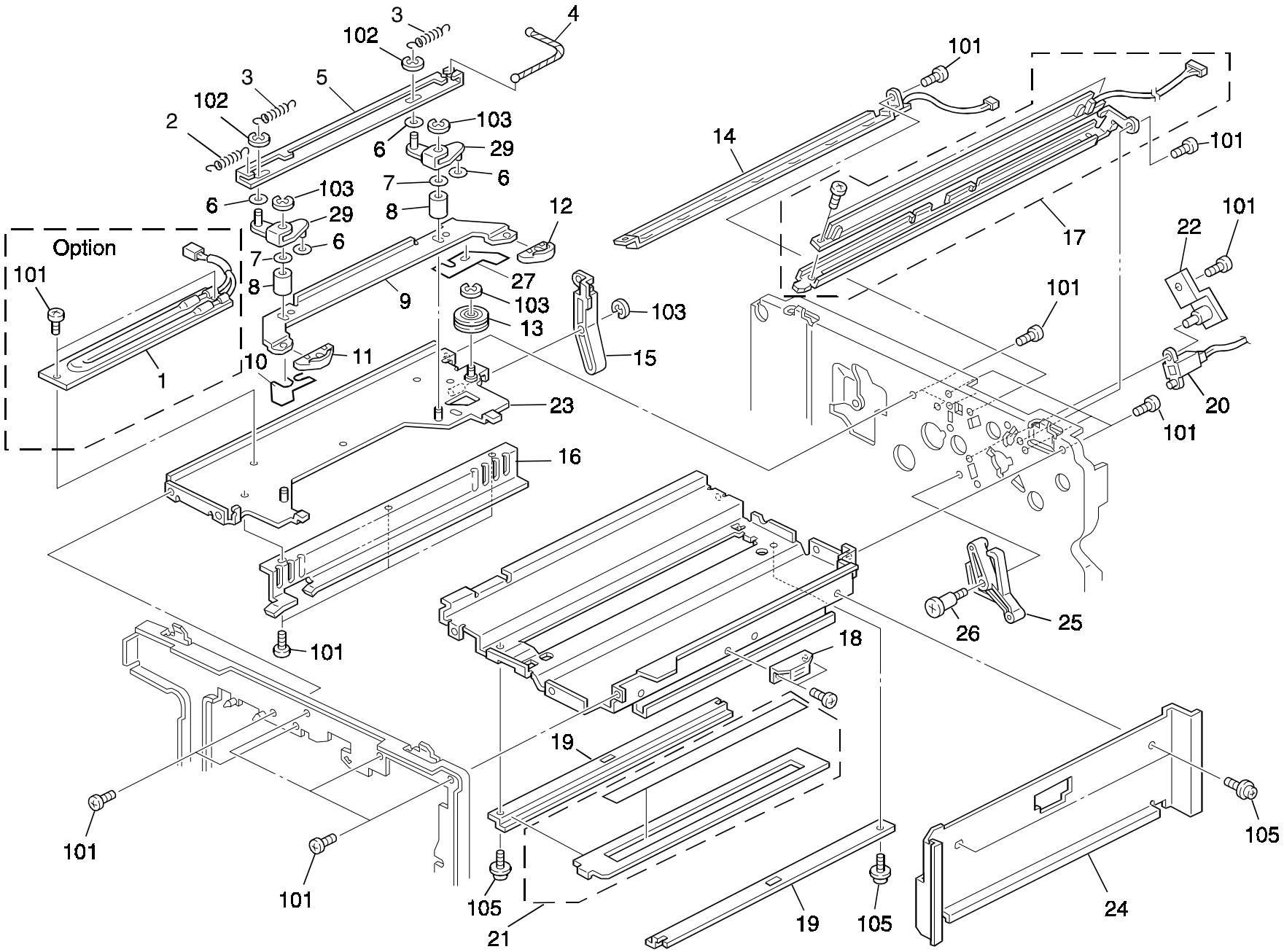

34. FRAME SECTION 1 (A212/A214)

Index No.	Part No.	Description	Q'ty Per Assembly
1	AX40 0094	Anticondensation Heater - 120V 9W (Option)	1
1	AX40 0095	Anticondensation Heater - 230V 9W (Option)	1
2	A212 2102	Pressure Spring	1
3	A212 2101	Release Spring	2
4	AA05 1025	Release Wire	1
5	A153 2072	Release Link Lever	1
6	A204 2187	Spacer-11mm	4
7	A204 2188	Spacer-15mm	2
8	AA13 2186	Collar	2
9	A153 2073	Guide Rail	1
10	A153 2084	Spacer	2
11	A153 2075	Front Roller Cam	1
12	A153 2076	Rear Roller Cam	1
13	A212 2060	Wire Pulley	1
14	A153 2090	Quenching Lamp	1
15	A212 2071	Cam Lever	1
16	A153 2083	Left Drum Rail	1
17	A153 2080	Eraser Lamp	1
18	AG07 0004	Magnetic Catch	6
19	A212 1674	Shield Glass Guide	2
20	A153 5339	Density Sensor Harness	1
21	A204 1677	Optical Filter	1
22	A153 3598	Pin Bracket	1
23	A153 2052	Release Bracket	1
24	A212 1350	Right Middle Cover	1
25	A153 3920	Belt Release Arm	1
26	AA14 3444	Stepped Screw	1
27	A153 2085	Spacer	1
28	A153 1675	Harness Guard Seal	1
29	A153 2061	Release Lever	1

Index No.	Part No.	Description	Q'ty Per Assembly
101	0434 0060B	Philips Tapping Screw - M4x6	
102	0720 0030E	Retaining Ring - M3	
103	0720 0040E	Retaining Ring - M4	
104	0964 4006B	Tapping Screw With Flat Washer - M4x6	
105	0313 0040B	Philips Pan Head Screw - M3x4	

35. FRAME SECTION 2 (A212/A214)

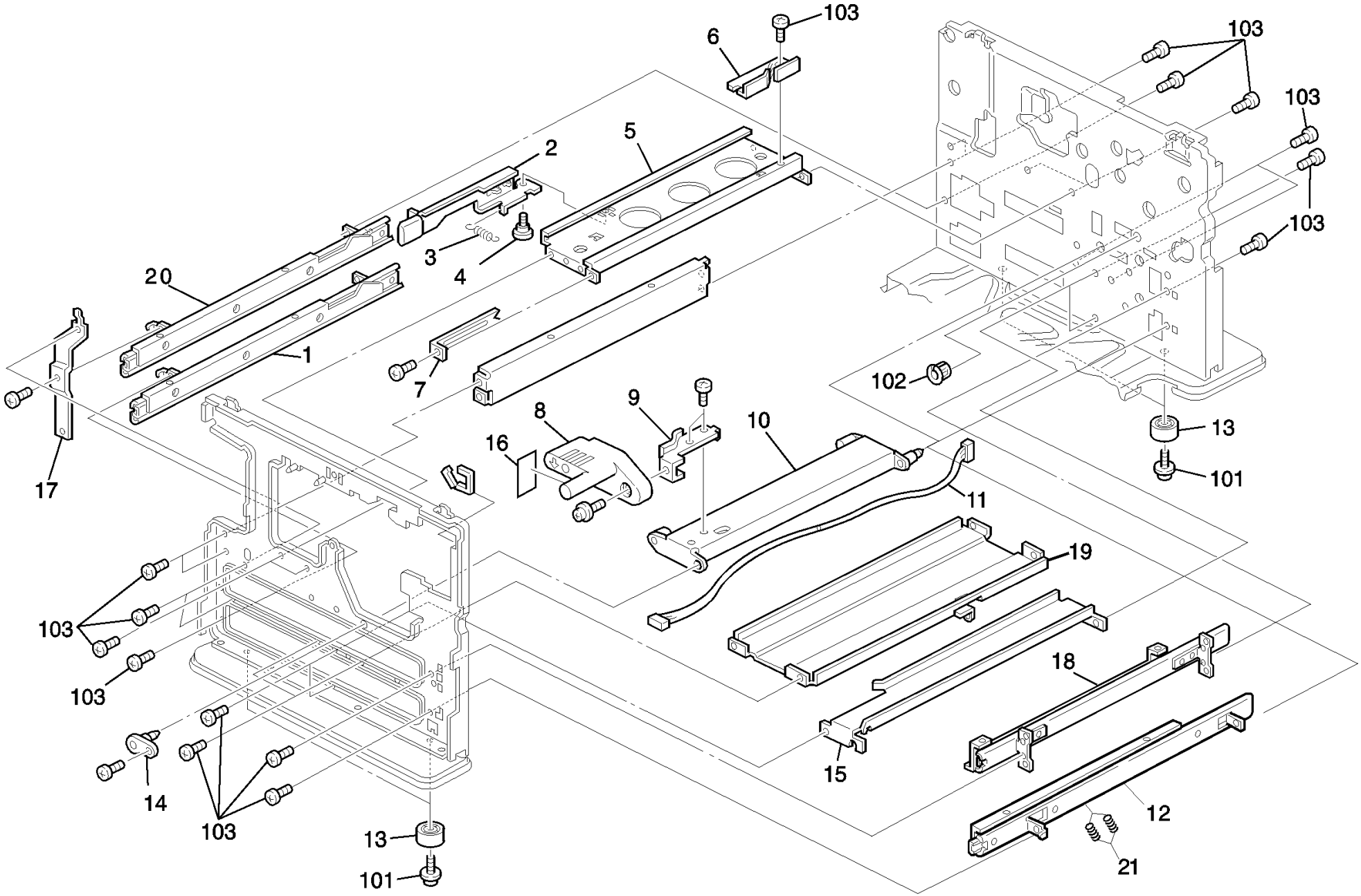

35. FRAME SECTION 2 (A212/A214)

Rev. 01/11/2000

Index No.	Part No.	Description	Q'ty Per Assembly
1	A212 2822	Left Slide Rail Ass'y	2
2	A212 4352	Fusing Lock Lever	1
3	A212 4467	Spring - Stripper Pawl Release	1
4	5203 1686	Screw - SLID RAIL	1
5	A134 4351	Stay - Fusing Rail	1
6	A208 4355	Grounding Brush - Fusing Entrance	1
7	A134 4355	Fusing Unit Stopper	1
8	A212 3930	Belt Unit Handle	1
9	A153 3933	Stopper Stay	1
10	A153 3931	Transport Unit Stay	1
11	A212 5334	CT Harness - 7p	1
12	A212 2873	Right Slide Rail Ass'y	1
13	AH01 0007	Rubber Foot	1
14	A157 3900	Support Plate	1
15	A212 2652	Middle Guide Rail	1
16	A153 3929	Decal - Caution Lever	1
17	A212 2929	Right Rail - Feed Tray	1
18	A134 4901	Duplex Right Rail Ass'y (A214 ONLY)	1
19	A212 1088	Middle Lower Stay	1
21	A212 2830	Lock Spring	2

Index No.	Part No.	Description	Q'ty Per Assembly
101	0960 4010B	Philips Flange Screw - M4x10	
102	1106 0193	Bushing - 7.9mm	
103	0434 0060B	Pan Head Self-tapping Screw - M4x6	

36. MAIN CONTROL BOARD (A212/A214)

CAPACITOR

SYMBOL NO.	INDEX NO.
C 1	190
C 2	190
C 3	191
C 4	182
C 5	190
C 6	182
C 7	191
C 8	191
C 9	191
C 10	190

SYMBOL NO.	INDEX NO.
C 11	190
C 12	182
C 13	192
C 14	182
C 15	189
C 16	190
C 17	190
C 18	182
C 19	190
C 20	192

SYMBOL NO.	INDEX NO.
C 21	191
C 22	182
C 23	190
C 24	190
C 25	182
C 26	191
C 27	191
C 28	191
C 29	190
C 30	182

SYMBOL NO.	INDEX NO.
C 31	190
C 32	191
C 33	190
C 34	190
C 35	190
C 36	190
C 37	191
C 38	191
C 39	190
C 40	191

SYMBOL NO.	INDEX NO.
C 41	191
C 42	182
C 43	190
C 44	190
C 45	190
C 46	190
C 47	190
C 48	190
C 49	190
C 50	190

SYMBOL NO.	INDEX NO.
C 51	190
C 52	190
C 53	190
C 54	190
C 55	191
C 56	188
C 57	188
C 58	190
C 59	182
C 60	189

SYMBOL NO.	INDEX NO.
C 61	191
C 62	190
C 63	191
C 64	190
C 65	190
C 66	191
C 67	182
C 68	182
C 69	190
C 70	190

CAPACITOR

SYMBOL NO.	INDEX NO.
C 71	190
C 72	182
----	----
C 107	185
C 108	----
C 109	185
----	----
C 149	185
----	----
C 159	153
----	----

SYMBOL NO.	INDEX NO.
C 208	185
----	----
C 217	187
C 218	187
C 219	----
C 220	187
C 221	185
C 222	186
----	----
----	----
----	----

SYMBOL NO.	INDEX NO.
C 300	190
C 301	190
C 302	190
C 303	190
C 304	190
C 305	190

CNNECTOR

SYMBOL NO.	INDEX NO.
CN 101	126
CN 102	115
CN 103	197
CN 104	9
CN 105	123
CN 106	114
CN 107	3
CN 108	102
CN 109	130
CN 110	128

SYMBOL NO.	INDEX NO.
CN 111	131
CN 112	4
CN 113	121
CN 114	115
CN 115	5
CN 116	3
CN 117	113
CN 118	7
CN 119	117
CN 120	6

SYMBOL NO.	INDEX NO.
CN 121	132
CN 122	110
CN 123	122
CN 124	118
CN 125	----
CN 126	125
CN 127	119
CN 128	6
CN 129	120
CN 130	128

SYMBOL NO.	INDEX NO.
CN 131	112
CN 132	127
CN 133	----
CN 134	102
CN 135	128
CN 136	129
CN 137	5
CN 138	----
CN 139	120
CN 140	8

36. MAIN CONTROL BOARD (A212/A214)

CNNECTOR

SYMBOL NO.	INDEX NO.
CN 141	102
CN 142	111
CN 143	124
CN 144	----
CN 145	195

DIODE

SYMBOL NO.	INDEX NO.
D 1	138
----	----
D 20	198
D 21	198
D 22	198
D 23	138
D 24	138
D 25	138
D 26	138
D 27	138

SYMBOL NO.	INDEX NO.
D 28	138
D 29	137
D 30	137
D 31	137

FILTER

SYMBOL NO.	INDEX NO.
FIL 1	152

IC

SYMBOL NO.	INDEX NO.
IC 1	143
(IC 1)	1
IC 2	149
IC 3	140
IC 4	147
IC 5	----
IC 6	140
IC 7	140
IC 8	146
IC 9	201
IC10	140

SYMBOL NO.	INDEX NO.
IC 11	202
IC 12	3
IC 13	203
(Socket)	196
IC 14	142
IC 15	140
IC 16	144
IC 17	----
IC 18	147
IC 19	----
IC 20	----

SYMBOL NO.	INDEX NO.
IC 100	141
IC 101	148
IC 102	141
IC 103	145
IC 104	145
IC 105	145
IC 106	141
IC 107	141
----	----
IC 145	2

JP

SYMBOL NO.	INDEX NO.
JP 1	184
JP 2-1	205
JP 2-2	205

OSC

SYMBOL NO.	INDEX NO.
OSC 1	183

Q

SYMBOL NO.	INDEX NO.
Q 1	135
Q 2	135
Q 3	135
-----	----
Q 102	134
Q 103	----
Q 104	134

REG

SYMBOL NO.	INDEX NO.
REG 101	204

RESISTOR

SYMBOL NO.	INDEX NO.
R 1	160
R 2	193
R 3	165
R 4	157
R 5	166
R 6	156
R 7	178
R 8	166
R 9	166
R 10	166

SYMBOL NO.	INDEX NO.
R 11	166
R 12	166
R 13	160
R 14	193
R 15	167
R 16	161
R 17	176
R 18	177
R 19	156
R 20	178

SYMBOL NO.	INDEX NO.
R 21	163
R 22	163
R 23	----
R 24	----
R 25	----
R 26	----
R 27	157
R 28	157
R 29	157
R 30	157

36. MAIN CONTROL BOARD (A212/A214)

RESISTOR

SYMBOL NO.	INDEX NO.	SYMBOL NO.	INDEX NO.	SYMBOL NO.	INDEX NO.	SYMBOL NO.	INDEX NO.	SYMBOL NO.	INDEX NO.	SYMBOL NO.	INDEX NO.	SYMBOL NO.	INDEX NO.
R 31	157	R 41	162	R 51	161	R 61	166	R 71	166	R 81	162	R 91	157
R 32	157	R 42	180	R 52	157	R 62	166	R 72	166	R 82	167	R 92	156
R 33	157	R 43	177	R 53	163	R 63	166	R 73	166	R 83	166	R 93	155
R 34	157	R 44	166	R 54	163	R 64	166	R 74	166	R 84	157	R 94	156
R 35	157	R 45	179	R 55	194	R 65	166	R 75	166	R 85	166	R 95	156
R 36	157	R 46	177	R 56	165	R 66	166	R 76	166	R 86	166	R 96	175
R 37	157	R 47	173	R 57	----	R 67	166	R 77	166	R 87	166	R 97	156
R 38	157	R 48	155	R 58	----	R 68	166	R 78	166	R 88	166	R 98	166
R 39	157	R 49	165	R 59	----	R 69	166	R 79	166	R 89	166	R 99	157
R 40	163	R 50	157	R 60	----	R 70	166	R 80	166	R 90	165	R 100	166

RESISTOR

SYMBOL NO.	INDEX NO.	SYMBOL NO.	INDEX NO.	SYMBOL NO.	INDEX NO.	SYMBOL NO.	INDEX NO.	SYMBOL NO.	INDEX NO.	SYMBOL NO.	INDEX NO.	SYMBOL NO.	INDEX NO.
R 101	157	R 111	166	R 121	163	R 131	157	R 141	157	R 151	166	R 161	194
R 102	157	R 112	166	R 122	174	R 132	157	R 142	157	R 152	157	R 162	157
R 103	166	R 113	157	R 123	181	R 133	157	R 143	157	R 153	194	R 163	165
R 104	166	R 114	157	R 124	172	R 134	157	R 144	157	R 154	194	R 164	156
R 105	157	R 115	166	R 125	157	R 135	157	R 145	157	R 155	194	R 165	156
R 106	166	R 116	166	R 126	157	R 136	157	R 146	157	R 156	194	R 166	156
R 107	157	R 117	157	R 127	156	R 137	157	R 147	157	R 157	194	R 167	156
R 108	166	R 118	166	R 128	166	R 138	157	R 148	157	R 158	194	R 168	157
R 109	157	R 119	157	R 129	166	R 139	157	R 149	157	R 159	194	R 169	157
R 110	157	R 120	163	R 130	176	R 140	157	R 150	166	R 160	194	R 170	157

36. MAIN CONTROL BOARD (A212/A214)

RESISTOR

SYMBOL NO.	INDEX NO.	SYMBOL NO.	INDEX NO.	SYMBOL NO.	INDEX NO.	SYMBOL NO.	INDEX NO.	SYMBOL NO.	INDEX NO.	SYMBOL NO.	INDEX NO.	SYMBOL NO.	INDEX NO.
R 171	158	R 181	166	R 191	157	R 201	157	R 211	166	R 221	166	R 231	166
R 172	166	R 182	156	R 192	157	R 202	157	R 212	166	R 222	166	R 232	160
R 173	166	R 183	157	R 193	157	R 203	166	R 213	166	R 223	166	R 233	166
R 174	166	R 184	156	R 194	157	R 204	166	R 214	166	R 224	166	R 234	160
R 175	157	R 185	157	R 195	157	R 205	165	R 215	166	R 225	166	R 235	157
R 176	157	R 186	157	R 196	157	R 206	166	R 216	166	R 226	166	R 236	166
R 177	157	R 187	157	R 197	157	R 207	157	R 217	166	R 227	160	R 237	166
R 178	155	R 188	157	R 198	157	R 208	166	R 218	166	R 228	166	R 238	157
R 179	157	R 189	157	R 199	157	R 209	166	R 219	166	R 229	160	R 239	166
R 180	156	R 190	157	R 200	157	R 210	166	R 220	166	R 230	166	R 240	166

RESISTOR

SYMBOL NO.	INDEX NO.	SYMBOL NO.	INDEX NO.	SYMBOL NO.	INDEX NO.	SYMBOL NO.	INDEX NO.	SYMBOL NO.	INDEX NO.	SYMBOL NO.	INDEX NO.	SYMBOL NO.	INDEX NO.
R 241	157	R 251	166	R 261	157	R 271	168	R 281	157	R 291	157	R 301	166
R 242	157	R 252	157	R 262	166	R 272	168	R 282	157	R 292	157	R 302	166
R 243	157	R 253	166	R 263	157	R 273	157	R 283	157	R 293	157	R 303	157
R 244	157	R 254	157	R 264	166	R 274	156	R 284	157	R 294	157	R 304	157
R 245	166	R 255	166	R 265	166	R 275	168	R 285	157	R 295	157	R 305	166
R 246	159	R 256	157	R 266	157	R 276	168	R 286	157	R 296	157	R 306	166
R 247	166	R 257	166	R 267	157	R 277	157	R 287	157	R 297	157	R 307	----
R 248	157	R 258	157	R 268	166	R 278	157	R 288	157	R 298	164	R 308	157
R 249	157	R 259	166	R 269	157	R 279	157	R 289	157	R 299	----	R 309	157
R 250	166	R 260	157	R 270	156	R 280	163	R 290	157	R 300	----	R 310	157

36. MAIN CONTROL BOARD (A212/A214)

RESISTOR

SYMBOL NO.	INDEX NO.
R 311	157
R 312	157
R 313	157
R 314	157
R 315	----
R 316	157
R 317	157
R 318	157
R 319	157
R 320	157

SYMBOL NO.	INDEX NO.
R 321	157
R 322	157
R 323	157
R 324	166
R 325	157
R 326	157
R 327	----
R 328	166
R 329	166
R 330	----

SYMBOL NO.	INDEX NO.
R 331	166
R 332	166
R 333	166
R 334	166
R 335	166
R 336	166
R 337	166
R 338	---
R 339	166
R 340	166

SYMBOL NO.	INDEX NO.
R 341	166
R 342	166
R 343	166
R 344	166
R 345	166
R 346	157
R 347	166
R 348	166
R 349	169
R 350	165

SYMBOL NO.	INDEX NO.
R 351	166
R 352	157
R 353	193
R 354	160
R 355	----
R 356	166
R 357	----
R 358	----
R 359	----
R 360	----

SYMBOL NO.	INDEX NO.
R 361	174
R 362	172
----	----
R 405	150
----	----
R 579	150
----	----
R 600	151

ZD

SYMBOL NO.	INDEX NO.
ZD 1	200
ZD 2	199
ZD 3	199
ZD 4	199

36. MAIN CONTROL BOARD (A212/A214)

Index No.	Part No.	Description	Q'ty Per Assembly
*	A212 5101	Main Control Board (115V)	1
*	A212 5201	Main Control Board (230V)	1
1	A069 5168	Heat Sink - Motor Board	1
2	A153 5114	Ram Board	1
3	A204 5117	IC - RF5A230	1

Index No.	Part No.	Description	Q'ty Per Assembly
102	1102 4202	Connector - 3p	
103	1102 4205	CT Header- 6p	
104	1102 4206	Connector - 7p	
105	1102 4207	Connector - 8p	
106	1102 4208	Connector - 9p	
107	1102 4210	Connector - 11p	
108	1102 4211	CT Header - 12p	
109	1102 4212	CT Header - 15p	
110	1102 4497	Connector - 13p	
111	1102 4619	Connector - 2p	
112	1102 4620	CT Header - 3p	
113	1102 4621	CT Header - 4p	
114	1102 4623	CT Connector - 6p	
115	1102 4624	CT Connector - 7P	
116	1102 4625	CT Connector 8p	
117	1102 4628	Connector - 11p	
118	1102 4629	Connector - 12P	
119	1102 4630	CT Connector	
120	1102 4637	CT Connector - 8P	
121	1102 4639	CT Connector - 10P	
122	1102 4640	Connector - 11p	
123	1102 4642	CT Connector - 15p	
124	1102 4643	CT Connector - 2p	
125	1102 5007	CT Header - 14p	
126	1102 5305	Connector - 6P	
127	1102 5605	Connector - 13P	
128	1102 5718	Optical Fiber Connector	
129	1102 6408	Connector - 30P	
130	1102 6762	CT Connector - 13p	
131	1103 1772	Pin Header - 6p	
132	1103 1774	Pin Header - 8p	
134	1400 0369	Transistor - 2sa1213y	
135	1400 0558	Transistor - 2sd780	
138	1402 1030	Diode - 1SS250	
140	1407 2187	TTLIC - SN74LS07NS	

Index No.	Part No.	Description	Q'ty Per Assembly
141	1407 2231	IC - TD62308AF	
142	1407 3173	Driver - 16bit - M66311fp	
143	1407 3708	IC - SLA7026M	
144	1407 4164	IC - MMID75XF	
145	1407 4316	IC - TD52308BF	
146	1407 4686	IC - M54992FP	
147	1408 0595	IC - NJM2904M	
148	1408 0874	Transistor Array - M54587fp	
149	1408 0877	Comparator - LM339NS	
150	1600 1499	Resistor - 0.33 OME ±2% 2W	
151	1600 1660	Resistor - ERG2SJ101	
152	1602 7032	Filter - Emi - 2200pF	
153	1604 4511	Capacitor - 0.15µF±10% 50V	
155	1630 3101	Resistor - 100Ω - 1/10W	
156	1630 3102	Resistor - 1KΩ 1/10W ±5%	
157	1630 3103	Resistor - 10KΩ 1/10W ±5%	
158	1630 3104	Resistor - 100K Ω 1/10W ±5	
159	1630 3105	Resistor - 1M Ω ±5% 1/10W	
160	1630 3222	Resistor - 2.2KΩ 1/10W ±5%	
161	1630 3223	Resistor - 22kΩ - 1/10W	
162	1630 3242	Resistor - 2.4K Ω ±5% 1/10W	
163	1630 3330	Resistor - 33 Ω ±5% 1/10W	
164	1630 3334	Resistor - 330K Ω ±5% 1/10	
165	1630 3393	Resistor - 39K Ω 1/10W	
166	1630 3472	Resistor - 4.7KΩ 1/10W ±5%	
167	1630 3473	Resistor - 47KΩ 1/10W ±5%	
168	1630 3680	Resistor - 68 Ω ±5% 1/10W	
169	1630 3682	Resistor - 6.8KΩ - 1/10W	
170	1630 3824	Resistor - 820KΩ ±5% 1/10W	
172	1633 1000	Resistor - 100Ω±1% 1/10W	
173	1633 1002	Resistor - 10K Ω ±1% 1/10W	
174	1633 2150	Resistor - 215Ω ±1% 1/10W	
175	1633 4701	Resistor - 4.7K Ω ±1% 1/10W	
176	1633 4702	Resistor - 47K Ω ± 1/10W	

Index No.	Part No.	Description	Q'ty Per Assembly
177	1633 4871	Resistor - 4.87K Ω±1%:1/10W	
178	1633 5231	Resistor - 5.23K Ω ±1% 1/1	
179	1633 6340	Resistor - 634K Ω ±1% 1/10W	
180	1633 6490	Resistor - :649Ω:±1%:1/10W	
181	1633 8209	Resistor - 820Ω ±1% 1/10W	
182	1660 7104	Capacitor - 100000pF 50V	
183	1503 0585	Oscillator - TQC-254A-6R(32MHZ)	
184	1002 0307	Jumper Wire	
185	1642 5100	Capacitor - 10µF±20% 50V	
186	1640 5470	Capacitor - 47µF±20% 50V	
187	1640 5101	Capacitor - 100µF±20% 50V	
188	1660 1100	Capacitor - 10pF 50V	
189	1660 3101	Capacitor - 100pF 50V	
190	1606 1139	Capacitor - 0.01µF±20%	
191	1660 3471	Capacitor - 470pF 50V	
192	1660 5222	Capacitor - 2200pF ±10% 50V	
193	1630 1101	Resistor - 100 Ω 1/4W ±5%	
194	1630 1161	Resistor - 160Ω ±5% 1/8W	
195	1104 0271	IC SOCKET - 28P	
196	1104 0612	Connector - 40P	
197	1102 3822	Connector - 20P	
199	1402 0478	Diode - 1SS226TE85L	
200	1402 0277	Zener Diode - 1Z12	
201	1402 0688	Diode	
202	1407 3257	CMOSIC - TC74HC14AF	
203	1408 1135	IC - X9C104S	
204	1905 0024	IC - WEPROM 4M X 16 100NS	
205	1408 0629	IC - 78M12A	

1

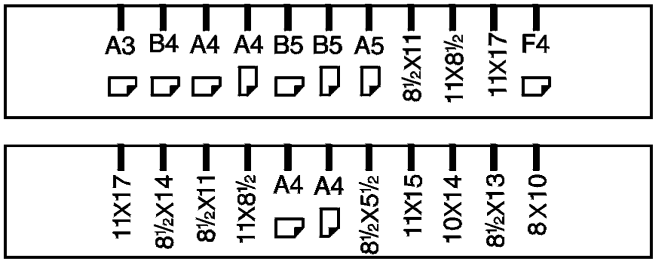

3

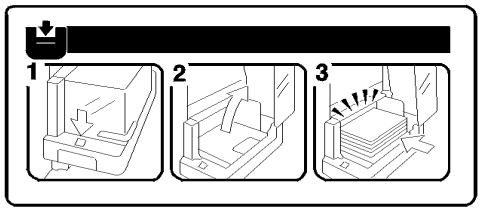

4



6

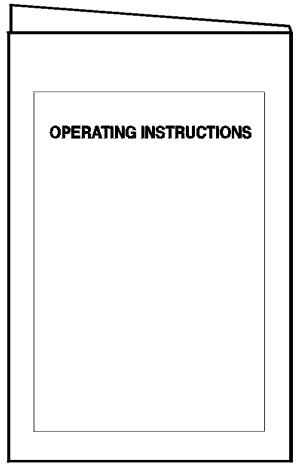

20

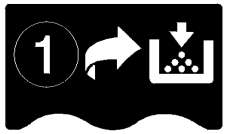

21

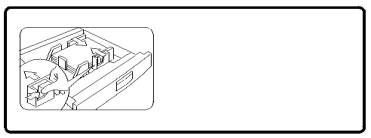

22

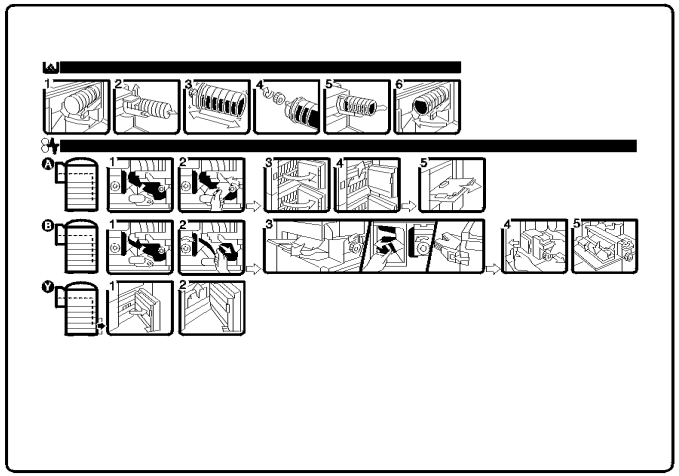

23

- Push the paper tray in gently.
- Refermer la cassette papier avec precaution.
- Die Papierkassette vorsichtig hinein schieben.
- Inserire il cassetto carta con delicatezza.
- Empujar el cassette de papel con suavidad. >PS<

24

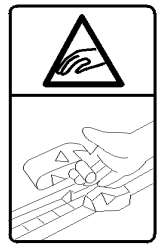

7

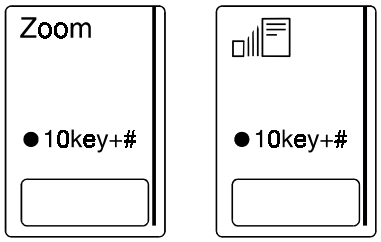

8

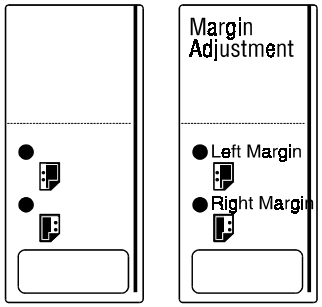

9

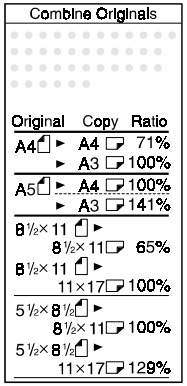

10

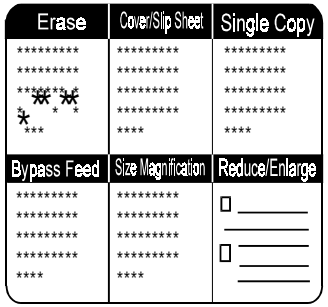

11

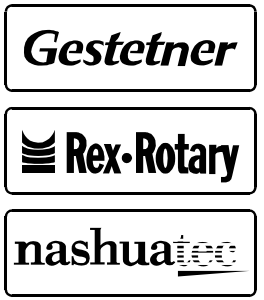

12

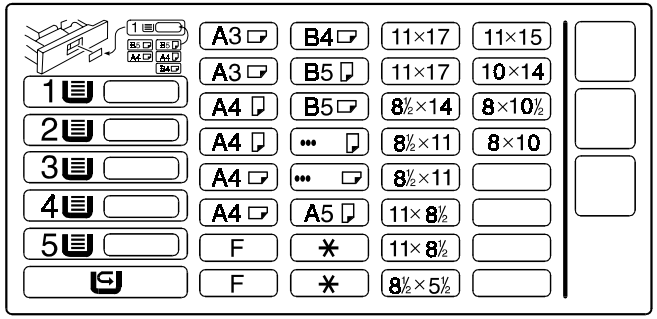

14

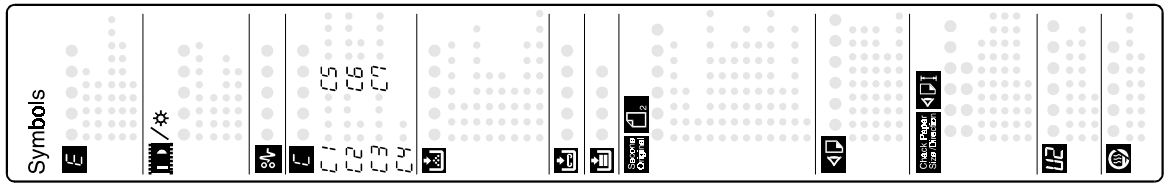

15

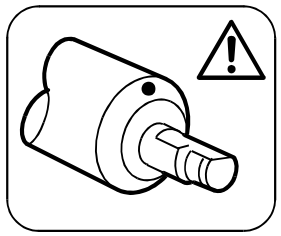

16



17

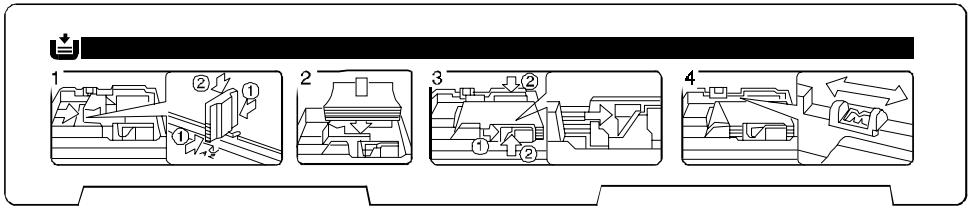

18

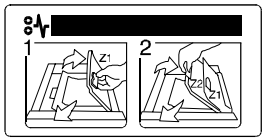

19

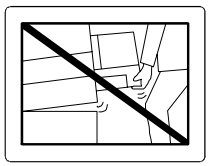

37. DECAL AND DOCUMENT (A212/A214)

Rev. 03/99

Index No.	Part No.	Description	Q'ty Per Assembly
1	A153 2995	Decal Paper Size - LT/DLT	1
1	A153 2996	Decal Paper Size - A4/A3	1
3	A155 6113	Decal - Paper Set	1
4	A153 1285	Emblem (RIC)	1
4	A156 6413	Emblem (SVN)	1
6	A212 8607	Operating Instructions - English LT (RIC)	1
6	A212 8650	Operating Instructions - English LT (SVN)	1
6	A212 8661	Operating Instructions - German (INF)	1
6	A212 8662	Operating Instructions - French (INF)	1
6	A212 8663	Operating Instructions - Italian(INF)	1
6	A212 8664	Operating Instructions - Spanish(INF)	1
6	A212 8660	Operating Instructions - English A4 (INF)	1
6	A212 8690	Operating Instructions - English A4 (NRG)	1
6	A212 8697	Operating Instructions - English LT (NRG)	1
6	A212 8608	Operating Instructions - English A4 (RIC)	1
7	A153 1475	Decal - 10key Zoom -LT/DLT	1
7	A153 1478	Decal - 10key Zoom - A4/A3	1
8	A153 1476	Decal - Margin Adjustment - LT/DLT	1
8	A153 1479	Decal - Margin Adjustment - A4/A3	1
9	A156 1495	Decal Copy Ratio	1
10	A204 1486	Operation Sheet (LT)	1
10	A204 1487	Operation Sheet (A4)	1
11	C225 2867	Decal - Cover - Panel - Nashua	1
11	C225 2866	Decal - Key Top Cover	1
11	A153 6409	Decal - Keytop Cover	1
12	AA00 2209	Decal - Paper Size	1
13	A212 6404	Decal - Model Name - GES (A212)	1
13	A214 6407	Decal - Model Name - NST (A212)	1
13	A214 6414	Decal - Model Name - REX (A212)	1
13	A214 6404	Decal - Model Name - GES (A214)	1
13	A212 6407	Decal - Model Name - NST (A214)	1
13	A212 6414	Decal - Model Name - REX (A214)	1
14	A153 1365	Symbol Explanation Decal	1
15	A204 2155	Decal - Caution	1
16	AA00 1389	Large Decal - Energy Star	1
17	A212 2758	Decal - Paper Setting	1
18	A134 4884	Decal - Duplex Misfeed Removal	1
19	A155 6114	Caution Decal - LCT	1
20	A212 3081	Decal - Toner Supply	1
21	A212 2805	Tray Bottom Plate Sheet	1
22	A157 1360	Operation Sheet (A212)	1
22	A158 1360	Operation Sheet (A214)	1
23	A219 2692	Decal - Operation Instructions	1
24	A153 3929	Decal - Caution Lever	1

38. SPECIAL TOOLS (A212/A214)

1

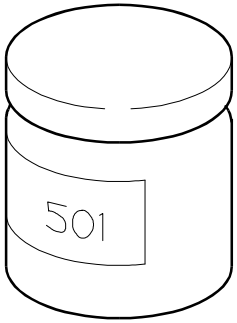

2

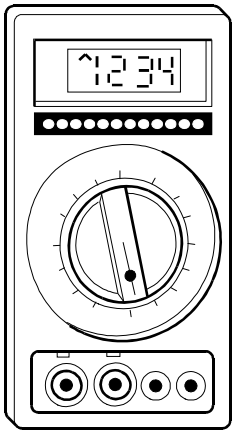

3

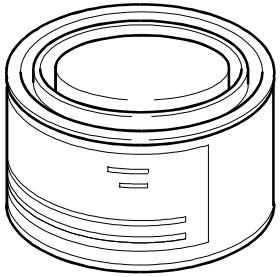

4

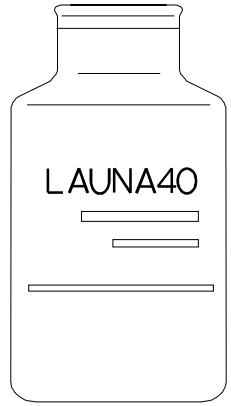

5

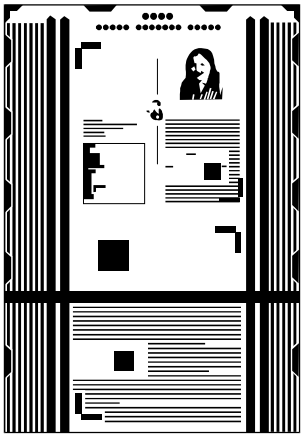

6

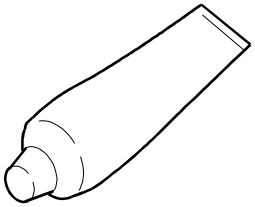

7

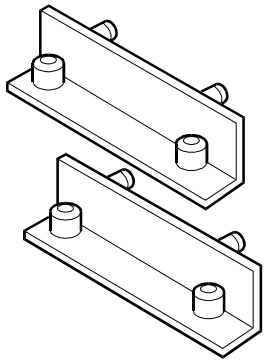

8

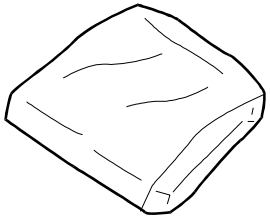

38. SPECIAL TOOLS (A212/A214)

Rev. 08/03/2000

Index No.	Part No.	Description	Q'ty Per Assembly
1	5203 9501	Grease 501	1
2	5420 9507	Digital Multimeter - Beckman	1
3	5447 9078	Heat Resisting Grease MT-78	1
3	A257 9300	Grease Barrierta - S552R	1
4	5442 9103	Launa Oil	1
5	5420 9516	Test Chart - OS -A3 (10PCS/SET)	1
6	A008 9502	Silicone Grease - G40M.	1
7	A153 9001	Scanner Adjustment Tool	2
8	A153 9004	Wiping Cloth	1

Index No.	Part No.	Description	Q'ty Per Assembly

A212/A214
PARTS INDEX

This section instructs you as to the numbers and names of parts on this machine.

PM Parts Index

Section Name	Part No.	Description in Service Manual	Description in Parts Catalog	Q'ty Per Assembly	Page and Index No
BY-PASS FEED SECTION (A212/A214)	5447 2927	Friction Pad - B	Friction Pad - B	1	15- 12
PAPER TRAY SECTION (A212/A214)	G020 2645	Friction Pad	Friction Pad	1	17- 13
LCT UNIT 1 (A214)	A421 2543	Friction Pad	Friction Pad	1	19- 13
PAPER FEED SECTION 1 (A212/A214)	AF03 1025	Feed Roller	Feed Roller	1	23- 7
	AF03 0024	Pick-up Roller	Pick-up Roller	1	23- 10
	AF03 2025	Separation Roller	Separation Roller	1	23- 21
PAPER FEED SECTION 2 (A212/A214)	G020 2555	Paper Feed Roller	Paper Feed Roller	4	25- 8
DRUM UNIT 1 (A212/A214)	A153 2135	Charge Roller Terminal Ass'y	Charge Roller Terminal Ass'y	1	41- 8
	AD02 7004	Charge Roller	Charge Roller	1	41- 13
	A204 2120	Drum Charge Roller Cleaner	Drum Charge Roller Cleaner	1	41- 25
DRUM UNIT 2 (A212/A214)	AD02 5019	Drum Pick-off Pawl	Drum Pick-off Pawl	1	43- 2
	A153 2277	Cleaning Blade	Cleaning Blade	1	43- 39
TRANSFER UNIT (A212/A214)	A157 3861	Transfer Belt	Transfer Belt	1	45- 2
	A153 3892	Belt Cleaning Blade	Belt Cleaning Blade	1	45- 17
FUSING UNIT 1 (A212/A214)	AE04 4019	Hot Roller Stripper	Hot Roller Stripper	5	47- 20
	AE01 1024	Hot Roller	Hot Roller	1	47- 22
FUSING UNIT 2 (A212/A214)	AE04 2030	Cleaning Roller	Cleaning Roller	1	49- 12
	AE02 0050	Pressure Roller	Pressure Roller	1	49- 15
DUPLEX TRAY 2 (A214)	AF03 1024	Feed Roller	Feed Roller	1	53- 17
DUPLEX TRAY 4 (A214)	AF01 3003	Bottom Plate Pad - Duplex	Bottom Plate Pad - Duplex	1	57- 2
DEVELOPMENT UNIT (A212/A214)	A204 3080	Development Filter	Development Filter	1	38-
PAPER FEED SECTION 1 (A212/A214)	A134 2674	Torque Limiter	Torque Limiter	1	22-

Part No.	Description	Page and Index No.
A212 1073	Stopper Bracket	25- 2
A212 1087	Middle Upper Stay	25- 17
A212 1088	Middle Lower Stay	77- 19
A212 1099	Stopper	25- 1
A212 1111	Spring Cover	65- 18
A212 1151	Tension Spring	63- 19
A212 1151	Tension Spring	65- 17
A212 1258	Right Bracket - Platen Cover	73- 10
A212 1261	Front Right Cover	9- 28
A212 1271	Rear Right Cover (A212)	9- 27
A212 1282	Front Cover (A212)(RIC)	9- 2
A212 1291	Rear Cover	9- 25
A212 1302	Left Cover	9- 16
A212 1323	Operation Panel Ass'y - LT (A212)	9- 12
A212 1323	Operation Panel Ass'y - LT (A212)	13- *
A212 1324	Operation Panel Ass'y - A4 (A212)	9- 12
A212 1324	Operation Panel Ass'y - A4 (A212)	13- *
A212 1328	Operation Panel Ass'y (A212)(SVN)	9- 12
A212 1328	Operation Panel Ass'y - LT (A212)(SVN)	13- *
A212 1350	Right Middle Cover	75- 24
A212 1352	Inner Cover - Right Lower	9- 7
A212 1465	Key-top - Sorter (SVN)	13- 18
A212 1481	Operation Panel Case - A4	13- 22
A212 1482	Display Panel - A4 (A212)	13- 24
A212 1483	Sorter Sheet - A4 (A212)	13- 16
A212 1485	Operation panel Sheet - A4	9- 31
A212 1485	Operation Sheet (A4)	83- 10
A212 1487	Sorter Sheet (A212)(SVN)	13- 16
A212 1491	Operation Panel Case - LT	13- 22
A212 1492	Display Panel - LT (A212)	13- 24
A212 1493	Sheet Sorter - LT (A212)	13- 16
A212 1494	Operation Panel Sheet	13- 23
A212 1495	Operation Panes Sheet - LT	13- 17
A212 1495	Operation Sheet (LT)	83- 10

Part No.	Description	Page and Index No
A212 1674	Shield Glass Guide	75- 19
A212 1695	Tension Spring	35- 12
A212 1707	Tension Bracket - Long	35- 14
A212 1708	Tension Bracket - Short	35- 6
A212 1710	Timing Pulley - 44Z	35- 16
A212 1807	Harness Guide	33- 2
A212 1840	Lens Magnification Unit	29- 1
A212 1841	Lens Drive Unit	29- 11
A212 1903	3rd Scanner Bracket	33- 28
A212 1914	3rd Scanner Rack	33- 19
A212 1981	Scanner Home Sensor Bracket	33- 29
A212 2060	Wire Pulley	75- 13
A212 2071	Cam Lever	75- 15
A212 2101	Release Spring	75- 3
A212 2102	Pressure Spring	75- 2
A212 2110	Charge Roller Ass'y	41- 2
A212 2131	Idle Gear 14z	41- 16
A212 2132	Idle Gear 20z	41- 17
A212 2142	Cam Lever	65- 32
A212 2251	Pressure Blade Spring	43- 8
A212 2252	Pressure Roller Spring	41- 10
A212 2255	Drum Unit	43- 1
A212 2351	Rear Roller Bushing	41- 5
A212 2352	Rear Roller Housing	41- 11
A212 2353	Front Roller Bushing	41- 18
A212 2354	Pad Pressure Spring	43- 11
A212 2524	Spring	25- 13
A212 2531	Timing Belt - S3M 300	67- 8
A212 2533	Paper Tray Ass'y (LT)	17- *
A212 2534	Paper Size Sensor Board	15- 7
A212 2537	Bushing	27- 7
A212 2538	Bushing	27- 17
A212 2539	Spring - Registration Roller	27- 5
A212 2542	Bottom Plate Ass'y	17- 12

Part No.	Description	Page and Index No.
A212 2547	Rear Side Fence Ass'y	17- 17
A212 2550	Vertical Guide Plate	27- 18
A212 2551	Lower Guide Plate	27- 8
A212 2552	Vertical Relay Guide Plate	27- 6
A212 2558	Upper Registration Guide	27- 19
A212 2559	Switch Bracket	19- 29
A212 2559	Switch Bracket	15- 17
A212 2562	Solenoid Bracket	67- 23
A212 2563	Lower Registration Guide	27- 3
A212 2564	Tightener	67- 11
A212 2567	Rear Side Fence	17- 18
A212 2570	Paper Feed Roller Ass'y (EU/ASIA/TWN)	25- 10
A212 2571	Vertical Transport Guide (A212)	15- 22
A212 2575	Shaft - Paper Feed Roller (EU/ASIA/TWN)	25- 6
A212 2580	Vertical Transfer Hinge (A212)	27- 11
A212 2581	Front Side Fence Ass'y	17- 3
A212 2582	Front Corner Separator	17- 8
A212 2583	Rear Corner Separator	17- 21
A212 2584	Paper Feed Drive Shaft	67- 21
A212 2586	Hinge Bracket (A212)	15- 14
A212 2587	Feed Roller Bushing - Front	25- 3
A212 2590	Paper Tray	17- 32
A212 2591	Vertical Transfer (A212)	15- 16
A212 2652	Middle Guide Rail	77- 15
A212 2658	Pick-up Arm	23- 30
A212 2659	By-pass Feed Housing	23- 15
A212 2660	Paper End Feeler	23- 2
A212 2661	Adjusting Plate - Front	17- 4
A212 2663	Separation Guide	23- 20
A212 2670	Rear Guide Plate	23- 19
A212 2671	By-pass Feed Cover	23- 4
A212 2672	Pressure Spring	67- 7
A212 2673	Release Spring	67- 4
A212 2692	By-pass Feed Table Ass'y	15- 1

Part No.	Description	Page and Index No
A212 2697	By-pass Feed Table	15- 5
A212 2705	Magnet Catch Plate	15- 6
A212 2706	Rear Fence Rack	15- 8
A212 2707	Front Fence Rack	15- 10
A212 2711	Front Side Fence	15- 2
A212 2716	Rear Side Fence	15- 3
A212 2746	By-pass Feed Cover	15- 11
A212 2757	Paper Tray Ass'y (A4)	17- *
A212 2758	Decal - Paper Setting	83- 17
A212 2758	Decal - Paper Set Detection	17- 2
A212 2765	Spring Plate - Gear Side Fence	17- 16
A212 2769	Rear Stopper Spring	17- 6
A212 2802	Feeler Paper End Sensor	25- 4
A212 2805	Tray Bottom Plate Sheet	83- 21
A212 2805	Tray Bottom Plate Sheet	17- 33
A212 2822	Left Slide Rail Ass'y	77- 1
A212 2823	Right Slide Rail Ass'y	77- 12
A212 2844	End Fence Ass'y	17- 9
A212 2870	Adjusting Plate Rear	17- 20
A212 2871	Adjusting Plate Front	17- 7
A212 2905	Release Arm - Paper End	25- 14
A212 2929	Right Rail - Feed Tray	77- 17
A212 2956	Paper Feed Front Cover	17- 1
A212 2982	Paper Lift Shutter	17- 31
A212 3051	Development Unit	39- 1
A212 3056	Coupled Gear - 15z/22z	39- 25
A212 3057	Gear - 17Z	39- 24
A212 3058	Gear - 26Z	39- 26
A212 3063	Paddle Roller	39- 14
A212 3068	Toner Bottle Holder	37- 15
A212 3071	Developer Rail Seal	69- 18
A212 3072	Relay Adjusting Spring	37- 31
A212 3072	Relay Adjusting Spring	67- 10
A212 3073	Chuck Spring	37- 8

Part No.	Description	Page and Index No.
A212 3078	Shutter Spring	37- 17
A212 3079	Toner Collection Coil	39- 10
A212 3081	Decal - Toner Supply	83- 20
A212 3087	Terminal Cap	65- 11
A212 3090	Development Position Plate	39- 4
A212 3150	Toner Supply Unit (RIC-EU)	37- *
A212 3151	Toner Supply Unit (RIC-NA)	37- *
A212 3153	Toner Supply Unit (OEM/RIC-AA)	37- *
A212 3157	Bottle Holder Bracket	37- 27
A212 3172	Shutter	37- 19
A212 3173	Shutter Guide	37- 16
A212 3174	Shutter Holder	37- 18
A212 3177	Toner Slider	37- 4
A212 3179	Chuck Shaft	37- 7
A212 3185	Toner Supply Gear (RIC-EU)	37- 1
A212 3187	Toner Supply Gear (RIC-NA)	37- 1
A212 3189	Toner Supply Gear (OEM/RIC-AA)	37- 1
A212 3190	Toner Bottle Stopper	37- 10
A212 3197	Bottle Holder	37- 13
A212 3200	Toner Hopper Ass'y	39- 21
A212 3270	Stay - Toner Supply	69- 17
A212 3281	Bottle Bracket Cover	37- 14
A212 3580	Toner Collection Unit	41- 23
A212 3590	ADS Plate	43- 19
A212 3595	Pick-off Pawl Retainer	43- 3
A212 3850	Transfer Unit	45- 1
A212 3851	Spring - T/S Unit	45- 20
A212 3851	Spring - T/S Unit	65- 35
A212 3853	Bias Roller Bushing - Rear	45- 11
A212 3862	Transfer Belt Frame	45- 7
A212 3863	Front Side Plate	45- 4
A212 3865	Belt Drive Gear - 25z	45- 10
A212 3876	Rear Side Plate	45- 9
A212 3882	Transfer Belt Casing	45- 31

Part No.	Description	Page and Index No
A212 3883	Toner Collection Cap	45- 29
A212 3884	Belt Guide Plate	45- 14
A212 3886	Belt Pressure Lever	45- 19
A212 3887	Belt Release Stay	45- 21
A212 3888	Earth Plate	45- 30
A212 3894	Bushing	45- 16
A212 3895	Bushing	45- 22
A212 3901	Entrance Guide Plate	45- 27
A212 3914	Magnetic Clutch Feeler	65- 28
A212 3930	Belt Unit Handle	77- 8
A212 4005	Fusing Unit (NA)	47- *
A212 4006	Fusing Exit Unit	49- 1
A212 4007	Fusing Unit (EU/ASIA/TWN)	47- *
A212 4053	Fusing Upper Stay	47- 2
A212 4103	Solenoid Spring	47- 18
A212 4110	Fuser Stripper Ass'y	47- 27
A212 4130	Fusing Front Cover	47- 1
A212 4151	Fusing Unit Frame	49- 20
A212 4205	Cleaning Roller Bracket	49- 8
A212 4301	Exit Plate	49- 17
A212 4326	Exit Roller Ass'y	49- 6
A212 4352	Fusing Lock Lever	77- 2
A212 4450	Upper Guide Plate	59- 15
A212 4450	Upper Guide Plate	61- 11
A212 4459	Pressure Spring	49- 19
A212 4460	Exit Cover	61- 12
A212 4467	Spring - Stripper Pawl Release	69- 8
A212 4467	Spring - Stripper Pawl Release	77- 3
A212 4495	Shift Clutch	59- 8
A212 4495	Shift Clutch	61- 2
A212 4496	Gear - 24Z	61- 14
A212 4496	Gear - 24Z	59- 6
A212 5101	Main Control Board (115V)	81- *
A212 5101	Main Control Board (NA)	71- 2

Part No.	Description	Page and Index No.
A212 5103	IC - 4MX16 - 120NS	71- 4
A212 5132	Density Sensor	43- 18
A212 5160	ADS Board	33- 18
A212 5201	Main Control Board (230V)	81- *
A212 5201	Main Control Board (EU/ASIA/TWN)	71- 2
A212 5312	Optical Harness	71- 13
A212 5316	Paper Feed Harness -2trays (A212)	71- 14
A212 5319	Rear Upper Harness	71- 5
A212 5320	Front Right Harness (EU/ASIA/TWN)	69- 5
A212 5324	Sorter Relay Harness	73- 12
A212 5333	CT Harness	27- 16
A212 5334	CT Harness - 7p	77- 11
A212 5393	Optical Harness 3	33- 23
A212 5460	Operation Panel Board - LT (A212)	13- 1
A212 5465	Operation Panel Board - A4 (A212)	13- 1
A212 5520	Front Right Harness (NA)	69- 5
A212 5661	AC Main Harness	69- 3
A212 5804	Main Switch Bracket (EU/ASIA/TWN)	69- 19
A212 5807	Bracket Ardf	71- 20
A212 5810	Power Supply Cord Bracket	73- 17
A212 5811	Main Control Board Bracket	71- 1
A212 5814	Main Switch Bracket (NA)	69- 19
A212 5820	Total Counter Bracket	69- 11
A212 5829	Decal - Main Switch Cover (EU/ASIA/TWN)	9- 10
A212 5830	Decal - Main Switch (EU/ASIA/TWN)	9- 32
A212 6404	Decal - Model Name - GES (A212)	9- 30
A212 6404	Decal - Model Name - GES (A212)	83- 13
A212 6407	Decal - Model Name - NST (A212)	83- 13
A212 6407	Decal - Model Name - NST (A214)	83- 13
A212 6407	Decal - Model Name - NSA (A212)	9- 30
A212 6412	Front Cover (A212)(SVN)	9- 2
A212 6414	Decal - Model Name - REX (A214)	83- 13
A212 6414	Decal - Model Name - REX (A212)	83- 13
A212 6414	Decal - Model Name - REX (A212)	9- 30
A212 6422	Front Cover (A212)(INF)	9- 2
A212 8607	Operating Instructions - English LT (RIC)	83- 6
A212 8608	Operating Instructions - English A4 (RIC)	83- 6
A212 8650	Operating Instructions - English LT (SVN)	83- 6
A212 8660	Operating Instructions - English A4 (INF)	83- 6
A212 8661	Operating Instructions - German (INF)	83- 6
A212 8662	Operating Instructions - French (INF)	83- 6
A212 8663	Operating Instructions - Italian(INF)	83- 6
A212 8664	Operating Instructions - Spanish(INF)	83- 6
A212 8690	Operating Instructions - English A4 (NRG)	83- 6
A212 8697	Operating Instructions - English LT (NRG)	83- 6
A212 8834	Operation panel Sheet - LT	9- 31

Part No.	Description	Page and Index No.
AA00 1381	Decal - FCC/15-B CSA CLASS-A	83- 25
AA00 1389	Large Decal - Energy Star	83- 16
AA00 1389	Large Decal - Energy Star (NA)	9- 33
AA00 2209	Decal - Paper Size	83- 12
AA01 2080	Dust Filter	9- 26
AA04 3374	Timing Belt - S2M800	57- 17
AA04 3386	Timing Belt - 40S2M1224	35- 2
AA04 3387	Timing Belt - 40S2M984	35- 1
AA04 3388	Timing Belt - 60S2M180	35- 11
AA04 3389	Timing Belt - 60S3M201	67- 13
AA04 3390	Timing Belt - 40S2M192	53- 3
AA04 3391	Timing Belt - 160S2M328	63- 6
AA04 3392	Drum Timing Belt	63- 3
AA04 3396	Timing Belt - 60S3M366	63- 15
AA04 3397	Timing Belt - 30S3M300	63- 18
AA04 3420	Timing Belt - 80S3M519	63- 4
AA04 3456	Timing Belt - S3M167	21- 12
AA05 0086	Lens Drive Wire - Horizontal	29- 20
AA05 0087	Lens Drive Wire - Vertical	35- 26
AA05 1024	Release Wire	69- 4
AA05 1024	Release Wire	63- 20
AA05 1025	Release Wire	75- 4
AA06 0228	Spring - Transfer Drum Cleaning Sol	63- 11
AA06 0593	Spring	55- 9
AA06 3239	Spring - Handle	19- 20
AA06 3367	Pressure Spring	37- 12
AA06 3370	Spring	57- 16
AA06 3499	Pressure Spring	23- 25
AA06 3523	Adjust Spring	33- 21
AA06 3532	Spring	73- 16
AA06 3538	Spring - 10mm	19- 40
AA06 3552	Pressure Spring	65- 20
AA06 6247	Spring	45- 23
AA06 6274	Spring	59- 12

Part No.	Description	Page and Index No
AA06 6274	Spring	61- 8
AA08 0034	Bushing - 4x5x7	19- 37
AA08 0037	Bushing - 6 mm	23- 24
AA08 0111	Bushing - 8x12x7	17- 23
AA08 0186	Bushing - 6mm	39- 11
AA08 0188	Bushing - 5mm	39- 7
AA08 0197	Rear Roller Bushing	41- 9
AA08 2047	Bushing - 8x16x7	27- 1
AA08 2047	Bushing - 8x16x7	65- 3
AA08 2047	Bushing - 8x16x7	67- 22
AA08 2061	Bias Roller Bushing - Front	45- 6
AA08 3010	Clutch Roller - 6x14x10	23- 13
AA11 1208	Paper End Sensor Feeler	53- 5
AA12 0067	Anti Static Brush	51- 16
AA12 0071	Exit Antistatic Brush	61- 4
AA12 0071	Exit Antistatic Brush	59- 16
AA13 2184	Motor Cushion	55- 16
AA13 2186	Collar	75- 8
AA14 0291	Bottom Plate Shaft	57- 6
AA14 0321	Pick-off Pawl Shaft	43- 4
AA14 0534	Feed Shaft	23- 11
AA14 0560	Joint Shaft	43- 20
AA14 0576	LCT Drive Shaft	21- 15
AA14 0599	Scanner Drive Shaft	35- 4
AA14 3025	Stepped Screw - M3	37- 22
AA14 3219	Stepped Screw	23- 3
AA14 3301	Stepped Screw - M3x4	71- 22
AA14 3307	Stepped Screw - M3x4	55- 17
AA14 3410	Stepped Screw - M4	37- 11
AA14 3416	Stepped Screw - M4x3	9- 19
AA14 3417	Shoulder Screw - M4x4	9- 22
AA14 3444	Stepped Screw	75- 26
AA14 3452	Stepped Screw	73- 14
AA14 3459	Knob Screw	37- 28

Part No.	Description	Page and Index No.
AA14 3712	Chuck Shaft	37- 5
AA14 3715	Stepped Screw - M5	47- 10
AA14 3730	Stepped Screw	41- 21
AA14 3744	Stepped Screw	41- 19
AA14 5539	Solenoid Shaft	65- 4
AA14 5794	Front Support Shaft	41- 20
AA14 5808	Rear Support Shaft	41- 12
AA14 8413	Idle Gear Shaft	37- 25
AA14 8447	Platen Cover Stud	11- 10
AA15 0367	Shielding Mylar	29- 22
AA15 0368	Shielding Plate - Cover - Lens	29- 4
AA15 0369	Original Sensor Seal	29- 2
AA15 0377	Shutter Seal	37- 20
AA15 0380	Seal Front Holder	43- 27
AA15 0381	Seal Rear Holder	43- 25
AA15 0382	Entrance Seal	39- 3
AA15 0389	Drum Guide Seal	43- 26
AA15 1144	Shield - Guide Plate	39- 6
AA15 1177	Seal - 5x82x4	73- 1
AA15 1809	Rear Seal	43- 7
AA15 1894	Seal - 67x53x2	37- 2
AA15 1935	Seal - 38x32x2.5	39- 23
AA15 1940	Left Upper Seal	39- 5
AA15 1941	Right Shield - Development Case	39- 17
AA15 1942	Side Seal	43- 13
AA15 1943	Front Seal	43- 6
AA15 1944	Rear Seal	43- 10
AA15 1945	Joint Seal	41- 22
AA15 2136	Shield - Development Roller	39- 8
AA15 2245	Front Drum Seal	43- 28
AA15 2246	Rear Drum Seal	43- 23
AA15 2330	Magnification Seal	29- 12
AA15 2332	Seal - 9x351	45- 15
AA16 1067	Cushion - Motor	55- 8
AA16 1107	Cushion	43- 22
AA16 2067	Platen Cover Pad	11- 6
AA16 2068	Guide Plate Pad	51- 20
AB01 0341	Gear - 18Z	43- 40
AB01 0348	Gear - 20Z	41- 15
AB01 1133	Gear - 49Z	21- 14
AB01 1153	Idle Gear - 25Z	67- 14
AB01 1165	Gear - 32Z	55- 5
AB01 1166	Gear - 33Z	53- 11
AB01 1167	Gear - 25Z	55- 15
AB01 1343	Idle Gear - 23Z	23- 9
AB01 1344	Gear - 16Z	23- 27
AB01 1345	Gear - 20Z	23- 28
AB01 1346	Gear - 27Z	23- 31
AB01 1357	Collection Coil Gear	43- 17
AB01 1358	Driven Gear	41- 4
AB01 1359	Joint Drive Gear	43- 21
AB01 1360	Idle Gear	43- 34
AB01 1361	Drive Gear	43- 37
AB01 3106	Gear - Drive - Third - Z18	59- 23
AB01 3343	Gear - 22Z	39- 13
AB01 3868	Gear - 16Z	17- 15
AB01 3872	Fusing Cam Gear - 28Z	63- 14
AB01 3881	Gear - 31Z	57- 12
AB01 3882	Gear - 40Z	47- 23
AB01 3883	Idle Gear - 25Z	47- 3
AB01 3884	Exit Gear - 17z	49- 7
AB01 3885	Idle Gear - 20z	49- 5
AB01 3908	Gear - 27Z	67- 20
AB01 3909	Idle Gear	39- 9
AB01 3911	Gear	39- 12
AB01 3917	Toner Supply Gear	65- 2
AB01 3918	Drive Gear - 35Z	67- 15
AB01 7129	Gear - 20Z And 72Z	35- 17

Part No.	Description	Page and Index No.
AB01 7332	Gear - 24Z/41Z	55- 14
AB01 7337	Gear - 15Z/55Z	55- 4
AB01 7339	End Fence Gear - 22Z/58Z	57- 14
AB01 7345	Timing Pulley - 35Z	63- 17
AB01 7347	Idle Gear	37- 24
AB01 7360	Gear Pulley	29- 19
AB01 7360	Gear Pulley	35- 8
AB01 7361	Gear - 24Z/56Z	35- 18
AB01 7361	Gear - 24Z/56Z	29- 21
AB01 7362	Gear - 25Z/32Z	35- 7
AB01 7366	Paddle Gear	39- 15
AB01 7368	Cleaning Drive Gear	65- 7
AB01 7369	Transfer Belt Pulley	65- 22
AB01 7370	Development Pulley	65- 24
AB01 7371	Exit Pulley	63- 9
AB01 7373	Idle Cam	43- 16
AB01 7374	Drive Gear	43- 32
AB01 7375	Drive Gear	43- 31
AB01 7376	Separation Pawl Cam	43- 12
AB01 7377	Gear - 25Z	67- 18
AB01 7385	Gear - 17Z/24Z	65- 29
AB01 7386	Cleaning Cam	65- 1
AB01 7388	Blade Cam	43- 33
AB01 7394	Timing Pulley - 24T/20Z	67- 19
AB01 7395	Timing Pulley	67- 17
AB01 7400	Gear- 18Z/68Z	57- 13
AB03 0281	Timing Pulley - 28Z	21- 9
AB03 0463	Fusing Cam Pulley	63- 13
AB03 0473	End Fence Pulley - 22Z	57- 11
AB03 0474	Pulley - 24Z	53- 2
AB03 0486	Timing Pulley - 24Z	35- 9
AB03 0489	Timing Pulley - 22Z	35- 15
AB03 0491	Timing Pulley - 25Z	67- 9
AB03 0492	Pulley - 25/25/34/125Z	63- 5

Part No.	Description	Page and Index No
AB03 0494	Drum Pulley	65- 14
AB03 2059	Driven Pulley	35- 23
AB03 2059	Driven Pulley	29- 14
AB03 3064	Drive Pulley	67- 16
AB03 3069	Timing Pulley - 22Z/24Z	35- 3
AB04 0015	Spring Clutch - Tray Bottom Plate	55- 12
AC01 2060	Exposure Glass - A3T-3.2	9- 23
AC03 0103	1st Mirror	31- 13
AC03 0106	4/5 Mirror	33- 16
AC03 0107	6th Mirror	35- 20
AC03 5022	Rear Mirror Clamp - 1st Mirror	31- 2
AC04 2113	Left Original Scale - A4	9- 20
AC04 2117	Left Original Scale - LT	9- 20
AC04 2120	Rear Original Scale (A4)	9- 21
AC04 2124	Rear Original Scale - LT	9- 21
AD02 5019	Drum Pick-off Pawl	43- 2
AD02 7004	Charge Roller	41- 13
AD04 3035	Toner Collection Coil	43- 30
AE01 1024	Hot Roller	47- 22
AE02 0050	Pressure Roller	49- 15
AE03 0022	Bearing - 12x24x64m	49- 14
AE03 0023	Bearing - 30x42x7mm	47- 21
AE03 1028	Bushing - 4mm	49- 11
AE04 2030	Cleaning Roller	49- 12
AE04 4019	Hot Roller Stripper	47- 20
AF01 0018	Duplex Tray	57- 27
AF01 3003	Bottom Plate Pad - Duplex	57- 2
AF01 5027	Paper Size Slider	17- 14
AF01 6160	Rear Side Fence	57- 3
AF01 6161	Front Side Fence	57- 4
AF02 0316	Lower Registration Roller	27- 13
AF02 0317	Stack Roller	53- 15
AF02 0319	Transport Roller	53- 6
AF02 0320	Right Transport Roller	53- 7

Part No.	Description	Page and Index No.
AF02 0327	Exit Roller	59- 20
AF02 0327	Exit Roller	61- 13
AF02 0330	Vertical Driven Roller	19- 36
AF02 0336	Inverter Drive Roller	59- 22
AF02 0337	Upper Relay Roller	27- 20
AF02 0338	Lower Relay Roller	27- 21
AF02 1052	Upper Registration Roller	27- 12
AF02 2042	Middle Pressure Roller	61- 10
AF02 2042	Middle Pressure Roller	59- 14
AF02 2077	Driven Roller	53- 19
AF02 2077	Driven Roller	51- 7
AF02 2079	Vertical Driven Roller	15- 20
AF02 5024	Pick-off Pawl	59- 21
AF03 0024	Pick-up Roller	23- 10
AF03 1024	Feed Roller	53- 17
AF03 1025	Feed Roller	23- 7
AF03 2025	Separation Roller	23- 21
AF04 0031	Upper Exit Roller	59- 19
AF04 0031	Upper Exit Roller	51- 11
AF04 0548	Exit Driven Roller	49- 3
AF04 3076	Copy Tray Slide	9- 14
AF04 3077	Copy Tray Guide	9- 15
AF04 3083	Copy Tray	9- 13
AG05 0074	Registration Knob	9- 6
AG05 0074	Registration Knob	27- 2
AG05 0076	Fusing Knob	49- 13
AG07 0004	Magnetic Catch	75- 18
AG07 0004	Magnetic Catch	9- 4
AG07 0004	Magnetic Catch	59- 3
AG07 0004	Magnetic Catch	15- 19
AG07 0004	Magnetic Catch	21- 16
AG07 0009	Magnetic Catch	49- 4
AH01 0007	Rubber Foot	77- 13
AW01 0040	Original Sensor	33- 11

Part No.	Description	Page and Index No
AW01 0068	Original Length Sensor	29- 5
AW02 0022	Photointerruptor	33- 13
AW02 0022	Photointerruptor	73- 8
AW02 0068	Photointerruptor	27- 15
AW02 0069	Photointerruptor	19- 28
AW02 0069	Photointerruptor	15- 15
AW02 0075	Photointerrupter	23- 16
AW02 0075	Photointerrupter	57- 18
AW02 0075	Photointerrupter	55- 21
AW02 0075	Photointerrupter	61- 6
AW02 0075	Photointerrupter	21- 7
AW02 0086	Photointerruptor	29- 13
AW02 0086	Photointerruptor	25- 12
AW02 0086	Photointerruptor	59- 10
AW02 0086	Photointerrupter	65- 27
AW03 0054	Optical Fiber - 250mm	71- 9
AW03 0055	Optical Fiber - 420mm	71- 8
AW03 0056	Optical Fiber - 550mm	73- 9
AW10 0027	Thermister	31- 12
AW10 0027	Thermister	9- 29
AW10 0032	Thermistor - 25°C 10k Ω	41- 24
AW23 0008	ID Sensor	39- 18
AW23 0009	Toner End Sensor	39- 22
AW50 0010	Push Switch	73- 5
AW50 0012	Push Switch	23- 17
AX05 0090	Motor - DC 24V 36W	21- 8
AX06 0108	Motor - Dc24v 45w	63- 8
AX12 0039	DC SOL 24V 400GF	59- 25
AX20 0101	Magnetic Clutch - 2.5kgf 35Z	23- 12
AX20 0105	Magnetic Clutch - 15kgf 24Z	65- 6
AX20 0106	Magnetic Clutch - 15kgf 52Z	65- 9
AX20 0107	Magnetic Clutch - 10kgf 25Z	67- 25
AX20 0109	Magnetic Clutch - 10kgf.cm 35Z	67- 27
AX21 0058	Magnetic Clutch - 42z	67- 24

Part No.	Description	Page and Index No.
AX21 0059	Spring Clutch	65- 30
AX31 0024	Total Counter	69- 9
AX40 0021	Tray Anticondensation Heater - 115V 18W	69- 6
AX40 0022	Tray Anticondensation Heater - 240V 18W	69- 6
AX40 0047	Anticondensation Heater - 115V 15W	33- 22
AX40 0048	Anticondensation Heater - 240V 15W	33- 22
AX40 0094	Anticondensation Heater - 120V 9W	75- 1
AX40 0095	Anticondensation Heater - 230V 9W	75- 1
AX43 0023	Fusing Lamp - 120V 350W	47- 24
AX43 0025	Fusing Lamp - 230V 350W	47- 24
AX43 0030	Main Fusing Lamp - 120V 550W	47- 25
AX43 0031	Main Fusing Lamp - 230V 550W	47- 25
AX52 0026	Exposure Lamp - 85V 200W (EU/ASIA/TWN)	31- 7
AX52 0028	Exposure Lamp - 97V 200W (NA)	31- 7
AX64 0058	Fan Motor - DC 24V 4.32W	73- 6
AX64 0059	Fan Motor - DC24V 3.12W	61- 3
AX64 0059	Fan Motor - DC24V 3.12W	59- 7
AZ02 0008	Coil - 1 0mh 2A	73- 21
AZ13 0023	Transformer - 230V	71- 18
AZ23 0055	DC Drive Board - 100/120V (NA)	71- 10
AZ23 0060	DC Drive Board - 220V/240V (EU/ASIA/TWN)	71- 10
AZ30 0041	Power Pack - Transfer Unit	45- 26
AZ32 0078	DC Power Pack	73- 2
AZ43 0020	High Voltage Supply Cord	73- 3
AZ43 0020	High Voltage Supply Cord	65- 25
AZ48 0021	Relay Harness - 3P	29- 28
AZ48 0029	CT Harness	41- 1
C105 2352	Stepped Screw - M6x1.7	63- 12
C225 2866	Decal - Key Top Cover	83- 11
C225 2867	Decal - Cover - Panel - Nashua	83- 11
C225 5866	Decal - Key Top Cover	9- 34
C225 5867	Decal - Cover - Panel - Nashua	9- 34
G011 3305	Gear - 16T	15- 9
G011 3305	Gear - 16T	57- 8

Part No.	Description	Page and Index No
G012 3897	Relay Harness - Toner End Sensor	39- 20
G020 2554	Paper Feed Roller Ass'y (NA)	25- 10
G020 2555	Paper Feed Roller	25- 8
G020 2565	Paper Guide	25- 7
G020 2570	Shaft - Paper Feed Roller (NA)	25- 6
G020 2585	Front Pin - Paper Feed Roller	25- 5
G020 2586	Rear Pin - Paper Feed Roller	25- 9
G020 2645	Friction Pad	17- 13

Part No.	Description	Page and Index No.
A008 9502	Silicone Grease - G40M.	85- 6
A028 9300	Grease Nok Barrierta - JFE 5 5/2	85- 3
A053 1957	Flex Hinge - Platen Cover	11- 5
A069 1883	Shoe - Scanner	33- 6
A069 1883	Shoe - Scanner	29- 17
A069 1883	Shoe - Scanner	31- 3
A069 5168	Heat Sink - Motor Board	81- 1
A075 1766	Adjusting Cam	35- 22
A077 1310	Snap Ring - M2	41- 6
A077 1673	Thermofuse Terminal	31- 5
A077 1690	Spring Plate - Mirror	33- 4
A077 1690	Spring Plate - Mirror	35- 19
A077 4162	Shoulder Screw - M3	49- 16
A079 3626	Stepped Screw - Swing Cleaning	55- 7
A085 1670	Exposure Adjusting Plate	31- 8
A085 1861	Main Reflector	31- 18
A096 1692	ADS Case	33- 15
A096 1692	ADS Case (Option)	33- 31
A096 1693	ADS Cover	33- 14
A096 1693	ADS Cover (Option)	33- 32
A096 1873	Scanner Shoe Pin	31- 17
A096 1873	Scanner Shoe Pin	33- 1
A096 3863	Spacer - 4x6x1	17- 26
A096 5230	ADS Board (Option)	33- 27
A111 1753	Seal - 0.1x18x49	29- 7
A134 1071	Left Grip Plate	69- 14
A134 1071	Left Grip Plate	63- 23
A134 1072	Right Bracket - Grip Plate	69- 15
A134 1072	Right Bracket - Grip Plate	63- 22
A134 1073	Left Bracket - Grip Plate	69- 16
A134 1073	Left Bracket - Grip Plate	63- 24
A134 1121	Joint Gear	63- 16
A134 1394	Front Platen Cover	11- 4
A134 1395	Rear Platen Cover	11- 7

Part No.	Description	Page and Index No
A134 1396	Original Holder	11- 8
A134 2557	Regist Sensor Bracket	27- 14
A134 2656	Stopper Plate	23- 6
A134 2658	Grounding Plate	23- 5
A134 2662	Grounding Plate	23- 18
A134 2667	Separation Drive Shaft	23- 29
A134 2668	Separation Driven Shaft	23- 23
A134 2674	Torque Limitter - 400fg	23- 22
A134 2676	Solenoid Bracket (A212)	67- 5
A134 2678	Solenoid Link (A212)	67- 3
A134 2679	Pick-up Lever	67- 2
A134 2680	DC Solenoid	67- 6
A134 2688	Positioning Plate	23- 1
A134 2701	By-pass Feed Guide	15- 4
A134 2927	Tray Lock Bracket	77- 20
A134 2941	Tray Sensor Bracket	73- 4
A134 2947	Heater Cover (Option)	69- 10
A134 2956	Paper Feed Front Cover	51- 1
A134 3161	Bottle Drive Bracket	37- 26
A134 3162	Bottle Drive Motor	37- 23
A134 3180	Bottle Chuck	37- 3
A134 3181	Chuck Roller	37- 6
A134 3201	Cam - Toner Bottle	37- 32
A134 3215	Rubber Cap	37- 9
A134 4061	Rear Terminal Plate	47- 11
A134 4153	Slide Rail - Fusing	49- 10
A134 4161	Pressure Lever	49- 18
A134 4280	Fusing Exit Guide - Lower	49- 2
A134 4351	Stay - Fusing Rail	77- 5
A134 4355	Fusing Unit Stopper	77- 7
A134 4508	Inverter Guide Plate	55- 13
A134 4512	Feed Roller Shaft	53- 21
A134 4525	End Fence	57- 26
A134 4527	Separation Roller	55- 20

Part No.	Description	Page and Index No.
A134 4619	Guide Plate Link	51- 12
A134 4620	Grounding Plate	57- 19
A134 4649	Paper Guide Holder	53- 16
A134 4658	Vibrating Plate	55- 23
A134 4662	Duplex Guide Plate	55- 24
A134 4676	Paper End Feeler	53- 8
A134 4688	Front Side Fence Rack	57- 10
A134 4689	Rear Side Fence Rack	57- 9
A134 4690	Clutch Stopper	53- 20
A134 4701	Front Upper Cover	51- 3
A134 4710	End Fence Actuator	57- 24
A134 4712	Right Cover Bracket	51- 4
A134 4714	Tightener	57- 15
A134 4720	End Fence Upper Cover	51- 2
A134 4721	Connector Cover	51- 6
A134 4726	Guide Plate Knob	51- 19
A134 4728	Inverter Feeler	51- 5
A134 4730	Entrance Feeler	51- 14
A134 4739	Lower Guide Plate Knob	51- 9
A134 4740	Lower Guide Plate	51- 15
A134 4751	Front Side Plate	53- 1
A134 4765	Grounding Plate	55- 22
A134 4781	Rear Side Plate	53- 9
A134 4790	Paper End Sensor	55- 18
A134 4799	Motor Bracket	55- 1
A134 4800	Motor Bracket	55- 2
A134 4804	Guide Plate Stopper	55- 19
A134 4808	Rear Guide Holder	53- 18
A134 4809	Front Guide Holder	53- 14
A134 4884	Decal - Duplex Misfeed Removal	83- 18
A134 4884	Decal - Duplex Misfeed Removal	51- 21
A134 4901	Right Slide Rail Ass'y	77- 18
A134 5254	Duplex Control Board	57- 23
A134 5290	Transport Drive Motor	55- 3

Part No.	Description	Page and Index No
A134 5291	Jogger Drive Motor - Side Fence	57- 20
A134 5292	Jogger Drive Motor - End Fence	57- 21
A134 5311	By-pass Feed Harness	23- 14
A134 5320	Toner Bottle Cam	57- 28
A134 5321	Sensor Relay Harness	57- 25
A134 5322	End Fence Harness	57- 31
A134 5323	Motor Harness	57- 22
A153 1107	Motor Bracket	63- 25
A153 1112	Drive Gear Holder	65- 15
A153 1117	Drum Drive Shaft	65- 21
A153 1125	Development Drive Bracket	65- 8
A153 1127	Clutch Shaft	65- 5
A153 1128	Tightener	63- 10
A153 1131	Development Support Plate	63- 7
A153 1132	Development Tightener	65- 16
A153 1135	Drum Drive Tightener	65- 19
A153 1251	Upper Cover	9- 24
A153 1259	Platen Cover Bracket - Left	73- 11
A153 1285	Emblem (RIC)	9- 1
A153 1285	Emblem (RIC)	83- 4
A153 1353	Front Cover Hinge	69- 1
A153 1354	Hinge Pin	9- 3
A153 1355	Key Counter Bracket	69- 2
A153 1365	Symbol Explanation Decal	83- 14
A153 1369	Platen Cover Ass'y	11- 1
A153 1370	Platen Cover Hinge	11- 3
A153 1380	Platen Cover Bracket	11- 11
A153 1383	Platen Cover Feeler	11- 9
A153 1452	Key-top Start	13- 2
A153 1453	Key-top Interrupt	13- 3
A153 1454	Key-top Mode Clear	13- 4
A153 1455	Key-top Program	13- 5
A153 1456	Key-top 10 Key	13- 6
A153 1457	Key-top Clear/Stop	13- 7

Part No.	Description	Page and Index No.
A153 1458	Key-top Auto Density	13- 8
A153 1459	Key-top Darker	13- 9
A153 1460	Key-top Lighter	13- 10
A153 1461	Key-top Auto Paper Select	13- 11
A153 1462	Key-top Paper Select	13- 12
A153 1463	Key-top Full Size	13- 13
A153 1464	Key-top Auto Reduce/Enlarge	13- 14
A153 1465	Key-top - Sorter	13- 18
A153 1469	Panel Cover	9- 11
A153 1469	Panel Cover	13- 15
A153 1475	Decal - 10key Zoom -LT/DLT	83- 7
A153 1476	Decal - Margin Adjustment - LT/DLT	83- 8
A153 1478	Decal - 10key Zoom - A4/A3	83- 7
A153 1479	Decal - Margin Adjustment - A4/A3	83- 8
A153 1675	Harness Guard Seal	75- 28
A153 1700	Scanner Drive Motor - DC2.3V 13.5W	35- 13
A153 1720	Scanner Rail	33- 12
A153 1721	Spring Plate	33- 10
A153 1749	Scale Bracket	31- 11
A153 1754	Exposure Stay	31- 14
A153 1757	Contact Grass Holder	31- 16
A153 1776	Front Mirror Clamp - 1st Mirror	31- 4
A153 1777	Front Terminal	31- 6
A153 1778	Rear Terminal	31- 9
A153 1779	Thermostat - 121°C 250V 10A	31- 15
A153 1780	Exposure Lamp Harness	31- 10
A153 1801	2nd Scanner Ass'y	33- 8
A153 1805	Front Mirror Holder	33- 5
A153 1806	Rear Mirror Holder	33- 7
A153 1808	2nd Mirror	33- 3
A153 1809	3rd Mirror	33- 9
A153 1851	Lens Cover	29- 3
A153 1854	Wire Guide	29- 27
A153 1855	Shading Plate	29- 26

Part No.	Description	Page and Index No
A153 1859	Shielding Sheet Guide	29- 23
A153 1861	Bracket - Flexible Board	29- 25
A153 1905	3rd Scanner Filler	33- 30
A153 1906	Adjust Shoe	33- 20
A153 1908	Shielding Plate	33- 17
A153 1912	3rd Scanner Stay	33- 26
A153 1923	6th Mirror Bracket	35- 27
A153 1924	6th Mirror Plate	35- 28
A153 1935	Lens Drive Bracket	35- 29
A153 1947	Magnification Drive Unit Bracket	35- 24
A153 1952	Magnification Rail	35- 21
A153 1961	Lens Cover	29- 6
A153 1971	Original Sensor Bracket	29- 8
A153 1974	Original Sensor Bracket	29- 24
A153 1976	ADS Sensor Bracket	33- 25
A153 1986	Cooling Fan Duct	73- 7
A153 2052	Release Bracket	75- 23
A153 2061	Release Lever	75- 29
A153 2072	Release Link Lever	75- 5
A153 2073	Guide Rail	75- 9
A153 2075	Front Roller Cam	75- 11
A153 2076	Rear Roller Cam	75- 12
A153 2080	Eraser Lamp	75- 17
A153 2083	Left Drum Rail	75- 16
A153 2084	Spacer	75- 10
A153 2085	Spacer	75- 27
A153 2090	Quenching Lamp	75- 14
A153 2116	Grounding Plate	41- 7
A153 2126	Swing Arm	41- 3
A153 2130	Receptacle Housing	65- 13
A153 2135	Charge Roller Terminal Ass'y	41- 8
A153 2143	Shielding Plate	41- 14
A153 2277	Cleaning Blade	43- 39
A153 2301	Front Stay	43- 36

Part No.	Description	Page and Index No.
A153 2302	Drum Bearing Holder	43- 38
A153 2303	Grounding Plate	43- 35
A153 2995	Decal Paper Size - LT/DLT	83- 1
A153 2995	Decal Paper Size - LT/DLT	17- 35
A153 2996	Decal Paper Size - A4/A3	17- 35
A153 2996	Decal Paper Size - A4/A3	83- 1
A153 3065	Right Paddle Roller	39- 16
A153 3075	Entrance Seal	39- 2
A153 3086	Bias Terminal	65- 12
A153 3114	Transfer Entrance Guide	27- 10
A153 3149	Knob Screw - M4x12	39- 27
A153 3262	Bottle Unit Hinge	37- 29
A153 3264	Bottle Unit Upper Hinge	37- 33
A153 3265	Bottle Unit Lock Plate	37- 21
A153 3266	Bottle Unit Link Plate	37- 30
A153 3555	Cleaning Entrance Seal	43- 24
A153 3558	Blade Seal	43- 14
A153 3561	Cleaning Blade Bracket	43- 9
A153 3570	Spring Plate	43- 15
A153 3591	Mylar - 17x335	43- 29
A153 3598	Pin Bracket	75- 22
A153 3865	Belt Drive Roller	45- 13
A153 3866	Belt Drive Roller	45- 3
A153 3870	Transfer Bias Roller	45- 8
A153 3873	Bias Roller Terminal	45- 5
A153 3874	Earth Terminal	45- 12
A153 3877	Spring Plate	45- 25
A153 3888	Earth Plate	45- 24
A153 3892	Belt Cleaning Blade	45- 17
A153 3893	Belt Cleaning Stay	45- 18
A153 3897	Harness Clamp	45- 28
A153 3920	Belt Release Arm	75- 25
A153 3929	Decal - Caution Lever	77- 16
A153 3929	Decal - Caution Lever	83- 24

Part No.	Description	Page and Index No
A153 3931	Transport Unit Stay	77- 10
A153 3933	Stopper Stay	77- 9
A153 4055	Upper Fusing Guide	47- 26
A153 4062	Electrode Plate - Middle	47- 12
A153 4063	Front Terminal Plate	47- 14
A153 4074	Terminal Connector - 2p	47- 4
A153 4075	Front Holder	47- 15
A153 4088	Thermister	47- 9
A153 4089	Thermister - 2	47- 8
A153 4102	Front Lamp Terminal Holder	47- 16
A153 4112	Stripper Bracket	47- 19
A153 4114	Stripper Stopper	47- 17
A153 4197	Lower Fusing Guide	49- 9
A153 5114	RAM Board	71- 15
A153 5114	Ram Board	81- 2
A153 5141	Lens Drive Harness	29- 16
A153 5211	Mirror Drive Motor - DC24V 8.6V	35- 25
A153 5212	Lens Drive Motor - Horizontal	29- 18
A153 5213	Lens Drive Motor - DC24V 8.6W	35- 5
A153 5266	Thermofuse - 169°c	47- 13
A153 5328	CT Harness	59- 9
A153 5328	CT Harness	61- 5
A153 5330	CT Harness - 7p	39- 19
A153 5339	Density Sensor Harness	75- 20
A153 5340	CT Harness	65- 10
A153 5344	Power Supply Harness - 2trays (A212)(NA)	71- 7
A153 5391	Optical Harness - 1	29- 9
A153 5392	Optical Harness - 2	29- 10
A153 5395	Optical Harness - 5	29- 15
A153 5545	AC Drive Board - 120V (NA)	71- 11
A153 5571	Power Supply Cord - 120V (NA)	73- 13
A153 5601	AC Relay Harness	73- 19
A153 5621	Noise Filter Board	73- 20
A153 5644	Power Supply Harness - 2trays (A212)	71- 7

Part No.	Description	Page and Index No.
A153 5645	AC Drive Board (230V)(EU/AISA/TWN)	71- 11
A153 5671	Power Supply Cord (EU/ASIA/TWN)	73- 13
A153 5801	DC Drive Board Bracket	71- 12
A153 5802	Lower Bracket - DC Drive Board	63- 1
A153 5803	Upper Bracket - DC Drive Board	71- 6
A153 5803	Upper Bracket - DC Drive Board	35- 10
A153 5806	Bracket Paper Tray Unit	71- 19
A153 5808	Bracket - Safety Switch	69- 13
A153 5809	Arm Interlock SW	69- 12
A153 5812	Left Lower Bracket	67- 26
A153 5813	Main Control Board Bracket	67- 1
A153 6409	Decal - Keytop Cover	9- 34
A153 6409	Decal - Keytop Cover	83- 11
A153 6423	Support Cover (INF)	9- 1
A153 6423	Support Cover (INF)	83- 4
A153 9001	Scanner Adjustment Tool	85- 7
A153 9004	Wiping Cloth	85- 8
A153 9510	OPC Drum	41- 26
A153 9513	Harness - ADS (Option)	33- 24
A154 4616	Paper Holder	51- 17
A154 4620	Bottom Plate	57- 1
A154 4621	Front Guide Plate	57- 30
A154 4622	Rear Guide Plate	57- 29
A154 5325	Duplex Unit Relay Harness	73- 15
A155 2667	Lift Sensor Feeler (A214)	23- 24
A155 2675	Pick-up Bracket (A214)	67- 5
A155 2677	Pick-up Link (A214)	67- 3
A155 2682	Lift Sensor Bracket (A214)	23- 32
A155 5165	LCT Main Board	21- 18
A155 5170	Push Switch	21- 27
A155 5314	LCT Relay Harness	71- 23
A155 5342	LCT Harness	21- 31
A155 5345	CT Harness (A214)	23- 33
A155 5348	Paper End Sensor Harness	21- 4

Part No.	Description	Page and Index No
A155 5349	LCT Vertical Harness	19- 33
A155 6101	LCT Upper Cover	19- 6
A155 6110	Front Side Plate	21- 29
A155 6112	Spacer - LCT	19- 38
A155 6113	Decal - Paper Set	19- 2
A155 6113	Decal - Paper Set	83- 3
A155 6114	Caution Decal - LCT	19- 35
A155 6114	Caution Decal - LCT	83- 19
A155 6116	Safety Switch Bracket	21- 21
A155 6117	Safety Switch Lever	21- 23
A155 6118	Spring Plate	21- 20
A155 6125	Rear Side Bracket	21- 28
A155 6136	Lift Sensor Bracket	21- 11
A155 6141	Tray Bottom Plate	21- 17
A155 6142	LCT Paper Tray	19- 14
A155 6143	Left Bracket	21- 1
A155 6145	Tray Cover	21- 19
A155 6147	Paper End Sensor Bracket	21- 3
A155 6148	Paper End Sensor Feeler	21- 2
A155 6153	Upper Hinge	21- 6
A155 6162	Cushion	19- 34
A155 6169	Hinge Holder	19- 30
A155 6170	Hinge Bracket	19- 21
A155 6171	Grip Bracket	19- 19
A155 6181	Knob	19- 18
A155 6191	LCT Front Cover	19- 17
A155 6201	LCT Hinge Bracket	19- 8
A155 6203	Paper Tray Stay	21- 5
A155 6207	Cover Bracket	19- 3
A155 6215	Harness Guide	21- 30
A155 6221	LCT Rear Cover	19- 15
A155 6231	LCT Right Cover	19- 16
A155 6241	LCT Harness Cover	19- 26
A155 6251	Upper Stay	19- 9

Part No.	Description	Page and Index No.
A155 6270	Cushion 20x30	19- 39
A155 6302	Hinge Angle	19- 5
A155 6303	Fix Hinge	19- 4
A155 6306	Front Side Fence	19- 22
A155 6307	Rear Side Fence	19- 12
A155 6311	Front Paper Holder	19- 23
A155 6312	Rear Paper Holder	19- 10
A155 6313	Support Guide	19- 11
A155 6321	Front Spring Plate	19- 24
A155 6322	Rear Sprig Plate	19- 25
A155 6324	End Fence	19- 1
A156 1452	Key-top Start (SVN)	13- 2
A156 1453	Key-top Interrupt (SVN)	13- 3
A156 1454	Key-top Mode Clear (SVN)	13- 4
A156 1455	Key-top Program (SVN)	13- 5
A156 1456	Key-top 10 Key (SVN)	13- 6
A156 1457	Key-top Clear/Stop (SVN)	13- 7
A156 1458	Key-top Auto Density (SVN)	13- 8
A156 1459	Key-top Darker (SVN)	13- 9
A156 1460	Key-top Lighter (SVN)	13- 10
A156 1461	Key-top Auto Paper Select (SVN)	13- 11
A156 1462	Key-top Paper Select (SVN)	13- 12
A156 1463	Key-top Full Size (SVN)	13- 13
A156 1464	Key-top Auto Reduce/Enlarge (SVN)	13- 14
A156 1495	Decal Copy Ratio	83- 9
A156 6413	Emblem (SVN)	83- 4
A156 6413	Emblem (SVN)	9- 1
A157 1084	Motor Stay	61- 1
A157 1084	Motor Stay	59- 2
A157 1111	Belt Tightener	65- 23
A157 1311	Left Inner Cover	9- 17
A157 1321	Left Inner Cover - Small	9- 18
A157 1339	Lower Inner Cover	9- 8
A157 1351	Upper Inner Cover	9- 9

Part No.	Description	Page and Index No
A157 1360	Operation Sheet (A212)	83- 22
A157 1360	Operation Sheet (A212)	9- 5
A157 1770	1st Scanner Ass'y (EU/ASIA/TWN)	31- 1
A157 1790	1st Scanner Ass'y (NA)	31- 1
A157 2557	Spring Plate	15- 21
A157 2560	Paper Feed Support Plate	67- 12
A157 2800	Paper End Sensor Bracket	25- 11
A157 2804	Shield Plate - Paper End Sensor	25- 15
A157 3861	Transfer Belt	45- 2
A157 3900	Support Plate	77- 14
A157 3900	Support Plate	45- 32
A157 4456	Spring Plate	59- 13
A157 4456	Spring Plate	61- 9
A157 4459	Paper Exit Feeler	61- 7
A157 4459	Paper Exit Feeler	59- 11
A157 5311	Rear Lower Harness - 2tray (A212)	71- 17
A157 5336	Vertical Transport Harness	15- 18
A157 6403	Front Cover (NRG)	9- 2
A158 1360	Operation Sheet (A214)	83- 22
A158 1360	Operation Sheet (A214)	9- 5
A158 4451	Reverse Guide Plate	59- 5
A158 4452	Lower Reverse Guide Plate	59- 4
A158 4453	Exit Cover	59- 17
A158 4459	Spring Plate	59- 18
A158 4463	Pick-off Pawl Arm	59- 24
A158 4466	Switch Bracket	63- 21
A158 4467	Solenoid Bracket	59- 26
A158 4603	Paper Holder	51- 18
A158 4604	Duplex Lower Guide	51- 22
A158 4607	Upper Guide Plate	51- 10
A158 5310	Duplex Paper Feed Harness (A214)	71- 14
A158 5343	Duplex Power Supply Harness (A214)(NA)	71- 7
A160 5643	Duplex Power Supply Harness (A214)	71- 7
A204 1471	Keytop - Halftone	13- 19

Part No.	Description	Page and Index No.
A204 1472	Keytop - Enlarge	13- 20
A204 1473	Keytop - Reduce	13- 21
A204 1677	Optical Filter	75- 21
A204 2101	P.T.L. Lamp Ass'y	27- 9
A204 2120	Drum Charge Roller Cleaner	41- 25
A204 2155	Decal - Caution	83- 15
A204 2187	Spacer-11mm	75- 6
A204 2188	Spacer-15mm	75- 7
A204 3080	Development Filter	39- 28
A204 3568	Rear Bushing	43- 5
A204 3911	Cam Shaft	65- 31
A204 3915	Magnet Clutch Bracket	65- 26
A204 3921	Clutch Arm	65- 34
A204 3922	Brake Cam	65- 33
A204 4651	Bottom Pressure Plate	57- 5
A204 5117	IC - RF5A230	81- 3
A204 5300	Fusing Unit Connector - 115V	47- 5
A204 5326	Fusing Relay Harness	71- 21
A204 5665	Fusing Unit Connector - 230V	47- 5
A207 1471	Keytop - Halftone (SVN)	13- 19
A207 1472	Keytop - Enlarge (SVN)	13- 20
A207 1473	Keytop - Reduce (SVN)	13- 21
A208 4084	Fusing Connector Bracket	47- 6
A208 4102	Rear Lamp Terminal Holder	47- 7
A208 4355	Grounding Brush - Fusing Entrance	77- 6
A212 1073	Stopper Bracket	25- 2
A212 1087	Middle Upper Stay	25- 17
A212 1088	Middle Lower Stay	77- 19
A212 1099	Stopper	25- 1
A212 1111	Spring Cover	65- 18
A212 1151	Tension Spring	63- 19
A212 1151	Tension Spring	65- 17
A212 1258	Right Bracket - Platen Cover	73- 10
A212 1261	Front Right Cover	9- 28

Part No.	Description	Page and Index No
A212 1271	Rear Right Cover (A212)	9- 27
A212 1282	Front Cover (A212)(RIC)	9- 2
A212 1291	Rear Cover	9- 25
A212 1302	Left Cover	9- 16
A212 1323	Operation Panel Ass'y - LT (A212)	9- 12
A212 1323	Operation Panel Ass'y - LT (A212)	13- *
A212 1324	Operation Panel Ass'y - A4 (A212)	9- 12
A212 1324	Operation Panel Ass'y - A4 (A212)	13- *
A212 1328	Operation Panel Ass'y (A212)(SVN)	9- 12
A212 1328	Operation Panel Ass'y - LT (A212)(SVN)	13- *
A212 1350	Right Middle Cover	75- 24
A212 1352	Inner Cover - Right Lower	9- 7
A212 1465	Key-top - Sorter (SVN)	13- 18
A212 1481	Operation Panel Case - A4	13- 22
A212 1482	Display Panel - A4 (A212)	13- 24
A212 1483	Sorter Sheet - A4 (A212)	13- 16
A212 1485	Operation Sheet (A4)	83- 10
A212 1485	Operation panel Sheet - A4	9- 31
A212 1487	Sorter Sheet (A212)(SVN)	13- 16
A212 1491	Operation Panel Case - LT	13- 22
A212 1492	Display Panel - LT (A212)	13- 24
A212 1493	Sheet Sorter - LT (A212)	13- 16
A212 1494	Operation Panel Sheet	13- 23
A212 1495	Operation Sheet (LT)	83- 10
A212 1495	Operation Panes Sheet - LT	13- 17
A212 1674	Shield Glass Guide	75- 19
A212 1695	Tension Spring	35- 12
A212 1707	Tension Bracket - Long	35- 14
A212 1708	Tension Bracket - Short	35- 6
A212 1710	Timing Pulley - 44Z	35- 16
A212 1807	Harness Guide	33- 2
A212 1840	Lens Magnification Unit	29- 1
A212 1841	Lens Drive Unit	29- 11
A212 1903	3rd Scanner Bracket	33- 28

Part No.	Description	Page and Index No.
A212 1914	3rd Scanner Rack	33- 19
A212 1981	Scanner Home Sensor Bracket	33- 29
A212 2060	Wire Pulley	75- 13
A212 2071	Cam Lever	75- 15
A212 2101	Release Spring	75- 3
A212 2102	Pressure Spring	75- 2
A212 2110	Charge Roller Ass'y	41- 2
A212 2131	Idle Gear 14z	41- 16
A212 2132	Idle Gear 20z	41- 17
A212 2142	Cam Lever	65- 32
A212 2251	Pressure Blade Spring	43- 8
A212 2252	Pressure Roller Spring	41- 10
A212 2255	Drum Unit	43- 1
A212 2351	Rear Roller Bushing	41- 5
A212 2352	Rear Roller Housing	41- 11
A212 2353	Front Roller Bushing	41- 18
A212 2354	Pad Pressure Spring	43- 11
A212 2524	Spring	25- 13
A212 2531	Timing Belt - S3M 300	67- 8
A212 2533	Paper Tray Ass'y (LT)	17- *
A212 2534	Paper Size Sensor Board	15- 7
A212 2537	Bushing	27- 7
A212 2538	Bushing	27- 17
A212 2539	Spring - Registration Roller	27- 5
A212 2542	Bottom Plate Ass'y	17- 12
A212 2547	Rear Side Fence Ass'y	17- 17
A212 2550	Vertical Guide Plate	27- 18
A212 2551	Lower Guide Plate	27- 8
A212 2552	Vertical Relay Guide Plate	27- 6
A212 2558	Upper Registration Guide	27- 19
A212 2559	Switch Bracket	19- 29
A212 2559	Switch Bracket	15- 17
A212 2562	Solenoid Bracket	67- 23
A212 2563	Lower Registration Guide	27- 3

Part No.	Description	Page and Index No
A212 2564	Tightener	67- 11
A212 2567	Rear Side Fence	17- 18
A212 2570	Paper Feed Roller Ass'y (EU/ASIA/TWN)	25- 10
A212 2571	Vertical Transport Guide (A212)	15- 22
A212 2575	Shaft - Paper Feed Roller (EU/ASIA/TWN)	25- 6
A212 2580	Vertical Transfer Hinge (A212)	27- 11
A212 2581	Front Side Fence Ass'y	17- 3
A212 2582	Front Corner Separator	17- 8
A212 2583	Rear Corner Separator	17- 21
A212 2584	Paper Feed Drive Shaft	67- 21
A212 2586	Hinge Bracket (A212)	15- 14
A212 2587	Feed Roller Bushing - Front	25- 3
A212 2590	Paper Tray	17- 32
A212 2591	Vertical Transfer (A212)	15- 16
A212 2652	Middle Guide Rail	77- 15
A212 2658	Pick-up Arm	23- 30
A212 2659	By-pass Feed Housing	23- 15
A212 2660	Paper End Feeler	23- 2
A212 2661	Adjusting Plate - Front	17- 4
A212 2663	Separation Guide	23- 20
A212 2670	Rear Guide Plate	23- 19
A212 2671	By-pass Feed Cover	23- 4
A212 2672	Pressure Spring	67- 7
A212 2673	Release Spring	67- 4
A212 2692	By-pass Feed Table Ass'y	15- 1
A212 2697	By-pass Feed Table	15- 5
A212 2705	Magnet Catch Plate	15- 6
A212 2706	Rear Fence Rack	15- 8
A212 2707	Front Fence Rack	15- 10
A212 2711	Front Side Fence	15- 2
A212 2716	Rear Side Fence	15- 3
A212 2746	By-pass Feed Cover	15- 11
A212 2757	Paper Tray Ass'y (A4)	17- *
A212 2758	Decal - Paper Setting	83- 17

Part No.	Description	Page and Index No.
A212 2758	Decal - Paper Set Detection	17- 2
A212 2765	Spring Plate - Gear Side Fence	17- 16
A212 2769	Rear Stopper Spring	17- 6
A212 2802	Feeler Paper End Sensor	25- 4
A212 2805	Tray Bottom Plate Sheet	17- 33
A212 2805	Tray Bottom Plate Sheet	83- 21
A212 2822	Left Slide Rail Ass'y	77- 1
A212 2823	Right Slide Rail Ass'y	77- 12
A212 2844	End Fence Ass'y	17- 9
A212 2870	Adjusting Plate Rear	17- 20
A212 2871	Adjusting Plate Front	17- 7
A212 2905	Release Arm - Paper End	25- 14
A212 2929	Right Rail - Feed Tray	77- 17
A212 2956	Paper Feed Front Cover	17- 1
A212 2982	Paper Lift Shutter	17- 31
A212 3051	Development Unit	39- 1
A212 3056	Coupled Gear - 15z/22z	39- 25
A212 3057	Gear - 17Z	39- 24
A212 3058	Gear - 26Z	39- 26
A212 3063	Paddle Roller	39- 14
A212 3068	Toner Bottle Holder	37- 15
A212 3071	Developer Rail Seal	69- 18
A212 3072	Relay Adjusting Spring	67- 10
A212 3072	Relay Adjusting Spring	37- 31
A212 3073	Chuck Spring	37- 8
A212 3078	Shutter Spring	37- 17
A212 3079	Toner Collection Coil	39- 10
A212 3081	Decal - Toner Supply	83- 20
A212 3087	Terminal Cap	65- 11
A212 3090	Development Position Plate	39- 4
A212 3150	Toner Supply Unit (RIC-EU)	37- *
A212 3151	Toner Supply Unit (RIC-NA)	37- *
A212 3153	Toner Supply Unit (OEM/RIC-AA)	37- *
A212 3157	Bottle Holder Bracket	37- 27
A212 3172	Shutter	37- 19
A212 3173	Shutter Guide	37- 16
A212 3174	Shutter Holder	37- 18
A212 3177	Toner Slider	37- 4
A212 3179	Chuck Shaft	37- 7
A212 3185	Toner Supply Gear (RIC-EU)	37- 1
A212 3187	Toner Supply Gear (RIC-NA)	37- 1
A212 3189	Toner Supply Gear (OEM/RIC-AA)	37- 1
A212 3190	Toner Bottle Stopper	37- 10
A212 3197	Bottle Holder	37- 13
A212 3200	Toner Hopper Ass'y	39- 21
A212 3270	Stay - Toner Supply	69- 17
A212 3281	Bottle Bracket Cover	37- 14
A212 3580	Toner Collection Unit	41- 23
A212 3590	ADS Plate	43- 19
A212 3595	Pick-off Pawl Retainer	43- 3
A212 3850	Transfer Unit	45- 1
A212 3851	Spring - T/S Unit	45- 20
A212 3851	Spring - T/S Unit	65- 35
A212 3853	Bias Roller Bushing - Rear	45- 11
A212 3862	Transfer Belt Frame	45- 7
A212 3863	Front Side Plate	45- 4
A212 3865	Belt Drive Gear - 25z	45- 10
A212 3876	Rear Side Plate	45- 9
A212 3882	Transfer Belt Casing	45- 31
A212 3883	Toner Collection Cap	45- 29
A212 3884	Belt Guide Plate	45- 14
A212 3886	Belt Pressure Lever	45- 19
A212 3887	Belt Release Stay	45- 21
A212 3888	Earth Plate	45- 30
A212 3894	Bushing	45- 16
A212 3895	Bushing	45- 22
A212 3901	Entrance Guide Plate	45- 27
A212 3914	Magnetic Clutch Feeler	65- 28

Part No.	Description	Page and Index No.
A212 3930	Belt Unit Handle	77- 8
A212 4005	Fusing Unit (NA)	47- *
A212 4006	Fusing Exit Unit	49- 1
A212 4007	Fusing Unit (EU/ASIA/TWN)	47- *
A212 4053	Fusing Upper Stay	47- 2
A212 4103	Solenoid Spring	47- 18
A212 4110	Fuser Stripper Ass'y	47- 27
A212 4130	Fusing Front Cover	47- 1
A212 4151	Fusing Unit Frame	49- 20
A212 4205	Cleaning Roller Bracket	49- 8
A212 4301	Exit Plate	49- 17
A212 4326	Exit Roller Ass'y	49- 6
A212 4352	Fusing Lock Lever	77- 2
A212 4450	Upper Guide Plate	59- 15
A212 4450	Upper Guide Plate	61- 11
A212 4459	Pressure Spring	49- 19
A212 4460	Exit Cover	61- 12
A212 4467	Spring - Stripper Pawl Release	77- 3
A212 4467	Spring - Stripper Pawl Release	69- 8
A212 4495	Shift Clutch	59- 8
A212 4495	Shift Clutch	61- 2
A212 4496	Gear - 24Z	59- 6
A212 4496	Gear - 24Z	61- 14
A212 5101	Main Control Board (NA)	71- 2
A212 5101	Main Control Board (115V)	81- *
A212 5103	IC - 4MX16 - 120NS	71- 4
A212 5132	Density Sensor	43- 18
A212 5160	ADS Board	33- 18
A212 5201	Main Control Board (230V)	81- *
A212 5201	Main Control Board (EU/ASIA/TWN)	71- 2
A212 5312	Optical Harness	71- 13
A212 5316	Paper Feed Harness -2trays (A212)	71- 14
A212 5319	Rear Upper Harness	71- 5
A212 5320	Front Right Harness (EU/ASIA/TWN)	69- 5

Part No.	Description	Page and Index No
A212 5324	Sorter Relay Harness	73- 12
A212 5333	CT Harness	27- 16
A212 5334	CT Harness - 7p	77- 11
A212 5393	Optical Harness 3	33- 23
A212 5460	Operation Panel Board - LT (A212)	13- 1
A212 5465	Operation Panel Board - A4 (A212)	13- 1
A212 5520	Front Right Harness (NA)	69- 5
A212 5661	AC Main Harness	69- 3
A212 5804	Main Switch Bracket (EU/ASIA/TWN)	69- 19
A212 5807	Bracket Ardf	71- 20
A212 5810	Power Supply Cord Bracket	73- 17
A212 5811	Main Control Board Bracket	71- 1
A212 5814	Main Switch Bracket (NA)	69- 19
A212 5820	Total Counter Bracket	69- 11
A212 5829	Decal - Main Switch Cover (EU/ASIA/TWN)	9- 10
A212 5830	Decal - Main Switch (EU/ASIA/TWN)	9- 32
A212 6404	Decal - Model Name - GES (A212)	9- 30
A212 6404	Decal - Model Name - GES (A212)	83- 13
A212 6407	Decal - Model Name - NSA (A212)	9- 30
A212 6407	Decal - Model Name - NST (A212)	83- 13
A212 6407	Decal - Model Name - NST (A214)	83- 13
A212 6412	Front Cover (A212)(SVN)	9- 2
A212 6414	Decal - Model Name - REX (A212)	9- 30
A212 6414	Decal - Model Name - REX (A212)	83- 13
A212 6414	Decal - Model Name - REX (A214)	83- 13
A212 6422	Front Cover (A212)(INF)	9- 2
A212 8607	Operating Instructions - English LT (RIC)	83- 6
A212 8608	Operating Instructions - English A4 (RIC)	83- 6
A212 8650	Operating Instructions - English LT (SVN)	83- 6
A212 8660	Operating Instructions - English A4 (INF)	83- 6
A212 8661	Operating Instructions - German (INF)	83- 6
A212 8662	Operating Instructions - French (INF)	83- 6
A212 8663	Operating Instructions - Italian(INF)	83- 6
A212 8664	Operating Instructions - Spanish(INF)	83- 6

Part No.	Description	Page and Index No.
A212 8690	Operating Instructions - English A4 (NRG)	83- 6
A212 8697	Operating Instructions - English LT (NRG)	83- 6
A212 8834	Operation panel Sheet - LT	9- 31
A214 1277	Front Cover (A214)(RIC)	9- 2
A214 1325	Operation Panel Ass'y - LT (A214)	13- *
A214 1325	Operation Panel Ass'y - LT (A214)	9- 12
A214 1326	Operation Panel Ass'y - A4 (A214)	13- *
A214 1326	Operation Panel Ass'y - A4 (A214)	9- 12
A214 1328	Operation Panel Ass'y - LT (A214)(SVN)	13- *
A214 1328	Operation Panel Ass'y (A214)(SVN)	9- 12
A214 1331	Rear Right Cover (A214)	9- 27
A214 1482	Display Panel - A4 (A214)	13- 24
A214 1483	Paper Exit Sheet - A4 (A214)	13- 16
A214 1485	Operation Panes Sheet - A4	13- 17
A214 1487	Sorter Sheet (A214)(SVN)	13- 16
A214 1492	Display Panel - LT (A214)	13- 24
A214 1493	Paper Exit Sheet - LT (A214)	13- 16
A214 2571	Vertical Transport Guide	19- 27
A214 2878	Mylar - Paper Guide (EU)	15- 24
A214 5309	Rear Lower Harness - Duplex (A214)	71- 17
A214 5460	Operation Panel Board - LT (A214)	13- 1
A214 5465	Operation Panel Board - A4 (A214)	13- 1
A214 6175	LCT Positioning Plate	19- 32
A214 6404	Decal - Model Name - GES (A214)	83- 13
A214 6404	Decal - Model Name - GES (A214)	9- 30
A214 6407	Decal - Model Name - NSA (A214)	9- 30
A214 6412	Front Cover (A214)(SVN)	9- 2
A214 6414	Decal - Model Name - REX (A214)	9- 30
A214 6422	Front Cover (A214)(INF)	9- 2
A214 6460	Lower Hinge	19- 31
A219 2541	Spring	17- 28
A219 2543	Spring	17- 30
A219 2558	End Fence Guide	17- 11
A219 2574	Paper Lift Arm Ass'y	17- 25
A219 2577	Paper Lift Roller	17- 27
A219 2585	Lever	17- 29
A219 2591	Paper Lift Shaft	17- 24
A219 2597	Bottom Plate Lever	17- 22
A219 2642	Rear Lever Stopper	17- 19
A219 2656	End Fence Spring	17- 10
A219 2664	Front Stopper Lever	17- 5
A219 2692	Decal - Operating	17- 34
A219 2692	Decal - Operation Instructions	83- 23
A300 3155	Stepped Screw - M25x32	21- 22
A334 4706	Disk - Bottom Plate Clutch	55- 11
A335 3251	Top Cover Hinge	19- 7
A335 4351	Guide Roller	21- 10
A335 4352	Timing Belt Clamp	21- 25
A355 1341	Chain Hook	21- 24
A421 2543	Friction Pad	19- 13
A470 1703	Shift Clutch	61- 15
A491 4690	Bottom Plate Hook	57- 7

Part No.	Description	Page and Index No.
5053 0223	Bushing - 8mm	21- 26
5053 0447	Bushing - 6mm	53- 10
5053 0447	Bushing - 6mm	59- 1
5203 1686	Screw - SLID RAIL	77- 4
5203 9501	Grease 501	85- 1
5206 2686	Snap Ring	51- 8
5215 2621	Snap Ring - M6	15- 13
5215 2621	Snap Ring - M6	53- 13
5304 1639	Bushing - 8mm	53- 12
5420 9507	Digital Multimeter - Beckman	85- 2
5420 9516	Test Chart - OS -A3 (10PCS/SET)	85- 5
5442 9103	Launa Oil	85- 4
5443 2668	Bushing - 4x6x7mm	53- 4
5443 2668	Bushing - 4x6x7mm	55- 6
5446 1239	Plate Nut - Key Counter	69- 7
5447 2681	Snap Ring	25- 16
5447 2681	Snap Ring	55- 10
5447 2681	Snap Ring	23- 8
5447 2681	Snap Ring (A212)	15- 23
5447 2768	Stepped Screw - M3	51- 13
5447 2927	Friction Pad - B	15- 12
5447 9078	Heat Resisting Grease MT-78	85- 3
5448 2804	Platen Cover Sheet	11- 2
5474 2152	Bushing - 8x12x12mm	27- 4
5925 2258	Stopper Chain	21- 13

Part No.	Description	Page and Index No
0313 0040B	Philips Pan Head Screw - M3x4	31-107
0313 0040B	Philips Pan Head Screw - M3x4	27-106
0313 0040B	Philips Pan Head Screw - M3x4	59-108
0313 0040B	Philips Pan Head Screw - M3x4	9-104
0313 0040B	Philips Pan Head Screw - M3x4	75-105
0313 0050B	Philips Pan Head Screw - M3X5	47-107
0313 0050B	Philips Pan Head Screw - M3x5	55-102
0313 0060B	Philips Pan Head Screw - M3x6	31-108
0313 0060B	Philips Pan Head Screw - M3x6	41-103
0313 0080B	Philips Pan Head Screw - M3x8	43-106
0313 0140B	Philips Pan Head Screw - M3x14	63-105
0313 0140B	Philips Pan Head Screw - M3x14	15-104
0314 0060B	Philips Pan Head Screw - M4x6	69-106
0314 0060B	Philips Pan Head Screw - M4x6	31-109
0314 0060B	Philips Pan Head Screw - M4x6	43-101
0314 0060B	Philips Pan Head Screw - M4x6	47-104
0314 0060B	Philips Pan Head Screw - M4x6	39-104
0323 0060B	Philips Sunk Screw - M3x6	37-101
0323 0060B	Philips Sunk Screw - M3x6	73-110
0323 0060B	Philips Sunk Screw - M3x6	71-108
0323 0080B	Philips Sunk Screw - M3x8	69-104
0344 0080F	Philips Truss Head Screw - M4x8	51-103
0353 0300B	Bind Screw - M3x30	61-104
0353 0300B	Bind Screw - M3x30	59-105
0413 0050Z	Tapping Screw - M3x5	31-104
0413 0060W	Tapping Screw - M3x6	31-105
0413 0062B	Tapping Screw - M3x6	29-102
0413 0062W	Tapping Screw - M3x6	31-103
0414 0080B	Binding Self-tapping Screw - M4x8	27-107
0414 0080B	Tapping Screw - M4x8	33-104
0414 0080B	Tapping Screw - M4x8	29-107
0414 0080B	Tapping Screw - M4x8	25-102
0414 0080B	Tapping Screw - M4x8	65-106
0414 0080B	Tapping Screw - M4x8	23-103

Part No.	Description	Page and Index No.
0414 0080B	Tapping Screw - M4x8	19-102
0414 0080B	Binding Self-tapping Screw - M4x8	45-106
0414 0082W	Tapping Screw With Flat Washer - M4x8	31-102
0414 0082W	Tapping Screw With Flat Washer - M4x8	15-102
0414 0122B	Philips Tapping Screw - M4x12	49-102
0414 0142B	Binding Self Tapping Screw - M4x14	73-106
0414 0142B	Binding Self Tapping Screw - M4x14	11-101
0433 0050B	Tapping Screw - M3x5	37-102
0433 0060W	Tapping Screw - M3x6	35-110
0434 0060B	Philips Tapping Screw - M4x6	37-108
0434 0060B	Philips Tapping Screw - M4x6	75-101
0434 0060B	Pan Head Self-tapping Screw - M4x6	77-103
0434 0060B	Philips Tapping Screw - M4x6	55-107
0434 0060B	Philips Tapping Screw - M4x6	65-105
0434 0060B	Philips Tapping Screw - M4x6	63-104
0434 0060B	Philips Tapping Screw - M4x6	33-107
0434 0060B	Philips Tapping Screw - M4x6	35-103
0434 0060B	Philips Tapping Screw - M4x6	19-101
0434 0060B	Philips Tapping Screw - M4x6	25-101
0434 0060B	Pan Head Self-tapping Screw - M4x6	67-105
0434 0060B	Philips Tapping Screw - M4x6	69-101
0434 0060B	Philips Tapping Screw - M4x6	21-101
0434 0060B	Philips Tapping Screw - M4x6	59-104
0434 0060B	Philips Tapping Screw - M4x6	61-102
0434 0060B	Philips Tapping Screw - M4x6	27-102
0434 0060B	Philips Tapping Screw - M4x6	71-107
0434 0080B	Philips Tapping Screw - M4x8	59-102
0434 0080B	Pan Head Self-tapping Screw - M4x8	27-108
0434 0082B	Tapping Screw - M4x8	49-103
0434 0082B	Tapping Screw - M4x8	59-103
0434 0082B	Tapping Screw - M4x8	9-101
0434 0352W	Pan Head Self-tapping Screw - M4x35	73-105
0443 0050B	Philips Pan Head Screw - M3x6	27-105
0443 0060B	Hexagon Tapping Screw - M3x6	45-109

Part No.	Description	Page and Index No
0443 0060B	Hexagon Tapping Screw - M3x6	53-101
0443 0060B	Hexagon Tapping Screw - M3x6	55-104
0443 0060B	Hexagon Tapping Screw - M3x6	73-108
0443 0060B	Hexagon Tapping Screw - M3x6	21-103
0443 0060W	Hexagon Head Tapping Screw - M3x6	25-104
0443 0060W	Hexagon Head Tapping Screw - M3x6	51-102
0443 0080B	Tapping Screw - M3x8	45-102
0443 0080B	Tapping Screw - M3x8	73-109
0443 0080W	Hexagon Head Tapping Screw - M3x8	33-102
0452 3010B	Tapping Bind Screw - M3x10	39-107
0453 4006B	Tapping Screw - 4x6	17-103
0573 0040E	Hexagon Headless Set Screw - M3x4	65-102
0573 0040E	Hexagon Headless Set Screw - M3x4	35-101
0573 0100E	Hexagon Headless Set Screw - M3x10	35-111
0574 0050E	Hexagon Headless Set Screw - M4x5	35-105
0622 0100E	Spring Pin - 2x10mm	23-104
0623 0160E	Spring Pin - 3x16mm	21-106
0707 8140B	Bushing - 8x14mm	63-101
0720 0015E	Retaining Ring - 1.5	41-104
0720 0020E	Retaining Ring - M2	41-106
0720 0030E	Retaining Ring - M3	19-106
0720 0030E	Retaining Ring - M3	45-104
0720 0030E	Retaining Ring - M3	17-101
0720 0030E	Retaining Ring - M3	43-105
0720 0030E	Retaining Ring - M3	75-102
0720 0030E	Retaining Ring - M3	55-103
0720 0040E	Retaining Ring - M4	53-103
0720 0040E	Retaining Ring - M4	57-103
0720 0040E	Retaining Ring - M4	59-101
0720 0040E	Retaining Ring - M4	25-103
0720 0040E	Retaining Ring - M4	35-102
0720 0040E	Retaining Ring - M4	75-103
0720 0040E	Retaining Ring - M4	43-107
0720 0040E	Retaining Ring - M4	23-101

Part No.	Description	Page and Index No.
0720 0040E	Retaining Ring - M4	37-106
0720 0040E	Retaining Ring - M4	55-106
0720 0040E	Retaining Ring - M4	49-101
0720 0040E	Retaining Ring - M4	41-102
0720 0040E	Retaining Ring - M4	27-103
0720 0040E	Retaining Ring - M4	29-106
0720 0040E	Retaining Ring - M4	61-103
0720 0040E	Retaining Ring - M4	67-104
0720 0040E	Retaining Ring - M4	39-108
0720 0060	Retaining Ring - M6	65-111
0720 0060E	Retaining Ring - M6	47-103
0720 0060E	Retaining Ring - M6	63-103
0720 0060E	Retaining Ring - M6	65-110
0720 0060E	Retaining Ring - M6	67-103
0720 0060E	Retaining Ring - M6	35-106
0720 0060E	Retaining Ring - M6	21-104
0720 0060E	Retaining Ring - M6	27-104
0725 0100E	Retaining Ring C - M10	37-107
0725 0120E	Retaining Ring C - M12	49-104
0725 0300E	Retaining Ring C - M30	47-106
0727 0090E	Retaining Ring C - M9	39-101
0740 3008	Ball Bearing - 8x22x7	65-101
0740 3008	Ball Bearing - 8x22x7	35-107
0800 0072	Philips Pan Head Screw - M2.6x4	37-105
0801 0137	Philips Pan Head Screw With Spring	71-109
0802 5085	Tapping Screw - M4x8	15-103
0802 5094	Tapping Truss Head Screw - M4x8	9-103
0802 5094	Tapping Truss Head Screw - M4x8	19-103
0802 5221	Tapping Screw - M3x10	65-108
0802 5231	Tapping Screw - M3x6	33-106
0802 5231	Binding Self-tapping Screw - M3x6	39-105
0802 5231	Tapping Screw - M3x6	37-103
0802 5232	Tapping Screw - M3x8	57-102
0802 5232	Binding Self-tapping Screw - M3x8	45-103

Part No.	Description	Page and Index No
0802 5232	Tapping Screw - M3x8	29-103
0802 5233	Tapping Screw - M3x10	37-104
0802 5233	Binding Self-tapping Screw - M3x10	43-102
0802 5233	Tapping Screw - M3x10	41-109
0802 5234	Tapping Screw - M3x12	57-105
0802 5236	Tapping Screw - M4x8	57-104
0802 5236	Tapping Screw - M4x8	65-107
0802 5236	Tapping Screw - M4x8	59-107
0802 5236	Tapping Screw - M4x8	55-105
0802 5236	Tapping Screw - M4x8	61-101
0802 5236	Tapping Screw - M4x8	21-102
0802 5236	Tapping Screw - M4x8	51-101
0802 5237	Tapping Screw - M4x10	29-101
0802 5238	Tapping Screw - M4x12	39-106
0803 0017	Knob Screw - M4x6.5	43-103
0805 3384	Bushing - 5mm	43-108
0805 3415	Ball Bearing - 9x20x6	39-102
0805 3471	Bushing - M8x22x7	41-107
0805 3480	Bushing - 6mm	61-106
0805 3480	Bushing - 6mm	23-102
0805 3480	Bushing - 6mm	59-109
0805 3485	Bushing - 8x12x3.5mm	45-101
0805 3490	Bushing - 5x10x4 mm	45-105
0950 4006M	Philips Screw With Flat Washer - M4x6	47-105
0951 3005B	Philips Screw With Flat Washer M3x5	33-105
0951 3006B	Philips Screw With Flat Washer - M3x6	73-102
0951 3006B	Philips Screw With Flat Washer - M3x6	71-110
0951 3006B	Philips Screw With Flat Washer - M3x6	31-101
0951 3006B	Philips Screw With Flat Washer - M3x6	57-101
0951 3006B	Philips Screw With Flat Washer - M3x6	27-101
0951 3008B	Philips Screw With Flat Washer - M3x8	41-105
0951 4006B	Philips Screw With Washer - M4x6	29-104
0951 4006B	Philips Screw With Washer - M4x6	35-109
0951 4008B	Philips Screw With Washer - M4x8	53-102

Part No.	Description	Page and Index No.
0951 4008B	Philips Screw With Washer - M4x8	35-104
0951 4012B	Philips Screw With Flat Washer	65-103
0951 5010B	Philips Screw With Washer - M5x10	41-108
0952 4008B	Sem's Screw - M4x8	65-109
0953 4008M	Screw - M4X8	9-105
0954 3010B	Philips Screw - M3x10	47-101
0954 4012B	Double Sems Screw - M4 X 12	47-102
0960 4005B	Philips Flange Screw - M4 X 5	33-101
0960 4010B	Philips Flange Screw - M4x10	77-101
0960 4012W	Philips Flange Screw - M4x12	17-102
0964 4006B	Tapping Screw With Flat Washer - M4x6	75-104
0964 4006B	Tapping Screw With Flat Washer - M4X6	9-107
0964 4008B	Tapping Screw With Flat Washer - M4x8	9-102
0964 4008B	Tapping Screw With Flat Washer - M4x8	73-107
0964 4008W	Tapping Screw With Flat Washer - M4x8	31-106
0965 3006B	Tapping Screw With Flat Washer M3x6	15-105
0965 3008B	Tapping Screw With Washer - M3x8	45-108
0965 3008W	Tapping Screw With Flat Washer - M3x8	29-105
0965 3010B	Tapping Screw - M3X10	43-104
0971 3006A	Philips Polycarbonate Screw - M3x6	43-109
1002 0307	Jumper Wire	81-184
1005 0890	Decal - TUV	9-106
1102 3822	Connector - 20P	81-197
1102 4052	Optional Connector	73-104
1102 4052	Optional Connector	71-102
1102 4202	Connector - 3p	81-102
1102 4205	CT Header- 6p	81-103
1102 4206	Connector - 7p	81-104
1102 4207	Connector - 8p	81-105
1102 4208	Connector - 9p	81-106
1102 4210	Connector - 11p	81-107
1102 4211	CT Header - 12p	81-108
1102 4212	CT Header - 15p	81-109
1102 4473	CT Connector - 2p	73-103

Part No.	Description	Page and Index No
1102 4497	Connector - 13p	81-110
1102 4619	Connector - 2p	81-111
1102 4620	CT Header - 3p	81-112
1102 4621	CT Header - 4p	81-113
1102 4623	CT Connector - 6p	81-114
1102 4624	CT Connector - 7P	81-115
1102 4625	CT Connector 8p	81-116
1102 4628	Connector - 11p	81-117
1102 4629	Connector - 12P	81-118
1102 4630	CT Connector	81-119
1102 4637	CT Connector - 8P	81-120
1102 4639	CT Connector - 10P	81-121
1102 4640	Connector - 11p	81-122
1102 4642	CT Connector - 15p	81-123
1102 4643	CT Connector - 2p	81-124
1102 5007	CT Header - 14p	81-125
1102 5305	Connector - 6P	81-126
1102 5605	Connector - 13P	81-127
1102 5718	Optical Fiber Connector	81-128
1102 6408	Connector - 30P	81-129
1102 6613	Relay Terminal - 2P	41-101
1102 6762	CT Connector - 13p	81-130
1103 1772	Pin Header - 6p	81-131
1103 1774	Pin Header - 8p	81-132
1104 0271	IC SOCKET - 28P	81-195
1104 0612	Connector - 40P	81-196
1105 0008	Nylon Clamp - 2n	31-110
1105 0192	Locking Support	67-101
1105 0192	Locking Support	73-101
1105 0196	Wire Clamp	45-107
1105 0199	Clamp	55-101
1105 0199	Clamp	67-102
1105 0199	Clamp	61-105
1105 0199	Clamp	59-106