354 46 83 Маликин Виктор Максимович

RICOH

RICOH FT4060/FT4030

FIELD SERVICE MANUAL

РЕМОНТ И
ОБСЛУЖИВАНИЕ
ОФИСНОЙ
ТЕХНИКИ

Алексей
Воеводин

сервисный инженер

моб.тел.:
8-097-58-36-777
e-mail:toner@ukr.net

RICOH COMPANY, LTD.

SECTION 1

INSTALLATION REQUIREMENTS

1. INSTALLATION REQUIREMENTS

1-1. Environment 1-1

1-2. Machine Level 1-2

1-3. Minimum Space Requirements 1-3

1-4. Power Source 1-4

1-1. ENVIRONMENT

1. Temperature Range : 10°C to 30°C (50°F to 86°F)
2. Humidity Range : 15% to 90% RH
3. Ambient Illumination : Less than 1,500 luxs
   (Do not expose to direct sunlight)
4. Ventilation : Room air should turn over at least 3 times/hour.
5. Ambient Dust : Less than 0.15 mg/m^3 (4 x 10^{-3} Oz/yd^3)
6. Room Size : More than 10 m^3 (13.4 yd^3)
7. If the installation place is airconditioned or heated, place the machine.
   a. Away from where it may be subjected to sudden temperature changes from low to high, or vice versa.
   b. Away from where it is directly exposed to cool air from an air-conditioner in the summer.
   c. Away from where it is directly exposed to reflected heat from a space heater in winter.
8. Avoid placing the copier in a gas-filled area.
9. Avoid any area higher than 2,000 m (6,500 feet) above sea level.
10. Place the copier on a strong and level base.
11. Avoid any area where the copier may be subjected to frequent strong vibration.

1-2. MACHINE LEVEL

1. Front to Back:
   Within 5 mm (0.2") of level.

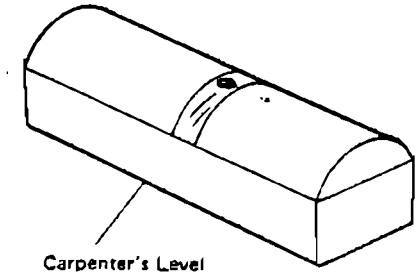

2. Right to Left:
   Within 5 mm (0.2") of level.
   (Legs may be screwed up or down to level the machine. Set a carpenter's level on the exposure glass.)

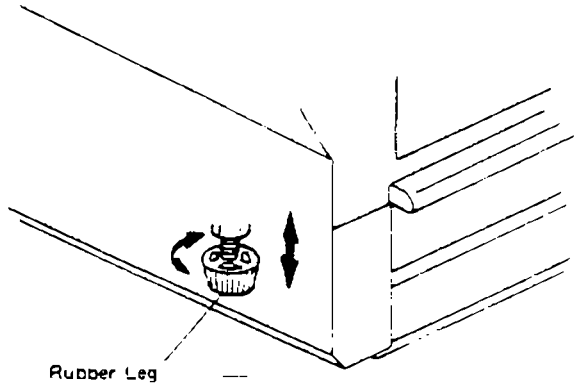

1-3. MINIMUM SPACE REQUIREMENTS

1. Front: 70 cm (27.6")
2. Back : 10 cm (3.9")
3. Right: 80 cm (31.5")
4. Left : 10 cm (3.9")

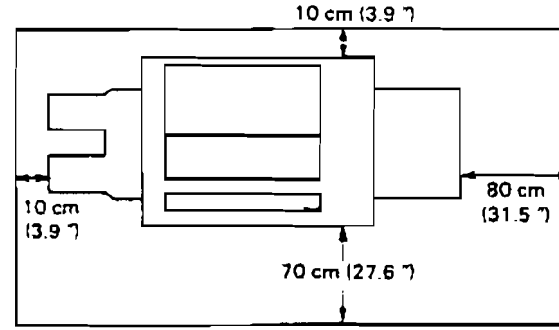

1-4. POWER SOURCE

1. Input Voltage Level
   115V/60Hz : More than 12A
   220V/50Hz : More than 7A
   240V/50Hz : More than 6A
2. Permissible Voltage Fluctuation: ±10 %
3. Permissible Extension Cord:
   At least 300V, 30A capacity and less than 5 m (16.4") long.

NOTE: 1. Be sure to ground the machine. (Do not connect the grounding wire to a gas pipe.)
2. Make sure the plug is firmly inserted in the outlet.
3. Avoid multi-wiring.
4. Do not set anything on the power cord.

SECTION 2

UNPACKING

2. UNPACKING

2-1. Unpacking Procedure 2-1

2-2. Accessory Check 2-5

2-1. UNPACKING PROCEDURE

1. Remove 4 box joiners and the top box as shown in the figures right.
2. Take out the accessories.
3. Remove the cushion block.
4. Open the vinyl bag.
5. Take out the machine.

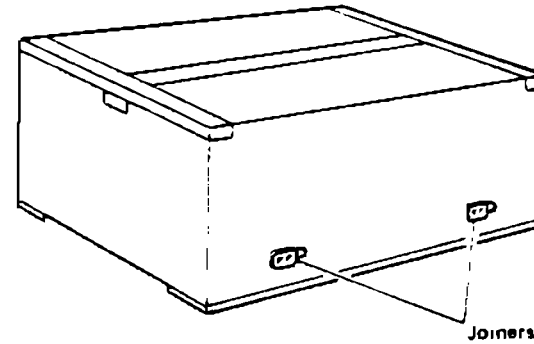

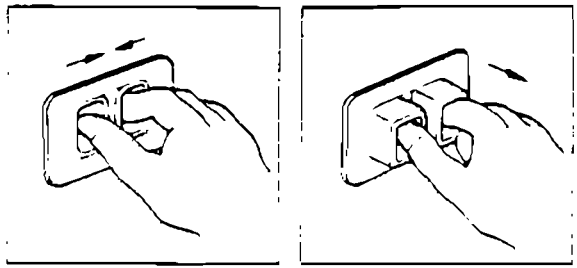

Squeeze and pull out the inner portion of the Box Joiner

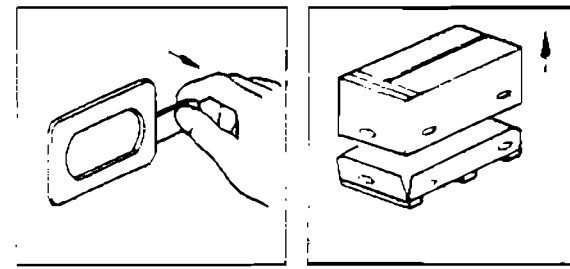

Pull out the outer portion of the Box Jointer and take off the Top Box

6. Take off the two strips of tape holding the platen cover.

7. Take off the strip of tape holding the upper feed roller guide. (FT4060)

FT4060

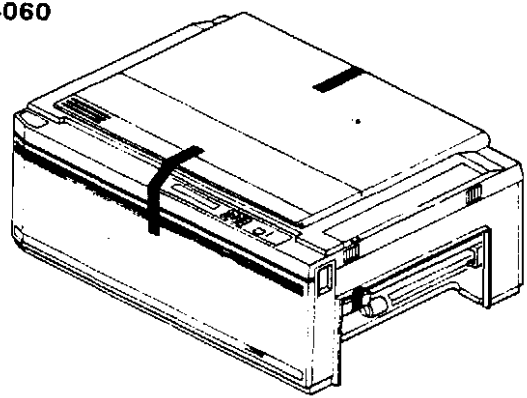

FT4030

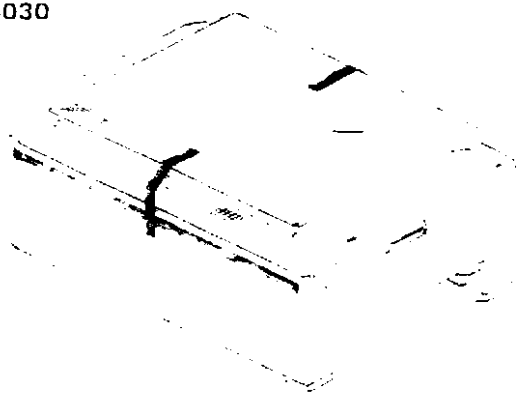

8. Take off the strip of tape holding the transfer/separation corona unit.

9. Remove the wedge from between the registration rollers.

10. Remove the left inner cover.
Then, pull out the fusing unit.

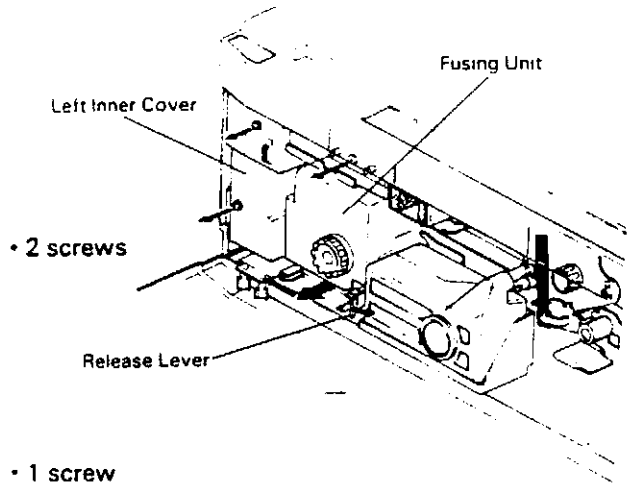

11. Remove the scanner lock plate.
NOTE: Do not throw away the scanner lock plate.
It is necessary to reinstall it if the copier is transported to a new location.

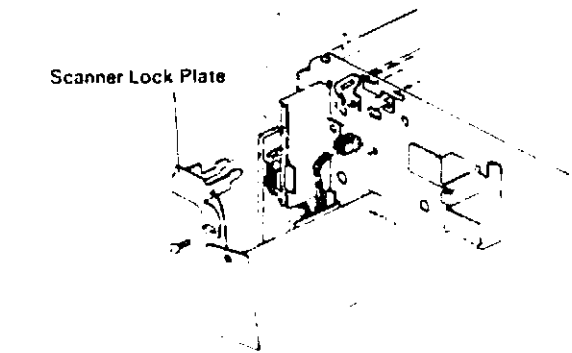

12. Turn the lens lock lever to the down position. The projection on the lever must be set in the hole in the charge corona power pack cover. (FT4060)
    CAUTION: Do not forget to remove the warning tag.

13. Reassemble the copier.

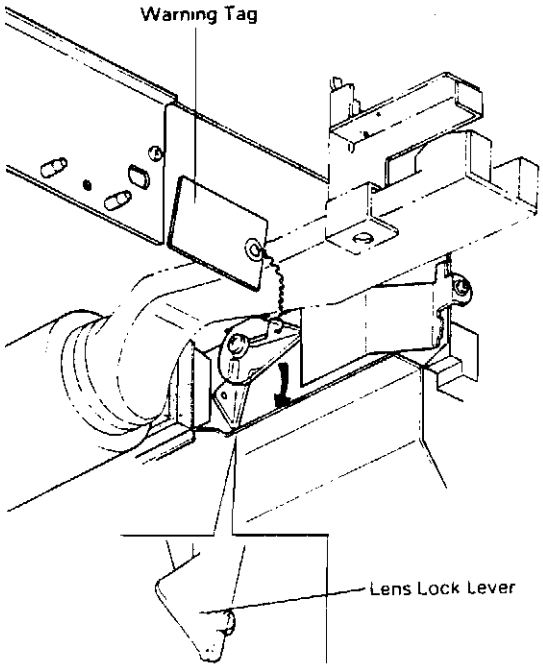

2-2. ACCESSORY CHECK

Check quantity and condition of the accessories in the box according to the New Equipment Condition Report or the following list.

1. Large Universal Cassette 2 (FT4060), 1 (FT4030)
2. Small Universal Cassette 1
3. Copy Tray 1
4. Original Tray 1
5. N.E.C.R. 1
6. Operating Instructions 1
7. Operating Instructions Holder 1
8. Selenium Drum 1
9. Cassette Holder 2 (FT4060), 1 (FT4030)
10. Toner Collection Bottle ..... 1 (Another in the copier)
11. Oil Tube Plug 1
12. Envelope for N.E.C.R. (115V/60Hz) ... 1
13. Pipette 1
14. Installation Procedure 1
15. Additional Multilanguage Operating Instructions, and Decals (220,240V/50Hz) 1

SECTION 3

INSTALLATION

3. INSTALLATION

3-1. Installation

3-2. Cassette Modification

3-3. Key Counter Holder Installation

3-4. Modifying Main Transformer Voltage

3-1. INSTALLATION

1. Check the machine level.
2. Open the front cover.
3. Pull out the fusing unit.
4. Remove the fusing unit cover and oil pad pressure plate.
5. Apply silicon oil to the oil supply pad.
6. Reassemble the fusing unit.
7. Fill the oil bottle with silicone oil, and set it in place on the oil bottle holder.
8. Reset the fusing unit.
9. Push down the corona unit release lever.
10. Remove the corona unit together with the corona wire cleaner.
11. Take off the drum stay.

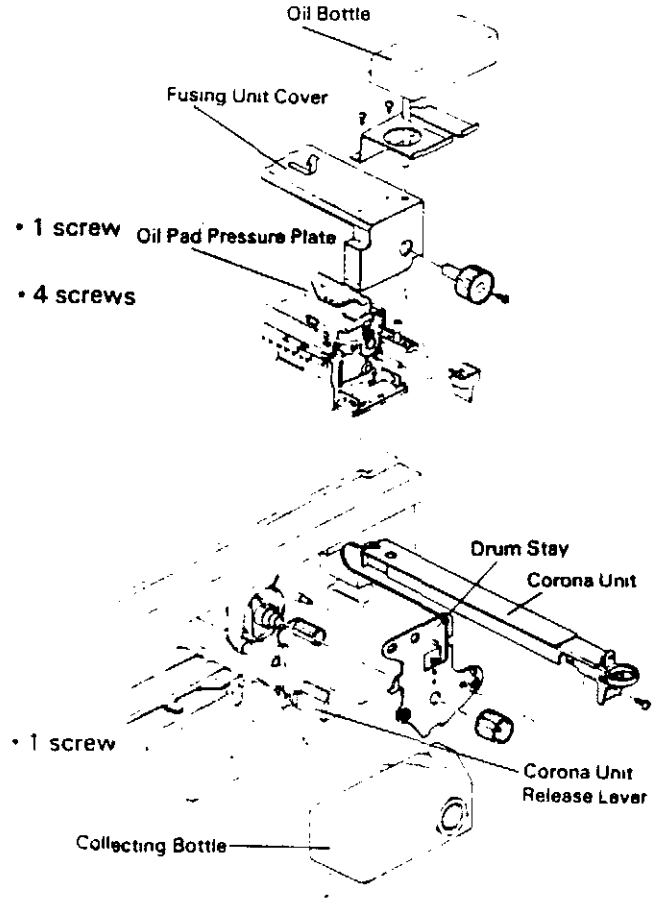

12. Pull out the development unit and the drum flange, and release the cleaning unit.

13. Remove the protective sleeve and dust the new drum with setting powder (in a dark place); then, insert the drum with the protective sleeve on it.

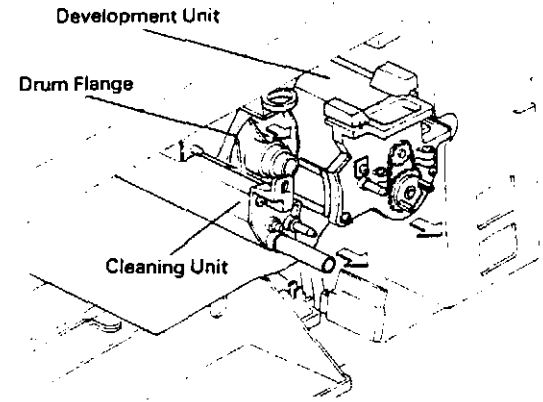

14. Pour one bottle of developer (1 kg RICOH TYPE 4000) into the development unit.
While pouring the developer, turn the knob counterclockwise to smooth the developer.

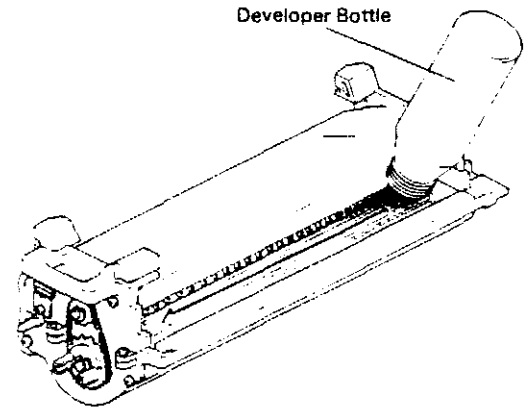

15. Pull out the protective sleeve and insert the drum flange.
    NOTE: Save the drum protective sleeve for future use when servicing the copier.

16. Insert the development unit.

17. Reset the cleaning unit, charge corona unit with wire cleaner, and the drum stay.
    Then, raise the corona unit release lever.

• 1 screw

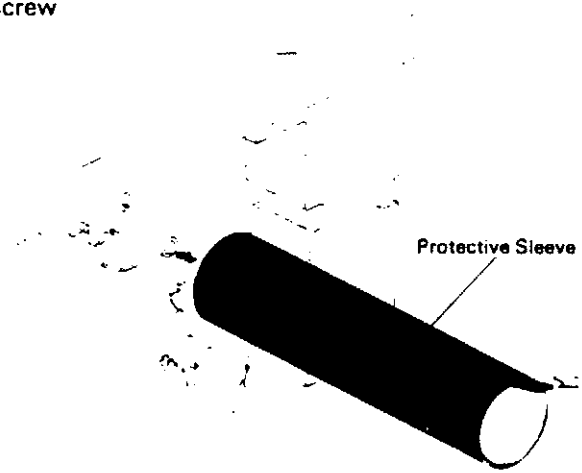

18. Remove the lower operation panel cover.
    • 1 screw
19. Turn on DIP SW #2, and close the front cover.
20. Lay a white sheet of A3 or 11" x 17" paper on the exposure glass before lowering the platen cover.
21. Turn on the main switch, and select 50 copies.
22. After warm up, press the print key.
23. After the machine stops, open the front cover.
24. Turn off the main switch.
25. Turn off DIP SW #2.
26. Reinstall the lower operation panel cover.
    NOTE: When installing the lower operation panel, be sure to set the locating pin on the panel into the cutout in the front frame of the machine.
27. Load one cartridge of toner (RICOH TYPE 4000) in the toner tank.
28. Install cassette holders, cassettes, and copy tray.
29. Fill out NEW EQUIPMENT CONDITION REPORT.

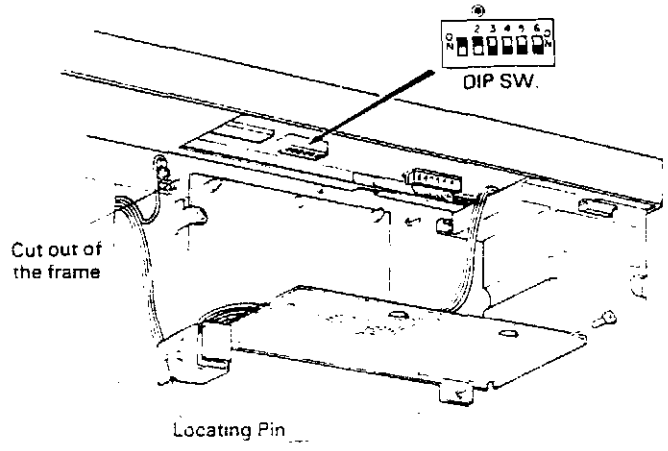

3-2. CASSETTE MODIFICATION

1. Take off the cassette cover.

2. Install the side fences. Secure each fence with two screws. The small size cassette uses two side fences and one rear fence; the large cassette uses four side fences and one rear fence.

   NOTE: The fence positions for the various paper sizes are printed on the bottom of the cassette.

3. Stick the proper paper size decals on the cassette at the positions shown.

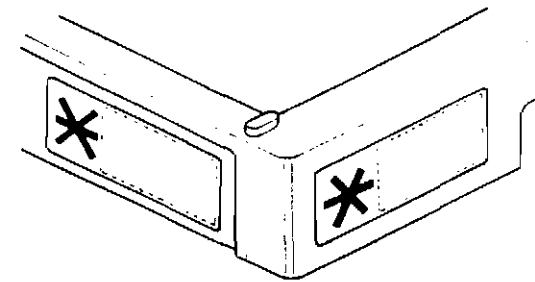

4. Push and stick actuator magnets firmly on the cassette according to the table to the right.

   NOTE: Make sure the magnet positions are clean before installing the magnets.

5. Replace the cassette cover and insert the cassette in the cassette holder. Check the paper size indicator on the FL screen.

6. Load paper in the cassette and make copies. Check copy speed and copy image.

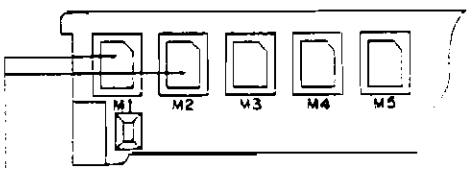

Sticking position

Paper Size	M1	M2	M3	M4	M5	Cassette Size
A3	0	0	0	0	1	L
B4	0	0	1	0	0	L
A4 Lengthwide	0	0	0	1	0	L
A4 Sidewise	0	0	0	1	1	S
B5 Lengthwise	0	0	1	0	1	S
B5 Sidewise	0	0	1	1	0	S
A5/B6 Lengthwise	1	0	0	0	1	S
A6 Lengthwise	1	1	0	0	0	S
11" x 17"	0	1	0	0	0	L
8-1/2" x 11" Lengthwise	0	1	0	0	1	L
8-1/2" x 11" Sidewise	0	1	0	1	0	S
8-1/2" x 13"	1	0	0	1	0	L
8-1/2" x 14"	1	0	0	1	1	L
8-1/2" x 5-1/2"	1	1	0	0	1	S
8-1/4" x 13"	1	0	1	1	0	L
8-1/4"x 14"	1	0	1	1	0	L
8" x 10"	1	0	1	0	0	L
8" x 13"	0	0	1	1	1	L
10" x 14", 10" x 15"	1	0	1	0	1	L
Option	1	0	0	0	0	

L: Large Univarsal
S: Small Univarsal

3-3. KEY COUNTER HOLDER INSTALLATION

1. For the FT4060 remove the right cover. • 4 screws
   For the FT4030 remove the key counter cover. • 2 screws
2. Open the front cover and remove the right inner cover. • 3 screws
3. Remove the cover plate and fixing plate from the key counter bracket.
4. Hold the fixing plate on the inside of the key counter bracket and insert the key counter holder.
5. Align the holes in the fixing plate with the mounting holes of the key counter holder and secure the key counter holder.
   NOTE: This copier can use three types of the counter. Make sure to use the correct holes in the fixing plate.
6. Remove the shorting plug from the key counter connector.
7. Plug in the key counter holder.
8. Reassemble the copier and check key counter operation.

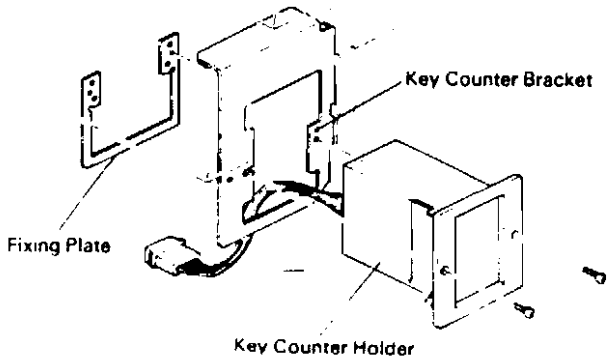

3-4. MODIFYING MAIN TRANSFORMER VOLTAGE (220 to 240V)

1. Remove the rear cover • 2 screws
2. Disconnect the black input line from the 220V terminal. • 1 screw
3. Connect the this line to the 240V terminal. • 1 screw

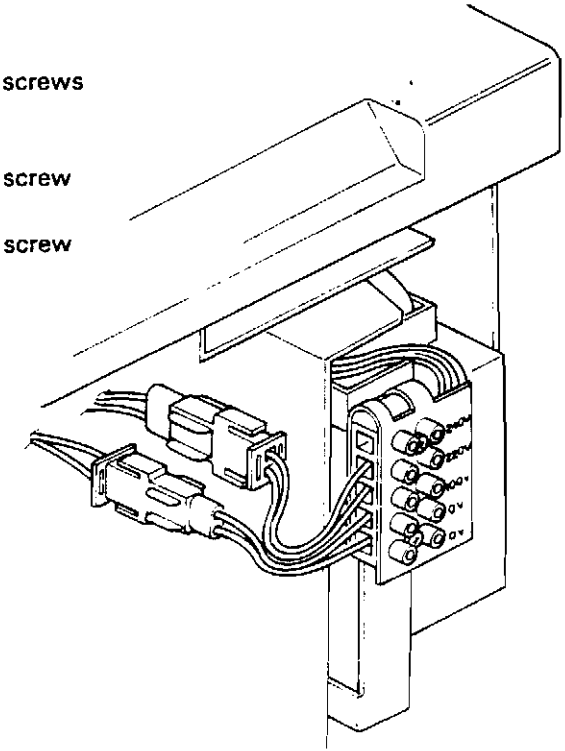

SECTION 4

PREPARATION FOR TRANSPORTING THE COPIER

PREPARATION FOR TRANSPORTING THE COPIER

Before moving the copier from its place of installation, be sure to prepare it for transportation as follows.
The copier may be badly damaged if it is moved without proper preparation.

1. After setting the lens to the enlarge position, turn off the main switch; then, turn the lock lever to the upper position. (FT4060)

CAUTION: While transporting the copier by car, always cover the copier to avoid direct sunshine, and do not leave it in a car to avoid extream hot or cold conditions.

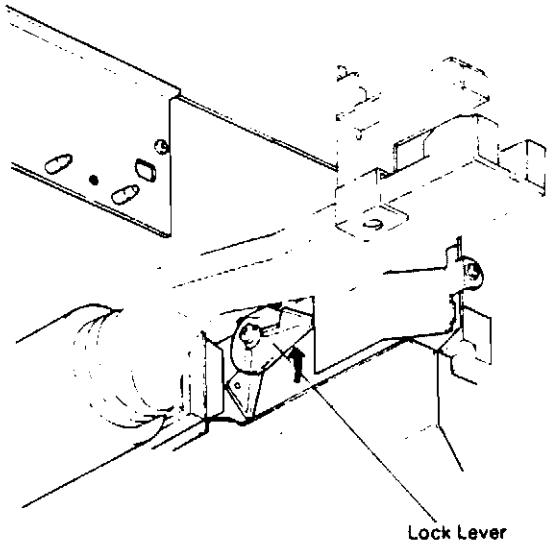

2. Remove the left inside cover and insert the scanner lock plate.
   NOTE: • Confirm that the scanner is at the home position.
   • Do not push the lock plate in strongly. Make sure that the lock plate is set correctly; the scanner must not be lifted off of the guide rail.

3. Take out the oil tank and plug the oil tank tube.

4. Using a pipette, remove all silicone oil from the oil sump. Then, reset the fusing unit.

5. Set the toner tank lid.

6. Remove the developer and clean the development unit.

7. Insert the drum protective sleeve.

8. Reinsert the development unit and set the drum stay.

9. Place a wedge between the registration rollers, and tape the transfer/separation corona unit in the upper position.

10. Fix the front cover, platen cover, and toner inlet cover with tape.

• 1 screw

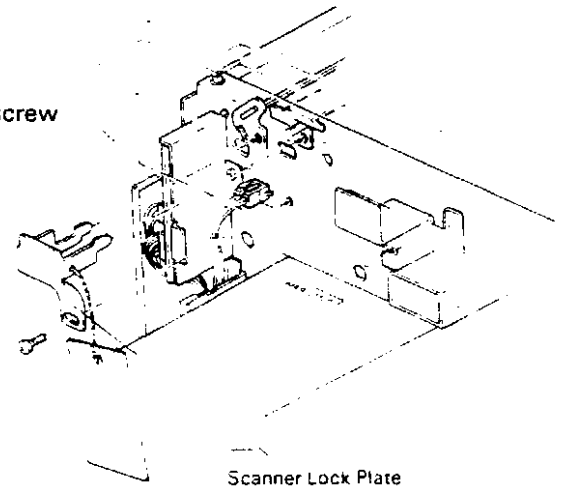

Scanner Lock Plate

SECTION 5

REMARKS

5. REMARKS

5-1. Points to Remember 5-1

5-2. Handling the Drum 5-4

5-3. Toner Collection Bottle 5-5

5-1. POINTS TO REMEMBER

Drum Charge

1. The corona wires should be cleaned at every service call by sliding the corona unit or with dry cloth.
   Do not use emery paper or alcohol for wire cleaning.
2. Do not touch the corona wires with oily hands.
3. Make sure that the corona wires are correctly inserted between the cleaner pads.

Exposure

1. Do not adjust the following parts:
   a : First and second scanner height adjusting cams. (1 screw each)
   b : Scanner Guide Plate (3 screws)
   c : Lens Axis Adjusting Cam (1 screw)
   d : Lens Position Adjusting Screw.
   e : Fourth Mirror Angle Adjusting Screw.
2. The scanner home sensor and the lens home sensor should be adjusted only when newly installed.
3. Do not bend or damage the lens support plate or the mylar strip.
4. Launa oil or an equivalent oil should be used to lubricate or clean the following
   a. Scanner Guide Rod (cleaning)
   b. Scanner Guide Rod Pads (Lubrication)
   c. Scanner Guide Plate (Lubrication/Cleaning)
   d. Lens Drive Screw Shaft (Lubrication)

   CAUTION: Do not use silicone oil or any other kind of oil.
5. Clean the exposure glass with glass cleaner and a dry cloth.
6. Do not touch the following parts with bare hands:
   a. Reflectors
   b. Exposure Glass
   c. Mirrors and Lens
7. Do not adjust the VR on the optics PCB.

Development

1. Be careful not to nick or scratch the development roller sleeve.
2. Do not turn the development roller in the opposite direction.
3. Place a sheet of paper under the development unit when it is out of the copier.
4. Clean the development unit guide plate before reinstalling the unit.

Toner

1. Toner density sensor should be cleaned at every EM or PM with a blower brush.
2. Do not touch the sensor pattern with bare hands.
3. Toner density sensor adjustment is required when:
   a. A new drum is installed.
   b. The sensor (first quenching unit) is taken out and reinstalled.
   c. The first quenching PCB is replaced.

Cleaning

1. Do not damage the edge of the cleaning blade.
2. Do not touch the cleaning brush with oily hands.
3. Before pulling out the cleaning unit, place the sheet of paper under it.
4. Be careful not to damage the drum with the pick-off pawls when pulling out or inserting the unit.
5. Toner collected from the cleaning unit can not be used again.

Second Quenching

1. Clean the lamp surface with finger or with a dry cloth.
   After cleaning it with a dry cloth, discharge any static electicity before reinstalling it.
   Never use a wet cloth to clean the E.L. lamp.

Paper Feed

1. Lubricate the paper feed motor worm with Launa oil or an equivalent oil periodically.

Fusing

1. After replacement of the oil blade and the hot roller, apply silicone oil to the top of the oil blade.
2. Be careful not to damage the edge of the hot roller strippers or their tension springs.
3. Be careful not to bend the pressure roller strippers.
4. Be sure that the fusing lamp is not in contact with the inner surface of the hot roller.

5-2. HANDLING THE DRUM

1. Never touch the drum surface with bare hands.

2. Store the drum in a cool dry place.

3. When cleaning the drum, always wear a pair of glooves.

4. Always prime the drum with setting powder after cleaning the drum, or before installing a new drum. This should be done within one minute in a locating not exposed to strong light.

5. To protect the drum, always apply setting poweder to a new cleaning blade and/or a new cleaning brush before installing them.

6. Drum conditioning is necessary when a new drum is installed. In addition, this should be done at the following times:
   1) When image density is reduced due to overexposure of the drum..
   2) After cleaning the drum.
   3) When the drum is lightly scratched.

7. Always keep the drum in the protective sleeve when inserting or pulling the drum out of the copier. (Except when applying setting powder.)

8. Before inserting or pulling out the drum, the cleaning unit should be pulled slightly out to avoid drum damage by the pick-off pawls.

9. Before inserting the protective sleeve on the drum while it is in the copier, always take out the development unit. If the sleeve is inserted while the development unit is in the copier, the edge of the sleeve will scrape developer off of the development roller.

5-3. TONER COLLECTION BOTTLE

When servicing the copier, always check the toner collection bottle. If it is full or nearly full remove it and install a new bottle as follows.

1. Remove the full bottle and insert the cap in the month.
2. Clean the toner collection bottle sensor with a blower brush.
3. Install a new toner collection bottle.

NOTE: 1) Each carton of toner (10 bottles) contains three new toner collection bottles.
2) The toner collection bottle will fill in 15K to 25K copies.
3) At each visit to the customer gather up all full toner collection bottles, and return them to the service center for disposal according to local regulations.

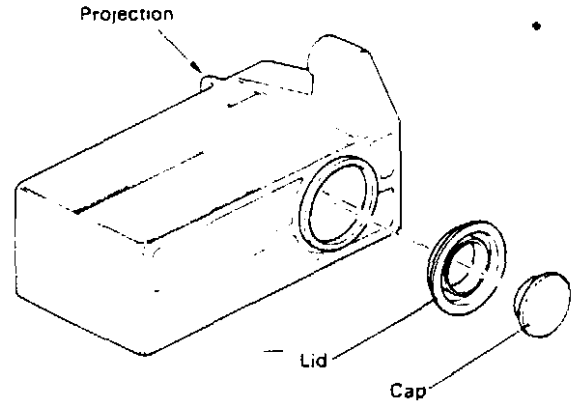

SECTION 6

REPLACEMENT AND ADJUSTMENT

6. REPLACEMENT AND ADJUSTMENT

6-1. Optics 6- 1

6-2. Development 6-19

6-3. Toner 6-25

6-4. Cleaning 6-31

6-5. Paper Feed 6-37

6-6. Transport 6-51

6-7. Fusing 6-55

6-8. Copy Image 6-71

6-9. Others 6-81

OPTICS

DEVELOPMENT

TONER

CLEANING

PAPER FEED

TRANSPORT

FUSING

COPY IMAGE

OTHERS

6-1. OPTICS

1- 1. Exposure Glass Removal 6- 2

1- 2. Exposure Lamp Replacement 6- 3

1- 3. Uneven Exposure Adjustment 6- 4

1- 4. Scanner Drive Wire Replacement (FT4060) 6- 5

1- 5. Scanner Drive Wire Replacement (FT4030) 6- 8

1- 6. Scanner Drive Motor Replacment (FT4060) 6-10

1- 7. Scanner Drive Clutch Removal (FT4030) 6-11

1- 8. Scanner Home Position Sensor Adjustment (FT4060) 6-12

1- 9. Scanner Drive Belt Tension Adjustment (FT4030) 6-14

1-10. Lens Drive Motor Replacement (FT4060) 6-15

1-11. Lens Home Position Sensor Adjustment (FT4060) 6-17

1-1. EXPOSURE GLASS REMOVAL

1. Take off the left scale.
2. Loosen the two screws that tighten the right glass holder.
3. Remove the exposure glass.
   CAUTION: Be sure not to dislodge the three rubber pads that support the exposure glass.
   Always use two short screws (M4 x 5) to the left scale. If long screws (M4 x 8) are used, they will hit the scanner, resulting in optics service call.

• 2 screws

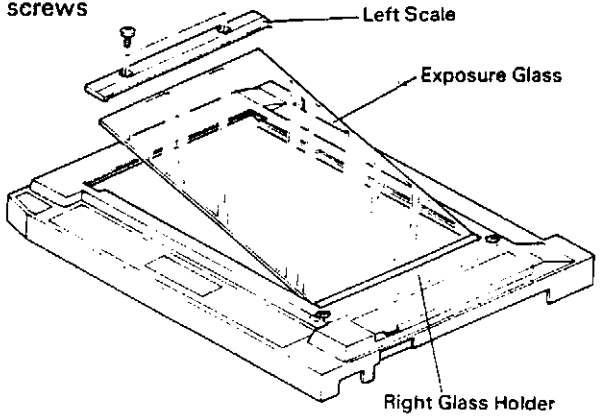

1-2. EXPOSURE LAMP REPLACEMENT

1. Remove the exposure glass.
2. Move the scanner to the position where the frame is cut out.
3. Unscrew the exposure lamp cover and slip it off to the right.
4. Rotate the lamp terminal as shown and take out the lamp.
5. Install a new lamp.
6. Check the lamp position and light intensity.
   CAUTION: • Do not handle the exposure lamp with your bare hands. Use a strip of paper as shown. (Finger marks (oil marks) on the lamp or reflectors will be affected by heat, resulting in discoloration.)
   • The projection on the lamp must point toward the mouth of the reflector.

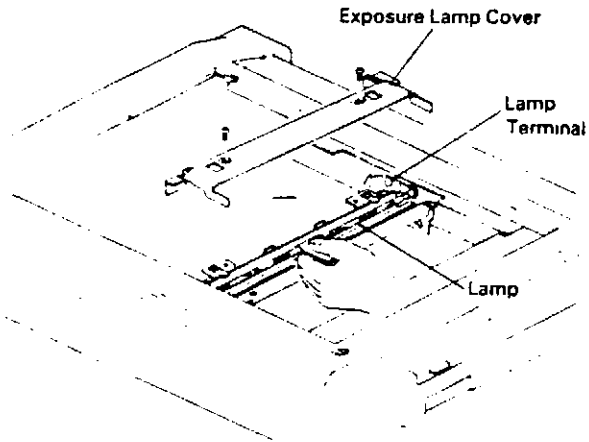

1-3. UNEVEN EXPOSURE ADJUSTMENT

I. Exposure Lamp Position (First check and adjust this)

1. Remove the top cover.
2. Remove the exposure glass.
3. Correct the horizontal position by tightening or loosening the two adjusting screws.
4. Correct the vertical position by turning the adjusting knobs. (Be sure to tighten the adjusting knob screws after adjusting the lamp position.)

II. Adjusting Plate

If uneven exposure still exists after the above adjustment, do the following:

1. Remove the exposure glass.
2. Move the adjusting plates as shown to increase or decrease edge illumination.

NOTE: The leading edges of the three adjusting plates must be aligned where they meet. (To avoid white streak.)

• 8 screws

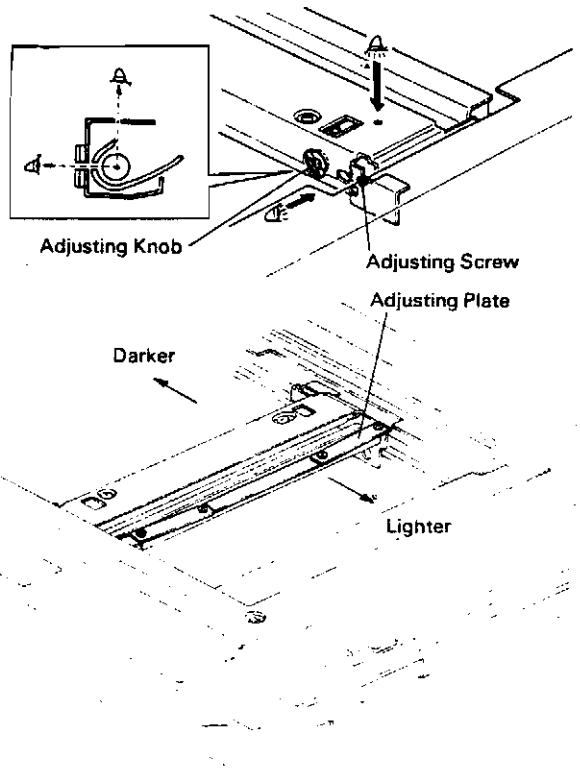

1-4. SCANNER DRIVE WIRE REPLACEMENT (FT4060)

1. Remove the platen cover and the platen cover mounting studs.
2. Remove the top cover. • 8 screws
3. Remove the exposure glass.
4. Remove the rear cover and lower the CPU plate.
5. Remove the following parts:
   - Inlet cooling fan • 2 screws 1 connector
   - Platen cover mounting brackets • 2 screws each
   - Bias transformer • 2 screws 1 connector

   NOTE: All screws installed in the horizontal direction must be short screws (M4 x 6).
6. Unhook the ends of the wire and take out the magnification change clamp. • 1 screw
7. Remove the old wire. • 1 screw
8. Clamp the new wire to the magnification change clamp as shown. The left end is about 180 mm (7.09").

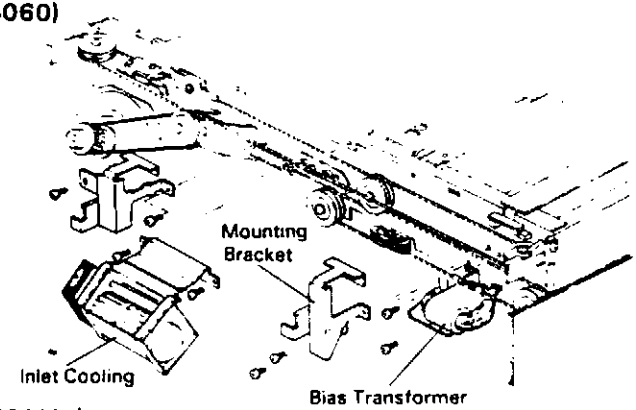

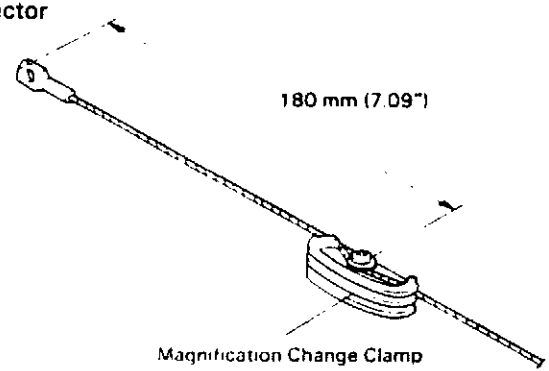

9. Reinstall the magnification change clamp. • 1 screw

10. Move the second scanner to the return position.

11. Working from the clamp, thread the long end of the wire in the lower groove of the clamp and run it under the inside track of the tension pulley. (WP1)

12. Then, run the wire under the outer track of the second scanner pulley (WP2), through the wire clamp (below the screw), and around the lower track of WP3.

13. Run the wire around the outer track of WP4, and then give it three and half (3.5) turns around the drive pulley starting form the inside edge.

14. Next, run the wire over the inner track of WP4, the lower track of WP6, the inner track of WP2, and the inner track of WP7.

15. Guide the left end of the wire through the upper groove of the magnification change clamp; then, pull the ends of the wire together and hook them.

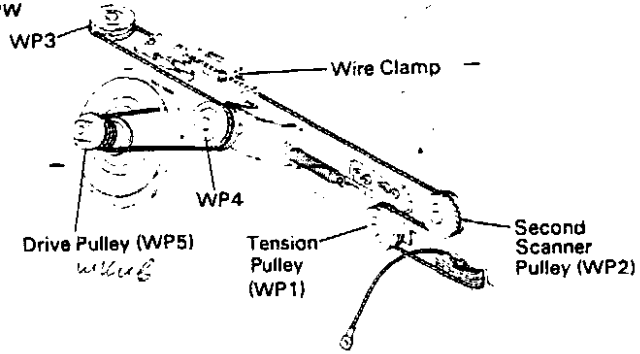

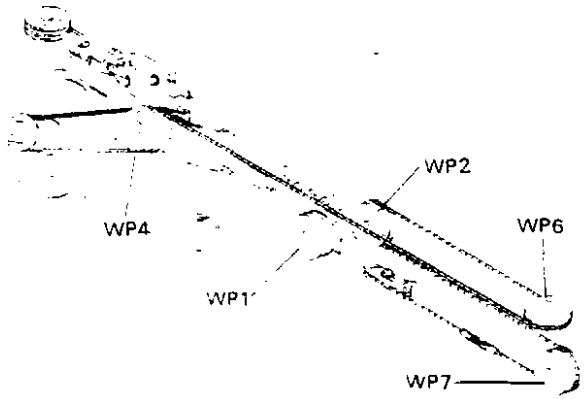

16. Tighten the wire clamp. (Be careful not to bend the bracket.)
    NOTE: Move the first scanner to the position Ⓐ and then move the second scanner to the position Ⓑ.

17. Manually rotate scanner drive pulley and check for overlapping of the scanner drive wire.

18. Reassemble the parts removed in step 5.

19. Check and adjust magnification.

20. Reassemble the copier.

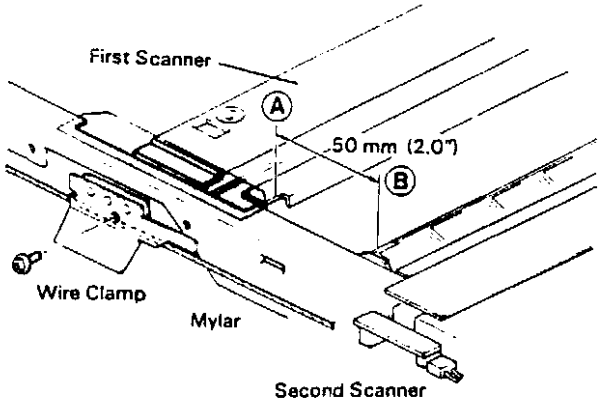

1-5. SCANNER DRIVE WIRE REPLACEMENT (FT4030)

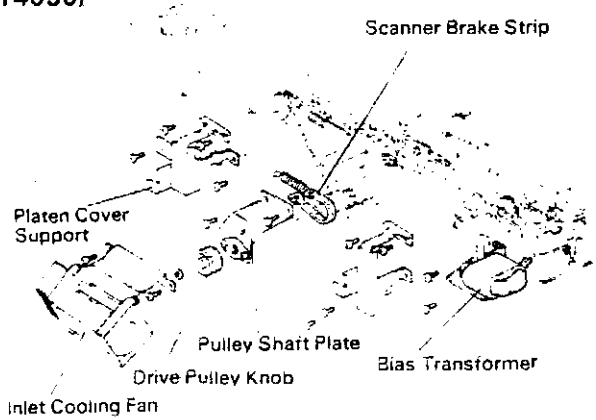

1. Remove the platen cover and platen cover mounting screws.
2. Remove the top cover. • 8 screws
3. Remove the left scale and the exposure glass.
4. Remove the rear cover and rotate the CPU plate down. • 2 screws each
5. Remove the following parts:
   - Inlet cooling fan • 2 screws 1 connector
   - Platen cover supports • 4 screws each
   - Bias transformer • 2 screws 1 connector
6. Take off the drive pulley knob. • 1 E-ring
7. Remove the pulley shaft support plate. • 2 screws
8. Unhook the scanner brake strip.
9. Loosen the wire clamp and remove the old wire.

10 Hook one end of the new wire to the anchor hook.

11 Run the wire under the inside track of WP1 and around the lower track of WP5.

12. Next, run the wire over the inside track of WP3.

13. Run the wire over the pulley, and wrap it around the pulley 3-1/2 times, starting from the inside edge of the pulley.

14. Then, run the wire over the outer track of WP3 and around the lower track of WP2.

15. Run the wire through the wire clamp (below the screw) and over the outside track of WP1.

16. Hook the free end of the wire to the tension bracket.

17. Tighten the wire clamp.
NOTE: • Be careful not to bend the bracket.
• See page 6-7 #16

18. Manually rotate the main pulley and check for overlapping of the scanner drive wire.

19. Reassemble the copier.

20 Check and adjust magnification

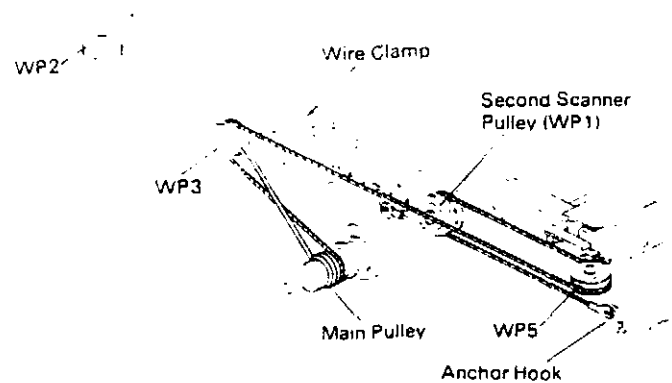

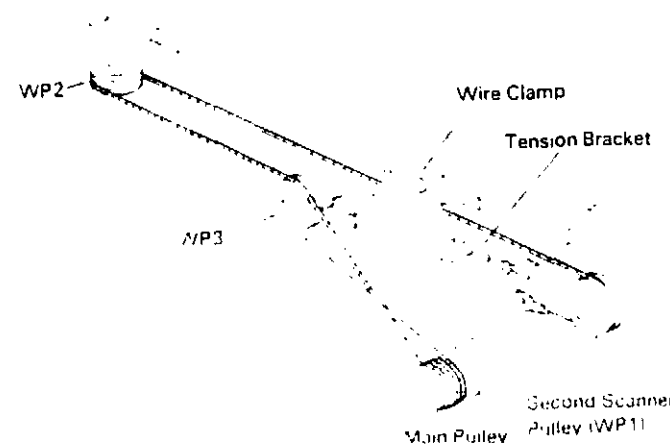

1-6. SCANNER DRIVE MOTOR REPLACEMENT (FT4060)

1. Take off the rear cover and lower the CPU plate. • 2 screws each
2. Take off the top cover, and remove the exposure glass. • 8 screws, 2 studs
3. Remove the right cover. • 4 screws
4. Uncouple the scanner drive motor connectors and unscrew the ground wire.
5. Tape the drive wire to the pulleys as shown to the right.
6. Slide the main pulley off of the motor shaft. • 2 allen screws
7. Replace the scanner drive motor. • 4 screws
8. Reassemble.

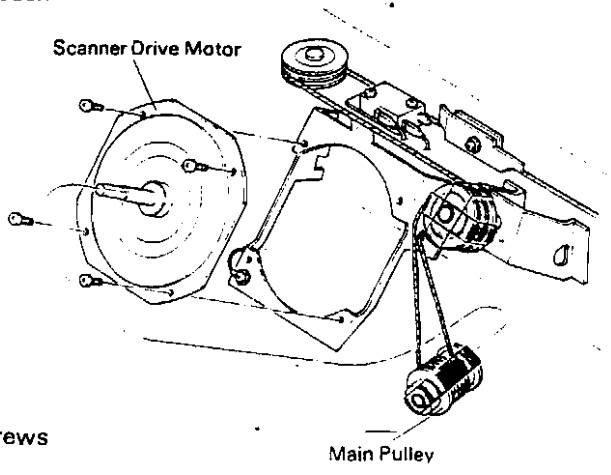

1-7. SCANNER DRIVE CLUTCH REMOVAL (FT4030)

1. Take off the rear cover and lower the CPU plate. • 2 screws each
2. Take off the inlet cooling fan. • 2 screws
3. Take off the main pulley knob. • 1 E-ring
4. Remove the pulley shaft support plate. • 2 screws
5. Unhook the clutch brake strip.
6. Tape the wire to the main pulley and WP3, and unhook the wire tightener spring.
7. Take off the main pulley. • 2 allen screws
8. Slip the scanner drive belt off of the pulley shaft.
9. Remove the scanner drive clutch • 3 screws
   • connector
   2 wire clamps

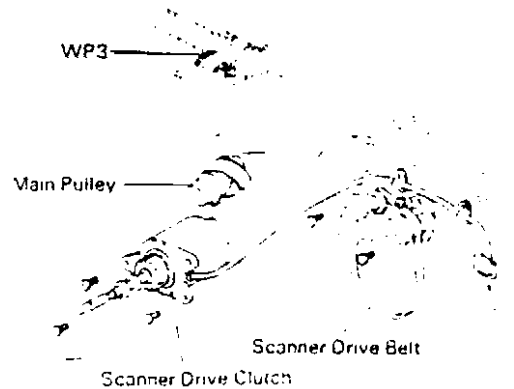

1-8. SCANNER HOME POSITION SENSOR ADJUSTMENT (FT4060)

1. Select full size mode.
2. Take off the rear cover and lower the CPU plate.
3. Turn the main pulley to move the scanner until the center of the M3 truss screw is 14 mm (0.55") from the left scale.
4. Connect the digital multimeter input line to pin 4 of IC21 on the optics PCB (or CN403-B5), and connect the multimeter COM line to logic ground. (The wire securing OSC1 is good for this.)
5. Remove the plate from the access slot above the home position sensor.
6. Loosen the home position sensor screw.
7. Slide the home position sensor just to the point where the multimeter changes from 0V to +5V.
   Tighten the sensor screw at this position.
   CAUTION Be careful not to damage PCB pattern.

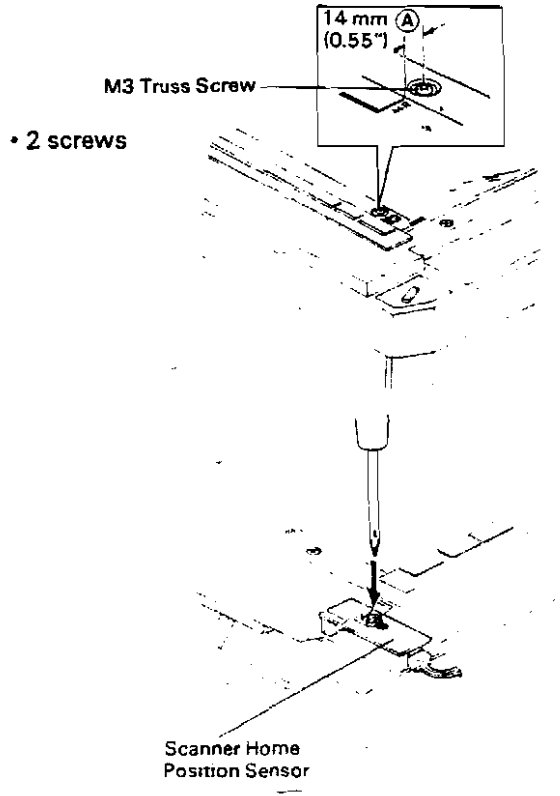

8. Check the adjustment:
   - Move the scanner away from the home position until the multimeter changes to low.
   - Then slowly move it back until the multimeter turns high again.
   - Check that at this position "Ⓐ" is 14 ± 0.5 mm. (0.55" ± 0.02")

NOTE: When the home sensor is properly positioned, the lead edge margin (erase, and registration) will be almost equal for all five magnifications.

1-9. SCANNER DRIVE BELT TENSION ADJUSTMENT (FT4030)

- Adjustment Standard: 750 ± 250 g (1.65 ± 0.55 lbs)

1. Remove the top cover. • 8 screws, 2 studs
2. Take off the inlet cooling fan. • 2 screws
3. Loosen the belt tightener bracket screw.
4. Pull up on the belt tightener bracket with a tension gauge. Tighten the bracket screw when the gauge reads 750 g (1.65 lbs).
   NOTE: Make sure the lower end of the tightener bracket is in the guide slot.

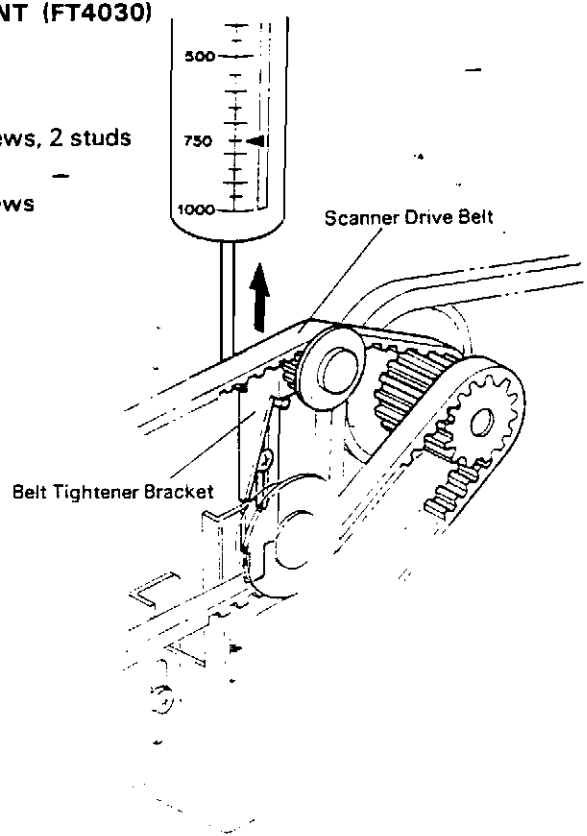

1-10 LENS DRIVE MOTOR REPLACEMENT (FT4060)

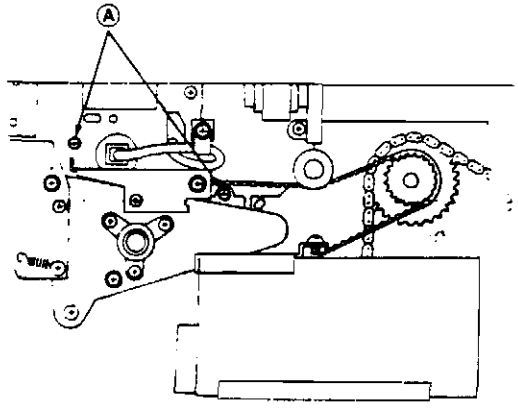

1. Remove the following parts:
   - Cleaning unit
   - Development unit
   - 2nd quenching lamp
   - Erase lamp
   - Charge corona unit • 1 screw
   - Selenium drum
   - Drum heater • 1 C-ring
   - Exposure glass • 4 screws
2. Take off the rear cover and lower the CPU plate. • 2 screws each
3. Remove the two screws Ⓐ securing the rear side of the above drum casing.
4. Remove the air duct and charge corona power pack cover. • 1 screw each
5. Take off the drum stay plate. • 3 screws
6. Take out the above drum casing. • 3 screws

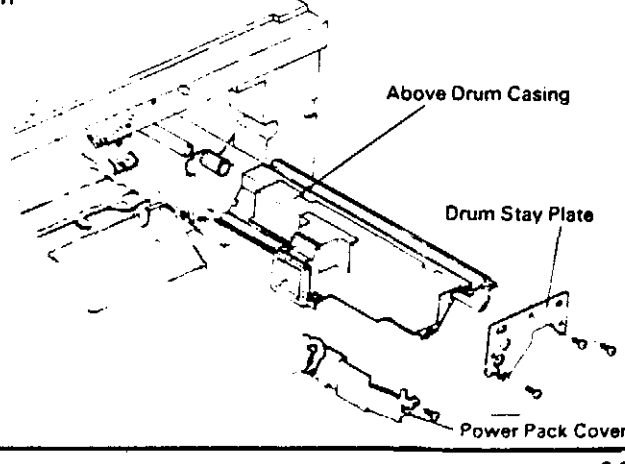

7. Remove the light shield cover. • 3 screws
8. Disconnect the lens drive motor connector and disengage it from the rear side plate.
9. Unscrew the two wire clamps holding the lens drive motor harness.
10. Remove the lens drive motor assembly. • 2 screws
11. Take off the motor cover. • 1 screw
12. Remove the motor gear. • 1 allen screw
13. Replace the lens drive motor. • 2 screws
14. Reassemble.

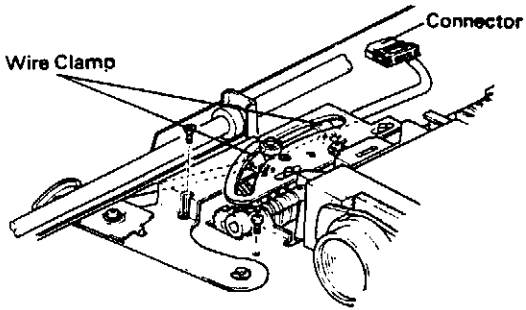

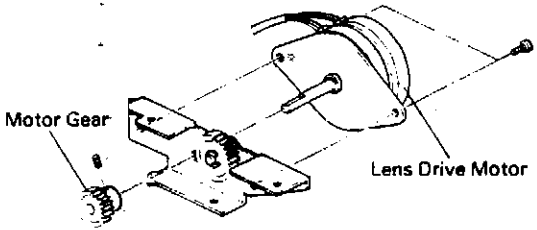

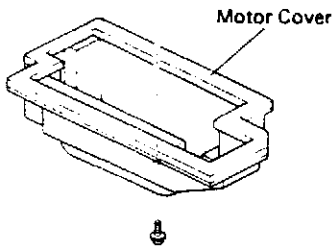

1-11. LENS HOME POSITION SENSOR ADJUSTMENT (FT4060)

1. Remove the exposure glass, light shield cover, and rear cover.
2. By turning the lens drive shaft, move the lens to the position where the center of the cam follower is aligned with the two holes in the second scanner drive cam as shown.
3. Connect the multimeter's COM line to logic ground and connect the input line to pin 10 of IC21 (or CN403-A7).
4. Loosen the sensor fixing screw.
5. Slide the sensor as far as possible toward the right.
6. Slowly slide the sensor back until the multimeter reading changes from +5V to 0V. Tighten the sensor screw at this position.
7. Make a copy and check the horizontal component of magnification.

• 2,3, and 2 screws

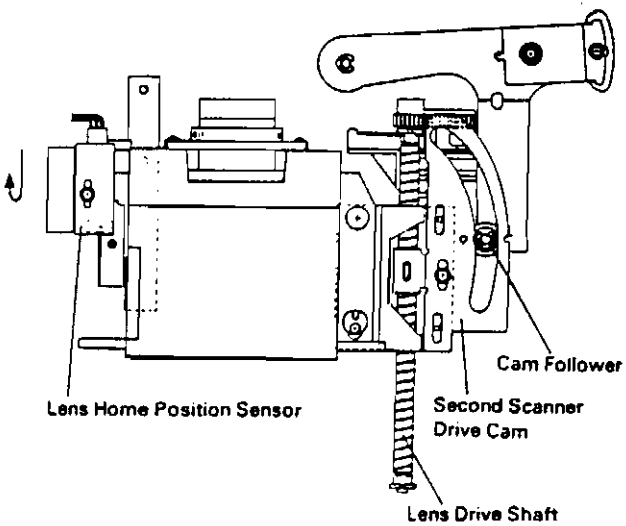

NOTE: If the resolution or focus becomes worse when the wire clamp (horizontal magnification) is correctly positioned, it is necessary to adjust the lens home sensor.

6-2. DEVELOPMENT

2-1. Developer Replacement 6-20

2-2. Doctor Gap Adjustment 6-21

2-3. Magnet Angle Adjustment 6-22

2-4. Bias Power Pack Check 6-23

2-1. DEVELOPER REPLACEMENT

1. Insert the end of the development unit in a vinyl bag and hold it as shown.

2. Turn the development unit knob counter-clockwise.
   The developer will fall into the bag.

3. Reassemble the paddle gear and idle gear.

4. After dumping the developer, check the movement of the vibrating plate. The paddle roller should move it about 2 mm to 10 mm. (0.08" to 0.39")

5. Pour one bottle (1 kg) of developer into the development unit while turning the development ~~unit~~ knob.
   CAUTION: • Be careful not to bend the bias terminal.
   • After removing used developer, clean the drive gears.

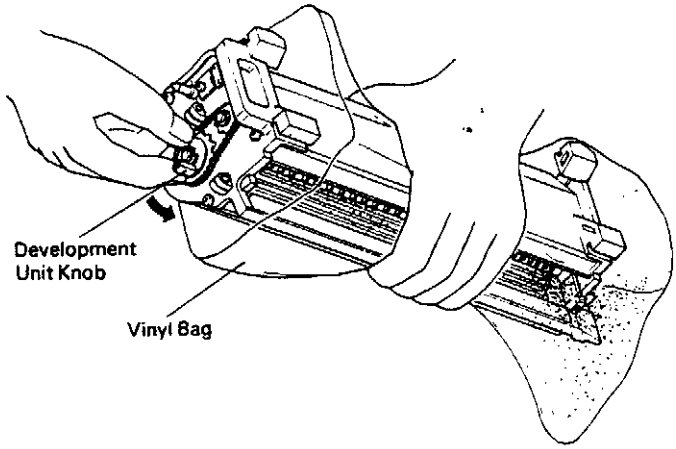

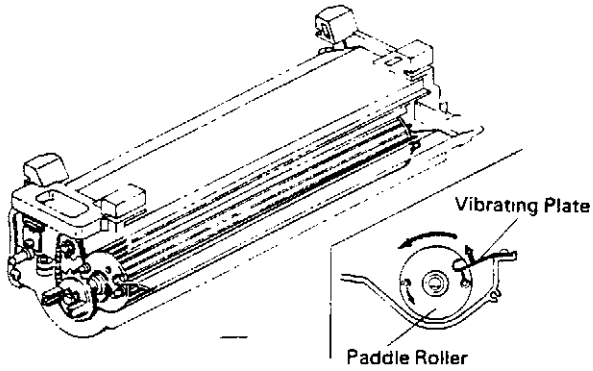

2-2. DOCTOR GAP ADJUSTMENT

- Adjustment Standard: 1.26 ± 0.1 mm (0.05" ± 0.004")

1. Take out the development unit and empty the developer.
2. Take off the upper cover. • 2 screws
3. Before making the adjustment, confirm that both surfaces where the thickness gauge will be inserted are clean.
4. Loosen screws Ⓐ and Ⓑ.
5. Insert a 1.26 mm (0.05") thickness gauge into the DG at the shown positions, and press the DG plate down until the doctor blade lightly contacts the doctor blade.
6. Tighten screws Ⓐ and Ⓑ.
7. Check that the DG is correct and even on both positions.

   NOTE: Confirm that the DG is correct whenever the upper and lower sections of the development unit are separated.

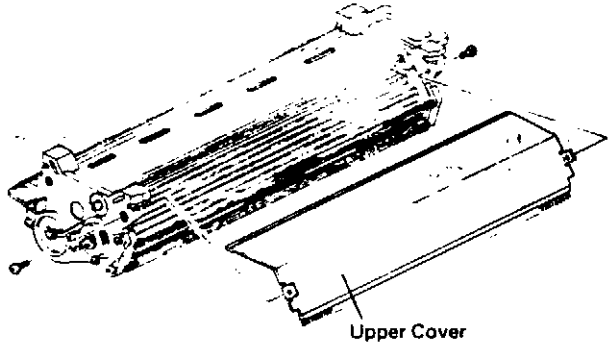

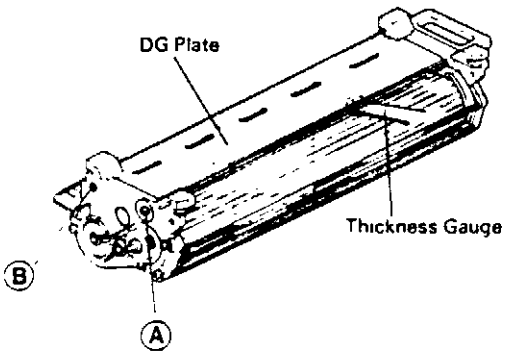

2-3. MAGNET ANGLE ADJUSTMENT

1. Loosen the magnet plate screw, and turn the magnet plate counterclockwise as far as possible.

2. Turn the plate slowly clockwise and fix it one graduation to the left of center.
   NOTE: Adjust the magnet angle after replacing the development roller.

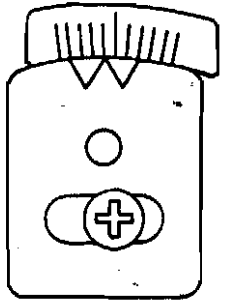

2-4. BIAS POWER PACK CHECK

1. Turn off the bias thermistor switch and turn on the free run switch (DIP SW100 #1).
2. Set the density control at the center (4th) position.
3. Press the print key; then, with a digital multimeter, check the development bias. At the center setting, the bias should be DC +300V ± 12V during forward scan.
4. Check that the bias value changes approximately 60V at each step.
5. If the bias value is incorrect, disconnect the bias cable and check bias output directly from the cable.
   - If the bias is now correct, check for a bias leak from the development roller.
   - If the bias is still wrong, replace the bias power pack.

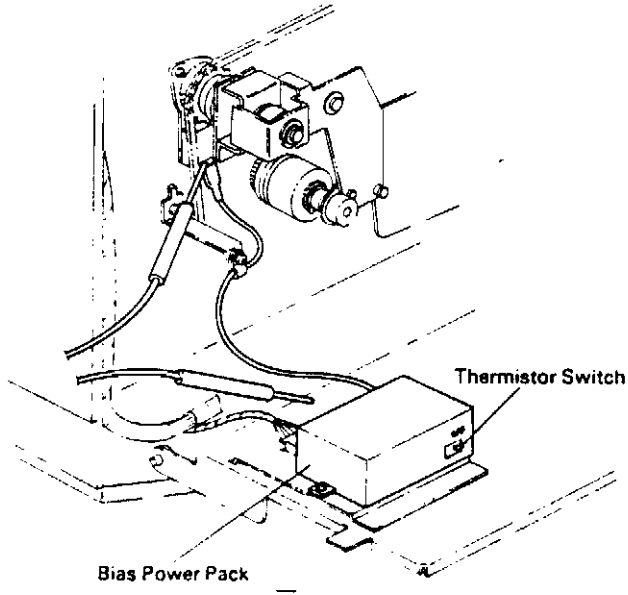

NOTE: When the thermistor switch is off, the bias temperature compensation will not work, and output becomes fixed at the 30°C value.

6-3. TONER

3-1. Toner Density Sensor (First Quenching Lamp) Replacement 6-26

3-2. Toner Density Sensor Adjustment 6-28

3-3. Toner Tank Removal (FT4060) 6-29

3-4. Toner Tank Removal (FT4030) 6-30

3-1. TONER DENSITY SENSOR (FIRST QUENCHING LAMP) REPLACEMENT

1 Lower the transfer/separation unit.

2. Take off the charge corona unit and the drum stay. • 1 screw

3. Take out the toner collection bottle and the cleaning unit.

4. Take out the development unit and put it on a clean sheet of paper.

5. Slide the protective sleeve over the drum and take off the drum flange.

6. Pull out the drum and the drum heater. • 1 C-ring

7. Remove the rear cover and lower the CPU plate. • 2 screws each

8. Remove the wire clamp and clamp bracket, and disconnect the two harnesses (5P and 3P) going to the first quenching unit.

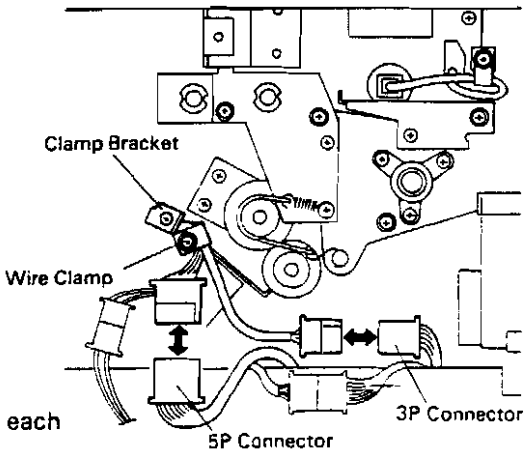

9. Pull the connectors and wires through the rear side plate.

10. Take out the first quenching assembly. • 2 screws

11. Remove the wire clamp and loosen the two screws on the first quenching assembly.

12. Replace the first quenching P.C.B. • 1 screw

13. Reassemble the copier and adjust the toner density sensor.
    NOTE: Make sure the rear end of quenching assembly is properly set in its bracket.

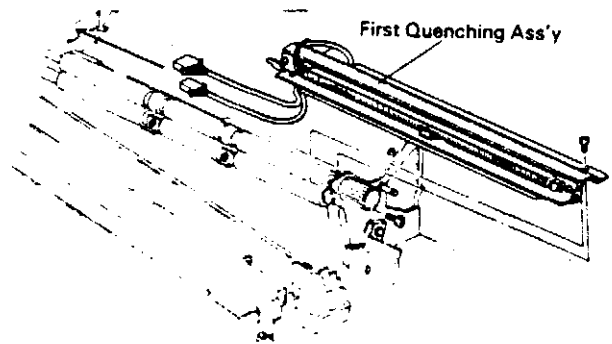

3-2. TONER DENSITY SENSOR ADJUSTMENT

1. Clean the following parts.
   Toner density sensor with blower brush or solder sucker.
   Optics– Mirrors and reflectors with silicon cloth.
   Lens with blower brush.
   Toner shield glass with dry cloth.
   Charge corona wire with dry cloth.

2. Place 2 or 3 sheets of LDG/A3 paper on the exposure glass.

3. Select drum conditioning mode (DIP SW #2 under the operation panel).

4. Insert small paper clips in CN3-B13, and CN3-B14 on the main PCB while the main switch is off.

   NOTE: Cut the end of the clips to a point to make it easy to insert.
   CAUTION: Be careful not to let these two clips contact.

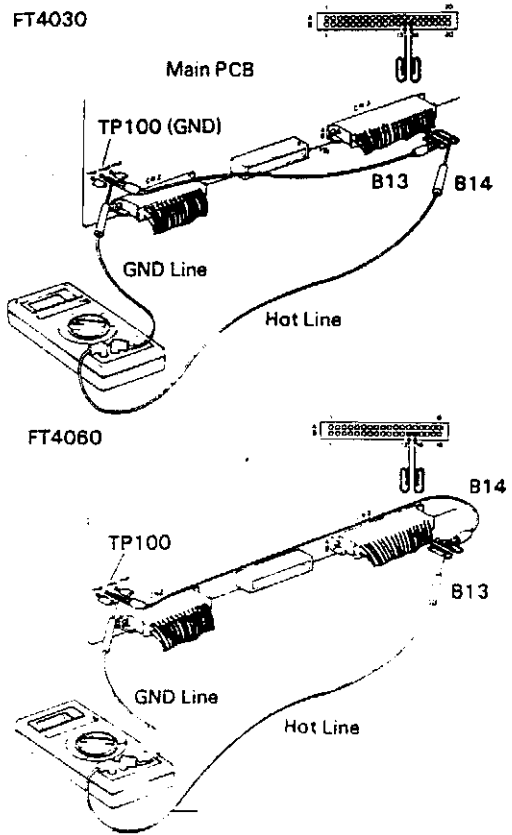

5. Turn on the main switch, and wait for warm-up.

6. After warm-up, turn off the main switch and connect the multimeter and short wire as follows;

FT4060 — Multimeter — Hot line: CN3-B13
                     — Ground line: TP100
          Short wire: CN3-B14 and TP100
FT4030 — Multimeter — Hot line: CN3-B14
                     — Ground line: TP100
          Short wire: CN3-B13 and TP100

CAUTION Apply tape to TP101 and TP102 to prevent electrical shortage of these two pins to TP100.

7. Turn on the main switch, set 50 copies, and select the 3rd level of density control.

8. Press the print key, and check the voltage during the forward scan.
   Adjustment Standard: 4.0 ± 0.2 V

9. Adjust the VR on the front end of the first quenching unit.

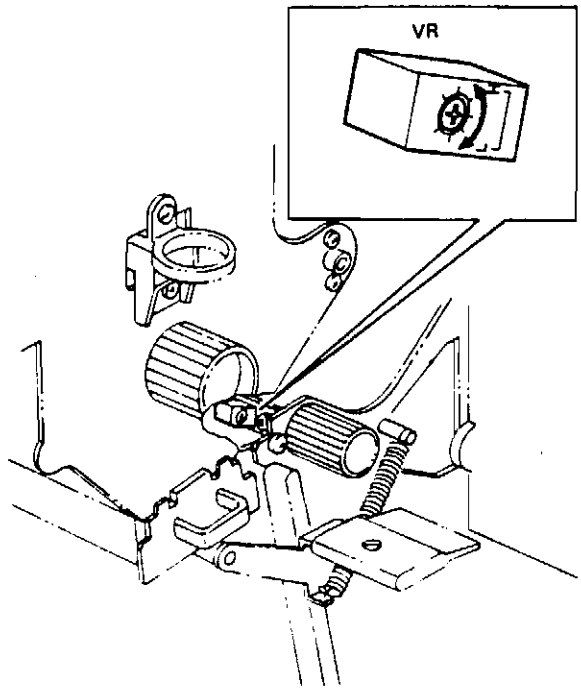

3-3. TONER TANK REMOVAL (FT4060)

1. Remove the top cover. • 8 screws, 2 studs
2. Remove the right cover. • 4 screws
3. Take off the inner right cover. • 3 screws
4. Take off the rear cover and lower the CPU plate. • 2 screws each
5. Remove the harness cover. • 5 screws
6. Take off the right side plate. • 4 screws, 1 connector, 1 ground wire
7. Put a sheet of paper on the upper feed roller to catch any dropping toner.
8. Take out the toner tank. • 4 screws, 2 connectors

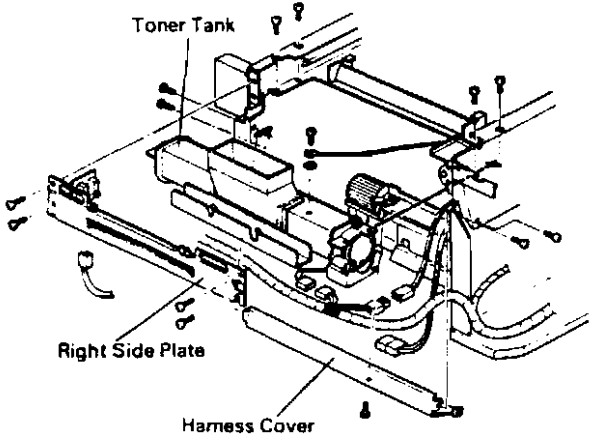

3-4. TONER TANK REMOVAL (FT4030)

1. Take off the top cover and inner right cover. • 8 screws, 2 studs, 3 screws
2. Remove both right side covers. • 2 screws each
3. Remove the rear cover and lower the CPU plate. • 2 screws each
4. Take off the by-pass paper guide. • 1 screw
5. Remove the right side plate. • 4 screws, 2 connectors, 1 ground wire
6. Remove the harness cover. • 2 screws
7. Remove the by-pass entrance brace. • 4 screws, 1 connector
8. Put a sheet of paper on the by-pass feed roller to catch any dropping toner.
9. Take out the toner tank. • 4 screws, 2 connectors

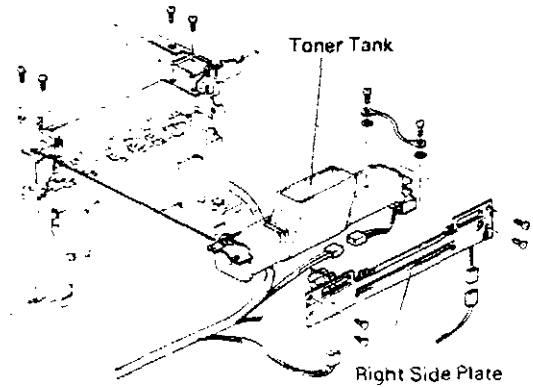

6-4. CLEANING

4-1. Cleaning Blade Replacement 6-32

4-2. Pick-off Pawl Replacement 6-33

4-3. Cleaning Brush Replacement 6-35

4-4. Toner Collection Coil Replacement 6-36

4-1. CLEANING BLADE REPLACEMENT

1. Take out the cleaning unit.
2. Remove the old blade. • 1 screw
3. Dust a new blade with setting powder.
   NOTE: Clean the inside of the cleaning unit.
4. Install the new cleaning blade.
   CAUTION: Be careful not to touch the edge of the new blade.

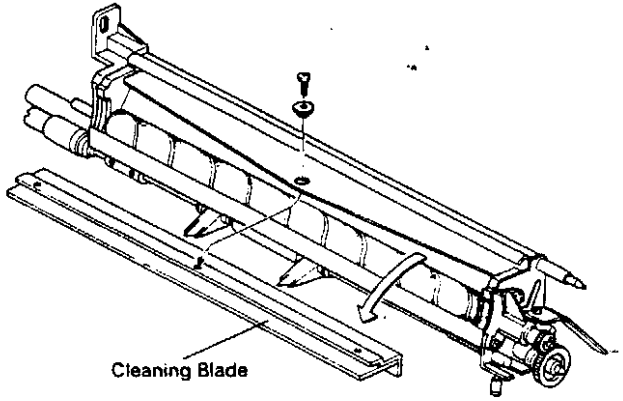

4-2. PICK-OFF PAWL REPLACEMENT

1. Unscrew the cam holder. Be sure to grasp the inner part of the holder when unscrewing.
2. Remove the pawl shaft pin.
3. Remove the spring. • 1 screw
4. Remove the cam rider. • 1 allen screw
5. Take off the old pawls and slide new pawls onto the shaft. Do not set the E-rings yet.
6. Fix the spring.
   NOTE: The spring screw must enter the shaft from the top.
   (Oposite side from the pawl pins.)
7. Set the pawl shaft. Make sure the spring end is in the small hole.

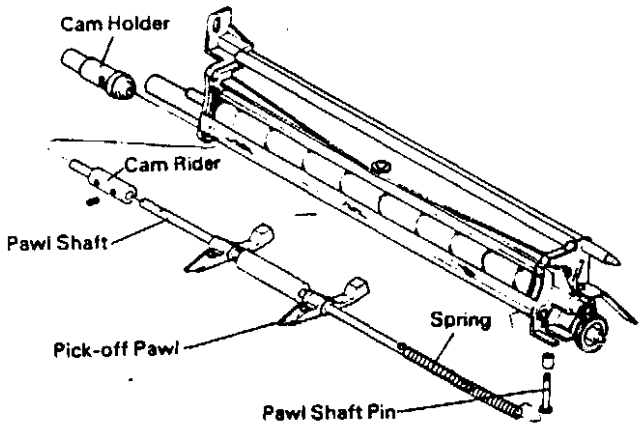

8. Tighten the spring by rotating the shaft counterclockwise viewed from the front (about 2 turns); then, screw in the pawl shaft pin.

9. Set the cam rider.

10. Set the pawls and fix them in place with the E-rings.

11. Screw in the cam holder.

12. Check that the up and down movement of the pick-off pawls is smooth by pressing the pawl shaft pin to the black arrow direction.

NOTE: Before pressing the pawl shaft pin, the pawls should be in the down position (white arrow position).

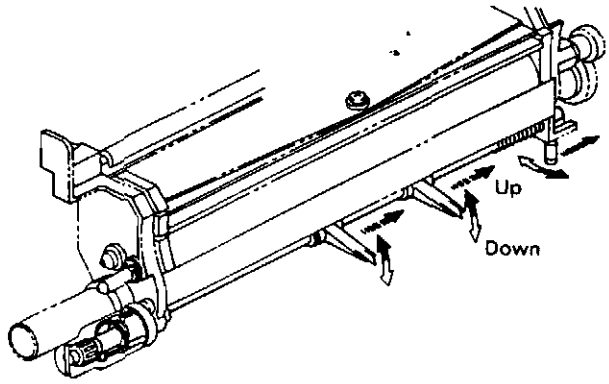

4-3. CLEANING BRUSH REPLACEMENT

1. Remove the front bushing from the front end. • 1 E-ring

2. Remove the gear and rear bushing from the rear end. • 1 E-ring

3. Take off the brush shaft holder, and take out the old brush. • 2 screws
   NOTE: Clean the inside of cleaning unit.

4. Prime a new brush by dusting it with setting powder.
   NOTE: Do not touch the new brush; handle the shaft only.

5. Install the new cleaning brush.

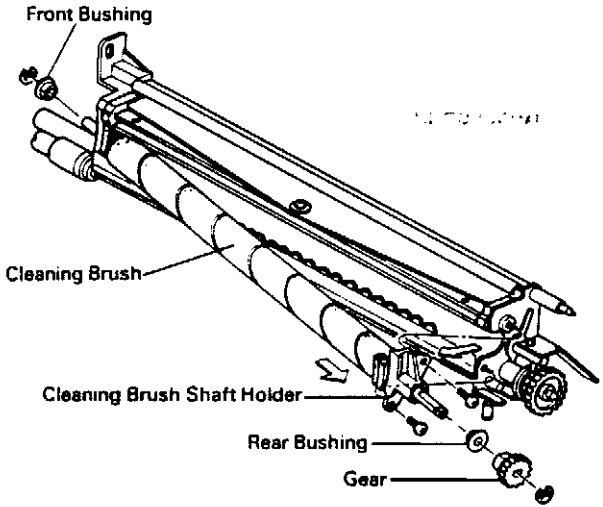

4-4. TONER COLLECTION COIL REPLACEMENT

1. Take off the coil gear.
   • 1 E-ring
2. Remove the old coil and insert a new one.
3. Reassemble.

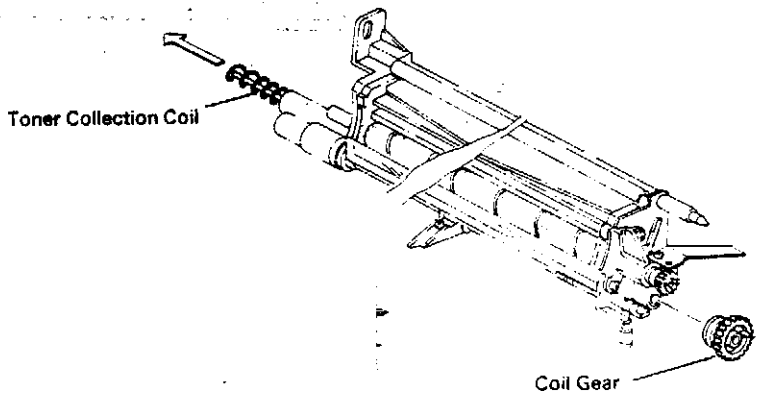

6-5. PAPER FEED

5-1. Feed Roller Replacement (FT4060) 6-38

5-2. Feed Roller Replacement (FT4030) 6-39

5-3. Friction Pad Replacement 6-40

5-4. Paper Feed Adjustment 6-41

5-5. Upper By-pass Feed Roller Replacement (FT4030) 6-43

5-6. By-pass Feed Solenoid Position (FT4030) 6-45

5-7. Upper Paper Size Detector Replacement (FT4060) 6-46

5-8. Lower Paper Size Detector Replacement (FT4060) 6-48

5-9. Paper Size Detector Replacement (FT4030) 6-49

5-10. Crimp Clutch Adjustment 6-50

5-1. FEED ROLLER REPLACEMENT (FT4060)

1. Loosen the feed roller allen screws, and slide the feed roller off the shaft.

2. Install a new feed roller.
   The end of the feed roller must be flush with the end of the roller shaft.
   NOTE: Removal procedure is the same for both upper and lower rollers. For access to the upper roller, first remove the upper front guide plate.

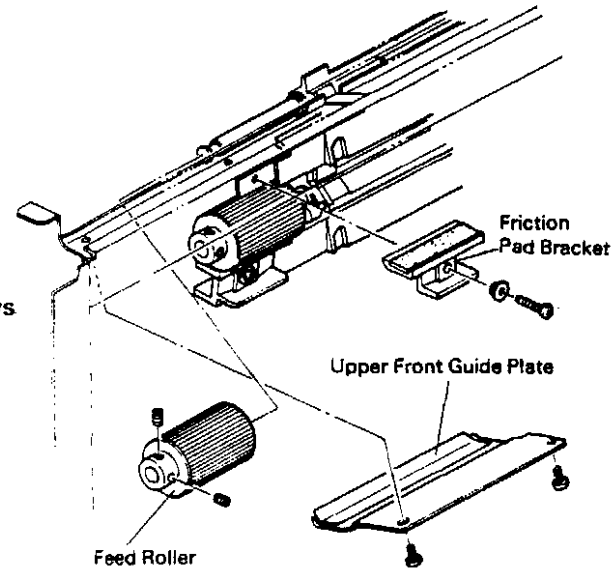

5-2 FEED ROLLER REPLACEMENT (FT4030)

1. Open the front cover.
2. Remove the right inner cover, and remove the feed roller shaft bushing. • 2 screws
   • 1 E-ring
3. Remove the cassette holder.
4. Loosen two feed roller allen screws, and push the feed roller to the front end of the feed roller shaft.
5. Take off the rear cover. • 2 screws
6. Turn down the CPU plate. • 2 screws
7. Push the roller shaft out to the rear about 60 mm (2.36"), and slide the old feed roller off the front end of the shaft.
   Be careful not to damage the paper end detector feeler or actuator.
8. Slide a new feed roller on the shaft and reassemble.

NOTE: When installing the feed roller, the allen screws should be tightened at the extreme left of the positioning groove.

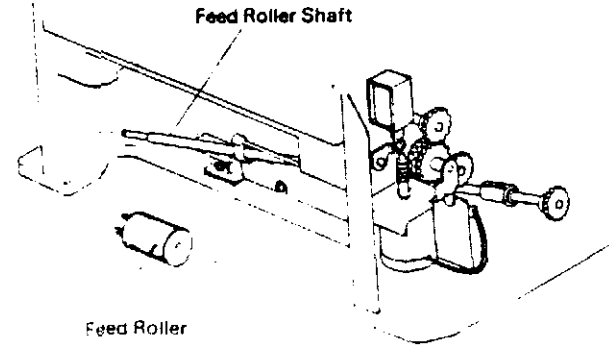

5-3. FRICTION PAD REPLACEMENT

1. Remove the friction pad bracket. • 1 screw

2. Strip the worn friction pad off the bracket.

3. Stick the new pad in place.
   Check that Ⓐ is 0.05 to 0.35 mm. (0.002" to 0.014")
   NOTE: Do not touch the surface of the friction pad.

4. Before remounting the friction pad bracket, grease point Ⓑ. (Swivel point)
   NOTE: Check the swivel movement of the bracket.

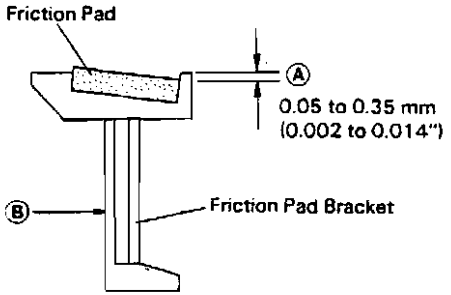

5-4. PAPER FEED ADJUSTMENT

- Adjustment Standard:
  Upper Cassette: $150 \pm {}^{10}_{15}$ mm $(5.91'' \pm {}^{0.39}_{0.59''})$

  Lower Cassette: $135 \pm {}^{10}_{15}$ mm $(5.31'' \pm {}^{0.39}_{0.59''})$

[Rough Adjustment]

NOTE: This adjustment is required only after replacement of the paper feed PCB.

1. On the Main CPU board connect IC300-10 (or CN102-B11 for FT4060, CN102-B13 for FT4030) and TP100 (GND). (When the main switch is turned on, the paper feed motor will run continuously, so turn down the upper cassette handle.)

2. Turn on the main switch. Measure the voltage between CN2-1 (+) and CN2-3 (−) on the paper feed P.C.B.
   Adjust this potential to +16.5V ± 0.5V with VR1.

3. Remove the jumper line from the Main CPU board.

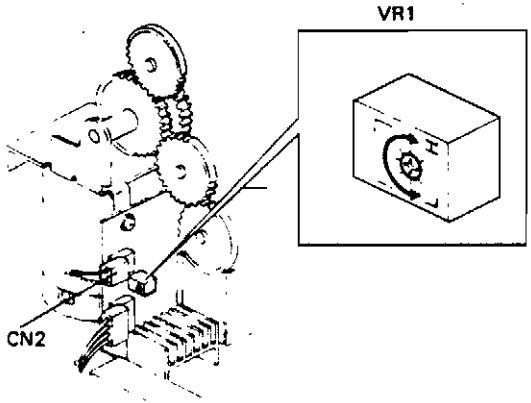

[Fine Adjustment]

NOTE: Before adjustment, clean the paper feed rollers and friction pad.

1. Remove the cover from the large universal cassette and insert it in the upper position.
2. Make three A3 (LDG) copies. Mark the momentary stop position of the trailing edge for each sheet (On the sheet underneath).
3. Measure the distance from the mark to the trailing edge of each sheet (This is the paper feed amount) and compute the average.
4. If the paper feed amount is outside the standard adjust with VR1.
5. After adjustment, insert the cassette in the lower position and check that the lower feed amount is correct.

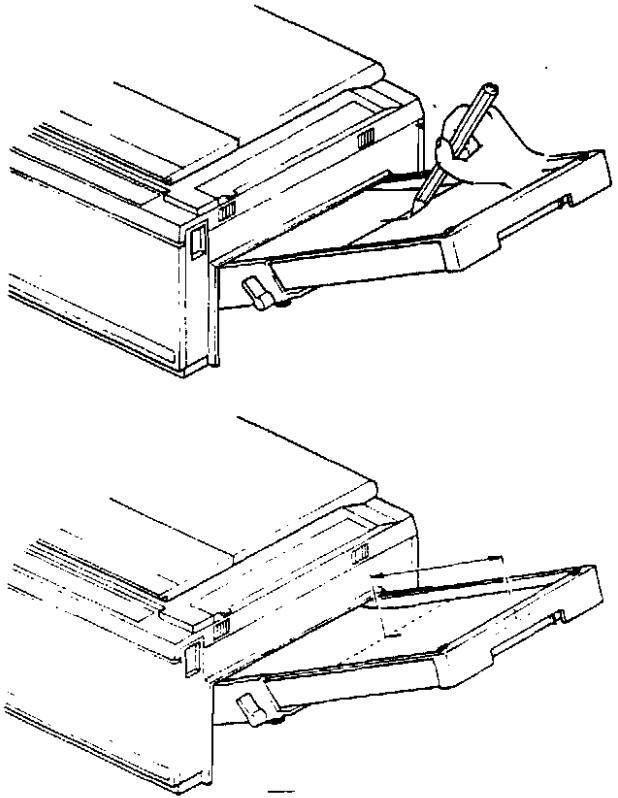

5-5. UPPER BY-PASS FEED ROLLER REPLACEMENT (FT4030)

1. Open the by-pass feed table, and remove the by-pass paper guide. • 1 screw
2. Unhook the support arms and let the by-pass feed table hang straight down.
3. Take off the key counter cover. • 2 screws
4. Open the front cover and remove the right inner cover.
5. Take off the rear cover and lower the CPU plate. • 2 screws each
6. Remove the harness cover. • 2 screws
7. Disconnect the by-pass feed sensor 3P connector.
8. Remove the by-pass entrance brace. • 4 screws

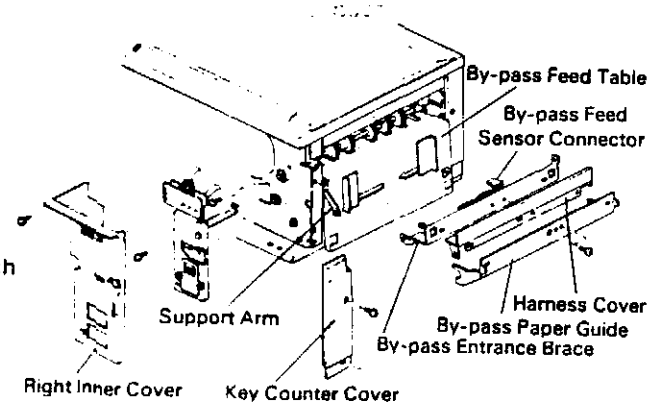

9. Remove the front bushing.

10. Remove the by-pass roller gear and the rear bushing.

11. Take out the feed roller shaft.

12. Replace the entire by-pass feed roller shaft as a set.

13. Reassemble.

• 1 E-ring

• 1 E-ring each

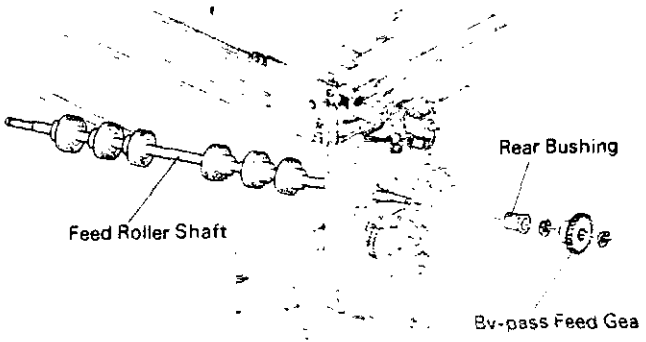

5-6. BY-PASS SOLENOID POSITION (FT4030)

- Adjustment Standard: 0.5 to 1.0 mm (0.02" to 0.04")

1. Take off the rear cover and lower the CPU plate.

2. Push in the plunger of the by-pass solenoid and check that the clearance between the rubber ring and solenoid is 0.5 to 1.0 mm (0.02" to 0.04").
   If it is not, do the following.

3. Loosen the solenoid bracket screw.

4. Insert a 0.5 mm (0.02") thickness gauge between the solenoid and the rubber ring of the plunger.

5. Push up the plunger until the by-pass feed rollers lightly touch. At that position tighten the bracket screw.

• 2 screws each

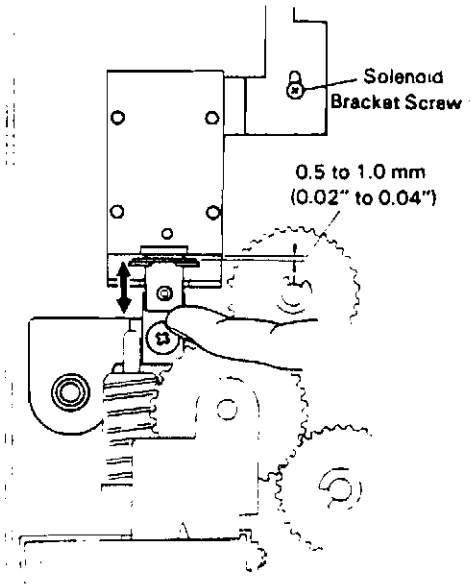

5-7 UPPER PAPER SIZE DETECTOR REPLACEMENT (FT4060)

1. Remove the rear cover, the right cover, and the right front inner cover. • 2, 4 and 3 screws
2. Take off the counter bracket. • 1 screw
3. Lower the CPU plate. • 2 screws
4. Remove the harness cover. • 4 screws
5. Uncouple the paper size detector 6P connector.
6. Remove the paper feed motor. • 1 screw
   1 lower connector
7. Take off the upper feed roller gear and the upper paper end detector. • 1 E-ring
8. Remove the upper of two cassette holder pins and the cassette holder guide block.

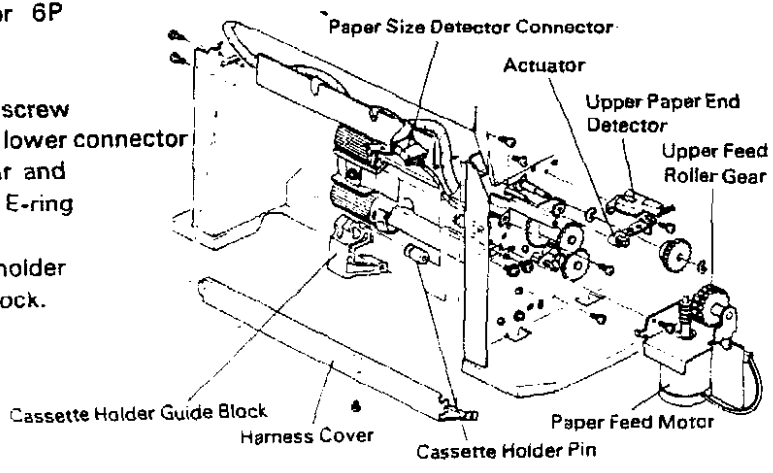

9. Remove the upper feed roller shaft.
   - 1 E-ring

10. Take off the actuator of the upper paper end switch (be careful not to damage it) and remove the feeler shaft.

11. Take off the upper feed roller shaft holder.
    - 3 screws

12. Replace the paper size detector PCB.
    - 2 screws

13. Reassemble the copier.
    NOTE: When reassembling, make sure the groove in the feeler shaft is hooked in the feed roller shaft holder and locked in place by the plastic lock plate on the feed roller shaft.

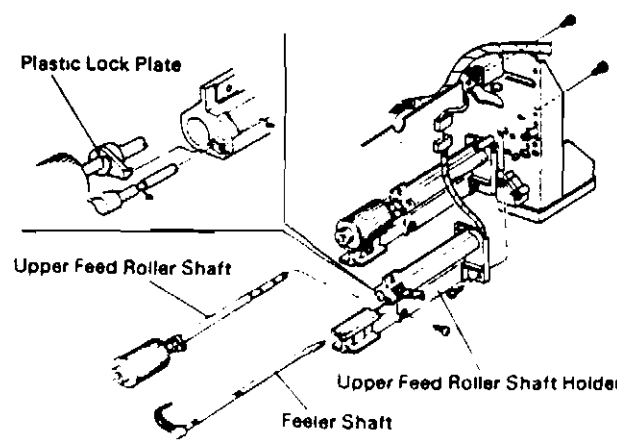

5-8. LOWER PAPER SIZE DETECTOR REPLACEMENT (FT4060)

1. Take off the rear cover and lower the CPU plate. • 2 screws each
2. Uncouple the harness connector of the paper size detector.
3. Remove the paper size detector plate. • 2 screws
4. Replace the paper size detector PCB. • 2 screws
5. Reassemble.

NOTE: Confirm that the lower paper size detector plate is parallel to the base plate within 0,5 mm (0,02").

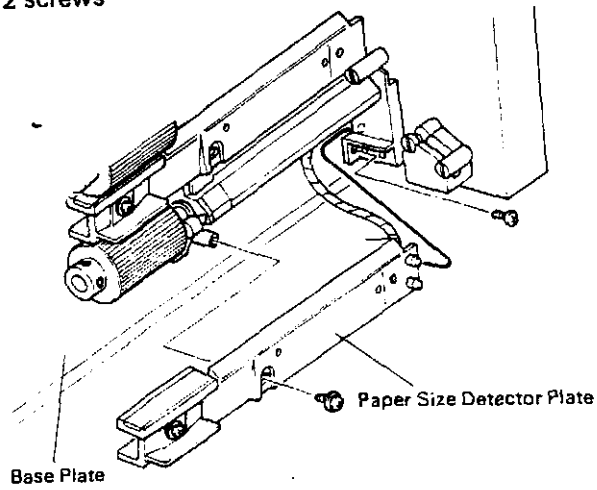

5-9. PAPER SIZE DETECTOR REPLACEMENT (FT4030)

1. Take off the rear cover and right rear cover, and lower the CPU plate. • 2 screws each
2. Take off the paper feed motor. • 1 screw, 1 connector
3. Remove the paper size detector plate. • 2 screws, 1 connector
4. Replace the paper size detector P.C.B. • 2 screws
5. Reassemble

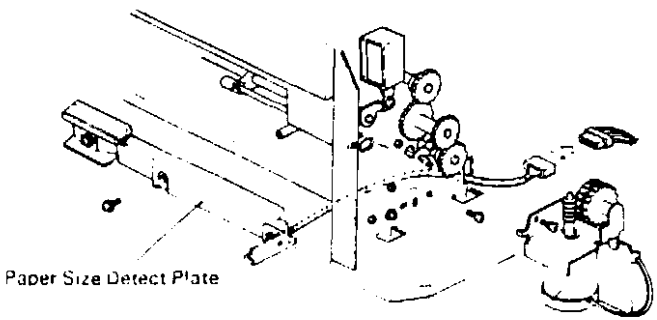

5-10. CRIMP CLUTCH ADJUSTMENT

1. Take off the rear cover and lower the CPU plate. • 2 screws each
2. Remove the transport/separation power pack from its bracket.
3. Unhook the registration roller brake belt.
4. Unhook the chain tightener spring.
5. Remove the crimp clutch. • 1 allen screw
6. Loosen the clutch allen screw and position the sleeve so that Ⓐ is 0.5 to 1.0 mm (0.02" to 0.04").
   Measure Ⓐ while turning the sprocket clockwise as shown and holding the sleeve.
7. Check that thrust play is 0.05 to 0.1 mm (0.002" to 0.004").
8. Reinstall the clutch.
9. Push in the solenoid plunger and confirm that clearance Ⓑ is 1.0 to 3.0 mm (0.04" to 0.12").

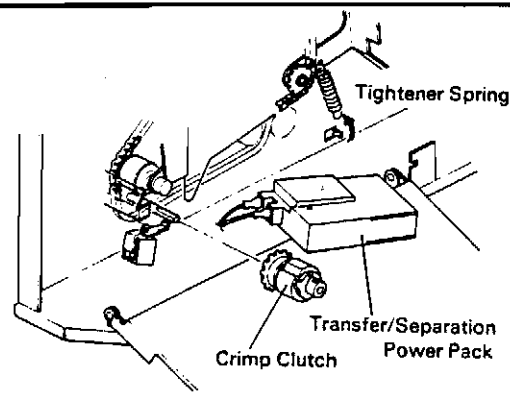

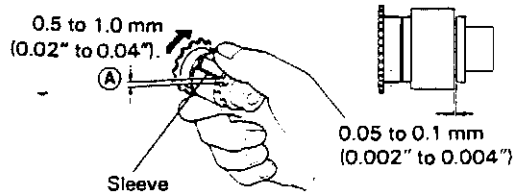

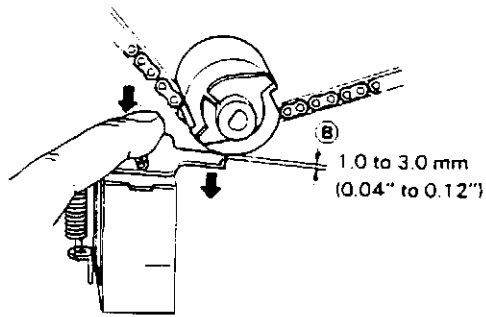

6-6. TRANSPORT

6-1. Transport Unit Removal 6-52

6-2. Transport Belt Replacement 6-53

6-3. Pick-off Pawl Solenoid Adjustment 6-54

6-1. TRANSPORT UNIT REMOVAL

1. Take off the rear cover. • 2 screws
2. Lower the CPU plate. • 2 screws
3. Remove the transport/separation power pack from its bracket. • 2 screws
4. Uncouple the 4 connectors attached to the transport unit.
5. Open the front cover and take out the toner collection bottle and the cleaning unit.
6. Remove the toner collection bottle holder. • 1 shoulder screw, 1 E-ring
7. Lift and take out the transport unit. • 1 screw

NOTE: Confirm the gear engagement after reassembling this unit.

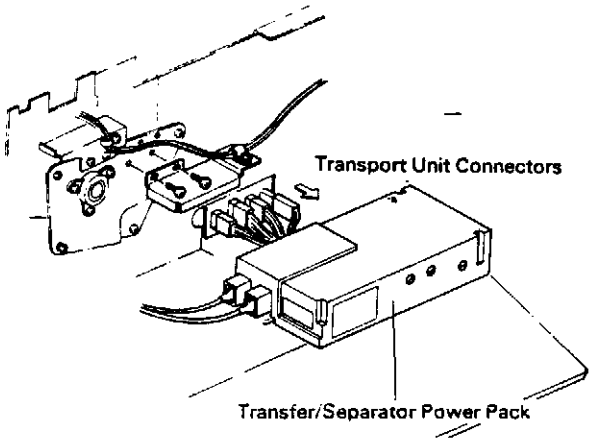

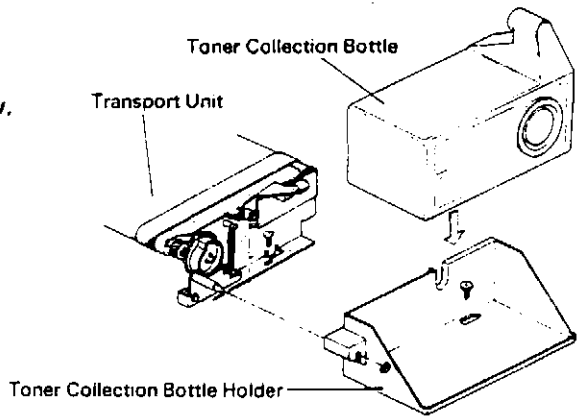

6-2. TRANSPORT BELT REPLACEMENT

1. Take out the transport unit.
2. Remove the three screws Ⓐ securing the transport belt assembly to the vacuum assembly.
3. Remove the transport belt assembly from the vacuum assembly.
4. Replace the vacuum belts.
   NOTE: The belts must be shiny side out.
5. Reassemble.

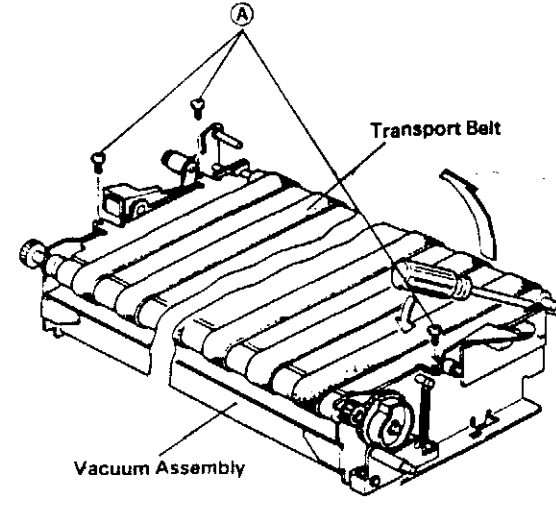

6-3. PICK-OFF PAWL SOLENOID ADJUSTMENT

1. Take out the transport unit.
2. With the adjusting screw, adjust solenoid stroke to $5 \pm {}^{0}_{0.5}$ mm ($0.20'' \pm {}^{0}_{0.02}''$)
3. Reinsert the transport unit and confirm that:
   a. The pick-off pawls do not touch the drum when the solenoid is off.
   (Gap: 1.5 ± 1.0 mm (0.06" ± 0.04"))
   b. The pick-off pawls touch the drum when the solenoid is on.

   NOTE: This adjustment is only necessary after replacing the pick-off pawls or pick-off pawl solenoid.

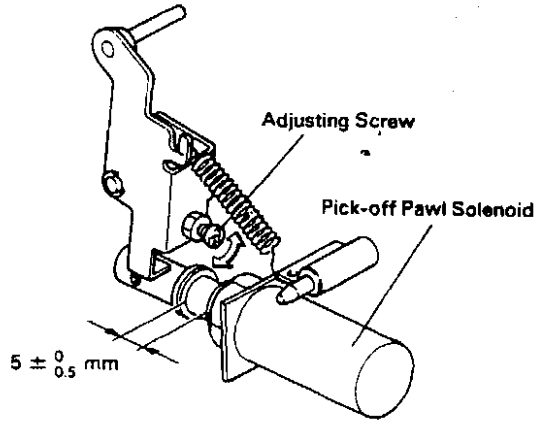

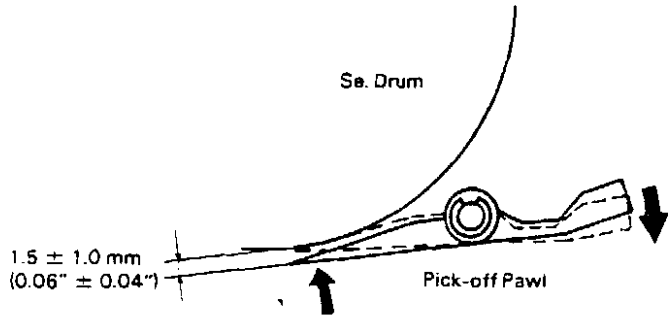

6-7. FUSING

7- 1. Hot Roller Replacement 6-56

7- 2. Pressure Roller Replacement 6-59

7- 3. Thermistor Replacement 6-61

7- 4. Thermistor Gap Adjustment 6-62

7- 5. Thermofuse Replacement and Positioning 6-63

7- 6. Oil Supply Pad Replacement 6-64

7- 7. Oil Blade Replacement 6-65

7- 8. Hot Roller Strippers Replacement 6-66

7- 9. Pressure Roller Strippers Replacement 6-67

7-10. Operating Temperature Adjustment 6-68

7-11. Ready Temperature Adjustment 6-70

7-1. HOT ROLLER REPLACEMENT

1. Take out the unit. • 1 screw
2. Take off the oil bottle.
3. Remove the oil bottle holder. • 2 screws
4. Take off the fusing unit knob. • 1 screw
5. Slide the fusing unit cover toward the front and take it off. • 1 screw

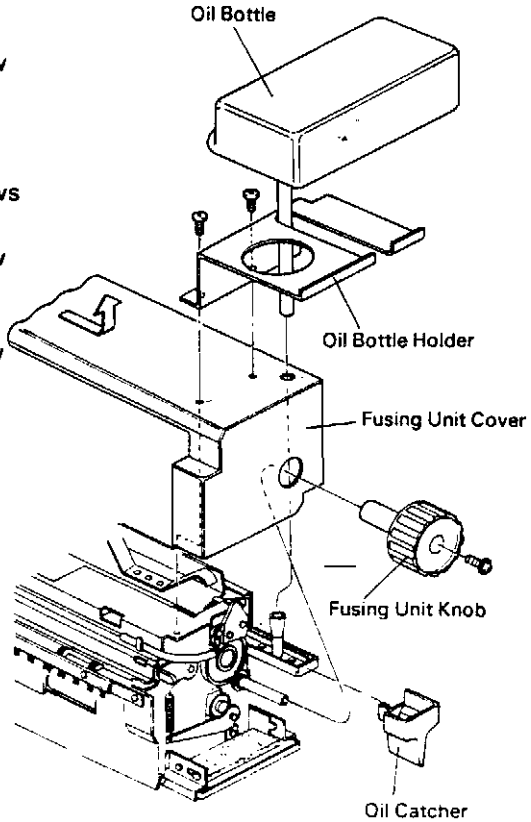

6. Open the exit assembly and remove the oil catcher.

7. Unhook the pressure springs.

8. **Pull and rotate the front fusing lamp terminal, and take out the fusing lamp.**

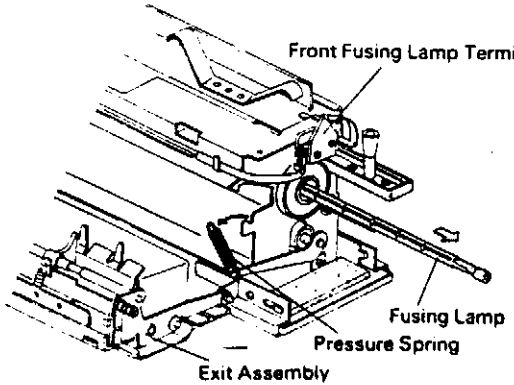

9. Take out the oil pad pressure plate.

10. Remove the oil supply assembly. • 2 screws

11. Take off the oil blade assembly. • 2 springs

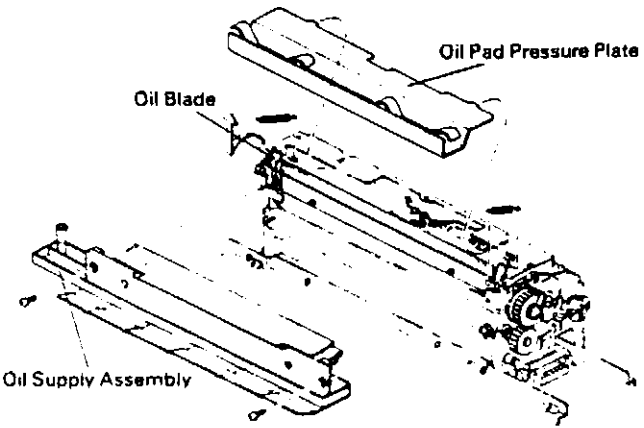

12. Take off the rear lamp terminal. • 1 screw

13. Remove the hot roller gear. • 1 C-ring

14. Carefully slide the hot roller out through the front bearing opening.
CAUTION: Do not damage the thermistor!

15. Remove the bearing from the front end of the hot roller. • 1 C-ring

16. Tear the protective paper from the ends of a new hot roller; then set the bearing on the front (short) end of the roller.

17. Carefully insert the new roller. After it is set, tear off the protective paper.

18. Reassemble the fusing unit.
NOTE: Apply extra silicone oil to the oil blade to avoid excess friction between it and the new hot roller.
Confirm that the fusing lamp does not contact the inside of the hot roller by turning the hot roller.

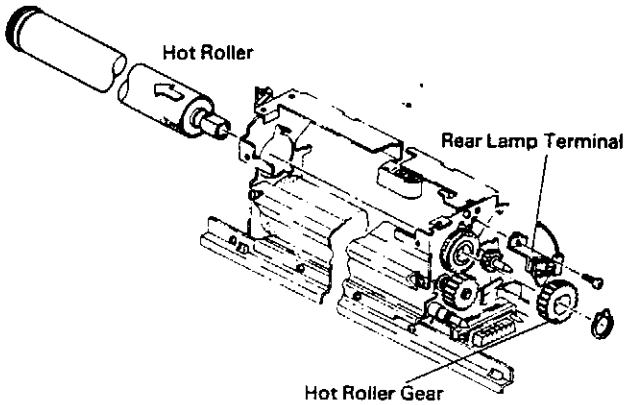

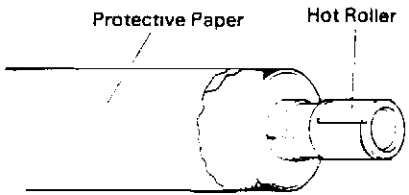

7-2. PRESSURE ROLLER REPLACEMENT

1. Follow the same steps 1 through 7 of the hot roller replacement procedure.

2. Take out the oil cleaning pad.

• 2 screws

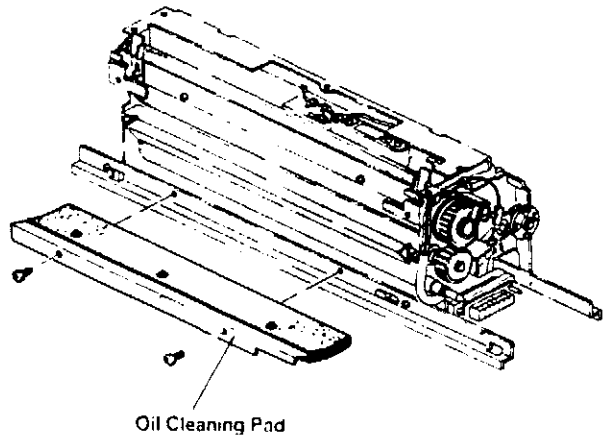

3. Take off the front pressure lever.

4. Remove the oil pan screw.

5. Lift up the upper part of the fusing unit and take out the pressure roller.

• 1 E-ring

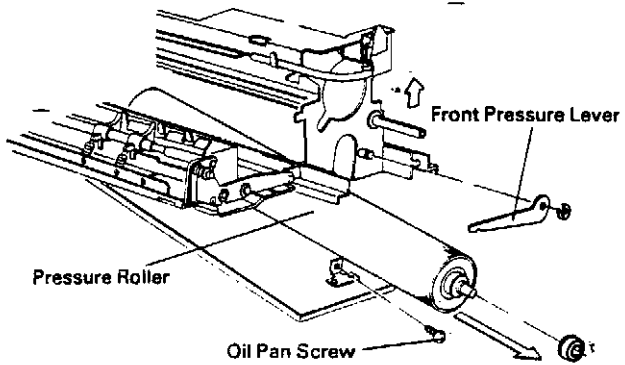

6. Install a new pressure roller.
   NOTE: Make sure to set the pressure roller bearing from the inside.

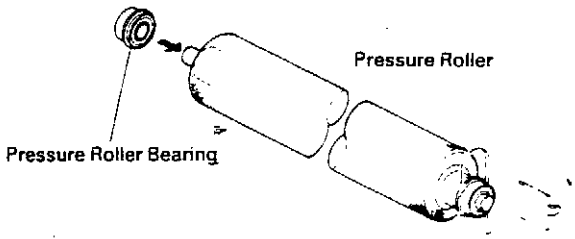

7-3. THERMISTOR REPLACEMENT

1. Follow steps 1 to 10 of the hot roller replacement procedure.
2. Disconnect the two white lead wires. • 1 screw each
3. Remove the thermistor bracket. • 1 screw
4. Separate the thermistor assembly and the thermistor bracket. • 2 screws
5. Install a new thermistor and adjust the thermistor gap.

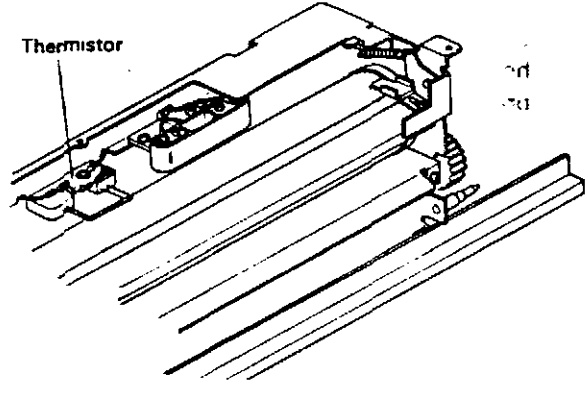

7-4. THERMISTOR GAP ADJUSTMENT

- Adjustment Standard: 0.4 to 0.7 mm (0.02" to 0.03")

1. Position the thermistor bracket so that the thermistor is about 1 mm (0.04") from the hot roller, and lightly tighten the thermistor bracket screw. (Orient the washer as shown.)

2. Install an adjusting screw longer than M4 x 10 as shown. (One of the screws securing the original tray will do.)

3. Insert a thickness gauge (0.55 mm (0.02")) between the thermistor and the hot roller; then, tighten the adjustment screw until the thermistor almost touches the thickness gauge.

4. Tighten the thermistor bracket screw.

5. Take out the adjusting screw and recheck the thermistor gap.

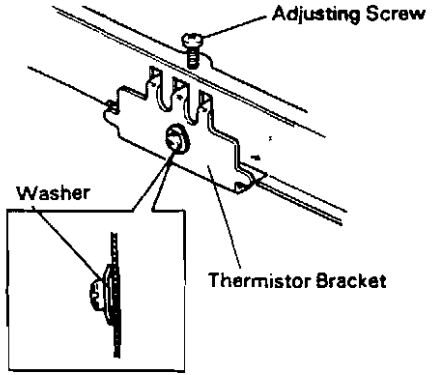

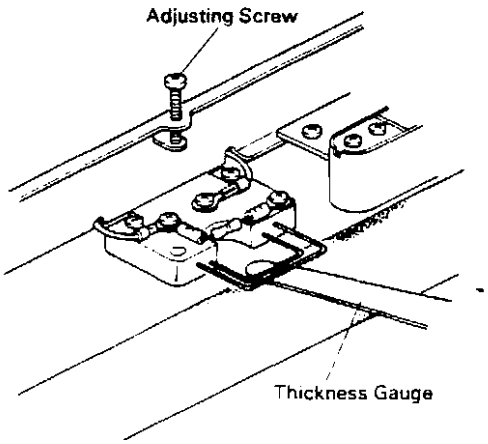

7-5. THERMOFUSE REPLACEMENT AND POSITIONING

1. Pull out the fusing unit and take off the cover. • 4 screws
2. Remove the pressure plate. • 2 screws
3. Remove the ceramic thermofuse holder. • 2 screws
4. Replace the thermofuse.
5. Reinstall the thermofuse holder.
   NOTE: Position the holder as near the hot roller as possible.

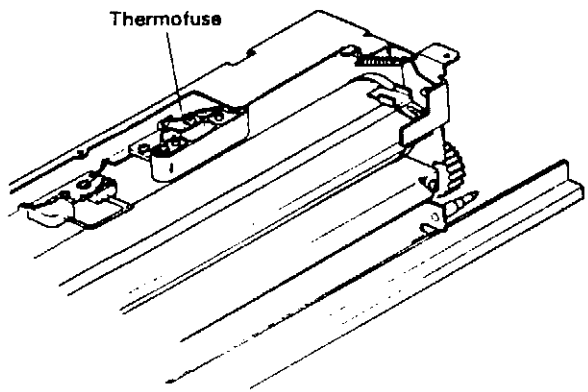

7-6. OIL SUPPLY PAD REPLACEMENT

1. Pull out the fusing unit.
2. Take off the oil bottle, fusing unit cover, and the fusing unit knob.
   CAUTION: Be careful not to spill any oil.
   • 4 screws
3. Take out the oil supply pad pressure plate and the oil catcher.
4. Remove the oil supply assembly.
   • 2 screws
5. Replace the oil supply pad.
   • 2 screws

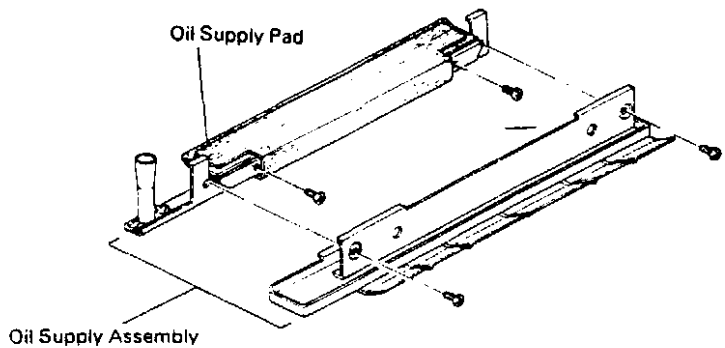

7-7. OIL BLADE REPLACEMENT

1. Remove the oil blade assembly.

2. Remove the old blade from the assembly, and install a new blade.
   NOTE: • Make sure that the edge indicated by the arrow contacts the hot roller.
   • The blade must be seated squarely on the blade bracket.

• 4 screws

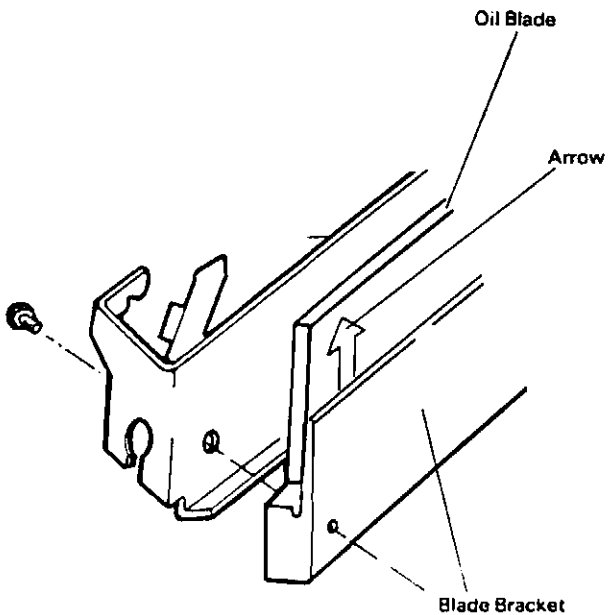

7-8. HOT ROLLER STRIPPERS REPLACEMENT

1. Pull out the fusing unit and open the exit assembly.

2. Unhook the springs and take off the hot roller strippers.

3. Snap on new strippers and connect the springs. Make sure the springs are hooked in the proper direction as shown.
   NOTE: There are eight stripper positions on the shaft. Set the strippers at the inside six positions (leave the two end positions empty).

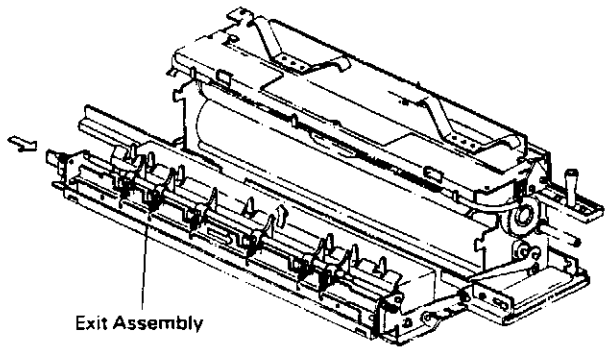

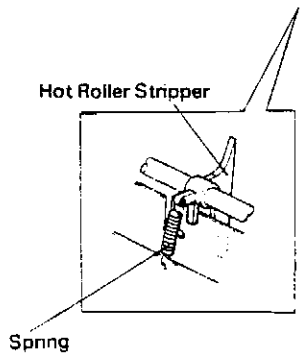

7-9. PRESSURE ROLLER STRIPPERS REPLACEMENT

1. Pull out the fusing unit and open the exit assembly.

2. Take out the lower exit guide bracket.
   - 2 screws

3. Replace the pressure roller strippers.
   - 1 screw each

   Pull the stripper down against the screw before tightening it.

   CAUTION: Be careful not to bend or deform the pressure roller strippers when installing.

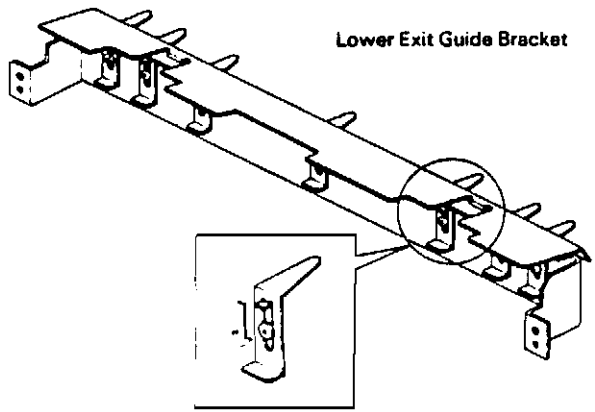

7-10. OPERATING TEMPERATURE ADJUSTMENT

- Adjustment Standard: 178 to 183°C (352 to 361°F)

1. Pull out the fusing unit.
2. Remove the exit assembly. • 1 E-ring, 1 connector
3. Reset the fusing unit and close the front cover.
4. Turn on the main switch and wait 15 minutes.
5. Measure the temperature in the middle of the hot roller.
   (Use a digital thermometer and probe.)
6. If the temperature is not within the specified limits adjust it using VR2 on the temperature control PCB.

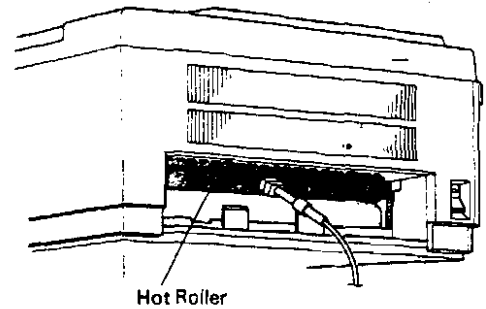

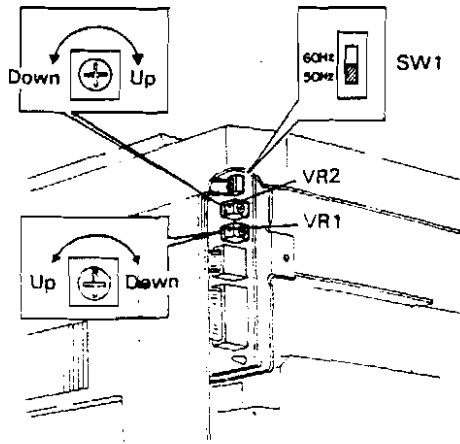

7. After adjusting wait 10 minutes then re-check the temperature.

NOTE:
- Under cold conditions allow 10 minutes more warm-up time before measuring the temperature.
- Do not measure fusing temperature in a location where a cool draft is blowing on the machine exit.
- After installing a new temperature control PCB, confirm that SW1 is set to the correct frequency.

7-11. READY TEMPERATURE ADJUSTMENT

* Adjustment Standard: 175 ± 3°C (347 ± 37°F)

Adjust "Ready" temperature only after replacing the temperature control PCB
Always adjust "Operating" temperature first.

1. Open the front cover to cut power to the fusing lamp.
2. When the surface temperature in the middle of the hot roller drops to 160°C (320°F), close the front cover.
3. Note the temperature at which the "Ready Tone" (beep-beep-beep) sounds.
4. Adjust the temperature with VR1.
5. Repeat the above steps to confirm that the "Ready" temperature is correct.
6. Confirm that the maximum temperature overshoot is less than 205°C (401°F).

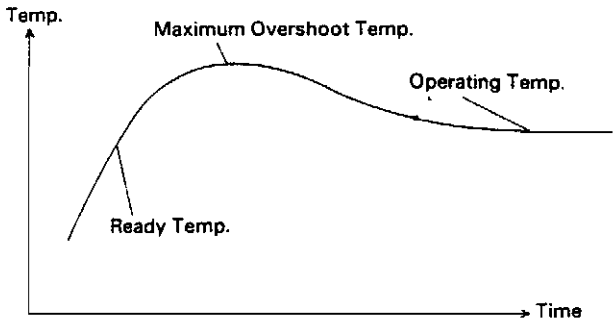

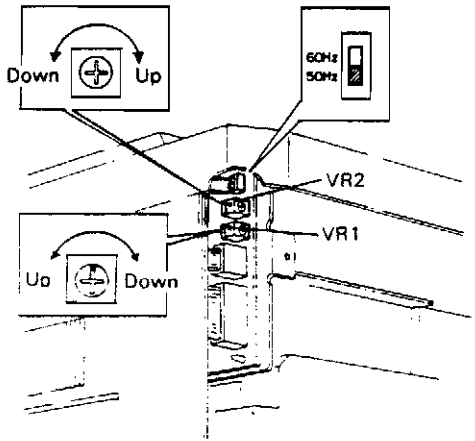

6-8. COPY IMAGE ADJUSTMENT

8-1. Leading Edge Registration Adjustment (FT4060) 6-72

8-2. Leading Edge Registration Adjustment (FT4030) 6-73

8-3. Leading Edge Erase Adjustment (FT4060) 6-74

8-4. Leading Edge Erase Adjustment (FT4030) 6-75

8-5. Vertical Magnification Adjustment (FT4060) 6-76

8-6. Horizontal Magnification Adjustment 6-77

8-7. Light Intensity Adjustment 6-78

8-1. LEADING EDGE REGISTRATION ADJUSTMENT (FT4060)

- Adjustment Standard: 2.0 ± 2.0 mm (0.08" ± 0.08")

Adjust the leading edge registration with DIP-SW 1 switches #1, #2, #3 and #4 as shown in the table.

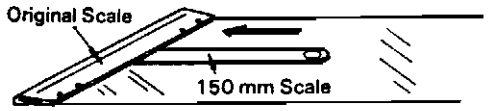

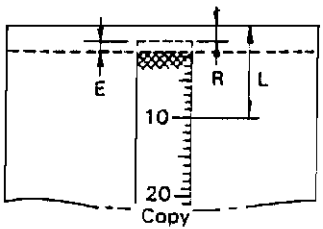

1. Place a 150 mm scale on the exposure glass, aligning it with the original scale.
2. Make 3 copies.
3. Measure "L".
   L − 10 = R = +2.0 ± 2.0 m/m

NOTE: "E" means the leading edge erase margin which is actual image lost.

DIP-SW1

#1	#2	#3	#4	Registration
0	0	0	0	−4.2 mm (−0.17")
0	0	0	1	−3.6 mm (−0.14")
0	0	1	0	−3.0 mm (−0.12")
0	0	1	1	−2.4 mm (−0.09")
0	1	0	0	−1.8 mm (−0.07")
0	1	0	1	−1.2 mm (−0.05")
0	1	1	0	−0.6 mm (−0.02")
0	1	1	1	0 mm (0")
1	0	0	0	+0.6 mm (+0.02")
1	0	0	1	+1.2 mm (+0.05")
1	0	1	0	+1.8 mm (+0.07")
1	0	1	1	+2.4 mm (+0.09")
1	1	0	0	+3.0 mm (+0.12")
1	1	0	1	+3.6 mm (+0.14")
1	1	1	0	+4.2 mm (+0.17")
1	1	1	1	+4.8 mm (+0.19")

0 : OFF
1 : ON

8-2. LEADING EDGE REGISTRATION ADJUSTMENT (FT4030)

- Adjustment Standard: 2.0 ± 1.5 mm (0.08" ± 0.06")

Leading edge registration is adjusted by moving the registration switch.

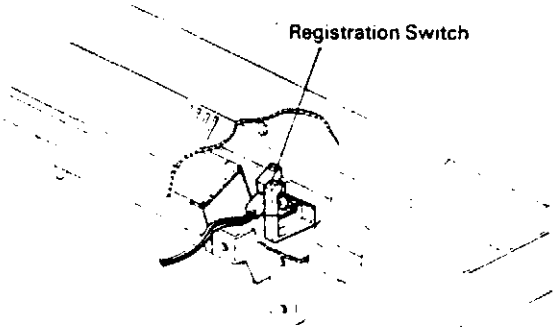

8-3. LEADING EDGE ERASE ADJUSTMENT (FT4060)

- Adjustment Standard: 1.5 ± 1.0 mm (0.06" ± 0.04")

Adjust the leading edge erase margin with DIP-SW 1 switches #7 and #8 (Optics PCB) as shown in the table.

DIP-SW 1

#7 #8	Erase Margin
0 0	0 mm (0")
0 1	+0.8 mm (0.03")
1 0	+1.6 mm (0.06")
1 1	+2.4 mm (0.09")

8-4. LEADING EDGE ERASE ADJUSTMENT (FT4030)

Adjustment Standard: 2.0 ± 1.5 mm
(0.08" ± 0.06")

1. Remove the plate from the access slot above the home position sensor.
2. Adjust the position of the scanner home position sensor to provide the correct amount of erasure.
   If > 3.5 mm (0.14"), move the sensor to the right.
   If < 0.5 mm (0.02"), move the sensor to the left.

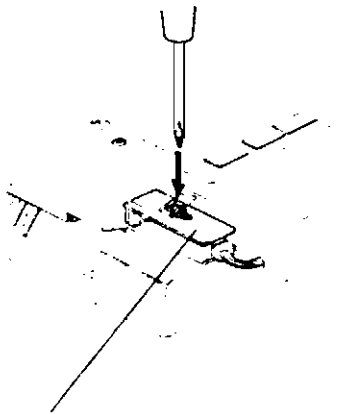

Home Position Sensor

8-5. VERTICAL MAGNIFICATION ADJUSTMENT (FT4060)

- Adjustment Standard: ±1 %

Adjust the vertical component of magnification (scanner forward velocity) by DIP-SW 1 switches #5 and #6 as shown in the table.

NOTE: For the FT4030, scanner forward velocity is fixed.

DIP SW1

#5	#6	
0	0	+0.3%
0	1	+0.1%
1	0	−0.1%
1	1	−0.3%

8-6. HORIZONTAL MAGNIFICATION ADJUSTMENT

- Adjustment Standard: ±0.5 %

1. Remove the rear cover
2. Remove the two studs and six screws securing the top cover.
3. Lift the back edge of the top cover and loosen the wire clamp screws.
4. Move the clamp right to enlarge the copy image. Move it left to make the copy image smaller. (Viewed from the rear side.)
   NOTE: This adjustment is effective only in the direction perpendicular to the direction of paper travel.

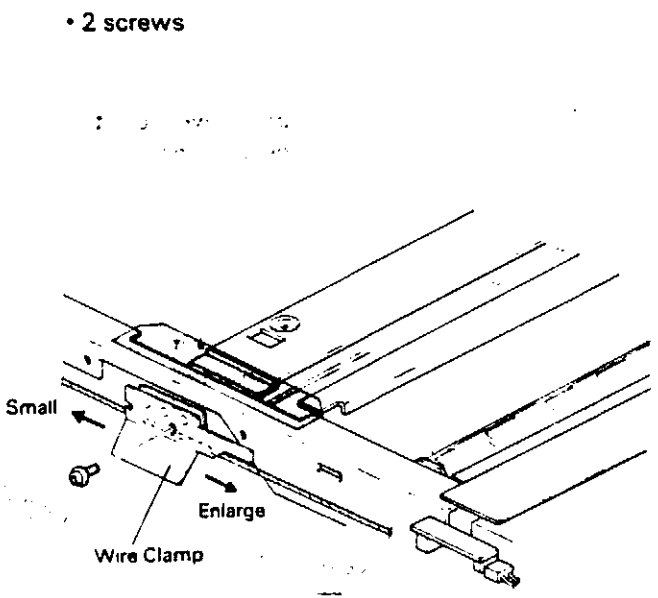

8-7. LIGHT INTENSITY ADJUSTMENT

Adjustment Standard:

1. Level 2 of the gray scale on the OS-A3 chart should be lightly visible on the copy when 2nd level of the density control is selected.
2. Background of the copy should be slightly dirty when the first level of the density control is selected.

1. Clean the optics, the toner density sensor, and charge corona wires.
2. Make sure that horizontal magnification and the resolution (focus) are proper.
3. Turn on the main switch and wait ten minutes to get proper drum temperature. (This is especially important on cold mornings.)

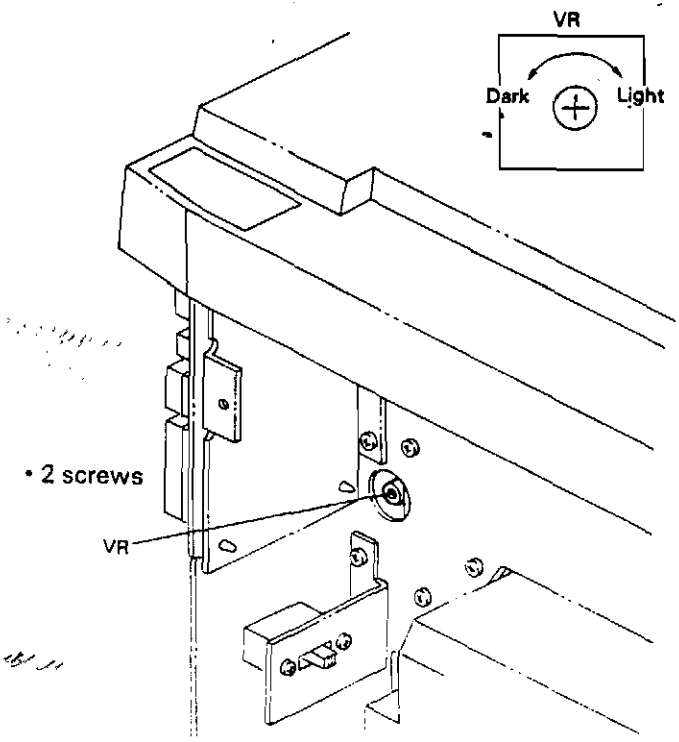

4. Make 10 copies to get proper drum sensitivity.

5. Set the density level at the No. 2 position, and make 3 OS-A3 test copies.
   Confirm that the second level of the gray scale is lightly visible.
   NOTE: If there is no test chart, place 2 or 3 sheets of pure white copy paper on the exposure glass, and make 3 copies at 2nd density control position.
   Adjustment Standard: There should be almost no background on copies.

6. Set the density control at the No. 1 position (darkest position), and make 3 copies.
   Check that the background of the copies is slightly dirty.

7. If the light intensity is not proper, adjust the VR on the lamp regulator, and repeat steps 5 and 6.

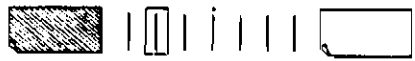

NOTE: Check and adjust the light intensity at every EM call.

6-9. OTHERS

9-1. Drum Current Adjustment 6-82

9-2. Power Supply Unit Removal 6-88

9-3. Charge Corona Power Pack Replacement 6-90

9-4. Drum Drive Belt Tension Adjustment 6-92

9-1. DRUM CURRENT ADJUSTMENT

1. Turn off the main switch and remove the rear cover.
2. Remove all connectors from the main board and optic board.
3. Insert the switching board into the plug of CN2 on the main board.
4. Remove the following parts. (Front Side)
   - Toner Collection Bottle
   - Charge Corona Unit
   - Drum Stay and Flange
   - Drum and Drum Heater
   - Development Unit
   - Cleaning Unit
5. Slide out the transfer/separation corona unit and remove the corona paper guide.
   - 1 screw
6. Install the drum shoe with the lip to the rear.

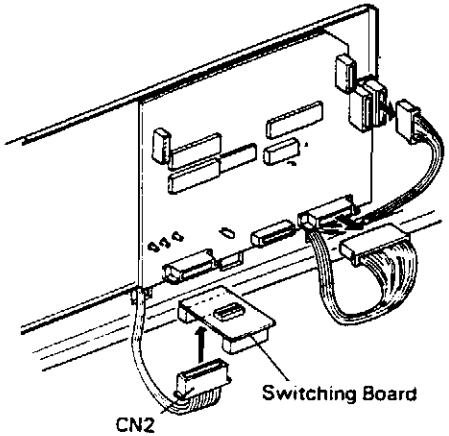

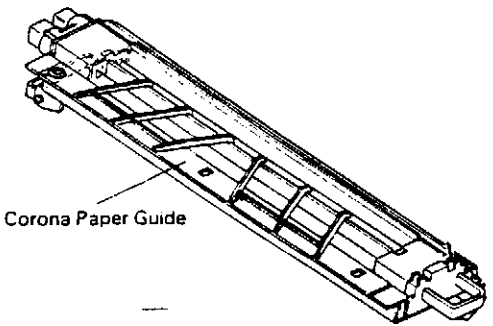

7. Reset the drum stay and connect the digital multimeter leads — the positive to the red shoe lead clip, and the negative and the black shoe lead clip to ground.

8. Reset the charge corona unit and transfer/separation corona unit, after cleaning wires and casings.

9. Actuate the front cover interlock switch.

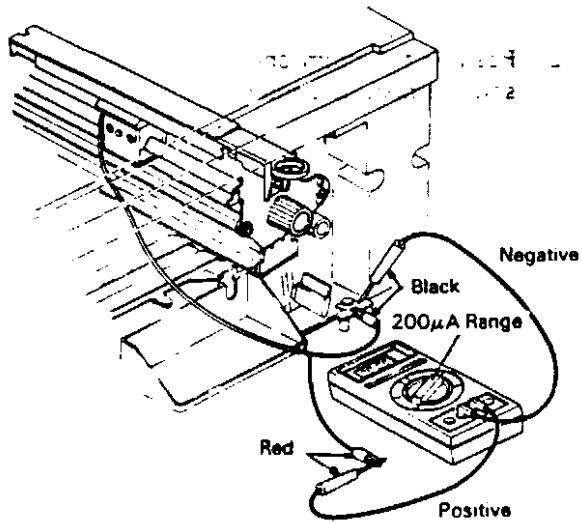

CHARGE CORONA

- Adjustment Standard: DC $+25.1 \pm 0.5\ \mu A$

1. Slide the drum shoe to its rear limit. (A)
2. Position the drum shoe so that the current sensing plate is centered facing the corona casing.
3. Select the DC μA range of digital multimeter.
4. Turn on the power relay and charge switches on the switching board.
5. Turn on the main switch, and note the reading.
6. Move the drum shoe to the front as shown in the right and check the front reading. (B)

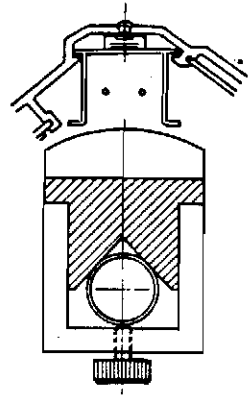

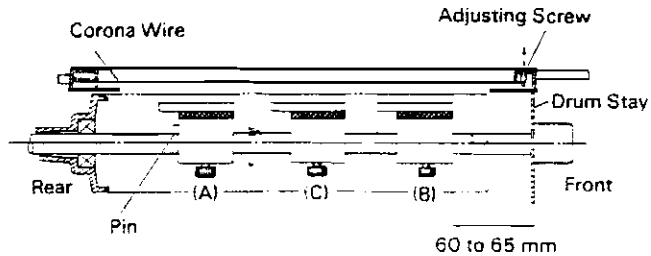

7. Adjust the front corona wire height adjusting screw if the reading differs.
   NOTE: • Clockwise turn will increase the reading.
   Counterclockwise turn will decrease the reading.
   • After adjusting the front side, confirm the rear reading once again.

8. Position the shoe on the center of the shaft (c) and adjust the charge corona current by turning the VR on the charge power pack.
   NOTE: Wait 20 seconds for the current to stabilize.

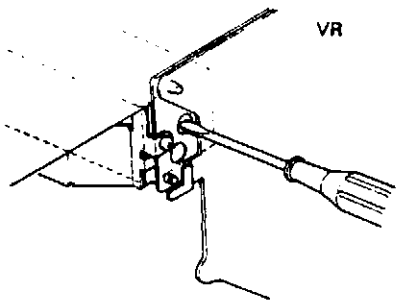

TRANSFER AND SEPARATION CORONA

- Adjustment Standard:

Transfer Corona:	DC	+25.5 ±0.7 μA
Separation Corona:	AC	+16.4 ±0.7 μA

1. Position the shoe on the center of the shaft over the transfer separation corona unit as shown.
   NOTE: Measure both the transfer and separation currents with the shoe at the same position.

2. Lower the CPU plate.

3. Select the DC μA range of digital multimeter, and turn off the charge switch and instead, turn on the transfer switch on the switch board.

4. Turn on the main switch and adjust the transfer corona current by turning VRT on the transfer/separation power pack.
   NOTE: Wait 20 seconds for the corona current to stabilize.

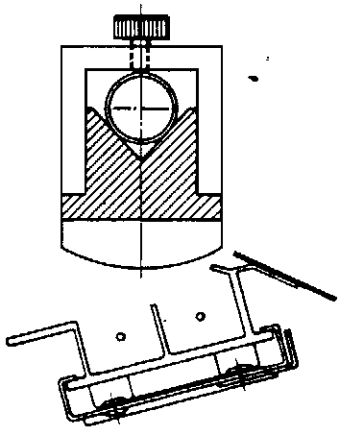

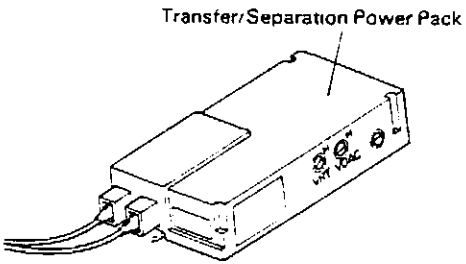

5. Turn off the transfer switch on the switching board.

6. Select the AC μA range of digital multimeter and turn on the separation switch on the switching board.

7. Adjust the separation corona current by turning VDAC on the transfer/separation power pack.
   NOTE: Do not adjust the DC component of separation corona current. (The other VR on T/S power pack.)

9-2. POWER SUPPLY UNIT REMOVAL

1. Open the front cover and take out the toner collection bottle.
2. Take out the drum and the transport unit. (See page 6-52)
3. Take out the transfer/separation corona unit.
4. Disconnect the transfer and separation corona cables and remove the ground wire screw.
5. Unhook the rear transfer and separation unit spring and remove the two shoulder screws securing the transfer and separation unit holder.
6. Remove the corona release lever.
7. Remove the black plastic guide of the transfer and separation unit.

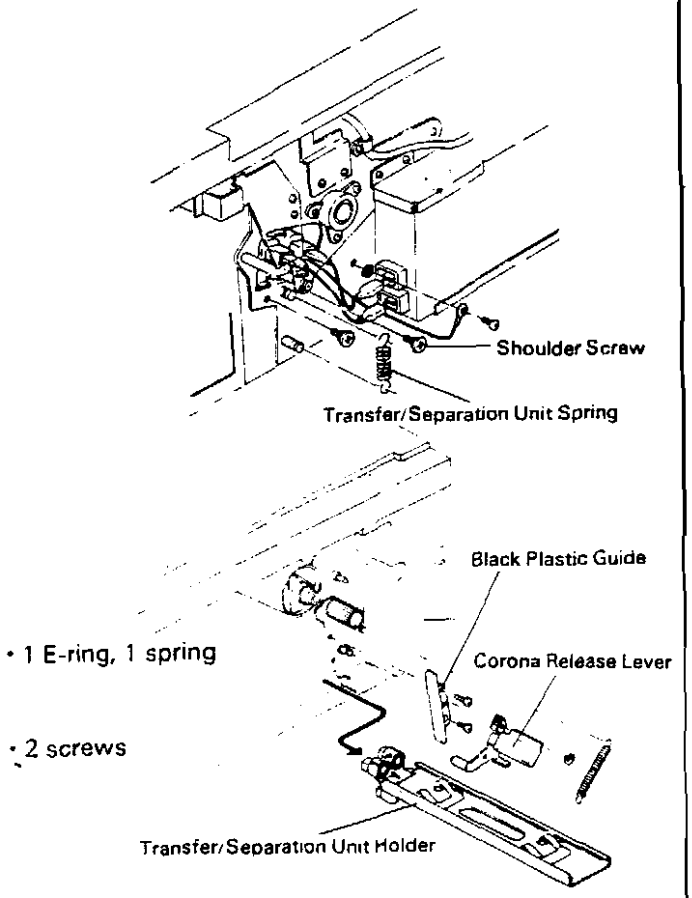

8. Take out the transfer and separation unit holder.
   NOTE: Lightly grease the portion of this holder that contacts the rear side-plate before reinstalling it.

9. Uncouple the three power supply unit connectors.

10. Take out the power supply unit.

11. Install a new power supply unit and reassemble the copier.
    NOTE: • Be sure to reconnect the transfer and separation corona cables.

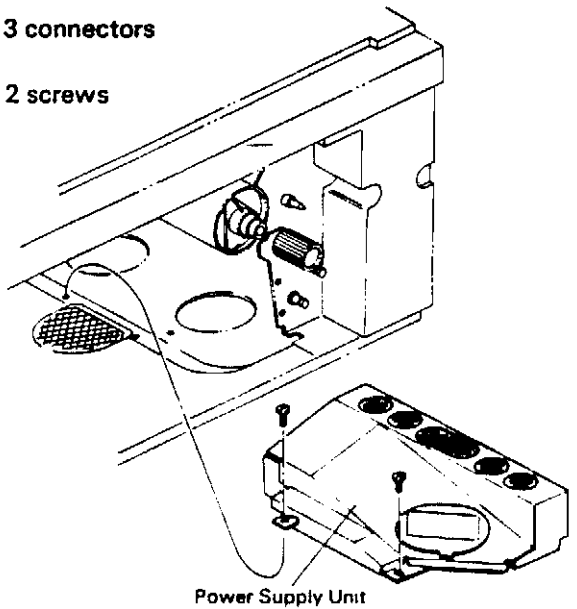

9-3. CHARGE CORONA POWER PACK REPLACEMENT

1. Remove the rear cover and lower the CPU plate. • 2 screws each
2. Remove the wire clamp and disconnect the charge corona cable from the corona unit.
3. Tape a piece of string (about 1 meter long) to the end of the corona cable.
4. Open the front cover and remove the air duct. • 1 screw
5. Remove the lower operation panel cover and disconnect the power pack 4P connector.
6. Unscrew the power pack ground wire.
7. Take out the power pack cover plate. • 1 screw
8. Take out the charge corona power pack. (The string should be pulled through the machine.)

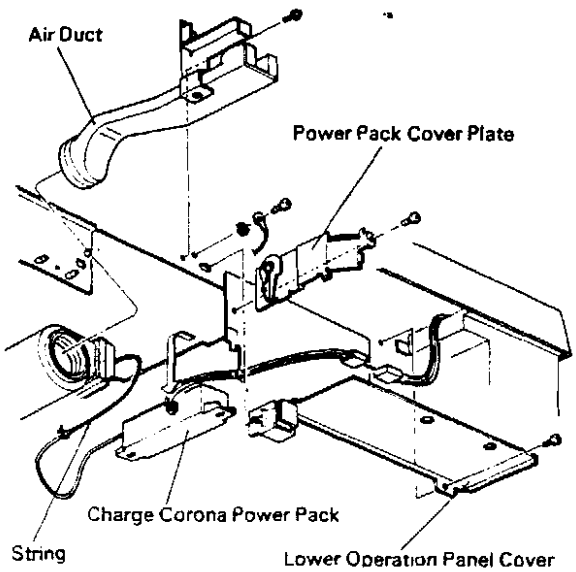

9. Take the string off of the old power pack cable and tape it on the end of the new cable.

10. With the string pull the cable through the copier.

11. Reassemble the copier.

9-4. DRUM DRIVE BELT TENSION ADJUSTMENT

- Adjustment Standard: 400 ± 50g (0.88 ± 0.11 lbs)

1. Remove the top cover. • 8 screws, 2 studs
2. Remove the inlet cooling fan. • 2 screws
3. Loosen the belt tightener bracket screw.
4. With a tension gauge, press down the belt tightener.
   When the gauge reads 400g (0.88 lbs), tighten the bracket screw.

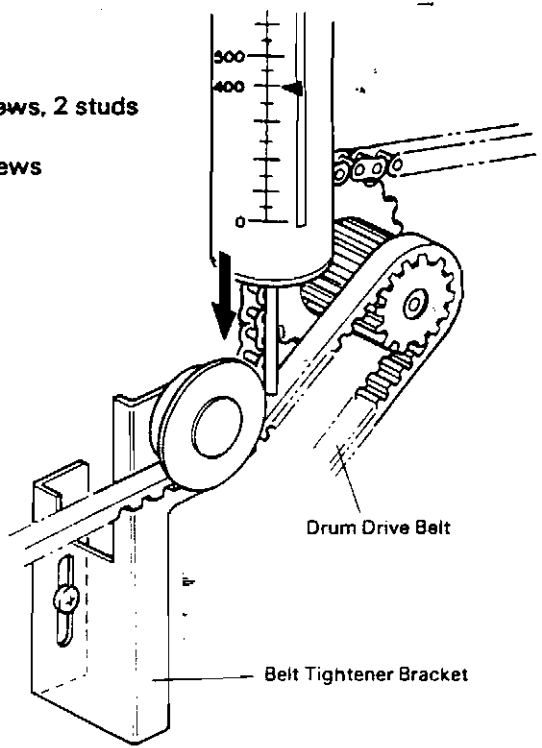

SECTION 7

SERVICE TABLES

7-1.TABLE OF ADJUSTMENTS

No.	Adjustment Item	Adjustment Standard	Note
1	Scanner Home Position Sensor (FT4060)	Scanner activates sensor (0V to +5V) when the center of the M3 screw is 14±0.5mm from the scale.	Connect the multimeter input line to pin 4 of IC21 on the optic PCB (or CN403-B5) to check the output of home position sensor. 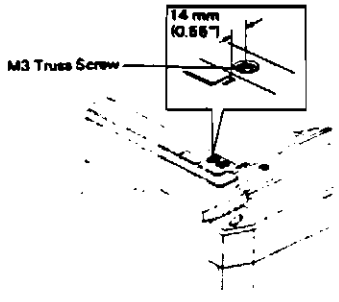
2	Scanner Drive Belt Tension (FT4030)	750 ± 250 g (1.65 ± 0.55 lbs)	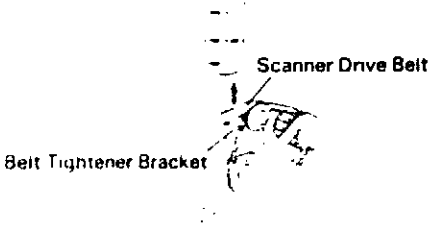

No.	Adjustment Item	Adjustment Standard	Note
3	Lens Home Position Sensor	1. Cam follower aligned with two holes in cam. 2. Sensor positioned where output change from +5V to 0V.	Connect the input line to pin 10 of IC21 (or CN403-A7) 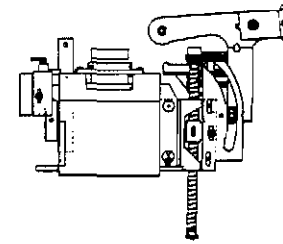
4	Doctor Gap	1.26 ± 0.1 mm (0.05" ± 0.004")	Adjust the DG at the positions shown. 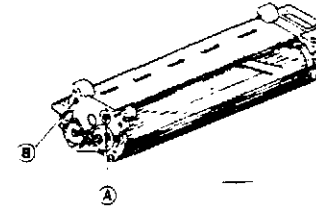
5	Magnet Angle	One graduation to the left of center, turning the plate clockwise.	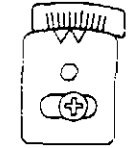

No.	Adjustment Item	Adjustment Standard	Note
6	Toner Density Sensor	+4 ± 0.2V	FT4060 Multimeter Hot line: CN3-B-13 GND line: TP100 Short Wire: CN3-B14 and TP100 FT4030 Multimeter Hot line: CN3-B-14 GND line: TP100 Short Wire: CN3-B13 and TP100
7	Friction Pad	A = 0.05 to 0.35 mm (0.002" to 0.014")	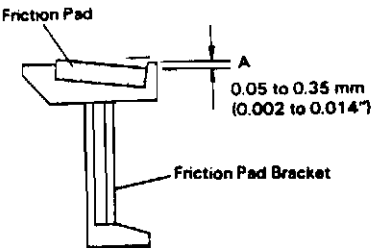
8	Paper Feed Motor	Upper: 150 ± $^{10}_{15}$ mm (5.91" ± $^{0.39}_{0.59}$") Lower: 135 ± $^{10}_{15}$ mm (5.31" ± $^{0.39}_{0.59}$")	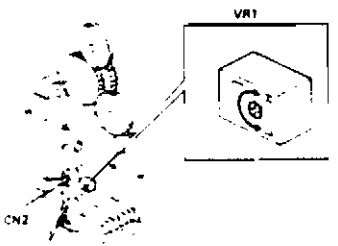

No.	Adjustment Item	Adjustment Standard	Note
9	By-pass Solenoid Position (FT4030)	0.5 to 1.0 mm (0.02" to 0.04")	Adjust the solenoid bracket when the by-pass feed rollers lightly touch. 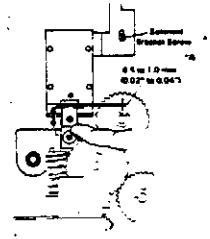
10	Crimp Clutch	A = 0.5 to 1.0 mm (0.02" to 0.04") thrust play = 0.05 + 0.01 mm (0.002" + 0.004")	Measure "A" while turning the sprocket clockwise. 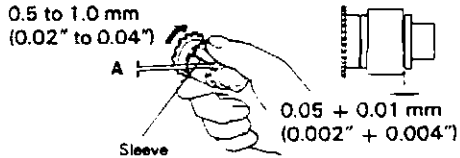
11	Crimp Solenoid	Stopper clearance is 1.0 to 3.0 mm (0.04" to 0.12") when solenoid is on.	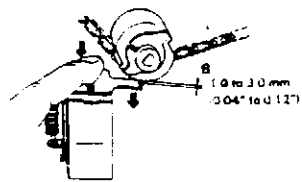

No.	Adjustment Item	Adjustment Standard	Note
12	Pick-off Pawl Solenoid	Solenoid stroke $= 5^{+0}_{-0.5}$ mm ($0.2"^{+0}_{-0.02}$)	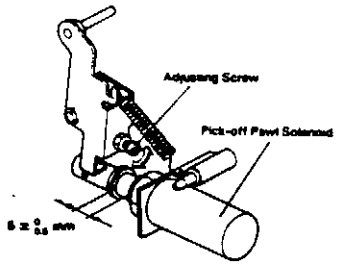 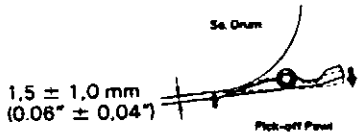
13	Thermistor Gap	0.4 to 0.7 mm (0.02" to 0.03")	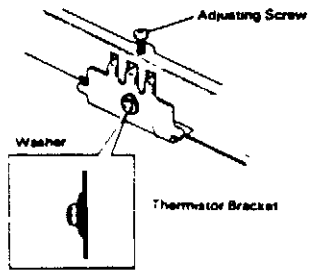

No.	Adjustment Item	Adjustment Standard	Note
14	Fusing Temperature	Operating Temp. (VR.2) 178 to 183°C (352.4 to 361.4°F) Ready Temp. (VR.1) 175 ± 3°C (341 ± 37.4°F) Maximum Overshoot Temp. less than 205°C (401°F)	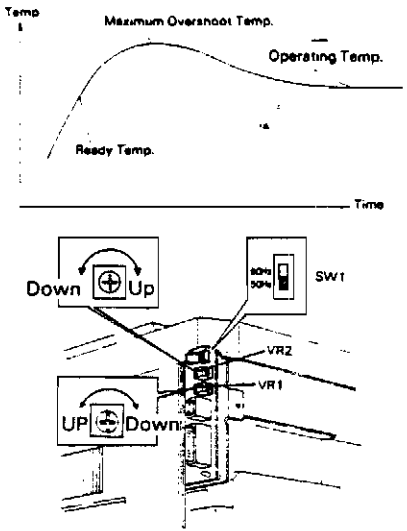
15	Light Intensity	Level 2 of gray scale should be slightly visible on the copy when 2nd level of density control is selected. (OS-A3), and dirty background should appear when 1st level of density control is selected.	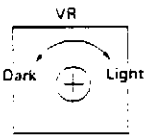

No.	Adjustment Item	Adjustment Standard	Note
16	Corona Current	Charge Corona DC + 25.1 ± 0.5 μA Transfer Corona DC + 25.5 ± 0.7 μA Separation Corona AC + 16.4 ± 0.7 μA	
17	Drum Drive Belt Tension	400 ± 50 g (0.88 ± 0.11 lbs.)	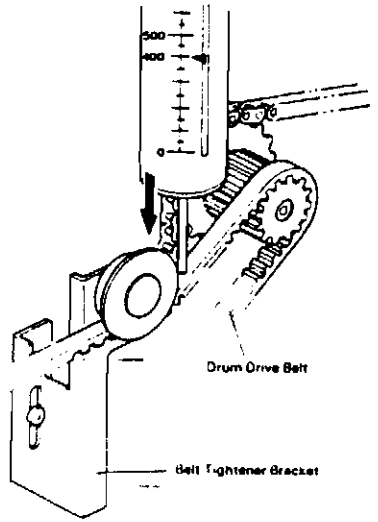

No.		FT4060		FT4030	
		Adjustment Standard	Note	Adjustment Standard	Note
18	Leading Edge Registration	+2.0 ± 2.0 mm (0.08" ± 0.08")	DIP SW1 #1 ~ #4	+2.0 ± 1.5 mm (0.08" ± 0.06")	Registration Switch
19	Leading Edge Erase	1.5 ± 1.0 mm (0.06" ± 0.04")	DIP SW1 #7, #8	2.0 ± 1.5 mm (0.08" ± 0.06")	Home Position Sensr
20	Vertical Magnification	±1%	DIP SW1 #5, #6	Can not adjust	
21	Horizontal Magnification	±0.5%	Wire Clamp	±0.5%	Wire Clamp
22	Thrust play	• Registration Clutch 0.05 ~ 0.1 mm • Toner Supply Clutch 0.05 ~ 0.2 mm			

7-2. DIP SWITCH TABLES

1. DIP SW1 (FT4060 OPTICS BOARD)

No	Leading Edge Registration																Vertical Magnification				Leading Edge Erase			
1	0	0	0	0	0	0	0	0	1	1	1	1	1	1	1	1								
2	0	0	0	0	1	1	1	1	0	0	0	0	1	1	1	1								
3	0	0	1	1	0	0	1	1	0	0	1	1	0	0	1	1								
4	0	1	0	1	0	1	0	1	0	1	0	1	0	1	0	1								
5																	0	0	1	1				
6																	0	1	0	1				
7																					0	0	1	1
8																					0	1	0	1
Amount	−4.2 mm	−3.6	−3.0	−2.4	−1.8	−1.2	−0.6	0	+0.6	+1.2	+1.8	+2.4	+3.0	+3.6	+4.2	+4.8	+0.3 %	+0.1	−0.1	−0.3	3.2 mm	4.0	4.8	5.6
	−0.17"	−0.14	−0.12	−0.09	−0.07	−0.05	−0.02	0	+0.02	+0.05	+0.07	+0.09	+0.12	+0.14	+0.17	+0.19					0.13"	0.16	0.19	0.22

2. DIP SW2 (FT4060 OPTICS BOARD)

No.	FUNCTION
1	Optics Free Run
2 ~ 4	Not Used. (Must be OFF)

3. DIP SW100 (MAIN BOARD)

No.	FUNCTION
1	Free Run
2	Not Used.
3	
4	
5	Toner Supply Amount (Refer to the right table)
6	
7	
8	

DIP SW No.				FUNCTION	
5	6	7	8		
1	0	0	0	10% Black Area	Detect Mode
0	1			20% Black Area	
1	1			30% Black Area	
0	0			0% No Supply	
1	0	1	1	3.5% Black Area	Fixed Supply Mode
0	1			7% Black Area	
1	1			10.5% Black Area	
0	0			0% No Supply	

0: OFF 1: ON

4. DIP SW100 (OPERATION PANEL)

No.	FUNCTION
1	Buzzer (Key Tone)
2	Drum Conditioning
3	Auto Clear
4	Count UP/DOWN
5	Not Used
6	
7	
8	

7-3. SERVICE CALL CONDITIONS

EXPOSURE

1. The exposure lamp turns on just after the main power switch is turned on.
2. The exposure lamp fails to light. (FT4030 only)

OPTICS (FT4060)

1. Either of the overrun switches turns on.
2. The encoder signal interval is more than 0.2 sec or less than 50 μsec while the scanner drive motor is turning.
3. The scanner does not move from the home position after the scanner drive motor starts turning.
4. The home position sensor (or it's circuit) is defective.
5. The lens home sensor is not activated within 5 seconds after the lens drive motor starts turning.

OPTICS (FT4030)

1. The scanner does not leave the home position within 1.23 sec after the forward coil of the scanner drive clutch turns on.
2. The registration switch is not actuated within 1.43 sec after the forward coil of the scanner drive clutch turns on.
3. The scanner home sensor is not actuated within 3.43 sec after the reverse coil of the scanner drive clutch turns on.

FUNCTIONAL DRIVE

1. Main motor does not rotate.
2. Pulse encoder is defective.

THERMISTOR

1. Either the drum heater thermistor circuit or the fusing thermistor circuit is open.
2. The fusing temperature thermistor is shorted.

SECTION 8

P.M. TABLE

8. P.M. TABLE

○ : Clean • : Replace # : Lubricant

	EM	40K	80K	120K	160K	200K	Note
OPTICS							
1. Mirrors, Lens, Reflectors, Toner Shield Glass, Sensor Pattern	○	○					Alcohol or Water (Si. Cloth)
2. Exposure Glass	○	○					Glass Cleaner and Dry Cloth
3. Platen Cover	○	○					Alcohol or Water
4. Exposure Lamp				•			
5. Scanner Guide Rod and Plate			#		○		Launa Oil or Equivalent Oil
PAPER FEED							
6. Friction Pad	○	•					Water
7. Paper Feed Roller	○	•					Water
8. Registration Roller			○				Water
9. Cassette Pad			○				
10. Worm Gear		#					Launa Oil or Equivalent Oil
11. Paper Feed Sensor			○				
CORONA UNIT							
12. Corona Wires	○	○	•				Dry Cloth
13. End Blocks and Casing	○	○					Dry Cloth
14. Corona Wire Cleaner Pad			•				
DEVELOPMENT UNIT							
15. Developer			•				If necessary
16. Development Unit Guide		○					
CLEANING UNIT	○ or •						See the Note.
17. Cleaning Blade		•					
18. Cleaning Brush		•					Dust with Setting Powder when replacing
19. Cleaning Unit		○					

NOTE:
- At every EM, clean the edge of the cleaning blade. And if the cleaning blade has been used for about 20K copies, replace it.
- At every EM, check and adjust the exposure light intensity.

	EM	40K	80K	120K	160K	200K	Note
FUSING							
20. Hot Roller		O	*				
21. Pressure Roller		O		*			
22. Hot Roller Strippers		O	*				
23. Oil Supply Pad		*					
24. Oil Cleaning Pad		*					
25. Fusing Engrance and Exit Guides		O					Toluene
26. Oil Spreader Blade				*			
OTHERS							
27. Toner Collection Bottle and Pick-off Sensors	O	O					Blower Brush
28. Transport Belts		O					Alcohol
29. Erase Lamp Filter		O					
30. Toner Density Sensor		O					
31. Drive Chain			#				Spindle Oil
32. Bushings			#				Spindle Oil
33. Paper Crimp Clutch						#	Mobil Temp. 1
34. Lens Drive Shaft						#	Launa Oil or Equivalent Oil
35. Quenching Lamp		O		*			Finger or Dry Cloth
36. Duct Filters			O				

NOTE:
- Check used toner and silicone oil level, and remove or add if necessary at every EM.
- To maintain the best copy quality, the above scheduled items should be observed.
- The above items should be carried out either at an EM call or as copy quality indicates to be necessary.

SECTION 9

SPECIAL TOOLS AND JIGS

9. SPECIAL TOOLS AND JIGS

1. Setting Powder	54429101	13. Sllicon Oil	54209550
2. Light Shielding Bag	54429102	14. Launa Oil	54429103
3. Drum Current Measuring Shoe	54429106	15. Isoprophil Alcohol	
4. Test Harness-Power Supply Unit	54429105	16. Spindle Oil	
5. Switching Board	54429601	17. Grease (MOBIL TEMP 1)	
6. Test Chart OS-A-3	54209502		
7. Digital Thermometer	54209504		
8. Digital Thermometer's Probe	54209505		
9. Digital Multimeter (BECKMAN RMS3030)	54209507		
10. Tension Gauge	54199660		
11. Carpenter's Level			
12. Thickness Gauge			

SECTION 10

TROUBLE SHOOTING