A128 COPIER
SERVICE MANUAL

1. SPECIFICATIONS

Configuration: Desk top

Copy Process: Dry electrostatic transfer system

Originals: Sheet/Book, object

Original Size: Maximum: A3, 11" x 17"

Copy Paper Size: Maximum: A3, 11" x 17"
Minimum: A6, 5 1/2" x 8 1/2" (lengthwise)

Copy Paper Weight: 52 to 157 g/m^2 (14 to 42 lb)

Reproduction Ratios: 2 Enlargement and 3 Reduction

	A4/A3 version	LT/LDG version
Enlargement	141% 122%	155% 129%
Full size	100%	100%
Reduction	93% 82% 71%	93% 74% 65%

Zoom: From 50% to 200% in 1% steps

Copying Speed: 15 copies/minute (A4, 11" x 8 1/2" sideways)
10 copies/minute (A3, 11" x 17")

Warm-Up Time: Less than 60 seconds (at 20°C)

First Copy Time: 5.9 seconds (A4, 11" x 8 1/2" sideways for cassette feed)

Copy Number Input: Ten keys, 1 to 99 (count up)

Manual Image Density Selection: 7 steps

Automatic Reset: All input modes are reset 1 minute after the copier is not in use; can also be set to 3 minutes or no auto reset.

Energy Saver Function: Reduces electricity consumption
(Manual or manual/auto)

Paper Capacity: Cassettes: 500 sheets (A4, 8 1/2" x 11")
250 sheets (A3, 11" x 17")
Manual feed table: 50 sheets

Toner Replenishment: Black: Cartridge exchange (370g/cartridge)
Color (red, blue, & green):
Cartridge exchange (310 g/cartridge)

Copy Tray Capacity: 250 sheets (B4, 8 1/2" x 14" and smaller)
100 sheets (A3, 11" x 17")

Power Source: 110 V/ 60 Hz/ 15 A (for Taiwan)
115 V/ 60 Hz/ 15 A (for North America)
220/230/240 V/ 50 Hz/ 8 A (for Europe)
220 V/ 60 Hz/ 8 A (for Middle East)

(Refer to the serial number plate (rating plate) to determine the power source required by the machine.)

Power Consumption:

	Copier Only	Full System
Maximum	1.2 KVA	1.5 KVA
Warm-up	800 VA (average)	800 VA (average)
Copy cycle	900 VA (average)	800 VA (average)
Stand-by (without energy saver function)	180 VA (average)	180 VA (average)
Main switch off	20 VA (average)	40 VA (average)*

* : With the optional optics anti-condensation heater

Dimensions:

	Width	Depth	Height
Copier only	672 mm (1130 mm)* (1255 mm)** 26.5" (44.5")* (49.4")**	600 mm 23.7"	363 mm (417 mm)* 14.1" (16.4")*
Full system	1274 mm 49.1"	600 mm 23.7"	466 mm 18.3"

( )* : When the A4 cassette and platen cover are installed and the copy tray is extended.

( )** : When the A3, 11" X 17" cassette and platen cover are installed and the copy tray is extended.

Full system: When the A3, 11" x 17" cassette and the sorter and the document feeder are installed.

Noise Emissions:

	Maximum	Copy cycle	Stand-by
Copier only	less than 58 dB	less than 55 dB	less than 40 dB
Full system	less than 60 dB	less than 58 dB	less than 40 dB

Weight:

Copier only	50 kg (110.2 lb)
Full system	67 kg (147.7 lb)

Optional Equipment and Machine Configuration:

( ) Machine Code

Configuration	Optional dc power supply unit (A525)	
Optional equipment	Required	Not required
10 bin sorter (A490)		O
Document feeder (A318)	O	
Color development unit (A313)		O

Other Optional Equipment:

- Key counter
- Universal cassette
- Optics anti-condensation heater

- Specifications are subject to change without notice.

2. COPY PROCESSES AROUND THE DRUM

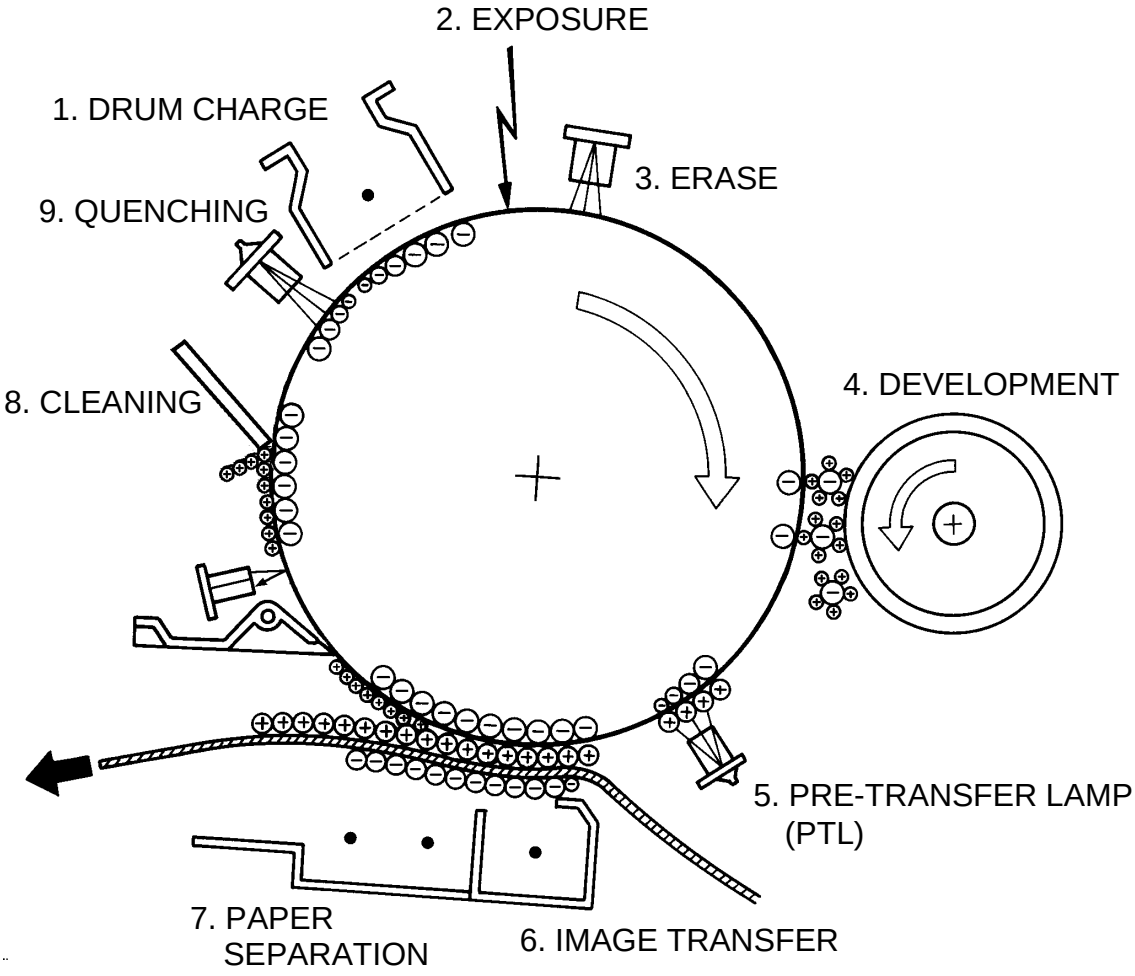

CLEANING

The cleaning blade removes any toner remaining on the drum. (A cleaning brush is not used in the A128 copier).

3. MECHANICAL COMPONENT LAYOUT

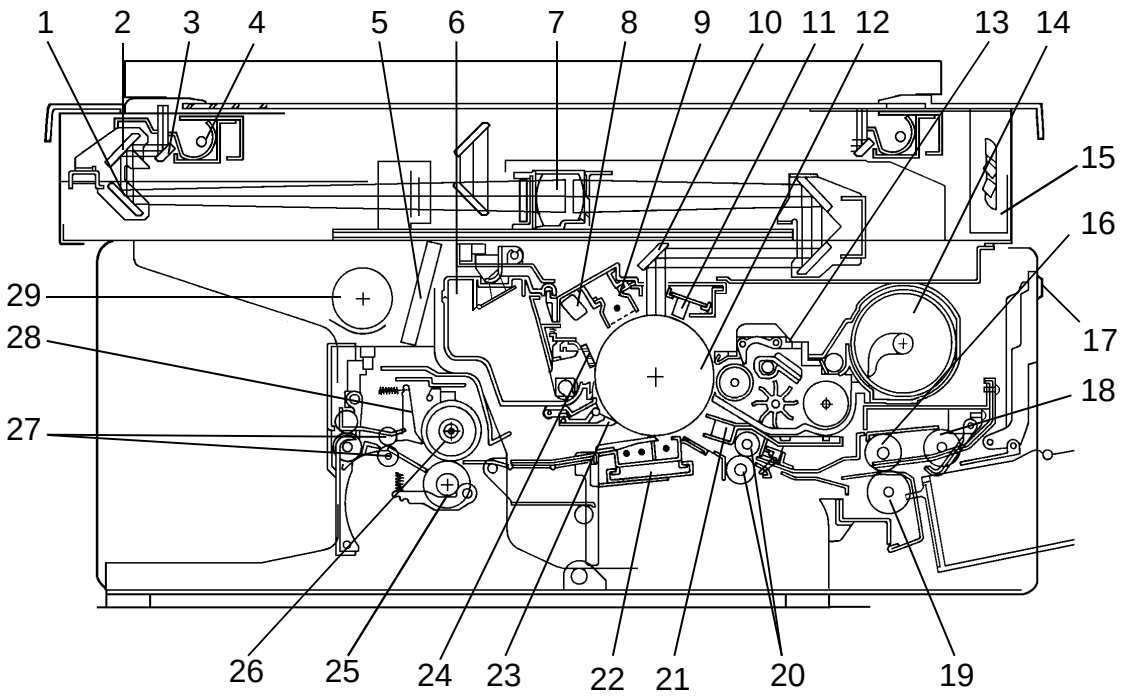

1. Third Mirror
2. Second Mirror
3. First Mirror
4. Exposure Lamp
5. Ozone Filter
6. Cleaning Unit
7. Lens
8. Quenching Lamp (QL)
9. Charge Corona Unit
10. Sixth Mirror
11. Erase Lamp
12. OPC Drum
13. Development Unit
14. Toner Supply Unit
15. Optics Cooling Fan
16. 1st Feed Roller
17. Manual Feed Table
18. Pick-up Roller
19. Separation Roller
20. Registration Rollers
21. Pre-transfer Lamp (PTL)
22. Transfer and Separation Corona Unit
23. Pick-off Pawls
24. Cleaning Blade
25. Pressure Roller
26. Hot Roller
27. Exit Rollers
28. Hot Roller Strippers
29. Exhaust Blower

4. DRIVE LAYOUT

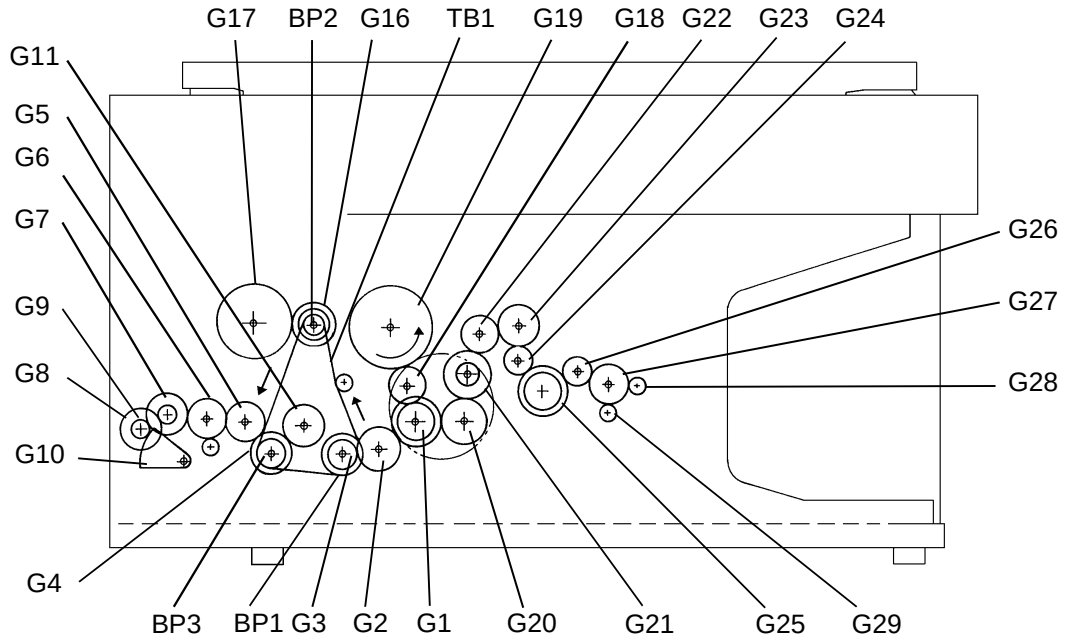

G1: Main Motor Gear

G2: Relay Gear

G3: Timing Belt Drive Gear

BP1: Timing Belt Pulley

TB1: Timing Belt → Development Section

A

G18: Relay Gear

G19: Drum Drive Gear

Drum

BP2: Timing Belt Pulley

G16: Development CL Gear

Development CL Solenoid → Development Unit

G17: Toner Supply CL Gear

Toner Supply CL → Toner Supply Unit

G20: Relay Gear

G21: Cleaning Drive → Cleaning

G22: Relay Gear

Fusing and Exit Section

G23: Relay Gear

G24: Relay Gear

G25: Hot Roller Gear

G26: Relay Gear

G27: Relay Gear

G28: Exit Roller Gear

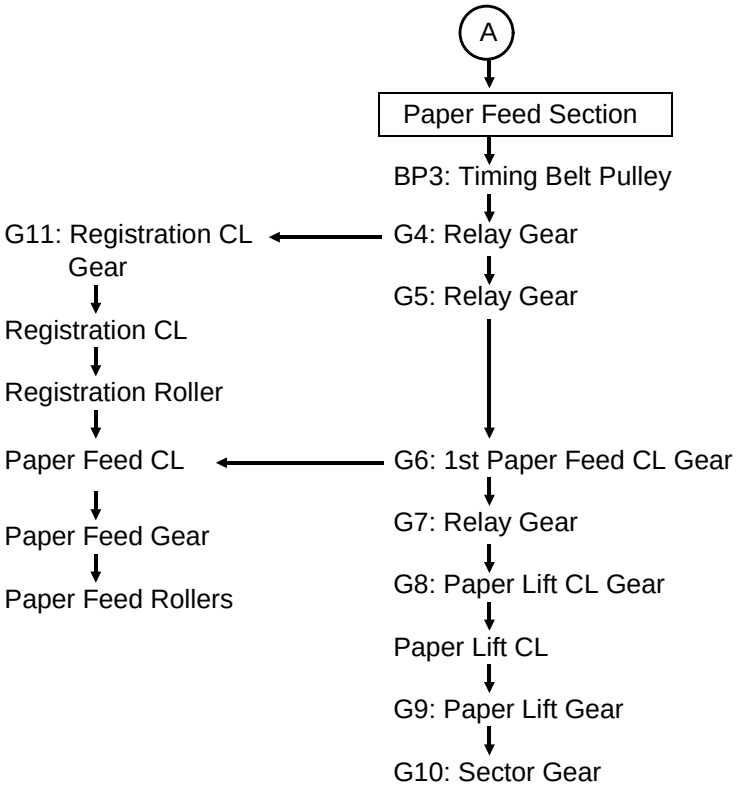
A
Paper Feed Section
BP3: Timing Belt Pulley
G4: Relay Gear
G11: Registration CL Gear
G5: Relay Gear
Registration CL
Registration Roller
G6: 1st Paper Feed CL Gear
Paper Feed CL
G7: Relay Gear
Paper Feed Gear
G8: Paper Lift CL Gear
Paper Feed Rollers
Paper Lift CL
G9: Paper Lift Gear
G10: Sector Gear

5. ELECTRICAL COMPONENT LAYOUT

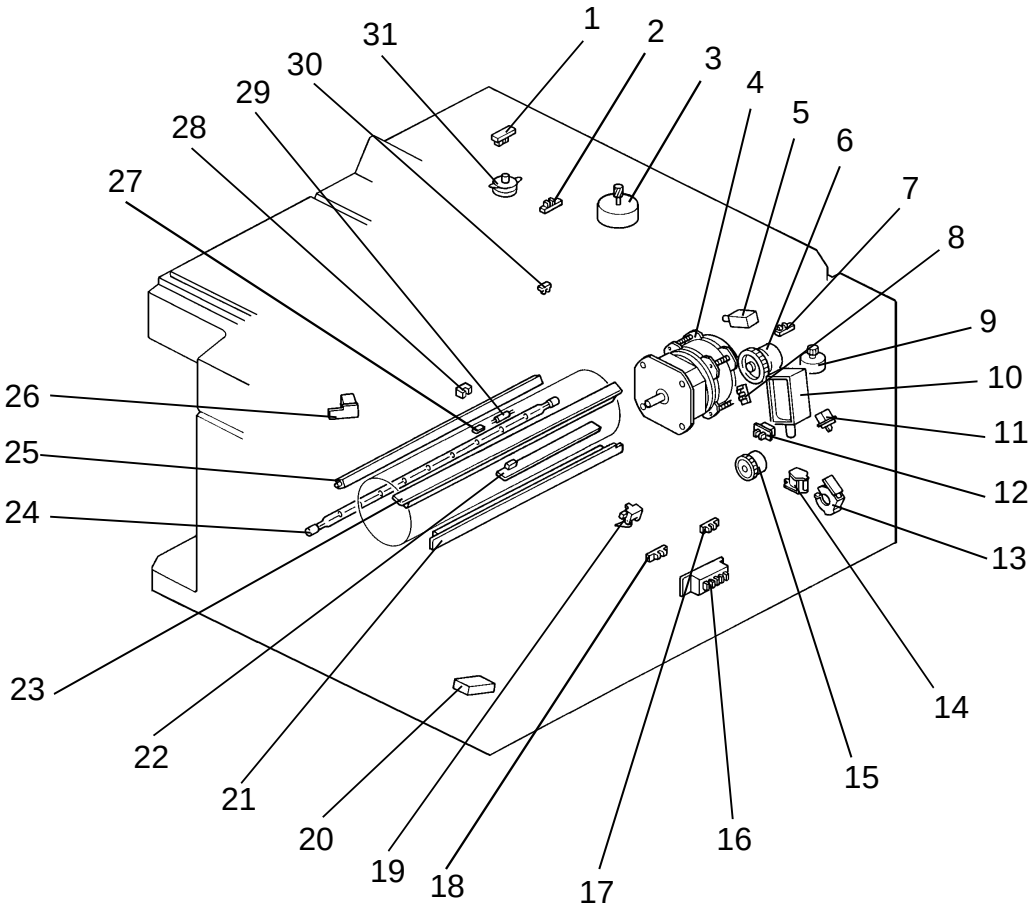

1. Scanner H.P. Sensor
2. Lens H.P. Sensor
3. Scanner Motor
4. Main Motor
5. Development Clutch Solenoid
6. Toner Supply Clutch
7. 4th/5th Mirror H.P. Sensor
8. Color Toner End Sensor
9. 4th/5th Mirror Motor
10. Pick-up Roller Release Solenoid
11. Manual Feed Table Switch
12. Color Switch
13. Paper Lift Clutch
14. Paper Feed Clutch Solenoid
15. Registration Clutch
16. Paper Size Switch
17. Paper End Sensor
18. Paper Lift Sensor
19. Registration Sensor
20. Total Counter
21. Pre-transfer Lamp (PTL)
22. ID Sensor Board
23. Erase Lamp
24. Fusing Lamp
25. Quenching Lamp (QL)
26. Auto Image Density Sensor
27. Fusing Thermistor
28. Toner Overflow Sensor
29. Fusing Thermofuse
30. Exit Sensor
31. Lens Motor

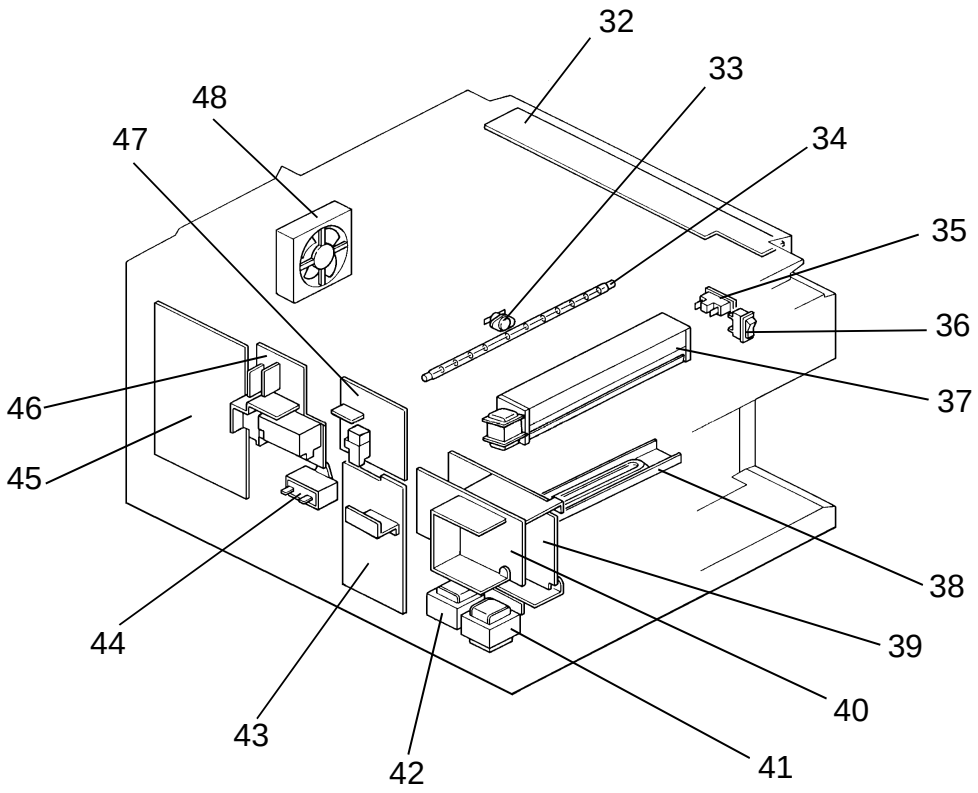

32. Operation Panel Board
33. Optics Thermoswitch
34. Exposure Lamp
35. Cover Safety Switch
36. Main Switch
37. Exhaust Blower Motor
38. Drum Anti-condensation Heater
39. Main DC Power Supply Board
40. Option DC Power Supply Board
41. Option Transformer
42. Main Transformer
43. AC Drive Board
44. Main Motor Capacitor
45. Main Board
46. TC/SC Power Pack
47. CC/Grid/Bias Power Pack
48. Optics Cooling Fan Motor

6. ELECTRICAL COMPONENT DESCRIPTIONS

Symbol	Name	Function	Index No.
Motors			
M1	Main Motor	Drives all the main unit components except for the optics unit and fans. (115/220/230/240 Vac)	4
M2	Scanner Motor	Drives the scanners (1st and 2nd). (dc stepper)	3
M3	Lens Motor	Positions the lens according to the selected magnification. (dc stepper)	31
M4	4th/5th Mirror Motor	Positions the 4th/5th mirror according to the selected magnification. (dc stepper)	9
M5	Optics Cooling Fan Motor	Prevents built up of hot air in the optics cavity. (24 Vdc)	48
M7	Exhaust Blower Motor	Removes heat from around the fusing unit and blows the ozone built up around the charge section to the ozone filter. (115/220/230/240 Vac)	37
Magnetic Clutch			
MC1	Toner Supply Clutch	Drives the toner supply roller.	6
Magnetic Spring Clutches			
MSC2	Paper Lift Clutch	Lifts paper to the appropriate feed station.	13
MSC3	Registration Clutch	Drives the registration rollers.	15
Solenoids			
SOL1	Paper Feed Clutch Solenoid	Starts paper feed from the first paper station.	14
SOL2	Pick-up Roller Release Solenoid	a) After a sheet of paper is fed, releases the pick-up roller from next sheet. b) When the manual feed table is used, releases the pick-up roller from the table.	10
SOL3	Development Clutch Solenoid	Drives the development unit.	5
Switches			
SW1	Main Switch	Supplies power to the copier.	36
SW2	Cover Safety Switch	Cuts the ac power line when the front cover or/and exit cover is open.	35
SW3	Paper Size Switch	Determines what size paper is in the cassette.	16
SW6	Color Switch	Determines which color development unit is installed.	12
SW7	Manual Feed Table Switch	Detects when the manual feed table is open.	11

Symbol	Name	Function	Index No.
Sensors			
S1	Scanner Home Position Sensor	Informs the CPU when the 1st scanner is at the home position.	1
S2	Lens Home Position Sensor	Informs the CPU when the lens is at the home position (full size position).	2
S3	4th/5th Mirror Home Position Sensor	Informs the CPU when the 4th/5th mirror assembly is at the home position (full size position).	7
S4	Registration Sensor	Detects misfeeds.	19
S5	Exit Sensor	Detects misfeeds.	30
S6	Paper End Sensor	Informs CPU when the cassette runs out of paper.	17
S8	Color Toner End Sensor	Detects when it is time to add toner for the color development unit.	8
S9	Paper Lift Sensor	Detects the correct feed height of paper in the cassette.	18
S10	Image Density (ID) Sensor	Detects the density of the image on the drum to control the toner density.	22
S11	Auto Image Density Sensor (ADS)	Senses the background density of the original.	26
S17	Toner Overflow Sensor	Detects when the used toner tank is full.	28
Printed Circuit Boards			
PCB1	Main Board	Controls all copier functions both directly and through the other PCBs.	45
PCB2	AC Drive Board	Drives all ac motors, the exposure lamp, fusing lamp, quenching lamp, and exhaust blower motor.	43
PCB3	Main DC Power Supply Board	Rectifies 28 Vac input and outputs dc voltages.	39
PCB4	Operation Panel Board	Informs the CPU of the selected modes and displays the situations on the panel.	32
PCB5	Option DC Power Supply Board	Rectifies 26 and 10 Vac input and outputs dc voltages. This board is required when the document feeder is installed.	40
Lamps			
L1	Exposure Lamp	Applies high intensity light to the original for exposure.	34
L2	Fusing Lamp	Provides heat to the hot roller.	24
L3	Quenching Lamp	Neutralizes any charge remaining on the drum surface after cleaning.	25

Symbol	Name	Function	Index No.
L4	Erase Lamp	Discharge the drum outside of the image area. Provides leading/trailing edge, side and editing erases.	23
L5	Pre-transfer Lamp	Reduces charge on the drum surface before transfer.	21
Power Packs			
P1	CC/Grid/Bias Power Pack	Provides high voltage for the charge corona, grid, and the development roller bias.	47
P2	TC/SC Power Pack	Provides high voltage for the transfer and separation coronas.	46
Heaters			
H1	Drum Anti-condensation Heater	Prevents moisture around the drum.	38
H2	Optics Anti-condensation Heater (Option)	Prevents moisture from forming on the optics.	N/A
Counters			
CO1	Total Counter	Keeps track of the total number of copies made.	20
CO2	Key Counter (Option)	Used for control of authorized use. Copier will not operate until installed.	N/A
Transformer			
TR1	Main Transformer	Steps down the wall voltage to 28 Vac.	42
TR2	Option Transformer	Steps down the wall voltage to 26 Vac and 10 Vac. This transformer is required when the document feeder is installed.	41
Others			
TH	Fusing Thermistor	Monitors the fusing temperature.	27
TF	Fusing Thermofuse	Provides back-up overheat protection in the fusing unit.	29
TS	Optics Thermoswitch	Provides back-up overheat protection around the exposure lamp.	33
C	Main Motor Capacitor	Start capacitor	44

7. AC POWER AND DC POWER DISTRIBUTION

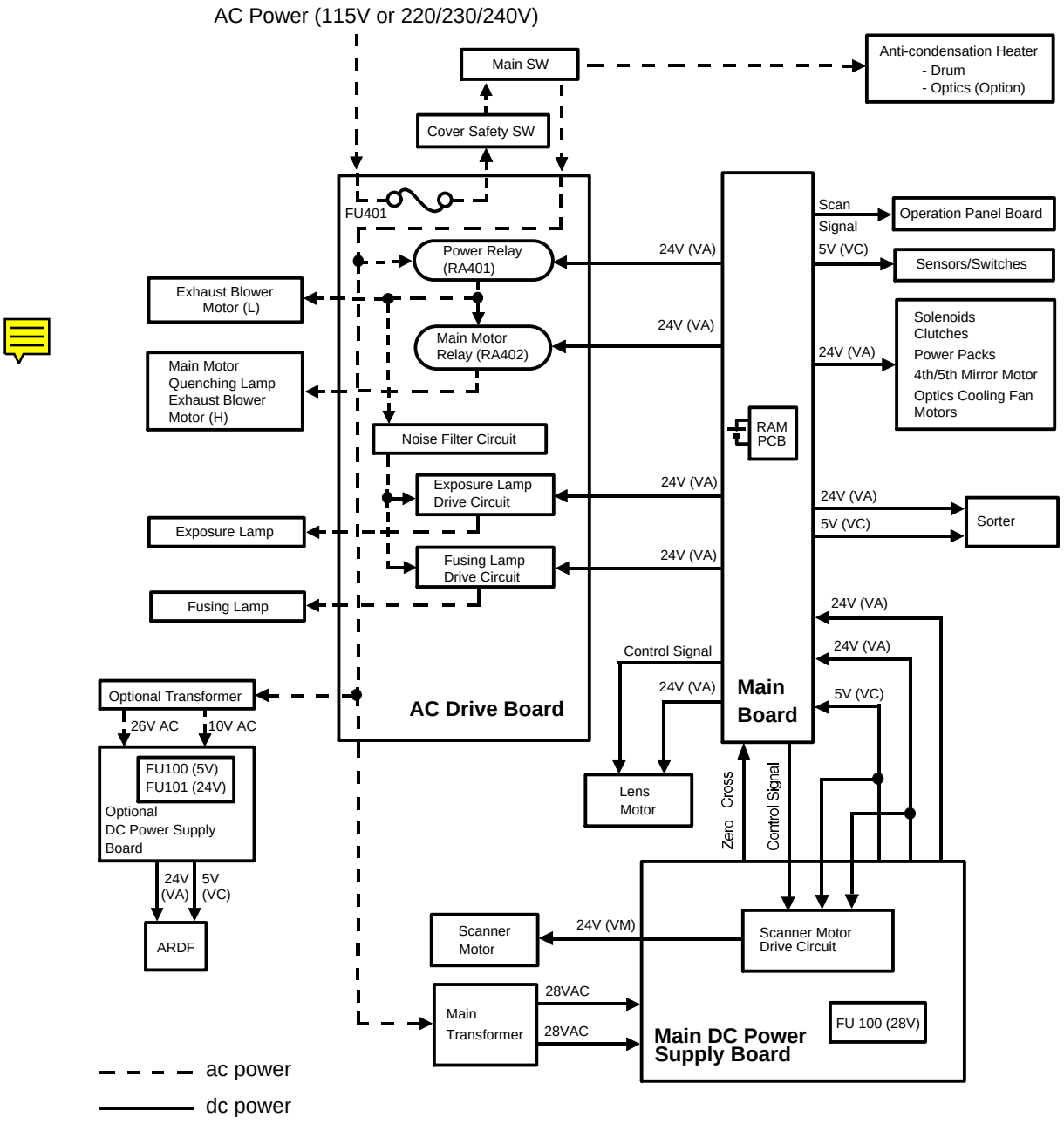

When this copier is plugged in and the main switch is turned off, ac power is supplied via the ac drive board to the anti-condensation heater. When the front cover and/or the exit cover is open, the cover safety switch completely cuts off power to all ac and dc components. The RAM board has a back up power supply (dc battery) for the service program mode and misfeed job recovery.

When the main switch is turned on, the ac power supply to the anti-condensation heater is cut off and ac power is supplied to the ac drive board. The main and optional transformers receive wall outlet ac power through the ac drive board. The main transformer outputs 28 volts ac to the main dc power supply board. The optional transformer outputs 10 volts ac and 26 volts ac to the optional dc power supply board.

The main dc power supply board converts the 28 volts ac to +5 volts and a zero cross signal. The main dc power supply board also converts 28 volts ac to +24 volts.

The +5 volt and +24 volt currents are supplied to the copier main board. The zero cross signal is supplied to the copier main board. The main dc power supply board has a scanner motor drive circuit. The scanner motor drive circuit produces scanner motor drive signals.

The copier main board supplies dc power to all copier dc components except the scanner motor. All sensors and switches operate on +5 volts. All other dc components including the power relay (RA401) and the main motor relay (RA402) operate on +24 volts. The copier main board also supplies the +5 volt and +24 volt currents to the sorter.

The main board supplies +24 volts to the lens motor. The main dc power supply board supplies +24 volts to the scanner motor. The main board sends the control signals to the lens motor and to the scanner motor drive circuit on the main dc power supply board.

The optional dc power supply board supplies +5 volts and +24 volts to the ARDF.

When the main board receives power, it activates the power relay (RA401) which then supplies ac power to the fusing lamp drive circuit, and the exposure lamp drive circuit on the ac drive board. The exhaust blower motor begins rotating at low speed. The fusing lamp drive circuit receives a trigger signal from the main board and the fusing lamp lights. The exposure lamp does not turn on until the main board sends a trigger pulse to the exposure lamp drive circuit.

When the Start key is pressed, the main board energizes the main motor relay (RA402). Then, the main motor and the quenching lamp turn on and the exhaust blower starts rotating at high speed.

When the main switch is turned off, power is cut off to the main board and to RA401, and the drum and optional anticondensation heaters are turned on. The exposure lamp and the fusing lamp power lines are completely disconnected from the line voltage.

8. DETAILED SECTION DESCRIPTIONS

8.1 DRUM CLEANING

8.1.1 Overview

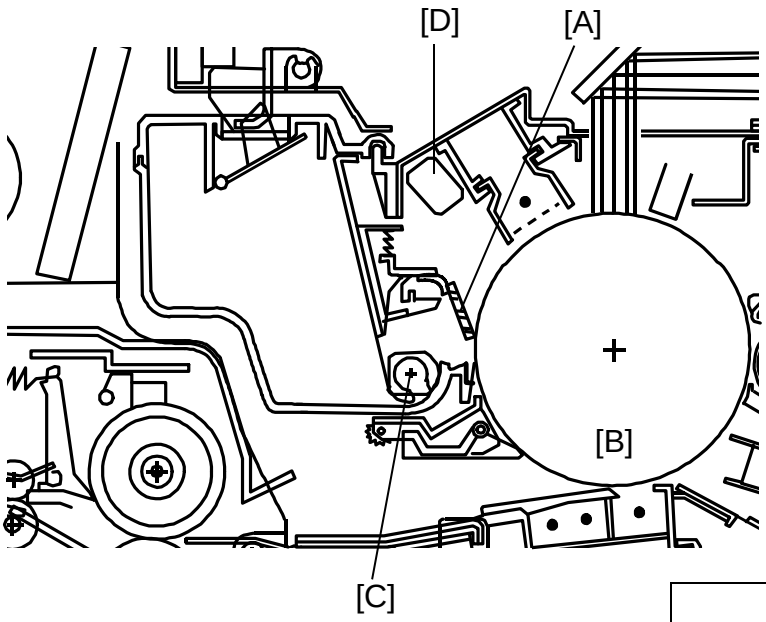

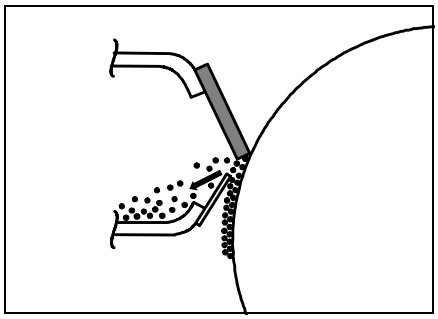

The cleaning blade [A] removes any toner remaining on the drum [B] after the image is transferred to the paper.

The removed toner falls into the cleaning unit. The toner collection roller [C] carries the used toner to the used toner tank. The light of the quenching lamp [D] neutralizes any charge remaining on the drum in preparation for the next copy cycle.

The cleaning blade releases when the release knob is pressed. This prevents the drum from being damaged when the cleaning unit is removed or installed.

8.1.2 Drive Mechanism

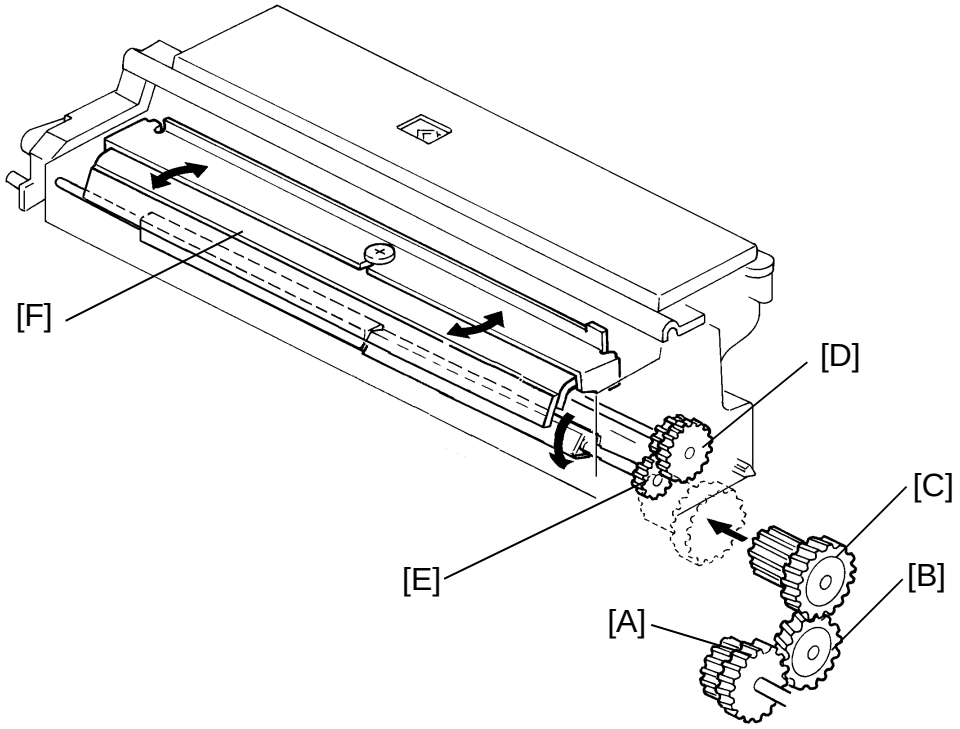

The rotation of the main motor is transmitted to the cleaning unit through the main motor gear [A], the relay gear [B], and the cleaning drive gear [C].

The gear [D] driven by the cleaning drive gear passes the rotation to the toner collection roller gear [E].

The cleaning blade [F] is mounted in the center of the blade and is tilted to apply even pressure.

8.2 PAPER FEED AND MISFEED DETECTION TIMING

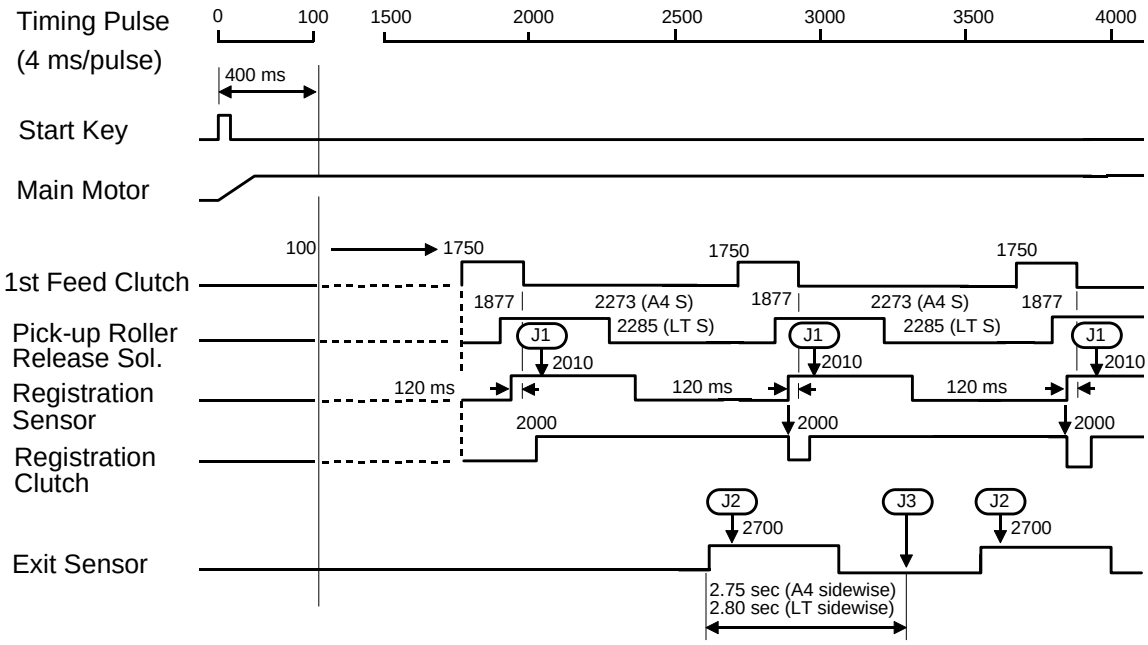

PAPER FEED AND MISFEED DETECTION TIMING

The registration sensor and the exit sensor monitor the movement of the paper through the paper path. If the CPU determines that a misfeed exists, the Check Paper Path and the Misfeed Location indicators turn on. When the main switch is turned on, the CPU checks these two sensors for initial misfeed. During the copy cycle, the CPU performs three kinds of misfeed detection:

J1: Checks whether the registration sensor is actuated within 10 pulses (40 milliseconds) after the registration clutch turns on. (Misfeed Location indicator "B" turns on.)

J2: Checks whether the exit sensor is actuated within 700 pulses (2.8 seconds) after the registration clutch turns on. (Misfeed Location indicator "C" turns on.)

J3: Checks whether the copy paper has passed through the exit sensor 2.75 (A4 sideways) or 2.80 (Letter sideways) seconds after the exit sensor has been actuated. (Misfeed Location indicator "D" turns on.)

9. INSTALLATION REQUIREMENTS

9.1 MINIMUM SPACE REQUIREMENTS

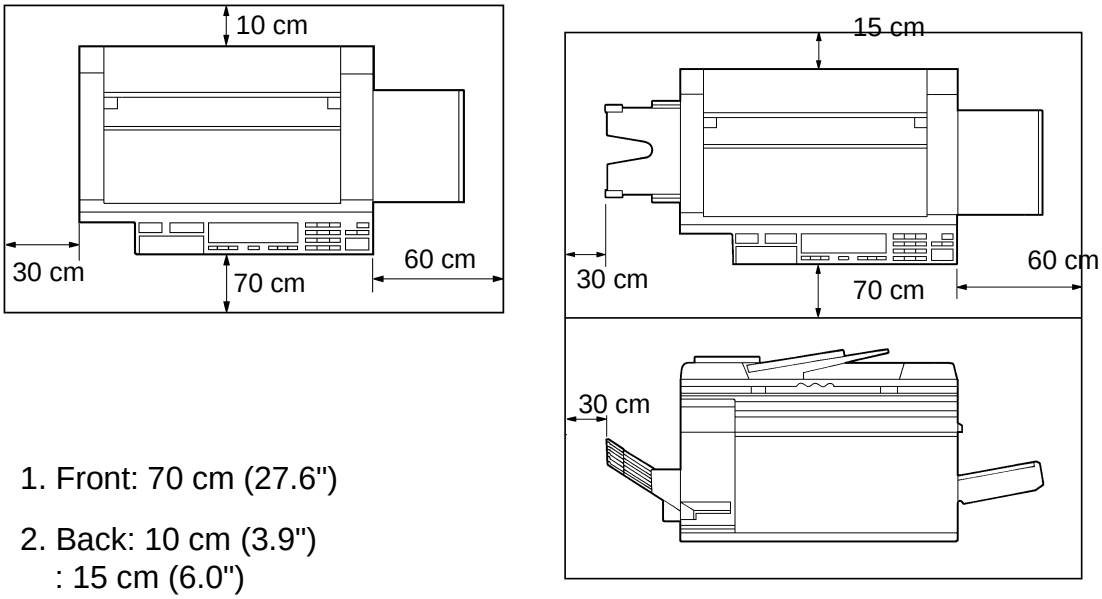

1. Front: 70 cm (27.6")
2. Back: 10 cm (3.9")
   : 15 cm (6.0")
   (when the sorter is installed.)
3. Right: 60 cm (31.5")
4. Left: 30 cm (11.8")

NOTE: Make sure there is at least 15 cm (6.0") clearance behind the copier so that the sorter will not be damaged when it is opened.

9.2 POWER REQUIREMENTS

1. Input voltage level:

   110 V/60 Hz: More than 15 A (for Taiwan)
   115 V/60 Hz: More than 15 A (for North America)
   220, 230, 240 V/50 Hz: More than 8 A (for Europe)
   220 V/60 Hz (for Saudi Arabia)

2. Permissible voltage fluctuation: 10%
3. Do not set anything on the power cord.

NOTE: a) Be sure to ground the machine. (Do not connect the grounding wire to a gas pipe.)
b) Make sure the plug is firmly inserted in the outlet.
c) Avoid multiwiring.

9.3 INSTALLATION PROCEDURE

9.3.1 Introduction

The following table shows which options can be used on A110/A111 and A128 copiers.

	A110 copier	A111 copier	A128 copier
Document Feeder	A318	A318	A318
Sorter	A490	A490	A490
Duplex Unit	A491	A491	**NOTE 1**
Color Development Unit	A313	A313	A313
DC Power Supply Unit	A525	**NOTE 2**	A525

NOTE:

1. The A128 copier does not have a duplex unit as an option.
2. The A111 copier does not require the dc power supply unit.
3. The installation procedures of the following options are the same as those of the A110/A111 copier. Refer to each section of the A110/A111 copier service manual as follows.
   - Key Counter Holder — Refer to page 3-11.
   - Optics Anti-condensation Heater — Refer to page 3-12.
   - Color Development Unit — Refer to page 3-13 to 14.



9.3.2 Copier Installation

Accessory check

Check the quantity and condition of the accessories in the box according to the following list:

1. Receiving Tray.....1 pc
2. Cassette - Small .....1 pc
3. Cassette - Large .....1 pc
4. Paper Size Decal.....1 pc
5. Paper Size Actuator.....1 set
6. Outer Decal - Symbol Explanation .....1 pc
7. Multilingual Decal (Europe only).....1 pc
8. Operating Instructions (Except Europe) .....1 pc
9. New Equipment Condition Report .....1 pc
10. Envelope for NECR (U.S.A. only).....1 pc
11. User Survey Card (U.S.A. only).....1 pc

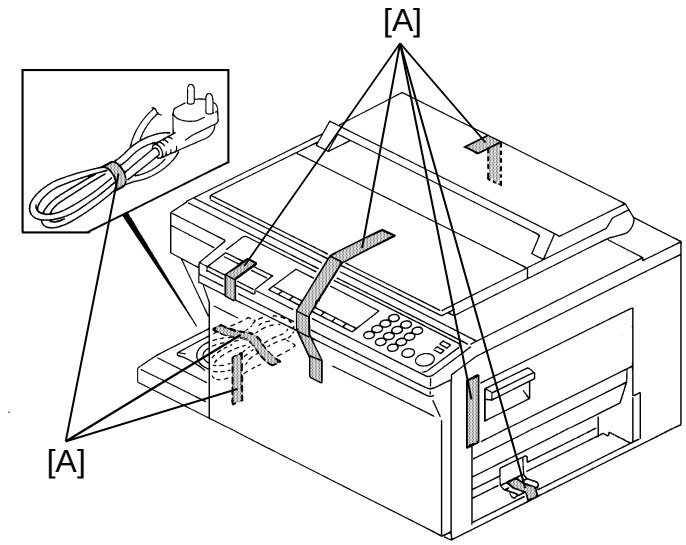

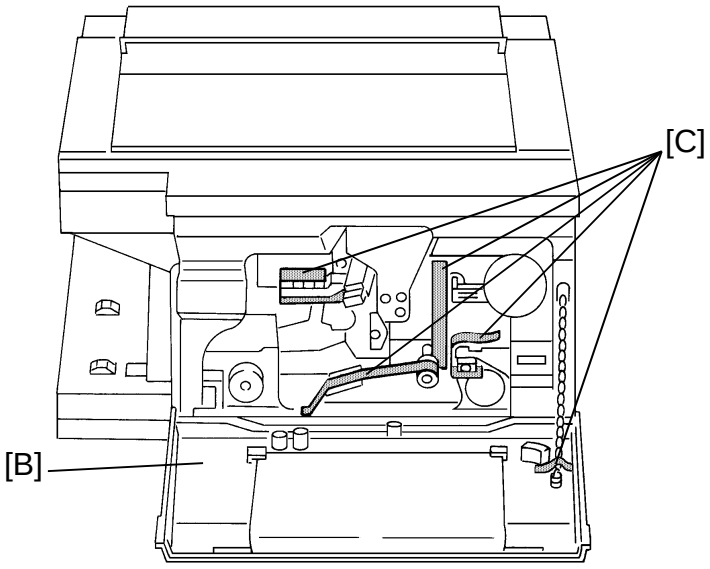

1. Remove the strips of tape [A] from the copier at the locations shown.
2. Open the front cover [B], and remove the strips of tape [C] as shown.
3. Do **steps 5 to 19** of the A110/A111 copier installation procedure. However, **skip steps 14 and 18** (page 3-5 to 9).

- See page 3-10 for the cassette modification procedure.

9.3.3 DC Power Supply Unit Installation (Option)

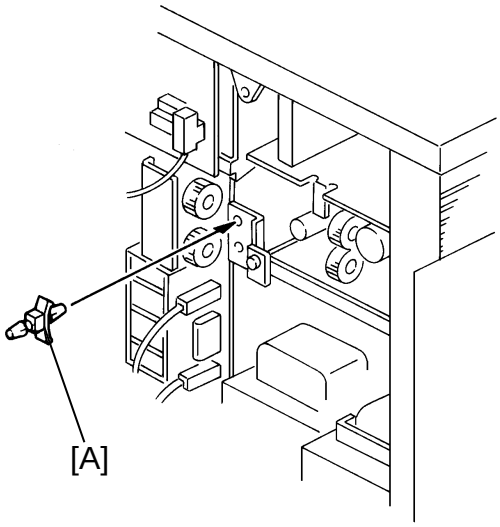

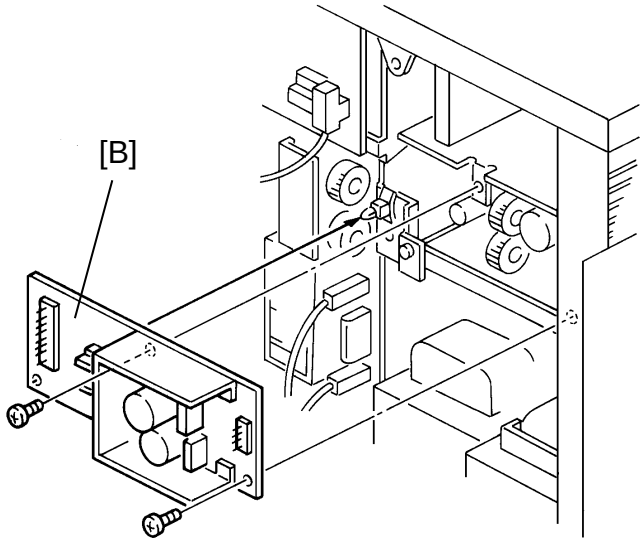

1. Do **steps 1 to 2** of the installation procedure for the A110/A111 copier (page 3-16).
2. Install the locking support [A] on the bracket as shown in figure.
3. Install the optional dc power supply unit [B] (2 screws and locking support) as shown.
4. Do **steps 10 to 12** of the installation procedure for the A110/A111 copier (page 3-18).

9.3.4 Document feeder Installation (Option)

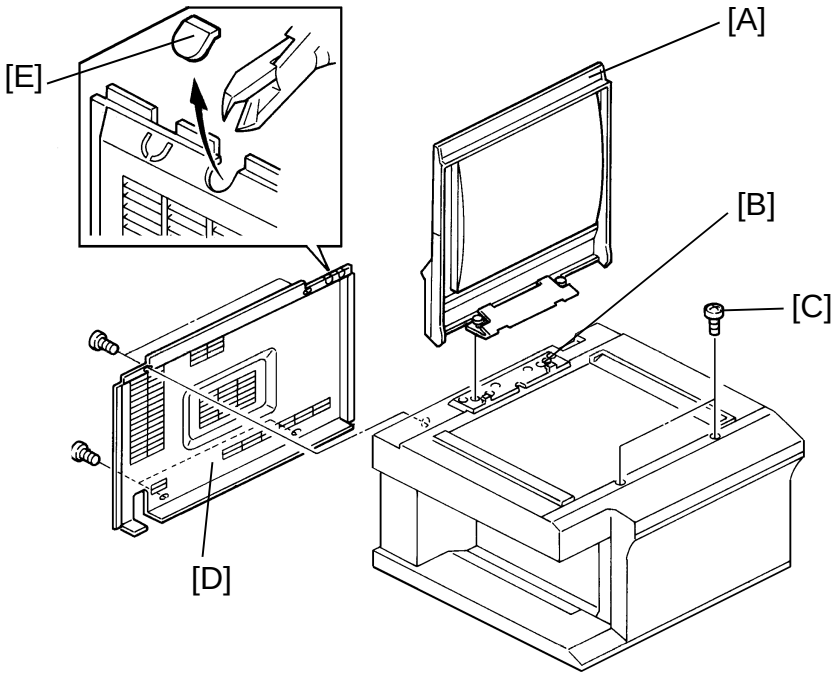

1. Install the power supply unit.
   Refer to the installation procedure enclosed with the power supply unit (A525).

2. Remove the following parts from the copier.
   1) Platen cover [A] (2 push-locks)
   2) Platen cover pedestal [B] (4 screws)
   3) 2 screws [C] for fixing the operation panel
   4) Rear cover [D] (4 screws)

3. Cut the two links of the large harness cap [E] with nippers and remove it.

4. Do **steps 6 to 31** of the installation procedure for **the A110 copier** (not A111 copier) on page 28 to 32 of the section for the document feeder.

9.3.5 Sorter Installation (Option)

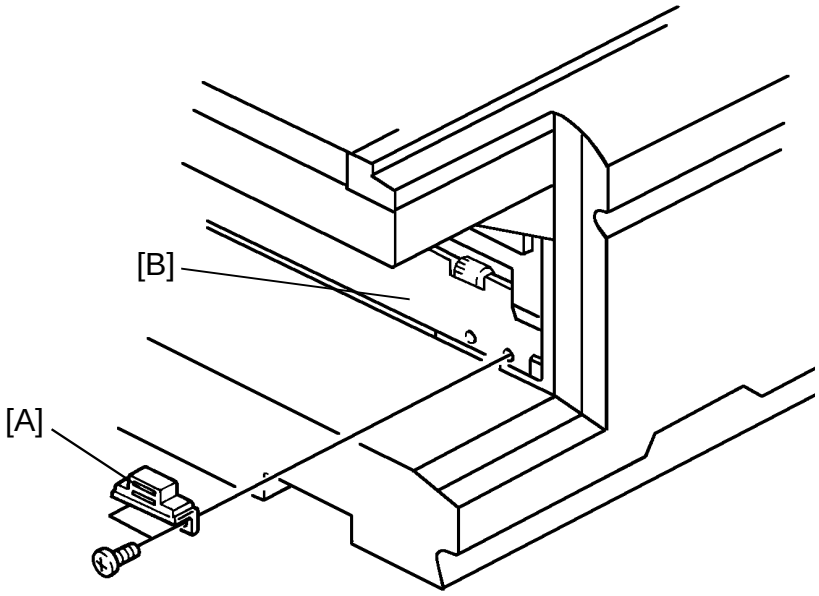

1. Do **steps 1 to 5** of the installation procedure for the A110/A111 copier (page 13 of the section for the sorter).
2. Install the magnet catch [A] on the exit unit [B] (2 screws).

   NOTE: When installing the magnet catch [A] for the A128 copier, be sure to use the two tapping screws included in the plastic bag which is located on the inner side of the rear cover.
3. Do **steps 7 to 20** of the installation procedure for the A110/A111 copier **skipping steps 9 and 11** (page 14 to 15 of the section for the sorter).

10. SERVICE TABLES

10.1 SERVICE REMARKS

10.1.1 Drum and Drum unit

After installing a new drum, be sure to apply setting powder to the entire surface of the drum.

10.1.2 Cleaning Unit

After installing a new cleaning blade, be sure to apply setting powder evenly on the surface of the blade.

10.1.3 AC Drive Board

Each of the following connectors must be connected to the socket whose color indication on the AC drive board matches the **connector's wire color**.

Connector No.	Wire Color	Connector Color	Color Indication Beside Socket
T401	**orange**	white	**ORANGE**
T402	**black**	white	**BLACK**
T403	**red**	white	**RED**
T404	**red**	white	**RED**
T405	**white**	white	**WHITE**
T406	**red**	yellow	**RED**
T407	**blue**	white	**BLUE**

Each of the following connectors must be connected to the socket whose color indication on the AC drive board matches the **connector color**.

Connector No.	Wire Color	Connector Color	Color Indication Beside Socket
CN411	red and blue	**red**	**RED**
CN413	gray	**black**	**BLACK**
CN415	pink	**black**	**BLACK**
CN417	red and blue	**white**	**WHITE**
CN419	black	**yellow**	**No indication**

10.2 SERVICE PROGRAM MODE

Following service program (SP) modes are **not** accessible.

SP13, SP17, SP18, SP20, SP21, SP25, SP26, SP40, SP46, SP72, SP77, SP83, SP84, SP85, SP95, SP96, SP101, SP102, SP103, SP104, SP105, SP111, SP112, SP113, SP114, SP125

10.3 MISFEED LOCATION INDICATOR

The A128 copier has only B, C, D and F misfeed location indicators on the operation panel.

10.4 CONNECTOR NUMBER CROSS REFERENCE

The connector number cross reference table here gives only brief information. Refer to also the point to point diagram of the A128 copier.

A110 copier	A128 copier	Destination/Signal
Main board (PCB1)		
CN101-1 to 3	CN101-1 to 3	Registration sensor (S4)
CN101-4 to 7	CN101-4 to 7	Auto ID sensor (S11)
CN101-8 to 10	CN101-8 to 10	Toner overflow sensor (S17)
CN103	CN102	Optics cooling fan motor-1 (M6)
CN104	Not exist	Optics cooling fan motor-2 (M6)
CN106-1 to 6	CN104-1 to 6	4th/5th mirror motor (M4)
CN107	CN105	GND/VA/VC
CN108-1 to 3	CN106-1 to 3	Lens H.P. sensor (S2)
CN108-4 to 6	CN106-4 to 6	4th/5th mirror H.P. sensor (S3)
CN108-7 to 9	CN106-7 to 9	Scanner H.P. sensor (S1) Sensor
CN109	CN107	Erase lamp (L4)
CN110	CN108	ID sensor (S10)
CN111	CN109	Registration CL (MSC3)
CN112-1 to 8	CN110-1 to 8	CC/GRID/BIAS power pack (P1)
CN112-10 to 14	CN110-10 to 14	TC/SC power pack (P2)
CN113	Not exist	Relay roller CL (MSC4)
CN115	Not exist	2nd paper size SW (SW4/5)/2nd paper end sensor (S7)
CN116	CN111	Development CL SOL (SOL3)
CN118	CN112	Toner supply CL (MC1)
CN119	CN113	1st paper feed CL SOL (SOL1)
CN120	Not exist	2nd paper feed CL (MSC1)
CN121	CN114	PTL (L5)
CN122-1	CN115-3	Motor lock (Not used)
CN122-2	CN115-7	Power RA (RA401)
CN122-3	CN115-6	Main motor RA (RA402)
CN122-4	CN115-9	Fusing lamp safety
CN122-5	CN115-2	Exposure lamp voltage FB.
CN122-6	CN115-4	Fusing lamp trigger
CN122-7	CN115-5	Exposure lamp trigger
CN122-8	CN150-1	Zero cross
CN124	CN117	Paper lift CL (MSC2)
CN125-1 to 6	CN116-1 to 6	1st paper size SW (SW3)
CN125-7 to 9	CN118-1 to 3	Paper end sensor (S6)
CN125-10 to 12	CN118-4 to 6	Paper lift sensor (S9)

A110 copier	A128 copier	Destination/Signal
Main board (PCB1) (Continued)		
CN126	CN126	Sorter main board
CN127	CN127	Key counter
CN128	CN120	Pick-up roller release SOL (SOL2)
CN129	CN121	Total counter
CN130-1	Not exist	Operation panel board (PCB4)
CN130-2 to 13	CN122-1 to 12	Operation panel board (PCB4)
CN131-1 to 5	Not exist	Operation panel board (PCB4)
CN131-6 to 15	CN123-1 to 10	Operation panel board (PCB4)
CN133	CN133	Document feeder
CN137-1 to 3	CN124-1 to 3	Color toner end sensor (S8)
CN137-5 to 7	CN124-5 to 7	Color SW (SW6)
CN137-9 to 10	CN124-9 to 10	Manual feed table SW (SW7)
CN137-11 to 13	CN124-11 to 13	Exit sensor (S5)
CN137-14 to 15	CN124-14 to 15	Fusing thermistor (TH1)
CN141	Not exist	Right cover SW (SW8)
CN142-1 to 6	CN150-2 to 7	Scanner motor (M2)
CN142-7 to 10	CN150-9 to 12	Lens motor (M3)
CN151-1 to 4	Not exist	Duplex main board
AC Drive Board (PCB2)		
CN411	CN411	Drum/Optics anti-condensation heater (H1/H2)
CN412	Not exist	Drum/Optics anti-condensation heater (H1/H2)
CN413	CN413	Main motor (M1)
CN415	CN415	Quenching lamp (L3)
CN417-1, 3	CN417-1, 2	Main transformer (TR1)
CN418-1, 3	CN418-1, 2	Option transformer (TR2)
CN419	CN419	Exposure lamp (L1)
CN420	CN420	Exhaust blower motor (M7)
CN431	CN131 on PCB3	Scanner motor (M2)
CN432	CN150-8 to 13 on PCB1	Lens motor (M3)
CN435-1	CN132-7 on PCB3	Zero cross
CN435-2	CN401-5	Exposure lamp trigger
CN435-3	CN401-6	Fusing lamp trigger
CN435-4	CN401-8	Exposure lamp voltage FB
CN435-5	CN401-1	Fusing lamp safety
CN435-6	CN401-4	Main motor RA
CN435-7	CN401-3	Power RA
CN435-8	CN401-7	Motor lock (Not used)
CN436	Not exist	Main board (PCB1)
CN437	Not exist	Main DC power supply board (PCB3)
T401	T401	Main SW (SW1)
T402	T402	Main SW (SW1)
T403	T404	Cover safety switch (SW2)
T404	T403	AC input

A110 copier	A128 copier	Destination/Signal
AC Drive Board (PCB2) (Continued)		
T405	T406	Fusing lamp (L2)
T406	T405	Fusing thermofuse (TF)
T407	T407	AC input
Power Supply Board (PCB3)		
CN100-1 to 4	CN100-1 to 4	Main transformer (TR1)
CN100-5 to 6	Not exist	Main transformer (TR1)
CN101	CN101	Main board (PCB1)
CN102-1	Not exist	AC power supply board
CN102-2	CN132-7	Zero cross
Not exist	CN131	Scanner motor
Not exist	CN132-1 to 6	Main board
Operation Panel Board (PCB4)		
CN501-1 to 12	CN501-12 to 1	SC1 to 8, Key 1 to 4
CN501-13	Not exist	Key 5
CN502-1 to 10	CN502-10 to 1	SEG 1 to 10
CN502-11 to 15	Not exist	SEG 11 to 15

10.5 TEST POINT CROSS REFERENCE

Copier Main Board

A110/A111 copier	A128 copier	Function
TP101	TP102	BIN (Development bias feed back)
TP102	TP101	GIN (not used)

NOTE: The other test points have the same numbers and the same functions as with the A110/A111 copier.

10.6 DIP SWITCHES

All the dip switches have the same numbers and the same functions as with the A110/A111 copier.

10.7 VARIABLE RESISTORS

All the variable registers have the same numbers and the same functions as with the A110/A111 copier.

11. REPLACEMENT AND ADJUSTMENT

11.1 INNER COVER REMOVAL

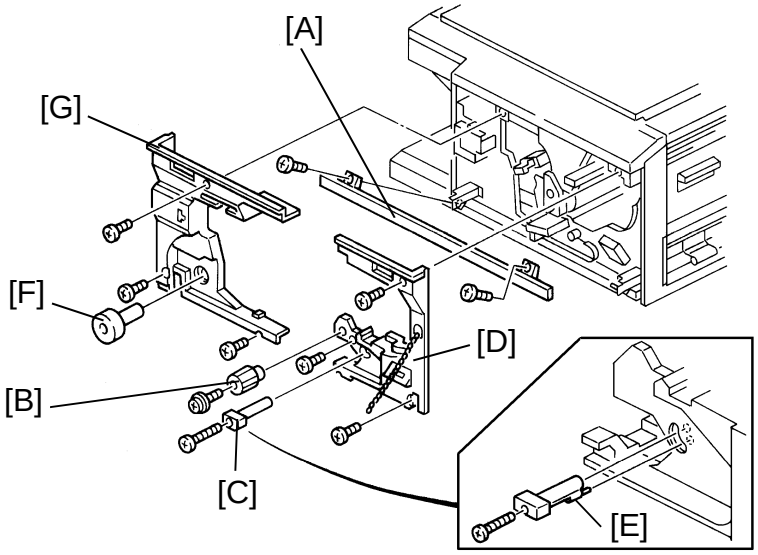

11.1.1 Right Inner Cover

1. Open and remove the front cover.
2. Remove the development unit.
3. Remove the lower front cover [A] (2 screws).
4. Remove the registration knob [B] and paper guide release lever [C] (1 screw each).
5. Remove the right inner cover [D] (3 screws).

NOTE: When reinstalling the release lever [C], make sure that the pin [E] on the lever is properly set in the paper guide.

11.1.2 Left Inner Cover

1. Open and remove the front cover.
2. Remove the lower front cover [A] (2 screws).
3. Remove the fusing roller knob [F].
4. Remove the left inner cover [G] (2 screws).

11.2 CLEANING BLADE REPLACEMENT

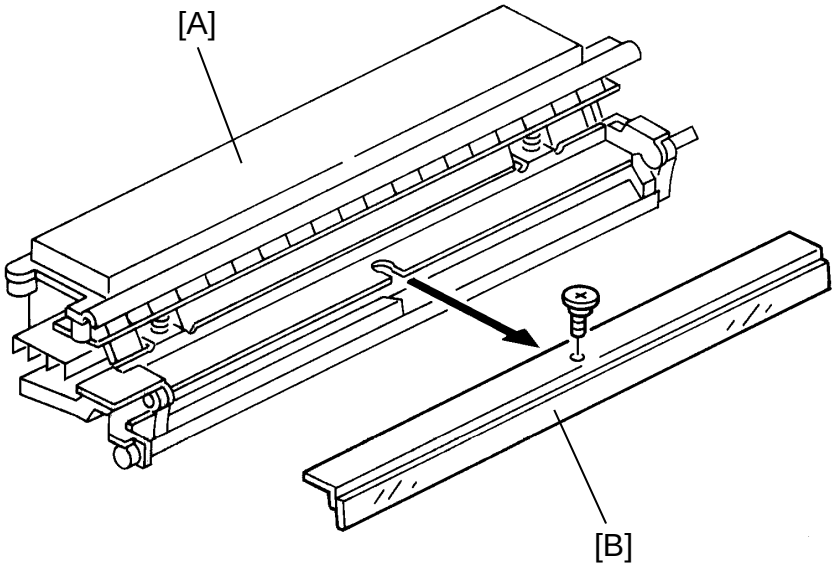

1. Remove the cleaning unit [A]. (See Cleaning Unit Removal of the A110/A111 copier.)
2. Remove the cleaning blade [B] (1 screw).

NOTE: a) Do not touch the edge of a new cleaning blade, as it is damaged easily.

b) After installing a new cleaning blade, be sure to apply the setting powder evenly on the surface of the blade.

c) Make sure the new blade swivels correctly.

11.3 ENTRANCE SEAL REPLACEMENT

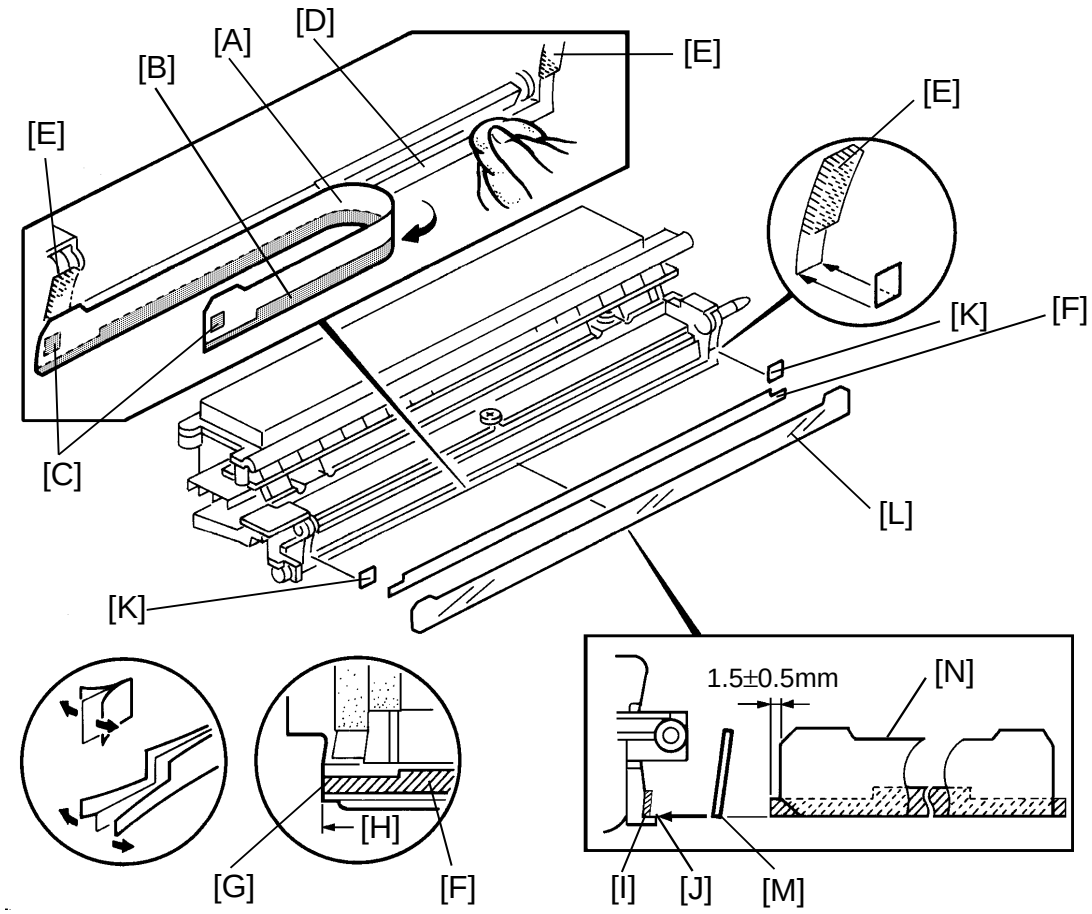

1. Remove the cleaning unit and cleaning blade. (See Cleaning Blade Removal.)
2. Remove the used toner. (See Used Toner Collection of the A110/A111 copier.)
3. Clean the cleaning unit with a vacuum cleaner.
4. Remove the entrance seal [A] together with the strip of 2 sided tape [B] and both of the 2 sided seals [C] which secure the entrance seal [A] to the lower casing [D] and the side seals [E].
5. Clean the lower casing [D] with alcohol. Make sure that no tape remains on the casing surface and the side seals.

6. Place new strip of 2 sided tape [F] on the lower casing surface as shown in the illustration.
   The side edge [G] of the tape must be flush with the edge [H] of the lower casing and the lower edge [I] of the tape must be flush with the edge [J] of the projection of the lower casing as shown in the illustration.
7. Place new strips of 2 sided seals [K] on the side seals [E] of both sides.
8. Place the new entrance seal [L] on the 2 sided tape [F] and the 2 sided seals [K] as shown in the illustration.

   NOTE: a) Lower edge [M] of the entrance seal must be aligned with the edge [J] of the projection of the lower casing.
   b) Make sure that there are no waves in the upper edge [N] of the entrance seal.

11.4 REGISTRATION CLUTCH REPLACEMENT

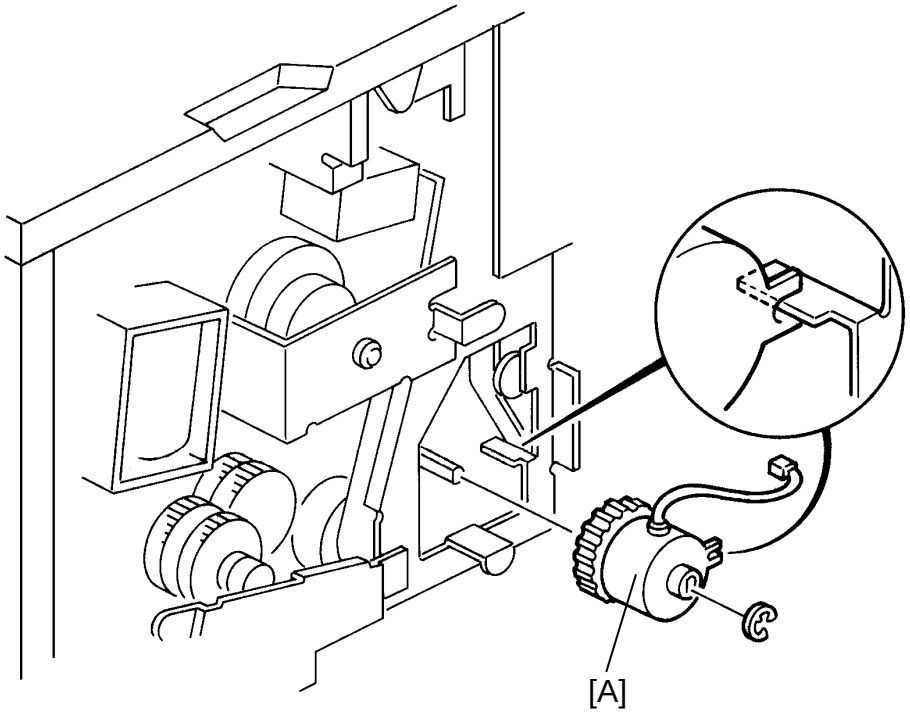

1. Turn off the main switch.
2. Remove the rear cover.
3. Remove the main board (1 screw, 4 locking supports, and all connectors).
4. Replace the registration clutch [A] (1-E ring).

NOTE: When reinstalling a new registration clutch, make sure that the stopper bracket locks the registration clutch as shown.

11.5 REGISTRATION SENSOR AND ROLLER REPLACEMENT

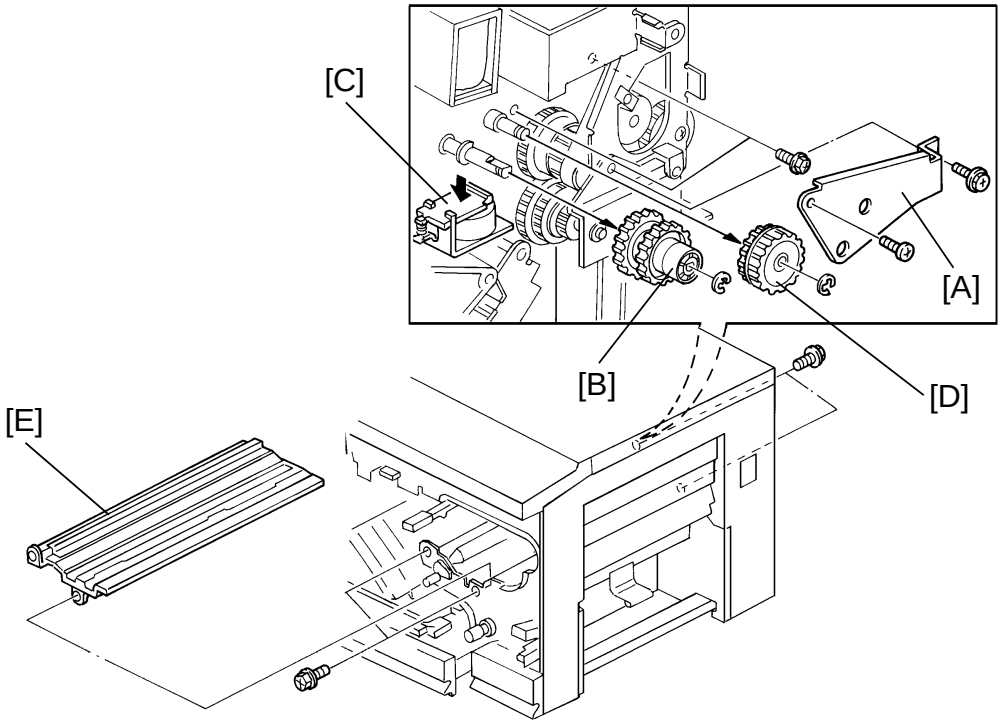

1. Turn off the main switch.
2. Remove the following parts:
   - Front cover (See Exterior Cover Removal of the A110/A111 copier.)
   - Development unit
   - Right inner cover (See Inner Cover Removal.)
   - Cleaning unit (See Cleaning Unit Removal of the A110/A111 copier.)
   - Drum unit (See Drum Unit Removal of the A110/A111 copier.)
   - Rear cover (See Exterior Cover Removal of the A110/A111 copier.)
   - Main board
   - PTL board (See PTL Board Replacement of the A110/A111 copier.)
3. Remove the clutch bracket [A] (2 screws) and remove the 1st feed roller spring clutch [B] while pressing down on the stopper [C] lever of the solenoid (1 E-ring).
4. Remove the idle gear [D] (1 E-ring).
5. Remove the development lower guide plate [E] (2 screws each at front and rear frames).

– Registration Rollers –

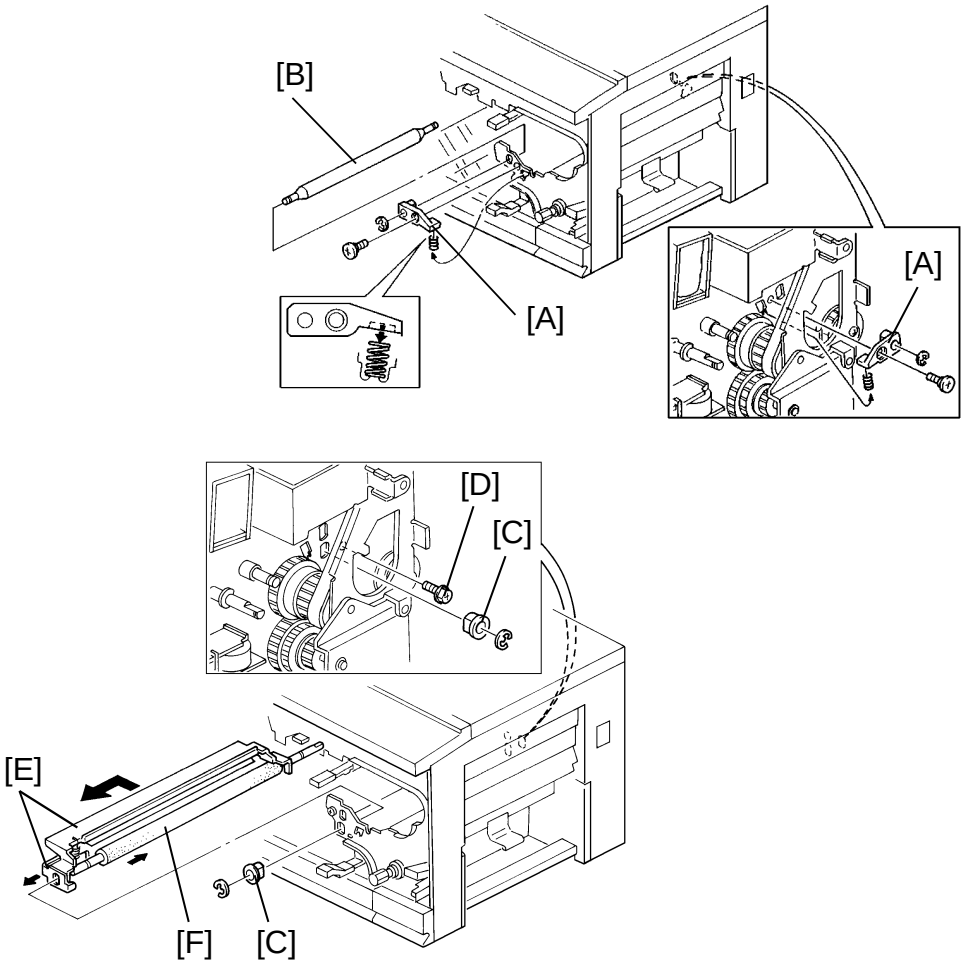

6. Remove the registration clutch. (See Registration Clutch Replacement.)
7. Remove the front and rear holders [A] (1 screw, pressure spring, and E-ring each) of the upper registration roller.
8. Replace the upper registration roller [B].
9. Remove the 2 bushings [C] (1 E-ring each).
10. Remove the screw [D] securing the upper and lower guide plates [E].
11. Remove the lower registration roller [F] together with the upper and lower guide plates; then, replace the lower registration roller.

NOTE: To install the lower registration roller, refer to page 5-58 of the A110/A111 copier service manual.

– Sensor –

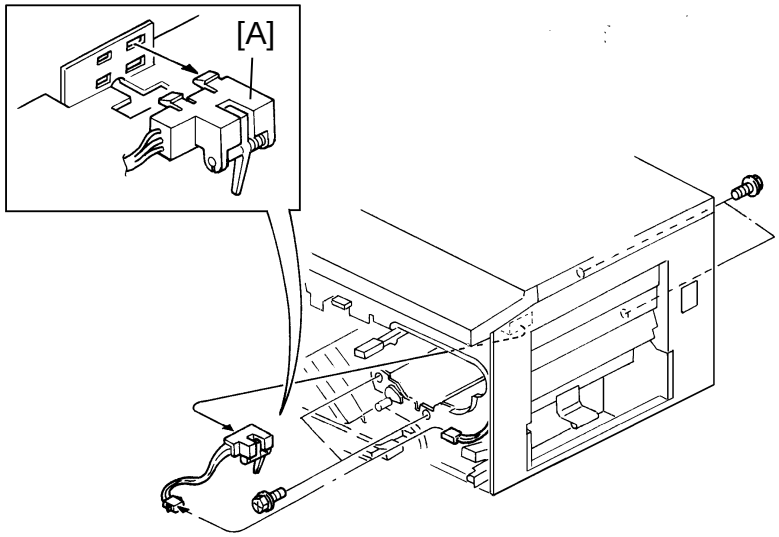

12. Remove the upper registration roller. (See registration roller replacement.)
13. Replace the sensor [A] (1 connector).

11.6 DRUM REPLACEMENT

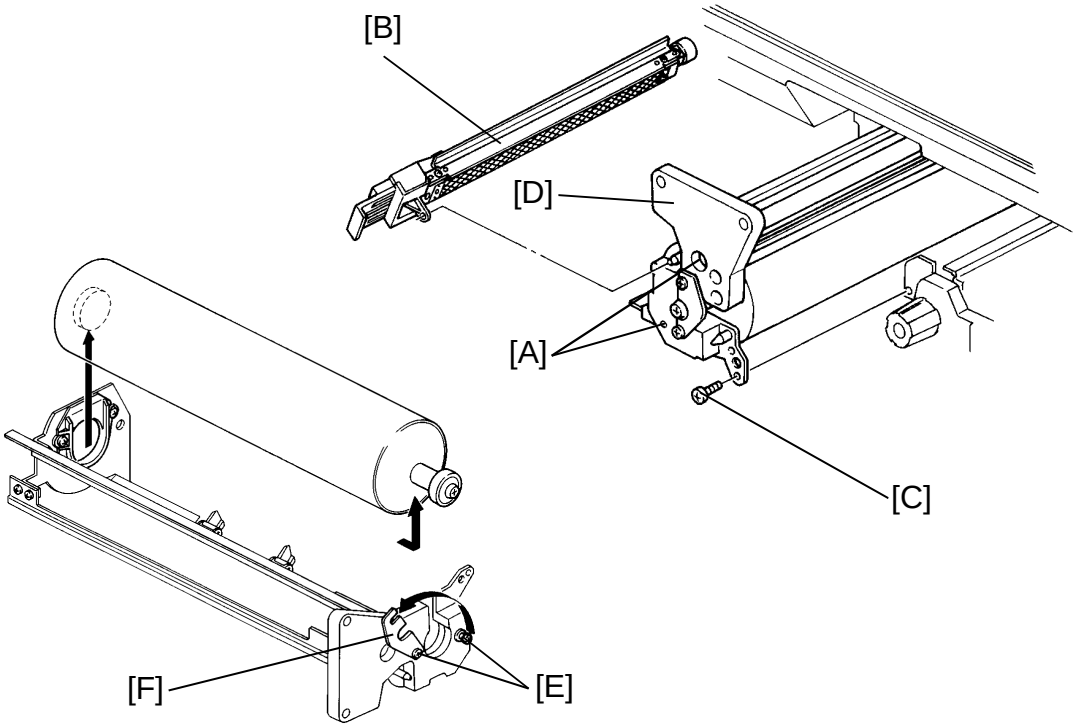

CAUTION: When replacing the drum, do not loosen the paint locked screws [A]. The drum position is set with a special tool, and instruments at the factory to ensure the proper gap between the drum and the development unit.

1. Lower the transport unit.
2. Remove the following units:
   - Development unit
   - Cleaning unit
   - Charge corona unit [B] and wire cleaner
3. Remove the fixing screw [C] securing the drum stay and pull out the drum unit [D] gently along the rail.
4. Place the drum unit on a sheet of paper. Loosen the two screws [E] securing the bearing holder [F] and rotate the holder as shown.
5. Remove the drum by holding the drum unit rail and pulling out and up on the drum knob.

NOTE: a) When removing the drum, take care not to strike it against any objects.
b) Be careful not to bend the bearing holder [F].

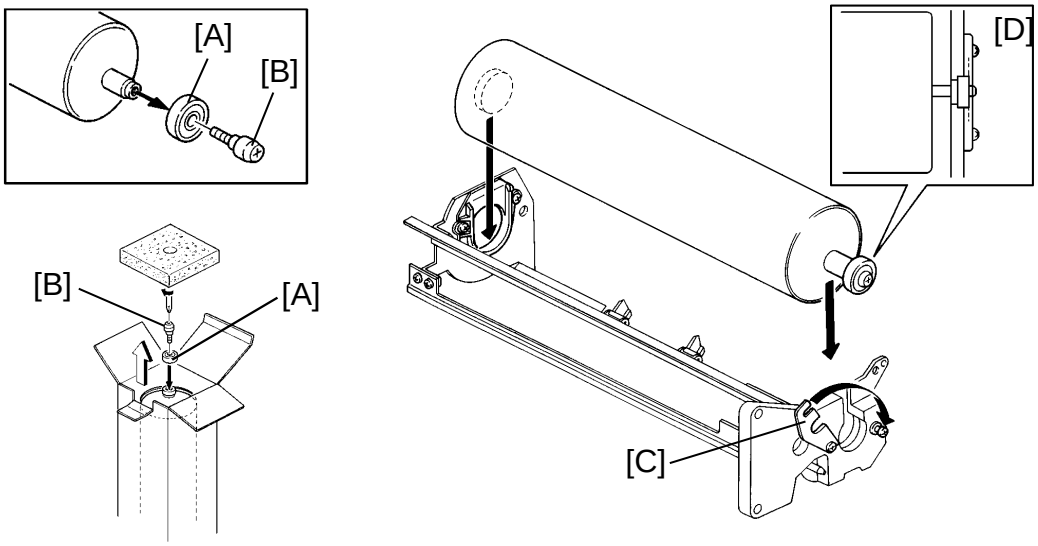

6. Remove the bearing [A] (1 screw [B]) from the old drum and install them on the the new drum. Do not remove the protective sheet from the new drum.
7. Set the OPC drum in the unit and put the bearing holder [C] back in place. Tighten the screws.

   NOTE: a) When setting the drum in the unit, be careful not to strike it against the rail.
   b) Do not bend the bearing holder. Make sure bearing holder is in contact with the bearing [D], as they are both used to ground the unit. If they are not in contact, solid black copies may occur.
   c) Do not touch the drum surface.

8. Set the drum unit in the machine and remove the drum protective sheet.

   NOTE: After installing a new drum, be sure to apply the setting power to the entire surface of the drum.

9. Reinstall the other units around the drum unit.
10. Reset the drum counter using SP66.
11. Perform the ID sensor (Vsg) adjustment using SP54. (See ID Sensor Adjustment of the A110/A111 copier.)
12. Perform the light intensity adjustment using SP48. (See Light Intensity Adjustment of the A110/A111 copier.)
13. Perform the ADS adjustment using SP56. (See ADS Adjustment of the A110/A111 copier.)

11.7 HOT ROLLER REPLACEMENT

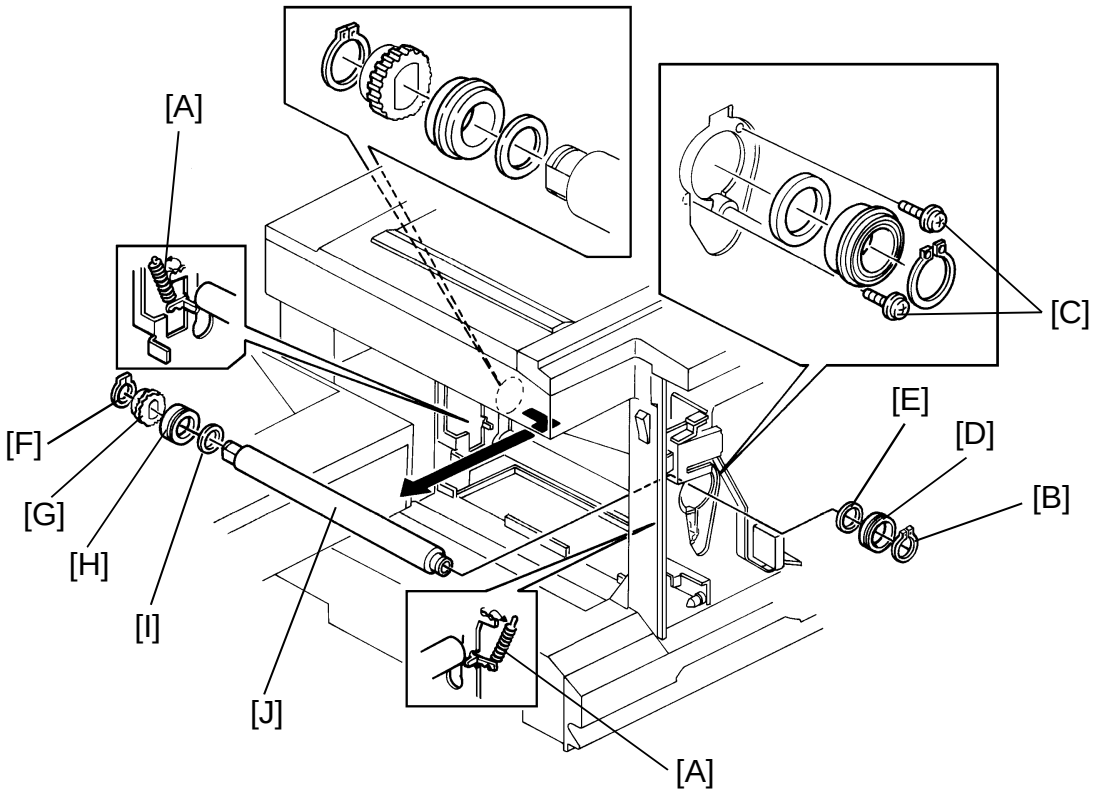

1. Remove the exit unit. (See Exit Unit Removal of the A110/A111 copier.)
2. Remove the fusing lamp. (See Fusing Lamp Replacement of the A110/A111 copier.)
3. Remove the exit paper guide (1 screw).
4. Remove the front and rear pressure springs [A].
5. Remove the C-ring [B] (front side).
6. Remove the 2 screws [C] securing the bearing to the fusing front frame, then remove the bearing [D] and spacer [E].
7. Remove the rear C-ring [F].
8. Slide the hot roller out. The gear [G] will drop off the hot roller shaft.
9. Replace the hot roller [J] (1 bearing [H] and 1 spacer [I]).

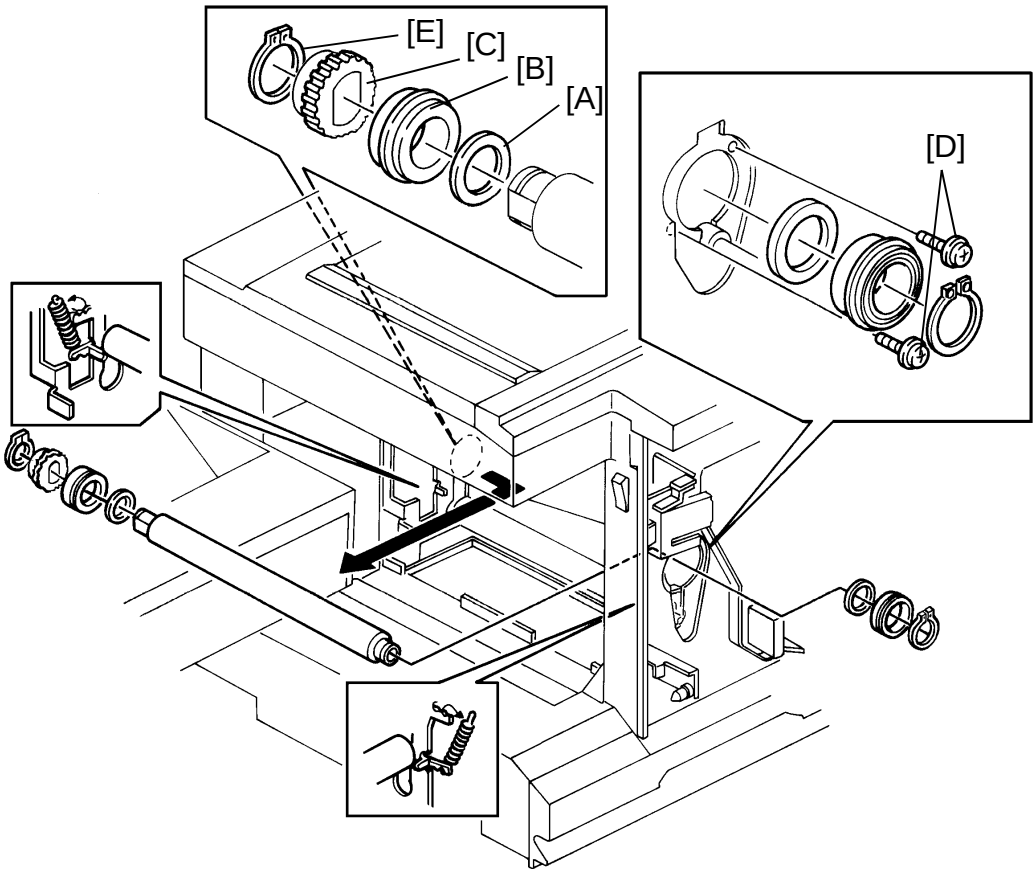

– Reinstallation –

1. Place the spacer [A] on the rear end of the shaft.
2. Set the rear bearing [B] on the rear frame.
3. Insert the rear end of the hot roller shaft through the rear bearing.
4. Place the gear [C] on the rear end of the shaft.

   NOTE: The gear flange must face out.

5. Install the front bearing and spacer, then secure with two screws [D].
6. Set the rear side C-ring [E] on the rear shaft.

NOTE: a) Peel off 3 cm (1 inch) from both ends of the protective sheet before installing a new hot roller.

b) Before setting the pressure springs, remove the rest of the protective sheet.

c) Before reinstalling the pressure springs, refer to the installation procedure in the Pressure Roller Replacement Section on page 5-78 of the A110/A111 copier service manual.

11.8 OZONE FILTER REPLACEMENT

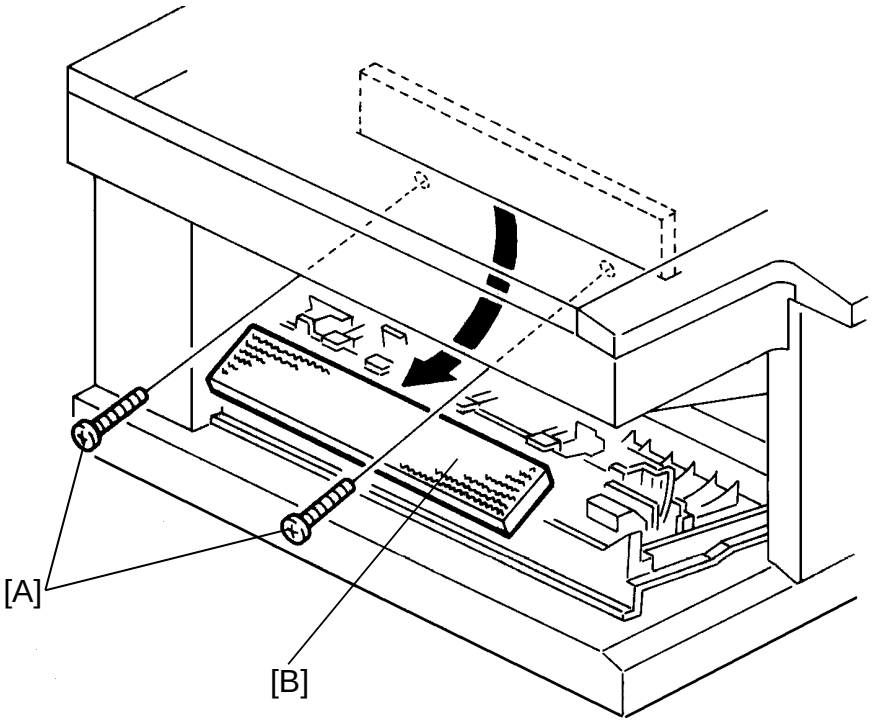

1. Open the exit unit.
2. Remove the front and the rear support screws [A].
3. Replace the ozone filter [B].

11.9 4TH/5TH MIRROR HEIGHT ADJUSTMENT

When:	Parallelogram (skewed) image appears.
Purpose:	To maintain the proper copy image.
Measure:	Turn 4th/5th mirror height adjustment screw.
How:	Changes the 4th/5th mirror height.

CAUTION: Never perform this adjustment until you have positively verified that the source of the skewing is optical and not in the paper path.

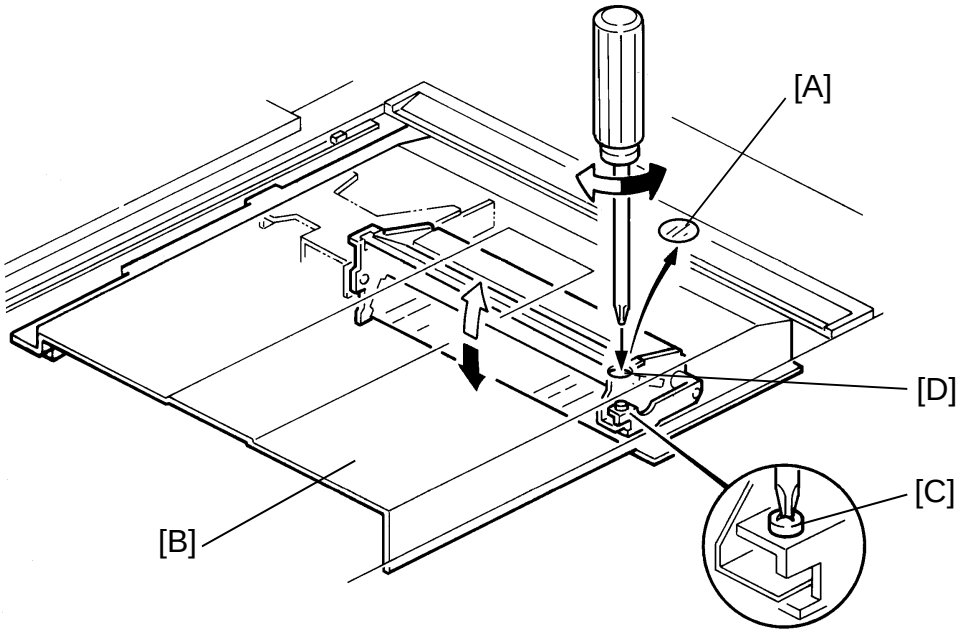

1. Turn off the main switch and remove the exposure glass. (See Exposure Glass Removal.)
2. Remove the seal [A] on the lens housing cover [B].

   NOTE: Save the seal [A], because it is used again after the adjustment.
3. Adjust the 4th/5th mirror height by turning the screw [C] through the hole [D] of the lens housing cover. Refer to the arrows in the illustration.
4. Place the seal [A] again on the hole of the lens housing cover.

12. TROUBLESHOOTING

The A128 copier has the same troubleshooting procedure as that of the A110/A111 copier. However, some connector numbers are different from those of the A110/A111 copier. Refer to the connector number cross reference table on page 27 to 29 of the A128 copier service manual.

NOTE: The A128 copier has the same voltage scanner motor drive signals as the A111 copier. Check the voltage on page 6-29 to 33 according to the procedure for the A111 copier.

12.1 BLOWN FUSE CONDITION

1) 115 V machine

Component	Location	Symptom
FU401 (125V/15A)	AC Drive Board	The copier does not turn on even when the main switch is turned on.
FU100 (125V/6.3A)	Main DC Power Supply Board	The copier does not turn on even when the main switch is turned on.
FU100 (125V/3.15A)	Optional DC Power Supply Board	ADF: The feed-out motor starts rotating when the main switch is tuned on.
FU101 (125V/5A)	Optional DC Power Supply Board	ADF: The ADF does not work.

2) 220/230/240 V machine

Component	Location	Symptom
FU401 (250V/6.3A)	AC Drive Board	The copier does not turn on even when the main switch is turned on.
FU100 (250V/6.3A)	Main DC Power Supply Board	The copier does not turn on even when the main switch is turned on.
FU100 (250V/3.15A)	Optional DC Power Supply Board	ADF: The feed-out motor starts rotating when the main switch is tuned on.
FU101 (250V/5A)	Optional DC Power Supply Board	ADF: The ADF does not work.