IMPORTANT SAFETY NOTICES

PREVENTION OF PHYSICAL INJURY

1. Before disassembling or assembling parts of the copier and peripherals, make sure that the copier power cord is unplugged.
2. The wall outlet should be near the copier and easily accessible.
3. Note that some components of the copier and the paper tray unit are supplied with electrical voltage even if the main switch is turned off.
4. If any adjustment or operation check has to be made with exterior covers off or open while the main switch is turned on, keep hands away from electrified or mechanically driven components.
5. The inside and the metal parts of the fusing unit become extremely hot while the copier is operating. Be careful to avoid touching those components with your bare hands.

HEALTH SAFETY CONDITIONS

1. Never operate the copier without the ozone filter installed.
2. Always replace the ozone filter with the specified one at the specified interval.
3. Toner and developer are non-toxic, but if you get either of them in your eyes by accident, it may cause temporary eye discomfort. Try to remove with eye drops or flush with water as first aid. If unsuccessful, get medical attention.

OBSERVANCE OF ELECTRICAL SAFETY STANDARDS

1. The copier and its peripheral must be installed and maintained by a customer service representative who has completed the training course on those models.

– CAUTION –

2. The RAM pack has a lithium battery which can explode if handled incorrectly, replace only with same RAM pack. Do not recharge, or burn this battery. Used RAM pack must be handled in accordance with local regulations.

SAFETY AND ECOLOGICAL NOTES FOR DISPOSAL

1. Do not incinerate the toner cartridge or the used toner. Toner dust may ignite suddenly when exposed to open flame.
2. Dispose of used toner, developer, and organic photoconductors according to local regulations. (These are non-toxic supplies.)
3. Dispose of replaced parts in accordance with local regulations.

TABLE OF CONTENTS

1. OVERALL MACHINE INFORMATION

1. SPECIFICATIONS 1-1

2. COPY PROCESSES AROUND THE DRUM 1-4

3. COPY PROCESS CONTROL. 1-6

4. MECHANICAL COMPONENT LAYOUT 1-7

5. DRIVE LAYOUT 1-8

6. ELECTRICAL COMPONENT LAYOUT 1-10

7. ELECTRICAL COMPONENT DESCRIPTIONS 1-12

8. AC POWER AND DC POWER DISTRIBUTION 1-16

2. DETAILED SECTION DESCRIPTIONS

1. DRUM 2-1

1.1 OPC DRUM CHARACTERISTICS 2-1

1.2 DRUM UNIT 2-2

2. DRUM CHARGE 2-3

2.1 OVERVIEW. 2-3

2.2 CHARGE CORONA WIRE CLEANER MECHANISM 2-4

2.3 CHARGE CORONA CIRCUIT 2-5

2.4 GRID VOLTAGE CORRECTION 2-6

2.4.1 Drum Residual Voltage Correction (Vr correction) 2-6

2.4.2 Vp Correction 2-7

2.5 GRID VOLTAGE CONTROL 2-8

2.5.1 Image Density Control. 2-8

2.5.2 Toner Density Detection 2-8

2.5.3 Vr Detection 2-8

3. OPTICS 2-9

3.1 OVERVIEW. 2-9

3.2 SCANNER DRIVE 2-10
3.2.1 1st and 2nd Scanner Drive Mechanism 2-10
3.3 LENS DRIVE. 2-11
3.3.1 Lens Drive 2-11
3.3.2 Shading Mechanism 2-11
3.3.3 Lens Positioning 2-12
3.4 4TH AND 5TH MIRROR DRIVE 2-13
3.4.1 Drive 2-13
3.4.2 Positioning. 2-13
3.5 ORIGINAL SIZE DETECTION IN PLATEN MODE (A111 Copier Only). 2-14
3.6 AUTOMATIC IMAGE DENSITY SENSING 2-16
3.7 EXPOSURE LAMP VOLTAGE CORRECTION 2-17
3.7.1 VL Correction. 2-17
3.7.2 Drum Wear Correction 2-17
3.7.3 Reproduction Ratio Correction 2-17
3.8 EXPOSURE LAMP VOLTAGE CONTROL 2-18
3.8.1 Base Lamp Voltage Factor in Manual Image Density Mode 2-19
3.8.2 Base Lamp Voltage Factor in Auto Image Density Mode 2-19
3.8.3 VL Correction Factor 2-20
3.8.4 Drum Wear Correction Factor 2-21
3.8.5 Reproduction Ratio Correction Factor. 2-21
3.9 EXPOSURE LAMP CONTROL CIRCUIT 2-22
4. ERASE 2-23
4.1 OVERVIEW. 2-23
4.1.1 Lead Edge Erase 2-24
4.1.2 Side Erase. 2-24
4.1.3 Trail Edge Erase 2-25
4.1.4 Editing Mode Erase. 2-25
5. DEVELOPMENT 2-27
5.1 OVERVIEW. 2-27
5.2 DRIVE MECHANISM 2-28
5.3 CROSS-MIXING 2-29

5.4 DEVELOPMENT BIAS FOR IMAGE DENSITY CONTROL 2-30
5.4.1 Base Bias Voltage Factor in Manual Image Density Control 2-30
5.4.2 Base Bias Voltage Factor in Automatic Image Density Control 2-31
5.4.3 Base Bias Voltage Adjustment Factor 2-32
5.4.4 Vr Correction Factor 2-33
5.5 DEVELOPMENT BIAS CIRCUIT 2-34
5.6 COLOR DEVELOPMENT UNIT DETECTION 2-35
6. TONER DENSITY DETECTION AND TONER SUPPLY 2-36
6.1 DETECT SUPPLY MODE 2-36
6.2 ID SENSOR FUNCTION IN DETECT SUPPLY MODE 2-37
6.3 FIXED SUPPLY MODE 2-38
6.4 ID SENSOR FUNCTION IN FIXED SUPPLY MODE 2-39
6.4.1 Black Development Unit 2-39
6.4.2 Color Development Unit 2-39
6.5 ABNORMAL CONDITION IN TONER DENSITY DETECTION 2-40
6.6 DEVELOPMENT BIAS TONER DENSITY DETECTION 2-40
6.6.1 Toner Density Adjustment Factor 2-40
6.6.2 Vd Correction Factor (Only for Black Toner) 2-41
6.7 TONER SUPPLY AND AGITATOR DRIVE MECHANISM 2-42
6.8 TONER SUPPLY AMOUNT 2-43
6.8.1 Detect Supply Mode (SP30 = 0) 2-43
6.8.2 Fixed Supply Mode (SP30 = 1) 2-45
6.9 BLACK TONER END DETECTION 2-47
6.9.1 Near Toner End Condition 2-47
6.9.2 Toner End Condition 2-47
6.9.3 Toner End Recovery 2-48
6.10 COLOR TONER END DETECTION 2-49
6.11 COLOR TONER SUPPLY UNIT INITIAL SETTING (SP63) 2-50
7. IMAGE TRANSFER AND PAPER SEPARATION 2-51
7.1 PRE-TRANSFER LAMP (PTL) 2-51
7.2 IMAGE TRANSFER 2-51
7.3 PAPER SEPARATION 2-52

7.4 PRE-TRANSFER LAMP AND TRANSFER/SEPARATION CORONA CIRCUIT 2-53

8. DRUM CLEANING 2-54

8.1 OVERVIEW. 2-54

8.2 DRIVE MECHANISM 2-55

8.3 TONER OVERFLOW DETECTION 2-56

9. QUENCHING. 2-57

10. PAPER FEED AND REGISTRATION 2-58

10.1 OVERVIEW. 2-58

10.2 FRR FEED SYSTEM 2-59

10.2.1 Pick-up Roller 2-59

10.2.2 Feed and Reverse Rollers 2-59

10.3 1ST FEED STATION PAPER LIFT MECHANISM AND PAPER END DETECTION 2-61

10.3.1 Paper Lift Mechanism 2-61

10.3.2 Paper End Detection 2-62

10.4 2ND/3RD FEED STATION PAPER LIFT MECHANISM AND PAPER END DETECTION 2-63

10.4.1 Paper Lift Mechanism 2-63

10.4.2 Paper End Detection 2-63

10.5 PAPER SIZE DETECTION 2-64

10.5.1 1st Feed Station 2-64

10.5.2 2nd/3rd Feed Station. 2-66

10.6 PAPER FEED DRIVE MECHANISM 2-68

10.6.1 1st Feed Station 2-68

10.6.2 2nd Feed Station 2-69

10.6.3 3rd Feed Station (A111 Copier Only) 2-70

10.7 SLIP CLUTCH MECHANISM 2-71

10.8 MANUAL FEED TABLE 2-72

10.9 PAPER REGISTRATION 2-73

10.10 PAPER FEED AND MISFEED DETECTION TIMING 2-74

11. IMAGE FUSING 2-76

11.1 OVERVIEW. 2-76

11.2 FUSING DRIVE RELEASE MECHANISM AND COVER SAFETY SWITCH . . 2-77
11.3 FUSING LAMP CONTROL 2-78
11.4 ENERGY SAVER FUNCTION 2-79
11.5 FUSING LAMP CONTROL CIRCUIT 2-80
11.5.1 Phase Control Mode 2-81
11.5.2 Overheat Protection 2-82

3. INSTALLATION

1. INSTALLATION REQUIREMENTS 3-1
1.1 ENVIRONMENT 3-1
1.2 MACHINE LEVEL 3-1
1.3 MINIMUM SPACE REQUIREMENTS 3-2
1.4 POWER REQUIREMENTS 3-2
2. INSTALLATION PROCEDURE 3-3
2.1 ACCESSORY CHECK 3-3
2.2 COPIER INSTALLATION 3-4
2.3 CASSETTE MODIFICATION 3-10
2.4 KEY COUNTER HOLDER INSTALLATION (Option) 3-11
2.5 OPTICS ANTI-CONDENSATION HEATER INSTALLATION (Option) 3-12
2.6 COLOR DEVELOPMENT UNIT INSTALLATION (Option) 3-13
2.7 DC POWER SUPPLY UNIT INSTALLATION (A110 Copier Only) (Option) 3-15

4. SERVICE TABLES

1. SERVICE REMARKS 4-1
1.1 GENERAL CAUTION 4-1
1.2 DRUM AND DRUM UNIT 4-1
1.3 CHARGE CORONA 4-2
1.4 OPTICS 4-2
1.5 DEVELOPMENT UNIT 4-3
1.6 TONER SUPPLY 4-4

1.7 TRANSFER AND SEPARATION 4-4
1.8 CLEANING UNIT 4-4
1.9 FUSING UNIT 4-5
1.10 PAPER FEED 4-5
1.11 DOCUMENT FEEDER 4-5
1.12 SORTER 4-6
1.13 OTHERS 4-6
2. SERVICE PROGRAM MODE 4-7
2.1 SERVICE PROGRAM MODE OPERATION 4-7
2.1.1 Service Program Access Procedure 4-7
2.1.2 Change Adjustment Values or Modes 4-9
2.1.3 Memory Clear Procedure 4-9
2.2 SERVICE PROGRAM MODE TABLE 4-12
2.3 SP-8 SENSOR/SWITCH DATA CHECK 4-24
2.4 SP-9 ELECTRICAL COMPONENT CHECK 4-26
2.5 MISFEED LOCATION INDICATOR 4-28
2.5.1 Initial Misfeed Detection 4-28
2.5.2 Misfeed Detection During Copy Cycle 4-29
3. SERVICE TABLES 4-30
3.1 TEST POINTS 4-30
3.2 DIP SWITCHES 4-31
3.3 VARIABLE RESISTORS 4-33
4. SPECIAL TOOLS AND LUBRICANTS 4-34
5. PREVENTIVE MAINTENANCE SCHEDULE 4-35
5.1 PM TABLE 4-35
5.2 EXPLANATION OF REGULAR PM 4-39
5.3 REGULAR PM PROCEDURE 4-41

5. REPLACEMENT AND ADJUSTMENT

1. EXTERIOR AND INNER COVERS 5-1

1.1 EXTERIOR COVER REMOVAL 5-1
1.1.1 Front Cover 5-1
1.1.2 Right Cover 5-1
1.1.3 Left Lower Cover 5-2
1.1.4 Left Upper Cover 5-2
1.1.5 Rear Cover 5-3
1.1.6 Upper Cover 5-3
1.2 INNER COVER REMOVAL 5-4
1.2.1 Right Inner Cover 5-4
1.2.2 Left Inner Cover 5-4
2. OPTICS 5-5
2.1 EXPOSURE GLASS REMOVAL 5-5
2.2 1ST MIRROR REMOVAL 5-6
2.3 2ND AND 3RD MIRROR REMOVAL 5-8
2.4 4TH AND 5TH MIRROR REPLACEMENT 5-10
2.5 EXPOSURE LAMP REPLACEMENT 5-11
2.6 OPTICS THERMOSWITCH REPLACEMENT 5-13
2.7 SCANNER DRIVE WIRE REPLACEMENT 5-14
2.7.1 Wire Removal 5-14
2.7.2 Wire Installation 5-15
2.8 SCANNER MOTOR REPLACEMENT 5-21
2.9 LENS MOTOR REPLACEMENT 5-22
2.10 LENS DRIVE WIRE INSTALLATION 5-23
2.11 4TH/5TH MIRROR MOTOR REPLACEMENT 5-24
3. DEVELOPMENT AND TONER SUPPLY 5-25
3.1 TONER SUPPLY UNIT REMOVAL 5-25
3.2 DEVELOPER REPLACEMENT 5-26
3.3 INLET SEAL REMOVAL 5-27
3.4 TONER SUPPLY CLUTCH REPLACEMENT 5-28
3.5 DEVELOPMENT CLUTCH SOLENOID REPLACEMENT 5-29
3.6 DEVELOPMENT DRIVE CLUTCH REPLACEMENT 5-30
3.7 DEVELOPMENT BIAS VOLTAGE ADJUSTMENT (SP9-57) 5-32

4. CLEANING 5-33

4.1 CLEANING UNIT REMOVAL 5-33

4.2 CLEANING BLADE REPLACEMENT. 5-34

4.3 CLEANING BRUSH REPLACEMENT 5-35

4.4 BLADE SCRAPER REPLACEMENT 5-36

4.5 TONER OVERFLOW SENSOR REPLACEMENT 5-37

4.6 USED TONER COLLECTION 5-38

4.7 ENTRANCE SEAL REPLACEMENT 5-39

5. PAPER FEED 5-40

5.1 1ST PAPER SIZE SWITCH REPLACEMENT 5-40

5.2 1ST PAPER END SENSOR AND PAPER LIFT SENSOR REPLACEMENT. . . 5-41

5.3 1ST FEED ROLLER, PICK-UP ROLLER, AND REVERSE ROLLER REPLACEMENT. 5-42

5.4 2ND AND 3RD PAPER FEED ROLLER REPLACEMENT. 5-44

5.5 RELAY SENSOR REPLACEMENT (A111 Copier Only) 5-45

5.6 PICK-UP ROLLER RELEASE SOLENOID AND MANUAL FEED TABLE SWITCH REPLACEMENT 5-46

5.7 1ST PAPER FEED CLUTCH SOLENOID REPLACEMENT 5-47

5.8 PAPER LIFT CLUTCH SOLENOID ASSEMBLY REPLACEMENT 5-48

5.9 REGISTRATION CLUTCH REPLACEMENT 5-50

5.10 2ND PAPER FEED CLUTCH AND RELAY ROLLER CLUTCH REPLACEMENT. 5-51

5.11 3RD PAPER FEED CLUTCH REPLACEMENT (A111 Copier Only) 5-53

5.12 2ND AND 3RD PAPER END SENSOR REPLACEMENT 5-54

5.13 2ND AND 3RD PAPER SIZE SWITCH REPLACEMENT 5-55

5.14 REGISTRATION SENSOR AND ROLLER REPLACEMENT. 5-56

6. AROUND DRUM. 5-59

6.1 DRUM REPLACEMENT. 5-59

6.2 ID SENSOR REPLACEMENT 5-61

6.3 PICK-OFF PAWL REPLACEMENT 5-62

6.4 PTL BOARD REPLACEMENT 5-63

6.5 QUENCHING LAMP REPLACEMENT/CLEANING 5-64

6.6 ERASE LAMP REPLACEMENT. 5-65

6.7 CHARGE CORONA WIRE REPLACEMENT 5-66
6.8 CHARGE CORONA GRID REPLACEMENT 5-67
6.9 TRANSFER/SEPARATION CORONA WIRE REPLACEMENT 5-68
6.10 CORONA CURRENT ADJUSTMENT 5-69
6.10.1 CHARGE CORONA CURRENT ADJUSTMENT (SP9-2) 5-71
6.10.2 GRID VOLTAGE ADJUSTMENT (SP9-2) 5-73
6.10.3 TRANSFER CORONA CURRENT ADJUSTMENT (SP9-5) 5-74
6.10.4 SEPARATION CORONA CURRENT ADJUSTMENT (SP9-8) 5-75
7. FUSING 5-76
7.1 EXIT UNIT REMOVAL 5-76
7.2 FUSING LAMP REPLACEMENT 5-77
7.3 PRESSURE ROLLER REPLACEMENT 5-78
7.4 HOT ROLLER REPLACEMENT 5-80
7.5 THERMISTOR AND THERMOFUSE REPLACEMENT 5-82
7.6 FUSING PRESSURE ADJUSTMENT 5-83
7.7 FUSING EXIT SENSOR REPLACEMENT 5-84
8. OTHERS 5-85
8.1 OPERATION PANEL REMOVAL 5-85
8.2 OZONE FILTER REPLACEMENT 5-86
9. COPY QUALITY ADJUSTMENT 5-87
9.1 LIGHT INTENSITY ADJUSTMENT 5-88
9.2 UNEVEN EXPOSURE ADJUSTMENT 5-89
9.3 BIAS VOLTAGE ADJUSTMENT 5-90
9.4 TONER DENSITY ADJUSTMENT 5-91
9.5 FIXED TONER SUPPLY MODE SELECTION 5-91
9.6 TONER SUPPLY RATIO SELECTION 5-91
9.7 ID SENSOR (Vsg) ADJUSTMENT 5-92
9.8 ADS (Auto Image Density Sensor) ADJUSTMENT 5-93
9.9 VERTICAL MAGNIFICATION ADJUSTMENT 5-94
9.10 HORIZONTAL MAGNIFICATION ADJUSTMENT 5-94
9.11 FOCUS ADJUSTMENT 5-95
9.12 ERASE MARGIN ADJUSTMENT 5-96

9.13 REGISTRATION ADJUSTMENT 5-96
9.14 SIDE-TO-SIDE REGISTRATION ADJUSTMENT 5-97
9.15 4TH/5TH MIRROR HEIGHT ADJUSTMENT 5-100

6. TROUBLESHOOTING

1. COPY QUALITY 6-1
1.1 BLANK COPY (WHITE COPY). 6-1
1.2 DIRTY BACKGROUND 6-4
1.3 UNEVEN IMAGE DENSITY 6-7
1.4 VERTICAL BLACK BANDS 6-8
1.5 VERTICAL BLACK LINES 6-9
1.6 VERTICAL WHITE LINES OR BANDS–1 (DULL OR BLURRED) 6-10
1.7 VERTICAL WHITE LINES OR BANDS–2 (THIN, DISTINCT) 6-11
1.8 HORIZONTAL BLACK/WHITE LINES 6-12
1.9 JITTER 6-13
1.10 BLACK SPOTS ON THE COPY IMAGE 6-14
1.11 SKEWED (OPTICAL) COPY IMAGE 6-15
1.12 TONER DENSITY TOO HIGH 6-16
1.13 TONER DENSITY TOO LOW. 6-18
1.14 TONER SCATTERING 6-20
1.15 UNFUSED COPY IMAGE. 6-21
1.16 PAPER MISFEED. 6-22
1.17 DF ORIGINAL MISFEED OR SKEW 6-23
2. U-CODE CONDITION 6-24
2.1 U1 - RIGHT COVER OPEN 6-24
2.2 U2 - KEY COUNTER NOT SET 6-24
2.3 U4 - SORTER OPEN 6-24
2.4 U5 - CASSETTE LIFT SENSOR NOT ON 6-24
2.5 U7 - DUPLEX UNIT OPEN DURING DUPLEX OPERATION 6-24
3. SERVICE CALL CONDITION. 6-25
3.1 CODE #11 – EXPOSURE LAMP ERROR 6-25

3.2 CODE #12 – EXPOSURE LAMP ERROR 6-27
3.3 CODE #13 – ZERO CROSS SIGNAL ERROR 6-28
3.4 CODE #21 – SCANNER HOME POSITION ERROR 6-29
3.5 CODE #22 – SCANNER HOME POSITION ERROR 6-31
3.6 CODE #28 – LENS HOME POSITION ERROR 6-33
3.7 CODE #29 – LENS HOME POSITION ERROR 6-35
3.8 CODE #2A – 4TH/5TH MIRROR HOME POSITION ERROR 6-37
3.9 CODE #2B – 4TH/5TH MIRROR HOME POSITION ERROR 6-39
3.10 CODE #52 – FUSING WARM-UP ERROR 6-41
3.11 CODE #53 – FUSING OVERHEAT 6-43
3.12 CODE #55 – FUSING THERMISTOR OPEN 6-44
3.13 E70 (IN THE MAGNIFICATION INDICATOR) – TONER OVERFLOW SENSOR ON 6-46
3.14 CODE #80 – DUPLEX AND COPIER MAIN BOARD COMMUNICATION ERROR 6-47
3.15 CODE #82 – JOGGER HOME POSITION ERROR 6-50
3.16 CODE #83 – JOGGER HOME POSITION ERROR 6-51
3.17 ABNORMAL CONDITION IN TONER DENSITY DETECTION 6-52

4. ELECTRICAL COMPONENT DEFECTS 6-54

4.1 SENSOR 6-54
4.2 SWITCH OR OTHER ELECTRICAL COMPONENT 6-56
4.3 BLOWN FUSE CONDITION 6-57
4.3.1 A110 copier 6-57
4.3.2 A111 Copier 6-58

DOCUMENT FEEDER

1. SPECIFICATIONS 1

2. COMPONENT LAYOUT 2

3. ELECTRICAL COMPONENT DESCRIPTIONS 3

4. OVERALL MACHINE CONTROL 4

5. BASIC OPERATION 6

6. POWER DISTRIBUTION 8

6.1 A110 COPIER 8

6.2 A111 COPIER 9

7. ORIGINAL FEED 10

7.1 ORIGINAL PICK-UP 10

7.2 ORIGINAL SEPARATION 11

7.3 ORIGINAL FEED-IN MECHANISM 12

7.4 ORIGINAL SIZE DETECTION 14

7.5 ORIGINAL INVERSION MECHANISM 15

7.6 ORIGINAL FEED-OUT MECHANISM 17

7.7 BELT DRIVE MOTOR CIRCUIT 18

7.8 FEED-OUT MOTOR CIRCUIT 19

7.9 INPUT AND OUTPUT CIRCUITS 20

8. LIFT MECHANISM 21

9. ORIGINAL MISFEED SENSING 22

10. INSTALLATION PROCEDURE (for Machine Code: A110/A111) . . 24

10.1 ACCESSORY CHECK 24

10.2 INSTALLATION PROCEDURE 27

11. PREPARATION FOR TRANSPORTATION 34

12. REPLACEMENT AND ADJUSTMENT 35

12.1 FEED-IN UNIT 35

12.1.1 Transport Belt Replacement 35

12.1.2 Feed-in Unit Removal 37

12.1.3 Pick-up Roller Replacement 38

12.1.4 Feed-in Clutch Lubrication 39

12.1.5 Pick-up Solenoid Adjustment 40

12.1.6 Feed Roller Replacement 42

12.1.7 Feed-in Solenoid Adjustment 43

12.1.8 Friction Belt Replacement 44

12.2 FEED-OUT UNIT 45

12.2.1 Feed-out Unit Removal 45

12.2.2 Inverter Solenoid Adjustment 46
12.2.3 DF Leading Edge Registration Adjustment 47
12.3 BELT DRIVE MOTOR SPEED ADJUSTMENT 48

SORTER

1. SPECIFICATIONS 1
2. COMPONENT LAYOUT 2
3. ELECTRICAL COMPONENT DESCRIPTIONS 3
4. OVERALL MACHINE CONTROL 4
5. BASIC OPERATION 5
6. EXIT ROLLER DRIVE 6
6.1 ROLLER DRIVE MECHANISM 6
6.2 ROLLER DRIVE CIRCUIT 7
7. BIN DRIVE 8
7.1 BIN DRIVE MECHANISM 8
7.2 BIN DRIVE CIRCUIT 10
8. MISFEED DETECTION 11
9. INSTALLATION PROCEDURE (for Machine Code: A110/A111) . . . 12
9.1 ACCESSORY CHECK 12
9.2 INSTALLATION PROCEDURE 13
10. PREPARATION FOR TRANSPORTATION 16
11. ROLLER DRIVE BELT REPLACEMENT 17
12. BIN GUIDE LUBRICATION 18

DUPLEX

1. SPECIFICATIONS 1
2. COMPONENT LAYOUT 2
3. ELECTRICAL COMPONENT DESCRIPTION 3

4. POWER DISTRIBUTION AND OVERALL MACHINE CONTROL 4

4.1 A110 COPIER 4

4.2 A111 COPIER 5

5. BASIC OPERATION 6

5.1 FIRST SIDE COPY 6

5.2 DUPLEX STACKING 6

5.3 SECOND SIDE COPY 6

6. DRIVE MECHANISM 7

7. FIRST SIDE COPY 8

7.1 FROM COPIER PAPER FEED SECTION TO DUPLEX ENTRANCE ROLLER . . 8

7.2 FROM DUPLEX ENTRANCE ROLLER TO DUPLEX TRAY 9

7.3 DUPLEX STACKING 10

8. SECOND SIDE COPY 11

9. DUPLEX PAPER FEED AND MISFEED DETECTION TIMING 12

10. INSTALLATION PROCEDURE 13

10.1 ACCESSORY CHECK 13

10.2 INSTALLATION PROCEDURE 14

11. REPLACEMENT AND ADJUSTMENT 19

11.1 DUPLEX TRAY REMOVAL 19

11.2 JOGGER MOTOR AND JOGGER HOME POSITION SENSOR REPLACEMENT 21

11.3 TURN SENSOR REPLACEMENT 22

11.4 FEED MOTOR REPLACEMENT 23

11.5 PAPER END SENSOR REPLACEMENT 24

11.6 ENTRANCE SENSOR REPLACEMENT 25

11.7 GATE SOLENOID REPLACEMENT 26

11.8 FRICTION ROLLER REPLACEMENT 27

11.9 FEED ROLLER REPLACEMENT 28

SECTION 1

OVERALL MACHINE INFORMATION

1. SPECIFICATIONS

Configuration:	Desk top	
Copy Process:	Dry electrostatic transfer system	
Originals:	Sheet/Book	
Original Size:	Maximum:	A3/11" x 17"
Copy Paper Size:	Maximum:	A3/11" x 17"
	Minimum:	A6/5 1/2" x 8 1/2" (lengthwise)
		..... Manual and cassette feeds
		A5/11" x 8 1/2" (sideways)
		..... Paper tray feed
(Duplex Copying)	A4/11" x 8 1/2" (sideways)	
Copy Paper Weight:	Cassette feed:	52 to 157 g/m^2 (14 to 42 lb)
	Paper tray feed:	64 to 90 g/m^2 (17 to 22 lb)
	Manual feed:	52 to 157 g/m^2 (14 to 42 lb)
	Duplex:	58 to 104 g/m^2 (16 to 28 lb)

Reproduction Ratio: 2 Enlargement and 3 Reduction

	A4/A3 version	LT/LDG version
Enlargement	141% 122%	155% 129%
Full size	100%	100%
Reduction	93% 82% 71%	93% 74% 65%

Zoom: From 50% to 200% in 1% steps

Copying Speed:
(A110 copier)
20 copies/minute (A4/11" x 8 1/2" sideways)
10 copies/minute (A3/11" x 17")
(A111 copier)
22 copies/minute (A4/11" x 8 1/2" sideways)
11 copies/minute (A3/11" x 17")

Warm-Up Time: Less than 60 seconds (at 20°C)

First Copy Time: 5.9 seconds (A4/11" x 8 1/2" sideways for cassette feed)

Copy Number Input: Ten keys, 1 to 99 (count up)

Manual Image Density Selection: 7 steps

Automatic Reset: All input modes are reset 1 minute after the copier is not in use; can also be set to 3 minutes or no auto reset.

Energy Saver Function: Saving the electricity consumption (Manual or manual/auto)

Paper Capacity:
Cassettes: 500 sheets
Paper tray: 250 sheets
(A110 copier ... 1 paper tray)
(A111 copier ... 2 paper trays)
Manual feed table: 50 sheets

Toner Replenishment:
Black: Cartridge exchange (370g/cartridge)
Color (red, blue, & green):
Cartridge exchange (310 g/cartridge)

Copy Tray Capacity:
250 sheets (B4/8 1/2" x 14" and smaller)
100 sheets (A3/11" x 17")

Power Source:
110 V/ 60 Hz/ 15 A (for Taiwan)
115 V/ 60 Hz/ 15 A (for North America)
220/230/240 V/ 50 Hz/ 8 A (for Europe)
220 V/ 60 Hz/ 8 A (for Middle East)

(Refer to the serial number plate (rating plate) to determine the power source required by the machine.)

Power Consumption:

	A110 copier	A111 copier
Maximum	1.2 kVA	1.3 kVA
Warm-up	720 VA (average)	720 VA (average)
Copy cycle	810 VA (average)	830 VA (average)
Stand-by (without energy saver function)	160 VA (average)	160 VA (average)

Dimensions:

		Width	Depth	Height
Copier only	A110 copier	672 mm (1130 mm) 26.5" (44.5")	600 mm 23.7"	410 mm (464 mm) 16.1" (18.3")
	A111 copier	672 mm (1130 mm) 26.5" (44.5")	600 mm 23.7"	530 mm (584 mm) 20.9" (23.0")
Full system	A110 copier	1149 mm 45.3"	600 mm 23.7"	513 mm 20.2"
	A111 copier	1149 mm 45.3"	600 mm 23.7"	633 mm 25.0"

( ): when the cassette and platen cover are installed and the copy tray is extended.

Noise Emissions:

	Maximum	Copy cycle	Stand-by
Copier only	less than 58 dB	less than 55 dB	less than 40 dB
Full system	less than 60 dB	less than 58 dB	less than 40 dB

Weight:

	A110 copier	A111 copier
Copier only	55 kg (121.3 lb)	64 kg (141.1 lb)
Full system	78 kg (172 lb)	83.5 kg (184 lb)

Optional Equipment and Machine Configuration:

( ) Machine Code

Configuration		Optional dc power supply unit (A525)	
Main frame	Optional equipment	Required	Not required
A110 copier	10 bin sorter (A490)		O
	Document feeder (A318)	O	
	Duplex unit (A491)	O	
	Color development unit (A313)		O
A111 copier	10 bin sorter (A490)		O
	Document feeder (A318)		O
	Duplex unit (A491)		O
	Color development unit (A313)		O

Other Optional Equipment:

- Key counter
- Universal cassette
- Optics anti-condensation heater

- Specifications are subject to change without notice.

2. COPY PROCESSES AROUND THE DRUM

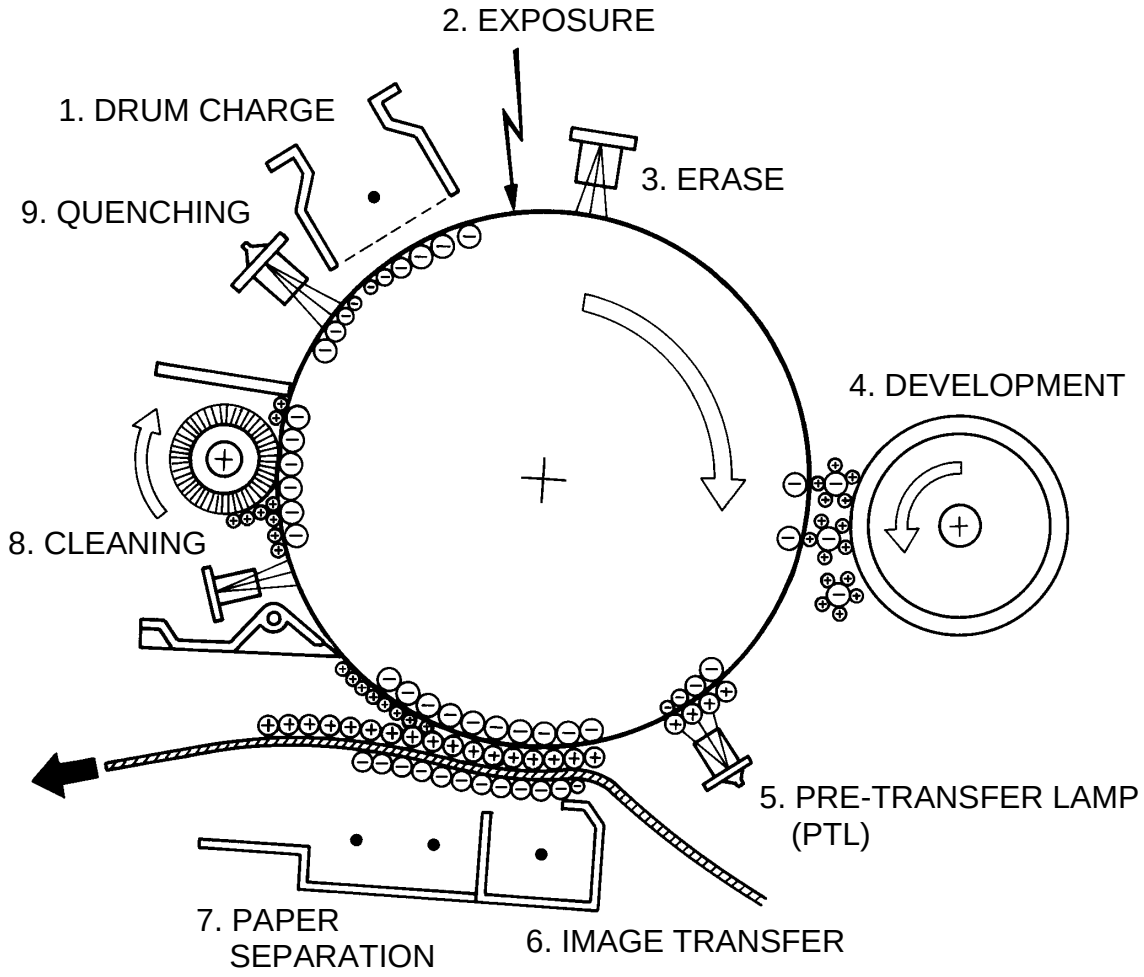

1. DRUM CHARGE
In the dark, the charge corona unit gives a uniform negative charge to the organic photoconductive (OPC) drum. The charge remains on the surface of the drum because the OPC drum has a high electrical resistance in the dark.

2. EXPOSURE
An image of the original is reflected to the OPC drum surface via the optics assembly. The charge on the drum surface is dissipated in direct proportion to the intensity of the reflected light, thus producing an electrical latent image on the drum surface.

3. ERASE
The erase lamp illuminates the areas of the charged drum surface that will not be used for the copy image. The resistance of the drum in the illuminated areas drops and the charge on those areas dissipates.

4. DEVELOPMENT
Positively charged toner is attracted to the negatively charged areas of the drum, thus developing the latent image. (The positive triboelectric charge is caused by friction between the carrier and toner particles.)

5. PRE-TRANSFER LAMP (PTL)
The PTL illuminates the drum to remove all negative charge from the exposed areas of the drum. This prevents the toner particles from being reattracted to the drum surface during paper separation and makes paper separation easier.

6. IMAGE TRANSFER
Paper is fed to the drum surface at the proper time so as to align the copy paper and the developed image on the drum surface. Then, a strong negative charge is applied to the back side of the copy paper, producing an electrical force which pulls the toner particles from the drum surface to the copy paper. At the same time, the copy paper is electrically attracted to the drum surface.

7. PAPER SEPARATION
A strong ac corona discharge is applied to the back side of the copy paper, reducing the negative charge on the copy paper and breaking the electrical attraction between the paper and the drum. Then, the stiffness of the copy paper causes it to separate from the drum surface. The pick-off pawls help to separate paper.

8. CLEANING
The cleaning brush removes most of the toner on the drum and loosens the remainder. Then the cleaning blade scrapes off the loosened toner.

9. QUENCHING
Light from the quenching lamp electrically neutralizes the surface of the drum.

3. COPY PROCESS CONTROL

	Grid Voltage	Exposure Lamp Voltage	Development Bias Voltage	Erase Lamp
Image Density Control	Standard image density grid voltage (–920V) + Drum residual voltage (Vr) correction factor (SP67)	Base exposure lamp voltage 1. Manual mode [SP48] 2. ADS mode [SP48] and [SP34] + V_L correction factor [SP61] and [SP57] + Drum wear correction factor (SP58) + Reproduction ratio correction factor	Base bias voltage 1. Manual mode 2. ADS mode [SP34] + Base bias voltage adjustment factor [SP37].....Black [SP79].....Color + Drum residual voltage (Vr) correction factor (SP67)	Depending on paper size and reproduction ratio
Toner Density Detection	Standard ID sensor grid voltage (–560V) + Vp correction factor (SP69)	Same as image density control	Toner density adjustment factor [SP33].....Black [SP75].....Color + Vd correction factor (Black only) (SP64)	ID sensor pattern erase (Vsg detection: Full erase)
Residual Voltage (Vr) Detection	–500 bolts (Fixed)	Same as image density control	0 volt (Fixed)	Full erase (All LEDs ON)
Between Copies (Non-image area)	0 volt (Fixed)	Exposure lamp turns off	–200 volts (Fixed) + Base bias voltage adjustment factor [SP37].....Black [SP79].....Color + Drum residual voltage (Vr) correction factor (SP67)	Full erase (All LEDs ON)

NOTE: a) Boxed items can be adjusted by SP modes surrounded by square brackets [ ].

b) Data which determines the correction factor can be observed by SP modes surrounded by parenthesis ( ).

4. MECHANICAL COMPONENT LAYOUT

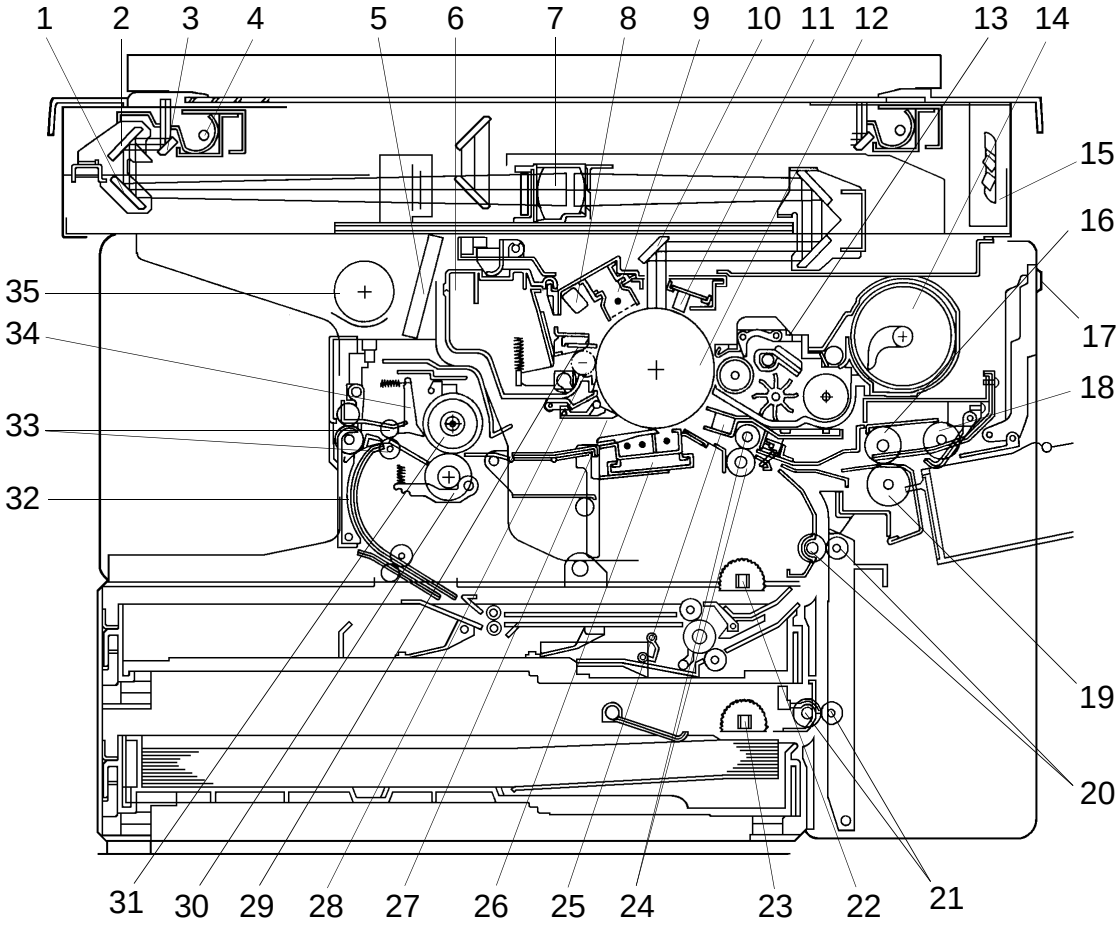

1. Third Mirror
2. Second Mirror
3. First Mirror
4. Exposure Lamp
5. Ozone Filter
6. Cleaning Unit
7. Lens
8. Quenching Lamp (QL)
9. Charge Corona Unit
10. Sixth Mirror
11. Erase Lamp
12. OPC Drum
13. Development Unit
14. Toner Supply Unit
15. Optics Cooling Fans
16. 1st Feed Roller
17. Manual Feed Table
18. Pick-up Roller
19. Separation Roller
20. 1st Relay Rollers
21. 2nd Relay Rollers **(A111 copier only)**
22. 2nd Feed Rollers (Semi-circular)
23. 3rd Feed Rollers (Semi-circular) **(A111 copier only)**
24. Registration Rollers
25. Pre-transfer Lamp (PTL)
26. Transfer and Separation Corona Unit
27. Pick-off Pawls
28. Cleaning Brush
29. Cleaning Blade
30. Pressure Roller
31. Hot Roller
32. Duplex Turn Guide (Option)
33. Exit Rollers
34. Hot Roller Strippers
35. Exhaust Blower

5. DRIVE LAYOUT

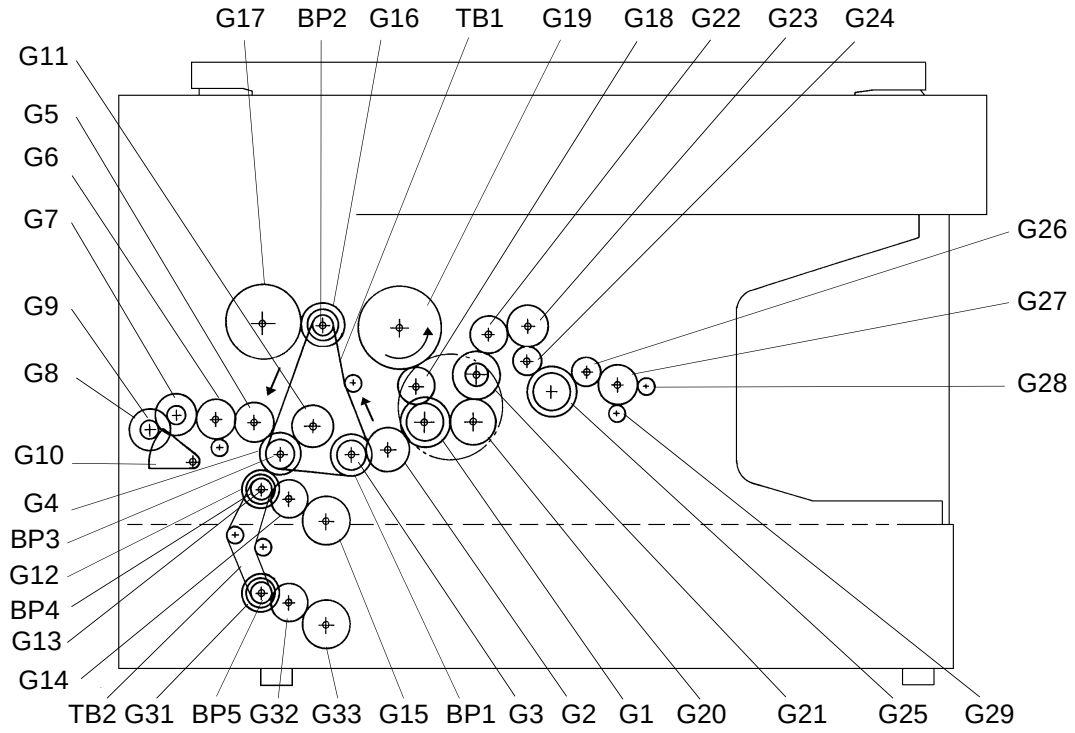

G1: Main Motor Gear → G20: Relay Gear

G1: Main Motor Gear → G2: Relay Gear → G3: Timing Belt Drive Gear → BP1: Timing Belt Pulley → TB1: Timing Belt → A

G1: Main Motor Gear → G18: Relay Gear → G19: Drum Drive Gear → Drum

TB1: Timing Belt → Development Section → BP2: Timing Belt Pulley → G16: Development CL Gear → Development CL Solenoid → Development Unit

Development CL Solenoid → G17: Toner Supply CL Gear → Toner Supply CL → Toner Supply Unit

G20: Relay Gear → G21: Cleaning Drive → Cleaning

G20: Relay Gear → G22: Relay Gear → Fusing and Exit Section → G23: Relay Gear → G24: Relay Gear → G25: Hot Roller Gear → G26: Relay Gear → G27: Relay Gear → G28: Exit Roller Gear

G27: Relay Gear → G29: Duplex Transport Gear (Option)

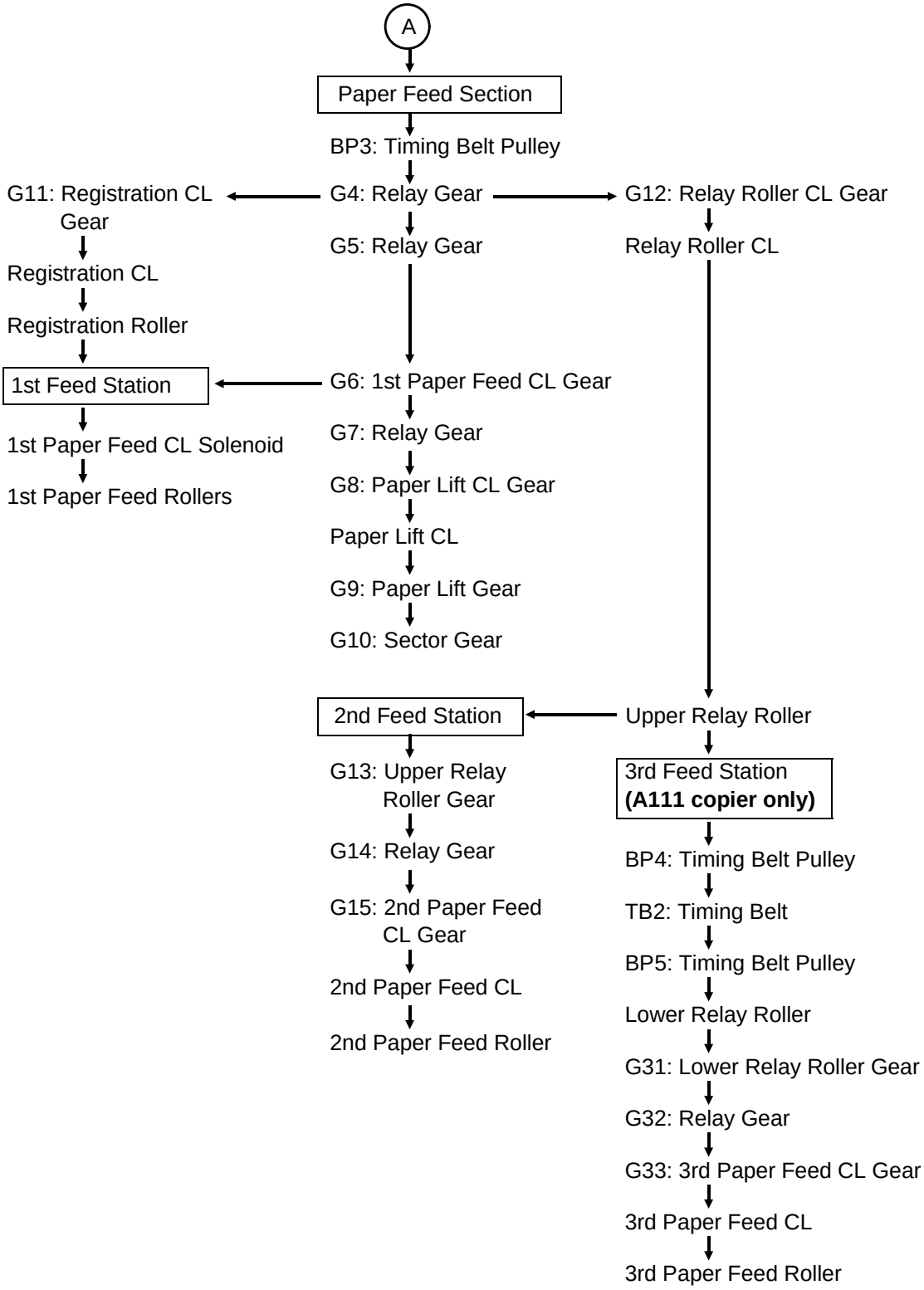
A
Paper Feed Section
BP3: Timing Belt Pulley
G4: Relay Gear
G11: Registration CL Gear
Registration CL
Registration Roller
1st Feed Station
1st Paper Feed CL Solenoid
1st Paper Feed Rollers
G5: Relay Gear
G6: 1st Paper Feed CL Gear
G7: Relay Gear
G8: Paper Lift CL Gear
Paper Lift CL
G9: Paper Lift Gear
G10: Sector Gear
G12: Relay Roller CL Gear
Relay Roller CL
2nd Feed Station
G13: Upper Relay Roller Gear
G14: Relay Gear
G15: 2nd Paper Feed CL Gear
2nd Paper Feed CL
2nd Paper Feed Roller
Upper Relay Roller
3rd Feed Station
(A111 copier only)
BP4: Timing Belt Pulley
TB2: Timing Belt
BP5: Timing Belt Pulley
Lower Relay Roller
G31: Lower Relay Roller Gear
G32: Relay Gear
G33: 3rd Paper Feed CL Gear
3rd Paper Feed CL
3rd Paper Feed Roller

6. ELECTRICAL COMPONENT LAYOUT

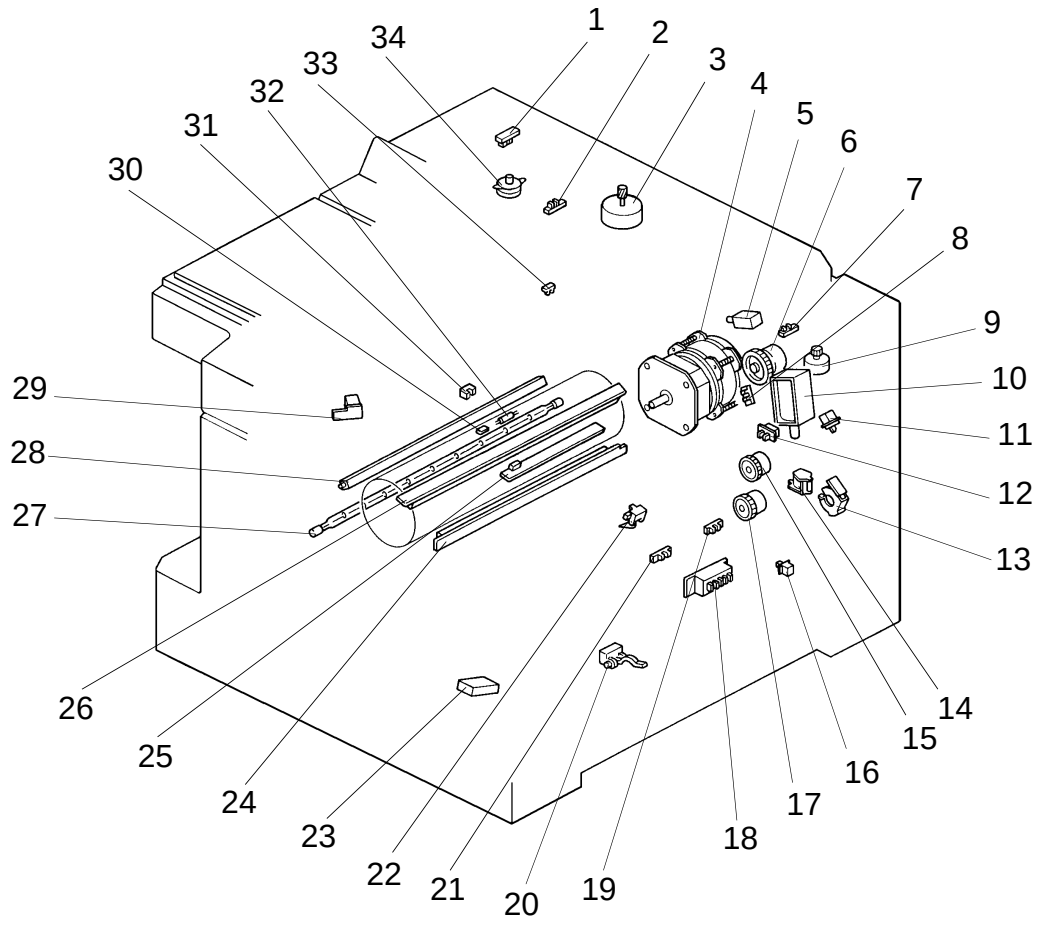

1. Scanner H.P. Sensor
2. Lens H.P. Sensor
3. Scanner Motor
4. Main Motor
5. Development Clutch Solenoid
6. Toner Supply Clutch
7. 4th/5th Mirror H.P. Sensor
8. Color Toner End Sensor
9. 4th/5th Mirror Motor
10. Pick-up Roller Release Solenoid
11. Manual Feed Table Switch
12. Color Switch
13. Paper Lift Clutch
14. 1st Paper Feed Clutch Solenoid
15. Registration Clutch
16. Right Cover Switch
17. Relay Roller Clutch
18. 1st Paper Size Switch
19. 1st Paper End Sensor
20. Relay Sensor **(A111 copier only)**
21. Paper Lift Sensor
22. Registration Sensor
23. Total Counter
24. Pre-transfer Lamp (PTL)
25. ID Sensor Board
26. Erase Lamp
27. Fusing Lamp
28. Quenching Lamp (QL)
29. Auto Image Density Sensor
30. Fusing Thermistor
31. Toner Overflow Sensor
32. Fusing Thermofuse
33. Exit Sensor
34. Lens Motor

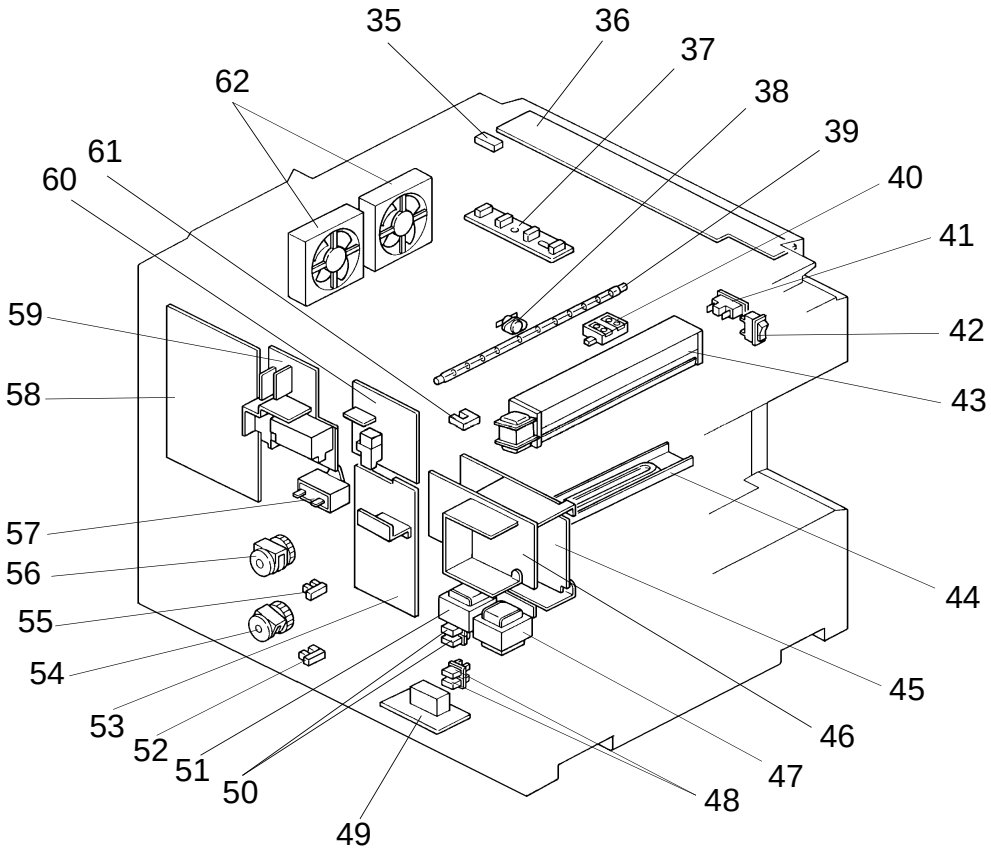

35. Platen Cover Closed Switch **(A111 copier only)**
36. Operation Panel Board
37. Original Length Sensor **(A111 copier only)**
38. Optics Thermoswitch
39. Exposure Lamp
40. Original Width Sensor **(A111 copier only)**
41. Cover Safety Switch
42. Main Switch
43. Exhaust Blower Motor
44. Drum Anti-condensation Heater
45. Main DC Power Supply Board
46. Option DC Power Supply Board **(A110 copier only)**
47. Option Transformer **(A110 copier only)**
48. 3rd Paper Size Switches **(A111 copier only)**
49. Noise Filter Board (220/230/240 V only)
50. 2nd Paper Size Switches
51. Main Transformer
52. 3rd Paper End Sensor **(A111 copier only)**
53. AC Drive Board
54. 3rd Paper Feed Clutch **(A111 copier only)**
55. 2nd Paper End Sensor
56. 2nd Paper Feed Clutch
57. Main Motor Capacitor
58. Main Board
59. TC/SC Power Pack
60. CC/Grid/Bias Power Pack
61. Platen Cover Position Sensor **(A111 copier only)**
62. Optics Cooling Fan Motors

7. ELECTRICAL COMPONENT DESCRIPTIONS

Symbol	Name	Function	Index No.
Motors			
M1	Main Motor	Drives all the main unit components except for the optics unit and fans. (115/220/230/240 Vac)	4
M2	Scanner Motor	Drives the scanners (1st and 2nd). (dc stepper)	3
M3	Lens Motor	Moves the lens position according to the selected magnification. (dc stepper)	34
M4	4th/5th Mirror Motor	Move the 4th/5th mirror position according to the selected magnification. (dc stepper)	9
M5	Optics Cooling Fan Motor-1	Prevents built up of hot air in the optics cavity. (24 Vdc)	62
M6	Optics Cooling Fan Motor-2	Prevents built up of hot air in the optics cavity. (24 Vdc)	62
M7	Exhaust Blower Motor	Removes heat from around the fusing unit and blower the ozone built up around the charge section to the ozone filter. (115/220/230/240 Vac)	43
Magnetic Clutch			
MC1	Toner Supply Clutch	Drives the toner supply roller.	6
Magnetic Spring Clutches			
MSC1	2nd Paper Feed Clutch	Starts paper feed from the 2nd paper feed station.	56
MSC2	Paper Lift Clutch	Lifts paper to the appropriate feed station.	13
MSC3	Registration Clutch	Drives the registration rollers.	15
MSC4	Relay Roller Clutch	Drives the relay rollers for the 2nd or 3rd paper feed station.	17
MSC5	3rd Paper Feed Clutch	Starts paper feed from the 3rd paper feed station. **(A111 copier only)**	54
Solenoids			
SOL1	1st Paper Feed Clutch Solenoid	Starts paper feed from the first paper station.	14
SOL2	Pick-up Roller Release Solenoid	a) After the paper is fed, releases the pick-up roller from next paper. b) When the manual feed table is used, releases the pick-up roller from the table.	10
SOL3	Development Clutch Solenoid	Drives the development unit.	5

Symbol	Name	Function	Index No.
Switches			
SW1	Main Switch	Supplies power to the copier.	42
SW2	Cover Safety Switch	Cuts the ac power line when the front cover or/and exit cover is open.	41
SW3	1st Paper Size Switch	Determines what size paper is in the cassette.	18
SW4	2nd Paper Size Switch-1 (Upper)	Determines what size paper is in the upper paper tray.	50
SW5	2nd Paper Size Switch-2 (Lower)	Determines what size paper is in the upper paper tray.	50
SW6	Color Switch	Determines which color development unit is installed.	12
SW7	Manual Feed Table Switch	Detects when the manual feed table is open.	11
SW8	Right Cover Switch	Detects when the right cover is open.	16
SW9	3rd Paper Size Switch-1 (Upper)	Determines what size paper is in the lower tray. **(A111 copier only)**	48
SW10	3rd Paper Size Switch-2 (Lower)	Determines what size paper is in the lower tray. **(A111 copier only)**	48
SW11	Platen Cover Closed Switch	Detects when the platen cover or the document feeder is closed. **(A111 copier only)**	35
Sensors			
S1	Scanner Home Position Sensor	Informs the CPU when the 1st scanner is at the home position.	1
S2	Lens Home Position Sensor	Informs the CPU when the lens is at the home position (full size position).	2
S3	4th/5th Mirror Home Position Sensor	Informs the CPU when the 4th/5th mirrors assembly is at the home position (full size position).	7
S4	Registration Sensor	Detects misfeeds.	22
S5	Exit Sensor	Detects misfeeds.	33
S6	1st Paper End Sensor	Informs CPU when the cassette runs out of paper.	19
S7	2nd Paper End Sensor	Informs CPU when the upper paper tray runs out of paper.	55
S8	Color Toner End Sensor	Detects when it is time to add toner for the color development unit.	8
S9	Paper Lift Sensor	Detects the correct feed height of the cassette.	21
S10	Image Density (ID) Sensor	Detects the density of the image on the drum to control the toner density.	25

Symbol	Name	Function	Index No.
S11	Auto Image Density Sensor (ADS)	Senses the background density of the original.	29
S12	3rd Paper End Sensor	Informs CPU when the lower paper tray runs out of paper. **(A111 copier only)**	52
S13	Relay Sensor	Detects misfeeds. **(A111 copier only)**	20
S14	Platen Cover Position Sensor	Detects when the platen cover is positioned about 10 cm (4") above the exposure glass. **(A111 copier only)**	61
S15	Original Width Sensor	Detects the original width. **(A111 copier only)**	40
S16	Original Length Sensor	Detects the original length. **(A111 copier only)**	37
S17	Toner Overflow Sensor	Detects when the used toner tank is full.	31
Printed Circuit Boards			
PCB1	Main Board	Controls all copier functions both directly and through the other PCBs.	58
PCB2	AC Drive Board	Drives all ac motors, the exposure lamp, fusing lamp, quenching lamp, exhaust blower motor.	53
PCB3	Main DC Power Supply Board	Rectifies 26 (31) Vac and 10 Vac input and outputs dc voltages.	45
PCB4	Operation Panel Board	Informs the CPU of the selected modes and displays the situations on the panel.	36
PCB5	Noise Filter Board	Removes the electrical noise. (220/230/240 V only)	49
PCB6	Option DC Power Supply Board	Rectifies 26 and 10 Vac input and outputs dc voltages. This board is required when the document feeder or/and duplex unit is installed. **(A110 copier only)**	46
Lamps			
L1	Exposure Lamp	Applies high intensity light to the original for exposure.	39
L2	Fusing Lamp	Provides heat to the hot roller.	27
L3	Quenching Lamp	Neutralizes any charge remaining on the drum surface after cleaning.	28
L4	Erase Lamp	Discharge the drum outside of the image area. Provides leading/trailing edge, side and editing erases.	26
L5	Pre-transfer Lamp	Reduces charge on the drum surface before transfer.	24

Symbol	Name	Function	Index No.
Power Packs			
P1	CC/Grid/Bias Power Pack	Provides high voltage for the charge corona, grid, and the development roller bias.	60
P2	TC/SC Power Pack	Provides high voltage for the transfer and separation corona.	59
Heaters			
H1	Drum Anti-condensation Heater	Prevents moisture around the drum.	44
H2	Optics Anti-condensation Heater (Option)	Prevents moisture from forming on the optics.	N/A
Counters			
CO1	Total Counter	Keeps track of the total number of copies made.	23
CO2	Key Counter (Option)	Used for control of authorized use. Copier will not operate until installed.	N/A
Transformer			
TR1	Main Transformer	Steps down the wall voltage to 26 (31) Vac and 10 Vac.	51
TR2	Option Transformer	Steps down the wall voltage to 26 Vac and 10 Vac. This transformer is required when the document feeder or/and duplex unit is installed. **(A110 copier only)**	47
Others			
TH	Fusing Thermistor	Monitors the fusing temperature.	30
TF	Fusing Thermofuse	Provides back-up overheat protection in the fusing unit.	32
TS	Optics Thermoswitch	Provides back-up overheat protection around the exposure lamp.	38
C	Main Motor Capacitor	Start capacitor	57

8. AC POWER AND DC POWER DISTRIBUTION

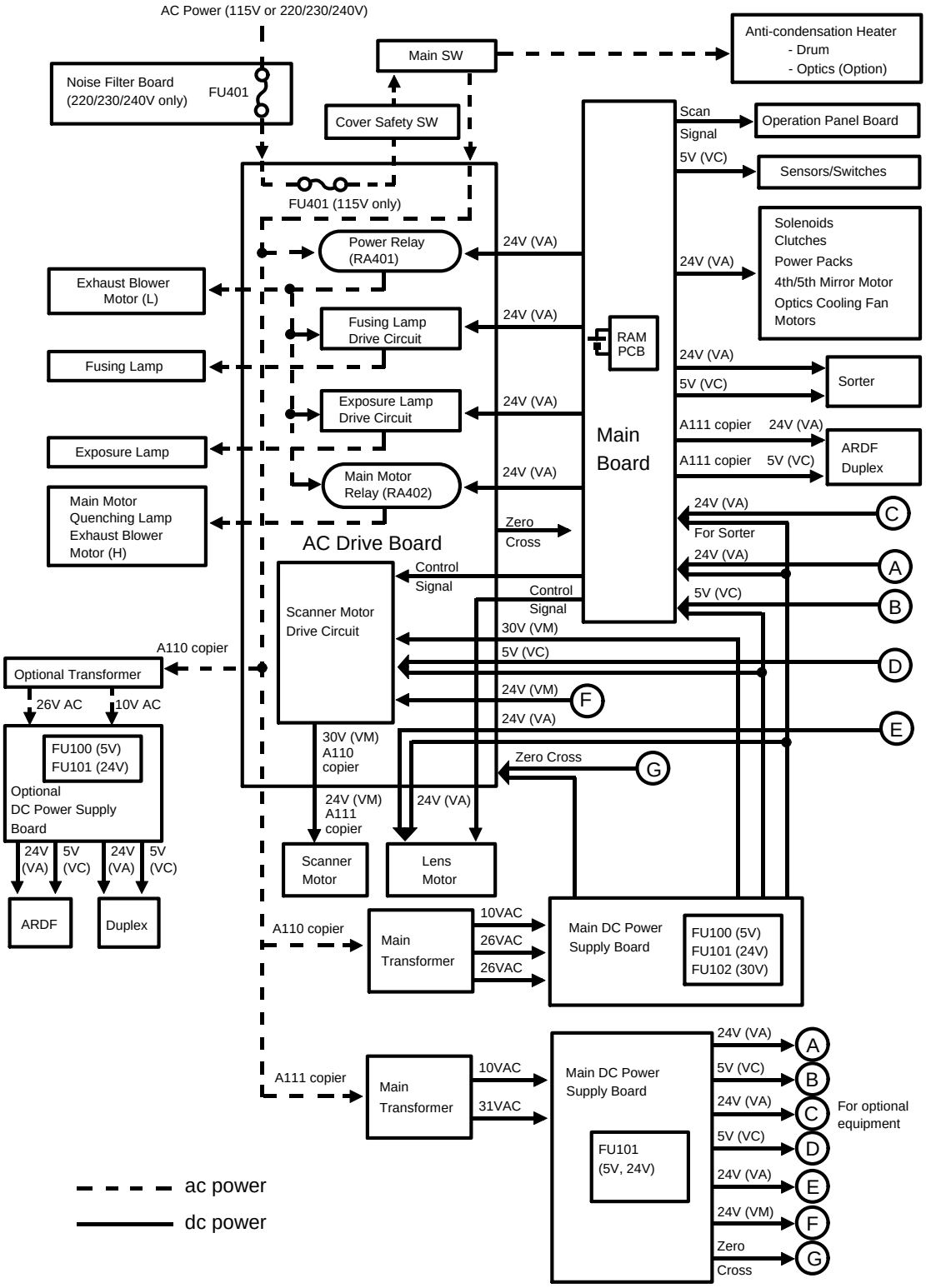

When this copier is plugged in and the main switch is turned off, ac power is supplied via the ac drive board to the anti-condensation heater. When the front cover and/or the exit cover is open, the cover safety switch completely cuts off power to all ac and dc components. The RAM board has a back up power supply (dc battery) for the service program mode and misfeed job recovery.

(A110 copier)

When the main switch is turned on, the ac power supply to the anti-condensation heater is cut off and ac power is supplied to the ac drive board. The main and optional transformers receive wall outlet ac power through the ac drive board. It outputs 10 volts ac and 26 volts ac to the main and optional dc power supply boards.

The main dc power supply board converts the 10 volts ac to +5 volts and a zero cross signal. There are two 26 volts ac inputs. The main dc power supply board converts them to +24 volts and +30 volts.

The +5 volt and +24 volt currents are supplied to the copier main board and ac drive board. The +30 volt current is supplied to the ac drive board. The zero cross signal is supplied to the copier main board through the ac drive board.

The copier main board supplies dc power to all copier dc components except the scanner motor and lens motor. All sensors and switches operate on +5 volts. All other dc components including the power relay (RA401) and the main motor relay (RA402) operate on +24 volts. The copier main board also supplies the +5 volt and +24 volt currents to the sorter.

The ac drive board supplies +30 volts to the scanner motor and +24 volts to the lens motor. The +5 volt current is dc power for the ICs on the scanner motor drive circuit. The main board sends the control signals to the scanner motor and lens motor through the ac drive board.

The optional dc power supply board supplies +5 volts and +24 volts to the duplex unit and ARDF.

(A111 copier)

When the main switch is turned on, the ac power supply to the anti-condensation heater is cut off and ac power is supplied to the ac drive board. The main transformer receives wall outlet ac power through the ac drive board and outputs 10 volts ac and 31 volts ac to the main dc power supply board.

The main dc power supply board converts the 10 volts ac input to +5 volts and a zero cross signal. The dc power supply board converts the 31 volts ac to +24 volts.

The +5 volt and +24 volt currents are supplied to the copier main board, ac drive board. The zero cross signal is supplied to the copier main board through the ac drive board.

The copier main board supplies dc powers to all copier dc components except the scanner motor and lens motor. All sensors and switches operate on +5 volts. All other dc components including the power relay (RA401) and the main motor relay (RA402) operate on +24 volts.
The copier main board also supplies the +5 volt and +24 volt currents to the sorter, ARDF and duplex unit.

The ac drive board supplies +24 volts to the scanner motor and lens motor. The +5 volt current is dc power for the ICs on the scanner motor drive circuit. The main board sends the control signals to the scanner motor and lens motor through the ac drive board.

When the main board receives power, it activates the power relay (RA401) which then supplies ac power to the fusing lamp drive circuit, and the exposure lamp drive circuit on the ac drive board. The exhaust blower motor begins rotating at low speed. The fusing lamp drive circuit receives a trigger signal from the main board and the fusing lamp lights. The exposure lamp does not turn on until the main board send a trigger pulse to the exposure lamp drive circuit.

When the Start key is pressed, the main board energizes the main motor relay (RA402). Then, the main motor and the quenching lamp turn on and the exhaust blower starts rotating at high speed.

When the main switch is turned off, power is cut off to the main board and to RA401, and the drum and optional anticondensation heaters are turned on. The exposure lamp and the fusing lamp power lines are completely disconnected from the line voltage.

SECTION 2

DETAILED SECTION DESCRIPTIONS

1. DRUM

1.1 OPC DRUM CHARACTERISTICS

An OPC has the characteristics of:

1. Being able to accept a high negative electrical charge in the dark. (The electrical resistance of a photoconductor is high in the absence of light.)
2. Dissipating the electrical charge when exposed to light. (Exposure to light greatly increases the conductivity of a photoconductor.)
3. Dissipating an amount of charge in direct proportion to the intensity of the light. That is, where stronger light is directed to the photoconductor surface, a smaller voltage remains on the OPC.
4. Being less sensitive to changes in temperature (when compared to selenium F type drums).
5. During the drum's life, drum residual voltage gradually increases and the photoconductive surface becomes worn. Therefore, some compensation for these characteristics is required.

1.2 DRUM UNIT

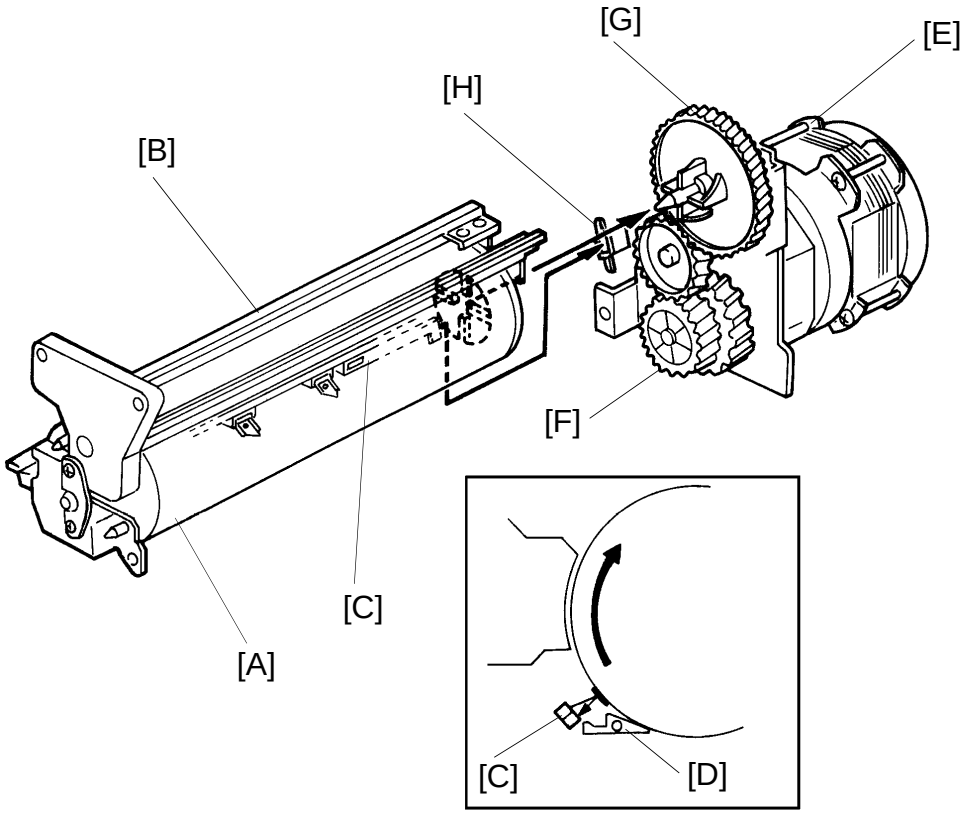

An organic photoconductor drum [A] is used on this model.

A drum unit [B] is used to hold the drum to prevent stress on the drum. The drum unit consists of an OPC drum, ID sensor [C] and pick-off pawls [D]. When the drum is replaced, and/or the pick-off pawls and/or the ID sensor are cleaned, the drum unit must be removed from the copier as a unit.

The drum is driven by the main motor [E] through the main motor gear [F], a relay gear and the drum drive gear [G]. The pick-off pawls are always in contact with the drum surface. The ID sensor is electrically connected to the ID sensor connector [H].

2. DRUM CHARGE

2.1 OVERVIEW

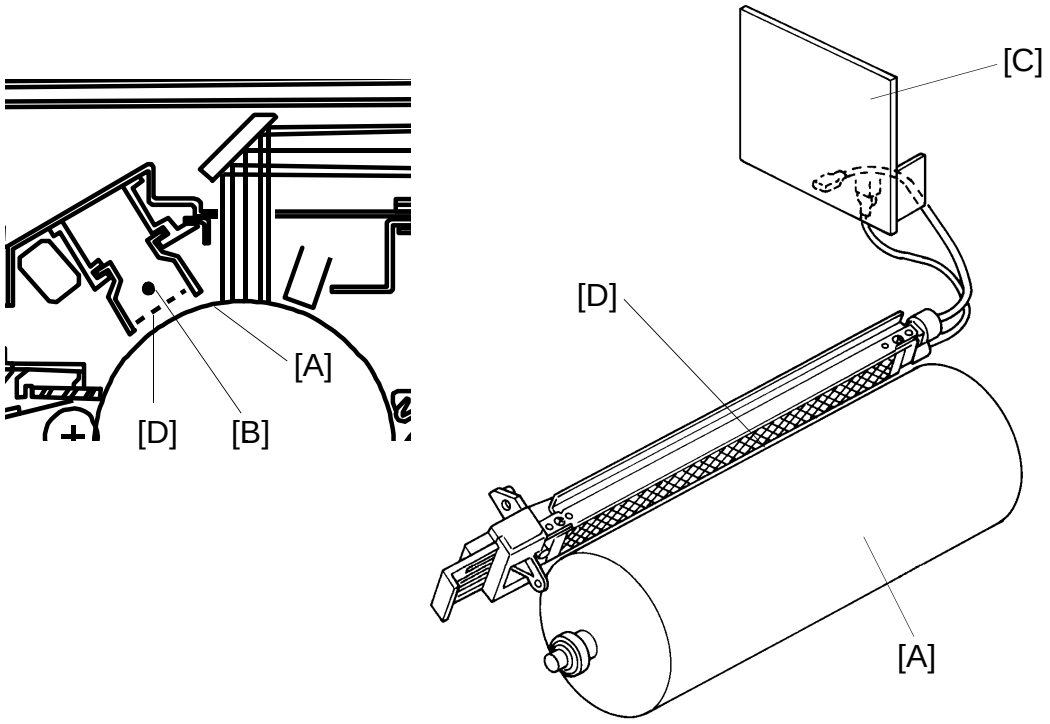

This copier uses a single wire scorotron and a highly sensitive OPC drum [A]. The corona wire [B] generates a corona of negative ions when the CC/Grid/Bias power pack [C] applies a high voltage. The CC/Grid/Bias power pack also applies a negative high voltage to a stainless steel grid plate [D]. This insures that the drum coating receives a uniform negative charge as it rotates past the corona unit.

The exhaust blower, located above the copy exit, causes a flow of air from the upper area of the development unit through the charge corona unit. This prevents uneven build-up of negative ions that can cause uneven image density. The exhaust blower runs at half speed when in the stand-by condition and runs at full speed while copying.

The exhaust blower has an ozone filter (active carbons) which adsorbs ozone (O_3) generated by the corona charge. The ozone filter decreases in efficiency over time as it adsorbs ozone. The ozone filter should be replaced at every 60,000 copies.

The flow of air around the charge corona wire may deposit paper dust or toner particles on the corona wire. These particles may interfere with charging and cause low density bands on copies. The wire cleaner cleans the corona wire when the operator slides the corona unit in and out.

2.2 CHARGE CORONA WIRE CLEANER MECHANISM

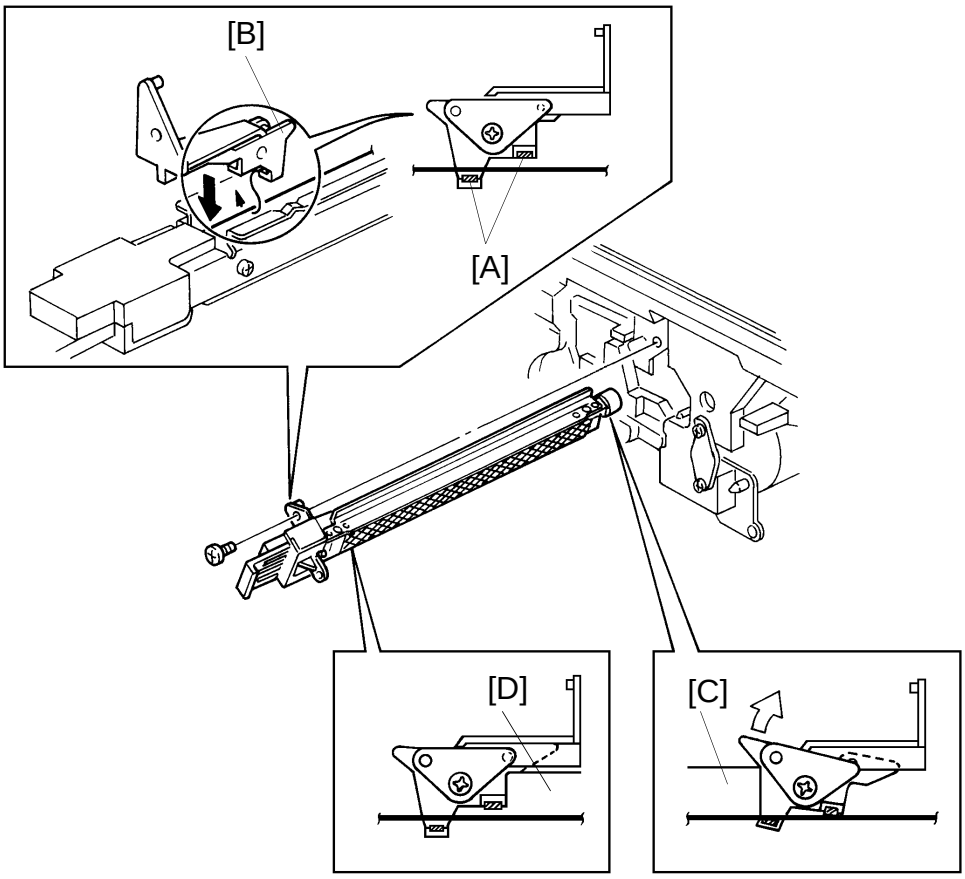

Pads [A] above and below the charge corona wire clean the wire as the charge unit is manually slid in and out.

The cleaner pad bracket [B] rotates when the charge unit is fully extended and the bracket is pulled up against the rear block [C]. This moves the pads against the corona wire (see illustration). If the charge unit is not fully extended, the pads do not touch the corona wire.

The pads move away from the wire when the charge unit is fully inserted and the cleaning bracket is pushed against the front block [D].

After copier installation the key operator should be instructed how to use this mechanism when copies have white streaks.

2.3 CHARGE CORONA CIRCUIT

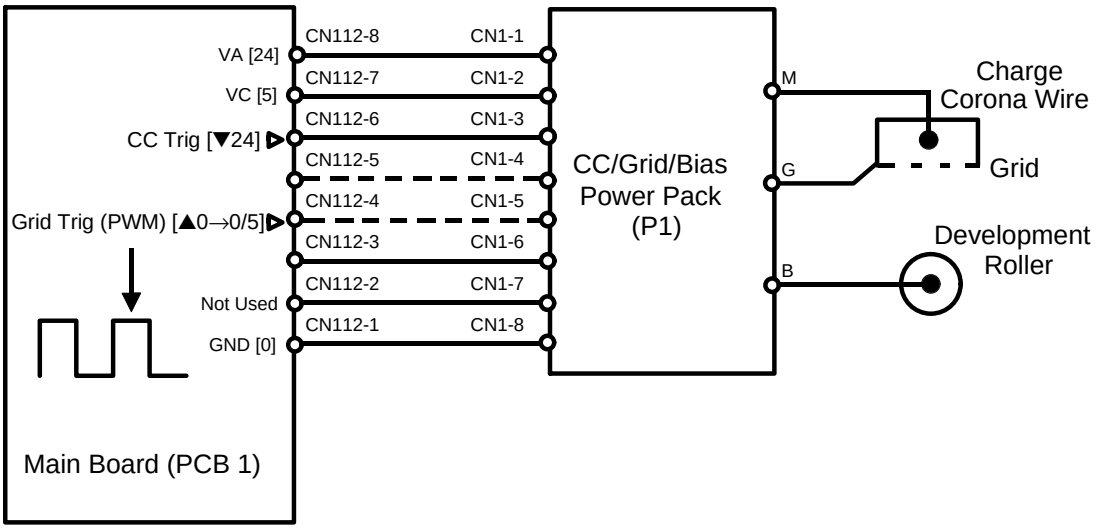

The main board supplies +24 volts to the CC/Grid/Bias power pack at CN1-1 as the power supply source. After the Start key is pressed, the CPU drops CN1-3 from +24 volts to 0 volts. This energizes the charge corona circuit within the CC/Grid/Bias power pack, which applies a high negative voltage of approximately –5.6 kv to the charge corona wire. The corona wire then generates a negative corona charge.

The grid limits the charge voltage to ensure that the charge does not fluctuate and an even charge is applied to the drum surface.

The grid trigger pulse applied to CN1-5 is a pulse width modulated signal (PWM signal). This signal is not only a trigger signal; it also changes the voltage level of the grid. As the width of the pulse applied increases, the voltage of the grid also increases.

2.4 GRID VOLTAGE CORRECTION

To maintain good copy quality over the drum's life, the grid voltage is changed by the following:

- Drum residual voltage correction (Vr correction)
- Vp correction

2.4.1 Drum Residual Voltage Correction (Vr correction)

During the drum's life, the drum may fatigue electrically and residual voltage (Vr) on the drum may gradually increase. When this happens, the corona charged voltage on the drum is not discharged enough in the quenching and exposure processes. Even if the development bias is applied in the development process, the background area of the original on the drum may attract some toner. This may cause dirty background on copies. The Vr correction prevents this phenomenon as follows:

A pattern (Vr pattern) is developed on the drum every 1000 copies and its reflectivity is detected by the ID sensor to measure the residual voltage. This is called residual voltage detection. If the reflectivity is low, the residual voltage will be high.) When the Vr pattern is developed, all blocks of the erase lamp turn on, the grid voltage is –500 volts and the development bias voltage is 0 volt.

The CPU determines what level of Vr correction is necessary depending on the output (Vr ratio [L]) from the ID sensor.

$$L = \frac{Vrp}{Vsg} \times 100(\%)$$

Vrp: ID sensor output for Vr pattern
Vsg: ID sensor output for bare drum

The current Vr ratio is displayed by SP67.

The CPU increases the development bias voltage depending on the Vr ratio to prevent dirty background on copies. (See page 2-33 for more information.) The CPU also increases the grid voltage to ensure proper image density depending on the Vr ratio. (See page 2-8.)

2.4.2 Vp Correction

Due to the OPC drum's characteristics, the chargeability of the photoconductor may decrease until around 2,000 copies after installation. It will stay stable after 2,000 copies. This characteristic especially affects developing of the ID sensor pattern. The ID sensor pattern developed on the drum becomes lighter after 2,000 copies causing higher toner concentration in the developer. Vp correction is made to prevent this phenomenon and is as follows:

The CPU keeps track of the total number of copies made with the drum. The grid voltage for the toner density detection increases by –20 volts after 2,000 copies (see page 2-8). The drum counter is displayed by SP69. The counter must be reset by SP66 when the drum is replaced with a new one.

2.5 GRID VOLTAGE CONTROL

The main board controls the grid voltage for a copy image and the toner density detection through the CC/Grid/Bias power pack. As the grid voltage for the image density control becomes less, the copy image becomes lighter and vice versa.
As the grid voltage for the toner density detection becomes less, the toner concentration in the developer becomes higher and vice versa.

The grid voltage is based on the standard grid voltage and the correction factor as follows:

2.5.1 Image Density Control

Grid Voltage = Standard image density grid voltage (–920 volts [SP60 = 5])
+
Vr correction factor

Vr Correction Factor

L	Change of grid voltage
100 to 89 (%)	±0 (volt)
88 to 76 (%)	–40 (volts)
75 to 62 (%)	–80 (volts)
61 to 45 (%)	–120 (volts)
44 to 0 (%)	–160 (volts)

L = Vrp/Vsg x 100 (Vr correction ratio)
Vrp: ID sensor output for Vr correction pattern
Vsg: ID sensor output for bare drum

NOTE: The grid voltage for between copies (non-image area) is 0 volt (Fixed).

2.5.2 Toner Density Detection

Grid Voltage = Standard ID sensor grid voltage (–560 volts [SP62 = 5])
+
Vp correction factor

Drum counter	Vp correction factor
0 to 1,999 (copies)	±0 (volt)
Over 2,000 (copies)	–20 (volts)

2.5.3 Vr Detection

Grid Voltage = –500 volts (Fixed)

3. OPTICS

3.1 OVERVIEW

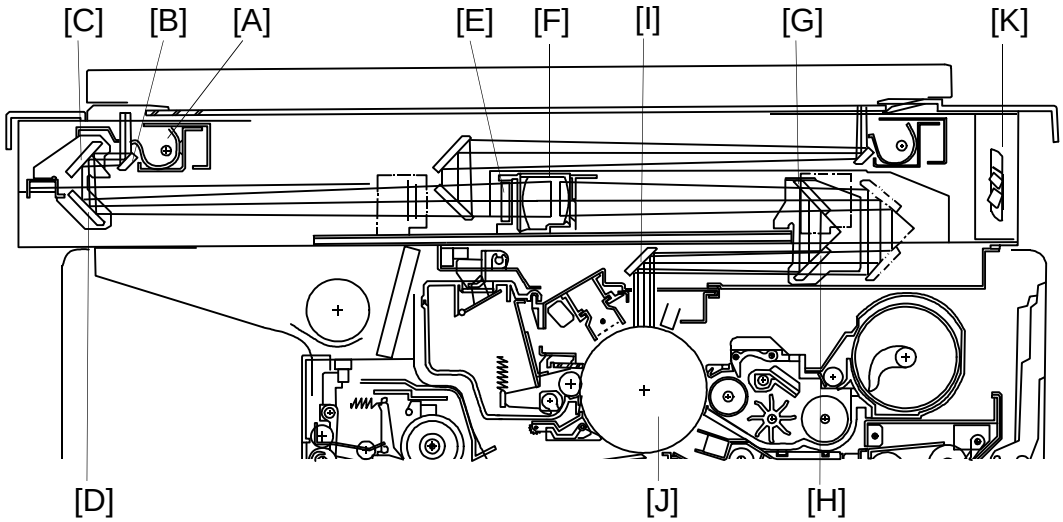

During the copy cycle, an image of the original is reflected onto the drum surface through the optics assembly as follows.

Light Path:

Exposure Lamp [A] → Original → First Mirror [B] → Second Mirror [C] → Third Mirror [D] → Green Color Filter [E] → Lens [F] → Fourth Mirror [G] → Fifth Mirror [H] → Sixth Mirror [I] → Drum [J]

The two optics cooling fans [K] draw cool air into the optics cavity. The air flows from the right to the left in the optics cavity and exhausts through the vents in the left cover. These fans operate during the copy cycle.

This copier has six standard reproduction ratios: Three reduction ratios, two enlargement ratios, and full size. It also has a zoom function. The operator can change the reproduction ratio in one percent steps from 50% to 200%.

Stepper motors are used to change the positions of the lens and mirrors. Separate motors are used because the wide range of reproduction ratios makes it mechanically difficult for one motor to position both the lens and mirrors. A stepper motor is also used to drive the scanner. This motor changes the scanner speed according to the reproduction ratio.

The thermoswitch opens at 140°C and removes ac power to the exposure lamp to prevent overheating. The thermoswitch can be reset manually when the exposure lamp area cools.

A green color filter [E] is located just in front of the lens to decrease the sensitivity of the OPC layer against red right.

3.2 SCANNER DRIVE

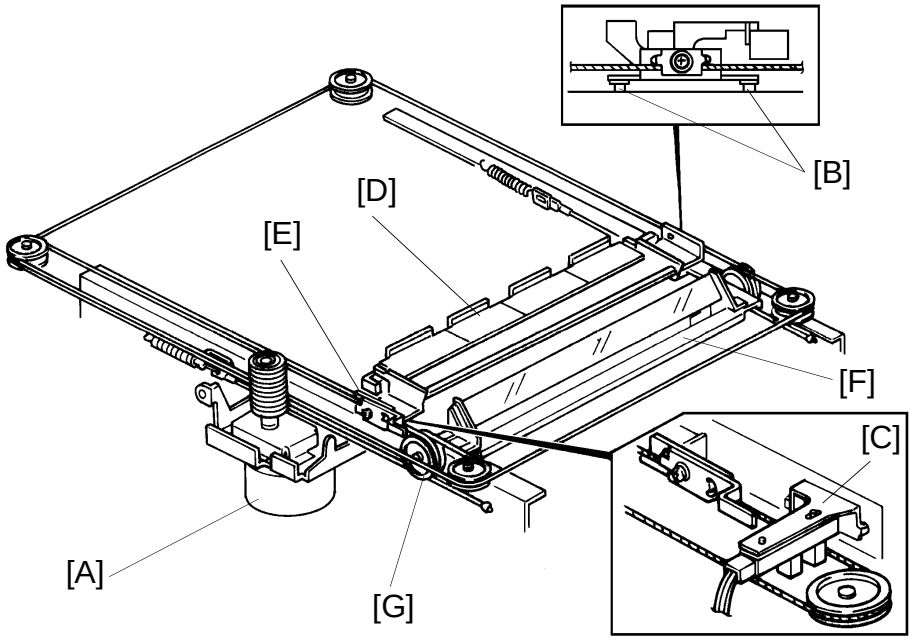

3.2.1 1st and 2nd Scanner Drive Mechanism

This model uses a stepping motor [A] to drive the scanners. Both ends of each scanner are driven to prevent skewing. The scanners have sliders [B], which ride on guide rails.

The scanner home position is detected by the home position sensor [C]. The scanner return position is determined by counting the scanner motor drive pulses.

The first scanner [D], which consists of the exposure lamp and the first mirror, is connected to the scanner drive wire by the wire clamps [E]. The second scanner [F], which consists of the second and third mirrors, is connected to the scanner drive wire by movable pulleys (the second scanner pulley [G]).

The pulley moves the second scanner at half the velocity of the first scanner. This is to maintain the focal distance between the original and the lens during scanning. This relationship can be expressed as:

V1r = 2 (V2r) = VD/r
where r = Reproduction ratio
V1r = First scanner velocity (when the reproduction ratio is "r")
V2r = Second scanner velocity (when the reproduction ratio is "r")
VD = Drum peripheral velocity (120 mm/s)

3.3 LENS DRIVE

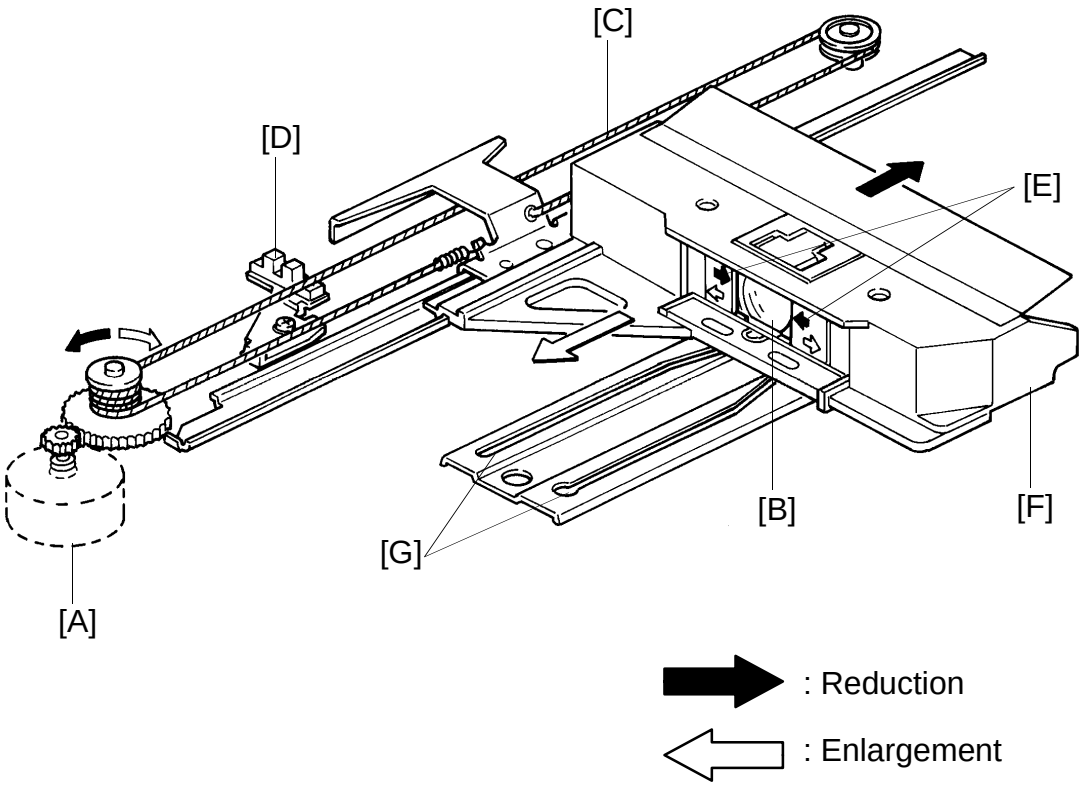

3.3.1 Lens Drive

The lens motor [A] (stepper motor) changes the lens [B] position through the lens drive wire [C] in accordance with the selected reproduction ratio to provide the proper optical distance between the lens and the drum surface.

The rotation of the lens drive pulley moves the lens back and forth in discrete steps. The home position of the lens is detected by the home position sensor [D]. The main board keeps track of the lens position based on the number of pulses sent to the lens motor.

3.3.2 Shading Mechanism

The shading plates [E] are installed on the lens housing [F] and are slid open and shut by the groove cams [G]. When the lens moves in the reduction direction, the groove cams move the shading plates closer together. The plate blocks part of the light passing through the lens to keep the intensity of the light on the drum even.

3.3.3 Lens Positioning

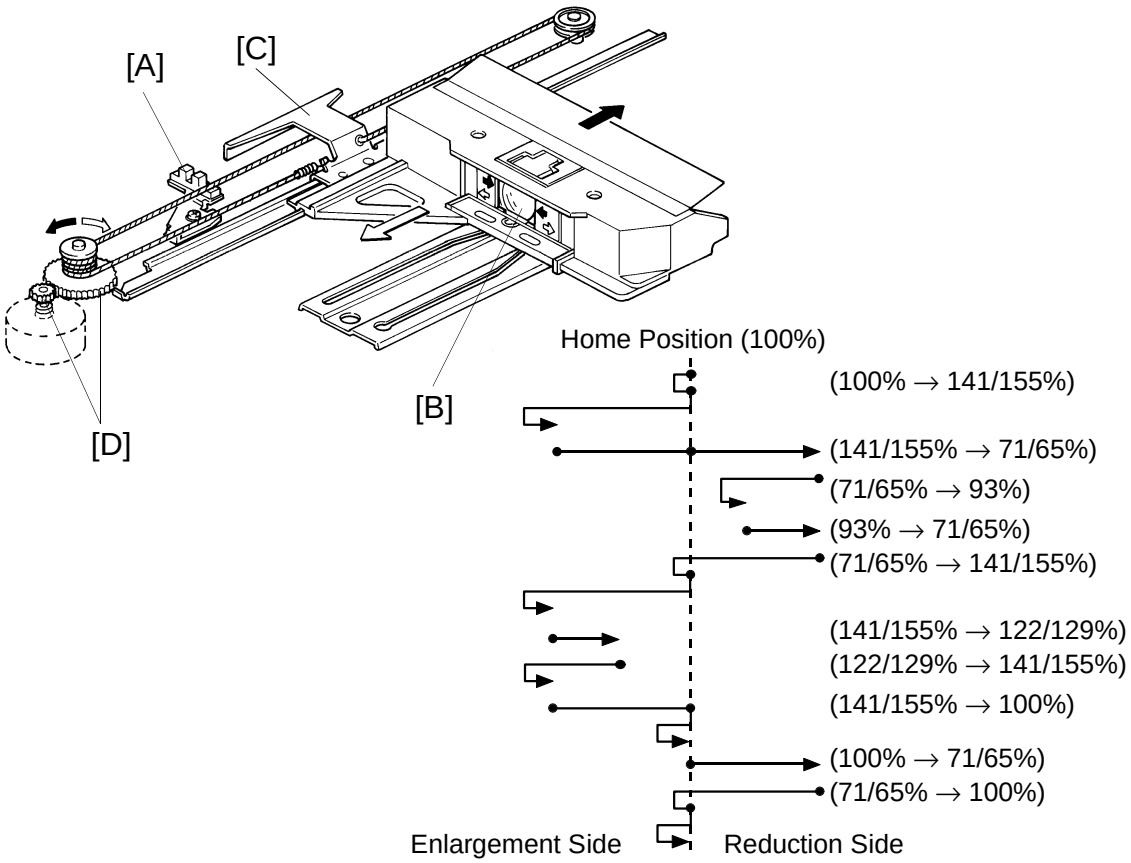

The lens home position sensor [A] informs the main board when the lens is at full size position (home position). The main board determines the lens stop position in reduction and enlargement modes by counting the number of steps the motor makes with reference to the lens home position. When a new reproduction ratio is selected, the lens [B] moves directly to the selected magnification position.

The lens home position is registered each time the lens starts from or passes through the lens home position sensor. As the lens moves from the enlargement side to the reduction side, the sensor registers the home position. This occurs when the actuator plate [C] enters the lens home position sensor.

A small vibration can be observed when the lens moves through home position from the reduction side to the enlargement side because the lens is going in the wrong direction to register the home position. The lens overshoots the home position by only one pulse before going back to register the home position.

The lens always stops while moving from left to right (as viewed from the front) to minimize the error caused by mechanical play in the drive gears [D].

3.4 4TH AND 5TH MIRROR DRIVE

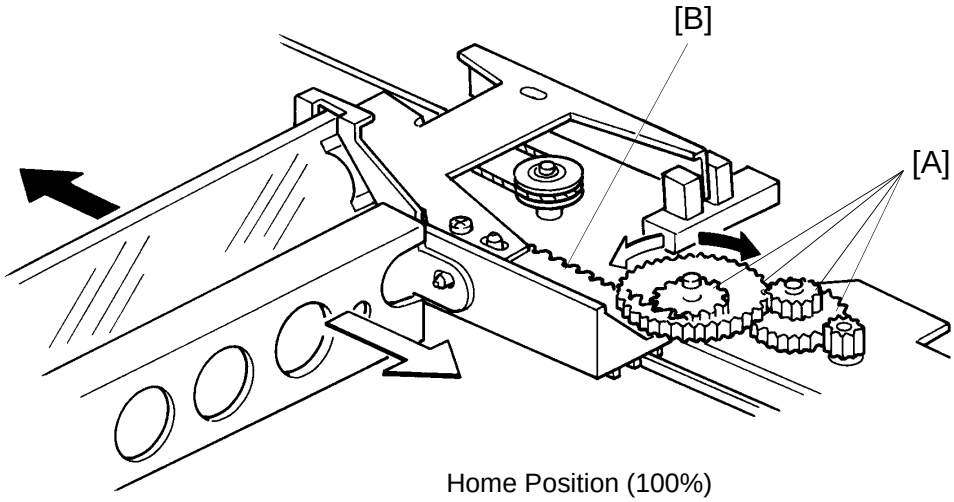

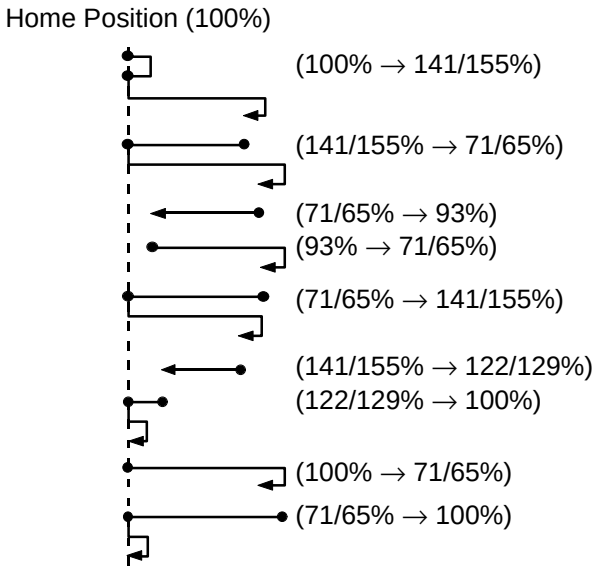

3.4.1 Drive

The 4th/5th mirror drive motor (stepper motor) changes the 4th/5th mirror assembly position through the pinion gears [A] and the rack gear [B] in accordance with the selected reproduction ratio to provide the proper optical distance between the lens and drum surface.

3.4.2 Positioning

The positioning mechanism is similar to that of lens positioning, as shown in the above positioning chart. The scanner always stops while moving from right to left (as viewed from the front).

3.5 ORIGINAL SIZE DETECTION IN PLATEN MODE (A111 Copier Only)

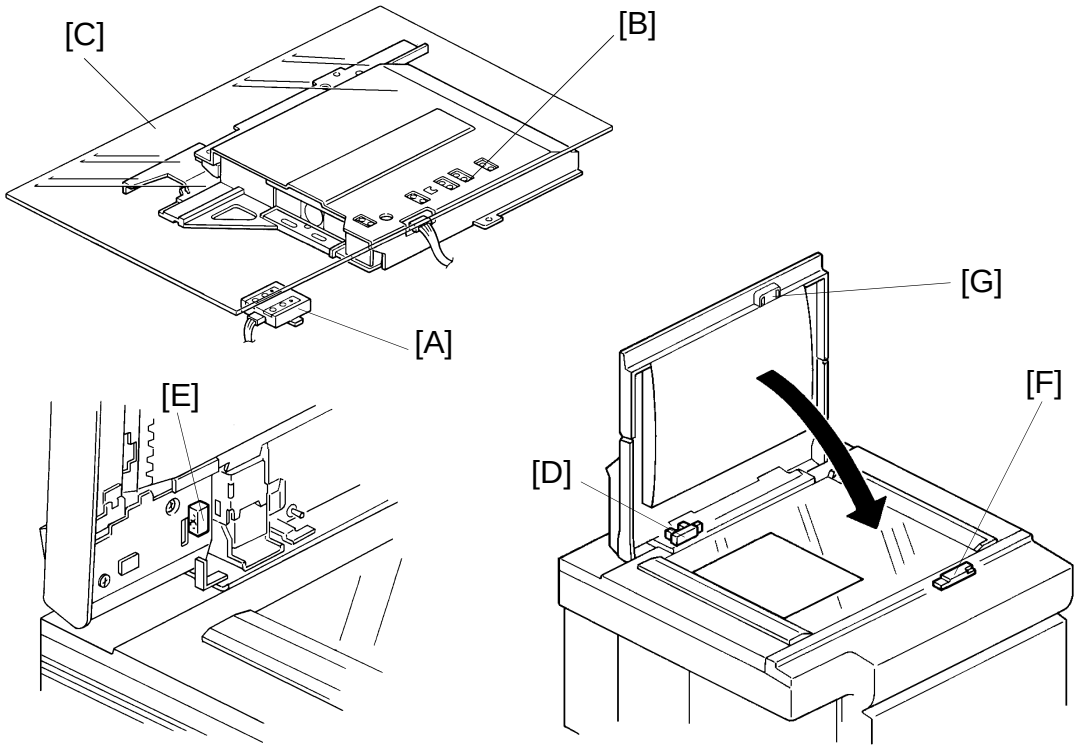

An original width sensor [A] and an original length sensor [B] are under the exposure glass [C]. The original width sensor consists of two reflective photosensors. The original length sensor consists of five reflective photosensors (four for inch version).
These sensors are used for the original size detection.

When the main switch is on, these sensors are active and the original size data is always sent to the main CPU. The CPU checks the data twice in platen mode for determining the original size for APS or ARE modes.

The first check is done when the platen cover position sensor [D] or DF position sensor [E] is actuated. At this time the platen cover (or DF) is lowered to about 10 cm (4") above the exposure glass. Only the sensors underneath the original receive the reflected light and output a low signal. The other sensors output a high signal.

The second check is done when the platen cover (or DF) is closed and the platen cover closed switch [F] is actuated. The platen cover closed switch is a lead switch. A magnet [G] mounted on the platen cover (or DF) actuates the lead switch.

The CPU compares the second check with the first one to judge if the original is present above the sensor or not according to the following table.

First data	Second data	Judgement
High	High	Original exists
High	Low	No original
Low	High	Displays "Check Paper Size" indicator
Low	Low	Original exists

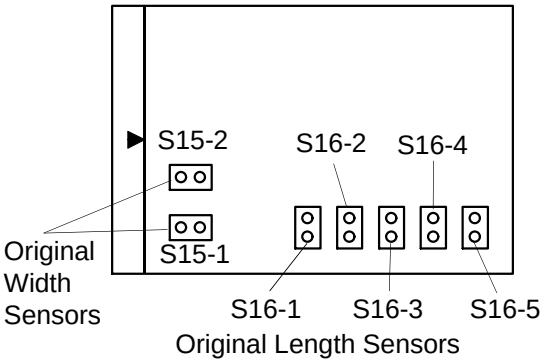

The CPU finally determines the original size from the above judgements. The following table shows how the original size is determined with information of each sensor.

Sensors / Original Size		Original Width Sensor		Original Length Sensor				
		S15-1	S15-2	S16-1	S16-2	S16-3	S16-4	S16-5
A3	11" x 17"	0	0	0	0	0	0	0
B4	11" x 15" 10" x 14"	0	0	0	0	0	0	1
—	8 1/2" x 14"	1	0	0	0	0	0	1
F4	—	1	0	0	0	0	1	1
A4 lengthwise	8 1/2" x 11"	1	0	0	0	1	1	1
B5 lengthwise	8" x 10"	1	0	0	1	1	1	1
A5 lengthwise or smaller	5 1/2" x 8 1/2" or smaller	1	1	1	1	1	1	1
A4 sideways	11" x 8 1/2"	0	0	0	1	1	1	1
B5 sideways	8 1/2" x 5 1/2"	0	0	1	1	1	1	1
A5 sideways		1	0	1	1	1	1	1

0: Original exists 1: No original

NOTE: 1. The inch version machine does not have S16-3.
2. When the original size is A5 lengthwise/5 1/2" x 8 1/2" or smaller, the machine cannot detect the original size.

When a copy is made with the platen cover (DF) open, the CPU uses the original size data detected when the Start key is pressed.

When an original is fed to the exposure glass through the DF, the CPU uses the original size data from the DF.

3.6 AUTOMATIC IMAGE DENSITY SENSING

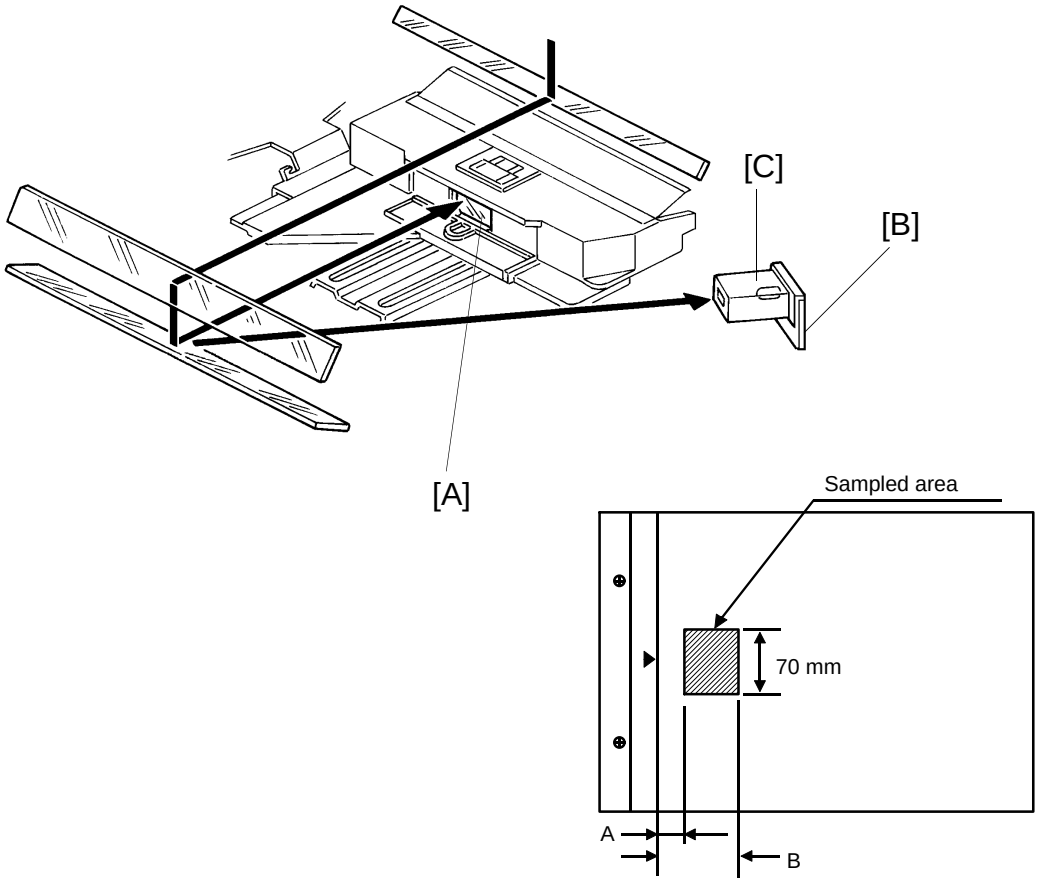

Light from the exposure lamp is reflected from the original and travels to the lens [A] via the mirrors. The auto ID sensor [B], a photodiode, is mounted on the upper front frame. The sensor cover [C] has a hole in it to allow light to fall directly onto the sensor. Sampling starts 10 millimeters from the leading edge of the original and continues to 50 millimeters from the leading edge of original in full size mode. The length of "A" and "B" will vary depending on the selected reproduction ratio.

The lengths "A" and "B" in each reproduction ratio are calculated as follows:

$$A = \frac{10\ mm}{Reproduction\ Ratio\ (\%)} \times 100 \qquad B = \frac{50\ mm}{Reproduction\ Ratio\ (\%)} \times 100$$

The photosensor circuit converts the light intensity to a voltage. The detected voltage is amplified and sent to the main PCB. The CPU stores the voltage of each sampled point in RAM. It then computes the image density of the original from the maximum sample voltage and changes the development bias accordingly. (See page 2-31 for details.) The exposure lamp voltage is constant regardless of the image density of the original.

3.7 EXPOSURE LAMP VOLTAGE CORRECTION

To maintain good copy quality, the exposure lamp voltage is changed by the following:

- V_L correction
- Drum wear correction
- Reproduction ratio correction

3.7.1 V_L Correction

The light intensity may decrease because of dust accumulated on the optics parts. This may cause dirty backgrounds on copies. To compensate for this phenomenon, V_L correction is done as follows:

The CPU keeps track of the amount of time that the main switch is on. The exposure lamp voltage increases at set intervals, which can be changed by SP61 (see page 2-20).

3.7.2 Drum Wear Correction

During the drum's life, the photoconductive surface of the drum becomes worn by contact with the cleaning brush. This affects the drop of the drum photosensitivity. This may cause dirty backgrounds on copies.
To compensate for this phenomenon, drum wear correction is made as follows:

The CPU keeps track of the drum rotation time. The exposure lamp voltage increases at set intervals (see page 2-21).

3.7.3 Reproduction Ratio Correction

To compensate for the change in the concentration of light on the drum, the exposure lamp voltage increases depending on the selected reproduction ratio (see page 2-21).

3.8 EXPOSURE LAMP VOLTAGE CONTROL

The main board controls the exposure lamp voltage through the ac drive board. The exposure lamp voltage is based on the base lamp voltage and various correction factors. The exposure lamp data setting determines the base lamp voltage. The following table gives the approximate lamp voltage for each data setting.

Exposure Lamp Data/Voltage Reference Table

Exposure lamp data	Exposure lamp voltage (standard)		Exposure lamp data	Exposure lamp voltage (standard)	
	115V machine	220/230/240V machine		115V machine	220/230/240V machine
100	57.1	105.9	126	71.9	133.4
101	57.6	106.9	127	72.5	134.5
102	58.2	108.0	128	73.0	135.5
103	58.8	109.1	129	73.6	136.6
104	59.3	110.1	130	74.2	137.6
105	59.9	111.2	131	74.7	138.7
106	60.5	112.2	132	75.3	139.8
107	61.1	113.3	133	75.9	140.8
108	61.6	114.4	134	76.5	141.9
109	62.2	115.4	135	77.0	142.9
110	62.8	116.5	136	77.6	144.0
111	63.3	117.5	137	78.2	145.1
112	63.9	118.6	138	78.7	146.1
113	64.5	119.6	139	79.3	147.2
114	65.0	120.7	140	79.9	148.2
115	65.6	121.8	141	80.5	149.3
116	66.2	122.8	142	81.0	150.4
117	66.8	123.9	143	81.6	151.4
118	67.3	124.9	144	82.2	152.5
119	67.9	126.0	145	82.7	153.5
120	68.5	127.1	146	83.3	154.6
121	69.0	128.1	147	83.9	155.6
122	69.6	129.2	148	84.4	156.7
123	70.2	130.2	149	85.0	157.8
124	70.8	131.3	150	85.6	158.8
125	71.3	132.4			

NOTE: Exposure lamp rating: 115 V machine: 97 V/280 W
220/230/240 V machine: 180 V/310 W

The method of control is different depending on whether the image density is manually selected or the auto image density mode is selected.

The exposure lamp voltage consists of the following factors:

Exposure lamp voltage = Base exposure lamp voltage factor (Manual or auto image density mode)
+
V_L correction factor
+
Drum wear correction factor
+
Reproduction ratio correction factor

3.8.1 Base Lamp Voltage Factor in Manual Image Density Mode

Darker ⟷ Lighter

Manual ID level	1	2	3	4	5	6	7
Exposure lamp data	Vo –4	Vo	Vo	Vo	Vo +4	Vo +8	Vo +12

The above table shows changes in the exposure lamp data in manual image density mode.

SP48 sets the exposure lamp data for level 4 (Vo) of manual image density mode. A value from 100 to 150 can be selected.

3.8.2 Base Lamp Voltage Factor in Auto Image Density Mode

In auto ID mode, the CPU selects the level 4 (Vo) exposure lamp data regardless of the input from the auto image density sensor. When the auto image density level is set to lighter in SP34, the exposure lamp data changes to that of manual ID level 5 as shown below. When the auto image density level is set to darker, the development bias shifts +40 volts. Only the development bias varies according to the input from the auto image density sensor. (See page 2-31.)

Auto Image Density Level (SP34)

Auto image density level	SP data (SP34)	Exposure lamp data	Development bias shift
Normal	0	Same as level 4 (Vo ±0)	±0 volts
Darker	1	Same as level 4 (Vo ±0)	+40 volts
Lighter	2	Same as level 5 (Vo +4)	±0 volts

3.8.3 VL Correction Factor

SP data (SP61)	Change of exposure lamp data/Machine on time
0	+1/70H
1	+1/140H
2	+1/40H
3	+1/20H
4	+1/10H
5	+1/5H
6	No Correction

(Factory Setting: SP61 = 0)

The exposure lamp data increases by +1 at set intervals of the machine on time. This interval can be changed by SP61 as shown in the above table.

The total increase for VL correction cannot exceed +20. When cleaning the optics parts, SP94 should be performed to clear VL correction.

VL correction clear (SP94)

SP data (SP94)	VL correction
0	Not clear
1	Clear

NOTE: When "1" is input in SP94, the machine on time (SP57) data is cleared.

3.8.4 Drum Wear Correction Factor

Drum rotation time (SP58)	Change of exposure lamp data
0 to 24 H	±0
25 to 49 H	+1
50 to 74 H	+2
75 to 99 H	+3
More than 99 H	+4

To compensate for OPC drum wear caused by contact with the cleaning brush, the exposure lamp data increases at set interval of drum rotation time as shown in the above table.

The drum rotation time is displayed by SP58. This time must be reset by SP66 when the drum is replaced with a new one.

3.8.5 Reproduction Ratio Correction Factor

Reproduction ratio	Change of exposure lamp data
50 to 61%	+2
62 to 139%	±0
140 to 159%	+2
160 to 179%	+6
180 to 200%	+10

The exposure lamp data increases depending on the selected reproduction ratio as shown in the above table.

3.9 EXPOSURE LAMP CONTROL CIRCUIT

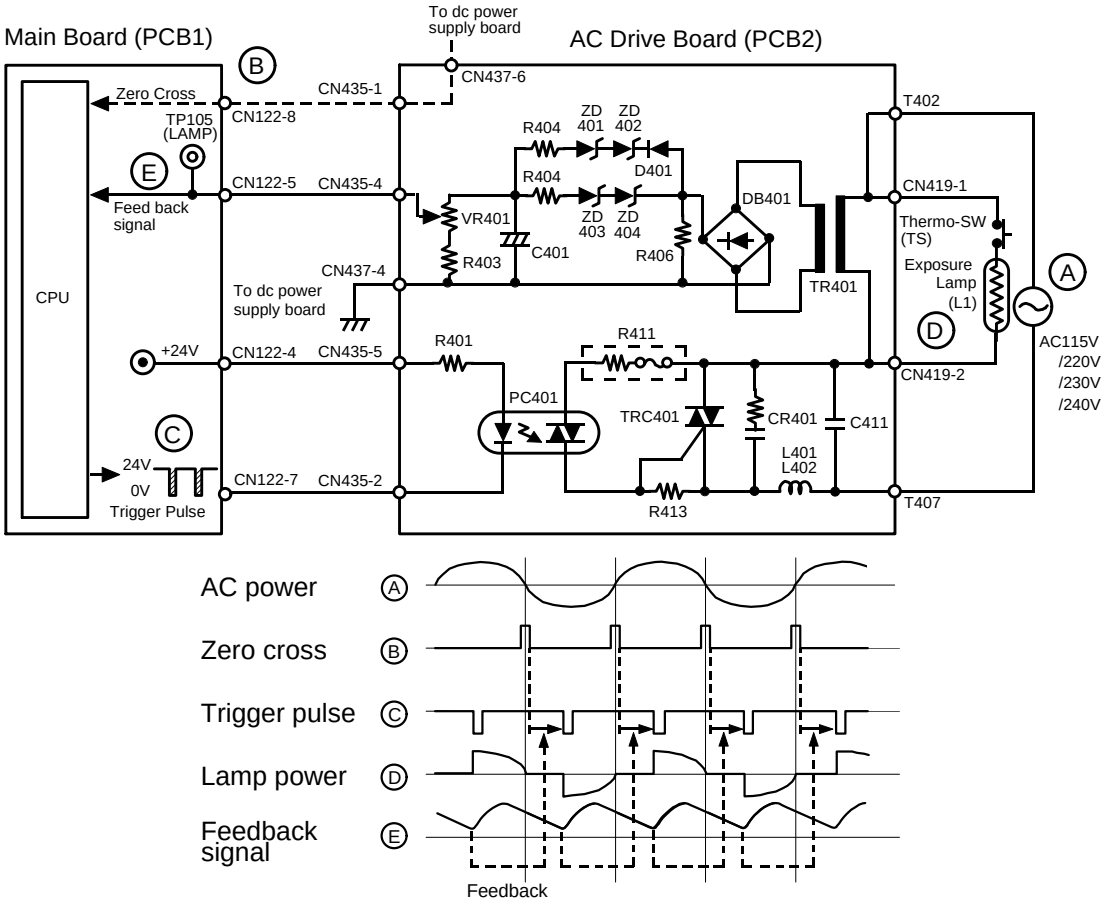

The main board sends lamp trigger pulses to the ac drive board from CN122-7. PC401 activates TRC401, which provides ac power to the exposure lamp, at the trailing edge of each trigger pulse.

The voltage applied to the exposure lamp is also provided to the feedback circuit. The feedback circuit steps down (TR401), rectifies (DB401), and smoothes (zener diodes and capacitors) the lamp voltage. The CPU monitors the lowest point of the smoothed wave (feedback signal), which is directly proportional to the actual lamp voltage.

The CPU changes the timing of the trigger pulses in response to the feedback voltage. If the lamp voltage is too low, the CPU sends the trigger pulses earlier so that more ac power is applied to the exposure lamp. This feedback control is performed instantly; so, the lamp voltage is always stable even under fluctuating ac power conditions.

The voltage applied to the exposure lamp can be changed with SP48 (Light Intensity Adjustment). The ADS voltage adjustment (SP56) must be done whenever the light intensity adjustment is done.

4. ERASE

4.1 OVERVIEW

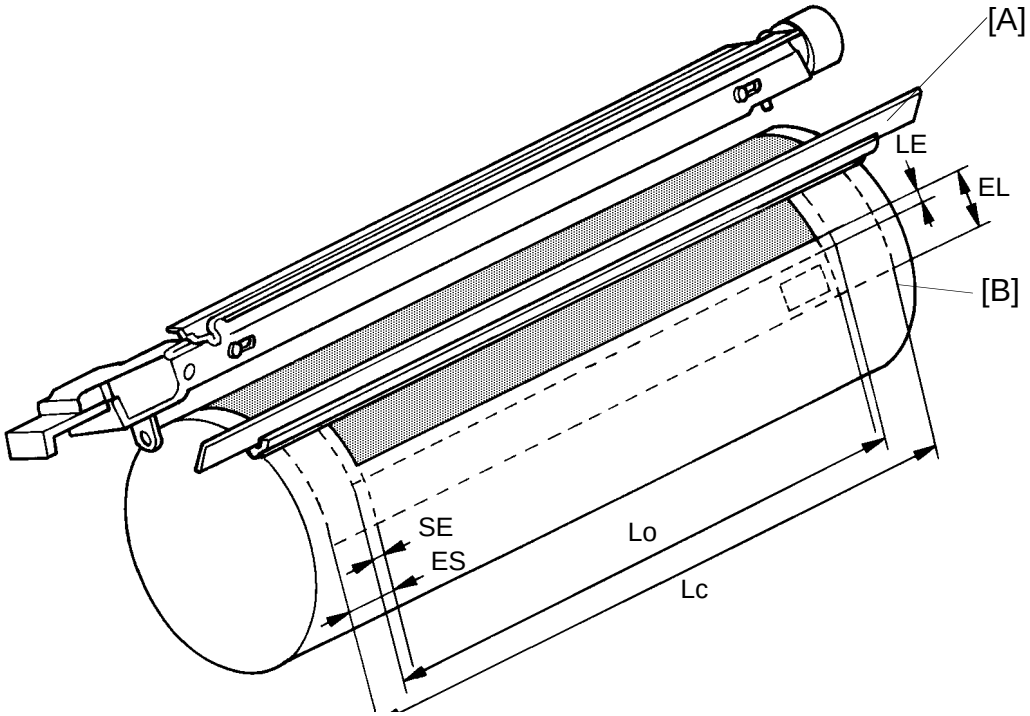

LE:	Lead edge erase margin	2.5 ±1.5 mm
SE:	Side erase margin	2.0 ±2.0 mm on each side; total of both sides 4 mm or less
LO:	Original width	
LC:	Charged width of drum	
EL:	Lead edge erase	
ES:	Side erase	

The erase lamp [A] consists of a line of LEDs (43 LEDs) extending across the full width of the drum [B].

The erase lamp has four functions: lead edge erase, side erase, trail edge erase and editing mode erase (erase edge or/and erase center). Trail edge erase begins after the trailing edge of the copy paper; therefore, the trailing edge of the copy will not be erased.

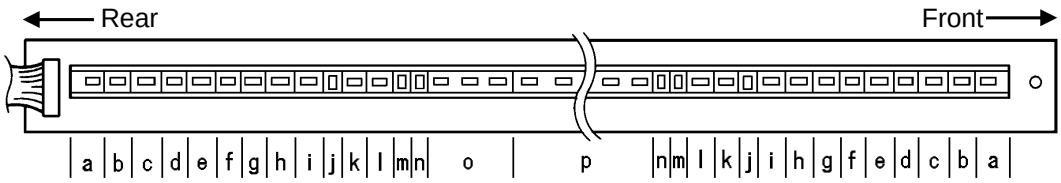

4.1.1 Lead Edge Erase

The entire line of LEDs turns on when the main motor turns on. They stay on until the erase margin slightly overlaps the lead edge of the original image area on the drum (Lead Edge Erase Margin). This prevents the toner density sensor pattern from being developed every copy cycle and the shadow of the original edge from being developed on the paper. At this point, side erase starts. The width of the lead edge erase margin can be adjusted using SP41.

During the toner density detection cycle (once every ten copy cycles), a block of erase lamps (labeled "o" above) turns off long enough for the sensor pattern to be developed.

The entire line of LEDs turns on when the residual voltage on the OPC drum is being detected (Vr detection).

4.1.2 Side Erase

Based on the combination of copy paper size and the reproduction ratio data, the LEDs turn on in blocks (labeled "a" – "p" above). This reduces toner consumption and drum cleaning load.

The following table shows which blocks of erase lamp LEDs turn on depending on the paper size and the reproduction ratio:

Blocks ON	Paper size	Reproduction ratio (%)
None	A3, A4 Sideways, 11" x 17", 11" x 8 1/2", Manual Feed	99–200
a		95–98
a–b		91–94
a–c	B4, B5 Sideways	87–90
a–d		83–86
a–e		79–82
a–f	8 1/2" x 11", 8 1/2" x 5 1/2", F4	74–78
a–g	A4 Lengthwise	70–73
a–h		67–69
a–i		64–66
a–j		61–63
a–k		57–60
a–l		54–56
a–m		52–53
a–n	A5 Lengthwise, 5 1/2" x 8 1/2"	50–51
All (a–p)	Lead Edge and Trail Edge Erase/For Vr Detection Cycles	
a–n, p	For Toner Density Detection Cycles	

4.1.3 Trail Edge Erase

The entire line of LEDs turns on after the trailing edge of the latent image has passed. Therefore, a trailing erase margin cannot be observed on the copy. The LEDs stay on to erase the leading edge of the latent image in the next copy cycle. After the final copy, the erase lamps turn off at the same time as the main motor.

4.1.4 Editing Mode Erase

When copying a thick book original, the binding margin at the center and the edges may appear dirty on copies. To prevent this, the erase center mode, erase edge mode, or erase center and edge mode can be selected as follows:

1. Press the Program key.
2. Press one of the following numbers:

   Erase center..... Press "6"
   Erase edge..... Press "7"
   Erase center and edge..... Press "8"

a) Center Erase

The erase margin of the center is done through the timing of when the entire line of LEDs turns on. The margin can be changed by SP26 as shown.

SP data (SP26)	Margin of the center
0	20 mm
1	10 mm
2	15 mm
3	25 mm

(Factory setting: SP26 = 0)

b) Lead and Trail Edge Erase

The erase margin of the lead and trail edges is done through the timing of when the entire line of LEDs turns on. The margin can be changed by SP18 as shown.

SP data (SP18)	Margin of the lead and trail edges
0	10 mm
1	5 mm
2	15 mm
3	20 mm

(Factory setting: SP18 = 0)

c) Side Edge Erase

The erase margin of the side edges is done through which blocks of the LEDs turn on. The margin can be changed by SP13. The margin of the side edges depends on the paper size and reproduction ratio.

The right table show the margin of the side edges for the various paper sizes in the full size copy mode.

Paper Size	Margin of side edges	
	SP13 = 0	SP13 = 1
A3, A4, *	13 mm	5.5 mm
11" x 17", 11" x 8.5", 11" x 15"	11 mm	3.5 mm
B4, B5, 10" x 14"	13.5 mm	7.5 mm
8.5" x 14", 8.5" x 13", 8.5" x 11", 8.5" x 5.5"	12 mm	6 mm
A4R, A5, 8" x 13", 8" x 10.5", 8" x 10"	11 mm	6 mm
B5R, B6	10 mm	5 mm

(Factory setting: SP13 = 0)
* Non-standard paper size

5. DEVELOPMENT

5.1 OVERVIEW

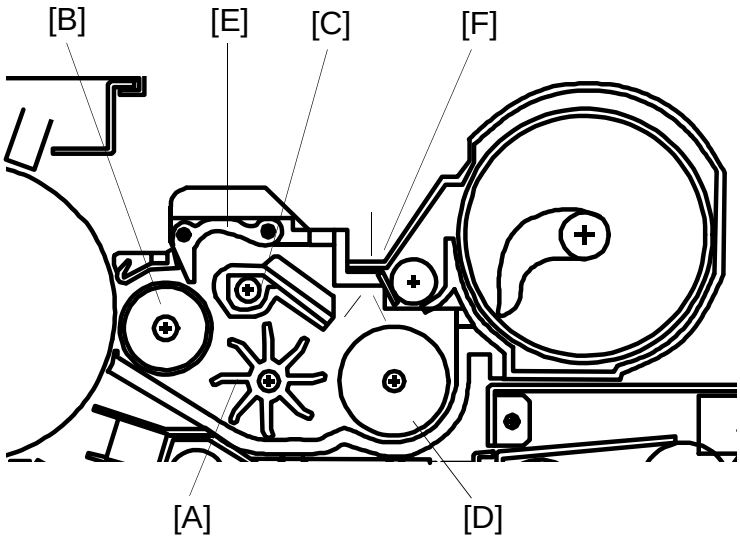

When the main motor turns on and the development clutch solenoid is de-energized, the paddle roller [A] development roller [B] the auger [C], and the agitator [D] start turning. The paddle roller picks up developer in its paddles and transports it to the development roller. Internal permanent magnets in the development roller attract the developer to the development roller sleeve.

The turning sleeve of the development roller then carries the developer past the doctor blade [E]. The doctor blade trims the developer to the desired thickness and creates backspill to the cross-mixing mechanism.

The development roller continues to turn, carrying the developer to the OPC drum. When the developer brush contacts the drum surface, the negatively charged areas of the drum surface attract and hold the positively charged toner. In this way, the latent image is developed.

The development roller is given a negative bias to prevent toner from being attracted to non-image areas on the drum that may have residual negative charge. The bias also controls image density.

After turning about 100 degrees more, the development roller releases the developer to the developer tank. The developer is agitated by the paddle roller, agitator [D], and the cross-mixing mechanism.

Rotation of the paddle roller and development roller tend to cause air pressure inside the unit to become higher than the air pressure around the development unit. A hole, fitted with a filter [F], has been added to the top of the unit to relieve air pressure and to minimize toner scattering.

5.2 DRIVE MECHANISM

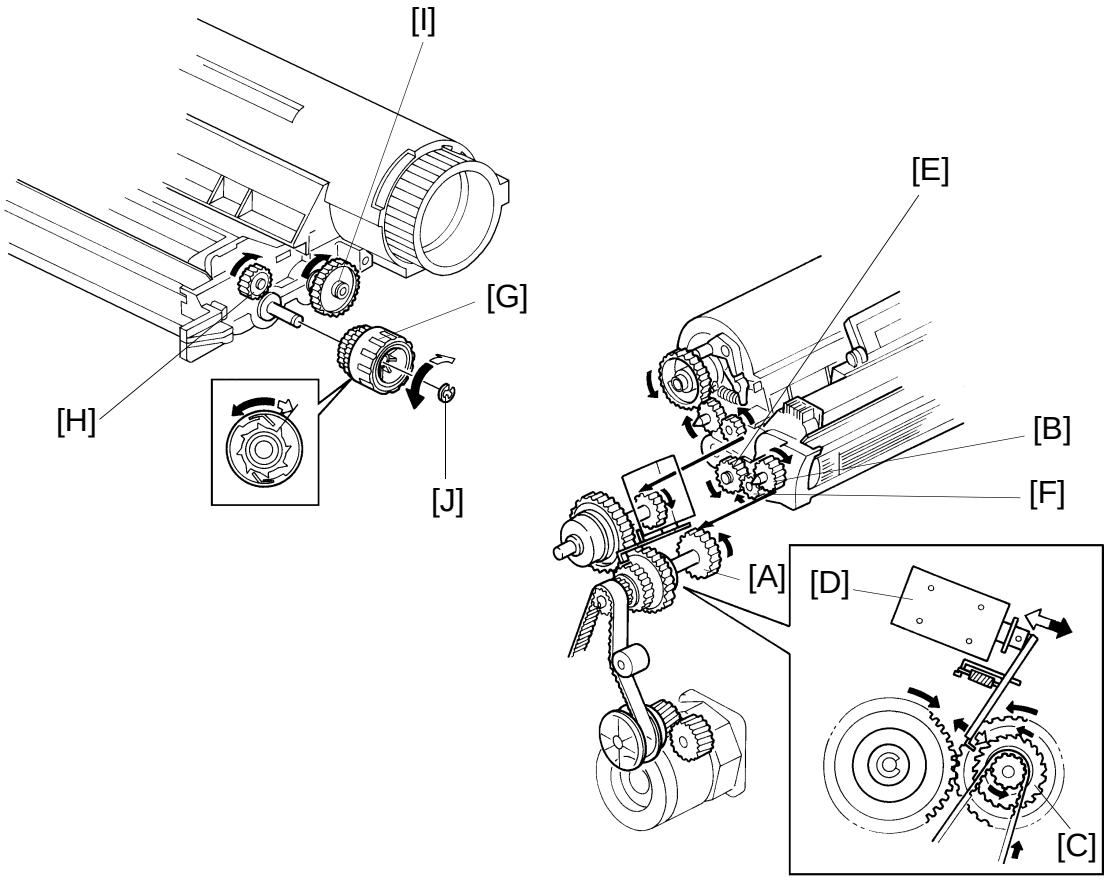

When the main motor turns, the rotation is transmitted from the development drive gear [A] to the development roller gear [B] through the development clutch [C]. (The rotation is transmitted to the development drive gear when the development solenoid [D] is de-energized.) Then, the rotation is transmitted from the development roller gear to the paddle roller gear [E] through the idle gear [F].

A gear [G] on the front end of the paddle roller shaft drives the auger gear [H] and the agitator gear [I]. The paddle roller shaft has a knob [J] on the front end so that it can be turned manually to exchange developer. The knob has a one-way clutch inside. The one-way clutch prevents the development roller from turning in the wrong direction.

The development clutch solenoid energizes each copy cycle after image development is completed. This stops the rollers, thereby reducing developer fatigue.

5.3 CROSS-MIXING

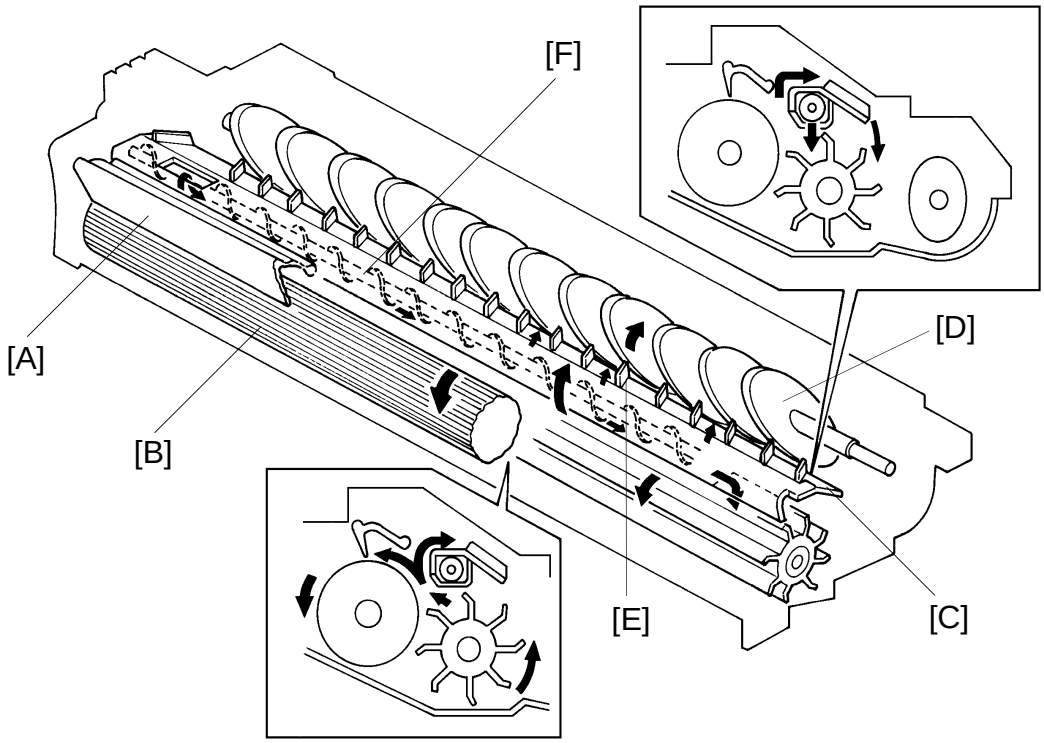

This copier uses a standard cross-mixing mechanism to keep the toner and developer evenly mixed. It also helps agitate the developer to prevent developer clumps from forming and helps create the triboelectric charge.

The developer on the turning development roller is split into two parts by the doctor blade [A]. The part that stays on the development roller [B] forms the magnetic brush and develops the latent image on the drum. The part that is trimmed off by the doctor blade goes to the backspill plate [C].

As the developer slides down the backspill plate to the agitator [D], the mixing vanes [E] move it slightly toward the rear of the unit. Part of the developer falls into the auger inlet and is transported to the front of the unit by the auger [F].

The agitator moves the developer slightly to the front as it turns, so the developer stays level in the development unit.

5.4 DEVELOPMENT BIAS FOR IMAGE DENSITY CONTROL

Image density is controlled by changing two items: (1) the strength of the bias voltage applied to the development roller sleeve, and (2) the strength of the voltage applied to the exposure lamp.

Applying a bias voltage to the development sleeve reduces the potential between the development roller and the drum, thereby reducing the amount of toner transferred. As the bias voltage becomes greater, the copy image becomes lighter. Similarly, increasing the voltage to the exposure lamp causes an increase in light intensity which also results in lighter copies.

The method of control is different depending on whether the image density is manually selected or the automatic ID mode is used.

The development bias applied to the development roller sleeve has the following three factors:

Development bias voltage = Base bias voltage factor
(Manual or automatic image density control)
+
Base bias voltage adjustment factor
+
Vr correction factor

The base bias voltage for non-image areas (between copies) is –200 volts. The above correction factors are also applied.

5.4.1 Base Bias Voltage Factor in Manual Image Density Control

Darker ⟷ Lighter

Manual ID level	1	2	3	4	5	6	7
Base bias voltage	–120	–120	–160	–200	–200	–240	–280
Exposure lamp data	Vo –4	Vo	Vo	Vo	Vo +4	Vo+8	Vo+12

In manual ID control mode, the base bias voltage depends on the manually selected ID level. The voltage applied at each ID level is shown in the above table. The base exposure lamp voltage also varies depending on the manual ID level as shown in the table. (See page 2-19 for more information.)

5.4.2 Base Bias Voltage Factor in Automatic Image Density Control

In automatic image density control mode, the base exposure lamp voltage is fixed to Vo. (See page 2-19 for more information.) Image density is controlled by changing only the base bias voltage.

The base bias voltage depends on the background image density of the original, which is measured using the auto ID sensor. (See page 2-16 for more information.)

The CPU checks the voltage output from the automatic ID circuit. This circuit has a peak hold function. The peak hold voltage corresponds to the maximum reflectivity of the original. The CPU then determines the proper base bias level with reference to the peak hold voltage.

The following table gives the base bias voltages at each ADS output level.

When the automatic density level is set to darker by SP34, the base bias voltage shifts +40 volts as shown in the following table.

K	Base bias voltage	
	Normal or lighter (SP34 = 0 or 2)	Darker (SP34 = 1)
$K \geq TL1$	–200 volts	–160 volts
$TL1 > K \geq TL2$	–240 volts	–200 volts
$TL2 > K \geq TL3$	–280 volts	–240 volts
$TL3 > K \geq TL4$	–320 volts	–280 volts
$TL4 > K \geq TL5$	–360 volts	–320 volts
$TL5 > K$	–380 volts	–340 volts

$$K = \frac{\text{ADS Output Voltage (Peak Hold Voltage)}}{\text{ADS Reference Voltage (SP56)}}$$

TL1 to TL5: Threshold level (see the following table)

To maintain the correct image density, the lamp data is incremented when the reproduction ratio is changed or drum wear correction or V_L correction is done. This increment in the lamp data increases the intensity of light reflected from the original. Therefore, the auto ID sensor output voltage also changes. In order to maintain a constant voltage for the same original when the lamp data is incremented, the threshold levels are shifted with each increment in the lamp data as shown in the following table.

✻ Increase of lamp data

✻	+0	+1	+2	+3	+4	+5	+6	+7	+8	+9	+10	+11	+12
TL1	0.80	0.82	0.86	0.89	0.91	0.93	0.95	0.99	1.01	1.04	1.05	1.07	1.10
TL2	0.75	0.77	0.81	0.83	0.86	0.88	0.90	0.92	0.95	0.97	1.00	1.02	1.04
TL3	0.70	0.72	0.75	0.76	0.79	0.81	0.83	0.84	0.88	0.90	0.93	0.95	0.97
TL4	0.60	0.62	0.64	0.66	0.69	0.70	0.72	0.74	0.76	0.77	0.80	0.81	0.83
TL5	0.29	0.29	0.30	0.31	0.33	0.33	0.34	0.35	0.36	0.36	0.37	0.38	0.37

✻	+13	+14	+15	+16	+17	+18	+19	+20	+21	+22	+23	+24
TL1	1.11	1.11	1.11	1.12	1.13	1.13	1.13	1.13	1.13	1.13	1.13	1.13
TL2	1.05	1.06	1.07	1.08	1.10	1.11	1.13	1.13	1.13	1.13	1.13	1.13
TL3	0.98	0.99	1.02	1.05	1.07	1.09	1.12	1.13	1.13	1.13	1.13	1.13
TL4	0.85	0.86	0.86	0.88	0.91	0.93	0.95	0.98	0.99	1.02	1.05	1.08
TL5	0.38	0.39	0.42	0.43	0.44	0.45	0.46	0.47	0.48	0.49	0.51	0.52

5.4.3 Base Bias Voltage Adjustment Factor

Base Bias Adjustment
(Black toner: SP37, Color Toner: SP79)

Image density	SP data (SP37 or 79)	Change of base bias voltage
Normal	0	±0 volts
Darkest	1	+40 volts
Darker	2	+20 volts
Lighter	3	–20 volts
Lightest	4	–40 volts

The base bias voltage can be changed in SP37 for black toner or SP79 for color toner to adjust the image density level. The above table gives the base bias voltage for each SP mode setting. This adjustment should be done only when the exposure lamp voltage adjustment (SP48) fails to achieve the desired image density.

5.4.4 Vr Correction Factor

As the OPC drum is used, drum residual voltage (Vr) gradually increases. Vr correction compensates for residual voltage on the drum. Vr correction is done every 1,000 copies based on the data of the drum counter (SP69) and the Vr correction ratio (L) (SP67). The following chart shows how the bias voltage changes depending on the Vr correction ratio (L).

Vr Correction Factor

L	Change of bias voltage
100 to 89 (%)	±0 (volts)
88 to 76 (%)	–40 (volts)
75 to 62 (%)	–80 (volts)
61 to 45 (%)	–120 (volts)
44 to 0 (%)	–160 (volts)

NOTE: L = Vrp/Vsg x 100 (Vr correction ratio)

Vrp: ID sensor output for Vr correction pattern
Vsg: ID sensor output for bare drum

When the Vr correction is made every 1,000 copies, all blocks of erase lamps turn on and the development bias becomes 0 volt to develop the Vr correction pattern.

5.5 DEVELOPMENT BIAS CIRCUIT

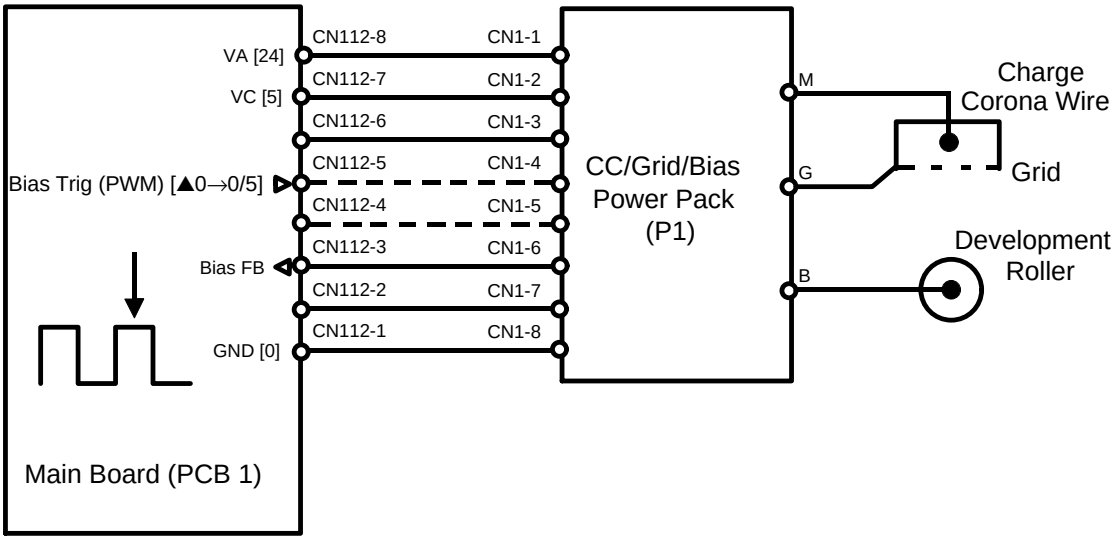

The main board supplies +24 volts to the CC/Grid/Bias power pack at CN1-1 as the power supply source. When the Start key is pressed, the CPU starts sending the bias trigger pulse to CN1-4. This energizes the development bias circuit within the CC/Grid/Bias power pack, which applies a high negative voltage to the development roller. The development bias is applied whenever the drum is rotating except when the Vr pattern is developed.

The bias trigger pulse applied to CN1-4 is a pulse width modulated signal (PWM signal). This signal is also used to change the voltage level of the development roller. As the width of the trigger pulses increase, the voltage of the development roller also increases. The CPU monitors the development bias voltage at CN1-6 and controls the width of the bias trigger pulses based on this feedback.

5.6 COLOR DEVELOPMENT UNIT DETECTION

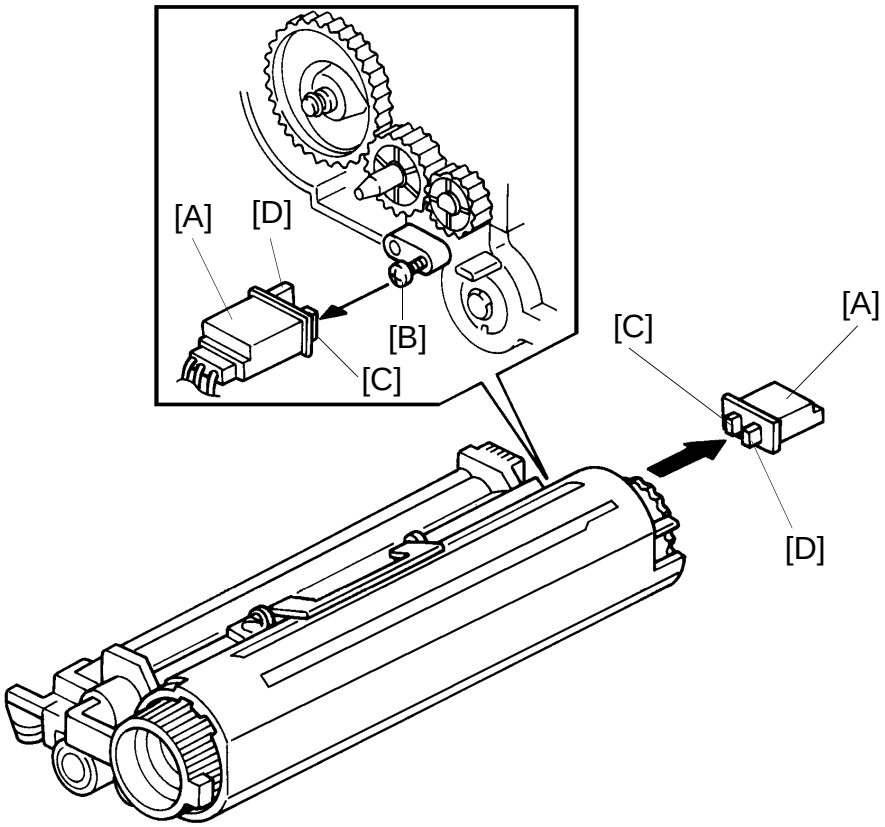

Color Development Unit Detection Table

SW6-1	SW6-2	Color
OFF	OFF	Black
ON	OFF	Red
OFF	ON	Green
ON	ON	Blue

ON: LOW
OFF: PULSE

When a color development unit is installed in the copier, the color switch [A] is activated by screw [B] at the rear side of the development unit. The color switch has two microswitches (SW6-1 [C] and 6-2 [D]) inside. The CPU receives a LOW signal from the microswitch activated by the screw and determines which color unit has been installed.

6. TONER DENSITY DETECTION AND TONER SUPPLY

6.1 DETECT SUPPLY MODE

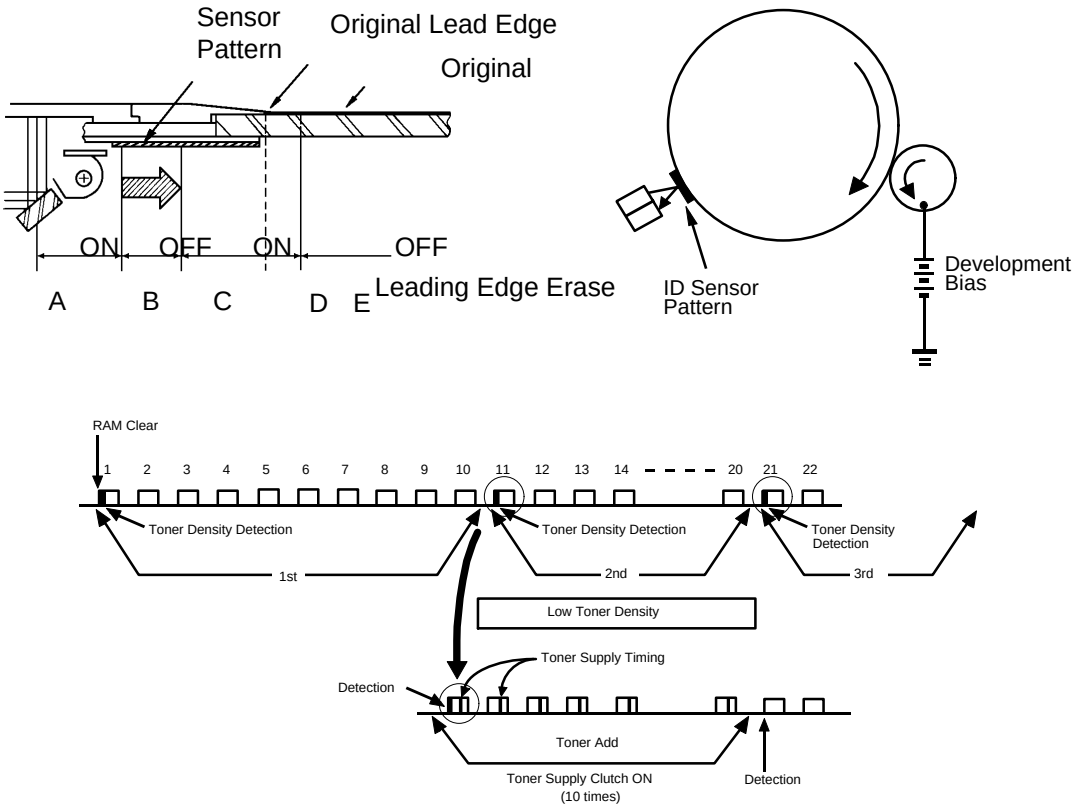

The CPU checks toner density by directly sensing the image density every 10 copy cycles (every 5 copies for the color development unit). If the RAM is cleared (SP99), or a new RAM is installed, the CPU checks the image density at the beginning of the first copy cycle.

During the check cycles, the sensor pattern is exposed prior to exposure of the original. After the sensor pattern is developed, its reflectivity is checked by the image density sensor (a photosensor). The CPU notes the reflectivity. If the reflected light is too strong, indicating a too low toner density condition, toner is added to the development unit.

The toner is not added all at once. The CPU energizes the toner supply clutch for the proper amount of time to add a selected amount of toner over the next 10 cycles.

When a color development unit is used, the CPU automatically selects fixed toner supply mode.

6.2 ID SENSOR FUNCTION IN DETECT SUPPLY MODE

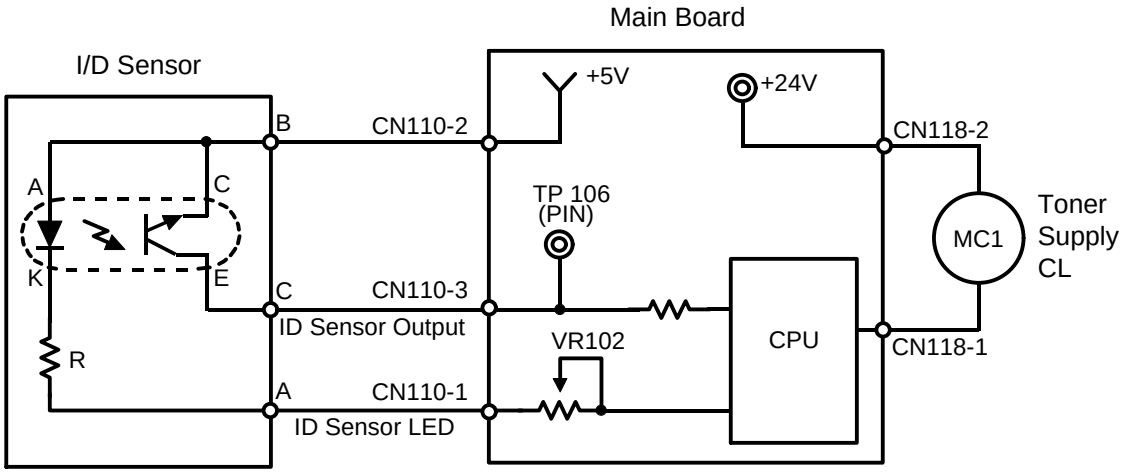

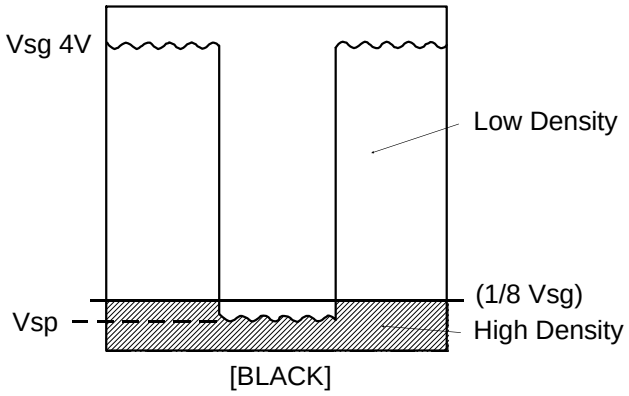

The image density sensor checks the density of the sensor pattern image once every 10 copy cycles. The CPU receives two voltage values directly from the sensor: the value for the bare drum (Vsg) and the value for the sensor pattern (Vsp). These two values are then compared to determine whether more toner should be added.

1. Vsp ≤ 1/8 Vsg ..... No toner is added. (High density)
2. Vsp > 1/8 Vsg .....Toner is added. (Low density)

When the image density is too low, the CPU activates the toner supply clutch to add toner over the next 10 copy cycles. The amount of toner added depends on the value of Vsp, the selected toner supply ratio (SP31), ID sensor data and the paper size in use. (See page 2-43 for more information.)

When the data of SP35 is set to "1" (factory setting = "0"), the CPU changes the interval of the ID check from every 10 copies to every 5 copies for the black development unit.

6.3 FIXED SUPPLY MODE

When the data of SP30 is "1" (factory setting = "0") or a color development unit is installed, the fixed supply mode is selected. In this case, a fixed amount of toner is added every copy cycle depending on the selected toner supply ratio (SP32 (black toner), SP70 (color toner)), the paper size in use, and the color data. (See page 2-45 for more information.)

6.4 ID SENSOR FUNCTION IN FIXED SUPPLY MODE

6.4.1 Black Development Unit

In fixed supply mode, toner is supplied every copy cycle according to the fixed toner supply ratio data (SP mode), the paper size data and the color data. However, the toner supply clutch is de-energized to prevent over-toning when Vsp is lower than 1/8 Vsg.

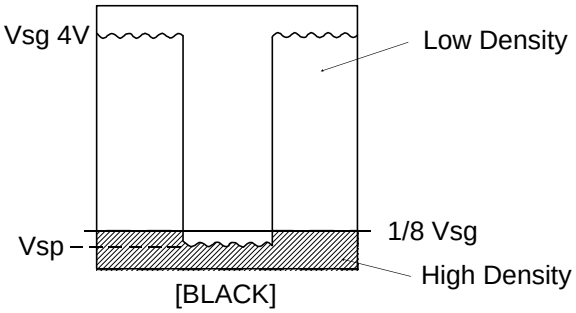

6.4.2 Color Development Unit

When a color development unit is installed, the CPU automatically selects the fixed toner supply mode. The amount of toner supplied depends on the fixed toner supply ratio (SP70), the paper size data and the kind of color data.

The CPU calculates the threshold level for toner supply when the color developer initial setting (SP10) procedure is completed. This level is determined by calculating the average of Vsp/Vsg x 100(%).

Since the fixed supply mode is selected when in color toner mode, it is necessary to inhibit toner supply if the toner density becomes high to prevent over-toning. The CPU checks Vsp once every 5 copy cycles. If Vsp becomes lower than the threshold level, the CPU stops supplying toner. Toner supply resumes when Vsp rises above the threshold level again.

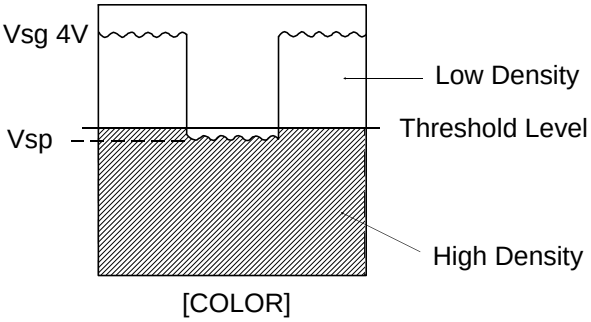

The threshold level (a percentage) for each color can be monitored in SP80 (Red), 81 (Green) and 82 (Blue).

6.5 ABNORMAL CONDITION IN TONER DENSITY DETECTION

If the Vsg goes below 2.5 volts (Vsg abnormal) or Vsp goes above 2.5 volts (Vsp abnormal) 5 times in a row, the CPU determines that toner density detection is abnormal. The CPU changes from the detect supply mode to the fixed supply mode. At the same time either the Auto ID indicator or the selected manual ID level starts blinking, and the machine can be operated.

Abnormal Condition In Toner Density Detection

SP55 display		Conditions
Vsp	Vsg	
varies	0.00	Vsg ≤ 2.5 (Vsg abnormal)
varies	5.00	Vsp ≥ 2.5 (Vsp abnormal)

6.6 DEVELOPMENT BIAS TONER DENSITY DETECTION

The development bias for the toner density detection consists of the following 2 factors:

Development bias voltage = Toner density adjustment factor
+
Vd correction factor (Black toner only)

The development voltage for the Vr correction is 0 volt.

6.6.1 Toner Density Adjustment Factor

Toner density	SP data (SP33 and SP75)	Development bias voltage			
		Black toner	Red toner	Green toner	Blue toner
Normal	0	–280 volts	–240 volts	–320 volts	–300 volts
Low	1	–240 volts	–200 volts	–280 volts	–260 volts
High	2	–300 volts	–260 volts	–340 volts	–320 volts
Higher	3	–320 volts	–280 volts	–360 volts	–340 volts
Lower	4	–200 volts	—	—	—
Highest	5	–340 volts	—	—	—
Developer initial setting		–340 volts	–280 volts	–320 volts	–300 volts

The development bias can be adjusted by SP33 for black toner or SP75 for color toner to adjust the toner density level. The above chart shows the development bias voltage corresponding to setting of SP33 or SP75. This adjustment should be used only when the exposure lamp voltage adjustment (SP48) and the base bias adjustment (SP37 or SP79) for copy image can not achieve the desired image density.

6.6.2 Vd Correction Factor (Only for Black Toner)

The development bias for toner density detection is changed automatically to compensate for variations of the triboelectric charge of the developer.

The CPU monitors Vsp and Vsg and calculates the average of Vsp/Vsg x 100(%) during the black developer initial setting (SP65). The result of the calculation can be monitored by SP64.

The CPU has a software counter (no SP mode display) to count the number of copies made with the developer. The counter resets to "0" when SP65 is performed.

Vd correction is made based on the results of the calculation and the data of the software counter as shown in the following table:

SP data (SP64)	Vsp/Vsg x 100 (%)	Change of development bias voltage	
		0 to 499 copies	More than 500 copies
0	12 to 15	±0 volts	±0 volts
1	0 to 7	–40 volts	±0 volts
2	8 to 11	–20 volts	±0 volts
3	16 to 21	±0 volts	+20 volts
4	More than 22	±0 volts	+40 volts

6.7 TONER SUPPLY AND AGITATOR DRIVE MECHANISM

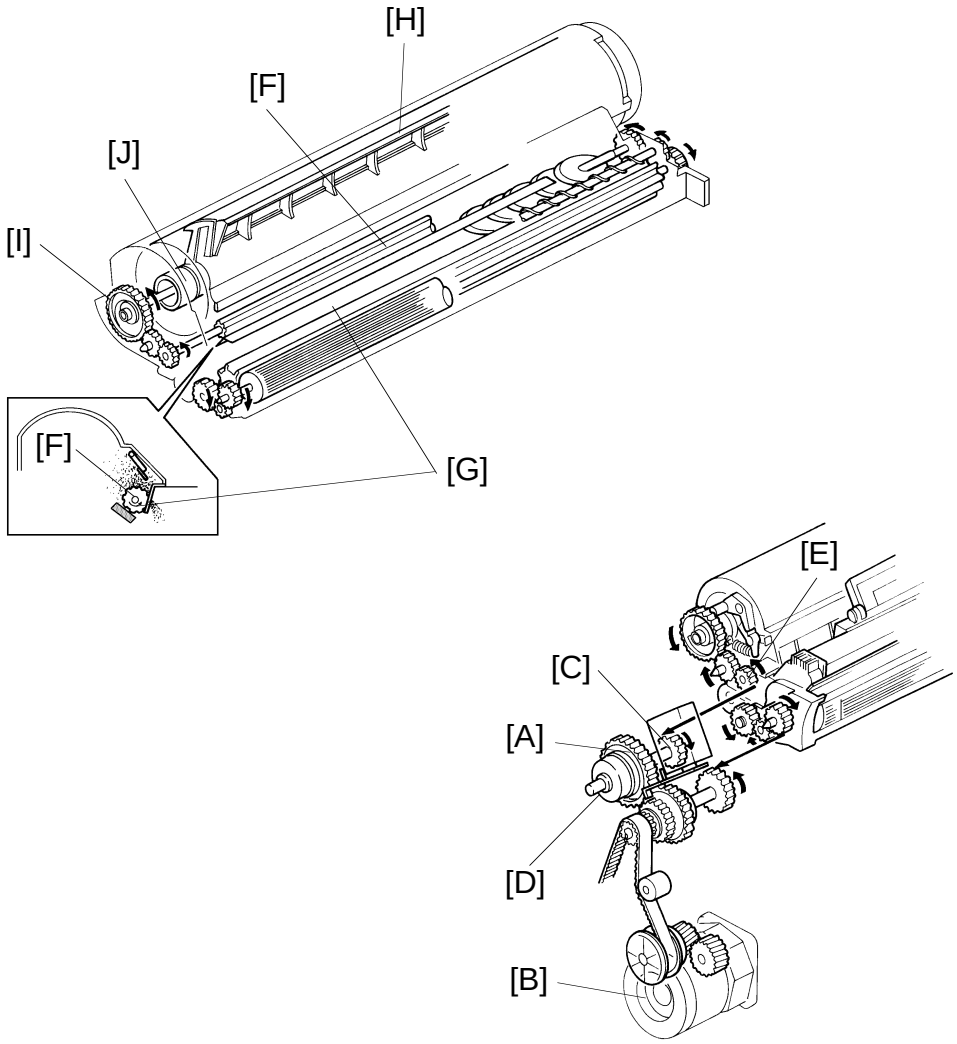

The toner supply clutch gear [A] turns when the main motor [B] is on and the development clutch solenoid is de-energized. The transmission of this rotation to the toner supply drive gear [C] is controlled by the toner supply clutch [D].

When the toner supply clutch energizes, the toner supply clutch engages and starts turning the toner supply drive gear. The toner supply drive gear turns the toner supply roller gear [E]. Toner catches in the grooves on the toner supply roller [F]. Then, as the grooves turn past the pin hole plate [G], the toner drops into the development unit through the pin holes.

The toner agitator [H] mechanism, which is contained in the toner cartridge, prevents toner from blocking. The toner agitator gear [I] turns whenever the toner supply clutch solenoid is engaged. Rotation passes through the toner cartridge casing to the agitator junction [J].

6.8 TONER SUPPLY AMOUNT

This copier has two different ways of controlling the amount of toner supplied. Normally, the detect supply mode controls toner supply for the black development unit; however, a fixed supply mode also can be selected by SP30. When the color development unit is installed, the fixed supply mode controls toner supply regardless of the setting of SP30.

6.8.1 Detect Supply Mode (SP30 = 0)

The amount of toner supplied depends on the ID sensor data, the detect toner supply ratio data, and the paper size. The toner supply clutch on time in each copy cycle is calculated as follows:

Toner Supply Clutch ON Time = I x T x P (pulses)

Where:
I = ID Sensor Data
T = Detect Toner Supply Ratio Data
P = Paper Size Data

For example:
Vsp = 0.65 volts, which means the toner supply level is "2" and the ID sensor = 29.

The data of SP31 is set to "0".
The toner supply ratio is 15 % and the toner supply data = 2.

Paper size is A4 or LT.
The paper size data = 1.

Toner Supply Clutch ON Time = I x T x P
= 29 x 2 x 1
= 58 (pulses)
= 232 (m sec.) (1 pulse = 4.0 m sec.)

ID Sensor Data

Vsp/Vsg x100 (Vsp, if Vsg = 4.0 volts)	Toner supply level (Toner supply ratio, if SP31 = 0)	ID sensor data
0 to 12.5% (0 to 0.5 volts)	No toner supply (0 %)	0
12.5 to 15.0% (0.5 to 0.6 volts)	1 (3.75 %)	15
15.0 to 17.5% (0.6 to 0.7 volts)	2 (7.5 %)	29
17.5 to 22.5% (0.7 to 0.9 volts)	3 (15 %)	59
22.5 to 62.5 % (0.9 to 2.5 volts) (See note below.)	4 (30 %)	118 (Toner end level)
62.5 to more than 100 % (2.5 to 5.0 volts)	Fixed supply mode	N/A (Abnormal condition)

NOTE: If this condition is detected three times consecutively, the toner supply ratio rises to 60% (ID Sensor Data = 236), which is double that at toner supply level 4.

Detect Toner Supply Ratio Data (SP31)

SP data (SP31)	Toner supply ratio	Toner supply ratio data
0	15%	2
1	7%	1
2	30%	4
3	60%	8

Paper Size Data

Paper size	Paper size data
Paper size ≤ A4 or LT	1
Paper size > A4 or LT	2

6.8.2 Fixed Supply Mode (SP30 = 1)

The amount of toner supplied depends on the fixed toner supply ratio data, the paper size data and the color data. The toner supply clutch on time in each copy cycle is calculated as follows:

Toner Supply Clutch ON Time = T x P x 2 x C (pulses)

Where:
T = Fixed Toner Supply Ratio Data
P = Paper Size Data
C = Color Data

For example:
The data of SP32 is set to "0".
The toner supply ratio is 7.0% and the toner supply data = 2.

Paper size is A4. The paper size data = 29.
Black toner is used. The color data = 1.

Toner Supply Clutch ON Time = T x P x 2 x C
= 2 x 29 x 2 x 1
= 116 (pulses)
= 464 (m sec.) (1 pulse = 4.0 m sec.)

Fixed Toner Supply Ratio Data (Black Toner: SP32)

SP data (SP32)	Toner supply ratio	Toner supply ratio data
0	7.0%	2
1	3.5%	1
2	10.5%	3
3	14.0%	4

Fixed Toner Supply Ratio Data (Color Toner: SP70)

SP data (SP70)	Toner supply ratio	Toner supply ratio data
0	14.0%	2
1	7 .0%	1
2	21.0%	3
3	28.0%	4

Paper Size Data

Paper size	Paper size data
A3	58
B4	43
A4	29
B5	23
A5	15
B6	11
11" x 17"	55
8 1/2" x 14"	37
8 1/2" x 11"	27
5 1/2" x 8 1/2"	14
Universal (*)	29
Paper size not detected	0

Color Data

Color	Color data
Black	1
Red	2
Blue or Green	1.2

6.9 BLACK TONER END DETECTION

The image density sensor is used to detect a toner end condition in both detect and fixed supply modes for the black toner.

6.9.1 Near Toner End Condition

When (Vsp/Vsg x 100) becomes greater than 22.5, the toner density detection cycle changes from every 10 copies to 5 copies.

When this condition is detected three times consecutively, the toner supply ratio becomes two times the amount of toner supply level 4. The resulting toner supply ratio is 60%, and the ID sensor data is 236.

Then, when this condition is detected five times consecutively, the CPU determines that it is the near end condition and starts blinking the Add Toner indicators.

6.9.2 Toner End Condition

After the Add Toner indicator starts blinking (Near Toner End Condition), the operator can make 50 copies. If the toner cartridge is not replaced within 50 copies, copying is inhibited and a toner end condition is determined. In this condition, the Add Toner indicator lights.

Example:

Copy number	Toner density detection cycle	Vsp/Vsg x 100	Toner supply ratio (If SP31 = 0)	Indicator
1st ~ 5th copies	1st copy	22.6	30%	
6th ~ 10th copies	6th copy	22.6	30%	
11th ~ 15th copies	11th copy	22.6	60%	
16th ~ 20th copies	16th copy	22.6	60%	
21st copy	21st copy	22.6	60%	Add Toner indicator starts blinking (near toner end condition)
I I I	I I I	I I I	I I I	Add Toner indicator blinks (near toner end condition)
71st copy	—	—	—	Add Toner indicator lights (toner end condition)

When (Vsp/Vsg x 100) becomes greater than 37.5 two times consecutively, the CPU determines immediately that there is a toner end condition and copying is inhibited. This causes the Add Toner indicator to light.

Example:

Copy number	Toner density detection cycle	Vsp/Vsg x 100	Toner supply ratio (If SP31 = 0)	Indicator
1st~5th copies	1st copy	30.5	30%	
6th~10th copies	6th copy	37.7	30%	
16th copy	16th copy	37.7	—	Add Toner indicator lights (toner end condition)

6.9.3 Toner End Recovery

After the toner cartridge is replaced and the front cover is closed, the CPU turns on the main motor, de-energizes the development clutch solenoid, and turns on the toner supply clutch for 35 seconds to supply toner to the empty toner supply unit from the toner cartridge.
The CPU checks Vsg and Vsp four times at the end of this period to clear the toner end condition.

When the average of (Vsp/Vsg x 100) becomes less than 22.5 or the average of (Vsp/Vsg x 100) becomes less than 80% of the last detection before replacing the toner cartridge, the toner end or near end condition is cleared.

If the toner end or near end condition is not cleared, copying is inhibited. This prevents the customer from clearing the near end or toner end condition by simply opening and closing the front cover or turning off and on the main switch.

6.10 COLOR TONER END DETECTION

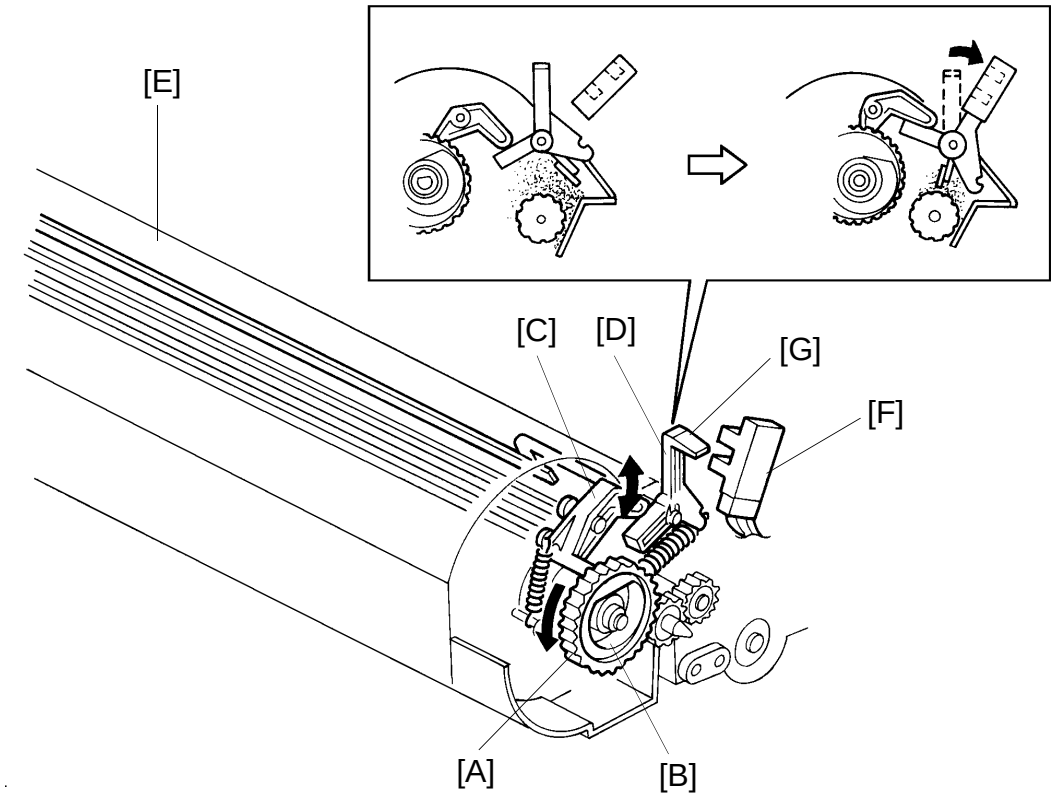

The toner agitator gear [A] has a cam [B] (the toner end cam) on its inner surface, and it rotates only when toner is supplied. The cam follower on the end of the toner end lever [C] rides on the surface of the toner end cam (spring pressure). The opposite end of the toner end lever alternately presses and releases the toner end arm [D] as the cam turns. The toner end plate [E], which is in the toner hopper, is mounted on the same shaft as the toner end arm.

When there is sufficient toner in the hopper, the toner end plate is prevented from moving by the toner. Therefore, even when the toner end lever drops to the lowest position on the cam (releasing the toner end arm), the toner end arm does not move and the toner end sensor [F] is not activated.

When there is insufficient toner in the hopper, the toner end plate can move. When the toner end lever releases the toner end arm, the toner end plate lowers and the actuator [G] on the toner end arm moves into the toner end sensor. The CPU receives a single pulse from the toner end sensor.

If this condition is detected by the CPU two times consecutively, the Add Toner indicator starts blinking.

After the indicator starts blinking, 50 copies can be made. If a new toner cartridge is not added within that 50 copy interval, the Add Toner indicator stops blinking (stays on) and copying is inhibited. If the main switch is turned off and on after this, only 1 copy can be made each time.

The toner end condition is normally detected by the mechanism described here. However, it can also be detected using the ID sensor. The Add Toner indicator will start blinking if Vsp/Vsg exceeds 1.1 x threshold level 10 times in a row. The threshold level is the average of Vsp x Vsg, which is calculated and stored in RAM when the color developer initial setting (SP10) procedure is completed.

When the toner cartridge is replaced and the front cover is closed, the CPU turns on the main motor, de-energizes the development clutch solenoid, and turns on the toner supply clutch for approximately 3 seconds to supply toner to the empty toner supply unit from the toner cartridge. A toner end detection is also done during this 3 second period. The CPU performs this operation a maximum of 3 times (9 seconds) to clear the toner end condition.

6.11 COLOR TONER SUPPLY UNIT INITIAL SETTING (SP63)

When the new color development unit is installed or the color toner supply unit is replaced with a new one, the toner supply unit initial setting (SP63) must be performed to prevent the CPU from falsely detecting toner end.

When SP63 is performed, the CPU turns on the main motor, de-energizes the development clutch solenoid, and turns on the toner supply clutch for approximately 3 seconds to supply toner to the empty toner supply unit from the toner cartridge. A toner end detection is also done during this 3 second period. The CPU performs this operation a maximum of 3 times (9 seconds) to clear the toner end condition.

7. IMAGE TRANSFER AND PAPER SEPARATION

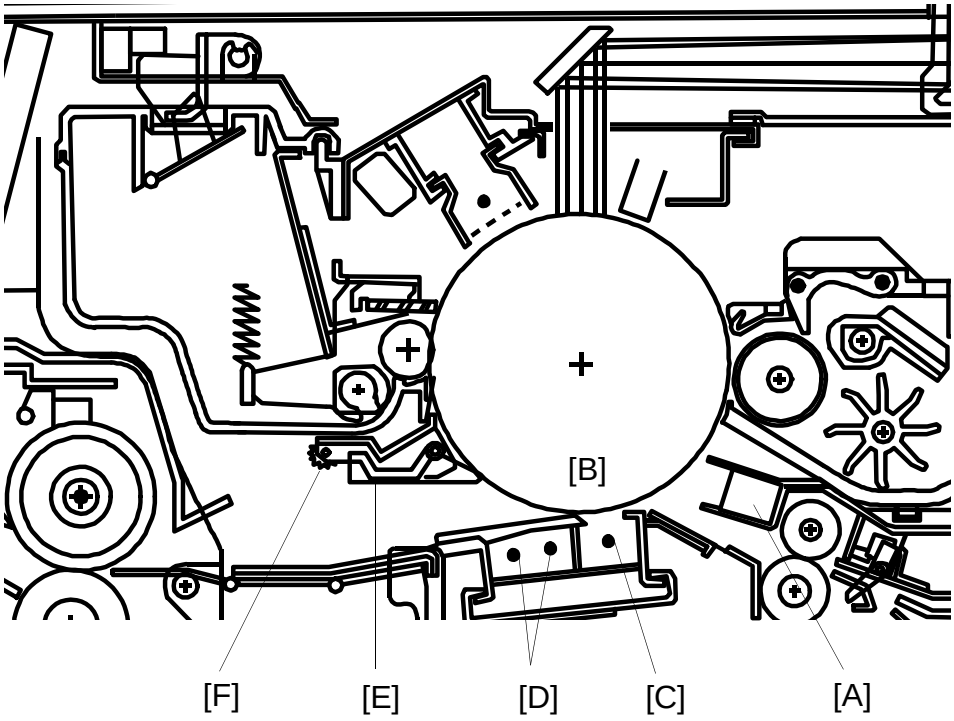

7.1 PRE-TRANSFER LAMP (PTL)

After the latent image is developed but before the image is transferred to the copy paper, the drum surface is illuminated by the pre-transfer lamp [A]. This illumination reduces the negative potential on the drum surface [B]. This prevents the toner particles from being re-attracted to the negatively charged drum during the paper separation process. It also makes image transfer and paper separation easier.

7.2 IMAGE TRANSFER

A high negative voltage (–4.8 kilovolts) is applied to the transfer corona wire [C], and the corona wire generates negative ions. These negative ions are applied to the copy paper, and the negative charge attracts the positively charged toner away from the drum and onto the paper. In addition, the paper is held against the drum by the positive counter charge on the drum.

7.3 PAPER SEPARATION

After image transfer the copy must be separated from the drum. To break the attraction between the paper and the drum, the separation corona wire [D] applies an ac corona to the reverse side of the paper. The stiffness and weight of the paper causes it to separate from the drum.

The negative charge on the paper (from the transfer corona) is not completely discharged until the paper is far enough from the drum that the toner will not be reattracted to the drum. The two pick-off pawls [E] ensure that thin, low stiffness paper and upward curled paper separate completely. The spurs [F] prevents the unfused toner on the paper from being smeared by the pick-off pawls.

7.4 PRE-TRANSFER LAMP AND TRANSFER/SEPARATION CORONA CIRCUIT

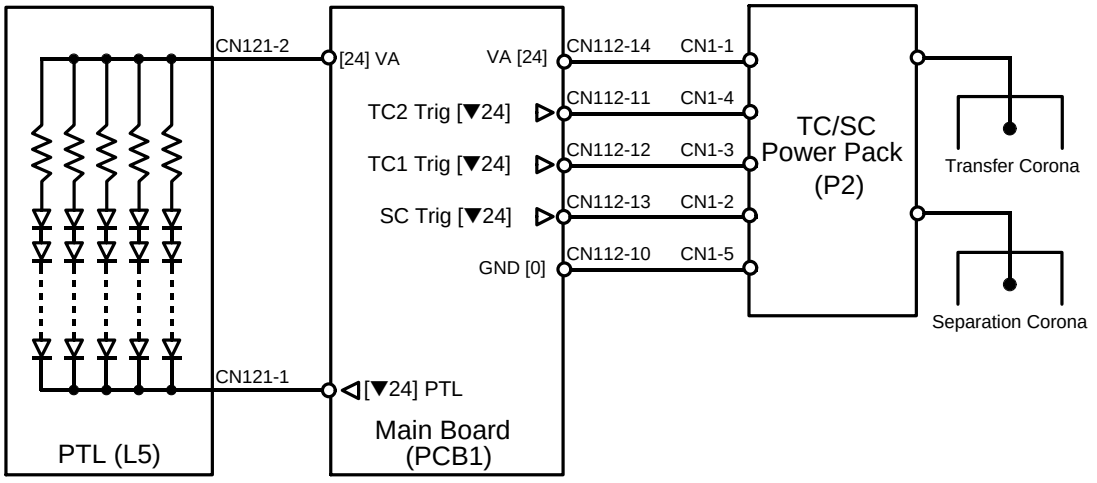

When the Start key is pressed, the main board outputs Low signals to turn on the pre-transfer lamp (PTL) and the TC/SC power pack for the transfer and separation coronas.

The pre-transfer lamp is composed of 50 LEDs supplied by +24 volts.

The TC/SC power pack has a dc to dc converter and a dc to ac inverter. The dc to dc converter changes +24 volts to –4.8 kilovolts for the transfer corona. The inverter changes +24 volts to the 5.0 kilovolts ac (500 Hz) for the separation corona.

The TC2 trigger is only used for the second side copies in duplex copy mode. This shifts the corona current to increase transfer efficiency.

The separation corona circuit in the TC/SC power pack has a current leak detection circuit for safety. When this circuit detects that more than 2 milliampere is supplied to the separation corona, the separation corona turns off immediately. When the main switch is turned off and on, or the front cover or the exit cover is opened and closed, this condition is cleared.

8. DRUM CLEANING

8.1 OVERVIEW

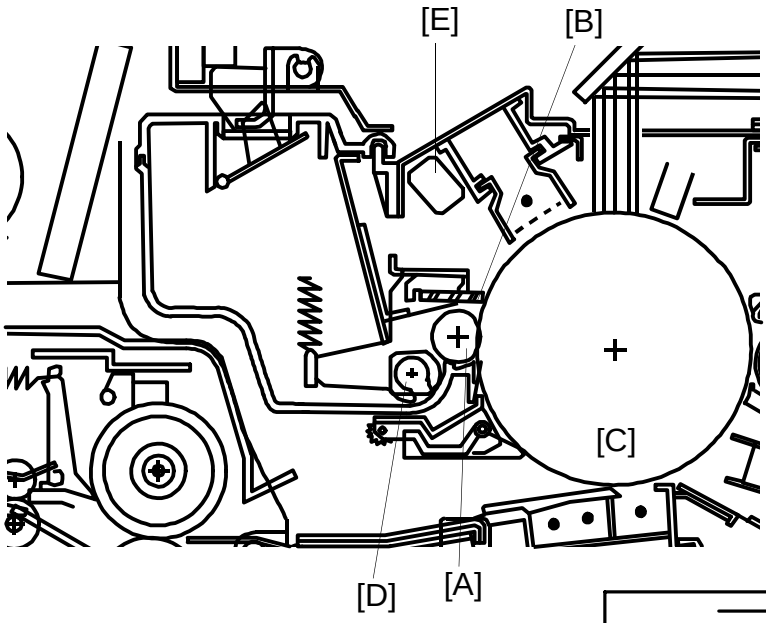

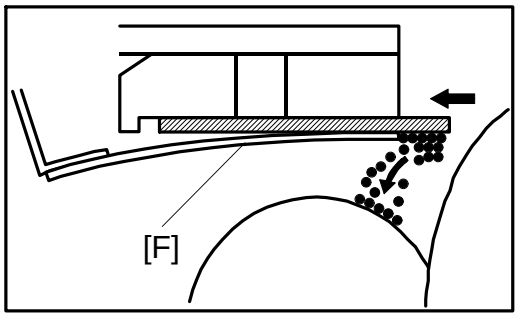

The cleaning brush [A] and cleaning blade [B] remove any toner remaining on the drum [C] after the image is transferred to the paper.

The cleaning brush and drum move in opposite directions at their point of contact. The cleaning brush removes paper dust and nearly half of the toner from the drum surface to reduce the cleaning load placed on the blade.

The cleaning blade removes the remaining toner. The falling toner catches in the fibers of the cleaning brush and is carried inside the cleaning unit. The toner collection roller [D] carries the used toner to the used toner tank. The light of the quenching lamp [E] neutralizes any charge remaining on the drum in preparation for the next copy cycle.

The cleaning blade releases when the release knob is pressed. This cleans the edge of the cleaning blade using the blade scraper [F], which is mounted under the cleaning blade.

8.2 DRIVE MECHANISM

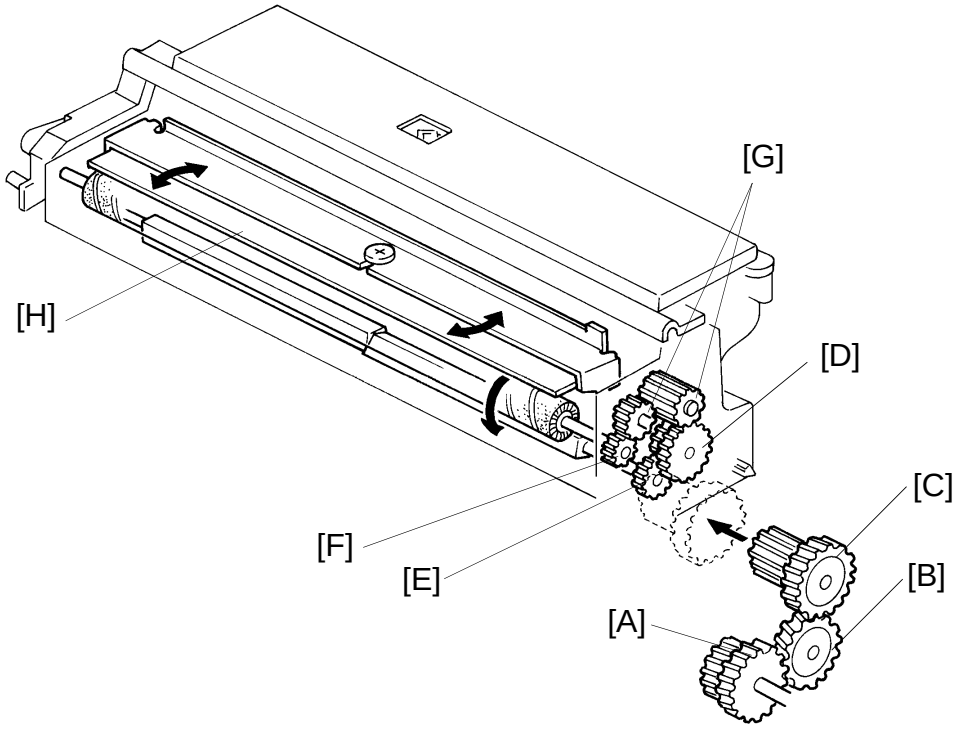

The rotation of the main motor is transmitted to the cleaning unit through the main motor gear [A], the relay gear [B], and the cleaning drive gear [C].

The gear [D] driven by the cleaning drive gear passes the rotation to the toner collection roller gear [E] and to the cleaning brush gear [F] through the idle gears [G].

The cleaning blade [H] is mounted in the center of the blade and is tilted to apply even pressure.

8.3 TONER OVERFLOW DETECTION

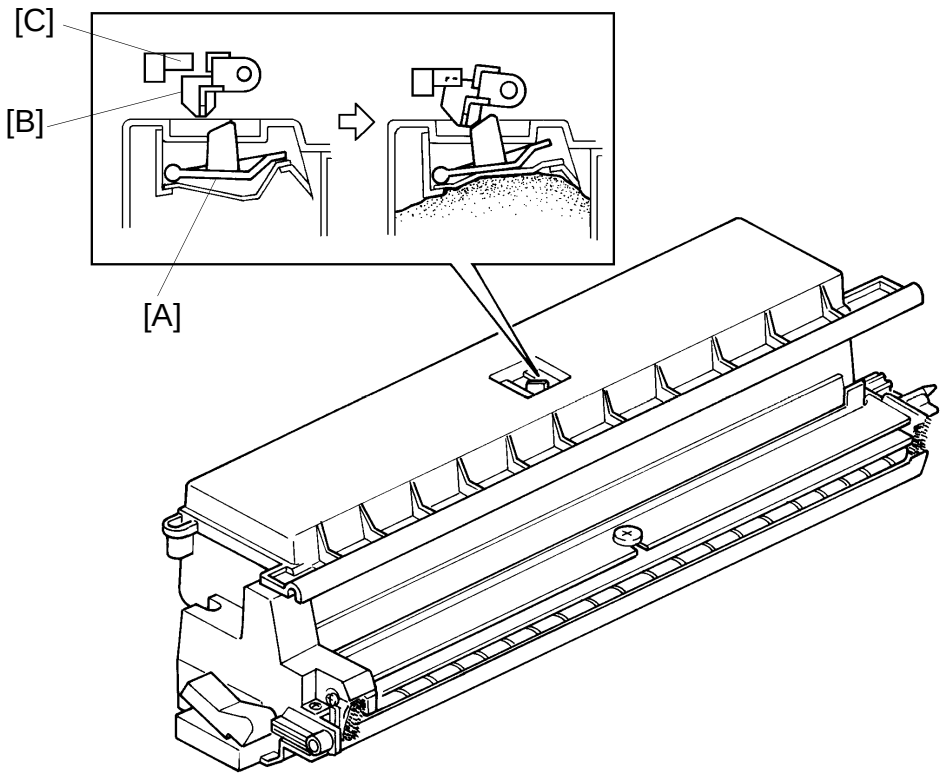

The toner overflow detection mechanism stops copier operation when the used toner tank gets full. When the tank gets full, the pressure of the used toner pushes up a movable plate [A] mounted in the top of the used toner tank. As this plate moves up, it raises the toner overflow actuator [B]. When the actuator moves into the toner overflow sensor [C], the CPU starts to blink "E70" on the operation panel. After the "E70" starts to blink, 250 copies can be made. Then, after 250 copies the "E70" stops blinking (stays on) and copying is inhibited.

9. QUENCHING

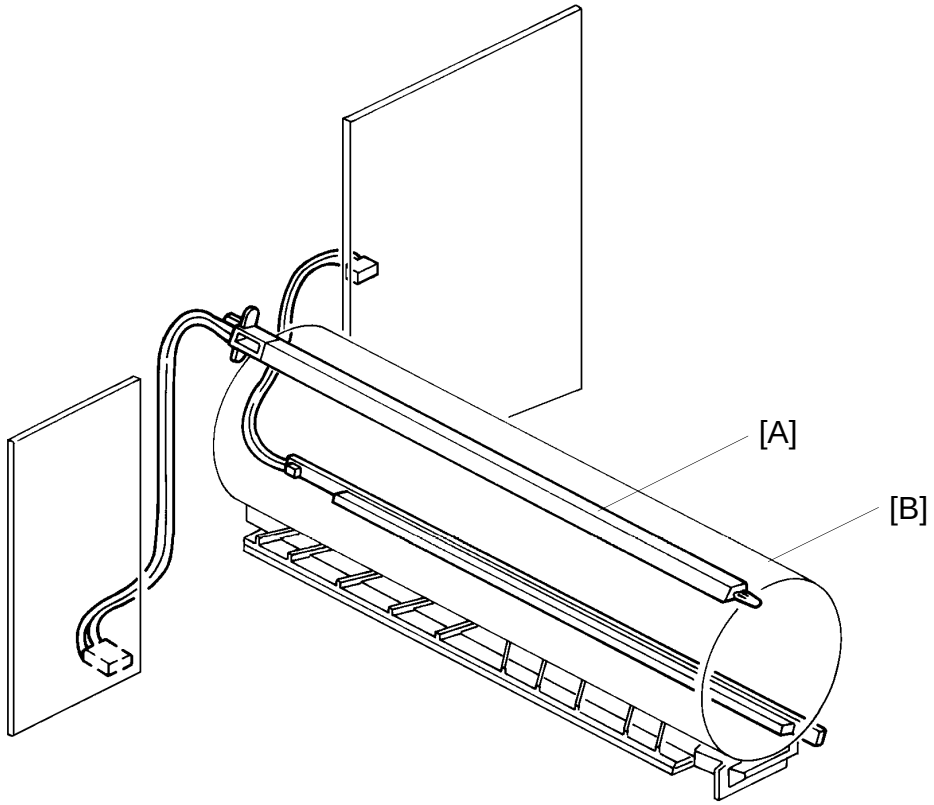

In preparation for the next copy cycle, light from the quenching lamp (QL) [A] neutralizes any charge remaining on the drum [B].

The neon lamp is used for quenching and it is turned on whenever the main motor rotates.

10. PAPER FEED AND REGISTRATION

10.1 OVERVIEW

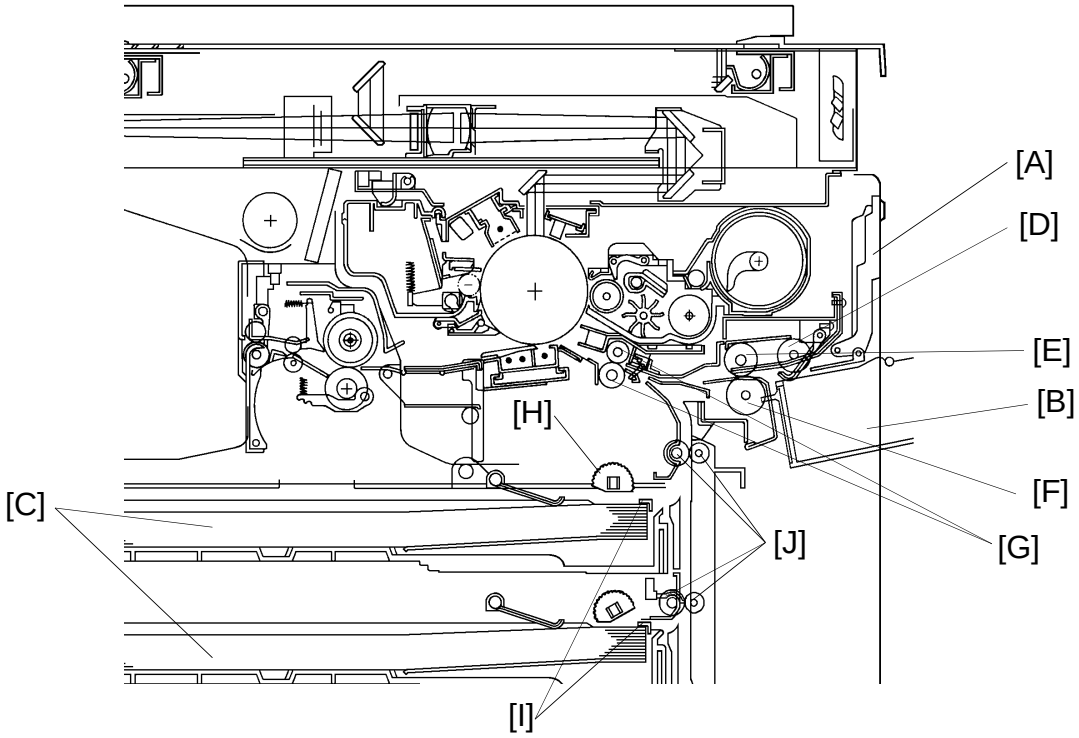

A110 copier has two paper feed stations (1 cassette + 1 paper tray) and manual feed table [A]. A111 copier has three paper feed stations (1 cassette + 2 paper trays) and manual feed table.

The first feed station uses a cassette [B] which can load 500 sheets, and the second and third feed stations use a paper tray [C] which can load 250 sheets. The manual feed table can load 50 sheets. The manual feed table utilizes the feed mechanism of the first feed station.

The first feed station uses a FRR feed system. Rotation of the pick-up roller [D] drives the top sheet of paper from the cassette to the feed and the reverse rollers. The feed [E] and reverse [F] rollers then take over the paper drive. If more than one sheet is fed by the pick-up roller, the reverse roller rotates in the opposite direction and prevents all but the top sheet from passing through to the registration rollers [G].

The second and third feed stations use the semicircular feed roller [H] and corner separator [I] system. The semicircular feed roller makes one rotation to drive the top sheet of paper to the relay rollers [J], which then feed the sheet to the registration rollers. The corner separator allows only one sheet to feed.

10.2 FRR FEED SYSTEM

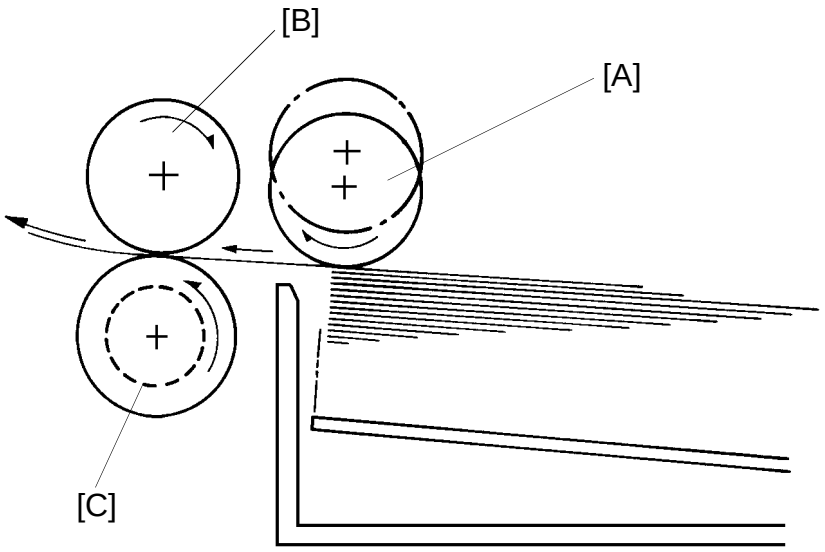

This copier uses an FRR (Feed + Reverse Roller) paper feed system which utilizes three rollers.

10.2.1 Pick-up Roller

The pick-up roller [A] is not in contact with the paper stack before it starts feeding paper. Shortly after the Start key is pressed, the pick-up roller drops down and feeds the top sheet between the feed [B] and the reverse rollers [C]. At almost the same time that the paper's leading edge arrives at the feed roller, the pick-up roller lifts off the paper stack so that it does not interfere with the operation of the feed and reverse rollers. The feed and reverse rollers then take over the paper feed process.

10.2.2 Feed and Reverse Rollers

There is a one-way bearing inside the feed roller so it can turn only in one direction. The reverse roller is driven in the opposite direction to the feed roller. The reverse roller, however, is driven through a slip clutch (torque limiter clutch) which allows it to turn in either direction depending on the friction between the rollers. A spring keeps the reverse roller in contact with the feed roller.

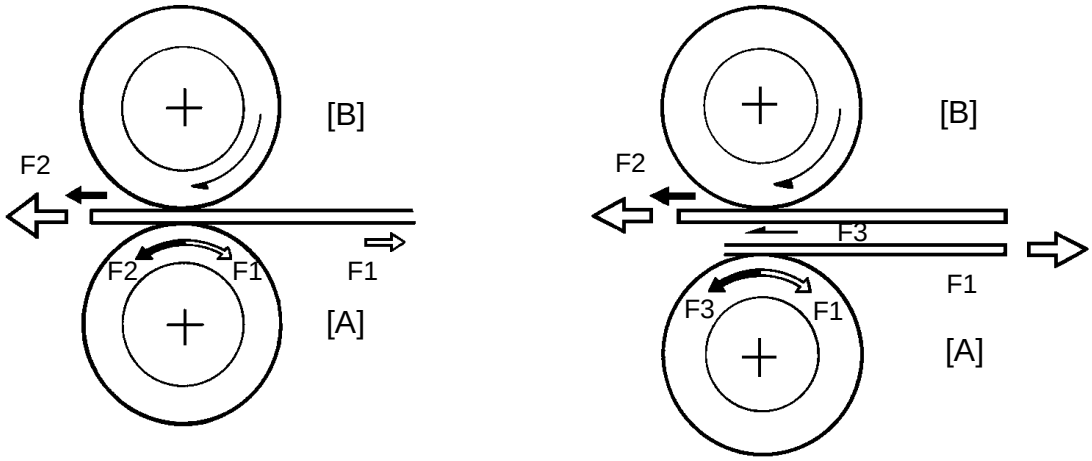

The direction that the reverse roller [A] turns depends on the frictional forces acting on it. The slip clutch applies a constant clockwise force (F1). When there is a single sheet of paper being driven between the rollers, the force of friction between the feed roller [B] and the paper (F2) is greater then F1. So, the reverse roller turns counterclockwise.

If two or more sheets are fed between the rollers, the forward force on the second sheet (F3), becomes less than F1 because the coefficient of friction between the two sheets is small. So, the reverse roller starts turning clockwise and drives the second sheet back to the cassette.

10.3 1ST FEED STATION PAPER LIFT MECHANISM AND PAPER END DETECTION

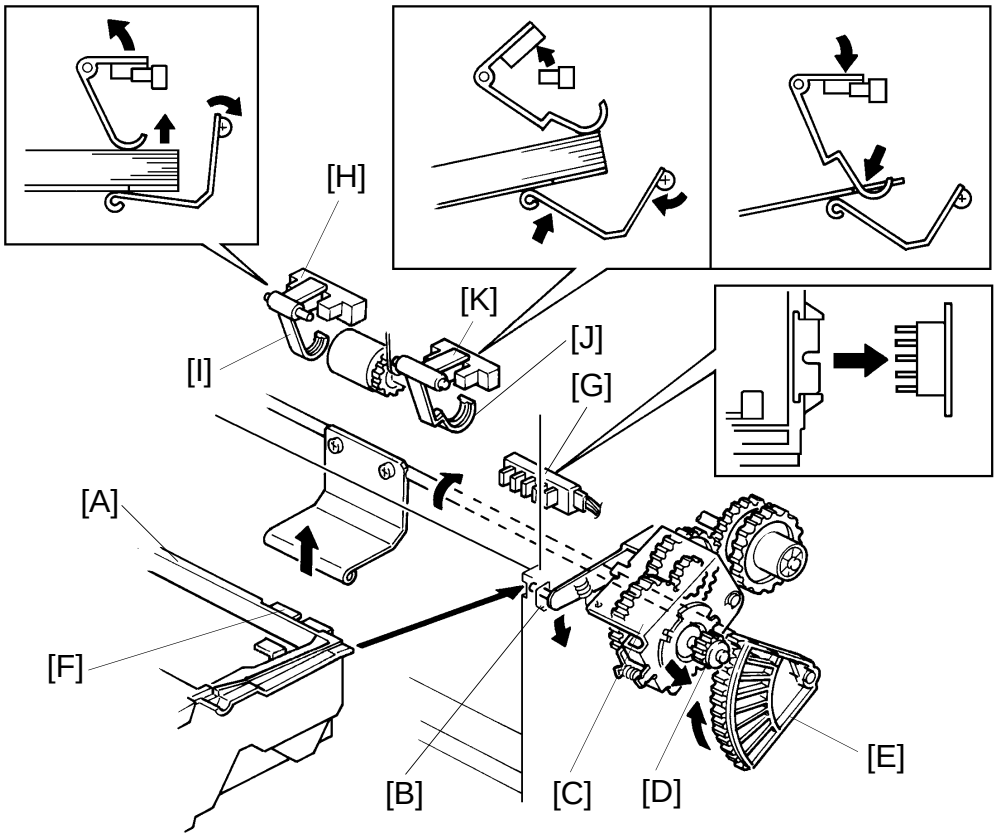

10.3.1 Paper Lift Mechanism

When the cassette [A] is inserted into the copier, the cassette actuator pin [B] is pushed down by the cassette. The paper lift clutch unit [C] moves down and then the paper lift gear [D] engages with the sector gear [E]. Simultaneously, the paper size actuator [F] actuates the paper size switch [G].

Under the following conditions, the CPU checks the paper lift sensor [H] to see if the paper is at the feed position:

1. When the Start key is pressed.
2. When the warm-up condition changes to the ready condition.
3. When the manual feed table is closed.

If the paper has not been raised to the feed position, the CPU turns on the main motor and the paper lift clutch. The paper lift gear turns the sector gear and the bottom plate raises until the top sheet pushes up the paper lift sensor feeler [I]. When the paper lift sensor is de-actuated, the paper lift sensor sends a Low signal to the main board, and then the main motor and the paper lift clutch are turned off.

If the tray lift sensor stays HIGH for 7 seconds after the paper lift clutch is turned on, "U5" lights in the operation panel.

As paper is fed into the copier, the level of paper stack gets lower. If the level becomes too low, the paper lift sensor is actuated and the CPU energizes the paper lift clutch until the top sheet raises the feeler to de-actuate the paper lift sensor again. This ensures that the paper is always at the correct feed height.

10.3.2 Paper End Detection

When the cassette runs out of paper, the paper end feeler [J] drops through a slot in the cassette bottom plate. As it drops, the paper end sensor [K] is actuated by the feeler. The paper end sensor then sends a HIGH signal to the main board. The Add Paper indicator then turns on. The Wait indicator keeps turning on and the machine stops after the copy cycle is finished.

10.4 2ND/3RD FEED STATION PAPER LIFT MECHANISM AND PAPER END DETECTION

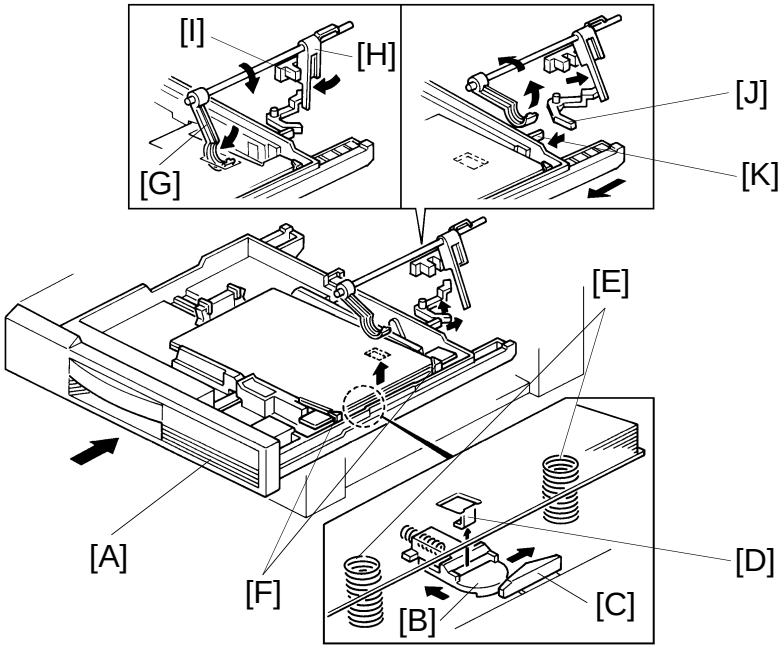

10.4.1 Paper Lift Mechanism

When the paper tray [A] is closed after paper is loaded, the plate release slider [B], which is mounted on the bottom part of the paper tray, is pushed by the projection [C] of the copier frame and the release slider comes off the bottom plate hook [D].

Once the release slider comes off, the bottom plate is raised by the pressure springs [E] and the top sheet pushes up the corner separators [F]. This keeps the stack of paper at the correct height.

10.4.2 Paper End Detection

When the paper tray runs out paper, the paper end feeler [G] drops through a slot in the tray bottom plate. The paper end actuator [H], which is on the same shaft as the paper end feeler, pivots into the paper end sensor [I]. The paper end sensor sends a HIGH signal to the main board and then the Add Paper indicator turns on. The Wait indicator keeps turning on and the machine stops after the copy cycle is finished.

When the paper tray is pulled out, the release arm [J], which is spring loaded, rotates clockwise and raises the paper end actuator and the paper end feeler. This prevents the paper end feeler from being damaged by the paper tray. When the paper tray is closed, the projection [K] on the paper tray pushes the release arm to release the paper end actuator and the paper end feeler.

10.5 PAPER SIZE DETECTION

10.5.1 1st Feed Station

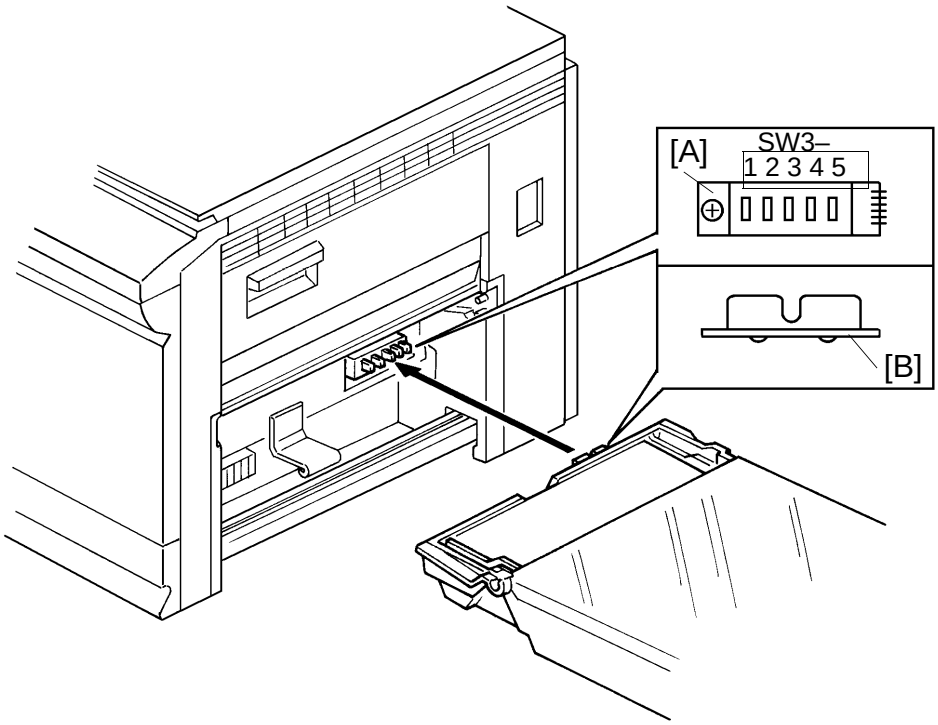

The paper size switch (SW3) [A] in the cassette entrance detects the paper size. The paper size switch has five microswitches (SW3-1 through 3-5) inside. The paper size switch is actuated by an actuator plate [B] on the rear of the cassette. Each paper size has its own unique combination of notches in the plate. The CPU receives a LOW signal from the microswitches activated by the actuator and determines which cassette was inserted.

Paper Size Detection Table (1st Feed Station)

Paper Size	Switch 3 – 1	2	3	4	5	Size Indication
Universal	0	0	0	0	0	✻
A3	1	0	0	0	0	A3
B4	1	1	0	0	0	B4
A4 (sideways)	0	0	1	0	0	A4
A4 (lengthwise)	1	0	1	0	0	A4
B5 (sideways)	0	1	1	0	0	✻
B5 (lengthwise)	1	1	1	0	0	✻
A5 (sideways)	0	0	0	1	0	A5
A5 (lengthwise)	1	0	0	1	0	A5
B6 (sideways)	0	1	0	1	0	✻
B6 (lengthwise)	1	1	0	1	0	✻
F (8" x 13")	1	0	0	1	1	F
Return Post Card	0	0	1	1	0	✻
Post Card	1	0	1	1	0	✻
11" x 17"	0	0	0	0	1	11 x 17
11" x 8 1/2"	1	0	0	0	1	8 1/2 x 11
11" x 15"	0	1	0	0	1	✻
10" x 14"	1	1	0	0	1	✻
8 1/2" x 14"	0	0	1	0	1	8 1/2 x 14
8 1/2" x 13"	1	0	1	0	1	✻
8 1/2" x 11"	0	1	1	0	1	8 1/2 x 11
8 1/2" x 5 1/2"	1	1	1	0	1	5 1/2 x 8 1/2
8 1/4" x 13" (14")	0	0	0	1	1	✻
8" x 10 1/2"	0	1	0	1	1	✻
8" x 10"	1	1	0	1	1	✻
5 1/2" x 8 1/2"	0	0	1	1	1	5 1/2 x 8 1/2
No Cassette	1	1	1	1	1	—

0: Actuated (Low)
1: Not Actuated (High)

10.5.2 2nd/3rd Feed Station

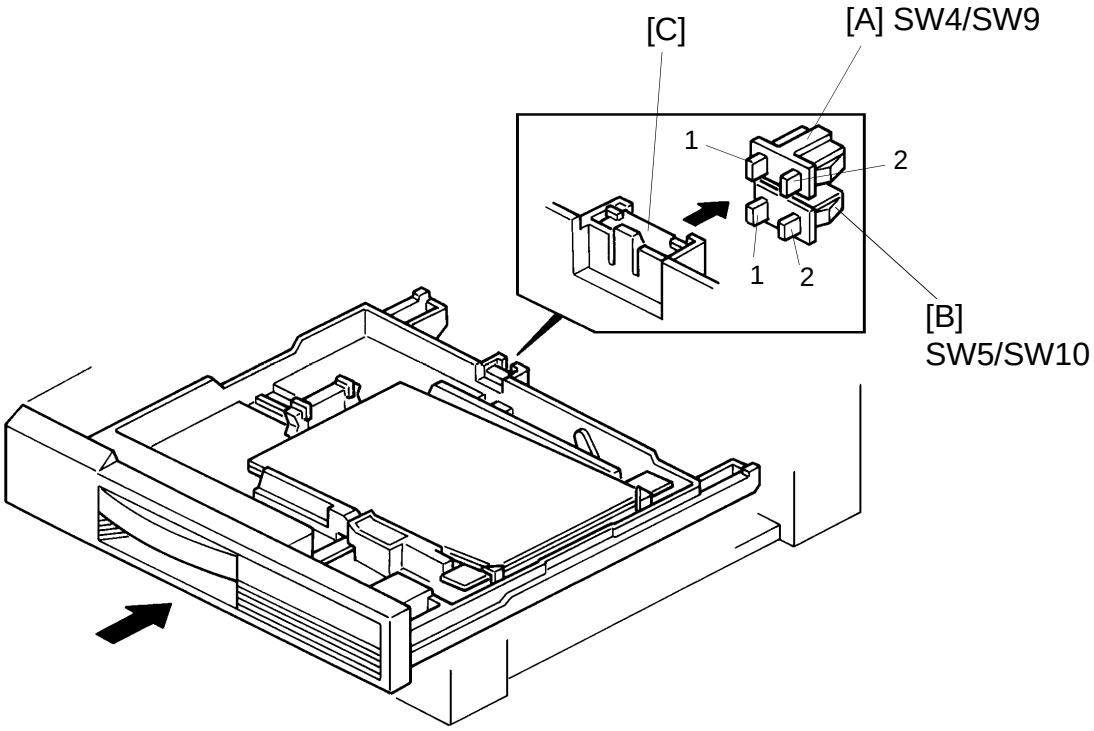

Two paper size switches (SW4 [A] and SW5 [B] for 2nd feed station, SW9 [A] and SW10 [B] for 3rd feed station) on the rear frame detect the paper size. Each paper size switch has two microswitches.

The paper size switches are actuated by a paper size detection block [C] on the rear of the paper tray. Each paper size has its own unique combination of holes in the block.

The CPU receives a LOW signal from the microswitches activated by the block and determines which paper size is used in the paper tray.

Paper Size Detection Table (2nd and 3rd Feed Station)

Paper Size	SW4/SW9	SW5/SW10	Size Indication
	1 2	1 2	
✻ (See Note)	0 0	0 1	✻
A3	1 1	1 0	A3
B4	0 1	0 0	B4
A4 (sideways)	0 1	1 1	A4
A4 (lengthwise)	1 1	0 1	A4
B5 (sideways)	0 0	1 0	✻
A5 (sideways)	1 0	1 1	A5
F (8" x 13")	1 0	0 0	F
11" x 17"	1 1	1 0	11" x 17"
11" x 8 1/2"	0 1	1 1	8 1/2" x 11"
8 1/2" x 14"	0 1	0 0	8 1/2" x 14"
8 1/2" x 11"	1 1	0 1	8 1/2" x 11"
	0 0	0 0	Duplex Unit

0: Actuated (Low)
1: Not Actuated (High)

NOTE: 1. SP96 (special paper size setting) sets the appropriate paper size for special paper when setting the "✻" mark on the paper size detection block.

2. Duplex modes cannot be selected.

10.6 PAPER FEED DRIVE MECHANISM

10.6.1 1st Feed Station

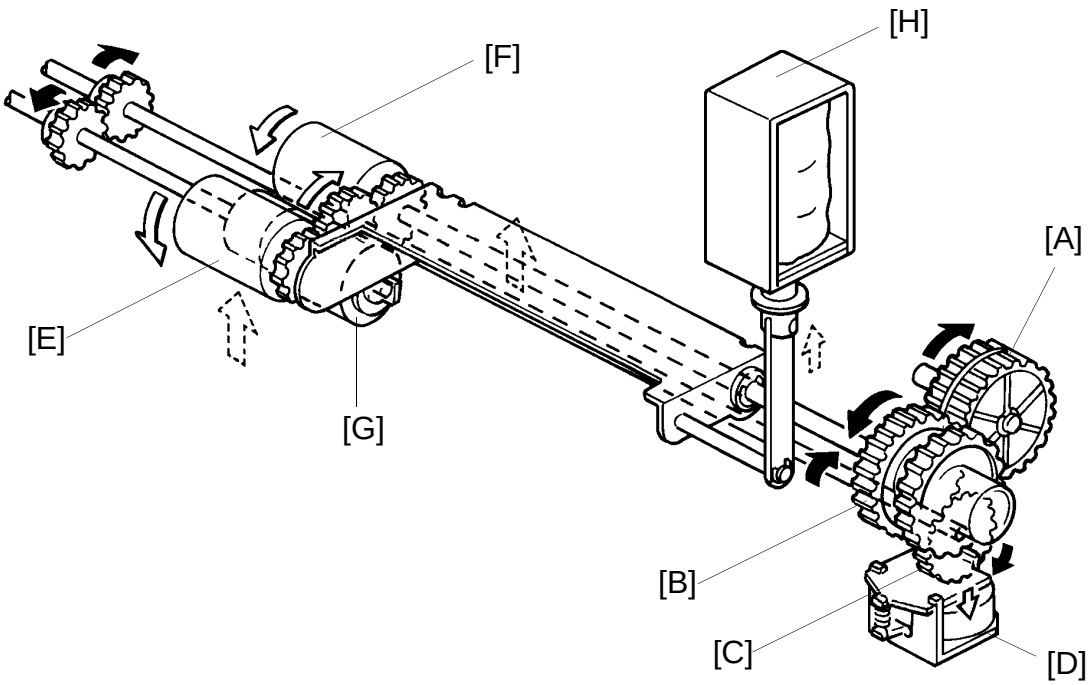

Through several gears and a timing belt, main motor rotation is transmitted to the relay gear [A] and then the 1st paper feed clutch gear [B]. The 1st paper feed clutch gear turns the reverse roller drive gear [C]. The paper feed timing is controlled by the 1st paper feed clutch solenoid [D].

The pick-up roller [E] is normally in contact with the paper stack. When the leading edge of the paper passes between the feed roller [F] and the reverse roller [G], the pick-up roller is then lifted up by the pick-up roller release solenoid [H]. After the trailing edge of the paper passes under the pick-up roller, the pick-up roller release solenoid is de-energized and the pick-up roller drops back onto the paper stack in preparation for the next copy cycle.

10.6.2 2nd Feed Station

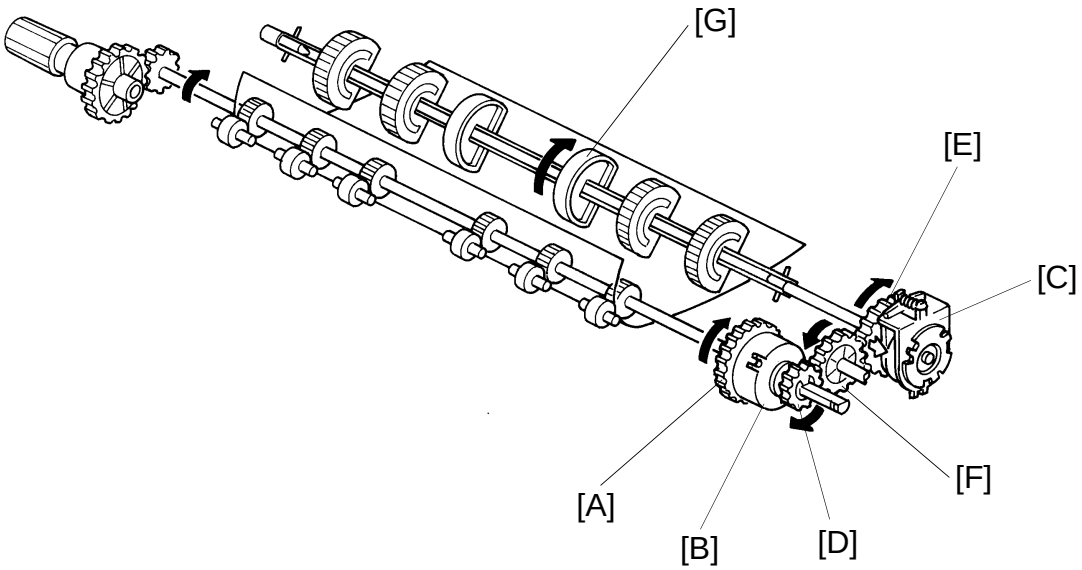

Main motor rotation is transmitted to the relay roller clutch gear [A] through gears and a timing belt. The paper feed timing is controlled by the relay roller clutch [B] and the 2nd feed clutch [C]. The upper relay roller gear [D] transmits rotation to the 2nd feed clutch gear [E] through the relay gear [F] only when the relay roller clutch is on.

Both the relay roller clutch and the 2nd paper feed clutch turn on at the same time to start paper feed. The 2nd feed clutch is energized for 500 milliseconds to transfer drive to the 2nd feed roller shaft and turns the 2nd feed rollers [G]. The 2nd feed rollers stop turning when the 2nd feed clutch gear completes one rotation. The relay roller clutch stays energized until the leading edge of the paper reaches the registration rollers.

10.6.3 3rd Feed Station (A111 Copier Only)

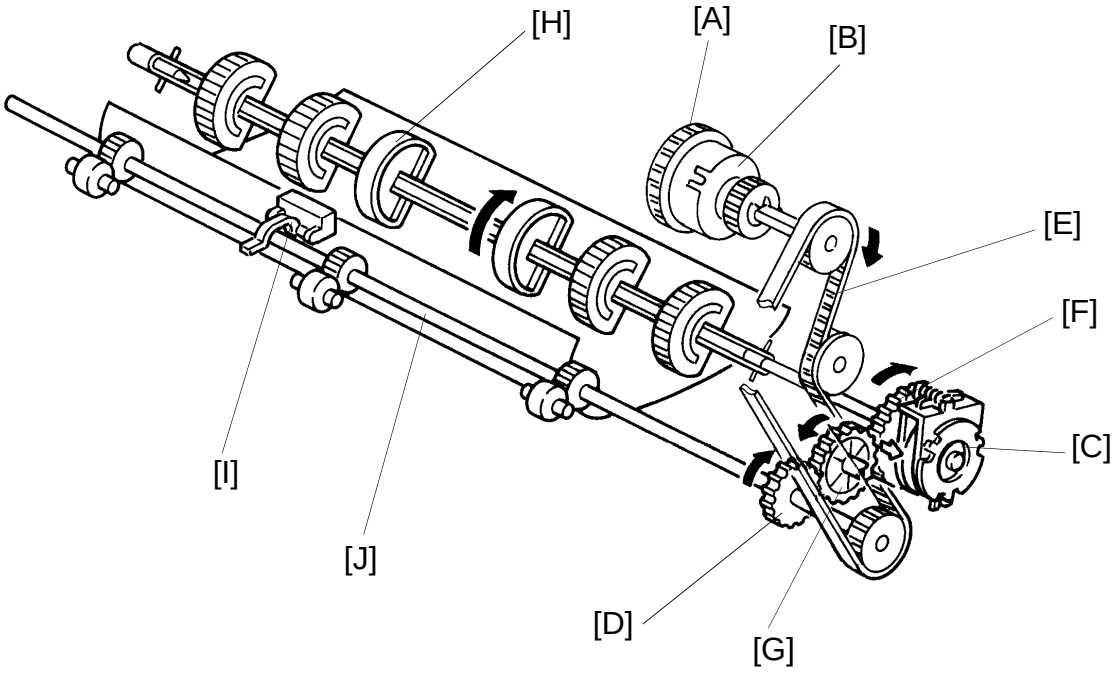

Main motor rotation is transmitted to the relay roller clutch gear [A] through gears and a timing belt. The paper feed timing is controlled by the relay roller clutch [B] and the 3rd paper feed clutch [C]. When the relay roller clutch is energized, the relay roller clutch gear transmits rotation to the lower relay roller gear [D] through a timing belt [E] and the timing pulleys. Then, the lower relay roller gear transmits rotation to the 3rd feed clutch gear [F] through the relay gear [G].

Both the relay roller clutch and the 3rd paper feed clutch turns on at the same time to start paper feed. The 3rd feed clutch is energized for 500 milliseconds to transfer drive to the 3rd feed roller shaft and turns the 3rd feed rollers [H]. The 3rd feed rollers stop turning when the 3rd feed clutch gear completes one rotation. The relay roller clutch stays energized until the leading edge of the paper reaches the registration rollers.

The relay sensor [I] is located just after the lower relay roller [J]. This sensor is used for paper misfeed detection.

10.7 SLIP CLUTCH MECHANISM

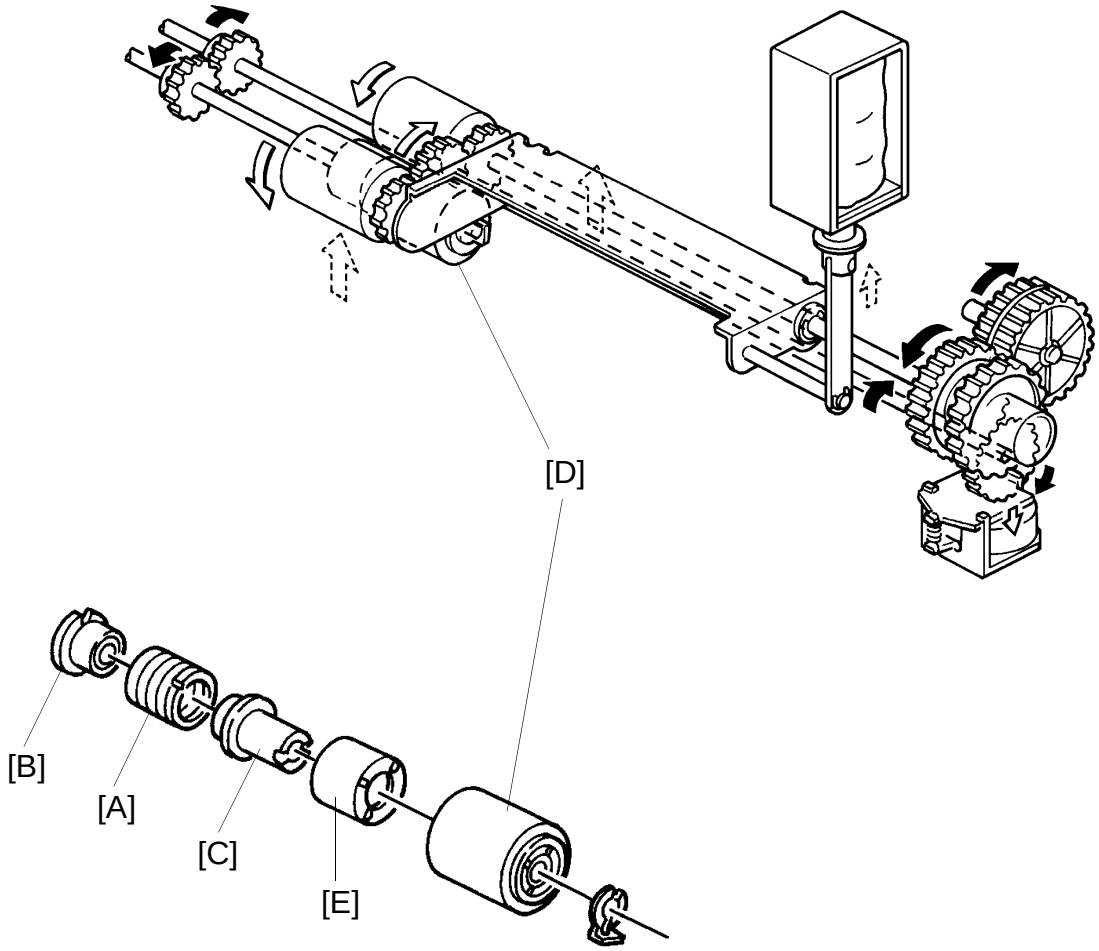

[D]: Reverse Roller
[E]: Slip Clutch Cover

The slip clutch consists of two hubs connected by a drive spring [A]. The spring grips the input hub [B] loosely and grips the output hub [C] tightly. It will slip if the resistance to rotation is too great. The hubs and spring are precisely machined, and the output hub and spring slip when a single sheet of paper feeds between the feed roller and reverse roller.

10.8 MANUAL FEED TABLE

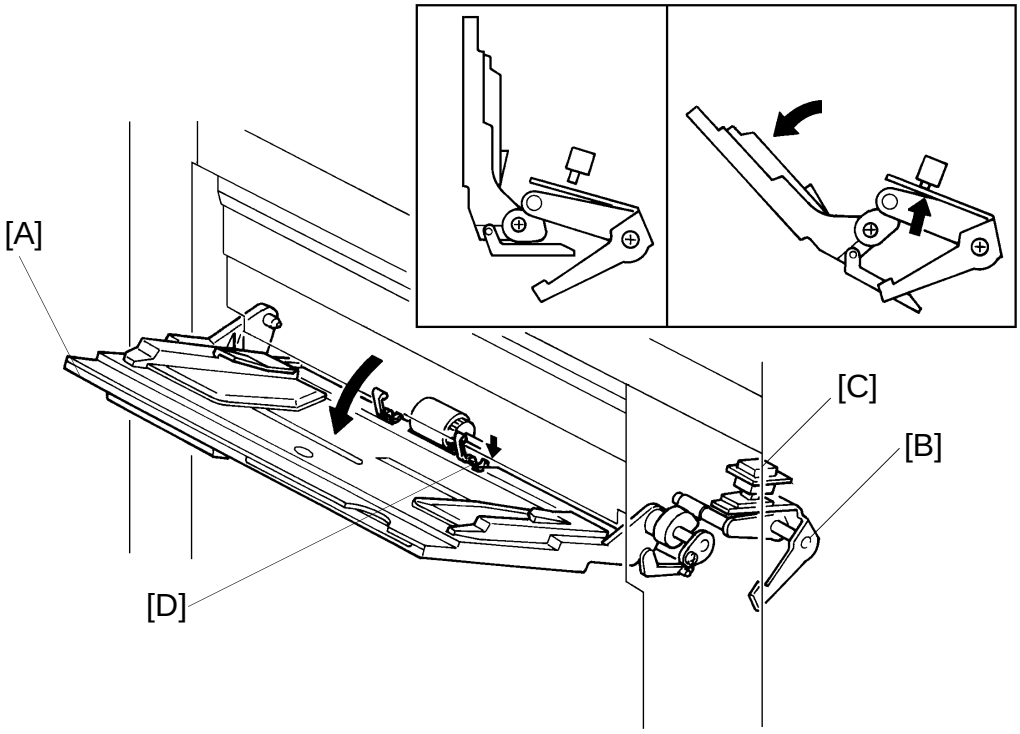

The manual feed table [A] uses the same feed mechanism as the first feed station and a maximum of 50 sheets of standard weight paper can be loaded. When the manual feed table is opened, a release lever [B] activates the manual feed table switch (SW7) [C] and releases the paper lift-up clutch unit mechanically to drop down the cassette bottom plate. At the same time the pick-up roller release solenoid turns on to release the pick-up roller and the paper end feeler [D] drops down into a slot in the manual feed table.

The manual feed table switch sends a LOW signal to the main board so that the Manual Feed indicator turns on and the pick-up roller is lifted up.

When paper is loaded onto the manual feed table, the manual feed is selected automatically.

10.9 PAPER REGISTRATION

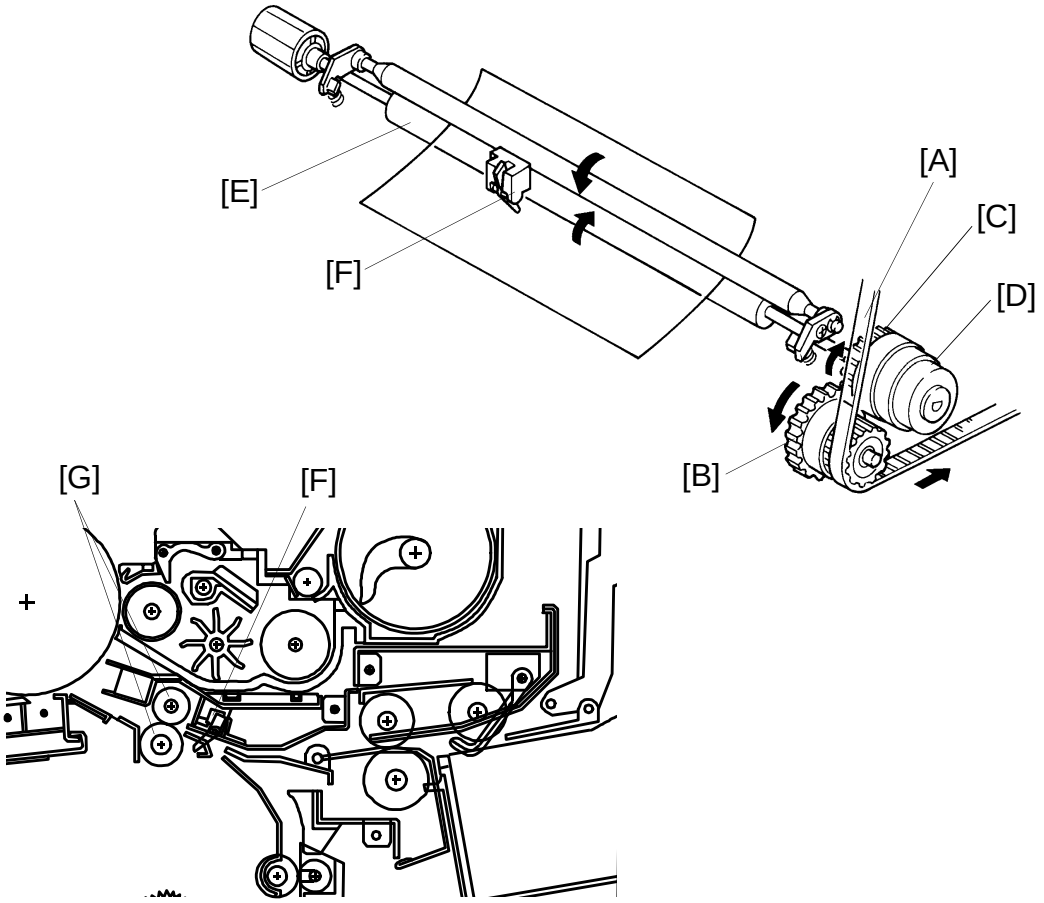

Main motor rotation is transmitted to the timing belt [A] through a series of gears. The timing belt rotate the relay gear [B] and then the registration roller clutch gear [C]. When the registration clutch [D] is energized, the rotation of the clutch gear is transmitted to the lower registration roller [E].

The registration rollers can be rotated by a knob in the front to ease misfed paper removal.

The registration sensor [F], which is positioned just before the registration rollers [G], controls the paper feed stop timing. The 1st paper feed clutch stays on for 120 milliseconds and the relay roller clutch (2nd and 3rd paper feed stations) stays on 114 milliseconds after the leading edge of paper actuates the registration sensor. At the end of the period, the CPU turns off the 1st paper feed clutch or the relay roller clutch. This delay allows time for the paper to press against the registration rollers and buckle slightly to correct skew.

The CPU energizes the registration clutch 1.4 seconds (1st feed station) after the Start key is pressed. The registration rollers then feed the paper to the image transfer section.

10.10 PAPER FEED AND MISFEED DETECTION TIMING

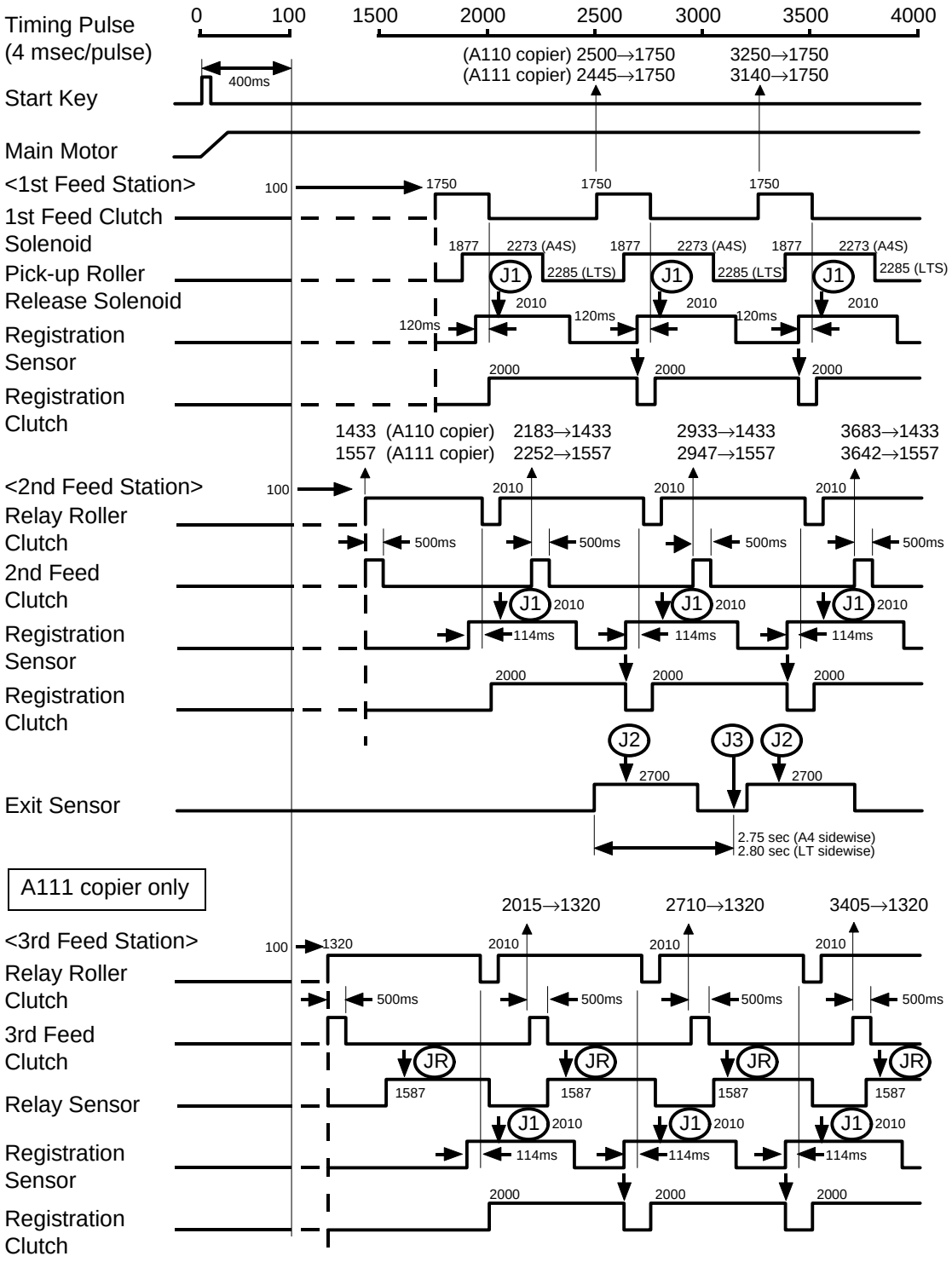

The registration sensor, the exit sensor and the relay sensor (A111 copier only) monitor the movement of the paper through the paper path. If the CPU determines that a misfeed exists, the Check Paper Path and the Misfeed Location indicators turn on. When the main switch is turned on, or the front cover or exit cover is closed, the CPU checks these sensors for initial misfeed. During the copy cycle, the CPU performs the following misfeed detection:

J1: Checks whether the registration sensor is actuated within 10 pulses (40 milliseconds) after the registration clutch turns on.

J2: Checks whether the exit sensor is actuated within 700 pulses (2.8 seconds) after the registration clutch turns on.

J3: Checks whether the copy paper has passed through the exit sensor 2.75 (A4 sideways) or 2.80 (Letter sideways) seconds after the exit sensor has been actuated.

(A111 copier only)

JR: Checks whether the relay sensor is actuated within 267 pulses (1.07 seconds) after the 3rd feed clutch turns on.

11. IMAGE FUSING

11.1 OVERVIEW

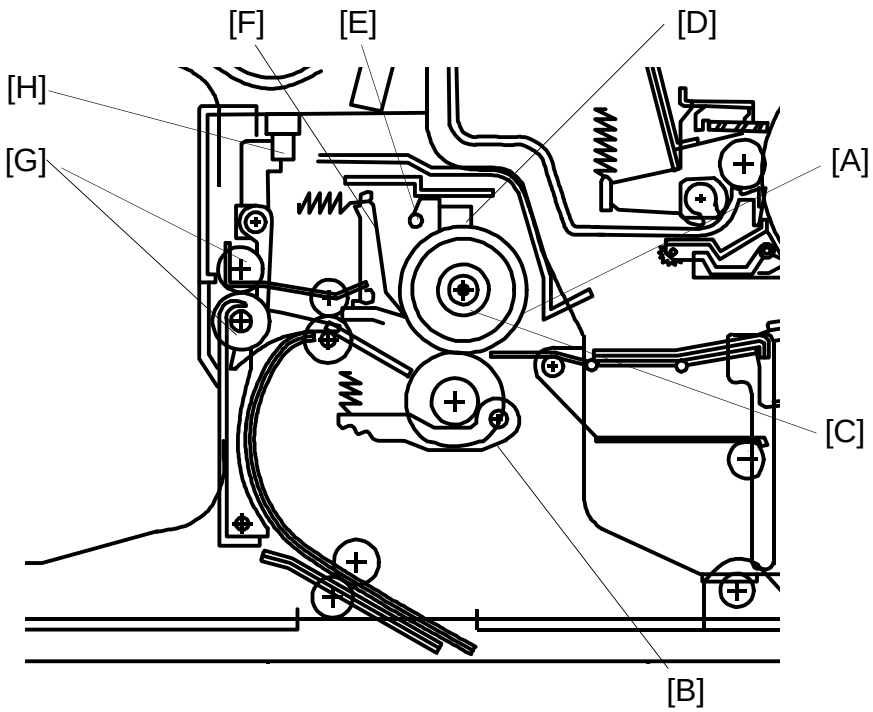

After the image is transferred, the copy paper enters the fusing unit. The image is fused to the copy paper by the process of heat and pressure through the use of a hot roller [A] and pressure roller [B].

The fusing lamp [C] located inside the hot roller is turned on and off to maintain the operating temperature of 185°C. The CPU monitors the hot roller surface temperature through a thermistor [D] which is in contact with the hot roller's surface. A thermofuse [E] protects the fusing unit from overheating.

The hot roller strippers [F] separate the copy paper from the hot roller and direct it to the exit rollers [G]. The exit sensor [H] monitors the progress of the copy paper through the fusing unit and acts as a misfeed detector while the exit rollers drive the copy paper to the copy tray. When the sorter is installed, the paper sensor on the sorter also functions as a misfeed detector.

11.2 FUSING DRIVE RELEASE MECHANISM AND COVER SAFETY SWITCH

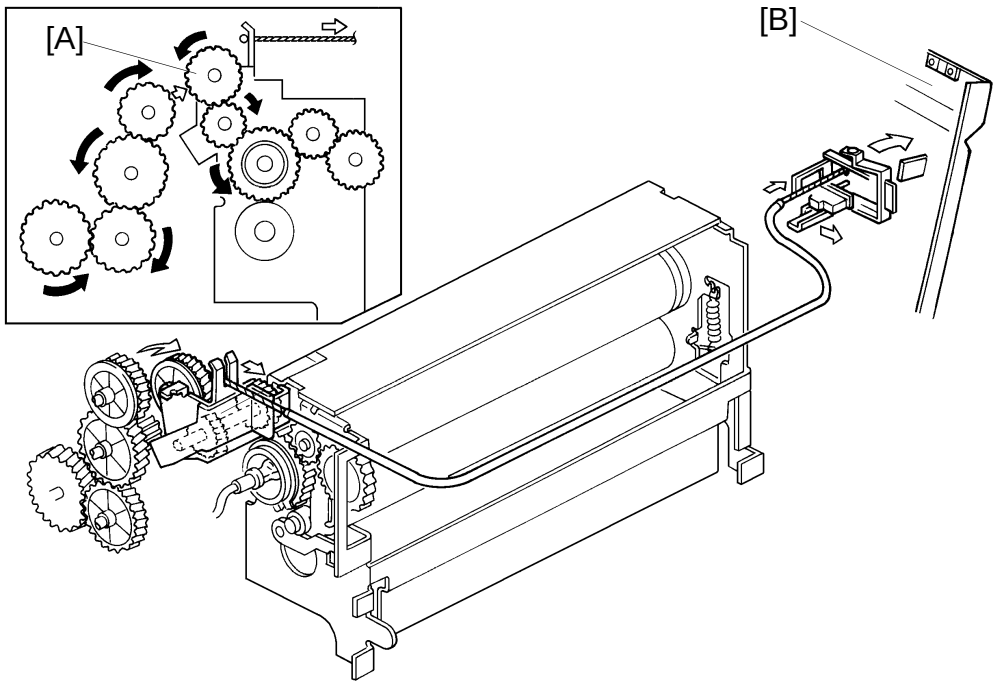

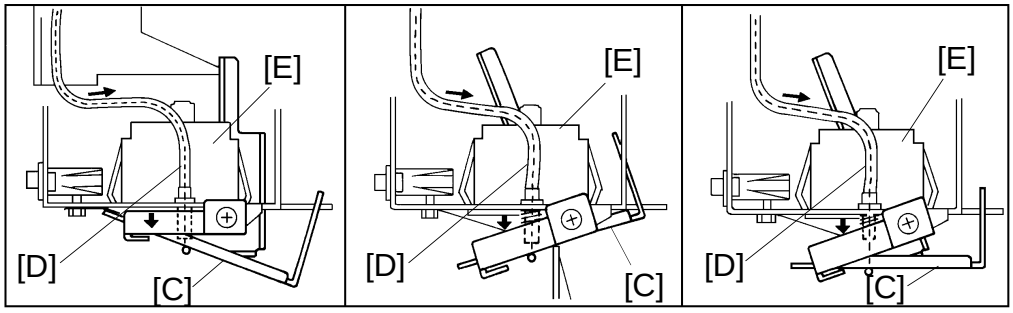

The front cover is opened. The exit cover is opened. The front cover and exit cover are opened.

The fusing unit drive release mechanism automatically disengages the fusing unit drive gear [A] when the front cover [B] or the exit cover is opened. This allows the fusing unit drive gear to rotate freely so that misfed paper can be easily removed.

When the front cover and/or the exit cover is opened, the actuator plate [C] pulls release wire [D] and the fusing unit drive gear is disengaged.

The actuator plate also releases the cover safety switch [E] removing all power from the copier and the optional peripherals.

11.3 FUSING LAMP CONTROL

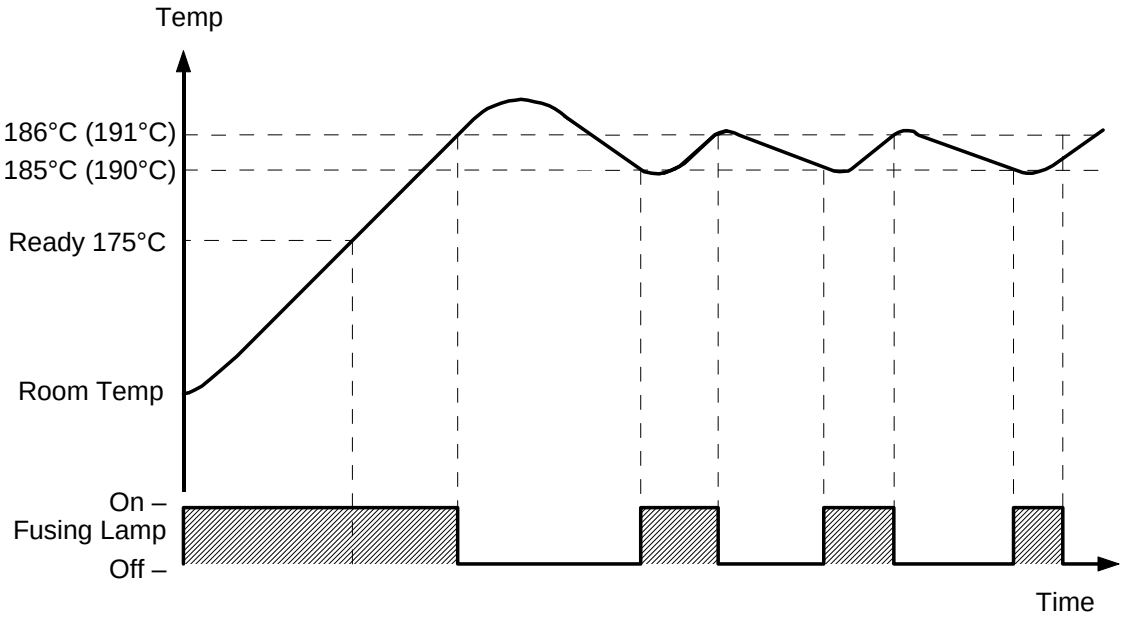

When the main switch is turned on, the CPU starts sending a trigger pulse to the fusing control circuit. The fusing control circuit then applies power to the fusing lamp. The power is applied until the CPU detects the ready temperature (175°C) through the fusing thermistor. This should take less than 60 seconds. Once the CPU detects the ready temperature, the CPU changes the timing of the fusing lamp on/off check (checks whether the fusing lamp should be turned on or off) from every 1 second to every 5 seconds.

During warm-up, the thermistor's temperature lags behind the real hot roller's temperature. As a result, when the thermistor senses the ready temperature, the hot roller is already at or near the operating temperature. At this time the Ready indicator turns on.

After that, the trigger pulse is turned on constantly when thermistor detects a temperature less than 185°C (190°C for European version), and is turned off when the thermistor detects 186°C (191°C for European version).

If the fusing lamp (780 W) is turned on or off when the exposure lamp is on, the power supplied to the exposure lamp will fluctuate, possibly degrading the copy image. To prevent this, the fusing lamp does not switch during scanning; it stays either on or off.

11.4 ENERGY SAVER FUNCTION

When the copier is not in use, the energy saver function reduces the power consumption by decreasing the fusing temperature.

When the Energy Saver/Clear Modes key is pressed for over 1 second, the copier goes to the energy saver mode. The Energy Saver indicator turns on and all the other indicators turn off.

The energy saving ratio can be selected by SP86 as shown in the following table.

SP data (SP86)	Energy saving ratio without save energy mode	Fusing temperature	Warm-up time
0	Δ 56%	approx. 70°C	approx. 30 sec
1	Δ 34%	approx. 130°C	approx. 20 sec
2	Δ 28%	approx. 145°C	approx. 10 sec
3	Δ 10%	approx. 175°C	approx. 0 sec

Factory Setting: SP86 = 2

NOTE: The energy saving ratio in the above table are standard values measured in laboratory tests under controlled conditions. The actual ratios will vary depending on environmental conditions, copy modes, power supply conditions and measurement instruments.

The greater the energy saving ratio is, the longer the waiting time until the copier returns to the ready condition.

The copier returns to the ready condition (after a warm-up time) by the following actions:

1. Pressing any key except the Start key,
2. Opening the manual feed table or setting copy paper on it,
3. Opening the platen cover (A111 copier only),
4. Opening the DF or setting original on it.

When the auto energy saver mode (SP78) is selected, the copier automatically goes to the energy saver mode at the auto reset time selected by SP15.

11.5 FUSING LAMP CONTROL CIRCUIT

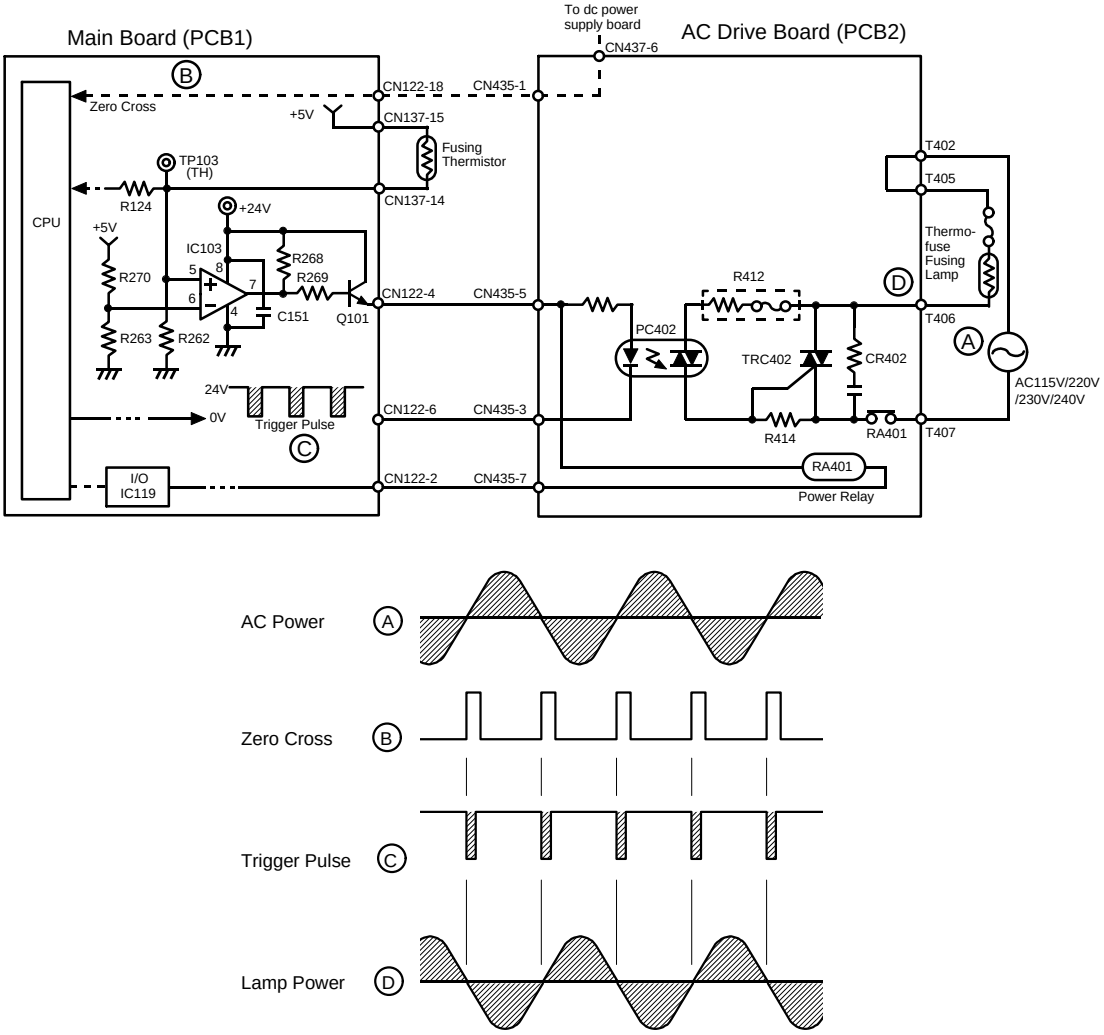

The main board monitors the fusing temperature through a thermistor. It also uses the zero cross signal generated by the dc power supply board to accurately control the applied power.

Normally, the voltage applied to the lamp is a full ac waveform. However, through SP29, fusing power can be phase controlled. (Normally, phase control is used only if the customer has a problem with electrical noise or interference.)

When the main switch is turned on, the main board starts to output a trigger pulse [C], which has the same timing as the zero cross signal [B], to the ac drive board. This trigger pulse allows maximum ac power to be applied to the fusing lamp. When the operating temperature is reached, the CPU stops outputting the trigger pulse (trigger goes HIGH) and the fusing lamp turns off.

11.5.1 Phase Control Mode

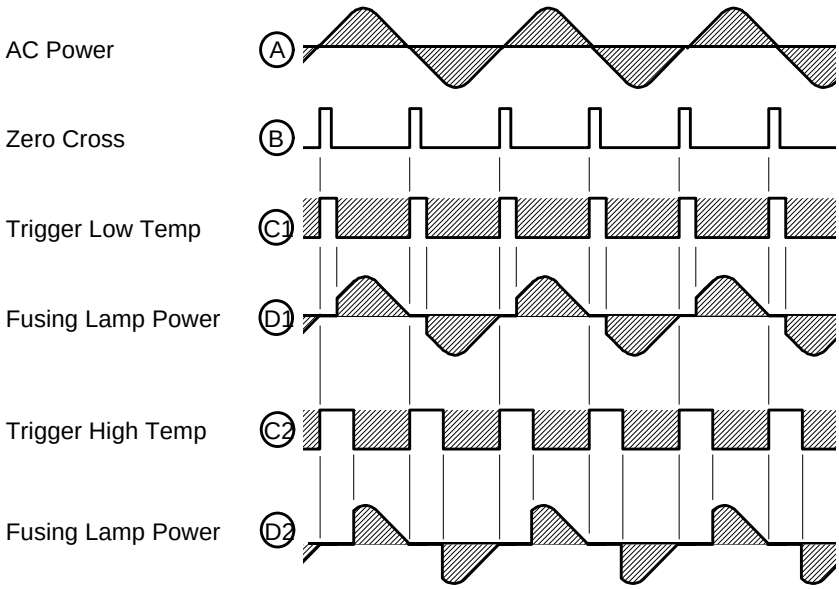

The main board sends the fusing lamp trigger pulse (LOW active) [C] to the ac drive board. PC402 activates TRC402, which provides ac power to the fusing lamp at the trailing edge of each trigger pulses. The trigger pulse goes HIGH when the main board receives the zero cross signal.

The amount of time that power is applied to the fusing lamp [D] depends on the temperature of the hot roller.

The trigger pulse (LOW part) is wider [C1] when the hot roller temperature is lower, and it is narrower [C2] when the hot roller is near the operating temperature.

11.5.2 Overheat Protection

IC103 and Q101 form an overheat protection circuit. When the fusing lamp is controlled within the normal range, pin 7 of IC103 stays LOW; therefore, Q101 stays on, allowing PC402 to operate. If the hot roller temperature reaches 240°C, the resistance of the thermistor becomes too low. At that time, pin 7 of IC103 becomes HIGH, turning off Q101 and stopping PC402. At the same time "E53" lights on the operation panel and the power relay (RA401) turns off.

Even if the thermistor overheat protection fails, a thermofuse is installed in series with the fusing lamp. If the thermofuse temperature reaches 169°C, the thermofuse opens, removing power from the fusing lamp.

SECTION 3

INSTALLATION

1. INSTALLATION REQUIREMENTS

1.1 ENVIRONMENT

1. Temperature Range: 10°C to 30°C (50°F to 86°F)
2. Humidity Range: 15% to 90% RH
3. Ambient Illumination: Less than 1,500 lux. (Do not expose to direct sunlight.)
4. Ventilation: Room of more than 30 m^3. Room air should turn over at least 30 m^3/hr/person.
5. Ambient Dust: Less than 0.15 mg/m^3 (4 x 10^{-3} oz/yd^3)
6. The machine must not be subjected to sudden temperature changes. Do not install the machine where it will be directly exposed to cool air from an air conditioner or hot air from a heater.
7. Avoid placing the machine in an area filled with corrosive gas.
8. Do not install at any location over 2,000 meters (6,500 feet) above sea level.
9. Place the machine on a strong and level base.
10. Avoid any area where the machine may be subjected to frequent, strong vibrations.

1.2 MACHINE LEVEL

1. Front to back: Within 5 mm (0.2") of level
2. Right to left: Within 5 mm (0.2") of level

Make sure that the machine is level using a carpenter’s level.

1.3 MINIMUM SPACE REQUIREMENTS

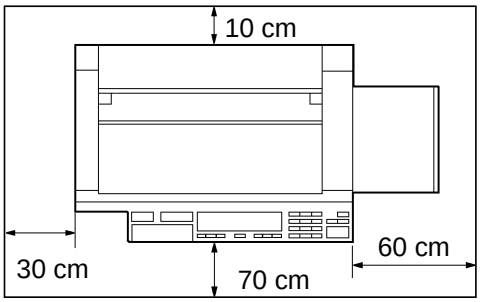

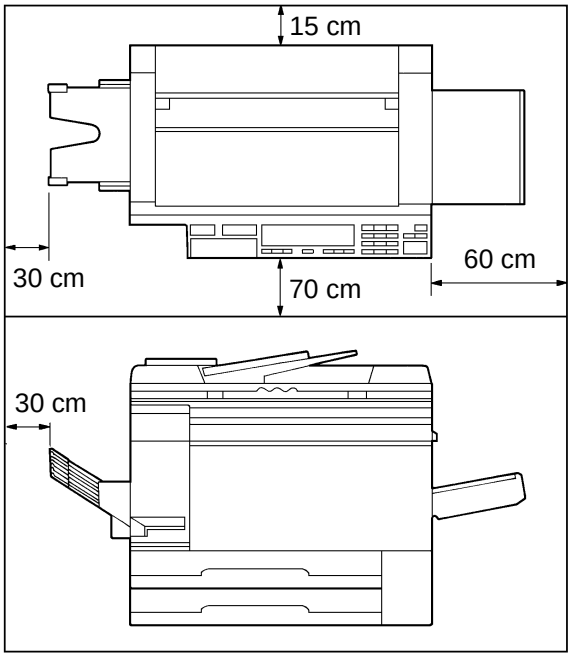

1. Front : 70 cm (27.6")
2. Back : 10 cm (3.9")
   : 15 cm (6.0")
   (when the sorter is installed.)
3. Right : 60 cm (31.5")
4. Left : 30 cm (11.8")

NOTE: Make sure there is at least 15 cm (6.0") clearance behind the copier so that the sorter will not be damaged when it is opened.

1.4 POWER REQUIREMENTS

1. Input voltage level:

   110 V/60 Hz: More than 15 A (for Taiwan)
   115 V/60 Hz: More than 15 A (for North America)
   220, 230, 240 V/50 Hz: More than 8 A (for Europe)

2. Permissible voltage fluctuation: ±10%
3. Do not set anything on the power cord.

NOTE: a) Be sure to ground the machine. (Do not connect the grounding wire to a gas pipe.)
b) Make sure the plug is firmly inserted in the outlet.
c) Avoid multiwiring.

2. INSTALLATION PROCEDURE

2.1 ACCESSORY CHECK

Check the quantity and condition of the accessories in the box according to the following list:

1. Receiving Tray ..... 1 pc
2. Cassette - Small ..... 1 pc
3. Paper Size Decal ..... 1 pc
4. Paper Size Actuator ..... 1 set
5. Outer Decal - Symbol Explanation ..... 1 pc
6. Multi Lingual Decal (Europe only) ..... 1 pc
7. 230 V Caution Decal (Europe only) ..... 1 pc
8. Voltage Conversion Procedure (A110, Europe only) ..... 1 pc
9. Operating Instructions (Except Europe) ..... 1 pc
10. New Equipment Condition Report ..... 1 pc
11. Envelope for NECR (U.S.A. only) ..... 1 pc
12. User Survey Card (U.S.A. only) ..... 1 pc

2.2 COPIER INSTALLATION

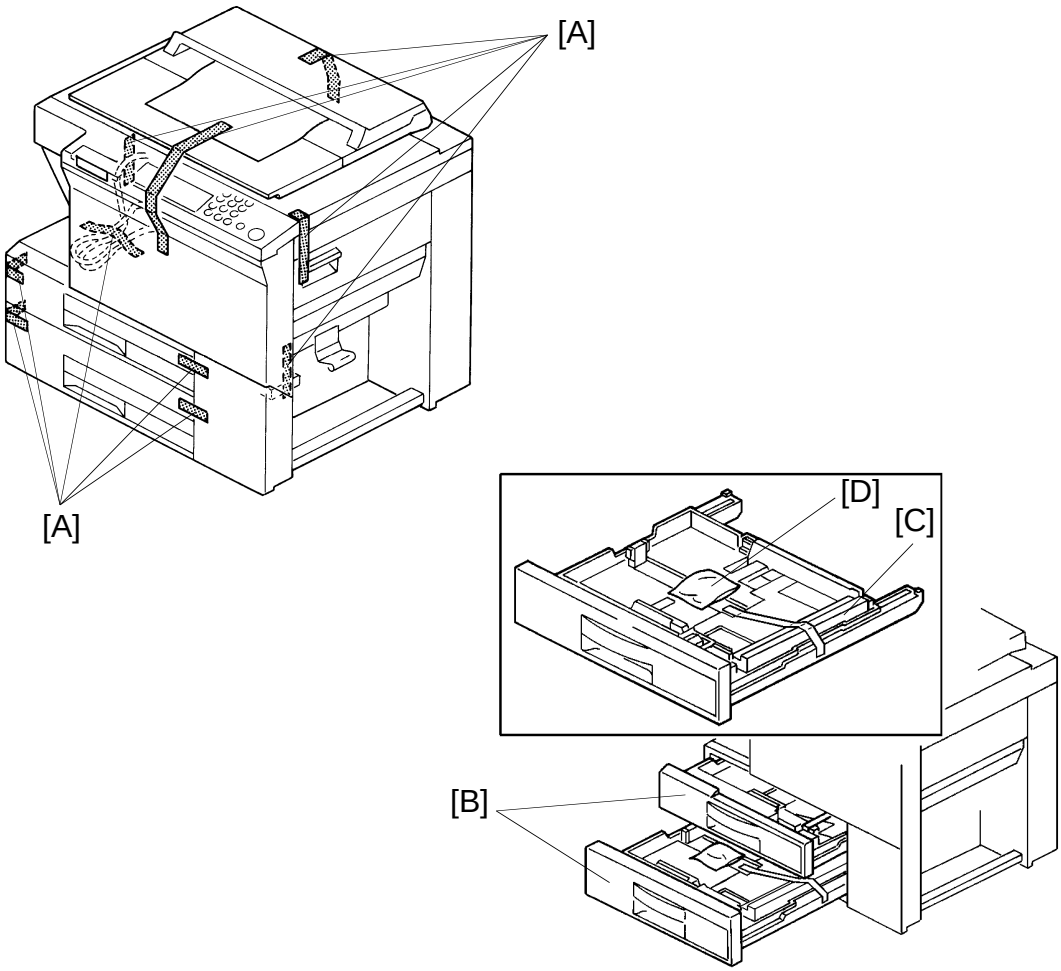

1. Remove the strips of tape [A] from the copier at the locations shown.
2. Pull out the paper trays [B] and remove the foam block [C], tape, and silica gel [D].

   NOTE: A110 copier has one paper tray.

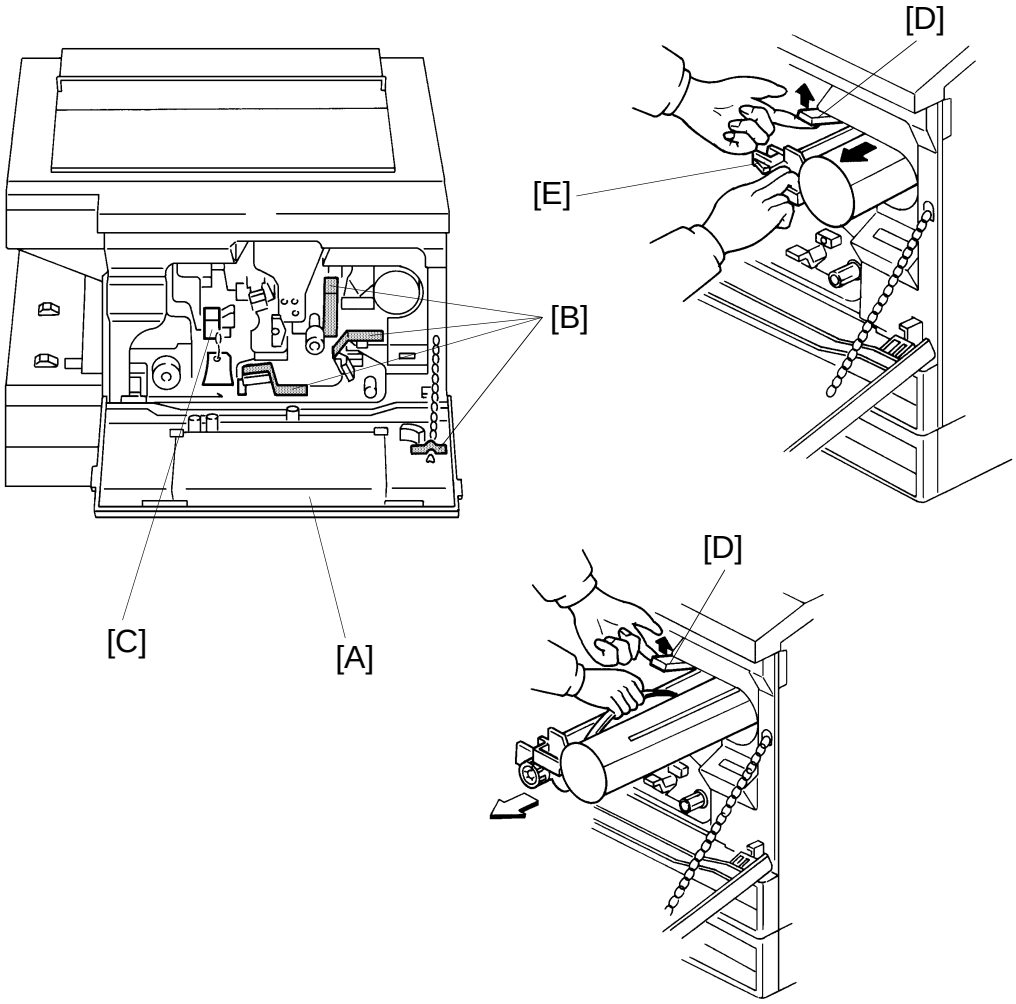

3. Open the front cover [A], and remove the strips of tape [B] as shown.
4. Remove the lock plate [C] from the cleaning blade release lever.

   NOTE: Save the lock plate for future use.
5. Raise the development unit lock lever [D], pull out the development unit [E], and place it on a clean sheet of paper.

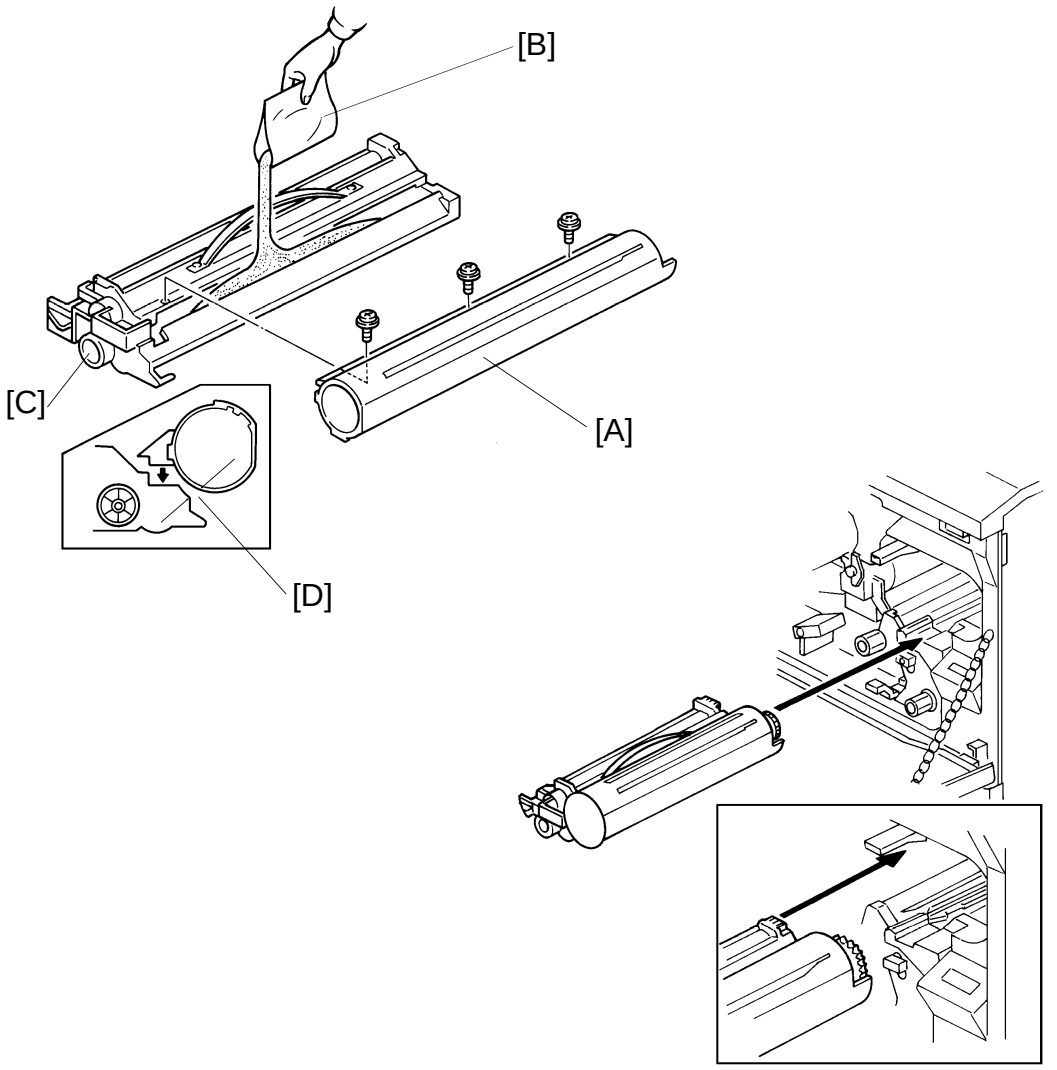

6. Remove the toner supply unit [A] from the development unit (3 screws).
7. Pour one pack of developer [B] into the development unit while turning the development roller knob [C] counterclockwise to distribute the developer.
8. Reinstall the toner supply unit on the development unit.

   NOTE: Make sure that there is no gap [D] between the toner supply unit and the development unit.
9. Reinstall the development unit as shown.

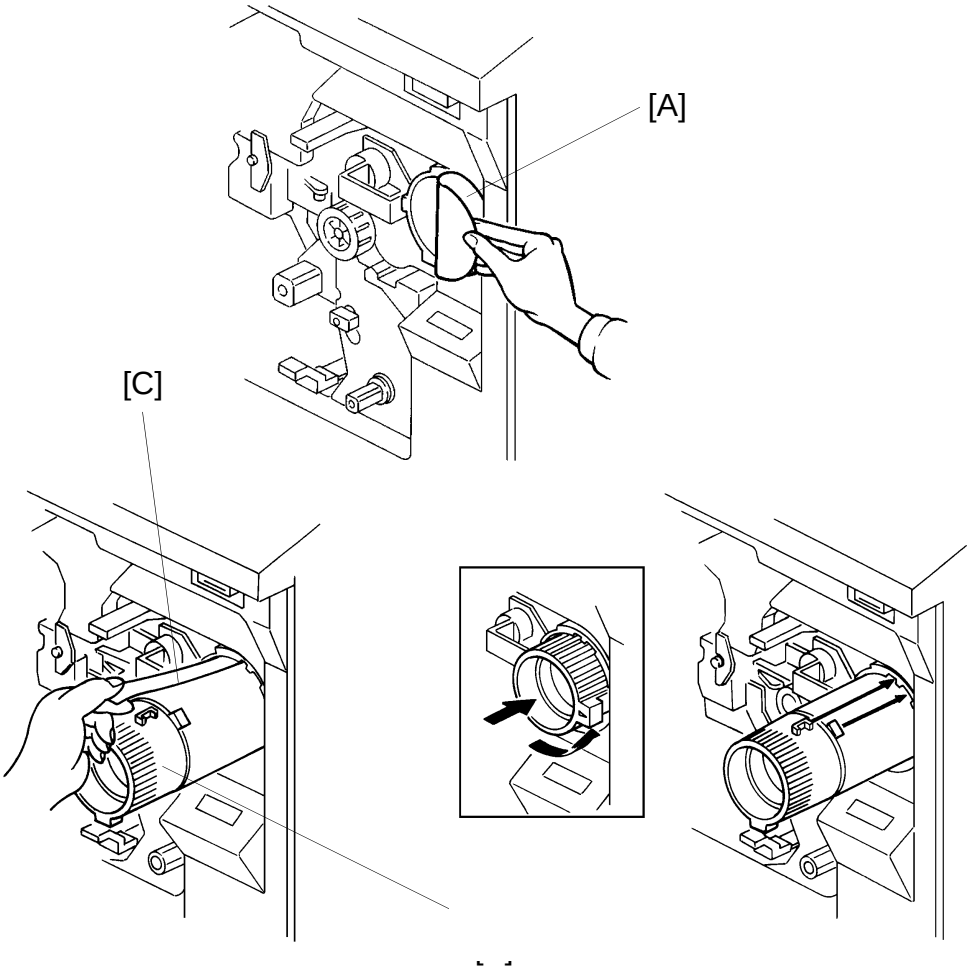

10. Remove the seal [A] from the toner supply unit.
11. Shake the toner cartridge [B] well and insert the cartridge while pulling off the seal [C]. Then, install the cartridge as shown.
12. Close the front cover.

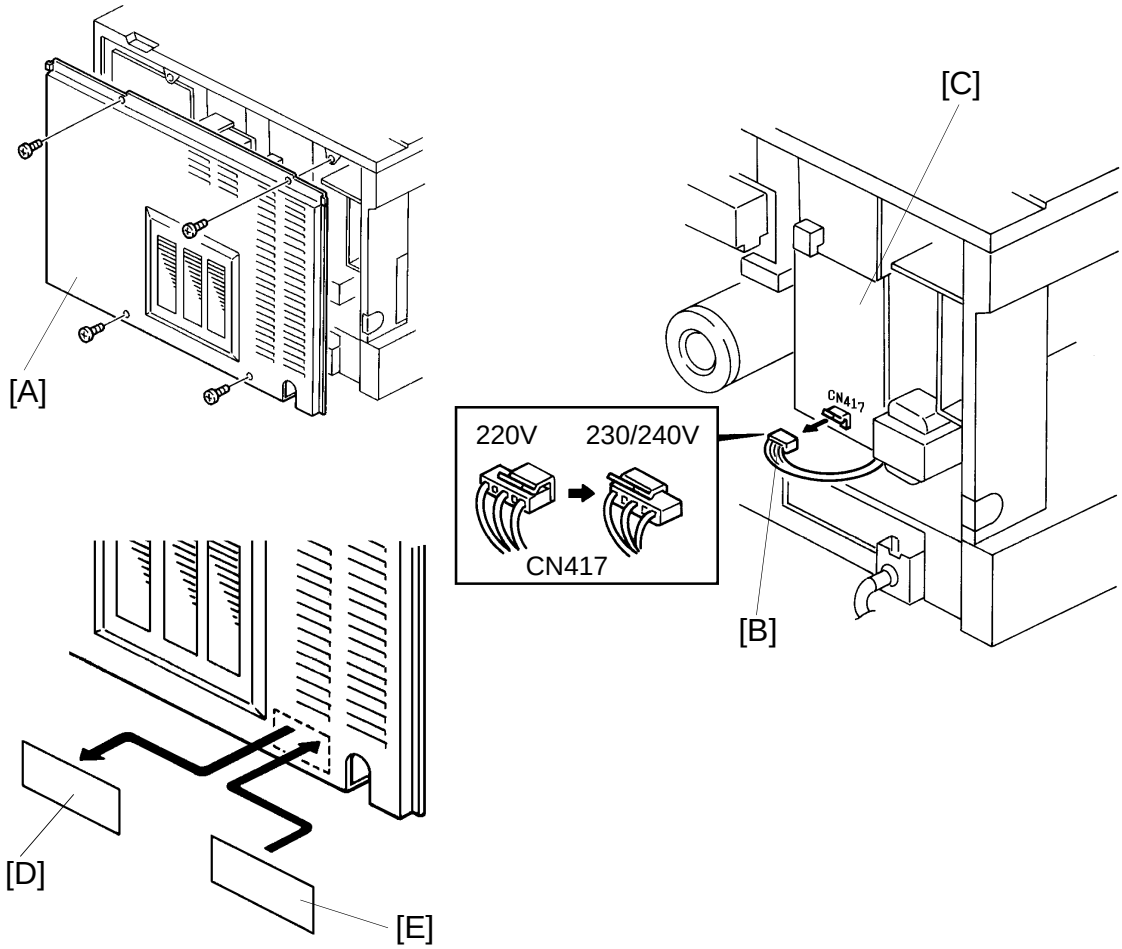

13. Plug in the machine and turn on the main switch, then place a few sheets of white paper (A3 or 11" x 17") on the exposure glass and lower the platen cover.

CAUTION: Step 14 must be done only in 230 and 240 volt areas (A110 copier only). A111 copier does not need to have this step performed.

14. Perform the conversion from 220 V to 230 and 240 V as follows:
    1) Remove the rear cover [A] (4 screws).
    2) Disconnect the transformer connector [B] (3P/White) on the ac drive board [C] from CN417 and reconnect it to CN417 as shown in the illustration.
    3) Reinstall the rear cover.
    4) Remove the 220 V caution decal [D] from the rear cover [A].
    5) Adhere the 230 V caution decal [E] (enclosed with the machine) to the rear cover. (This step is required only in 230 volt areas.)

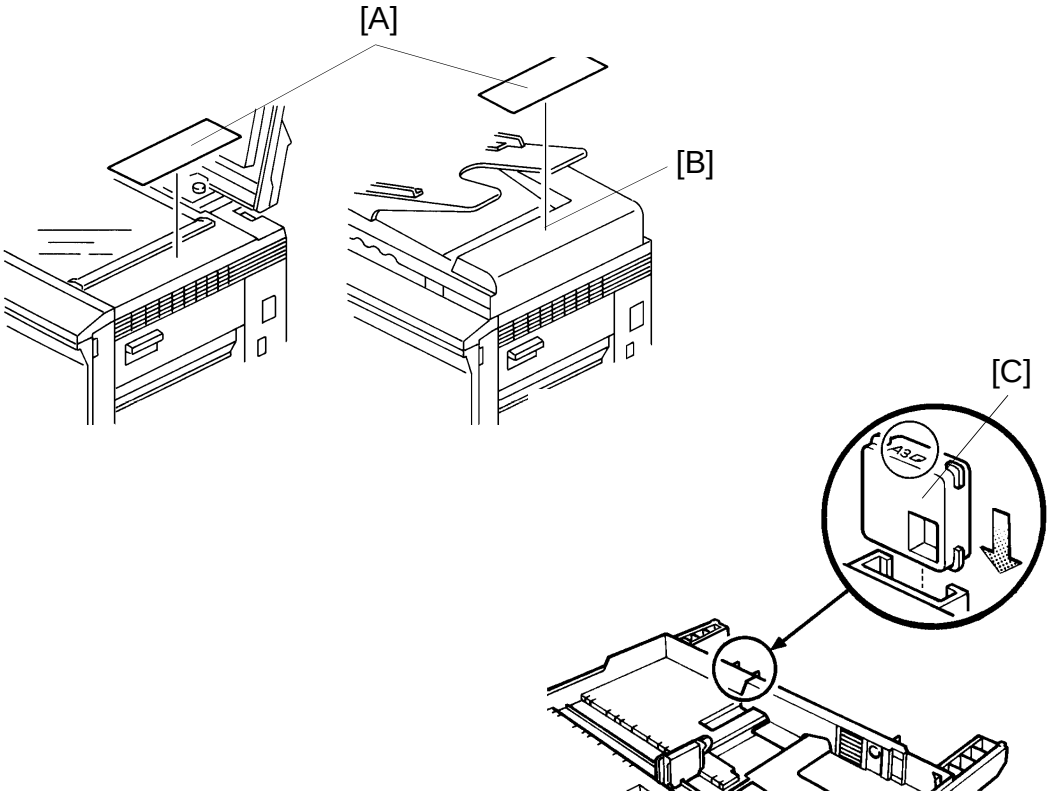

15. Perform the developer initial setting.
    1) To access the SP mode, press the following keys in the order given.
        1. Energy Saver/Clear Modes key
        2. Clear/Stop key
        3. Enter key
    2) Perform SP65 in the following sequence.

SP Mode Number		Procedure
65	Developer Initial Setting	Enter "65" using the numeral keys and press the Enter key. "20" will be displayed in the copy counter. Press the Start key for initial setting.

16. Place the outer decal (symbol explanation) [A] on the upper cover and install the receiving tray.

    NOTE: If the DF is installed on the machine, place the outer decal [A] on the DF [B] as shown.

17. Load paper into the cassette and/or paper trays according to the instruction decal.

18. Change the position of paper size block [C] to display the correct paper size.

19. Check the machine operation and copy quality.

2.3 CASSETTE MODIFICATION

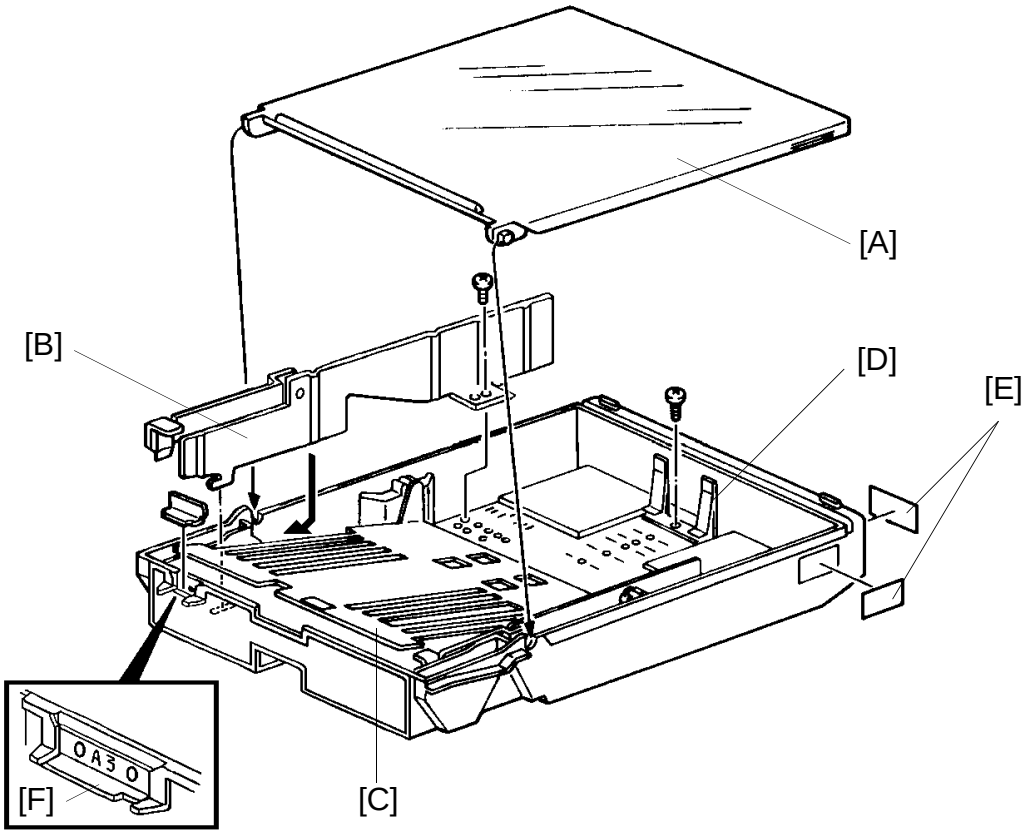

1. Take off the cassette cover [A].
2. Remove the side fences [B] (1 screw each) and the bottom plate [C].
3. Reposition the rear fence [D] in the desired paper size position (1 screw).

   NOTE: Paper size positions are shown on the inside of the cassette.
4. Reinstall the bottom plate.
5. Reinstall the side fences in the desired size positions.
6. Attach the proper paper size decals [E] on the cassette at the positions shown.
7. Insert the actuator plate [F] in the slot on the front of the cassette as shown.

2.4 KEY COUNTER HOLDER INSTALLATION (Option)

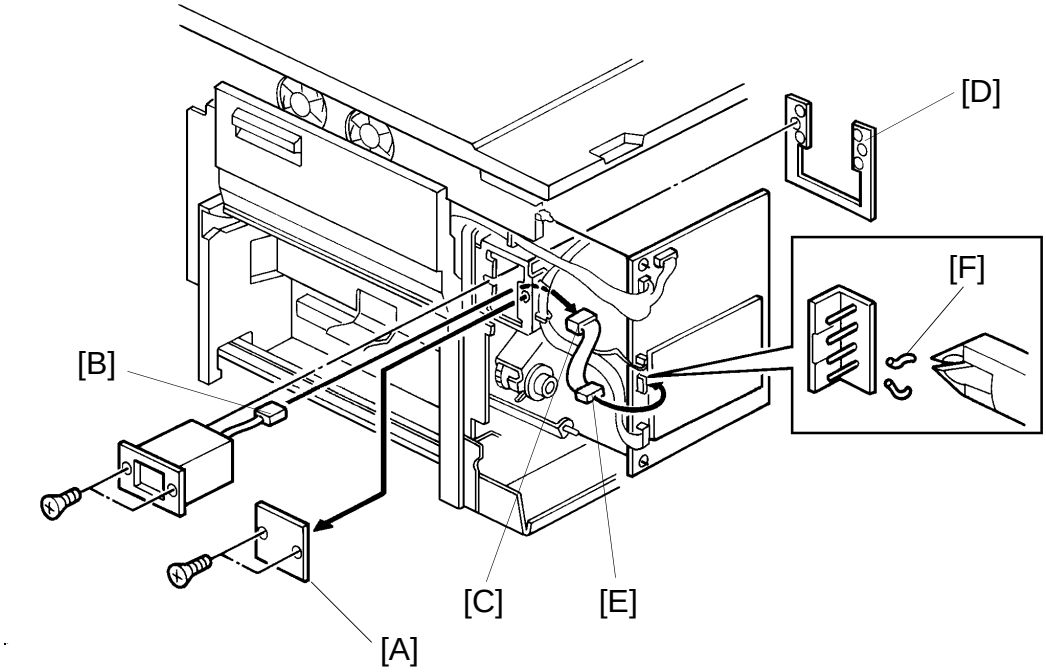

1. Make sure that the main switch is turned off.
2. Open the front cover and the manual feed table.
3. Remove the right cover (4 screws).
4. Remove the key counter cover [A] (2 screws).
5. Connect the 4P connector [B] of the key counter holder to the key counter harness [C] through the key counter access hole.
6. Position the fixing plate [D] as shown in the illustration and insert the key counter holder.
7. Align the holes in the fixing plate with the mounting holes of the key counter holder and secure the key counter holder (2 screws).

   NOTE: The fixing plate has three different hole sizes. Use the holes that match those on the counter that you are installing.
8. Connect the other end of the key [E] counter harness to CN127 on the main board.
9. Cut off the jumper wire (JP101) [F] with a pair of pliers.
10. Reinstall all covers.

2.5 OPTICS ANTI-CONDENSATION HEATER INSTALLATION (Option)

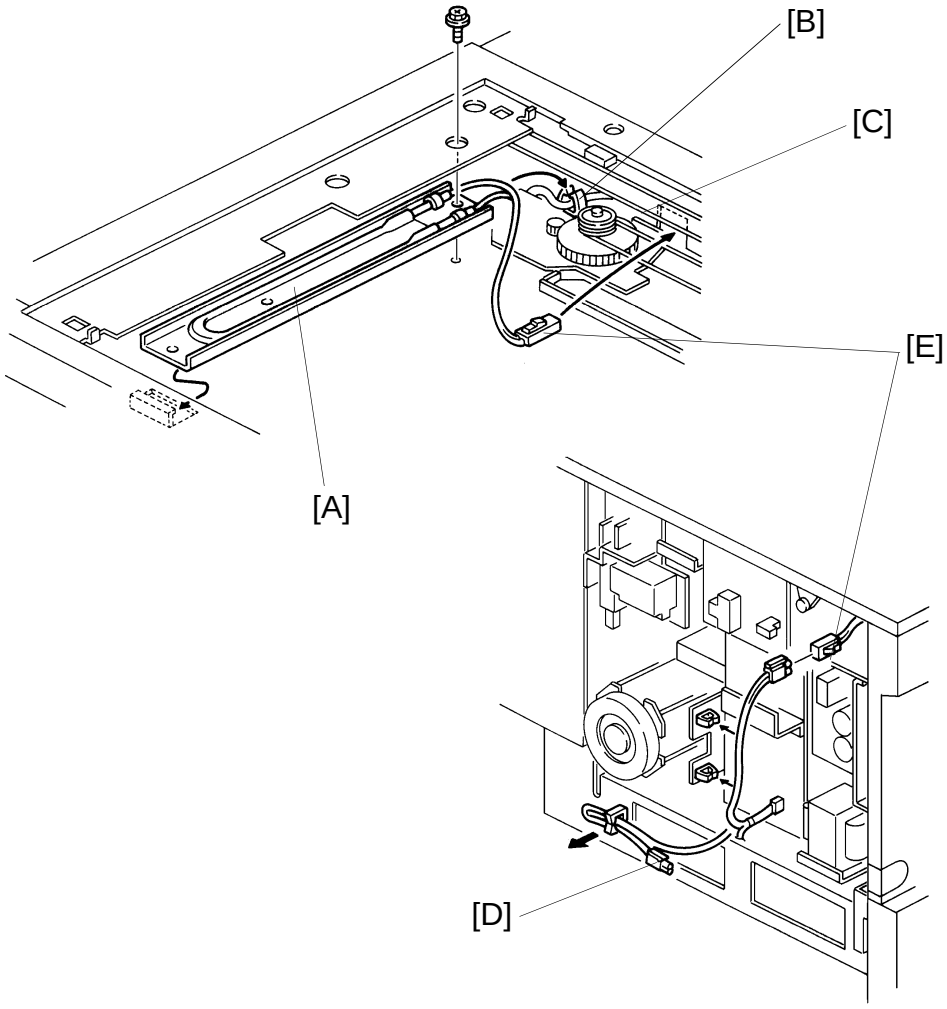

1. Make sure that the main switch is turned off.
2. Remove the rear cover.
3. Remove the exposure glass. (See Exposure Glass Removal.)
4. Move the 1st and 2nd scanner unit all the way to the right.
5. Install the optics heater [A] in the optics cavity as shown (1 screw).
6. Mount the anti-condensation heater harness in the following way.
   - Harness clamp [B].
   - Rear frame cutout hole [C].
7. Rewire the heater harness [D] as shown in the illustration and connect it to the anti-condensation heater connector [E].

2.6 COLOR DEVELOPMENT UNIT INSTALLATION (Option)

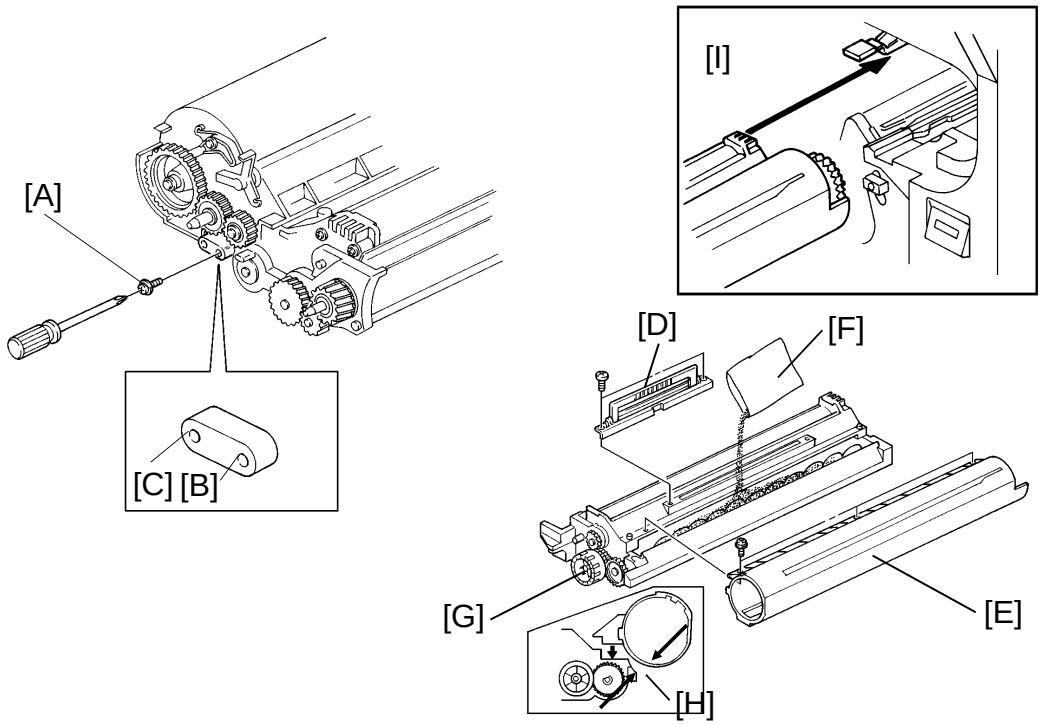

NOTE: The two tapping screws (M4 x 6) are enclosed as accessories.

1. Screw the tapping screws [A] into the holes at the rear side of the development unit as shown. Refer to the following table to determine the correct combination of screws for each color.

	Red	Green	Blue
Screw Hole [B]	Set	Not Set	Set
Screw Hole [C]	Not Set	Set	Set

2. Remove the filter bracket [D] (2 screws). (The development unit handle is attached.)
3. Remove the toner supply unit [E] from the development unit (3 screws).
4. Pour one pack of developer [F] into the development unit while turning the development roller knob [G] counterclockwise to distribute the developer.
5. Reinstall the toner supply unit and the filter bracket on the development unit.

   NOTE: Make sure that there is no gap [H] between the toner supply unit and the development unit.
6. Install the development unit as shown [I].

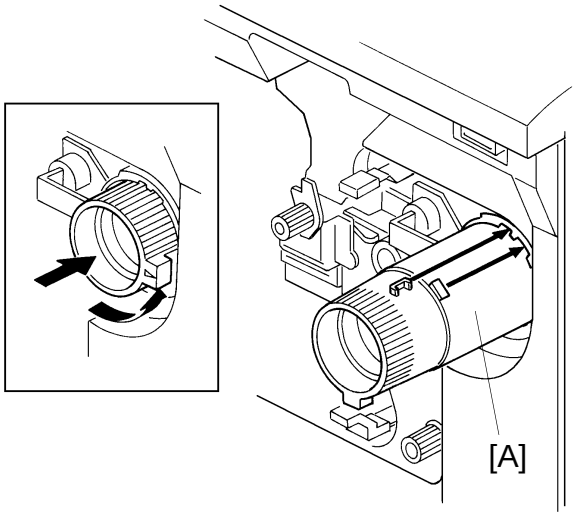

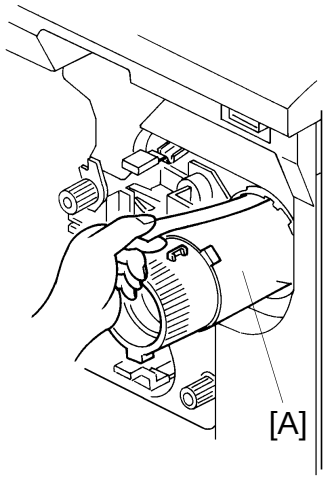

7. Shake the toner cartridge [A] well to distribute the toner evenly inside the cartridge. Then, install the cartridge as shown.
8. Turn on the main switch and place a few sheets of white paper (A3 or 11" x 17") on the exposure glass. Then, lower the platen cover.
9. Perform Color Developer Initial Setting and Toner Supply Unit Initial Setting. To access the SP modes, press the following keys in order given.

   (1) Clear Mode key
   (2) Clear/Stop key
   (3) Enter key

   Access SP modes in the following sequence:

Step	SP MODE NUMBER	PROCEDURE
1	10 Color Developer Initial Setting	Enter "10" using the numeral keys and press the Enter key. "20" will be displayed in the copy counter. Press the Start key for initial setting.
2	63 Toner Supply Unit Initial Setting	Enter "63" using the numeral keys and press the Enter key while holding down the Point key.

10. Make a copy and check the copy quality.

2.7 DC POWER SUPPLY UNIT INSTALLATION (A110 Copier Only) (Option)

ACCESSORY CHECK

Check the quantity and condition of the accessories in the box according to the following list:

1. DC Power Supply Unit 1
2. Transformer 1
3. Locking Support 1
4. Locking Support Bracket 1
5. DC Power Supply Unit Bracket 1
6. DF Harness 1
7. Hexagon Head Tapping Screw - M3 x 6 6
8. Philips Pan Head Screw - M3 x 6 1

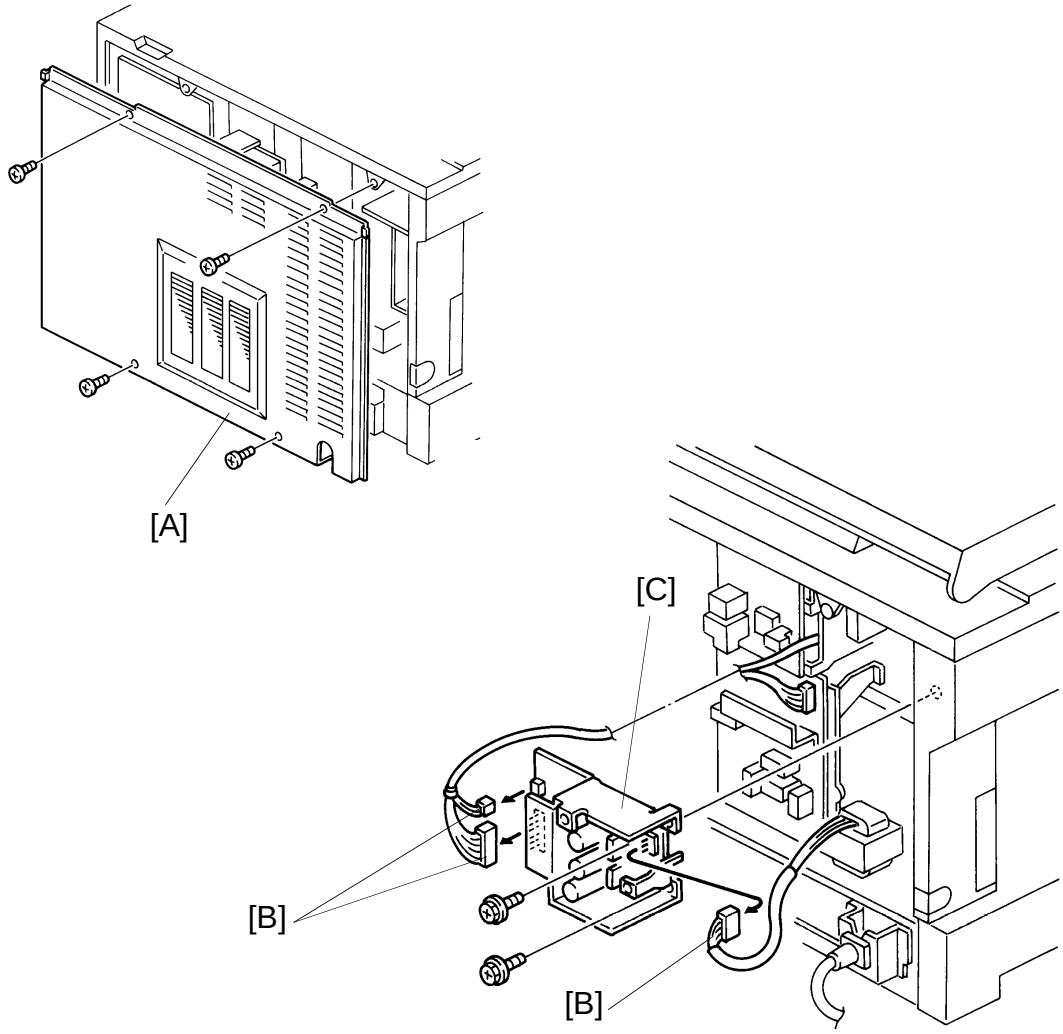

1. Make sure that the main switch is turned off and the power supply cord of the copier is unplugged.
2. Remove the rear cover [A] (4 screws).
3. Disconnect the connectors [B] from the main dc power supply unit [C] on the copier.
4. Remove the main dc power supply unit (2 screws and 2 locking supports).

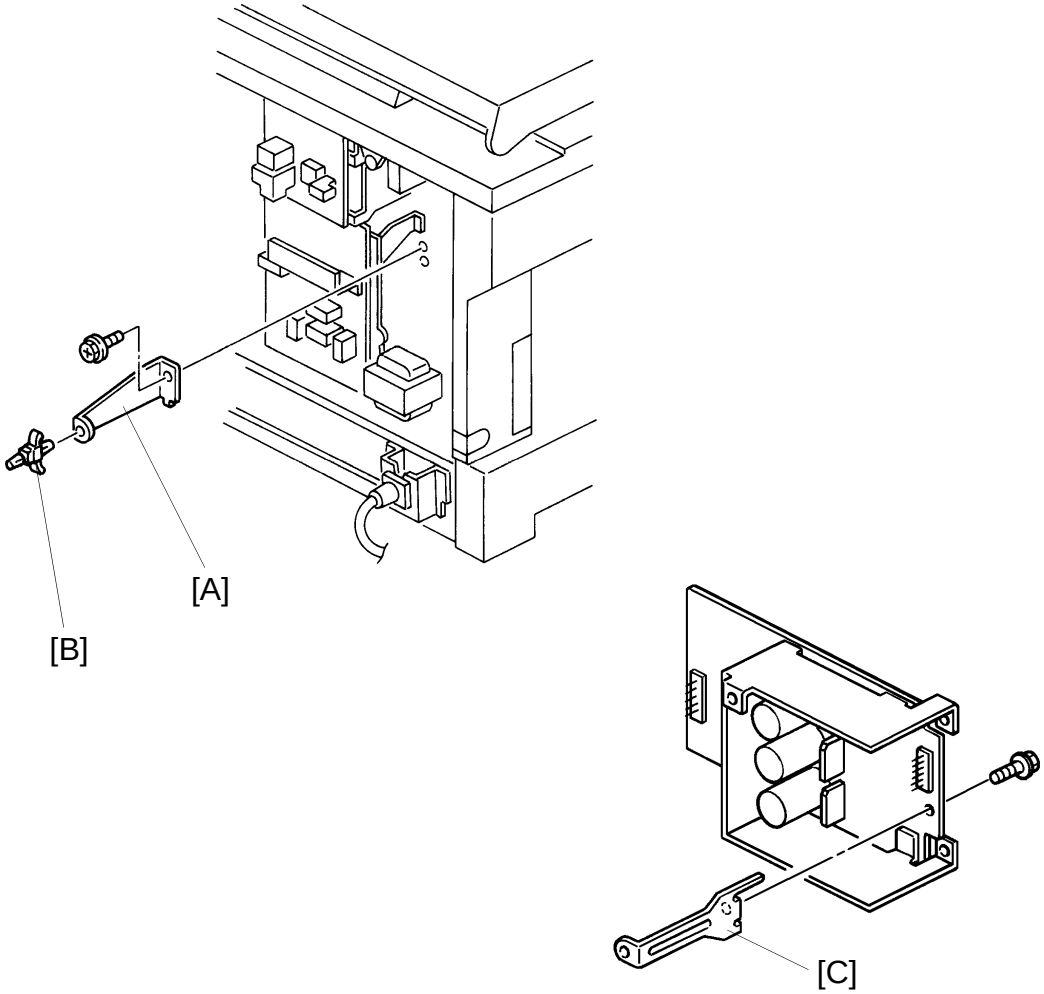

5. Install the locking support bracket [A] on the rear frame (1 screw) and install the locking support [B] on it.
6. Install the dc power supply unit bracket [C] on the main dc power supply unit as shown.
7. Reinstall the main dc power supply unit.
8. Re-connect the connectors on the main dc power supply unit.

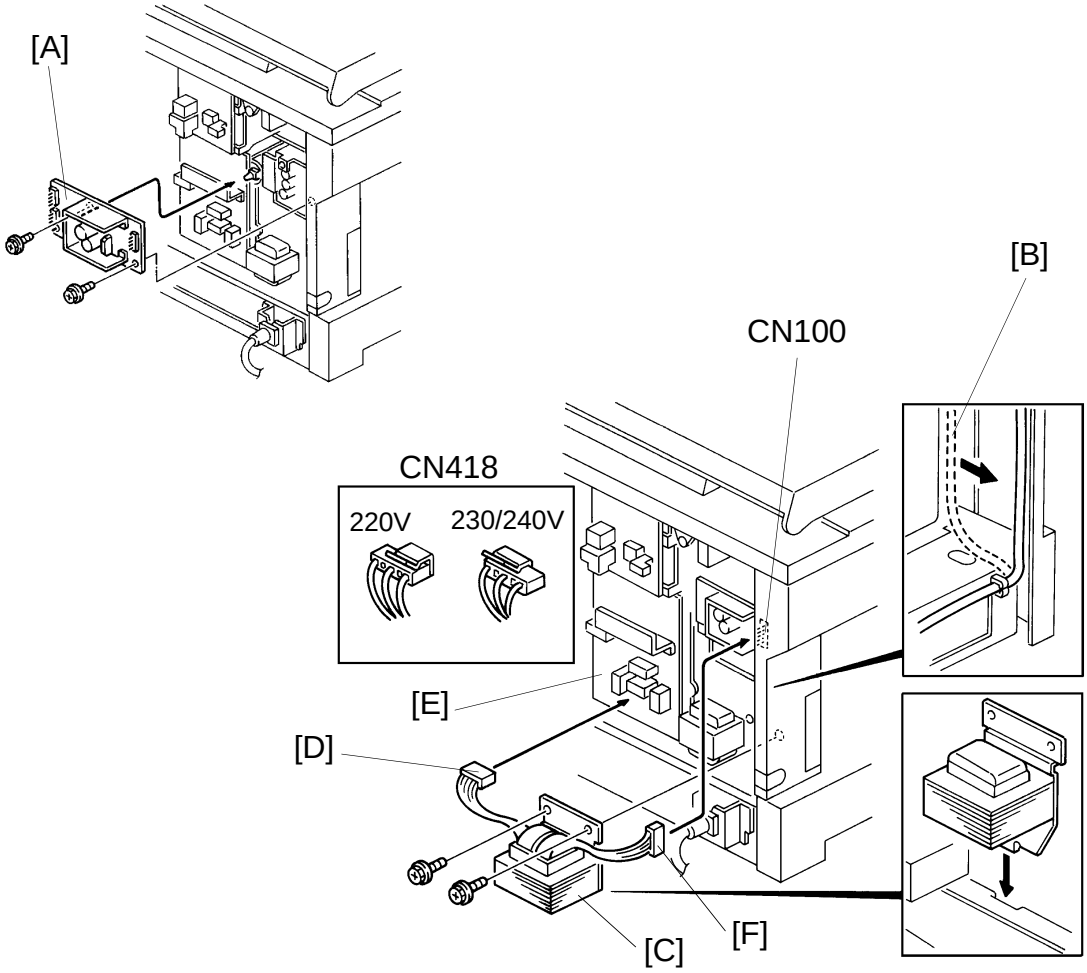

9. Install the optional dc power supply unit [A] (2 screws and locking support) as shown.
10. To prevent damage to the ac harness [B] when installing the optional transformer [C], reposition the harness as shown.
11. Install the optional transformer [C] (2 screws).
12. Connect the connector [D] (3P/Black) of the transformer to CN418 on the ac drive board [E] and the connector [F] (4P/White) to CN100 on the optional dc power supply unit as shown.

    NOTE: 1. The connectors of the transformer must be positioned differently for 220 V and 230/240 V areas.
    2. Connect the DF harness. (See the installation procedure for DF.)

SECTION 4

SERVICE TABLES

1. SERVICE REMARKS

1.1 GENERAL CAUTION

To prevent physical injury, keep your hands away from the mechanical drive components in the following two cases:

1. If the Start key is pressed before the copier finishes the warm-up cycle, (Ready indicator starts blinking) the copier starts making copies as soon as the warm-up cycle is completed.
2. If the main switch is turned on while the cassette is in the down position, the main motor starts rotating as soon as the warm-up period is completed.

1.2 DRUM AND DRUM UNIT

The organic photoconductor drum is comparatively more sensitive to light and ammonia gas than a selenium drum.

1. Never expose the drum to direct sunlight.
2. Never expose the drum to direct light of more than 1,000 Lux for more than a minute.
3. Never touch the drum surface with bare hands. When the drum surface is touched with a finger or becomes dirty, wipe with a dry cloth or clean with wet cotton. Wipe with a dry cloth after cleaning with wet cotton.
4. Never use alcohol to clean the drum; alcohol dissolves the drum surface.
5. Store the drum in a cool, dry place away from heat.
6. Take care not to scratch the drum as the drum layer is thin and is easily damaged.
7. Never expose the drum to corrosive gases such as ammonia gas.
8. Always keep the drum in the protective sheet when inserting or pulling the drum unit out of the copier to avoid exposing it to bright light or direct sunlight. This will protect the drum from light fatigue.
9. Before pulling out the drum unit, place a sheet of paper under the drum to catch any spilled toner.
10. Drum initial setting (SP66) must be performed when a new drum is installed.

    NOTE: This is not necessary at installation of a new machine as the drum initial setting is performed at the factory.

11. Dispose of used drums according to local regulations.
12. Never loosen the two screws securing the drum support plate. The position of the drum support plate is set with a special tool at the factory to ensure the proper gap between the drum and the development roller.

1.3 CHARGE CORONA

1. Clean the corona wire by sliding the corona unit in and out. (The cleaner pads come into contact with the corona wire when the corona unit is slid all the way out.) The wire and casing can also be cleaned with water or dry cloth. Do not use sandpaper or solvent.
2. Do not touch the corona wire with oily hands. Oil stains may cause white bands on copies.
3. Make sure that the corona wire is correctly positioned between the cleaner pads and that there is no foreign material (iron filings, etc.) on the casing.
4. When installing a new corona wire, be sure to place the damper ring in the front end block. (See Charge Corona Wire Replacement.)
5. When adjusting the charge corona current, always make sure that the center of the drum shoe is aligned with the corona wire.
6. Clean the charge grid with a blower brush (not with a cloth).
7. The corona height should only be adjusted in the following two cases:
   a) When the front end block is replaced
   b) When the drum charge current is uneven

1.4 OPTICS

1. The position of following parts are very difficult to adjust. Do not adjust them.
   a) 4th/5th Mirror Home Position Sensor
   b) Lens Home Position Sensor
   c) Lens and 4th/5th Mirror Guide Rails

   NOTE: Before removing a sensor bracket to replace a sensor, mark the position of the bracket. Check the copy image (magnification and focus) to determine the exact location of the sensor.

2. When installing the exposure glass, make sure that the red mark on the edge of the glass faces up. This side has received a special treatment to make it smoother and generate less static electricity. This is especially important when the DF is installed.
3. Clean the following parts with a dry cloth:
   a) Lens and 4th/5th Mirror Guide Rails
   b) Scanner Guide Plates
4. Clean the exposure glass with glass cleaner and a dry cloth to reduce the amount of static electricity on the glass surface.
5. Only use a clean soft cloth damped with alcohol or water to clean the mirrors and lens.
6. Clean the green color filter with a dry cloth and discharge static electricity by touching it with your finger. Do not clean the filter with alcohol or water because the filter has an antistatic coating.
7. Do not touch the following parts with bare hands:
   a) Reflectors
   b) Exposure Lamp
   c) Mirrors and Lens
8. Perform the V_L correction clear (SP94) whenever the mirrors, lens, and green color filter are cleaned, before the light intensity (SP48) is adjusted.
9. After adjusting the light intensity (SP48), adjust the ADS reference voltage.
10. Do not adjust VR401 on the ac drive board.

1.5 DEVELOPMENT UNIT

1. Be careful not to nick or scratch the development roller sleeve.
2. Place the development unit on a sheet of paper after removing it from the copier. This prevents any small metal objects (staples, clips, E-rings, etc.) from being attracted to the development roller and getting inside the unit.
3. Be careful not to bend the bias terminals.
4. Never loosen the two screws securing the bias terminal block. The position of the terminal block is set with a special tool at the factory to ensure the proper gap between the drum and the development roller.

5. Never loosen the four screws securing the doctor plate. The position of the doctor plate is set with a special tool at the factory to ensure the proper gap between the doctor blade and the development roller.
6. Clean the drive gears after removing used developer.
7. Never load black developer or toner into the color development unit; never load color developer or toner into the black development unit.
8. Developer initial setting is necessary when the developer is replaced.
   a) Black Developer Initial Setting (SP65)
   b) Color Developer Initial Setting (SP10)
9. Dispose of used developer according to local regulations.

1.6 TONER SUPPLY

1. Clean the image density sensor with a blower brush.
2. Do not touch the sensor pattern with bare hands.
3. The ID sensor adjustment (Vsg Adjustment [SP54]) is required in the following cases:
   a) When the ID sensor is replaced
   b) When the main board is replaced
   c) When the drum has been replaced and Vsg is out of specification
   d) When there have been problems with toner supply and Vsg is out of specification
4. Color toner supply unit initial setting (SP63) must be done when the color development unit is installed or the toner supply unit is replaced.

1.7 TRANSFER AND SEPARATION

1. Clean the corona wires and casing with water or a dry cloth.
2. When adjusting the corona current, always make sure that the center of the drum shoe is aligned with the corona wire.

1.8 CLEANING UNIT

1. When servicing the cleaning unit, be careful not to damage the edge of the cleaning blade.
2. Do not touch the cleaning brush with bare hands.

3. Before pulling out the cleaning unit, place a sheet of paper under it to catch any spilled toner.
4. When inserting the cleaning unit into the copier, be sure the cleaning unit rail is properly engaged with the unit guide rail on the copier.
5. Empty the used toner tank every service call.
6. Dispose of used toner according to local regulations.

1.9 FUSING UNIT

1. Be careful not to damage the edges of the hot roller strippers or their tension springs.
2. Do not touch the fusing lamp with bare hands.
3. Make sure that the fusing lamp does not touch the inner surface of the hot roller.

1.10 PAPER FEED

1. Do not touch the pick-up, feed, and reverse rollers with oily hands.
2. Non-standard size copy paper may stick to the cassette side or back fences and misfeed. Reposition the fences.
   Example:
   With an A4/11" x 8$_{1/2}$" (sideways) cassette, the proper paper width is 296 mm. 297.5 mm width paper sticks to the cassette fences and does not feed correctly.
3. The side fences and the end fence of the paper tray should be positioned correctly so that they securely hold the paper. Otherwise, paper misfeeds may occur.
4. A worn out registration roller causes paper to crease. It should be replaced.

1.11 DOCUMENT FEEDER

1. Do not bend the DF interface harness at a sharp angle. This damages the fiber optics cables.
2. When installing or reinstalling the document feeder, make sure that the document feeder is in the open position.
3. A build-up of static electricity on the exposure glass can cause originals to misfeed. Apply silicon oil to the glass to reduce the amount of friction.

1.12 SORTER

1. The sorter has two types of bins, odd numbered and even numbered, which are installed in an alternating sequence. Be sure to install them in the correct order.
2. If the bins do not operate smoothly, lubricate the slot liners and transfer wheels using grease 501 or an equivalent type.

1.13 OTHERS

1. When replacing the main board, remove the RAM pack from the old main board and place it on the new main board. Then, install the new main board in the copier.
2. After installing the new main board with the new RAM pack, the "Clear All Memory (SP99)" procedure (see page 4-10 and 11) must be performed. (Do not perform SP99 if you have placed the old RAM on the new main board.)
3. Never perform SP99 (Clear All Memory) except for the following two cases:
   a) When the copier malfunctions due to a damaged RAM pack
   b) When replacing the RAM pack
4. Whenever SP99 (Clear All Memory) is performed, all the steps of the "Clear All Memory (SP99)" procedure must be followed. Otherwise, copy quality might be seriously affected.
5. When replacing a sensor, do not overtighten the screws. This may damage the sensor.
6. If a customer claims that red image areas on the original do not appear on the copy, instruct the customer to select the desired image density by the Manual Image Density key.
7. Tighten securely the screws used for grounding the following PCBs when reinstalling them.
   - Main Board
   - AC Drive Board
   - DC Power Supply Board
   - TC/SC Power Pack
   - CC/Grid/Bias Power Pack

2. SERVICE PROGRAM MODE

2.1 SERVICE PROGRAM MODE OPERATION

The service program (SP) mode is used to check electrical data and change modes or adjustment values.

2.1.1 Service Program Access Procedure

There are three ways to access an SP mode.

1) By key operation (for customers and sales representatives)
2) By key operation (for service representatives)
3) By turning on DPS101-4 on the main board (for service representatives)

Access Procedure 1 - Key Operation
(for customers and sales representatives)

Accessible SP modes: SP10, SP11, SP13, SP15, SP16, SP17, SP18, SP19, SP20, SP21, SP26, SP34, SP63, SP65, SP78, SP86, SP90, SP91, SP92, SP93, and SP96 (Refer to the service program mode table for details.)

1. Turn on the main switch.
2. Press the Energy Saver/Clear Modes.
3. Press the Clear/Stop key.
4. Press the Recall/Enter key. "5" will blink in the copy counter and the ADS indicator will blink.
5. Enter the desired SP mode number using the number keys.

   NOTE: To cancel an SP mode number after entering it, press the Clear/Stop key.
6. Press the Recall/Enter key.

   NOTE: To enter a different SP mode number, press the Recall/Enter key and follow steps 5 and 6.
7. To leave SP mode, press the Energy Saver/Clear Modes key.

Access Procedure 2 - Key Operation (for service representatives)

Accessible SP modes: All SP modes except for SP27, SP98, and SP99

1. Turn on the main switch.
2. Press the Energy Saver/Clear Modes key.
3. Press the Clear/Stop key.
4. Press the Recall/Enter key. "5" will blink in the copy counter and the ADS indicator will blink.
5. Enter the desired SP mode number using the number keys.

   NOTE: a) To cancel an SP mode number after entering it, press the Clear/Stop key.
   b) "." is displayed instead of "1" in the Copy Counter when SP mode numbers over "100" are entered. The maximum number is "131".

6. Press the Recall/Enter key while holding down the Point (".") key to view data.

   NOTE: To enter a different SP mode number, press the Recall/Enter key and follow steps 5 and 6.

7. To leave SP mode, press the Energy Saver/Clear Modes key.

Access Procedure 3 - DPS 101-4 (for service representatives)

Accessible SP modes: All SP modes including SP27, SP98, and SP99

1. Turn the main switch off.
2. Remove the rear cover and turn on DPS101-4, then turn on the main switch. "5" will blink in the copy counter and the ADS indicator will blink.
3. Enter the desired SP mode number using the number keys.

   NOTE: a) To cancel an already entered program, press the Clear/Stop key.
   b) "." is displayed instead of "1" in the Copy Counter when SP mode numbers over "100" are entered. The maximum number is "131".

4. Press the Recall/Enter key to view data.

   NOTE: To enter a different SP mode number, press the Recall/Enter key and follow steps 3 and step 4.

5. To leave SP mode, turn off DPS101-4.

2.1.2 Change Adjustment Values or Modes

1. Follow steps 1 to 6 in Access Procedure 1 and 2, or steps 1 to 4 in Access Procedure 3.
2. The factory-set value/mode or the default setting will be displayed in the Magnification indicator.
3. Enter the desired value or mode using the number keys and then press the Recall/Enter key.
4. To leave SP mode, press the Energy Saver/Clear Modes key (Access Procedure 1 and 2) or turn off DPS101-4 (Access Procedure 3).

2.1.3 Memory Clear Procedure

– Clear Counters (SP98) –

NOTE: This SP mode clears the following counters:
- SP88: PM Counter Display
- SP91: User Code Counter Display
- SP100: 1st Feed Station Copies
- SP101: 2nd Feed Station Copies
- SP102: 3rd Feed Station Copies (A111 copier only)
- SP105: Duplex Copies
- SP106: DF Originals
- SP120: Total Service Calls
- SP121: Optics Section Service Calls
- SP122: Exposure Lamp Service Calls
- SP124: Fusing Section Service Calls
- SP125: Duplex Unit Service Calls
- SP130: Total Misfeeds
- SP131: Number of Misfeeds by Location
- User Program

1. Turn off the main switch.
2. Turn on DPS101-3 and 4 on the main board and turn on the main switch.
3. Enter "98" using the number keys and press the Recall/Enter key.
4. Enter "1" using the number keys and press the Recall/Enter key.

   NOTE: "1" blinks 4 times when the above procedure is completed.
5. Turn off the main switch.
6. Turn off DPS101-3 and 4.
7. Turn on the main switch to resume normal copier operation.

– Clear All Memory (SP99) –

CAUTION: Memory all clear mode (SP99) clears all the correction data for copy process control and software counters, and returns all the modes and adjustments to the default settings. Normally, this SP mode should no be performed.

This procedure is required only when the copier malfunctions due to a damaged RAM pack or when replacing the RAM pack.

1. Turn off the main switch.
2. Turn on DPS101-3 and 4 on the main board and turn on the main switch.
3. Enter "99" using the number keys and then press the Recall/Enter key.
4. Enter "1" using the number keys and press the Recall/Enter key.

   NOTE: The data "1" blinks 5 times when the above procedure is completed.
5. Turn off the main switch and DPS101-3 and 4.
6. Replace the OPC drum with a new one.

CAUTION: Since the drum rotation time (SP58) for the drum wear correction and the drum counter (SP69) for the Vp correction have been cleared, the old drum cannot be used. If the old drum is used after all memory is cleared, dirty backgrounds or toner scattering may occur.

7. Replace the developer with a new one.

CAUTION: Since the toner density level data (black toner: SP64, red toner: SP80, green toner: SP81, blue toner: SP82) and the developer counter (no SP mode display) for the Vd correction have been cleared, the old developer cannot be used. If the old developer is used after all memory is cleared, dirty backgrounds, toner scattering, or light copies may occur.

8. Clean the optics, sensors, and the inside of the copier.
9. Turn on the main switch.

10. Refer to the "SP MODE FACTORY SETTING DATA" sheet located in the left inner cover and enter the data in the following SP modes:
    (1) SP40: Registration Buckle - 3rd Feed
    (2) SP41: Lead Edge Erase Margin Adjustment
    (3) SP42: Registration Adjustment
    (4) SP43: Vertical Magnification Adjustment
    (5) SP44: Horizontal Magnification Adjustment
    (6) SP45: Registration Buckle - 1st Feed
    (7) SP46: Registration Buckle - 2nd Feed
    (8) SP47: Focus Adjustment
    (9) SP60: Standard Image Density Grid Voltage
    (10) SP62: Standard ID Sensor Grid Voltage

11. Perform the following SP modes in sequence:
    (1) SP66: Drum Initial Setting
    (2) SP65: Black Developer Initial Setting
        SP10: Color Developer Initial Setting
    (3) SP54: Vsg Adjustment
    (4) SP48: Light Intensity Adjustment
    (5) SP56: ADS Reference Voltage Adjustment

12. Check copy quality and perform the necessary adjustments.



2.2 SERVICE PROGRAM MODE TABLE

1. A "❒" after the mode name means that copies can be made in SP mode.
   1) After the following SP mode numbers are entered, the copier goes automatically into copy mode when the Recall/Enter key is pressed while holding down the Point (".") key.
      SP mode numbers: SP5, SP6, SP52, SP55, and SP59
   2) After the following SP mode numbers are entered and the Recall/Enter key is pressed while holding down the Point (".") key, enter the desired input numbers or the data number for adjustment by the number keys. The copier goes automatically into copy mode when the Recall/Enter key is pressed.
      SP mode numbers: SP8, SP37, SP40, SP41, SP42, SP43, SP44, SP45, SP46, SP47, SP48, and SP79

   To make copies, enter the desired copy quantity, select the ID level and paper feed station, and then press the Start key.
2. A "○" before the mode number means that the mode can be accessed by customers and sales representatives.
3. In the *Function* column, comments (extra information) are in italics.
4. In the *Data* column, the default value is printed in bold letters.

Mode No.		Function	Data
5	Exposure Lamp OFF ❒	Exposure lamp OFF	
		Turn on DPS101-1, then press the Start key to start free run. Press the C/S key to stop free run. Press the R/# key in Ready mode to turn off this mode. *Use this mode for the scanner movement check. To save toner, remove the development unit.*	
6	Misfeed Detection Off ❒	Copies are made without misfeed detection.	
		Press the Start key to make a copy. Press the R/# key in Ready mode to turn off this mode. *Use this mode to check whether the paper misfeed was caused by a sensor malfunction.* *The total counter increments when copies are made in this mode.*	
8	Input Check ❒	Displays the input data from sensors and switches.	For data, see page 4-24 and 25.
9	Output Check	Electrical components turn on.	For data, see page 4-26 and 27.

Mode No.		Function	Data
°10	Color Developer Initial Setting	Used to set the new color developer condition. ***Initial setting is required when new developer is installed.*** *After color developer conditioning (20 cycles) is completed, the copier automatically returns to normal mode.*	
°11	All Indicators ON	Turns on all the indicators on the operation panel. *To turn off the indicators, press the R/# key.*	
°13	Side Edge Erase	Selects the width of the side erase margin in Erase Edge mode (Program key + "7" + R/# key) or Erase Center and Edge mode (Program key + "8" + R/# key). *0: 13.5 mm (B4, B5, 10" x 14")* *13 mm (A3, A4, *)* *12 mm (8 1/2" x 14", 8 1/2" x 13", 8 1/2" x 11", 8 1/2" x 5 1/2")* *11 mm (A4R, A5, 8" x 13", 8" x 10 1/2", 8" x 10", 11" x 17", 11" x 8 1/2", 11" x 15")* *10 mm (B5R, B6)* *1: 7.5 mm (B4, B5, 10" x 14")* *6 mm (8 1/2" x 14", 8 1/2" x 13", 8 1/2" x 11", 8 1/2" x 5 1/2", A4R, A5, 8" x 13", 8" x 10 1/2", 8" x 10")* *5.5 mm (A3, A4, *)* *5 mm (B5R, B6)* *3.5 mm (11" x 17", 11" x 8 1/2", 11" x 15")*	**0: Normal** 1: Narrower
°15	Auto Reset Time	Selects auto reset time of 1 or 3 minutes, or cancels this mode.	**0: 1 min.** 1: 3 min. 2: None
°16	Count Up/Down	Selects count up or count down.	**0: Up** 1: Down ("1" is the default for NRG.)
°17	Auto Feed Station Shift	Selects auto feed station shift mode. *Copier automatically shifts to the paper feed station holding same size paper when paper runs out.*	**0: Auto Shift** 1: Manual
°18	Lead and Trail Edge Erase	Selects the width of the lead and trail edge erase margins in Erase Edge mode (Program key + "7" + R/# key) or Erase Center and Edge mode (Program key + "8" + R/# key).	**0: 10 mm** 1: 5 mm 2: 15 mm 3: 20 mm
°19	ADS Priority	Specifies whether the copier defaults to ADS or manual mode when the main switch is turned on.	**0: ADS** 1: Manual

Mode No.		Function	Data
°20	APS Priority (Copier)	Specifies whether the copier defaults to APS or manual mode when the main switch is turned on. *This mode is used only on the A111 copier.*	**0: APS** 1: Manual
°21	APS Priority (ADF)	Specifies whether the copier defaults to APS or manual mode when the original is set on the DF. *DF must be installed on the machine.*	**0: APS** 1: Manual
22	SADF Shut-off Time	Selects shut-off time for SADF mode. *DF must be installed on the machine.*	**0: 5 sec.** 1: 60 sec.
23	ADF Free Size	Enables originals of various sizes to be fed from the same size stack. *DF must be installed on the machine.*	**0: No** 1: Yes
25	Margin Adjustment in Duplex Mode	Sets the margin (5 mm) on the right side of the reverse page. *The duplex unit must be installed on the machine.* *When 1 sided original mode is selected, the back margin (5 mm) is automatically added on the right side of the reverse page.*	**0: Yes** 1: No ("1" is the default for SAVIN.)
°26	Center Erase	Selects the width of the center erase margin in Erase Center mode (Program key + "6" + R/# key) or Erase Center and Edge mode (Program key + "8" + R/# key).	**0: 20 mm** 1: 10 mm 2: 15 mm 3: 25 mm
27	A3/11" x 17" Double Count	Selects single or double count for the total counter in A3/11" x 17" copies. ***Dip SW101-4 on the main board must be turned on to change the data.*** *Double count is not applied for copies from the manual feed table. Double count is not applied to the user code counter.*	**0: Single** 1: Double
28	Auto Sort Select	Sort mode is automatically selected when more than 1 original is set on the DF table and the entered copy quantity is greater than 1 and less than 11. *The sorter and DF must be installed on the machine. When in duplex mode (1-sided original mode), more than 2 originals must be set.*	**0: Manual** 1: Auto Sort
29	Fusing Temperature Control	Selects fusing temperature control mode. *After selecting the control mode and turning the main switch off/on, the fusing temperature control is changed.*	**0: ON/OFF control** 1: Phase control
30	Black Toner Supply Mode	Selects black toner supply system. *See SP31/SP32 for toner supply ratio.*	**0: Detect Mode** 1: Fixed Mode
31	Black Toner Supply Ratio (Detect Mode)	Selects black toner supply ratio in detect mode.	**0: 15%** 1: 7% 2: 30% 3: 60%

Mode No.		Function	Data
32	Black Toner Supply Ratio (Fixed Mode)	Selects black toner supply ratio in fixed mode.	**0: 7.0%** 1: 3.5% 2: 10.5% 3: 14.0%
33	ID Sensor Bias (Black)	Sets the development bias voltage applied to the development roller for the ID Sensor Pattern. *0: Vo 3: Vo–40V* *1: Vo+40V 4: Vo+80V* *2: Vo–20V 5: Vo–60V*	Toner Density **0: Normal (Vo)** 1: Low 2: High 3: Higher 4: Lower 5: Highest
°34	ADS Level	Selects the image density level in ADS mode. *Data: 1* *Decreases development bias voltage (+40V).* *Exposure lamp data is not changed.* *Data: 2* *Increases exposure lamp data (+2).* *Development bias voltage is not changed.*	**0: Normal** 1: Darker 2: Lighter
35	ID Detection Interval (Black)	Toner density detection is performed every 5 copies or 10 copies. *If low image density occurs in the near end condition, change the data to "1".*	**0: 10 copies** 1: 5 copies
37	Image Bias Adjustment ❒ (Black)	Adjusts image development bias voltage. *Use this SP mode, if the image density at level 4 cannot be adjusted by Light Intensity Adjustment (SP48).* *0: Vo 3: Vo–20V* *1: Vo+40V 4: Vo–40V* *2: Vo+20V*	**0: Normal (Vo)** 1: Darkest 2: Darker 3: Lighter 4: Lightest
40	Registration Buckle - 3rd Feed ❒	Adjust the amount of paper buckle in the registration area. *0.5 mm per step. (max. –5.0 mm to +2.0 mm)*	1–15 **Default = 11**
41	Lead Edge Erase Margin Adjustment ❒	Adjusts the lead edge erase margin. *0.5 mm per step. (max. –3.5 mm to 3.5 mm)*	1–15 **Default = 8**
42	Registration Adjustment ❒	Adjusts registration. *0.5 mm per step. (max. +3.5 mm to –3.5 mm)*	1–15 **Default = 8**
43	Vertical Magnification Adjustment ❒	Adjusts magnification in the paper feed direction. *0.2% per step. (max. –1.4% to +1.4%)*	1–15 **Default = 8**
44	Horizontal Magnification Adjustment ❒	Adjusts magnification perpendicular to the direction of paper feed. *0.2% per step. (max. –3.0% to +3.0%)*	1–31 **Default = 16**
45	Registration Buckle - 1st Feed ❒	Adjust the amount of paper buckle in the registration area. *0.5 mm per step. (max. –3.5 mm to +3.5 mm)*	1–15 **Default = 8**
46	Registration Buckle - 2nd Feed ❒		

Mode No.		Function	Data
47	Focus Adjustment ❒	Adjusts the 4th/5th mirror position to correct focus. *This mode must be done after vertical and horizontal magnification adjustments (SP43 and SP44).*	1–80 **Default = 40**
48	Light Intensity Adjustment ❒	Adjusts the exposure lamp voltage. *The exposure lamp voltage is adjusted on the production line.*	100–150 **Default = 126**
49	Fusing Temperature Adjustment	Adjusts fusing temperature.	175–190°C **Default = 185°C** 180–195°C **Default = 190°C** for European version
51	Exposure Lamp Data Display	Displays the exposure lamp data with a reference number. *The exposure lamp, and optics cooling fans turn on for 10 seconds. Press the C/S key to turn this mode off. Do not repeat more than 5 times to avoid overheating the optics cavity.*	100–170
52	Fusing Temperature Display ❒	Displays the fusing temperature.	
54	Vsg Adjustment	Adjusts Vsg. *Adjust Vsg to 4.0 ± 0.2 V using VR102 on the main board. The main motor, the QL, the PTL, the erase lamp, and the ID sensor LED turn on.*	
55	Vsg & Vsp Display ❒	Display the Vsg and Vsp readings. The Vsg reading is displayed while the "0" key is held down. *When making copies, the Vsp and Vsg voltage readings are updated every 10 or 5 copies depending on SP35 (ID Detection Interval).*	
56	ADS Reference Voltage Adjustment	Adjusts ADS. *After adjusting the light intensity, place 6 or more sheets of A3 or 11" x 17" white paper on the exposure glass and select this mode. Adjust ADS voltage to 2.5 ± 0.1 V using VR101 on the main board.*	
57	Machine On Time	Displays the total hours that the main switch is on. *The first three digits are displayed in the Magnification indicator. Hold down the "." key to display the last three digits.* ***This counter is reset when the V_L correction Reset (SP94) is performed after the optics is cleaned.***	

Mode No.		Function	Data
58	Drum Rotation Time	Displays the total hours that the drum has rotated. *The first three digits are displayed in the Magnification indicator. Hold down the "." key to display the last three digits.*	
59	Bias Voltage Display ❒	Displays development bias voltage. *Press the Start key to display the voltage.*	
60	Standard Image Density Grid Voltage	Factory use ***Do not change data.*** *Data will vary depending on factory setting. Refer to "SP MODE FACTORY SETTING DATA" sheet located on the left inner cover.*	1: –840 volts 2: –860 volts 3: –880 volts 4: –900 volts **5: –920 volts** 6: –940 volts 7: –960 volts 8: –980 volts 9: –1000 volts
61	VL Correction Interval	Sets the interval of VL correction. *The exposure lamp data increases by +1 at set interval of machine on time.* ***Do not change the data more than one (1) step at a time.***	**0: every 70 hours** 1: every 140 hours 2: every 40 hours 3: every 20 hours 4: every 10 hours 5: every 5 hours 6: No correction
62	Standard ID Sensor Grid Voltage	Factory use ***Do not change data.*** *Data will vary depending on factory setting. Refer to "SP MODE FACTORY SETTING DATA" sheet located on the left inner cover.*	1: –480 volts 2: –500 volts 3: –520 volts 4: –540 volts **5: –560 volts** 6: –580 volts 7: –600 volts 8: –620 volts 9: –640 volts 10: –660 volts 11: –680 volts 12: –700 volts 13: –720 volts 14: –740 volts



Service Tables

Mode No.		Function	Data
°63	Black Toner Forced Supply	Used to recover low toner concentration. *The main motor starts turning and the development bias voltage (–200 volts) is applied to the development roller.* *Hold down or release the "0" key to turn on or off the toner supply clutch.* *Press the R/# key or the C/S key to stop and return to normal mode.*	
	Color Toner Supply Unit Initial Setting	Used to supply toner from the toner cartridge to the toner supply unit. ***This SP mode must be performed when the machine is installed and when the color toner supply unit is replaced to prevent the toner end condition from being detected in error.***	
64	Black Toner Density Level Display	Displays the black toner density level detected by initial setting (SP65). *Data Vsp/Vsg (%)* *0: 12–15* *1: 0–7* *2: 8–11* *3: 16–21* *4: 22–100*	**0**–4
°65	Black Developer Initial Setting	Used to set the new black developer condition. *"20" is displayed on the copy counter when the R/# key is pressed. Press the Start key to start the initial setting.* ***Initial setting must be done when new developer is installed.*** *The copier automatically returns to normal mode after black developer conditioning (20 cycles) is completed.*	
66	Drum Initial Setting	Used to set new drum condition. ***Initial setting must be done when a new drum is installed.*** *The drum rotation time (SP58) and the drum counter (SP69) are cleared when the R/# key is pressed after "66" is entered.*	
67	Vr Ratio Display	Displays the present Vr ratio. *L = Vrp/Vsg x 100* *L(%) Grid voltage* *100 to 89 Vo* *88 to 76 Vo–40V* *75 to 62 Vo–80V* *61 to 45 Vo–120V* *44 to 0 Vo–160V*	**0**–100

Mode No.		Function	Data
68	Vr Forced Detection	Detects Vrp and perform Vr correction. *The copier returns to normal mode after the R/# key is pressed while the "." key is held down.* *The detection is performed in the first 5 copy cycles after this SP mode is performed.*	
69	Drum Counter	Shows the total number of copies made with the drum installed on the machine. *The first three digits are displayed in the magnification indicator. Hold down the "." key to display the last three digits.*	
70	Color Toner Supply Ratio (Fixed Mode)	Selects the color toner supply ratio.	**0: 14%** 1: 7% 2: 21% 3: 28%
71	Sorter Operation	Enables sorter operation. *Sorter Mode 1: U4 is displayed when the sorter is opened.* *Sorter Mode 2: U4 is displayed when Sort/Stack mode is selected and the sorter is opened.*	**0: No sorter** 1: Sorter Mode 1 2: Sorter Mode 2
72		Not used (Do not change the data.)	**0: Normal** 1: APS disabled.
73	Color Copy Counter	Displays the total number of copies (Red + Green + Blue). *The first three digits are displayed in the magnification indicator. Hold down the "." key to display the last three digits.*	
74	ID Detection Interval (Color)	Toner density detection is performed every 5 copies or 10 copies. *If low image density occurs in the near end condition, change the data to "1".*	**0: 10 copies** 1: 5 copies
75	ID Sensor Bias (Color)	Sets the development bias voltage applied to the development roller for the ID Sensor Pattern. *Red / Blue / Green* *0: –240V / –320V / –300V* *1: –200V / –280V / –260V* *2: –260V / –340V / –320V* *3: –280V / –360V / –340V*	Toner Density **0: Normal** 1: Low 2: High 3: Higher
76	Sorter Bin Capacity	Sets the stock quantity limits. *When the data "1" is selected:*	0: No limits **1: Limits**
77	ADF Odd Number Originals (Duplex mode)	Sets the copier to eject the final copy if an odd number of originals is set. *When "Yes", the final copy is fed out; when "No", the copy stays in the duplex unit.*	**0: Yes** 1: No
°78	Auto Energy Saver Mode	Selects the "Automatic Energy Saver" mode. *The copier automatically goes to Energy Saver mode at the auto reset time selected (SP15).*	**0: No** 1: Yes

Service Tables

Mode No.		Function	Data
79	Image Bias Adjustment (Color) ❒	Adjusts image development bias voltage. *Use this SP mode, if the image density at level 4 cannot be adjusted by Light Intensity Adjustment (SP48).* *0: Vo 3: Vo –20V* *1: Vo +40V 4: Vo –40V* *2: Vo +20V*	**0: Normal (Vo)** 1: Darkest 2: Darker 3: Lighter 4: Lightest
80	Red Toner Density Level Display	Displays the red toner density level detected by initial setting (SP10). *Toner Density Level (%) = Vsp/Vsg x 100*	
81	Green Toner Density Level Display	Displays the red toner density level detected by initial setting (SP10). *Toner Density Level (%) = Vsp/Vsg x 100*	
82	Blue Toner Density Level Display	Displays the red toner density level detected by initial setting (SP10). *Toner Density Level (%) = Vsp/Vsg x 100*	
83 84 85		Not used	
°86	Energy Saving Ratio	Selects energy saving ratio. *The greater the saving ratio, the longer the waiting time until the copier returns to the ready condition.* *Saving Ratio Waiting Time* *0: 56% 30 sec.* *1: 34% 20 sec.* *2: 28% 10 sec.* *3: 10% 0 sec.*	0: 56% 1: 34% **2: 28%** 3: 10%
87	PM Interval Setting	Sets the interval of the PM counter. *When the PM counter exceeds the set interval, the Magnification indicator blinks.*	**0: No PM** 1: 40K 2: 60K 3: 80K 4: 100K
88	PM Counter Display	Displays contents of the PM counter. *The first three digits are displayed in the Magnification indicator. Hold down the "." key to display the last three digits.*	
89	PM Counter Reset	Resets the PM counter. *Enter "1" by the number keys and then press the R/# key to clear the counter.*	**0: No** 1: Yes
°90	User Code Mode	Enables user code mode. ***JP101 on the main board must be cut.*** *If this mode is set, operators must enter a code to make copies. The user codes are the following 20 numbers:* *1101, 1202, 1303, 1404, 1505, 1606, 1707, 1808, 1909, 2010, 2111, 2212, 2313, 2414, 2515, 2616, 2717, 2818, 2919, 3020*	**0: No** 1: Yes

Mode No.		Function	Data
°91	User Code Counter Display	Displays the contents of each user code counter. *Use the Zoom keys ("+" or "–") to select a user code. The last two digits of the user code are displayed in the copy counter. User counters count from 0 to 999999.* *The first three digits are displayed in the Magnification indicator. Hold down the "." key to display the last three digits.*	
°92	User Code Counter Clear	Resets counters of all the user codes (SP91). *To reset, press "1" then the "Enter" key.*	**0: No** 1: Yes
°93	Copy Limit	Limits the maximum copy quantity that can be entered.	1–99 **99=default**
94	VL Correction	Clears the VL correction factor of the exposure lamp data and the machine on time (SP57). ***SP94 must be performed whenever the mirrors, lens, and green color filter are cleaned, before the light intensity (SP48) is adjusted.***	**0: No** 1: Yes
95		Not used	
°96	Special Paper Size Setting	Sets the appropriate paper size for special paper loaded in the 2nd or the 3rd paper feed station. ***The "*" mark on the paper size detection block must be selected to use this special feature. (Duplex modes cannot be selected.)*** *When the 2nd or the 3rd feed station is selected, the appropriate paper size or "*" mark will be displayed and the copier will operate according to the set paper size.*	**0: Universal** 1: A3 3: B4 4: A4 5: A4 6: B5 7: B5 8: A5 16: 11" x 17" 17: 11" x 8 1/2" 18: 11" x 15" 19: 10" x 14" 20: 8 1/2" x 14" 21: 8 1/2" x 13" 22: 8 1/2" x 11" 24: 8 1/4" x 14 or 13 25: 8" x 13" 26: 8" x 10 1/2" 27: 8" x 10"

Mode No.		Function	Data
98	Clear Counters	Clears the following counters and the User Program: • SP88: PM Counter Display • SP91: User Code Counter Display • SP100: 1st Feed Station Copies • SP101: 2nd Feed Station Copies • SP102: 3rd Feed Station Copies • SP105: Duplex Copies • SP106: DF Originals • SP120: Total Service Calls • SP121: Optics Section Service Calls • SP122: Exposure Lamp Service Calls • SP124: Fusing Section Service Calls • SP125: Duplex Unit Service Calls • SP130: Total Misfeeds • SP131: Number of Misfeeds by Location • User Program	**0: No** 1: Yes
		DPS101-3 and 4 on the main board must be on to perform this SP mode. To clear, press "1" then the "R/#" key.	
99	Clear All Memory	Clears all the correction data for copy process control and software counters, and returns all modes and adjustments to the default settings.	**0: No** 1: Yes
		Normally, this SP mode should not be performed. *DPS101-3 and 4 on the main board must be on to perform this SP mode.* *To clear, press "1" then the "R/#" key.*	
100	1st Feed Station Copies	Displays the total number of copies fed from the 1st feed station (cassette and manual feed table).	
		The first three digits are displayed in the Magnification indicator. Hold down the "." key to display the last three digits.	
101	2nd Feed Station Copies	Displays the total number of copies fed from the 2nd feed station.	
		The first three digits are displayed in the Magnification indicator. Hold down the "." key to display the last three digits.	
102	3rd Feed Station Copies (A111 copier only)	Displays the total number of copies fed from the 3rd feed station.	
		The first three digits are displayed in the Magnification indicator. Hold down the "." key to display the last three digits.	
103 104		Not used	

Mode No.		Function	Data
105	Duplex Copies	Displays the total number of copies made in duplex mode. *The first three digits are displayed in the Magnification indicator. Hold down the "." key to display the last three digits.*	
106	DF Originals	Displays the total number of originals fed from the DF. *The first three digits are displayed in the Magnification indicator. Hold down the "." key to display the last three digits.*	
111 112 113 114		Not used	
120	Total Service Calls	Displays the total number of the service call conditions.	
121	Optics Section Service Calls	Displays the total number of "optics section" service call conditions.	
122	Exposure Lamp Service Calls	Displays the total number of "exposure lamp" service call conditions.	
123		Not used	
124	Fusing Section Service Calls	Displays the total number of "fusing section" service call conditions.	
125	Duplex Unit Service Calls	Displays the total number of "duplex unit" service call conditions.	
130	Total Misfeeds	Displays the total number of paper misfeed excluding original misfeeds in the DF. *The first three digits are displayed in the Magnification indicator. Hold down the "." key to display the last three digits.*	
131	Number of Misfeeds by Location	Displays the total number of paper misfeeds in each area. *Use the Zoom key ("+" or "–") to select the desired number.* *1: Paper Feed 4: DF* *2: Exit 5: Duplex* *3: Sorter* *The first three digits are displayed in the Magnification indicator. Hold down the "." key to display the last three digits.*	

2.3 SP-8 SENSOR/SWITCH DATA CHECK

– How to check sensor/switch data –

1. Press "8", then press the Recall/Enter key while pressing the Point (".") key.
2. Enter the desired input number by the number keys. The input numbers are given in the following table.
3. Press the Recall/Enter key again.
4. Enter the number of copies and press the Start key.

   NOTE: The ON/OFF status can also be checked manually.
5. The data (0 or 1) will be displayed in the magnification indicator.

Input No.	Sensor/Switch/Signal	Data	
		0	1
1	Registration Sensor	Paper not detected (HIGH)	Paper detected (LOW)
2	Exit Sensor		
3	Paper Lift Sensor	Sensor feeler down (HIGH)	Sensor feeler up (LOW)
4	1st Paper End Sensor	Sensor feeler down (Paper end) (HIGH)	Sensor feeler up (LOW)
5	2nd Paper End Sensor		
6	3rd paper End Sensor **(A111 copier only)**		
9	Manual Feed Table Switch	Table closed (HIGH)	Table open (LOW)
10	Right Cover Switch	Cover closed (HIGH)	Cover open (LOW)
14	Relay Sensor **(A111 copier only)**	Paper not detected (HIGH)	Paper detected (LOW)
17	Scanner HP Sensor	Sensor actuated (HIGH)	Sensor not actuated (LOW)
18	Lens HP Sensor		
19	4th/5th Mirror HP Sensor		
20	Toner End Sensor	Sensor actuated (HIGH)	Sensor not actuated (LOW)
21	Toner Overflow Sensor	Sensor feeler up (HIGH) (Used toner tank full)	Sensor feeler down (LOW)
22	Color Switch - 1	Switch actuated (LOW)	Switch not actuated (HIGH)
23	Color Switch - 2		
24	Duplex Entrance Sensor	Paper not detected (HIGH)	Paper detected (LOW)
25	Duplex Turn Sensor		
26	Duplex Paper End Sensor		
27	Duplex Jogger HP Sensor	Sensor not actuated (Home position)	Sensor actuated
28	Sorter Paper Sensor	Paper not detected (High)	Paper detected (Low)
29	Sorter Wheel Switch	Switch not actuated	Switch actuated
30	Sorter HP Switch	Switch actuated	Switch not actuated
31	Sorter Switch	Sorter opened	Sorter closed

Input No.	Sensor/Switch/Signal	Data	
		0	1
32	ADF ON Line	ADF not installed	ADF installed
33	ADF Lift Sensor	ADF closed	ADF opened
34	APS Sensors **(A111 copier only)**	Refer to the following explanation.	

Input No. 34

The A111 Copier has 7 (6 for the inch version) different sensors for detecting the original length and width in APS and ARE modes. The platen cover position sensor (DF position sensor) and the platen cover closed switch are used for the original size detection timing.

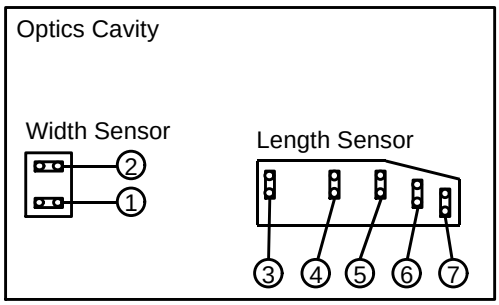

NOTE: The inch version does not have sensor ⑤.

1) When an original length sensor or an original width sensor detects the original, the manual image density indicator (7 LEDs) corresponding to the sensor will light.

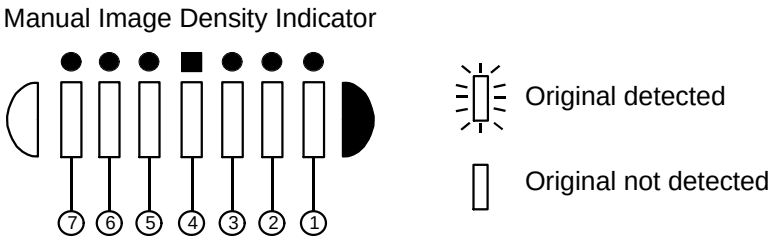

2) When the platen cover position sensor or the platen cover closed switch is turned on, the point indicator in the magnification indicator will light.

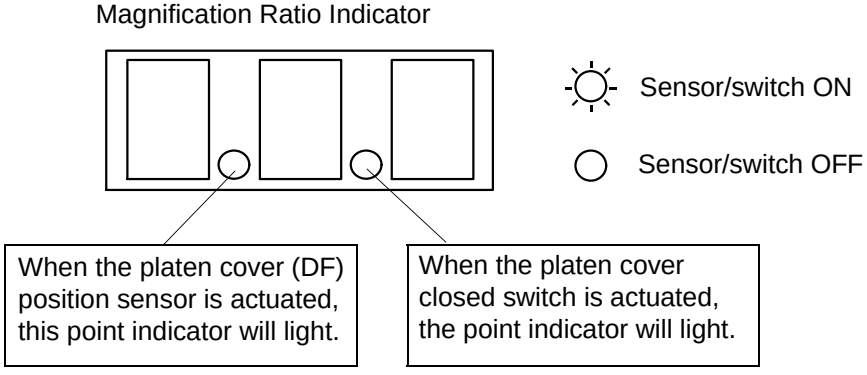

2.4 SP-9 ELECTRICAL COMPONENT CHECK

– How to turn electrical components on/off –

1. Enter "9", then press the Recall/Enter key while pressing the Point (".") key.
2. Enter the desired output number by the number keys. The output numbers are given in the following table.
3. Press the Start key to turn on the electrical component.
4. Press the Clear/Stop key to turn off the electrical component.

Output No.	Electrical Component
1	Main Motor (PTL and Quenching Lamp)
2	Charge Corona + Standard Grid (Grid Voltage = –920 volts)
3	Charge Corona + ID Sensor Grid (Grid Voltage = –660 volts + Vp Correction Factor)
4	Charge Corona + Vrp Grid (Grid Voltage = –500 volts)
5	Transfer Corona (first side copy)
6	Transfer Corona (second side copy)
8	Separation Corona
9	ID Sensor LED
10	Development Clutch Solenoid
11	Toner Supply Clutch
14	Sorter Roller Drive Motor
15	Sorter Wheel Motor (Bin up)
16	Sorter Wheel Motor (Bin down)
17	Registration Clutch
18	1st Paper Feed Clutch Solenoid
19	Relay Roller Clutch
23	2nd Paper Feed Clutch
24	3rd Paper Feed Clutch **(A111 copier only)**
27	Paper Lift Clutch
28	Duplex Gate Solenoid
29	Pick-up Roller Release Solenoid
30	Duplex Feed Motor (Stack)
31	Duplex Feed Motor (Feed)
32	Duplex Jogger Motor (Home Position)
33	Duplex Jogger Motor (A4 size)
34	Duplex Jogger Motor (B5 size)
35	Duplex Jogger Motor (11" x 8 1/2")

Output No.	Electrical Component
37	Erase Lamp
39	Optics Cooling Fans
40	Exposure Lamp + Optics Cooling Fans
42	Charge Corona + Standard Grid + Transfer Corona + Separation Corona
43	Charge Corona + ID Sensor Grid + Transfer Corona + Separation Corona
44	Charge Corona + Vrp Grid + Transfer Corona + Separation Corona
50 - 57	Applies bias voltage in 40 V steps starting at –120 V
60 - 67	Applies grid voltage in 60 V steps starting at –560 V

2.5 MISFEED LOCATION INDICATOR

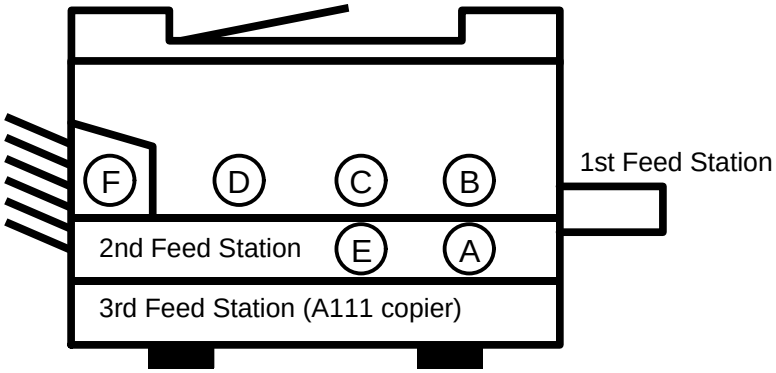

2.5.1 Initial Misfeed Detection

When an initial misfeed is detected, the misfeed location indicator on the operation panel lights. The following table shows the correspondence between the Misfeed location indicators and the sensors detecting the misfed paper:

Sensor detecting the misfed paper	Feed station	Misfeed location indicator
Registration sensor	1st feed station (Cassette or manual feed)	B and C light
	2nd feed station	A and C light
	3rd feed station	A and C light
Exit sensor		D lights
Relay sensor		A lights
Duplex entrance sensor		E lights
Sorter paper sensor		F lights

2.5.2 Misfeed Detection During Copy Cycle

When a misfeed is detected during copy cycle, one of the misfeed location indicators starts blinking to indicate which misfeed detection has detected the misfeed condition. The following table shows the correspondence between the Misfeed location indicators and misfeed detections:

Misfeed detection	Feed station	Misfeed location indicator
Copier J1 (Registration sensor not ON)	1st feed station (Cassette or manual feed)	B blinks
	2nd feed station	A blinks
	3rd feed station	A blinks
	Duplex unit	A blinks
Copier J2 (Exit sensor not ON)		D blinks
Copier J3 (Exit sensor not OFF)		
Copier JR (Relay sensor not ON) (A111 copier only)		A blinks
Duplex J1 (Duplex entrance sensor not ON)		E blinks
Duplex J2 (Duplex turn sensor not ON)		
Duplex J3 (Duplex turn sensor not OFF)		
Sorter J1 (Sorter paper sensor not ON)		F blinks
Sorter J2 (Sorter paper sensor not OFF)		

Other misfeed location indicators will lights if the sensor in the paper path detects that the misfed paper is present. The following table shows the correspondence between the Misfeed location indicators and the sensors detecting the misfed paper.

Sensor detecting the misfed paper	Misfeed location indicator
Registration sensor	C lights
Exit sensor	D lights
Relay sensor	G lights
Duplex entrance sensor	E lights
Sorter paper sensor	A lights

3. SERVICE TABLES

3.1 TEST POINTS

Copier Main Board

Number	Function
TP101	BIN (Development bias feed back)
TP102	GIN (not used)
TP103	TH (Fusing thermistor)
TP104	ADS (ADS output voltage)
TP105	LAMP (Exposure lamp voltage feed back)
TP106	PIN (ID sensor voltage)
TP107	VCC (+5 volts)
TP108	CGND (GND)
TP109	VAA (+24 volts)
JP101	Key Counter (Cut this jumper wire when installing the key counter on the machine.)

DF Main Board

Number	Function
TP102	+5 V
TP103	GND
TP104	Factory use
TP105	+12 V
TP106	+24 V
TP107	Factory use

3.2 DIP SWITCHES

Copier Main Board

DPS	Normal	Function
101-1	OFF	Free run
101-2	OFF	Forced start (Ready temperature ignored) **Factory use**
101-3	OFF	To clear memory counters by SP98 or to clear all memory by SP99
101-4	OFF	Service program mode access

NOTE: a) Free run starts when the Start key is pressed. To stop the free run, press the C/S key.

b) The copy quality cannot be guaranteed if the fusing unit has not yet reached standard operating temperature.
To cancel this mode, turn off DPS101-2, then turn the main switch on and off.
This mode must not be used in the field. The fusing and pressure rollers may be damaged when toner remaining on the rollers melts.

DF Main Board

DPS101				Function
1	2	3	4	
ON	OFF	OFF	OFF	Normal mode for this copier
ON	OFF	OFF	ON	1 sided free run
OFF	ON	OFF	ON	2 sided free run
OFF	OFF	ON	ON	Solenoid test: Switch101 - solenoids ON Switch102 - solenoids OFF
ON	ON	OFF	ON	Motor test
ON	ON	ON	ON	All indicators ON

NOTE: a) To use all functions, DPS101 must be set to the normal mode when the main switch is turned on. At this time, the initial sequence between the copier and the DF will take place.

b) To use all functions except for the solenoid test mode, the lift switch must be turned on.

c) To use the one and two-sided free run modes, all sensors must be activated in the normal manner. Therefore, place the DF in the normal working position (down) and place paper on the original table. Then, turn on SW101 at the rear side of the DF.

Duplex Main Board

DPS	Factory Setting	Function
700-1		Jogger position adjustment (0.5 mm per step), refer to the table below.
700-2		
700-3		
700-4		
700-5	OFF	Factory use
700-6	OFF	
700-7	OFF	
700-8	OFF	

Jogger Position Adjustment

DPS700 (0: OFF, 1: ON)				Adjustment Value
1	2	3	4	
0	0	0	0	–3.5 mm
1	0	0	0	–3.0 mm
0	1	0	0	–2.5 mm
1	1	0	0	–2.0 mm
0	0	1	0	–1.5 mm
1	0	1	0	–1.0 mm
0	1	1	0	–0.5 mm
1	1	1	0	±0
0	0	0	1	0.5 mm
1	0	0	1	1.0 mm
0	1	0	1	1.5 mm
1	1	0	1	2.0 mm
0	0	1	1	2.5 mm
1	0	1	1	3.0 mm
0	1	1	1	3.5 mm
1	1	1	1	4.0 mm

3.3 VARIABLE RESISTORS

Copier Main Board

Number	Function
VR101	Adjusts ADS reference voltage (2.5 ± 0.1 volts)
VR102	Adjusts ID sensor voltage (4.0 ± 0.2 volts)

CC/Grid/Bias Power Pack

Number	Function
VRC	Adjusts charge corona current
VRG	Adjusts grid voltage
VRB	Adjusts development bias voltage

TC/SC Power Pack

Number	Function
VRT	Adjusts transfer corona current
VRD	Adjusts separation corona current

AC Drive Board

Number	Function
VR401	Adjusts exposure lamp voltage (factory use)

DF Main Board

Number	Function
VR101	Factory use
VR102	Original leading edge registration adjustment (One sided original mode)
VR103	Original leading edge registration adjustment (Two sided original mode)
VR106	Factory use

4. SPECIAL TOOLS AND LUBRICANTS

Part Number	Description	Q'ty
A0069105	Drum Shoe Shaft	1
A0069103	Scanner Wire Clamper (Omega Clamp)	1
A0069104	Scanner Positioning Pin (4 pcs)	1 set
A0089502	Grease G-40M	1
52039501	Grease (Shinetsu Silicone G-501)	1
54429106	Drum Shoe	1
54479104	Shoe Adapter	1
54209507	Digital Multimeter	1
54479078	Heat Resistance Grease (MT-78)	1
54209516	Test Chart OS-A3 (10 pcs/set)	
54209502	Test Chart OS-A3 (100 pcs/set)	

5. PREVENTIVE MAINTENANCE SCHEDULE

5.1 PM TABLE

L = Lubricate R = Replace C = Clean I = Inspect

	EM	60K	120K	180K	240K	Notes
Optics						
Mirrors, Lens, Reflectors	C	C	C	C	C	Cotton pad with water, or blower brush
Green Color Filter	C	C	C	C	C	Dry soft cloth
Exposure Glass	C	C	C	C	C	Alcohol or glass cleaner
Platen Cover Sheet	C	R	R	R	R	Alcohol or water (replace if necessary)
Scanner Guide Plate		C	C	C	C	Dry cloth
Lens and 4th/5th Mirror Guide Rails		C	C	C	C	Dry cloth
Original Size Sensor		C	C	C	C	Blower brush
Optics Cooling Fan Filter		C	C	C	C	
Paper Feed (for each paper feed station)						
Paper Feed Roller	C		R		R	Water
Pick-up Roller	C		R		R	Water
Reverse Roller	C		R		R	Water
Registration Roller		C	C	C	C	Water (replace if necessary)
Relay Roller		C	C	C	C	Water
Reverse Roller Slip Clutch		L	L	L	L	Mobil temp. 78 **See NOTE 1**
Paper Feed Guide Plate		C	C	C	C	Alcohol
Cassette Bottom Plate Pad		C	R	C	R	Water
Paper Tray Bottom Plate Pad		C	R	C	R	Water
Manual Feed Bottom Plate Pad		C	R	C	R	Water
Registration Sensor		I	I	I	I	
Relay Sensor		I	I	I	I	
Around Drum						
Corona Wires	C	R	R	R	R	Dry cloth or water
Wire Cleaner		R	R	R	R	

	EM	60K	120K	180K	240K	Notes
Charge Grid		C	R	C	R	Blower brush
End Blocks and Casing	C	C	C	C	C	Alcohol or water
Transfer Guide Plate		C	C	C	C	Dry cloth
Pre-transfer Lamp	C	C	C	C	C	Dry cloth
Quenching Lamp	C	C	C	C	C	Dry cloth
ID Sensor	C	C	C	C	C	Blower brush
Erase Lamp	C	C	C	C	C	Dry cloth
Pick-off Pawls	C	C	C	C	C	Replace if necessary
Cleaning Unit						
Cleaning Blade			R		R	
Cleaning Seal		C	C	C	C	Replace if necessary
Cleaning Brush			R		R	
Used Toner Tank	C	C	C	C	C	Empty used toner
Development Unit						
Developer		R	R	R	R	Replace if necessary (color developer: 30K)
Inlet Seal		C	C	C	C	
Fusing Unit						
Hot Roller		C	C	R	C	
Pressure Roller		C	C	R	C	
Stripper Pawls		C	C	C	C	Suitable solvent, replace if necessary
Fusing Entrance and Exit Guides		C	C	C	C	Suitable solvent
Fusing Thermistor		I	I	I	I	Suitable solvent, clean if necessary
Others						
Ozone Filter		R	R	R	R	
Drive Belt		I	I	I	I	Replace if necessary
Bushings			L		L	Spindle oil
Exit Sensor		I	I	I	I	
Relay Gear		L	L	L	L	Grease G501 **See NOTE 2**
Document Feeder PM interval: number of original fed (SP106)						
Transport Belt	C	C	R	C	R	Belt cleaner

	EM	60K	120K	180K	240K	Notes
Friction Belt	C	R	R	R	R	
Pick-up Roller		C	C	C	C	Water, replace if necessary
Feed Roller		C	C	C	C	Water, replace if necessary
Feed-in Clutch		L	L	L	L	Mobil Temp. 78
Sorter						
Bin Guide/Wheel		L	L	L	L	Grease G501(if necessary)
Round Belt		C	C	C	C	Alcohol
Guide Plate		C	C	C	C	Dry cloth
Duplex PM interval: Number of duplex copies (SP105)						
Feed Roller	C		R		R	
Friction Roller	C		R		R	
Bottom Plate Pad			R		R	
Round Belt		I	R		R	
Spring Clutch			L		L	Mobil temp. 78 **See NOTE 3**

NOTE 1: Clean and lubricate the spring clutch of the reverse roller at every PM.

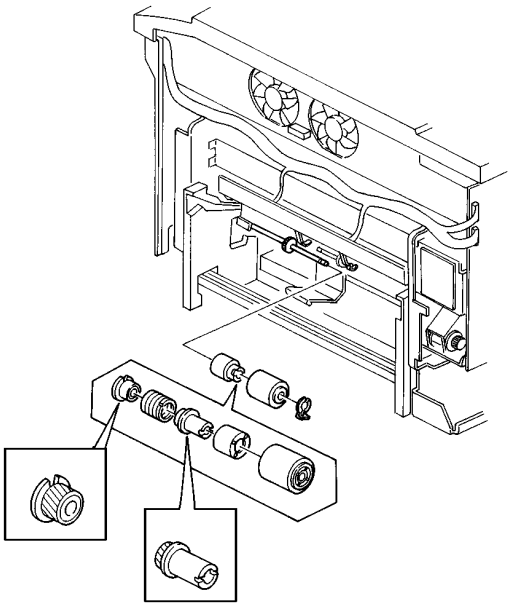

NOTE 2: Lubricate the gear using Grease G501 at every PM.

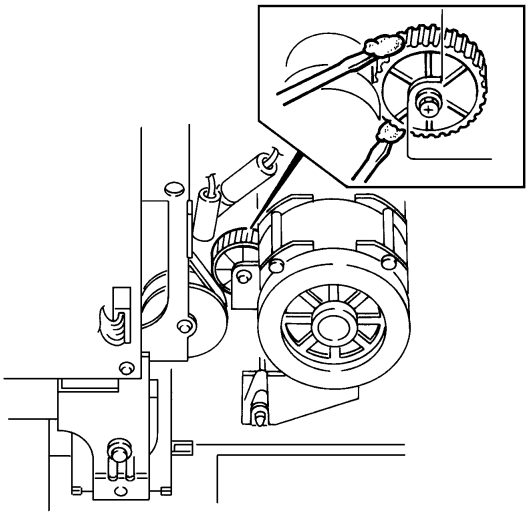

NOTE 3: Clean and lubricate the paper lift spring clutch of the duplex tray every 120K copies.

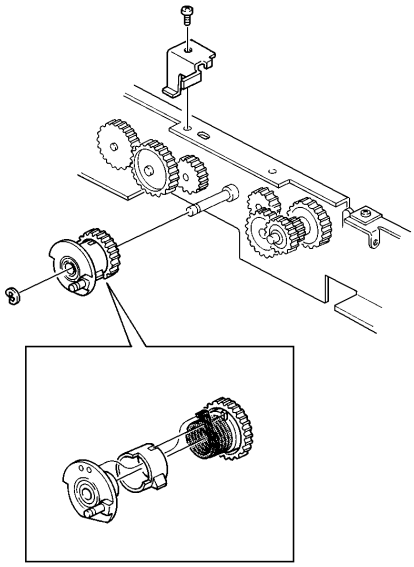

5.2 EXPLANATION OF REGULAR PM

Item		Explanation
Optics Unit	Mirrors, Lens, Reflector, Exposure Glass, Platen Cover	Stains on any part of the optics unit result in a dirty background, black lines, black spots, or areas of decreased sharpness on the copy image. Periodic cleaning is required. The exposure glass and the platen cover must also be cleaned. If stains on the platen cover cannot be removed, it must be replaced.
	Exposure Lamp	Deterioration of the exposure lamp affects the copy image. Inspect the lamp at regular intervals and replace if discolored.
Paper Feed, and Registration	Paper Feed Roller, Pick-up Roller, Reverse Roller	If paper powder or dust adheres to the paper feed rollers and/or rollers are worn out, paper may not feed correctly and/or skewing may result. Cleaning or replacement is required at regular intervals.
	Registration Roller	A dirty registration roller can cause paper to register incorrectly, skew, or misfeed. Cleaning is required at regular intervals.
Transport	Transfer Guide Plate	If the transfer guide plate is dirty, the back sides of the copy may become dirty. Clean the plate at regular intervals.
Around Drum	Charge Wires	Dirty charge wires may cause uneven image density. They should be cleaned or replaced at regular intervals.
	End Blocks	Toner tends to accumulate on the corona end blocks, and this can result in poor copy quality or even a high voltage leak. Clean end blocks at regular intervals.
	QL	If toner accumulates on the QL, a dirty background or a repeating negative image may result. Clean the QL at regular intervals.
	PTL	If paper dust or toner accumulates on the PTL, its efficiency may be reduced. This can cause toner to be reattracted to the drum during transfer, reducing image density. Clean the PTL at regular intervals.
	ID Sensor	If paper dust or toner accumulates on the ID sensor, the toner density cannot be controlled correctly. This results in light copies or overtorning. Clean this sensor at regular intervals.
	Erase Lamp	If toner accumulates on the erase lamp, a dirty background may occur that becomes progressively worse in long copy runs. Clean this lamp at regular intervals.

Item		Explanation
Cleaning Unit	Cleaning Blade	A dirty or worn out cleaning blade will cause black lines on copies and/or scratches on the drum. The blade must be replaced or cleaned at regular intervals.
	Cleaning Brush	A worn out cleaning brush will not clean effectively, resulting in a dirty background and damage to the cleaning blade. Replace at regular intervals.
	Used Toner Tank	If the used toner tank becomes full, the "E70" lights in the copy counter and copying becomes inhibited. To prevent unnecessary EM calls, the used toner tank should be emptied at regular interval.
Fusing Unit	Thermistor	If toner accumulates on the thermistor, fusing temperature control may not be accurate. Inspect the thermistor at regular intervals.
	Stripper Pawls	Toner or dust adhering to the stripper pawls can cause a paper jam. Clean or replace the pawls at regular intervals.
	Fusing Entrance and Exit Guides	Toner piling up on the guide plate will cause a dirty background on the copy. Clean the guide plate at regular intervals.
DF	Transport Belt	A dirty transport belt can leave stains on copies. Clean or replace the belt at regular intervals.
	Pick-up Roller, Feed Roller, Separation Belt	When dirty, these rollers and this belt can leave stains on the copy paper. Clean or replace these parts at regular intervals.
Duplex Unit	Paper Feed and Friction Rollers	The duplex unit uses the feed and friction roller (FFR) system. If paper dust or dust adheres to the paper feed and friction rollers and if the rollers are worn out, paper may not feed correctly, or skewing may result. Cleaning or replacement is required at regular intervals.
	Transport Roller	A transport roller that is dirty or slips may cause a dirty copy image or a paper jam. Clean the rollers at regular intervals.
	Round Belt	The round belt transmits driving power to the turn guide roller. When the belt wears out (breaks or stretches), a paper jam may occur. Replace the belt at regular intervals.
Sorter	Bin Drive Wheel, Bin Guide	Dust adhering to the bin drive wheel or bin guide may interfere with bin movement and result in uneven bin positioning. Clean and lubricate if necessary.

5.3 REGULAR PM PROCEDURE



1. Make a copy

Make a copy of your test chart at manual image density level 4.

2. Optics (every 60 K)

1. Clean the mirrors, lens and reflectors with a soft cloth, cotton pad with water, or a blower brush.
2. Clean the green color filter with a dry soft cloth.
3. Clean the exposure glass with alcohol or water.
4. Clean the scanner guide rail with a dry cloth.
5. Clean the lens and 4th/5th guide rails with a dry cloth.
6. Clean the original width and length sensors with a blower brush.
7. Replace the platen cover sheet.
8. Clean the optics cooling fan filter.

3. Around drum (every 60 K)

Note: After removing the drum, wrap the drum in clean sheets of paper to protect it.

1. Clean the ID sensor with a blower brush.
2. Clean the pick-off pawls.
3. Clean the quenching lamp, pre-transfer lamp and erase lamp with a dry cloth.

Replace the charge grid (every 120 K)

4. Clean the end blocks, casing and transfer guide plate with water or alcohol.
5. Replace the corona wires and wire cleaner.
6. Clean the charge grid with a blower brush.
7. Clean the registration rollers.
8. Inspect the movement of the registration sensor feeler.

4. Cleaning unit (every 60 K)

1. Empty the used toner tank.
2. Clean the inside of the cleaning unit and the seals.

Service Tables

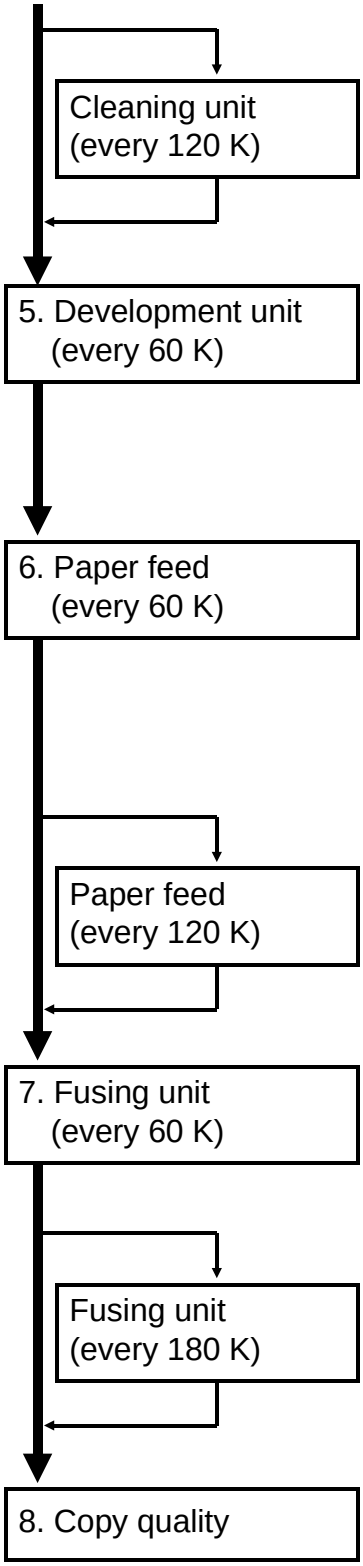

1. Replace the cleaning blade and brush.

1. Clean the development unit guide plate in the copier with a damp cloth.
2. Remove the old developer.
3. Clean the development unit and gears.
4. Install the new developer.

1. Clean the relay roller and paper feed guide plates.
2. Clean the bottom plate pads on the manual feed table, cassette and paper tray.
3. Clean and lubricate the slip clutch for reverse roller.
4. Inspect the movement of relay sensor feeler.

1. Replace the paper feed roller, pick-up roller, and reverse roller.
2. Replace the bottom plate pads on the manual feed table, cassette, and paper tray.

1. Clean the entrance guide plate.
2. Inspect the thermistor.
3. Clean the stripper pawls.
4. Replace the ozone filter.

1. Replace the hot roller and pressure roller.

1. Perform the black developer initial setting (SP65), if the developer has been replaced.
2. Perform the color developer initial setting (SP10), if the developer has been replaced.
3. Perform the drum initial setting (SP66), if the drum has been replaced.

4. Perform the VL correction clear (SP94).
5. Adjust the exposure lamp intensity (SP48).
6. Adjust the ADS reference voltage (SP56).
7. Adjust the Vsg voltage (SP54).
8. Make a copy of the OS-A3 test chart at manual image density level 4 and perform the copy quality adjustment if necessary.

SECTION 5

REPLACEMENT AND ADJUSTMENT

1. EXTERIOR AND INNER COVERS

1.1 EXTERIOR COVER REMOVAL

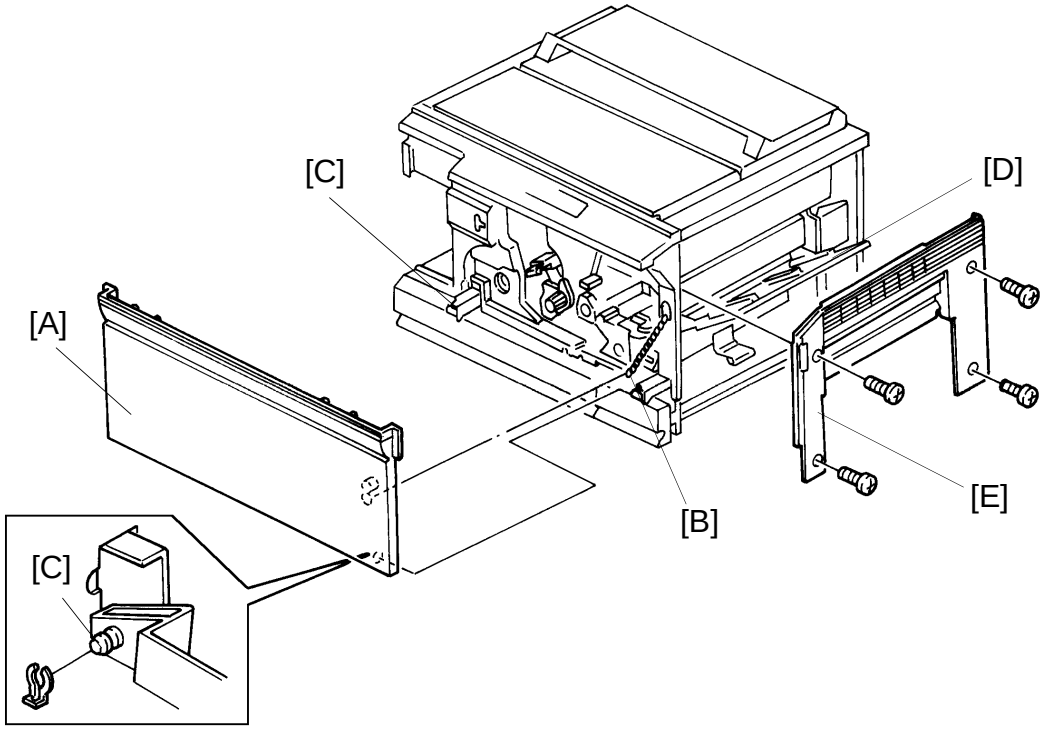

1.1.1 Front Cover

1. Open the front cover [A].
2. Unhook the chain [B] from the front cover.
3. Slide the front cover off the holding pins [C] (1 snap ring) and remove it.

1.1.2 Right Cover

1. Open the front cover and the manual feed table [D].
2. Remove the right cover [E] (4 screws).

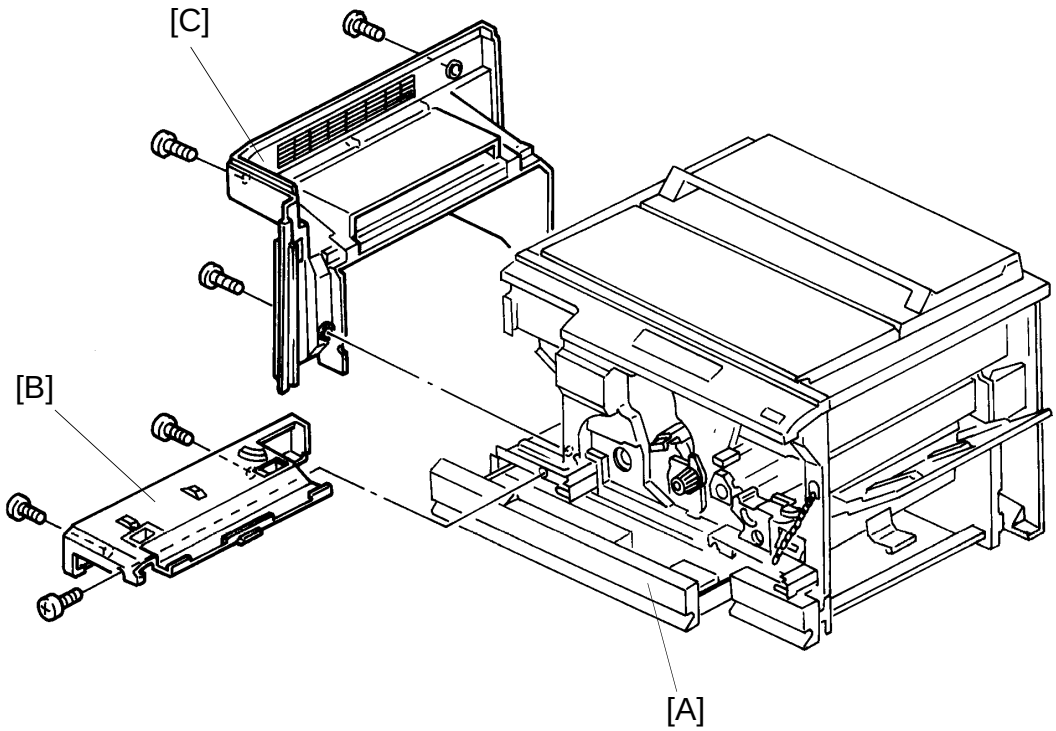

1.1.3 Left Lower Cover

1. Pull out the paper tray or the duplex tray [A].
2. Remove the left lower cover [B] (3 screws).

1.1.4 Left Upper Cover

1. Remove the left lower cover.
2. Open the exit unit.
3. Remove the left upper cover [C] (4 screws).

NOTE: Remove the sorter if it is installed.

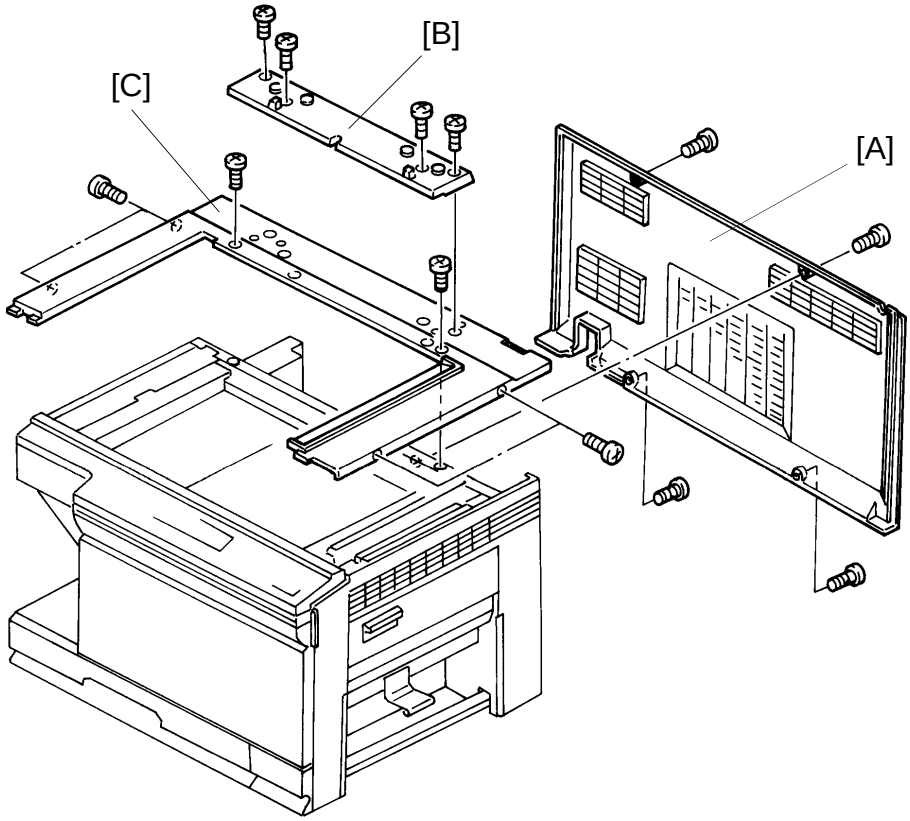

1.1.5 Rear Cover

1. Remove the rear cover [A] (4 screws).

1.1.6 Upper Cover

1. Remove the platen cover.
2. Remove the platen cover pedestal [B] (4 screws).
3. Remove the upper cover [C] (6 screws).

NOTE: Remove the DF if it is installed.

1.2 INNER COVER REMOVAL

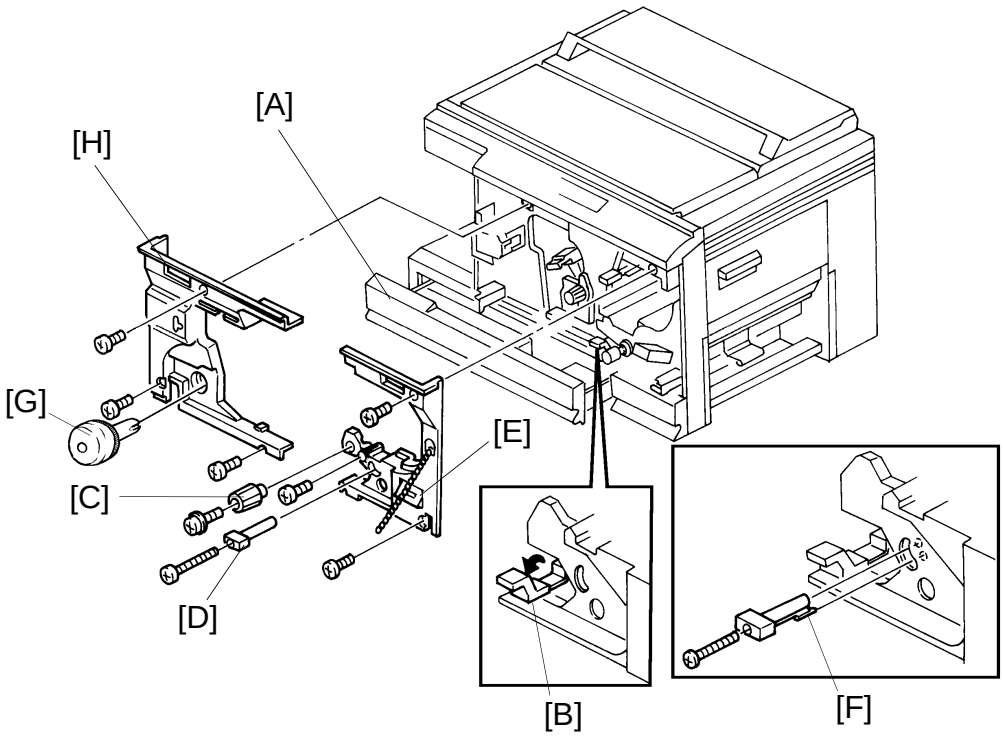

1.2.1 Right Inner Cover

1. Open and remove the front cover.
2. Remove the development unit.
3. Pull out the paper tray or the duplex unit [A].
4. Lower the turn guide lever [B].
5. Remove the registration knob [C] and paper guide release lever [D] (1 screw each).
6. Remove the right inner cover [E] (3 screws).

NOTE: When reinstalling the release lever [D], make sure that the pin [F] on the lever is properly set in the paper guide.

1.2.2 Left Inner Cover

1. Open and remove the front cover.
2. Pull out the paper tray or the duplex unit [A].
3. Remove the fusing roller knob [G].
4. Remove the left inner cover [H] (3 screws).

2. OPTICS

2.1 EXPOSURE GLASS REMOVAL

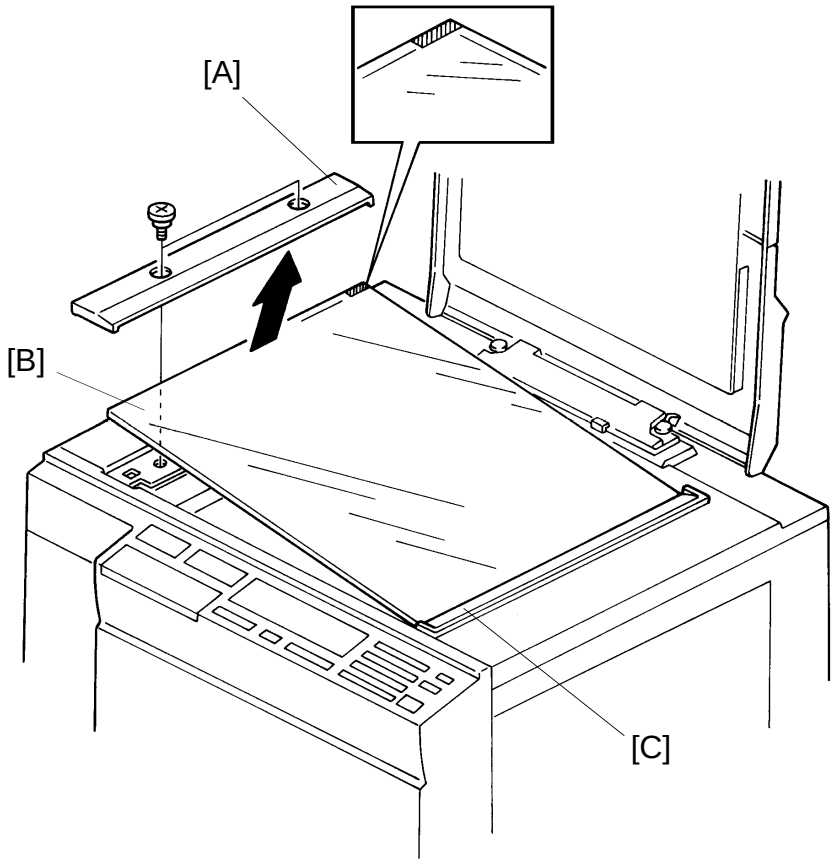

1. Take off the left scale [A] (2 short screws).
2. Grasp the left edge of the exposure glass [B] and lift up slightly. Slide the other edge out from under the right glass holder [C]. Remove the exposure glass.

NOTE: When reinstalling the exposure glass, make sure of the following:

a) The left edge of the glass is flush with the tab to the left of the scale plate, and the right glass holder firmly secures the exposure glass.

b) The red mark on the edge of the glass faces up. This side is smoother and it generates less static electricity when the DF is used.

2.2 1ST MIRROR REMOVAL

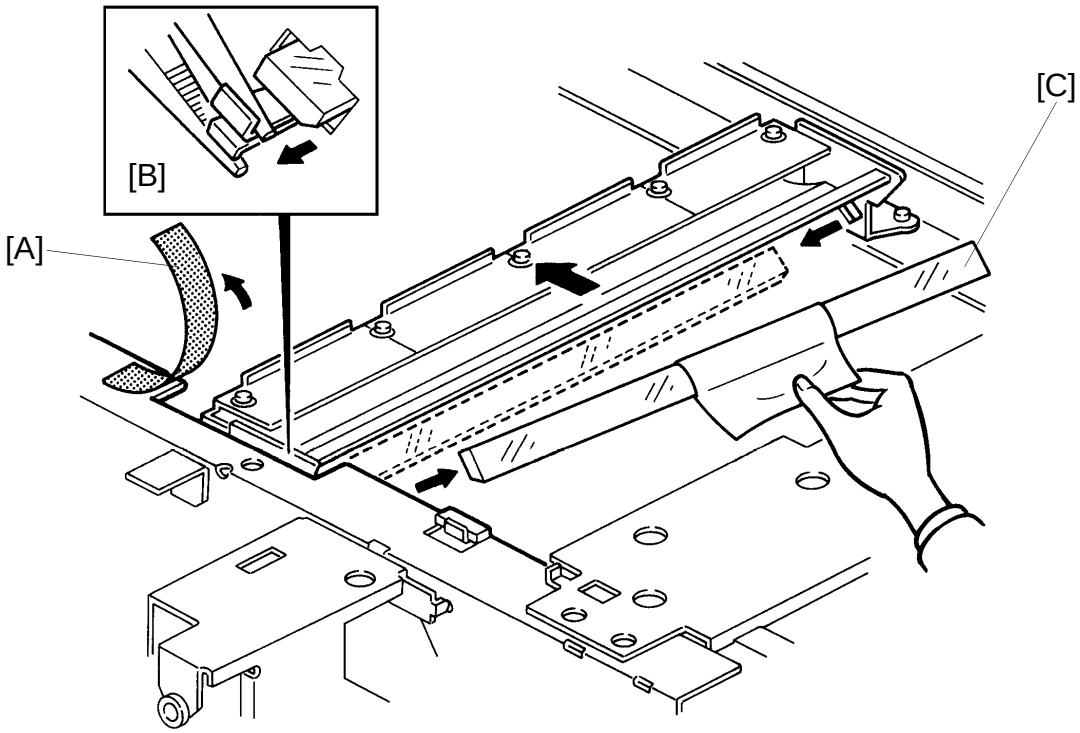

1. Turn off the main switch.
2. Remove the exposure glass. (See Exposure Glass Removal.)
3. Move the first scanner to the cutout position (150 mm from the left scale).
4. Remove the upper cover.
5. Peel off the rear cutout cover seal [A].
6. With a pair of pliers, remove the rear spring plate [B].
7. Carefully slide the 1st mirror [C] towards the rear of the machine and lift the mirror out of the machine front side first.

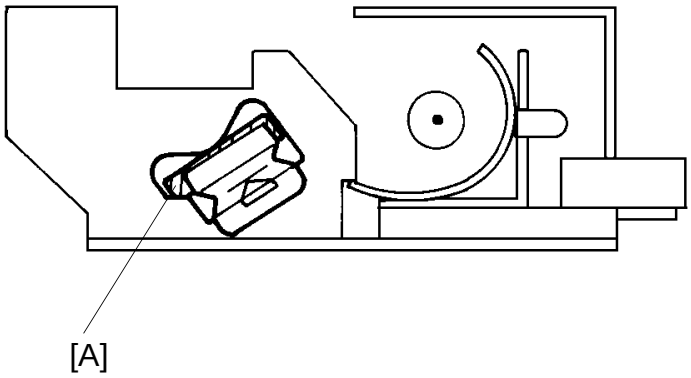

– Reinstallation –

1. Insert the 1st mirror into the rear side plate cutout. Then insert the front side of the mirror into the front spring plate.

   NOTE: Make sure when installing the mirror that the reflecting surface is on the upper side and the beveled edge [A] of the mirror is on the lower side.

2. Insert the rear spring plate between the mirror and the rear side plate cutout.

2.3 2ND AND 3RD MIRROR REMOVAL

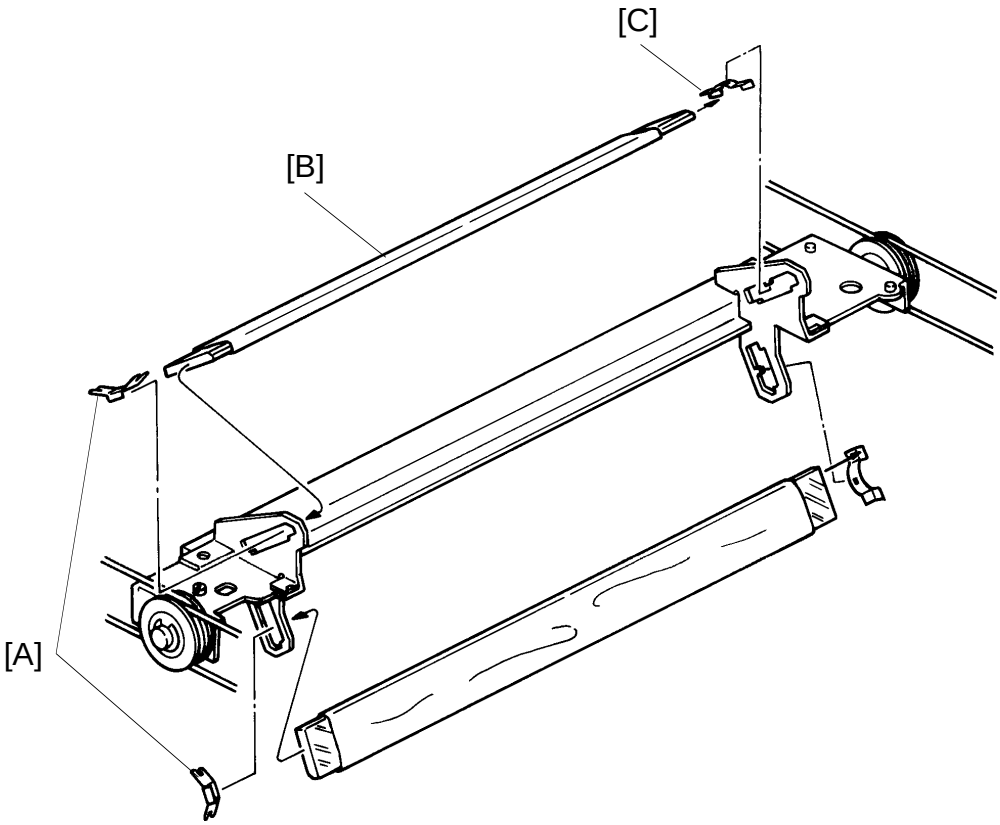

1. Turn off the main switch.
2. Remove the exposure glass. (See Exposure Glass Removal.)
3. Slide the 1st scanner 2/3 of the way to the right.
4. Press down on one side of the front spring plate [A] and pull it off the end of the mirror.
5. Carefully shift the 2nd mirror [B] towards the front of the machine to remove the rear spring plate [C].
6. Lift the mirror out of the machine rear side first.

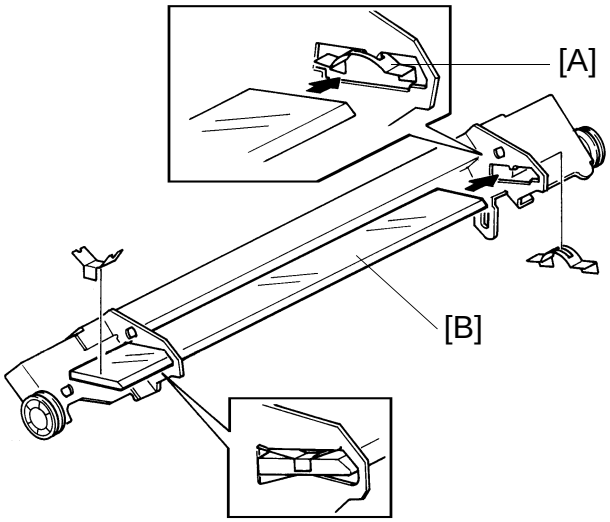

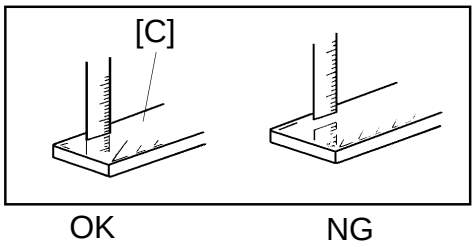

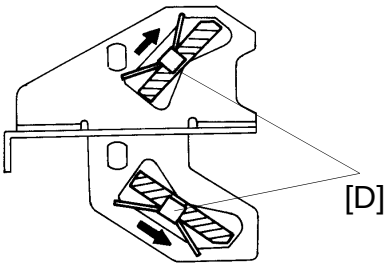

– Reinstallation –

1. Hold the rear spring plate [A] in position as shown.
2. Insert the 2nd mirror [B] into the front side plate cutout.
3. Position the rear end of the mirror under the rear spring plate in the rear side plate cutout.
4. Fit the front spring plate over the front end of the mirror. Make sure that the slot on each arm of the spring plate fits over the edge of the cutout as shown.

NOTE: a) Make sure when installing the mirrors that the reflecting surfaces [C] face the lens.
b) The front and rear spring plates are different. Make sure that each plate is placed in the correct position.
c) Position the spring plate [D] by moving it in the direction of the arrow.

2.4 4TH AND 5TH MIRROR REPLACEMENT

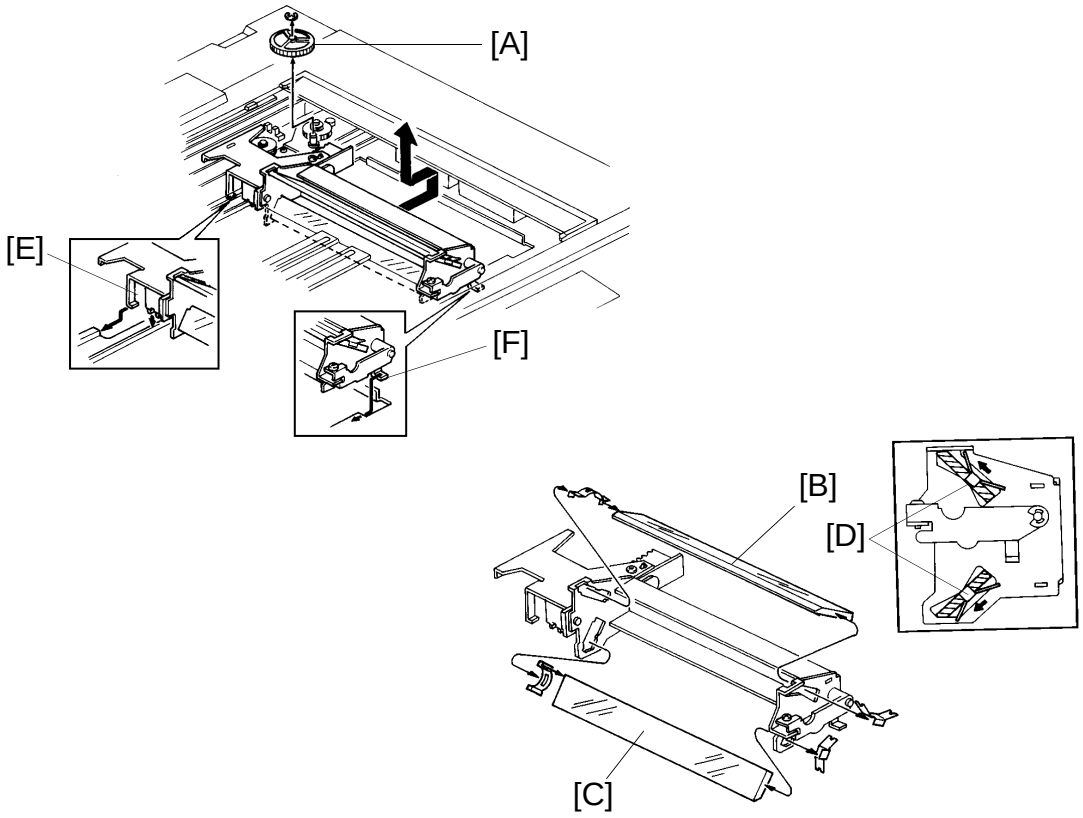

1. Turn off the main switch.
2. Remove the exposure glass. (See Exposure Glass Removal.)
3. Remove the lens cover (2 screws).
4. Remove the 4th and 5th mirror assembly drive gear [A] (1 E-ring).
5. Slide the mirror assembly all the way to the right and remove it.
6. Replace the fourth [B] and fifth [C] mirrors. (The procedure for removing the mirrors from their brackets is the same as with the second and third mirrors.)

NOTE: a) Make sure that the mirrors are installed in their original positions. (The fourth mirror is larger than the fifth mirror.)
b) The front and rear spring plates are different. Be sure to mount them in the correct positions.
c) Position the spring plates [D] as shown. Move them in the direction of the arrow.
d) When reinstalling the 4th and 5th mirror assembly, make sure that the hooks [E and F] are properly positioned as shown.

2.5 EXPOSURE LAMP REPLACEMENT

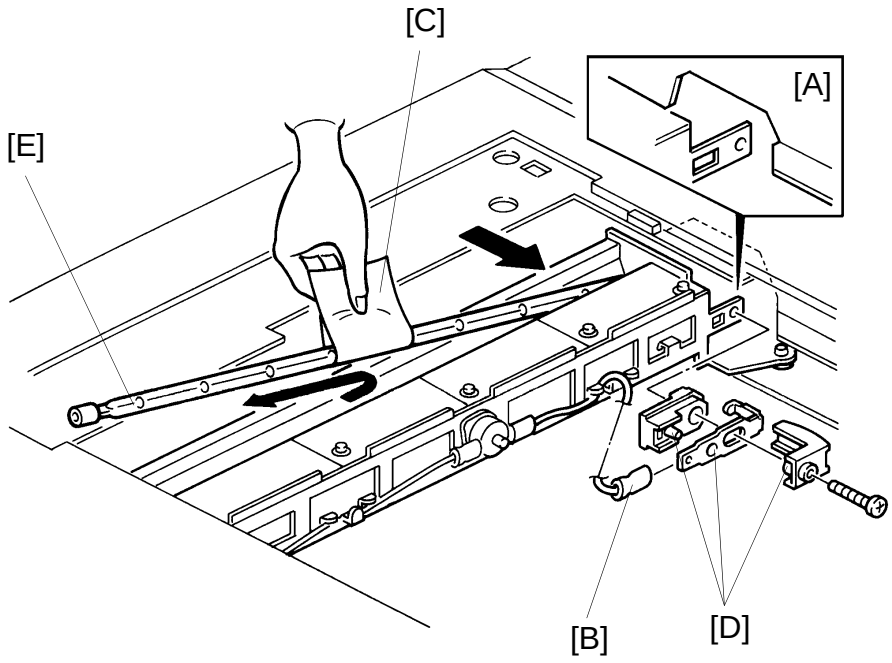

NOTE: Do not touch the reflector or the new exposure lamp with your bare hands. Use a strip of paper as shown. (Oil marks from fingers on the lamp or reflectors will be affected by heat from the lamp and will cause discoloration.)

– Removal –

1. Turn off the main switch and unplug the machine.
2. Remove the exposure glass. (See Exposure Glass Removal.)
3. Move the first scanner to the cutout position at the rear frame [A] as illustrated (about 50 mm).
4. Disconnect the exposure lamp wire [B].
5. Set a strip of paper [C] around the exposure lamp.
6. Remove the rear terminal [D] (1 screw).
7. Remove the exposure lamp [E] from the front terminal by moving the lamp into the rear frame cutout.

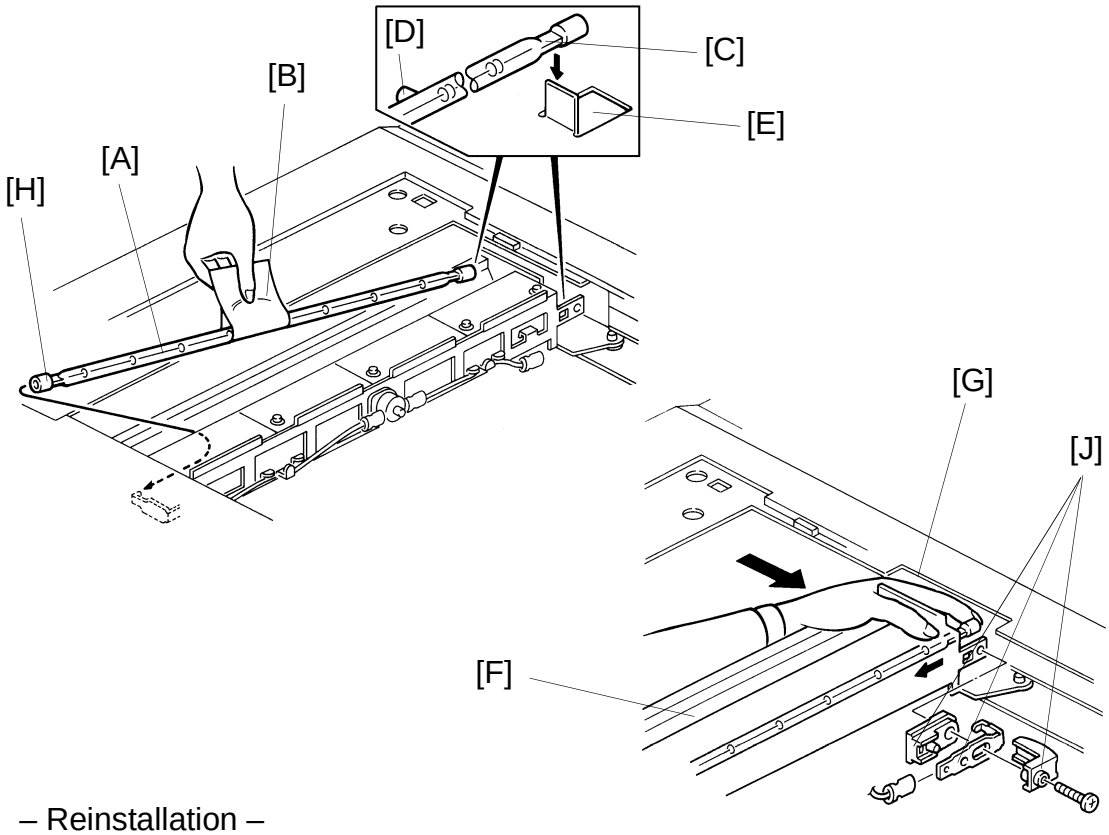

– Reinstallation –

8. Hold the lamp [A] with a strip of paper [B].
9. Before sliding in the lamp, position it so that the flat ends [C] are horizontal and the blister [D] will be pointing towards the reflector opening.
10. Carefully slide in the lamp [A] and place it on the plate [E].
11. Move the first scanner [F] to the right (about 50 mm) to the frame's cutout position [G].
12. Set the front insulator [H] to the front terminal [I], and while holding the lamp with your left hand, lightly push it towards the front.
13. With your right hand, screw in the rear terminal [J].

    NOTE: Make sure that both front and rear insulators are properly supported with the terminals.
14. Clean the optics parts.
15. Clear the V_L correction using SP94.

    NOTE: Always perform SP94 after cleaning the optics.
16. Perform the light intensity adjustment using SP48. (See Light Intensity Adjustment section.)
17. Perform the ADS adjustment using SP56. (See ADS Adjustment section.)

2.6 OPTICS THERMOSWITCH REPLACEMENT

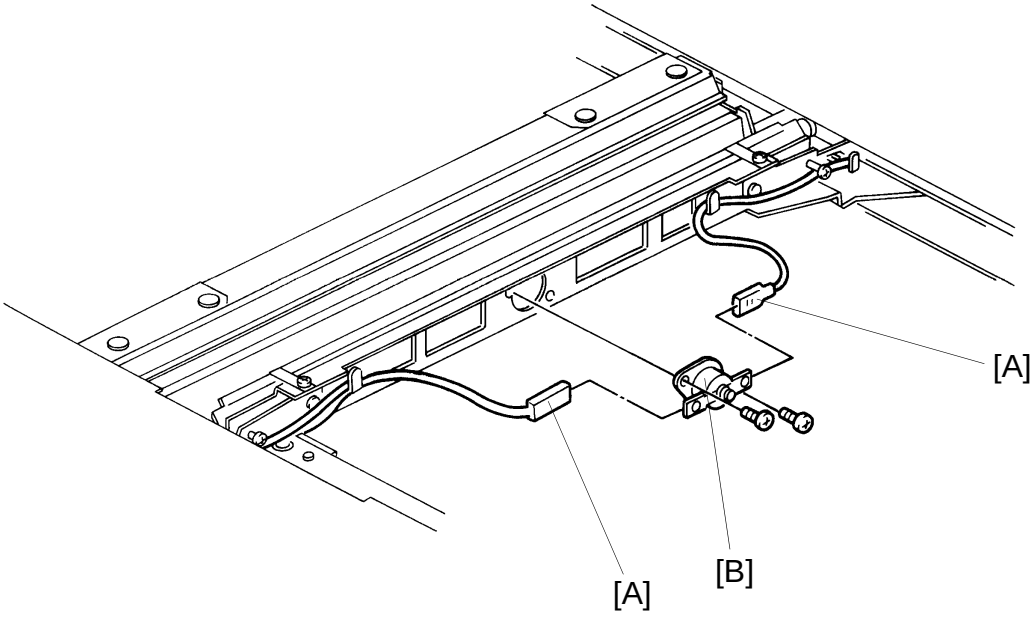

1. Turn off the main switch.
2. Remove the exposure glass (2 screws).
3. Remove the exposure lamp leads [A] from the terminals on both sides of the thermoswitch.
4. Remove optics the thermoswitch [B] (2 screws) and replace it.

2.7 SCANNER DRIVE WIRE REPLACEMENT

2.7.1 Wire Removal

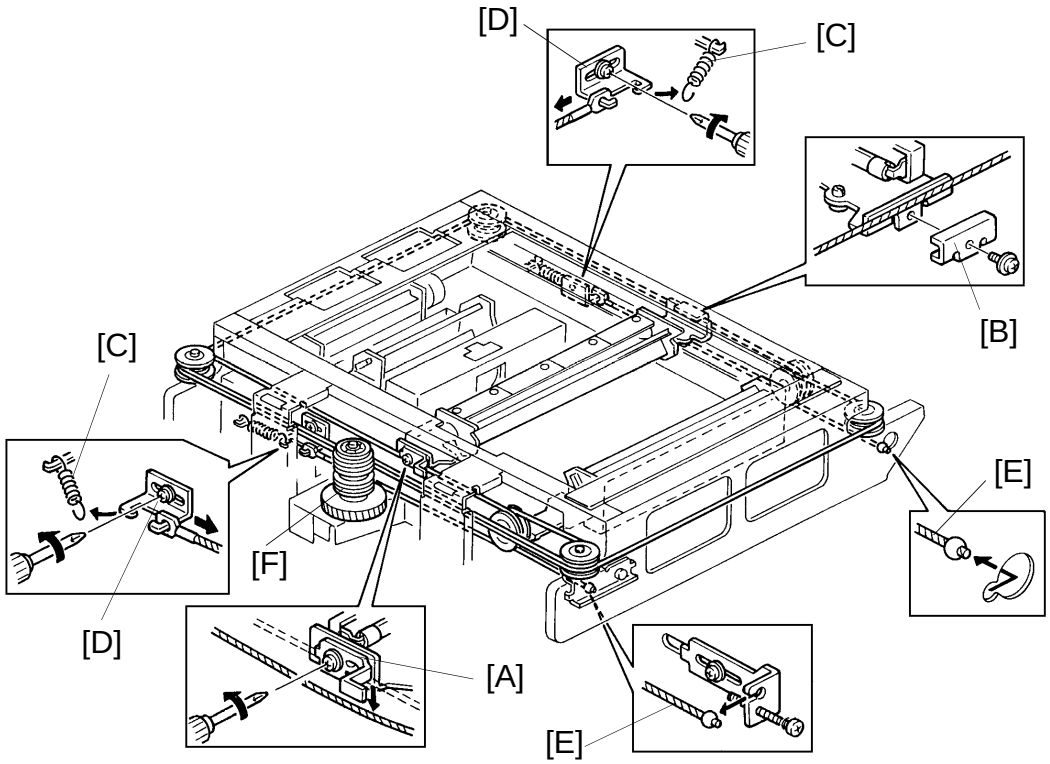

1. Remove the following covers and parts.

Sorter (if installed)	Document feeder (if installed)
Front cover	Development unit
Left and right inner covers	Left lower cover
Left upper cover	Rear cover
Right cover	Upper cover
Operation panel	Exposure glass
TC/SC power pack	

2. Loosen the screws securing the front [A] and rear [B] first scanner wire clamps.
3. Remove the front and rear wire tightened springs [C].
4. Loosen the screws securing the front and rear wire fixing plates [D].
5. Remove scanner wires [E] from the left side plate.
6. Remove scanner wires from the drive pulley [F].
8. Remove the drive pulley (1 E-ring).

2.7.2 Wire Installation

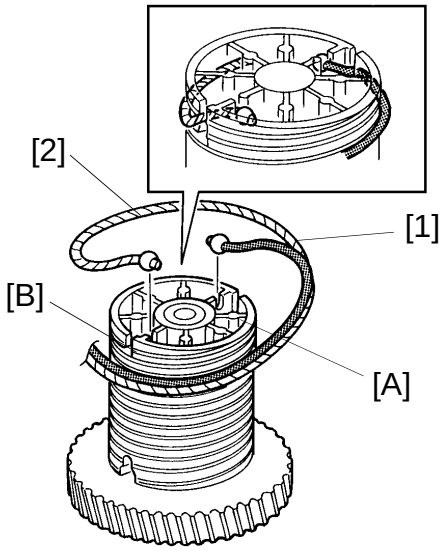

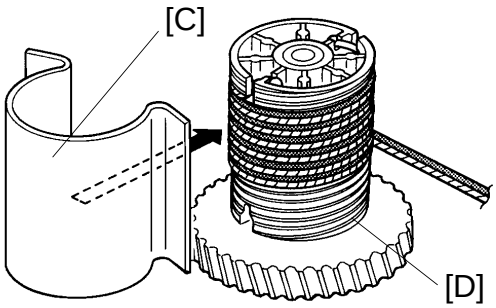



1. Put the bead at the end of the blue wire [1] in slot [A].
2. Put the bead of the silver wire [2] in slot [B].
3. Wind the blue wire [1] clockwise halfway around the pulley. Wind the silver wire [2] clockwise one complete turn around the pulley.
4. Wind the blue and silver wires together five and a half times around the pulley. Make sure that the blue wire is wound six times and the silver wire is wound six and a half times in total.
5. Set the omega clamp [C] over the wires on the drive pulley [D] as shown.

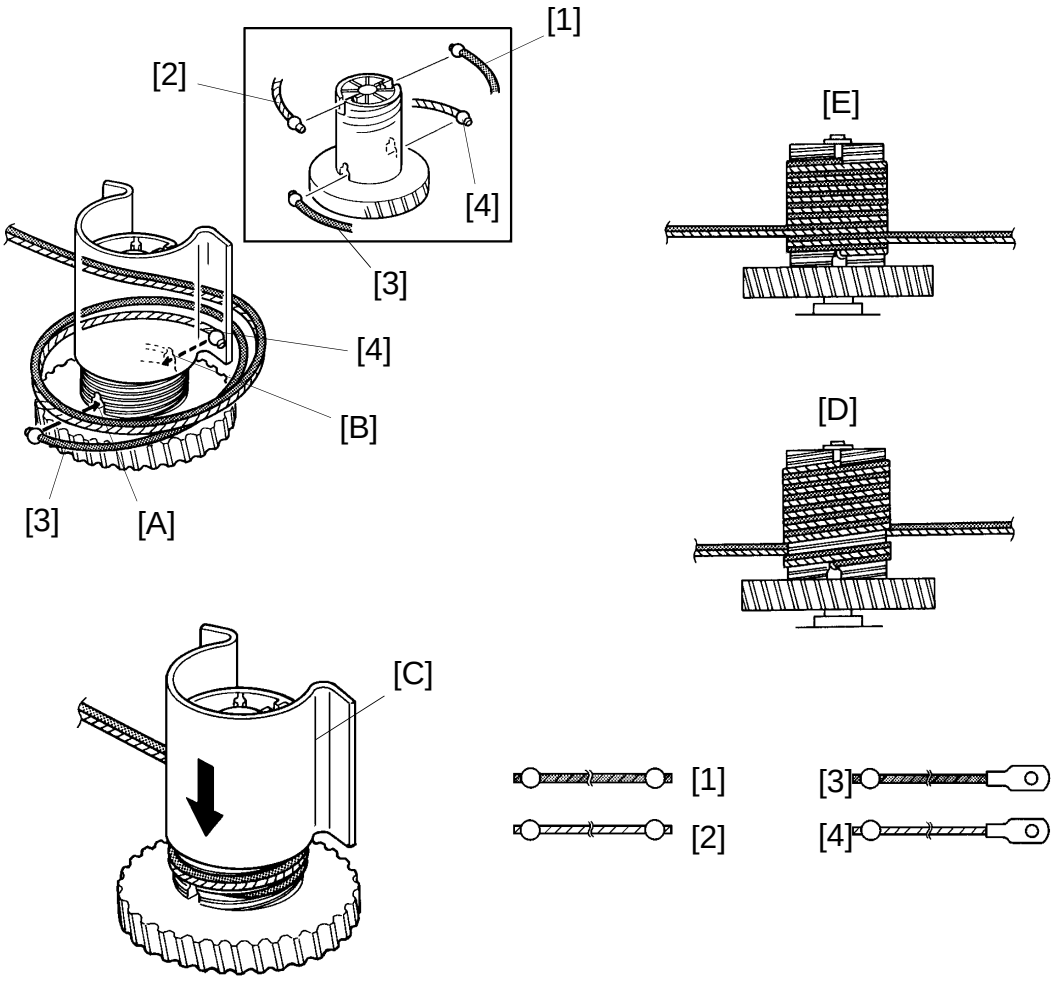

6. Put the bead of the blue wire [3] in slot [A] on the silver wire [2] side.
7. Put the bead of the silver wire [4] in slot [B] on the blue wire [1] side.
8. Wind the blue wire [3] clockwise one and a half times around the pulley. Wind the silver wire [4] once clockwise around the pulley.
9. Slide the omega clamp [C] down to secure all the wires as shown.

   NOTE: a) The blue and silver wires alternate on the pulley with the blue wire uppermost.
   b) Wires are not wound around the two grooves shown in the illustration (rear view [D]).
   c) Wires are wound around all the grooves shown in the illustration (front view [E]).

10. Set the pulley on the drive shaft (1 E-ring).

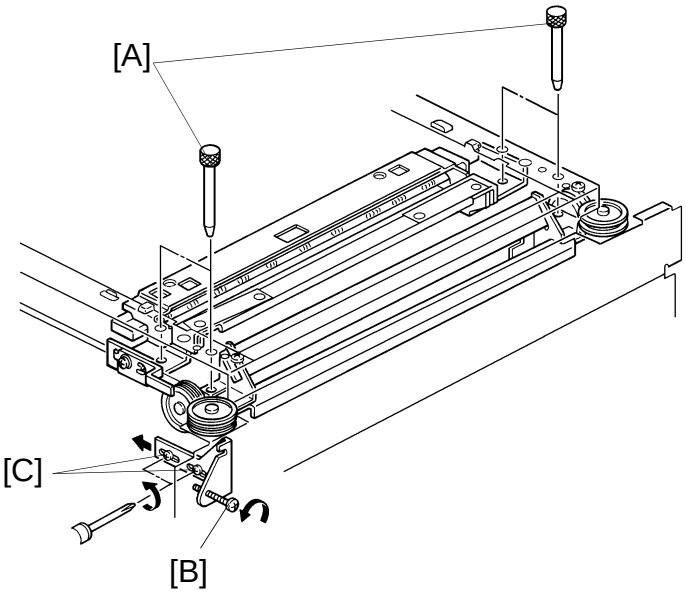

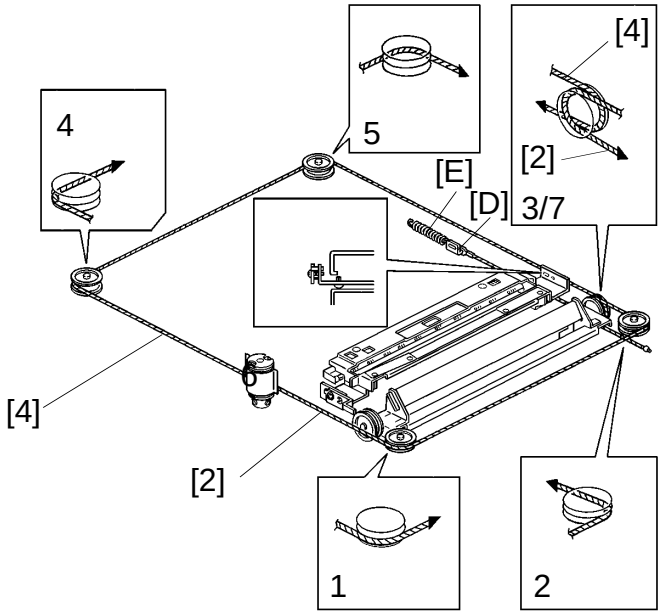

11. Manually move the first and second scanners to home position.
12. Insert the four positioning pins [A] in the holes on the scanner guide rails to secure the first and second scanners.
13. Loosen the wire tension bracket fixing screw [B] and the wire tension adjusting screws [C].
14. Loosen the screw securing the front fixing plate [D]. Place wires [2] and [4] on the pulleys as shown.
15. Hook the silver wire [4] onto the fixing plate and hook the wire tension spring [E] onto the fixing plate and the frame projection.

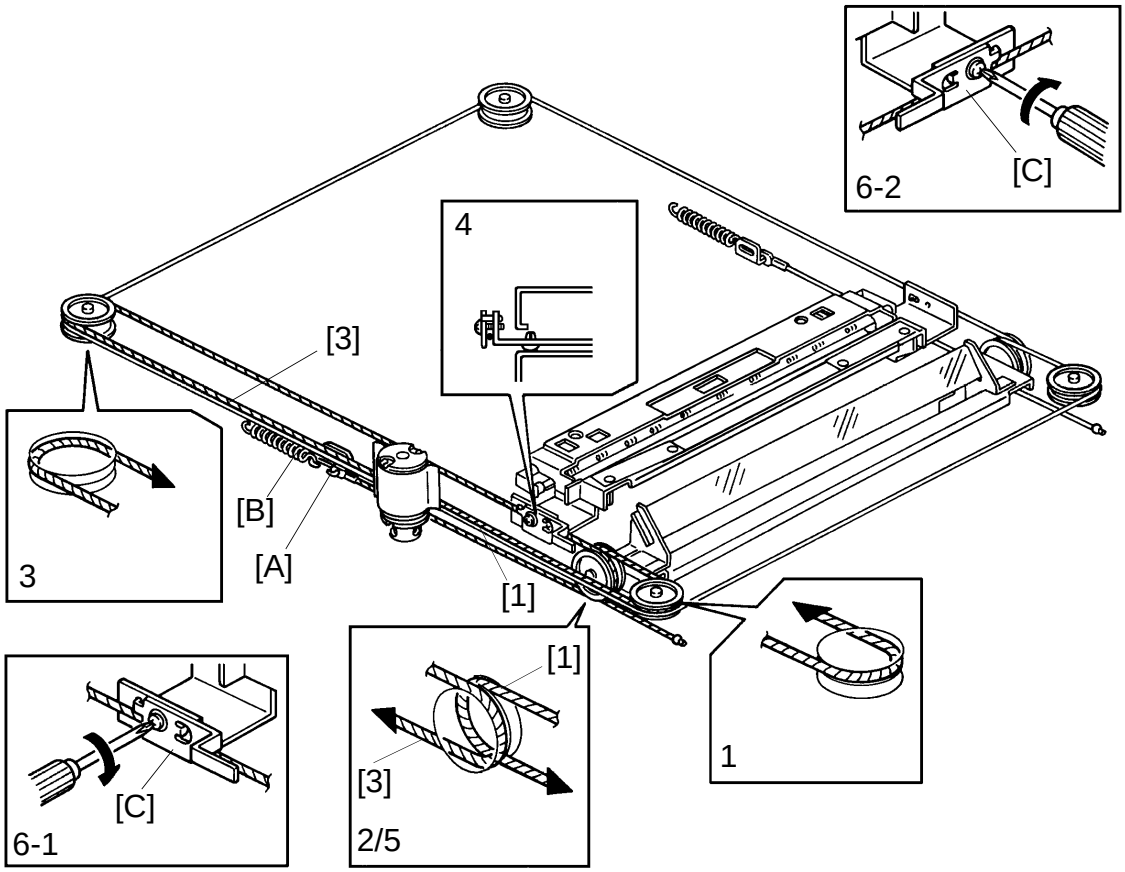

16. Attach blue wires [1 and 3] around the pulleys as shown.
17. Attach wire [3] to the wire fixing plate [A], then hook one end of tension spring [B] to the fixing plate and the other end to the frame projection.
18. Tighten the first scanner clamps [C] and remove the four positioning pins and the omega clamp.
19. Perform free run (turn DIP switch 101-1 ON) for 10 minutes and make sure that the scanners operate smoothly.

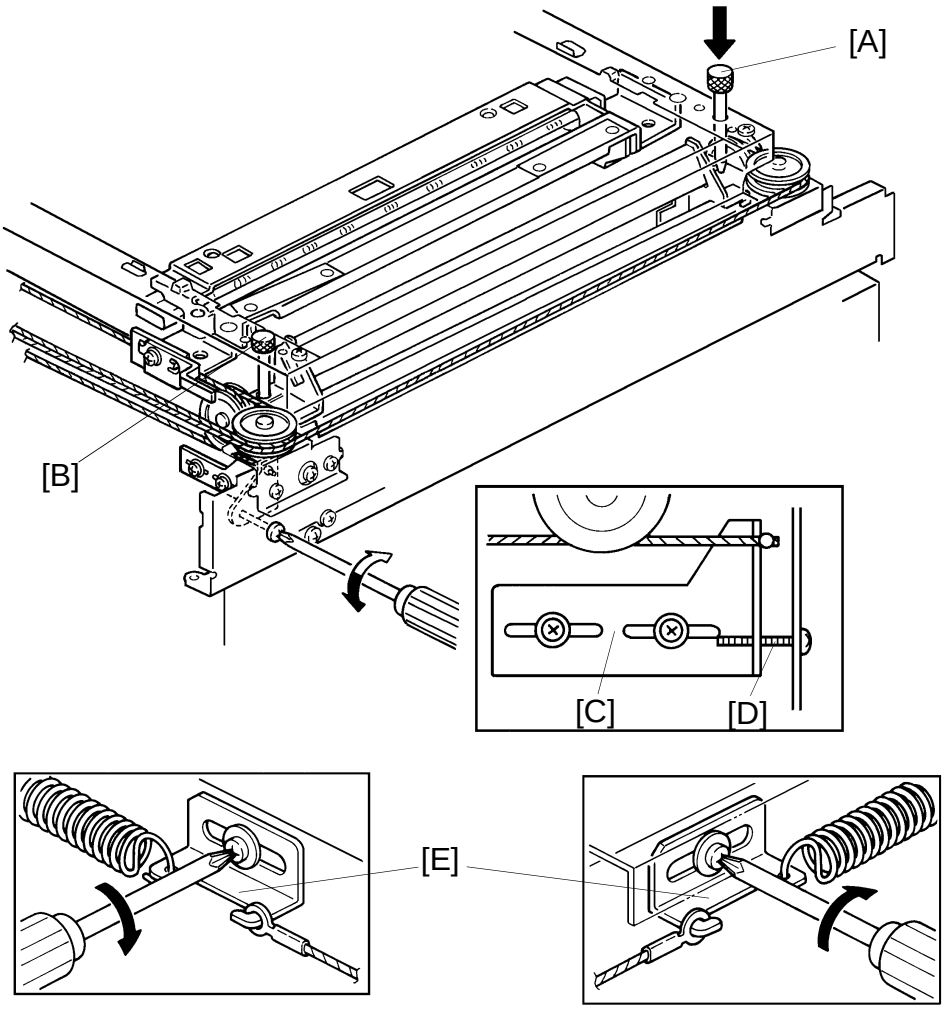

20. Adjust the tension in the second scanner wire.
    1) Insert positioning pin [A] in the hole at the front end of the second scanner.
    2) Loosely insert positioning pin [B] in the hole at the rear end of the second scanner.
    3) Loosen the two screws securing the wire tension bracket [C], then turn the 2nd scanner positioning screw [D] clockwise until the rear positioning pin drops and locks in position.
    4) Tighten the two screws securing the wire tension bracket [C].
    5) Make sure the positioning pin [B] slides in and out smoothly. If not, repeat step 3).
    6) Tighten the screws securing the front and rear wire fixing plates [E].

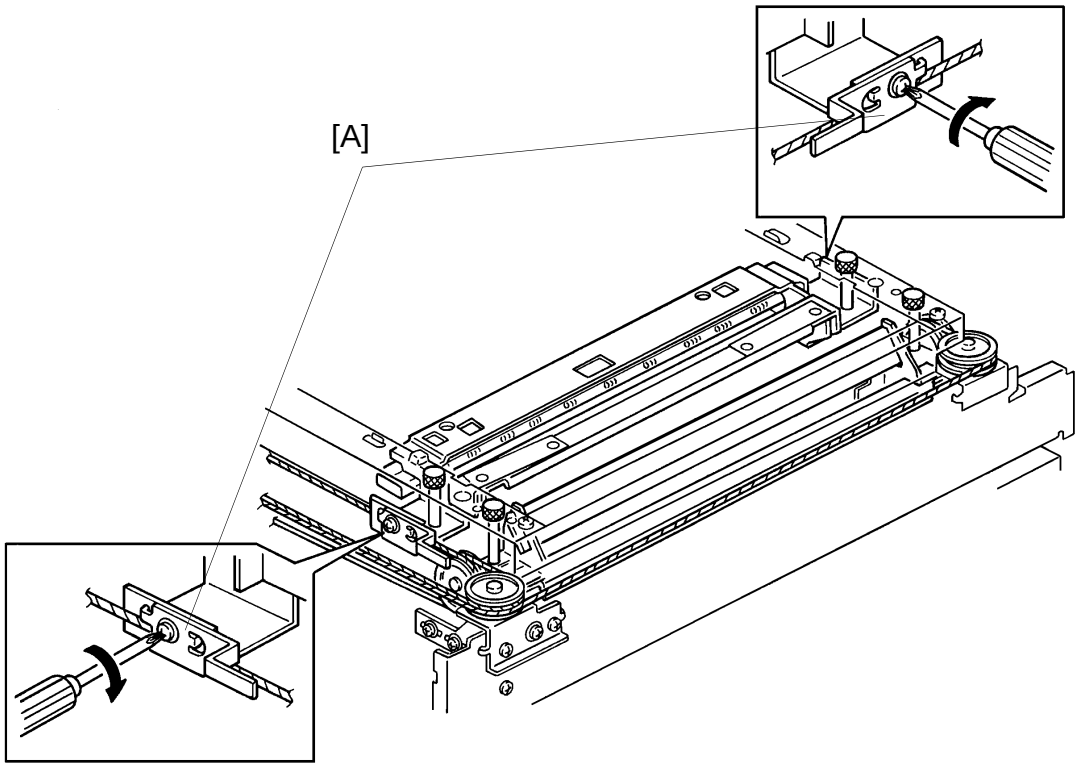

21. Adjust the first scanner wire clamps.
    1) Loosen the front and rear first scanner wire clamps [A]
    2) Insert the front and rear positioning pins.
    3) Tighten the wire clamps.

22. Reassemble.

NOTE: Always adjust the first scanner wire clamps after adjusting the tension in the second scanner wire.

2.8 SCANNER MOTOR REPLACEMENT

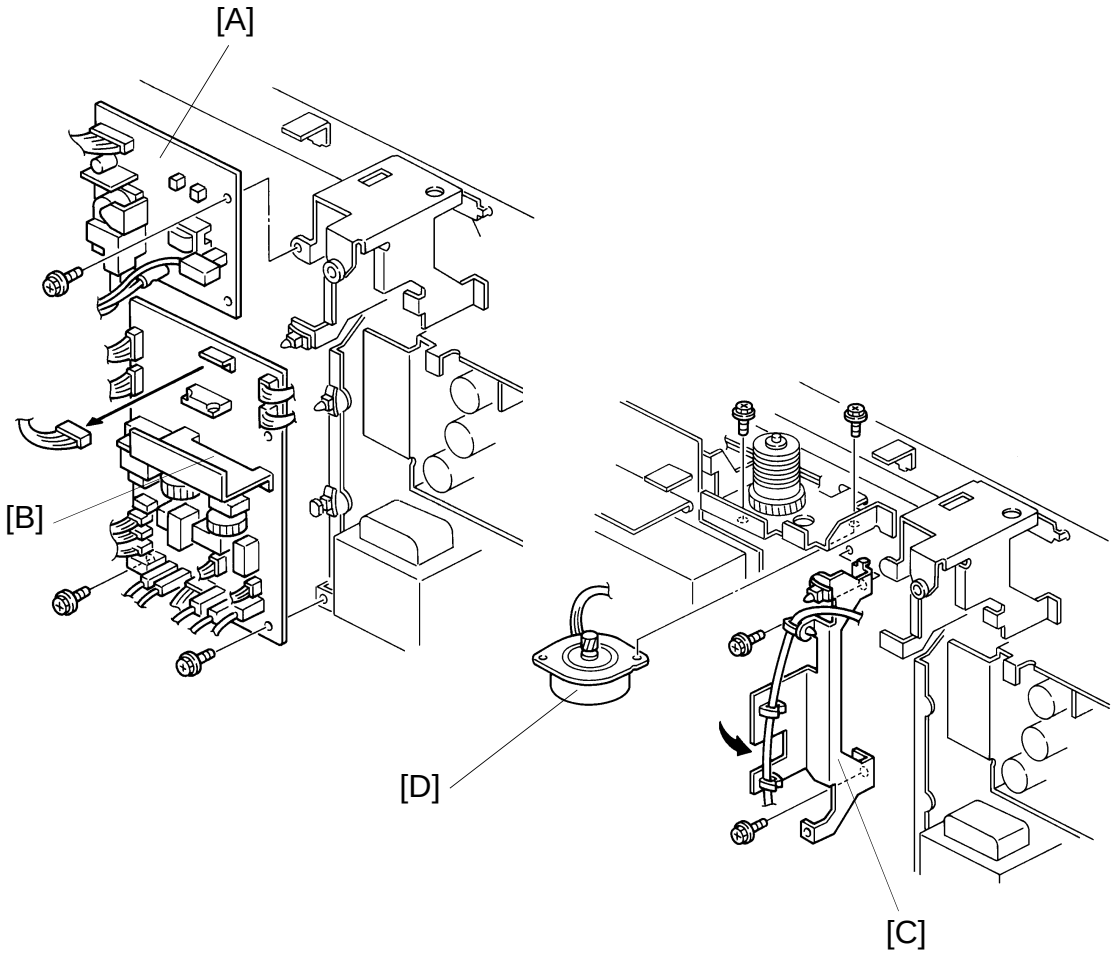

1. Turn off the main switch.
2. Remove the rear cover and the upper cover.
3. Remove the CC/G/B power pack [A] (2 locking supports, 1 screw, and 4 connectors).
4. Remove the ac drive board [B] (2 locking supports, 2 screws, and all connectors).
5. Remove the left ac drive board supporting frame [C] (2 screws).
6. Remove the scanner motor [D] (2 screws).

2.9 LENS MOTOR REPLACEMENT

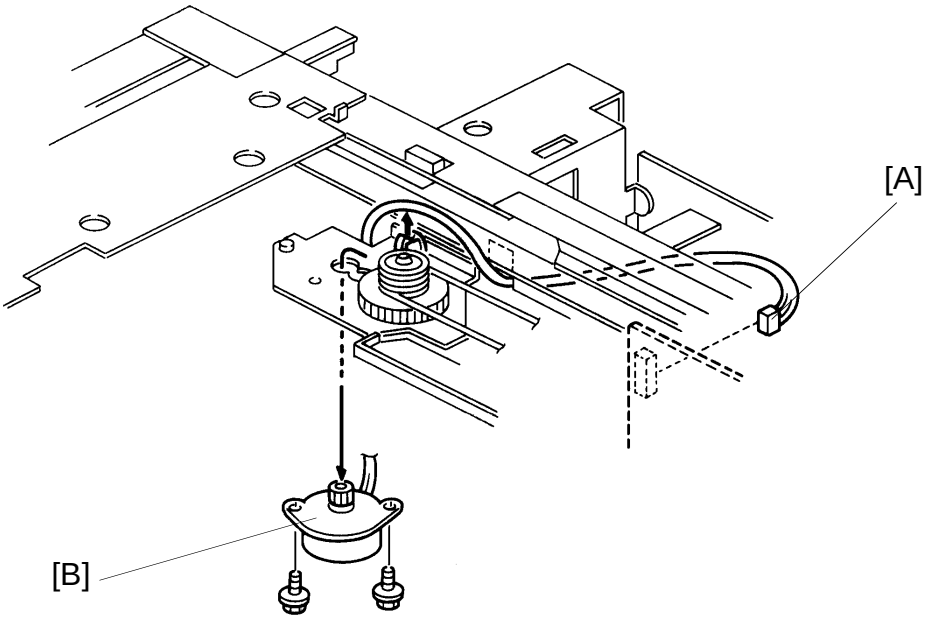

1. Turn off the main switch.
2. Remove the rear cover, the left lower cover, and the left upper cover.
3. Remove the lens motor 6P connector [A] from the ac drive board.
4. Remove the lens motor [B] (2 screws).

2.10 LENS DRIVE WIRE INSTALLATION

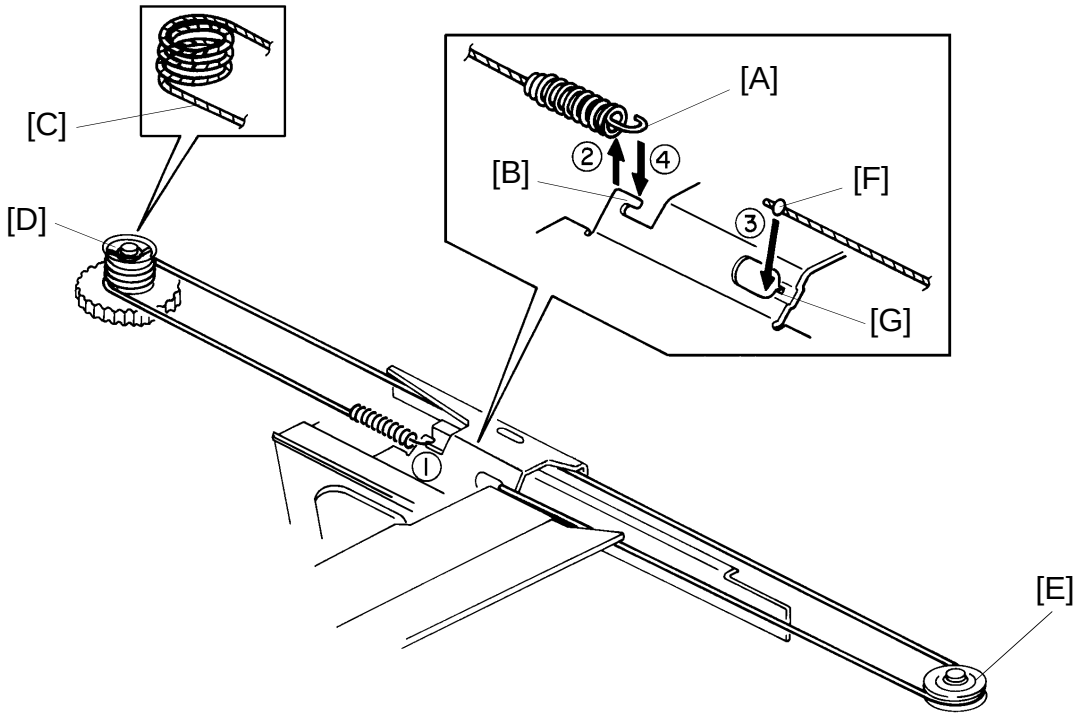

1. Remove the exposure glass and the lens cover.
2. Remove the lens drive wire.
3. Hook the spring [A] to the sensor actuator bracket [B].
4. Wind the lens drive wire [C] three and a half times around the pulley [D].
5. Wind the other end of the wire over the pulley [E].
6. Unhook the spring [A] (do not let go) and place the bead [F] at the other end of the wire in slot [G] on the sensor actuator bracket.
7. Reattach the spring to the bracket.

NOTE: Rotate the lens drive pulley and make sure that the lens drive wire moves smoothly.

2.11 4TH/5TH MIRROR MOTOR REPLACEMENT

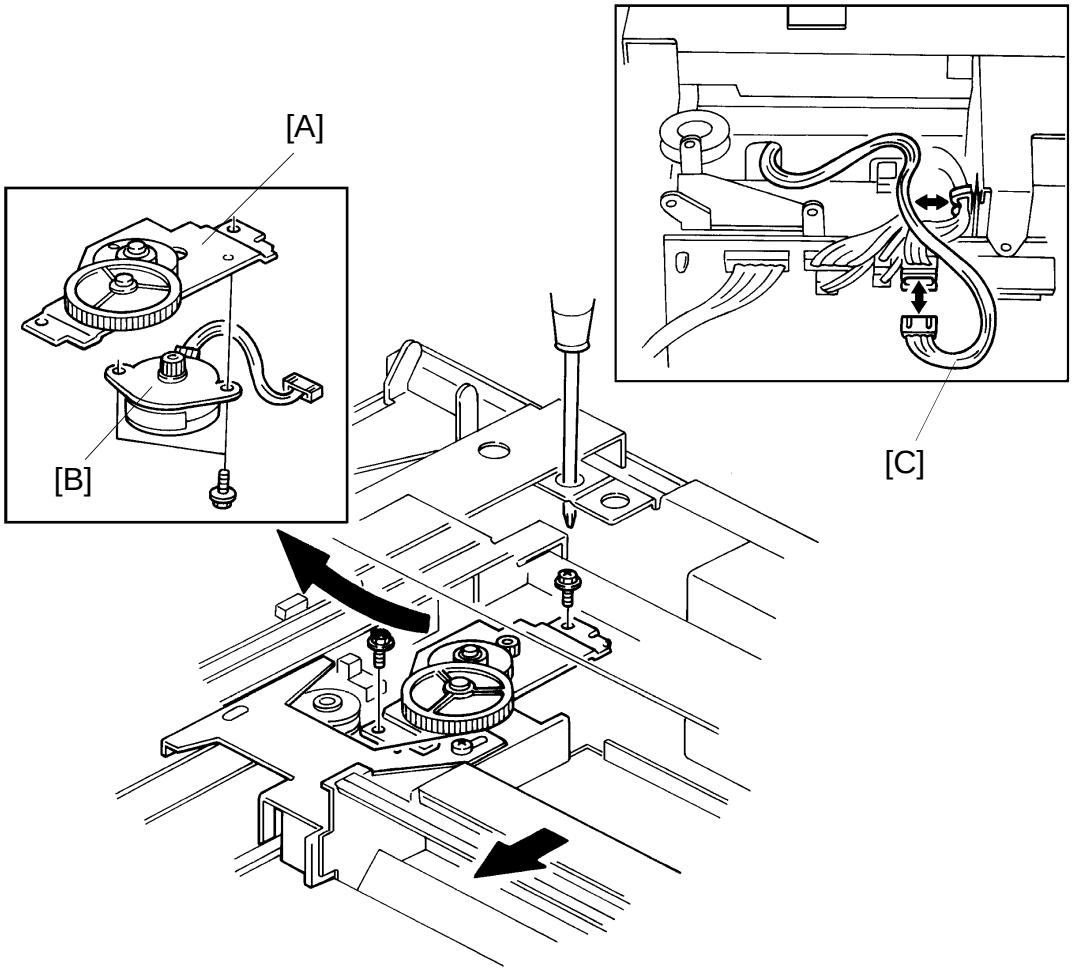

1. Turn off the main switch.
2. Remove the exposure glass, upper cover, lens cover, and rear cover.
3. Remove the main board.
4. Move the 4th/5th mirror assembly to the left (viewed from the front).
5. Remove the motor bracket [A] (2 screws).
6. Separate the 4th/5th mirror motor [B] from the bracket (2 screws) and replace it.

NOTE: Position the motor harness [C] as shown when installing a new motor.

3. DEVELOPMENT AND TONER SUPPLY

3.1 TONER SUPPLY UNIT REMOVAL

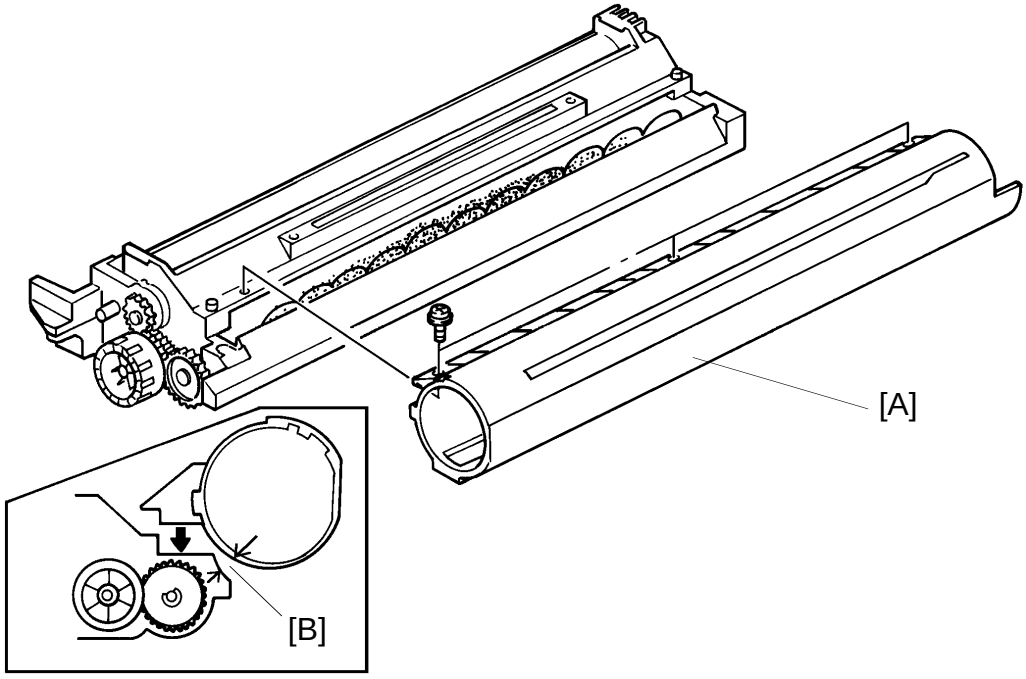

1. Take out the development unit.
2. Remove the toner supply unit [A] (3 screws).

NOTE: Make sure that there is no gap [B] between the toner supply unit and the development unit. (See illustration.)

3.2 DEVELOPER REPLACEMENT

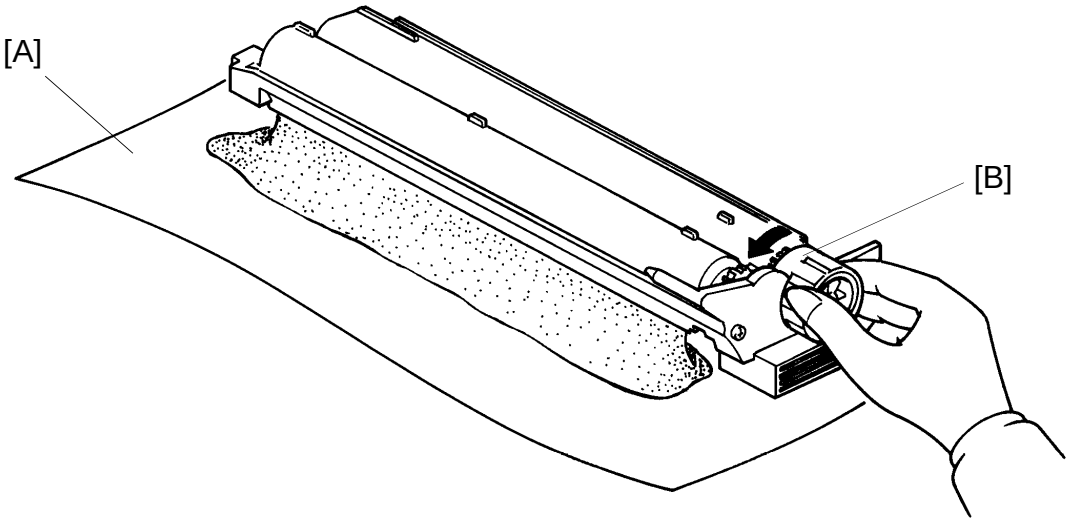

1. Take out the development unit.
2. Set the development unit on a large sheet of paper [A].
3. Remove the toner supply unit (3 screws). (See Toner Supply Unit Removal.)
4. Turn the paddle roller knob [B] counterclockwise to empty developer onto the paper.

   NOTE: Dispose of the used toner according to local regulations.
5. Make sure that no developer remains on the development roller or in the development unit.
6. Pour one pack of developer into the development unit while turning the paddle roller knob.
7. Reinstall the toner tank and set the development unit in the machine.
8. Confirm using SP54 that Vsg is 4 ± 0.2 volts .
   If not, adjust Vsg. (See ID Sensor Adjustment.)
9. Perform initial setting for new black or color developer using the following SP modes:

Black	Color
SP65	SP10

3.3 INLET SEAL REMOVAL

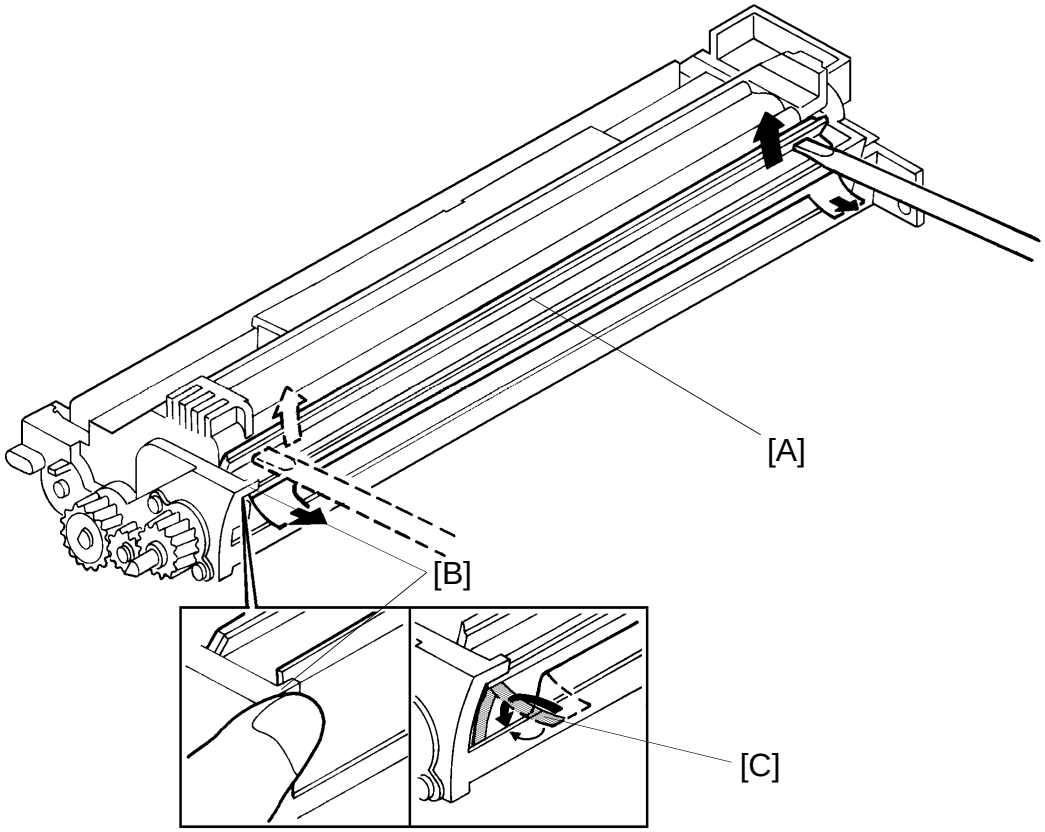

1. Take out the development unit.
2. Remove the inlet seal plate [A] by working a small blade screwdriver along the edge of the plate while pressing the stoppers [B] with one finger as shown.

NOTE: a) Be careful not to damage the stoppers [B] when removing the inlet seal plate.

b) To install a new inlet seal plate, remove the covering from the 2-sided tape [C] and affix the inlet seal [D] to the development unit lower casing. Tuck both ends of the seal inside the lower casing as shown.

3.4 TONER SUPPLY CLUTCH REPLACEMENT

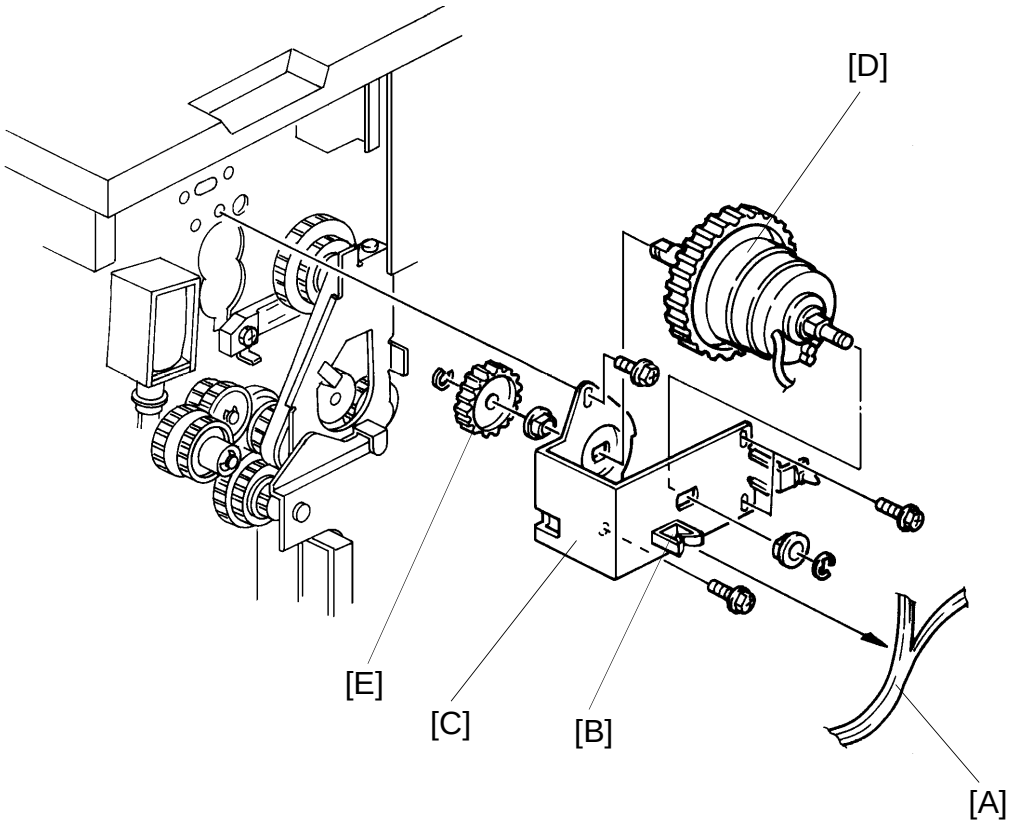

1. Turn off the main switch.
2. Remove the rear cover (4 screws) and main board (4 screws, 1 locking support, and all connectors).
3. Remove the color switch harness [A] from the clamp [B].
4. Remove the toner supply clutch bracket [C] (4 screws).
5. Replace the clutch [D] (2 E-rings, bushings, and 1 gear [E]).

3.5 DEVELOPMENT CLUTCH SOLENOID REPLACEMENT

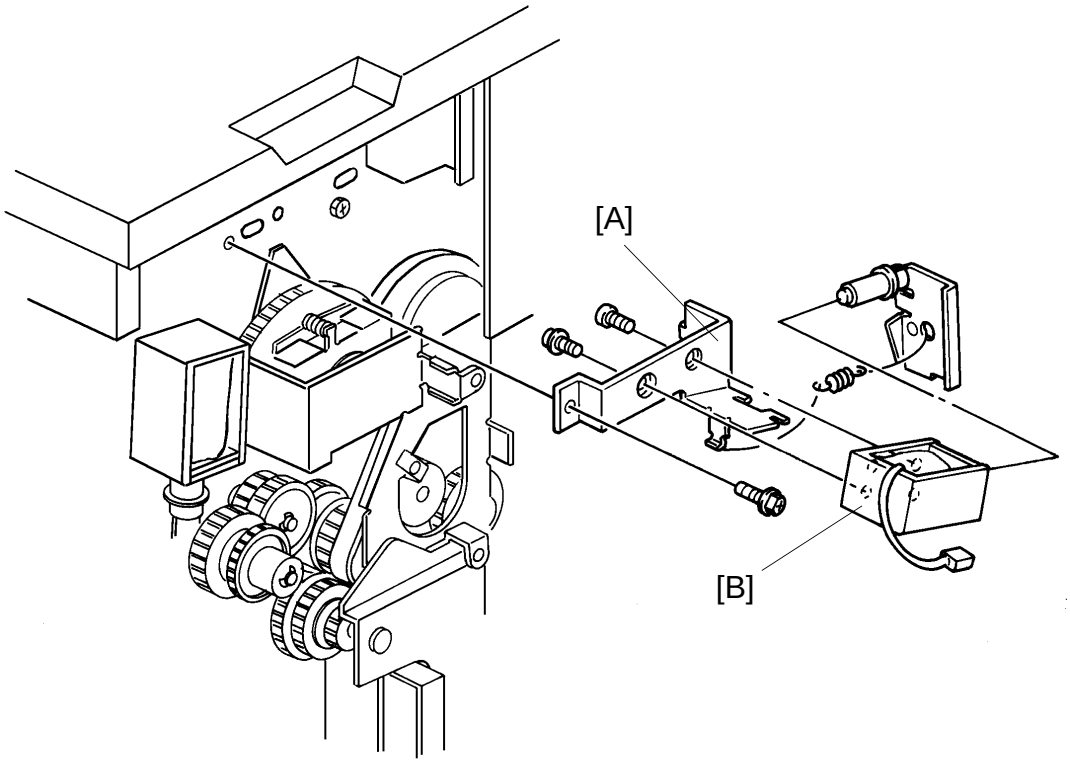

1. Turn off the main switch.
2. Remove the rear cover (4 screws) and main board (4 screws, 1 locking support, and all connectors).
3. Remove the clutch solenoid bracket [A] (1 screw).
4. Replace the solenoid [B] (2 screws).

NOTE: Reinstall the solenoid on the bracket [A] so that the harness is positioned on the upper side as shown.

3.6 DEVELOPMENT DRIVE CLUTCH REPLACEMENT

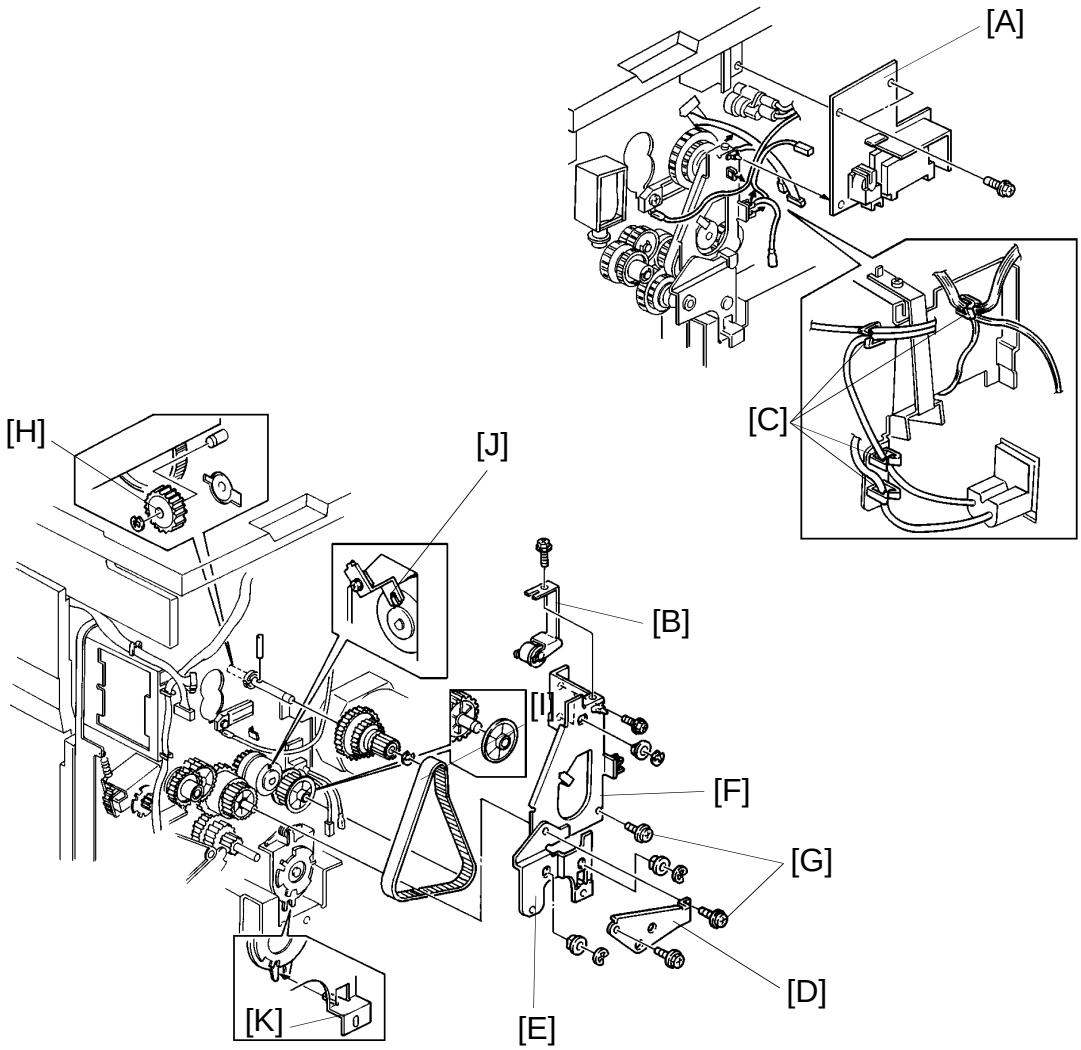

1. Remove the following parts:
   - Front cover
   - Cleaning unit
   - Drum unit
   - Main board
   - Development unit
   - Charge corona unit
   - Rear cover
2. Remove the toner supply clutch. (See Toner Supply Clutch Replacement.)
3. Remove the development clutch solenoid. (See Development Clutch Solenoid Replacement.)
4. Remove the TC & SC power pack [A] (2 locking supports and screws).
5. Remove the timing belt tightener [B] (1 screw).
6. Remove the harnesses from the clamps [C] on the frames as shown.

7. Remove the 3 clutch brackets [D, E, and F] (3 E-rings, bushings, and 6 screws).

   Screws: 4 tapping screws and 2 screws with washer [G].

8. Remove the development drive gear [H] (1 E-ring) from the front side.

9. Replace the drive clutch [I] (1 E-ring and parallel pin).

NOTE: When reassembling, make sure of the following:
a) The timing belt fits correctly onto the sprockets.
b) Stopper [J] locks the registration clutch.
c) Stopper [K] locks the 2nd paper feed clutch.
d) The harnesses do not pass between the frames.

3.7 DEVELOPMENT BIAS VOLTAGE ADJUSTMENT (SP9-57)

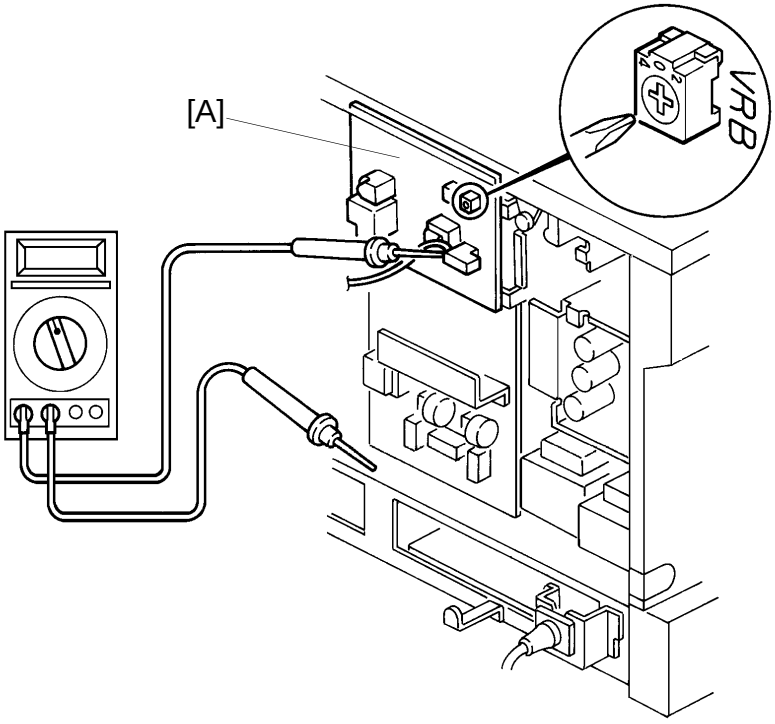

ADJUSTMENT STANDARD	Adjusting VR	
DC –400 ± 10 V	VRB	SP9-57

NOTE: VRB on the spare parts CC/Grid/Bias power pack is pre-adjusted. Usually it is not necessary to adjust VRB when the CC/Grid/Bias power pack is replaced.

1. Set the multimeter range to dc 1500 V and connect the multimeter leads as shown.

   NOTE: Keep the multimeter leads away from the main board.

2. Turn on the main switch, front cover safety switch, and development bias using SP9-57.
3. Adjust the development bias voltage to –400 ± 10 V by turning VRB on the CC/Grid/Bias power pack [A].
4. Press the Clear/Stop key and turn off the main switch.

4. CLEANING

4.1 CLEANING UNIT REMOVAL

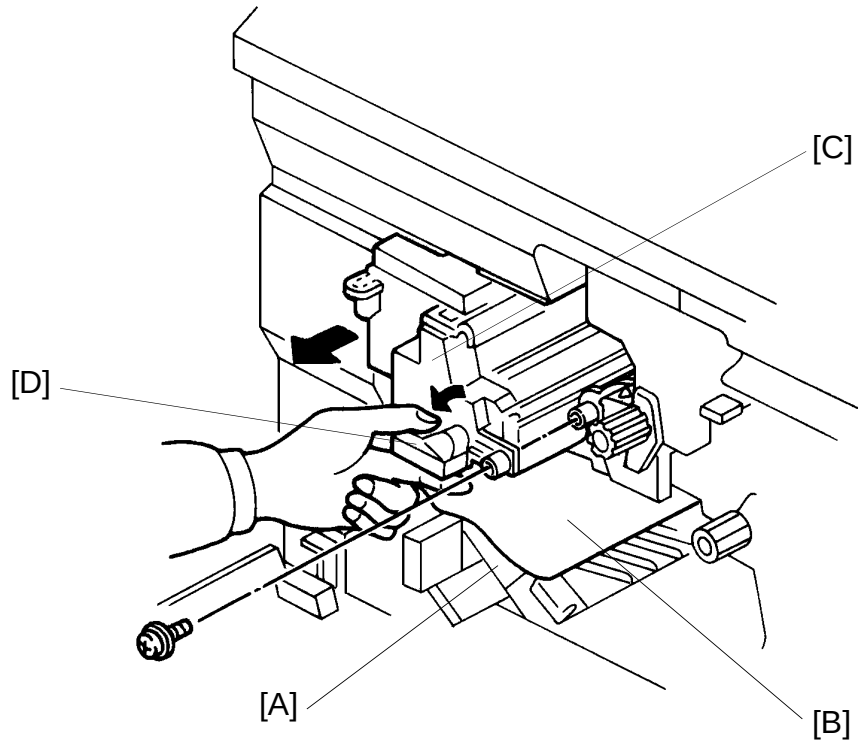

1. Open the front cover.
2. Lower the transport unit [A].
3. Place a sheet of paper [B] underneath the cleaning unit [C].
4. While holding down the cleaning blade release lever [D], remove the cleaning unit (1 screw).

4.2 CLEANING BLADE REPLACEMENT

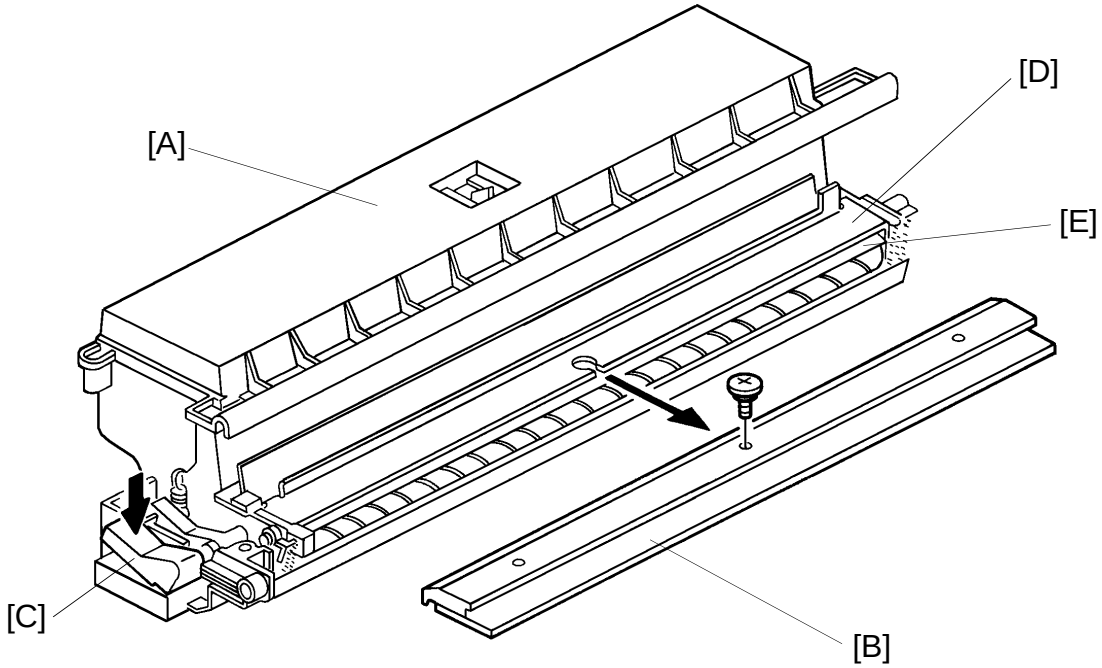

1. Remove the cleaning unit [A]. (See Cleaning Unit Removal.)
2. Remove the cleaning blade [B] (1 screw).
3. While holding down the cleaning blade release lever [C], install the new cleaning blade between the blade bracket [D] and the blade scraper [E] (collar screw).

NOTE: a) Do not touch the edge of a new cleaning blade, as it is damaged easily.
b) After installing a new cleaning blade, make sure it swivels.

4.3 CLEANING BRUSH REPLACEMENT

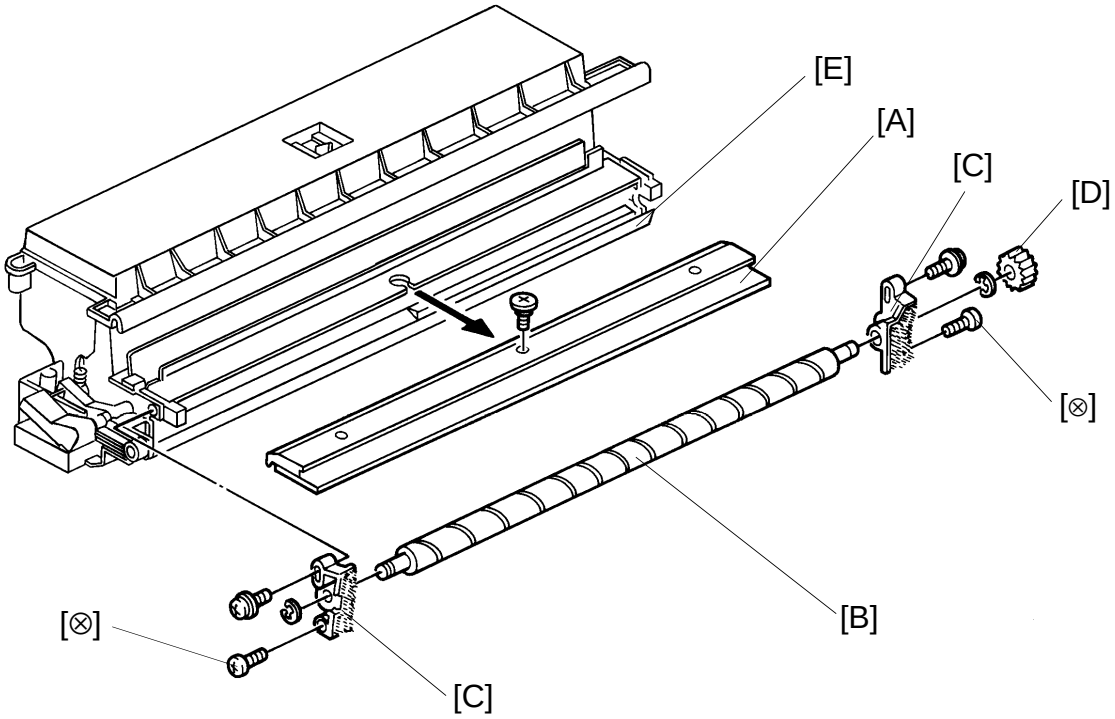

1. Remove the cleaning blade [A]. (See Cleaning Blade Replacement.)
2. Remove the cleaning brush bracket screws (4); then, remove the cleaning brush [B] together with the cleaning side brackets [C] and gear [D].
3. Remove the gear and the two E-rings, and replace the cleaning brush.

NOTE: a) Do not touch the cleaning brush surface. Handle only the shaft-ends.
b) Do not bend or damage the entrance seal [E].
c) These screws [⊗] are tapping screws. Do not tighten them too much as this will strip the resin threads.

4.4 BLADE SCRAPER REPLACEMENT

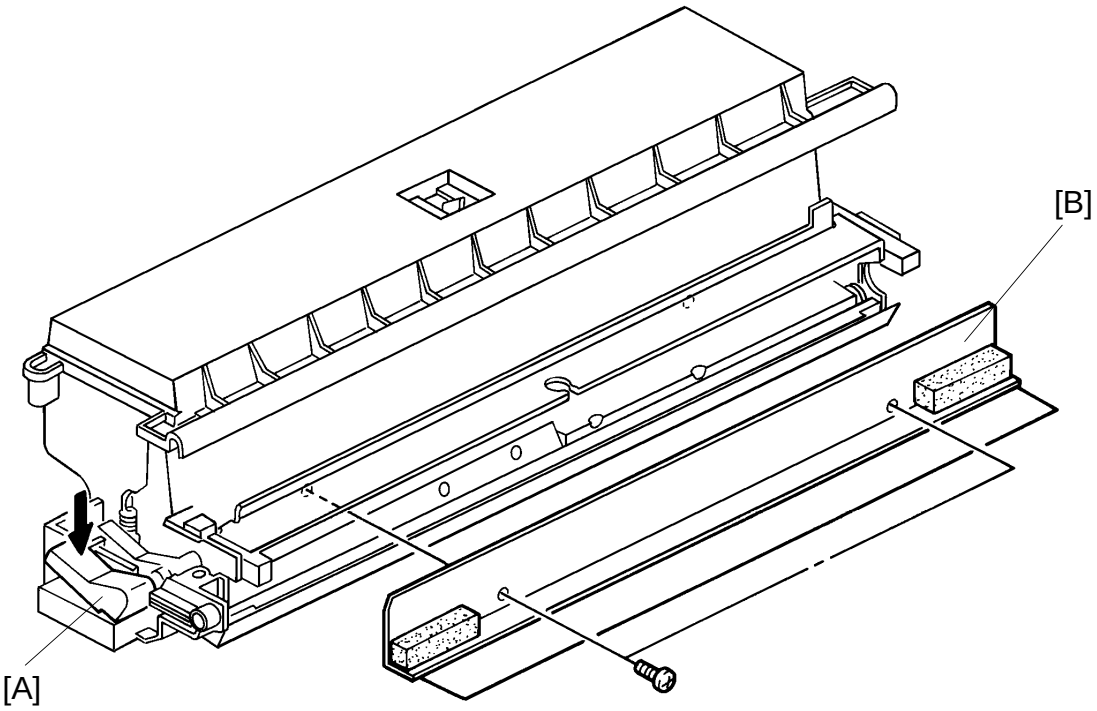

1. Remove the cleaning blade and brush. (See Cleaning Blade and Brush Replacement.)
2. While holding down the cleaning blade release lever [A], remove the blade scraper [B] (2 screws).

4.5 TONER OVERFLOW SENSOR REPLACEMENT

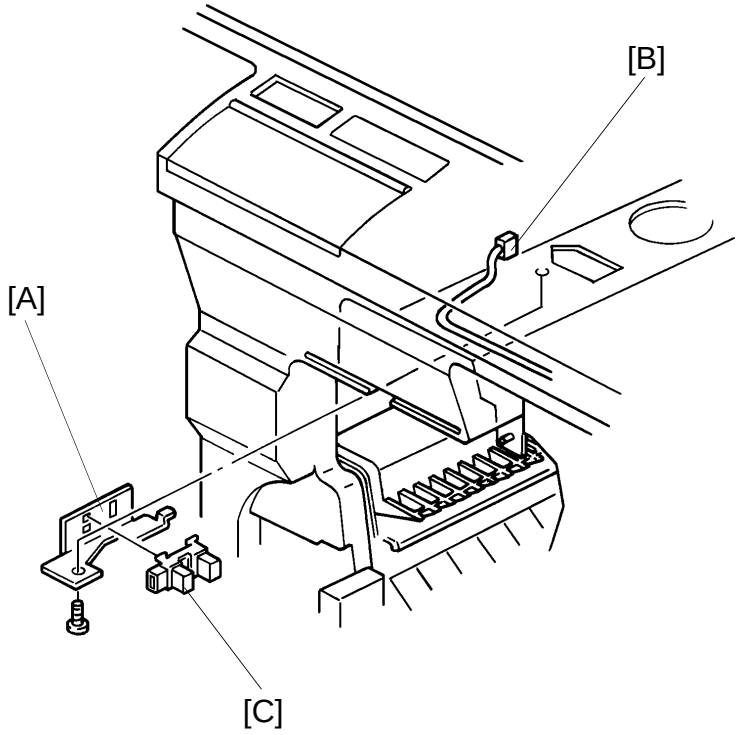

1. Remove the cleaning unit.
2. Lower the transport unit.
3. Remove the toner overflow sensor bracket [A] from the duct bracket (1 screw).
4. Disconnect the connector [B] and remove the toner overflow sensor [C] from the bracket (1 screw).

4.6 USED TONER COLLECTION

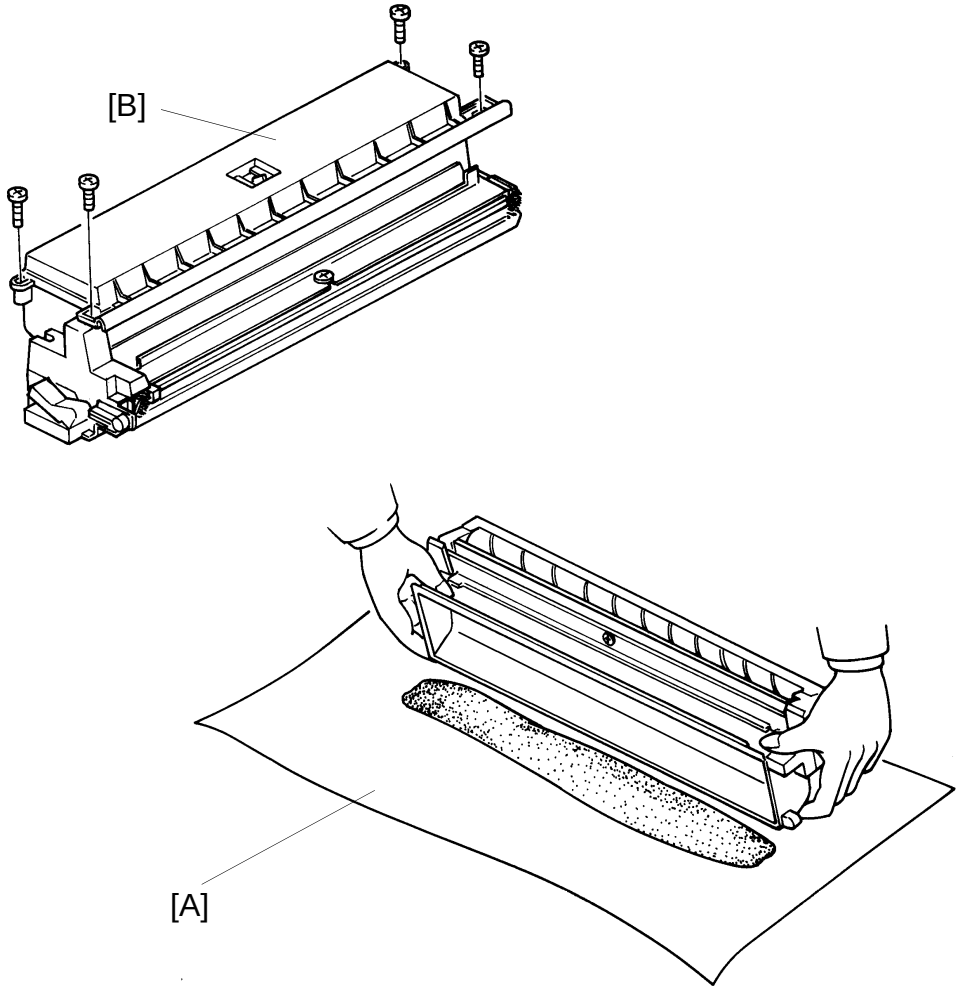

1. Remove the cleaning unit. (See Cleaning Unit Removal.)
2. Set the cleaning unit on a large sheet of paper [A].
3. Remove the toner collection cover [B] (4 screws).
4. Pour the used toner slowly onto the paper sheet so that the toner does not scatter.
5. Place the paper sheet with the toner into a vinyl bag.

   NOTE: Dispose according to local regulations.

4.7 ENTRANCE SEAL REPLACEMENT

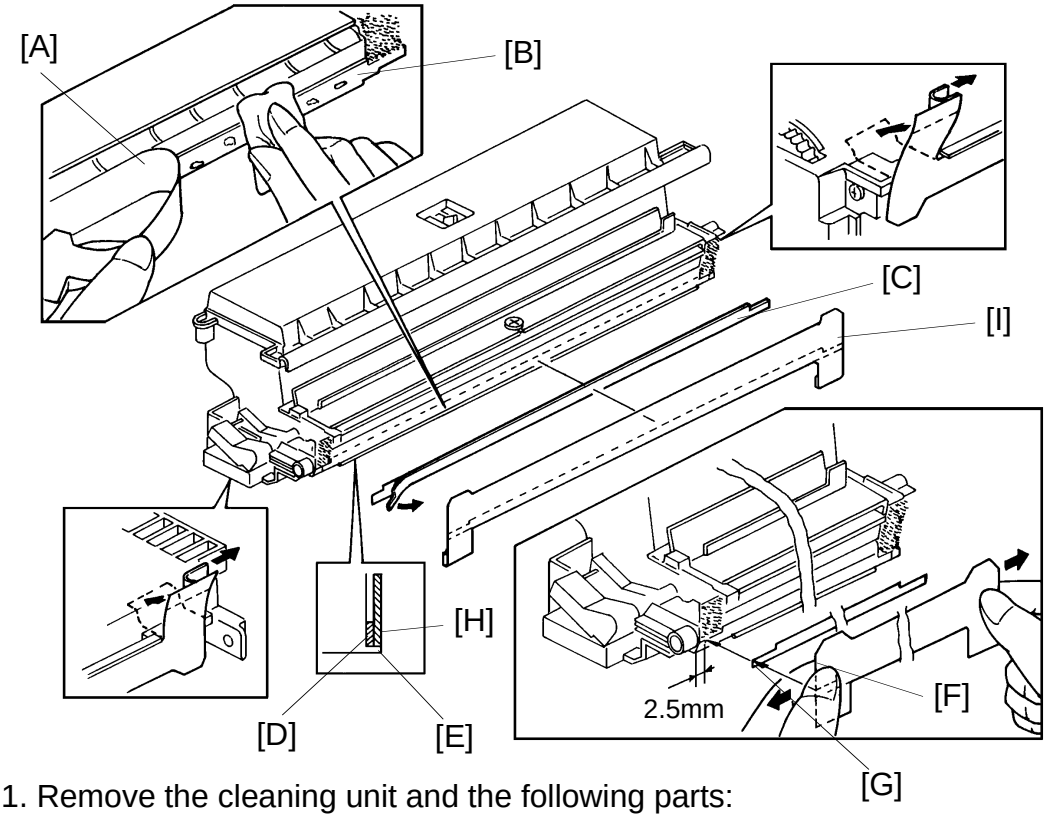

1. Remove the cleaning unit and the following parts:
   - Cleaning Blade
   - Cleaning Brush
2. Remove the used toner. (See Used Toner Collection.)
3. Clean the cleaning unit with a vacuum cleaner.
4. Remove the entrance seal [A] together with the strip of 2-sided tape securing it to the lower casing.
5. Clean the lower casing [B] with alcohol; make sure that no tape remains on the casing surface.
6. Place a new strip of 2-sided tape [C] on the lower casing surface. The lower edge [D] of the tape must be flush with the edge [E] of the projection as shown in the illustration.
7. Place the new entrance seal on the 2-sided tape. Extend the seal so that both edges [F] align with the edges [G] of the tape.

NOTE: a) The lower edge [H] of the entrance seal must be aligned with the edge [E] of the projection on the lower casing.
b) Make sure that there are no waves in the upper edge [I] of the entrance seal.

5. PAPER FEED

5.1 1ST PAPER SIZE SWITCH REPLACEMENT

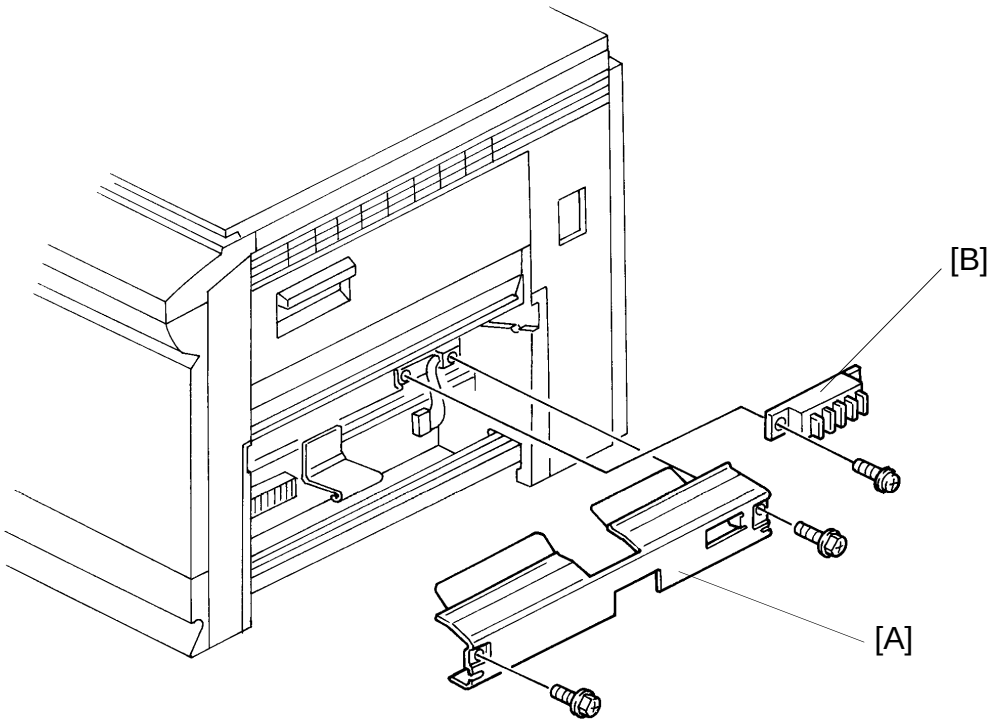

1. Turn off the main switch.
2. Remove the paper feed lower guide bracket [A] (2 screws).
3. Remove the 1st paper size switch [B] from the paper feed station (1 screw).
4. Pull the size switch out slightly and unhook the connector. Remove the size switch.

NOTE: After connecting the new switch to the connector, remove the slack in the switch harness by pulling on it from the rear side of the copier.

5.2 1ST PAPER END SENSOR AND PAPER LIFT SENSOR REPLACEMENT

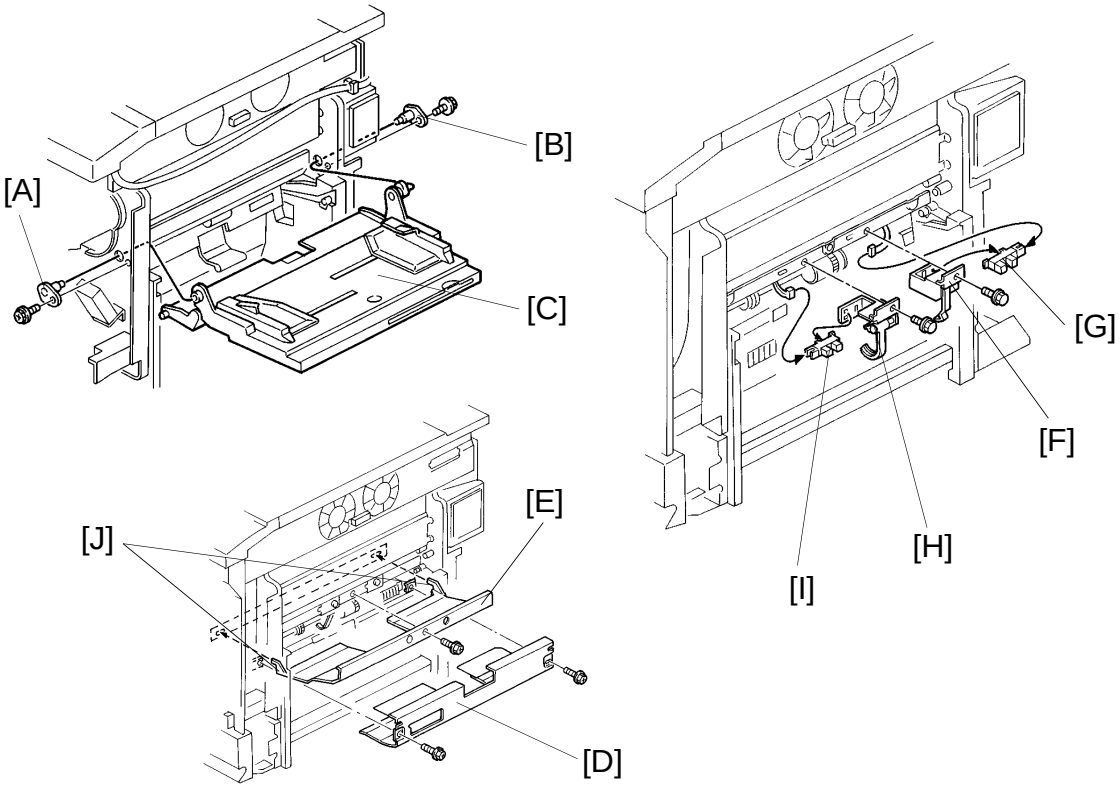

1. Turn off the main switch.
2. Remove the following covers.
   - Front cover
   - Front right inner cover
   - Rear cover
   - Right cover
3. Remove the front [A] and rear [B] holders supporting the manual feed table [C] (1 screw each).
4. Remove the manual feed table [C].
5. Remove the paper feed lower guide bracket [D] (2 screws).
6. Remove the paper feed upper guide bracket [E] (1 screw).
7. Remove the 1st paper end sensor bracket [F] (1 screw).
8. Replace the 1st paper end sensor [G] (1 connector).
9. Remove the paper lift sensor bracket [H] (1 screw).
10. Replace the paper lift sensor [I] (1 connector).

NOTE: When installing the paper feed upper guide plate, make sure that the hooks [J] fit into the holes as shown.

5.3 1ST FEED ROLLER, PICK-UP ROLLER, AND REVERSE ROLLER REPLACEMENT

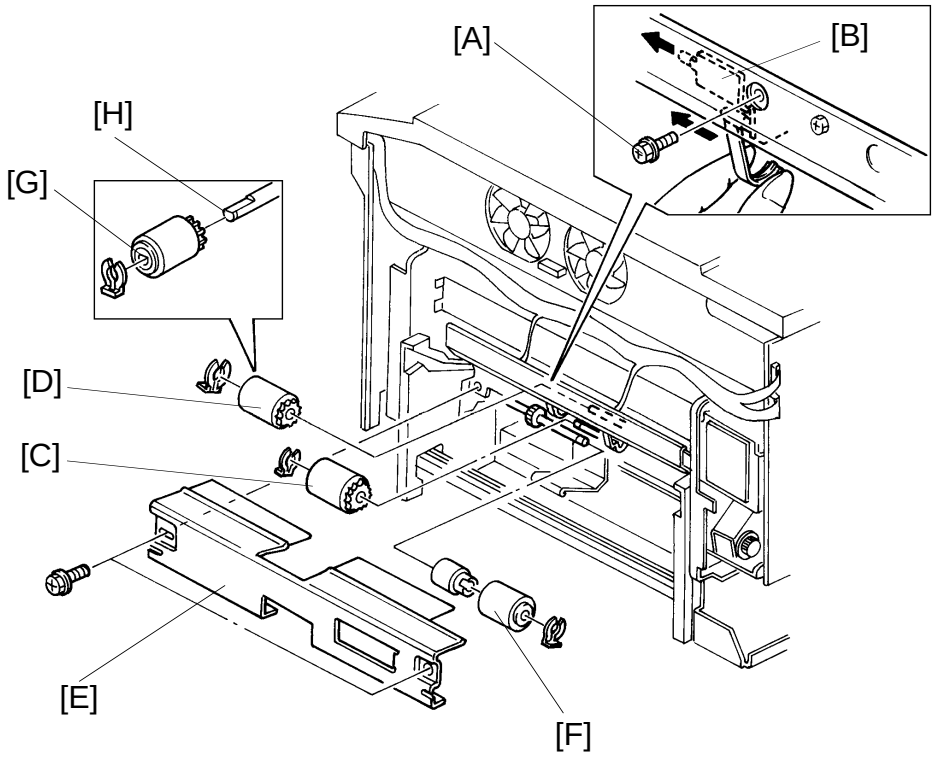

1. Turn off the main switch.
2. Open the manual feed table.
3. Remove the screw [A] securing the paper lift sensor bracket [B].
4. Close the manual feed table.
5. Slide the sensor bracket in the direction of the arrow.
6. Replace the pick-up roller [C] (1 small snap-ring).
7. Replace the feed roller [D] (1 snap-ring).
8. Remove the paper feed lower guide bracket [E] (2 screws).
9. Replace the reverse roller [F] (1 small snap-ring).

NOTE: a) Snap-rings come in two sizes; the larger of the two is used on the feed roller.
b) Flat faces [G] and [H] of the feed roller and shaft must be aligned.

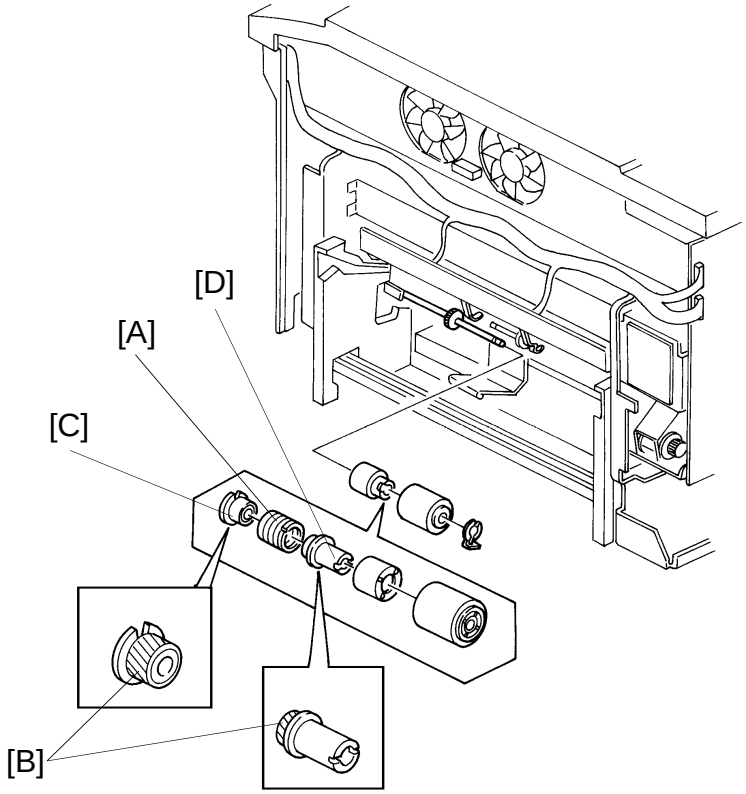

– Reinstallation –

1. Clean the rollers with a damp cloth.
2. Clean the clutch spring [A] of the reverse roller.
3. Lubricate the surface [B] of the output hub [C] and input hub [D] with Mobil Temp. 78.

5.4 2ND AND 3RD PAPER FEED ROLLER REPLACEMENT

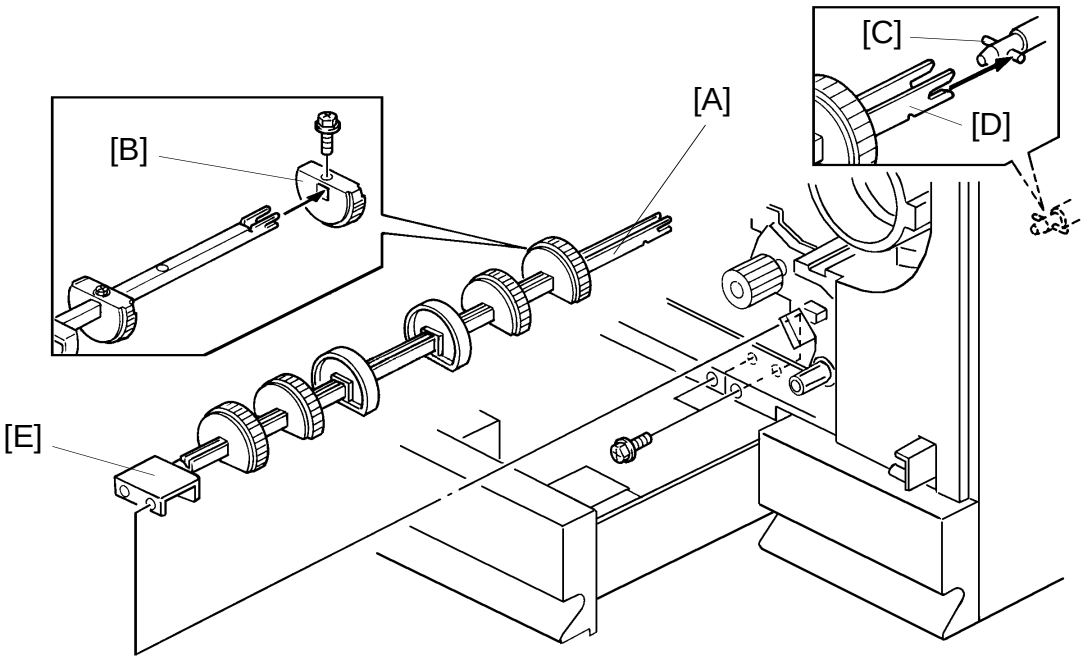

1. Turn off the main switch.
2. Open and remove the front cover.
3. Pull out the paper tray or the duplex tray.
4. Remove the feed roller assembly [A] (2 screws).
5. Replace the feed rollers [B] (1 screw each).

NOTE: When reinstalling the feed roller assembly, make sure of the following:

a) The feed rollers face up as shown.
b) The pins [C] on the end of the drive shaft fit into the slots [D] on the end of the feed roller shaft.
c) Surface [E] of the bracket faces up.

5.5 RELAY SENSOR REPLACEMENT (A111 Copier Only)

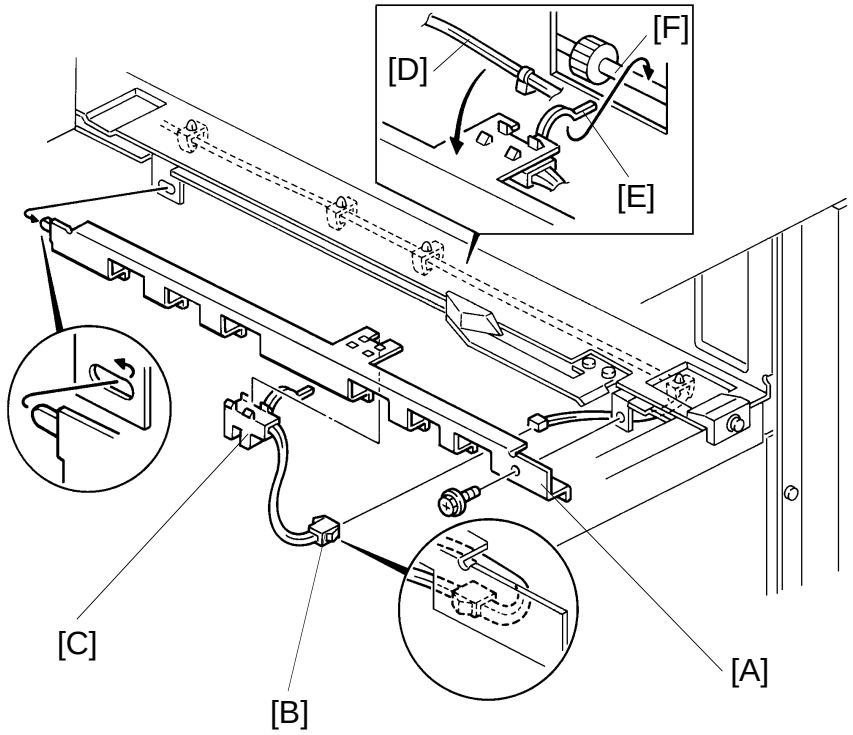

1. Remove the 3rd paper feed roller. (See 2nd and 3rd Paper Feed Roller Replacement section.)
2. Remove the relay sensor bracket [A] (1 screw).
3. Disconnect the relay sensor connector [B].
4. Replace the relay sensor [C].

NOTE: When reinstalling, make sure that the harness [D] is not in the way, and that the sensor's arm [E] goes over the roller shaft [F] as in the figure.

5.6 PICK-UP ROLLER RELEASE SOLENOID AND MANUAL FEED TABLE SWITCH REPLACEMENT

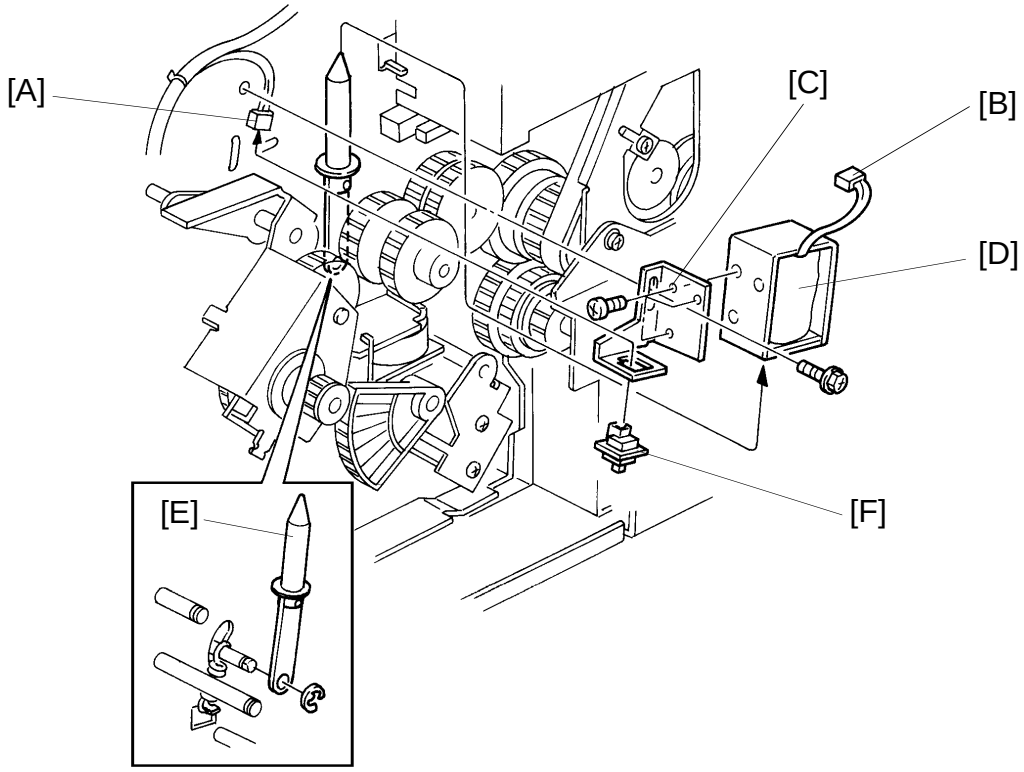

1. Turn off the main switch.
2. Remove the rear cover.
3. Remove the main board (4 screws, 1 locking support, and all connectors).
4. Disconnect the connector [A] of the switch.
5. Free the solenoid's harness [B] from the clamps.
6. Remove the solenoid bracket [C] (1 screw).
7. Replace the solenoid [D] without plunger [E] (3 screws) or the switch [F].

NOTE: Before replacing the plunger [E] (1 E-ring), first remove the paper lift clutch. (See Paper Lift Clutch Replacement.)

5.7 1ST PAPER FEED CLUTCH SOLENOID REPLACEMENT

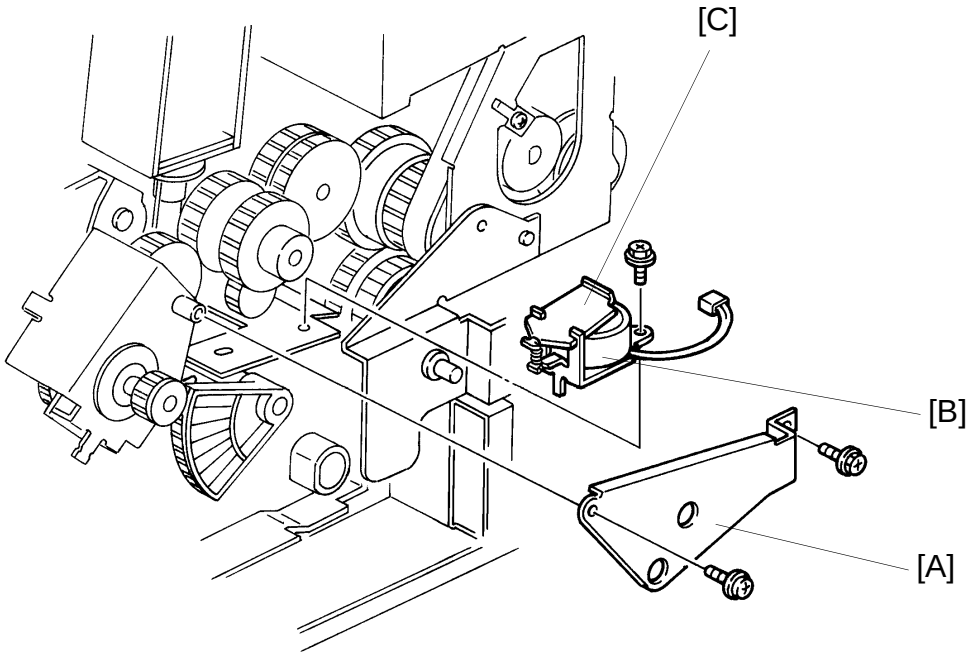

1. Turn off the main switch.
2. Remove the rear cover.
3. Remove the main board (4 screws, 1 locking support, and all connectors).
4. Remove the clutch bracket [A] (2 screws).
5. Replace the solenoid [B] (1 screw) while pressing down on the stopper lever [C].

5.8 PAPER LIFT CLUTCH SOLENOID ASSEMBLY REPLACEMENT

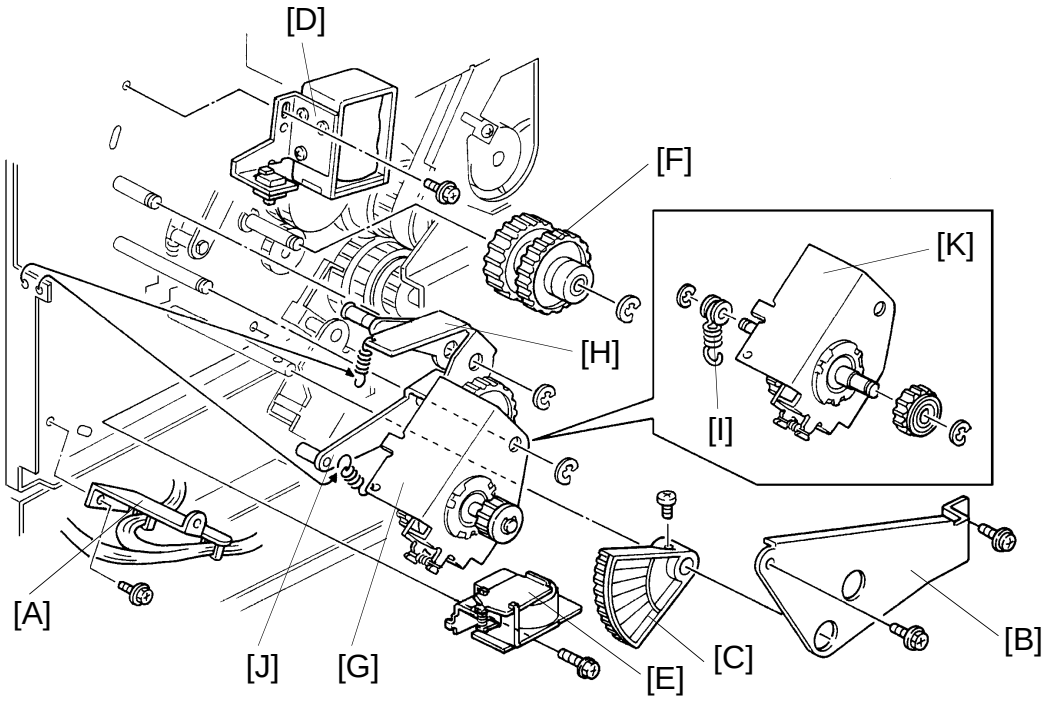

1. Turn off the main switch.
2. Remove the left and rear covers.
3. Remove the main board (4 screws, 1 locking support, and all connectors) and main board bracket [A] (1 screw).
4. Remove the clutch bracket [B] (2 screws).
5. Remove the sector gear [C] (1 screw).
6. Remove the pick-up roller release solenoid with bracket [D]. (See Pick-up Roller Release Solenoid Replacement.)
7. Remove the 1st paper feed clutch solenoid with bracket [E] (1 screw).
8. Remove the 1st feed roller spring clutch [F] (1 E-ring).
9. Remove the paper lift clutch [G] together with the manual feed table detection lever [H] (3 E-rings and two springs).
10. Remove the spring [I] from the actuator lever [J].
11. Replace the paper lift clutch [K] (spring, collar, and gear).

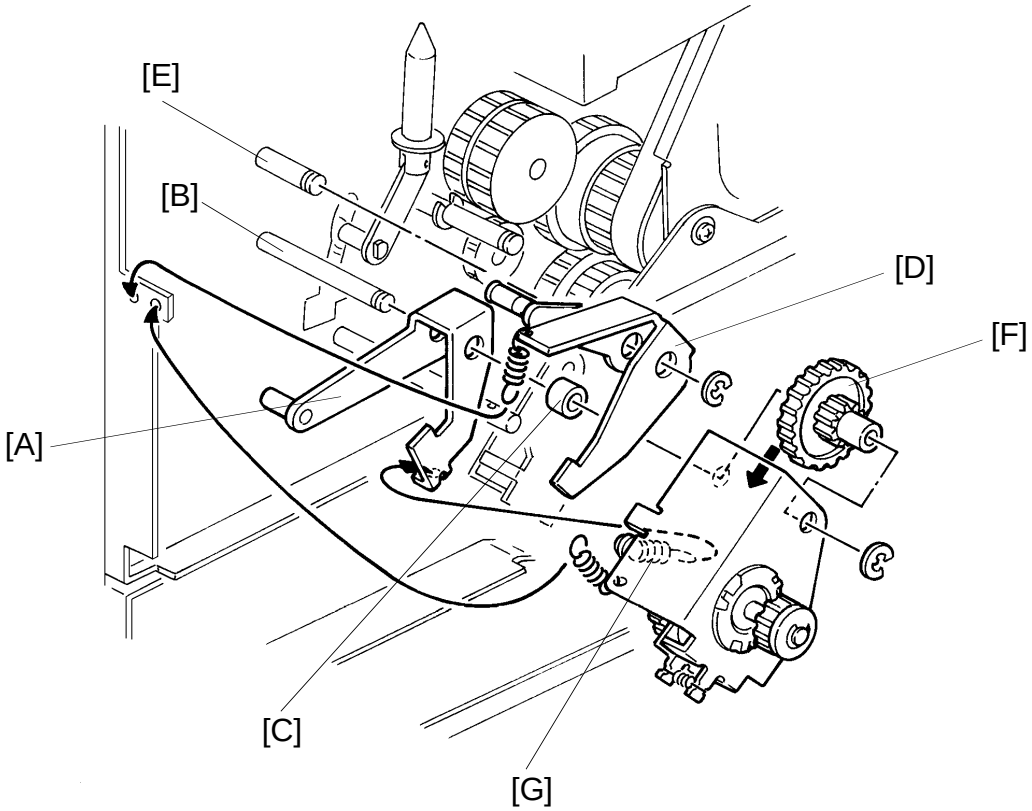

– Reinstallation –

1. Install the actuator lever [A] on the stud pin [B].
2. Set the collar [C] on the stud pin [B].
3. Install the manual feed table detection lever [D] on the stud pin [E].
4. Place the gear [F] on the paper lift clutch solenoid assembly and install it on the stud pin [B] as shown.
5. With a pair of pliers, hook the spring [G] to the actuator lever.
6. Set the 2 E-rings and 2 springs.

5.9 REGISTRATION CLUTCH REPLACEMENT

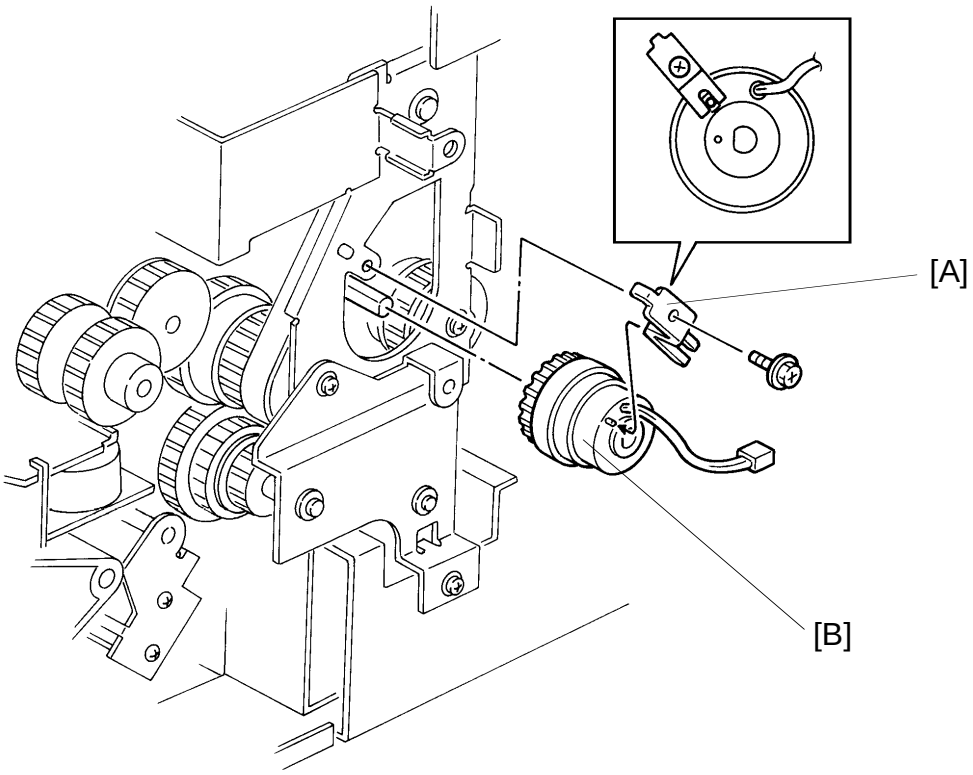

1. Turn off the main switch.
2. Remove the rear cover.
3. Remove the main board (4 screws, 1 locking support, and all connectors).
4. Remove the stopper bracket [A] (1 screw).
5. Replace the registration clutch [B].

NOTE: When reinstalling a new registration clutch, make sure that the stopper bracket locks the registration clutch as shown.

5.10 2ND PAPER FEED CLUTCH AND RELAY ROLLER CLUTCH REPLACEMENT

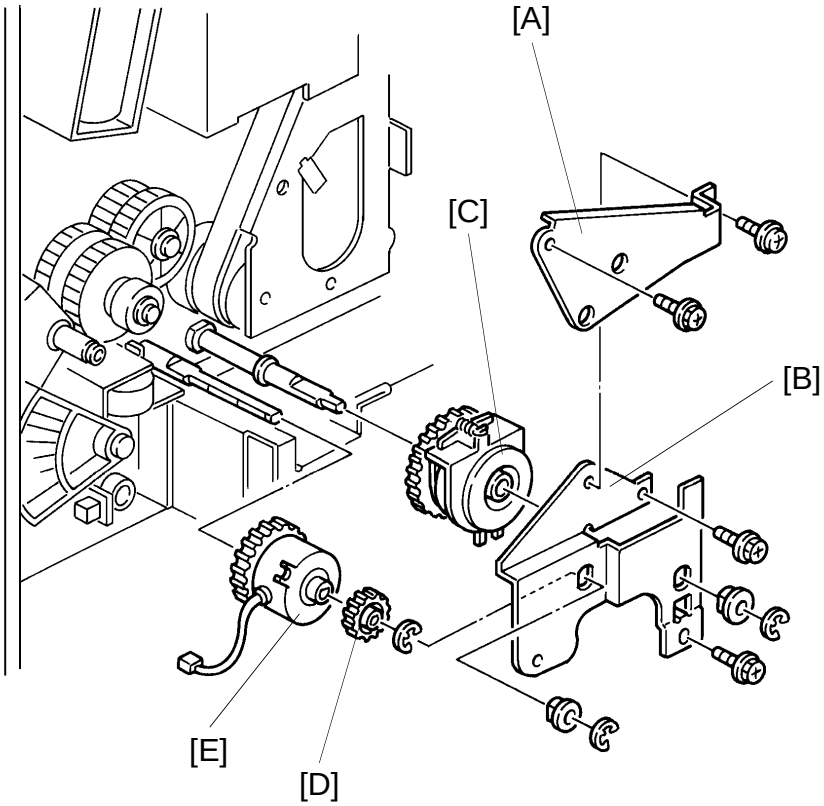

1. Turn off the main switch.
2. Remove the rear cover.
3. Remove the main board (4 screws, 1 locking support, and all connectors).
4. Remove the clutch bracket [A] (2 screws).
5. Remove the support bracket [B] (2 E-rings, 2 screws, and 2 bushings).
6. Replace the 2nd paper feed clutch solenoid [C].
7. Remove the gear [D] (1 E-ring) and replace the relay roller clutch [E].

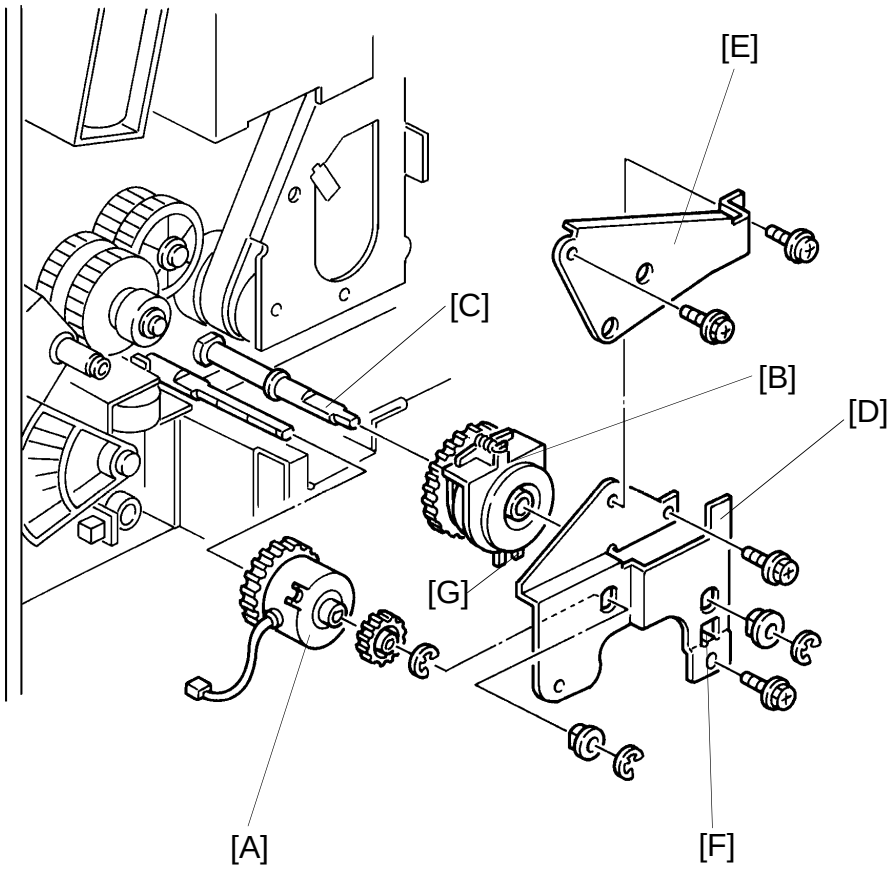

– Reinstallation –

1. Set the clutches [A], [B] on the shaft.
2. Open the right cover and the front cover.
3. Rotate the second feed roller shaft [C] so that the rollers face up.
4. Install the support bracket [D] and the clutch bracket [E].

NOTE: Make sure that the stopper [F] on the support bracket fits into the slot [G] on the clutch.

5.11 3RD PAPER FEED CLUTCH REPLACEMENT (A111 Copier Only)

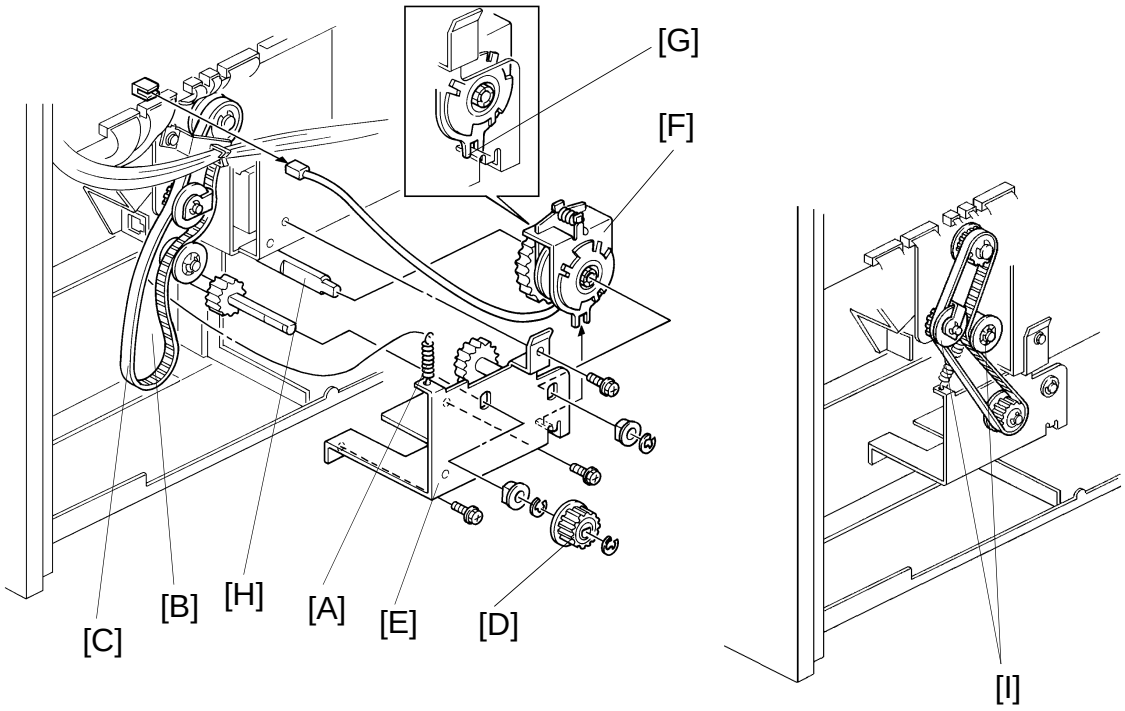

1. Turn off the main switch.
2. Remove the rear cover (4 screws).
3. Unhook the spring [A] from the tension pulley bracket [B].
4. Remove the drive belt [C] from the drive pulley [D]; then remove the pulley (1 E-ring).
5. Remove the 3rd paper feed clutch bracket [E] (2 E-rings and bushings and 3 screws).
6. Replace the 3rd paper feed clutch [F] (1 connector).

NOTE: a) When the clutch is installed, make sure that the stopper [G] on the bracket fits into the slot on the clutch as shown.
b) When the clutch is installed, make sure that the 3rd feed rollers are facing up. If not, rotate the shaft [H].
c) When the drive belt is installed, make sure that the belt stoppers [I] of the drive pulleys are positioned correctly as shown. This is to prevent the drive belt from coming off the pulleys.

5.12 2ND AND 3RD PAPER END SENSOR REPLACEMENT

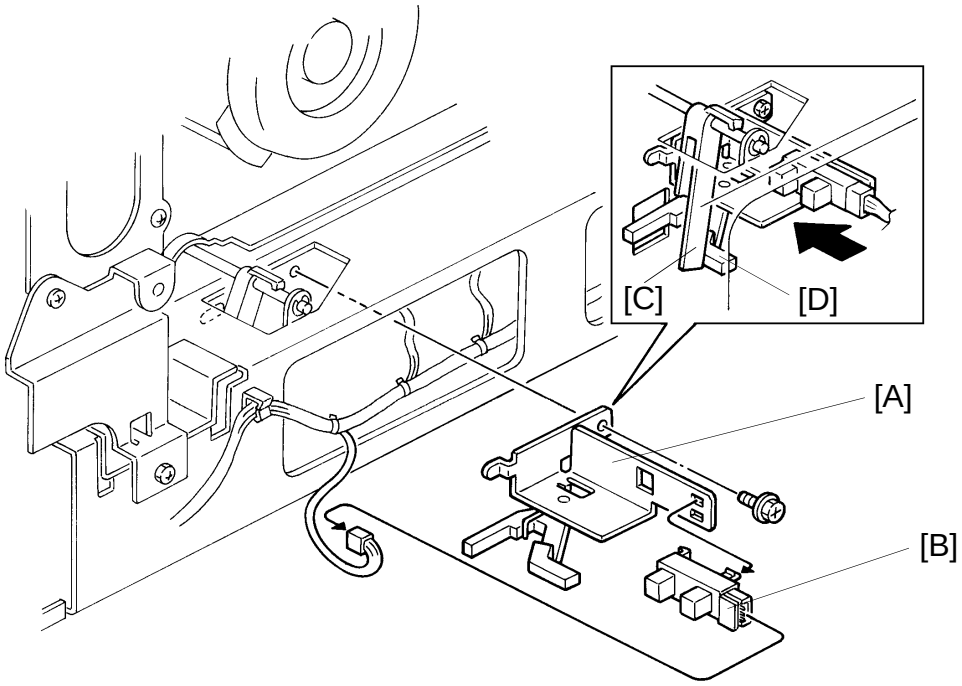

1. Turn off the main switch.
2. Pull out the paper tray or the duplex tray.
3. Remove the rear cover.
4. Remove the sensor bracket [A] (1 screw).
5. Replace the sensor [B] (1 connector).

NOTE: When reinstalling the sensor bracket, make sure that the paper end actuator [C] and paper end feeler release lever [D] are properly positioned as shown. If not, the feeler may be damaged when the paper tray is inserted.

5.13 2ND AND 3RD PAPER SIZE SWITCH REPLACEMENT

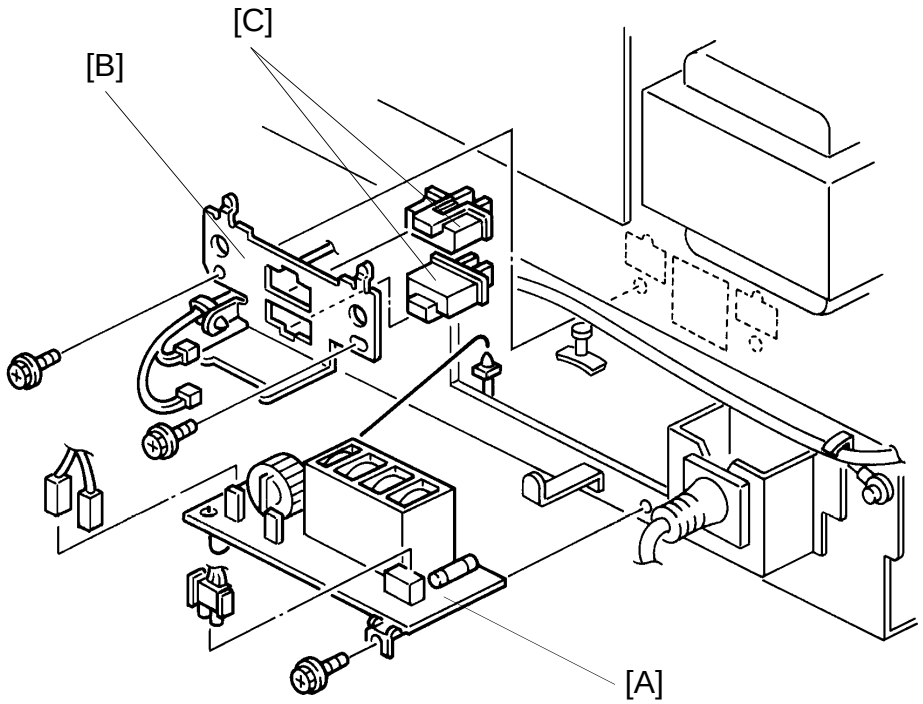

1. Turn off the main switch.
2. Pull out the paper tray or the duplex tray.
3. Remove the rear cover.
4. Remove the noise filter board [A] (1 screw, 1 locking support, and 3 connectors). **(220/230/240 V copiers only)**
5. Remove the switch bracket [B] (2 screws, 1 harness clamp).
6. Replace the switches [C] (1 connector each).

5.14 REGISTRATION SENSOR AND ROLLER REPLACEMENT

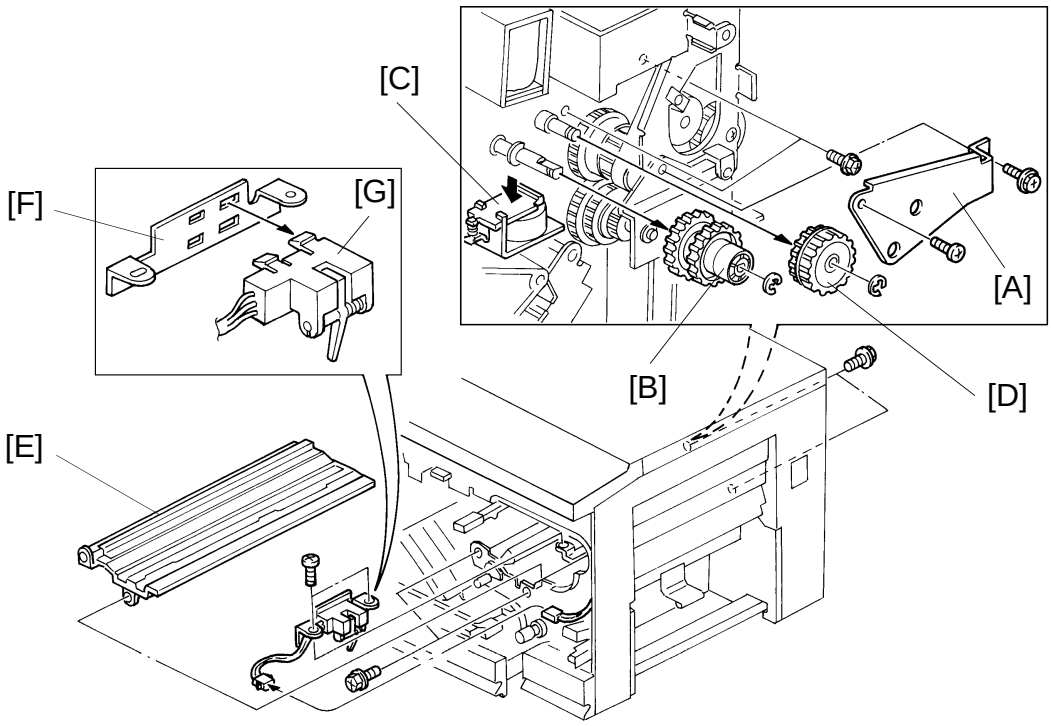

1. Turn off the main switch.
2. Remove the following parts:
   - Front cover (See Exterior Cover Removal.)
   - Development unit
   - Right inner cover (See Interior Cover Removal.)
   - Cleaning unit (See Cleaning Unit Removal.)
   - Drum unit (See Drum Unit Removal.)
   - Rear cover (See Exterior Cover Removal.)
   - Main board
   - PTL board (See PTL Board Replacement)
3. Remove the clutch bracket [A] (2 screws) and remove the 1st feed roller spring clutch [B] while pressing down on the stopper [C] lever of the solenoid (1 E-ring).
4. Remove the idle gear [D] (1 E-ring).
5. Remove the development lower guide plate [E] (2 screws each at front and rear frames).

– Sensor –

6. Remove the sensor bracket [F] (2 screws).
7. Replace the sensor [G] (1 connector).

– Registration Rollers –

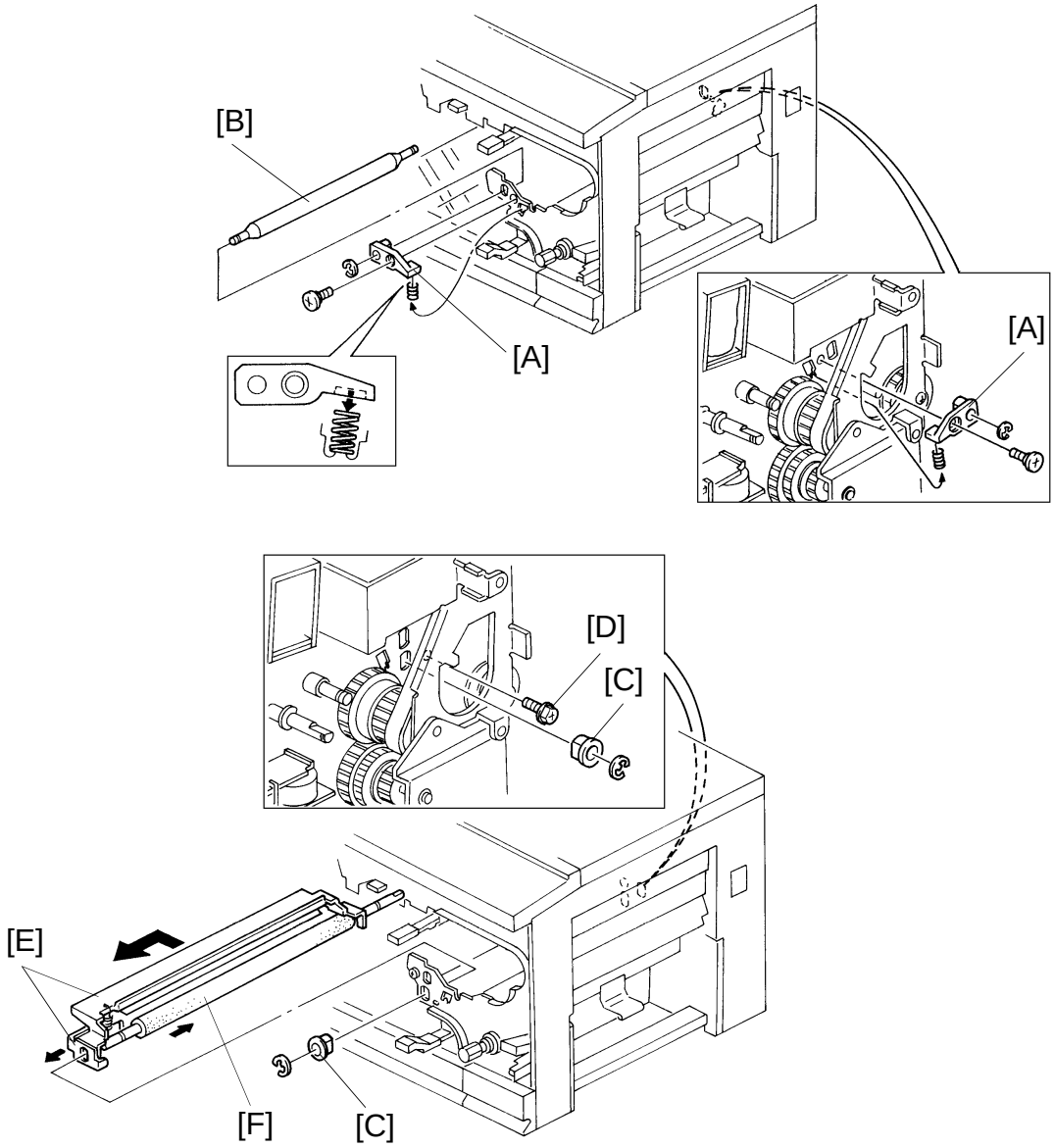

8. Remove the registration clutch. (See Registration Clutch Replacement.)
9. Remove the front and rear holders [A] (1 screw, pressure spring, and E-ring each) of the upper registration roller.
10. Replace the upper registration roller [B].
11. Remove the 2 bushings [C] (1 E-ring each).
12. Remove the screw [D] securing the upper and lower guide plates [E].
13. Remove the lower registration roller [F] together with the upper and lower guide plates; then, replace the lower registration roller.

– To install (Lower Registration Roller) –

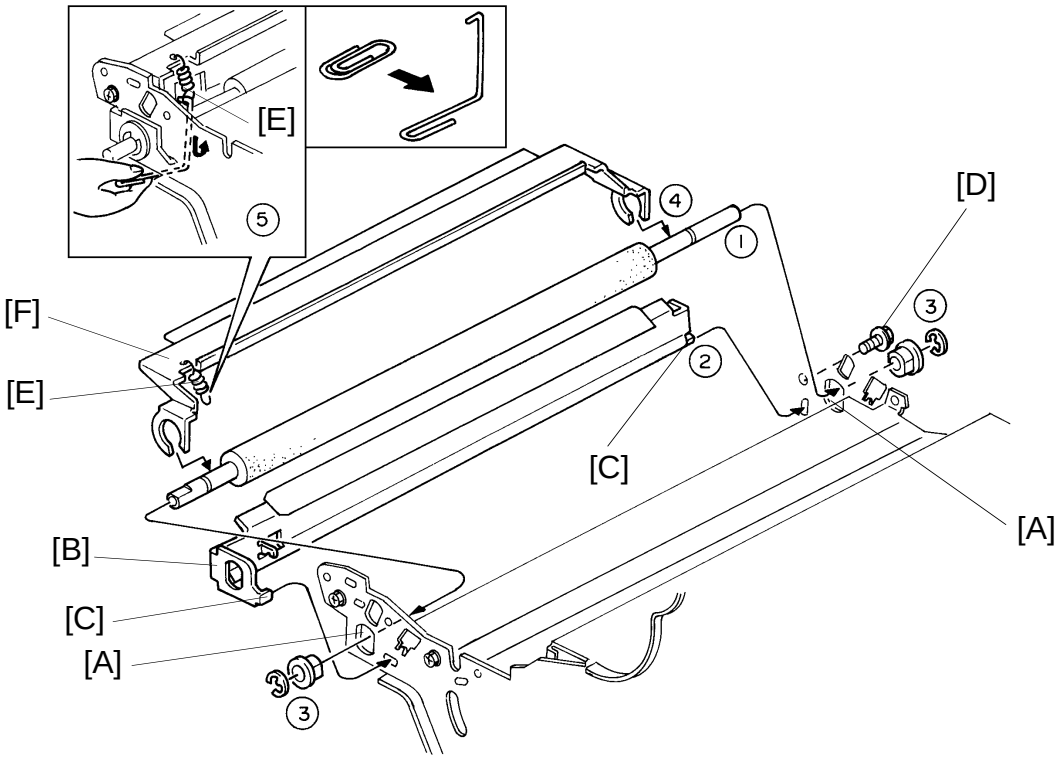

1. Set the ends of the lower registration roller shaft into the front and rear bushing holes [A].
2. Install the lower guide plate [B] with the front and rear hooks [C] in the holes.
3. Insert the bushings, set the E-rings and tighten the screw [D] securing the lower guide plate.
4. Install the spring [E] on the upper guide plate and set the upper guide plate [F].
5. Hook the spring [E] to the lower guide plate using a paper clip as shown.

NOTE: Make sure of the following when installing the upper registration roller:

a) The front and rear bushings are different. Make sure that they are in the correct position.

b) The pressure springs are positioned correctly in the bushings.

6. AROUND DRUM

6.1 DRUM REPLACEMENT

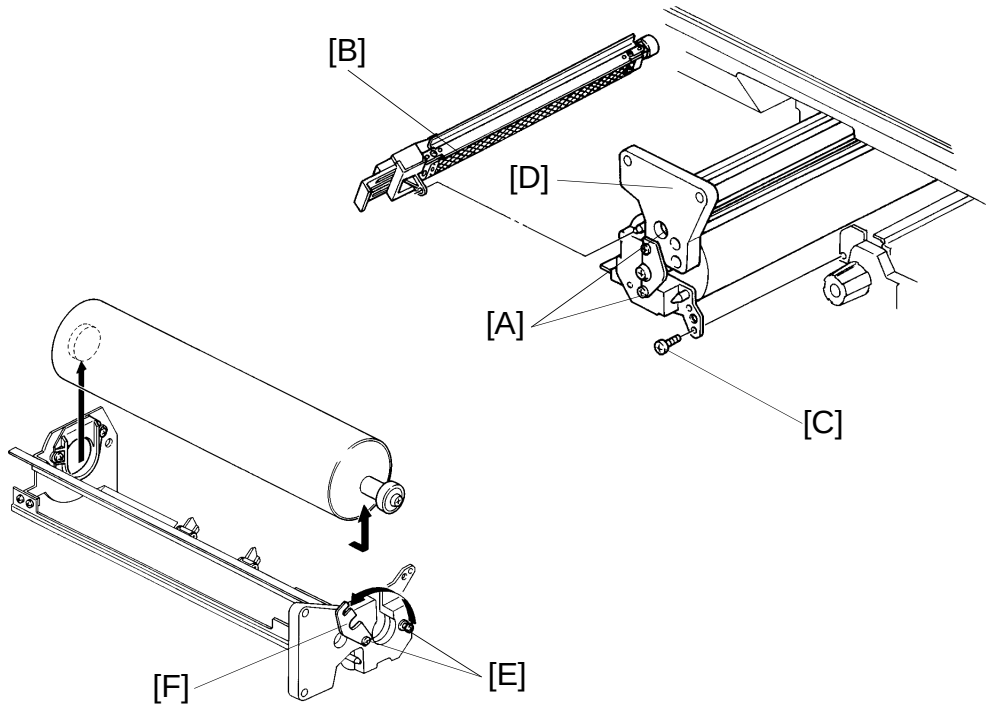

CAUTION: When replacing the drum, do not loosen the paint locked screws [A]. The drum position is set with a special tool, and instruments at the factory to ensure the proper gap between the drum and the development unit.

1. Lower the transport unit.
2. Remove the following units:
   - Development unit
   - Cleaning unit
   - Charge corona unit [B] and wire cleaner
3. Remove the fixing screw [C] securing the drum stay and pull out the drum unit [D] gently along the rail.
4. Place the drum unit on a sheet of paper. Loosen the two screws [E] securing the bearing holder [F] and rotate the holder as shown.
5. Remove the drum by holding the drum unit rail and pulling out and up on the drum knob.

NOTE: a) When removing the drum, take care not to strike it against any objects.
b) Be careful not to bend the bearing holder [F].

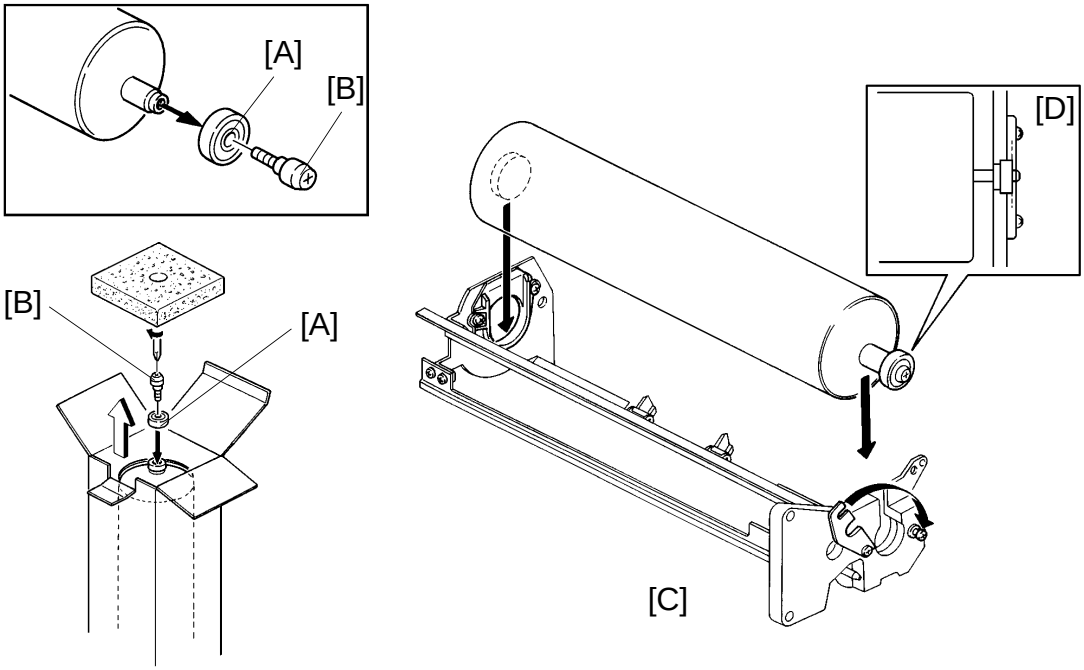

6. Remove the bearing [A] (1 screw [B]) from the old drum and install them on the the new drum. Do not remove the protective sheet from the new drum.
7. Set the OPC drum in the unit and put the bearing holder [C] back in place. Tighten the screws.

   NOTE: a) When setting the drum in the unit, be careful not to strike it against the rail.
   b) Do not bend the bearing holder. Make sure the bearing holder is in contact with the bearing [D], as they are both used to ground the unit. If they are not in contact, solid black copies may occur.
   c) Do not touch the drum surface.

8. Set the drum unit in the machine and remove the drum protective sheet.
9. Reinstall the other units around the drum unit.
10. Reset the drum counter using SP66.
11. Perform the ID sensor (Vsg) adjustment using Sp54. (See ID Sensor Adjustment.)
12. Perform the light intensity adjustment using SP48. (See Light Intensity Adjustment.)
13. Perform the ADS adjustment using SP56. (See ADS ADjustment.)

6.2 ID SENSOR REPLACEMENT

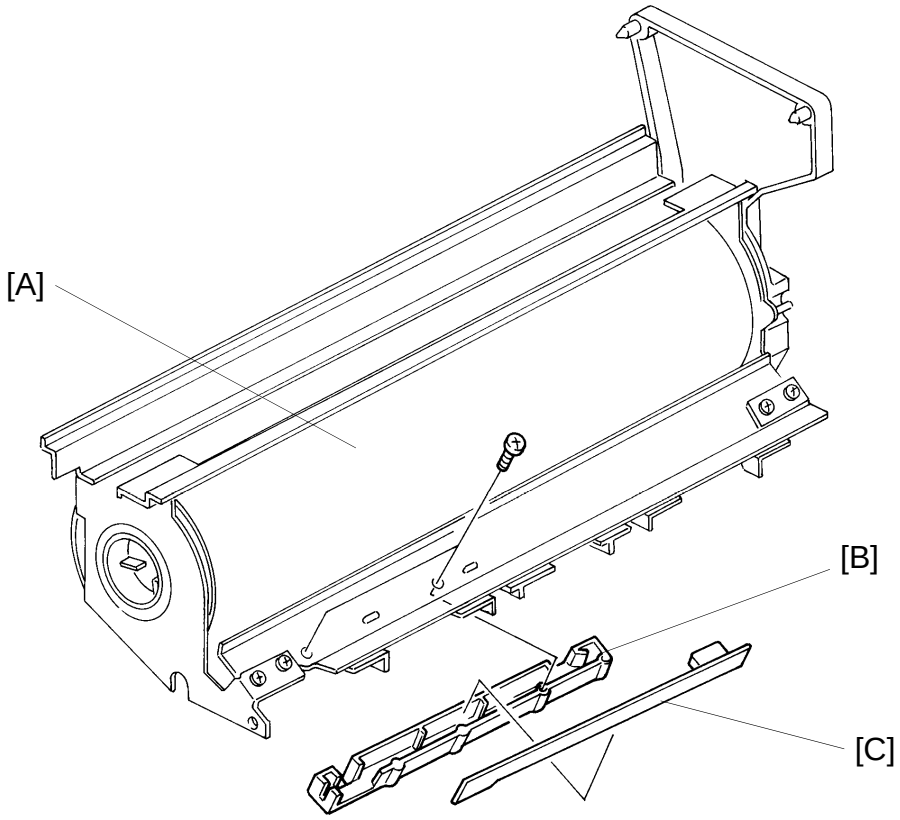

1. Remove the drum unit, then remove the drum [A] from the unit. (See Drum Replacement.)

   NOTE: Cover the drum with paper sheet to prevent the drum from being exposed to light.

2. Remove the ID sensor holder [B] (2 screws).
3. Replace the ID sensor board [C].
4. Perform the ID sensor (Vsg) adjustment (SP54).

6.3 PICK-OFF PAWL REPLACEMENT

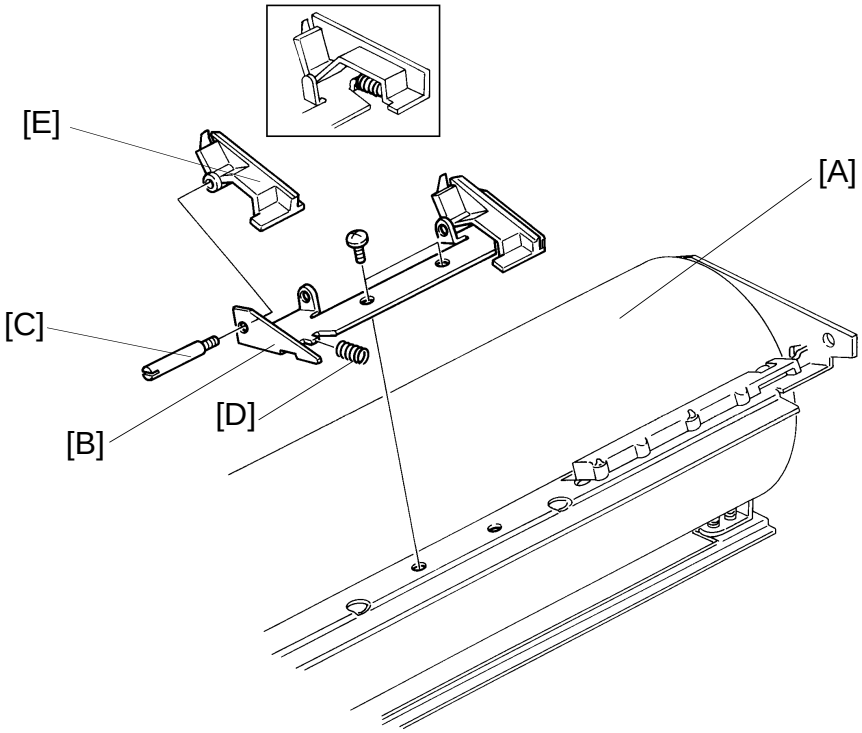

NOTE: Cover the drum with paper sheet after removing it from the drum unit. This prevents the drum from being exposed to light.

1. Remove the drum unit, then separate the drum [A] from the unit. (See the Drum Replacement section.)
2. Remove the pick-off pawl bracket [B] (2 screws).
3. Remove the screws [C] and the springs [D], then replace the pick-off pawls [E].

NOTE: When replacing the new pick-off pawls, make sure that the springs are positioned correctly as shown in the illustration.

6.4 PTL BOARD REPLACEMENT

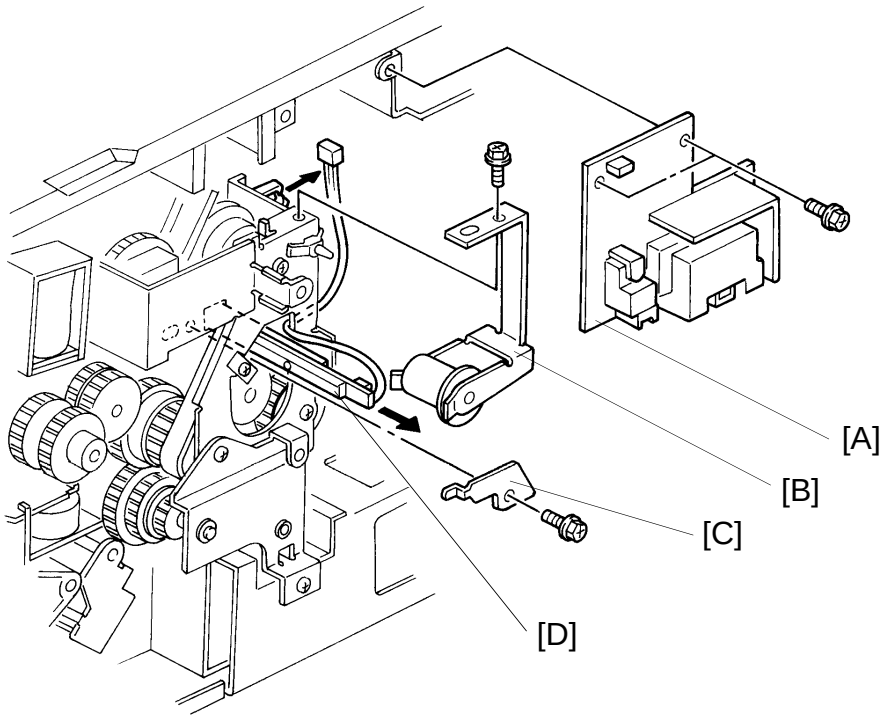

1. Turn off the main switch.
2. Remove the rear cover.
3. Remove the main board (4 screws, 1 locking support and all connectors).
4. Remove the TC/SC power pack [A] (2 locking supports and screws).
5. Remove the timing belt tightener [B] (1 screw).
6. Remove the PTL board stopper [C] (1 screw).
7. Replace the PTL board [D].

6.5 QUENCHING LAMP REPLACEMENT/CLEANING

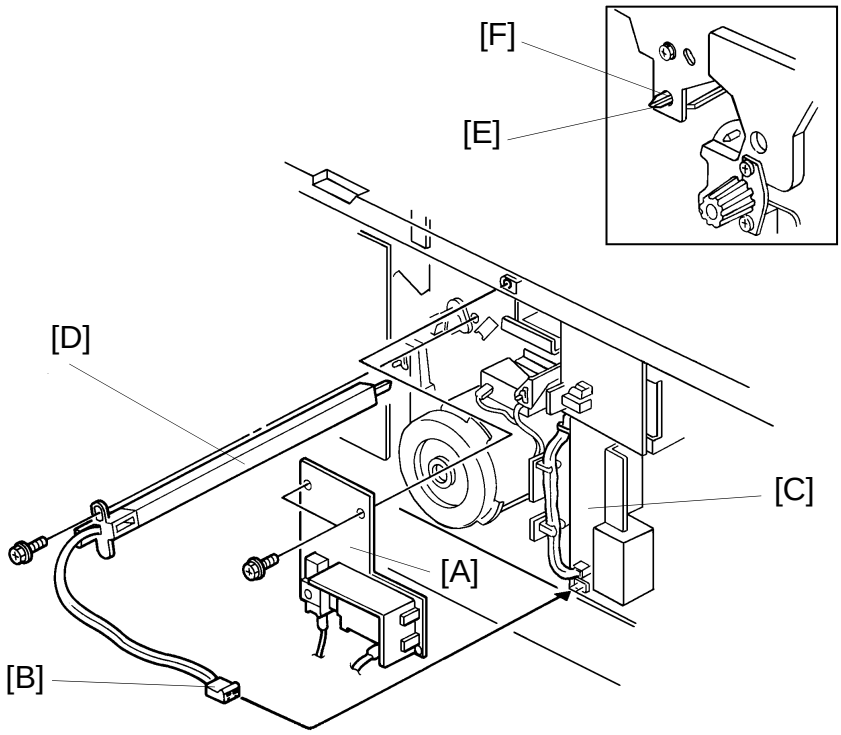

1. Open the front cover and lower the transport unit.
2. Remove the following parts:
   - Development unit
   - Cleaning unit
   - Charge corona unit
   - Drum unit
   - Rear cover
3. Remove the TC/SC power pack [A] (2 screws, locking supports, and connectors).
4. Disconnect the 2P connector [B] (CN413) from the ac drive board [C].
5. Remove the quenching lamp [D] (1 screw).

NOTE: a) Do not use alcohol to clean the QL. This damages the resin in the LED cover.

b) When reinstalling the quenching lamp, make sure that the positioning pin [E] on the lamp fits through the cutout [F] in the front side plate as shown.

6.6 ERASE LAMP REPLACEMENT

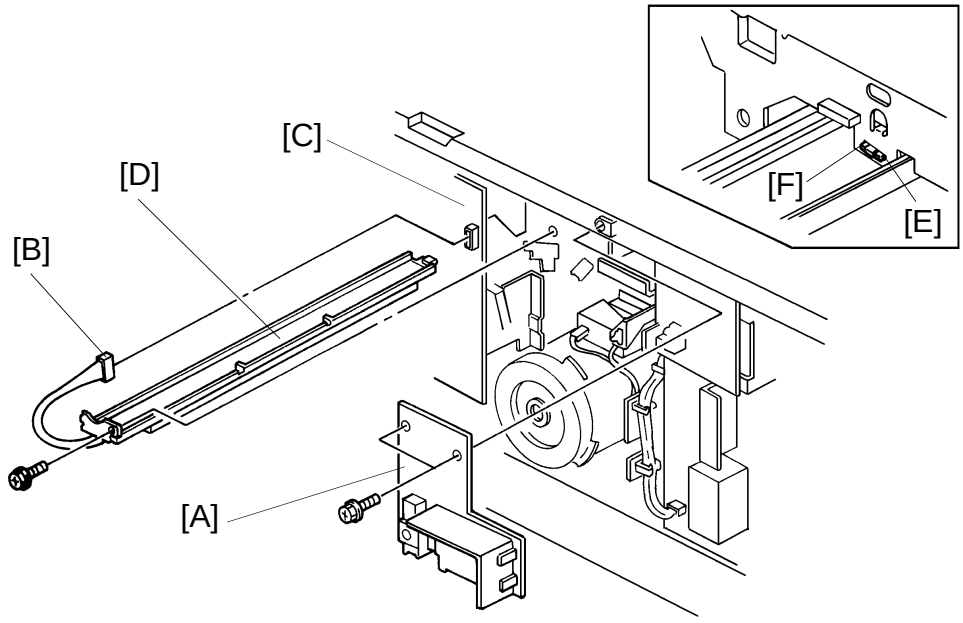

1. Open the front cover and lower the transport unit.
2. Remove the following parts:
   - Development unit
   - Cleaning unit
   - Charge corona unit
   - Drum unit
   - Rear cover
3. Remove the TC/SC power pack [A] (2 screws, locking supports, and connectors).
4. Disconnect the connector [B] (CN109) from the main board [C].
5. Remove the erase lamp [D] (1 screw) with the bracket on.
6. Replace the erase lamp (1 screw).

NOTE: a) Do not use alcohol to clean the erase lamp. This damages the resin surface of he LED cover.

b) When reinstalling the erase lamp, make sure that the positioning pin [E] on the lamp fits through the cutout [F] in the front side plate as shown.

6.7 CHARGE CORONA WIRE REPLACEMENT

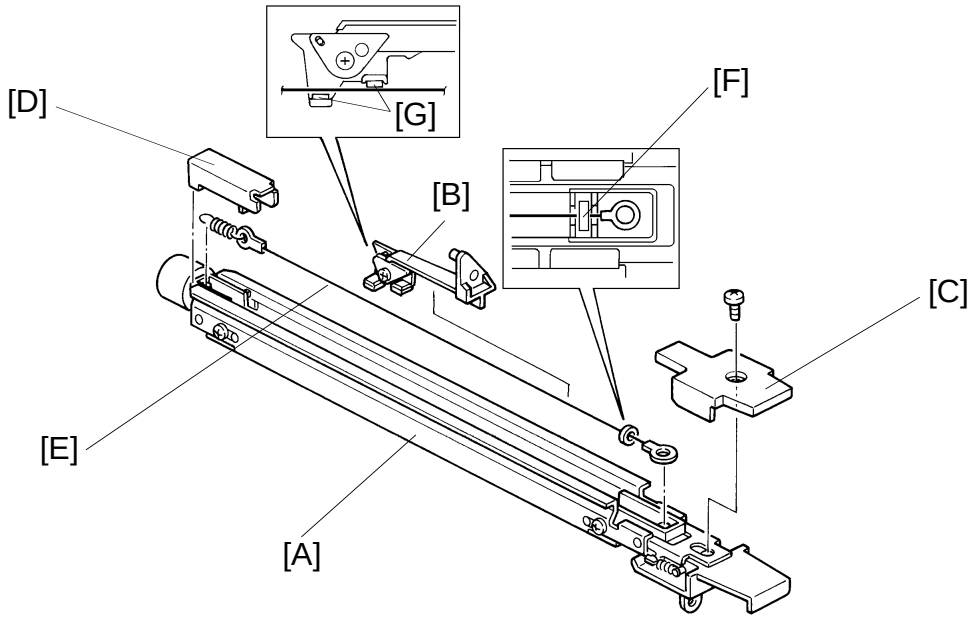

1. Remove the charge corona unit [A] together with the wire cleaner [B] (1 screw).
2. Remove the wire cleaner from the charge corona unit.
3. Remove the front end block cover [C] (1 screw) and the rear end block cover [D].
4. Unhook the spring from the corona wire [E] and replace the wire.

NOTE: a) Make sure that the damper ring [F] is properly positioned as shown.
b) Do not handle the new corona wire with bare hands. Oil on the wire may cause uneven charge on the drum.
c) Do not rub the corona wires with rough material (sandpaper, etc.) as this will damage the corona wires.
d) When removing the end block covers, be careful not to break off the side hooks.
e) Do not use any solvents to clean the wires as this will cause uneven charge on the drum.
f) Do not damage the grid when replacing the charge wire.
g) When installing the charge corona unit, make sure that the wire is positioned between the cleaner pads [G].

6.8 CHARGE CORONA GRID REPLACEMENT

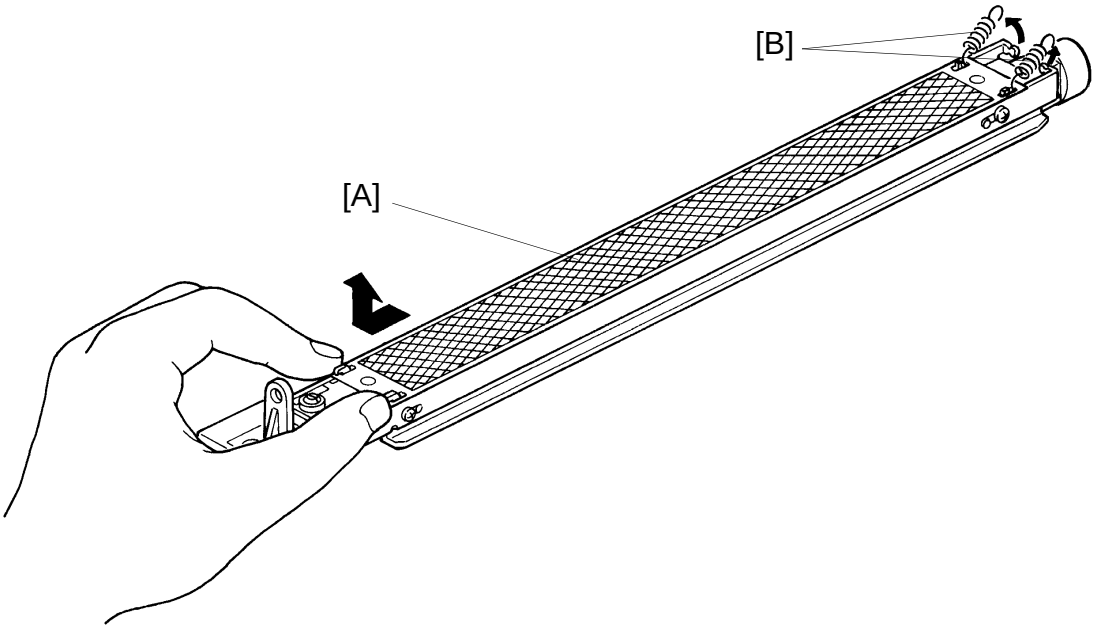

1. Remove the charge corona unit.
2. Remove the grid plate [A] (2 springs [B]).

NOTE: a) Oils and chemicals from your hands will deteriorate the grid.
b) Do not bend the grid plate. This can result in an uneven charge.

6.9 TRANSFER/SEPARATION CORONA WIRE REPLACEMENT

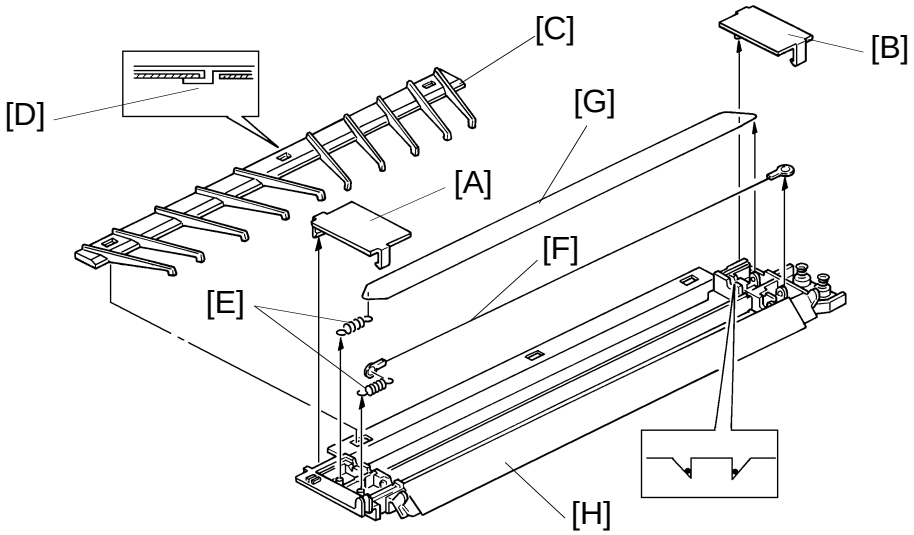

1. Remove the transfer/separation (TC/SC) corona unit.

2. Remove the following parts:
   - TC/SC unit front end block cover [A]
   - TC/SC unit rear end block cover [B]
   - TC/SC unit paper guide [C].

   NOTE: When reinstalling the TC/SC unit paper guide, verify that all three tabs [D] are properly latched in place.

3. Unhook the springs [E] from the wires.

4. Replace the transfer corona wire [F] and the separation corona wire [G].

NOTE: a) When installing the separation corona wire, make sure that the wire junction is positioned inside the rear endblock.
b) The transfer and separation corona wires must be in the grooves of the front and rear endblocks as shown.
c) Do not handle new corona wire with bare hands. Oil on the wire may cause an uneven charge on the drum.
d) Rubbing the corona wires with a rough material (sandpaper, etc.) will damage the corona wires.
e) When removing the end block covers, be careful not to break off the side hooks.
f) Do not use any solvents to clean the wires as this will cause uneven charge on the drum.
g) Do not loosen the screw of the transfer entrance guide [H]. This is because that the transfer entrance guide is positioned with a special tool at the factory.

6.10 CORONA CURRENT ADJUSTMENT

NOTE: The corona current varies with environmental conditions such as humidity and atmospheric pressure. The corona current is adjusted at the factory and is suitable under a wide range of environmental conditions. Corona current adjustment is necessary whenever the power packs are replaced; adjustment may also be necessary to correct problems with paper separation, toner transfer, or image density.

CAUTION: – Make sure that SP9 is cleared before you change the range on the digital multimeter. If not, the multimeter may be damaged.
– High voltage is applied to the corona wires. Be careful.

– Preparation –

1. Turn off the main switch and remove the following parts:
   - Development Unit
   - Cleaning Unit
   - Charge Corona Unit
   - TC/SC Corona Unit
   - Drum Unit
2. Clean or replace each corona wire and clean the corona units with water or alcohol.
3. Remove the rear cover (4 screws).
4. Disconnect CN123 on the main board.

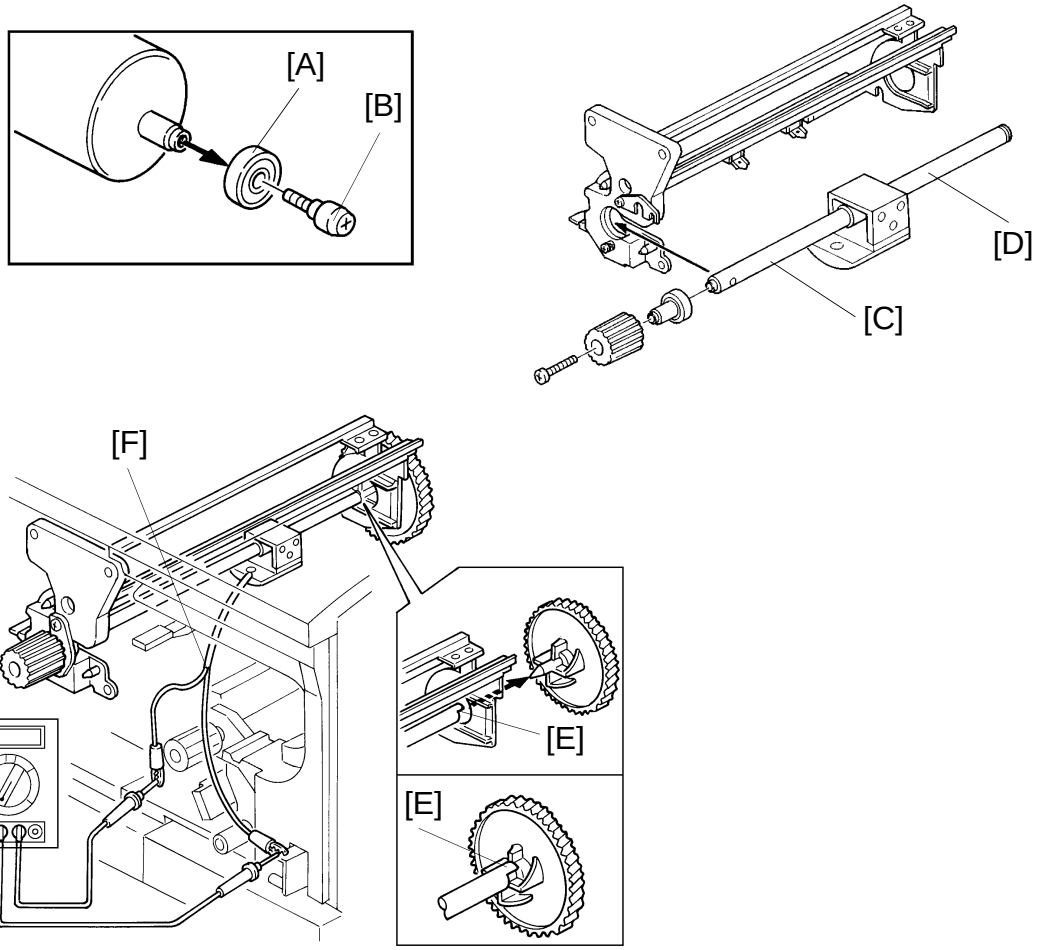

NOTE: Do steps 4 – 8 before adjusting the transfer corona current, separation corona current or charge wire height:

5. Remove the drum from the drum unit. Cover the drum with a shielding sleeve. (See Drum Replacement.)
6. Remove the bearing [A] (1 screw [B]) from the drum, then install them on the drum shaft [C] (special tool: P/N A0069105).
7. Set the drum shaft and drum shoe [D] on the drum unit as shown.

   NOTE: Be careful not to injure your hand on the edge of the pick-off pawls.
8. Reinstall the drum unit with the shaft rear end [E] positioned as shown in the illustration. Pass the harness [F] down into the development unit.
9. Connect the negative harness lead to the copier frame, then connect both multimeter leads as shown to the harness leads.

6.10.1 CHARGE CORONA CURRENT ADJUSTMENT (SP9-2)

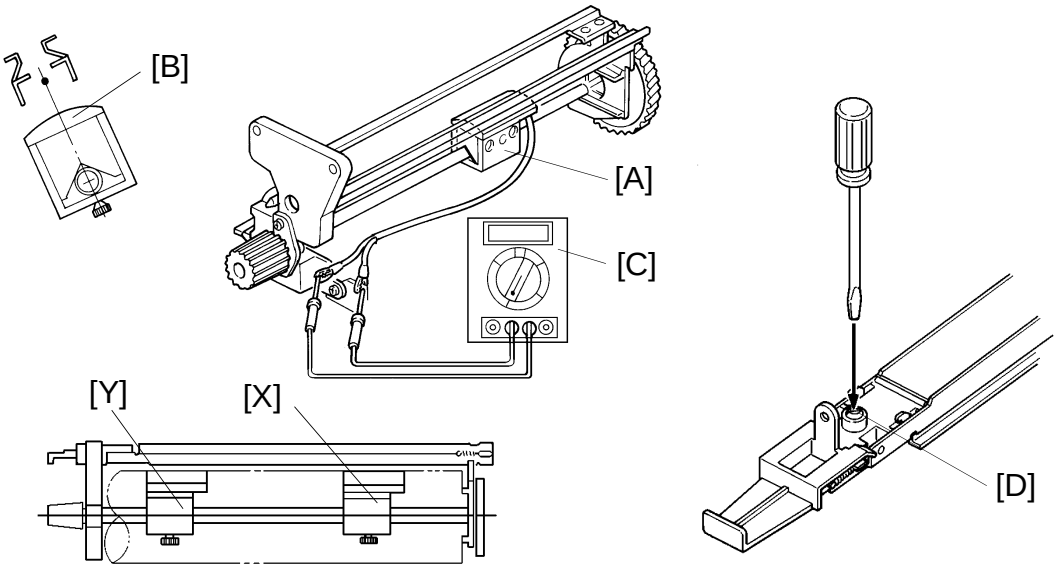

– Wire Height Adjustment –

NOTE: If the OS-A3 test chart gray scale shows an uneven image after the front end block of the charge corona unit is replaced, check and adjust the wire height as follows:

1. Set the drum shaft and drum shoe on the drum unit and install the drum unit in the machine. (See Drum Current Adjustment Preparation.)
2. Slide the the drum shoe [A] to the rear limit [X] as shown.
3. Position the drum shoe so that the axis of the current sensing plate [B] is aligned with the charge corona wire as shown.
4. Reinstall the charge corona unit on the drum unit.
5. Select the dc 200 μA range on the digital multimeter [C].
6. Using SP9–2, turn on the main switch, front door safety switch and the charge corona .
7. Note the reading. (Wait at least 30 seconds for the current to stabilize.)
8. Press the Clear/Stop key to turn off the charge corona, then move the drum shoe to the front limit [Y] as shown and repeat steps 3 to 7.
9. Adjust the front corona wire height by turning the adjusting screw [D] if the two readings are different.
10. Repeat steps 2 to 9 until the difference between the front and rear readings is no more than 4%.

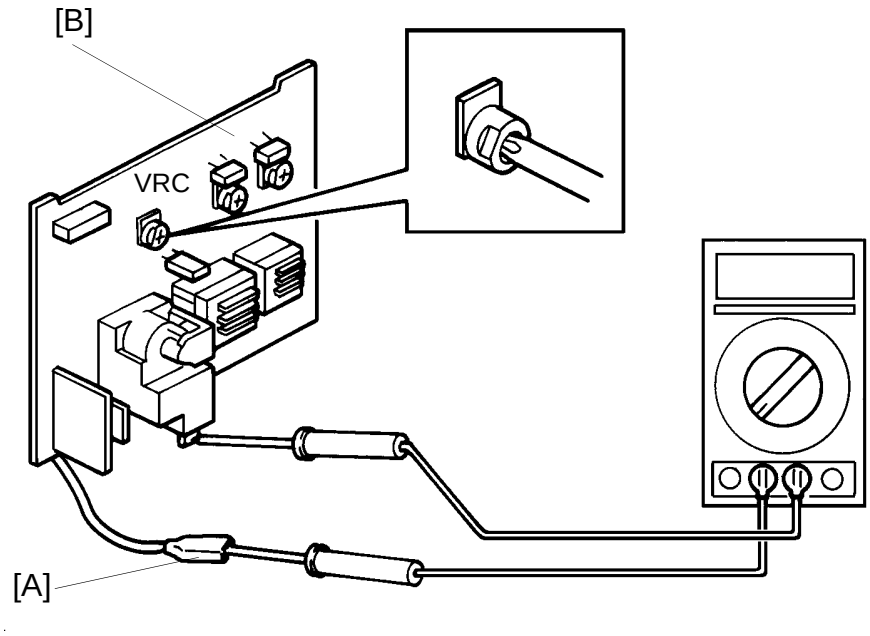

– Charge Corona Current Adjustment –

ADJUSTMENT STANDARD	Adjusting VR	
DC –400 ± 2 μA	VRC	SP9-2

NOTE: Keep the high voltage wire terminal [A] away from the copier frame. Otherwise, electrical leakage may interfere with current measurement.

1. Turn off the main switch.
2. Disconnect the charge corona terminal [A] from the CC/G/B power pack [B].
3. Select the dc 2mA range on the digital multimeter.
4. Connect the multimeter leads as shown, then measure the charge corona current.
5. Turn on the main switch, front door safety switch and the charge corona using SP9-2.
6. Adjust the charge corona current to –400 ± 2 μA by turning VRC on the CC/G/B power pack [B].
7. Press the Clear/Stop key.

6.10.2 GRID VOLTAGE ADJUSTMENT (SP9-2)

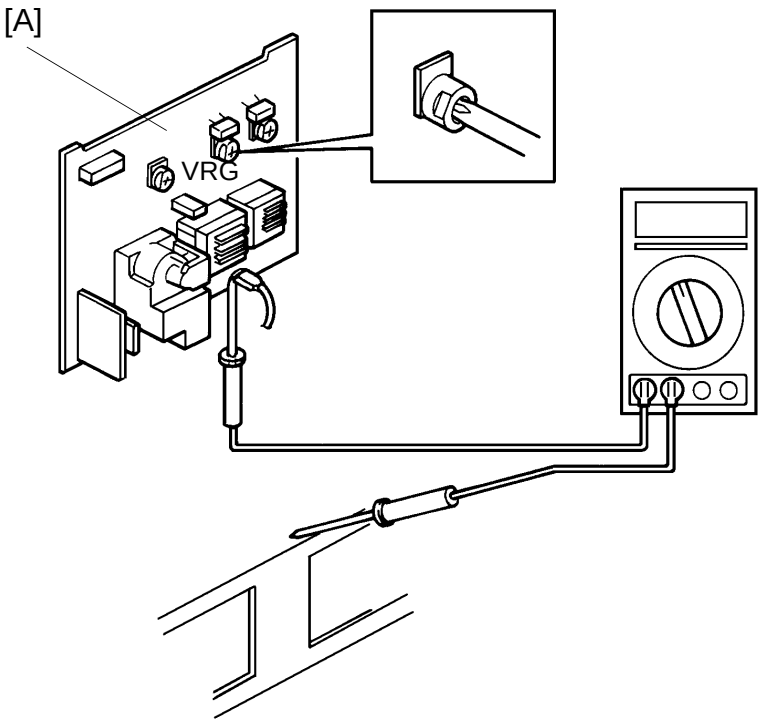

ADJUSTMENT STANDARD	Adjusting VR	
DC –920 ± 16 V	VRG	SP9-2

1. Set the multimeter range to dc 1500V and connect the multimeter leads as shown.
2. Turn on the main switch, front door safety switch, and grid using SP9-2.
3. Adjust VRG of the CC/G/B power pack to –920 ± 16 V by turning VRG on the CC/G/B power pack [A].
4. Press the Clear/Stop key and turn off the main switch.

6.10.3 TRANSFER CORONA CURRENT ADJUSTMENT (SP9-5)

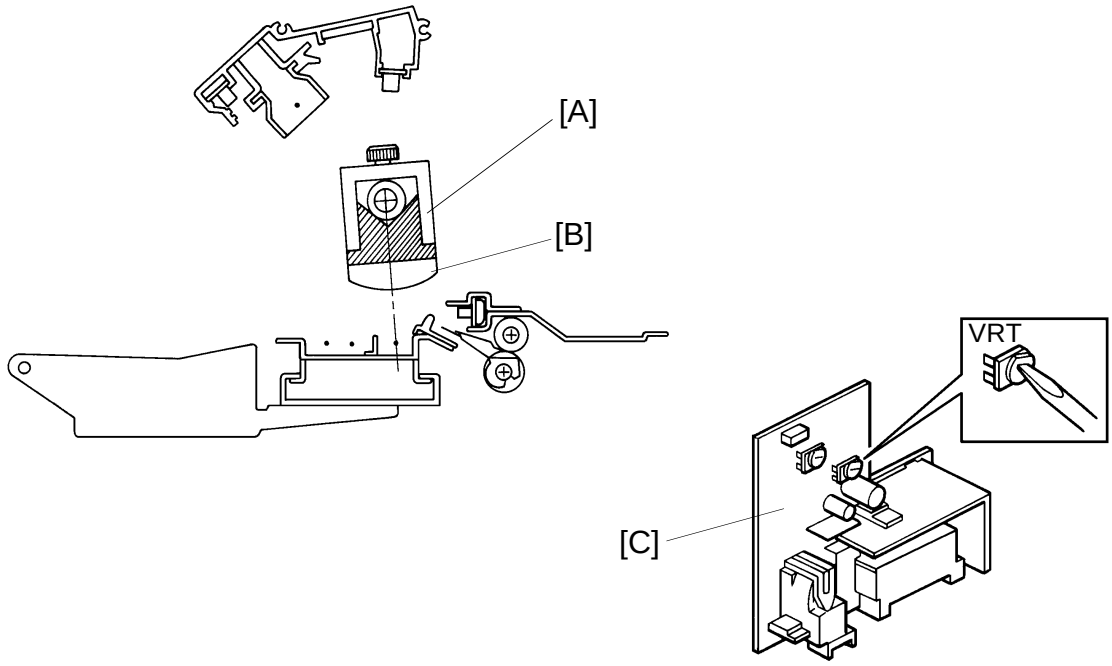

ADJUSTMENT STANDARD	Adjusting VR	
DC –19.3 ± 0.5 μA	VRT	SP9-5

1. Reinstall the TC/SC corona unit and position the drum shoe [A] on the center of the shaft so that the axis of the current sensing plate [B] is aligned with the transfer corona wire as shown.
2. Select the dc 200 μA range on the digital multimeter.
3. Turn on the main switch, front door safety switch, and transfer corona using SP9-5.
4. Adjust the transfer corona current to dc –19.3 ± 0.5 μA using VRT on the TC/SC power pack [C].
5. Press the Clear/Stop key and turn off the main switch.

6.10.4 SEPARATION CORONA CURRENT ADJUSTMENT (SP9-8)

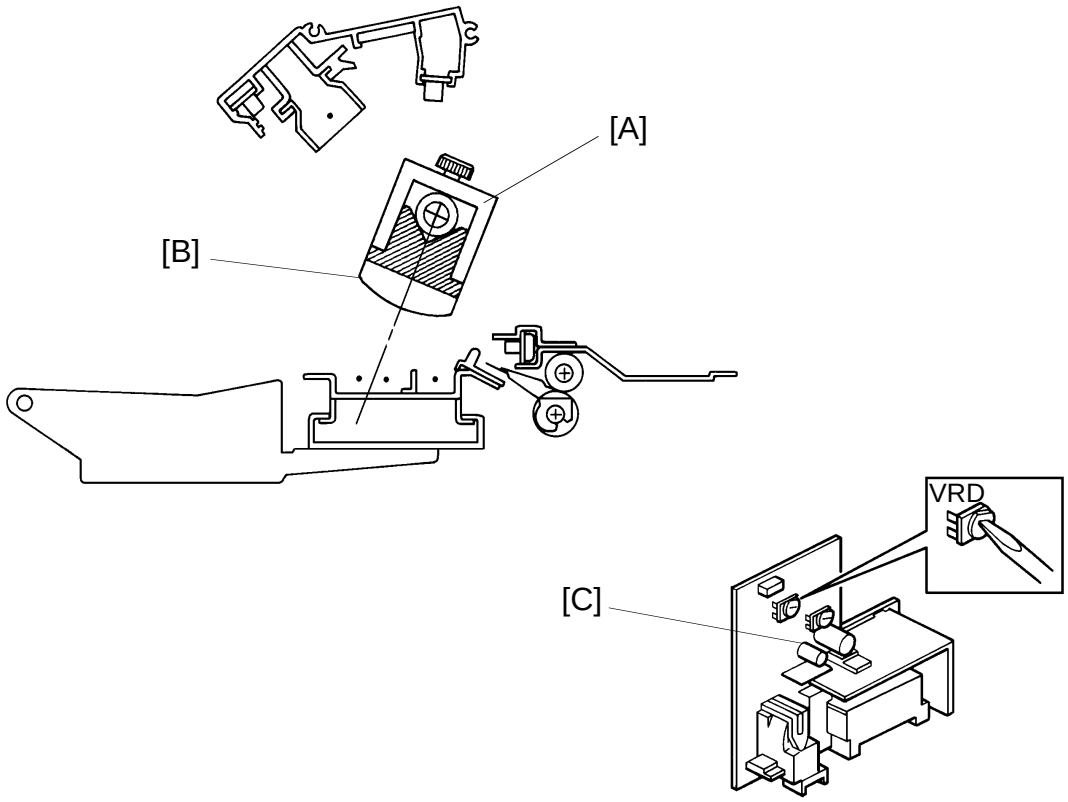

ADJUSTMENT STANDARD	Adjusting VR	
AC 41.6 ± 1.3 μA	VRD	SP9-8

1. Reinstall the TC/SC corona unit and position the drum shoe [A] on the center of the shaft so that the axis of the current sensing plate [B] is aligned with the separation corona wire as shown.

   NOTE: Make sure that the drum shoe does not touch the pick-off pawls.

2 Select the ac 200 μA range on the digital multimeter.

3. Turn on the main switch, the front safety switch, and the separation corona using SP9-8.

4. Adjust the separation corona current to ac 41.6 ± 1.3 μA using VRD on the TC/SC power pack [C].

5. Press the Clear/Stop key and turn off the main switch.

7. FUSING

7.1 EXIT UNIT REMOVAL

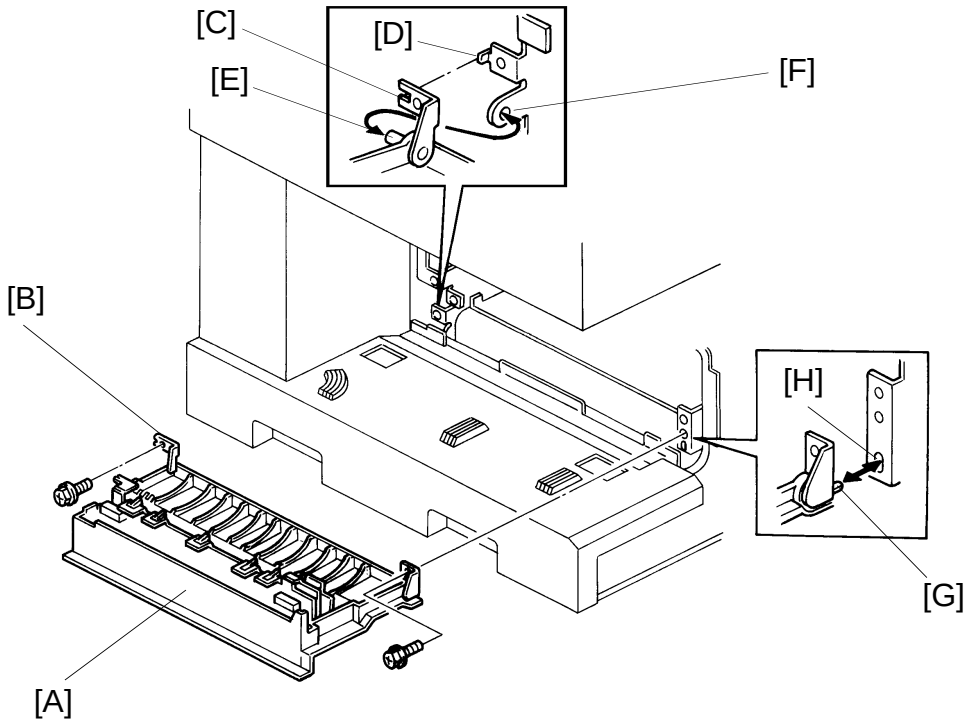

1. Remove the copy receiving tray or slide the sorter in the left side if it is installed.
2. Open the exit unit [A].
3. Remove the exit unit (2 screws and the rear holder [B]).

NOTE: When reinstalling the exit unit, make sure of the following:

a) The slot [C] in the rear holder fits over the projection [D] on the fusing unit rear frame and the holder pin [E] fits through the hole [F] as shown.

b) The projection [G] on the front holder fits through the hole [H] in the fusing unit front frame.

7.2 FUSING LAMP REPLACEMENT

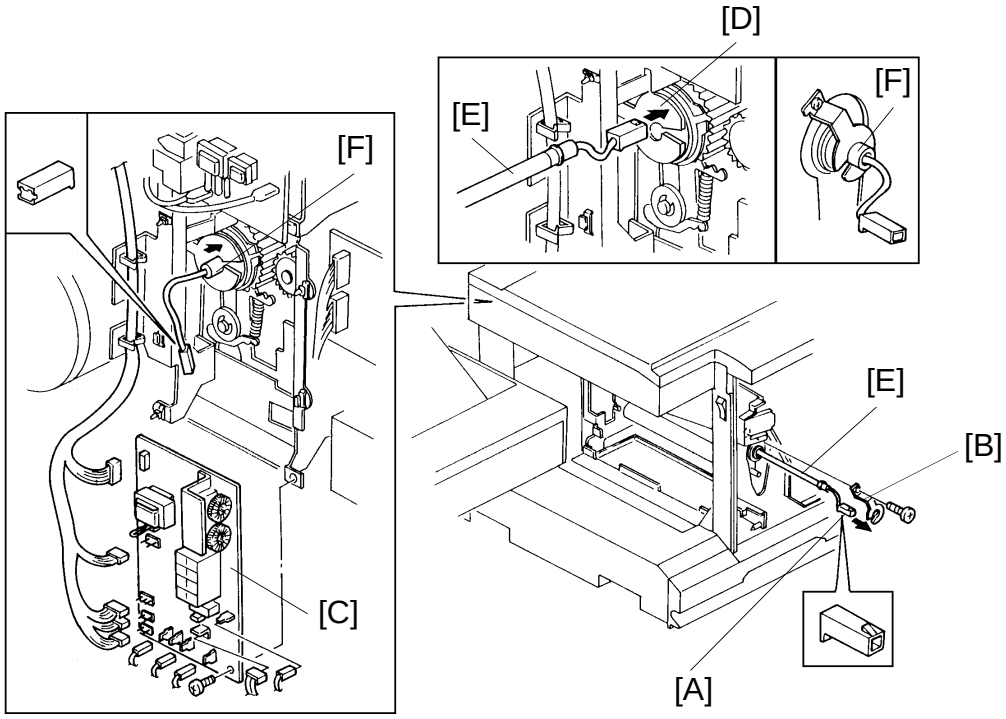

1. Make sure that the main switch is turned off and the power supply cord is unplugged.
2. Open and remove the front cover.
3. Remove the left inner cover. (See Interior Covers Removal.)
4. Disconnect the connector [A] at the front side.
5. Remove the front support bracket [B] (1 screw).
6. Remove the rear cover.
7. Remove the ac drive board [C] (all connectors, 4 locking supports, and 1 screw).
8. Remove the rear support bracket [D] (1 screw).
9. Pull the fusing lamp [E] out the front end of the fusing roller.

NOTE: a) Do not touch the fusing lamp with bare hands.
b) The connector housings used at the front and rear sides are different. (The rear harness is longer.)
c) Make sure that the fusing lamp insulators [F] are properly set in the holders as shown.

7.3 PRESSURE ROLLER REPLACEMENT

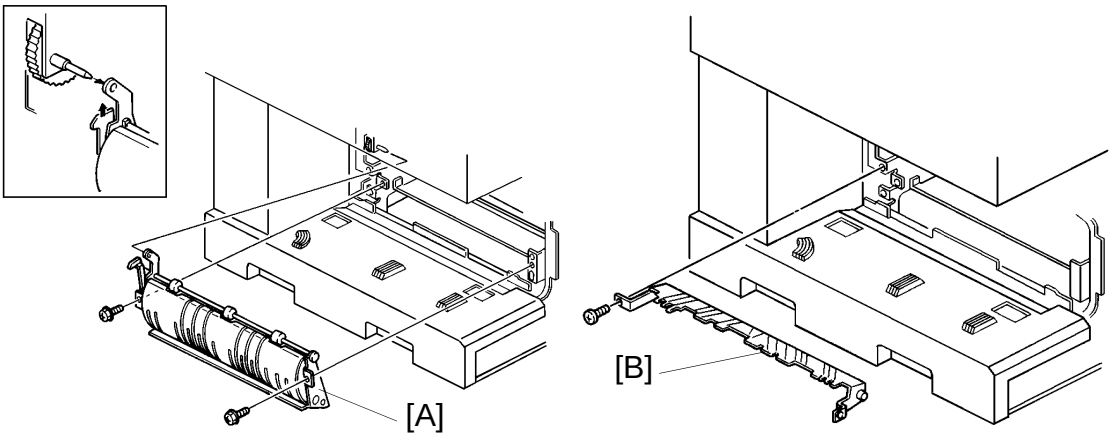

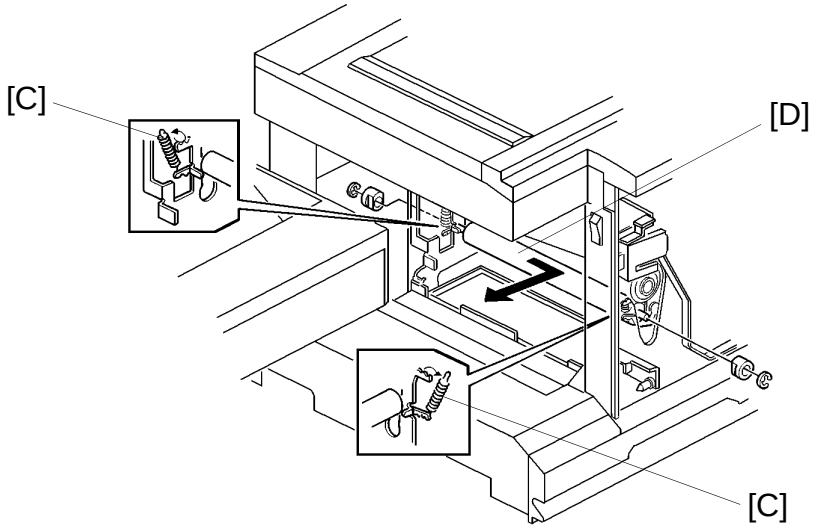

1. Remove the exit unit. (See Exit Unit Removal.)
2. If the duplex tray is installed, remove the turn guide plate [A] (2 screws).
3. Remove the exit paper guide [B] (1 screw).
4. Remove the rear cover and the ac drive board. (See Fusing Lamp Replacement.)
5. Remove the left inner cover. (See Interior Covers Removal.)
6. Remove the front and rear pressure springs [C].
7. Replace the pressure roller [D] (2 bushings and E-rings).

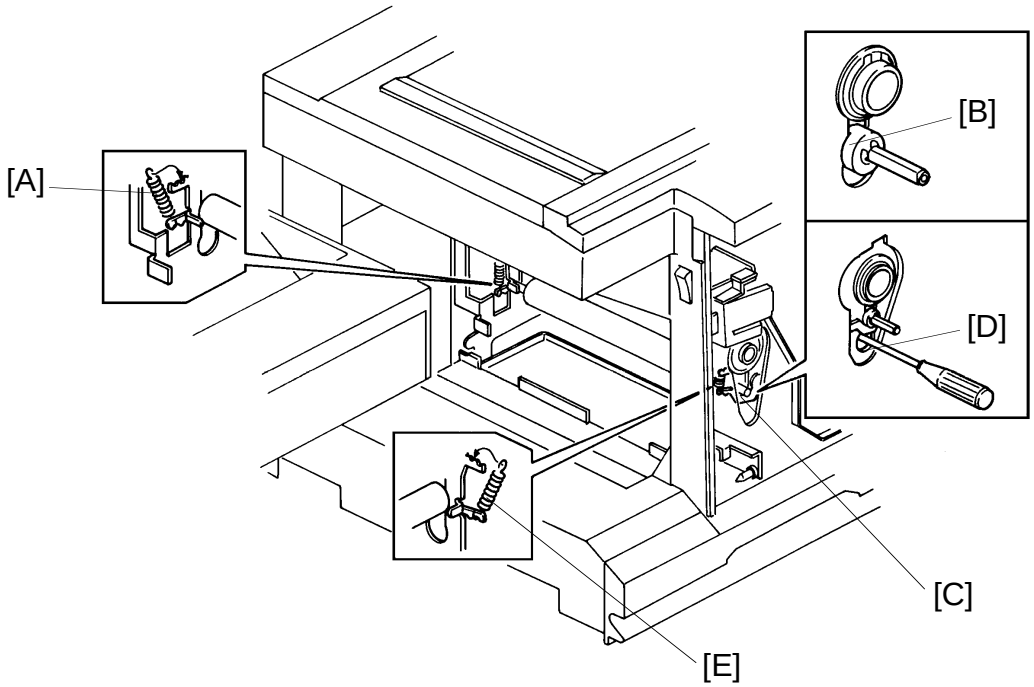

– Reinstallation –

1. Install the bushings on both the front and rear roller shafts (1 E-ring each).
2. After setting the pressure roller, install the rear pressure spring [A] while sliding the bushing [B] up along with the rear frame as shown.
3. Slide the bushing up along with the front frame and pull the lower spring bracket [C] up as shown.
4. To hold the spring bracket, insert a screw driver into the cutout [D] on the front frame as shown.
5. Install the front pressure spring [E].

7.4 HOT ROLLER REPLACEMENT

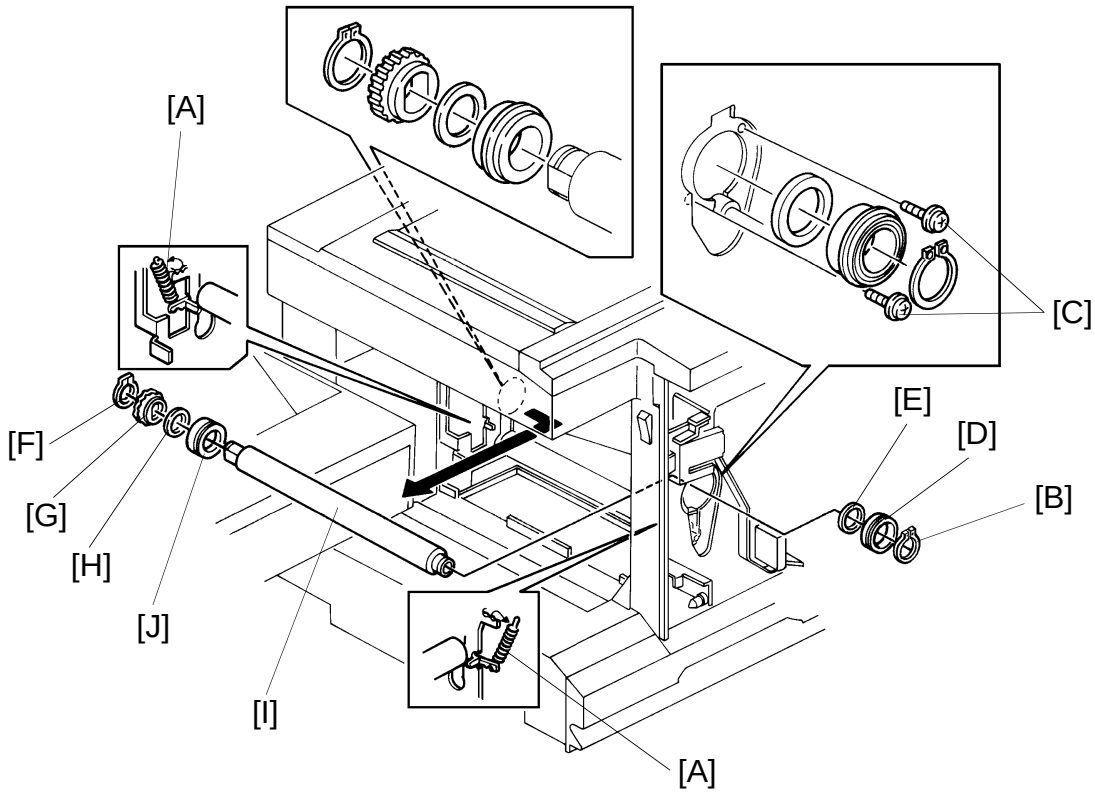

1. Remove the exit unit. (See Exit Unit Removal.)
2. Remove the fusing lamp. (See Fusing Lamp Replacement.)
3. If the duplex tray is installed, remove the turn guide plate (2 screws).
4. Remove the exit paper guide (1 screw).
5. Remove the front and rear pressure springs [A].
6. Remove the C-ring [B] (front side).
7. Remove the 2 screws [C] securing the bearing to the fusing front frame, then remove the bearing [D] and spacer [E].
8. Remove the rear C-ring [F].
9. Slide the hot roller out. The gear [G] and spacer [H] will drop off the hot roller shaft.
10. Replace the hot roller [I] (1 bearing [J]).

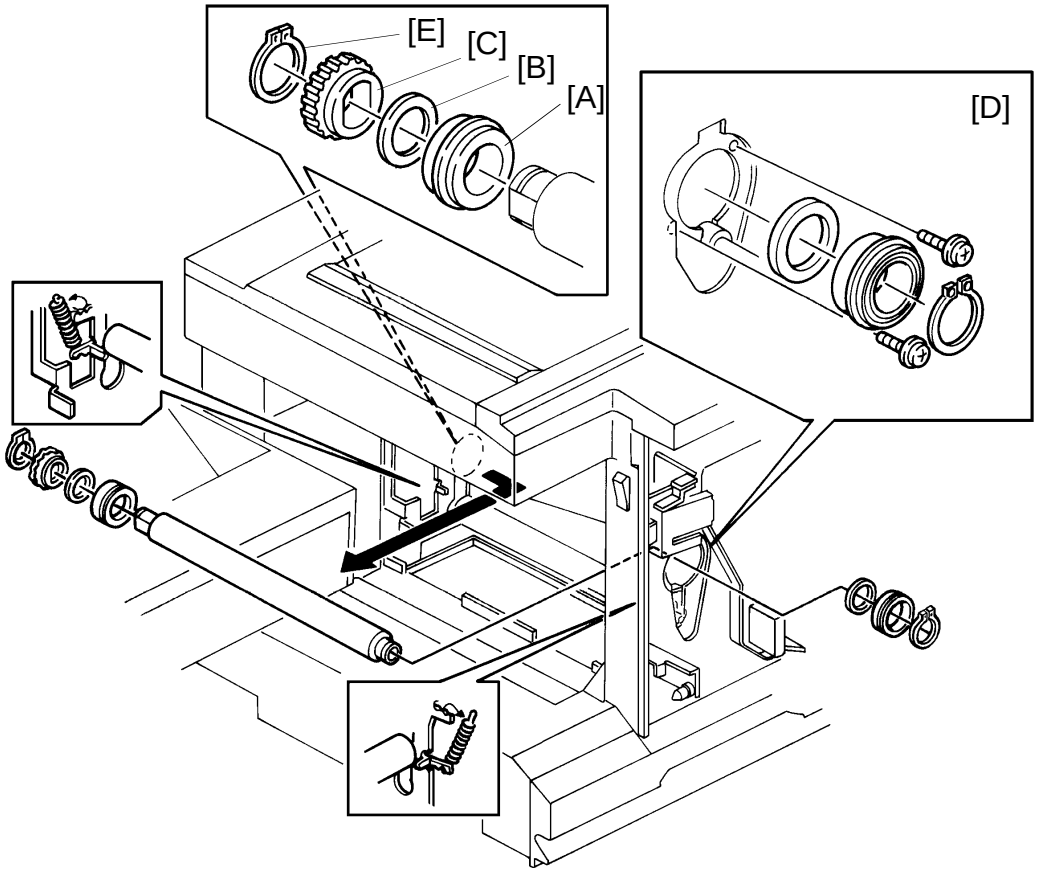

– Reinstallation –

1. Set the rear bearing [A] on the rear frame.
2. Insert the rear end of the hot roller shaft through the rear bearing.
3. Place the spacer [B] and gear [C] on the rear end of the shaft.
4. Install the front bearing and spacer, then secure with two screws [D].
5. Set the rear side C-ring [E] on the rear shaft.

NOTE: a) Peel off 3 cm (1 inch) from both ends of the protective sheet before installing a new hot roller.
b) Before setting the pressure springs, remove the rest of the protective sheet.
c) Before reinstalling the pressure springs, refer to the installation procedure in the Pressure Roller Replacement Section.

7.5 THERMISTOR AND THERMOFUSE REPLACEMENT

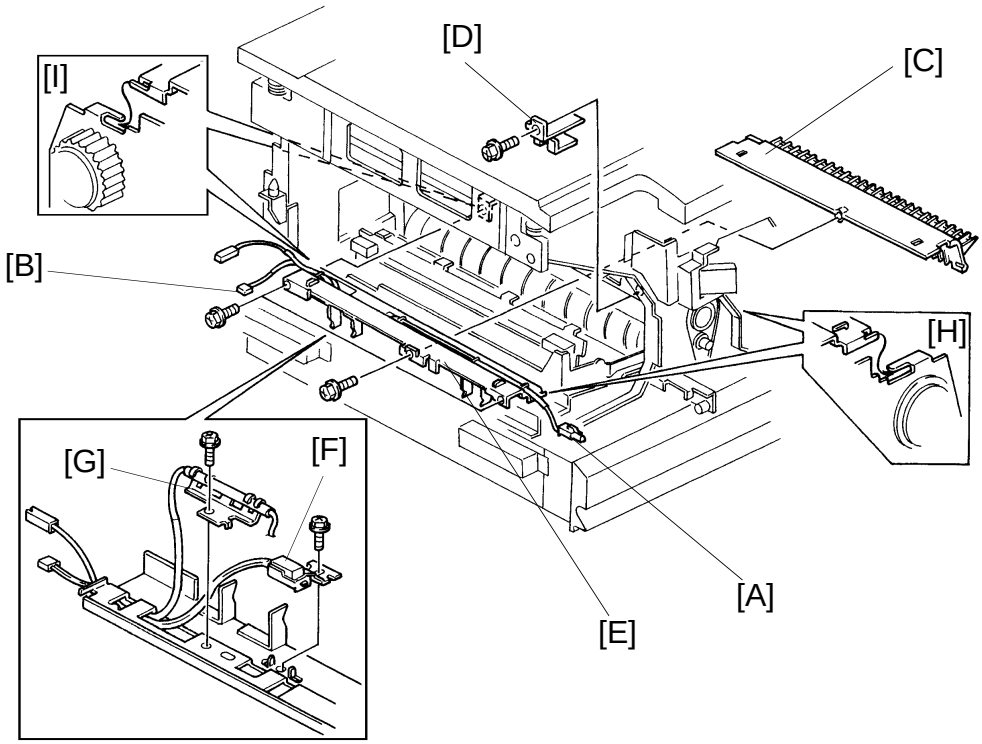

1. Turn off the main switch and unplug the power supply cord.
2. Remove the drum unit. (See Drum Replacement Section.)
3. Remove the left inner cover.
4. Disconnect the fusing lamp connector [A].
5. Remove the rear cover and remove the ac drive board. (See Fusing Lamp Replacement.)
6. Disconnect the thermistor connector [B].
7. Open the exit unit and remove the fusing unit cover [C] (1 screw).
8. Remove the left lower and left upper covers. (See Left Upper and Left Lower Cover Removal.)
9. Remove the safety switch actuator bracket [D] (1 screw).
10. Remove the upper fusing stay [E] as shown (2 screws).
11. Replace the thermistor [F] and/or thermofuse [G] (1 screw each).

NOTE: a) When reinstalling the stay [E], make sure that the front [H] and rear [I] hooks are inserted into the side frames as shown.
b) Make sure that each harness is properly wired as shown.

7.6 FUSING PRESSURE ADJUSTMENT

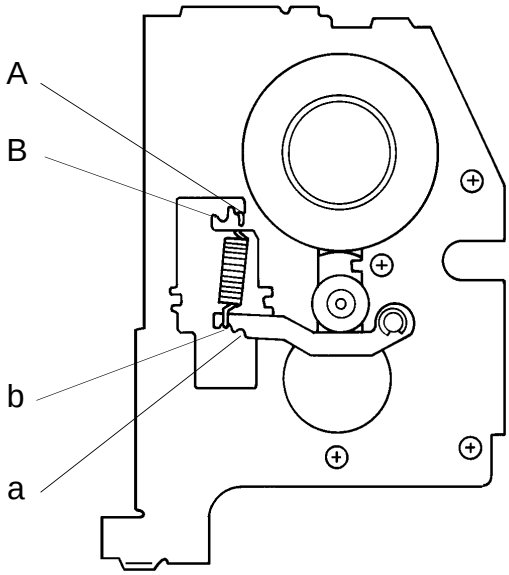

<Fusing pressure adjustment combinations>

Combination	Pressure Level
A–a	Stronger
A–b	Factory Setting
B–b	Weaker

The fusing pressure can be set at three different levels. Adjust the pressure spring position to A–a if poor fusing occurs or to B–b if copy paper becomes creased. For removal and installation, see pressure roller replacement section.

7.7 FUSING EXIT SENSOR REPLACEMENT

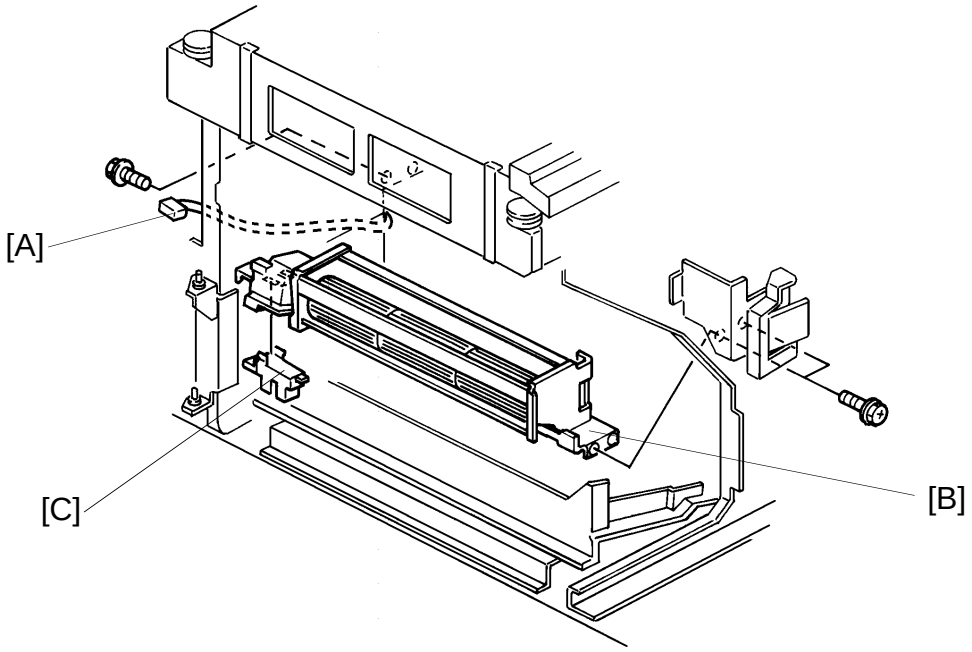

1. Turn off the main switch.
2. Open the front cover and exit unit.
3. Remove the following parts:
   - Left inner cover
   - Left lower and left upper covers
   - Rear cover
   - AC drive board
4. Disconnect the exit sensor connector [A] from the rear side.
5. Remove the exhaust blower motor bracket [B] (4 screws, 3 harness clamps).
6. Replace the exit sensor [C] (1 connector).

8. OTHERS

8.1 OPERATION PANEL REMOVAL

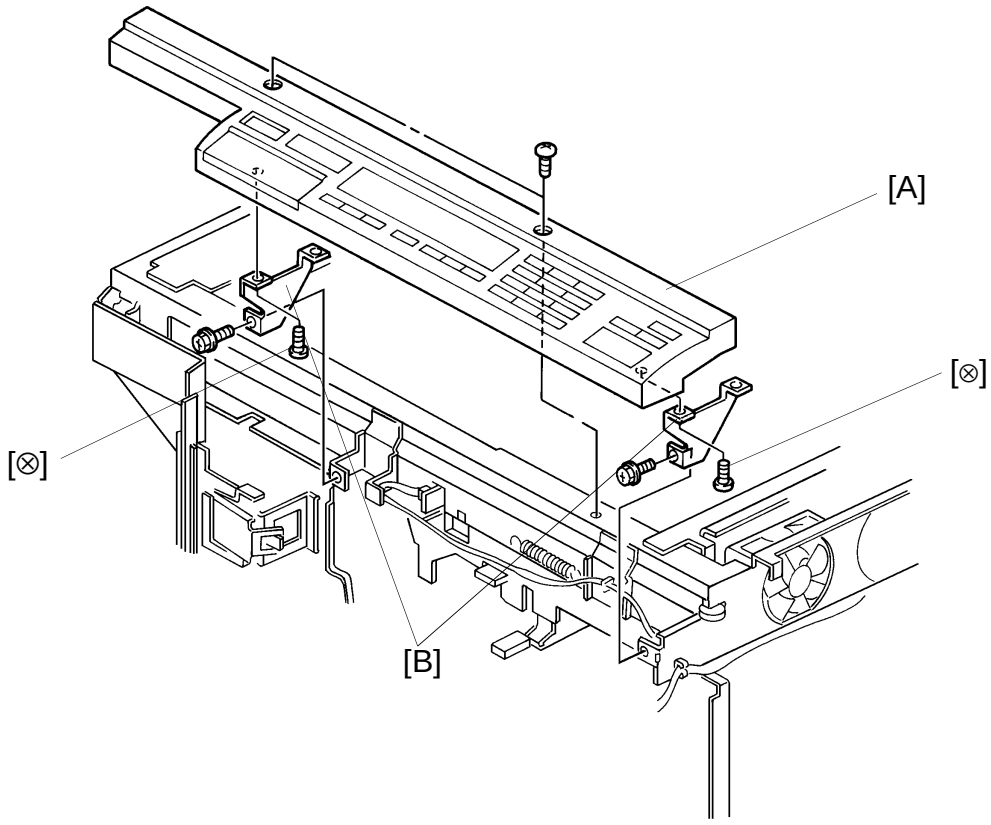

1. Open the front cover and remove the following covers:
   - Right and left inner covers
   - Right Cover
   - Rear Cover
2. Disconnect CN130 and CN131 from the main board and free the harness from the clamps.
3. Remove the operation panel [A] (4 screws).
4. Remove the brackets [B] from the old operation panel and install them on the new operation panel.
5. Install the new operation panel on the machine.

NOTE: The screws [⊗] are tapping screws. Do not tighten them too much as this will strip the resin threads.

8.2 OZONE FILTER REPLACEMENT

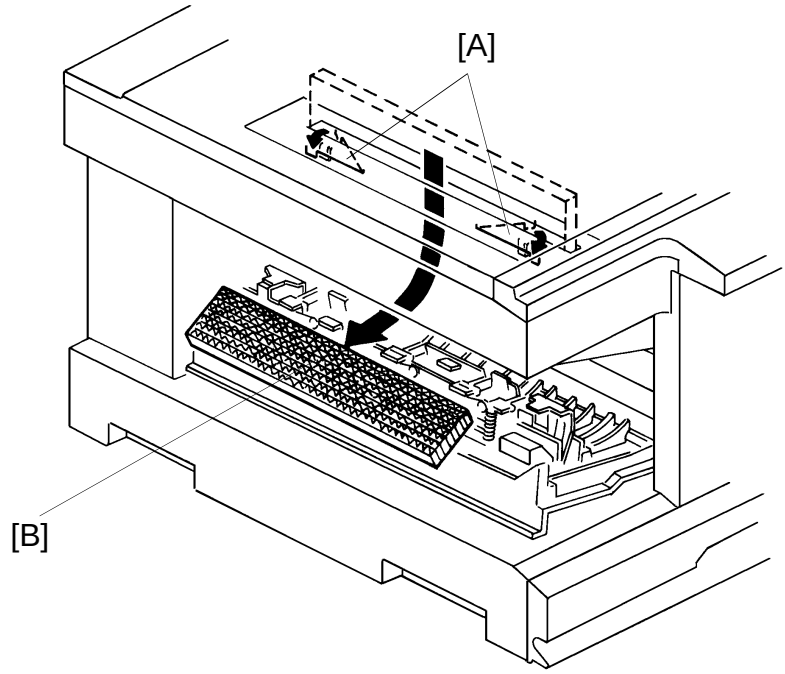

1. Open the exit unit.
2. Unhook the front and the rear support levers [A].
3. Replace the ozone filter [B].

9. COPY QUALITY ADJUSTMENT

– General Information –

Image density is affected by the following factors:

(1) Light Intensity
(2) Bias Voltage
(3) Toner Density
(4) Grid Voltage
(5) Charge Corona Current

The items listed above must be kept in balance to maintain correct image density.

In the field, image density should be adjusted first by changing the exposure lamp voltage. If results are unsatisfactory, the bias voltage can be changed. Also, if requested from the customer, the overall image density can be changed by changing the toner density. Normally, this should be kept at the normal position (factory setting).

The grid voltage and charge corona current are carefully adjusted at the factory. Any adjustment out of the adjustment standard will result in overtoning, toner scattering, dirty background, or light image density problem. The grid voltage and charge corona current adjustment should be done only when replacing the CC/G/B power pack or correct certain problems with image density after checking the other possible causes.

9.1 LIGHT INTENSITY ADJUSTMENT

When:	Every Call
Purpose:	To maintain the correct light intensity.
Adjustment Standard:	Level 2 of the gray scale on the OS-A3 chart should be just visible on the copy when the 4th manual image density level is selected.
Measure:	SP48
How:	Changes the ac drive board output voltage.

1. Turn off the main switch.
2. Clean the following parts:

Item No.	Section	Method
(1)	Optics (mirrors, lens, reflectors, shield glass, exposure glass)	Damp cotton, silicon cloth, and blower brush
(2)	ID sensor	Blower brush
(3)	Corona wires (charge, transfer, and separation) and casing.	Alcohol or water
(4)	QL, PTL, Erase Lamp	Dry Cloth

3. Clear the V_L correction by using SP94.

   NOTE: Always perform SP94 after cleaning the optics parts.
4. Confirm that the data in SP57 is set to "0" (standard value).

   NOTE: When SP94 is performed, the data in SP57 (machine on time) will change to "0".
5. Place the OS-A3 chart and make a full size copy at manual image density level #4 (center).
6. Confirm that level 2 of the gray scale is just visible on the copy. If the image density is not correct, proceed to the following steps.
7. Enter the lamp voltage setting mode using the numeral keys (SP48).
8. Change the data with the numeral keys as follows:

   If the image density is too dark: Increase the data number
   If the image density is too light: Decrease the data number
9. Confirm that the image density is within the adjustment standard.
10. Perform the ADS adjustment. (See page 5-96.)

9.2 UNEVEN EXPOSURE ADJUSTMENT

When:	The exposure is uneven side to side.
Purpose:	To maintain even exposure.
Adjustment Standard:	The side-to-side variation of the gray scales on the test chart should be less than one level.
Measure:	Move the exposure adjustment plates.
How:	Changes the position of the adjustment plates to make the light intensity from the exposure lamp even across its length.

[A]

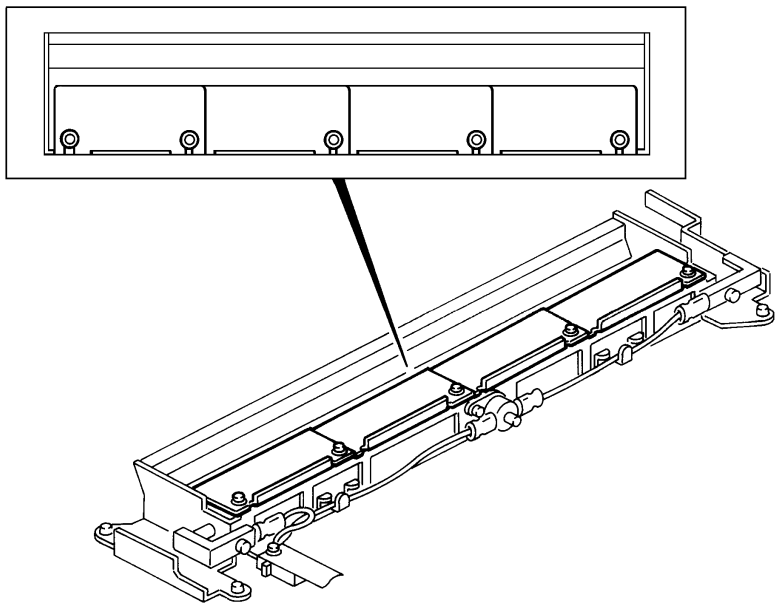

NOTE: Do not adjust the charge corona wire height to correct the uneven image density on the copy.
When adjusting the wire height, use the drum shoe. (See Charge Corona Current Adjustment.)

1. Clean the optics components and the charge corona wire.
2. Place a test chart on the exposure glass and make a A3/LDG copy.
3. If the side-to-side variations of the gray scales is not within the adjustment standard, turn off the main switch and remove the exposure glass. (See Exposure Glass Removal.)
4. Position the adjusting plates [A] so that the copy image meets the adjustment standard.

9.3 BIAS VOLTAGE ADJUSTMENT

When:	1. The image is blurred even though the image density in black solid areas is acceptable. 2. Dirty background. The problem is not caused by excess toner and cannot be solved by adjusting light intensity.
Purpose:	To improve the copy image.
Measure:	SP37
How:	Changes the bias voltage while the image area on the drum is being developed.

SP37

Data	0	1	2	3	4
Bias Voltage [V]	V_0	V_0 + 40	V_0 + 20	V_0 – 20	V_0 – 40
Image Density	Normal	Darkest	Darker	Lighter	Lightest

NOTE: V_0 is the standard voltage applied to the development roller.

1. Make a copy after adjusting the light intensity.
2. If the image is blurred:
   Decrease bias voltage by one step and readjust light intensity.

   If the background is dirty:
   Increase bias voltage by one step and readjust light intensity.

9.4 TONER DENSITY ADJUSTMENT

When:	Customer wants to change the overall image density of the copies.
Purpose:	To change toner concentration inside development unit.
Measure:	SP33
How:	Changes the ID pattern bias voltage and either raises/lowers the toner supply threshold.

9.5 FIXED TONER SUPPLY MODE SELECTION

When:	A problem with the ID sensing system cannot be corrected during a service call. (Detect supply mode does not function.)
Purpose:	To leave Detect mode and manually turn on the toner supply system.
Measure:	SP30
How:	Turns on the toner supply clutch every copy cycle.

9.6 TONER SUPPLY RATIO SELECTION

When:	The factory setting for toner supply amount is not appropriate for the type of original in use.
Purpose:	To adjust the toner supply amount.
Adjustment Standard:	Detect Mode: 15% (Factory Setting) Fixed Mode: 7% (Factory Setting)
Measure:	Detect Mode: SP31 Fixed Mode: SP32
How:	Changes the toner supply clutch on period.

9.7 ID SENSOR (Vsg) ADJUSTMENT

When:	1. Check Vsg at every call, and adjust Vsg if it is out of adjustment standard. 2. At replacement of the following parts: • ID sensor • Main board • Drum 3. A toner supply problem occurs.
Purpose:	To makes sure that ID sensor mode works correctly.
Adjustment Standard:	Vsg = 4.0 ± 0.2 volts
Measure:	SP54
How:	Changes the light intensity of the ID sensor LED. The Vsg voltage is displayed in the magnification indicator.

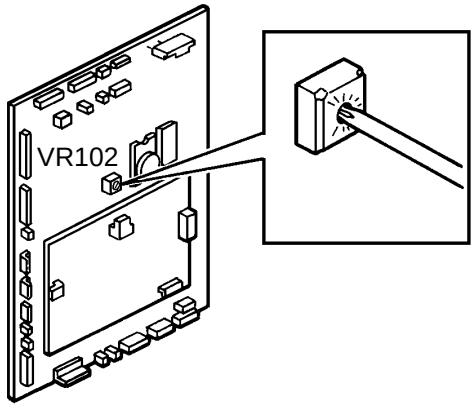

1. Turn off the main switch and clean the following parts:

Item No.	Section	Method
(1)	ID sensor	Blower brush
(2)	QL, PTL, Erase Lamp	Dry cloth

2. Reinstall all the parts.
3. Place five sheets of A3 (LDG) paper on the exposure glass.
4. Check Vsg using SP54. Adjust Vsg by turning VR102 (main board) if Vsg is out of adjustment standard.

9.8 ADS (Auto Image Density Sensor) ADJUSTMENT

When:	1. After light intensity adjustment. 2. ADS voltage is not within the adjustment standard.
Purpose:	To maintain correct ADS mode operation.
Adjustment Standard:	ADS Voltage = 2.5 ± 0.1 volts
Measure:	SP56
How:	Changes the main board ADS output voltage. The voltage reading is displayed in the magnification indicator.

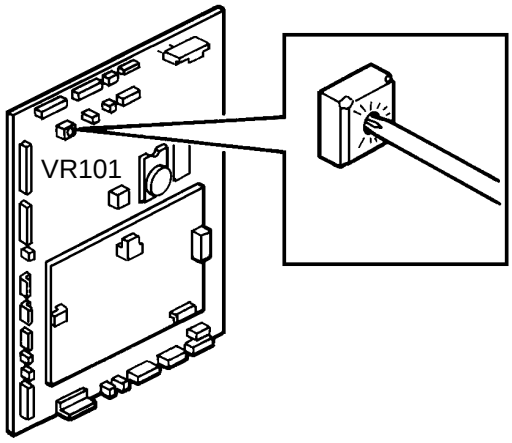

1. Place five sheets of A3 (LDG) paper on the exposure glass.
2. Select SP56 and press the Start key.
3. If the voltage is not within the adjustment standard, adjust it by turning VR101 on the main board.

9.9 VERTICAL MAGNIFICATION ADJUSTMENT

When:	The vertical magnification is not within the adjustment standard.
Purpose:	To maintain proper vertical magnification.
Adjustment Standard:	Less than ± 0.5% difference between original and copy.
Measure:	SP43 (0.2%/step, 15 steps)
How:	Changes the scanner speed compensation.

1. Place a 150 mm scale perpendicular to the left scale on the exposure glass.
2. Adjust the vertical magnification using SP43. Make three copies to check the magnification.

9.10 HORIZONTAL MAGNIFICATION ADJUSTMENT

When:	The horizontal magnification is not within the adjustment standard. After loosening the first scanner wire clamps.
Purpose:	To maintain proper horizontal magnification.
Adjustment Standard:	Less than ± 0.5% difference between original and copy.
Measure:	1. Adjust the position of the first scanner wire clamps (rough adjustment). 2. SP44 (0.2%/step, 31 steps) (fine adjustment)
How:	1. Changes the distance between the original and the drum. 2. Changes the lens home position.

– Rough Adjustment –

1. Change the data of SP44 to 16 (default value).
2. Position the scanner wire clamps using the scanner positioning pins. (See Scanner Wire Installation.)

– Fine Adjustment –

3. Place a 150mm scale parallel to the left scale on the exposure glass.
4. Adjust the horizontal magnification using SP44. Make three copies to check the magnification.

9.11 FOCUS ADJUSTMENT

When:	The copy image is out of focus. After adjusting the horizontal magnification.
Purpose:	To maintain proper focus.
Adjustment Standard:	Copy image in focus.
Measure:	SP47 (80 steps)
How:	Adjusts the 4th/5th mirror assembly home position, changing the the distance between the original and the drum surface.

1. Make three A3/LDG copies with the test chart.
2. Adjust the focus using SP47. Check the text on the copies.

9.12 ERASE MARGIN ADJUSTMENT

When:	The leading edge erase margin is not within the adjustment standard.
Purpose:	To maintain the correct leading erase margin.
Adjustment Standard:	2.5 ± 1.5 mm (0.1 ± 0.06")
Measure:	SP41 (0.5mm/step, 15 steps)
How:	Changes the erase lamp on period.

1. Place a 150 mm scale perpendicular to the left scale on the exposure glass.
2. Adjust the leading edge erase margin using SP41. Make three copies and check the erase margin.

9.13 REGISTRATION ADJUSTMENT

When:	Registration is not within the adjustment standard.
Purpose:	To maintain proper registration.
Adjustment Standard:	0 ± 2 mm (0 ± 0.08")
Measure:	SP42 (0.5mm/step, 15 steps)
How:	Changes the registration roller start timing.

1. Place a 150 mm scale perpendicular to the left scale on the exposure glass.
2. Adjust the registration using SP42. Make three copies and check the registration.

9.14 SIDE-TO-SIDE REGISTRATION ADJUSTMENT

When:	Side-to-side registration is not within the adjustment standard.
Purpose:	To maintain the proper side-to-side registration.
Adjustment Standard:	0 ± 2 mm (0 ± 0.08")
Measure:	1. Change the lens position. 2. Change the sIde fence position in the paper tray.
How:	Shifts the copy image.

NOTE: a) When side-to-side registration is incorrect and only the paper tray or duplex unit is being used, adjust the side fence position.

b) When side-to-side registration is incorrect for both the first paper feed station and the second paper feed station, adjust the lens position. Check the adjustment by making a copy from the first paper feed station. Then, make a copy from the paper tray feed station and adjust the paper tray or duplex unit side fences if necessary.

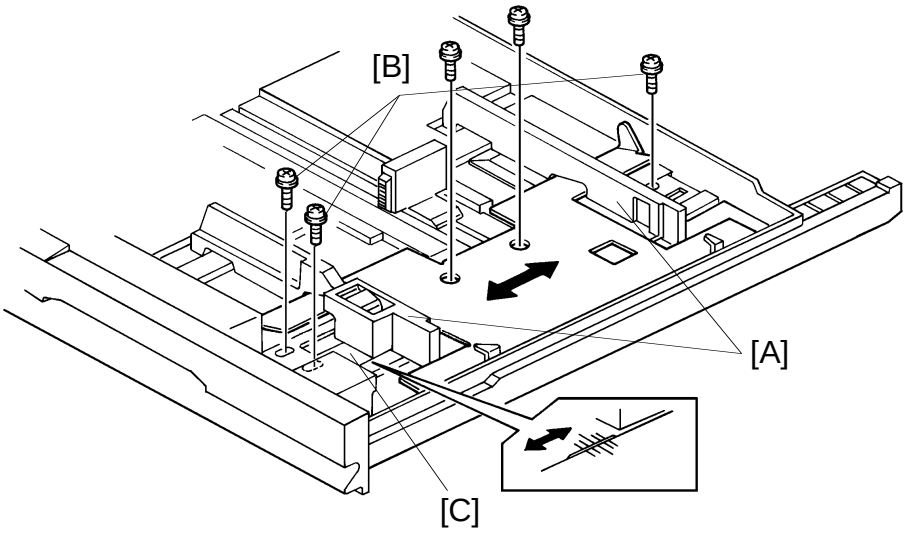

– Side Fence Adjustment (Paper Tray) –

1. Pull the paper tray out.
2. Move the side fences [A] to the A4 lengthwise position.
3. Loosen the five screws [B].
4. Set the side fences to the desired position [C].

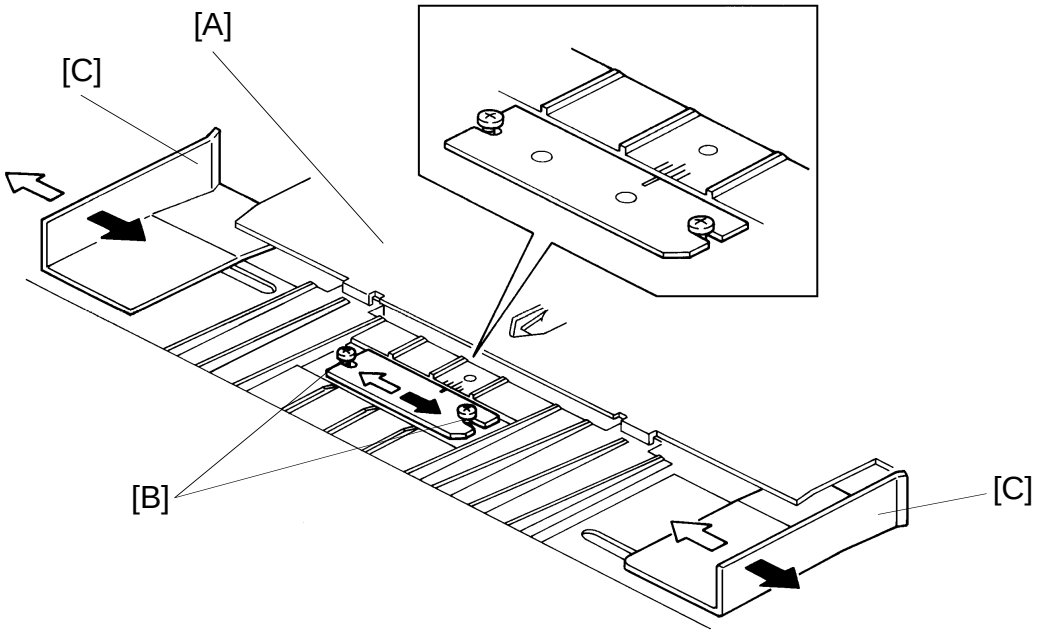

– Side Fence Adjustment (Duplex Unit) –

1. Pull the duplex unit [A] out.
2. Loosen the two screws [B].
3. Set the side fences to the desired position [C].

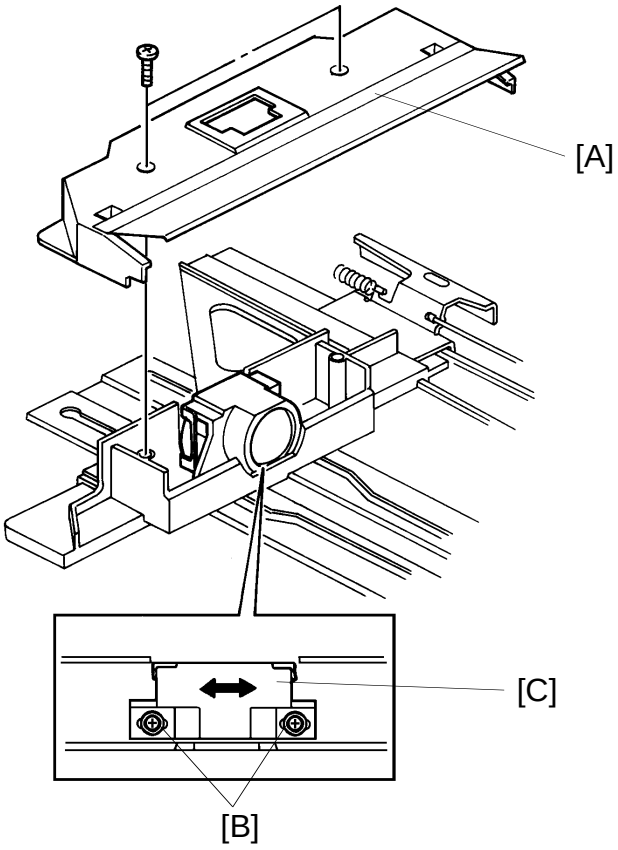

– Lens Position Adjustment –

1. Turn off the main switch and remove the exposure glass. (See Exposure Glass Removal.)
2. Remove the lens housing cover (2 screws) and lens cover [A] (2 screws).
3. Loosen two screws [B] and shift the lens [C] from side-to-side to the adjust the registration.

   NOTE: Do not move the lens more than 2 mm (from the center position) in either direction (front/rear). Otherwise, the lens may contact the lens unit rail while moving from home position to the selected reduction or enlargement position.
4. Make sure the lens moves smoothly when charging the magnification ratio.

9.15 4TH/5TH MIRROR HEIGHT ADJUSTMENT

When:	Parallelogram (skewed) image appears.
Purpose:	To maintain the proper copy image.
Measure:	Turn 4th/5th mirror height adjustment screw.
How:	Changes the 4th/5th mirror height.

CAUTION: Never perform this adjustment until you have positively verified that the source of the skewing is optical and not in the paper path.

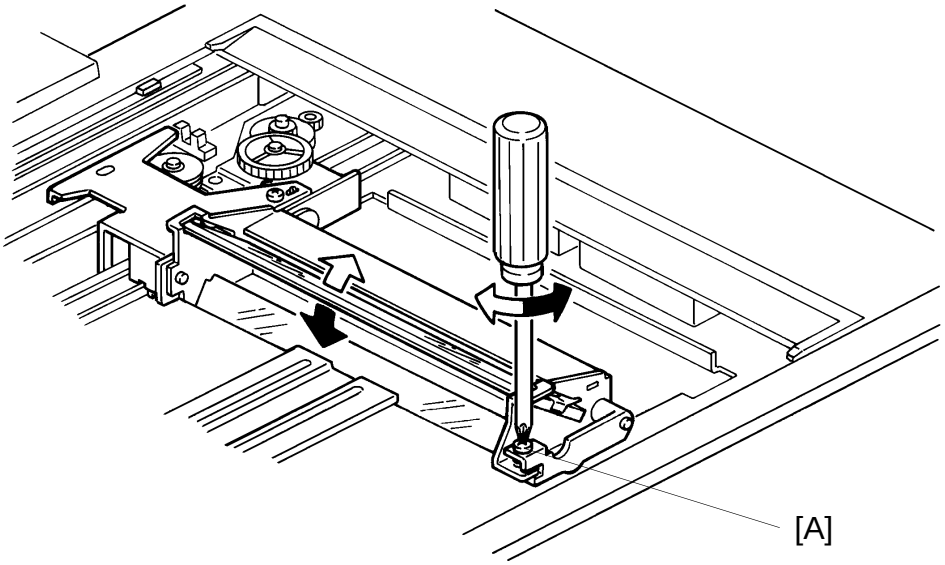

1. Turn off the main switch and remove the exposure glass. (See Exposure Glass Removal.)
2. Remove the lens housing cover (2 screws).
3. Adjust the 4th/5th mirror height by turning the screw [A]. Refer to the arrows in the illustration.

SECTION 6

TROUBLESHOOTING

1. COPY QUALITY

1.1 BLANK COPY (WHITE COPY)

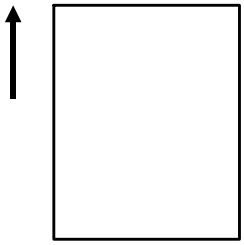

– Phenomenon –

White or almost white copy

– Possible Causes –

1. Charge is not applied.
   - CC/G/B bias power pack (charge or grid) failure
   - Poor contact of power pack lead wires
   - Broken charge corona wire
   - Leak in insulator or endblock

2. Copy image is not transferred to the paper.
   - TC/SC power pack (transfer) failure
   - Poor contact of power pack lead wires
   - Poor contact of transfer corona wire
   - Leak in insulator or endblocks

3. Development roller does not rotate.
   - Broken drive gear
   - Defective development clutch solenoid

4. Poor drum sensitivity
   - Drum exposed to fluorescent light or direct sunlight for long period of time.
   - Drum exposed to ammonia gas or fumes for long period of time.

5. Drum does not rotate.

– Action –

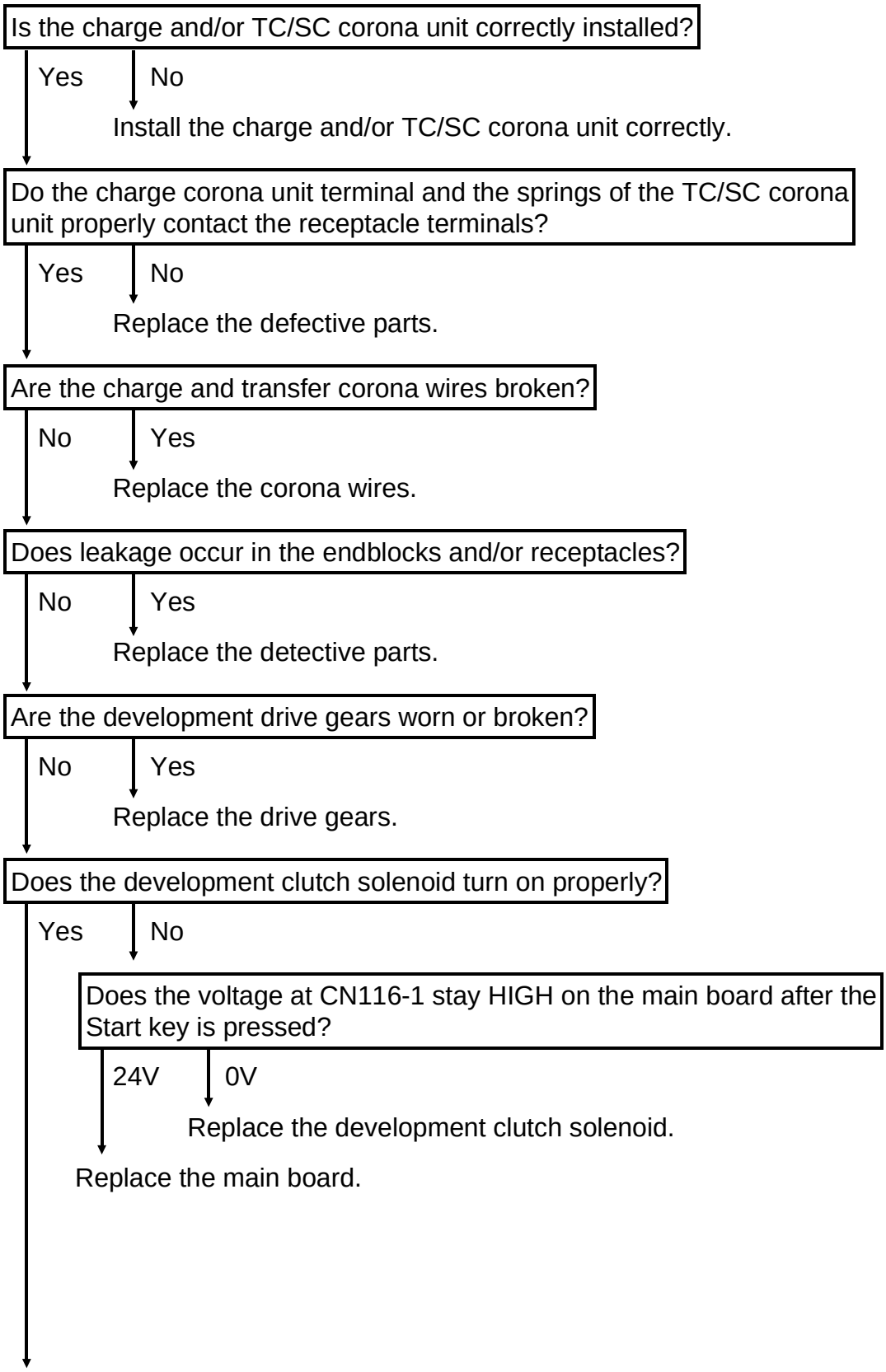
Is the charge and/or TC/SC corona unit correctly installed?
Yes
No
Install the charge and/or TC/SC corona unit correctly.
Do the charge corona unit terminal and the springs of the TC/SC corona unit properly contact the receptacle terminals?
Yes
No
Replace the defective parts.
Are the charge and transfer corona wires broken?
No
Yes
Replace the corona wires.
Does leakage occur in the endblocks and/or receptacles?
No
Yes
Replace the detective parts.
Are the development drive gears worn or broken?
No
Yes
Replace the drive gears.
Does the development clutch solenoid turn on properly?
Yes
No
Does the voltage at CN116-1 stay HIGH on the main board after the Start key is pressed?
24V
0V
Replace the development clutch solenoid.
Replace the main board.

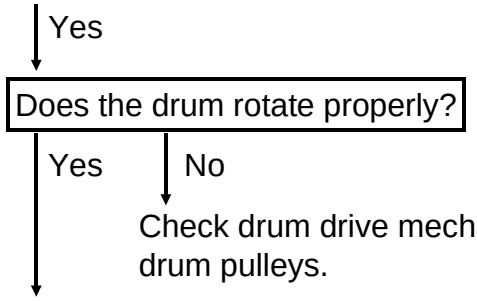

Check the following points:

- CN112-6 (charge trigger line) and CN112-4 (Grid trigger line)
  (1) If the signal stays HIGH after the Start key is pressed, replace the main board.
  (2) If the charge corona does not turn on even if the signal changes to LOW, replace the CC/Grid/Bias power pack.

- CN112-12 (Transfer trigger line)
  (1) If the signal stays HIGH after the Start key is pressed, replace the main board.
  (2) If the transfer corona does not turn on even if the signal changes to LOW, replace the TC/SC power pack.

If there is no problem with the signal lines, replace the drum if the sensitivity does not recover even when the drum is not exposed to light.

1.2 DIRTY BACKGROUND

– Phenomenon –

1. Dirty background at image density level 4 (manual setting).
2. ADS copies have a dirty background.

– Possible Causes –

1. V_L correction failure
   - Very dirty optics (V_L correction cannot compensate)
   - Deteriorated exposure lamp (maximum output cannot give sufficient light intensity)
   - Dirty erase lamp unit

2. V_R correction failure
   - CC/Grid/Bias Power Pack (development bias) failure
   - Poor contact of development bias
   - The development bias is grounded

3. OPC drum is not grounded properly.

4. ADS mode
   - Improper ADS Density setting (SP34)
   - ADS Sensor board failure
   - CC/Grid/Bias Power Pack failure
   - Incorrect adjustment of ADS sensor (SP56)

5. High toner density
   - Improper setting of ID Sensor bias (SP33)
   - Dirty erase lamp unit
   - Toner scattering occurs

– Action –

Make a copy in reduction mode at manual image density level 4.

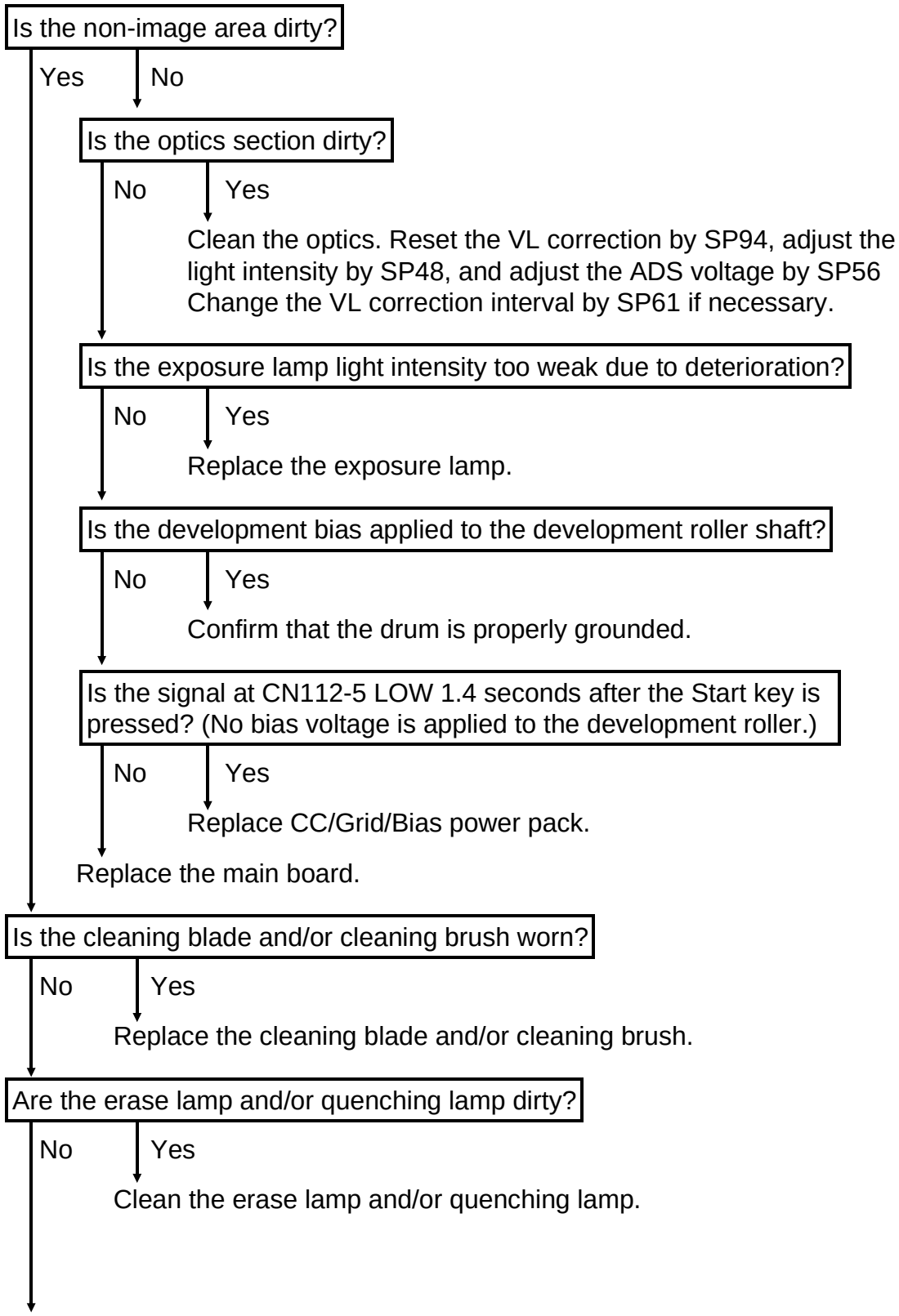

No

If toner scattering occurs, see the toner scattering section of the manual.

If the dirty background occurs only in ADS mode, do the following:

- If the ADS voltage is not within 2.5 ±0.1 volts standard voltage, readjust the ADS voltage.
- If the signal at CN101-6 stays HIGH, check the harness and/or sensor, and replace defective parts.
- If the signal at CN101-5 stays LOW, replace the main board.

1.3 UNEVEN IMAGE DENSITY

– Phenomenon –

Uneven image density appears on the copies.

– Possible Cause –

1. Dirty optics
2. Uneven exposure lamp horizontal position.
3. Dirty corona wires or grid
4. Uneven height of charge corona wire.

– Action –

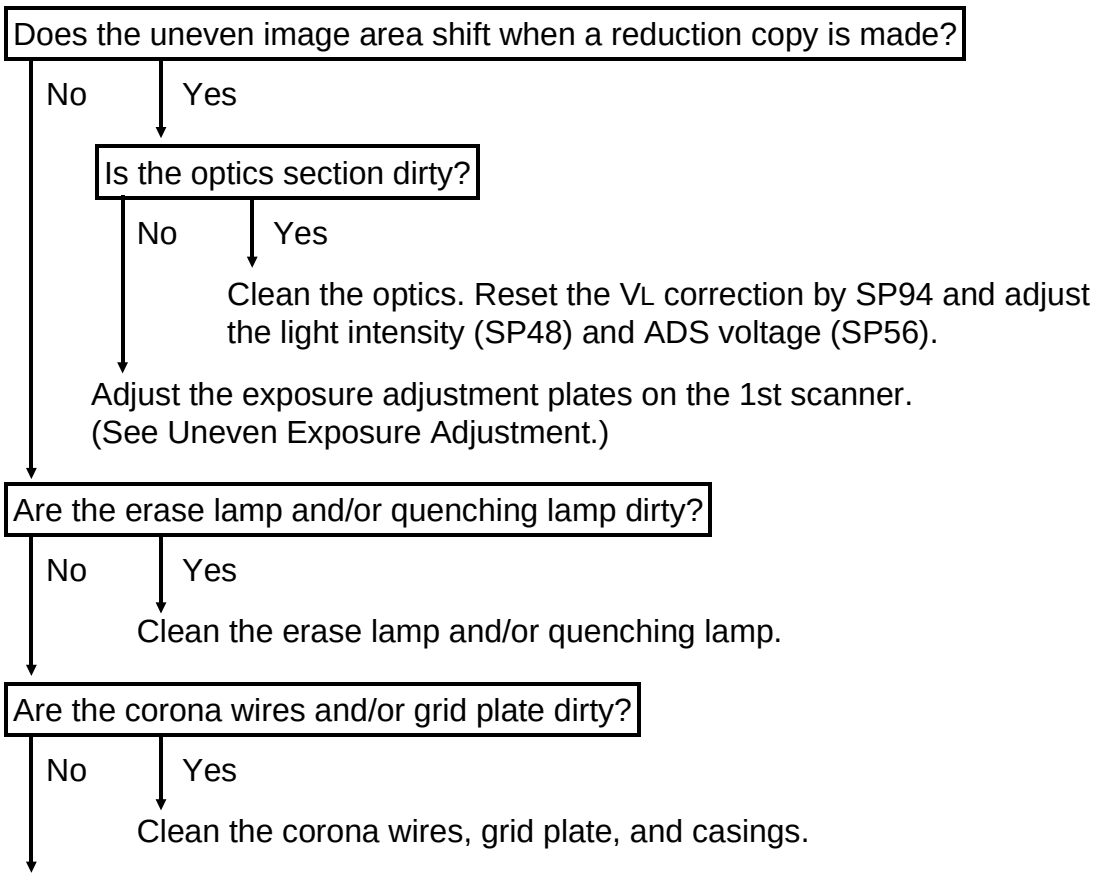

1.4 VERTICAL BLACK BANDS

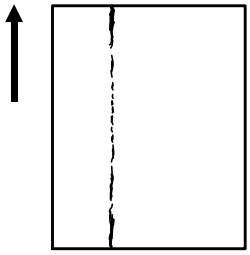

– Phenomenon –

Vertical black bands appear on the copy paper.

– Possible Causes –

1. Dirty optics
2. Dust between the cleaning blade and drum
3. Edge of the cleaning blade deformed
4. Deformed cleaning brush
5. Deformed inlet seal on the development unit

– Action –

Do the black bands shift when a reduction copy is made?

No

Yes

Check and clean the optics section. Reset the VL correction by SP94 and adjust the light intensity (SP48) and ADS voltage (SP56).

Press the blade release lever down two or three times to clean the edge of the the cleaning blade. If the black bands still appear, go to the next step.

Is the edge of the cleaning blade deformed?

No

Yes

Replace the cleaning blade.

Is the cleaning brush deformed?

No

Yes

Replace the cleaning brush.

If the inlet seal on the development unit is deformed, replace the inlet seal plate and the seal as a set.

1.5 VERTICAL BLACK LINES

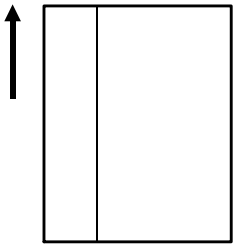

– Phenomenon –

Thin black lines appear on the copy.

– Possible Causes –

1. Scratched cleaning blade
2. Dirty or scratched exposure glass and/or dirty or scratched mirrors
3. Scratched or dirty drum
4. Scratched hot roller

– Action –

Do the black lines shift when a reduction copy is made?

No

Yes

Clean or replace the exposure glass or mirrors. Reset the V_L correction by SP94 and adjust the light intensity (SP48) and ADS voltage (SP56).

Is the edge of the cleaning blade scratched?

No

Yes

Replace the cleaning blade.

Is the hot roller scratched?

No

Yes

Check whether black lines appear on the copy by stopping the copy paper in the transport section. If no black lines appear, replace the hot roller.

Check whether the drum is scratched or toner is built-up on the drum.

- If toner is built-up on the drum, clean the drum with damp cloth.
- If the drum is scratched, replace the drum.

NOTE: When replacing the drum, perform the following SP modes.

- SP66 (Drum Initial Setting)
- SP48 (Light Intensity Adjustment)
- SP56 (ADS Voltage Adjustment)
- SP54 (Vsg Adjustment)

1.6 VERTICAL WHITE LINES OR BANDS–1 (DULL OR BLURRED)

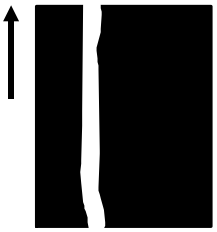

– Phenomenon –

Dull or blurred white lines appear on the copy.

– Possible Causes –

1. Dirty or deteriorated charge corona wire.
2. Dirty or deformed grid plate.
3. Damp or deformed inlet seal on the development unit.

– Action –

Are the charge corona wire and/or grid plate dirty?

No

Yes

Clean the charge corona wire and/or grid plate.

Is the inlet seal damp or deformed?

No

Yes

Clean the inlet seal with a dry cloth. If the problem is not corrected, replace the inlet seal plate and the seal as a set.

Is the grid plate deformed?

No

Yes

Replace the grid plate.

Replace the charge corona wire.

1.7 VERTICAL WHITE LINES OR BANDS–2 (THIN, DISTINCT)

– Phenomenon –

Vertical white lines appear on the copy.

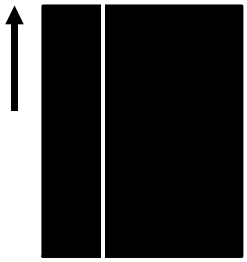

– Possible Causes –

1. Paper dust on the edge of cleaning blade
2. Scratched drum
3. Scratched hot roller

– Action –

Press the cleaning blade release lever down several times. Make a copy and if the white lines still occur, go to the next step.

↓

Make a copy and stop the machine when the paper reaches the transport section. Do white lines appear on the copy?

No ↓

Replace the hot roller if it is scratched.

Yes ↓

Replace the drum if it is scratched.

NOTE: If the drum is scratched, find out what caused the scratches on the drum and correct the problem.

- Paper Jam
- Incorrect positioning of the pick-off pawls
- Foreign substances on the cleaning brush and/or blade
- Carrier leakage

When replacing the drum, perform the following SP modes:

- SP66 (Drum Initial Setting)
- SP48 (Light Intensity Adjustment)
- SP56 (ADS Voltage Adjustment)
- SP54 (Vsg Adjustment)

1.8 HORIZONTAL BLACK/WHITE LINES

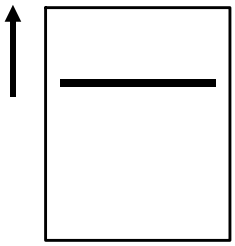

– Phenomenon –

Black/white lines perpendicular to the paper feed direction appear on the copy image.

– Possible Causes –

1. Drum is scratched.
   If black lines appear at 251mm intervals, the cause is a scratched drum or toner build up.
2. Hot roller is scratched.
   If black lines appear at 125mm intervals, the cause is a scratched hot roller.
3. Toner adhered to the drum surface.
   Due to insufficient cleaning, foreign matter may accumulate on the blade, causing toner to stick to the drum surface when the drum stops.

– Action –

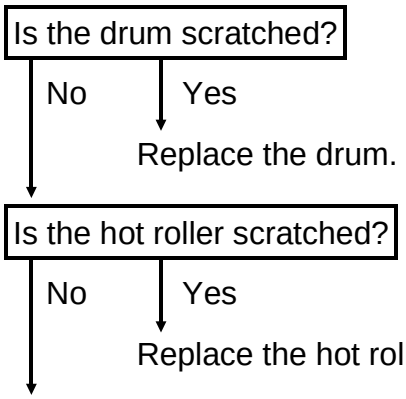

If toner adheres to the drum surface, clean the drum with water. Also clean or replace the cleaning blade and/or cleaning brush.

NOTE: When replacing the drum, perform the following SP modes.
- SP66 (Drum Initial Setting)
- SP48 (Light Intensity Adjustment)
- SP56 (ADS Voltage Adjustment)
- SP54 (Vsg Adjustment)

1.9 JITTER

– Phenomenon –

Jitter appears on the copy.

– Possible Causes –

1. Vibration in drive mechanism.
2. Scanner not moving smoothly.

– Action –

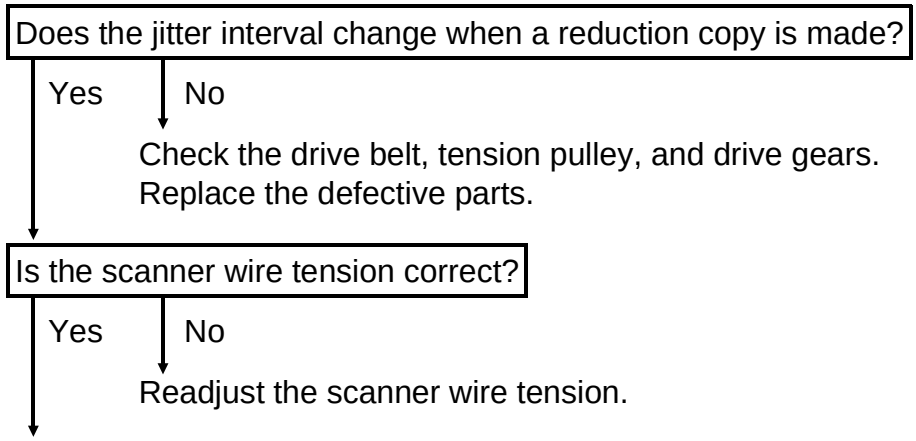

1.10 BLACK SPOTS ON THE COPY IMAGE

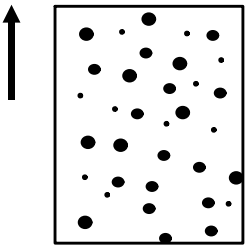

– Phenomenon –

The grid voltage is not applied correctly.

- Poor contact between charge corona casing and grid spring
- CC/Grid/Bias power pack defective
- Main board defective

– Action –

Is there a good electrical contact between the charge corona casing and the grid spring?

Yes

No → Repair the poor contact and/or replace any parts if needed.

Check the voltage at CN112-1 on the main board.

0V

Not 0V → Replace the main board.

Replace the CC/Grid/Bias power pack.

1.11 SKEWED (OPTICAL) COPY IMAGE

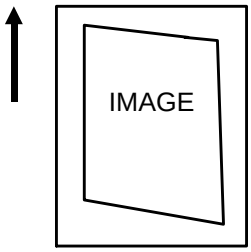

– Phenomenon –

The copy image is skewed (parallelogram shape).

The sides of the copy image are straight, but the leading and trailing edges are skewed.
(This differs from the paper path type of skewing.)

– Possible Causes –

1. 4th/5th mirror assembly is not parallel with the 1st and 2nd scanners.
2. Mirrors are in the wrong position
3. The stubs of the 4th/5th mirror assembly are off the rails.

– Action –

Is each mirror positioned correctly on its scanner and on the 4th/5th mirror assembly?

Yes

No → Reposition the mirror correctly. If the spring plates are defective, replace them.

Are the stubs of the 4th/5th mirror assembly off the rails?

No

Yes → Put the mirror assembly stubs back on the rails.

Readjust the height of 4th/5th mirror assembly by turning the adjusting screw.

1.12 TONER DENSITY TOO HIGH

– Phenomenon –

1. Dirty background appears on the copy.
2. The image density of black solid areas is too high.
3. Toner has built up on the endblock cover of the TC/SC corona unit and also on the upper cover of the development unit.

– Possible Causes –

1. Light intensity of the exposure lamp is too high.
2. Toner supply clutch keeps on turning continuously.
3. Copier is in fixed toner supply mode.
4. Main board defective.
5. ID sensor bias voltage (modules) is too low.
6. Charge corona current is too low.
7. ID sensor grid voltage is too low.

– Action –

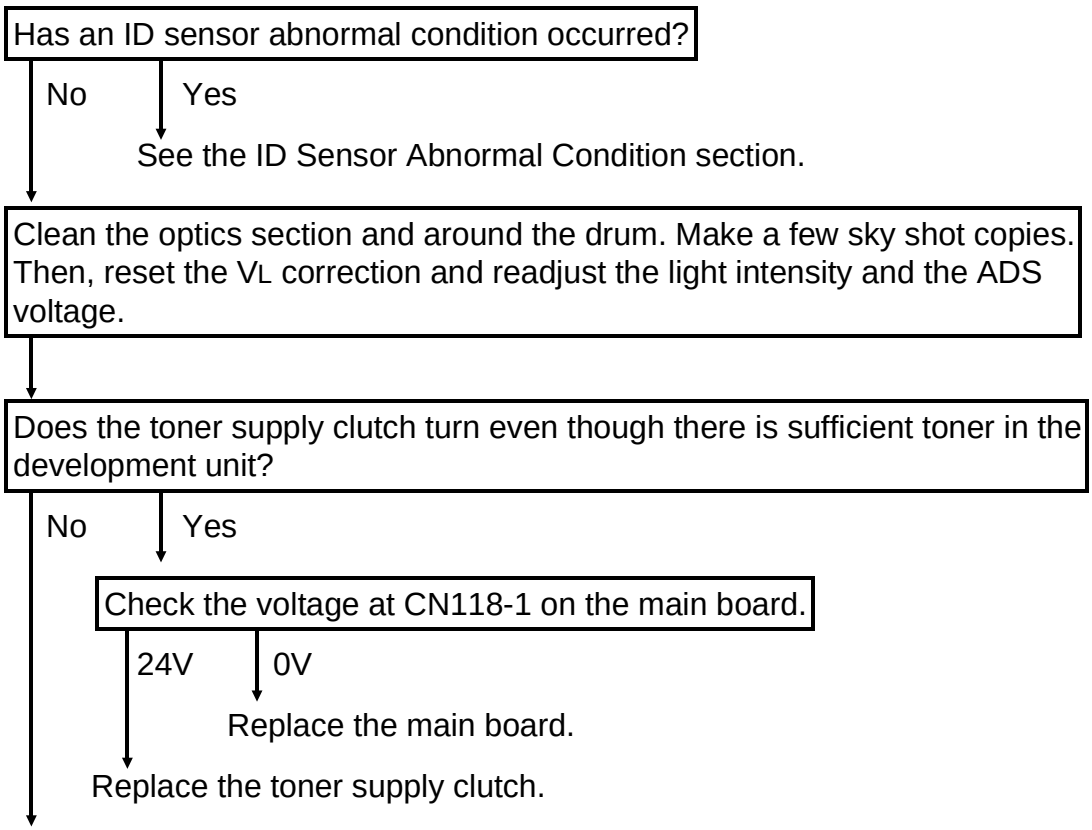

No

Is the copier in fixed mode?

No

Yes

Change the data in SP30 from "1" to "0".

Is the charge corona current correct?

Yes

No

Readjust the charge corona current.

Is the grid voltage correct?

Yes

No

Readjust the grid voltage. Check the data of SP62. If the data is different from the factory setting, change the data to the factory setting.

Check the data of SP33. If the data is "2", "3" or "5", readjust the data to "0".

1.13 TONER DENSITY TOO LOW

– Phenomenon –

1. Light copy
2. Carrier is on the copy.
3. Light spots appear in black solid areas.

– Possible Causes –

1. Light intensity of the exposure lamp is too low.
2. Toner supply clutch does not rotate.
3. Copier is in the fixed toner supply mode.
4. Main board is defective.
5. ID sensor voltage is too high.
6. Charge corona current is too high.
7. ID sensor grid voltage is too high.

– Action –

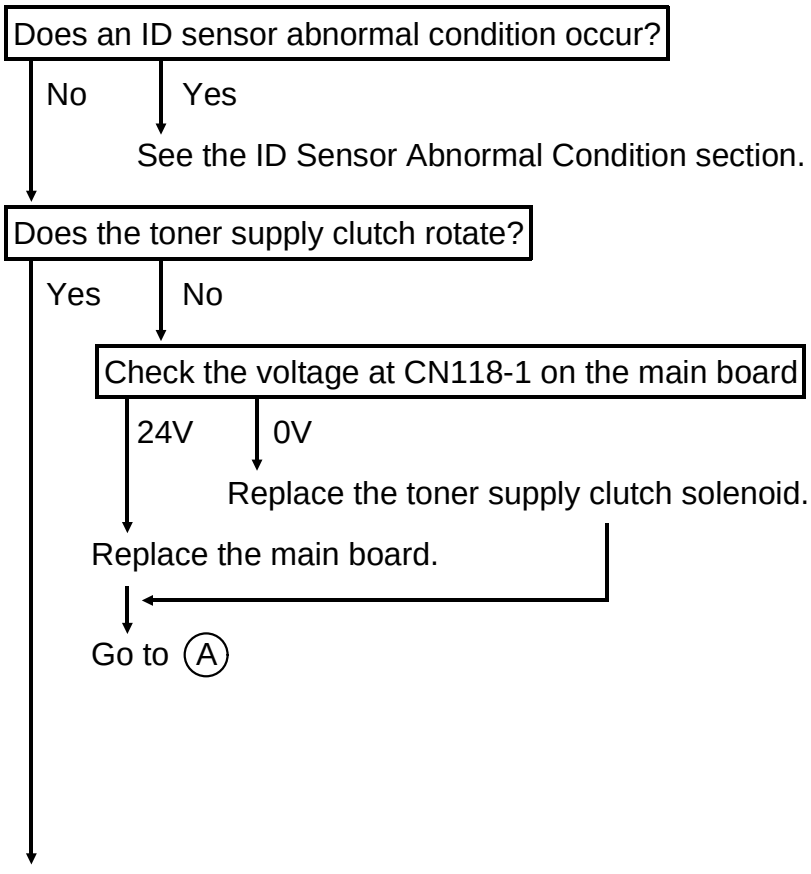

Yes

Is the data of SP30 "1"?

No

Yes

Change the data in SP30 from "1" to "0".

Go to (A)

Is the data of SP33 "1" or "4"?

No

Yes

Change the data in SP33 from "1" or "4" to "0".

Go to (A)

Is the charge corona current correct?

No

Yes

Readjust the charge corona current.

Go to (A)

Is the grid voltage correct?

Yes

No

Readjust the grid voltage. Check the data of SP62. If the data is different from the factory setting, change the data to the factory setting.

(A)

Clean the optics section and around the drum.
Turn on DIP switch 101-1 on the main board. Place a few sheets of white paper on the exposure glass. Enter "99" using the numeral key and press the Start key to start free run. Repeat free run until Vsp becomes lower than 1/8 Vsg using SP55.

Adjust the light intensity, ADS voltage, and/or Vsg.

1.14 TONER SCATTERING

– Phenomenon –

Toner scatters from the development unit.

– Possible Causes –

1. Toner density is too high.
2. Inlet seal on the development unit is out of position.
3. Filter on the top of the development unit is dirty.
4. Developer deterioration

– Action –

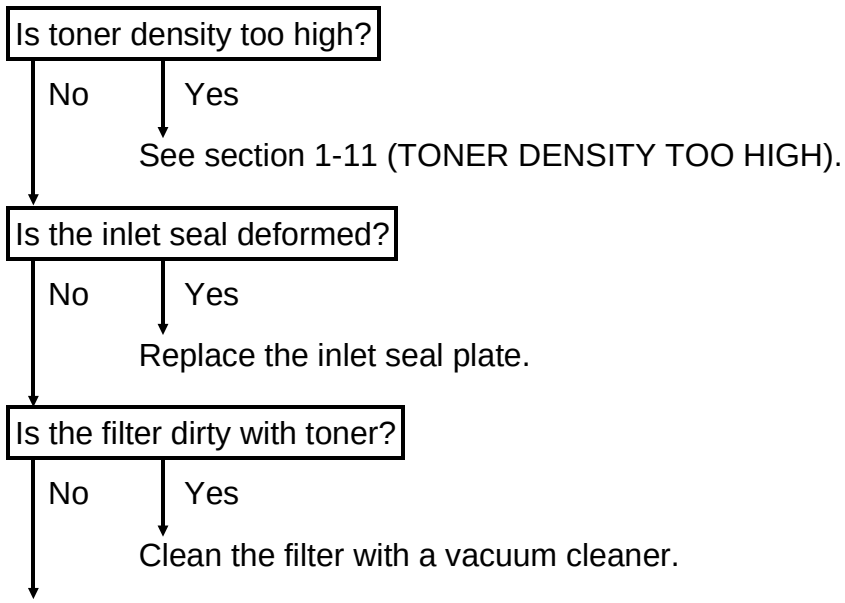

1.15 UNFUSED COPY IMAGE

– Phenomenon –

Solid image rubs off easily.

– Possible Causes –

1. Fusing pressure is too weak.
2. Fusing temperature is too low.
3. Thermistor malfunction

– Action –

Adjust the position of the pressure springs to increase the fusing pressure.

↓ No good

Increase fusing temperature using SP49.

↓ No good

Check the thermistor. If the thermistor is malfunctioning, replace it.

1.16 PAPER MISFEED

– Phenomenon –

1. Misfeed location indicator turns on when the main switch is turned on even if there is no paper in the copier.
2. Misfeed location indicator always turns on at the same location when copies are made.

– Possible Causes –

1. Sensor is defective.
2. Mechanical and/or electrical malfunction

– Action 1 (Initial Misfeed) –

Check which sensor is defective using the initial misfeed detection table. Replace the defective sensor. If no sensors are defective, replace the main board.

– Action 2 (Misfeed during copy cycle) –

Set jam Detection OFF mode (SP6) to on and make a copy to see whether a misfeed occurs.

Misfeed

No misfeed

Check which sensor is defective using the misfeed detection for during copy cycle. If no sensors are not defective, replace the main board.

Check whether a mechanical or electrical malfunction occurs. Replace the defective parts.

1.17 DF ORIGINAL MISFEED OR SKEW

– Phenomenon –

When the DF is in use, the original stops on the exposure glass or is skewed even if the electrical components are functioning normally.

– Possible Causes –

1. Exposure glass is upside-down.
2. Friction between the exposure glass and the feed belt

– Action –

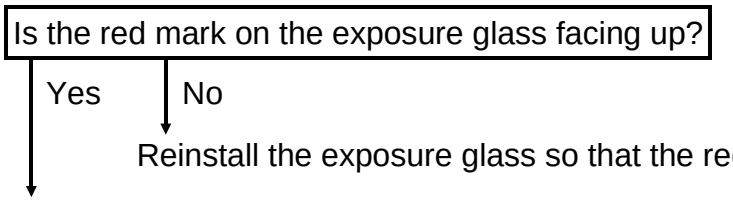

Clean the exposure glass surface with alcohol or water. Pour a small amount of silicone oil on the exposure glass and wipe the exposure glass with a dry cloth to reduce the friction between the exposure glass and the feed belt.

2. U-CODE CONDITION

2.1 U1 - RIGHT COVER OPEN

– Possible Cause –

- The right cover stays open
- Right cover switch failure
- Main board defective

2.2 U2 - KEY COUNTER NOT SET

– Possible Cause –

- The key counter is not set properly
- Key counter connector defective
- Main board defective

2.3 U4 - SORTER OPEN

– Possible Cause –

- The sorter stays open
- Sorter switch failure
- Main board defective

2.4 U5 - CASSETTE LIFT SENSOR NOT ON

– Possible Cause –

- The cassette is not set properly
- Paper lift sensor failure
- Main board defective

2.5 U7 - DUPLEX UNIT OPEN DURING DUPLEX OPERATION

– Possible Cause –

- The duplex unit is open during the duplex operation



3. SERVICE CALL CONDITION

NOTE: a) E-codes (E1 to E8) are displayed in the copy counter. To display the two digits, press the Enter key.

Example:
When the machine detects the E11 condition, E1 is displayed in the copy counter. Hold down the Enter key, and "11" is displayed in the copy counter.

b) When the service call (E5) conditions occur, for safety reason they cannot be cleared by turning off/on the main switch. The following procedure must be performed to clear these service call conditions:

1. Turn on the main switch.
2. Turn DIP switch 101-1 on and off.
3. Turn the main switch off and on.

3.1 CODE #11 – EXPOSURE LAMP ERROR

– Definition –

- The feedback signal becomes higher than 4.2 volts (r.m.s.) for 1.0 second when the exposure lamp is on.
- The feedback signal becomes higher than 1.0 volt (r.m.s.) for 1.0 second when the exposure lamp is off.

– Possible Causes –

- Exposure lamp open
- Thermoswitch open
- AC drive board defective
- Main board defective
- DC harness defective

– Action –

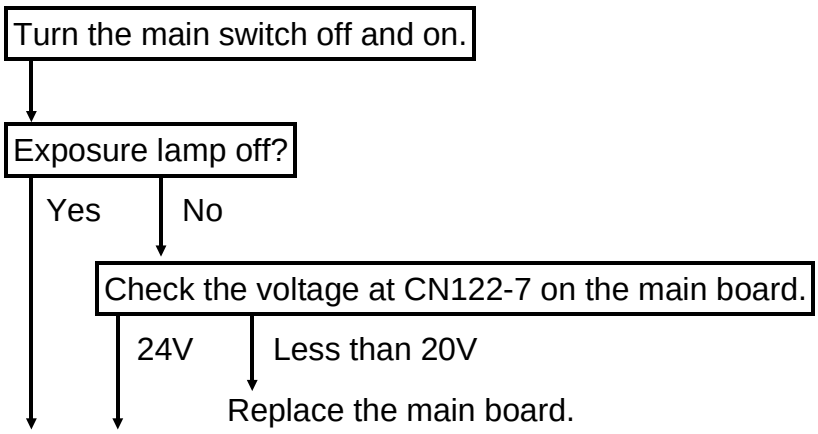

Trouble-shooting

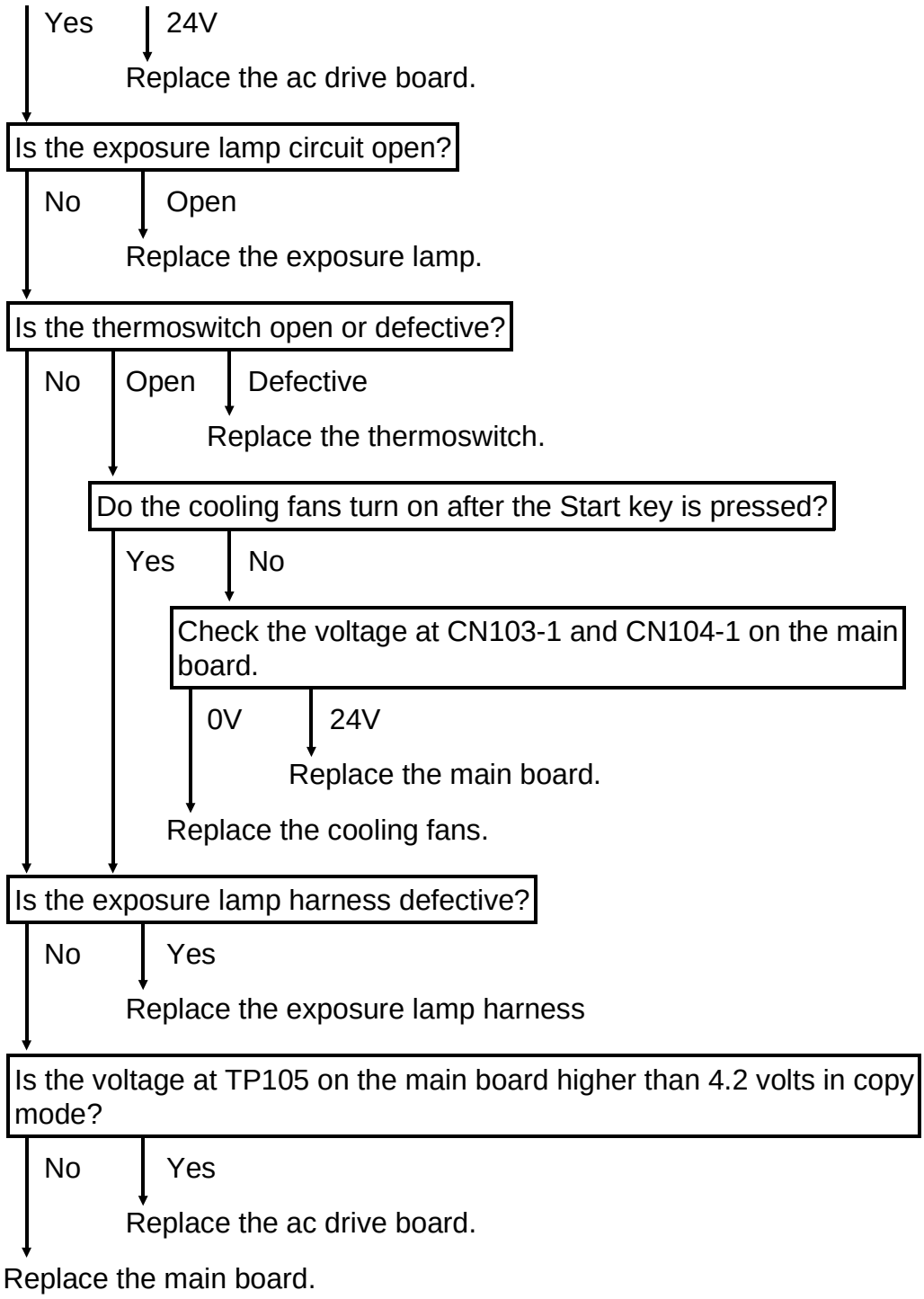
Yes
24V
Replace the ac drive board.
Is the exposure lamp circuit open?
No
Open
Replace the exposure lamp.
Is the thermoswitch open or defective?
No
Open
Defective
Replace the thermoswitch.
Do the cooling fans turn on after the Start key is pressed?
Yes
No
Check the voltage at CN103-1 and CN104-1 on the main board.
0V
24V
Replace the main board.
Replace the cooling fans.
Is the exposure lamp harness defective?
No
Yes
Replace the exposure lamp harness
Is the voltage at TP105 on the main board higher than 4.2 volts in copy mode?
No
Yes
Replace the ac drive board.
Replace the main board.

3.2 CODE #12 – EXPOSURE LAMP ERROR

– Definition –

- The feedback signal falls below 0.5 volts (r.m.s.) for 1.0 second when the exposure lamp is on.
- The exposure stays on for longer than 10 seconds.

– Possible Causes –

- AC drive board defective
- Main board defective

– Action –

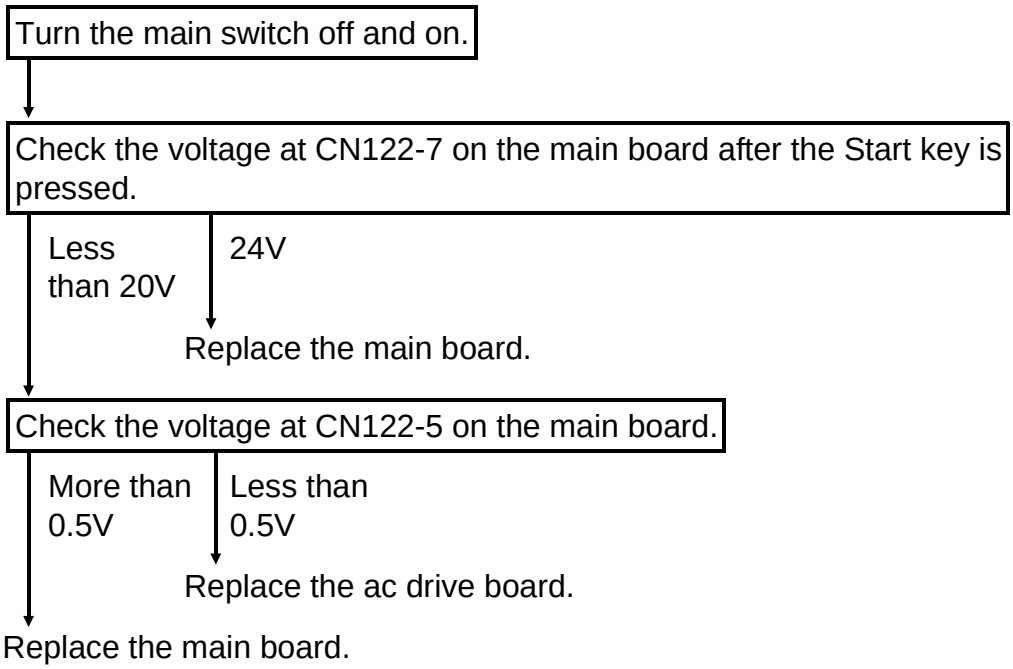

3.3 CODE #13 – ZERO CROSS SIGNAL ERROR

– Definition –

The CPU does not receive the zero cross signal within 0.56 second.

– Possible Causes –

- Main board defective
- AC drive board defective
- Main dc power supply board defective
- Zero cross line open
- CN435 or CN437 on the ac drive board, CN102 on the main dc power supply board or CN122 on the main board is not correctly connected.

– Action –

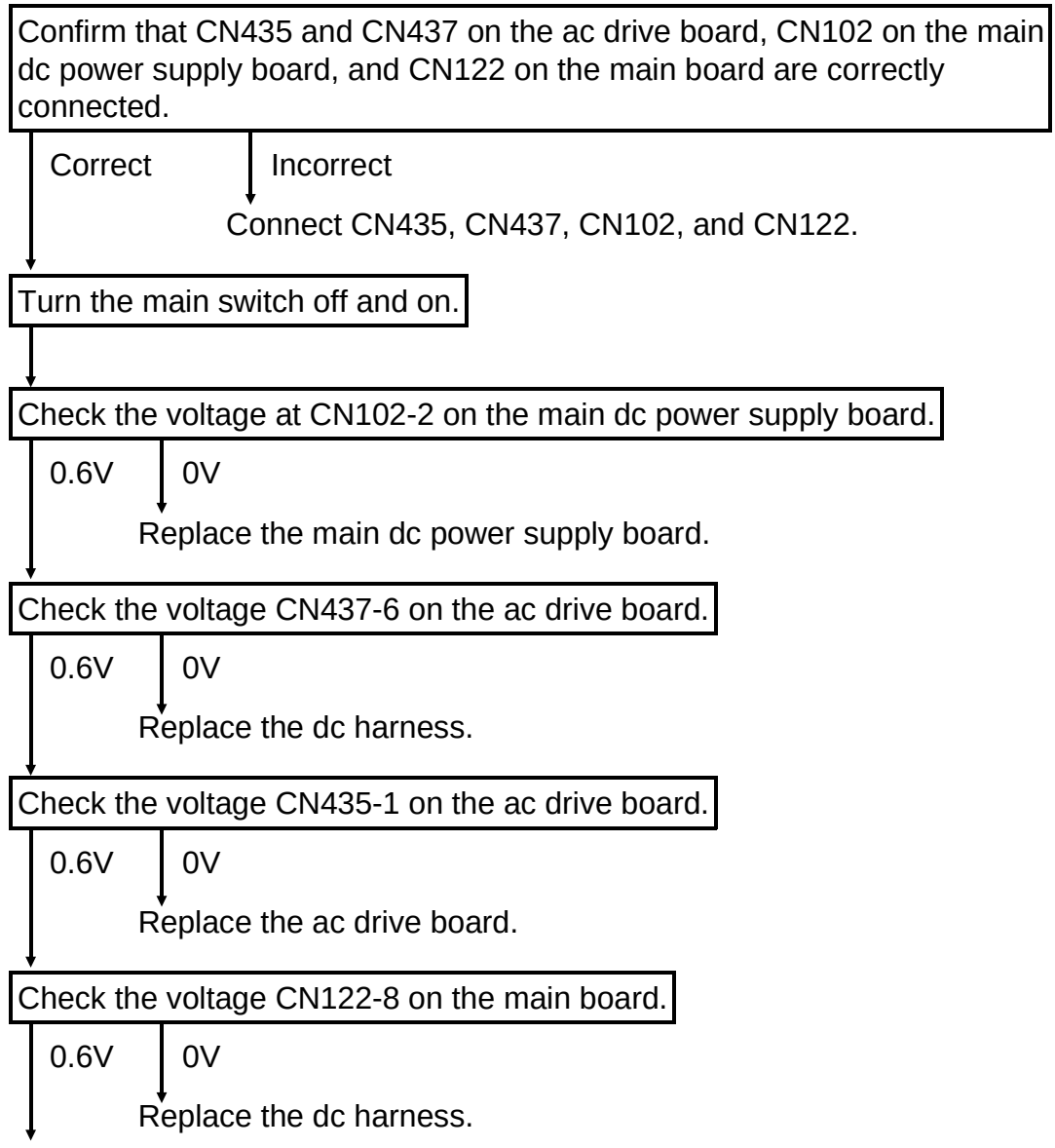

3.4 CODE #21 – SCANNER HOME POSITION ERROR

– Definition –

The scanner home position sensor's output remains LOW (de-actuated) for 8 seconds after the main switch is turned on.

– Possible Causes –

- Scanner home position sensor failure
- Scanner motor defective
- Main board defective
- Main dc power supply board defective
- AC drive board defective
- Incorrect scanner drive wire position
- CN437, CN436 or CN431 on the ac drive board/or CN142 on the main board is not correctly connected.

– Action –

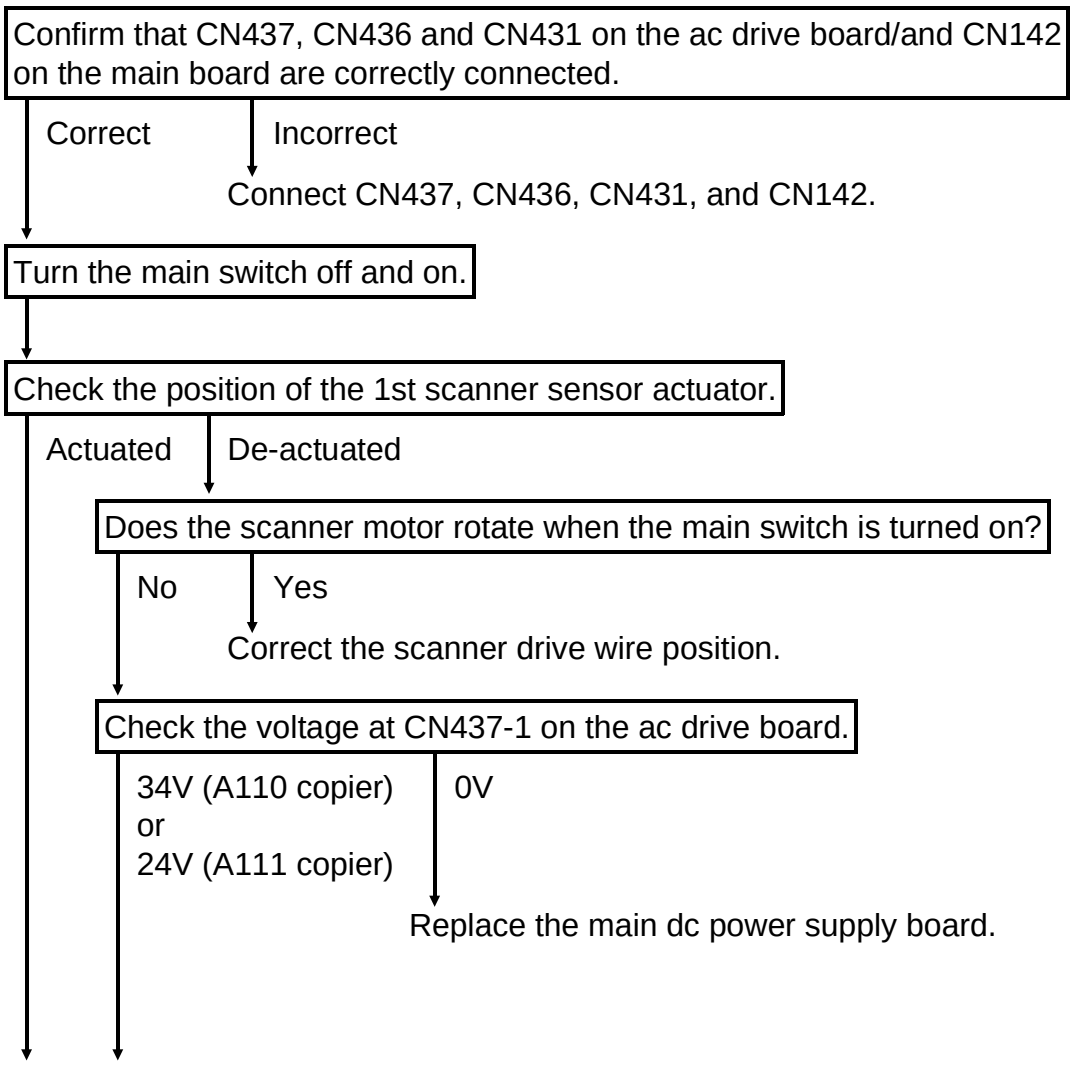

Trouble-shooting

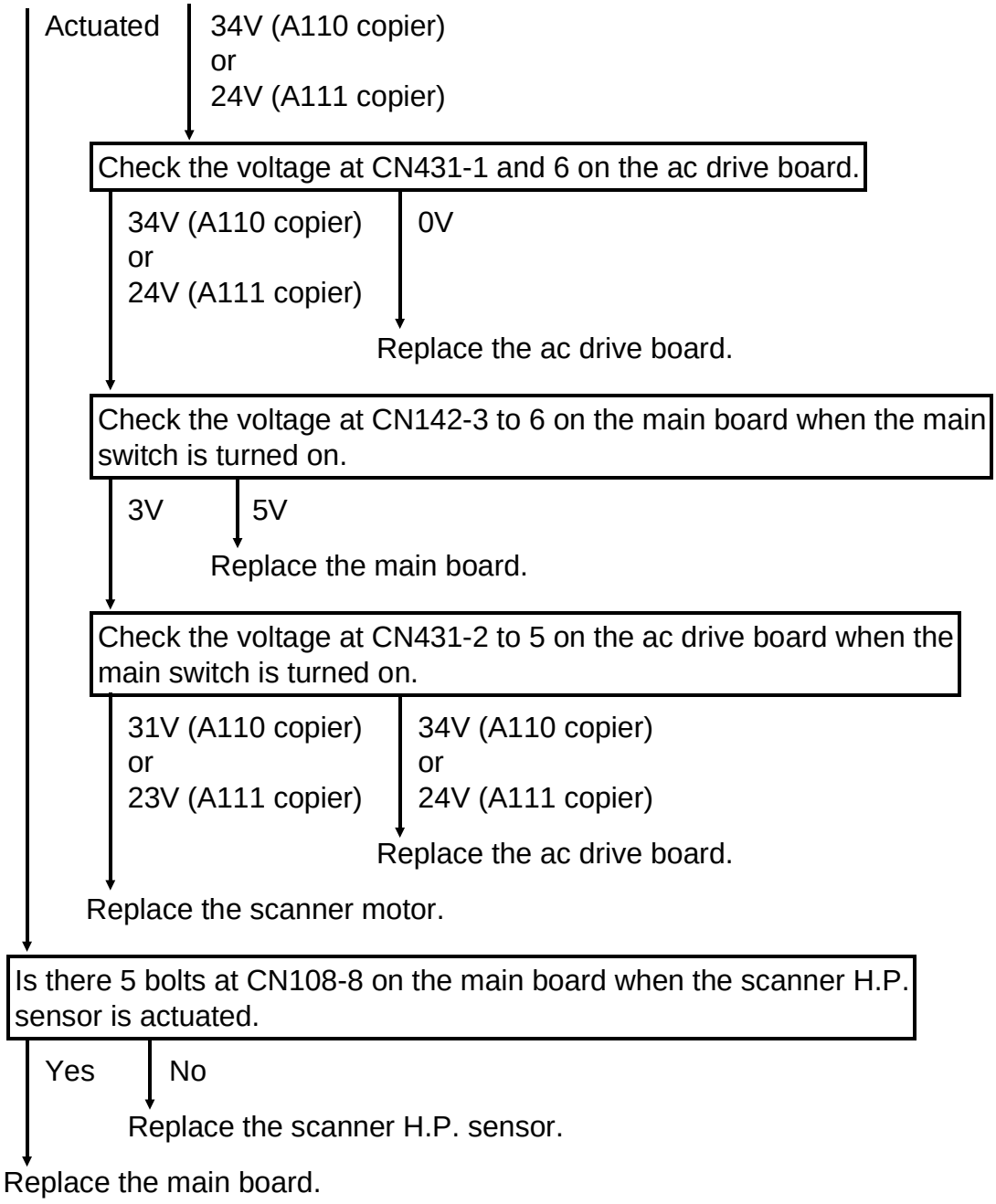
Actuated
34V (A110 copier)
or
24V (A111 copier)
Check the voltage at CN431-1 and 6 on the ac drive board.
34V (A110 copier)
or
24V (A111 copier)
0V
Replace the ac drive board.
Check the voltage at CN142-3 to 6 on the main board when the main switch is turned on.
3V
5V
Replace the main board.
Check the voltage at CN431-2 to 5 on the ac drive board when the main switch is turned on.
31V (A110 copier)
or
23V (A111 copier)
34V (A110 copier)
or
24V (A111 copier)
Replace the ac drive board.
Replace the scanner motor.
Is there 5 bolts at CN108-8 on the main board when the scanner H.P. sensor is actuated.
Yes
No
Replace the scanner H.P. sensor.
Replace the main board.

3.5 CODE #22 – SCANNER HOME POSITION ERROR

– Definition –

The scanner home position sensor's output remains HIGH (actuated) for 1.0 second after the scanner starts.

– Possible Causes –

- Scanner home position sensor failure
- Scanner motor defective
- Main board defective
- Main dc power supply board defective
- AC drive board defective
- Defective dc harness
- Incorrect scanner drive wire position
- CN437, CN436 or CN431 on the ac drive board/or CN108 or CN142 on the main board is not correctly connected.

– Action –

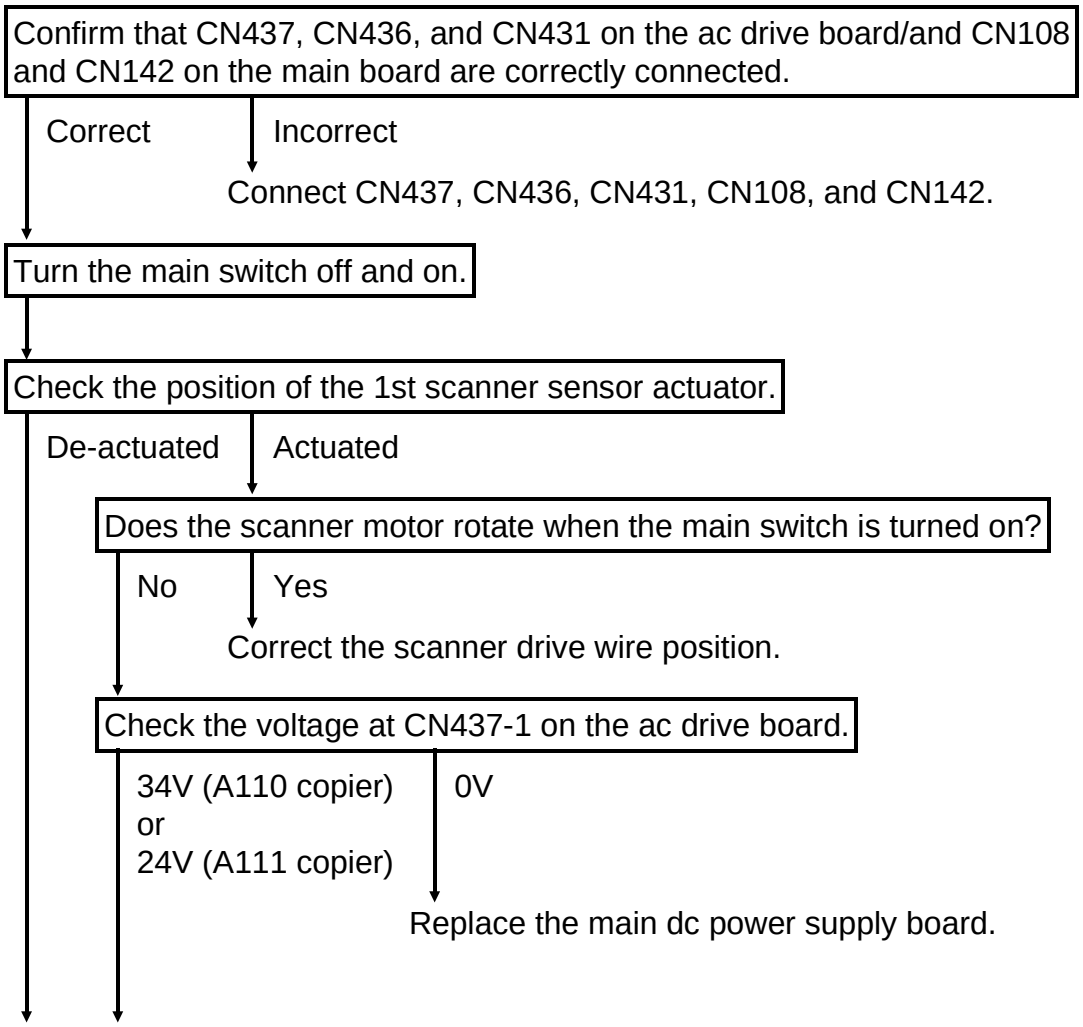

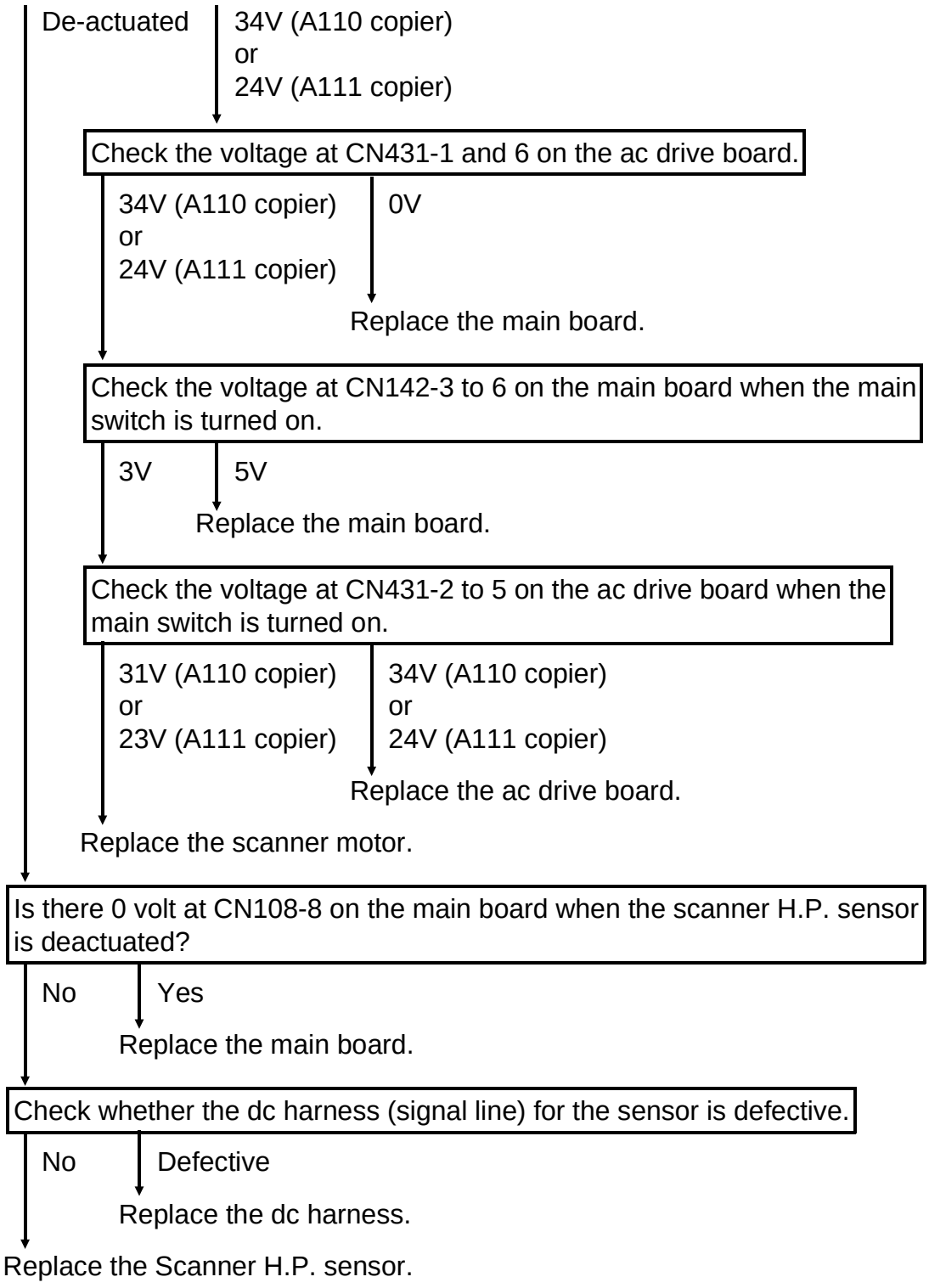
De-actuated
34V (A110 copier)
or
24V (A111 copier)
Check the voltage at CN431-1 and 6 on the ac drive board.
34V (A110 copier)
or
24V (A111 copier)
0V
Replace the main board.
Check the voltage at CN142-3 to 6 on the main board when the main switch is turned on.
3V
5V
Replace the main board.
Check the voltage at CN431-2 to 5 on the ac drive board when the main switch is turned on.
31V (A110 copier)
or
23V (A111 copier)
34V (A110 copier)
or
24V (A111 copier)
Replace the ac drive board.
Replace the scanner motor.
Is there 0 volt at CN108-8 on the main board when the scanner H.P. sensor is deactuated?
No
Yes
Replace the main board.
Check whether the dc harness (signal line) for the sensor is defective.
No
Defective
Replace the dc harness.
Replace the Scanner H.P. sensor.

3.6 CODE #28 – LENS HOME POSITION ERROR

– Definition –

The lens home position sensor's output remains LOW (de-actuated) for 3.5 seconds after the lens moves to the home position.

– Possible Causes –

- Lens home position sensor failure
- Lens drive motor defective
- Main board defective
- AC drive board defective
- Lens drive mechanism defective
- CN436 or CN432 on the ac drive board/or CN142 on the main board is not correctly connected.

– Action –

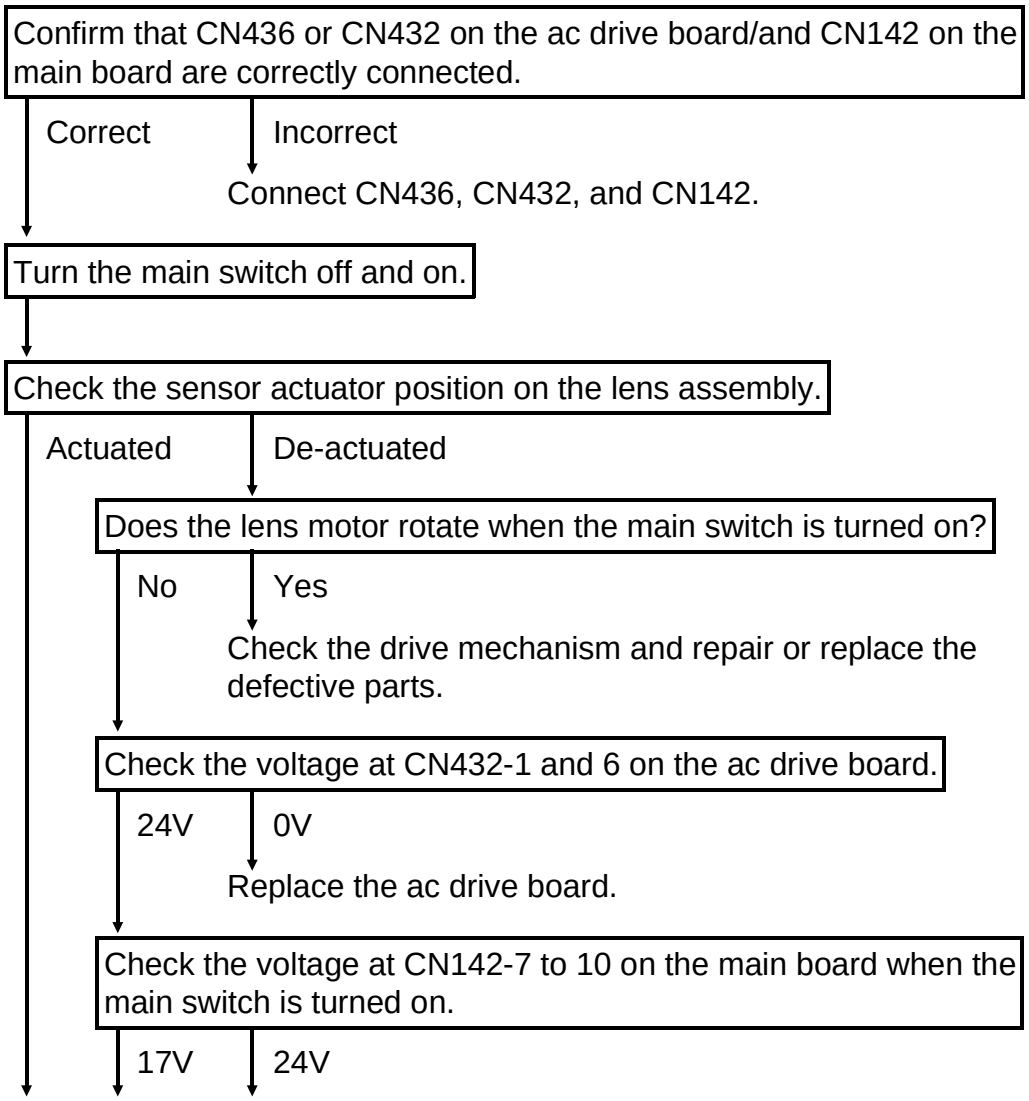

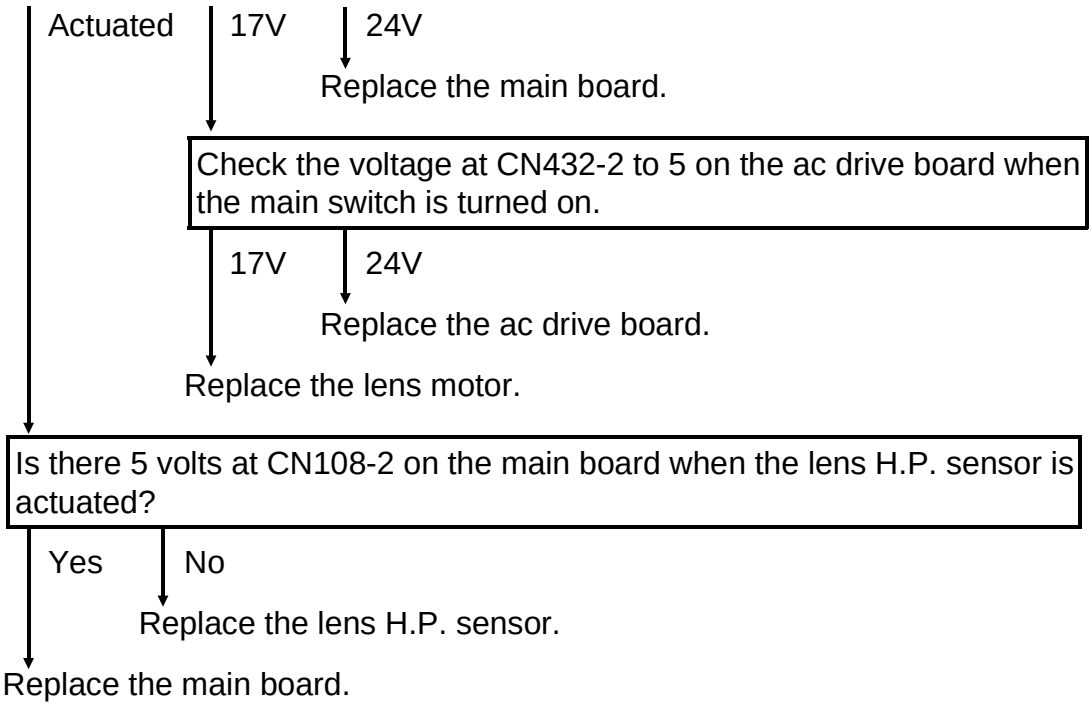
Actuated
17V
24V
Replace the main board.
Check the voltage at CN432-2 to 5 on the ac drive board when the main switch is turned on.
17V
24V
Replace the ac drive board.
Replace the lens motor.
Is there 5 volts at CN108-2 on the main board when the lens H.P. sensor is actuated?
Yes
No
Replace the lens H.P. sensor.
Replace the main board.

3.7 CODE #29 – LENS HOME POSITION ERROR

– Definition –

The lens home position sensor's output remains HIGH (actuated) for 3.5 seconds after the lens leaves the home position.

– Possible Causes –

- Lens home position sensor failure
- Lens drive motor defective
- Main board defective
- AC drive board defective
- Defective dc harness
- Lens drive mechanism defective
- CN436 or CN432 on the ac drive board/or CN108 or CN142 on the main board is not correctly connected.

– Action –

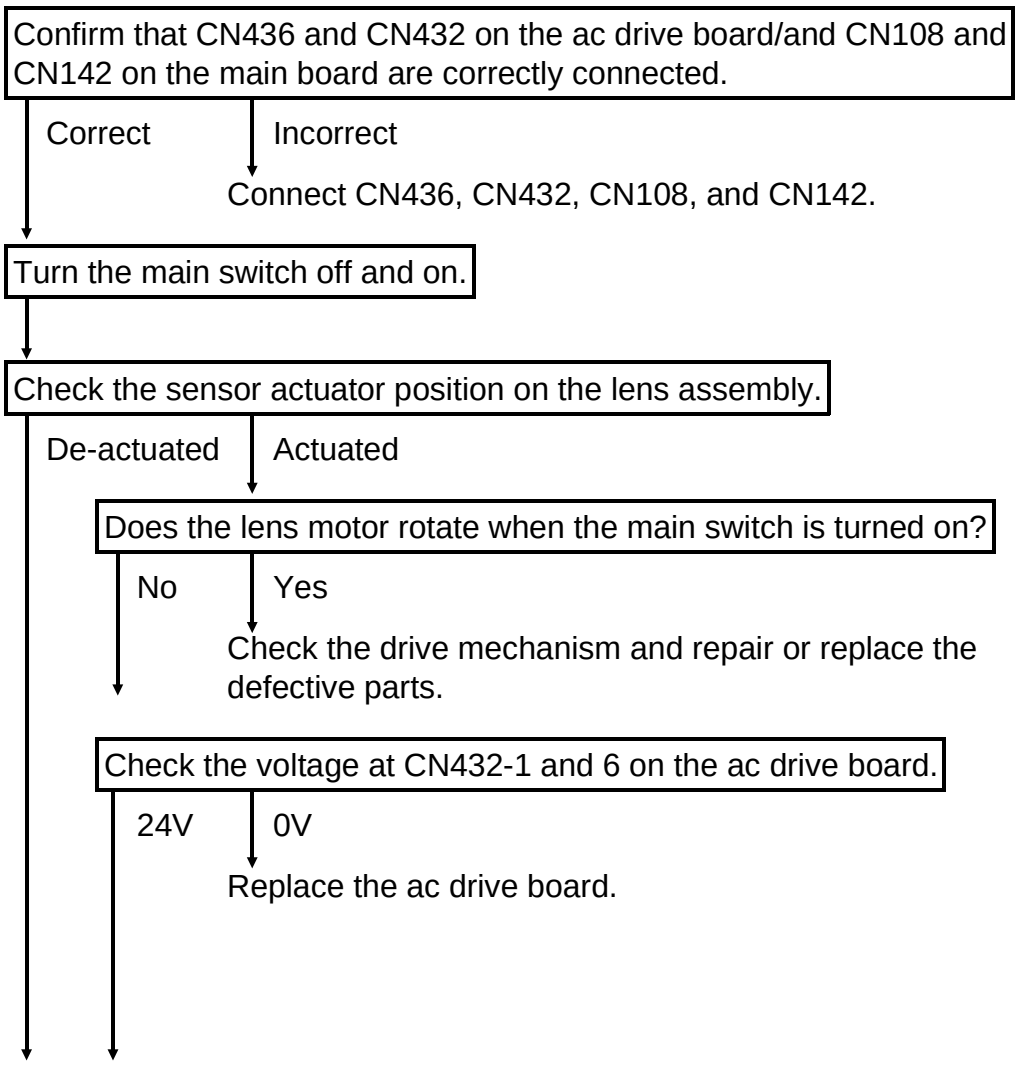

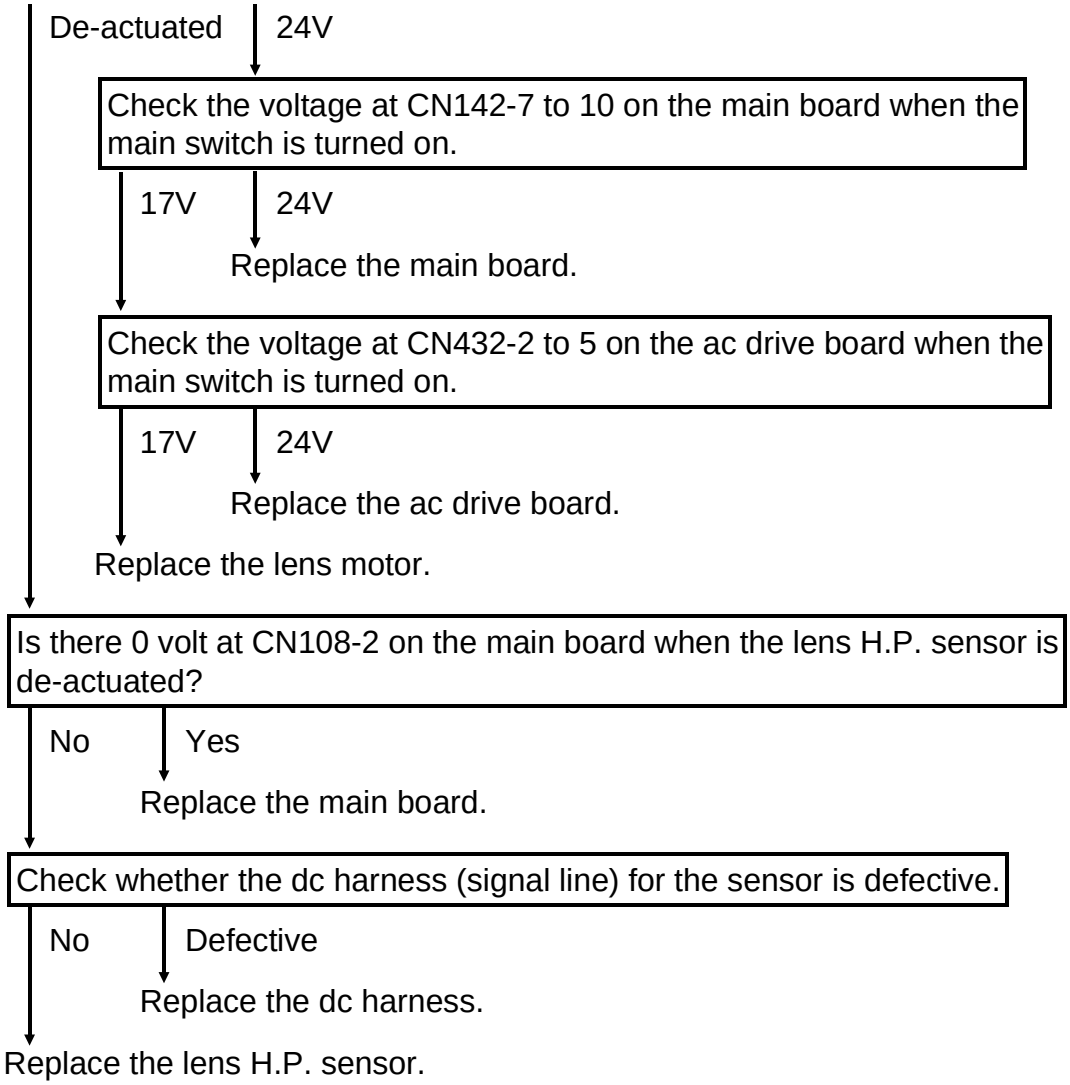
De-actuated
24V
Check the voltage at CN142-7 to 10 on the main board when the main switch is turned on.
17V
24V
Replace the main board.
Check the voltage at CN432-2 to 5 on the ac drive board when the main switch is turned on.
17V
24V
Replace the ac drive board.
Replace the lens motor.
Is there 0 volt at CN108-2 on the main board when the lens H.P. sensor is de-actuated?
No
Yes
Replace the main board.
Check whether the dc harness (signal line) for the sensor is defective.
No
Defective
Replace the dc harness.
Replace the lens H.P. sensor.

3.8 CODE #2A – 4TH/5TH MIRROR HOME POSITION ERROR

– Definition –

The 4th/5th mirror home position sensor's output remains HIGH (actuated) for 2.5 seconds after the 4th/5th mirror assembly leaves the home position.

– Possible Causes –

- 4th/5th mirror home position sensor failure
- 4th/5th mirror motor defective
- Main board defective
- 4th/5th mirror drive mechanism defective
- Defective dc harness
- CN108 or CN106 on the main board is not correctly connected.

– Action –

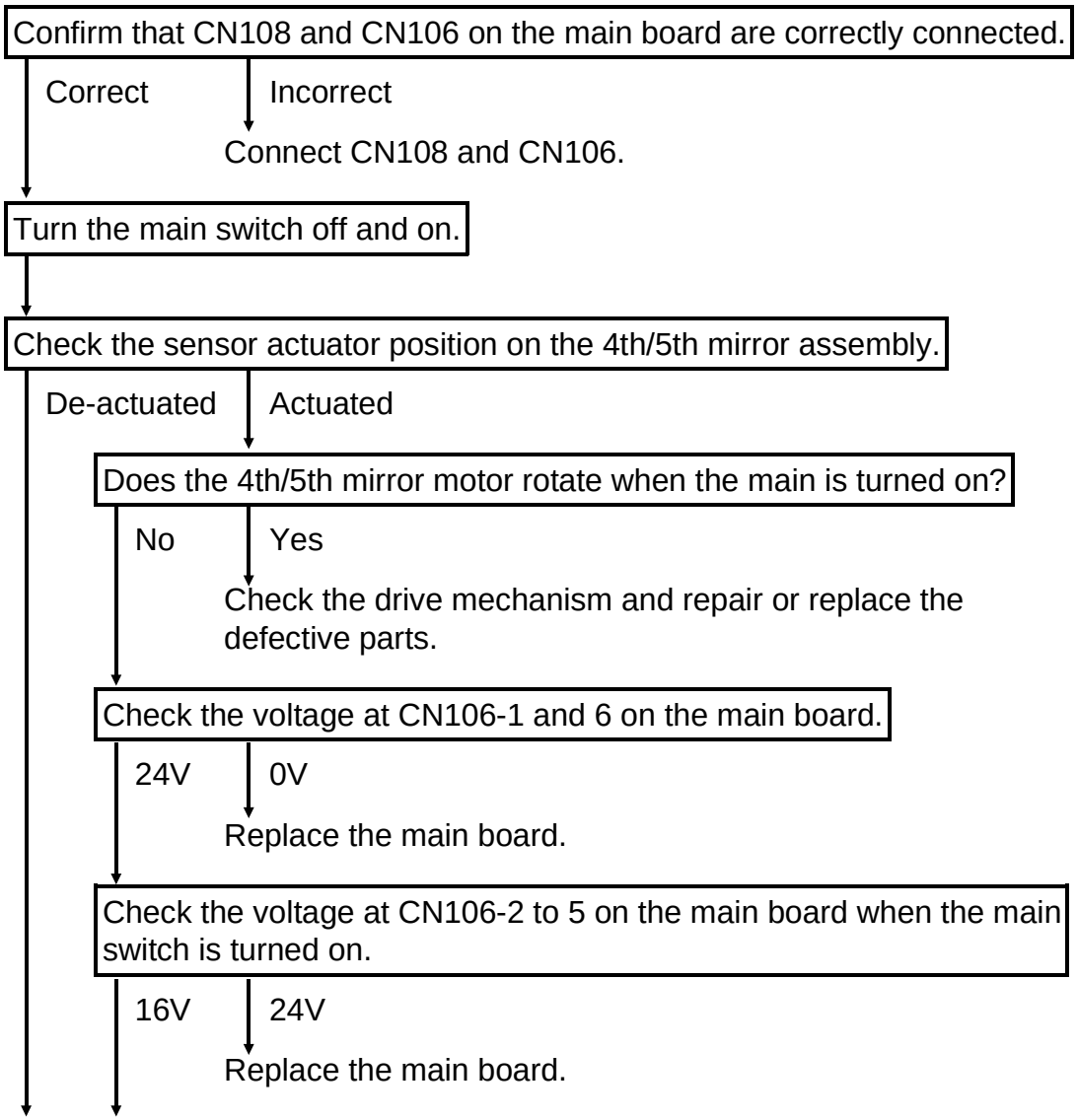

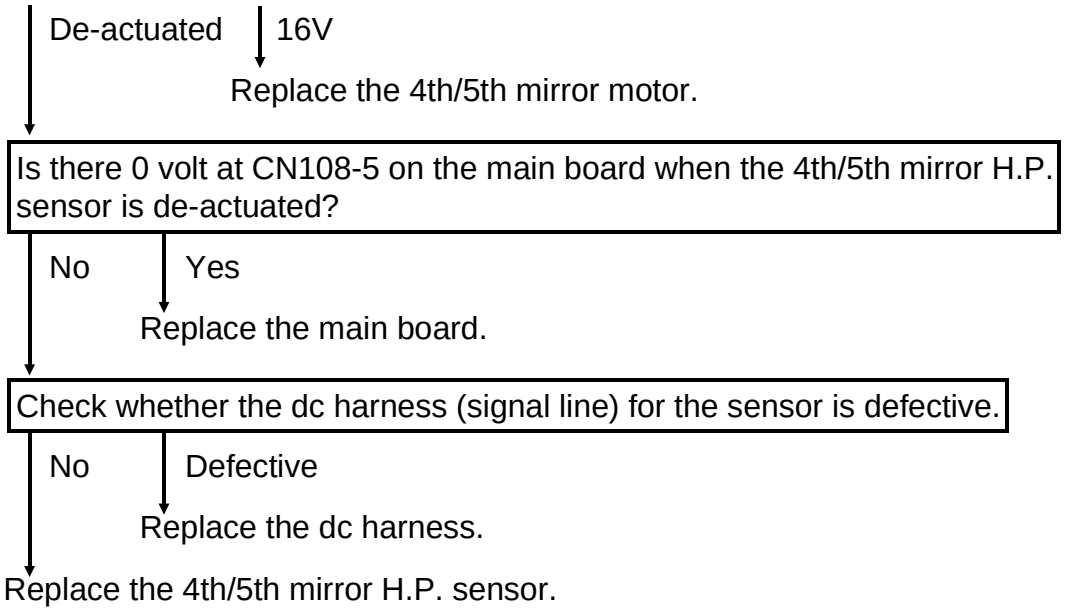
De-actuated
16V
Replace the 4th/5th mirror motor.
Is there 0 volt at CN108-5 on the main board when the 4th/5th mirror H.P. sensor is de-actuated?
No
Yes
Replace the main board.
Check whether the dc harness (signal line) for the sensor is defective.
No
Defective
Replace the dc harness.
Replace the 4th/5th mirror H.P. sensor.

3.9 CODE #2B – 4TH/5TH MIRROR HOME POSITION ERROR

– Definition –

The 4th/5th mirror home position sensor's output remains LOW (de-actuated) for 2.5 seconds after the 4th/5th mirror assembly moves to the home position.

– Possible Causes –

- 4th/5th mirror home position sensor failure
- 4th/5th mirror motor defective
- Main board defective
- 4th/5th mirror drive mechanism defective
- CN106 on the main board is not correctly connected.

– Action –

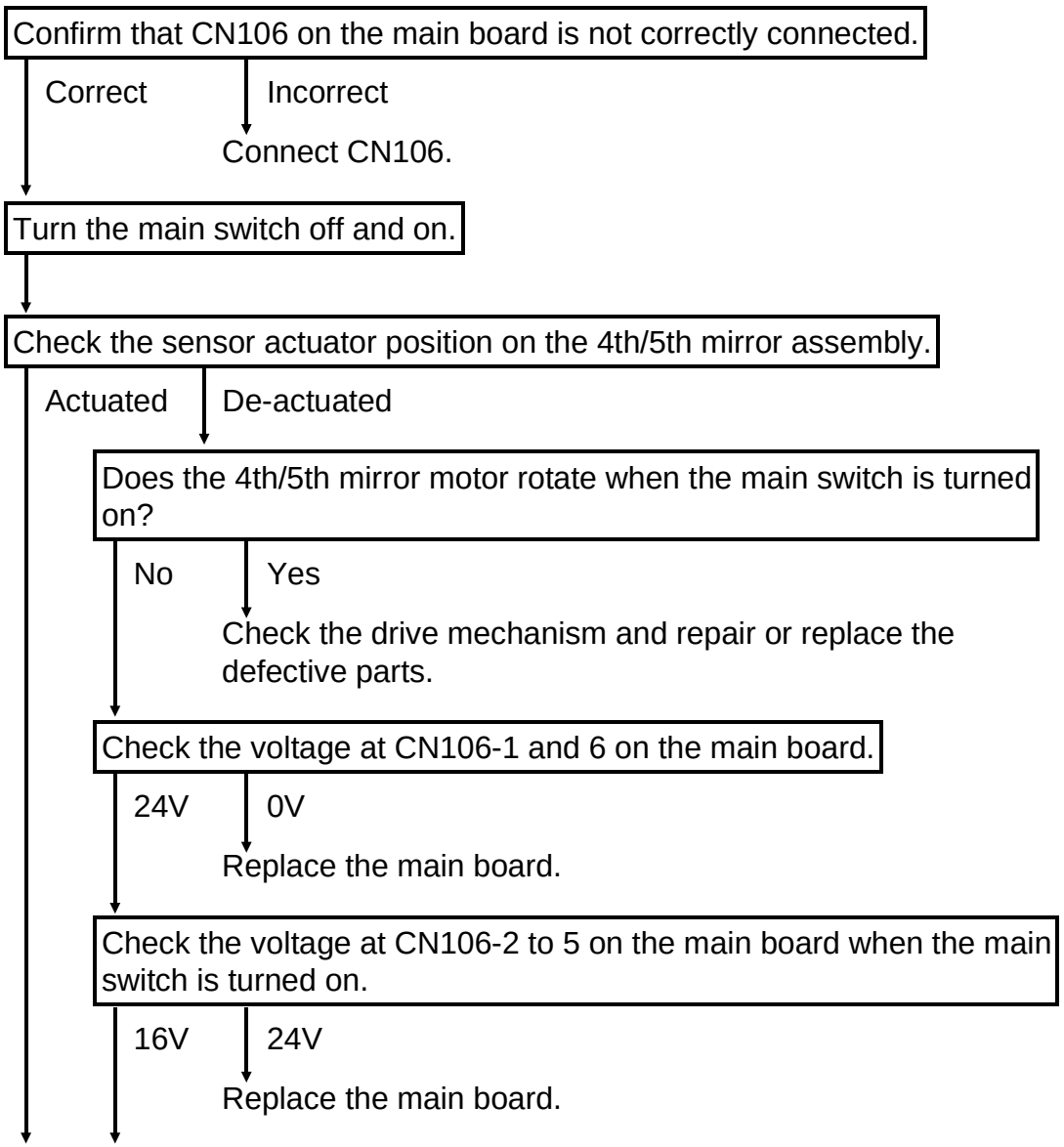

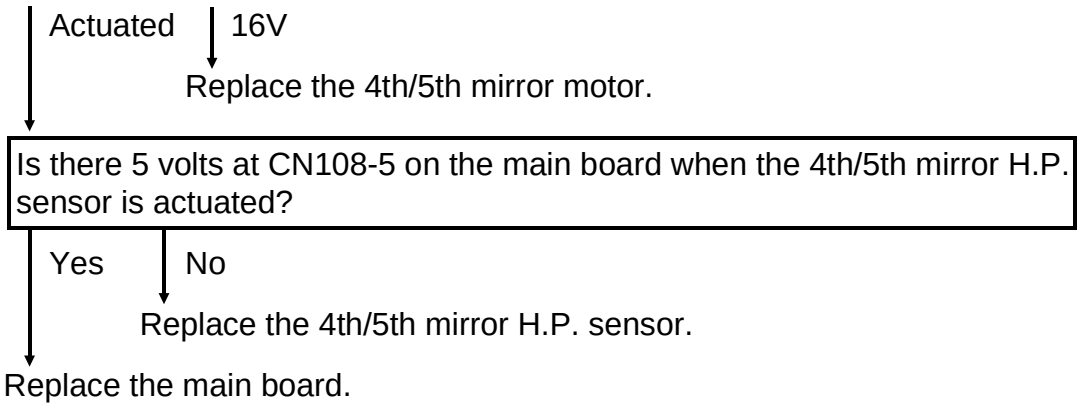
Actuated
16V
Replace the 4th/5th mirror motor.
Is there 5 volts at CN108-5 on the main board when the 4th/5th mirror H.P. sensor is actuated?
Yes
No
Replace the 4th/5th mirror H.P. sensor.
Replace the main board.

3.10 CODE #52 – FUSING WARM-UP ERROR

– Definition –

The temperature detected by the thermistor does not reach 175°C within 100 seconds after the main switch is turned on.

– Possible Causes –

- Thermistor position error
- Fusing lamp open
- Thermofuse open
- AC drive board defective
- Main board defective
- Defective ac harness
- T405 or T406 on the ac drive board is not correctly connected.

– Action –

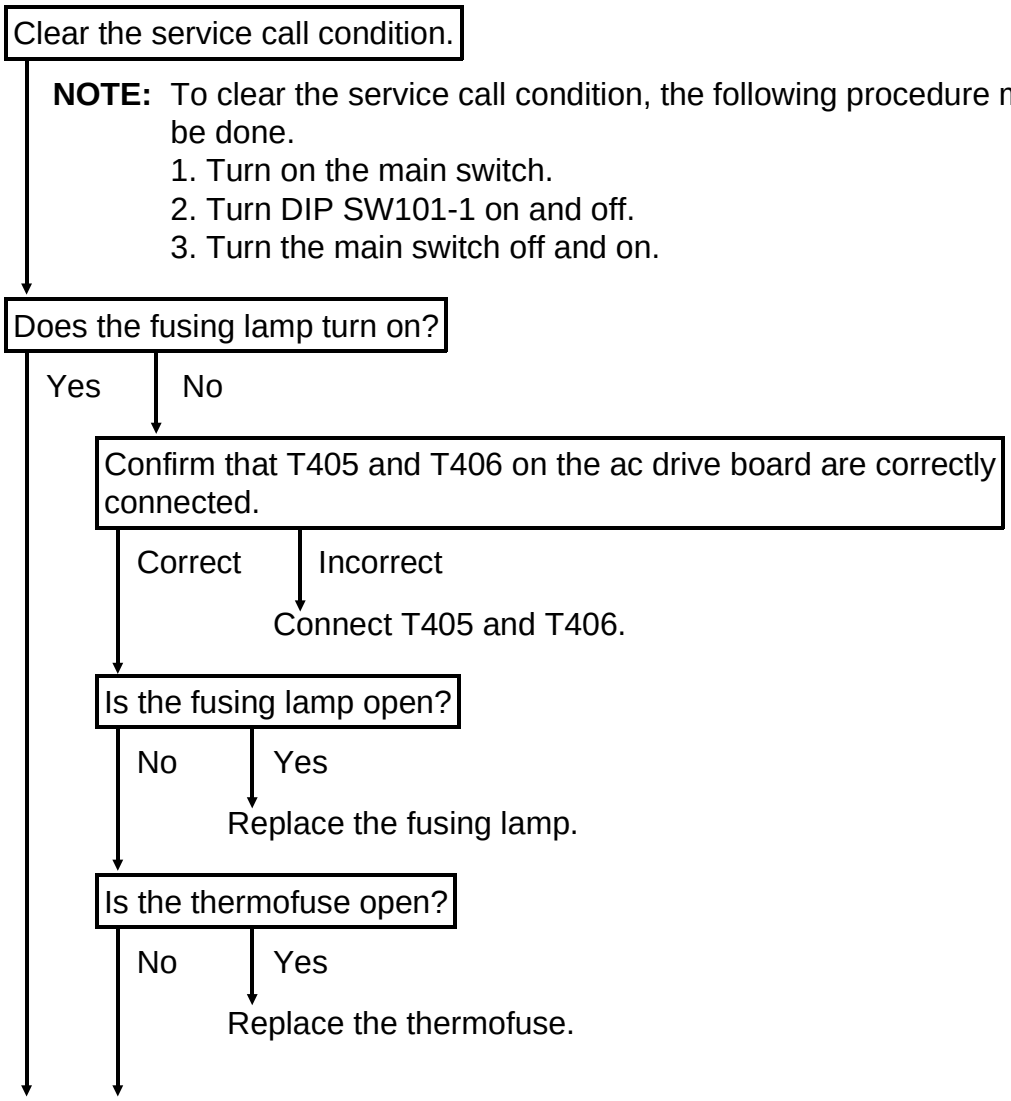

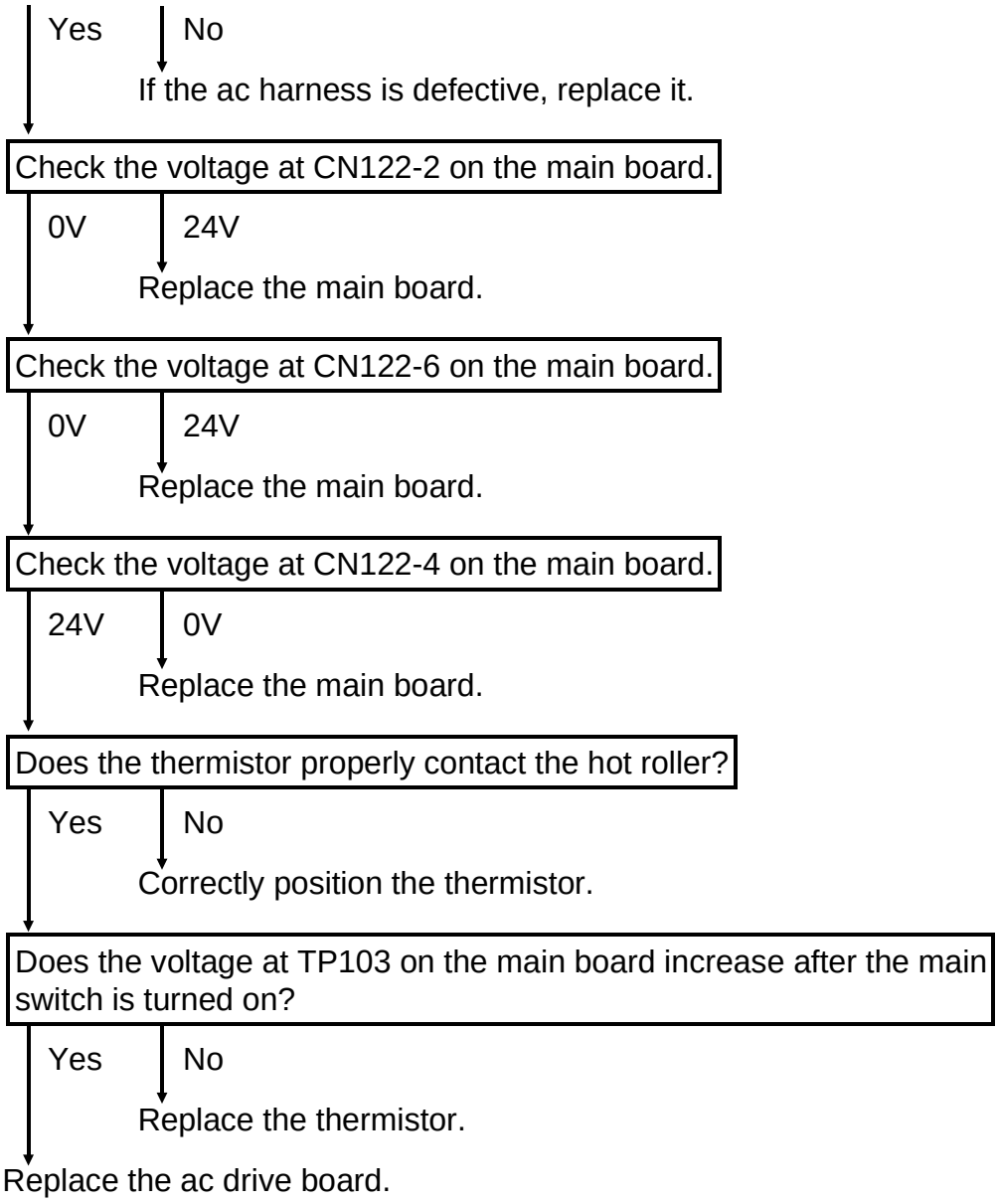
Yes
No
If the ac harness is defective, replace it.
Check the voltage at CN122-2 on the main board.
0V
24V
Replace the main board.
Check the voltage at CN122-6 on the main board.
0V
24V
Replace the main board.
Check the voltage at CN122-4 on the main board.
24V
0V
Replace the main board.
Does the thermistor properly contact the hot roller?
Yes
No
Correctly position the thermistor.
Does the voltage at TP103 on the main board increase after the main switch is turned on?
Yes
No
Replace the thermistor.
Replace the ac drive board.

3.11 CODE #53 – FUSING OVERHEAT

– Definition –

The thermistor detects a temperature higher than 240°C.

– Possible Causes –

- Thermistor short
- AC drive board defective
- Main board defective
- Fusing harness shorted

– Action –

Clear the service call condition.

NOTE: To clear the service call condition, the following procedure must be done.
1. Turn on the main switch.
2. Turn DIP SW101-1 on and off.
3. Turn the main switch off and on.

Check the voltage at TP103 on the main board.

More than 3.45V

Less than 3.45V

Replace the main board.

Has the thermistor shorted?

No

Yes

Replace the thermistor.

Check the voltage at CN122-6 on the main board.

24V

0V

Replace the main board.

Replace the ac drive board or check the fusing harness.

3.12 CODE #55 – FUSING THERMISTOR OPEN

– Definition –

The temperature detected by the thermistor does not detect 2°C within 30 seconds after the main switch is turned on.

– Possible Causes –

- Thermistor open
- Main board defective
- AC drive board defective
- Fusing lamp open
- Thermofuse open
- Defective ac harness
- T405 or T406 on the ac drive board is not correctly connected.

– Action –

Is the thermistor open?

No

Yes

Replace the thermistor.

Clear the service call condition.

NOTE: To clear the service call condition, the following procedure must be done.
1. Turn on the main switch.
2. Turn DIP SW101-1 on and off.
3. Turn the main switch off and on.

Does the fusing lamp turn on?

No

Yes

Replace the main board.

Confirm that T405 and T406 on the ac drive board are correctly connected.

Correct

Incorrect

Connect T405 and T406.

Is the fusing lamp open?

No

Yes

Replace the fusing lamp.

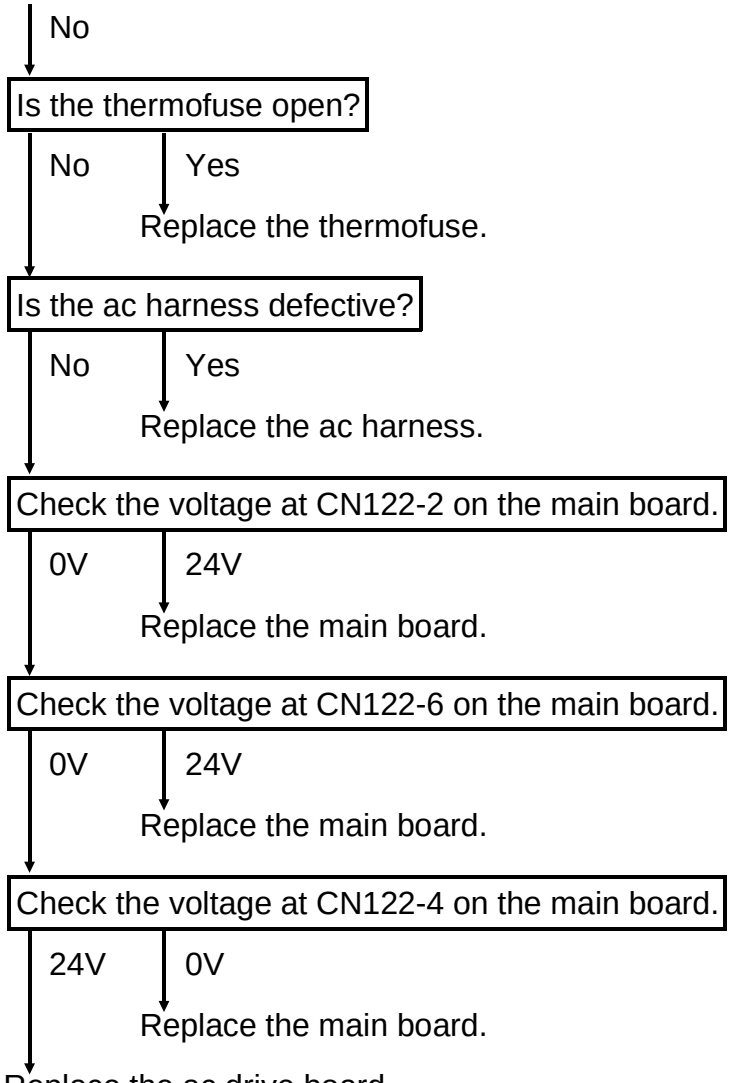
No
Is the thermofuse open?
No
Yes
Replace the thermofuse.
Is the ac harness defective?
No
Yes
Replace the ac harness.
Check the voltage at CN122-2 on the main board.
0V
24V
Replace the main board.
Check the voltage at CN122-6 on the main board.
0V
24V
Replace the main board.
Check the voltage at CN122-4 on the main board.
24V
0V
Replace the main board.
Replace the ac drive board.

3.13 E70 (IN THE MAGNIFICATION INDICATOR) – TONER OVERFLOW SENSOR ON

– Definition –

Toner overflow sensor turns on

– Possible Causes –

- Toner overflow
- Toner overflow sensor open
- Main board defective

– Action –

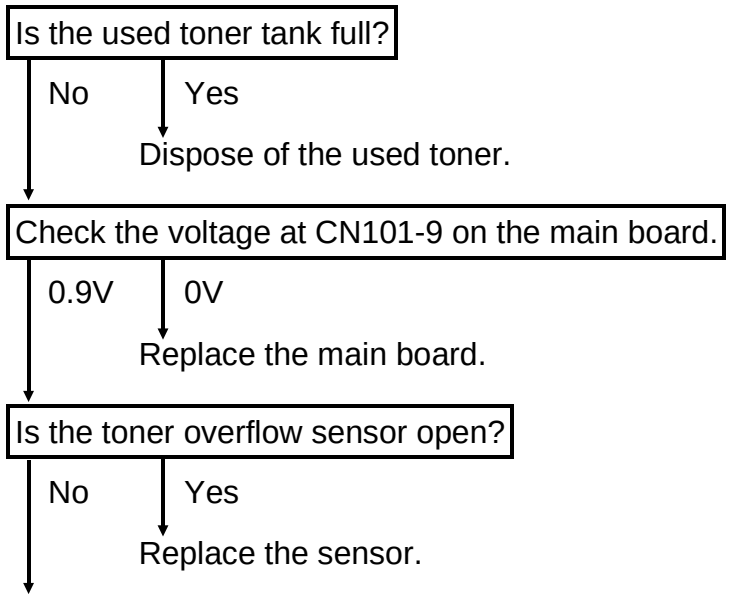

Replace the main board.

3.14 CODE #80 – DUPLEX AND COPIER MAIN BOARD COMMUNICATION ERROR

– Definition –

The copier main board does not receive any signal from the duplex main board within 1 second.

(A110 copier)

– Possible Causes –

- Copier main board defective
- Duplex main board defective
- Optional dc power supply board defective
- 2nd paper size switches failure
- CN701 or CN703 on the duplex main board, CN151 on the main board, or CN101 on the optional dc power supply board is not correctly connected.
- CN710 on the rear frame is not correctly connected.

– Action –

Confirm that CN701 and CN703 on the duplex main board, CN151 on the copier main board, and CN101 on the optional dc power supply board are correctly connected.

Correct

Incorrect → Connect CN701, CN703, CN151, and CN101.

Confirm that CN710 on the rear frame is not correctly connected.

Correct

Incorrect → Connect CN710.

Are the fuses (FU100 or FU101) on the optional dc power supply board broken?

No

Yes → Check the cause of the fuse damage and repair it, then replace the defective fuse.

Check the voltage at CN101-2 on the optional dc power supply board.

5V

0V → Replace the optional dc power supply board.

Trouble-shooting

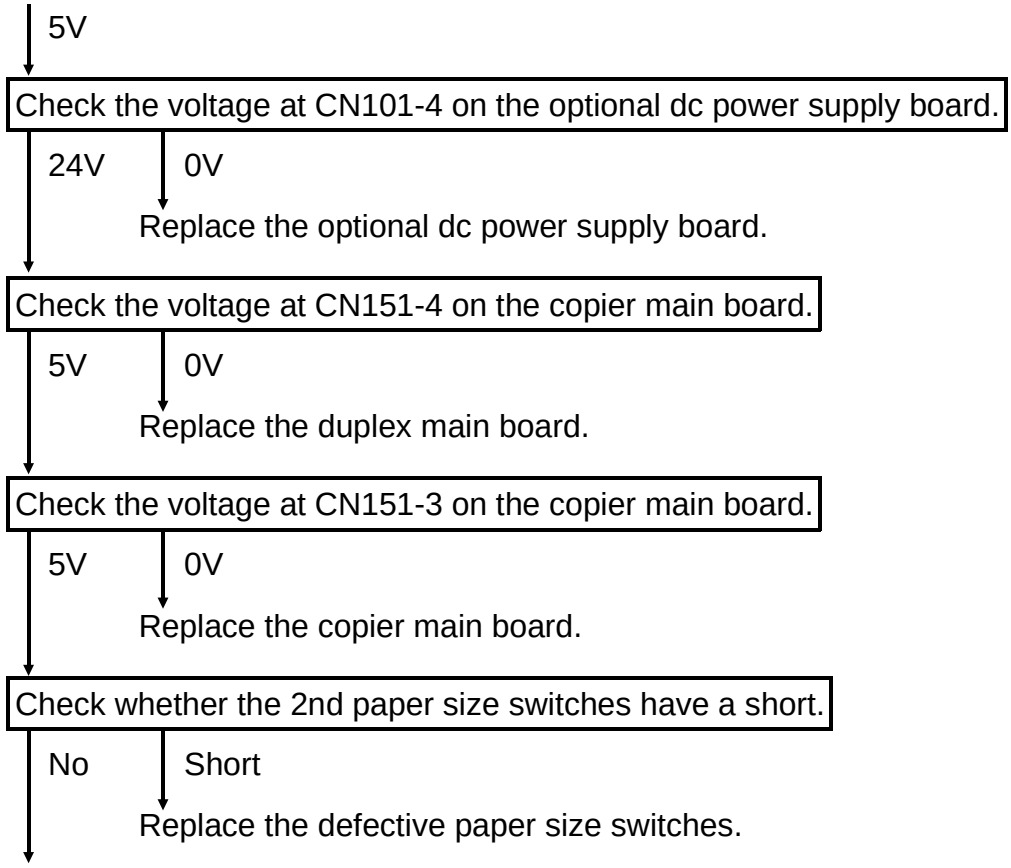

(A111 copier)

– Possible Causes –

- Copier main board defective
- Duplex main board defective
- 2nd paper size switches failure
- CN701 or CN703 on the duplex main board, or CN150 or CN151 on the main board is not correctly connected.
- CN710 on the rear frame is not correctly connected.

– Action –

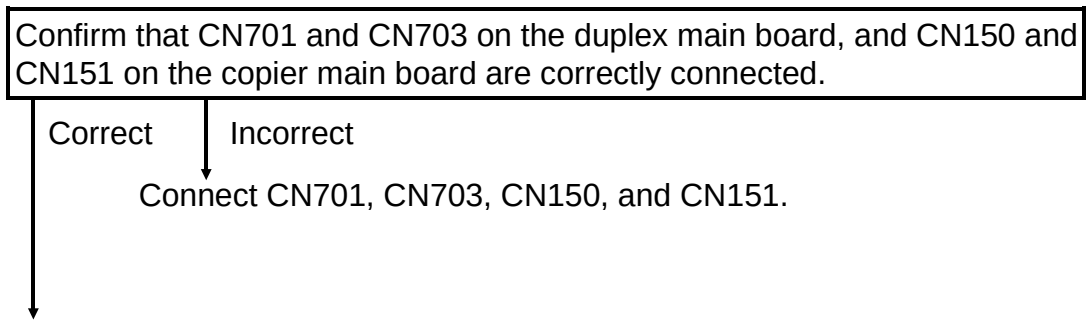

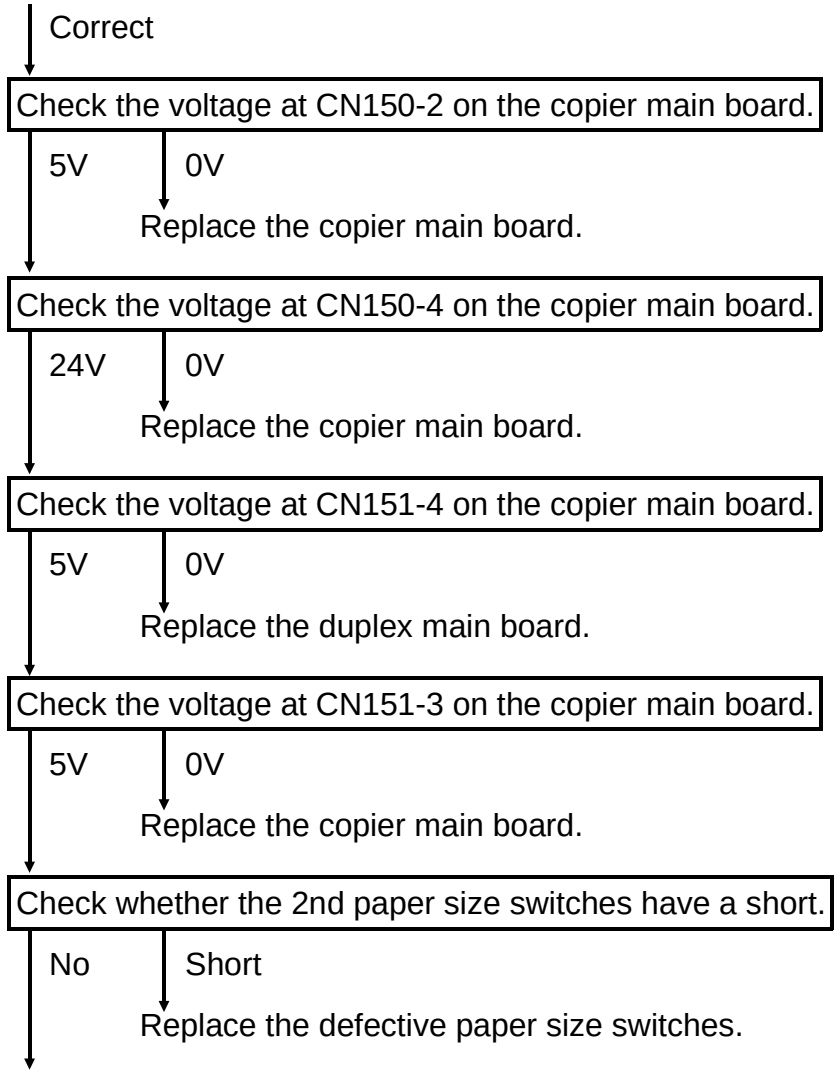
Correct
Check the voltage at CN150-2 on the copier main board.
5V
0V
Replace the copier main board.
Check the voltage at CN150-4 on the copier main board.
24V
0V
Replace the copier main board.
Check the voltage at CN151-4 on the copier main board.
5V
0V
Replace the duplex main board.
Check the voltage at CN151-3 on the copier main board.
5V
0V
Replace the copier main board.
Check whether the 2nd paper size switches have a short.
No
Short
Replace the defective paper size switches.
Replace the copier or duplex main board.

3.15 CODE #82 – JOGGER HOME POSITION ERROR

– Definition –

The output of the jogger home position sensor stays LOW (de-actuated) while the duplex main board is driving the jogger fences outward.

– Possible Causes –

- Jogger home position sensor failure
- Jogger motor defective
- Duplex main board defective
- Copier main board defective

– Action –

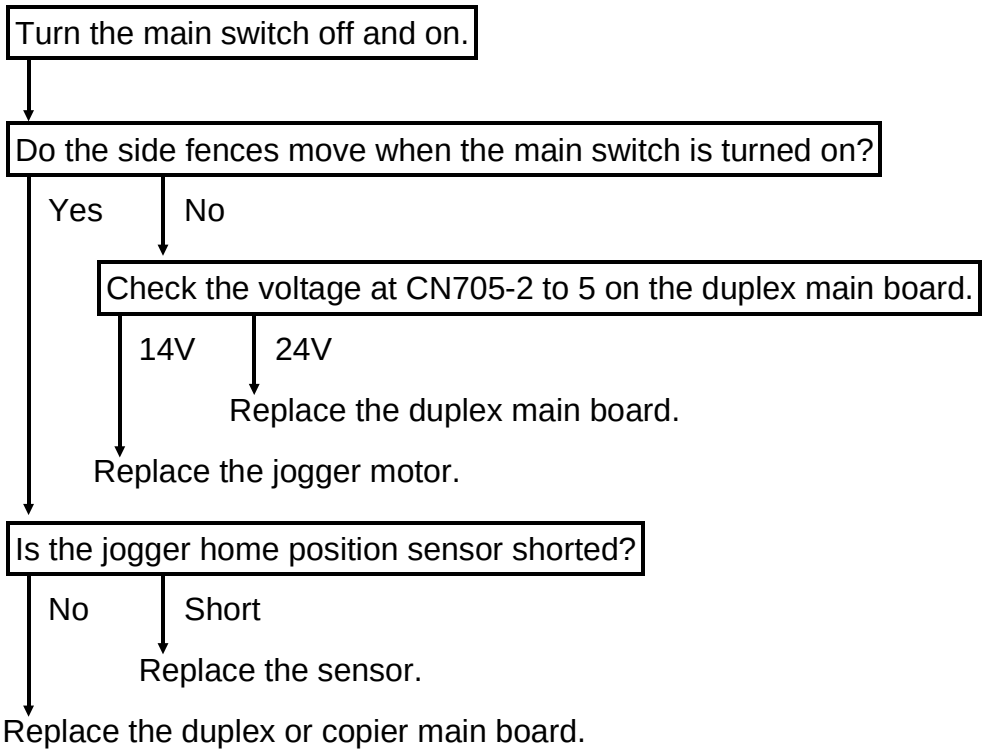

3.16 CODE #83 – JOGGER HOME POSITION ERROR

– Definition –

The output of the jogger home position sensor remains HIGH (actuated) as the duplex main board is driving the jogger fences inward.

– Possible Causes –

- Jogger home position sensor failure
- Jogger motor defective
- Duplex main board defective
- Copier main board defective

– Action –

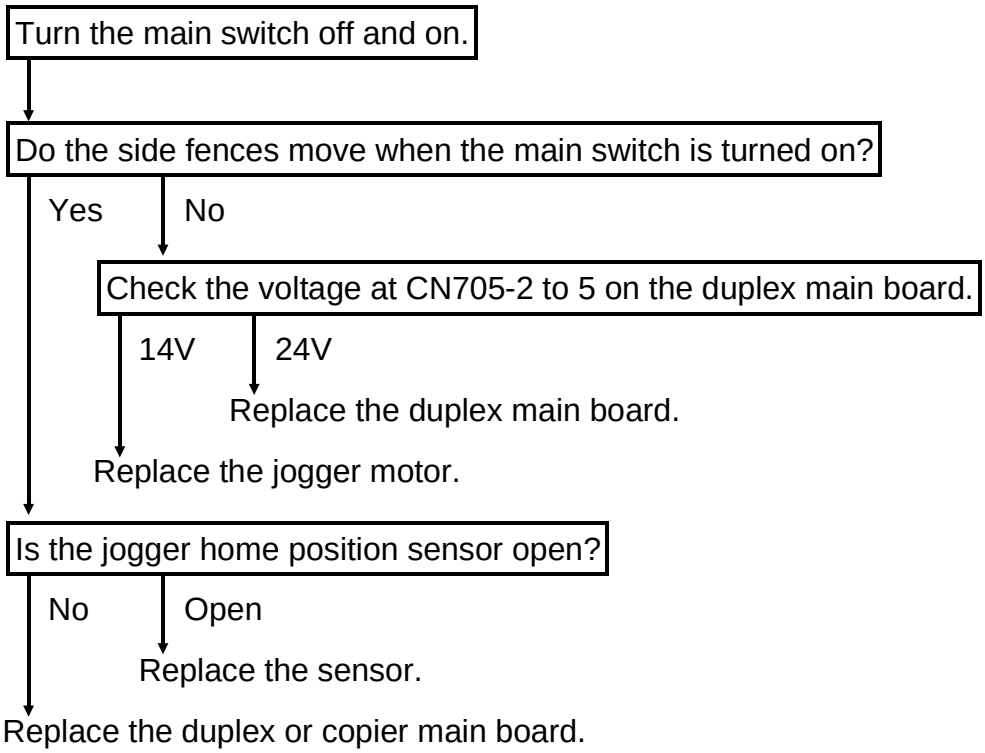

3.17 ABNORMAL CONDITION IN TONER DENSITY DETECTION

– Phenomenon –

The Auto ID indicator or the selected manual ID level blinks. (No SC Code is indicated.)

– Definition –

If the Vsg goes below 2.5 volts or Vsp goes above 2.5 volts 5 times in a row.

– Possible Causes –

- Incorrect Vsg voltage
- Dirty ID sensor
- Low toner density
- ID sensor defective
- Main board defective

– Action –

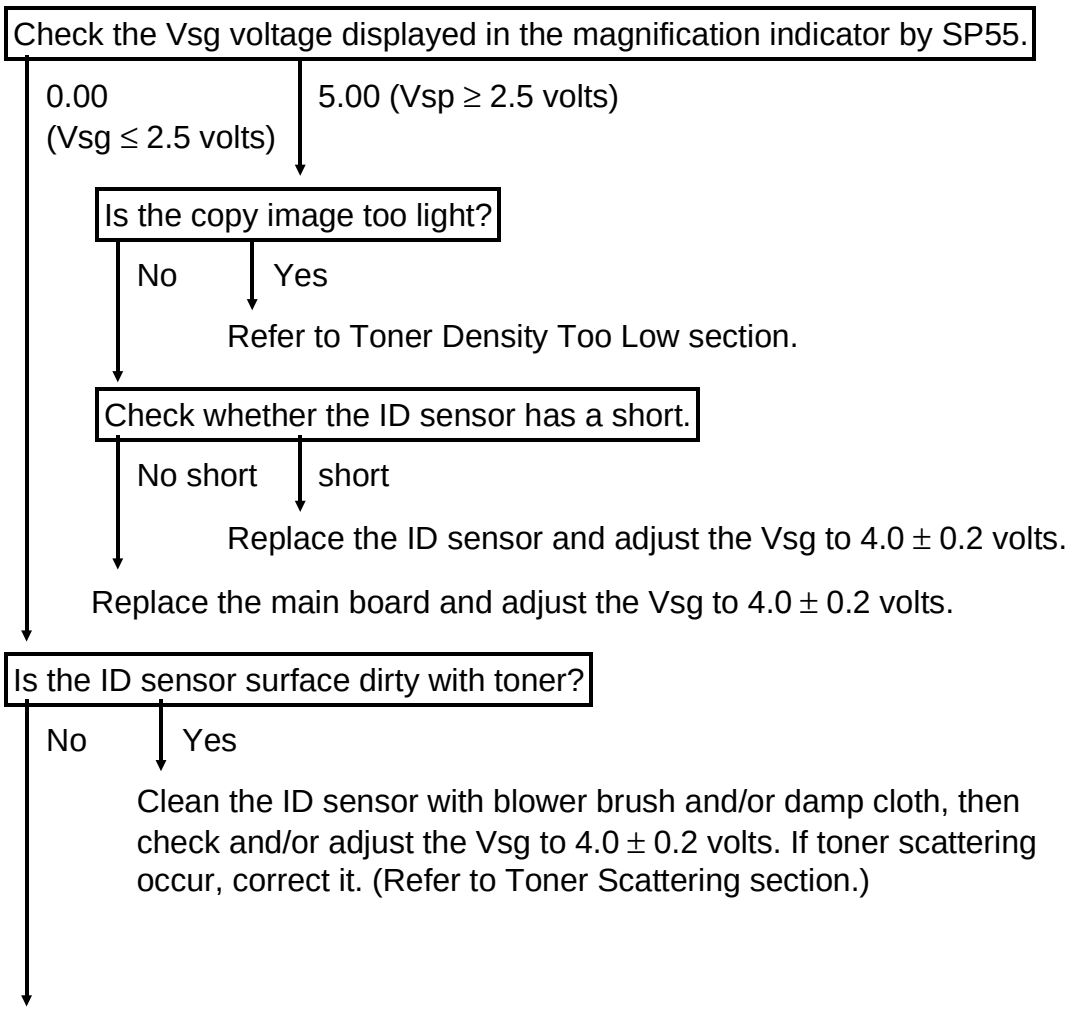

No

Is the Vsg less than 2.5 V when checking TP106 on the main board by SP54.

No

Yes

Readjust the Vsg to 4.0 ± 0.2 volts.

Is the ID sensor circuit open?

No

Yes

Replace the ID sensor and adjust the Vsg to 4.0 ± 0.2 volts.

Replace the main board and adjust the Vsg to 4.0 ± 0.2 volts.

4. ELECTRICAL COMPONENT DEFECTS

4.1 SENSOR

Component	Condition	Symptom
Scanner Home Position Sensor (S1)	Stays HIGH (CN108-8)	SC code (E22) is displayed.
	Stays LOW (CN108-8)	SC code (E21) is displayed.
Lens Home Position Sensor (S2)	Stays HIGH (CN108-2)	SC code (E29) is displayed.
	Stays LOW (CN108-2)	SC code (E28) is displayed.
4th/5th Mirror Home Position Sensor (S3)	Stays HIGH (CN108-5)	SC code (E2A) is displayed.
	Stays LOW (CN108-5)	SC code (E2B) is displayed.
Registration Sensor (S4)	Stays HIGH (CN101-2)	"Check Paper Path" indicator (location "A" or "B") blinks when a copy is made.
	Stays LOW (CN101-2)	"Check Paper Path" indicator (location "A", "B", or "C") lights when the main switch is turned on.
Exit Sensor (S5)	Stays HIGH (CN137-12)	"Check Paper Path" indicator (location "D") blinks when a copy is made.
	Stays LOW (CN137-12)	"Check Paper Path" indicator (location "D") lights when the main switch is turned on.
1st and 2nd Paper End Sensor (S6 and S7)	Stays HIGH (1st: CN125-8) (2nd: CN115-2)	"Load Paper" indicator light even when paper is in the cassette or tray.
	Stays LOW (1st: CN125-8) (2nd: CN115-2)	"Load Paper" indicator does not light even when the cassette or tray is empty.
Color Toner End Sensor (S8)	Stays HIGH (CN137-2)	The CPU detects color toner end condition using Vsp/Vsg value. If the ID sensor is defective, the CPU fails to detect color toner end and the image density may become too low.
	Stays LOW (CN137-2)	
Paper Lift Sensor (S9)	Stays HIGH (CN125-11)	"U5" is displayed.
	Stays LOW (CN125-11)	The cassette bottom plate does not rise to the paper feed position.
Image Density (ID Sensor) (S10)	Stays HIGH (CN110-3)	The CPU detects an ID sensor abnormal condition. The ADS or Manual Image Density indicator starts blinking.
	Stays LOW (CN110-3)	

Component	Condition	Symptom
3rd Paper End Sensor (S12) (A111 copier only)	Stays High (CN135-2)	"Load Paper" indicator lights even when paper is in the paper tray.
	Stays LOW (CN135-2)	"Load paper" indicator does not light even when the paper tray is empty.
Relay Sensor (S13) (A111 copier only)	Stays HIGH (CN141-4)	"Check Paper Path" indicator (location "A") blinks when a copy is mode.
	Stays LOW (CN141-4)	"Check Paper Path" indicator (location "A") lights when the main switch is turned on.
Platen Cover Position Sensor (S14) (A111 copier only)	Stays HIGH (CN129-17)	"Check Paper Size/Direction" indicator lights with APS and ARE in the platen cover mode.
	Stays LOW (CN129-17)	"Original Misfeed" indicator lights with APS and ARE in the platen cover mode after the main switch is turned on.
Original Width Sensor (S15) (A111 copier only)	Stays HIGH (CN129-5 and 6)	The CPU cannot properly detect original size. APS and ARE do not function correctly.
	Stays LOW (CN129-5 and 6)	
Original Length Sensor (S16) (A111 copier only)	Stays HIGH (CN129-9 to 13)	
	Stays LOW (CN129-9 to 13)	
Toner Overflow Sensor (S17)	Stays HIGH (CN101-9)	"E70" blinks in the magnification indicator even when used toner tank is not full.
	Stays LOW (CN101-9)	"E70" does not blink.

4.2 SWITCH OR OTHER ELECTRICAL COMPONENT

Component	Condition	Symptom
Main Switch (SW1)	OPEN	The copier does not turns on.
	SHORTED	The copier does not turns off.
Cover Safety Switch (SW2)	OPEN	The copier does not turns on.
	SHORTED	The copier does not turn off when the front or exit cover is opened.
1st Paper Size Switch (SW3)	OPEN (CN125-2 to 6)	The CPU cannot detect proper paper size, and misfeeds may occur when a copy is made.
	SHORTED (CN125-2 to 6)	
2nd Paper Size Switch (SW 4 and 5)	OPEN (CN115-4,-6, -7 and -9)	The CPU cannot detect proper paper size, and misfeeds may occur when a copy is made.
	SHORTED (CN115-4, -6, -7 and -9)	
Color Switch (SW6)	OPEN (CN137-5 and/or 7 stays HIGH)	The CPU cannot properly control the copy process system for the development unit (black or color). This may cause an abnormal image (dirty background, light copy, etc.)
	SHORTED (CN137-5 and/or 7 stays LOW)	
Manual Feed Table Switch (SW7)	OPEN (CN137-10 stays HIGH)	The CPU does not detect manual feed mode even when the manual feed table is opened.
	SHORTED (CN137-10 stays LOW)	"Manual Feed" indicator stays on even when the manual feed table is closed.
Right Cover Switch (SW8)	OPEN (CN141-1 stays HIGH)	The CPU does not display "U1" even when the right cover is opened.
	SHORTED (CN141-1 stays LOW)	"U1" is displayed even when the right cover is closed.
3rd Paper Size Switch (SW9 and 10) (A111 copier only)	OPEN (CN135-4, -6, -7 and -9)	The CPU cannot detect proper paper size, and misfeeds may occur when a copy is made.
	SHORTED (CN135-4, -6, -7 and -9)	
Platen Cover Closed Switch (SW11) (A111 copier only)	OPEN (CN129-19)	The CPU cannot detect proper original size correctly.
	SHORTED (CN129-19)	
Exposure Lamp (L1)	OPEN	SC Code (E11) is displayed.
Fusing Lamp (L2)	OPEN	SC Code (E52 or E55) is displayed.
Fusing Thermistor (TH)	OPEN	SC Code (E55) is displayed.
	SHORTED	SC Code (E53) is displayed.
Fusing Thermofuse (TF)	OPEN	SC Code (E52 or E55) is displayed.
Optics Thermoswitch (TS)	OPEN	SC Code (E11) is displayed.

4.3 BLOWN FUSE CONDITION

4.3.1 A110 copier

1) 115 V machine

Component	Location	Symptom
FU401 (125V/15A)	AC Drive Board	The copier does not turn on even when the main switch is turned on.
FU100 (125V/3.15A)	Main DC Power Supply Board	The copier does not turn on even when the main switch is turned on.
FU101 (125V/3.15A)	Main DC Power Supply Board	SC Code #2A or #2B is displayed depending on the 4th/5th mirror assembly position.
FU102 (125V/3.15A)	Main DC Power Supply Board	SC Code #21 or #22 is displayed depending on the 1st scanner position.
FU100 (125V/3.15A)	Optional DC Power Supply Board	Duplex Unit: SC Code #80 is displayed ADF: The feed-out motor starts rotating when the main switch is tuned on.
FU101 (125V/5A)	Optional DC Power Supply Board	Duplex Unit: SC Code #80 is displayed ADF: The ADF does not work.

2) 220/230/240 V machine

Component	Location	Symptom
FU401 (250V/6.3A)	Noise Filter Board	The copier does not turn on even when the main switch is turned on.
FU100 (250V/3.15A)	Main DC Power Supply Board	The copier does not turn on even when the main switch is turned on.
FU101 (250V/3.15A)	Main DC Power Supply Board	SC Code #2A or #2B is displayed depending on the 4th/5th mirror assembly position.
FU102 (250V/3.15A)	Main DC Power Supply Board	SC Code #21 or #22 is displayed depending on the 1st scanner position.
FU100 (250V/3.15A)	Optional DC Power Supply Board	Duplex Unit: SC Code #80 is displayed ADF: The feed-out motor starts rotating when the main switch is tuned on.
FU101 (250V/5A)	Optional DC Power Supply Board	Duplex Unit: SC Code #80 is displayed ADF: The ADF does not work.

4.3.2 A111 Copier

1) 115 V machine

Component	Location	Symptom
FU401 (125V/15A)	AC Drive Board	The copier does not turn on even when the main switch is turned on.
FU101 (250V/6.3A)	Main DC Power Supply Board	The copier does not turn on even when the main switch is turned on.

2) 220/230/240 V machine

Component	Location	Symptom
FU401 (250V/6.3A)	Noise Filter Board	The copier does not turn on even when the main switch is turned on.
FU101 (250V/6.3A)	Main DC Power Supply Board	The copier does not turn on even when the main switch is turned on.