RICOH

Technical Bulletin No. RTB-001

SUBJECT: Service Manual Correction	DATE: Aug. 15, '93 PAGE: 1 of 1
PREPARED BY: S. Orita CHECKED BY:	FROM: Copier Technical Support Section

CLASSIFICATION:

- ☐ Action Required
- ☐ Troubleshooting
- ☐ Retrofit Information
- ■ Revision of service manual
- ☐ Information only
- ☐ Other

MODEL:
Pigeon A (A110) and B (A111)

Please correct your service manual as follows:

1. Page 4-14

Incorrect

Mode No.		Function	Data
°20	APS Priority (Copier)	Specifies whether the copier defaults to APS or manual mode when the main switch is turned on.	**0: APS** 1: Manual
		This mode is used only on the A111 copier.	

Correct

Mode No.		Function	Data
°20	APS Priority (Copier)	Specifies whether the copier defaults to APS or manual mode when the main switch is turned on.	0: APS 1: Manual
		For A110 copiers, the default is "1". Do not change the data to "0". *For A111 copiers, the default is "0".*	

RICOH

Technical Bulletin No. RTB-002

SUBJECT: APS Priority with ADF (Pigeon A only)	DATE: Aug. 15, '93 PAGE: 1 of 3
PREPARED BY: S. Orita CHECKED BY:	FROM: Copier Technical Support Section

CLASSIFICATION:
- ■ Action Required
- ☐ Troubleshooting
- ☐ Retrofit Information
- ☐ Revision of service manual
- ☐ Information only
- ☐ Other

MODEL:
Pigeon A (A110)

[Phenomenon] The copier will not select APS automatically with ADF when the original is set on the ADF, although the data of SP21 (APS priority for ADF) is set to "0" (0: APS, 1: Manual).

Note: This problem occurs only on A110 copiers (Pigeon A) with ADF. It does not occur on A111 copiers (Pigeon B).

[Cause] Software problem for SP21 and SP72. (Refer to the table below.)

[Solution] To solve this problem, the ROM has been changed from P/N A1115107 to P/N A1115107A.
The functions of SP21 and SP72 for each ROM are as follows:

SP Mode No.		P/N A1115107	P/N A1115107A
20	APS Priority (Copier)	The default is "0". (0: APS, 1: Manual) When the main switch is turned on, the data will automatically change to "1" although the data is set to "0".	The default is "0" and the factory setting is "1". The data does not change although the main switch is turned on.
21	APS Priority (ADF)	When the main switch is turned on, the data will automatically change to "1" although the data is set to "0". (0: APS, 1: Manual)	The data does not change although the main switch is turned on.
72		For A110 copiers, the default is "1". (0: Normal, 1: APS disabled)	Same as P/N A1115107.

According to this change, the following procedure is required only when the ADF is installed on A110 copiers.

a: For machines which have the old ROM (P/N A1115107).
1) Replace the old ROM with the new one (P/N A1115107A)
2) Change the data of SP21 from "1" to "0".
3) Change the data of SP72 from "1" to "0".
4) Confirm that the data of SP20 is "1".

b: For machines which have the new ROM (P/N A1115107A).
1) Change the data of SP72 from "1" to "0".
2) Confirm that the data of SP20 is "1" and the data of SP21 is "0".

Note: If SP99 (Clear All Memory) is performed, change the data of SP20 from "0" to "1", and the data of SP72 from "1" to "0".

The cut-in serial numbers for the new ROM (A1115107A) are as follows:

Machine Code	Cut-in Serial Number
A110-10	From First Production
A110-15	From First Production
A110-17	From First Production
A110-19	From First Production
A110-22	From First Production
A110-26	From First Production
A110-27	A3473070041
A110-29	From First Production

To ease the installation procedure for the ADF, the functions of SP21 and SP72 for the ROM will be further changed. The suffix of the part number will be changed from A1115107A to A1115107B as follows:

SP Mode No.		P/N A1115107B
20	APS Priority (Copier)	For A110 copiers, the default and the factory setting are "1" (Manual).
72		The default is "0" (Normal).

For machines which have the new ROM (P/N A1115107B), it is not necessary to change the data of SP21 and SP72 when the ADF is installed on A110 copier. Even if SP99 (Clear All Memory) is performed, it is not necessary to change the data of SP20 and SP72.

Note: 1. For machines which have an old ROM (P/N A1115107 or A1115107A)

When the data of SP72 is set to "0", APS is enabled.
Therefore, when the ADF is installed, the data of SP72 should be set to "0".
When the ADF is not installed, the data of SP72 should be set to "1".

2. For machines which have the new ROM (P/N A1115107B)

APS is disabled when the ADF is not installed even if the data of SP72 is set to "0".
The machine automatically selects the APS based on the signal from the ADF when the original is set on the ADF.

RICOH	Technical Bulletin	No. RTB-003
SUBJECT: Service Manual Correction		DATE: PAGE: 1 of 4
PREPARED BY: J. Kasamoto CHECKED BY:	FROM: Copier Technical Support Section	
CLASSIFICATION: ☐ Action Required ☐ Troubleshooting ☐ Retrofit Information ■ Revision of service manual ☐ Information only ☐ Other		MODEL: Pigeon A and B

Some mistakes were found in the manual. Please correct your manuals as follows:

1. Page 5-39

The Entrance Seal Replacement procedure should be changed as follows:

4.7 ENTRANCE SEAL REPLACEMENT

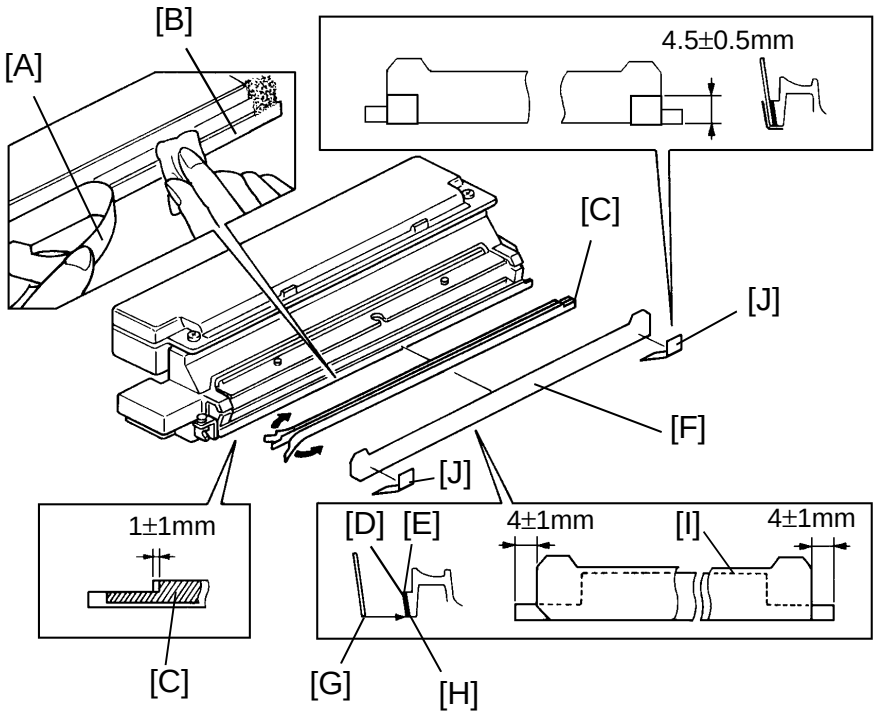

1. Remove the cleaning unit and the following parts:
   - Cleaning Blade
   - Cleaning Brush
2. Remove the used toner. (See Used Toner Collection.)
3. Clean the cleaning unit with a vacuum cleaner.
4. Remove the entrance seal [A] together with the strip of 2 sided tape securing it to the lower casing.

5. Clean the lower casing [B] with alcohol: make sure that no tape remains on the casing surface.
6. Place a new strip of 2-sided tape [C] on the lower casing surface as shown in the illustration. The upper edge [D] of the tape must be flush with the edge [E] of the projection as shown in the illustration.
7. Place the new entrance seal [F] on the 2-sided tape as shown in the illustration.

NOTE: a) The lower edge [G] of the entrance seal must be aligned with the edge [H] of the lower casing.

b) Make sure that there are no waves in the upper edge [I] of the entrance seal.

8. Place the new side seals [J] on the entrance seal as shown. Bend and stick the trail edge of the seal to the bottom casing.

2. Page 5-80 and 81

- The spacer illustrated in the Hot Roller Replacement procedure has been eliminated from the mass-production units.
- The gear (P/N AB013201) on the hot roller shaft was illustrated incorrectly. The illustration should show the gear's boss facing out.

For the reasons above, please replace the information on pages 5-80 and 5-81 of your service manuals with the following:

7.4 HOT ROLLER REPLACEMENT

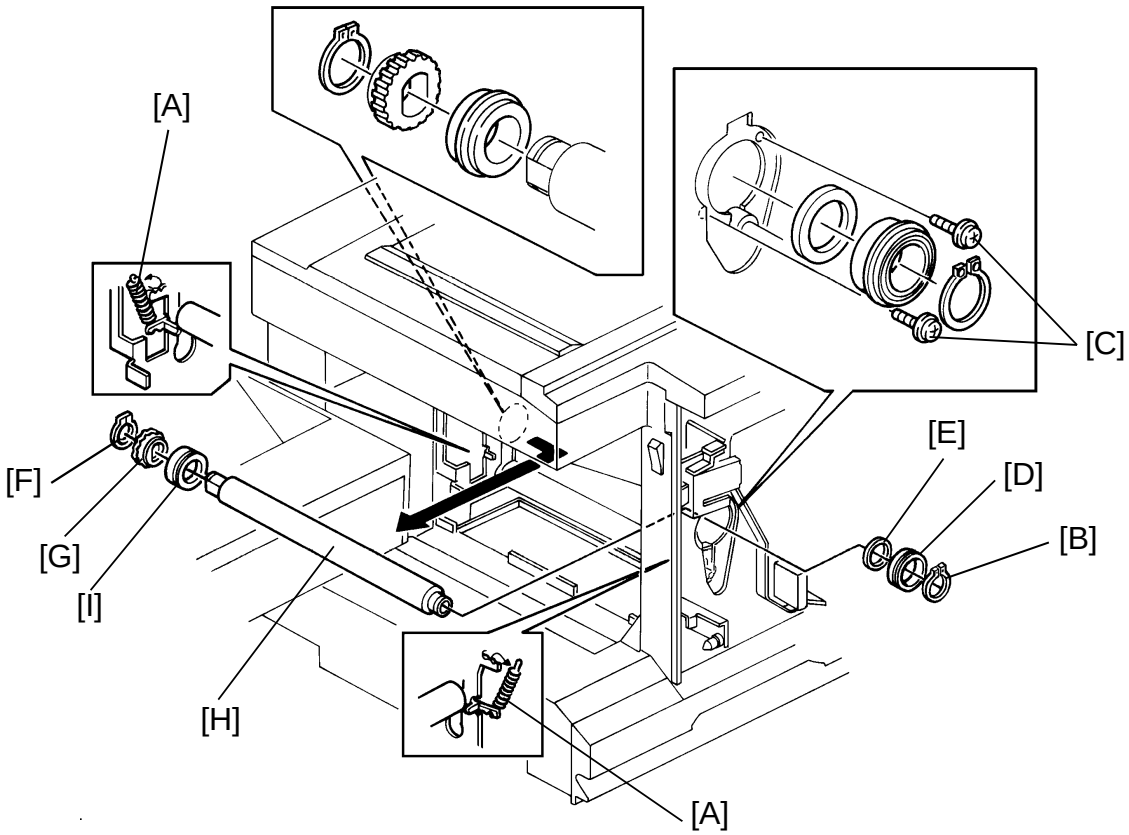

1. Remove the exit unit. (See Exit Unit Removal.)
2. Remove the fusing lamp. (See Fusing Lamp Replacement.)
3. If the duplex tray is installed, remove the turn guide plate (2 screws).
4. Remove the exit paper guide (1 screw).
5. Remove the front and rear pressure springs [A].
6. Remove the C-ring [B] (front side).
7. Remove the 2 screws [C] securing the bearing to the fusing front frame, then remove the bearing [D] and spacer [E].
8. Remove the rear C-ring [F].
9. Slide the hot roller out. The gear [G] will drop off the hot roller shaft.
10. Replace the hot roller [H] (1 bearing [I]).

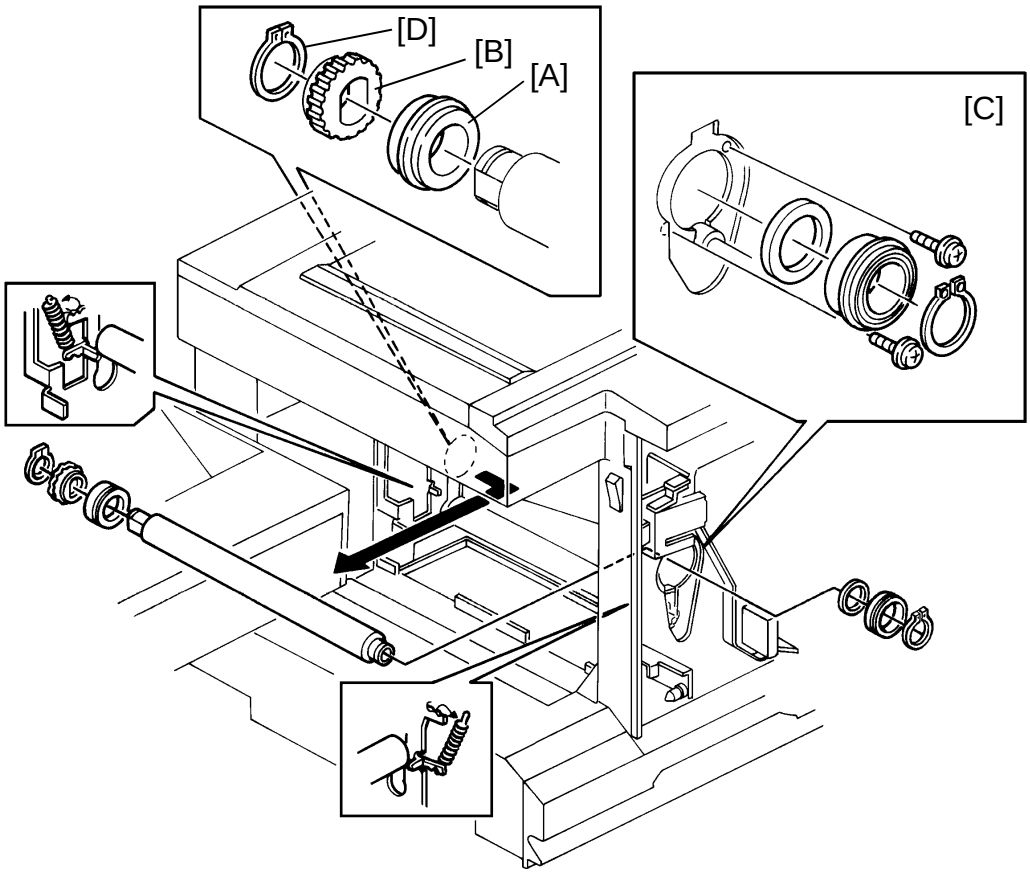

– Reinstallation –

1. Set the rear bearing [A] on the rear frame.
2. Insert the rear end of the hot roller shaft through the rear bearing.
3. Place the gear [B] on the rear end of the shaft.

NOTE: The gear's flange must face out.

4. Install the front bearing and spacer, then secure with two screws [C].
5. Set the rear side C-ring [D] on the rear shaft.

NOTE: a) Peel off 3 cm (1 inch) from both ends of the protective sheet before installing a new hot roller.
b) Before setting the pressure springs, remove the rest of the protective sheet.
c) Before reinstalling the pressure springs, refer to the installation procedure in the Pressure Roller Replacement Section.

RICOH

Technical Bulletin No. RTB-004

SUBJECT: Service manual correction

DATE: January 31, 1994
PAGE: 1 of 2

PREPARED BY: S. Orita
CHECKED BY:

FROM: 2nd Technical Support Section

CLASSIFICATION:
- ☐ Action Required
- ☐ Troubleshooting
- ☐ Retrofit Information
- ■ Revision of service manual
- ☐ Information only
- ☐ Other

MODEL: Pigeon A (A110) and B (A111)

Please correct your service manual as follows:

1. Page 1-2

Incorrect

Power Consumption:

	A110 Copier	A111 Copier
Maximum	1.2 kVA	1.3 kVA
Warm-up	720 VA (average)	720 VA (average)
Copy cycle	810 VA (average)	830 VA (average)
Stand-by (Without energy saver function)	160 VA (average)	160 VA (average)

Correct

Power Consumption

	A110 Copier		A111 Copier	
	Copier only	Full system	Copier only	Full system
Maximum	1.2 kVA	1.5 kVA	1.3 kVA	1.5 kVA
Warm-up	800 VA (average)	800 VA (average)	800 VA (average)	800 VA (average)
Copy cycle	900 VA (average)	800 VA (average)	900 VA (average)	800 VA (average)
Stand-by (Without energy saver function)	180 VA (average)	180 VA (average)	180 VA (average)	180 VA (average)

2. Page 4-15

Incorrect

Mode No.		Function	Data
°34	ADS Level	Selects the image density level in ADS mode.	**0: Normal** 1 Darker 2: Lighter
		Data: 1 *Decreases development bias voltage (+ 40V).* *Exposure lamp data is not changed.* *Data: 2* *Increases exposure lamp data (+ 2)* *Development bias voltage is not changed.*	

Correct

Mode No.		Function	Data
°34	ADS Level	Selects the image density level in ADS mode.	**0: Normal** 1 Darker 2: Lighter
		Data: 1 *Decreases development bias voltage (+ 40V).* *Exposure lamp data is not changed.* *Data: 2* *Increases exposure lamp data (+ 4)* *Development bias voltage is not changed.*	

RICOH Technical Bulletin No. RTB-005

SUBJECT: Service Manual Correction	DATE: April 30, 1994 PAGE: 1 of 2
PREPARED BY: S. Orita CHECKED BY:	FROM: 2nd Technical Support Section

CLASSIFICATION:
- ☐ Action Required
- ☐ Troubleshooting
- ☐ Retrofit Information
- ■ Revision of service manual
- ☐ Information only
- ☐ Other

MODEL: Pigeon A and B (A110/A111)

Please correct your service manual as follows:

1. Page 2-20 (V_L Correction Factor)

Incorrect

SP data (SP61)	Change of exposure lamp data/Machine on time
0	~~+1/70H~~
1	+1/140H
2	~~+1/40H~~
3	+1/20H
4	+1/10H
5	+1/5H
6	No correction

Correct

SP data (SP61)	Change of exposure lamp data/Machine on time
0	~~+1/70H~~
1	+1/20H
2	~~+1/40H~~
3	+1/140H
4	+1/10H
5	+1/5H
6	No correction

2. Page 4-17

Incorrect

Mode No.		Function	Data
61	VL Correction Interval	Sets the interval of VL correction. *The exposure lamp data increases by +1 at set interval of machine on time.* ***Do not change the data more than one (1) step at a time.***	**0: every 70 hours** 1: every 140 hours 2: every 40 hours 3: every 20 hours 4: every 10 hours 5: every 5 hours 6: No correction

Correct

Mode No.		Function	Data
61	VL Correction Interval	Sets the interval of VL correction. *The exposure lamp data increases by +1 at set interval of machine on time.* ***Do not change the data more than one (1) step at a time.***	**0: every 70 hours** 1: every 20 hours 2: every 40 hours 3: every 140 hours 4: every 10 hours 5: every 5 hours 6: No correction

RICOH	Technical Bulletin	No. RTB-006

SUBJECT: Software Modification	DATE: May 15, 1994 PAGE: 1 of 5
PREPARED BY: S. Orita CHECKED BY:	FROM: 2nd Technical Support Section

CLASSIFICATION:
- ■ Action Required
- ■ Troubleshooting
- ☐ Retrofit Information
- ☐ Revision of service manual
- ☐ Information only
- ☐ Other

MODEL: Pigeon A and B (A110/A111)

Because of software changes, the ROM has been changed from A1115107**C** to P/N A1115107**D**.

The details of software changes are as follows:

1. "Add Toner" indicator stays on

[Phenomenon]

"Add Toner" indicator stays on although toner is in the cartridge.

[Cause]

According to tolerance of toner characteristics, toner may get high electrical potential when it is agitated with developer. If toner with high electrical potential is mixed in developer, the density of ID sensor pattern on the drum becomes low. This results in high toner density in the development unit. Under this condition, a larger amount of toner physically adheres to the non-image areas of the drum surface. That results in low Vsg. When the Vsg becomes around 2.5 volts, the main CPU will improperly detect toner end condition.

[Solution]

To reduce the toner density in the development unit, the black development bias voltage for the ID sensor pattern (SP33) has been decreased as follows:

Toner Density	SP data (SP33)	Development bias voltage	
		Old	New
Normal	0	–280 volts	–240 volts
Low	1	–240 volts	–200 volts
High	2	–300 volts	–260 volts
Higher	3	–320 volts	–280 volts
Lower	4	–200 volts	–180 volts
Highest	5	–340 volts	–300 volts

[Action Required]

The following procedure is required when this problem occurs on the field machines with old ROM (P/N A1115107, **A**, **B** or **C**)

(To clear the toner end condition)

1. Remove the rear cover and disconnect the toner supply clutch connector from the main board (CN118).
2. Open and close the front cover to perform the toner end recovery.
3. Repeat step 2 until the Start key turns green.
4. If the Start key will not turn green by step 3, replace the developer.

(To prevent this problem from occurring again)

1. Clean the drum area and optics section.
2. Clear the V_L correction by SP94.
3. Enter SP33 and set the data to "1".
4. Enter SP62 and increase the data by +2 from "SP Mode Factory Setting Data".
5. If the color development unit is installed, enter SP75 and set the data to "3".
6. Make sky shot copies to reduce the toner density until SP55 shows Vsp between 0.40 volts and 0.70 volts.
7. Check if Vsg is higher than 3.5 volts in SP55.
8. Adjust the copy image by SP48 and SP56.

NOTE: Do not perform SP99 except in an emergency case. However, if you feel that it is costly or/and not easy to replace the developer in order to clear the toner end condition, SP99 may be performed as a final procedure as follows:

1. Remove the unused RAM from a spare main board.
2. Remove the RAM from the main board of your machine and install the unused RAM.
3. Clear all memory by SP99.
4. Clean the drum area and optics section.
5. Make sky shot copies to reduce the toner density until SP55 shows Vsp between 0.40 volts and 0.70 volts.
6. Reinstall the original RAM on the main board of your machine.

   NOTE: When the main switch is turned on after reinstalling RAM, the toner indicator stays on. However, the machine automatically goes into the toner end recovery and toner end condition is easily cleared.
7. Enter SP33 and set the data to "1".
8. Enter SP62 and increase the data by +2 from "SP Mode Factory Setting Data."
9. If the color development unit is installed, enter SP75 and set the data to "3".
10. Clear the VL correction by SP94.
11. Adjust the copy image by SP48 and SP56.

2. APS malfunction after using DF (Pigeon A only)

[Phenomenon]

For Pigeon A, the APS function is effective only when making a copy through DF. However, when the original is placed on the exposure glass after completing a copy job through DF, the APS function still stays engaged. The only way to clear the APS function is to press the Clear Modes key.

[Cause]

Software problem

[Solution]

To cancel the APS function when the DF is open, the software has been changed. With this change, the APS mode cannot be manually selected by pressing the Select Paper Tray key. The APS mode is automatically selected only when an original is set on the original table.

3. Drum counter problem

[Phenomenon]

The drum counter (SP69) does not display more than 65,000 copies.

NOTE: This problem does not affect the copy process control

[Cause]

Software problem

[Solution]

The software has been changed so that the drum counter displays until 999,999 copies.

4. Default for V_L correction internal (SP61)

[Phenomenon]

Lighter copy image may appear on copies.

[Cause]

The V_L correction is applied too early.

[Solution]

To reduce unnecessary call and match the environment where the machine is installed, the default value for the V_L correction interval (SP61) has been changed from "0" (+1/70H) to "3" (+1/140H).

The cut-in serial numbers of the new ROM (P/N A1115107**D**) are as follows:

JAPAN Production		RIF Production	
Machine Code	Cut-in Serial Number	Machine Code	Cut-in Serial Number
A110-10	2554050001		
A110-15	0340500001		
A110-17	A3474040385		
A110-19	A3474040815		
A110-22	2544040001	A110-22	2544640167
A110-26	3E30540001	A110-26	3E36540001
A110-27	A3474040877	A110-27	A3474640001
A110-29	A3474050665		
A110-99	005405XXXX		
A111-10	258405XXXX		
A111-15	0740500001		
A111-17	A3484040390		
A111-19	A348405XXXX		
A111-22	2574040001	A111-22	2574650001
A111-26	3E4054XXXX	A111-26	3E46540001
A111-27	A3484040651	A111-27	A3484640231
A111-29	A3484050455		

RICOH	Technical Bulletin	No. RTB-007

SUBJECT: High pitched noise from the dc power supply board	DATE:Oct. 15, '94 PAGE: 1 of 2
PREPARED BY: S. Orita CHECKED BY: S. Hamano	FROM: 2nd Technical Support Section

CLASSIFICATION:		MODEL: Pigeon B (A111)
■ Action Required ■ Troubleshooting □ Retrofit Information	□ Revision of service manual □ Information only □ Other	

- Phenomenon -

Coil (L101) on the dc power supply board makes a high pitched noise (Pigeon B only).

- Cause -

According to the tolerance of the switching regulator (IC101) on the dc power supply board, the current from IC101 varies. If the current is lower than some threshold level, the frequency of the switching regulator drops from 37.5KHz to 12.5KHz.
At this time, the coil (L101) starts to vibrate and makes a high pitched noise.

- Temporary countermeasure for the field machines with this problem -

To increase the current from IC101, we have registered the following countermeasure part (150Ω, 10W resistor with harness) as a service part.

Part Number	Description
A1119500	**Noise Killer Harness**

The installation procedure for this harness is as follows:

1. Remove the rear cover.
2. Remove a screw [A] on the rear cassette holder [B] from the rear side.
3. Install the noise killer harness [C] (1 screw).
4. Connect the connector [D] to CN127 on the main board [E].

NOTE: You cannot install this harness on a machine in which a key counter is used.

If this problem still occurs after this harness is installed or the key counter is installed, install the new dc power supply unit (P/N AZ230061) as the final countermeasure.

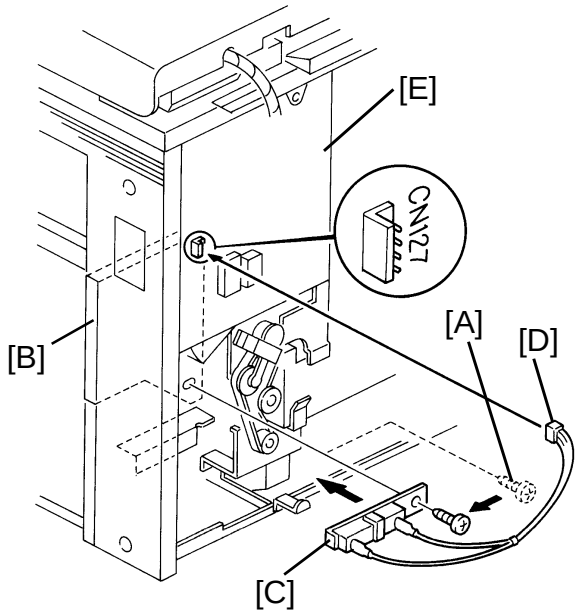

- Final countermeasure for the production machines -

The circuit of the dc power supply board has been changed as follows:

Old P/N	New P/N	Description
AZ230039	AZ230061	DC Power Supply Board

1. Two 470Ω resistors (R115 and R116) have been added between the 24V line and GND.

2. C105 and C106 (capacitors) have been changed from 2200pF to 4700pF.

3. The width of the ground pattern has been increased.

Please refer to the MB No. 22 of the Pigeon for details (cut-in serial numbers, schematics, etc.)

RICOH

Technical Bulletin No. RTB-008

SUBJECT: Service Manual Correction	DATE: Jan. 15, '95 PAGE: 1 of 1
PREPARED BY: S. Hizen CHECKED BY: S. Hamano	FROM: 2nd Technical Support Section

CLASSIFICATION:

- ☐ Action Required
- ☐ Troubleshooting
- ☐ Retrofit Information
- ■ Revision of service manual
- ☐ Information only
- ☐ Other

MODEL: Pigeon A and B

The procedure #4 in the service manual page 5-69 (6. 10:Corona Current Adjustment) is not necessary for the Pigeon.
Delete procedure #4 "Disconnect CN123 on the main board" from Pigeon service manual.

Reason:

The Pigeon service manual was made based on the N220 series service manual.
The procedure is necessary for the N220 series because the N220 has a development unit set sensor (CN123) and it is necessary to disconnect this sensor when the corona current is adjusted.
The Pigeon does not have a development set sensor and the procedure #4 is not necessary for these models.

RICOH	Technical Bulletin	No. RTB-009
SUBJECT: Software Modification		DATE: July 31, '95 PAGE: 1 of 2
PREPARED BY: N. Kaiya CHECKED BY:	FROM: 2nd Technical Support Section	
CLASSIFICATION: ☐ Action Required ☐ Troubleshooting ☐ Retrofit Information ☐ Revision of service manual ■ Information only ☐ Other		MODEL: Pigeon A and B (A110 / A111)

The Main ROM has been updated from A1115107D to A1115107E. The following software problems have been corrected with the version E ROM.

1. APS mode is not selected after bypass feed

Symptom

When using the bypass feed and if the bypass feed table is closed right after the last sheet of paper has been fed, the machine does not switch to APS mode.

Cause

Paper feed selection (default is APS) is not initialized when the bypass feed table is closed before the end of a copy job.

Solution

The software has been corrected so that paper feed selection is initialized even if the bypass feed table is closed before the end of a copy job.

2. The user code counter and total counter do not match

Symptom

The total number of copies in the user code counter and the total counter do not match

Cause

The number of sheets of paper fed is used for the user code counter while the number of sheets of paper fed out is used for the total counter. If there are paper jams, the figures from the two counters do not match.

Solution

The number of sheets of paper fed out will be used for both counters.

JAPAN Production		RIF Production	
Machine Code	Cut-in Serial Number	Machine Code	Cut-in Serial Number
A110 - 10	2554100001		
A110 - 15	0341000001		
A110 - 17	A3474100001		
A110 - 19	A3474100921		
A110 - 22	2544100001		
A110 - 26	3E31040001	A110 - 22	2544700001
A110 - 27	A3474101036	A110 - 26	3E37040001
A110 - 28	A3475030831	A110 - 27	A3474700039
A110 - 29	A3474091762		
A110 - 99	October production onward		
A111 - 10	2585070001		
A111 - 15	0741000001		
A111 - 17	A3484100001		
A111 - 19	November '94 production onward		
A111 - 22	2574100001	A111 - 22	2574700001
A111 - 26	3E40150001	A111 - 26	3E47040001
A111 - 27	A3484100656	A111 - 27	A3484700293
A111 - 29	A3484100813		

RICOH

Technical Bulletin No. RTB-010

SUBJECT: Service Manual Correction	DATE: April 30, '95 PAGE: 1 of 1
PREPARED BY: S. Hizen CHECKED BY: M. Iwasa	FROM: 2nd Technical Support Section

CLASSIFICATION:

- ☐ Action Required
- ☐ Troubleshooting
- ☐ Retrofit Information
- ■ Revision of service manual
- ☐ Information only
- ☐ Other

MODEL: Pigeon

User-Code 6 (U-6)

The U-6 is missing in the U-code section of the service manual page 6-24. Please add the U-6 code to your service manual.

U-6:

At machine installation / drum replacement, the drum protection sleeve should be removed and drum conditioning should be performed. If the sleeve is not removed, the ID sensor output stays less than 1 volt during drum conditioning, resulting in U-6.

Solution:

Remove the drum protection sheet and turn the main switch off and on.

Model: Pigeon (USA Market only)	Date: 30-Apr-98	No: 11
Subject: New Developer Type 411 Black	Prepared by: M.Inohana	
From: QAC Field Information Dept.		

Classification:	☒ Troubleshooting	☐ Part information	☐ Action required
	☐ Mechanical	☐ Electrical	☐ Service manual revision
	☐ Paper path	☐ Transmit/receive	☐ Retrofit information
	☐ Other ( )		

PURPOSES OF QUALITY IMPROVEMENT

Developer Type 410 Black sometimes allows a slight drop in image density over time when used in the Pigeon copier.

CAUSE

In some cases, the Developer Type 410 Black cannot maintain the charge level high enough for constant image density during the Pigeon's copying process.

SOLUTION

Developer Type 411 Black has been newly developed to keep its charge level higher when used in the Pigeon copier, and is now available for purchase in the market.

CAUTIONS

When using Developer Type 411 Black in the field, please be careful of the following.

1. The Developer Type 411 Black must be used with Toner Type 410. If the new developer is used with other types of toner, toner scattering or abnormal image problems may occur.
2. Reset the level of the photo-sensor voltage to [N] or [L]. This is necessary because Developer Type 411 Black gives more electric charge to toner particles compared with Type 410, so dirty background problems may occur if the photo-sensor voltage is set to [H].
3. Developer Type 411 Black should only be used in the Pigeon copier. If it is used in other models like the Ibis copier, this may result in dirty background.