RICOH

CUSTOMER SERVICE GROUP

FT4480
FIELD SERVICE MANUAL

REV. NO.	DATE	COMMENTS
*	3/87	Original Printing
1	1/89	Revised Pages

WARNING

The Field Service Manual contains information regarding service techniques, procedures, processes and spare parts of office equipment distributed by Ricoh Corporation. Users of this manual should be either service trained or certified by successfully completing a Ricoh Technical Training Program.

Untrained and uncertified users utilizing information contained in this service manual to repair or modify Ricoh equipment risk personal injury, damage to property, or loss of warranty protection.

Ricoh Corporation

TABLE OF CONTENTS

1. INSTALLATION

Environment 1-1
Machine Level 1-2
Minimum Space Requirement 1-2
Power Requirement 1-3
Copier Installation 1-4
Color Development Unit Installation 1-12
Key Counter Holder Installation 1-15
A3/11" x 17" Counter Installation 1-16
Cassette Modification 1-17
Modifying Main Transformer Voltage 1-18
Preparation for Transporting the Copier 1-19

2. SERVICE TABLES

PM Table 2-1
Service Tables
- Test Points 2-3
- Variable Resistors 2-4
- Dip Switches 2-5
- Service Program Mode (SP Mode) Operation 2-8
- Service Program Mode Table 2-9

Service Remarks 2-15
Special Tools and Lubricants 2-21

3. REPLACEMENT AND ADJUSTMENT

Optics 3-1
Development and Toner Supply 3-16
Cleaning 3-25
Quenching 3-33
Paper Feed 3-34
Fusing 3-54
Transport 3-64
Corona 3-67
Others 3-77
Copy Image 3-80

4. ELECTRICAL DATA

Main Board Schematic (Optics Control) 4-2
Operation Panel Board Schematic 4-3
Paper Feed Control Board Schematic 4-4
DC Power Supply Board Schematic 4-5
Lamp Regulator Schematic 4-6
Fusing Lamp Drive Board Schematic 4-7
DF Main Board Schematic 4-8
Sorter Control Board Schematic 4-9
LCT Control Board Schematic 4-10
Interface Board Schematic (Type-E) 4-11
Editor Board 4-12
Timing Chart (Main Frame) 4-13
DF Timing Chart 4-14
Electrical Component Layout - Copier 4-17
Document Feeder,Sorter, LCT 4-18
SP Mode 4-19
TP, VR, DIP SW 4-20
Copy Image 4-21
Mechanical Adjustment 4-22

5. DOCUMENT FEEDER

Unpacking and Installation 5-1
Replacement and Adjustment 5-9

6. SORTER

Unpacking and Installation 6-1
Replacement and Adjustment 6-5

7. LARGE CAPACITY TRAY

Unpacking and Installation 7-1
Replacement and Adjustment 7-7

8. EDITOR BOARD (FT4430 Only)

Editor Installation 8-1

9. TROUBLESHOOTING

Copy Quality
- White Spots 9-1
- Uneven Density 9-8
- Abnormal Image Density 9-10
- Vertical Black Lines or Bands 9-10
- Black Spots at the Leading Edge 9-13
- Dirty Background 9-14
- Blank Copy 9-16
- Light Copy 9-17
- Paper Creasing 9-18
- Multifeed and Misfeed 9-18

Service Call Conditions
- 11 Exposure Lamp Malfunction 9-19
- 21 Scanner Home Position Sensor Not On 9-20
- 23 No Registration Start Signal 9-21
- 24 No Scanner Home Position Signal 9-21
- 28 Lens Home Position Sensor Not On 9-22
- 29 Lens Home Position Sensor Not Off 9-22
- 2A 2nd Scanner Home Position Sensor Not On 9-23
- 2B 2nd Scanner Home Position Sensor Not Off 9-23
- 2C Scanner Motor Too Fast 9-24
- 2D Scanner Motor Too Slow 9-24
- 31 Drum Thermistor 9-24
- 32 Image Density Sensor 9-25
- 41 3rd Cassette Tray Lift Motor 9-25
- 53 Fusing Thermistor Abnormal 9-24
- 54 Fusing Warm-Up Failure 9-2
- 55 Fusing Overheat 9-26
- 56 Fusing Temperature Too Low 9-27
- 61 Pulse Generator Abnormal 9-27
- 91 Total Counter Malfunction 9-28
- 93 Optics < = > Main Communication Failure 9-28

ID Sensor Abnormal (No SC Number) 9-29

Defective Sensor Table 9-30

1. ENVIRONMENT

1. Temperature Range: 10°C to 30°C (50°F to 86°F)
2. Humidity Range: 15% to 90% RH
3. Ambient Illumination: Less than 1,500 lux (Do not expose to direct sunlight.)
4. Ventilation: Room air should turn over at least 3 times/hour.
5. Ambient Dust: Less than 0.15 mg/m^3 (4 x 10^{-3} oz/yd^3)
6. Room Size: More than 10 m^3 (13.4 yd^3)
7. If the installation place is air-conditioned or heated, place the machine:
   a. Where it will not be subjected to sudden temperature changes.
   b. Where it will not be directly exposed to cool air from an air conditioner in the summer.
   c. Where it will not be directly exposed to reflected heat from a space heater in winter.
8. Avoid placing the copier in an area filled with corrosive gas.
9. Avoid any area higher than 2,000 meters (6,500 feet) above sea level.
10. Place the copier on a strong and level base.
11. Avoid any area where the copier may be subjected to frequent strong vibration.

2. MACHINE LEVEL

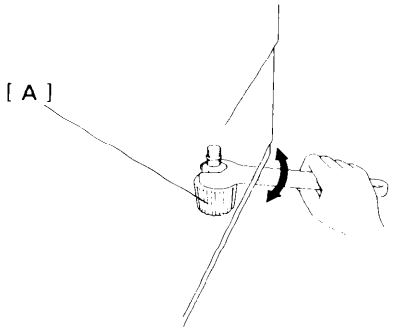

1. Front to back: Within 5 mm (0.2") of level
2. Right to left: Within 5 mm (0.2") of level

Place the machine on a table and screw the leveling foots [A] up or down to level the machine.
Use a leveling gauge if necessary.

3. MINIMUM SPACE REQUIREMENT

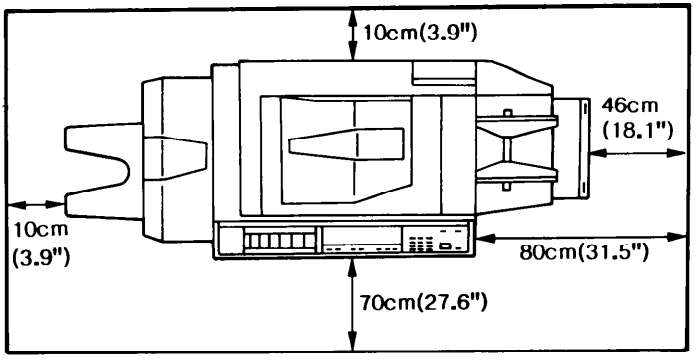

1. Front: 70 cm (27.6")
2. Back: 10 cm (3.9")
3. Right: 80 cm (31.5")
4. Left : 10 cm (3.9")

4. POWER REQUIREMENT

1. Input voltage level

   110V/60Hz : More than 15A
   115V/60Hz : More than 15A
   220V/50Hz : More than 8A
   220V/60Hz : More than 8A
   240V/50Hz : More than 8A

2. Permissible voltage fluctuation: ± 10%

3. Permissible extension cord: At least 300V, 30A capacity and less than 5 meters (16.4 ft) long.

4. Do not set anything on the power cord.

NOTE:
- **Be sure to ground the machine. (Do not connect the grounding wire to a gas pipe.)**
- **Make sure the plug is firmly inserted in the outlet.**
- **Avoid multi-wiring.**

5. COPIER INSTALLATION

- **ACCESSORY CHECK** -

Check the quantity and condition of the accessories in the box according to the following list.

	DESCRIPTION	Q'TY
1.	Installation Procedure (115V - English only. 220V/240V - five languages)	1
2.	New Equipment Condition Report	1
3.	Envelope - NECR (115V only)	1
4.	Cassette - Large	
	America, Europe, Middle East, Philippines	1
	The Rest of Asia,	2
5.	Cassette - Small	
	America, Europe, Middle East, Philippines, Taiwan	2
	The Rest of Asia	1
6.	Receiving tray	1
7.	Original holder	1
8.	Operating instructions (115V - English only. 220V/240V - five languages)	1
9.	Operating instruction cards (115V - English only. 220V/240V - five languages)	1
10.	Multilingual decals (220/240V only)	1
11.	Sort/Stack key top (attached on the right inner cover)	1
12.	Sort/Stack key cover (attached on the right inner cover)	1
13.	Editing Sheet	1

NOTE: Save the Sorter/Stack key top and cover for Sorter installation.

- INSTALLATION PROCEDURE -

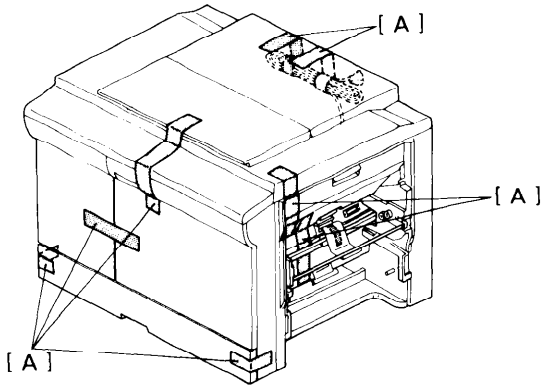

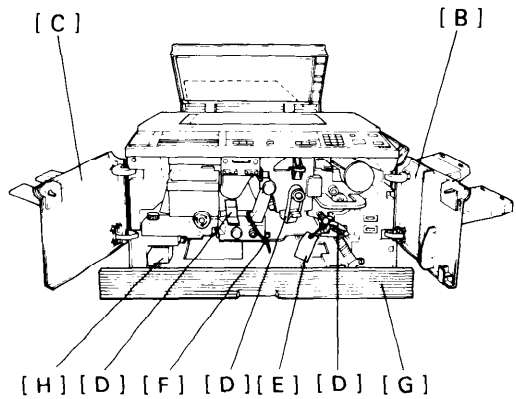

1. Remove the shipping tapes [A] from the copier as shown.
2. Open the copier right [B] and left front door [C], remove the shipping tape [D] and the wedge [E] between the registration rollers, and cut the cable tie [F] securing the toner collection bottle as shown.
3. Pull out the cassette tray [G].
4. Remove the foam rubber [H].

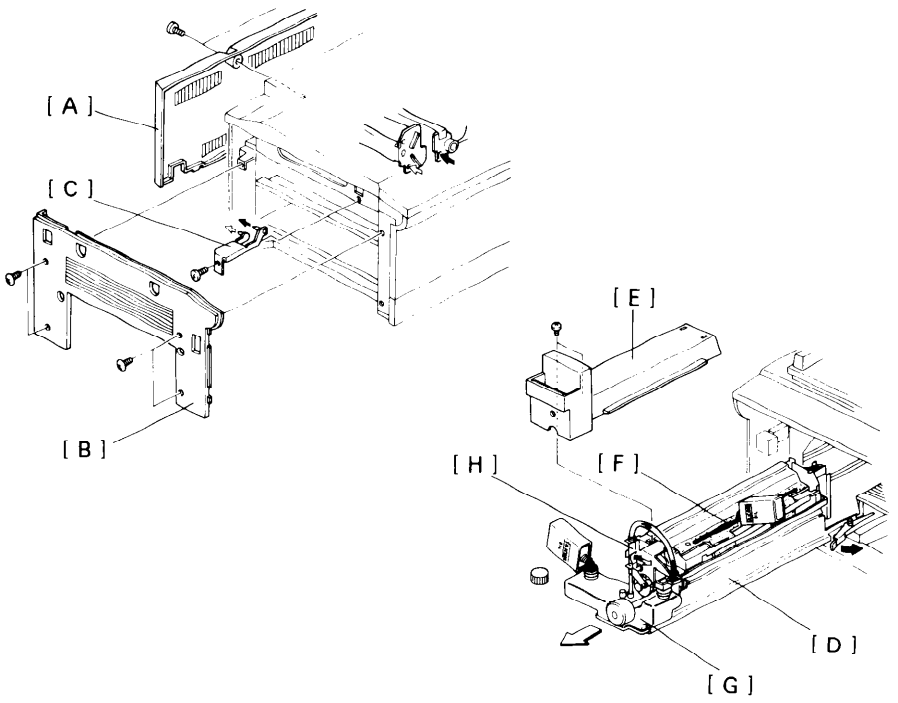

5. Remove the rear cover [A] (2 screws).
6. Remove the left cover [B] (4 screws).
7. Remove the scanner lock plate [C] (1 screw).

   NOTE: Save the scanner lock plate for future use.

8. Reinstall the left cover and rear cover.
9. Pull out the fusing unit [D] to the lock position and remove the fusing unit cover [E] (2 screws).
10. Prime the oil supply pad [F] with silicone oil.
11. Fill the oil tank [G] with silicone oil.
12. Manually operate the oil pump lever [H] and confirm the proper operation and condition of the silicone oil supply system.
13. Reassemble the fusing unit and return it to its original position.

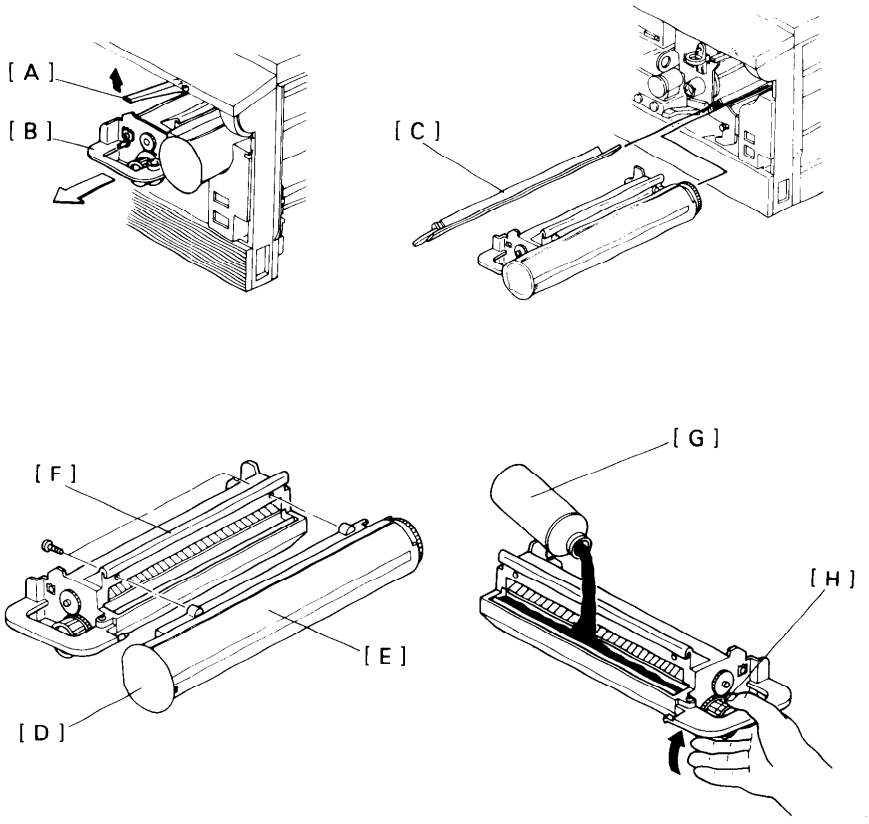

14. Raise the development lock lever [A] and pull out the development unit [B] and the PTL board [C]. Place the unit on a clean sheet of paper.

15. Remove the seal [D] from the toner tank.

16. Separate the toner tank [E] from the development unit [F] (2 screws).

17. Pour one bottle of developer [G] into the development unit while turning the knob [H] counterclockwise to distribute the developer.

18. Remount the toner tank on the development unit.

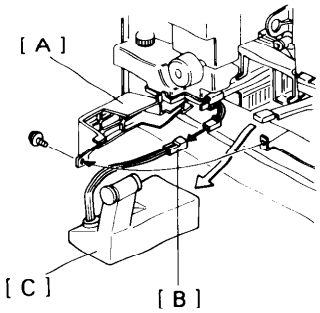

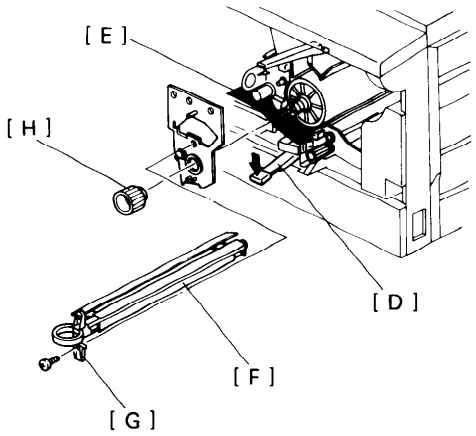

19. Swing the toner collection bottle cover [A] to the left (1 screw) and unplug the toner overflow sensor connector [B].

20. Remove the toner collection bottle [C].

21. Lower the T/S corona unit [D].

22. Place a sheet of paper [E] over the T/S corona unit.

23. Remove the charge corona unit [F] together with the wire cleaner [G] (1 screw).

24. Remove the drum stay [I] (1 knob and 1 screw).

NOTE: The drum stay knob [H] is reverse threaded.

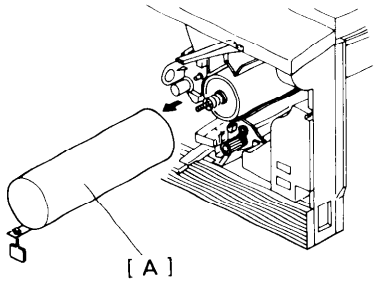

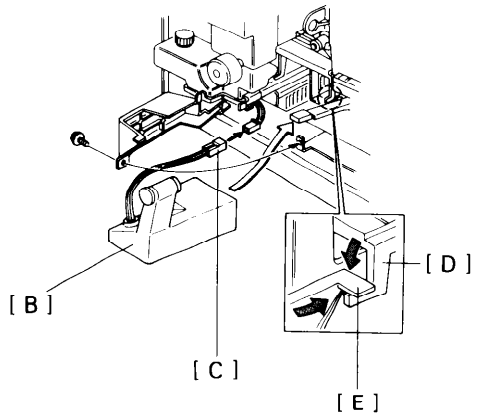

25. Pull out the drum protective sleeve [A].

    NOTE: **Save the drum protective sleeve for future use when servicing the copier.**

26. Make sure that the wire cleaner is properly positioned, then reinstall the drum stay and the charge corona unit.

27. Remove the paper over the T/S corona unit and return the T/S corona unit to its original position.

28. Reinstall the toner collection bottle [B] and plug in the toner overflow sensor connector [C].

29. Make sure that the hooks of the transport plate [D] are positioned underneath the bottle cover [E], then reinstall the toner collection bottle cover [F] (1 screw). Close the cassette tray.

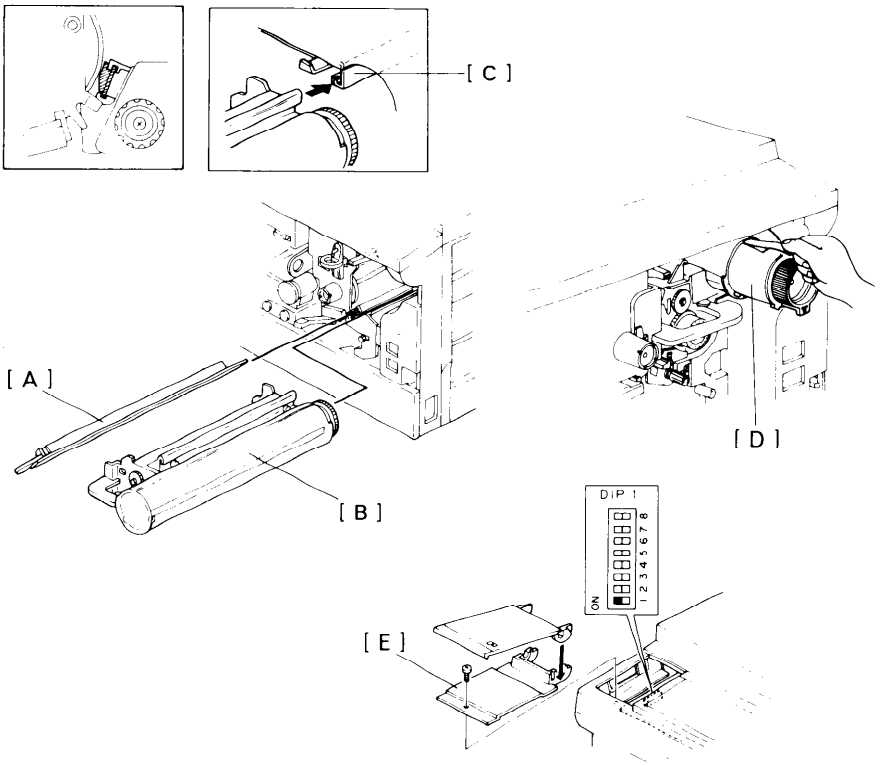

30. Reinstall the PTL board, then reinstall the development unit.

    CAUTION: When installing the PTL board [A], be sure that the PTL board is properly positioned in the rail. When installing the development unit [B], be sure the development unit rail is properly engaged with the unit guide rail [C] on the copier.

31. Install one toner cartridge [D].

    NOTE: Confirm that the toner cartridge gear is properly engaged by attempting to rotate the cartridge counterclockwise.
    When the toner cartridge gear is properly engaged, the toner cartridge will not rotate freely.

32. Remove the DIP switch cover [E] on the left side of the operation panel (1 screw) and turn on DIP switch No. 1 - 1.

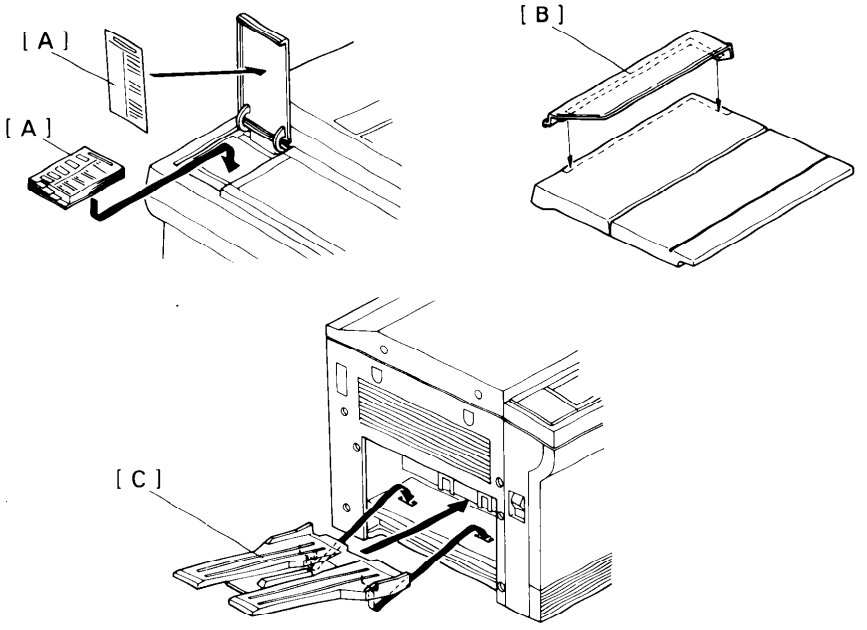

33. Lower the platen cover.

34. Plug in the machine and turn on the main switch.

35. After the warm up period is completed, enter 99 copies and press the Start Key for drum conditioning.

36. After the machine stops, turn off the main switch.

37. Turn off DIP switch No. 1 - 1 and reinstall the DIP switch cover.

38. Install the operating instruction cards [A] over the DIP Switch cover as shown (double-sided tape).

39. Install the original holder [B] on the platen cover as shown and install the receiving tray [C].

40. Load paper into the cassette and check machine operation and copy quality.

41. Fill out the New Equipment Condition Report.

6. COLOR DEVELOPMENT UNIT INSTALLATION

- ACCESSORY CHECK -

Check the quantity and condition of the accessories in the box according to the following list.

1.	Actuator - Red	1
2.	Actuator - Blue	1
3.	Actuator - Green	1
4.	Screw - M3x4	1
5.	Color Decal Sheet	1

- INSTALLATION PROCEDURE -

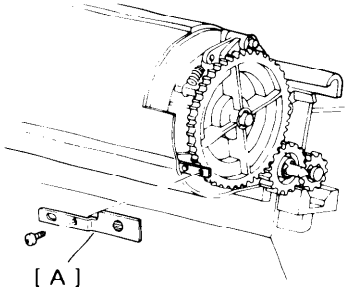

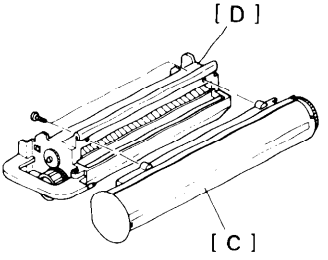

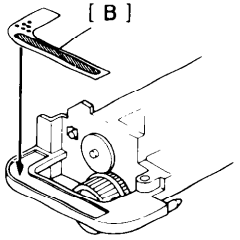

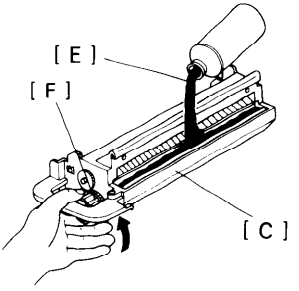

NOTE: - **The color development unit should be installed after drum conditioning is finished. (See the copier installation procedure.)**

- **The following procedure should be done when the color developer is replaced.**

1. Install the color actuator [A] on the color development unit (1 screw).

   NOTE: **Each actuator has a colored sticker. Install the appreciate actuator.**

2. Stick the appreciate decal [B] on the development unit handle.

3. Separate the toner tank [C] from the development unit [D] (2 screws).

4. Pour one bottle of color developer [E] into the development unit while turning the knob [F] counterclockwise to distribute the developer.

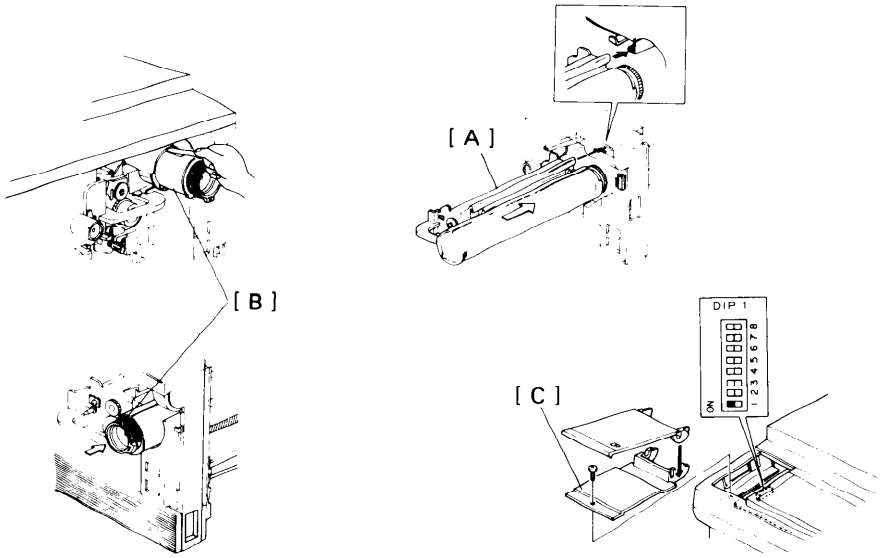

5. Remount the toner tank on the development unit.

CAUTION: **When installing the color development unit, be sure the development unit rail is properly engaged with the unit guide rail on the copier.**

6. Install a color development unit [A].

7. Install the color toner cartridge [B].

8. Remove the DIP SW cover [C] on the left side of the operation panel (1 screw) and turn on DIP SW No.1-1.

9. Plug in the machine and turn on the main switch. Confirm that the Color TOner indicator is displayed on the operation panel.

10. Press the Enter key. "20" will be displayed on the copy counter.

11. Put five sheets of white paper (A3 or 11"x17") on the exposure glass.

12. Lower the platen cover.

13. After the warm up period is completed, press the Start key.

14. After the machine stops, turn off the main switch and the DIP SW No.1-1.

15. Reinstall the DIP SW cover (1 screw).

7. KEY COUNTER HOLDER INSTALLATION

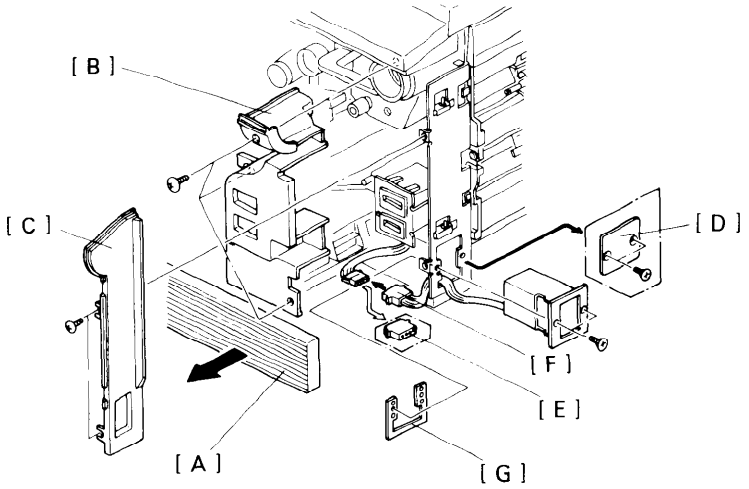

NOTE: Three types of counters are recommended for this copier (Ricoh, Hecon, and Hengstler key counters).

1. Open the right front door.
2. Pull out the cassette tray [A].
3. Remove the right inner cover [B] (3 screws).
4. Remove the right front door.
5. Remove the front right side cover [C] (2 screws).
6. Remove the cover plate [D] (2 screws).
7. Remove the shorting plug [E] from the 4p key counter connector.
8. Connect the 4p connector of the key counter holder [F] to the key counter harness through the key counter access hole.
9. Hold the fixing plate on the inside of the key counter bracket [G] and insert the key counter holder.
10. Align the holes in the fixing plate with the mounting holes of key counter holder and secure the key counter holder.

    NOTE: The fixing plate has three sets of holes. Make sure to use the holes that match the type of counter when installing.

11. Reinstall all covers.

8. A3/11"X17" COUNTER INSTALLATION

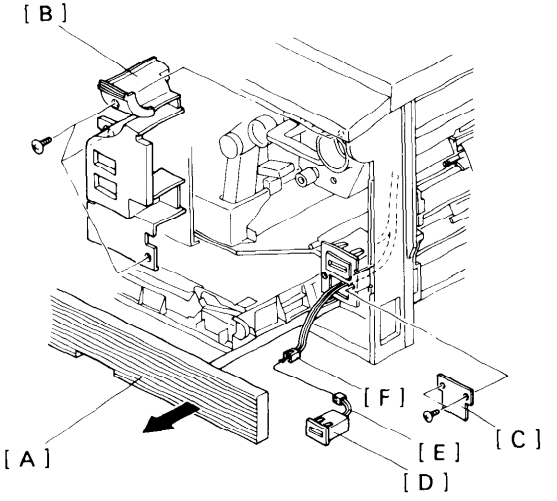

1. Open the right front door.
2. Pull out the cassette tray [A].
3. Remove the right inner cover [B] (3 screws).
4. Remove the A3/11"X17" counter cover plate [C] (2 screws).
5. Push the A3/11"X17" counter [D] into the space provided until it locks.
6. Connect the 2p connector [E] on the A3/11"X17" connector to the counter harness [F].
7. Reinstall the right inner cover.

9. CASSETTE MODIFICATION

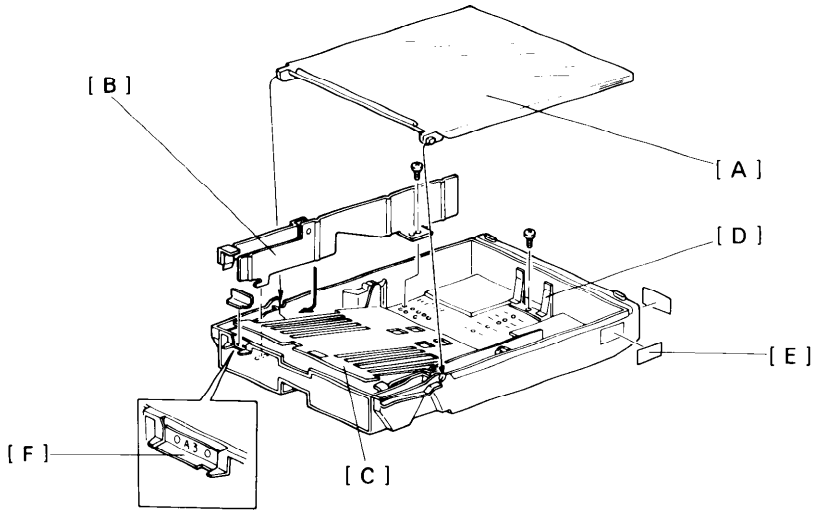

1. Remove the cassette cover [A].
2. Remove the side fences [B] (1 screw each) and the bottom plate [C].
3. Reposition the rear fence [D] in the desired paper size position (1 screw).

   NOTE: Paper size positions are shown on the inside of the cassette.

4. Reinstall the bottom plate.
5. Reinstall the side fences in the desired paper size position.
6. Attach the proper paper size decals [E] on the cassette at the positions shown.
7. Insert the actuator plate [F] in the slot on the front of the cassette as shown.

   NOTE: The actuator plates are enclosed in the cassettes. Save the other actuator plates for future use.

10. MODIFYING MAIN TRANSFORMER VOLTAGE (220V TO 240V)

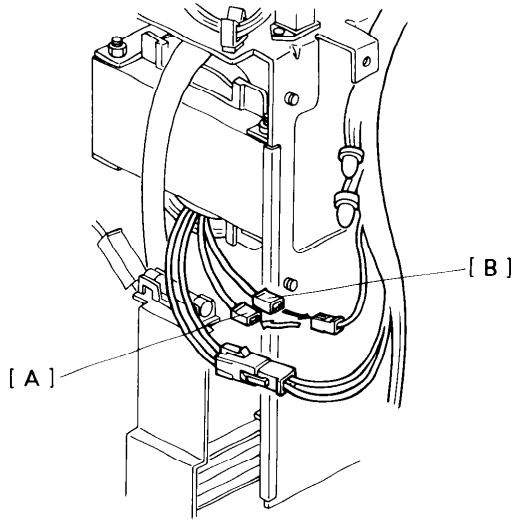

1. Remove the rear cover (2 screws).
2. Disconnect the 220V connector [A] (White:1P).
3. Connect the 240V connector [B] (Red:1P).
4. Reinstall the rear cover.

11. PREPARATION FOR TRANSPORTING THE COPIER

- SHORT HAUL TRANSPORTATION -

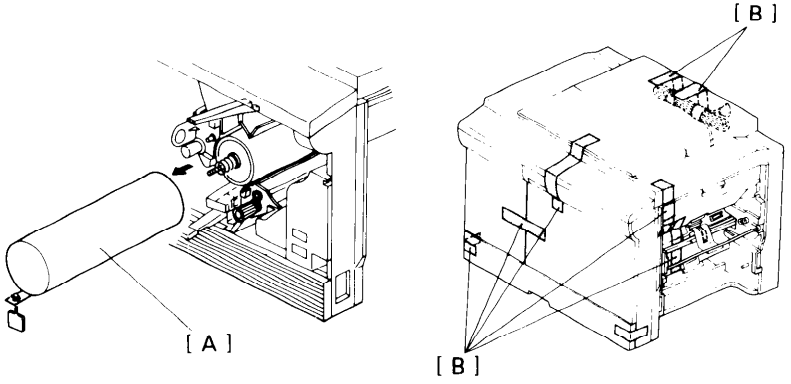

The copier may be seriously damaged if it is moved without proper preparation. Before moving the copier from its place of installation, be sure to prepare it for transportation as follows:

1. Insert the drum protective sleeve [A].
2. Re-install the development unit.
3. Re-install the drum stay and charge corona unit.
4. Secure the following items with tape [B]:
   - Manual feed table
   - Platen cover or document feeder
   - Power supply cord (roll up first)
   - Cassette tray front cover
5. Remove the sorter to prevent damage to the bins.
6. Remove the cassettes.
7. Remove the original table from the document feeder.
8. Remove the LCT if it is installed in the 2nd feed station.

- Long Haul Transportation By Vehicle -

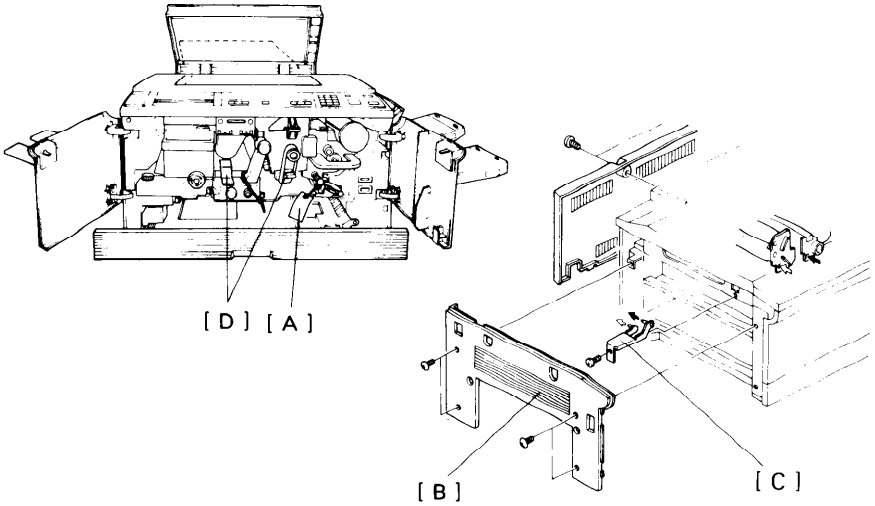

If the machine is to be transported by vehicle, do the following steps after you have completed the short haul procedure.

1. Remove the developer from the development unit.
2. Place a wedge [A] between the registration rollers.
3. Remove the left cover [B] and install the scanner lock plate [C].

   NOTE: Confirm that the scanner is at the home position.

4. Secure the following items with tape [D]:

   - T/S corona release lever to the drum stay knob
   - Transport plate to the toner collection bottle cover
   - 1st and 2nd feed guide plates

5. Remove the sorter and secure the following items with tape:

   - Top cover
   - Jam clearing tray
   - Bins--tape the right and left edges of the spacers together.

6. Secure the LCT covers and power supply cord with tape.

PM TABLE

C: Clean R: Replace L: Lubricate

ITEM	EM	60K	120K	180K	240K	NOTES
OPTICS						
1. Mirrors, lens, reflectors, toner shield glass, ADS sensor	C	C	C	C	C	Silicone cloth or water (cotton pad), blower brush
2. Exposure glass	C	C	C	C	C	Alcohol or water
2. Platen cover sheet	C	C	C	C	C	Alcohol or water (replace if necessary)
4. Scanner guide rod and plate		L	L	L	L	Launa oil or equivalent
5. Guide rod felt		L	L	L	L	Launa oil or equivalent
PAPER FEED						
6. Paper feed roller	C		R		R	Water
7. Friction pad	C		R		R	Water
8. Paper feed guide plate		C	C	C	C	
9. Registration sensor		C	C	C	C	Blower brush
10. Cassette bottom plate pad		C	C	C	C	Alcohol or water
11. Paper feed sensor		C	C	C	C	Blower brush
AROUND DRUM						
12. Corona wires	C		R		R	Dry cloth
13. Wire cleaner		R	R	R	R	
14. End blocks and casing	C	C	C	C	C	Dry cloth
15. Transfer guide plate		C	C	C	C	Dry cloth
16. Pre-Transfer Lamp	C	C	C	C	C	Dry cloth, discharge before installation.
17. Quenching Lamp	C	C	C	C	C	Dry cloth, discharge before installation.
18. ID sensor	C	C	C	C	C	Blower brush
19. Erase lamp unit		C	C	C	C	Dry cloth
CLEANING UNIT						
20. Cleaning blade		R	R	R	R	Dust with setting powder
21. Cleaning seal		C	C	C	C	Replace if necessary
22. Cleaning brush			R		R	Dust with setting powder
23. Cleaning unit		C	C	C	C	
24. Pick-off pawls	C	C	C	C	C	Replace if necessary
25. Used toner bottle	C	C	C	C	C	Empty of used toner

C: Clean R: Replace L: Lubricate A: Add I: Inspect

ITEM	EM	60K	120K	180K	240K	NOTES
DEVELOPMENT UNIT						
26. Developer		R	R	R	R	If necessary
27. Upper brush seal		C	C	C	C	
28. Side seals		C	C	C	C	
29. Development unit guide		C	C	C	C	
30. Toner supply clutch			L		L	Mobil Temp 78
FUSING UNIT						
31. Hot roller		C	R	C	R	
32. Pressure roller		C	R	C	R	If necessary
33. Stripper pawls		C	C	C	C	Replace if necessary
34. Oil supply pad		R	R	R	R	Prime with silicone oil
35. Oil blade		C	R	C	R	Prime with silicone oil
36. Fusing entrance and exit guides		C	C	C	C	Suitable solvent
37. Oil sump		C	C	C	C	
OTHERS						
38. Main drive chain			L		L	Spindle oil
39. Transport belt		C	C	C	C	Alcohol or water
40. Bushings			L		L	Spindle oil
DOCUMENT FEEDER						
41. Belt	C	C	C	C	C	Belt cleaner, replace if necessary
42. Pick-up roller	C	C	C	C	C	Water, replace if necessary
43. Feed roller	C	C	C	C	C	Water, replace if necessary
44. Friction roller	C	C	C	C	C	Water, replace if necessary
LARGE CAPACITY TRAY						
45. Pick-up roller	C		R		R	Water

SERVICE TABLES

1. Test Points

- MAIN BOARD -

NUMBER	FUNCTION
TP201	GND
TP202	+5V (Vc)
TP203	+24V (VA)
TP204	Factory Use
TP205	+12V (Vs)
CN212-1	ADS Voltage (Adjust using VR2 on the lamp regulator)
CN209-1	Input voltage of image density sensor (Adjust using VR201 on the main board)

- DF MAIN BOARD -

NUMBER	FUNCTION
TP101	GND
TP102	+24V (VA)
TP103	+12V (Power for motor control IC)
TP104	+5V (Vc)
TP105	Belt drive motor encoder pulse

2. Variable Resisters

- MAIN BOARD -

NUMBER	FUNCTION
VR201	Adjust the image density sensor voltage

- LAMP REGULATOR -

NUMBER	FUNCTION
VR1	Light adjustment
VR2	ADS input adjustment
VR3	Factory Use

- DF MAIN BOARD -

NUMBER	FUNCTION
VR101	Registration adjustment (0 ± 2.5 mm)
VR103	Belt drive motor speed adjustment (2,500 ± 30 rpm)
VR104	Original entrance sensor output (IC 116-5 > +8V : With paper) (IC 116-5 < +4V : Without paper)
VR105	Original width sensor output (IC 116-7 > +8V : With paper) (IC 116-7 < +4V : Without paper)

3. Dip Switches

- Main Board -

DIP 101

DIP Switch	Normal	Function
101-1	---	Lead edge registration adjustment
101-2	---	Lead edge registration adjustment
101-3	---	Lead edge registration adjustment
101-4	---	Lead edge registration adjustment
101-5	---	Lead edge blank margin adjustment
101-6	---	Lead edge blank margin adjustment
101-7	---	Lead edge blank margin adjustment
101-8	---	Lead edge blank margin adjustment

(Lead edge regist./blank margin adjustment interval = 1.0 mm per step. See the adjustment procedure.)

DIP 102

DIP Switch	Normal	Function
102-1	OFF	Scanner free run
102-2	---	Vertical magnification adjustment
102-3	---	Vertical magnification adjustment
102-4	---	Vertical magnification adjustment

(Vertical magnification adjustment interval = 0.2% per step. See the vertical magnification adjustment procedure.)

DIP 201

DIP Switch	Normal	Function
201-1	OFF	Toner supply mode (ON: fixed, OFF: detect)
201-2	ON	Toner supply amount (Note 1)
201-3	OFF	Toner supply amount (Note 1)
201-4	OFF	Image density adjustment (Note 2)
201-5	OFF	Image density adjustment (Note 2)
201-6	OFF	Increase bias (+30 V; Color)
201-7	OFF	Increase bias (+90 V)
201-8	OFF	ID sensor LED ON

NOTE 1: Dip SW 201-1, 2, 3

201-2	201-3	Detect Mode (201-1 OFF)	Fixed Mode (201-1 ON)
OFF	OFF	15%	3.5%
ON	OFF	30%	7.0%
OFF	ON	45%	10.5%
ON	ON	60%	14.0%

NOTE 2: Dip SW 201-4, 5

201-4	201-5	Image Density	ID sensor Bias
OFF	OFF	Normal	470V
ON	OFF	Light (least toner)	440V
OFF	ON	Dark (more toner)	500V
ON	ON	Darker (most toner)	530V

DIP 202

DIP Switch	Normal	Function
102-1	OFF	Sorter instructions
102-2	OFF	Auto cassette shift disable
102-3	OFF	Not used
102-4	OFF	Not used

- Operation Panel -

DIP 1

DIP Switch	Normal	Function
1-1	OFF	Drum conditioning
1-2	OFF	Free run
1-3	OFF	Jam detection disable
1-4	OFF	Auto reset disable
1-5	OFF	Beeper sound disable
1-6	OFF	Copy counter count up/down (ON: down, OFF: up)
1-7	OFF	Manual image density mode priority (ON: manual mode, OFF: ADS mode)
1-8	OFF	SP Mode

- DF Main Board -

DIP101

101-1	101-2	101-3	101-4	Function
ON	OFF	OFF	OFF	Normal mode
ON	OFF	OFF	ON	Free run
ON	ON	OFF	ON	Belt speed adjustment (VR103)
ON	ON	ON	ON	All indicator on

4. Service Program Mode (SP Mode) Operation

The service program mode is used to check and change electrical data or adjustment values by the service engineer.

- DATA CHANGE MODE -

1. Remove the DIP SW cover and turn on DIP SW1-8 on the operation panel. (The Service Call indicator will start blinking.)
2. Enter the desired SP Mode No. using the numeral keys.
   (The entered No. is displayed in the copy counter.)
3. Press the Enter key.
   (The SP Mode No. is shifted into the Magnification indicator and the actual data is displayed in the copy counter.)
4. If the data is correct, press the Enter key.
5. Enter the desired data using numeral keys.
   (The data entered is displayed in the copy counter.)
6. Press the Enter key to memorize the new data.
   (The copy counter indicates "1", the Ready indicator turns on and the Start key turns green.)
7. Turn off the DIP SW1-8.
   (The Service Call indicator goes off.)

- DATA CHECK MODE -

1. Perform the steps 1 and 2 of the data change mode.
2. Press the Enter key.
   (The data is displayed in the Magnification indicator.)
3. Perform the adjustment procedure for the SP Mode No.55 and 56. if necessary.
4. Turn off the DIP SW 1-8.

NOTE: - **The SP Mode can be cleared by pressing the Clear mode key or turning off the main switch.**

5. Service Program Mode Table

Mode No.	Function	Data	Factory Setting	Remarks
5 Exposure Lamp OFF	Exposure lamp ON/OFF	0: ON 1: OFF	0	
9 ADS	ADS voltage adjustment	-	-	For use with SP Mode "56". Refer to the ADS adjustment procedure.
11 All Indicators ON	Turns on all indicators on the operation panel.	-	-	
15 Auto Reset Time	Selects auto reset of 1 or 3 minutes.	0: 1 min. 1: 3 min.	0	Auto Reset time can be switched OFF by DIP SW 1-4 ON.
20 Feed Station Priority (LCT)	Selects feed station priority.	0: LCT 1: SP 22	0	Refer to the NOTE 1.
21 APS Priority	Selects APS or manual.	0: APS 1: Manual	0	If DF is installed.
22 Feed Station Priority (1st, 2nd, and 3rd cassette)	Selects feed station priority.	0: 1st 1: 2nd 2: 3rd	0	Refer to the NOTE 1.
23 DF Original Size	Enables originals of various sizes to be fed from the same stack.	0: OFF 1: ON	0	ADF Mode only.

Mode No.	Function	Data	Factory Setting	Remarks
28 Auto Sort Mode	Selects Sort Mode automatically in ADF mode.	0: Manual 1: Auto	0	Sorter and DF must be installed.
29 Fusing Unit Idle	Selects fusing unit idling mode	0: No idling 1: idling	0	Copier will idle for 10 seconds. Refer to the NOTE 3.
35 Toner Supply	Changes toner supply interval. a) ID sensor checks every 5 copies. b) Toner end level changes to 0.65V.	0: Standard 1: Increase	0	Standard: Every 10 copies, 0.75V.
49 Fusing Temperature Change	Changes fusing temp.	0: Standard 1: Low 2: Higher 3: Highest	0	178 - 184° 174 - 180° 182 - 188° 186 - 192°
52 Fusing Temperature	Displays the fusing temperature.	-	-	
55 VSG, VSP Voltage	Displays VSG, VSP voltage	-	-	Press the enter key twice to Display Vsp.
56 ADS Input Referrence Voltage	Displays ADS voltage	-	-	For use with SP Mode "9". Refer to the ADS adjustment procedure.
59 Bias Voltage	Displays bias voltage	-	-	Press the Start key to indicate the voltage.
60 Toner Supply Recovery	Recover toner volume if the Vsp is above 0.5V. a) Press Start key. b) Toner supply clutch turns on. c) Free run starts. d) Vsp becomes less than 0.5V. e) Free run stops.	-	-	Use this mode if the image density is low. (Black toner only). Refer to the NOTE 2 for color toner

Mode No.	Function	Data	Factory Setting	Remarks
70 Color Toner Supply Amount	Selects the color toner supply ratio.	0: 14% 1: 7% 2: 21% 3: 28% 4: 35% 5: 42% 6: 49% 7: 56%	0	
73 Color Toner Copy Count	Shows the number of color copies made	0: Red 1: Green 2: Blue		Multiply number by 100. Example: 24 = 2400 sheets
76 Sorter Bin Capacity	Set the stack mode quantity limit	0: No limit 1: Limit	0	Limit is determined by paper size. (Refer to NOTE 4.)
86 PM Counter	Turn on the PM counter.	0: Off 1: On	0	For PB machines, 0 is On and 1 is Off.
87 PM Copy Count	Set the interval of the PM counter.	0: 60 K 1: 80 K 2: 100 K	0	
88 PM Counter Check	Displays contents of the PM counter.		-	NOTES 6 & 7
89 PM conter reset	Reset the PM counter			Use after performing PM. Refer to note 8
93 Maximum Copy Quantity	Limits the maximum copy quantity that can be entered.	-	0 (999)	The limit quantity is displayed in the copy counter. (Refer to NOTE 5.)
97 Clear Jam Counter	Clears the jam counters	130:Total 131:Feed 132: Fusing 138: Sorter 139:DF	- - - - -	Dip SW 1-1 must be On
99 Clear All Memory	Clear all counters and returns all modes to factory setting.	0: Memory 1: Clear	0	Dip SW 1-1 must be On.

Continued . . .

Mode No.	Function	Data	Factory setting	Remarks
130 Paper Jams	Displays the total number of paper jams.	-	-	(Refer to NOTE 6.)
131 Feed Jams	Displays the total nunber of entrance area paper jams.	-	-	(Refer to NOTE 6.)
132 Fusing Jams	Displays the total number of jams at the fusing unit.	-	-	(Refer to NOTE 6.)
138 Sorter Jams	Displays the total number of sorter jams.	-	-	(Refer to NOTE 6.)
139 DF Jams	Displays the total number of DF jams.			(Refer to NOTE 6.)

NOTE 1: SP Mode No.20 and 22.

Feed Station Priority

	LCT Not Installed			LCT Installed			
SP Mode 20	X	X	X	0	1	1	1
SP Mode 22	0	1	2	X	0	1	2
First Priority	1st	2nd	3rd	2nd	1st	2nd	3rd
Second Priority	2nd	3rd	1st	3rd	2nd	3rd	1st
Third Priority	3rd	1st	2nd	1st	3rd	1st	2nd

- If no cassettes are installed, the machine returns to the first priority setting.
- The "X" mark means "don't care".
- If a cassette is not installed or the cassette is empty, the machine selects the next priority.

NOTE 2: SP Mode No.60.

For the color toner supply recovery, the following procedure is required:

1. Turn off the main switch and turn on DIP switch 1-2.
2. Turn on the main switch, then press the start key.
3. While pressing the enter key and the "0" key, the toner supply clutch turns on.
4. Press the Clear/Stop key and turn off the main switch, then turn off DIP switch 1 - 2.

NOTE 3: SP Mode No.29

The idling mode may be necessary if the copier has been installed in an environment with low temperature place.
The idling mode will warm up the fusing rollers enough to ensure the fusing ability at initial copy run.

Idling Mode: The copier will idle for 10 seconds only when the main switch turned on and the Start key turned on.

NOTE 4: SP Mode No.76

Paper Size	Limit Capacity
A3/DLT	10 sheets
A4/LT	30 sheets
A5/HLT	30 sheets

NOTE 5: SP Mode No.93

To change the limit quantity, perform the following:

1. Turn the DIP SW 1-8.
2. Enter "93" using the numeral keys.
3. Press the enter key.
4. Enter the desired number using the numeral keys.
5. Press the enter key.

NOTE 6: The first 3 digits are shown in the magnification indicator. Perss point (" . ") key to display the second 3 digits.

NOTE 7: When the PM count is exceeded, the service call indicator blinks and the key counter indicator stays on (Start key stays green and copies can be made).

NOTE 8: SP mode No. 89 PM Counter Reset Mode Procedure:

(1) Turn on DIP SW 1-8.
(2) Enter "89" using the numeral keys.
(3) Press the enter key.
(4) Enter "88" using the numeral keys.
(5) Press the enter key.
(6) Turn off DIP SW 1-8.

SERVICE REMARKS

- Handling the Drum -

1. Never touch the drum surface with bare hands.
2. Store the drum in a cool dry place.
3. Always wear gloves when cleaning the drum.
4. Prime the drum with setting powder only when installing new drum.
5. Never expose the drum to light for a long time.
6. Drum conditioning is necessary when a new drum is installed. In addition, it is useful at the following times:
   - When image density is reduced due to over-exposure of the drum.
   - After cleaning the drum.
   - When the drum is lightly scratched.
7. Always keep the drum in the protective sleeve when inserting or pulling the drum out of the copier.
8. Before inserting or pulling out the drum, the cleaning unit should be pulled slightly out to avoid drum damage by the pick-off pawls.
9. Return used drums to the distributor according to standard procedure.

- Charge Corona -

1. Clean the corona wires with a dry cloth or by sliding the corona unit in and out. Do not use emery paper or any solvent for wire cleaning.

2. Do not touch the corona wires with oily hands. Oil stains may cause white bands on copies.

3. Make sure that the corona wires are correctly positioned between the cleaner pads and there are no threads on the casing.

4. When adjusting the drum current, always make sure that the axis of drum shoe is aligned with the corona wire.

5. The corona wire height should be adjusted only when:

   a) The front end block is replaced.
   b) The drum charge current is uneven.

- Optics -

1. Do not adjust the following parts:

   a. Scanner Guide Plate
   b. Fourth Mirror Angle Adjusting Screw
   c. Lens Home Position Sensor
   d. Lens unit rails

2. The lens home position sensor does not have a convenient adjusting procedure. When replacing the sensor, mark the position of the sensor bracket before removing it, and adjust the fine position of the sensor by checking the copy image (horizontal magnification and focus).

3. Do not bend or damage the lens support plate or the mylar strip.

4. Launa oil or an equivalent oil should be used to lubricate or clean the following:

   - Scanner Guide Rod (cleaning)
   - Scanner Guide Rod Pads (Lubrication)
   - Scanner Guide Plate (Lubrication/Cleaning)

   CAUTION: Do not use any other kind of oil.

5. Clean the exposure glass with glass cleaner and a dry cloth to reduce static electricity on the glass.

6. Clean the mirrors with water or silicone cloth only.

7. Do not touch the following parts with bare hands:

   - Reflectors
   - Exposure Lamp
   - Mirrors and Lens

8. Do not bend the Auto ID fiber optics cable sharply.

9. When adjusting the light intensity, make ten copies before proceeding to check copy image if the main switch has just been turned on. This is to eliminate the effect of rest time compensation.

10. After adjusting the light intensity, check and adjust the Auto ID sensor.

- Development -

1. Be careful not to nick or scratch the development roller sleeve.

2. Place a sheet of paper under the development unit when it is out of the copier.

3. Be careful not to bend the bias terminal.

4. Clean the drive gears and end magnets after removing used developer.

5. Clean the development unit guide plate before reinstalling the unit.

- Toner Supply -

1. The image density sensor and the pre-transfer lamp unit should be cleaned with a blower brush.

2. Do not touch the sensor pattern with bare hands.

3. Image density sensor adjustment is required when:

   - The ID sensor/PTL board is replaced.
   - The main board is replaced.
   - The drum has been replaced and Vsg is out of specification.
   - Problems with toner supply have occurred and ID sensor check shows Vsg to be out of specification.

4. Grease the toner supply clutch with Mobil Temp 78 periodically to avoid noise and faulty operation.

- Transfer and Separation -

1. The corona wires should be cleaned with a dry cloth.
2. While the drum stay is out and the drum is installed on the drum guide, do not lift up the corona unit. (The corona casing will knock against the drum.)

- Cleaning -

1. When servicing, be careful not to damage the edge of the cleaning blade.
2. Do not touch the cleaning brush with your bare hands.
3. Before pulling out the cleaning unit, place a sheet of paper under it to catch falling toner.
4. Be careful not to damage the drum with the pick-off pawls when pulling out or inserting the cleaning unit.
5. When installing the toner collection bottle cover, be sure that the hooks of the transport plate are positioned underneath the bottle cover.
6. After replacing the cleaning solenoid, adjust the position of the cleaning solenoid.

- Fusing -

1. When removing the fusing unit, keep it in an up-right position so that the silicone oil does not spill.
2. After replacing the oil blade and oil supply pad, prime them with silicone oil.
3. Be careful not to damage the edge of the hot roller strippers or their tension springs.
4. Do not touch the fusing lamp with bare hands.
5. Be sure that the fusing lamp is not in contact with the inner surface of the hot roller.
6. Be sure that the oil end sensor contacts the bottom of the oil tank.
7. When the paper creasing occur, adjust the position of the entrance guide plate or fusing pressure.

- Paper Feed -

1. When replacing the friction pad, make sure that the friction pad is below the surface of the front lip of the pad holder.

2. When reinstalling the support bracket after cleaning the registration sensor, make sure that the bracket is properly engaged with the groove of the registration clutch stopper.

3. When replacing the friction pad, adjust the gap between the feed roller and the friction pad.

4. Do not touch the feed roller and the friction pad with oily hand.

- Document Feeder -

1. Do not bend the DF interface harness sharply to avoid damaging the fiber optics cables.

2. When servicing the document feeder, make sure that the main switch of the copier is off.

3. When installing or reinstalling the document feeder, make sure that the document feed is in the open position.

- Sorter -

1. The sorter has two types of bins; one type is used for odd numbered bins and the others used for even numbers. Be careful not to mix them up.

2. If bin operation is not smooth, lubricate the slot liners and transfer wheels using grease 501 or equivalent.

- Large Capacity Tray -

1. Unplug the power supply cord of the LCT before servicing it.

2. Before placing the large capacity tray in the cassette holders, make sure that the paper position feeler is set properly.

- Others -

1. When the main board is removed from the PCB plate, do not put it on a conductive surface. (This is to avoid discharging the battery for the user program memory.)

2. When installing a new main board, remove the RAM from the old main board. Reinstall the old RAM on the new main board, if the old RAM is not faulty.

3. When installing the PTL board, be sure that the drum stay has been already installed, if the drum stay is not installed the drum may be damaged by the PTL board.

4. When replacing a sensor, do not overtighten the screw.
   If the screw is overtightened, the sensor may be damage.

5. When taking out drum, be sure that the PTL board has already been removed, if the PTL board is not removed the drum may be damaged by the PTL board.

SPECIAL TOOLS AND LUBRICANTS

Part Number	Description	Q'ty
52159500	Docotor Gap Gauge	1
52059601	Switching Board	1
52059101	Gap Gauge - 0.1 mm	1
52059111	Omega Clamp	1
52069600	Sensor Checker	1
52039501	Grease (Shinetsu Silicone G-501)	1
54429101	Setting Powder	1
54429106	Drum Shoe	1
54479104	Shoe Adapter	1
54209504	Digital Thermometer	1
54209505	Digital Thermometer Probe	1
54209507	Digital Multimeter	1
54209550	Silicone Oil	1
54479078	Heat Resistant Grease (MT-78)	1
54209516	Test Chart OS-A3 (10pcs/set)	-
54209502	Test Chart OS-A3 (100pcs/set)	-
54429103	Launa Oil	1

1. OPTICS

- EXPOSURE GLASS REMOVAL -

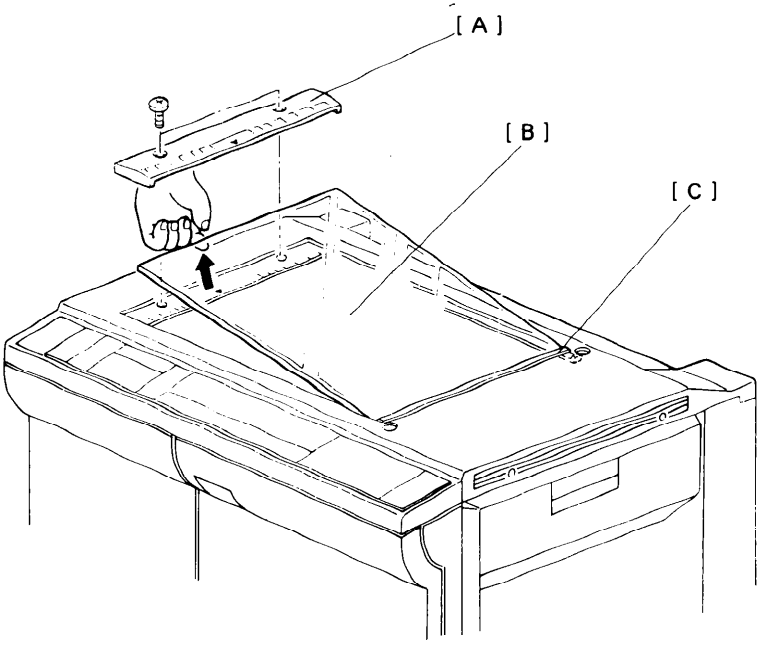

1. Take off the left scale [A] (2 short screws).
2. Grasp the left edge of the exposure glass [B] and lift it up slightly. Slide the other edge out from under the right glass holder [C]. Remove the exposure glass.

NOTE: - **When reinstalling the exposure glass:**

- **Make sure that the left edge of the glass is flush with the two tabs to the left of the scale plate.**
- **Make sure that the right glass holder firmly secures the exposure glass.**

- 2ND MIRROR REMOVAL -

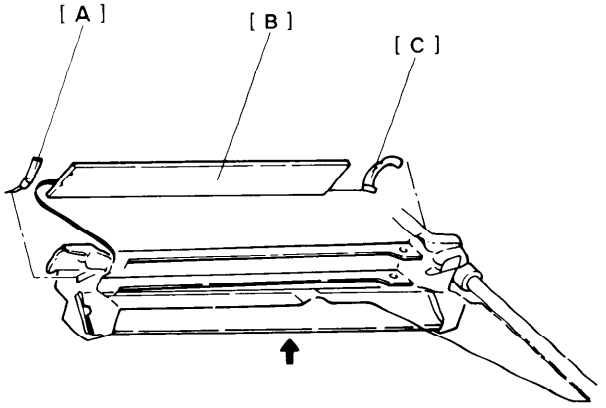

NOTE: This procedure is usually performed in order to make cleaning the 3rd mirror easier.

1. Turn off the main switch.
2. Remove the exposure glass. (See Exposure Glass Removal.)
3. Move the 1st scanner 2/3 to the right by pushing it at the rear.
4. Remove the front spring plate [A] by pressing the top of the spring and moving the plate towards the front of the machine.
5. Carefully pull the 2nd mirror [B] towards the front of the machine to remove the rear spring plate [C].
6. Lift the mirror out of the machine rear side first.
7. Clean mirrors with silicone cloth or water, and then dry.

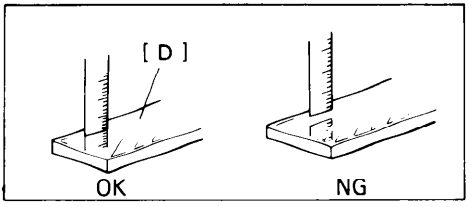

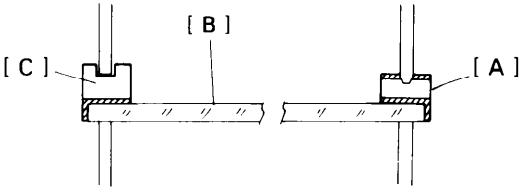

- To Reinstall -

8. Place the rear spring plate [A] in place and hold it with your finger.
9. Insert the 2nd mirror [B] into the front side plate cut out.
10. Insert the rear side of the mirror into the rear spring plate.
11. Locate the bottom of the front spring plate [C] and rotate the top of the spring into position.

NOTE: **Make sure that you install the mirrors with the reflecting surface [D] facing the lens as shown.**

- EXPOSURE LAMP REPLACEMENT -

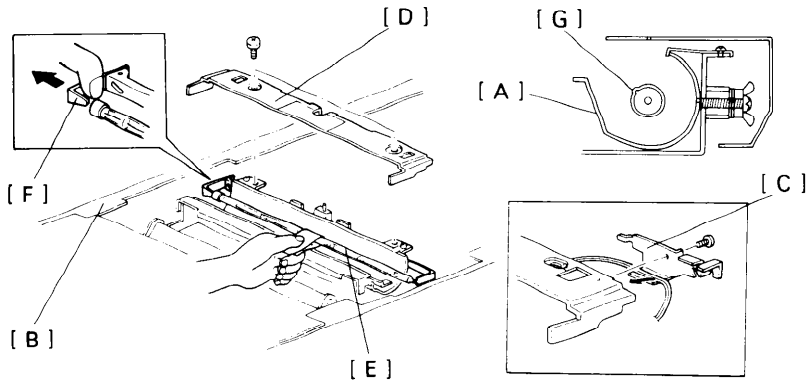

CAUTION: **Do not touch the reflector [A] or the new exposure lamp with your bare hands. Use a strip of paper as shown. (Finger oil marks on the lamp or reflectors will be affected by the heat and will result in discoloration.)**

1. Turn off the main switch.
2. Remove the exposure glass. (See Exposure Glass Removal.)
3. Move the first scanner to the position where the rear frame [B] is cut out.
4. Remove the front terminal cover [C] (1 screw) and the reflector cover [D] (2 screws) after unhooking the fiber optics cables.
5. Wrap a strip of paper around the exposure lamp [E] as shown.
6. Press the release lever [F] on the rear lamp terminal as shown and take out the lamp.
7. Install a new lamp using a strip of paper. (Set the front terminal first.)

   NOTE: **The blister [G] on the lamp must point towards the opening of the reflector as shown.**

8. Reassemble the 1st scanner.

   NOTE: **When reinstalling the front terminal cover, be careful not to damage the fiber optics cable.**

9. Check the exposure lamp position, the light intensity and auto ID sensor. (See Exposure Lamp Position, Light Intensity and Auto ID Sensor Adjustments.)

- AUTO ID FIBER CABLE REPLACEMENT -

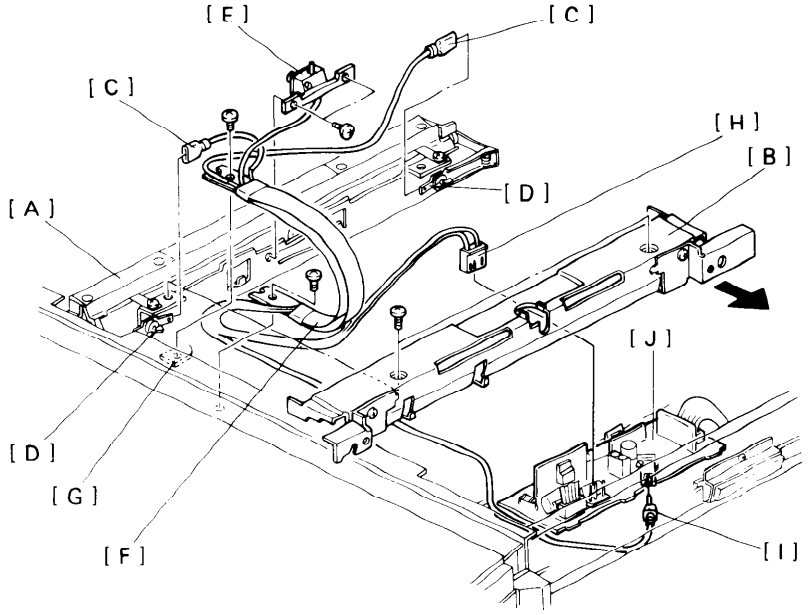

1. Turn off the main switch.
2. Remove the platen cover.
3. Remove the exposure glass (See Exposure Glass Removal.) and the upper cover (11 screws).
4. Position the first scanner [A] in the cut out for scanner removal.
5. Move the reflector cover [B] in the direction of the arrow (2 screws).

   NOTE: Unhook the fiber optics cable from the reflector cover.

6. Remove the exposure lamp leads [C] from the exposure lamp terminal [D].
7. Remove the auto ID sensor [E] (2 screws).
8. Remove the scanner harness [F] from the harness hold-down block [G] (1 screw).
9. Disconnect the exposure lamp harness [H] and the fiber optics cable [I] from the lamp regulator [J].
10. Replace the auto ID fiber optics cable.

- SCANNER DRIVE WIRE REPLACEMENT -

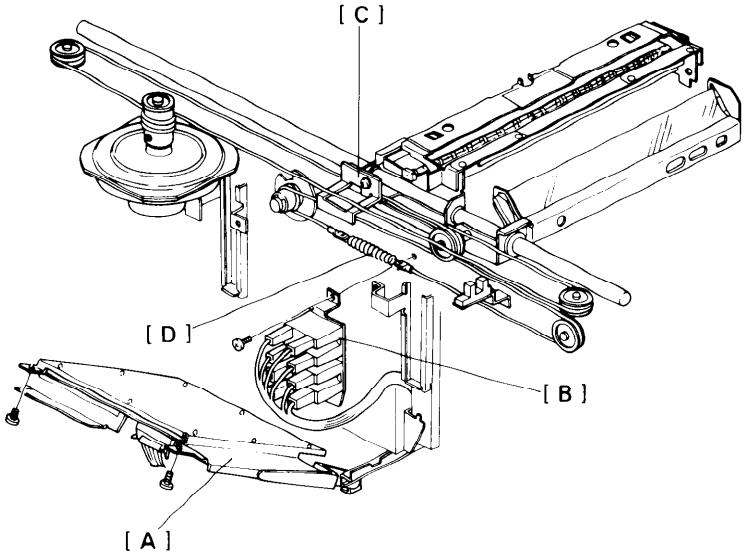

1. Turn off the main switch.
2. Remove the platen cover and the upper cover (11 screws).
3. Remove the left scale (2 short screws) and the exposure glass.
4. Remove the rear cover and lower the PCB plate [A] (2 screws each).
5. Remove the power relay bracket [B] (1 screw).
6. Loosen the wire clamp screw [C].
7. Unhook the tension spring [D] and remove the scanner drive wire.

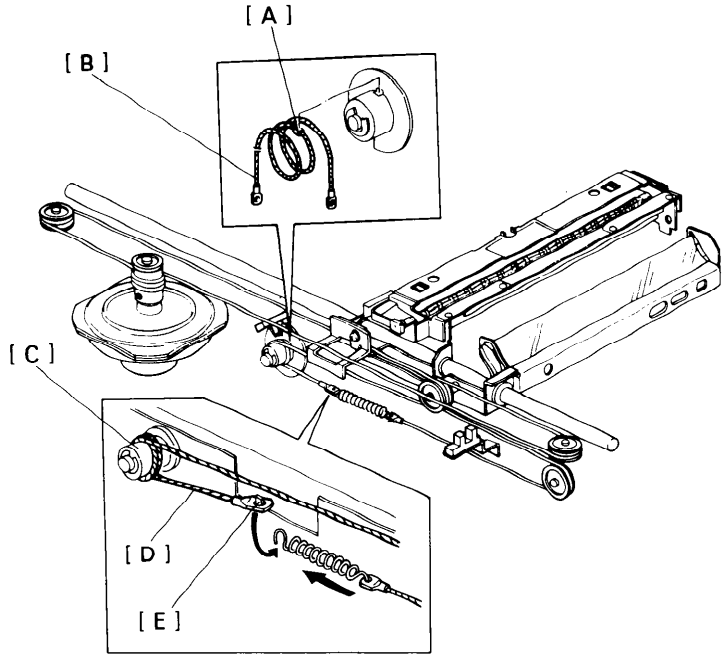

8. Position the bead [A] of the new wire [B] on the groove of the 2nd scanner drive pulley [C] and wrap the wire around the pulley with two and a half turns as shown.

9. Hook the short end [D] of the wire to the stopper [E] as shown.

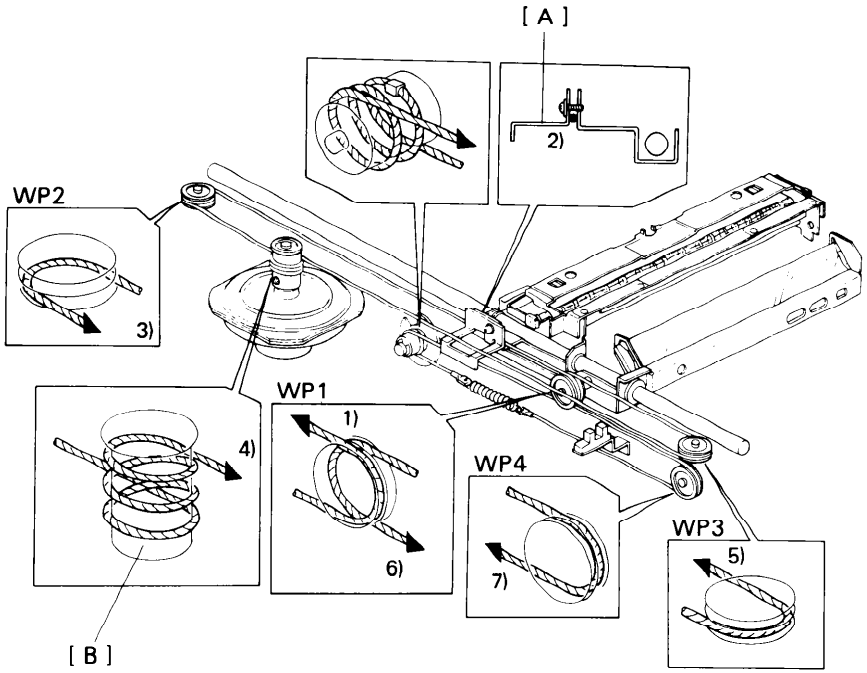

10. Run the scanner drive wire over the pulleys in the following order:

    1) Long end should be in the outer track (WP1).
    2) Lower side (wire clamp [A])
    3) Lower track (WP2)
    4) Three and a half turns from lower to upper (Scanner Drive Pulley [B]).
    5) Lower track (WP3).
    6) Inner track (WP1).
    7) Track (WP4).

11. Pull the ends of the wire together and join them with the tension spring. (See the preceding page.)

12. Rotate the scanner drive pulley and make sure that the scanner drive wire moves smoothly and that there is no overlapping around the scanner drive pulley.

    NOTE: Step 12 is important! If overlapping of the scanner drive wire occurs, then the trail edge of A3 (11" x 17") copies may be reduced.

- LENS DRIVE MOTOR REPLACEMENT -

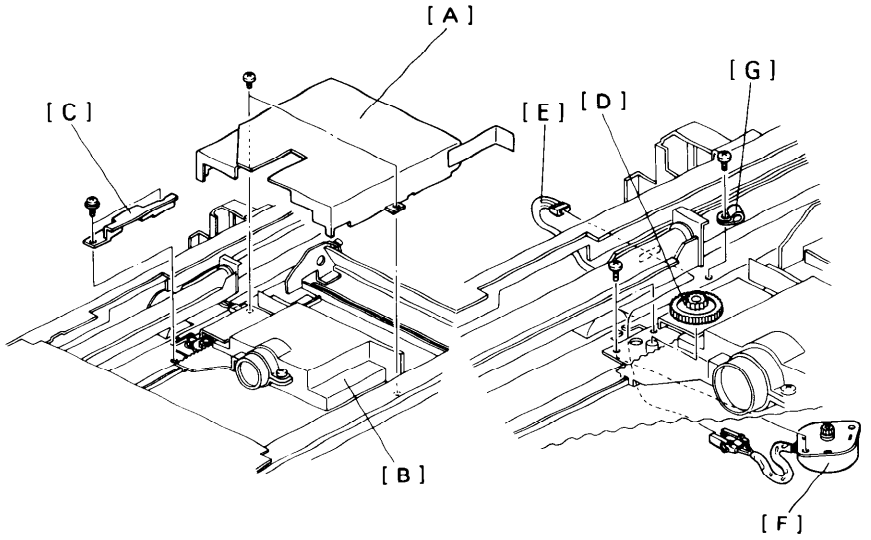

1. Turn off the main switch and remove the following parts:

   1) Development unit
   2) Charge corona unit (1 screw)
   3) Toner collection bottle
   4) Drum stay (1 screw and knob)
   5) Cleaning unit
   6) Drum flange and drum - should be covered with a shielding sleeve.

2. Remove the platen cover and the mounting studs.

3. Remove the left scale, the exposure glass, and the upper cover.

4. Move the scanner to the home position.

5. Remove the lens cover [A] (2 screws).

6. Move the lens unit [B] to a reduction position.

7. Remove the lens drive gear cover [C] (2 screws) and the idle gear [D].

8. Remove the rear cover and lower the PCB plate (2 screws each).

9. Disconnect the connector [E] (6p; black) of the lens drive motor [F] and remove the nylon clamp [G] (1 screw).

10. Replace the lens drive motor [F] from the front (2 screws).

- 2ND SCANNER DRIVE MOTOR REPLACEMENT -

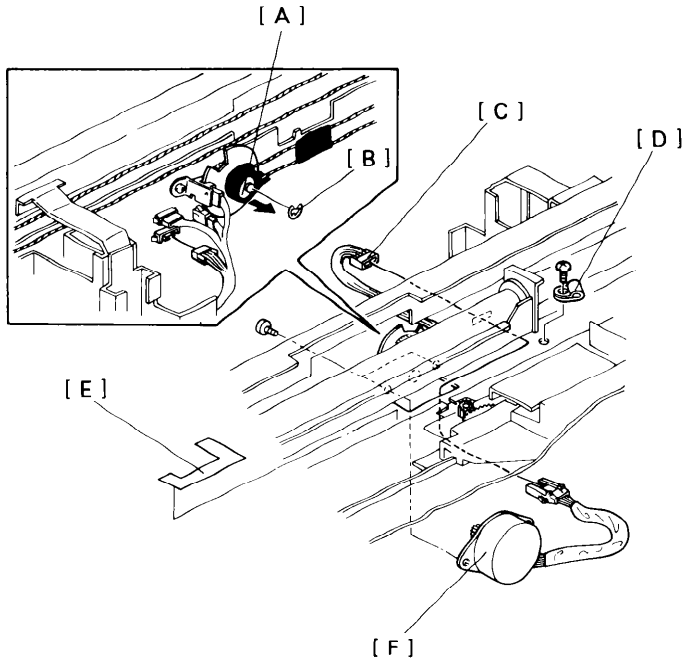

Perform Steps 1 through 6 of "Lens Drive Motor Replacement."

1. Tape the 2nd scanner drive pulley [A] and the scanner drive wire as shown to avoid the scanner wire coming off.
2. Remove the E-ring [B] from the 2nd scanner drive shaft and move the pulley slightly in the direction of the arrow.
3. Disconnect the 2nd scanner drive motor connector [C] (6p; white) and the nylon clamp [D] (1 screw).
4. Remove the mylar [E].
5. Replace the second scanner drive motor [F] from the front (2 screws).

- SCANNER DRIVE MOTOR REPLACEMENT -

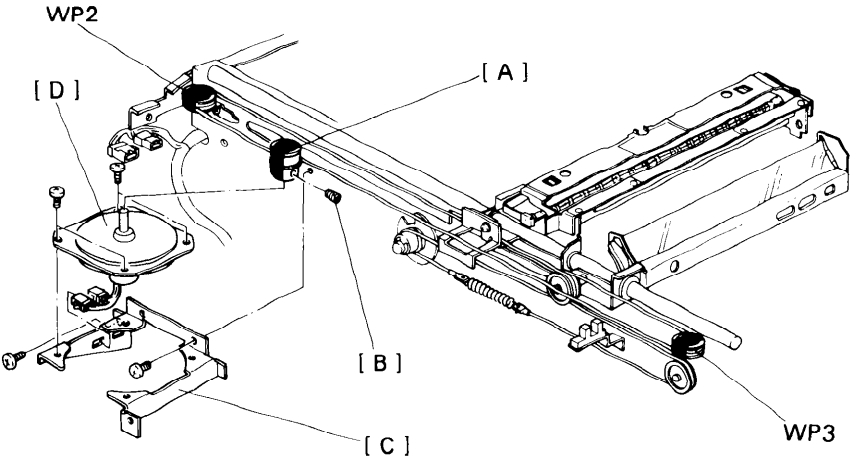

1. Turn off the main switch.
2. Remove the platen cover and the mounting studs.
3. Remove the left scale (2 short screws), the exposure glass, and the upper cover (9 screws).
4. Remove the rear cover 2 (screws).
5. Tape the scanner drive pulley [A] and pulleys WP2 and WP3 as shown to avoid the scanner wire coming off.
6. Loosen the scanner drive pulley (1 Allen screw [B]).
7. Remove the scanner drive pulley from the motor shaft.
8. Remove the motor bracket [C] (3 screws).
9. Remove the scanner drive motor [D] (4 screws and 2 connectors).
10. Install the new scanner drive motor and reassemble.

    NOTE: a) When installing the scanner drive motor, make sure the 3p connector is positioned on the left-hand side.

    b) When installing the scanner drive pulley on the motor shaft, the scanner drive pulley should be flush with the end of the motor shaft.

11. Examine the scanner drive wire for proper installation.

- LENS HOME POSITION SENSOR REPLACEMENT -

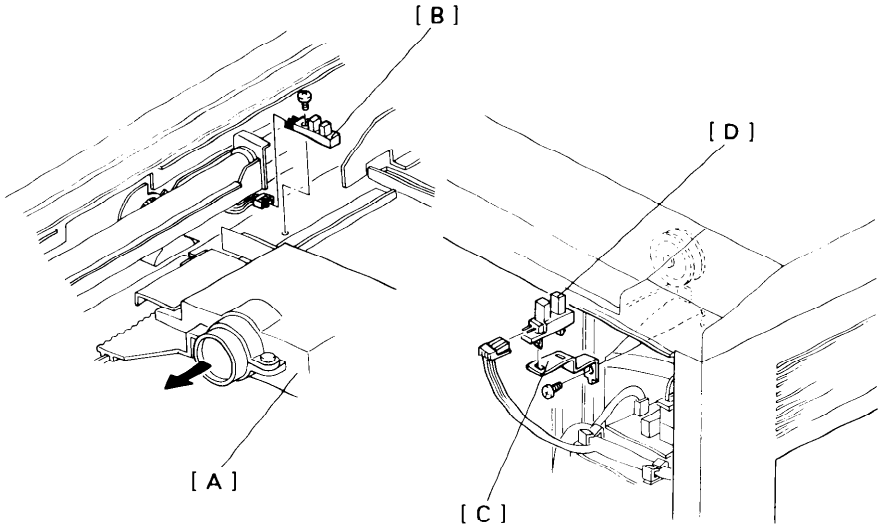

1. Turn off the main switch.
2. Remove the left scale and the exposure glass. (See "Exposure Glass Removal".)
3. Remove the lens cover (2 screws) and move the lens unit [A] in the direction of the arrow.
4. Replace the lens home position sensor [B] (1 screw and 1 connector).

   NOTE: Do not overtighten the screw when securing the new sensor.

- SCANNER HOME POSITION SENSOR REPLACEMENT -

1. Turn off the main switch.
2. Remove the rear cover (2 screws).
3. Remove the sensor bracket [C] (1 screw).
4. Replace the scanner home position sensor [D] (1 connector).

- 2ND SCANNER HOME POSITION SENSOR REPLACEMENT -

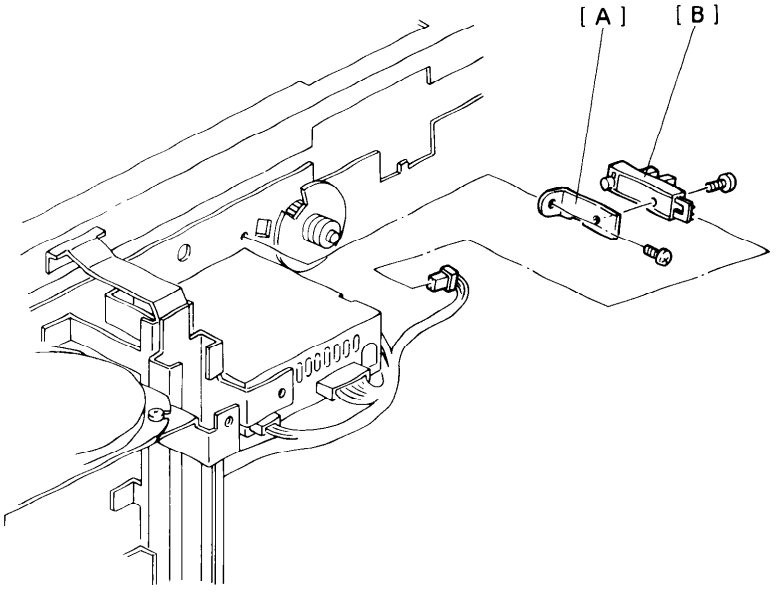

1. Turn off the main switch.
2. Remove the rear cover (2 screws).
3. Remove the sensor bracket [A] (1 screw).
4. Replace the 2nd scanner home position sensor [B] (1 screw and 1 connector).

   NOTE: Do not overtighten the screw when securing the new sensor.

- EXPOSURE LAMP POSITION ADJUSTMENT -

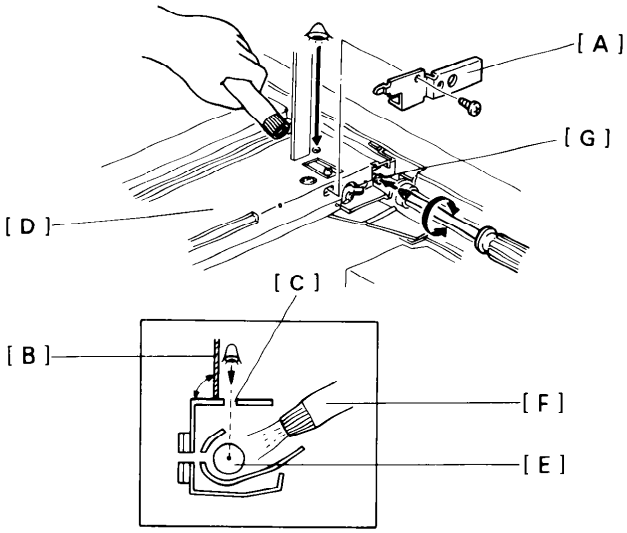

1. Turn off the main switch.
2. Remove the exposure glass. (See Exposure Glass Removal.)
3. Move the first scanner to the position where the rear frame is cut out.
4. Remove the front and rear terminal covers [A] (1 screw each).

- Horizontal Adjustment -

5. Position a scale [B] near the rear sight hole [C] of the reflector cover [D] to form a right angle for viewing alignment as shown.
6. View the lamp filament [E] through the sight hole in parallel with the scale. The filament should be directly beneath the sight hole.

   NOTE: If the filament cannot be seen easily, use a pen light [F] to illuminate the exposure lamp.

7. To correct the position of the filament turn the adjusting screw [G].
8. Repeat the above steps from 5 to 7 with the front sight hole.

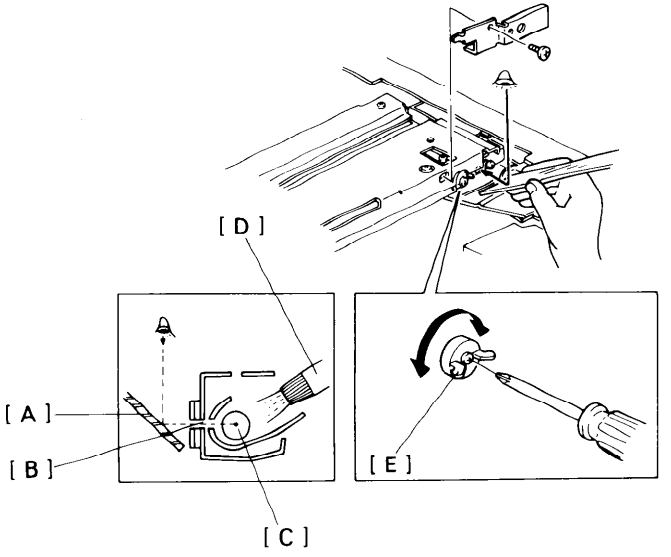

- Vertical Adjustment -

9. Position a mirror [A] beside the rear sight hole [B] at at 45° angle as shown.

   NOTE: If you do not have a mirror, remove and use the 2nd mirror.

10. View the lamp filament [C] through the sight hole reflected on the mirror. The filament should be level with the sight hole.

    NOTE: If the filament cannot be seen easily, use a pen light [D] to illuminate the exposure lamp.

11. To correct the position of the filament, turn the adjusting knob [E].

12. Repeat the above steps from 9 to 11 with the front sight hole.

2. DEVELOPMENT AND TONER SUPPLY

- DEVELOPER REPLACEMENT -

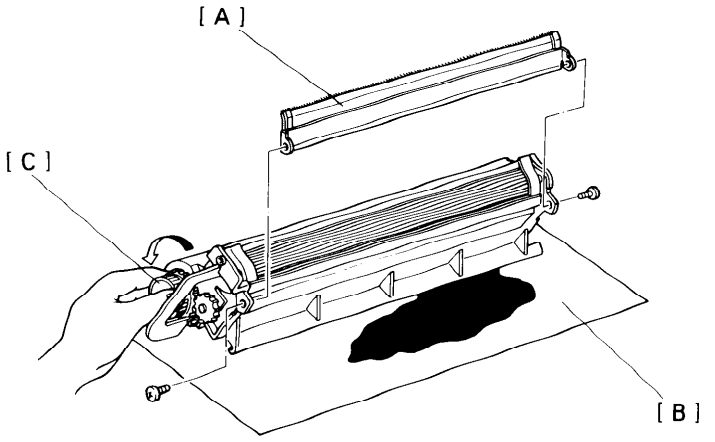

CAUTION:
- **Be careful not to bend the bias terminal.**
- **Be careful not to damage the upper brush seal.**
- **After removing used developer, clean the drive gears and end magnets.**

1. Take out the development unit and remove the toner tank (2 screws).
2. Remove the development brush cover [A] (2 screws) and clean it.
3. Set the development unit on a large sheet of paper [B] with the unit's inlet facing downward.
4. Turn the paddle roller knob [C] counterclockwise. The developer will fall out onto the paper.
5. Hold the unit at an angle and dump out the developer that has collected at the ends of the development unit.
6. Repeat the above steps until you have removed all of the developer.
7. Clean the development end magnets.
8. Turn the unit right-side up and pour in one bottle of developer (1 kg).
9. Put the used developer into the empty bottle or disposal bag and dispose it according to the local regulations.
10. Reassemble the toner tank (2 screws) and replace the development

- IMAGE DENSITY SENSOR/PTL REMOVAL -

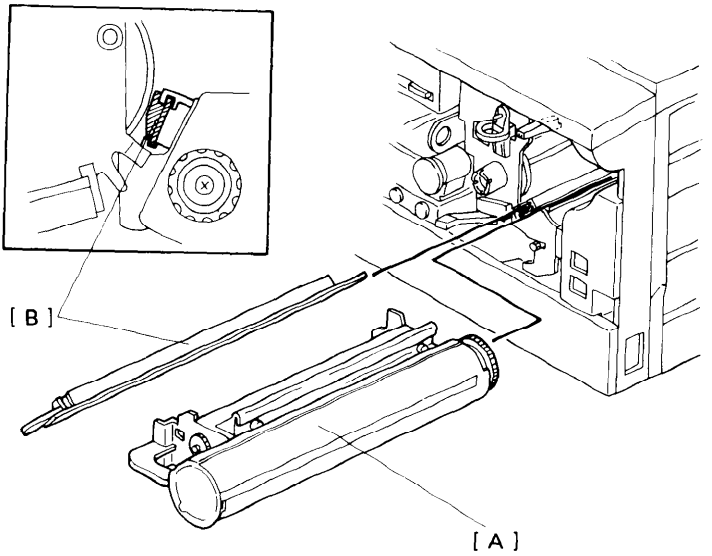

1. Open the right and left front doors.
2. Remove the development unit [A].
3. Slide out the image density sensor/PTL [B].
4. Clean and reinstall the ID sensor/PTL.

   NOTE: - **When sliding in the ID sensor/PTL board, make sure that the board is properly located on the rails as shown.**

5. Reinstall the development unit.

- COLOR TONER END SENSOR REPLACEMENT -

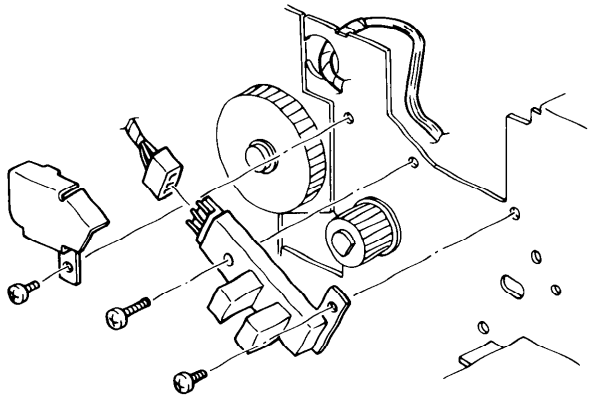

1. Turn off the main switch and remove the following parts:

   - Development unit
   - Charge corona unit (1 screw)
   - Drum stay (1 screw and 1 knob)
   - Cleaning unit
   - Drum flange and drum - should be covered with a shielding sleeve
   - Toner shield glass

2. Remove the connector cover [A] (1 screw).

3. Remove the sensor bracket [B] (1 screw).

4. Remove the color toner end sensor [C] (1 screw).

5. Reinstall the above parts.

   NOTE: Do not overtighten the screw when securing the new sensor.

- Color Toner Sensor Replacement -

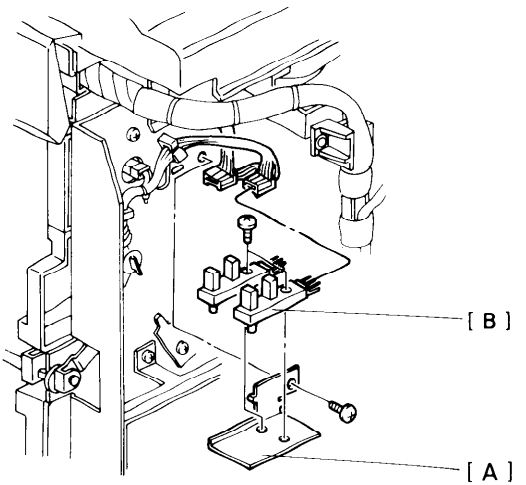

1. Remove the rear cover (2 screws).
2. Remove the color toner sensor bracket [A] (1 screw).
3. Replace the color toner sensors [B] (1 screw and 1 connector each).
4. Reassemble.

NOTE: Do not over tighten the screw when securing the new sensor.

- TONER SUPPLY CLUTCH LUBRICATION -

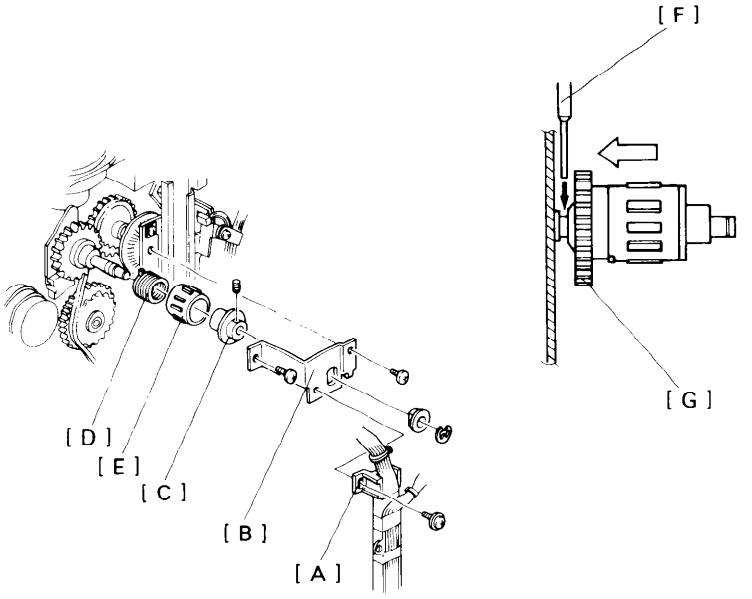

1. Turn off the main switch.
2. Remove the rear cover (2 screws).
3. Remove the screw securing the dc harness guide [A] to the toner supply clutch support bracket [B].
4. Remove the Toner Supply clutch support bracket.
5. Remove the clutch hub [C] (1 Allen screw), the spring [D], and the sleeve [E].
6. Clean the clutch hub, spring, and gear.
7. Apply the grease (Mobil Temp 78) inside the spring.

NOTE: - **Make sure that the right-angle projection is inside the notch of the sleeve.**

- **When securing the Allen screw of the clutch hub, insert a 0.1 mm gap gauge [F] between the E-ring and the toner supply roller drive gear [G] as shown in the figure.**

- IMAGE DENSITY SENSOR CHECK AND ADJUSTMENT -

NOTE: ID sensor adjustment is required in the following cases:

- **When the ID sensor/PTL board is replaced.**
- **When the main board is replaced.**
- **When the drum has been replaced and Vsg is out of standard.**
- **When a problem with toner supply occurs and checking the ID sensor shows that Vsg is not within specifications.**

ADJUSTMENT STANDARD: +4 ± 0.2V

METHOD A: Readout from the CPU

1. Clean the following parts:
   - Image density sensor
   - Optics (Mirrors, reflectors, lens, and toner shield glass)
   - Charge corona wire with dry cloth
   - Erase lamp unit
   - Quenching lamp
2. Place 2 or 3 sheets of paper (A3 or 11"x17") on the exposure glass and lower the platen cover.
3. Confirm that the main switch is off and turn on DIP SW No. 1-1 and No. 1-8 under the instruction cards on the operation panel.

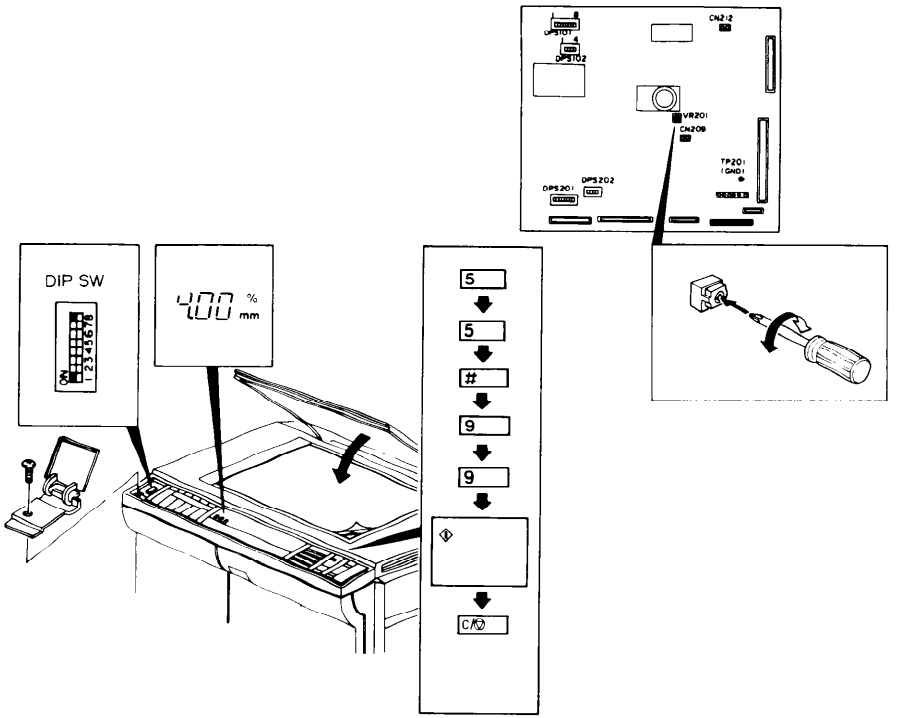

4. Turn on the main switch and allow it to warm up.
5. Enter "55" using the Number keys, then press the Enter key.
6. Enter "99" in the copy counter.
7. Press the Start key to show Vsg in the magnification indicator.
8. If Vsg is incorrect, remove the rear cover (2 screws).
9. While Vsg is displayed, adjust VR201 on the main board to +4 ± 0.2 volts.

   NOTE: VR201 clockwise => increase voltage
   VR201 counterclockwise => decrease voltage

10. Press the C/S key to stop the copier.
11. Turn off the main switch and turn off DIP SW No. 1-1 and No. 1-8.

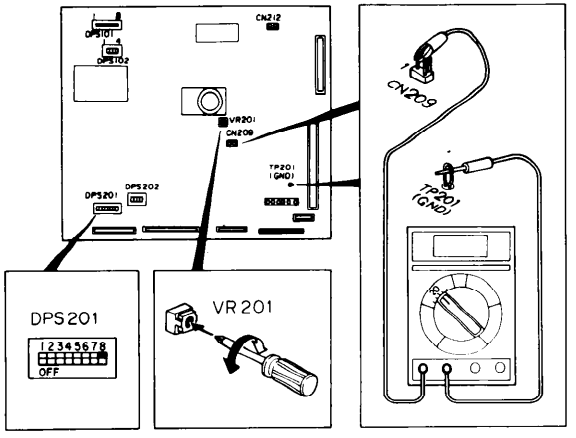

Method B: With a Digital Multimeter

Follow steps 1 through 3 of method A. (DIP SW NO.1-1 ON and NO.1-8 OFF)

1. Confirm that the main switch is off and turn on DIP SW 201-8 on the main board.

2. Hook up the multimeter leads as follows:
   Positive lead to pin 1 of CN209 on the main board
   Negative lead to TP201 (Ground) and select the 20-volt-dc setting.

   Note: Hook up the positive lead using a crocodile clip as shown.

3. Turn on the main switch and enter "99" in the copy counter, then press the start key.

4. Adjust VR201 to give a reading of +4 ± 0.2 volts.

5. Turn off the main switch; then, turn off Dip 201-8 and DIP SW No. 1-1.

- **DOCTOR GAP ADJUSTMENT** -

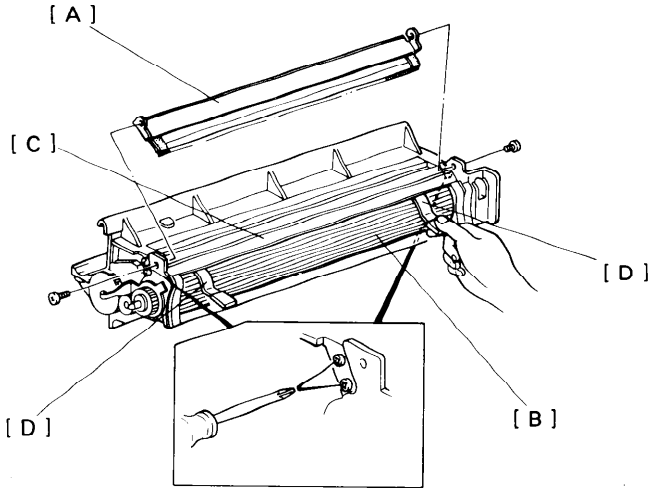

ADJUSTMENT STANDARD: **0.76 ± 0.1 mm (0.03" ± 0.004")**

NOTE: This adjustment is done only when the doctor blade has been either removed or replaced.

1. Remove the upper brush seal cover [A] (2 screws).
2. Turn the development roller sleeve [B] in the opposite direction of normal operation to drop the developer into the development tank.
3. Loosen the doctor plate [C] (4 screws).
4. Clean the development roller and insert the Doctor Gap gauges [D] (Part Number #52159500) near both ends of the development roller between the doctor blade.

NOTE: Ensure that there is no developer between the development unit and the gauses.

5. Press on the doctor plate and tighten the screws.
6. Pull the gauses lower sleeve and remove them.

CAUTION: Do not scratch the sleeve with the gauses.

7. Reassemble the development unit.

3. CLEANING

- CLEANING UNIT REMOVAL -

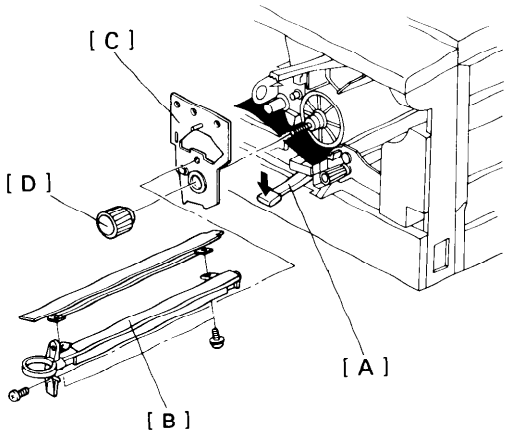

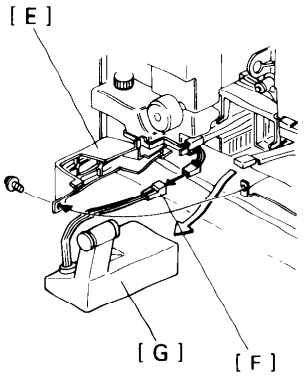

1. Remove the development unit and the PTL board.
2. Lower the T/S corona unit [A].
3. Remove the charge corona unit [B] (1 screw) and the drum stay [C] (1 knob [D] and 1 screw).

   NOTE: The drum stay knob has a reverse thread.
4. Swing the toner collection bottle cover [E] to the left (1 screw).
5. Disconnect the toner collection bottle sensor [F] (1 connector).
6. Remove the toner collection bottle [G].
7. Slide out the cleaning unit.

   CAUTION: Be sure the pick-off pawls are kept away from the drum when removing the cleaning unit or serious drum damage will result.

- Cleaning Blade Replacement -

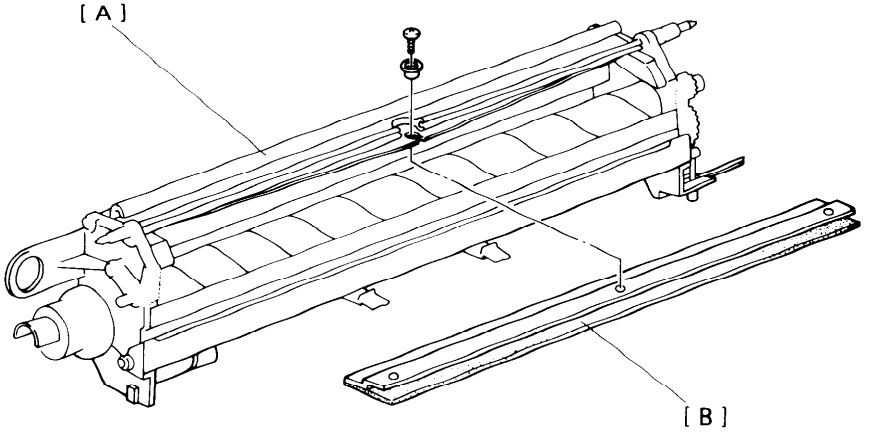

1. Take out the cleaning unit [A]. (See "Cleaning Unit Removal.")
2. Remove the cleaning blade [B] (1 screw and 1 bushing).
3. Install the new cleaning blade.

CAUTION: - Be careful not to touch the edge of the new blade.

- After installing the blade, make sure that the blade swivels.

- CLEANING BRUSH REPLACEMENT -

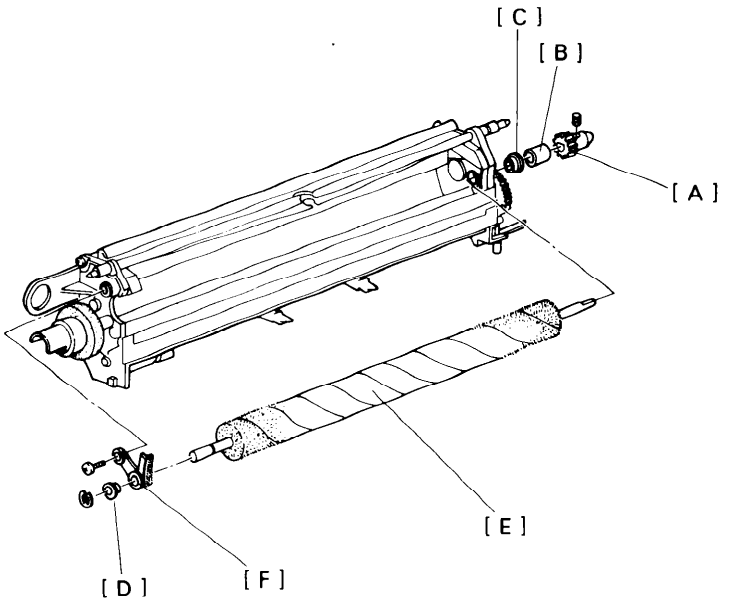

1. Remove the cleaning unit drive gear [A] (1 Allen screw), the collar [B], and the bushing [C] from the rear end of the cleaning brush shaft.
2. Remove the bushing [D] from the front end (1 E-ring).
3. Take out the cleaning brush [E] with the brush shaft holder [F] (1 screw).
4. Take the brush shaft holder off the front end.
5. Install the new cleaning brush and reassemble the unit.

CAUTION: Do not touch the new brush; handle only the shaft.

- **BLADE SCRAPER REPLACEMENT** -

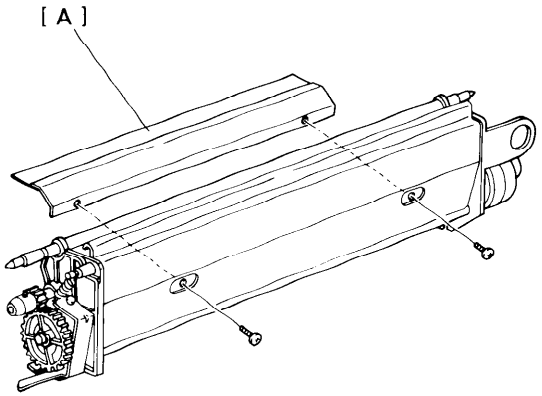

1. Remove the cleaning blade. (See Cleaning Blade Replacement.)
2. Remove the cleaning brush. (See Cleaning Blade Replacement.)
3. Take out the blade scraper [A] (2 screws).
4. Clean the inside of the cleaning unit, and install a new blade scraper.

LECTION COIL REPLACEMENT -

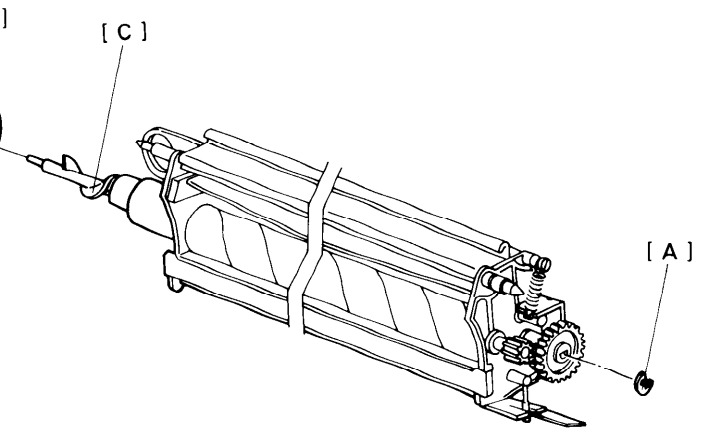

e the E-ring [A] from the toner collection coil shaft.

e the bottle joint seal [B].

ut the toner collection coil [C] from the front side of the g unit.

Toner will fall out when the coil is slid out of the cleaning unit.

- PICK-OFF PAWL REPLACEMENT -

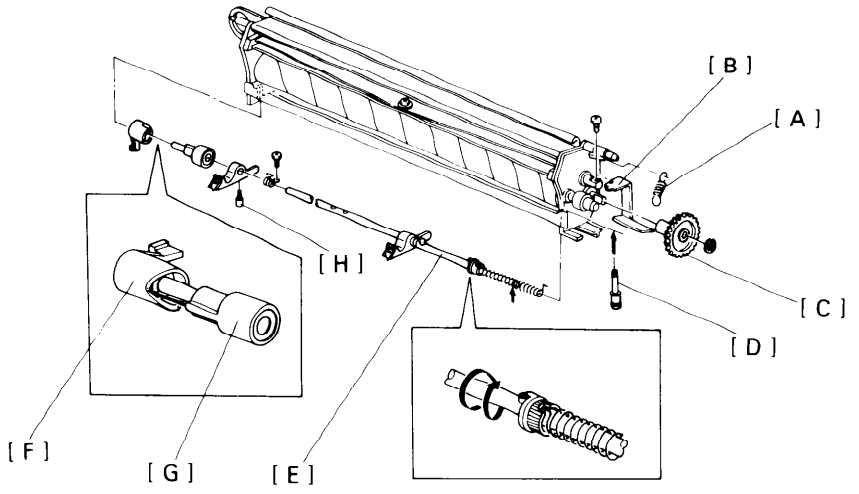

1. Remove the release spring [A] and the pressure lever [B] (1 screw).
2. Remove the collection coil gear [C] from the the toner collection coil shaft (1 E-ring).
3. Remove the pawl shaft pin [D] from the pawl shaft [E].
4. Push the pawl shaft to the rear and slide off the cam holder [F] from the front side plate.
5. Take out the whole pawl shaft assembly.
6. Slide off the cam holder and cam rider [G].
7. Slide off the front pick-off pawl [H] (1 positioning pin [I]) and the front pawl spring [J] (1 screw).
8. Slide off the rear pick-off pawl (1 positioning pin).

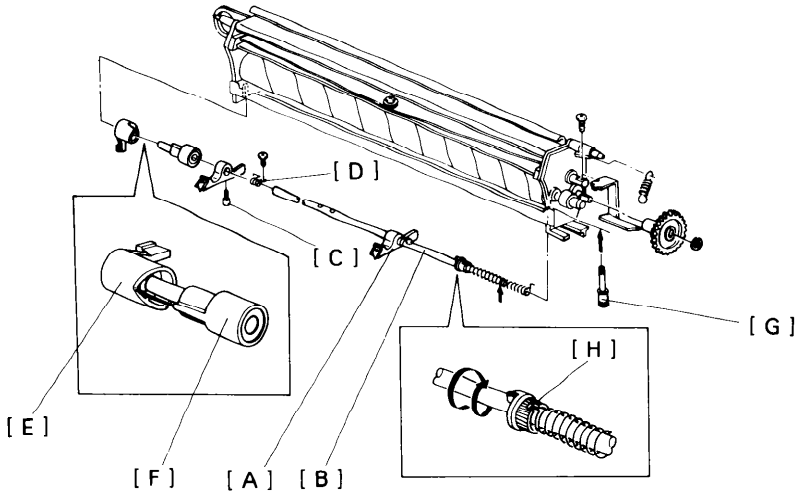

9. Set new pick-off pawls [A] on the shaft [B] and position them with the positioning pins [C] and pawl springs [D].

10. Assemble the pawl shaft assembly and set it on the cleaning unit sliding in the rear end of the shaft to the rear side plate.

    NOTE: - **When installing the cam holder [E] and the cam rider [F], align X with Y as shown in the figure.**

    - **Make sure that the spring end is in the small hole on the rear side plate.**

11. Install the pawl shaft pin [G].

12. Push the spring collar [H] to the rear and rotate it with one turn as shown in the figure. Then set the collar on the pin.

    NOTE: **Make sure that the end of the spring is correctly positioned in the groove of the collar.**

13. Reassemble.

- CLEANING PRESSURE ADJUSTMENT -

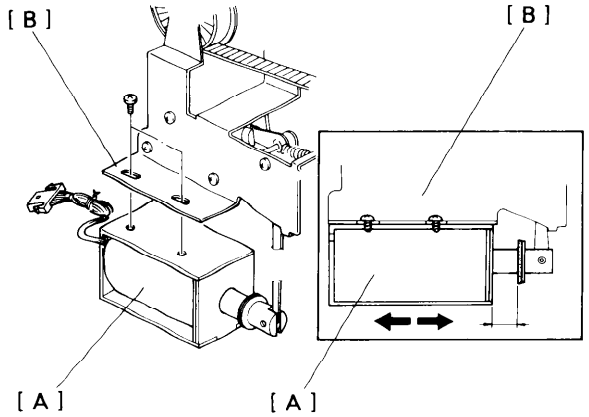

ADJUSTMENT STANDARD: A = 13 ± 0.5 mm (0.51" ± 0.02")

1. Turn off the main switch.
2. Remove the rear cover (2 screws).
3. Disconnect the fiber cables from the interface board if the DF is installed.
4. Lower the main PCB (2 screws).
5. Disconnect the AC harness from the T&S power pack and remove it (1 screw).
6. Lightly secure the cleaning solenoid [A] at the center of the bracket [B].
7. Position the cleaning solenoid to measuring the gap "A", then secure the cleaning solenoid.

   NOTE: When adjusting the gap "A", make sure that the solenoid plunger is far way to the right.

4. QUENCHING

- QUENCHING LAMP REPLACEMENT -

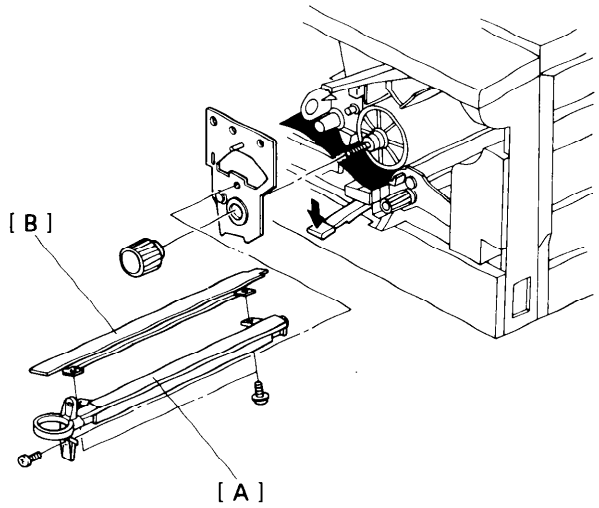

1. Remove the charge corona unit [A] (1 screw).
2. Remove the quenching lamp [B] from the charge corona unit (2 screws).

5. PAPER FEED

- MANUAL FEED TABLE REMOVAL -

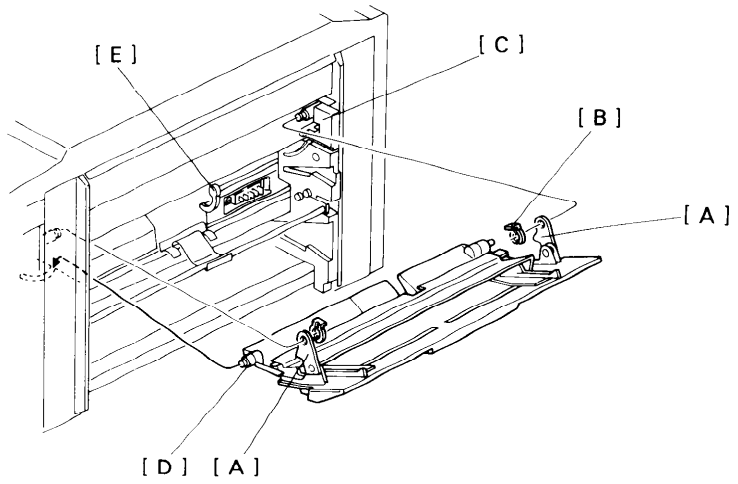

1. Remove the upper manual feed table hinges [A] from the copier (1 snap ring [B] each side).

   CAUTION: Be careful not to damage the manual feed sensor [C].

2. Slide the lower manual feed table hinge pins [D] down their respective grooves to remove the table.

   CAUTION: Be careful not to damage the paper end feeler [E].

LLERS AND FRICTION PAD REPLACEMENT -

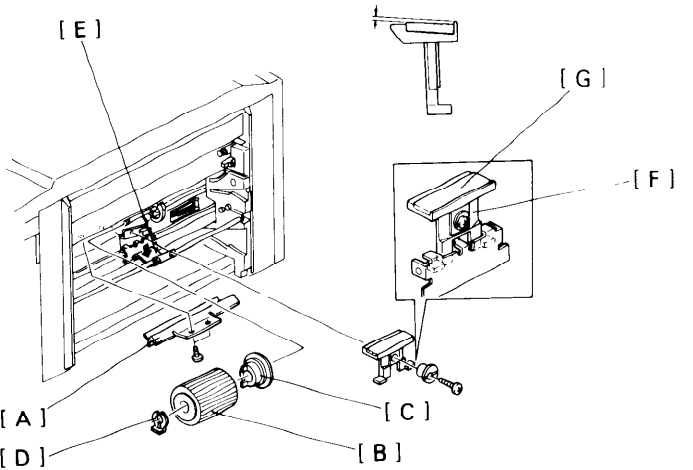

ve the manual feed table (See manual feed table removal).

ve the upper front guide plate [A] (2 screws).

- **The step 1 and 2 are for 1st feed station only.**

ve the feed roller [B] and hub [C] (1 snap ring [D]).

down on the cassette arm [E] and remove the friction pad holder screw and 1 cam roller).

the old friction pad [G] off and clean the surface of the on pad holder.

l the new friction pad.

se the friction pad holder swivel point with Mobil Temp 78.

tall the friction pad holder (1 screw and 1 cam roller) while

- REGISTRATION SENSOR REPLACEMENT -

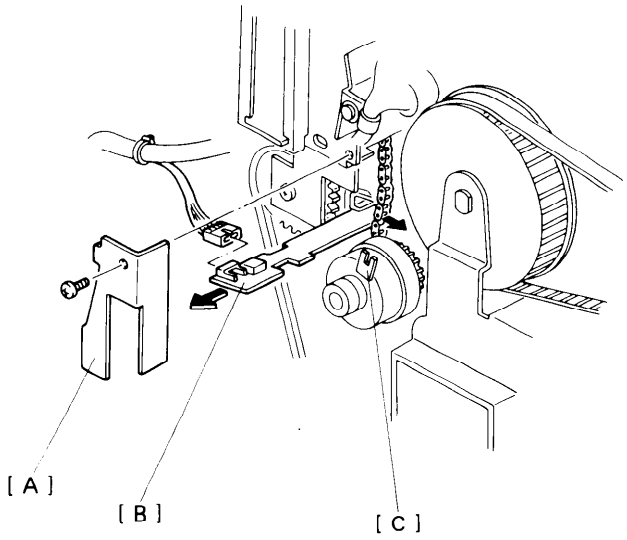

1. Remove the rear cover (2 screws) and lower the PCB plate (2 screws).
2. Remove the support bracket [A] (1 screw).
3. Move the main drive chain to the right of the PCB cut-out and slide out the registration sensor [B] (1 connector).

NOTE: - **When sliding in the registration sensor board, make sure that the board is properly located on the rails.**

- **When reinstalling the support bracket, make sure that the bracket is properly engaged with the groove of the registration clutch stopper [C].**
- **The support bracket is responsible for holding the registration sensor in place; so, make sure it is correctly positioned.**

- MANUAL FEED SENSOR REPLACEMENT -

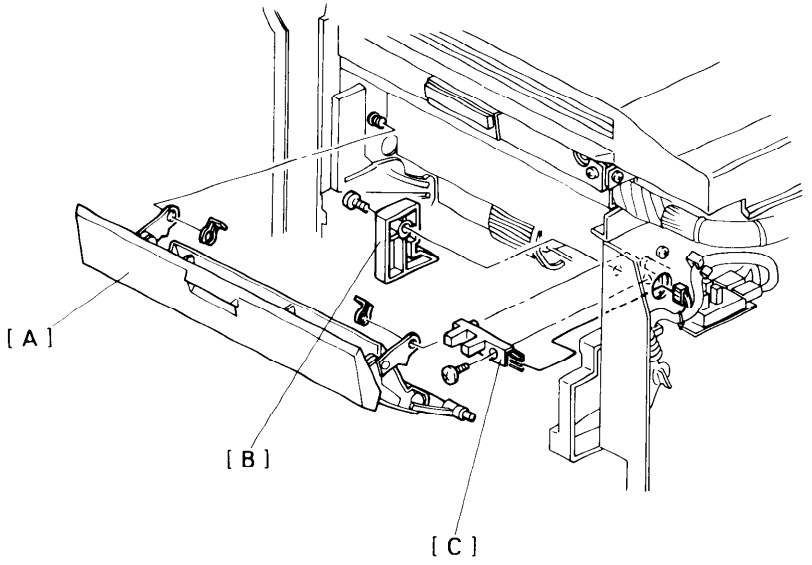

1. Remove the manual feed table [A]. (See Manual Feed Table Removal.)
2. Remove the rear cover (2 screws).
3. Remove the right rear cover (2 screws).
4. Remove the sensor cover [B] (1 screw).
5. Remove the manual feed sensor [C] (1 screw, 1 connector).
6. Install a new sensor.

   NOTE: Do not overtighten the screw when securing the new sensor.

- Paper End Sensor Replacement -

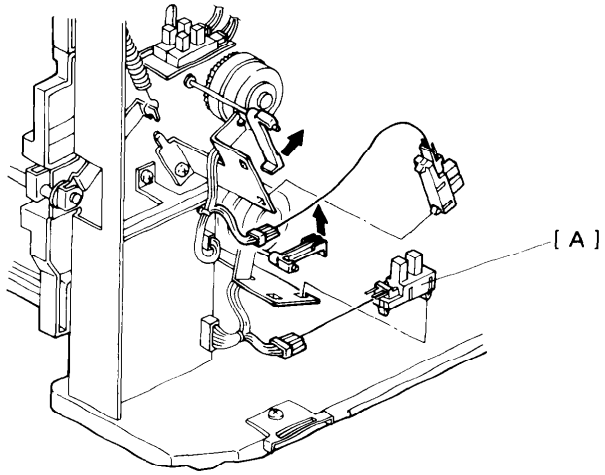

1. Remove the rear cover (2 screws).
2. Remove the paper end sensors [A] (1 connector each).

CAUTION: Be careful not to damage the paper end sensor actuator.

- PAPER SIZE SENSOR REPLACEMENT -

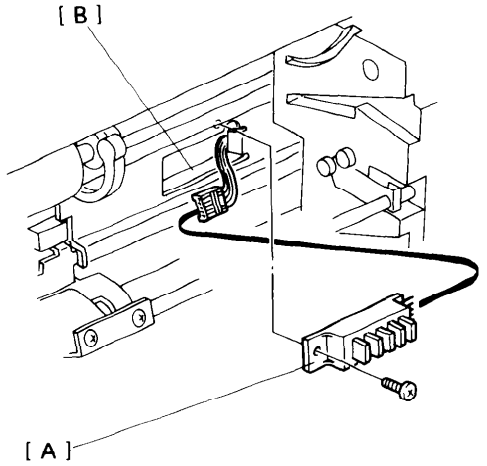

1. Remove the paper size sensor [A] from the sensor bracket [B] (1 screw and 1 connector).

2. Install a new sensor. Position the projection of the sensor in the hole of the sensor bracket.

   NOTE: Do not overtighten the screw when securing the new sensor.

- CASSETTE TRAY REMOVAL -

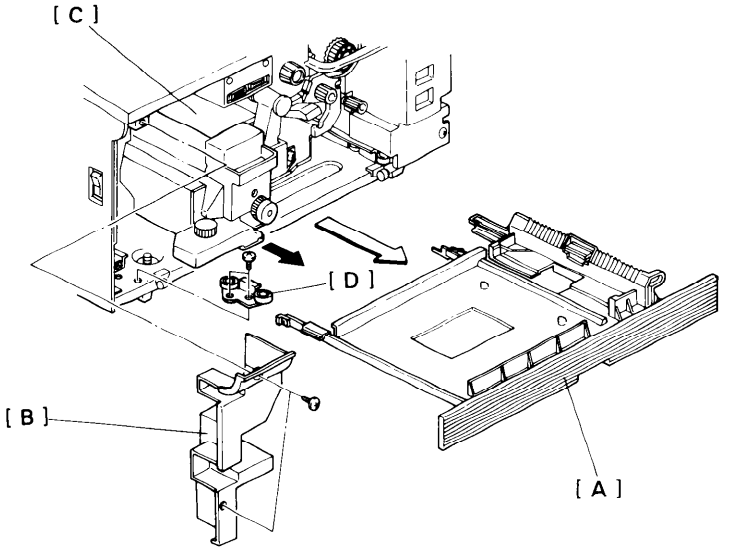

1. Open the left and right front doors and pull out the cassette tray [A].
2. Remove the left inner cover [B] (2 screws).
3. Pull the fusing unit [C] about one third of the way out.
4. Remove the left guide roller bracket [D] (2 screws).
5. Remove the cassette tray.

- PAPER END SENSOR REPLACEMENT (CASSETTE TRAY) -

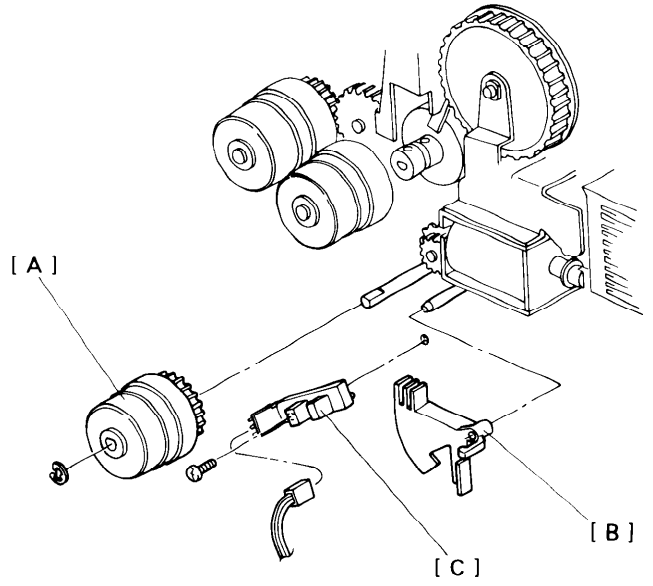

1. Remove the rear cover (2 screws).
2. Remove the PCB plate supporter (1 screw).
3. Remove the 3rd paper feed clutch [A] (1 E-ring).
4. Remove the paper end sensor actuator [B].
5. Replace the paper end sensor [C] (1 screw, 1 connector).

NOTE: When reinstalling the sensor, make sure that the actuator is properly aligned; do not overtighten the screw.

- CASSETTE TRAY SENSOR REPLACEMENT (CASSETTE TRAY) -

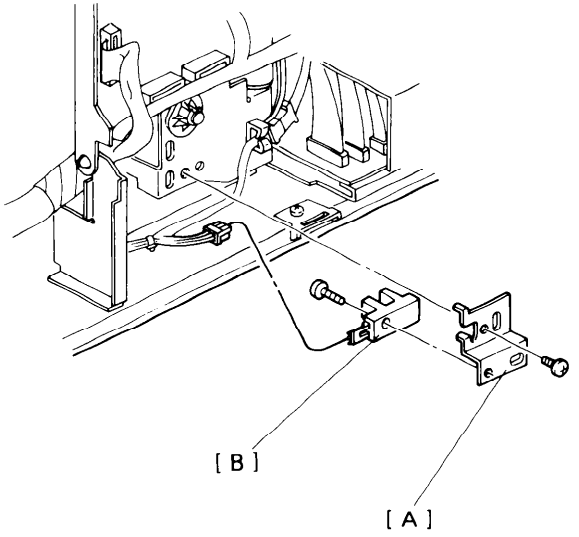

1. Remove the rear cover (2 screws).
2. Remove the cassette tray sensor bracket [A] as well as the sensor [B] (1 screw, 1 connector).
3. Replace the sensor (1 screw).

NOTE: Do not overtighten the screw when securing the new sensor.

- PAPER SIZE SENSOR REPLACEMENT (CASSETTE TRAY) -

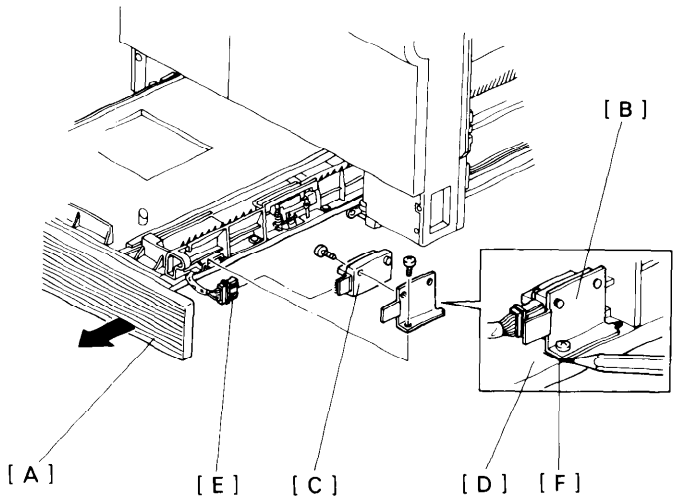

1. Pull out the cassette tray [A].
2. After marking the position of the paper size sensor bracket [B] remove it as well as the sensor [C] (1 screw) on the frame [D].
3. Disconnect the paper size sensor connector [E].
4. Replace the sensor (1 screw).

   NOTE: - **Do not overtighten the screw when securing the sensor.**

   - **Be sure to align the sensor bracket with the marked line [F].**

- PAPER SIZE SENSOR HARNESS REMOVAL (CASSETTE TRAY) -

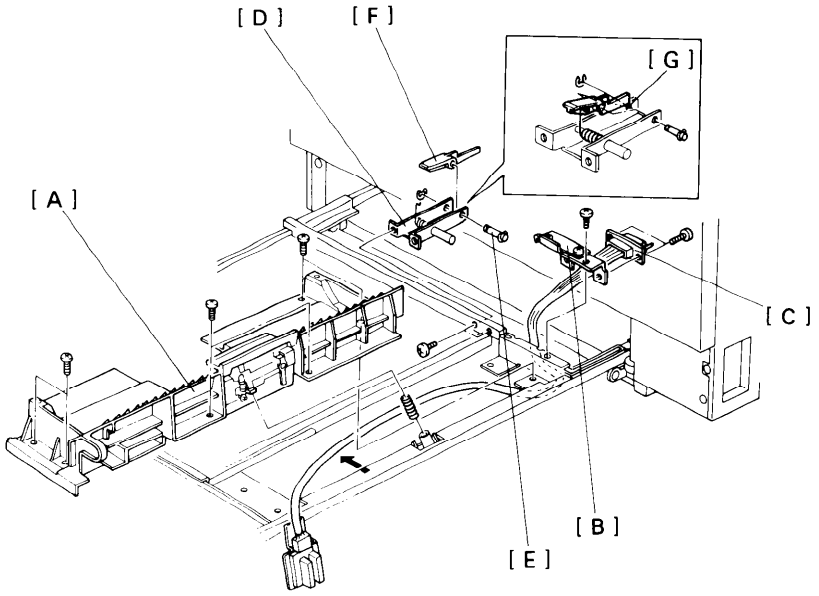

1. Pull out the cassette tray.
2. Remove the paper size sensor bracket and disconnect the paper size sensor connector. (See "Paper Size Sensor Replacement.")
3. Remove the paper guide plate [A] (6 screws).
4. Remove the terminal bracket [B] (1 screw).
5. Remove the terminal [C] (1 screw).

- CASSETTE TRAY FEELER REMOVAL -

1. Pull out the cassette tray.
2. Remove the sensor feeler bracket [D]
3. Remove the sensor feeler pin [E] (1 E-ring) and the sensor feeler [F].

NOTE: When reinstalling the sensor feeler, make sure that the spring [G] is properly positioned as shown.

- Feed Roller Replacement (Cassette Tray) -

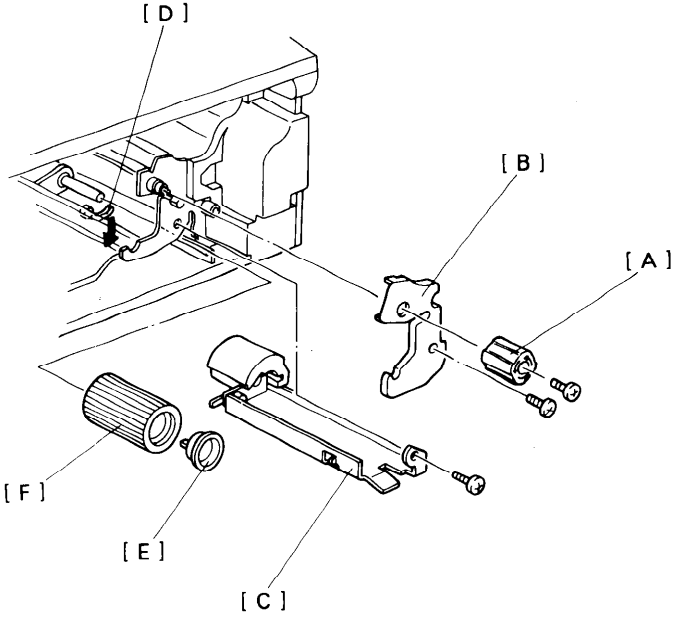

1. Open the left and right doors and pull out the cassette tray.
2. Remove the registration roller knob [A] and the small inner cover [B] (1 screw each).
3. Remove the balance wheel bracket [C] (1 screw).
4. While pressing down the paper end sensor feeler [D], remove the hub [E] and the feed roller [F].

- Friction Pad Replacement (Cassette Tray) -

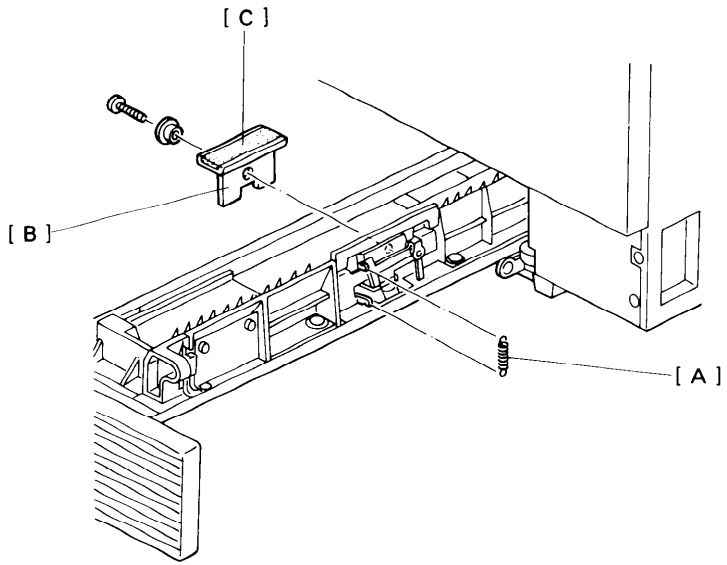

1. Pull out the cassette tray.
2. Unhook the pressure spring [A].
3. Remove the friction pad holder [B] (1 screw, 1 collar washer).
4. Strip off the old friction pad [C] and clean the surface of the friction pad holder.
5. Install the new friction pad.

NOTE: - **Do not touch the surface of the new friction pad with oily fingers.**
- **Check that the friction pad is 0.05 to 0.35 millimeters below the surface of the front lip.**

- LIFT UNIT REMOVAL -

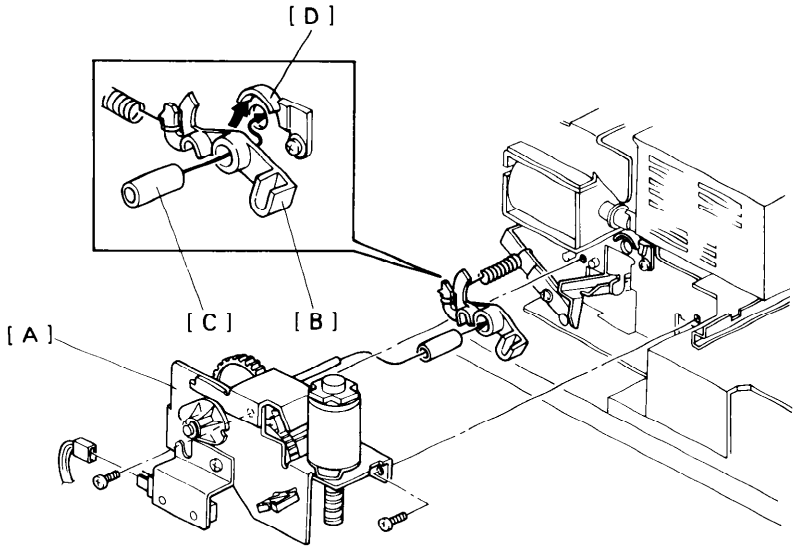

1. Pull out the cassette tray and remove the rear cover (2 screws).
2. Disconnect lift sensor, set sensor, and the lift motor connectors.
3. Remove the lift unit [A] (2 screws).

NOTE: - **When reinstalling the lift motor unit, first install the tray lift actuator lever [B] and the collar [C] on the rear guide plate if they were removed.**

Be sure that the tray lift actuator lever is positioned behind the tray lift guide [D].

- LIFT MOTOR REPLACEMENT -

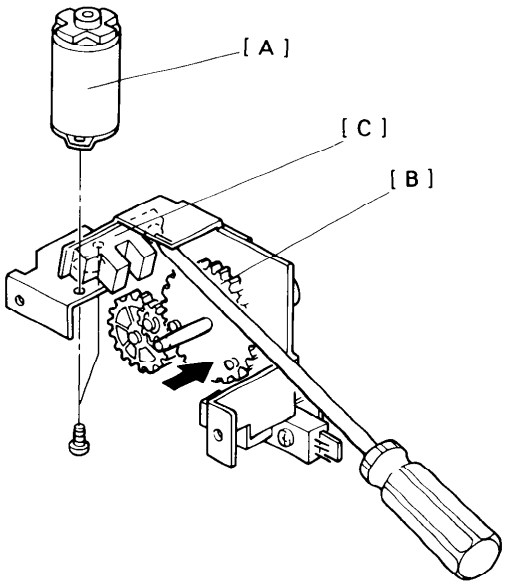

1. Remove the lift unit (See "Lift Unit Removal".)
2. Remove the lift motor [A] (2 screws).

- LIFT SENSOR REPLACEMENT -

1. Remove the lift unit (See "Lift Unit Removal".)
2. While pushing the release gear [B] in the direction of the arrow, remove the lift sensor [C] (1 screw).

   NOTE: Do not overtighten the screw when securing the new sensor.

- REGISTRATION CLUTCH ADJUSTMENT -

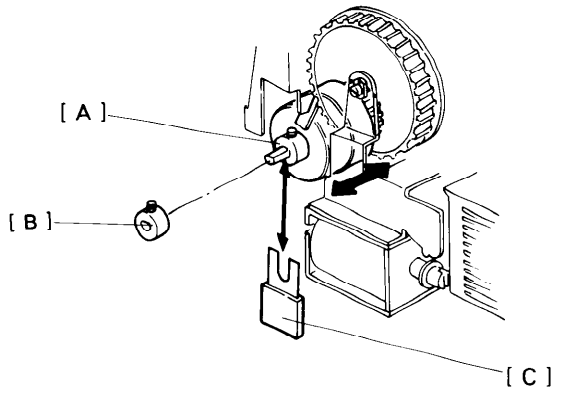

ADJUSTMENT STANDARD: 0.1 mm (0.004")

1. Remove the rear cover (2 screws).
2. Take the adjusting collar [A] off from the registration roller shaft (1 Allen screw).
3. Loosen the screw in the lock collar [B] on the clutch which is to be adjusted (1 Allen screw).
4. Place the adjusting collar next to the lock collar on the clutch shaft.
5. Position a 0.1 mm gap gauge [C] (Part number #52059101) between the two collars.
6. Push the collars and the thickness gauge back until the clutch presses against the rear plate. Tighten the Allen screw in the adjusting collar.
7. Remove the thickness gauge and move the lock collar against the adjusting collar. Tighten the Allen screw in the lock collar.

- Feed Roller/Friction Pad Gap Adjustment - (1st and 2nd Feed Station)

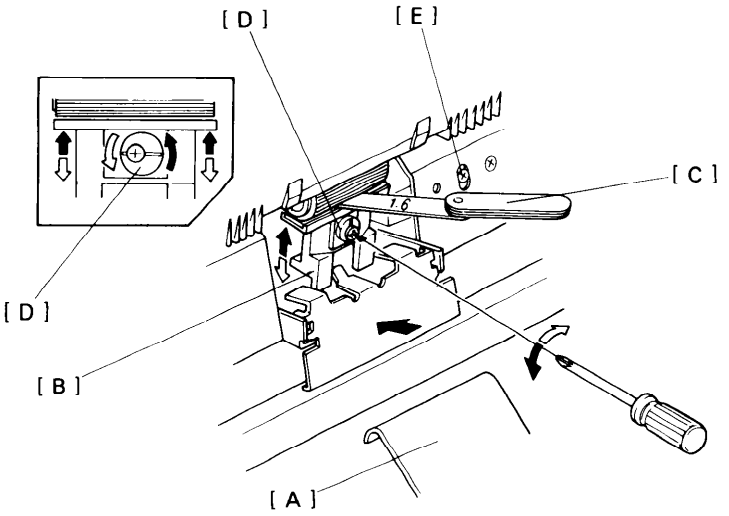

NOTE: This procedure is required when replacing the friction pad.

ADJUSTMENT STANDARD: 1.6 ± 0.3 mm (0.06" ± 0.01")

1. Remove the pressure arm [A] (2 screws).
2. Push down the friction pad holder [B] to make the gap between the feed roller and the pad.
3. Measure the gap between the feed roller and the pad using a gap guage [C].
4. If the gap is not within the adjustment standard, adjust the gap by turning the cam roller [D].

   Clockwise: The gap is decreased.
   Counterclockwise: The gap is increased.

   NOTE: Do not adjust the flat screws [E] because they are factory pre-set.

- FEED ROLLER/FRICTION PAD GAP ADJUSTMENT (CASSETTE TRAY) -

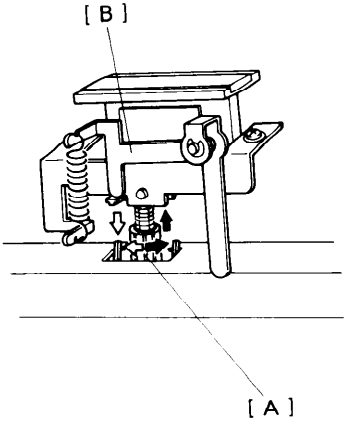

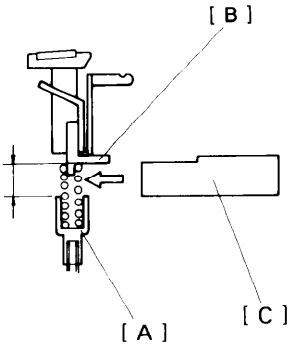

ADJUSTMENT STANDARD: 7.3 ± 0.3 mm (0.29" ± 0.01")

1. Remove the 1st and 2nd cassettes or large capacity tray if it is installed.
2. Confirm that the cassette tray (3rd cassette) is securely inserted into the machine.
3. Measure the gap between the friction adjusting screw [A] and the friction pad guide [B] using a gap guide [C].
4. If the gap is not within the adjustment standard, adjust the gap by turning the friction adjusting screw.

Clockwise:	The gap is increased.
Counterclockwise:	The gap is decreased.

- Friction Pad Holder Position Adjustment (Cassette Tray) -

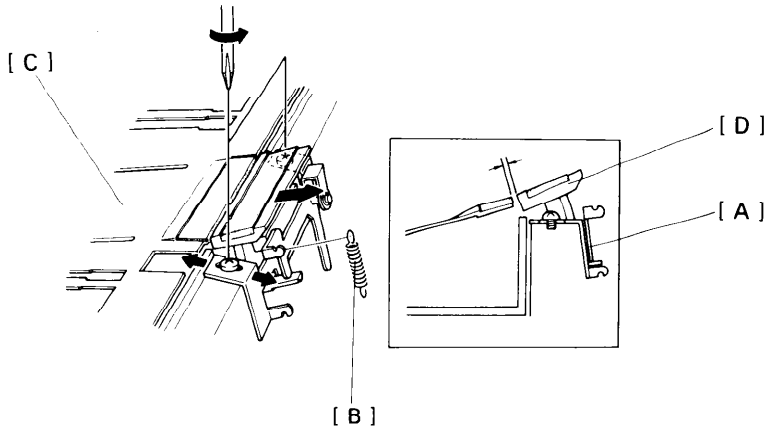

ADJUSTMENT STANDARD: 1.5 ± 0.5 mm (0.06″ ± 0.02″)

NOTE: After reinstalling the friction pad bracket [A], this adjustment is necessary to prevent wrinkling at the leading edge of the paper.

1. Remove the pressure spring [B].
2. Temporarily secure the friction pad bracket.
3. Place the empty cassette into the cassette tray.
4. Lift and position the bottom plate [C] as shown in the figure. Push the friction pad holder [D] in the direction of the arrow.
5. Adjust the position of the friction pad bracket so that the gap is within the standard.
6. Tighten the securing screw.

NOTE: The lead edge of the paper may bend if the gap is too narrow. A multifeed may occur if the gap is too wide.

- HORIZONTAL REGISTRATION ADJUSTMENT (CASSETTE TRAY) -

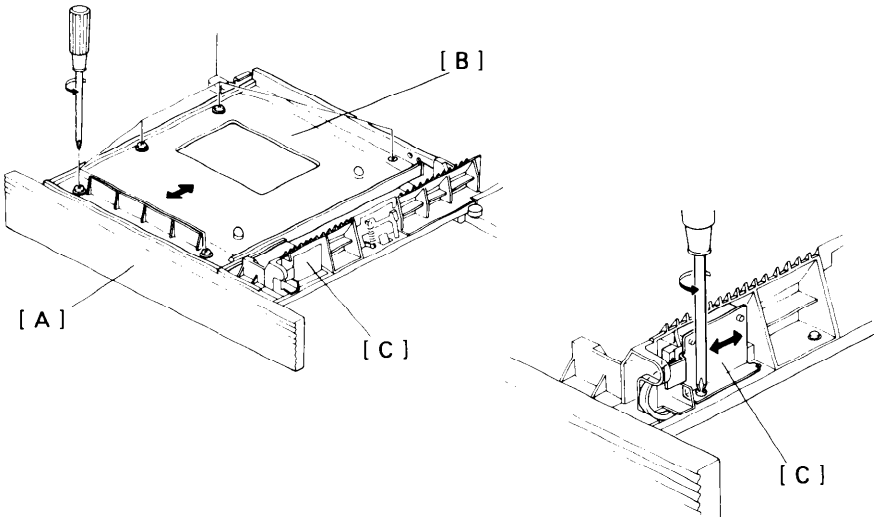

ADJUSTMENT STANDARD: 0 ± 2 mm (0 ± 0.08")

1. Pull out the cassette tray [A].
2. Remove the cassette.
3. Loosen the 5 screws securing the bottom plate [B] to the cassette tray and reposition the bottom plate. Retighten the screws.
4. Check the registration by making a copy. If the registration is not within specifications perform step 3 again.
5. After adjusting the bottom plate position, perform the following:
   a) Place each sized cassette into the cassette tray and close the tray.
   b) Confirm that the Paper Size indicator lights and correctly indicates the paper size of the cassette inserted in the tray.
   c) If the indication is not correct, adjust the position of the paper size sensor bracket [C].
   d) Continue this procedure until all cassettes are indicated properly.

6. FUSING

- FUSING UNIT REMOVAL -

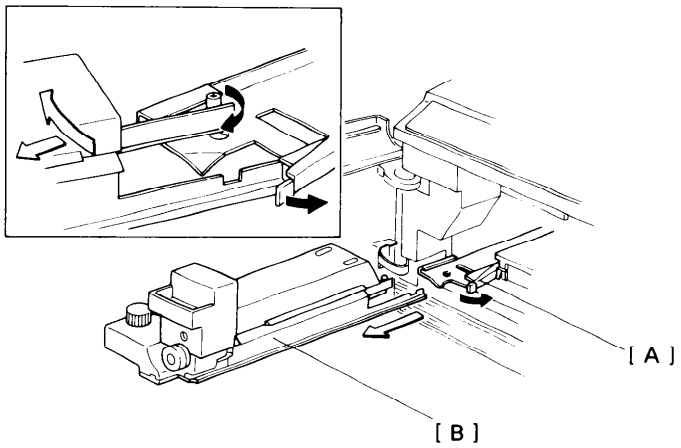

1. Open the left and right front doors.
2. Push the fusing unit release lever [A] to the right.
3. Pull out the fusing unit [B] until it is fully extended.
4. Push the fusing unit release lever to the right, move the fusing unit to the left to disengage the stopper pin [C], and remove the unit from the copier.

NOTE: Keep the fusing unit in an upright position so that silicone oil does not spill.

- OIL BLADE REPLACEMENT -

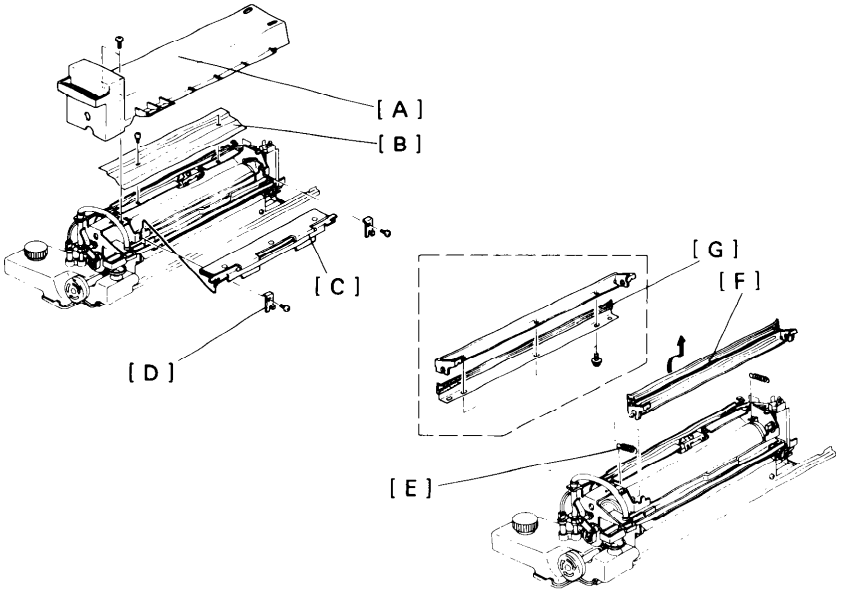

1. Remove the fusing unit. (See Fusing Unit Removal.)
2. Remove the fusing unit cover [A] (2 screws).
3. Remove the pressure plate [B] (2 screws).
4. Remove the oil supply pad [C] (2 screws and 2 clamp plates [D]).
5. Unhook the two tension springs [E].
6. Turn and remove the oil blade assembly [F].
7. Remove all screws (3) from the oil blade assembly and remove the blade [G].

- Hot Roller Replacement -

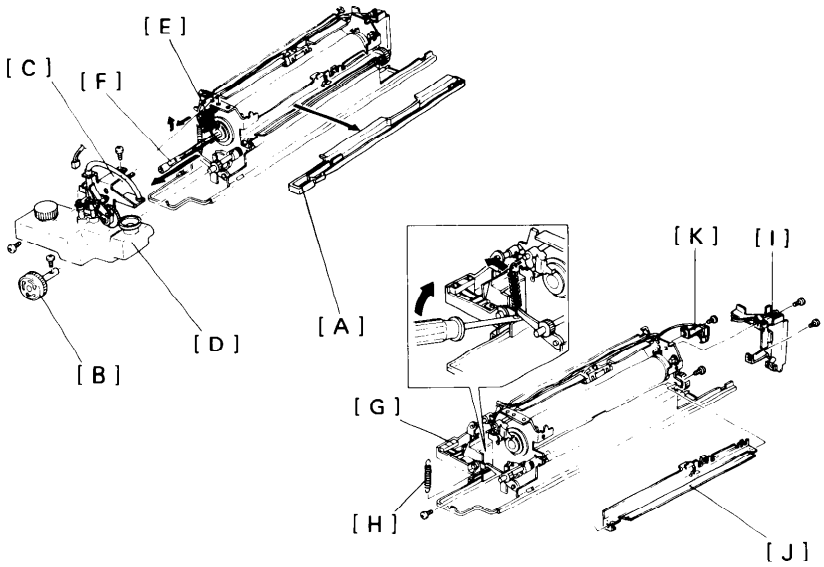

1. Remove the oil blade. (See "Oil Blade Replacement.")
2. Remove any excess oil from area surrounding the oil sump [A] and remove the oil sump.
3. Remove the fusing unit knob [B] (1 screw).
4. Remove the oil pump mechanism [C] with the oil tank [D] (2 screws and 1 connector).
5. Rotate the front lamp terminal [E] and remove the fusing lamp [F].

   CAUTION: Do not touch the fusing lamp with oily fingers because oil marks may damage the lamp.
6. Swing down the fusing exit assembly [G] and unhook the pressure springs [H].
7. Remove the harness support bracket [I] (2 screws and 2 hooks).
8. Remove the thermistor bracket [J] (2 screws).
9. Remove the rear lamp terminal [K] (1 screw and 1 hook).

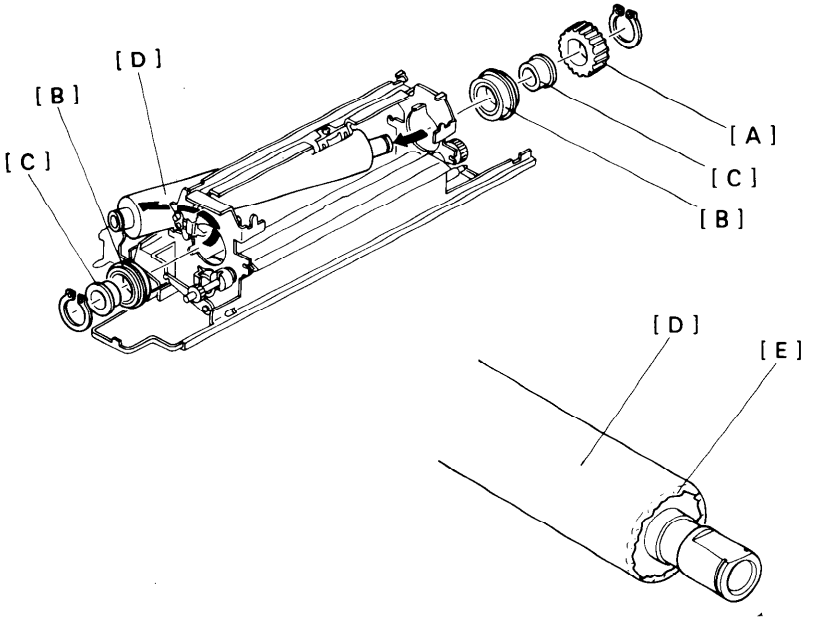

10. Remove the hot roller gear [A], bearings [B], and the collars [C] from both ends of the hot roller [D] (1 C-ring each).

11. Slide the hot roller slightly to the rear and remove the hot roller as shown.

12. Tear the protective paper [E] from the ends of a new hot roller and install it.

13. After the new hot roller is installed, remove the protective paper.

NOTE: When reinstalling the fusing lamp, make sure it does not touch the inside of the hot roller.

- PRESSURE ROLLER REPLACEMENT -

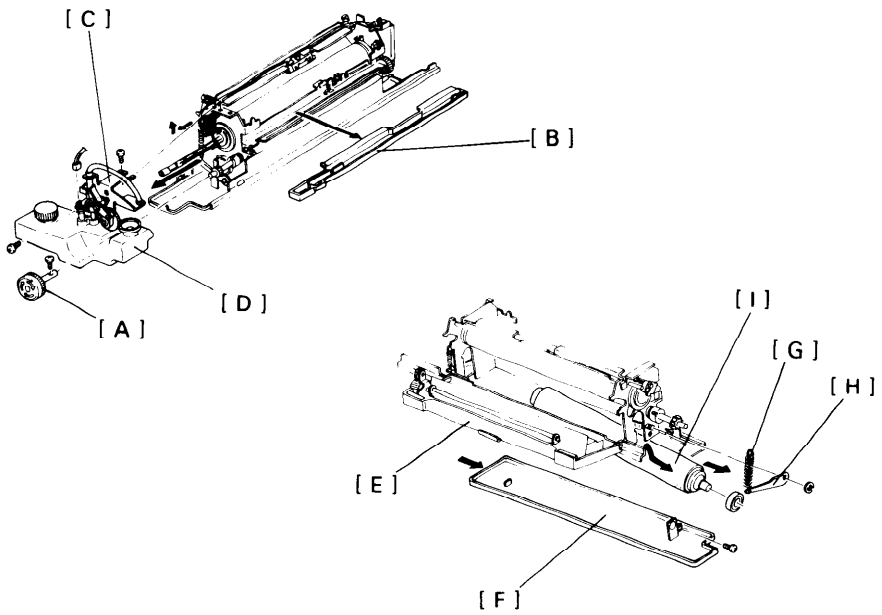

1. Remove the fusing unit and cover (2 screws).
2. Remove the fusing unit knob [A] (1 screw).
3. Remove any excess oil from the oil sump [B].
4. Remove the oil pump mechanism [C] with the oil tank [D] (2 screws and 1 connector).
5. Open and remove the fusing exit assembly [E] (1 E-ring, 1 connector, and 2 springs).
6. Remove the oil pan [F] (4 screws and 4 hooks).
7. Remove the front pressure spring [G].
8. Remove the front pressure lever [H] (1 E-ring).
9. Lift up the upper part of the fusing unit and remove the pressure roller [I].
10. Install the bearings [J] on the new pressure roller.

- Hot Roller Stripper Replacement -

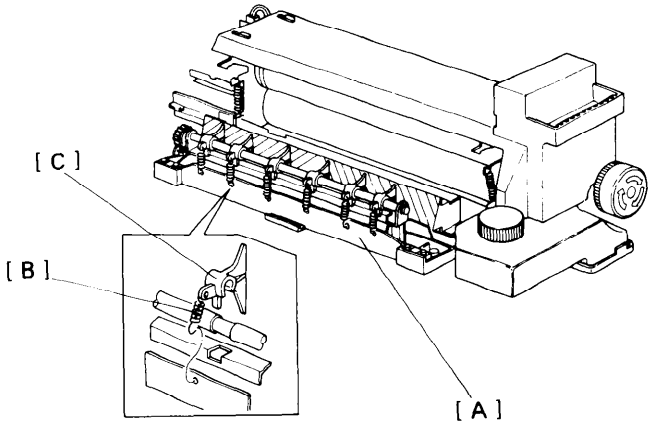

1. Pull out the fusing unit and open the fusing exit assembly [A].
2. Unhook the springs [B] and remove the hot roller strippers [C].
3. Install new strippers and connect the springs.

NOTE: It is best to replace strippers and springs as a set.

- THERMISTOR REPLACEMENT -

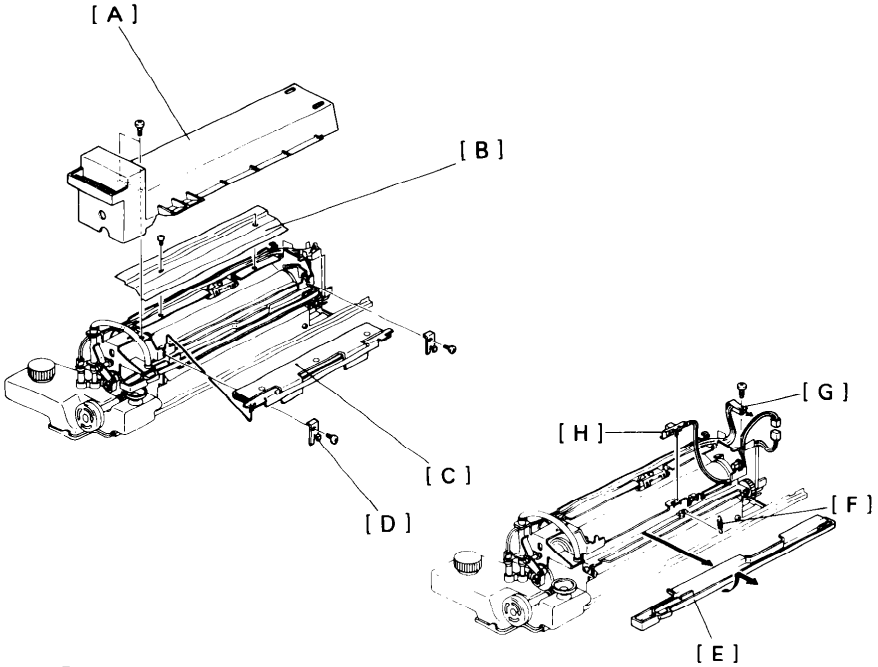

1. Remove the fusing unit.
2. Remove the fusing unit cover [A] (2 screws).
3. Remove the pressure plate [B] (2 screws).
4. Remove the oil supply pad [C] (2 screws and 2 clamp plates [D]).
5. Remove any excess oil from the oil sump and remove the oil sump [E].
6. Unhook the thermistor spring [F].
7. Remove the thermistor wire from the metal wire clamp [G] (1 screw) and remove the thermistor [H] (1 connector).
8. Replace the thermistor and reassemble.

NOTE: - **Make sure that the thermistor is properly contacted with the hot roller.**

- THERMOFUSE REPLACEMENT -

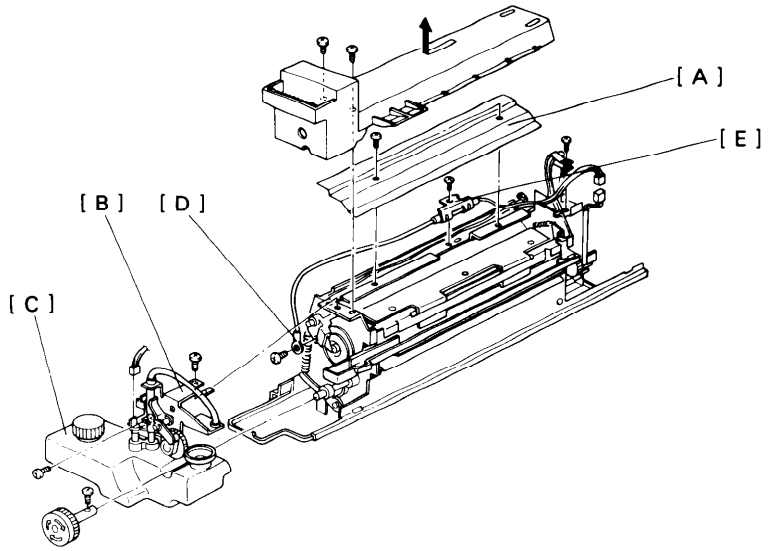

1. Perform steps 1 to 3 of Thermistor Replacement.
2. Remove the thermofuse bracket [A] (1 screw).
3. Remove the oil pump mechanism [B] with the oil tank [C] (2 screws and 1 connector).
4. Remove the thermofuse wire from the front lamp terminal [D] (1 screw).
5. Disconnect the thermofuse [E] (1 connector) and install the new thermofuse.

- FUSING PRESSURE ADJUSTMENT -

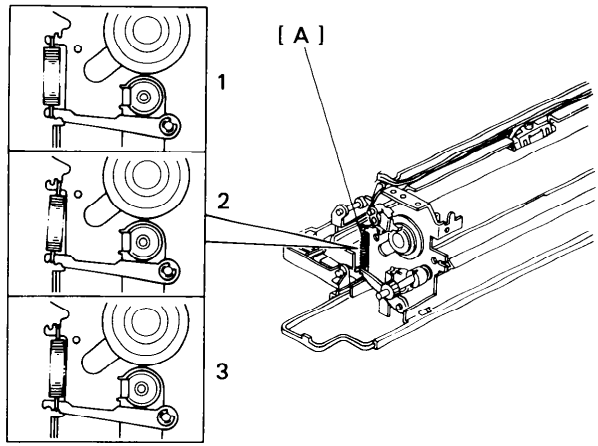

1. Remove the fusing unit.
2. Remove the fusing unit cover (2 screws).
3. Remove the fusing unit knob (1 screw).
4. Remove the oil pump mechanism along with the oil tank (2 screws, 1 connector).
5. Move the pressure springs [A] to the desired position. (See the following table.)

Setting	Fusing Pressure	
1	16.0 kg	
2	19.6 kg	* Factory Setting
3	20.4 kg	

NOTE: Position the front and rear springs in the same position.

- ENTRANCE GUIDE HIGHT ADJUSTMENT -

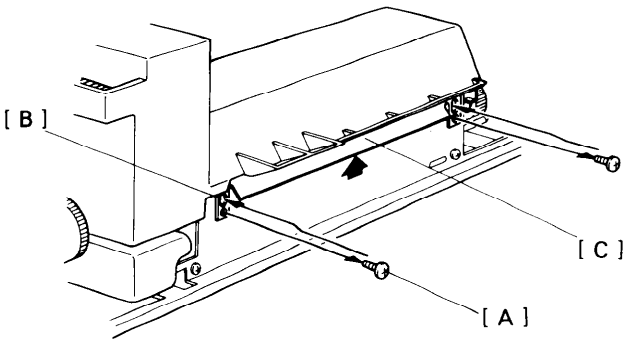

CAUTION: The entrance guide is very hot. Be carefull when touching it.

1. Pull out the fusing unit.
2. Remove the 2 screws [A] and reinsert them into the adjusting holes [B].
3. Lightly secure the entrance guide [C].
4. Secure the entrance guide in the upper position.

NOTE: - Make sure that both sides of the entrance guide are even.

- Factory setting is lower position.

7. TRANSPORT

- TRANSPORT UNIT AND TRANSPORT BELT REMOVAL -

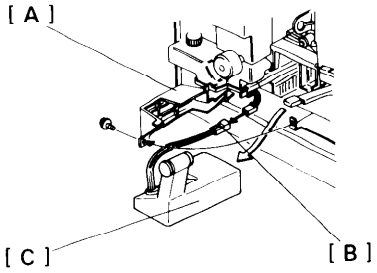

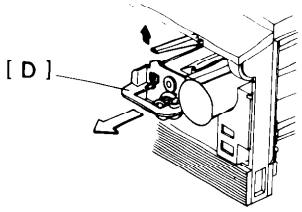

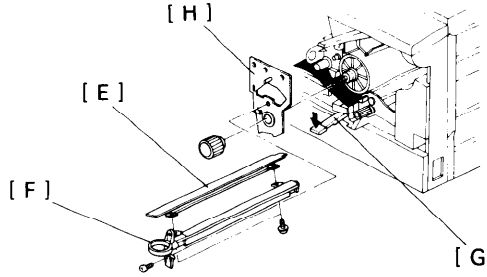

1. Swing the toner collection bottle cover [A] to the left (1 screw).
2. Disconnect the toner overflow sensor connector [B].
3. Remove the toner collection bottle [C].
4. Remove the development unit [D], PTL board [E], and the charge corona unit [F] (1 screw).
5. Lower the T/S corona unit [G].
6. Remove the drum stay [H] (1 knob [I] and 1 screw), the cleaning unit and the drum.

   NOTE: Be sure the protective sleeve is installed before removing the drum.
7. Remove the fusing unit.

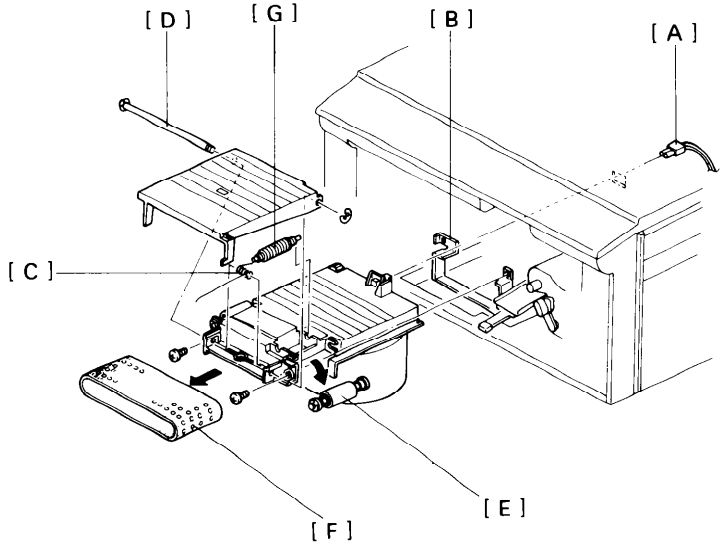

8. Remove the rear cover and lower the PCB plate (2 screws each).
9. Remove the transport and separation power pack (1 screw).
10. Disconnect the vacuum fan connector [A] (2p White) just under the main motor.
11. Remove the transport unit from the mounting bracket [B] (2 screws).
12. Slide the transport unit and vacuum fan out of the copier.

    NOTE: **When reinstalling the transport unit, be sure the transport gear meshes with the drive gear.**

13. Remove the front of the transport unit as shown (1 E-ring, 1 spring [C] and 1 shaft [D]).
14. Pull the right transport roller [E] and transport belt [F] to the right and remove the transport rollers [G].
15. Remove the transport belt as shown.

- VACUUM FAN MOTOR REPLACEMENT -

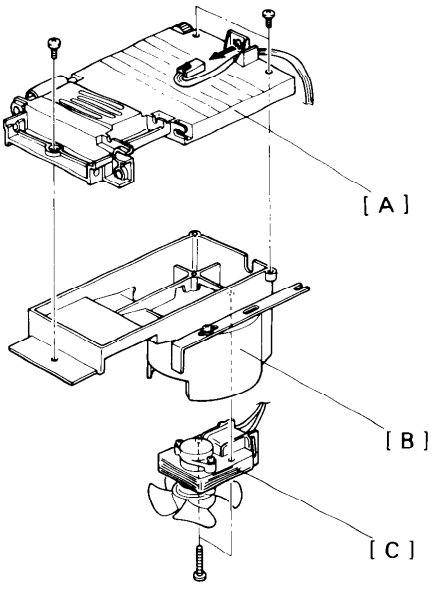

1. Remove the transport belt. (See "Transport Unit and Transport Belt Removal.")
2. Remove the transport plate [A] from the vacuum fan unit [B] (3 screws and 1 connector).
3. Remove the fan motor [C] (2 screws).

8. CORONA

- Corona Wire Replacement -

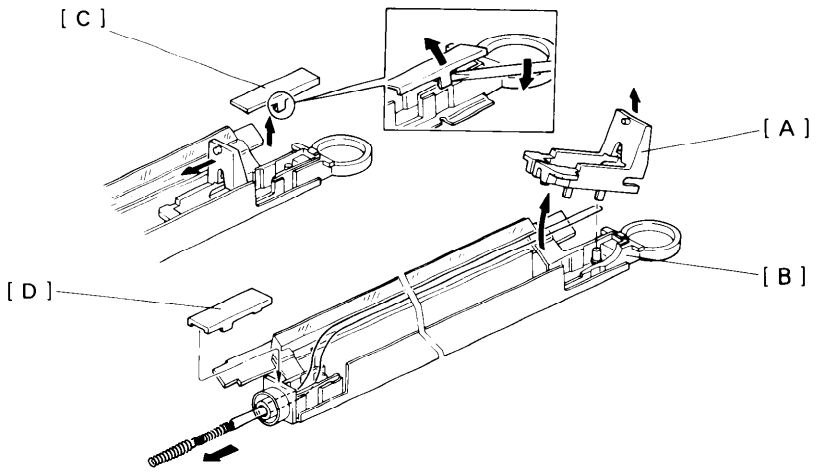

CAUTION: - Do not handle new corona wires with your bare hands. Oil on the wire will cause uneven charge on the drum.

- Do not rub the corona wires with rough material (sandpaper, etc.) because the corona wires are carbon-coated.
- When removing the endblock covers, be careful not to break off the side hooks.
- Do not use any solvent to clean the wire as it will cause uneven charge on the drum.

I. Charge Corona Wire

1. Slide the wire cleaner [A] away from the front endblock [B] as shown.
2. Remove the front [C] and rear [D] end block covers.
3. Slide the wire cleaner back to the front end and remove it.

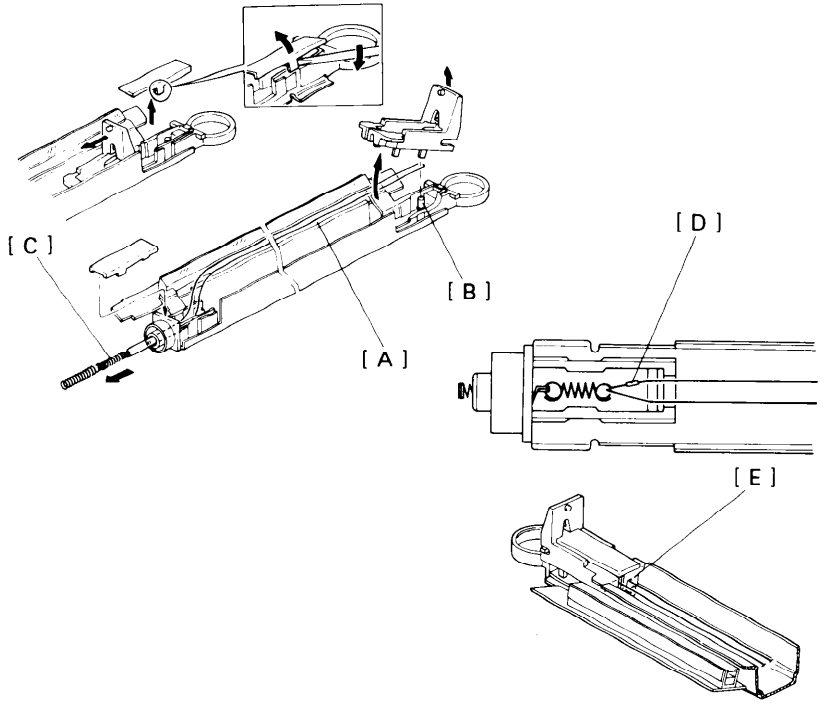

4. Unhook the corona wire [A] from the front anchor post [B] by pulling in the direction of the arrow using a small screw driver.

5. Remove the old corona wire as directed by the arrows.

6. Clean the endblocks, the covers, and the corona unit casing with a blower brush and dry cloth.

7. Hook the new corona wire onto the tension spring [C]

8. Hook the other end of the wire onto the front anchor post using a small screw driver.

   CAUTION: When installing the corona wire, the wire junction [D] should be positioned inside the rear endblock.

9. Reassemble the charge corona unit. Make sure that the corona wire is positioned between the cleaner pads [E].

II. T/S Corona Wires

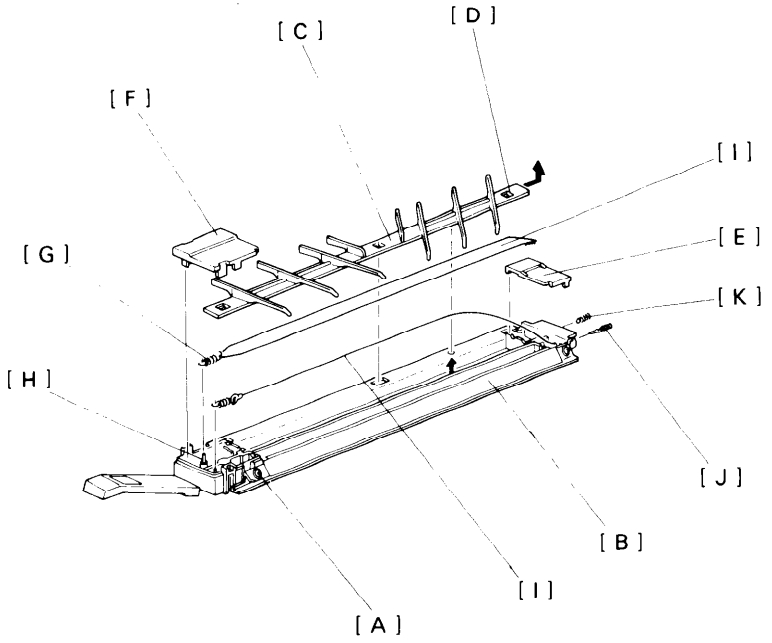

CAUTION: The eccentric cams [A] are used in the production line only to adjust the gap between the guide mylar [B] and the selenium drum.

1. Lower the transport and separation unit then remove it.
2. Slide the corona paper guide [C] to the rear, by pushing up the guide stopper [D] from underneath. Then, remove the guide from the corona unit.
3. Remove the front [E] and rear [F] endblock covers.
4. Unhook the tension springs [G] from the front anchor posts [H] and remove the old corona wires [I].
5. Clean the corona paper guide, the endblocks and covers, and the corona unit casing with a blower brush and dry cloth.
6. Thread the small eyelet [J] of the new transfer corona wire through the hole in the rear endblock and hook it onto the terminal spring [K].

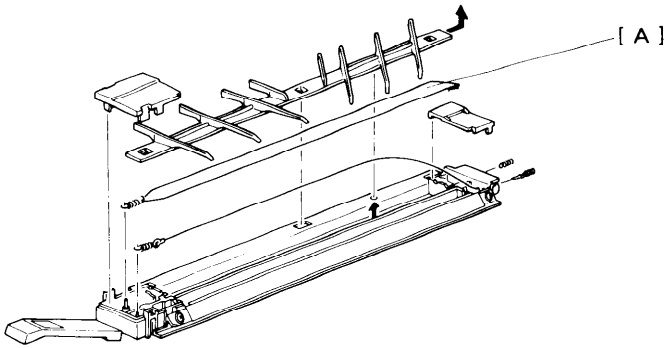

7. Hook the tension spring onto the other end of the corona wire. Then hook the tension spring onto the front endblock anchor post.

8. Insert the wire junction [A] of the new separation corona wire through the hole in the rear endblock and hook the terminal spring onto the nearby wire junction.

9. Hook the tension spring onto the other end of the loop and then hook the spring to the front endblock anchor post.

   CAUTION: The separation corona wire should be properly positioned on the grooves of the front and rear endblocks.

10. Reset the endblock covers and the corona paper guide.

- DRUM CURRENT ADJUSTMENT -

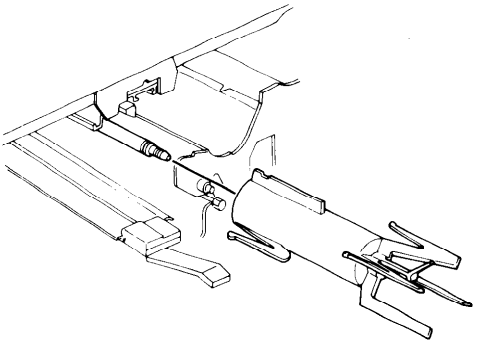

NOTE: The drum currents vary with environmental conditions such as humidity and atmospheric pressure. Generally it is not necessary to adjust the drum currents because they have already been adjusted for a range of environments in the factory.

Drum current adjustment may be required when there are problems with paper separation, incomplete toner transfer, or image density.

CAUTION:
- Make sure that the main switch is turned off when you change the range on the digital multimeter. If it is not turned off, the multimeter may be damaged.
- High voltage is applied to the corona wires when the main switch is turned on.

I. PREPARATION

1. Turn off the main switch and remove the following parts:

   - Development unit
   - Charge corona unit (1 screw)
   - Drum stay (1 screw)
   - Toner collection bottle
   - Cleaning unit
   - Drum flange
   - Drum - should be covered with a shielding sleeve
   - Drum guide
   - T/S corona unit

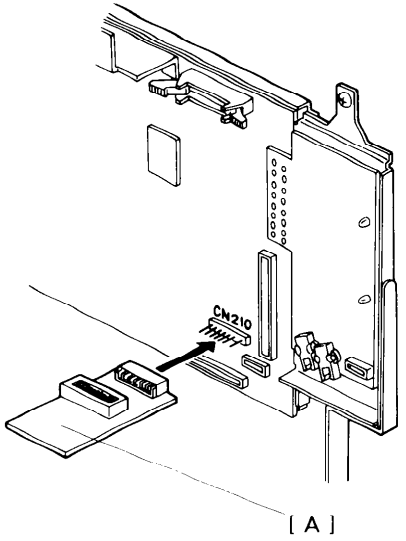

2. Clean or replace each corona wire. Also clean the corona units and the cleaning unit.

3. Actuate the front safety switch.

4. Remove the rear cover (2 screws).

5. Plug the switching board into connector CN210 of the main board as shown.

   NOTE: All the switches on the switching board [A] should be off.

6. Install the drum shoe and adapter on the drum shaft with the lip to the rear.

7. Route the shoe lead wire out through the development unit opening.

8. Connect the drum shoe and the digital multimeter leads as shown in the next page. Positive lead to the red lead clip. Negative lead and the black lead clip to the machine ground.

9. Open the Manual Feed table to keep the Start key red even if the machine is warmed up.

II. CHARGE CORONA

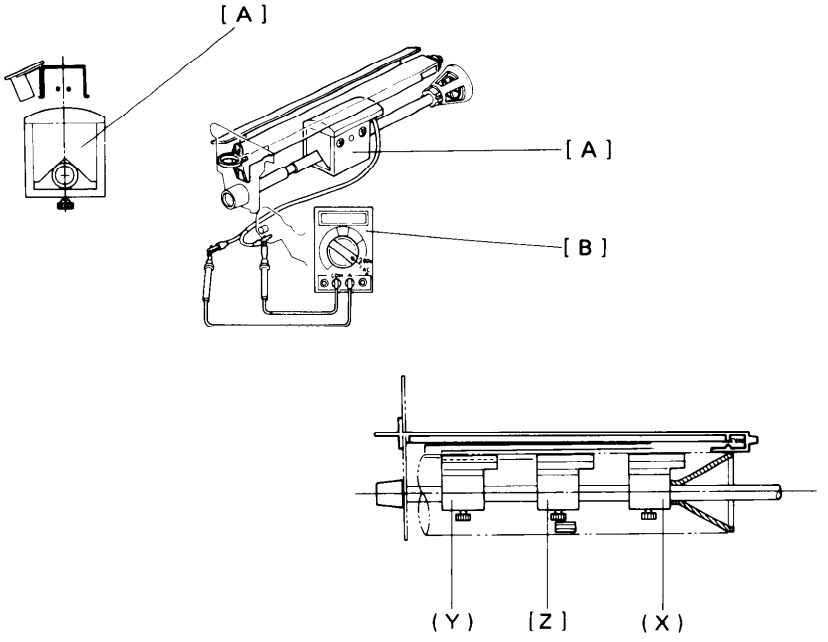

OPTIMUM ADJUSTING VALUE: DC +44.0 ± 0.2 μA

1. Slide the drum shoe [A] to its rear limit as shown (X)
2. Position the drum shoe so that the axis of the current sensing plate is aligned with the charge corona wire as shown.
3. Reinstall the drum stay (1 screw and 1 knob) and the charge corona unit.
4. Select the dc 200 μA range of the digital multimeter [B].
5. Turn on SW 8 of the switching board.
6. Turn on the main switch and note the reading. (Wait 30 seconds for the current to stabilize.)
7. Turn off the main switch, move the drum shoe to the front as shown (Y), and repeat steps 3 to 5.

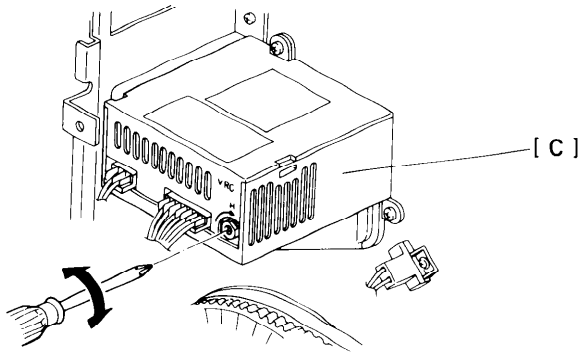

8. Adjust the front corona wire height adjusting screw if the two readings differ. The difference between front and rear should not be more than 0.2 μA.

   NOTE: - Turn the adjusting screw clockwise to increase the reading.

   - Turn it counterclockwise to decrease the reading.

   - After adjusting the front side, confirm the rear reading once again.

9. Turn off the main switch and position the drum shoe on the center of the shaft (Z). (The ID sensor is positioned in the the center of the shaft).

10. Turn on the main switch and adjust the charge corona current by turning "VRC" on the power pack - C/B [C].

11. Turn off the main switch and SW 8.

III. TRANSFER CORONA

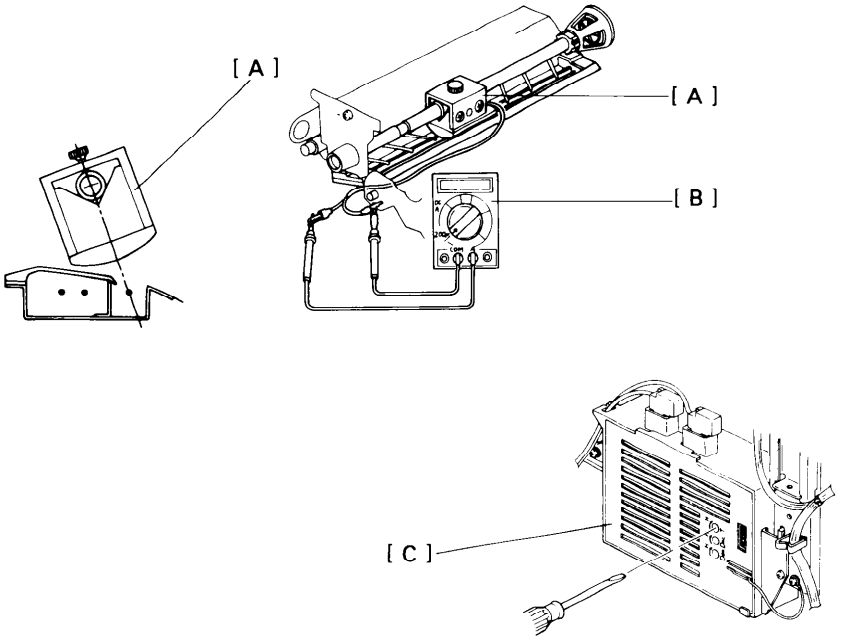

OPTIMUM ADJUSTING VALUE: DC + 19.0 ± 0.2 μA

1. Reinstall the T/S corona unit and position the drum shoe [A] at the center of the shaft so that the axis of the current sensing plate is aligned with the transfer corona wire as shown.
2. Reinstall the cleaning unit and the drum stay (1 screw and 1 knob).
3. Select the dc 200 μA range of the digital multimeter [B].
4. Turn on SW 3 of the switching board.
5. Turn on the main switch and adjust the transfer corona current by turning "T" on the power pack - T/S [C]. (Wait 30 seconds for the corona current to stabilize.)
6. Turn off the main switch and SW 3.

IV. SEPARATION CORONA

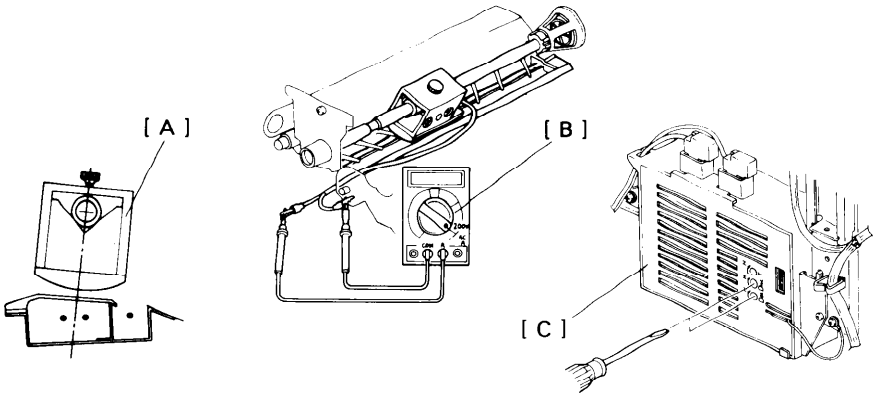

OPTIMUM ADJUSTING VALUE: AC 39.2 ± 1.5 μA
DC -2.7 ± 0.3 μA

1. Position the drum shoe [A] at the center of the shaft so that the axis of the current sensing plate is aligned between the separation corona wires as shown.

2. Reinstall the drum stay (1 screw and 1 knob) and return the T/S corona unit to its original position.

   NOTE: The cleaning unit should be also installed at this time.

3. Turn on SW 4 on the switching board.

4. Select the dc 200 μA range of the digital multimeter [B].

5. Turn on the main switch and adjust the separation dc current by turning "DDC" on the power pack - T/S [C]. (Wait 30 seconds for the corona current to stabilize.)

6. Turn off the main switch and select the ac 200 μA range of the multimeter.

7. Turn on the main switch and adjust the separation ac current by turning "DAC" on the power pack - T/S. (Wait 30 seconds for the corona current to stabilize.)

8. Turn off the main switch.

9. Repeat steps 4 to 8 until both the dc and ac corona currents are within in the optimum ranges.

10. Turn off the main switch and SW 4.

OTHERS

OPERATION PANEL REMOVAL -

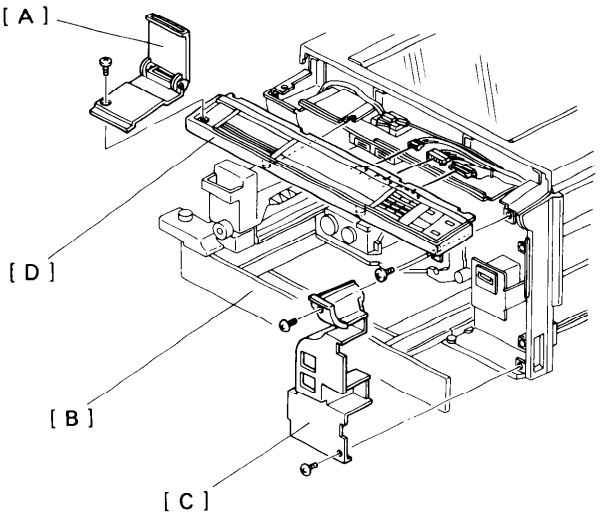

. Remove the DIP switch cover [A] under the instruction cards screw).

. Open the right and left front doors.

. Pull out the cassette tray [B] and remove the right inner cover [C] screws).

. Remove the operation panel [D] (2 screws and 3 connectors).

- POWER SUPPLY UNIT REMOVAL -

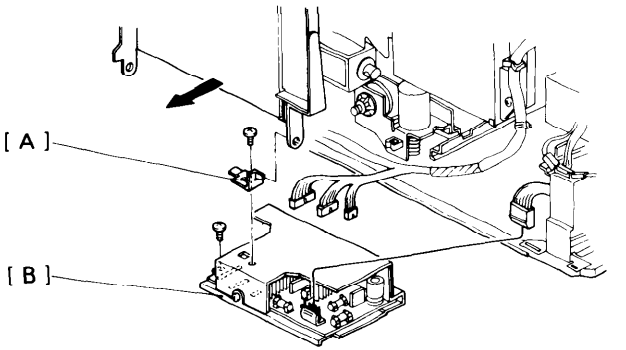

1. Remove the rear cover (2 screws).
2. Remove the main board bracket [A] (1 screw).
3. Remove the power supply unit [B] (1 screw and 4 connectors).

NOTE: **When reinstalling the power supply cover, be sure the wire harnesses are properly placed within their holders.**

- Drum Heater Removal -

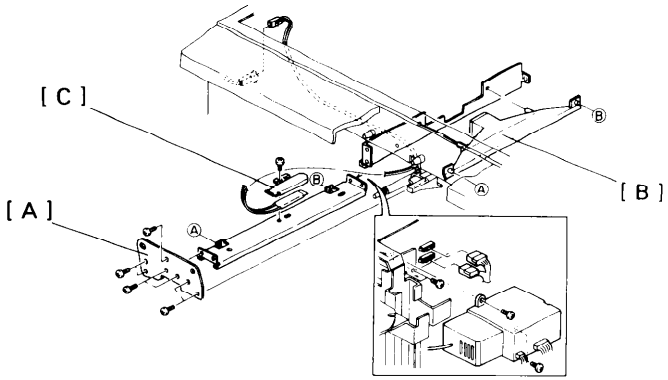

1. Turn off the main switch.
2. Open the left and right front doors and remove the following parts:
   - Development unit
   - Charge corona unit (1 screw)
   - Drum stay (1 screw)
   - Toner collection bottle
   - Cleaning unit
   - Drum flange
   - Drum - should be covered with a shielding sleeve
   - Drum guide
   - T/S corona unit
3. Remove the left inner cover (2 screws), the center inner cover (6 screws), and the rear cover (2 screws).
4. Disconnect the lens drive motor connector and the 2nd drive motor connector.
5. Remove the main charge power pack (2 screws and 1 connector).
6. Remove the front drum support bracket [A] (7 screws).
7. Remove the duct inlet [B].
8. Remove the main charge unit holder from the rear of the machine (2 screws).
9. Replace the drum heater [C] (1 screw).

   NOTE: When installing the drum heater, be sure that the duct outlet is properly positioned.

10. COPY IMAGE

- LIGHT INTENSITY ADJUSTMENT -

NOTE: - This adjustment should be done when the rest time compensation of the bias voltage is 0V. If the main power switch has just been turned on.

- Auto ID sensor adjustment must be done after light intensity adjustment.

ADJUSTMENT STANDARD: Level 2 of the gray scale on the OS-A3 chart should be just visible on the copy when the 4th level of the density control is selected.

1. Clean the optics (mirrors, lens, reflectors, exposure glass, toner shield glass).
2. Turn on the main switch and allow it to warm up.
3. Set the image density level at the No. 4 position and make 11 test copies of the OS-A3 test chart.
4. Confirm that the level 2 of the gray scale is just visible on the 11th copy. If the image density is not correct, proceed to steps 5 to 10.

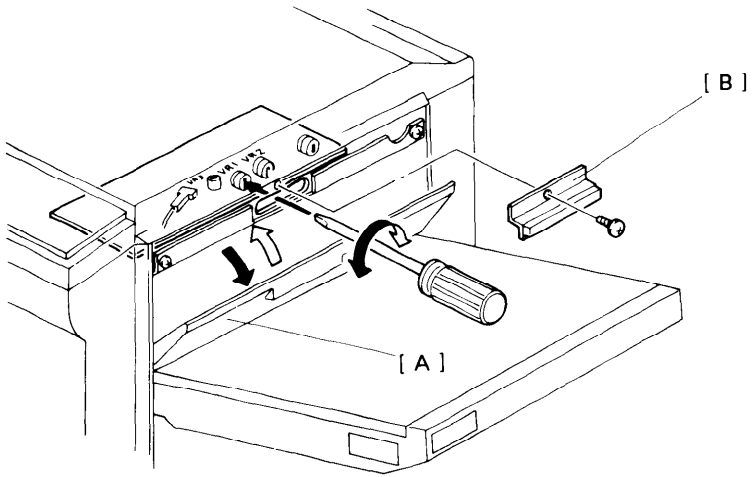

5. Open the manual feed table [A].
6. Remove the magnetic catch bracket [B] (1 screw).
7. Adjust VR1 on the lamp regulator board to achieve properly illuminated copies.
8. Hold the manual feed table closed and make test copies.
9. Confirm that the image density is within the standard.

   NOTE: - **If the test copies are made within 3 minutes after making previous copies, check the image density on the 4th copy.**

   - **If it is over 3 minutes, check the image density on the 6th copy.**

   - **Check and adjust the light intensity at every visit.**

10. Turn off the main switch and reassemble.

- AUTO ID SENSOR ADJUSTMENT -

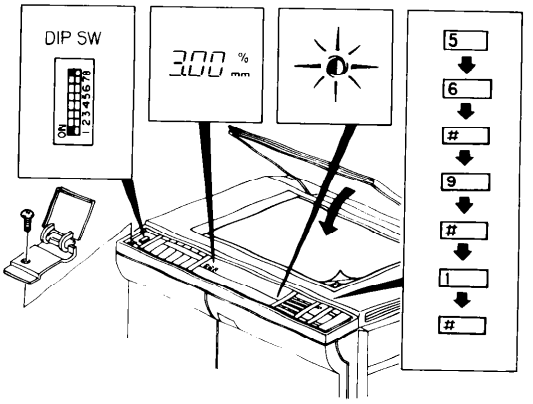

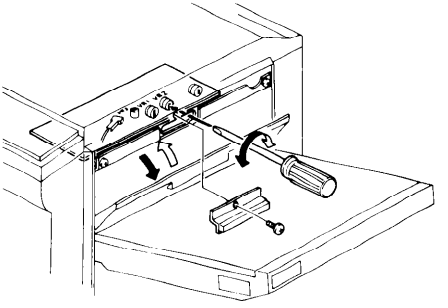

ADJUSTMENT STANDARD: +3 dc ± 0.06 volts

- Method A: Using the CPU -

1. Perform the light intensity adjustment before performing the Auto ID Sensor Adjustment.
2. Remove the DIP switch cover (1 screws).
3. Turn off the main switch and turn on DIP switches No. 1-1 and No. 1-8.
4. Open the manual feed table and remove the magnet catch bracket (1 screws). The manual feed table must now be held closed during machine operation.
5. Turn on the main switch and allow the copier to warm up.
6. Select the Auto ID mode.

7. Place 5 sheets of A3 (11" x 17") paper on the exposure glass.

8. Enter "56" using the numeral keys, then press the enter key.

9. Enter "9" using the numeral keys ,then press the enter key .

10. Enter "1" using the numeral keys, then press the enter key. Then the ADS voltage will be displayed on the magnification indicator for 10 seconds.

11. Adjust the Auto ID sensor by turning VR2 on the lamp regulator board.

    NOTE: - **Continue the adjustment procedure until the value is within specifications.**
    - **When adjusting the Auto ID sensor, use the monitor reading after the 3rd scanning operation.**

12. Turn off the main switch and the DIP switches, then reassemble.

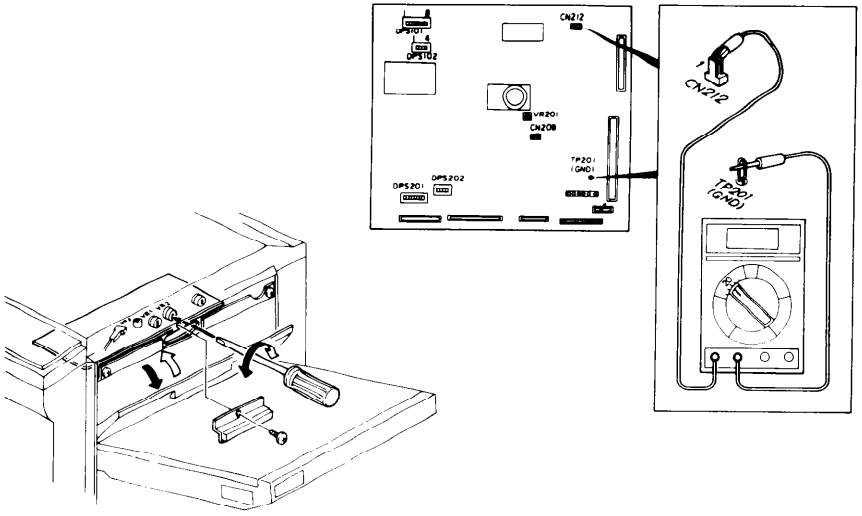

- Method B: Using a Digital Multimeter -

Perform steps 1 and 2 of method A.

1. Confirm that the main switch is off and turn on DIP SW No. 1-1 on the operation panel.

2. Open the manual feed table and remove the magnetic catch bracket (1 screws).

3. Remove the rear cover (2 screws).

4. Hook up the multimeter leads as follows:

   Note: Hook up the positive lead using a crocodile clip as shown.

   Positive lead to pin 1 of CN212 on the main board
   Negative lead to TP 201 (GND) and select the 20-volt range on the multimeter.

5. Close the manual feed table.

7. Place 5 sheets of paper (A3 or 11" x 17") on the exposure glass.

8. Turn on the main switch and select the Auto ID mode, then enter "99" using the numeral keys.
   Press the Start key after the copier warms up.

9. Adjust the Auto ID sensor by turning VR2 on the lamp regulator board.

   NOTE: - **Open and close the manual feed table and press the start key at each adjustment.**
   - **Adjust the Auto ID sensor after the 3rd copy cycle has been completed.**

10. Press the C/S button to stop the copier.

11. Turn off the main switch and DIP SW No 1-1, then reassemble.

- Horizontal Magnification Adjustment -

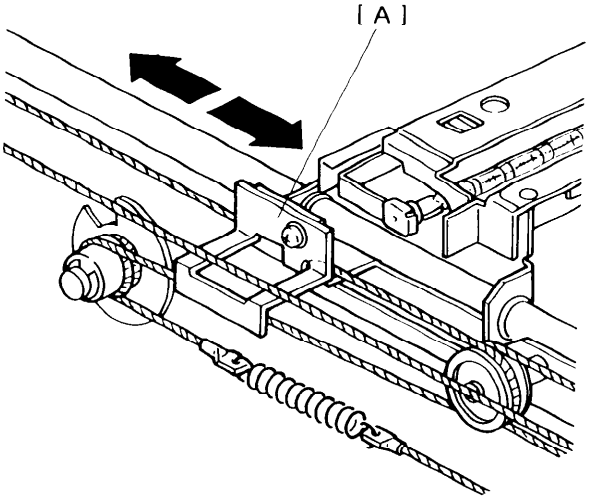

ADJUSTMENT STANDARD: ± 0.5% (Full Size)

1. Remove the rear cover (2 screws).
2. Remove the two mounting studs and eight screws securing the upper cover.
3. Lift the back edge of the upper cover and loosen the wire clamp [A] (1 screw).
4. Move the clamp to the right to enlarge the copy image. Move it to the left to make the copy image smaller. (Viewed from the rear side.)

- VERTICAL MAGNIFICATION ADJUSTMENT -

- Vertical Magnification -
DPS102 (On the Main Board)

SW.NO.	0:OFF				1:ON			
2	1	1	1	1	0	0	0	0
3	1	1	0	0	1	1	0	0
4	1	0	1	0	1	0	1	0

Narrower ← 2%/Step → Wider

ADJUSTMENT STANDARD: ± 1%

Adjust the vertical component of magnification (scanner forward velocity) using DIP switches 102-2,-3 and -4 on the main board as per the table.

- LEAD EDGE REGISTRATION ADJUSTMENT -

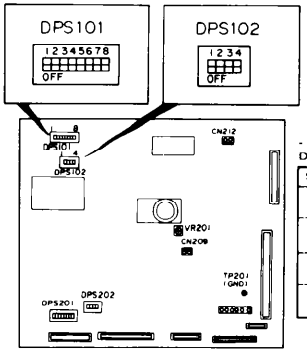

- Lead Edge Registration -
DPS101 (On the Main Board)

SW.NO.	0:OFF								1:ON							
1	0	0	0	0	0	0	0	0	1	1	1	1	1	1	1	1
2	0	0	0	0	1	1	1	1	0	0	0	0	1	1	1	1
3	0	0	1	1	0	0	1	1	0	0	1	1	0	0	1	1
4	0	1	0	1	0	1	0	1	0	1	0	1	0	1	0	1

Narrower ← 1.0mm/Step → Wider

ADJUSTMENT STANDARD: 0 ± 2 mm (0 ± 0.08")

1. Place a 150 mm scale on the exposure glass, aligning it with the left scale.
2. Make 3 copies with the ID level at the No. 7 position.
3. Adjust the lead edge registration using DIP switches 101-1, -2, -3, and -4 on the main board as per the table.

- LEAD EDGE BLANK MARGIN ADJUSTMENT -

- Lead Edge Margin -
DPS101 (On the Main Board)

SW.NO.	0:OFF				1:ON											
5	0	0	0	0	0	0	0	0	1	1	1	1	1	1	1	1
6	0	0	0	0	1	1	1	1	0	0	0	0	1	1	1	1
7	0	0	1	1	0	0	1	1	0	0	1	1	0	0	1	1
8	0	1	0	1	0	1	0	1	0	1	0	1	0	1	0	1

Narrower ← 0.8mm/Step → Wider

NOTE: This adjustment should be done after Lead Edge Registration Adjustment.

ADJUSTMENT STANDARD: 3.5 ± 2.5 mm (0.14" ±0.1")

Adjust the lead edge blank margin using DIP switches 101-5, -6, -7, and -8 on the main board as per the table.

2ND SCANNER HEIGHT ADJUSTMENT

ADJUSTMENT STANDARD:

Parallel between the eccentric cam and the 2nd scanner (as shown in the figure).

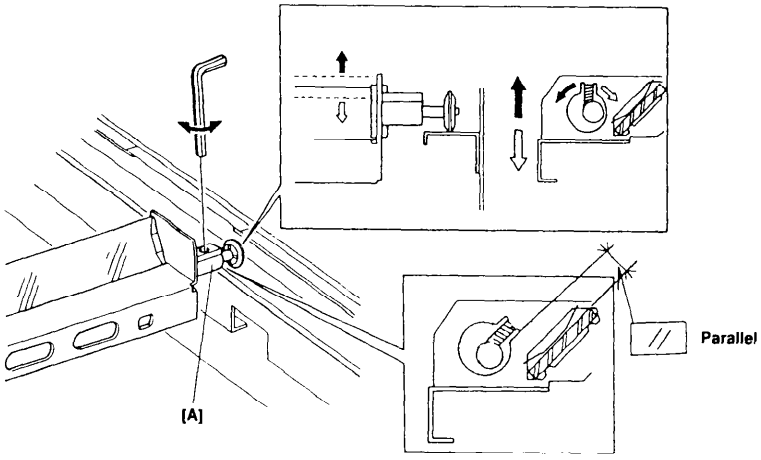

NOTE 1: It is necessary to adjust the 2nd Scanner height when non-square images appear on copies.

ADJUSTMENT PROCEDURE:

1. Turn off the main switch.
2. Remove the exposure glass.
3. Loosen the Allen screw on the eccentric cam [A] using an Allen wrench.
4. Adjust the height by turning the eccentric cam.

   CLOCKWISE: Decreases height
   COUNTERCLOCKWISE: Increases height

NOTE 2: After adjusting the scanner height, confirm the copy image.

2. MAIN BOARD SCHEMATIC (Optics Control)

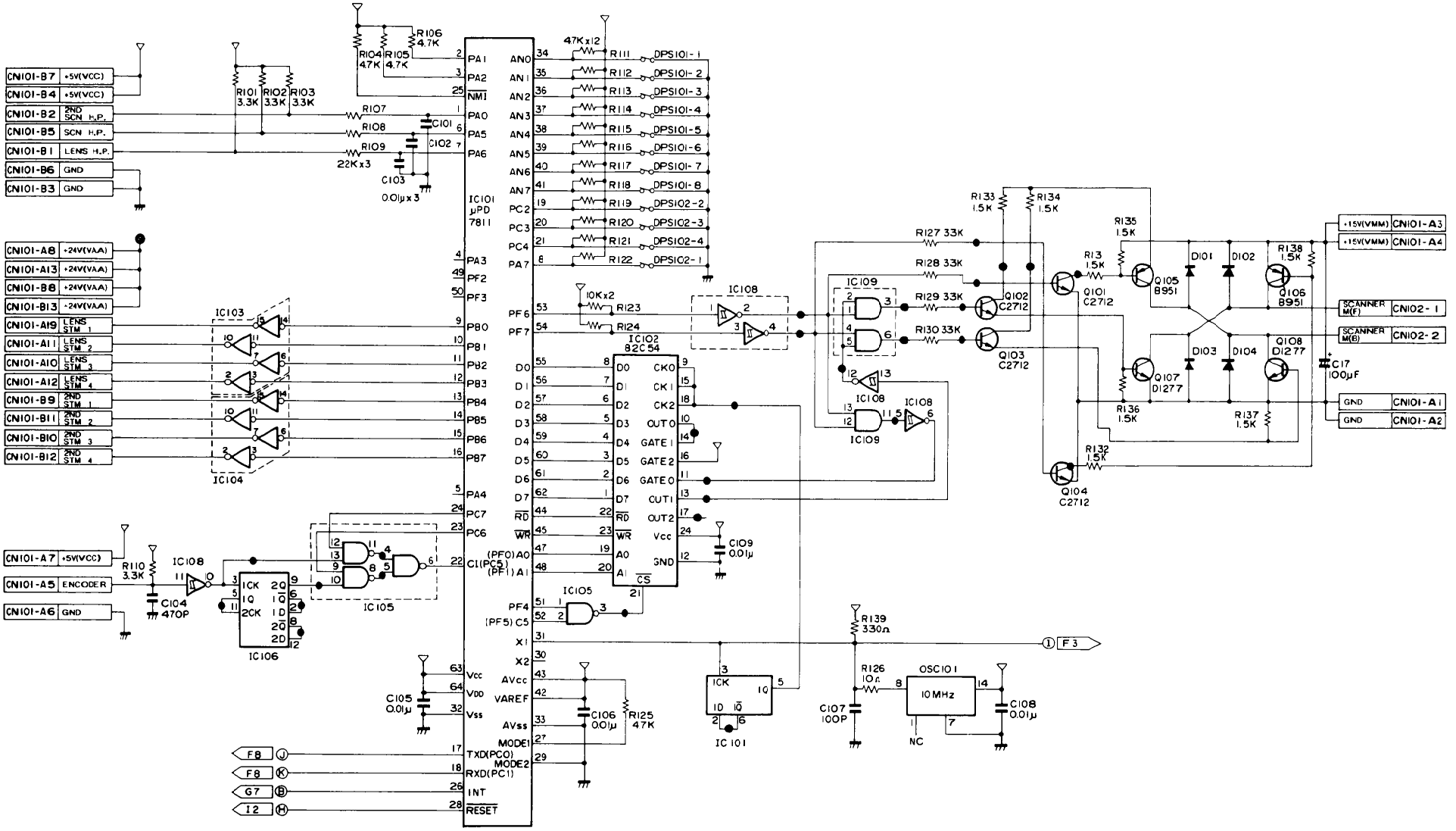

3. OPERATION PANEL BOARD SCHEMATIC

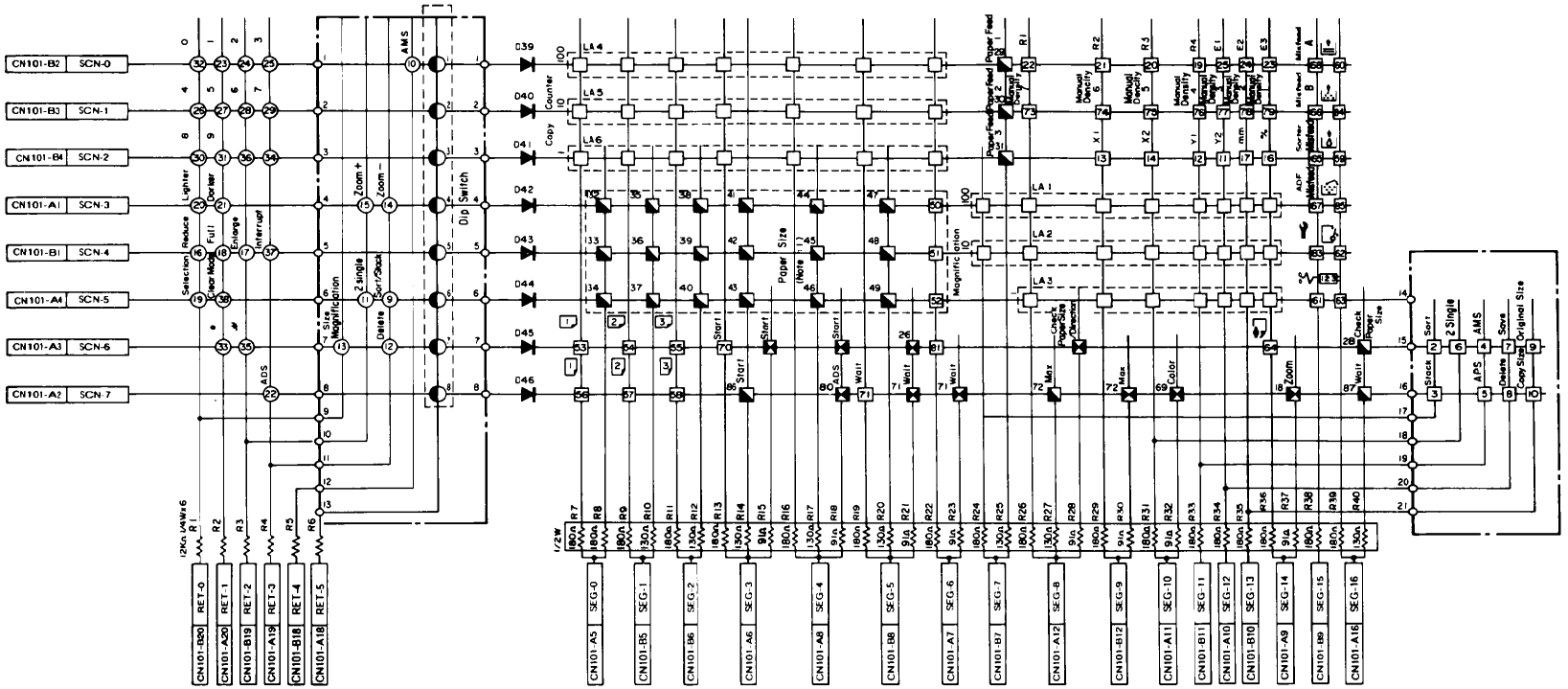

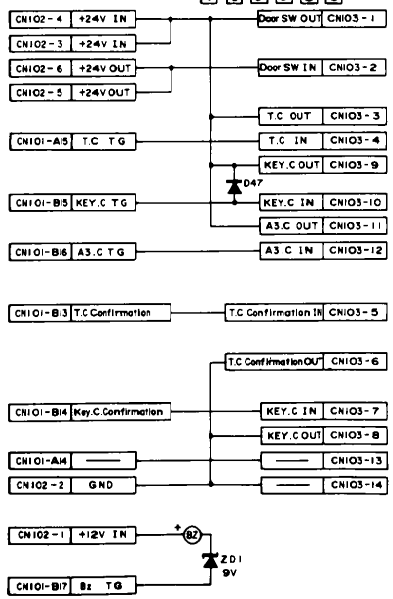

Cassette Size Detection

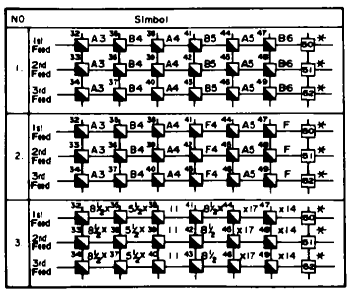

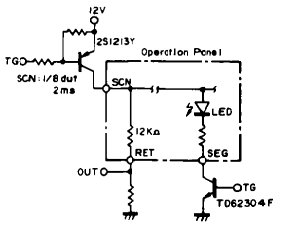

Operational Circuit

Key & LED Matrix

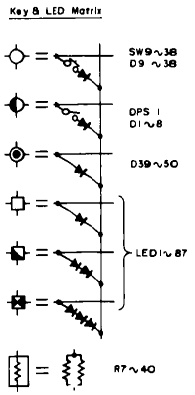

4. PAPER FEED CONTROL BOARD SCHEMATIC

15 March 87

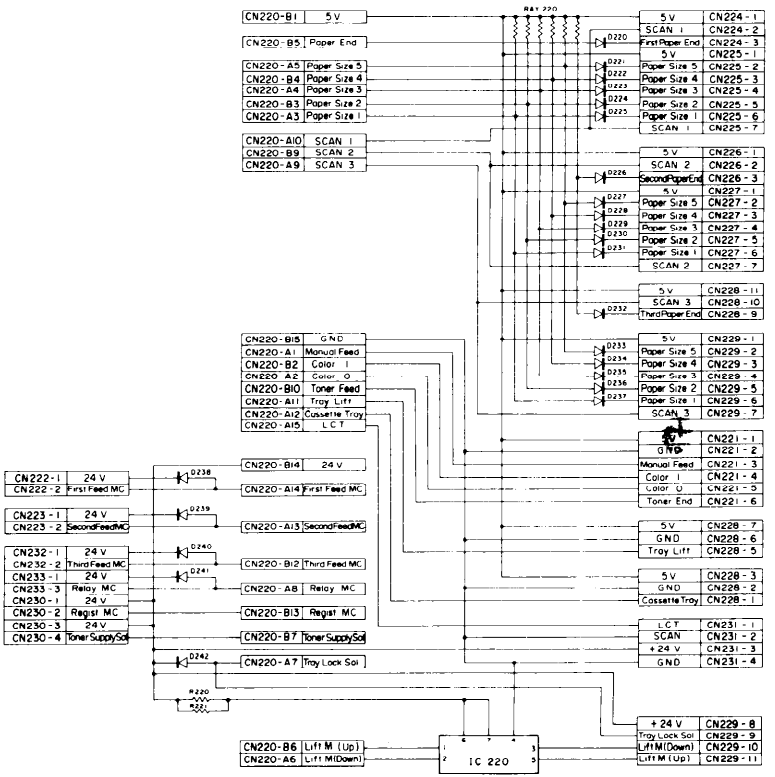

A009

5. DC POWER SUPPLY BOARD SCHEMATIC

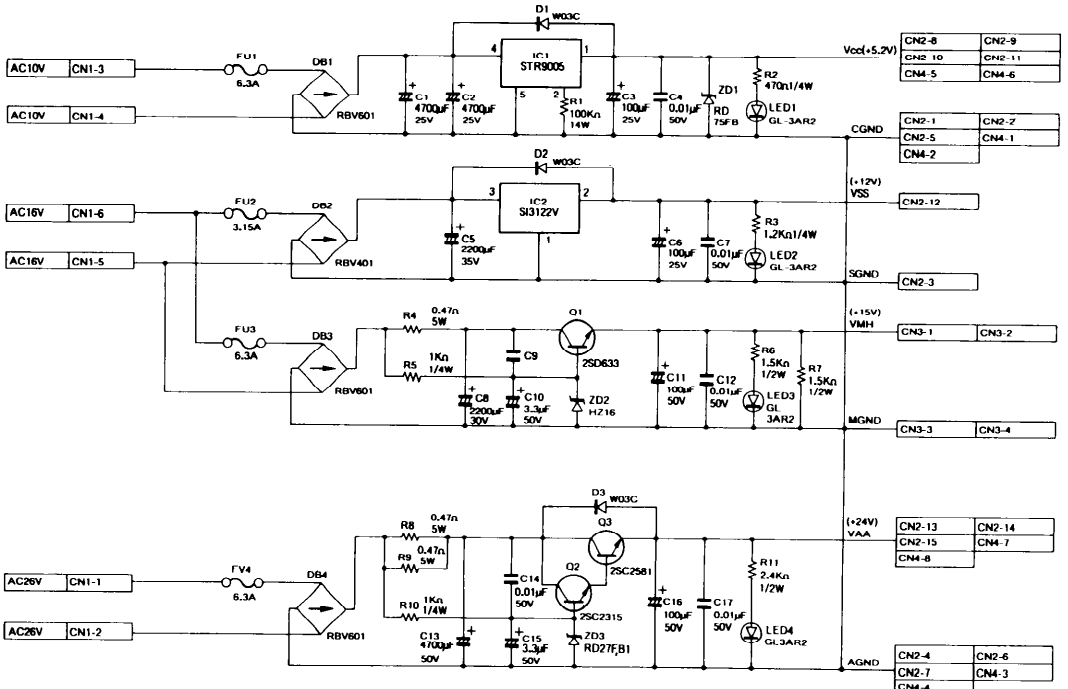

6. LAMP REGULATOR SCHEMATIC

15 March 87

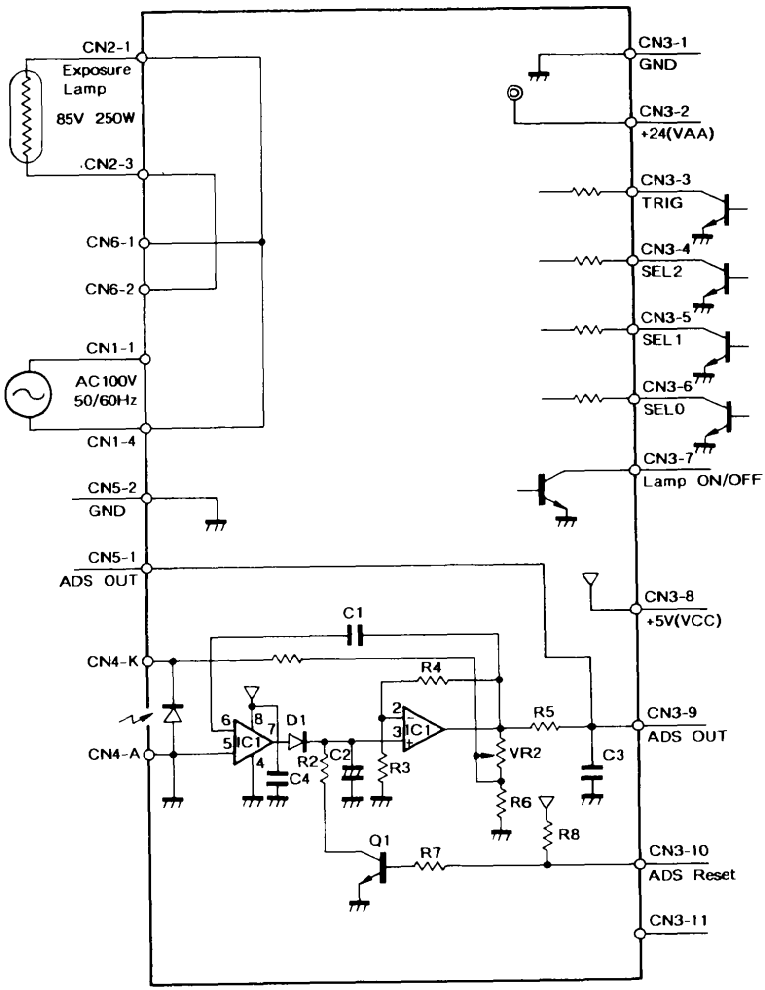

7. FUSING LAMP DRIVE BOARD SCHEMATIC

15 March 87

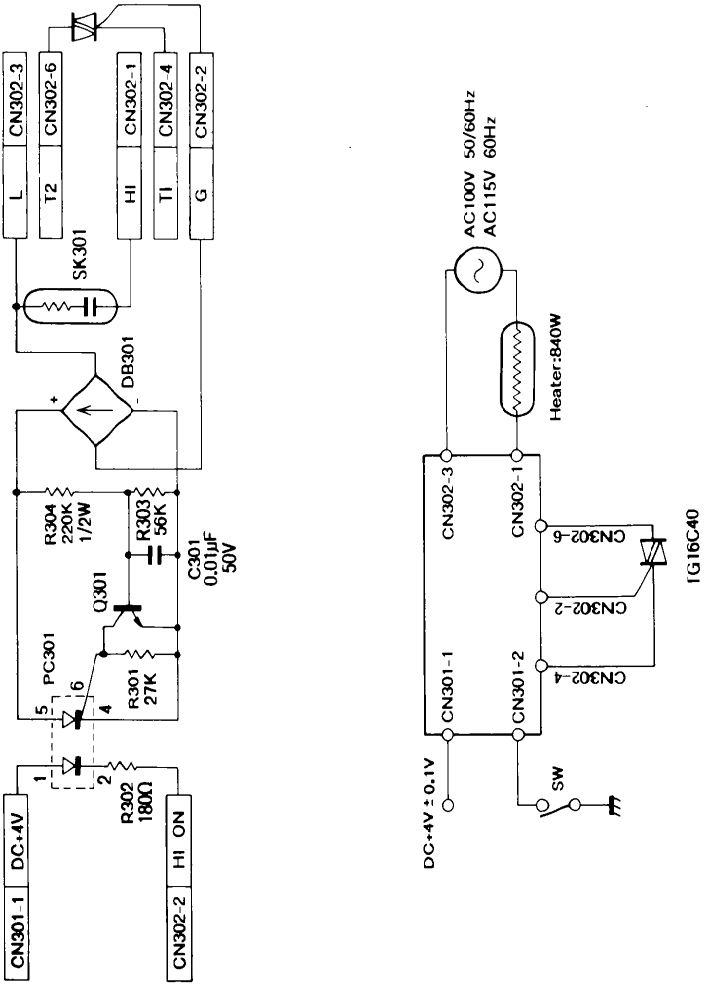

8. DF MAIN BOARD SCHEMATIC

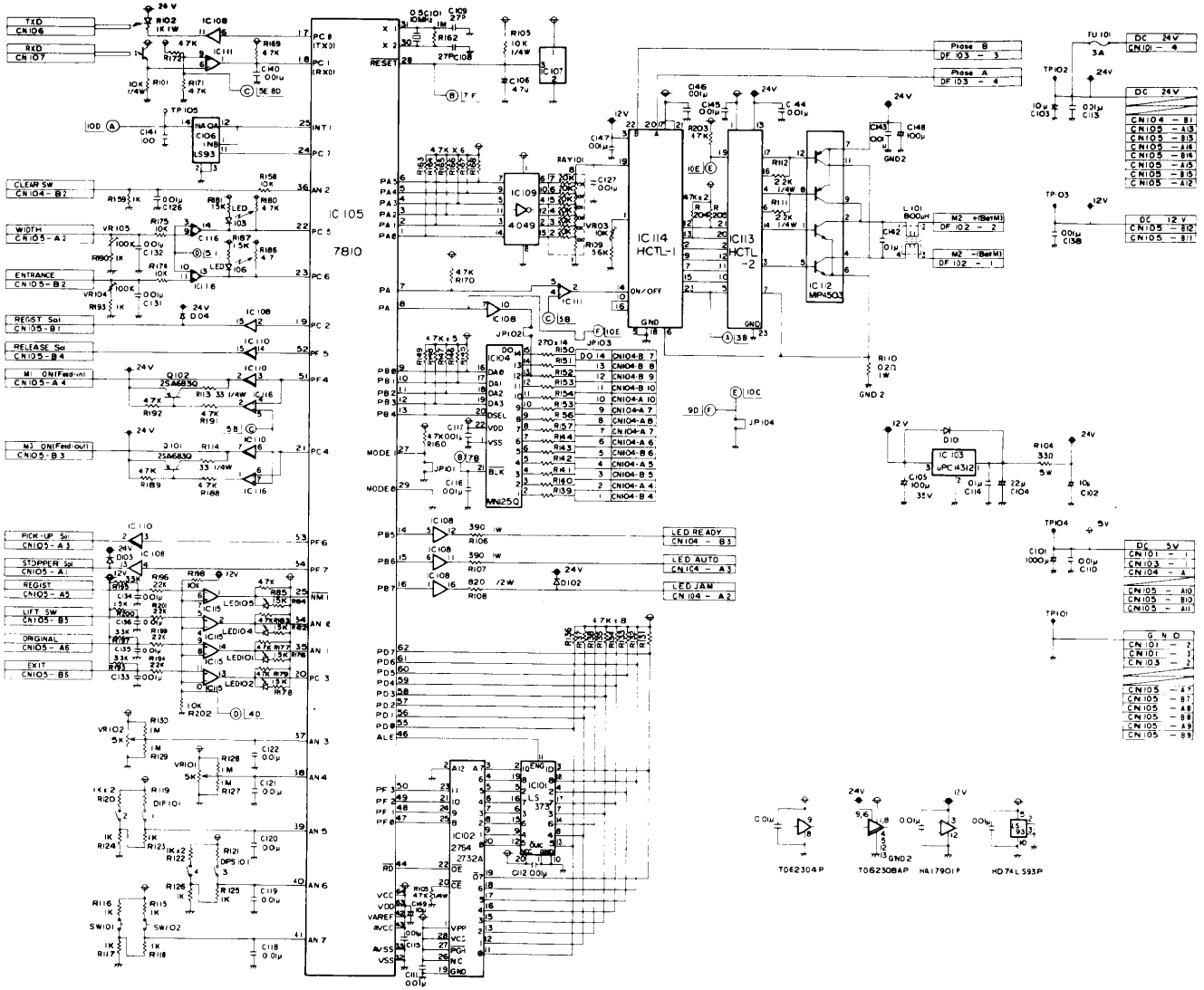

9. SORTER CONTROL BOARD SCHEMATIC

15 March 87

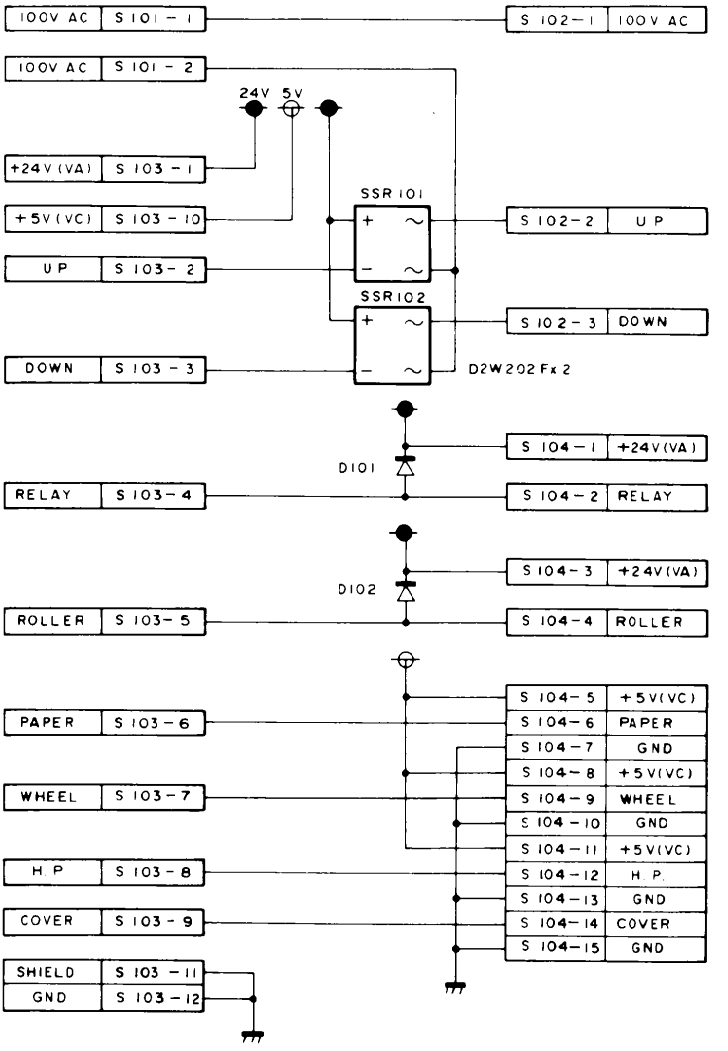

10. LCT CONTROL BOARD SCHEMATIC (Main Control)

15 March 87

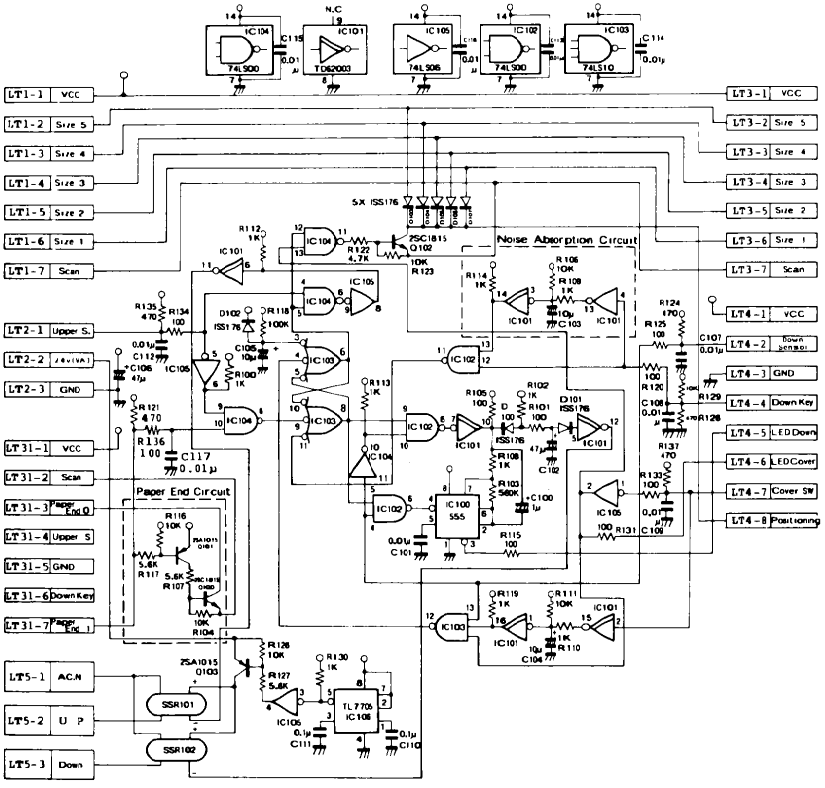

11. INTERFACE BOARD SCHEMATIC (TYPE-E)

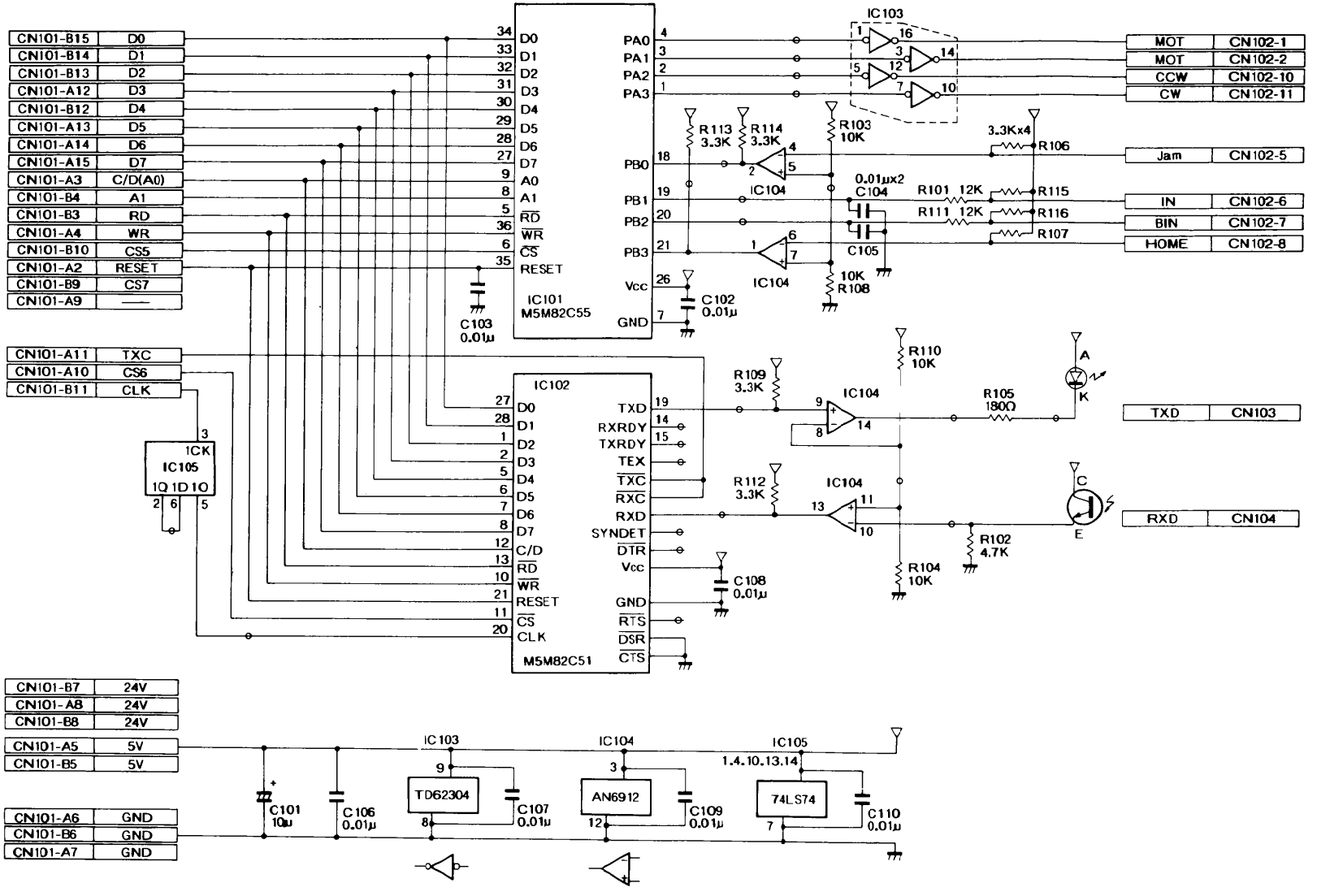

Editor Board

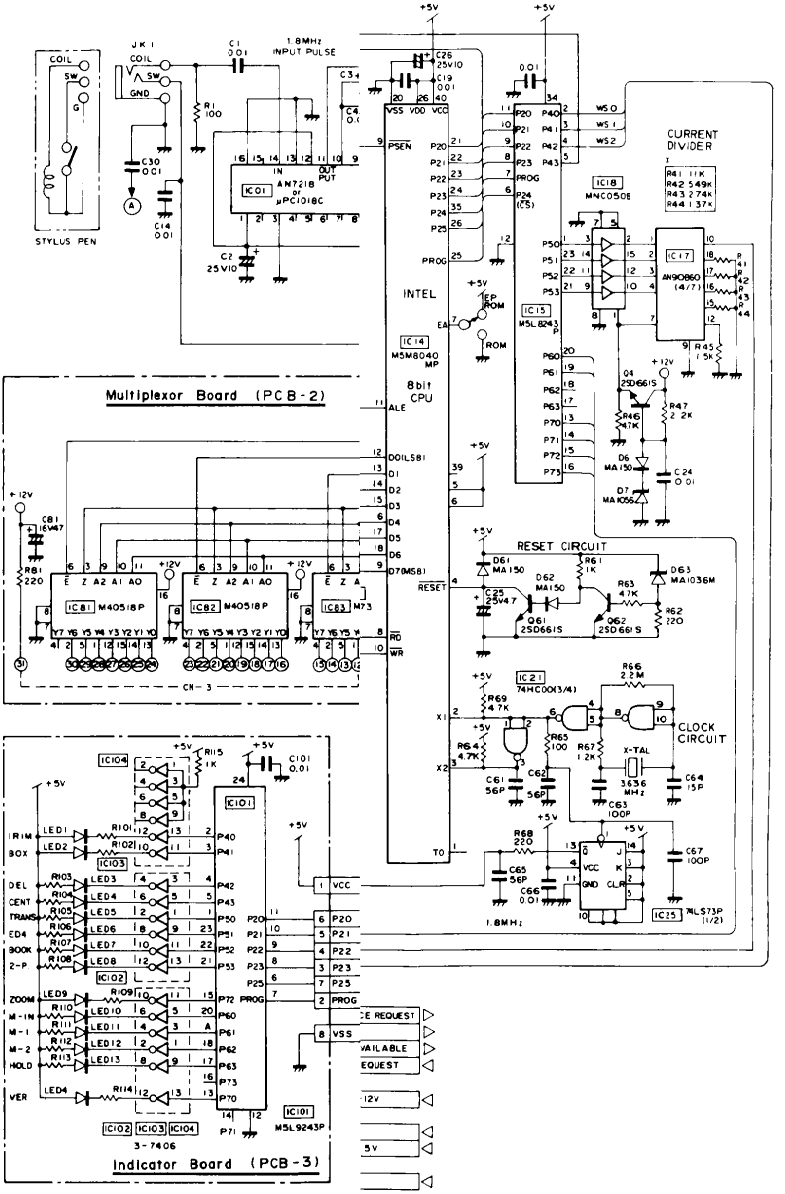

13. TIMING CHART (Main Frame)

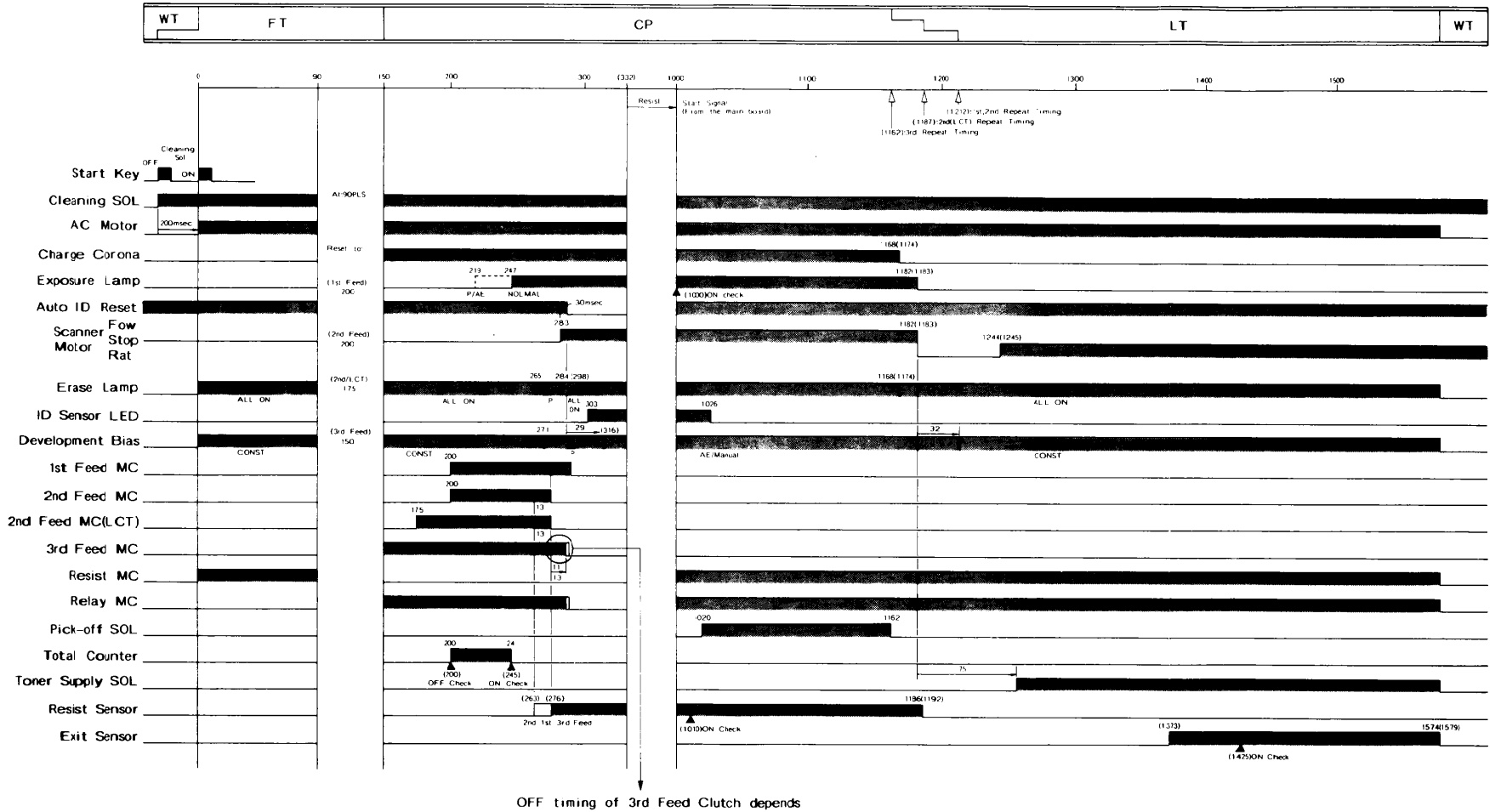

OFF timing of 3rd Feed Clutch depends on the paper size
11 pulses:B5(S),A5(S),B6(S),B6(L)
13 pulses:other paper size

A4 SIDEWISE SINGLE COPYING LT:( )
1 PLS = 6.98msec
= 1.047mm

14. DF TIMING CHART

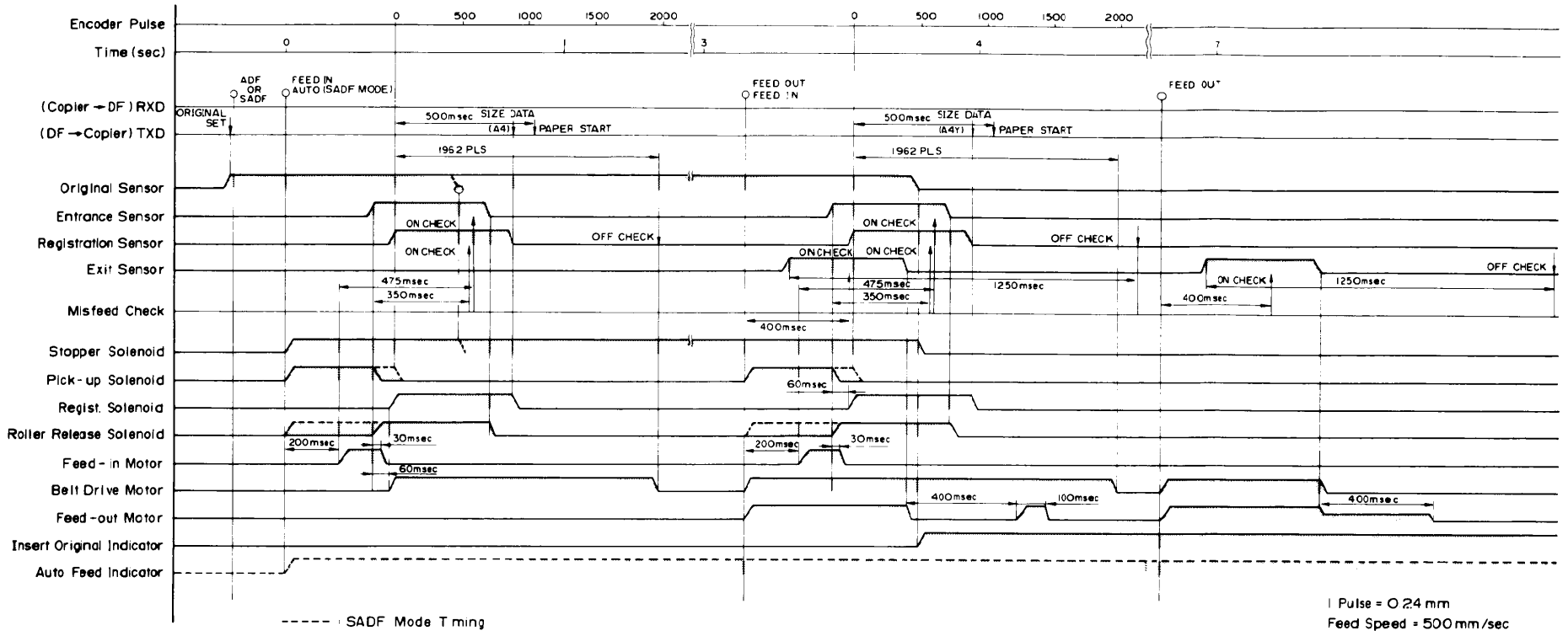

ELECTRICAL COMPONENT LAYOUT (A009)

15 March, '87

Copier

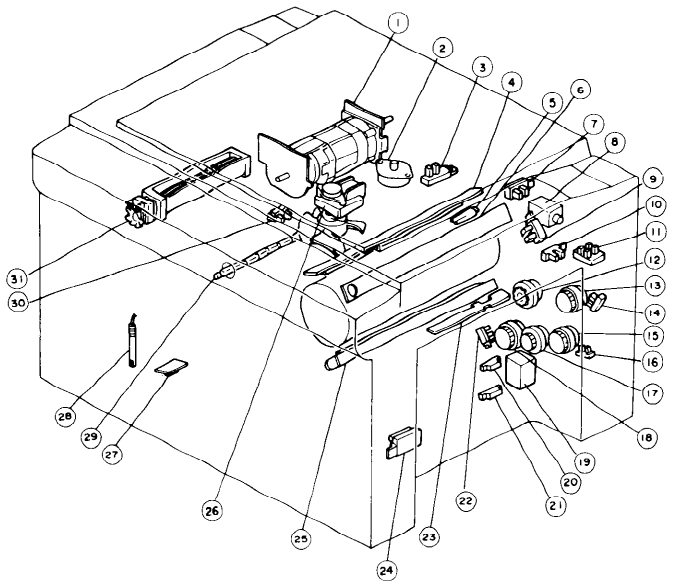

Index No.	Description	Symbol	P to P
1.	Main Motor	M1	G4
2.	Lens Drive Motor	S13	B2
3.	Lens HP Sensor	S1	B2
4.	Quenching Lamp	L1	C8
5.	Drum Heater	H	G7
6.	Erase Lamp	L2	E3
7.	Pulse Generator Sensor	S2	E1
8.	Toner Supply Solenoid	SOL1	B3
9.	Color Toner End Sensor	S3	B8
10.	Manual Feed Sensor	S4	B8
11.	Color Toner Sensors	S5	B8
12.	Registration MC	MC1	B7
13.	First Paper Feed MC	MC2	C6
14.	First Paper End Sensor	S6	B4
15.	Second Paper Feed MC	MC3	B6
16.	Second Paper End Sensor	S7	B5
17.	Relay Feed MC	MC4	B7
18.	Third Paper Feed MC	MC5	B6
19.	Tray Lock Solenoid	SOL2	B3
20.	First Paper Size Sensor	S8	B4
21.	Second Paper Size Sensor	S9	B5
22.	Third Paper End Sensor	S16	B6
23.	Registration Sensor	S10	C3
24.	Third Paper Size Sensor	S11	B6
25.	Pre Transfer Lamp	L3	C8
26.	Vacuum Fan Motor	M3	G3
27.	Toner Overflow Sensor	S17	C7
28.	Oil End Sensor	S18	F2
29.	Fusing Lamp	L4	G3
30.	Paper Exit Sensor	S12	F1
31.	Exhaust Blower Motor	M4	G4

Copier

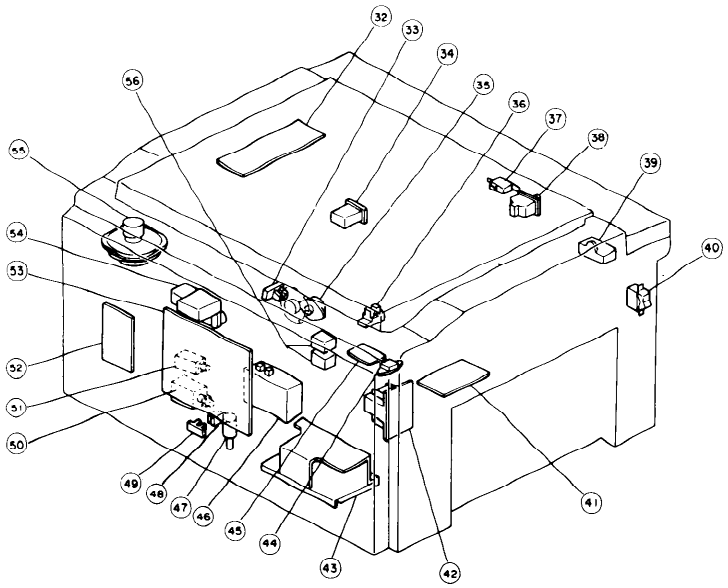

Index No.	Description	Symbol	P to P
32.	Lamp Regulator PCB	PCB1	E4
33.	Second Scanner Home Position Sensor	M2	C2
34.	Total Counter	CO1	C1
35.	Second Scanner Motor	M5	C2
36.	Scanner Home Position Sensor	S1	B2
37.	Door Switch	SW4	B1
38.	Front Cover Safety Switch	SW2,SW3	G5
39.	Main Motor Capacitor	C	G4
40.	Main Switch	SW1	G6
41.	Relay PCB	PCB2	F4-F5
42.	Transformer	TR1	G6
43.	DC Power Supply Unit	PSU	E5-F5
44.	Fusing Triac	FT	F3
45.	Heater Control PCB	PCB5	F3
46.	Power Pack — T/S	P1	E2
47.	Cassette Tray Lift Motor	M6	B3
48.	Cassette Tray Lift Sensor	S19	B7
49.	Cassette Tray Sensor	S15	B7
50.	Cleaning Solenoid	SOL3	E1
51.	Pick-off Solenoid	SOL4	F1
52.	Feed Control PCB	PCB3	C4-C8
53.	Main PCB	PCB4	D1-D8
54.	Power Pack — C/B	P2	E2-E3
55	Scanner Drive Motor	M7	C2
56	AC Drive Relay	R1	F4

ELECTRICAL COMPONENT LAYOUT (A009)

15 March, '87

Document Feeder

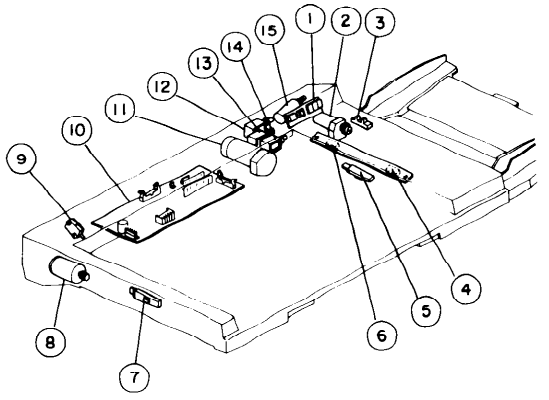

Index No.	Description	Symbol	P to P
1.	Indicator PCB	PCB-10	E8
2.	Feed-in Motor	M-14	F8
3.	Feed-in Sensor	S-34	E8
4.	Entrance Sensor	S-35	F8
5.	Registration Sensor	S-37	F8
6.	Width Sensor	S-36	F8
7.	Exit Sensor	S-38	F8
8.	Feed-out Motor	M-15	F8
9.	Lift Switch	SW-7	F8
10.	DF Main PCB	PCB-11	E8-F8
11.	Belt Drive Motor	M-16	E7
12.	Pick-up Solenoid	SOL-7	F7
13.	Registration Solenoid	SOL-8	F7
14.	Roller Release Solenoid	SOL-9	F7
15.	Stopper Solenoid	SOL-10	F7

Sorter

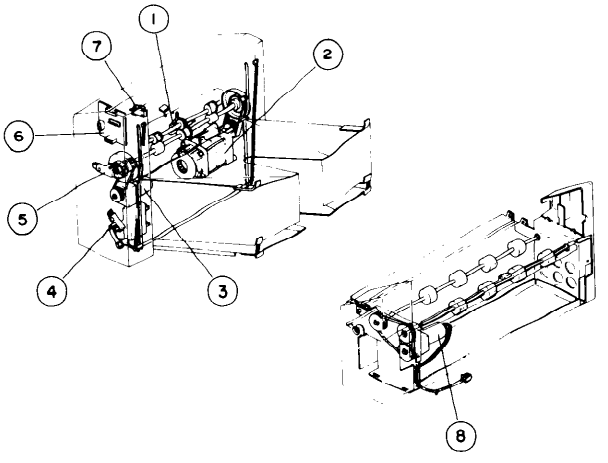

Index No.	Description	Symbol	P to P
1.	Paper Sensor	S-31	F7
2.	Wheel Drive Motor	M-11	F7
3.	Roller Drive Motor	M-12	F7
4.	Bin Home Position Sensor	S-32	E7
5.	Wheel Sensor	S-33	F7
6.	Sorter Control PCB	PCB-9	E6-F6
7.	Cover Safety Switch	SW-8	F7
8.	Relay Drive Motor	M-13	F7

Large Capacity Tray

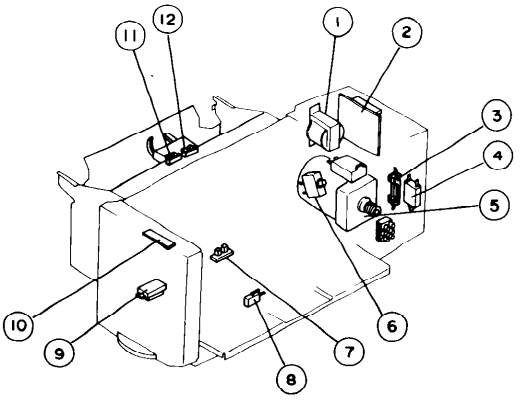

Index No.	Description	Symbol	P to P
1.	LCT Transformer	T2	A4
2.	LCT PCB	PCB-12	A4-A6
3.	AC Fuse (220V)	F-2	A4
4.	Circuit Beaker (115V)	CB-2	A4
5.	LCT Motor	M-17	A5
6.	LCT Safety Switch	S-10	A4
7.	Tray Down Sensor	S-39	A5
8.	Positioning Switch	S-5	A6
9.	Paper Size Sensor	S-40	A6
10.	LCT Operation Panel	PCB-13	A5-A6
11.	Paper End Sensor	A-41	B4
12.	Upper Limit Sensor	S-42	B5-B6

5. Service Program Mode Table

Mode No.	Function	Data	Factory Setting	Remarks
5 Exposure Lamp OFF	Exposure lamp ON/OFF	0: ON 1: OFF	0	
9 ADS	ADS voltage adjustment	-	-	For use with SP Mode "56". Refer to the ADS adjustment procedure.
11 All Indicators ON	Turns on all indicators on the operation panel.	-	-	
15 Auto Reset Time	Selects auto reset of 1 or 3 minutes.	0: 1 min. 1: 3 min.	0	Auto Reset time can be switched OFF by DIP SW 1-4 ON.
20 Feed Station Priority (LCT)	Selects feed station priority.	0: LCT 1: SP 22	0	Refer to the NOTE 1.
21 APS Priority	Selects APS or manual.	0: APS 1: Manual	0	If DF is installed.
22 Feed Station Priority (1st, 2nd, and 3rd cassette)	Selects feed station priority.	0: 1st 1: 2nd 2: 3rd	0	Refer to the NOTE 1.
23 DF Original Size	Enables originals of various sizes to be fed from the same stack.	0: OFF 1: ON	0	ADF Mode only.

NOTE 1: SP Mode No.20 and 22.

Feed Station Priority

	LCT Not Installed			LCT Installed			
SP Mode 20	X	X	X	0	1	1	1
SP Mode 22	0	1	2	X	0	1	2
First Priority	1st	2nd	3rd	2nd	1st	2nd	3rd
Second Priority	2nd	3rd	1st	3rd	2nd	3rd	1st
Third Priority	3rd	1st	2nd	1st	3rd	1st	2nd

- If no cassettes are installed, the machine returns to the first priority setting.
- The "X" mark means "don't care".
- If a cassette is not installed or the cassette is empty, the machine selects the next priority.

Mode No.	Function	Data	Factory Setting	Remarks
28 Auto Sort Mode	Selects Sort Mode automatically in ADF mode.	0: Manual 1: Auto	0	Sorter and DF must be installed.
29 Fusing Unit Idle	Selects fusing unit idling mode	0: No idling 1: idling	0	Copier will idle for 10 seconds. Refer to the NOTE 3.
35 Toner Supply	Changes toner supply interval. a) ID sensor checks every 5 copies. b) Toner end level changes to 0.65V.	0: Standard 1: Increase	0	Standard: Every 10 copies, 0.75V.
49 Fusing Temperature Change	Changes fusing temp.	0: Standard 1: Low 2: Higher 3: Highest	0	178 - 184° 174 - 180° 182 - 188° 186 - 192°
52 Fusing Temperature	Displays the fusing temperature.	-	-	
55 VSG, VSP Voltage	Displays VSG, VSP voltage	-	-	Press the enter key twice to Display Vsp.
56 ADS Input Reference Voltage	Displays ADS voltage	-	-	For use with SP Mode "9". Refer to the ADS adjustment procedure.
59 Bias Voltage	Displays bias voltage	-	-	Press the Start key to indicate the voltage.
60 Toner Supply Recovery	Recover toner volume if the Vsp is above 0.5V. a) Press Start key. b) Toner supply clutch turns on. c) Free run starts. d) Vsp becomes less than 0.5V. e) Free run stops.	-	-	Use this mode if the image density is low. (Black toner only). Refer to the NOTE 2 for color toner

NOTE 2: SP Mode No.60.

For the color toner supply recovery, the following procedure is required:

1. Turn off the main switch and turn on DIP switch 1-2.
2. Turn on the main switch, then press the start key.
3. While pressing the enter key and the "0" key, the toner supply clutch turns on.
4. Press the Clear/Stop key and turn off the main switch, then turn off DIP switch 1 - 2.

Mode No.	Function	Data	Factory Setting	Remarks
70 Color Toner Supply Amount	Selects the color toner supply ratio.	0: 14% 1: 7% 2: 21% 3: 28% 4: 35% 5: 42% 6: 49% 7: 56%	0	
73 Color Toner Copy Count	Shows the number of color copies made	0: Red 1: Green 2: Blue		Multiply number by 100. Example: 24 = 2400 sheets
76 Sorter Bin Capacity	Set the stack mode quantity limit.	0: No limit 1: Limit	0	Limit is determined by paper size. Refer to the NOTE 4.
93 Maximum Copy Quantity	Limits the maximum copy quantity that can be entered.	-	0 (999)	The limit quantity is displayed in the copy counter. (Refer to the NOTE 5.)
99 Clear All Memory	Clear All counters and returns all modes to factory setting.	0: Memory 1: Clear	0	DIP SW 1-1 must be ON.

NOTE 3: SP Mode No.29

The idling mode may be necessary if the copier has been installed in an environment with low temperature place.
The idling mode will warm up the fusing rollers enough to ensure the fusing ability at initial copy run.

Idling Mode: The copier will idle for 10 seconds only when the main switch turned on and the Start key turned on.

NOTE 4: SP Mode No.76

Paper Size	Limit Capacity
A3/DLT	10 sheets
A4/LT	30 sheets
A5/HLT	30 sheets

NOTE 5: SP Mode No.93

To change the limit quantity, perform the following:

1. Turn the DIP SW 1-8.
2. Enter "93" using the numeral keys.
3. Press the Enter key.
4. Enter a desired number using numeral keys.
5. Press the Enter key.

TP. VR. DIP SW (A009)

1. Test Points

- Main Board -

Number	Function
TP201	GND
TP202	+5V (Vc)
TP203	+24V (VA)
TP204	Factory Use
TP205	+12V (Vs)
CN212-1	ADS Voltage (Adjust using VR2 on the lamp regulator)
CN209-1	Input voltage of image density sensor (Adjust using VR201 on the main board)

- DF Main Board -

Number	Function
TP101	GND
TP102	+24V (VA)
TP103	+12V (Power for motor control IC)
TP104	+5V (Vc)
TP105	Belt drive motor encoder pulse

2. Variable Resisters

- Main Board -

Number	Function
VR201	Adjust the image density sensor voltage

- Lamp Regulator -

Number	Function
VR1	Light adjustment
VR2	ADS input adjustment
VR3	Factory Use

- DF Main Board -

Number	Function
VR101	Registration adjustment (0 ± 2.5 mm)
VR103	Belt drive motor speed adjustment (2,500 ± 30 rpm)
VR104	Original entrance sensor output (IC 116-5 > +8V : With paper) (IC 116-5 < +4V : Without paper)
VR105	Original width sensor output (IC 116-7 > +8V : With paper) (IC 116-7 < +4V : Without paper)

3. Dip Switches

- Main Board -

DIP 101

DIP Switch	Normal	Function
101-1	---	Lead edge registration adjustment
101-2	---	Lead edge registration adjustment
101-3	---	Lead edge registration adjustment
101-4	---	Lead edge registration adjustment
101-5	---	Lead edge blank margin adjustment
101-6	---	Lead edge blank margin adjustment
101-7	---	Lead edge blank margin adjustment
101-8	---	Lead edge blank margin adjustment

(Lead edge regist./blank margin adjustment interval = 1.0 mm per step. See the adjustment procedure.)

DIP 102

DIP Switch	Normal	Function
102-1	OFF	Scanner free run
102-2	---	Vertical magnification adjustment
102-3	---	Vertical magnification adjustment
102-4	---	Vertical magnification adjustment

(Vertical magnification adjustment interval = 0.2% per step. See the vertical magnification adjustment procedure.)

DIP 201

DIP Switch	Normal	Function
201-1	OFF	Toner supply mode (ON: fixed, OFF: detect)
201-2	ON	Toner supply amount (Note 1)
201-3	OFF	Toner supply amount (Note 1)
201-4	OFF	Image density adjustment (Note 2)
201-5	ON	Image density adjustment (Note 2)
201-6	OFF	Increase bias (+30 V; Color)
201-7	OFF	Increase bias (+90 V)
201-8	OFF	ID sensor LED ON

NOTE 1: Dip SW 201-1, 2, 3

201-2	201-3	Detect Mode (201-1 OFF)	Fixed Mode (201-1 ON)
OFF	OFF	15%	3.5%
ON	OFF	30%	7.0%
OFF	ON	45%	10.5%
ON	ON	60%	14.0%

NOTE 2: Dip SW 201-4, 5

201-4	201-5	Image Density	ID sensor Bias
OFF	OFF	Light (least toner)	470V
ON	OFF	Lighter (less toner)	440V
OFF	ON	Normal	500V
ON	ON	Dark (more toner)	530V

DIP 202

DIP Switch	Normal	Function
102-1	OFF	Sorter instructions
102-2	OFF	Auto casselte shift disable
102-3	OFF	Not used
102-4	OFF	Not used

- Operation Panel -

DIP 1

DIP Switch	Normal	Function
1-1	OFF	Drum conditioning
1-2	OFF	Free run
1-3	OFF	Jam detection disable
1-4	OFF	Auto reset disable
1-5	OFF	Beeper sound disable
1-6	OFF	Copy counter count up/down (ON: down, OFF: up)
1-7	OFF	Manual image density mode priority (ON: manual mode, OFF: ADS mode)
1-8	OFF	SP Mode

- DF Main Board -

DIP101

101-1	101-2	101-3	101-4	Function
ON	OFF	OFF	OFF	Normal mode
ON	OFF	OFF	OFF	Free run
ON	ON	OFF	ON	Belt speed adjustment (VR103)
ON	ON	ON	ON	All indicator on

COPY IMAGE (A009)

ITEM	ADJUSTMENT STANDARD	DESCRIPTION
Light Intensity	Level 2 should be slightly visible (OS-A3) Image Density Key at Level 4.	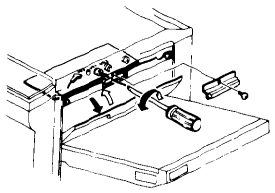
Auto ID Sensor	3 ± 0.06V SP Mode 9, 56	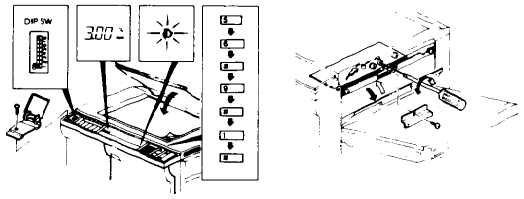
Lead Edge Registration	0 ± 2.0mm (0 ± 0.08")	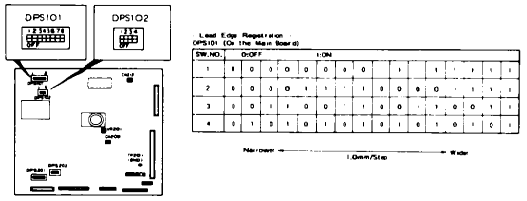
Lead Edge Margin	3.5 ± 2.5mm (0.14" ± 0.1")	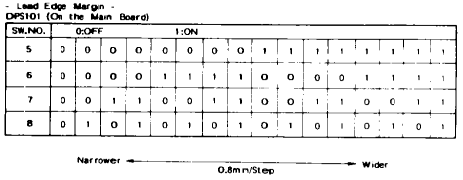
Horizontal and Vertical Magnification	Horizontal ± 0.5% Vertical ± 1.0%	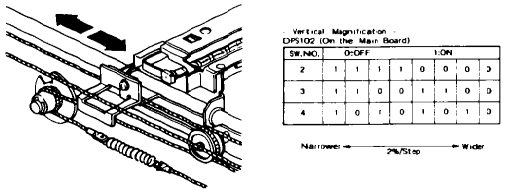

CORONA CURRENT

15 March 87

ITEM	ADJUSTMENT STANDARD	DESCRIPTION
Charge	DC + 42.4 ± 0.2 μA	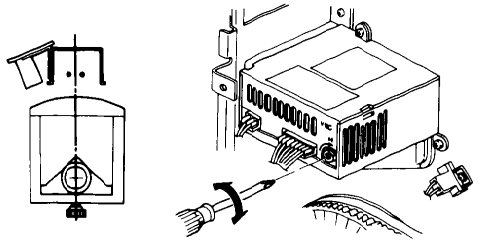
Transfer	DC + 18.6 ± 0.4 μA	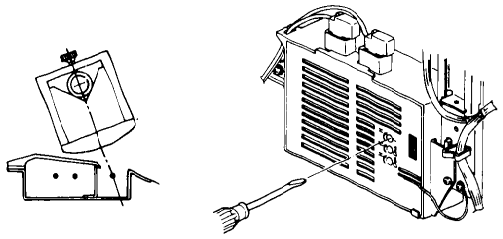
Separation	AC + 39.2 ± 1.5 μA DC − 2.7 ± 0.3 μA	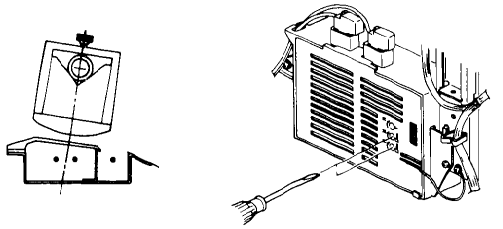

IMAGE DENSITY (Photo Sensor)

ITEM	ADJUSTMENT STANDARD	DESCRIPTION
ID Sensor	4 ± 0.2V	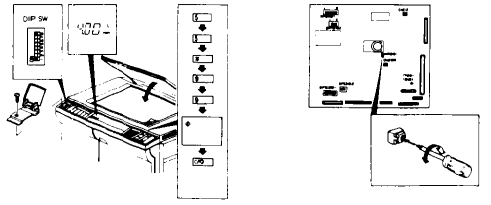

MECHANICAL ADJUSTMENT (A009)

Exposure Lamp Position
* Filament should be aligned with sight hole

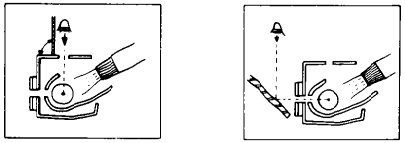

Toner Supply Clutch Lubrication

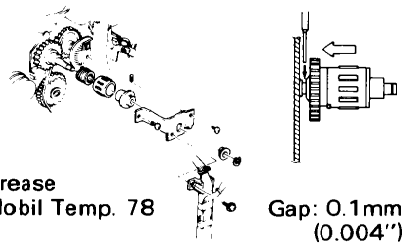

Grease
Mobil Temp. 78

Gap: 0.1mm (0.004")

Doctor Gap: 0.76 ± 0.1mm (0.03" ± 0.004")

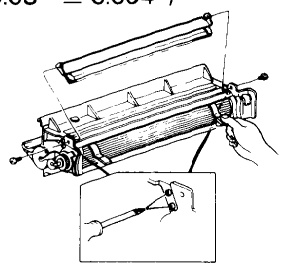

Cleaning Pressure: 13 ± 0.5mm (0.51" ± 0.02")

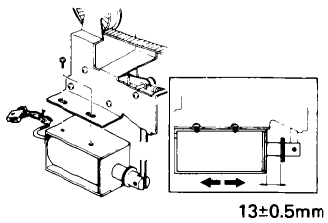

Registration Clutch Adjustment
Gap: 0.1mm (0.004")

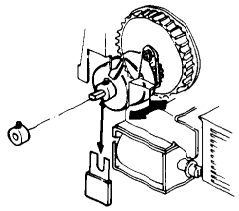

Feed Roller/Friction Pad Gap (1st/2nd Feed)
Gap: 1.6 ± 0.3mm (0.06" ± 0.01")

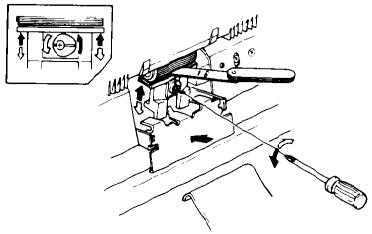

Feed Roller/Friction Pad Gap (Cassette Tray)
Gap: 7.3 ± 0.3mm (0.29" ± 0.01")

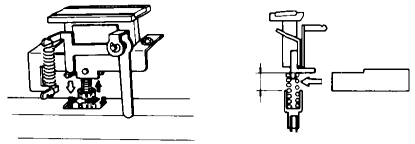

Friction Pad Holder Position (Cassette Tray)
Gap: 1.7 ± 0.2mm (0.07" ± 0.008")

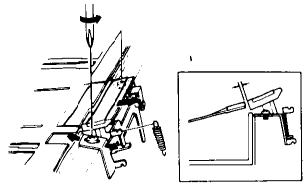

Horizontal Registration (Cassette Tray)
0 ± 2mm (0 ± 0.08")

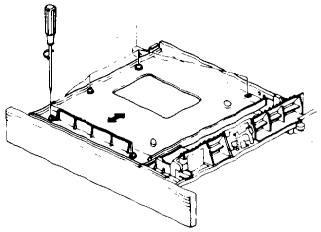

Fusing Pressure

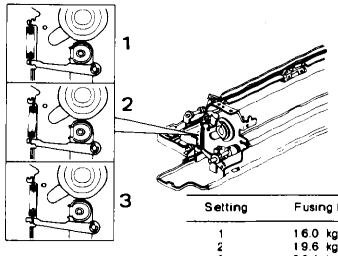

Setting	Fusing Pressure	
1	16.0 kg	
2	19.6 kg	* Factory Setting
3	20.4 kg	

Stopper Plate Position (DF)
Groove of the cam should be aligned with the "4" calibration mark.

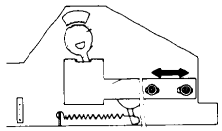

DF Belt Drive Motor Speed
2500 ± 30 rpm

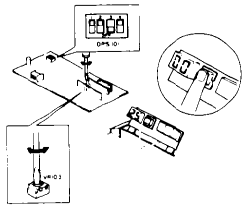

Lead Edge Registration (DF)
0 ± 2.0 mm (0 ± 0.08")

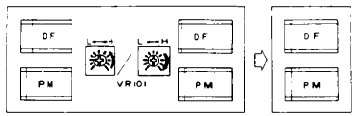

Timing Belt Tension (Sorter)
2^{+3}_{-0} mm $^{+0.12"}_{-0"}$

* Deflection at 200g (0.44lb)

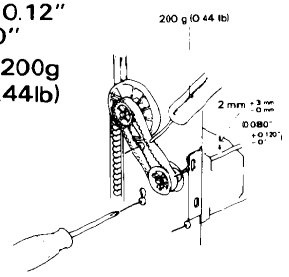

Side Registration (LCT)
0 ± 2.0 mm (0 ± 0.08")

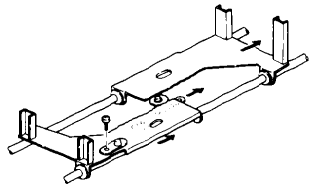

1. UNPACKING AND INSTALLATION

- ACCESSORY CHECK -

Check the quantity and condition of the accessories in the box according to the following list:

	DESCRIPTION	Q'TY
1.	Installation procedure (115V - English only. 220V/240V - five languages)	1
2.	New Equipment Condition Report	1
3.	NECR Envelope (115V only)	1
4.	Original exit guide	1
5.	Flip scale	1
6.	Flip scale spring	1
7.	Flathead shoulder screw	2
8.	Original feed table	1
9.	Original table cover	1
10.	DF interface harness	1
11.	Nylon harness bushing	1
12.	Test chart A4	1
13.	Flathead screw - M4 X 6	2
14.	Ground screw	2
15.	Toothed washer	2
16.	Pan head screw - M4 X 6	4
17.	Pan head screw with washer - M4 X 6	2
18.	Pan head screw - M5 X 12	4
19.	Flathead Screw - M4 X 8	2
20.	Multilingual decals (220/240V only)	1

Interface PCB type E is also required for DF installation.

Check the accessories according to the following list:

Interface PCB Type E box:

	DESCRIPTION	Q'TY
1.	PCB Mounting Stud	2
2.	Bolt	2
3.	Nut	2

NOTE: The interface PCB type E is not necessary if a sorter is already installed in the machine.

- INSTALLATION PROCEDURE -

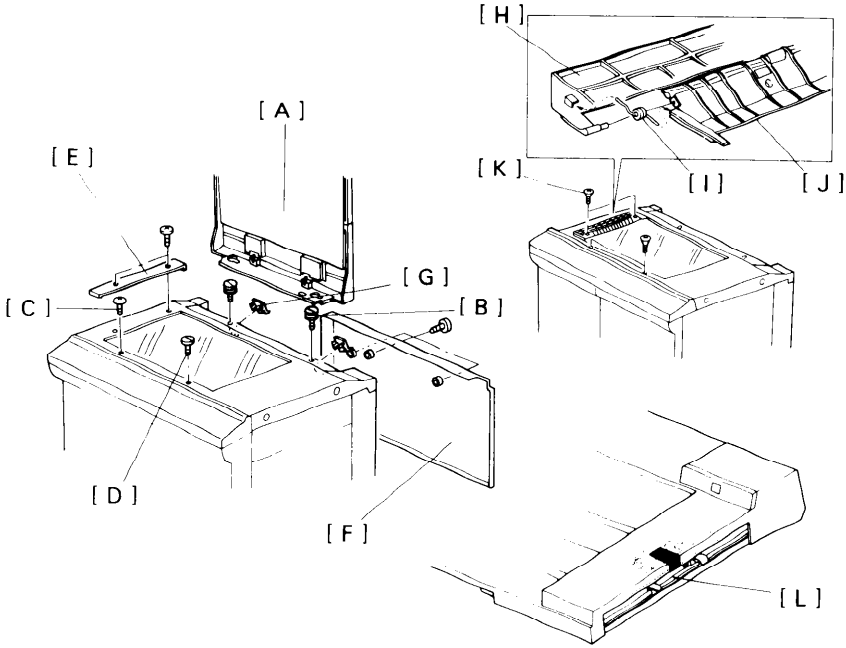

1. Turn off the main switch and unplug the power supply cord of the copier.

2. Remove the following parts:

   1) Platen cover [A]
   2) Mounting stud (2 pcs) [B]
   3) Truss screw [C]
   4) Plastic screw [D]
   5) Left scale (2 screws) [E]
   6) Rear cover (3 screws) [F]
   7) ADF docking hole cap (2 pcs) [G]

   Save the above parts for future use.

3. Set the flip scale [H] (with the flip scale spring [I]) on the original exit guide [J]; then, mount it as shown (2 flathead screws).

4. Secure two flathead shoulder screws [K] as shown in the figure.

5. Remove the shipping tape [L].

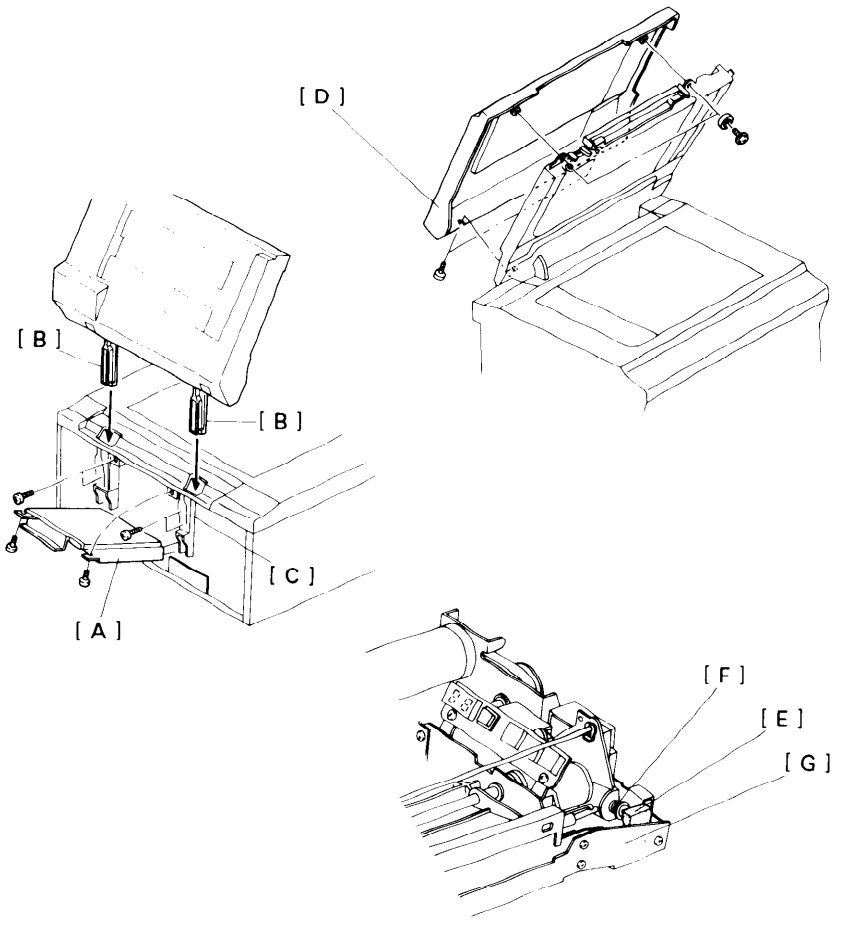

6. Lower the PCB plate [A] (2 screws).
7. Insert the mounting posts [B] into the DF mounting brackets [C].
8. Temporarily secure the mounting posts to the DF mounting brackets (4 screws, M5 X 12).
9. Remove the DF cover [D] (4 screws).
10. Remove the shipping cushion [E] between the stopper solenoid [F] and the DF side plate [G].

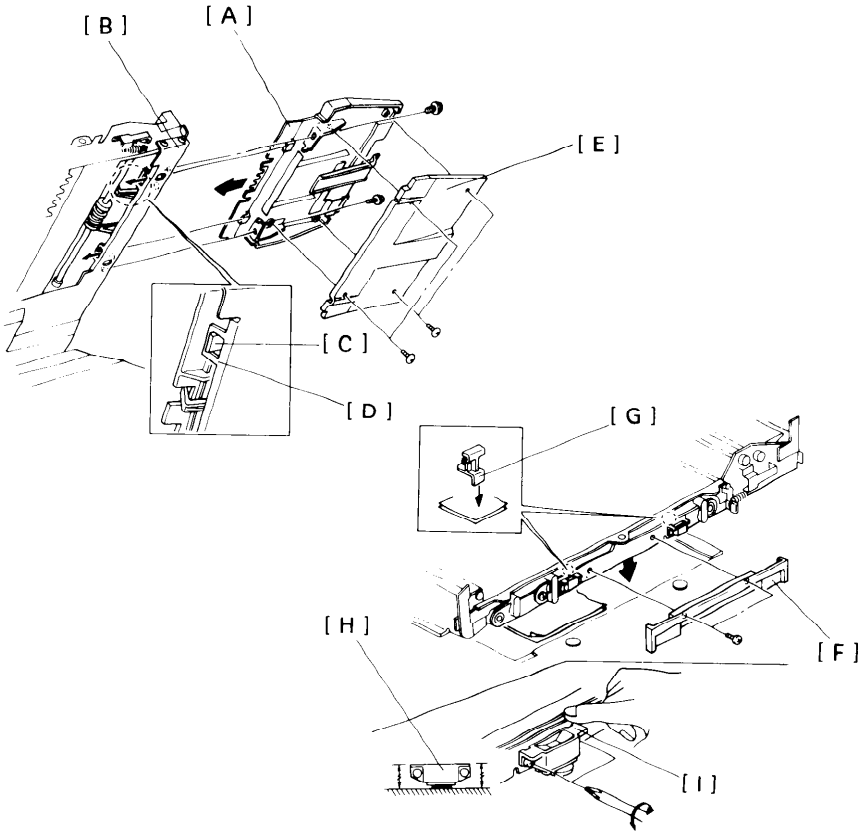

11. Install the original feed table [A] on the right side of the belt unit [B] (2 screws with washer). Be sure to engage the 2 hooks [C] of the original table with the docking holes [D] of the belt unit.

12. Install the original table cover [E] under the original table (4 screws).

13. Level the DF as follows:

    a) Remove the DF grip plate [F] (2 screws).
    b) Place 2 sheets of A3 (11" x 17") paper between the white belt guide spacers [G] and the exposure glass.
    c) Loosen the mounting screws of the right side magnetic catch [H]. Push down the right side of the magnetic catch bracket [I], then tighten the screws of the right magnetic catch. Repeat this process with the left side magnetic catch.
    d) Remove the 2 sheets of paper.

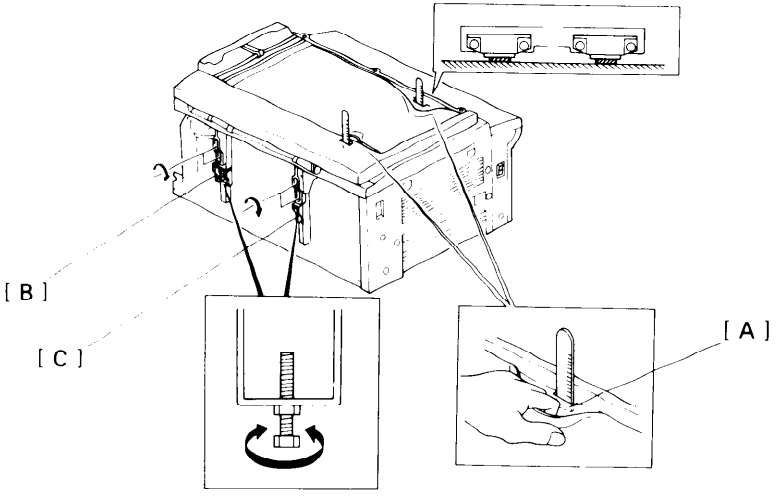

e) Adjust the height of rear side of the belt unit as follows:

1) Lift the upper part of the feed belt out of the way and measure the distance between the top of the access hole [A] in the pressure roller support bracket and the lower part of the feed belt at the front and rear left corners.
2) Adjust the two distances so that they are the same using the left height adjusting bolt [B] on the DF mounting bracket.
3) Adjust the right rear height adjusting bolt [C] so that the DF closes properly.
4) Make sure that the belt is properly positioned in the belt guide spacers.
5) Tighten the four screws (M5 x 12) on the mounting posts. Lock the height adjusting bolts [B], [C] (2 lock nuts).

f) Install the DF grip plate.

g) Check that the DF closes properly.

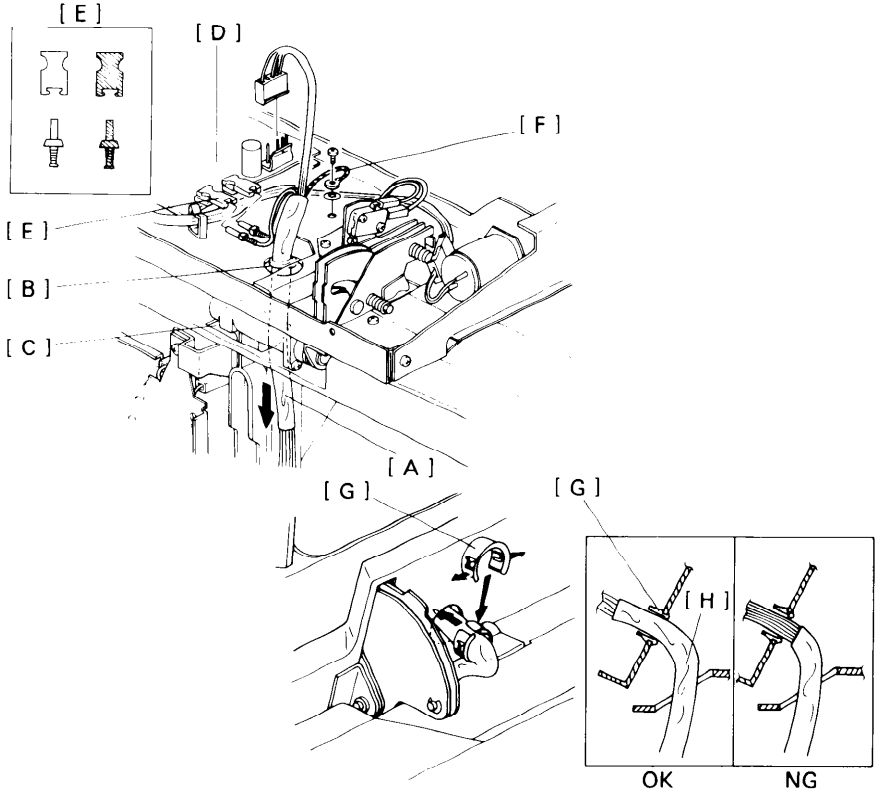

CAUTION: **On the following step, avoid bending the fiber optics sharply; this will damage the fiber optics.**

14. Pass the DF interface harness [A] through the harness hole [B] of the DF and the docking hole of the copier [C].

15. Connect the DF interface harness to the DF PCB [D] (3 connectors).

    NOTE: The fiber optics connectors [E] have different colors. Be sure to match these colors when making these connections.

16. Secure the DF ground wire [F] on the DF base plate (1 ground screw and toothed washer).

17. Open the DF and install the nylon harness bushing [G] from the underside. (This harness bushing should be positioned around the vinyl tube [H] of the DF harness as shown.)

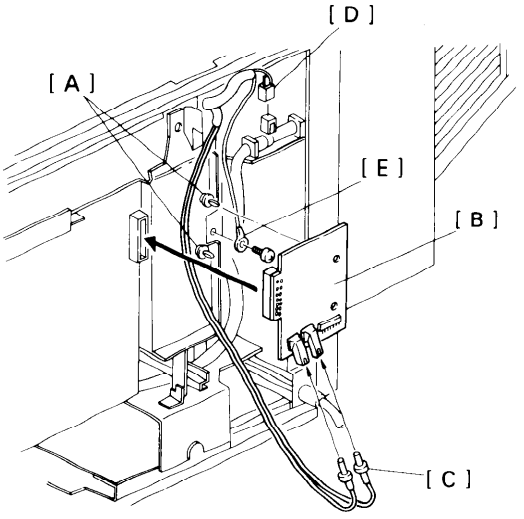

18. Raise and secure the copier PCB plate (2 screws).

19. Fix the two PCB mounting studs [A] on the PCB plate and install the interface board [B]. (This is not necessary if a sorter is already installed in the machine.)

20. Connect the 3 connectors.

    a) Being careful not to damage the two fiber optic connectors [C], connect them to the interface board as follows:

    CN806<== Brown ==> CN103
    CN807<== Black ==> CN104

    b) Connect the DF harness connector [D] to the copier's ac 4p connector.

21. Secure the ground wire [E] to the DF right mounting bracket (1 ground screw and toothed washer).

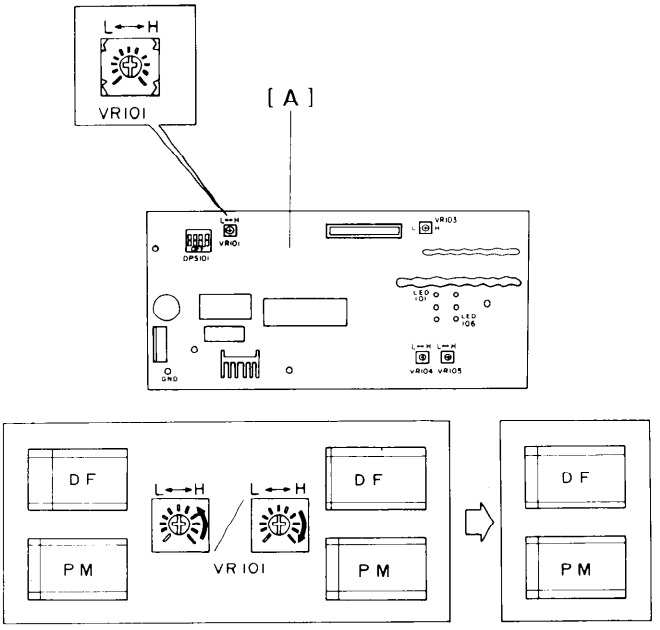

22. Turn on DIP switch 101-2 [A] on the DF PCB.

23. Adjust the lead edge registration as follows:

    a) Turn on the copier main switch and make a copy using the test chart in the platen mode with the flip scale.

    b) Keep this copy for reference and mark "PM" (Platen Mode) on the reverse side of it.

    c) Make a copy using the test chart with the DF.

    d) Adjust the DF registration to match the "PM" reference copy using VR101 on the DF PCB [B].

       PM > DF: Turn VR101 clockwise
       PM < DF: Turn VR101 counterclockwise

    e) Continue to repeat steps c) and d) until you achieve the same registration as in step 'b'.

24. Replace all covers.

25. Check the operation of the DF and copier system.

26. Fill out the New Equipment Condition Report.

2. REPLACEMENT AND ADJUSTMENT

- DF BELT REPLACEMENT -

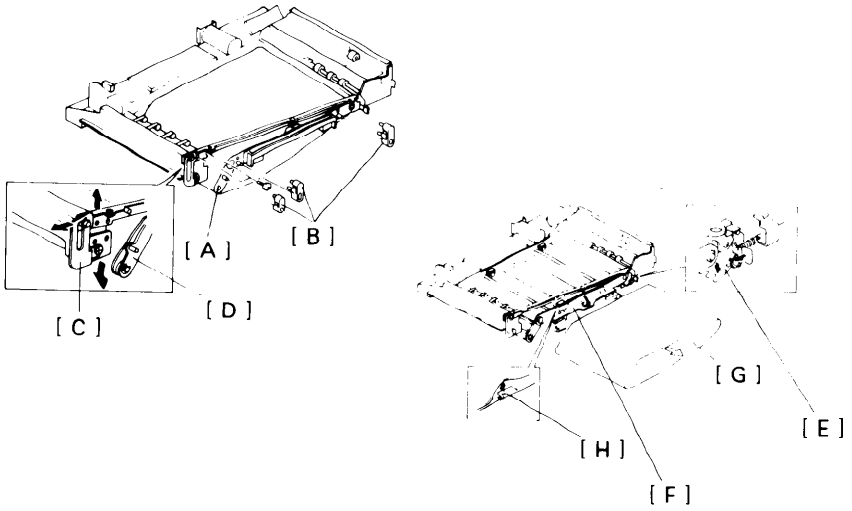

1. Remove the DF cover (4 screws, 2 collars).
2. Remove the 2 screws securing the left side of the front stay [A] and remove the 3 belt unit holders [B].
3. Raise the left end of the front stay and set it in the up position with the lock plate [C].
4. Rotate the belt release bracket [D] counterclockwise and lower the original entrance guide [E].
5. Lower the DF grip bracket [F] and release the belt [G] from the belt guide spacers [H].
6. Slide off the DF belt [G].

NOTE: - **After installing the DF belt, make sure that the belt is properly positioned in the belt guide spacers.**

- **When returning the DF grip bracket to its original position, make sure that the DF grip bracket is properly set behind the flathead screw.**

- PICK-UP ROLLER REPLACEMENT -

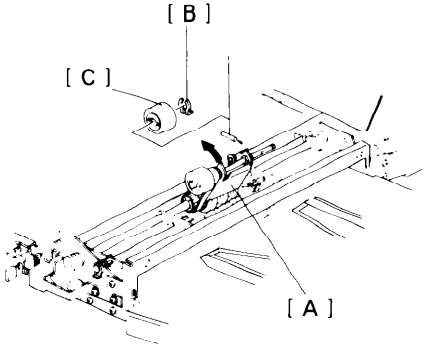

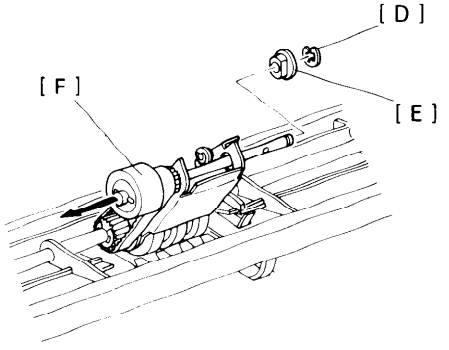

1. Remove the DF cover (4 screws, 2 collars).
2. Lift up the pick-up roller unit [A] and remove the snap ring [B].
3. Slide off the rear pick-up roller [C].

   NOTE: Be careful not to lose the pin.
4. Remove the E-ring [D] and bushing [E].
5. Slide off the front pick-up roller assembly [F].

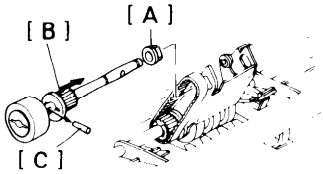

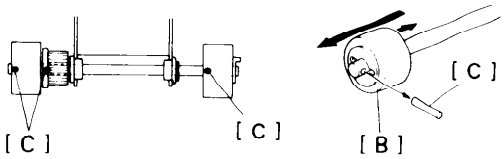

6. Slide off the pulley [A] and the pick-up roller [B].

NOTE: Be sure not to lose the drive pins [C] of the pulley and pick-up roller.

7. Replace the pick-up rollers and reassemble.

- FEED ROLLER REPLACEMENT -

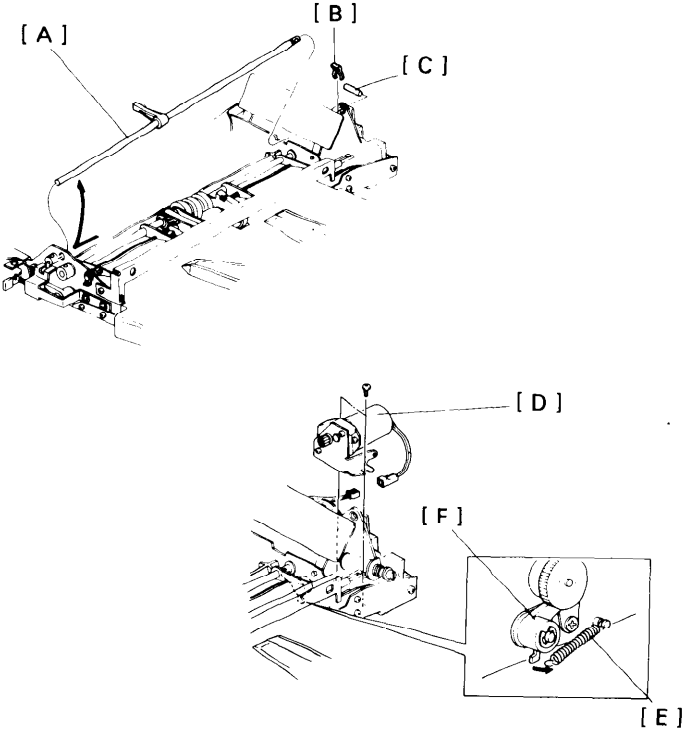

1. Remove the DF cover (4 screws, 2 collars).
2. Remove the pick-up control shaft [A] (1 snap ring [B], 1 pin [C]).
3. Remove the feed-in motor [D] (2 screws).
4. Unhook the spring [E] of the wear prevention lever [F].

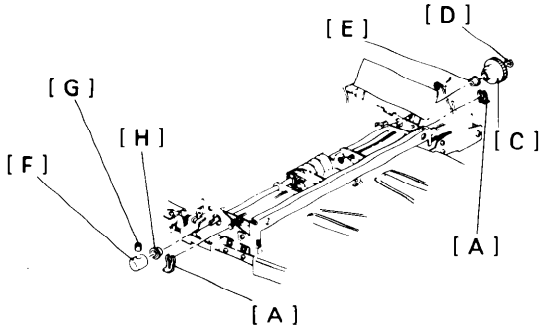

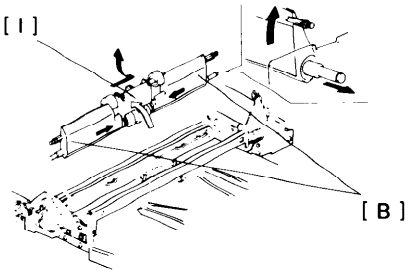

5. Remove the two snap rings [A] fixing the feed-in guides [B].
6. Remove the feed roller drive gear [C] (1 E-ring [D], 1 bearing [E]).
7. Remove the collar [F] (1 allen screw [G]) and the bearing on the front feed roller shaft [H].
8. Stand the feed roller unit [I] and slide the feed-in guides as shown in the figure.
9. Then slide the unit to the rear, lift the front of the unit, and remove it from the DF.

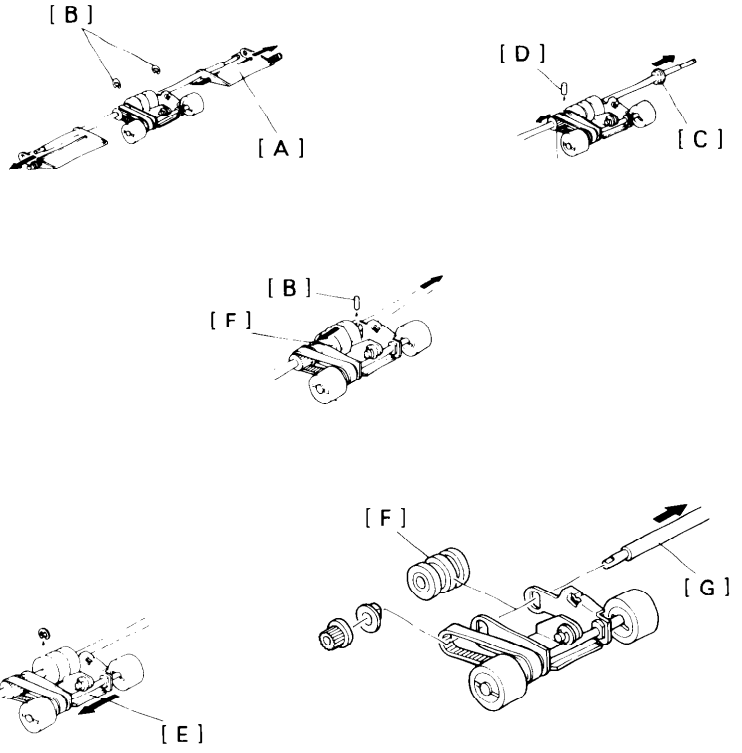

10. Slide off the feed-in guides [A] and remove two E-rings [B].
11. Remove the bushing [C] and slide the pulley towards the front to remove the pulley pin [D].
12. Slide the pick-up roller unit [E] to the front and remove the E-ring.
13. Slide the feed roller [F] to the front and remove the pin.
14. Slide off the feed roller shaft [G].
15. Replace the feed roller and reassemble.

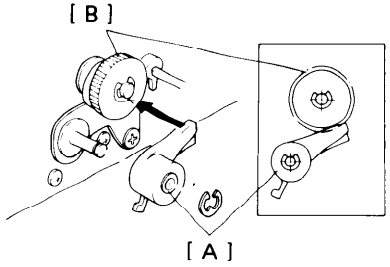

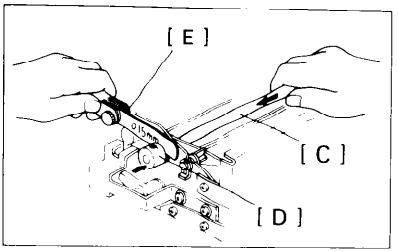

16. When reassembling the feed roller unit, make sure of the following points:

    1) Confirm that the wear prevention lever [A] is to the right of the drive gear [B] as viewed from the rear.

    2) Tighten the Allen screw of the feed roller shaft [C] collar [D] so that the clearance between the bushing and collar is 0.15 mm (check with a thickness gauge [E])

- FRICTION ROLLER REPLACEMENT -

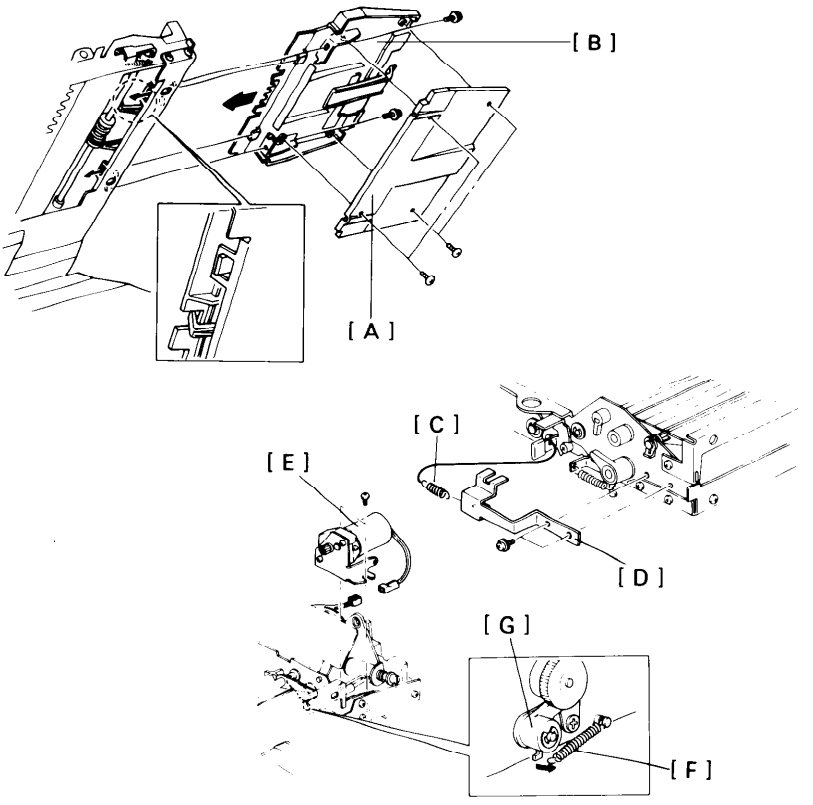

1. Remove the DF cover (4 screws, 2 collars).
2. Remove the original table cover [A] (4 screws).
3. Remove the original table [B] (2 screws).
4. Remove the lever spring [C] and the stopper plate [D] (2 screws).
5. Remove the feed-in motor [E] (2 screws, 1 connector).
6. Unhook the spring [F] of the wear prevention lever [G].

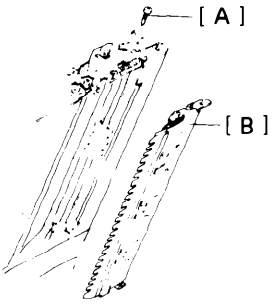

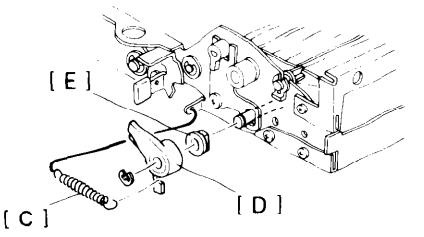

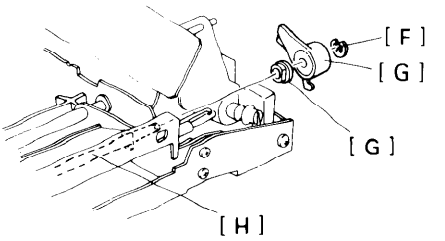

7. Remove the front stud screw [A] and take out the original entrance guide [B].

8. Unhook the spring [C] of the misfeed prevention lever [D] and remove the misfeed prevention lever and the bushing [E] (1 E-ring [F]).

9. Remove the wear prevention lever [G] (1 E-ring) and the bushings on the friction roller shaft [H].

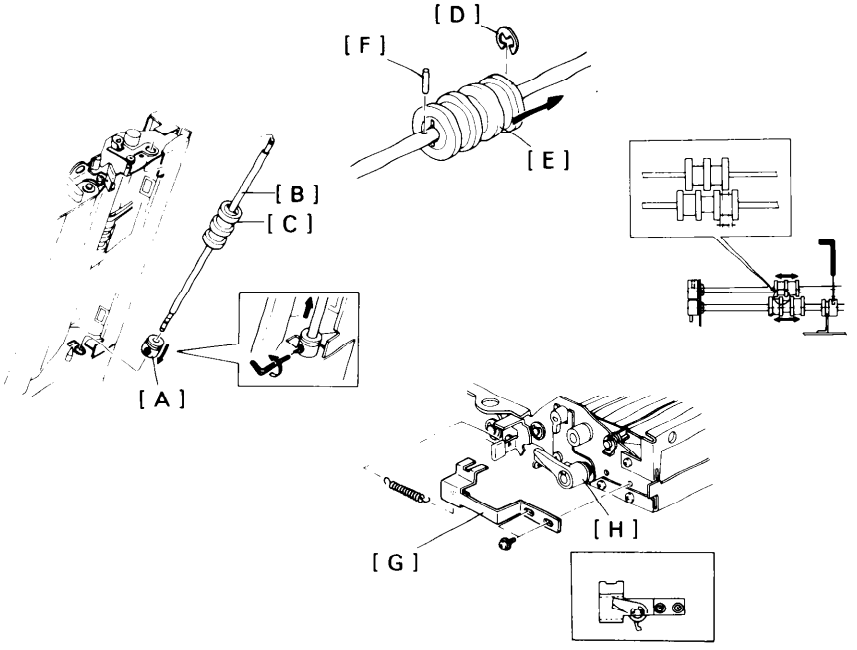

10. Loosen the allen screw in the collar [A] on the friction roller shaft [B] and remove the friction roller assembly [C].

11. Remove the E-ring [D] and replace the friction roller [E].

NOTE: - **Be sure not to lose the pin [F].**

- **When reassembling the unit, make sure of the following points:**

- **When replacing the collar on the friction roller shaft, position the friction roller so that it is centered on the feed roller.**

- **When replacing the stopper plate [G], make sure that the misfeed prevention lever [H] is restrained by the stopper plate as shown.**

- **Confirm the mounting position of the stopper plate (See "Stopper Plate Positioning").**

- REGISTRATION ROLLER REPLACEMENT -

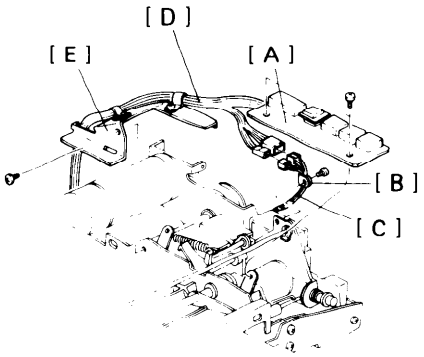

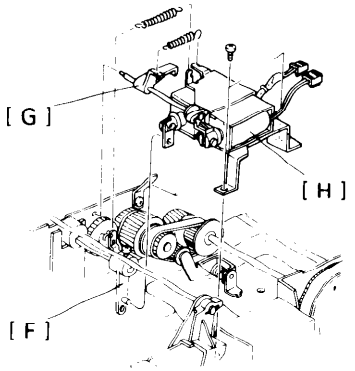

1. Remove the DF cover (4 screws, 2 collars).
2. Remove the indicator board [A] (2 screws).
3. Remove the harness clamp [B] as shown (1 screw).
4. Disconnect the registration solenoid harness [C] and roller release solenoid harness [D] (2 red connectors).
5. Move the indicator board and the harness bracket [E] (1 screw) away from the feed-in section.
6. Remove the springs of the friction roller release lever [F] and the registration clutch lever [G].
7. Remove the solenoid assembly [H] (2 screws).

NOTE: The release solenoid plunger is engaged with the release lever [I].

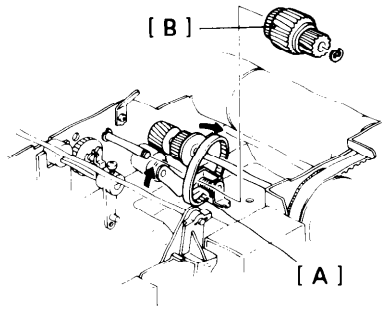

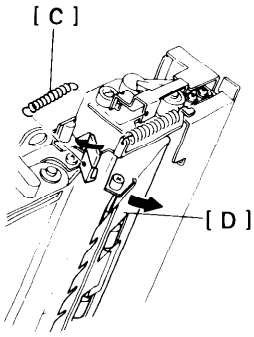

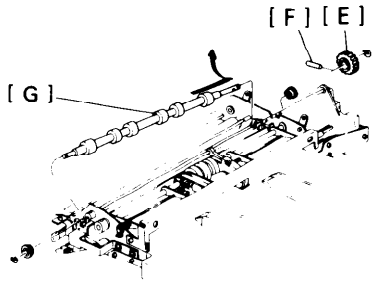

8. Slip off the timing belt [A] while lifting the belt tightener.

9. Remove the registration clutch assembly [B] (1 E-ring).

10. At the front, remove the lever spring [C] and lower the original entrance guide [D].

11. Remove the registration drive gear [E] (1 E-ring, 1 pin [F]).
NOTE: Do not lose the pin.

12. Remove the registration roller [G] as shown in the figure (1 E-ring, 2 bearings).

- STOPPER PLATE POSITION ADJUSTMENT -

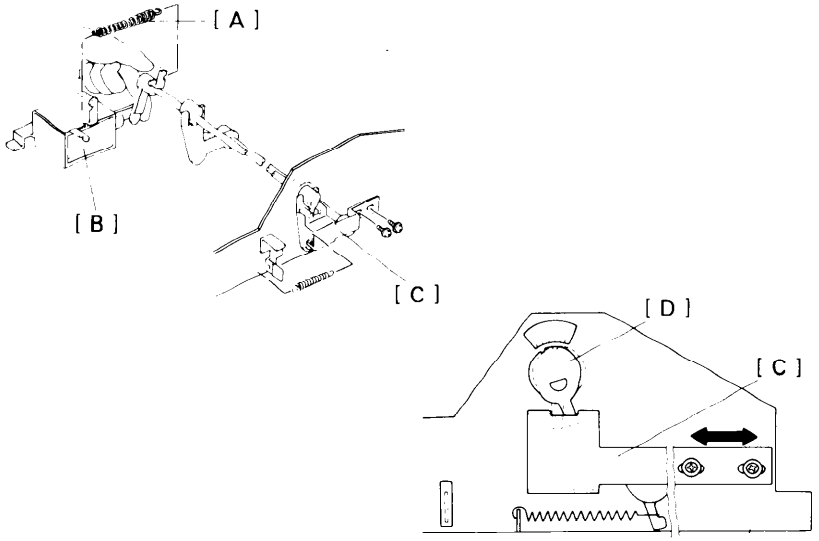

Reinstall the stopper plate as follows:

1. Remove the spring [A] of the friction roller release solenoid [B] and keep the solenoid plunger inside the coil.

2. Loosen the two screws of the stopper plate [C].

3. Position the plate so that the groove of the cam [D] aligns with the ".4" calibration mark.

   NOTE: - **This means that the overlap of the feed and friction rollers is adjusted to 0.4 mm when the friction roller is released from the feed roller.**

   - **If the cam cannot align with the ".4" mark, reposition the roller release solenoid by loosening the solenoid mounting screws.**

4. Replace the spring of the solenoid.

   NOTE: - **If multiple feeding occurs, increase the overlap by repositioning the stopper plate.**

   - **If the original becomes smeared, decrease the overlap.**

- DF BELT DRIVE MOTOR SPEED ADJUSTMENT -

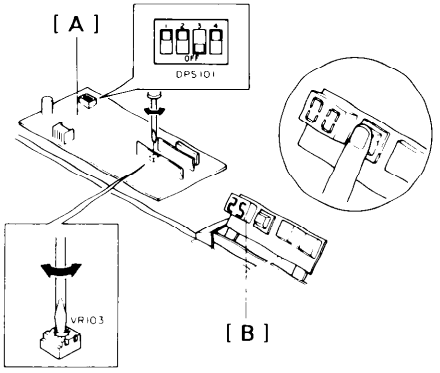

This adjustment should be done when the DF PCB [A] is replaced.

ADJUSTMENT STANDARD : 2500 ± 30 rpm

1. Turn off the main switch.
2. Remove the DF cover (4 screws, 2 collars)
3. Lower the DF unit.
4. Turn on DIP SW 101-2 and 101-4 of the DF main board.
5. Turn on the main switch.

   The belt drive motor will start turning, and the left two digits of the motor speed will be displayed in the original counter. To display the second two digits of the motor speed, press the Counter Reset key

   For example, if motor speed is 2500 rpm, "00" will be displayed on the original counter [B] when the Counter Reset key is pressed; "25" will be displayed when it is not pressed.
6. Adjust the motor speed to 2500 ± 30 rpm by turning VR103 on the DF main board.
7. Turn off the main switch, turn off DIP SW 101-2 and 101-4 to the normal position (DIP SW 101-1 is on and all others are off), and reassemble.

- LEAD EDGE REGISTRATION ADJUSTMENT -

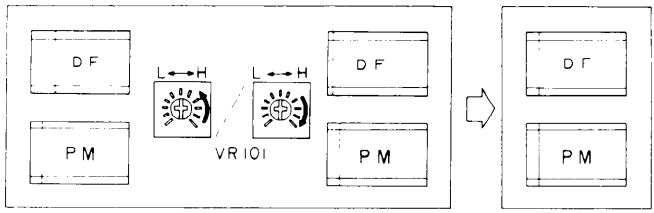

1. Adjust the lead edge registration as follows:

   a) Turn on the copier main switch and make a copy using the test chart in the platen mode with the flip scale.

   b) Keep this copy for reference and mark "PM" (Platen Mode) on the reverse side of it.

   c) Make a copy using the test chart with DF.

   d) Adjust the DF registration to match the "PM" reference copy using VR101 on the DF PCB [B].

      PM > DF: Turn VR101 clockwise
      PM < DF: Turn VR101 counterclockwise

   e) Continue to repeat steps c) and d) until you achieve the same registration as in step b).

2. Replace all covers.

3. Check the operation of the DF and copier system.

4. Fill out the New Equipment Condition Report.

1. UNPACKING AND INSTALLATION

- ACCESSORY CHECK -

Check the quantity and condition of the accessories in the box according to the following list:

	DESCRIPTION	Q'TY
1.	Installation Procedure (115V - English only. 220V/240V - five languages)	1
2.	New Equipment Condition Report	1
3.	NECR Envelope (115V only)	1
4.	Grounding Screw	1
5.	Toothed Washer	1
6.	Knob Screw	2
7.	Spacer (4.2 x 12 x 2.9)	2
8.	Multilingual Decal (220/240V only)	2

Interface PCB Type E and Sorter Adapter Type E are also required to install the sorter.

Check the accessories according to the following list:

Sorter Adapter Type E box:

	DESCRIPTION	Q'TY
1.	Mounting Stud	2
2.	Screw	1

Interface PCB Type E box:

	DESCRIPTION	Q'TY
1.	PCB Mounting Stud	2
2.	Bolt	2
3.	Nut	2

NOTE:
- **Save the bolts and nuts for ADF installation.**
- **Interface PCB is not necessary if a DF is already installed in the system.**
- **Key-top and Key Cover for the sorter installation are attached the back-side of the rear cover.**

- INSTALLATION PROCEDURE -

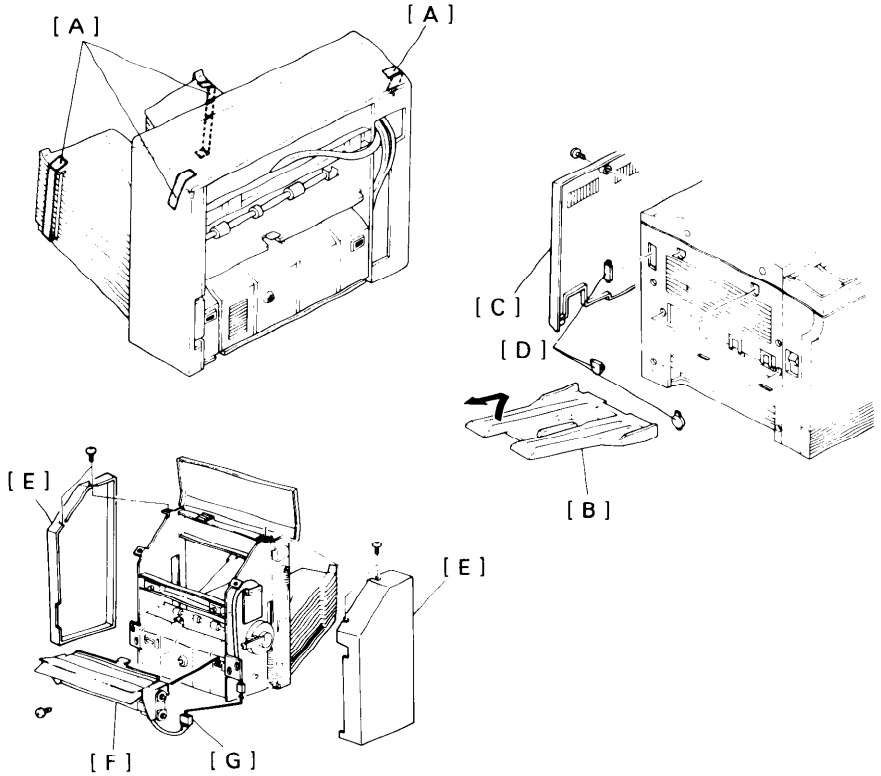

1. Remove the strips [A] of tape shown in the figure.
2. Turn off the main switch and unplug the power supply cord of the copier.
3. Remove the receiving tray [B] and rear cover [C] of the copier (2 screws).
4. Remove the five plastic caps [D] from the left cover.
5. Remove the sorter covers [E] (2 screws each).
6. Install the sorter adapter [F] on the sorter (1 screw).
7. Connect the sorter adapter harness [G] to the sorter (free white 2p connector).

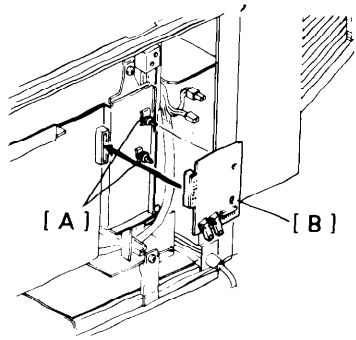

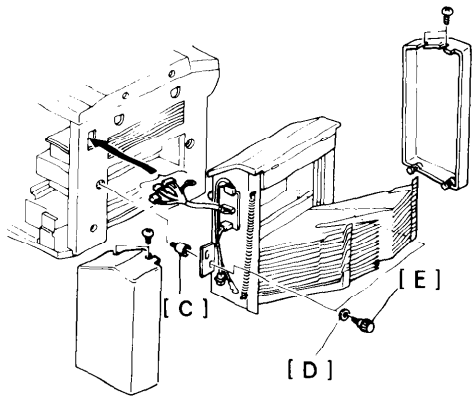

8. Fix the two PCB mounting studs [A] on the main board and install the interface board [B]. (The mounting studs are packed with the interface board.)

9. Screw in the lower mounting studs [C].

10. Mount the sorter on the copier. Insert the two mounting studs into the docking holes, and pass the harness through the access hole.

11. Fix the sorter unit to the copier with the spacers [D] and two knob screws [E].

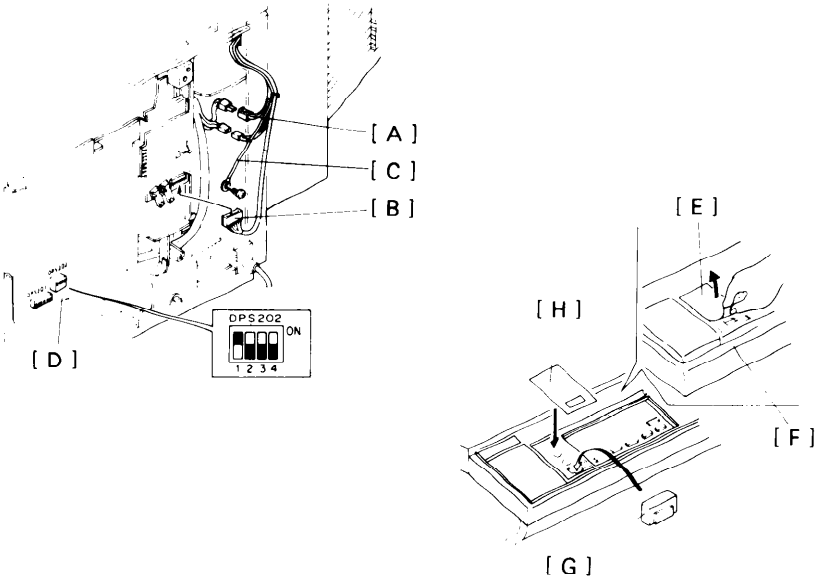

12. Connect the sorter ac harness [A] (free red 2p connector).
13. Connect the sorter dc harness [B] (CN102, free white 4p connector).
14. Secure the sorter ground wire [C] (1 screw with toothed washer).
15. Turn on DIP SW202-1 on the main board [D].
16. Mount the sorter covers and copier rear cover.
17. Peel off the panel cover [E] at the left end of the operation panel [F].
18. Set the Sort/Stack key top [G] and adhere the Sort/Stack key cover [H].
19. Check the sorter's operation and fill out the New Equipment Condition Report.

2. REPLACEMENT AND ADJUSTMENT

- EXIT ROLLER AND O-RING REPLACEMENT -

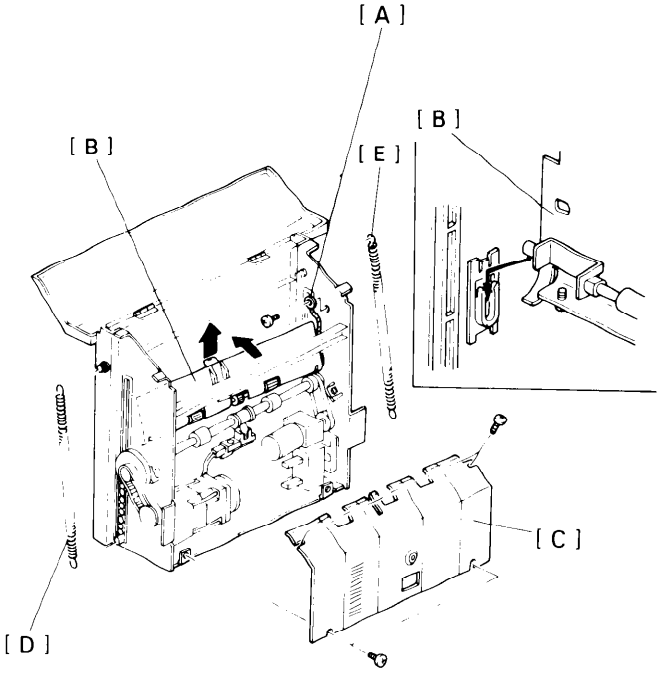

1. Remove the sorter from the copier and the sorter adapter from the sorter.
2. Remove the front and rear covers (2 screws each).
3. Remove the ground wire [A] of the upper guide plate [B] (1 screw).
4. Swing the guide plate up, then remove it by carefully pulling it up.
5. Remove the inner cover [C] (4 screws).
6. Unhook the front [D] and rear [E] pressure springs.

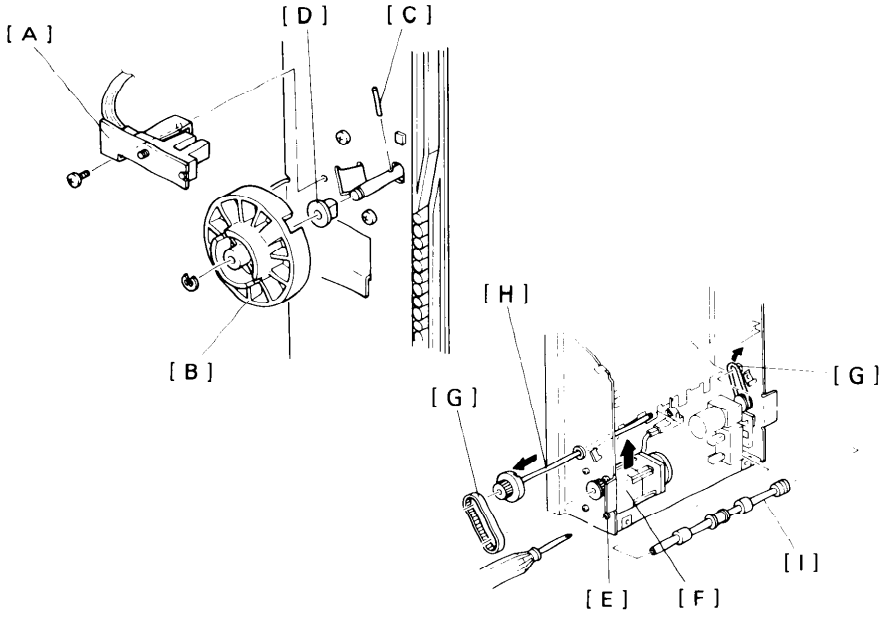

7. Remove the wheel sensor assembly [A] (1 screw).
8. Remove the rear transfer wheel [B] (1 E-ring).

   NOTE: Be sure not to lose the pin [C] of the wheel.

9. Remove the pin and bushing [D].
10. Loosen the four mounting screws [E] of the wheel drive motor [F].
11. Lift the wheel drive motor and slip off the timing belt [G].
12. Slide off the wheel drive shaft [H] and remove the exit roller [I] and O-ring [J].

    CAUTION: Do not damage the paper sensor [K] when removing the exit roller.

13. Replace the exit roller and O-ring, then reassemble.

    NOTE: - When reinstalling the wheel sensor assembly, be sure that the sensor does not touch the wheel.

    - When remounting the wheel drive motor, adjust the timing belt tension. (See the section on Timing Belt Tension Adjustment.)

- PAPER SENSOR REPLACEMENT -

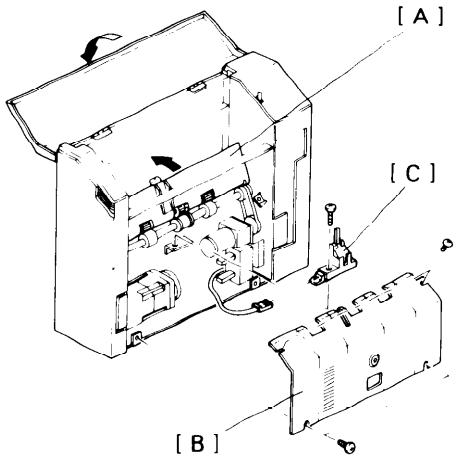

1. Remove the sorter from the copier and the sorter adapter from the sorter.
2. Swing up the guide plate [A].
3. Remove the inner cover [B] (4 screw).
4. Replace the paper sensor [C] (1 screw and 1 connector) and reassemble.

CAUTION: To avoid damaging the sensor, do not over-tighten the sensor mounting screw.

- Timing Belt Tension Adjustment -

ADJUSTMENT STANDARD: 2 $^{+3}_{-0}$ mm; 0.08 $^{+0.12}_{-0}$ inches
(deflection at 200 g (0.44 lb) pressure)

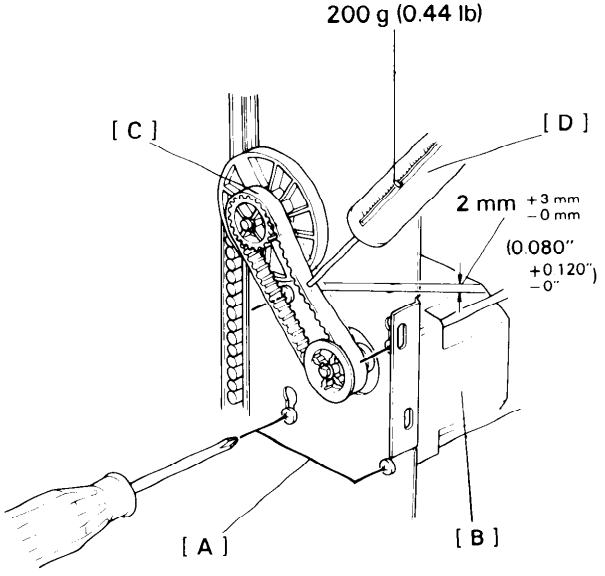

1. Remove the front cover.
2. Loosen the four mounting screws [A] of the wheel drive motor [B].
3. Press the timing belt [C] with a tension gauge [D] as shown in the figure and adjust the tension by repositioning the wheel drive motor.

1. UNPACKING AND INSTALLATION

- ACCESSORY CHECK -

Check the quantity and condition of the accessories in the box according to the following list:

	DESCRIPTION	Q'TY
1.	Installation procedure (115V - English only. 220V/240V - five languages)	1
2.	New Equipment Condition Report	1
3.	Envelope - NECR (115V only)	1
4.	Pick-up roller assembly	1
5.	Feed Gear	1
6.	Mounting Bracket (Type A, B, C)	6
7.	Screw (M4 X 6)	4
8.	Screw (M4 X 8)	1
9.	Screw (M4 X 10)	2
10.	Clamper	1
11.	Caution decal (115V - English only. 220V/240V - five languages)	1
12.	Multilingual decals(220/240V only)	1

- INSTALLATION PROCEDURE -

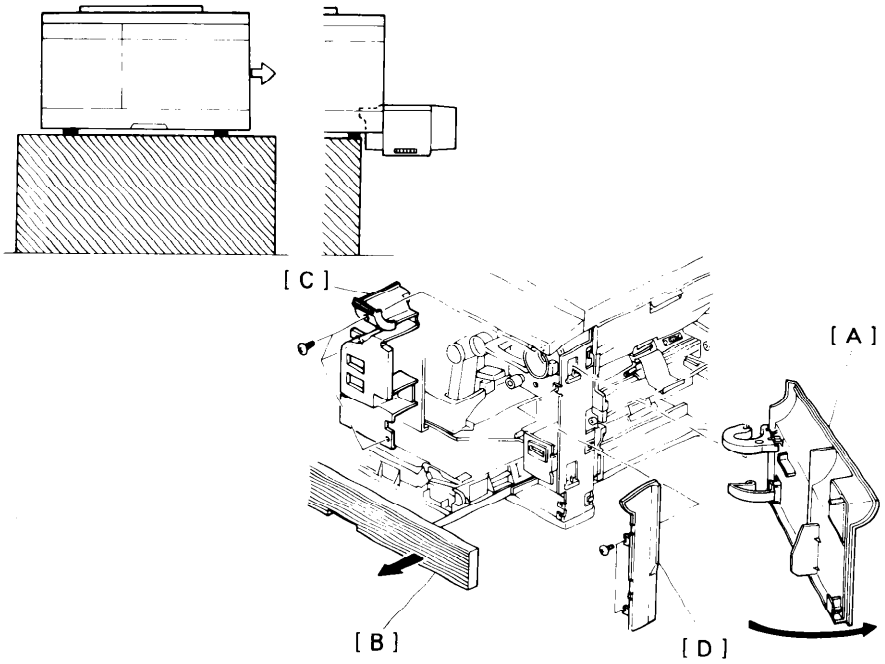

1. Turn off the main switch and unplug the power supply cord of the copier.
2. Move the copier to the right.

   NOTE: **As this system does not contain a special system table, the copier must be moved to the right so that the large capacity tray can overhang the end of the table.**
3. Open the right front door [A].
4. Pull out the cassette tray [B].
5. Remove the right inner cover [C] (3 screws with flat washer).
6. Remove the right front door [A].
7. Remove the front right side cover [D] (2 screws).

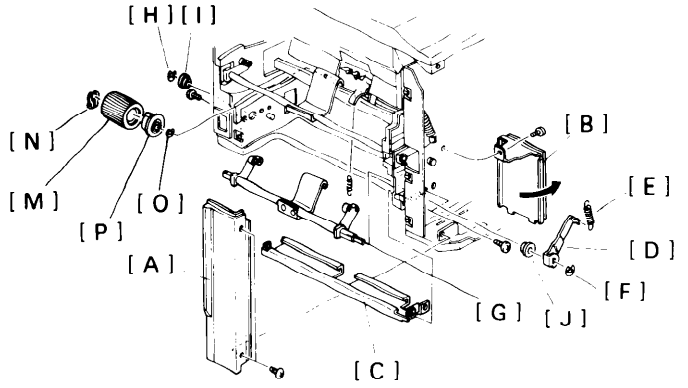

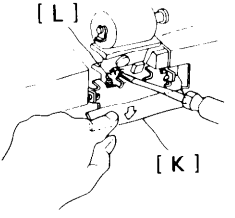

8. Remove the rear cover (2 screws).
9. Remove the rear right side cover [A] (2 screws).
10. Remove the paper feed PCB [B] (1 screw).
11. Remove the feed stay [C] (3 screws).
12. Remove the cassette arm lever [D] (1 spring [E], 1 E-ring [F]).
13. Remove the cassette arm assembly [G] (front - 1 E-ring [H] and 1 bushing [I], rear - 1 bushing [J]).
14. Press the pad positioning plate [K] down and unhook the spring [L] using a small screw driver.
15. Slide off the feed roller [M] (1 snap ring [N]).
16. Remove the nylon hub [O] from the feed roller.
17. Remove the E-ring [P] of the feed roller shaft.

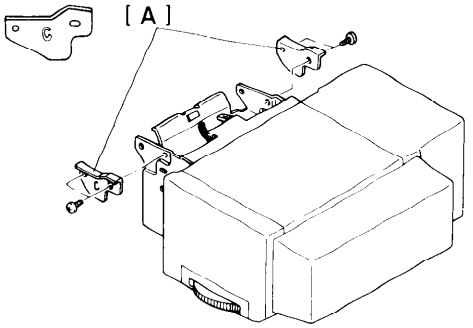

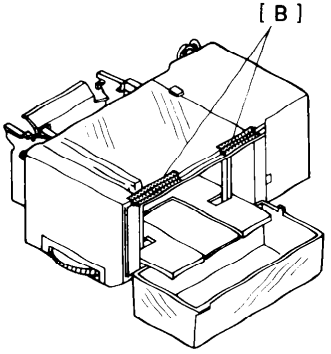

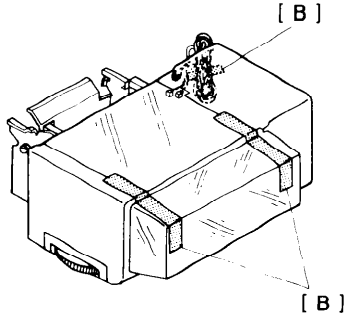

18. Install the mounting bracket [A] (Type C, Chrome) on the Large Capacity Tray (2 M4 X 6 screws each).

19. Remove the 5 strips of shipping tape [B].

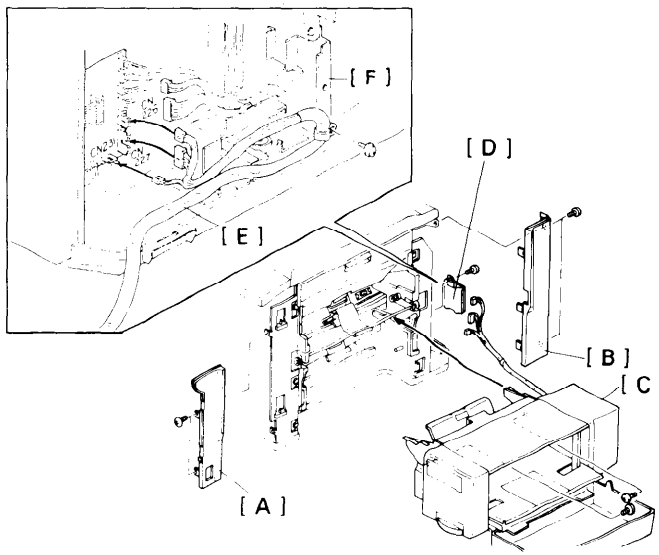

20. Reinstall the front right side cover [A] and rear right side cover [B].

21. Place the large capacity tray [C] in the cassette holder on the 2nd feed station.

    NOTE: **Make sure that the rib of the tray side plate fits into the groove of the cassette holder.**

22. Open the side and top covers and secure the tray to the 2nd feed station (2 screws, M4 X 10).

23. Disconnect CN226 and CN227, and fix these connectors with the harness clamp.

24. Connect the tray harness to the paper feed PCB [D] as follows:
    * 3p connector to CN 226
    * 4p connector to CN 231
    * 7p connector to CN 227

    Clamp the LCT harness [E] to the support bracket [F] of the main board as shown above.

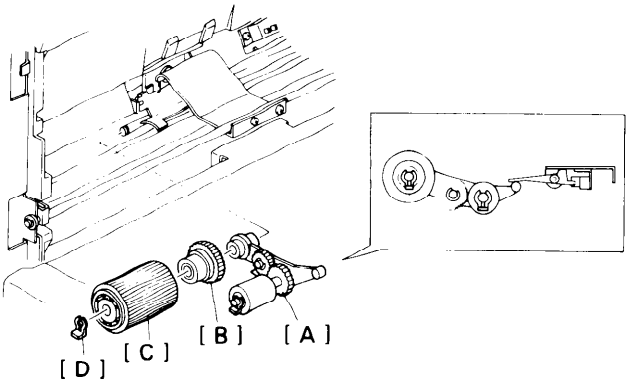

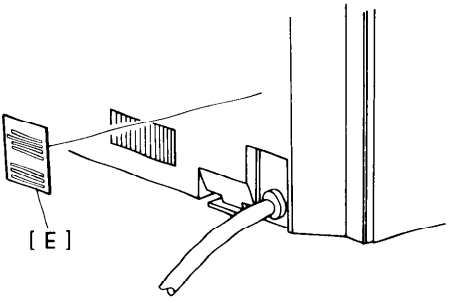

25. Install the pick-up roller assembly [A] on the feed roller shaft.
26. Install the gear [B] on the feed roller shaft.
27. Reinstall the feed roller [C] (1 snap ring [D]).
28. Make sure that the paper position feeler [F] is positioned as shown.
29. Reinstall all covers.
30. Stick the caution decal [E] on the copier rear cover.
31. Check the operation of the Large Capacity Tray.
32. Fill out the New Equipment Condition Report.

2. REPLACEMENT AND ADJUSTMENT

- TRAY WIRE REPLACEMENT -

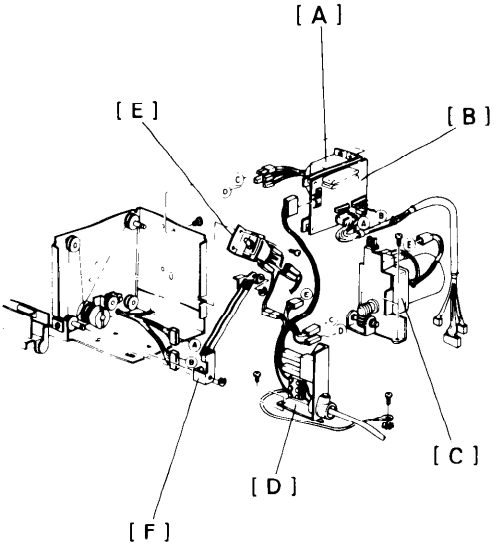

CAUTION: Unplug the tray power supply cord.

- Front Wire -

1. Remove the following parts:

   1) Front cover (2 screws and 1 connector)
   2) Nylon clamp holding the operation board harness (1 screw)

- Rear Wire -

1. Remove the LCT from the copier.

2. Remove the following parts:

   1) Rear cover (5 screws)
   2) Transformer assembly [A] with tray main board [B] (1 screw, 8 connectors, and 1 nylon clamp)
   3) Drive motor assembly [C] (2 screws and 1 connector)
   4) Ac power terminal [D] (2 screws and 1 ground wire)
   5) Safety switch assembly [E] (2 short screws)
   6) Safety switch actuator assembly [F] (2 E-rings)
   7) Shield plate [G] (4 screws)

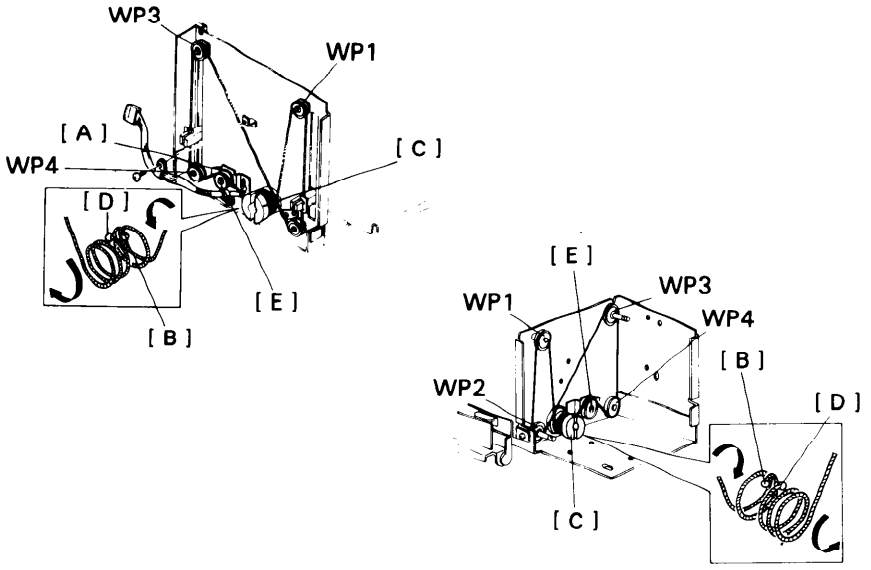

- Common Procedure for Front and Rear Wire -

NOTE: The running directions for the front and rear wires are opposite.

1. Loosen the wire tightener [A] (1 screw).
2. Insert the bead [B] (unmarked) into the rear slot of the drive pulley.
3. Loop the wire around the drive pulley [C], as shown (one and a half turns).
4. Run the wire over WP1, WP2, WP3, and WP4 in turn while also placing the lift rod's ends in the braces.
5. Insert the bead [D] (red) into the other slot of the drive pulley.
6. Loop the wire around the drive pulley, as shown (two and a half turns).
7. Hook the wire on the tightener pulley [E].
8. Move the rods up and down manually to ensure that the drive wire does not overlap on the pulley.
9. Tighten the wire using the tightener (1 screw).
10. Reassemble.

- TRAY DOWN SENSOR AND POSITIONING SWITCH REPLACEMENT -

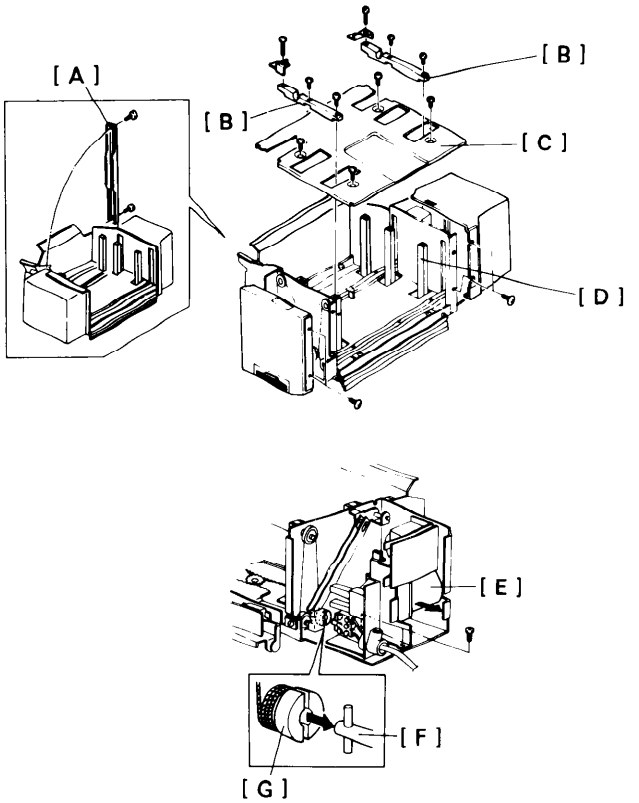

1. Open the side cover (1 screw).
2. Remove the top cover and rear cover (5 screws).
3. Remove the sensor bracket [A] (2 screws). (There is no need to disconnect the sensor connector.)
4. Remove the two post tops [B] (3 screws each).
5. Remove the tray bottom plate [C] (4 screws) taking care not to damage the 6 guide posts [D].
6. Move the tray drive motor assembly [E] (2 screws) to the rear to disengage the tray drive shaft [F] from the wire drive pulley [G].

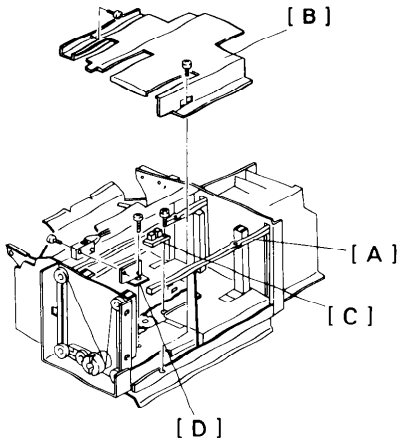

7. Raise the lift rods [A].
8. Remove the front inner cover [B] (1 short and 1 long screw).
9. Replace the tray down sensor [C] (1 screw and 1 connector).
10. Rotate the paper size dial to a smaller size, such as A4R, and remove the positioning switch bracket [D] (1 screw).
11. Replace the positioning switch (2 screws).

- PAPER SIZE SENSOR REPLACEMENT -

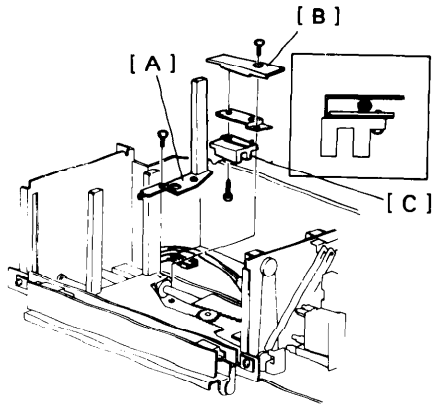

1. Do steps 1 to 8 of the tray down sensor and positioning switch replacement procedure.
2. Remove the front guide post [A] (1 screw and 1 hook).
3. Remove the paper size sensor bracket [B] (1 screw).
4. Replace the paper size sensor [C] (1 screw and 1 connector.)

NOTE: When installing the sensor bracket, make sure that the harness is positioned inside the sensor bracket.

- SIDE REGISTRATION ADJUSTMENT -

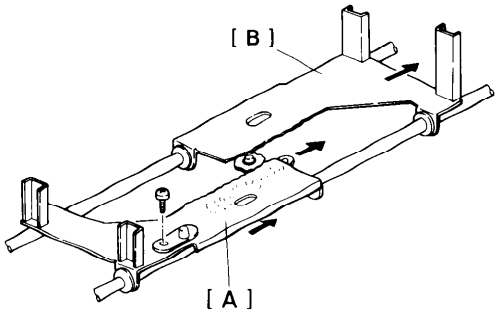

NOTE: Do not move the paper size dial while performing this adjustment.

1. Do steps 1 to 8 of the tray down sensor replacement procedure.
2. Loosen the 2 screws securing the pinion bracket [A].
3. Loosen the screw securing the guide post lock plate [B].
4. Move the pinion bracket while holding the pinion so that the pinion does not turn. (The front and rear guide posts must be equidistant from the center.)
5. Tighten the screws securing the pinion bracket.
6. Tighten the screws securing the guide post lock plates.
7. Confirm that the side registration is adjusted correctly and reassemble.

EDITOR INSTALLATION

Accessory Check

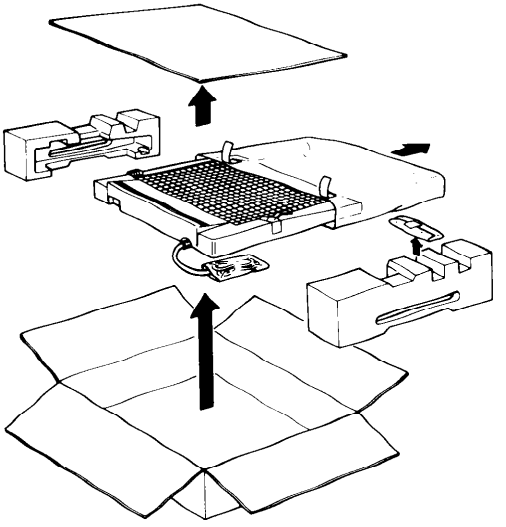

Check the quantity and condition of the accessories in the box according to the following list:

DESCRIPTION	Q'TY
1. Installation Procedure (115V - English only. 220V/240V - five languages)	1
2. New Equipment Condition Report	1
3. NECR Envelope (115V only)	1
4. Operation Instructions (115V - English, 220V/240V - five languages)	1
5. Stylus	1
6. Cover Plate (FT4480 only)	1
7. Ferrite Core (220V/240V only)	1
8. Lock Plate (220V/240V only)	1
9. Clamp	1
10. Multilingual Decal (220V/240V only)	1
11. Pan Head Screw (M4X8)	1

- Installation Set for RE 11 -

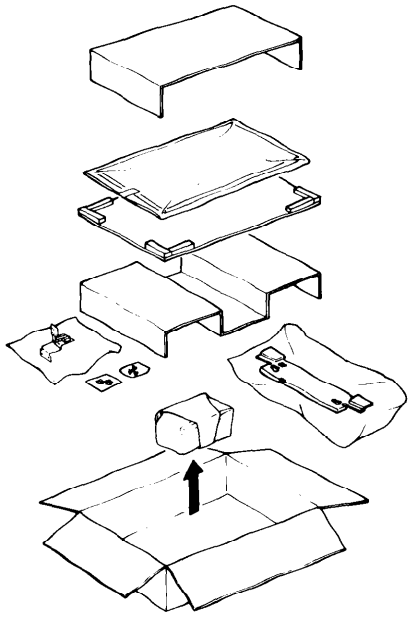

The installation set is required when using the editor as a pressure plate. Open the box and check the parts according to following list:

	DESCRIPTION	Q'TY
1.	Pressure Sheet	1
2.	Left Hinge	1
3.	Right Hinge	1
4.	Pan Head Screw (M4 X 12)	12
5.	Harness Clamp	2
6.	Hinge Bracket (FT5560 - 115V only)	1
7.	Mounting Stud (FT5560 - 115V only)	2
8.	Pan Head Screw With Washer (M3 X 6) (FT5560 - 115V only)	2

- Installation Preparation -

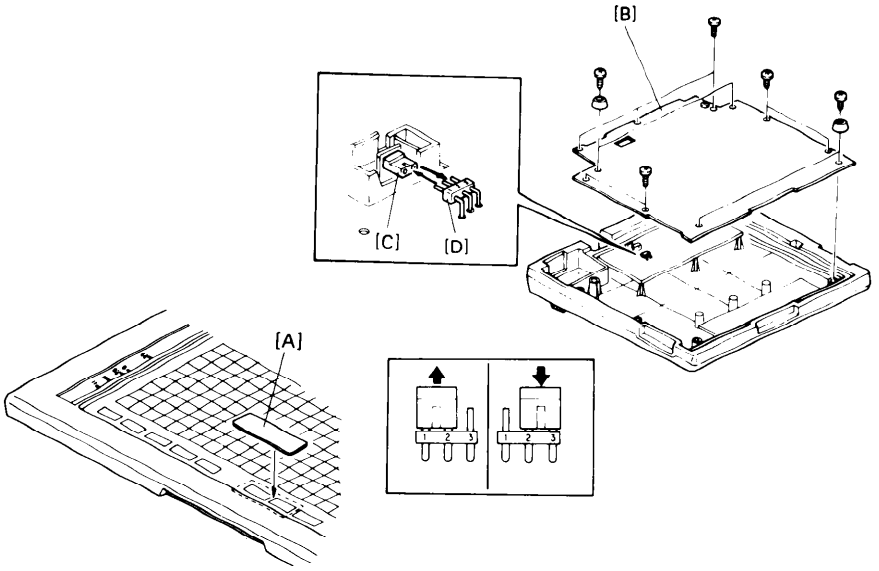

NOTE: - This preparation is only necessary for FT4480.

- As this copier does not have either the Shift Image function and Centering function, the following procedure prevents the buzzer from sounding if the user mistakenly pushes the Shift Image Key or Centering Key with the stylus.

1. Place the cover plate [A] over the Shift Image key and the Centering key.
2. Remove the bottom plate [B] of the editor (11 screws).
3. Remove the shorting connector [C] from the connector [D] on the PCB.
4. Reinstall the shorting connector, as shown in the figure.
5. Reinstall the bottom plate.

- Installation Procedure on a Table -

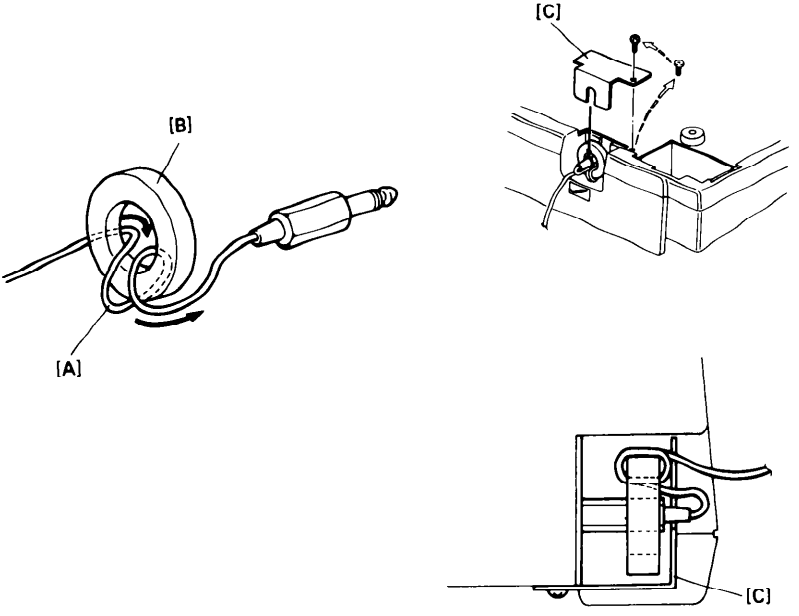

NOTE: This procedure is required if ADF or platen cover is already installed on the machine.

1. Turn the stylus harness [A] twice around the ferrite core [B] as shown in the figure.

   NOTE: - Step 1 is only required in the 220V/240V machines.

2. Plug the stylus jack into the editor board as shown.

3. Remove the screw securing the bottom plate as shown and secure the lock plate [C] to the bottom plate.

   NOTE: - Step 3 is only required in the 220V/240V machine.

   - Be sure that the lock plate does not damage the stylus harness.

4. Place the editor on a table.

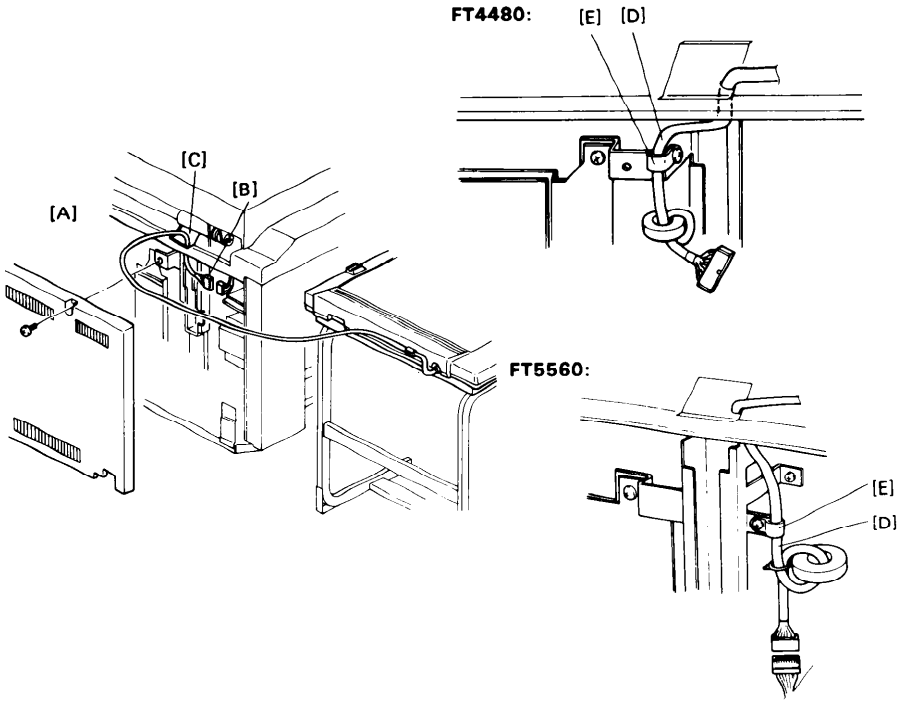

5. Open the rear cover [A].
6. Connect the editor connector (8 pin) [B] through the docking hole [C] of the DF.

   NOTE: If the platen cover is installed on the machine, the connector should be connected through the cutout in the docking hole cap as shown in page 8.

7. **FT4480:** Clamp the editor harness [D] to the main board bracket with the nylon wire clamp [E].

   FT5560: Clamp the editor harness [D] to the DF mounting bracket with the nylon wire clamp [E].

8. Reinstall the rear cover.
9. Check the operation of editor.
10. Fill out the New Equipment Condition Report.

- Installation Procedure on the Machine -

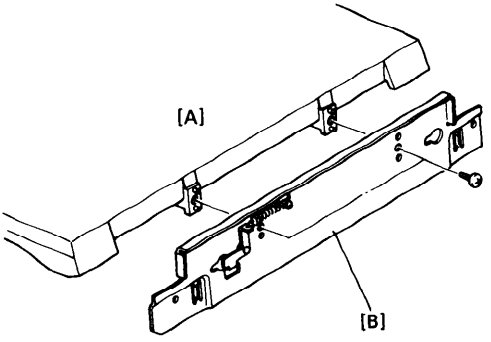

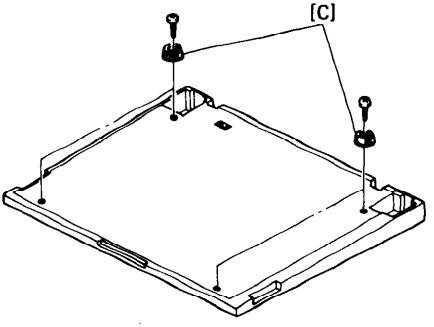

NOTE: Steps 1 and 2 are not necessary for the FT5560 (115V).

1. Remove the platen cover [A] from the machine.
2. Remove the platen cover hinge bracket [B] from the platen cover.
3. Remove the feet [C] from the editor (4 screws).

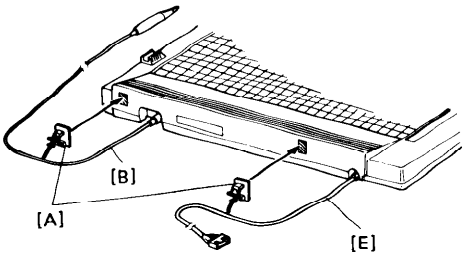

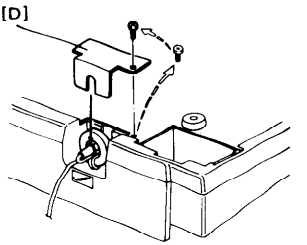

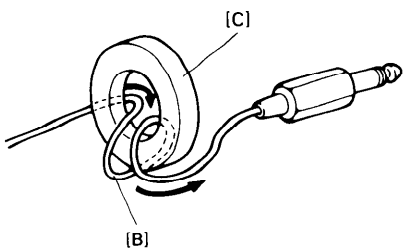

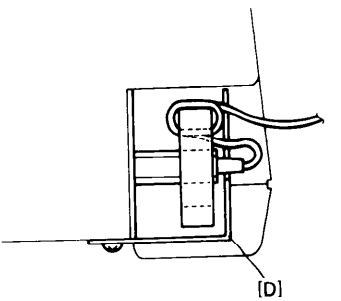

4. Install the clamps [A] on the editor as shown in the figure.
5. Turn the stylus harness [B] twice around the ferrite core [C] as shown in the figure.

   NOTE: - **Step 5 is only required in the 220V/240V machine.**

6. Plug a stylus jack into the editor as shown.
7. Remove the screw securing the bottom plate as shown and secure the lock plate [D] to the bottom plate.

   NOTE: - **Step 7 is only required in the 220V/240V machine.**

   - **Be sure that the lock late does not damage the stylus harness.**

8. Secure the stylus harness and connector harness [E] in the clamps.

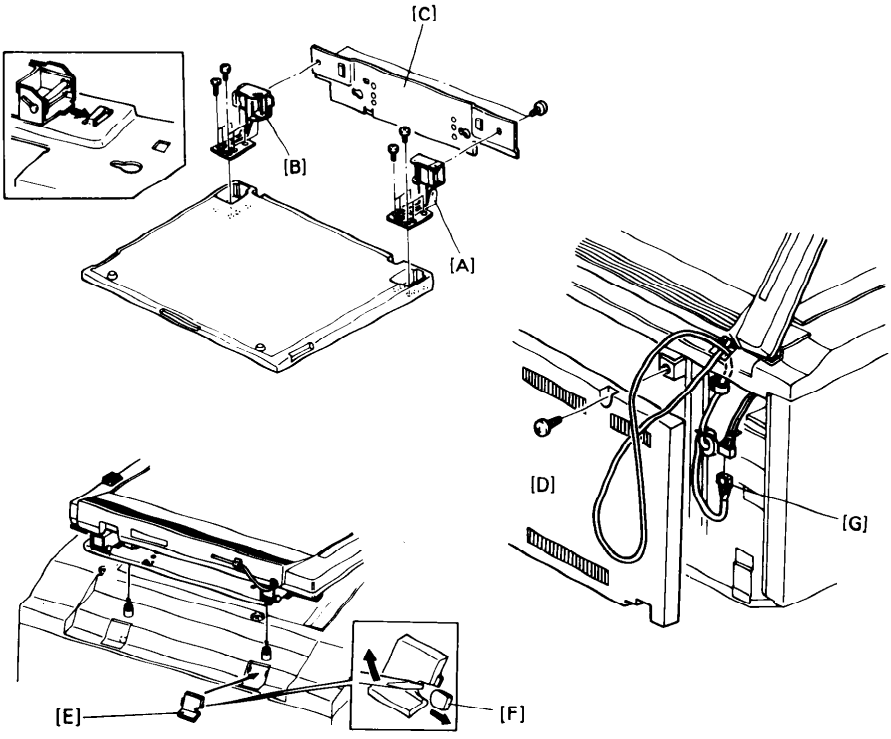

9. Install the left hinge [A] and right hinge [B] on the editor (6 screws each).

10. Install the hinge bracket [C] on the hinges (2 screws).

    NOTE: Use the screws which secure the platen cover to the copier for the FT4480 and FT5560 (220V/240V). Use the screws contained in the accessories for the FT5560 (115V).

11. Remove the rear cover [D] and remove the right docking hole cover [E].

12. Remove the cap [F] from the right docking hole cover using a small screw driver as shown in the figure.

13. Connect the editor connector (8 pin) [G] through the the docking hole and reinstall the docking hole cover on the copier.

FT4480:

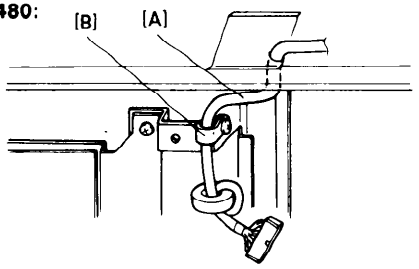

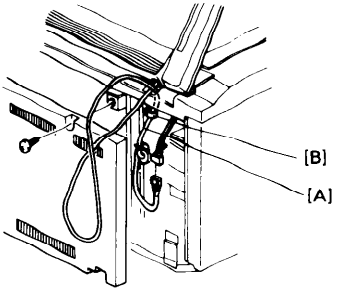

FT5560:

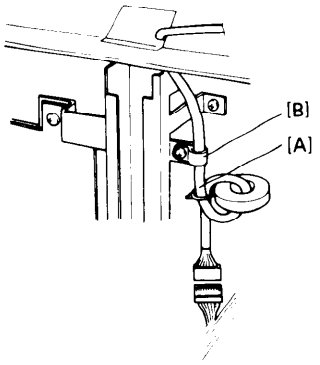

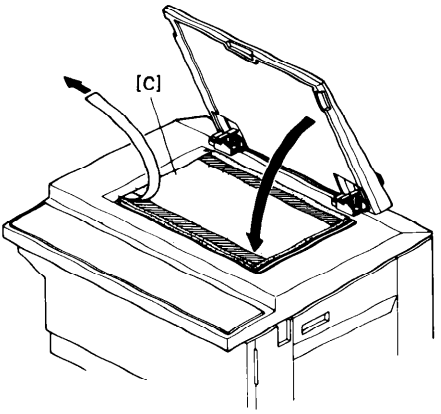

14. **FT4480:** Clamp the editor harness [A] to the main board bracket with the nylon wire clamp [B], then reinstall the rear cover.

    FT5560: Clamp the editor harness [A] to the DF mounting bracket with the nylon wire clamp [B], then reinstall the rear cover.

15. Install the editor on the copier.

16. Put the pressure sheet [C] on the exposure glass so as to align the image area indicators.

17. Remove the tape seal.

18. Close the editor to complete the installation of the pressure sheet and the editor.

19. Check the operation of the editor.

20. Fill out the New Equipment Condition Report.

COPY QUALITY

White Spots

1. FIREFLY SPOTS

- Possible Causes -

- Developer too old
- Insufficient toner in developer
- Dirty seals around development unit

- Action -

Is there a small black spot in the center of the white spot?
Y N
| |
| Check and adjust the doctor gap (0.90 mm).
|
Is the image density too light?
Y N
| |
| ▸ Clean the ends of the development roller.
| ▸ Replace the developer and the side seals.
|
Correct the light copy condition. Refer to "Light Copy" section.

2. SMALL SPOTS

- Possible Causes -

- Dirty corona wire.
- Incorrect corona current

- Action -

Perform drum conditioning. If that does not solve the problem, check whether the charge corona current is correct?
Y N
| |
| Adjust the charge corona current.
|
Clean the transfer corona wire and adjust the transfer current.

3. DIRTY BACKGROUND AROUND WHITE SPOTS

- Possible Causes -

- Condensation on the drum due to rapid temperature change. This phenomenon may occur early on winter mornings.

- Action -

The problem should disappear after about 20 copies. If it does not, perform drum conditioning.

HAT IMAGE

- Possible Causes -

- Defective quenching lamp
- Charge corona wire mismounted
- Incorrect corona current
- Old developer

- Action -

Does the quenching lamp turn on?
Y N
| |
| Does CN203-8 drop from +24 volts to ground?
| Y N
| | |
| | ▸ Check the connector and harness.
| |
| Replace the quenching lamp.
|
Is the charge corona wire properly installed?
Y N
| |
| ▸ Install the charge corona wire correctly.
| ▸ Replace any defective parts.
|
Is the charge corona current correct?
Y N
| |
| Adjust the charge corona current.
|
Replace the developer.

BLANK AREA OR PATCHY IMAGE

- Possible Causes -

- Uneven PTC, transfer, or separation coronas.

- Action -

Are the PTC, transfer, and separation corona wires improperly installed?
Y N
| |
| Clean the PTC, transfer, and separation corona wires and adjust the corona currents.
|
Clean and reset the wire(s).

UNFUSED COPY

IMAGE CAN BE EASILY RUBBED OFF

- Possible Causes -

- Thermistor malfunction
- Very low early morning temperatures.
- Copy paper has a very rough surface.

- Action -

Does the problem occur only early in the morning?
Y N
| |
| Is the thermistor dirty or damaged?
| Y N
| | |
| | Increase fusing temperature using SP mode 49. If the problem still occurs, increase fusing pressure.
| |
| Clean or replace the thermistor.
|
Select the fusing idling mode using SP mode 29.

JITTER

- Possible Causes -

- Vibration in drive mechanism
- Scanner not moving smoothly

- Action -

Does jitter appear at the leading edge of copies?
Y N
| |
| Does the interval of jitter change when making reduced copies?
| Y N
| | |
| | Check the main drive belt. Replace the tensioner spring if it is stretched.
| |
Clean the scanner guide rods; then, apply a small amount of Launa oil to the lubricant pad (if dry).

Is the scanner wire tension correct?
Y N
| |
| Rehook the tension spring or replace it if stretched.
|
Check all mechanical parts for incorrect operation.

HOLLOWING OUT

1. CENTER OF SOLID BLACK AREAS IS HOLLOW

- Possible Causes -

- Damp paper
- Incorrect transfer or separation corona current.

- Action -

Is the paper damp?
Y N
| |
| ▸ Clean the PTC and T/S corona wires.
| ▸ Check and adjust the transfer and separation corona currents.
|
Replace the damp paper with fresh paper.

VERTICAL WHITE LINES OR BANDS

1. LINES 80 mm APART

- Possible Causes -

- Damaged pick-off pawls
- Pick-off mechanism malfunction

- Action -

Does the pick-off pawl mechanism work correctly?
Y N
| |
| Correct or replace any defective parts.
|
Are the pick-off pawls damaged?
Y N
| |
| Replace the drum
|
Correct or replace the pick-off pawls, and replace the drum.

2. Straight Sharp Lines

- Possible Causes -

- Drum scratched
- Cleaning blade damaged
- Cleaning brush worn
- Hot roller scratched
- Hot roller strippers worn

- Action -

Start a copy cycle and stop it before the copy reaches the fusing unit.
Do the same lines exist on the unused copy?

Y N

N:
If the surface of the hot roller is scratched, which part is scratching the hot roller surface?
- Oil Blade
- Hot Roller Strippers
- Other

Clean, correct, and/or replace any parts which scratch the hot roller. If the hot roller strippers are badly stained with toner, check and adjust the fusing temperature. Then, replace the hot roller.

Is the drum scratched?

Y N

N:
Follow troubleshooting section "Uneven Density 1) Uneven density appears in bands."

Y:
Correct or replace any parts scratching the drum surface.
- Cleaning entrance seal--wavy, bent, burrs
- Cleaning brush
- Brush seals which contact the drum

Are there any foreign substances around the drum that may cause leaking of the drum potential?

Y N

N:
- Clean the edge of the cleaning blade. Check that the movement of the blade cleaner is smooth and the cleaner edge is straight.
- Clean all seals.

Y:
Remove the foreign substances.

3. FUZZY LINES OR BANDS

- Possible Causes -

- Dirty corona wire
- Dirty brush seals

- Action -

Clean the charge, transfer, and PTC corona wires.

Clean all brush seals that contact the drum.

UNEVEN DENSITY

1. IMAGE DENSITY GRADUALLY CHANGES ACROSS THE COPY

- Possible Causes -

- Charge corona wire height not even
- Charge corona wire dirty
- Doctor gap not even

- Action -

Does the darker area follow the image when making reduced copies?

Y
- Clean the charge corona wires. Are the charge corona wires incorrectly positioned in the wire cleaner and end block?
  - Y
    - Position the wires correctly.
  - N
    - Is the charge corona current uneven across the drum?
      - Y
        - Clean the transfer corona unit.
      - N
        - Adjust the charge corona current and wire height.
- If the problem still exists, check and adjust the doctor gap.

N

Are any of the optics parts stained?
- Toner Shield Glass
- Exposure Glass
- Mirrors, Lens, Reflectors

Y
- Is the exposure lamp stained black?
  - Y
    - Replace the exposure lamp.
  - N
    - Correct uneven exposure using the adjusting plates.

N

Clean them.

2. UNEVEN DENSITY APPEARS IN BANDS.

- Possible Causes -

- Exposure lamp misaligned
- Dirty quenching lamp
- Dirty corona wire
- Incorrect corona current

- Action -

Does the darker area move with the image when making reduced copies?

Y N

N:
- Clean the charge corona wire.
- Check and adjust the charge corona current. Make sure it is even across the drum.
- Clean the quenching lamp.
- Clean the transfer corona wire.
- Clean the erase unit.

Y:

Are any of the following parts stained or dirty?
- Toner Shield Glass
- Exposure Glass
- Mirrors, Lens, Reflectors

Y N

Y:

Clean them.

N:

Is the exposure lamp stained?

Y N

Y:

Replace the exposure lamp.

N:

Correct using the adjusting plates. Does the problem still exist?

Y

Y:

Align the filament of the exposure lamp.

ABNORMAL IMAGE DENSITY

1. IMAGE DENSITY IS TOO HIGH OR TOO LOW

- Possible Causes -

- Incorrect charge corona current
- ID sensor malfunction

- Action -

Check the output voltage of the ID sensor using SP mode 55. Is the voltage correct?
Y N
| |
| Adjust the voltage so that it is within standard.
|
Check and adjust the charge corona current.

If the image density is too light, use SP mode 60 to supply toner.

VERTICAL BLACK LINES OR BANDS

1. WAVY LINES

- Possible Causes -

- Dust between the cleaning blade and drum
- Edge of the cleaning blade deformed
- Insufficient cleaning pressure
- Cleaning mechanism not working properly

- Action -

Clean the edge of the cleaning blade. Do the lines still exist or do they reappear after a short time?
Y
|
Is the stroke of the cleaning solenoid plunger 4 mm?
Y N
| |
| Adjust the stroke of the cleaning solenoid.
|
Check the cleaning pressure mechanism. Do all parts move properly?
Y N
| |

Correct or replace any defective parts and check operation again.

Is the edge of the cleaning blade deformed?
Y N

Slightly increase the cleaning pressure.

Replace the cleaning blade.

---

2. DOTTED LINES OR BANDS

- Possible Causes -

- Pick-off pawl mechanism malfunction
- Scratched drum

- Action -

Do the pick-off pawls swing properly?
Y N

Correct or replace the pick-off pawls, and replace the drum.

Is the gap between the drum and pick-off pawls incorrect (1 to 2 mm)?
Y N

- If the pick-off pawl mechanism does not work properly, correct or replace any defective parts.
- If the drum is scratched, correct the condition that caused the scratch; then, replace the drum.

Adjust the gap, and replace the drum.

---

3. LINE OR BAND APPEARS AT THE REAR EDGE OF THE COPY (A3 or 11" x 17")

- Possible Cause -

- Toner shield glass mismounted

- Action -

Set the toner shield glass properly.

---

4. STRAIGHT LINES OR BANDS

- Possible Causes -

- Hot roller scratched
- Insufficient silicone oil
- Cleaning blade damaged
- Drum scratched

- Action -

Do the lines move with the image when making reduced copies?

Y

Refer to "Vertical White Lines 2) Straight sharp line(s)".

N

Start a copy cycle and stop it just before the paper reaches the fusing unit. Then, check if the unused copy has the same lines on it?

Y

If the hot roller surface is scratched, clean, correct, or replace any parts scratching the surface?

- ▸ Oil Blade
- ▸ Hot Roller Strippers

Note: If the hot roller strippers are badly toner stained, check and adjust the fusing temperature. Replace the hot roller. Check silicone oil level.

Is the drum scratched?

Y

Determine what scratched the drum and correct it (perhaps the pick-off pawls), and replace the drum.

N

If you cannot solve the problem by following trouble shooting "Uneven Density 2. Uneven density appears in bands", clean the edge of the cleaning blade. Make sure the blade cleaner moves smoothly, and the cleaner edge is straight.

5. LINES AT IRREGULAR INTERVALS

- Possible Causes -

- Deformed cleaning blade scraper
- Toner clogged in cleaning unit

- Action -

Is toner clogged in the cleaning unit?
Y N
| |
| Check the cleaning blade scraper.
| ▸ Is it straight?
| ▸ Does it contact the cleaning blade properly?
| ▸ Does it move correctly?
| Y N
| | |
| | Correct or replace any defective parts.
|
▸ Clean the cleaning unit. Check the toner collection coil; replace it if damaged.
▸ Check RA3. Make sure the cooling fan operates properly.

BLACK SPOTS AT THE LEADING EDGE

– Possible Cause –

- Separation corona wire mismounted

- Action -

Is the separation corona wire properly installed?
Y N
| |
| Clean the separation corona wire and T/S corona unit.
|
If the separation corona current is incorrect, clean the separation corona wire and adjust the separation corona current.

DIRTY BACKGROUND

1. DIRTY BACKGROUND ON ENTIRE COPY IMAGE

- Possible Causes -

- Dirty corona wire
- Toner supply clutch malfunction
- Incorrect lamp regulator output
- Dirty drum and bias thermistors
- Inefficient drum cleaning
- Incorrect corona current
- Drum worn out

- Action -

Note: When the problem occurs after the drum conditioning, make several white copies or cycle the development unit for 2 minutes using free run.

Make a reduced copy with A3/11" x 17" paper. Does the dirty background appear in the erased areas?

Y N

Y:
- ▸ Clean the drum thermistor and bias thermistor surfaces.
- ▸ Clean the charge corona wire.
- ▸ Clean the optics.

If the problem was not resolved, adjust the lamp regulator output.

If the problem still exists, check and adjust the charge corona current.

N:
o Clean the erase unit.
o Clean the drum heater thermistor and bias thermistor surfaces.

Do wavy lines occur with the dirty background?

Y N

Y:
Does the toner supply clutch turn off?

Y N

Y:
Is the toner supply solenoid (CN230-3, -4) continuously supplied with +24 volts

Y N

N:
Check/replace the dc power supply and/or the main board.

Clean or replace the toner supply clutch.

- Check and adjust the charge corona current.
- Clean or replace the cleaning brush.

- Clean the edge of the cleaning blade.
- Check that the edge of the blade scraper is straight and that its movement is smooth. If not, correct or replace any defective parts.

If the problem still exists, one of the following should solve it.

- Replace the cleaning blade.
- Check the quenching lamp; replace if necessary.
- Replace the drum.

BLANK COPY

– Possible Causes –

- Charge corona wire mismounted or broken
- Defective power pack
- Defective main board

- Action -

Is there a faint image?
Y N
| |
| Is the charge corona wire (or unit) incorrectly installed?
| Y N
| | |
| | Does the main board output the correct signal to the power pack (CN206-A22 drops from +24 volts to ground)?
| | Y N
| | | |
| | | Replace the main board.
| | |
| | ▸ Clean the charge corona unit and remove any foreign substances that might cause a leak.
| | ▸ If the problem still exists, replace the charge power pack.
| |
| Reset the charge corona wire (or unit).
|
Does the density gradually drop when making copies?
Y N
| |
| Is the transfer corona wire (unit) incorrectly installed?
| Y N
| | |
| | Does the main board output the proper T/S trigger signals?
| | Y N
| | | |
| | | Replace the main board.
| | |
| | Replace the transfer corona power pack.
| |
| Reset the transfer corona wire (unit).
|
Check the development drive mechanism and clean or replace any defective parts.

LIGHT COPY

– Possible Causes –

- Development bias not applied or defective bias power pack
- Defective main board
- Defective dc power supply

- Action -

Does the image density change with ID selection?
Y N
|
Is the development bias applied?
Y N
|
Does the bias power pack receive the proper trigger signal from the main board?
Y N
|
Replace the main board.

Check for electrical continuity between the bias terminal and the development sleeve. Correct any poor contact or faulty wiring. If that isn't effective, replace the bias power pack.

Does the toner supply clutch work properly?
Y N
|
Does CN230-4 drop from +24 volts to ground?
Y N
|
Does CN202-A7 go from +24 volts to ground?
Y N
|
Replace the main board.

Replace the paper feed relay board.

Clean or replace the toner supply clutch.

Other possible causes:
1. Charge corona
2. Transfer corona
3. Development drive mechanism

PAPER CREASING

- Possible Causes -

- If thin copy paper is used, the leading edge may not set correctly between the fusing rollers, resulting in creased copies.
- Paper curl

- Action -

Is thin paper used frequently?
Y N
| |
| Move the fusing entrance guide to the upper position.
|
If the paper is curled, reduce fusing pressure. If this does not solve the creasing problem, instruct the customer to correct the paper curl before copying.

MULTIFEED AND MISFEED

- Possible Causes -

- Incorrect friction between the feed pad and feed roller
- Very thin or very thick paper is being used

- Action -

Is the gap between the friction pad and feed roller 1.6 ± 0.3 mm?
Y N
| |
| Adjust the friction pad/feed roller gap.
|
Do the feed problems occur mostly with the cassette tray?
Y N
| |
| ▸ If multifeeds are common, decrease the friction pad/feed roller gap slightly to increase feed friction.
| ▸ If misfeeds (feed failure) are common, increase the friction pad/feed roller gap slightly to decrease feed friction.
| ▸ If the customer uses special paper frequently, adjust the friction at one feed station to match the special paper. Instruct the user to use only that station to copy the special paper.
|
Adjust the friction pad holder position.

If the above measures do not solve the problem, replace the feed roller and friction pad.

SERVICE CALL CONDITIONS

11 EXPOSURE LAMP MALFUNCTION

- Possible Causes -

- Exposure lamp turns on while in standby condition.
- Exposure lamp circuit open (lamp filament broken)
- Cooling fan malfunction

- Action -

Does the cooling fan work?
Y N
| |
| Check the cooling fan circuit. Replace the cooling fan if it is defective.
|
Turn the main switch off and on. Does SC 11 remain off?
Y N
| |
| ▸ Replace the exposure lamp if the exposure lamp circuit is open.
| ▸ Replace the lamp regulator if the exposure lamp circuit is not open.
|
Press the Start key. Does lamp trigger (CN204-9) go from +24 V to 0 V?
Y N
| |
| Replace the main board.
|
Replace the lamp regulator.

21 SCANNER HOME POSITION SENSOR NOT ON

- Possible Causes -

- Scanner does not move to home position at power on.
- Home position sensor failure

- Action -

Move the scanner away from the home position. Turn the main switch off and on. Does the scanner move to the home position.

Y N

| |

| Check/repair the scanner drive mechanism.

Manually activate the home position sensor. Does CN101-B5 go from LOW to HIGH?

Y N

| |

| Replace the home position sensor.

Replace the main board.

23 NO REGISTRATION START SIGNAL

- **Possible Causes** -

- Optics control circuit failure (no registration signal)

- **Action** -

Replace the main board. If the problem still exists, check the scanner drive motor.

24 NO SCANNER HOME POSITION SIGNAL

- **Possible Causes** -

- Scanner does not return to home position within 20 seconds after scanner start.
- Optics control circuit failure.
- Scanner home position sensor failure.

- **Action** -

Does the scanner return to the home position within 20 seconds after scanning starts?

Y N

| |

| Check/repair the scanner drive mechanism.

Does CN101-B5 stay HIGH when the scanner leaves the home position?

Y N

| |

| Replace the main board.

Check the scanner home position sensor circuit. Replace the scanner home position sensor if necessary.

28 LENS HOME POSITION SENSOR NOT ON

- **Possible Causes** -

- Lens does not move properly.
- Lens home position sensor failure

- **Action** -

Does the lens move smoothly?
Y N
| |
| Check/repair the lens drive mechanism.
|
Test the lens home position sensor. (Does CN101-B1 stay LOW?) Replace it if defective.

If the above does not work, replace the main board.

29 LENS HOME POSITION SENSOR NOT OFF

- **Possible Causes** -

- Lens does not move properly.
- Lens home position sensor failure

- **Action** -

Does the lens move smoothly?
Y N
| |
| Check/repair the lens drive mechanism.
|
Test the lens home position sensor. (Does CN101-B1 stay HIGH?) Replace it if defective.

If the above does not work, replace the main board.

2A 2ND SCANNER HOME POSITION SENSOR NOT ON

- Possible Causes -

- Second scanner drive doesn't work properly
- Second scanner home position sensor failure

- Action -

Check the action of the second scanner drive mechanism. Does it move correctly?

Y N

| |

| Check/repair the lens drive mechanism.

|

Test the 2nd scanner home position sensor. (Does CN101-B2 stay LOW?) Replace it if defective.

If the above does not work, replace the main board.

2B 2ND SCANNER HOME POSITION SENSOR NOT OFF

- Possible Causes -

- Second scanner drive doesn't work properly
- Second scanner home position sensor failure

- Action -

Check the action of the second scanner drive mechanism. Does it move correctly?

Y N

| |

| Check/repair the lens drive mechanism.

|

Test the 2nd scanner home position sensor. (Does CN101-B2 stay HIGH?) Replace it if defective.

If the above does not work, replace the main board.

2C SCANNER MOTOR TOO FAST

- **Possible Causes** -

- Scanner motor control circuit failure

- **Action** -

Replace the main board.

2D SCANNER MOTOR TOO SLOW

- **Possible Causes** -

- Scanner motor control circuit failure

- **Action** -

Replace the main board.

31 DRUM THERMISTOR

- **Possible Causes** -

- Drum thermistor circuit open
- Drum thermistor circuit short

- **Action** -

Is the input at CN203-17 less than 0.14 volts?
Y N
| |
| Is the input at CN203-17 about 5 volts?
| Y N
| | |
| | Replace the main board.
| |
Replace the erase unit.

32 IMAGE DENSITY SENSOR

- Possible Causes -

- PTL not set
- Dirty ID sensor
- ID sensor circuit failure

- Action -

Clean the ID sensor and reset the PTL unit.

If the problem still exists, check the input at CN203-5. Is it less than 1.0 volt?

Y N

| Replace the PTL unit.

Replace the main board.

41 3RD CASSETTE TRAY LIFT MOTOR

- Possible Causes -

- Lift motor stays on longer than 20 seconds.

- Action -

Is CN228-5 +5 volts when the cassette tray lift sensor is activated?

Y N

| Check the lift sensor circuit. Replace the lift sensor if necessary.

Is CN202-B11 +5 volts when the cassette tray lift sensor is activated?

Y N

| Check whether CN202 and CN220 are connected properly. If they are, replace the paper feed relay board.

Replace the main board.

53 FUSING THERMISTOR ABNORMAL

- Possible Causes -

- Thermistor failure (The input at CN206-B1 is less than 0.5 V.)

- Action -

Replace the fusing thermistor.

54 FUSING WARM-UP FAILURE

- Possible Causes -

- Fusing lamp blown
- Thermistor circuit open

- Action -

SC 54 turns on if the hot roller does not reach 150°C within 8 minutes after the power relay turns on.

Is the fusing lamp filament broken?
Y N
| |
| Is the thermistor circuit open?
| Y N
| | |
| | Check the thermistor. Make sure it is mounted properly and in good contact with the hot roller.
| |
| Replace the thermistor.
|
Replace the fusing lamp.

55 FUSING OVERHEAT

- Possible Causes -

- Thermistor failure (CN206-B1 < 0.5 V)

- Action -

Replace the thermistor.

56 FUSING TEMPERATURE TOO LOW

- Possible Causes -

- Fusing lamp blown
- Thermistor failure

- Action -

SC 56 turns on if the hot roller temperature drops below 150°C after warmup is complete.

Is the fusing lamp blown?
Y N
| |
| Replace the thermistor.
|
Replace the fusing lamp.

61 PULSE GENERATOR ABNORMAL

- Possible Causes -

- Main drive malfunction
- Pulse generator sensor failure

- Action -

SC 61 lights if the main board does not receive a pulse at CN206-A9 for longer than 1.8 seconds.

Is the main drive mechanism working properly.
Y N
| |
| Check/repair all parts of the main drive mechanism. (motor, timing belt, etc.)
|
Repair or replace the pulse generator.

91 TOTAL COUNTER MALFUNCTION

- **Possible Causes** -

◆ Total counter does not cycle

- **Action** -

Is +5 V supplied at CN103-5?
Y N
| |
| Replace the operation panel.
|
Is +24 V supplied at CN103-4?
Y N
| |
| Is there +24 V at CN103-?? of the main board?
| Y N
| | |
| | Check the Vaa power supply. Replace the dc power supply if it is not correct. Replace the main board if Vaa is all right.
| |
| Replace the operation panel.
|
Does CN103-5 pulse from +5 V to 0 V at the start of the copy cycle?
Y N
| |
| Replace the total counter.
|
Replace the operation panel. If the problem still exists, reinstall the operation panel and replace the main board.

93 OPTICS ←→ MAIN COMMUNICATION FAILURE

- **Possible Causes** -

◆ Data communication error between the main control circuit and the optics control circuit.

- **Action** -

Replace the main board.

ID SENSOR ABNORMAL (no SC number)

- **Possible Causes** -

◆ Dirty ID sensor or ID sensor failure

- **Action** -

If Vsg becomes less than 2.5 volts, the SC indicator lights but no number is displayed. The copier shifts to fixed toner supply mode.

Clean the ID sensor.

If the problem still exist, replace the PTC unit.

If the problem still exists, the ID control circuit must be bad; so, replace the main board.

DEFECTIVE SENSOR TABLE

No.	Name	Condition	Problem
S1	Lens Home Position	Open	Lights SC NO. 29 when the main switch is turned on.
		Short	Lights SC No. 28 when the main switch is turned on.
S2	Pulse Generator	Open	Lights SC No. 61 during the copy cycle.
		Short	Same as open condition.
S3	Toner End	Open	The CPU never detects toner end condition.
		Short	Lights "Add Toner" indicator even when enough toner is present.
S4	Manual Feed	Open	Lights "Manual Feed" indicator even when the manual feed table is closed.
		Short	Never lights "Manual Feed" indicator and the manual feed mode does not works.
S5	Color Toner	Open	"Color Toner" does not turn on when there is a color development unit in the machine.
		Short	Lights "Color Toner" indicator when the main switch is turned on.
S6	First Paper End	Open	Lights "Load Paper" indicator even when paper is present.
		Short	Never lights "Load Paper" indicator even when paper is not present.
S7	Second Paper End	Open	Same as S6.
		Short	Same as S6.

No.	Name	Condition	Problem
S8	First Paper Size	Open	Displays incorrect paper size.
		Short	No cassette in place condition is detected if all sensors are shorted.
S9	Second Paper Size	Open	Same as S8.
		Short	Same as S8.
S10	Registration	Open	Paper always jams at the registration roller.
		Short	Lights "Check Paper Path" indicator when the main switch is turned on.
S11	Third Paper Size	Open	Same as S8.
		Short	Same as S8.
S12	Paper Exit	Open	Lights "Check Paper Path" indicator when the main switch is turned on.
		Short	Same as open condition.
S13	Second Scanner Home Position	Open	Lights SC No. 2b 3 seconds after the main switch is turned on.
		Short	Lights SC No. 2A 0.3 seconds after the second scanner motor is turned on.
S14	Scanner Home Position	Open	Lights SC No. 21 when the main switch is turned on.
		Short	Lights SC No. 24 when the main switch is turned on.

No.	Name	Condition	Problem
S15	Cassette Tray	Open	Never lights "Paper Size" indicator even when the cassette tray is installed.
		Short	Lights "Paper Size" indicator even when the cassette tray is not installed.
S16	Third Paper End	Open	Same as S6.
		Short	Same as S6.
S17	Toner Overflow	Open	Never detects used toner bottle full condition.
		Short	Lights "Used Toner Bottle" indicator even when the used toner bottle is not full condition.
S18	Oil End	Open	Never detects low oil condition.
		Short	Lights "Add Oil" indicator even when there is enough oil.
S19	Cassette Tray	Open	Cassette bottom plate never lifts up. "Load Paper" lights.
		Short	Same as open condition.

RICOH
CUSTOMER SERVICE GROUP

TECHNICAL SUPPORT DIVISION,

TECHNICAL SERVICES

PRODUCT SUPPORT OVERVIEW

PN: RCTS0001

RICOH

SERVICE NEWS AND INFORMATION

CSG Customer Service Group

Subject: TECHNICAL SERVICES SUPPORT OVERVIEW HANDBOOK April 30, 1993

Distribution: ALL AUTHORIZED SERVICING DEALERS

Control #: 135

The enclosed handbook is an overview of Customer Service Group's Technical Support Division, Technical Services Department, as well as, a reference guide for our communication procedures and guidelines. This handbook is a compilation of several different publications distributed to the field over the last few years.

The convenient and easy-to-use format is designed to be utilized by technicians as a reference guide to services that are available to them as a RICOH Certified technician.

This handbook will be given to each technician attending RICOH's technical training classes and shall be included as part of each future Self-Pace and Customer Administered Training (C.A.T.) package.

Technical Services will issue updates to this handbook as needed. Additional copies may be acquired by ordering Part Number RCTS0001 through normal NSPC channels.

Should you have any questions regarding Technical Services, please call the appropriate Manager directly:

Copier	Beverley Patterson	1-201-882-5787
Facsimile	Gary Sanders	1-201-882-3950
Image Processing	Alan Chervenak	1-201-808-3691

Contents

OVERVIEW

Product Support Group Overview 1-1

Hotline Support Overview 1-2

Hotline Support Flow Chart 1-4

PART/TECHNICAL INQUIRIES and HOTLINE CLOSE-OUT PROGRAM

Part Inquiries 2-1

Technical Inquiries 2-2

Hotline Closeouts 2-3

Technical Services Inquiry/Hotline Close-out Form 2-4

TECHNICAL ALERT and AWARD PROGRAM

Technical Alert Communication Procedure 3-1

Technical Alert Form 3-5

Technical Award Program 3-8

GENERAL INFORMATION

FAX - Communication Troubleshooting 4-1

FAX - Binary, Hexadecimal Conversion 4-2

FAX - Long Distance Telephone Line Testing Tips 4-4

FAX - Part Number Prefix Reference Chart 4-5

COPIER - Part Number Prefix Reference Chart 4-7

COPIER - Ricoh Copier Test Chart Usage 4-12

FAX/COPIER - Packing Guidelines for Machine Return 4-20

FAX/COPIER - Electrostatic Discharge 4-21

FAX/COPIER - Pre-installation - Wall Outlet Check 4-22

FAX/COPIER - Material Safety Data Sheets 4-23

PRODUCT SUPPORT GROUP OVERVIEW

The Technical Service Product Support Group's primary function is the Hotline. The Hotline Product Specialists provide support and assistance to Ricohs Dealer/Direct Field Service Representatives, End-Users, Ricoh Field Operations (RTM's/RPS's/FSM's/RESM's), and Ricoh Internal Groups. Some of the hotline calls may require the specialist to duplicate the problem on machines in the lab, or request assistance from engineers at Ricoh Company, LTD. In addition to Product Support other functions performed by the Product Specialists are:

- **Communication with Ricoh Company, LTD. (Japan)**
  Research and communicate field problems
- **Technical Alerts**
  Research and reply to technical alerts
- **Technical Field Support**
  Assist RTM's/RPS's by conducting on-site visits to resolve specific product issues
- **Regional Nuts & Bolts Meetings**
  Prepare and present information at technical seminars
- **Trade Shows and Photo/Video Shoots**
  Provide technical assistance at trade shows and photo/video shoots
- **Bulletin Development and Verification**
  Create and ensure the accuracy of technical bulletins prior to publication
- **New Product Launch**
  Assist in new product launch and Initial Field Administration Program (IFAP) activities
- **Returned Machine Evaluation**
  Evaluate the condition of machines returned from the field due to extraordinary circumstances
- **Part Modifications**
  Qualify and quantify field requests and coordinate distribution

HOTLINE SUPPORT OVERVIEW

Ricoh provides (emergency) technical support to its Dealers and Direct technicians on an as needed basis. The principle method of interfacing between the field and Ricoh's Technical Services Department is the "Hotline", a toll free telephone service available to all Ricoh TRAINED Service personnel.

If problems of a technical nature arise at any time in the servicing of a Ricoh product or a Ricoh authorized accessory, the Hotline is available for assistance. It is staffed by Technical Product Specialists who will be available to:

- **Provide assistance and answer questions of a technical nature**
- **Guide the technician in resolving field problems**
- **Provide a basis for follow-up by the Regional Technical Manager (RTM), Regional Product Specialist (RPS), or District Manager (FSM)**

The Ricoh Product Support Hotline is available Monday through Friday (except holidays) by dialing 800-53-RICOH (537-4264). Callers will be greeted with an announcement instructing them to select a "prompt" for the appropriate assistance.

Product Support	Prompt	Standard Hours of Operation
Copier	"C" (2)	9:00 a.m. - 7:00 p.m. (Eastern)
Facsimile	"F" (3)	9:00 a.m. - 7:00 p.m. (Eastern)
Printer	"P" (7)	9:00 a.m. - 5:00 p.m. (Eastern)
Close-out	"H" (4)	24 hrs, 7 days a week

TYPES OF SUPPORT CALLS (Hotline, Technical Info, and Information)

When placing a **HOTLINE call, please observe the following guidelines:**

1. The Technician must be a certified Ricoh trained technician on the product in question.
2. The call must be made from the machine location.
3. All proper test equipment, special tools, gauges, etc... must be on hand.
4. The Technician must have available the Ricoh Field Service Manual, Point-to-Point, Parts Manual, etc...
5. All other reasonable methods of resolving the problem must be exhausted prior to calling.

If the criteria for a HOTLINE call is met, the Product Specialist will work with the technician to resolve the problem. This may require several telephone calls. A Hotline ID number will be given to identify the call when following up or closing out the call when the problem is resolved.

Your support means a lot. Every time you place a HOTLINE call the information we capture is used in problem trending and tracking reports. This enables us to work with Ricoh Co., Ltd. (Japan) towards a resolution (if none is available) or utilize this information for future products. Your support will help us monitor our products and continue to assist other Technicians with similar problems.

If the criteria of a Hotline call is not met, we will provide assistance in a generalized manner. For example: If the Technician is not on-site, it is not possible to do the necessary checks to assist in troubleshooting. The Product Specialist will only assist the Technician with a general idea of where the problem may be. In cases of this type, the call will be logged as a TECHNICAL INFO call with no follow-up required by the technician or Ricoh.

We know there are occasions where the information you need is not readily available to you, EDP codes for accessories, supply yields, etc... This type of call is logged as an INFORMATION call. We ask that you please make every effort to obtain the information through the materials existing in the field prior to calling.

For non emergency technical questions please utilize the Technical Inquiry form.

MONTH END REPORTS

At the end of each month a detailed report of Hotline and Information calls is mailed to each Service Manager for review.

This information is distributed to the Service Manager to alert them to potential problem accounts and to assist them in identifying specific areas of training for Field Technicians.

HOTLINE SUPPORT

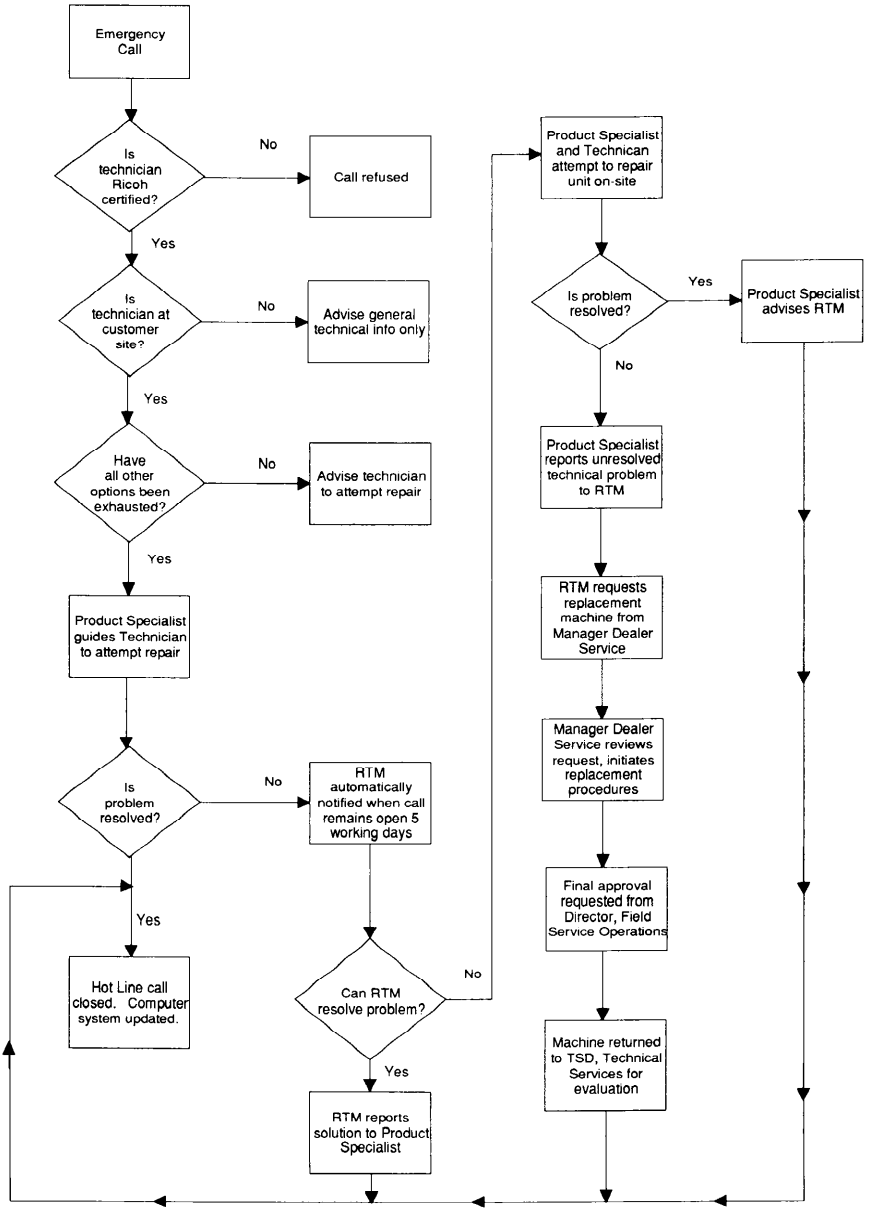

PART INQUIRIES

In an effort to provide a comprehensive response to part related inquires, Technical Services developed an "INQUIRY/HOTLINE CLOSEOUT FAX FORM". This form (Page 2-4) is utilized for other purposes; when submitting a Part Inquiry check the appropriate box.

Please understand that this form is not designed as a substitute for proper use of the Part Catalogs, Field Service Manuals and other technical documentation that is distributed to the field.

Utilize the "INQUIRY/HOTLINE CLOSEOUT FAX FORM" for the following Part Inquiries:

- **Part interchangeability**
- **Part number omissions from the Parts Catalog**
- **Part number errors**

Please provide all appropriate information. For example, a question involving part interchangeability will require the part numbers for all parts as well as the model number and serial number of the equipment. Obviously, questions involving omissions in part catalogs cannot include the part number in question, however, enough detail must be provided to allow us to identify the specific part.

FAX the completed form to Technical Services at **(201) 882-3960**. We will research the question and respond within six (6) working hours to the fax number provided on the inquiry form. We recommend using your office fax number to ensure that you receive our reply.

Please note that incomplete or inaccurate forms will only delay our response to you.

Reminder:
Technical Services no longer accepts part related inquires via the Hotline to enable us to efficiently support emergency technical issues.

The National Order Process Department must be contacted at (800) 524-0199 for all part questions regarding:

- Order Errors
- Damaged Parts/Shipments
- Pricing
- Mislabeling
- Shipping Errors
- ETA's
- Part Substitutions/Chaining

TECHNICAL INQUIRIES

Technical Services has developed an "INQUIRY/HOTLINE CLOSEOUT FAX FORM" for non-emergency technical inquires. This form (Page 2-4) is utilized for other purposes; when submitting a Technical Inquiry check the appropriate box.

Please understand that this form is not designed as a substitute for proper use of the Service Training Manuals, Field Service Manuals and other technical documentation that is distributed to the field.

Utilize the "INQUIRY/HOTLINE CLOSEOUT FAX FORM" for *minor* non-emergency technical issues such as, supply interchangeability, specifications, yields, non emergency bit switch settings, etc... Again, all appropriate information must be provided.

FAX the completed form to Technical Services at **(201) 882-3960**. We will research the question and respond within six (6) working hours to the fax number provided on the form. We recommend using your office fax number to ensure that you receive our reply.

Please note that incomplete or inaccurate forms will only delay our response to you.

HOTLINE CLOSEOUTS

There are two convenient methods for technicians to close-out OPEN Hot Line calls; the toll-free 800 number or via the "INQUIRY/HOTLINE CLOSEOUT FAX FORM".

When using the toll-free number 800-53-RICOH (Prompt "H" available 24 hours a day), be prepared to leave a recorded message with the following information:

1. Hot Line call ID Number.
2. Your name.
3. Your Dealer name and location or District location.
4. Machine model number.
5. Description of the problem and what resolved it.

NOTE: *If the call ID number is lost, it is still possible to close out the call as long as the other pertinent information is provided.*

Technicians may prefer to utilize the "INQUIRY/HOTLINE CLOSEOUT FAX FORM". This form (Page 2-4) is utilized for other purposes; complete all areas pertaining to Hotline Closeout.

FAX the completed form to Technical Services at **(201) 882-3960**.

RICOH TECHNICAL ALERT COMMUNICATION PROCEDURE

A Ricoh Technical Alert (RTA) is a form of written communication to alert TSD, Technical Services of a problem/issue of a technical nature in the field that is beginning to show a trend or may be the start of a potential problem.

Please note it is not meant as a substitute for a Hot Line call. The Hot Line must be used when requiring assistance to resolve a particular problem when you are at the machine site.

The RTA form must be filled out completely and accurately. It is important that as many details about the problem be included, as well as, all actions taken. Ricoh must deal in facts and not generalities. The more facts provided, the quicker the response (Serial Numbers are a must).

The data required for TSD, Technical Services to start an investigation or open an issue shall be comprised of the following:

Standard Information Required for each RTA:

- Product Line
- Model
- Reporter Name
- Date Reported
- System Configuration
- Subject
- Company Name, Address, and Phone Number
- Statement of Problem
- Action Taken/Status
- Serial Numbers (if applicable)
- Meter Readings (if applicable)
- Current Resolution Method
- Service History/Log
- Part Samples

Specific Information Required with each RTA:

Problem/Issue Reported	Information Required				
	Copy/Print Sample	Revision Level	Lot Number	Photo/ Illustration	Part/ Supply Samples
Equipment, Hardware, Firmware (ROM Level)	Yes	Yes	No	Yes	Yes
Documentation	No	Yes	No	Yes	No
Supplies	Yes	No	Yes	No	Yes
Parts	Yes	Yes	Yes	Yes	Yes
Safety/Liability	No	No	No	Yes	Yes
*Software/Application/Interface/Compatibility	Yes	Yes	Yes	Yes	Yes
*Complete entire Computer Peripheral Section of RTA for Ricoh products when they are connected to a computer system.					

All Technical Alerts will be acknowledged in writing by Technical Services within five (5) working days of receipt. After the RTA has been reviewed, additional information may be required. Upon completion of the investigation, the written results of Technical Services findings will be provided to the reporter via a "Technical Alert Response Form."

Instructions for Completing the Ricoh Technical Alert Form:

The guidelines and instructions below must be adhered to when submitting Ricoh Technical Alerts:

- **Product Line:**
  Check the appropriate box to indicate which product line the machine is in.
- **Model:**
  Must be specific model. For example: DF57, FT7870, FAX4500L, LP4150, etc...
- **Reported By:**
  Your name.
- **System Configuration:**
  List the accessories and options installed on this particular product.

- **Subject:**
  This should be a summary of the problem observed. For example: Flickering Operation Panel Display, Premature Charge Corona Wire Failure, Compressed Image When Receiving, etc...

- **Dealership/District:**
  The name of your Dealership or Ricoh Service District, address, phone number, and fax number.

- **Statement of Problem:**
  This should list the actual problem or trend that you are experiencing. List all observations as accurately as possible. For example: When feeding three 8 1/2 x 11 originals in duplex 2 mode, the third original misfeeds at DF exit.

- **Cause:**
  List the actual cause if known. Otherwise write "Unknown". If you have an idea of what is causing this problem, indicate as "Possible Cause".

- **Action Taken:**
  List the specific actions you have taken, such as, replacing, cleaning, adjusting, or lubricating components. **Indicate if your actions resolved the problem.** If components were replaced, include the part number of each next to its description.

- **Shipped Via:**
  Indicate the method used to ship the copy/print/part samples to Technical Services (UPS, Mail, Federal Express, etc...) and indicate the actual items sent by checking the appropriate box and providing the part number and description of each.

- **Problem Occurs:**
  Check the appropriate box. If intermittently, briefly describe when it occurs. If an accessory, indicate which accessories are in use when the problem occurs.

- **Time of Failure:**
  Check the appropriate box. If "Other" is checked, briefly describe when in the space provided.

- **Record of Occurrence:**
  List the date of occurrence and serial numbers of all units with this problem. List the meter readings and install dates. Utilize the "Remarks" column to report accessory serial numbers (if appropriate) or other relevant comments.

- **Explanations/Illustrations:**
  Draw or insert the illustration from the appropriate parts/service manual that helps clarify the problem.

- **Current Resolution Method/Recommendations:**
  Describe the method you are currently using to resolve the problem and/or list your recommendations for resolution.

- **Service History/Log:**
  Must be provided with the Technical Alert. Include any applicable code sheet or list to assist in reading the service history.

- **For copy/print quality problem:**
  The following copy/print samples must be provided while using the appropriate Ricoh Test Chart:

Copier

1. An 11 x 17 copy at each ID position.
   Note: If 11 x 17 copy paper is not available, use the largest available copy paper size.
2. Run a white 11 x 17 copy with the ID level set at mid-position.
   Note: ***Do not*** use the back of a test chart, use 3 blank pieces of 11 x 17.
3. With the ID level at mid-position (Level 4), run an 11 x 17 sky shot. Be careful to ensure no interference from overhead lighting.
4. An SP Mode data print out.

Facsimile

1. A received copy in detail mode.
2. A received copy in standard mode.
3. A copy mode sample.
4. A printout of each printer test pattern.
5. System Service Report.
6. System Parameter List

Printer

1. A black page.
2. A white page.
3. Three text pages.

If supplies are in question, a sample with lot numbers should also be sent with the above documentation.

Send All Documentation and Samples To:

Ricoh Corporation
155 Passaic Avenue
Fairfield, NJ 07004
Attn.: Technical Services - Box #32
RTA Enclosed

You may also use our FAX number (201) 882-3960 to submit your Technical Alert (copy/print samples must be mailed).

SAMPLE

Dear:

We are in receipt of your Ricoh Technical Alert. If further information is required, we will be contacting you in the near future. Upon completion of the investigation, the written results of our findings will be provided to you via a "Technical Alert Response Form".

Periodically, Technical Service recognizes and awards a Technical Alert that is most effective in escalating and resolving a field problem. You will be notified if your Technical Alert is selected as an award recipient.

Thank you for your time and interest in Ricoh Corporation.

Sincerely,

Dan Piccoli
Director, Technical Support Division

SAMPLE

TECHNICAL AWARD PROGRAM

Technical Services has developed a Technical Award Program designed to recognize and award Technical Alerts that are most effective in identifying and/or resolving field problems.

All submissions should utilize the new Ricoh Technical Alert Form, dated 1/93. Please discard all existing Rich Idea and Dealer Technical Alert Forms.

ELIGIBILITY CRITERIA:

- **Ricoh Technical Alert (RTA) must be completed with all supporting information.**
- **Reporter must be Ricoh certified on the product in question.**
- **Problem must be able to be reproduced or observed by an authorized Ricoh Technical Representative.**
- **Countermeasure(s) provided (if applicable) must be proven to resolve the problem and must not jeopardize the equipment safety standards.**
- **Suggestions regarding specification and/or design changes will not be considered.**
- **Reporter must be employed by an authorized Ricoh Dealer or Service Technician (FSR) employed by Ricoh Corporation.**

SELECTION PROCESS:

- **RTA must meet all eligibility requirements.**
- **Winners are selected by vote of the appropriate Technical Services staff (Copier, Fax, Printer) subject to approval by Technical Services Manager.**
- **In case of duplicate submissions, the winner will be determined by: 1) completeness 2) technical accuracy 3) receipt date.**

AWARD:

A gift will be presented by a Regional Service Representative on behalf of Technical Services.

Should you have any questions, please call Beverley Patterson or Gary Sanders at Ricoh Technical Services (201) 882-5790.

FAX COMMUNICATION TROUBLESHOOTING CHECKLIST

1. Get specifics about the problem from the customer.

2. Confirm the problem by running a test with the machine(s) they are having trouble with.

3. If the problem occurs, then start to narrow it down .

4. Verify that all Bit Switches are set correctly.

5. Check (if possible) that CSI is programmed with 20 characters or spaces.

6. Enable any built in diagnostic aids (such as the "Communication Parameter Display").

7. Hook up O'Scope and observe the protocol exchange. If you don't have an isolation box, connect the scope leads across the secondary side of the isolation transformer on the NCU.

8. Check the DB levels, incoming and outgoing from your unit.

9. If the problem appears to be a compatibility issue, find out what kind of unit it is (G3, G2, G1) and the manufacturer and Model #. Then consult all Technical Bulletins and any other documentation (Like "Facts Lines") for help.

10. If you suspect a phone line problem, adjust the DB level (if you think it might help). Try both transmitting higher and lower than the original setting. Verify with your O'Scope that your DB level has not changed. Also, adjust the RX equalizer settings.

11. If Step 10 is no help, find out what kind of phone system the customer is using.

a. If it is a direct phone line, which long distance service are they using? (AT&T, MCI, SPRINT etc.). Verify by calling 1-700-555-4141.

b. If behind a PBX, try using an outside line. **Note**: Usually dialing a "9" will get you a so-called outside line. Most PBX's are programmed to route long distance calls over the cheapest route possible which usually means "Outbound" Wats or Tie lines. These may be the very same line you are having trouble with. The only way to be sure is to dial "9" then "0" and have and outside operator (not PBX operator) place the call.

c. If you suspect a "Local Loop" problem (this is tip and ring from the RJxx jack to the PBX or CO). Try another phone jack with a different phone number.

d. Have the other end initiate a phone call to your machine and try to Transmit/Receive on that connection.

12. Find out if the customer has other Fax units in the same or nearby building. If so, do they have similar communications problems? Verify it. If they do, then try to determine the difference between the two units (different phone line, DB level, Bit Switch settings etc.).

13. Try lowering the modem speed (7200,4800,or 2400 BPS) to see if that helps.

14. Swap the modem or NCU if you suspect these to be the problem.

15. If you are having severe problems to all locations, test with a Traffic/Test machine at your or Ricoh's office,

If you have tried all of the above and still have problems, then call Technical Support. Be prepared to give information based on your observations from the check list above.

BINARY, HEXADECIMAL, BCD CONVERSION

NUMBER CONVERSION

The following information is designed to give a BASIC guide to proper number conversions.

BINARY

To convert a binary number to decimal, each bit represents one of the values on the scale below. Each value is added to form the decimal equivalent.

	VALUE SCALE									
	128	**64**	**32**	**16**	**8**	**4**	**2**	**1**		
EXAMPLE	1	0	0	0	0	0	0	0	= 128	(128+0+0+0+0+0+0+0)
				1	0	0	0	0	= 16	(16+0+0+0+0)
					1	1	0	1	= 13	(8+4+0+1)
			1	0	1	0	1	0	= 42	(32+0+8+0+2+0)
					1	1	1	1	= 15	(8+4+2+1)
	BINARY								**DECIMAL**	

HEXADECIMAL

Begin by first converting decimal to binary and then binary to hexadecimal. To do this break the binary number into **groups of four** and convert as per the conversion chart on page 2. Numeric digits of ten (10) or higher are represented by the ALPHA characters of A-F.

	BINARY								HEXADECIMAL
EXAMPLE					1	0	1	0	= A
					0	1	0	1	= 5
			1	1	1	0	1	0	1	1	= EB
	0	1	1	0	1	1	1	1	0	1	1	1	= 6F7
	1	0	1	0	1	0	1	0	1	0	1	0	= AAA

CONVERSION CHART

DECIMAL	BINARY	HEXADECIMAL
0	0 0 0 0	0
1	0 0 0 1	1
2	0 0 1 0	2
3	0 0 1 1	3
4	0 1 0 0	4
5	0 1 0 1	5
6	0 1 1 0	6
7	0 1 1 1	7
8	1 0 0 0	8
9	1 0 0 1	9
10	1 0 1 0	A
11	1 0 1 1	B
12	1 1 0 0	C
13	1 1 0 1	D
14	1 1 1 0	E
15	1 1 1 1	F

BINARY CODED DECIMAL

A decimal number can be converted to binary coded decimal (BCD). This is achieved by representing the decimal number in four bit groups. (BCD) can never have a binary value greater than (9).

EXAMPLE'S

25								DECIMAL
2				5				Break the decimal number 25 into two groups of four binary digits.
0	0	1	0	0	1	0	1	BCD

125												DECIMAL
1				2				5				Break the decimal number 125 into three groups of four binary digits.
0	0	0	1	0	0	1	0	0	1	0	1	BCD

LONG DISTANCE TELEPHONE LINE TESTING TIPS

When testing a machine that may have problems related to the long distance telephone service used, and you want to determine which long distance carrier the customer is utilizing, dial the following phone number, 1-700-555-4141. You will then hear a recording that states the name of the long distance carrier that the customer is using.

NOTE: *This phone number may not work in all areas.*

If you think that the long distance telephone lines may be the cause of the problem, you can change the carrier service by dialing one of the following access codes before you dial the remote units phone number. Before testing on a different long distance carrier, be sure to obtain the customer's permission.

This is one-time-only switch, if you do not precede the phone number with an access code, the call will be placed on the original long distance carrier.

LONG DISTANCE CARRIER ACCESS CODES	
AT&T	10288 + 1 + Area Code + Phone Number
MCI	10222 + 1 + Area Code + Phone Number
SPRINT	10333 + 1 + Area Code + Phone Number
ALLNET	10444 + 1 + Area Code + Phone Number

Changing long distance carriers will not have an effect on the local telephone service provided (e.g. if your problem lies within the local loop to the central office, changing the long distance carrier will not have any effect).

NOTE: *When a new telephone line is installed, if the person ordering the line does not request a specific long distance carrier to be used on that line, the carrier will be assigned at random from all carriers that service the area.*

FAX PART NUMBER PREFIX REFERENCE

The following chart cross-references the first four digits of a part number with the appropriate model to assist in the indentification of parts.

NOTE: *Please be aware that some interchangeability exists between models*

Part Number Prefix	Model (s)				
5450	R80	R100	D4XX		
5456	R1850				
5457	R1500				
5464	R800	R1000			
5465	R6100				
5466	R6300	R6300R	R6350T		
5467	R3100	R3100T	R3300	R3300TA	R3312
5471	R5000				
5473	SAF-PAK				
5474	R120	R130			
5475	R210	R230	R2100	R2110 (M)	R2112T
5476	R200				
H000	LCT	R830			
H001	R610				
H002	R510				
H003	R205				
H004	FAX2800DI	FAX2800L	SFX2800M	SFX2800TE	
H006	FAX1010L	FAX1000L	LCT		
H007	RF800	FAX07			
H008	FAX7000L	FAXCARD			
H010	FAX08	FAX09	RF850	RF900	
H012	FAX10				
H013	FAX20				
H015	FAX60				
H020	FAX4000L				
H022	FAX10E				

Part Number Prefix	Model (s)
H023	RF920 FAX20E
H025	FAX60E
H027	FAX70E
H032	RF910 FAX15
H033	FAX25
H035	FAX65
H037	FAX75
H038	FAX35
H043	FAX105
H048	FAX90
H049	FAX95
H051	FAX77
H053	FAX80 SFX80M SFX80TE
H055	FAX85
H059	FAX86
H060	PF-1
H065	RF810
H066	RF860
H067	FAX12
H081	FAX3000L FAX3100L FAX3200L FAX4500L LCT
H110	LCT
H502	FAX240
H954	FAX22 FAX21
S300	RM8000

COPIER PART NUMBER PREFIX REFERENCE CHART

The following chart cross-references the first four digits of a part number with the appropriate model to assist in the indentification of parts. Please be aware that some interchangeability exists between models.

Part Number Prefix	Model (s)			
75	RT12	TD3001		
178	CS1015			
5203	M10/Ripro			
5205	FT5050			
5206	FT5070			
5209	FT4085			
5211	FT4065	FT4420		
5214	M5/Ripro Jr.	LR2		
5215	FT5010			
5216	FT2050			
5219	FT7060			
5220	FT2070			
5328	WB-1			
5420	FT6200	FT6200F	FT6200FR	FT6200R
5432	FT4700			
5433	FW420			
5441	FT6600			
5442	FT4060	FT4030		
5446	FT6080	FT6085		
5447	FT3020	FT3050		
5448	FT3060			
5875	DF10			
5886	DF31			
5887	CS2030			

Part Number Prefix	Model (s)
5894	DF32
5895	CS1510
5897	RT11 RT16
5899	DF11 DF14
5910	CS1030
5918	DF34
5919	AD100
5920	PS200
5922	PS100
5925	RT14
5937	CS2060
5938	RT20
5940	DF36
6754	CS2011 CS2010
6769	CS1020
6801	CS1040
6803	CS2050
A004	FT5000
A005	FT2010 FT2220
A006	FT4460
A007	FT5590
A008	FT5560
A009	FT4480
A011	FT5520
A012	DS320 (F)
A017	FT3320
A019	FT6620
A024	FT4400 FT4410 FT4430
A027	FT2260
A029	FT7770

Part Number Prefix	Model (s)
A030	NC100
A032	FT4490
A045	FT5570
A046	FT5540
A048	FT4418
A053	FT6750
A054	FT4421
A058	FT7870
A072	NC305
A073	FT5433
A074	FT5733
A075	FT4415
A076	FT3113
A077	FT3313
A083	FT8880
A084	FT8780
A087	FT4427
A088	FT4727
A092	NC8015
A300	SR200
A310	SCU
A318	DF57
A325	PS140
A326	PS250
A327	CS120
A328	Sorter Adapter Type G
A340	RT17
A341	Multi By-Pass Tray
A342	PS150
A352	RDH

Part Number Prefix	Model (s)
A353	SR300
A354	ST23 A/B
A355	RT30
A356	SR30
A365	DF40
A366	ST22
A374	ST24
A411	CS2080
A414	CS2070
A415	PS210
A416	AD400
A418	DF51
A419	DF38 DF39
A420	PS220
A421	RT21
A422	DF52
A423	CS2090
A424	AD500
A428	AD110
A432	PS240
A437	DF53
A438	CS1070
A439	AD600
A444	FAX KIT
A448	PS110
A455	CS1530
A462	CS2065
A463	RT25
A464	PS130
A465	DF54

Part Number Prefix	Model (s)
A467	CS1060
A469	ST20
A490	CS110
A491	AD120
A497	DF56
A498	ST21
A499	DH200
A906	RE11
A912	RT15
A916	RE12
A936	FD300
A937	SR100
A938	DH100
A943	LR1
A946	RE14
A952	MR20
A963	TP1 - FUSER
A984	Slide Projector Unit
A988	RE9
C203	SS950
C206	SS830
C211	VT2130
C300	WB2

RICOH COPIER TEST CHART USAGE

How to evaluate copier operation and copy quality using Ricoh Test Charts.

The Ricoh OS-A-3 Test Chart is designed to help you, the service technician, in evaluation machine operation and copy quality. Copy quality specifications cannot accurately be maintained unless the correct test chart is used. We will use the OS-A-3 Test Chart as an example of how to evaluate machine operation and copy quality. Ricoh has other test charts available which contain the same information as the OS-A-3 Test Chart for the various products. Be sure to use only the test chart which is recommended for that model.

NOTE: *The recommended Test Chart may be located in the "Special Tools" section of the Parts Catalog.*

This section will review the use of each portion of the test chart. We will also discuss some problems that could cause a deficiency in the copy quality of the OS-A-3 Test Chart.

At the completion of the test, you should be able to identify how each portion of the test chart is used to determine correct machine operation and copy quality.

Before we begin, let's discuss the most important factor in maintaining proper machine operation and copy quality - FACTORY SPECIFICATION.

All adjustments to be performed have factory set specifications, usually with a tolerance of plus or minus; for example, 30mm ±2mm. This means the adjustment should be ideally set to 30mm, yet the allowable deviation is plus or minus 2mm. So the adjustment could measure anywhere from 28 to 32mm. This tolerance still allows proper operation of the copier. However, DO NOT exceed these tolerances. A team of factory engineers have established these specifications to yield the most reliable operation and consistent copy quality. Exceeding the specified limits will lower overall machine performance and customer satisfaction.

Before any work can begin to repair a problem, the copier MUST be in specification. If the copier is out of specification, there is no way of determining where the problem lies. Usually, you have to misadjust another adjustment out of specification to resolve the problem, and eventually the maladjusted components can develop larger and more frequent problems.

FOR BEST RESULTS, KEEP IT IN SPECS.

Each section of the OS-A-3 Test Chart to be discussed has been reproduced for easy identification. There cannot be a SET order for setting-up/troubleshooting copy quality. The following is the basic order to use to set-up a new copier. However, it should be noted that even with a new copier, a copy quality problem could arise that would change the order of these checks. For example, a light copy caused by the light intensity not being adjusted could appear to be out of focus. Once light intensity has been darkened, if the copy still appears to be out of focus, then the focus adjustment would need to be performed next before other checks can be made.

1. LIGHT INTENSITY

The specification for light intensity in most Ricoh copiers is to have level 2 of the gray scale slightly visible, or the background present around the photograph slightly visible. (Gray scale, level 2 = background around the photograph)

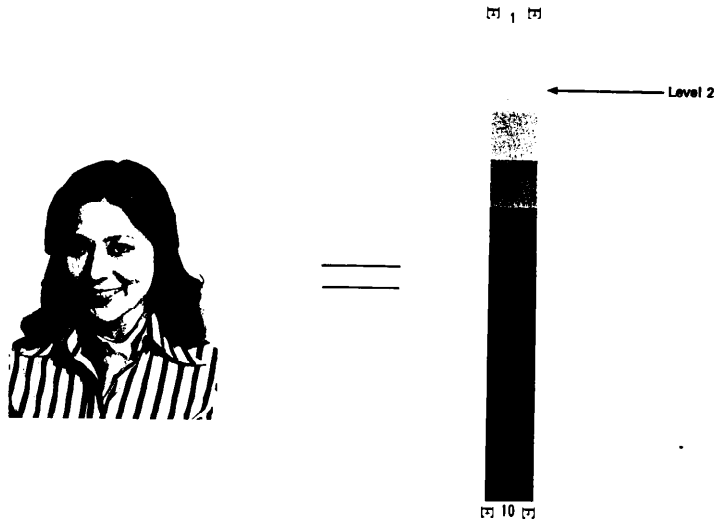

This is accomplished by increasing or decreasing the exposure lamp intensity (voltage).

Before this adjustment is attempted, the condition of the original, optics, developer, charge corona and charge corona current should be checked.

If this adjustment is incorrect, copy quality will be poor. Too much light intensity causes low image density; while too little light causes background on the copy.

DO NOT USE THIS PAGE AS A TEST CHART
FOR REFERENCE ONLY!

2. SIDE-TO-SIDE BALANCE

Using the gray scales on each side of the test chart help you easily determine image balance.

The gray scales are numbered from 1, representing white, to 10 representing black. Each step is a proportionally darker shade than the previous one. To meet the specification, the gray scales on both sides of the copy must reproduce within one block of each other.

There are two areas of the test chart that can be used to determine what area(s) of the copier is causing uneven density; using the gray scale levels 1 - 4 and level 10 or black band on the test chart. If the gray scale levels 1 - 4 are uneven but level 10 or black band is even all the way across the copy, the area causing the problem would be in the optics (i.e., exposure lamp, exposure lamp position, exposure lamp baffle position, mirrors, toner shield glass). If both levels 10 or the black band is uneven, the areas to check would be other than the optical path (i.e., charge corona height and developer unit doctor blade gaps). Both levels 10 or the black band generally eliminate optics because no light is reflected through any optical components.

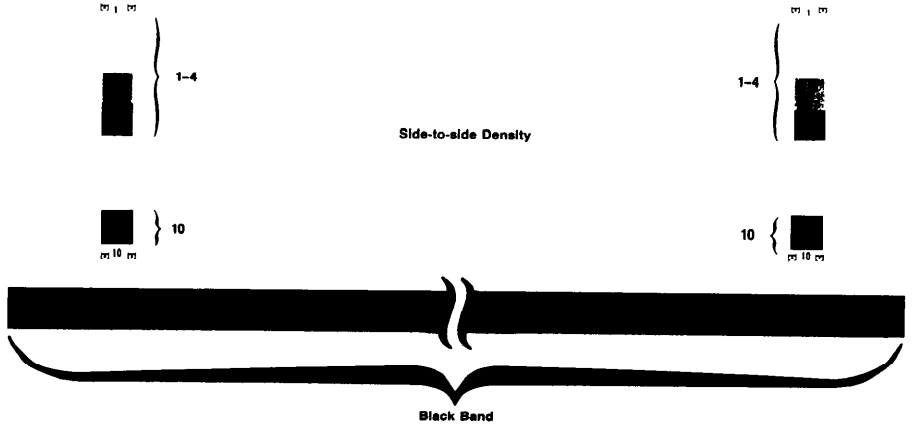

DO NOT USE THIS PAGE AS A TEST CHART
FOR REFERENCE ONLY!

3. FOCUS/MAGNIFICATION

Focus is achieved by first insuring that the magnification is within specification.

Magnification means that if your original image measures 100mm, your copy image should also be 100mm. If the copy image is smaller or larger when using the 1:1 ratio mode, the image is not properly magnified and looks out of focus. To determine proper magnification, measure the 100mm lines extending horizontally and vertically across the test chart.

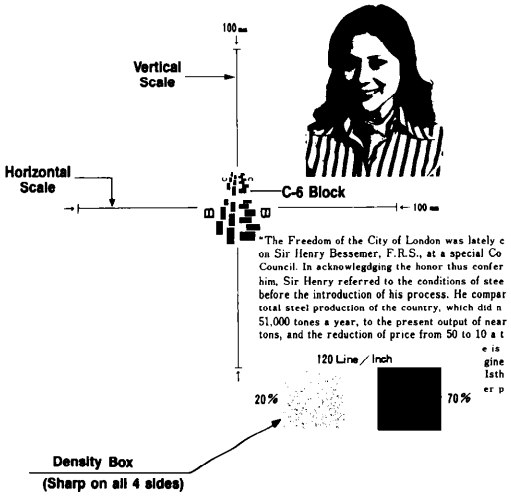

Horizontal magnification is accomplished by changing the magnification of the LENS. Focus is corrected by changing the position of the MIRRORS. Focus also affects the horizontal measurement of the 100mm line on the test chart. In most of the Ricoh copier's, focus is accomplished by moving a wire clamp which secures the first mirror and exposure lamp to the scanner cable. This changes the distance between the first and second scanner assemblies. This adjustment is done until the horizontal 100mm line on the test chart measures 100mm on the copy.

However, in the latest Ricoh products, horizontal magnification is performed by changing the lens magnification and focus is performed by changing the mirror distance, two separate adjustments. Horizontal magnification is checked by measuring the horizontal 100mm line of the test chart. Focus can be checked be observing the following on the OS-A-3 Test Chart:

- **Resolution bars**
- **20% density box**
- **Photograph on test chart**

DO NOT USE THIS PAGE AS A TEST CHART
FOR REFERENCE ONLY!

The resolution bars in the C-6 block should be seen clearly. Using the 20% box, the box should be sharply defined on all four sides. The photograph on the test chart should have a twinkle in both eyes, the part in her hair and the three shades in the shirt should be clearly defined.

Vertical magnification is also important for a properly focused image. The specification on the OS-A-3 Test Chart is the same as for horizontal magnification except the measurement is made vertical. Vertical magnification is controlled by scanner speed. So, if a problem occurs with vertical magnification, the scanner cable, scanner drive pulleys, scanner drive clutch, scanner drive motor, or scanner drive PCB must be checked or adjusted.

4. IMAGE DENSITY

Image density is judged by the image on the copy paper.

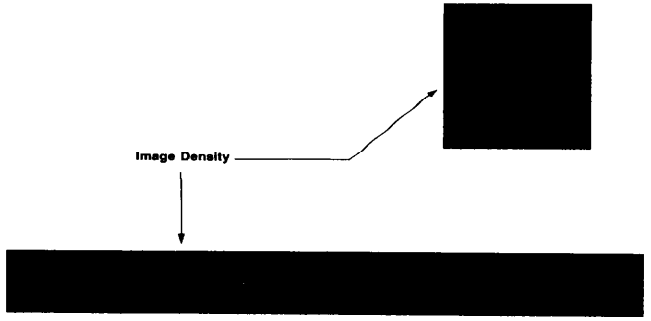

Before the checks for image density can be made, the condition of the original, optics, magnification, side-to-side density, light intensity, corona currents, and developer all need to be correct. Usually the most direct cause of poor image density is under or overtoned developer. The only sure way to eliminate the developer as a potential cause of poor image density is to replace it with fresh developer.

DO NOT USE THIS PAGE AS A TEST CHART
FOR REFERENCE ONLY!

5. LEAD EDGE REGISTRATION

The lead edge of the copy paper must be properly aligned to the latent image of the original to ensure that all printed material is copied.

The scale on the top of the OS-A-3 Test Chart can help you determine if lead edge registration is in specification. The specification varies from model to model, usually because of erase margins. So check each copiers' respective specification.

The scale has 10 equally spaced 1 mm lines. Consult your applicable Field Service Manual for correct specifications. Meeting this specification prevents a black line and distorted image on the lead edge of the copy paper. Lead edge registration is controlled by the timing of the registration rollers.

The timing of the registration rollers is controlled in different ways. Some Ricoh copiers use a registration switch to energize the registration rollers, while other models use pulse counts received at the main board. Both methods accurately register the copy paper to the original's image on the photoconductor surface.

6. LEAD EDGE REGISTRATION

In order to eliminate a shadow or black line on the lead edge of the copy and to assist the separation process a void area is created at the lead edge of the copy paper. This lead edge void area also helps prevent misfeeds in the fuser unit caused by toner at the lead edge of the copy paper. The specification for lead edge erase varies depending upon the model. To measure the lead edge erase, first insure that the lead edge registration is within specification. Once this adjustment is correct simply measure the point at which the image begins to the lead edge of the copy paper to determine the lead edge erase margin.

The method of adjusting the lead edge erase also varies from model to model. The following is one example of how lead edge registration and lead edge erase is performed using the test chart.

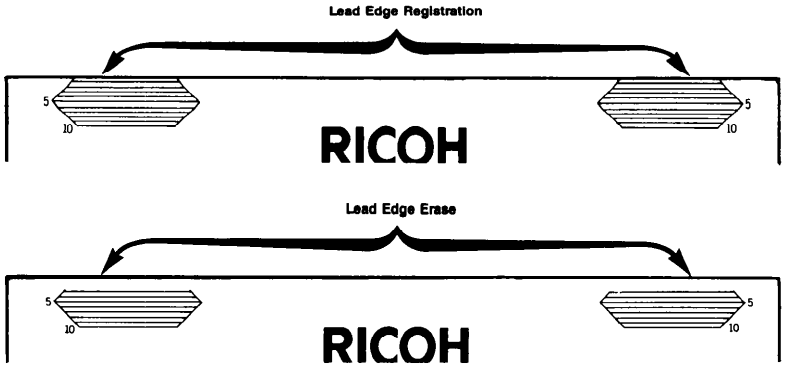

DO NOT USE THIS PAGE AS A TEST CHART
FOR REFERENCE ONLY!

7. SIDE-TO-SIDE REGISTRATION

Like lead edge registration, where the image on the photoconductor surface was registered to the lead edge of the copy paper, the image must also be registered at the side edges of the copy paper.

On each side of the OS-A-3 Test Chart are scales. Here lines are positioned 1mm apart.

The specification for side-to-side registration varies from model to model. On some models adjustment can be performed, while on other models, side-to-side registration is fixed.

The adjustment is usually performed by either moving the lens or paper feed position sideways. Attaining proper side-to-side registration prevents black lines on the edge of the copy and also ensures the proper side erase margins, if used.

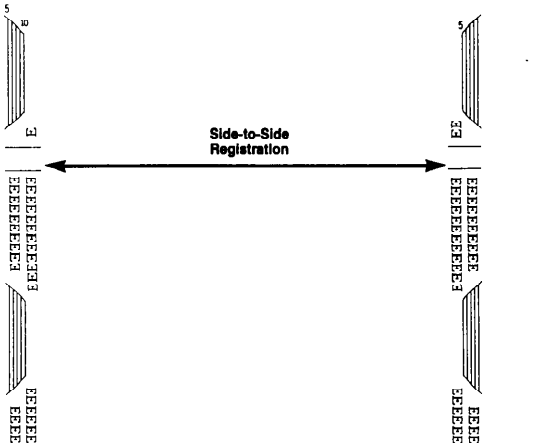

8. JITTER

On each side of the OS-A-3 Test Chart are 2 groups of fine resolution bars. These bars extend almost the entire length of the test chart. The purpose of these bars if the determine if jitter is present on the copy.

Jitter causes a blurred image on the copy. There are usually two types of jitter marks that can be present on the OS-A-3 copy. One is caused by scanner movement, the other by copy paper travel.

To distinguish between the two is relatively easy.

DO NOT USE THIS PAGE AS A TEST CHART
FOR REFERENCE ONLY!

Scanner Movement

If the scanner is stalling, more light will reflect to the photoconductor surface. This causes overexposure of the photoconductor resulting in a WHITE jitter in the resolution bars of the copy.

Copy Paper Travel

If the copy paper is stalled or brought erratically into contact with the developed latent image, the toner will be smeared, causing a BLACK jitter in the resolution bars of the copy.

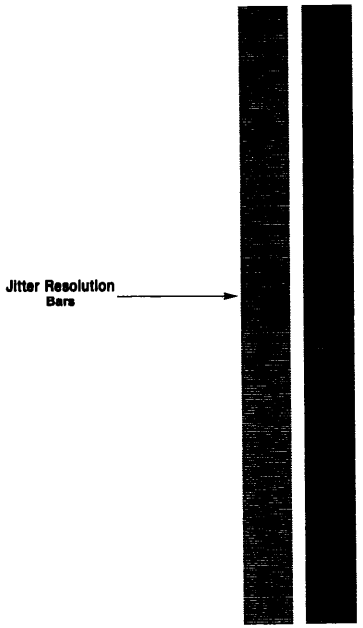

Isolating the cause of jitter can help you correct the problem quickly and accurately. Keep in mind that the jitter bar test is an extremely critical check. Often a jitter seen on the resolution bars is not evident on a normal copy. You should therefore use this part of the test chart as a troubleshooting tool only when jitter is evident on normal copies.

As you can see, the OS-A-3 Test Chart can be a very useful tool in the field. A lot of information can be gathered by observing all areas of the OS-A-3 Test Chart as described.

And Remember!

- **Always use factory specifications**
- **Before troubleshooting a problem, check factory specifications**
- **Do not tweak an adjustment out of specification**
- **Factory specifications: The adjustment that works**

DO NOT USE THIS PAGE AS A TEST CHART
FOR REFERENCE ONLY!

PACKING GUIDELINES FOR MACHINE RETURN TO RICOH

The following guidelines should be observed when preparing a Fax or Copier for return to Ricoh for any reason.

When Applicable

- **Remove the document and copy trays**
- **Remove the handset and handset stand**
- **Remove the paper cassettes**
- **Remove the phone line and power cord**

After removing the above components, place them in a plastic bag and wrap with packing material.

- **Each copier product has a specific "Long Haul Transportation" procedure. This information can be found in the Field Service Manual, Service Overview or Dealer Launch Package**
- **Remove the development unit and vacuum out the toner hopper and developer Reinstall the development unit**
- **Empty Oil Tank**
- **Remove the master unit and place in a protective shielding bag**
- **Tape all covers shut**
- **Place machine in a plastic bag or wrap with protective plastic film (shrink wrap)**
- **Pack the machine and original accessories. Try to locate original carton and packing material. If the carton has been discarded use one comparable to the original.**
- **If new packing must be used make sure it completely surrounds the machine**
- **Clearly write the machine serial number on the outside of the box**
- **Tape the carton shut**
- **Attach a legible copy of the signed Return Authorization (RA) Form to the outside of the unit box**

ESD (ELECTROSTATIC DISCHARGE)

When handling EPROM's, PCB's and other static sensitive devices, the following precautions must be observed to prevent damage to such components.

1. DO NOT open the anti-static container until the component is ready to be installed.

2. DO NOT store these devices near magnetic, electromagnetic, electrostatic or radioactive fields.

3. When installing these devices, leave the machine plugged into a properly grounded outlet. This provides an earth ground to the frame of the machine.

4. Before removing the device from its anti-static container, touch the frame of the machine to discharge any static electricity that may be present. The use of an ESD grounding wrist strap is the best method.

5. Make sure the main switch is in the "OFF" position before removing or installing any device.

6. **WARNING - SHOCK HAZARD**
   Keep hands and conductive tools away from AC components and connectors as the unit is connected to AC power.

PRE-INSTALLATION - WALL OUTLET CHECK

Ricoh recommends all wall outlets be inspected for proper operation where a copier, facsimile or printer product is to be installed. The following procedure has been created to assist the technician.

PROCEDURE:

1. Select the 200 VAC scale on the meter.
2. Connect the "RED" probe to the AC Hot and the "BLACK" probe to the AC neutral.
   * Confirm the voltage reading is within specification as stated in the appropriate FSM.
3. Connect the "RED" probe to the AC Neutral and the "BLACK" probe to ground.
   * Confirm the voltage reading is within specification as stated in the appropriate FSM.
4. Connect the "RED" probe to the AC Hot and the "BLACK" probe to ground.
   * Confirm the voltage reading is within specification as stated in the appropriate FSM.

Wall outlet checks should be performed:

- **At Installation**
- **At a P.M. Cycle**
- **As Part of an I.M.**
- **Before Troubleshooting**

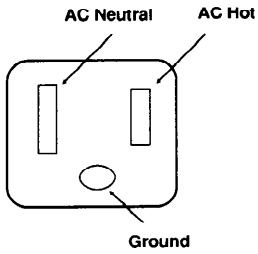

WALL OUTLET

For information regarding line filter and testing equipment, please refer to:

- Service News and Information Control #66, dated 5/2/92 for the ESP power filter
- Service News and Information Control #91, dated 4/24/92 for the SureTest-PRO Wiring Analyzer

1-800-336-MSDS

Ricoh has a toll free "Chemical Safety Hotline" to provide information regarding environmental issues which relate to the office equipment industry.

Call toll free for Material Safety Data Sheets or Safety and Health Information.

***24** hours a day **7** days a week*

RICOH

CUSTOMER SERVICE GROUP

FT4430/4410
FIELD SERVICE MANUAL

REV. NO.	DATE	COMMENTS
*	4/88	Original Printing
1	7/89	Revised Pages

PN: RCFM4430

RICOH

CUSTOMER SERVICE GROUP

FT4430/4410
FIELD SERVICE MANUAL

REV. NO.	DATE	COMMENTS
*	4/88	Original Printing
1	7/89	Revised Pages

PN: RCFM4430

MAIN BOARD SCHEMATIC (Main Control)

16 April '88

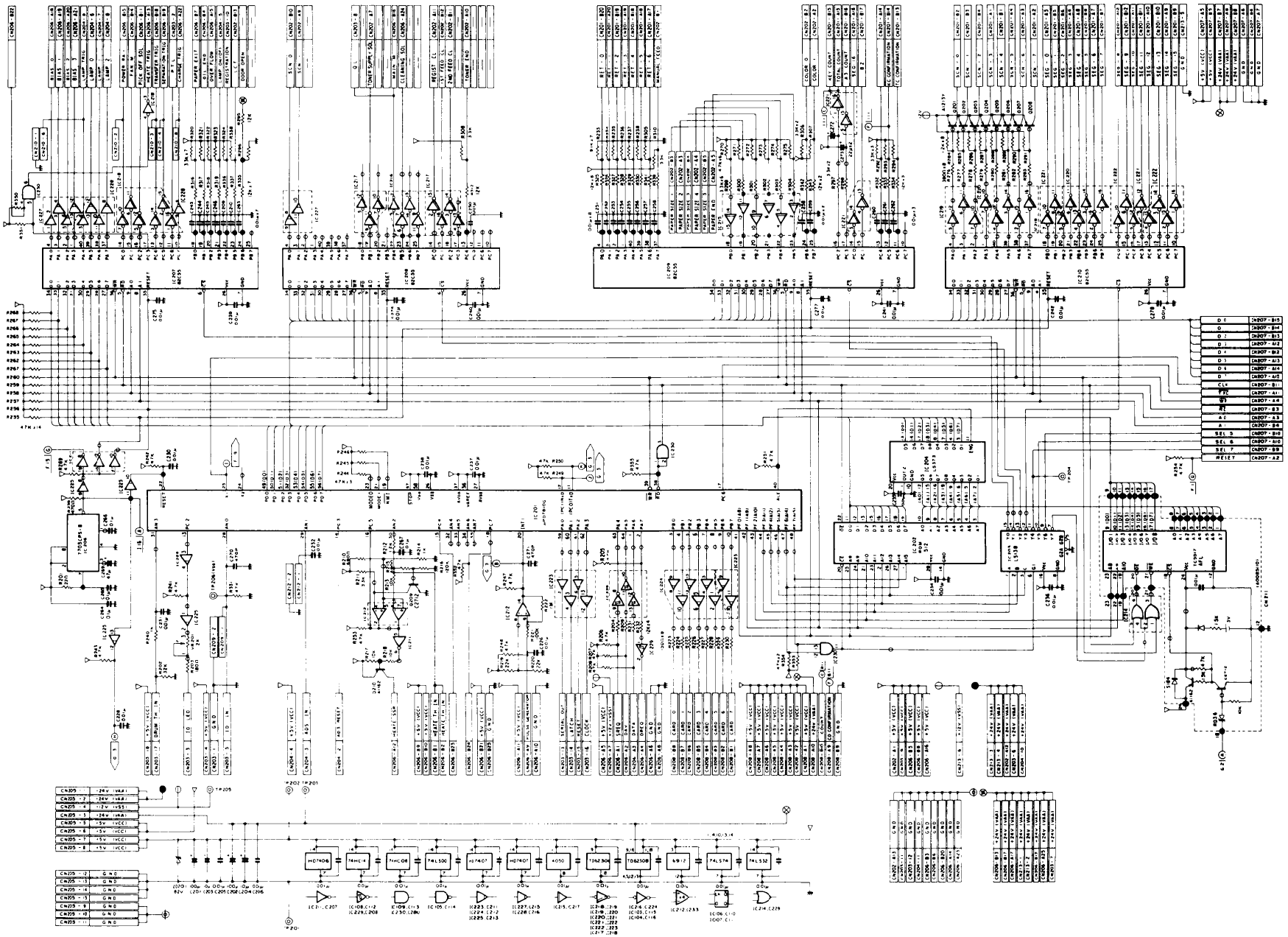

A024

MAIN BOARD SCHEMATIC (Optics Control)

16 April '88

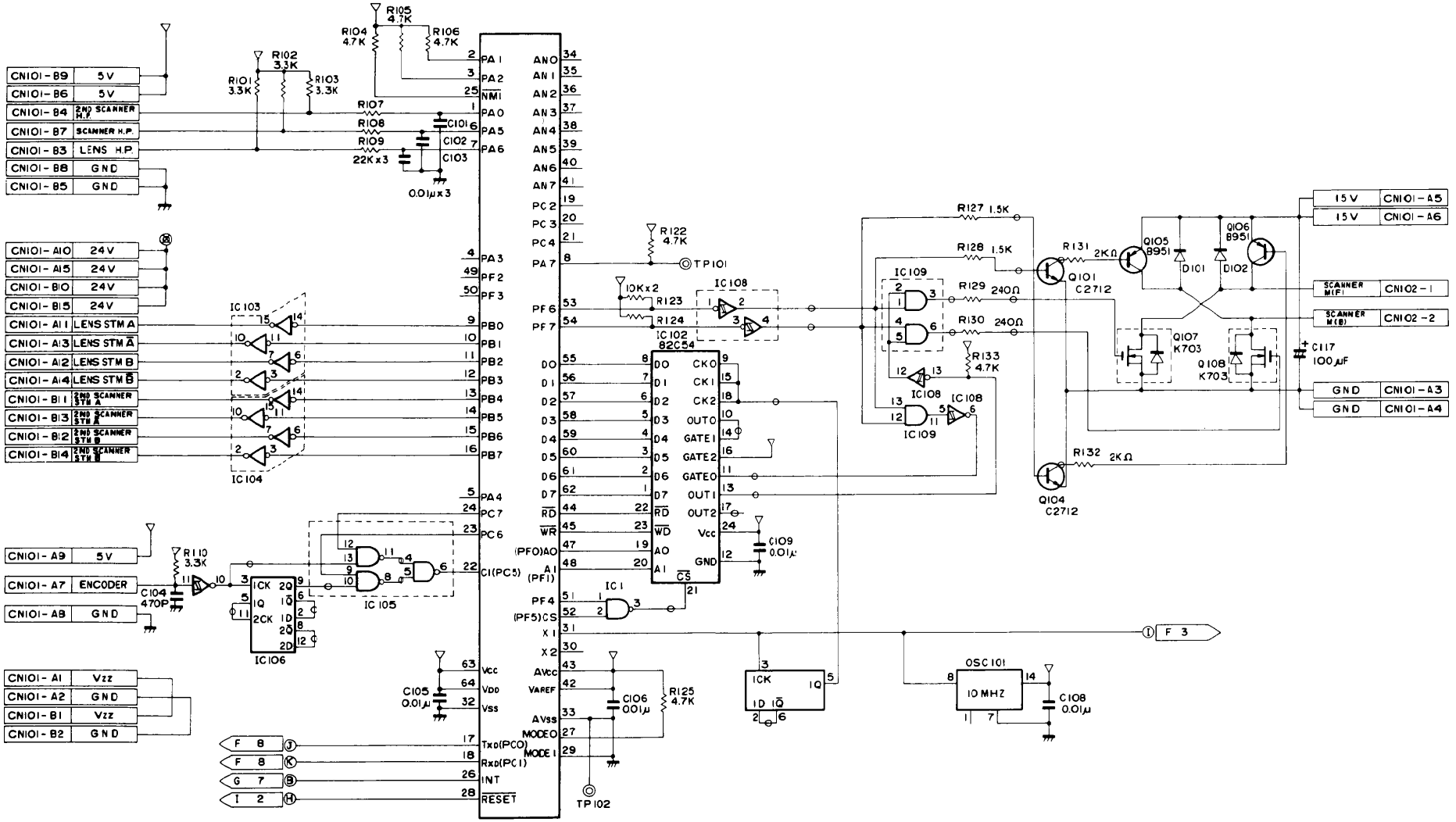

A024

4-2

OPERATION PANEL BOARD SCHEMATIC
FT4410

16 April '88

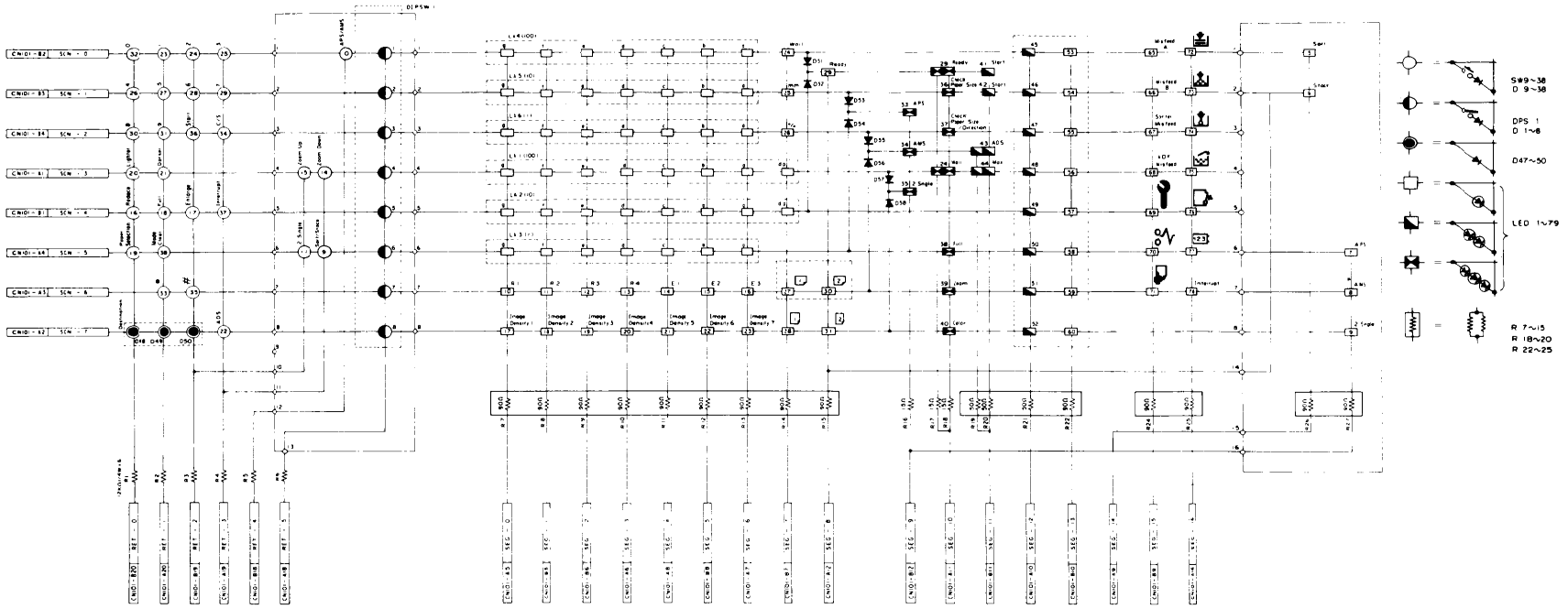

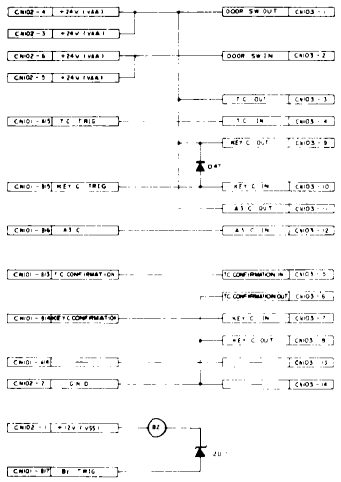

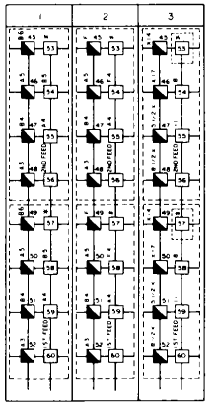

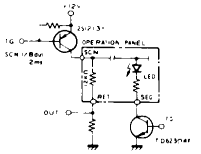

PAPER FEED CONTROL BOARD SCHEMATIC

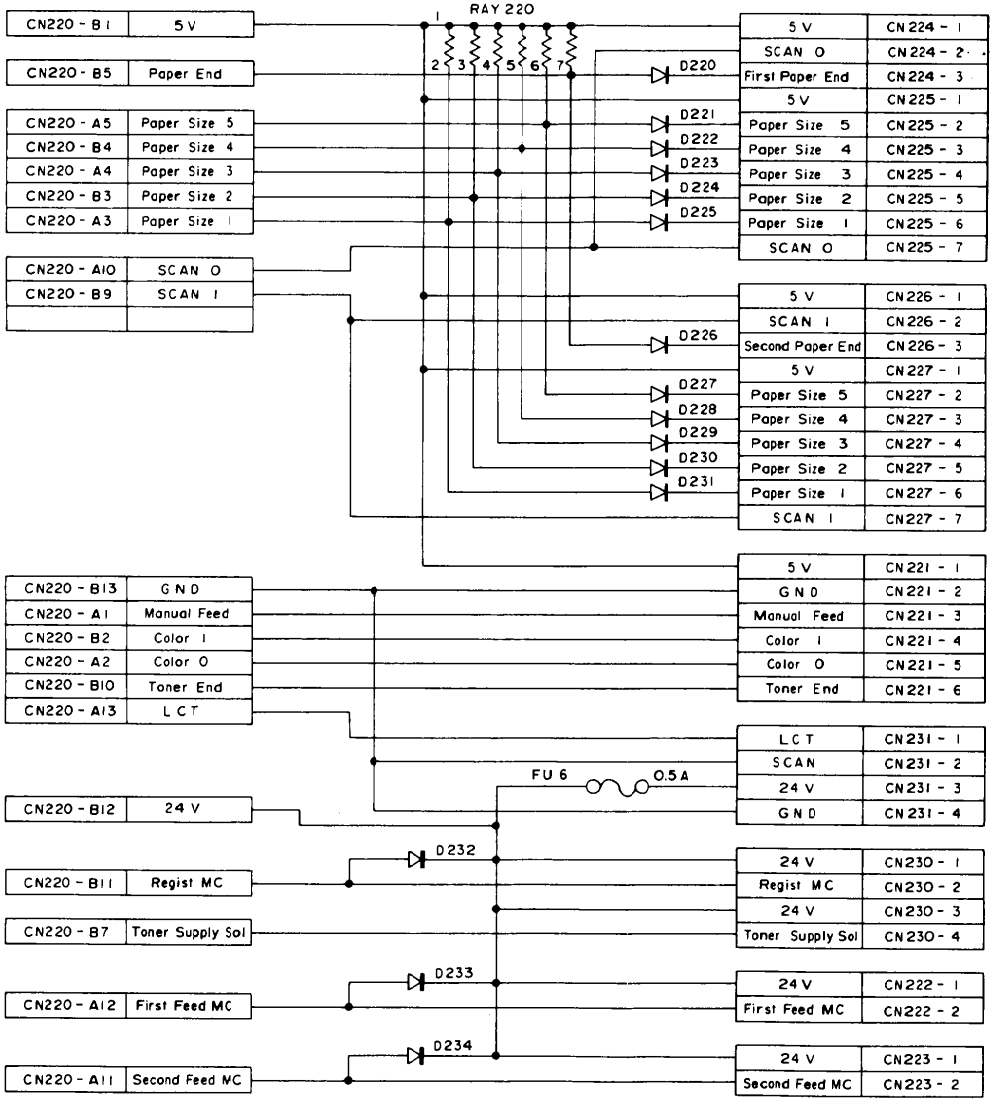

OPERATION PANEL BOARD SCHEMATIC
FT4430

16 April '88

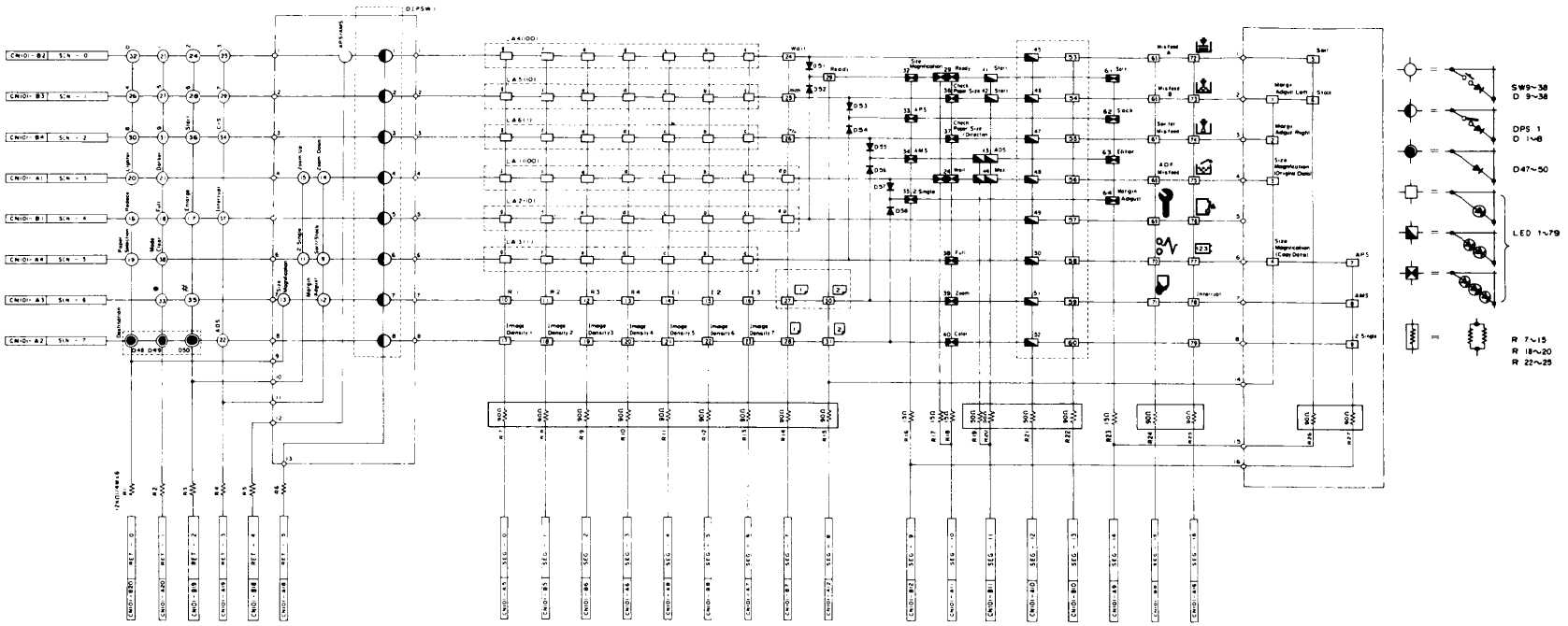

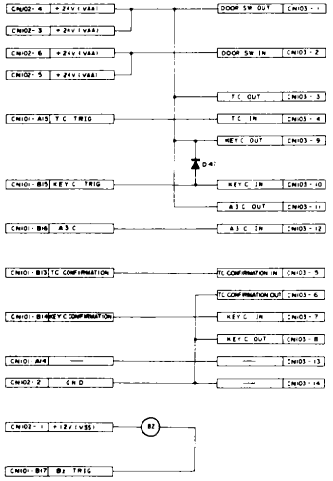

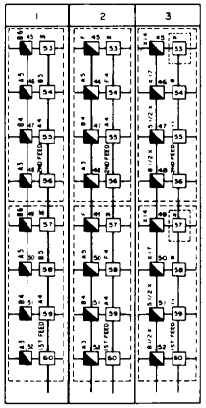

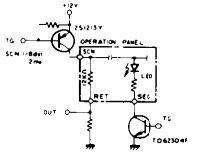

A024
4-3A

DC POWER SUPPLY BOARD SCHEMATIC

16 April '88

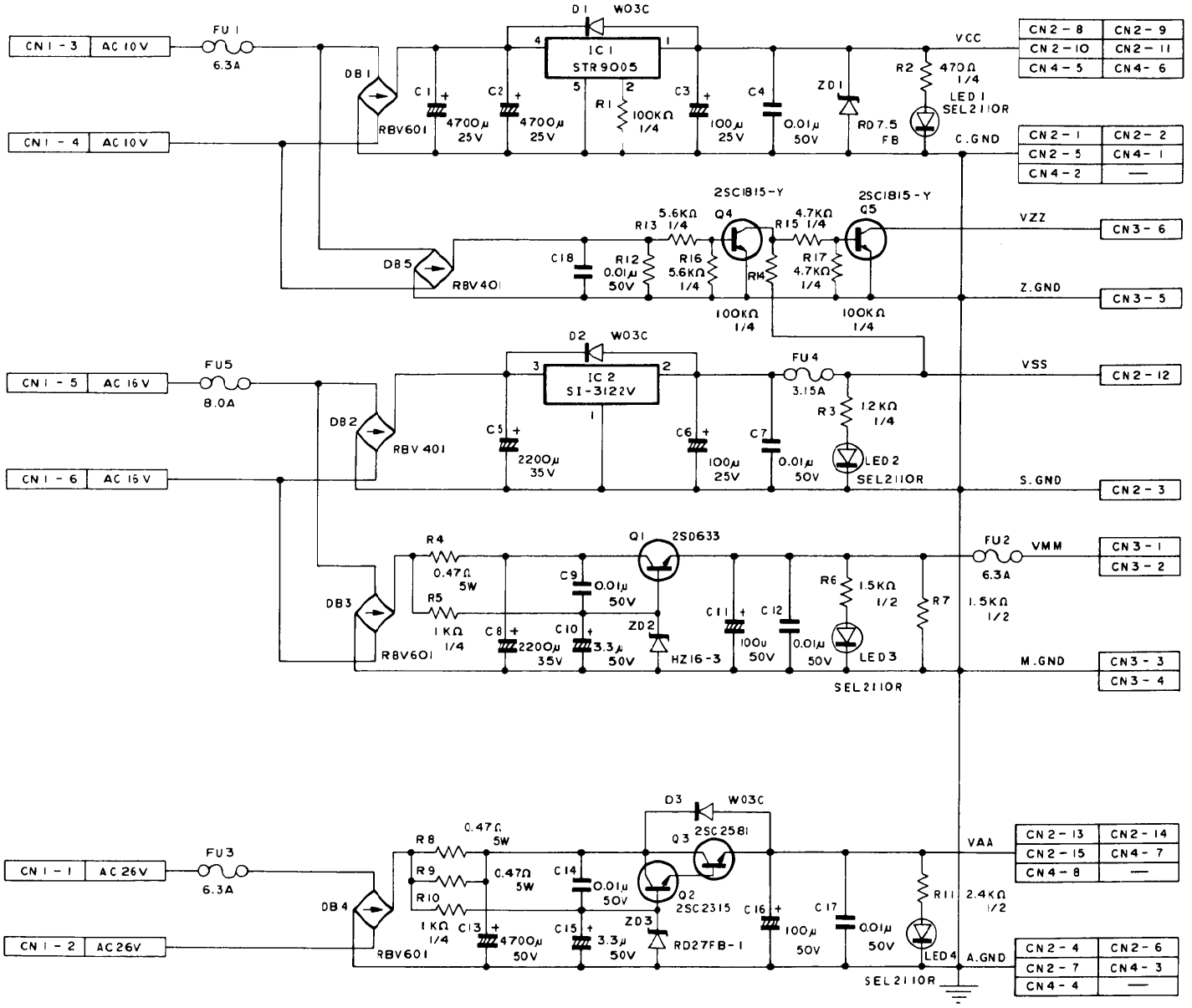

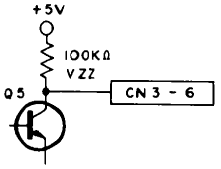

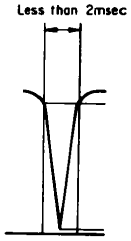

LAMP REGULATOR SCHEMATIC

16 April '88

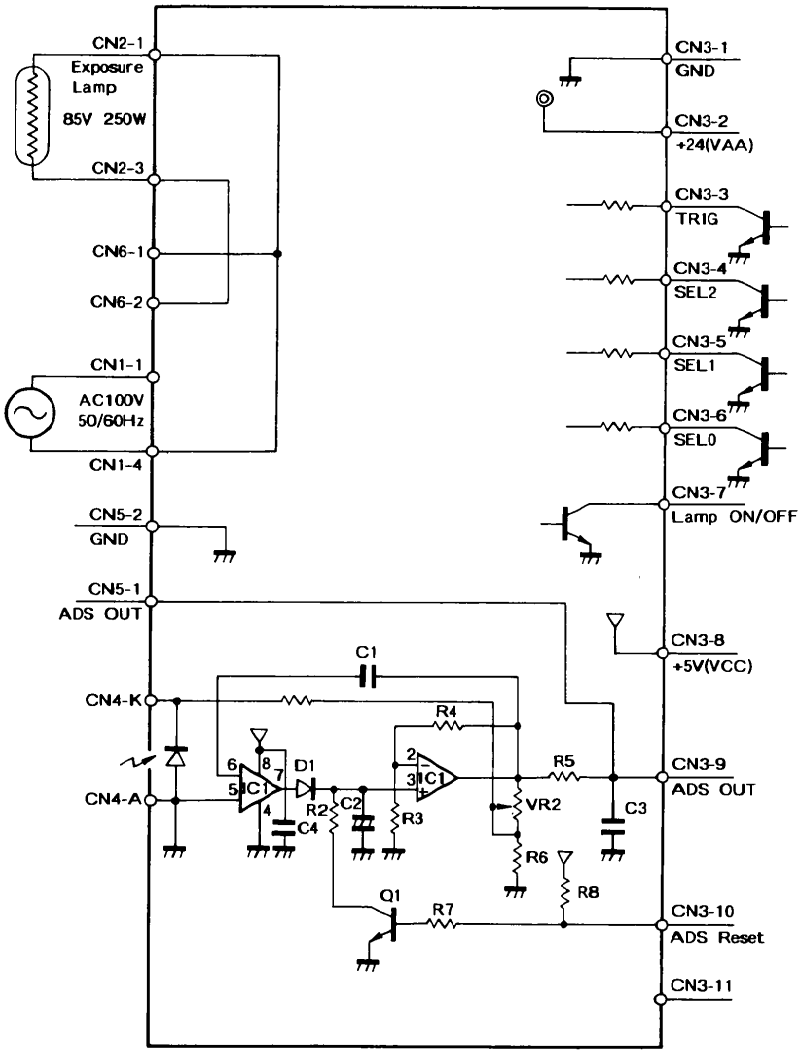

A024

FUSING LAMP DRIVE BOARD SCHEMATIC

16 April '88

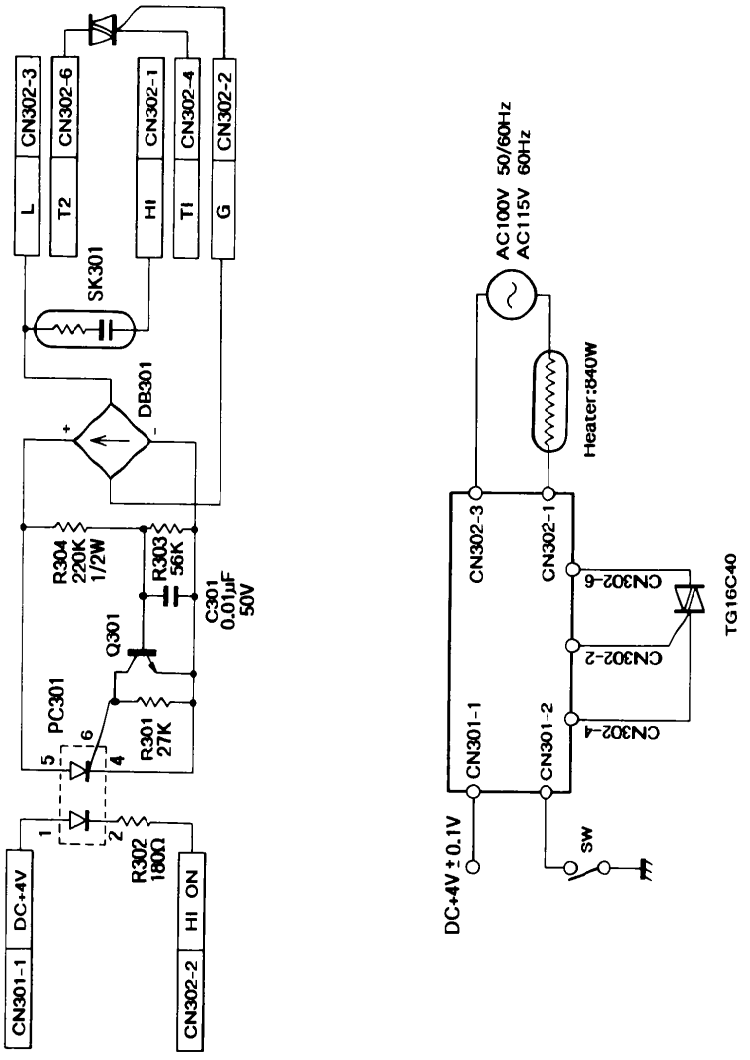

A024

INTERFACE BOARD SCHEMATIC (TYPE-E)

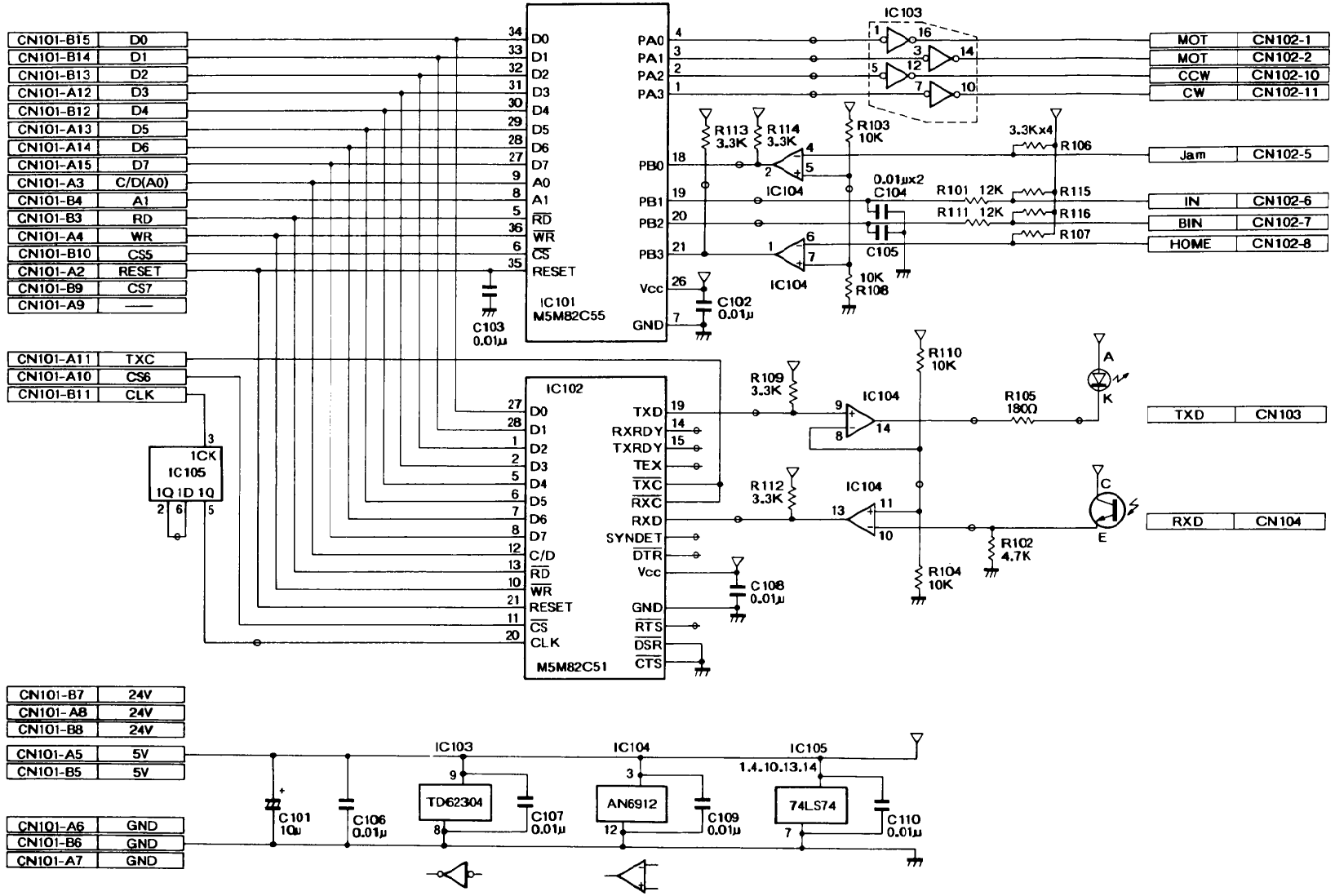

TIMING CHART (Main Frame)

16 April '88

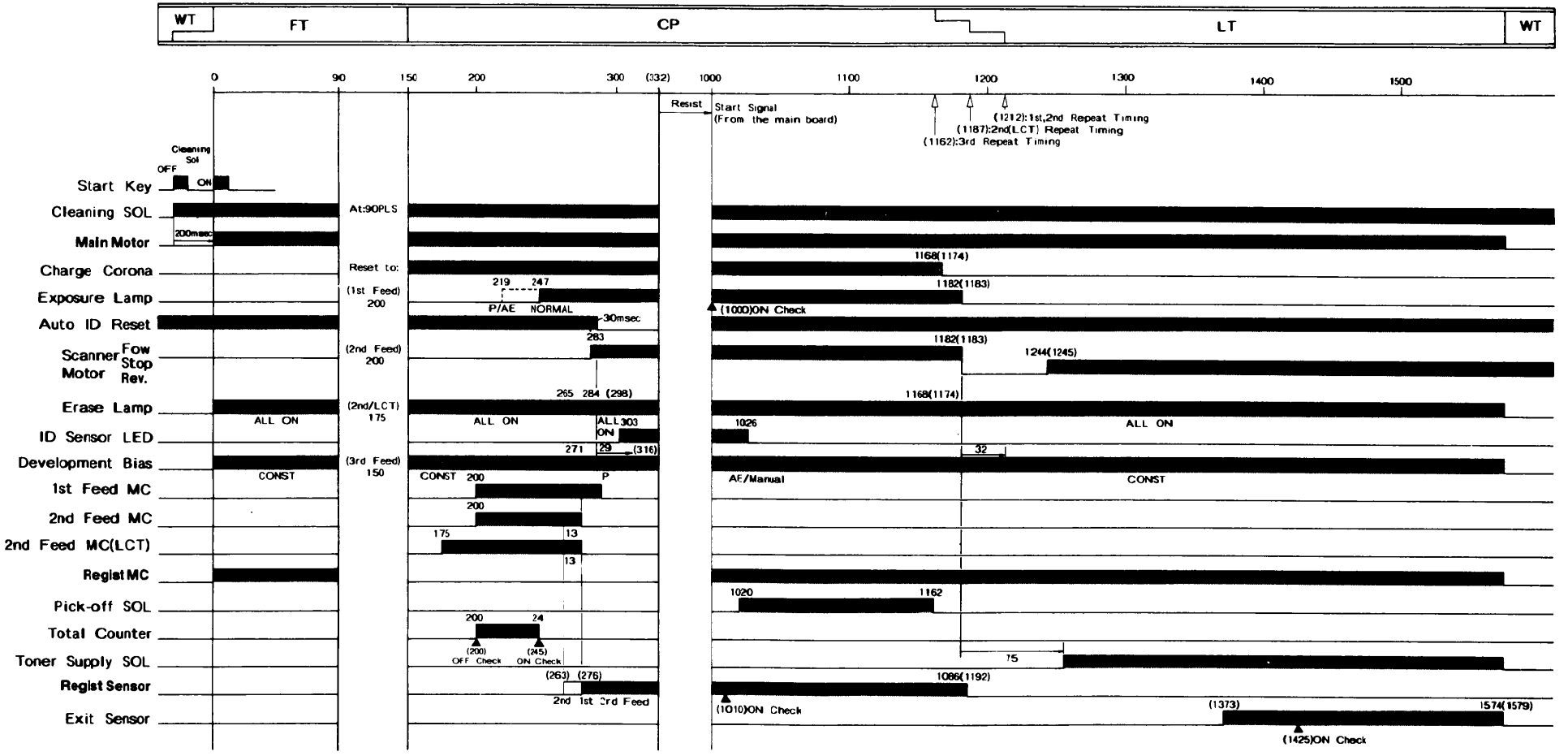

A4 SIDEWISE SINGLE COPYING LT:( )
1 PLS = 6.98ms
= 1.047mm

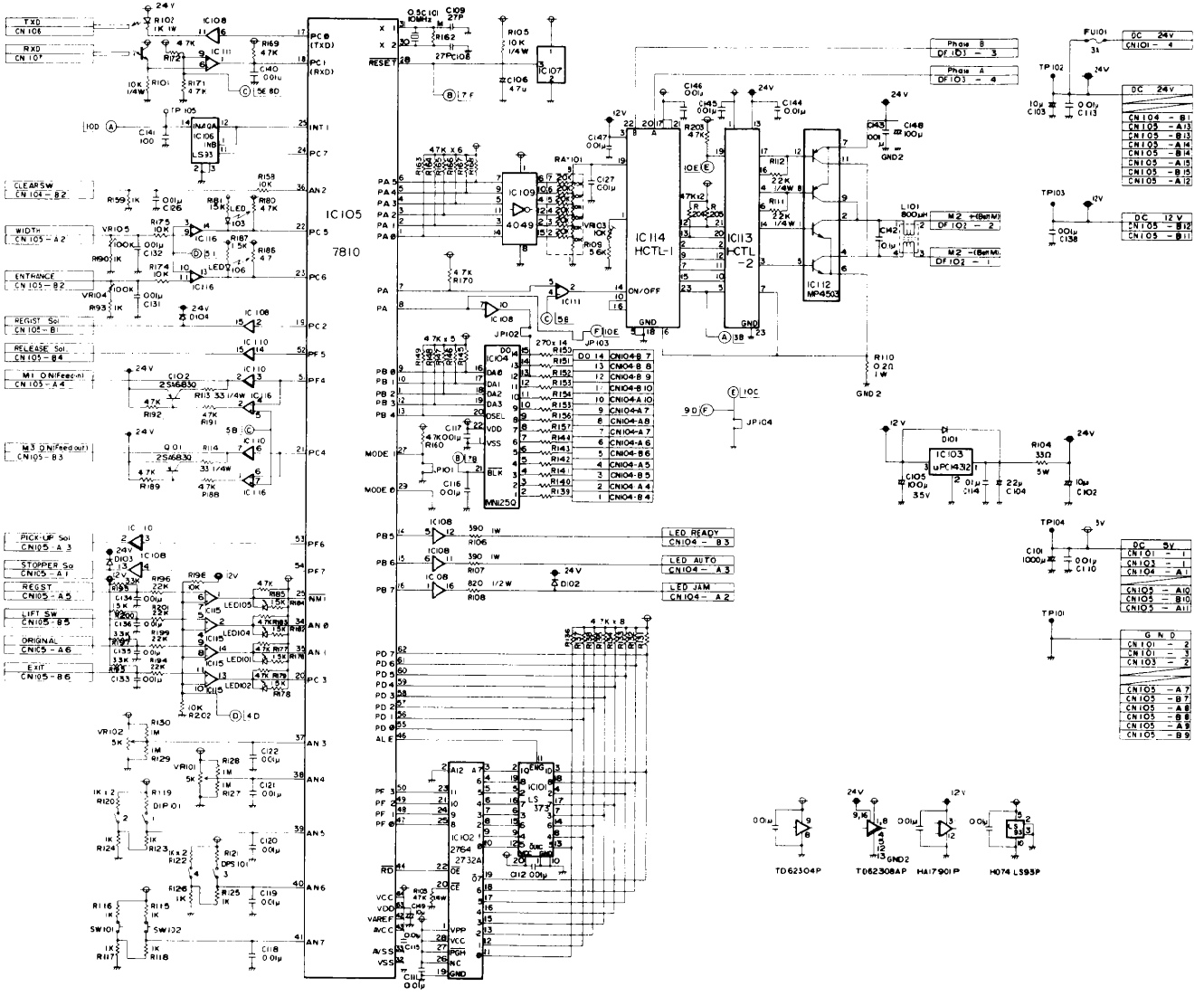
IC105
7810
IC114
HCTL-1
IC113
HCTL
-2
IC112
MP4503
IC109
4049
IC104
MN250
IC103
μPC1432
IC101
IC102
2764
27324
TD62304P
TD62308AP
HA17901P
H074 LS93P

DF TIMING CHART

16 April '88

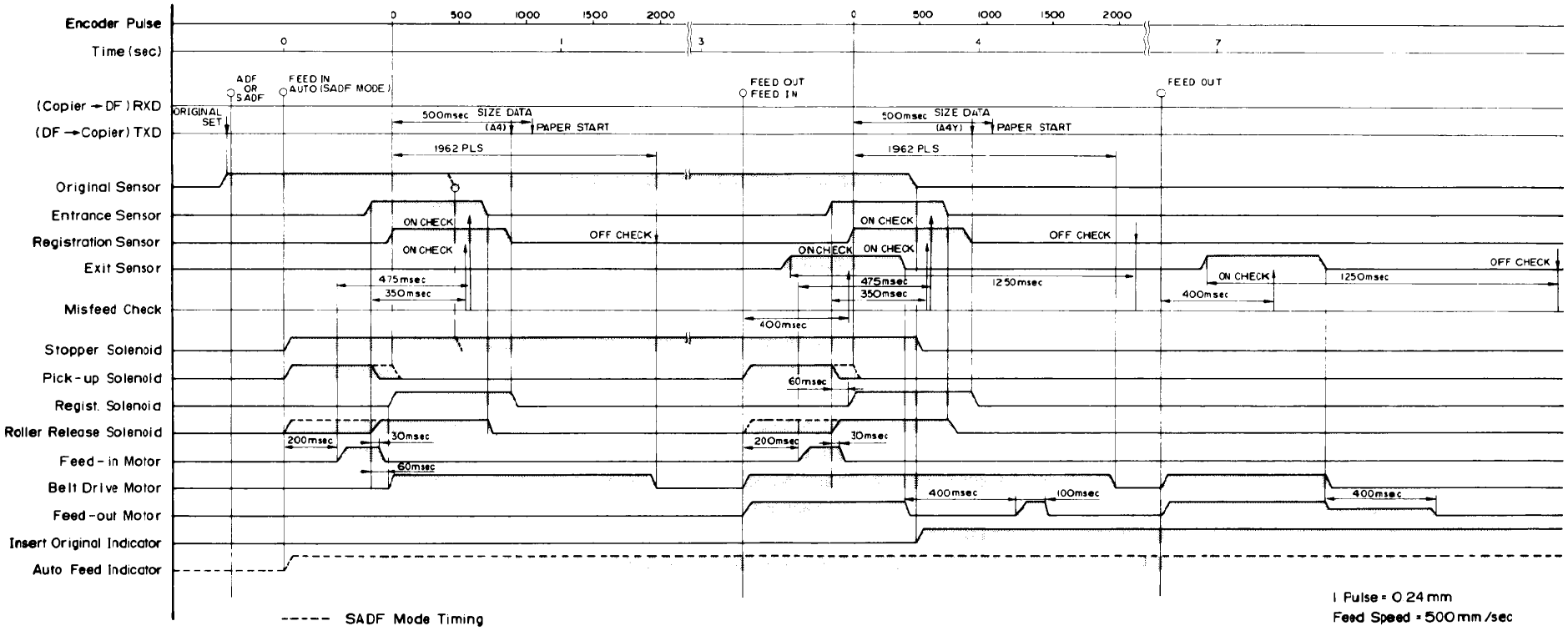

A024

LCT CONTROL BOARD SCHEMATIC (Main Control)

16 April '88

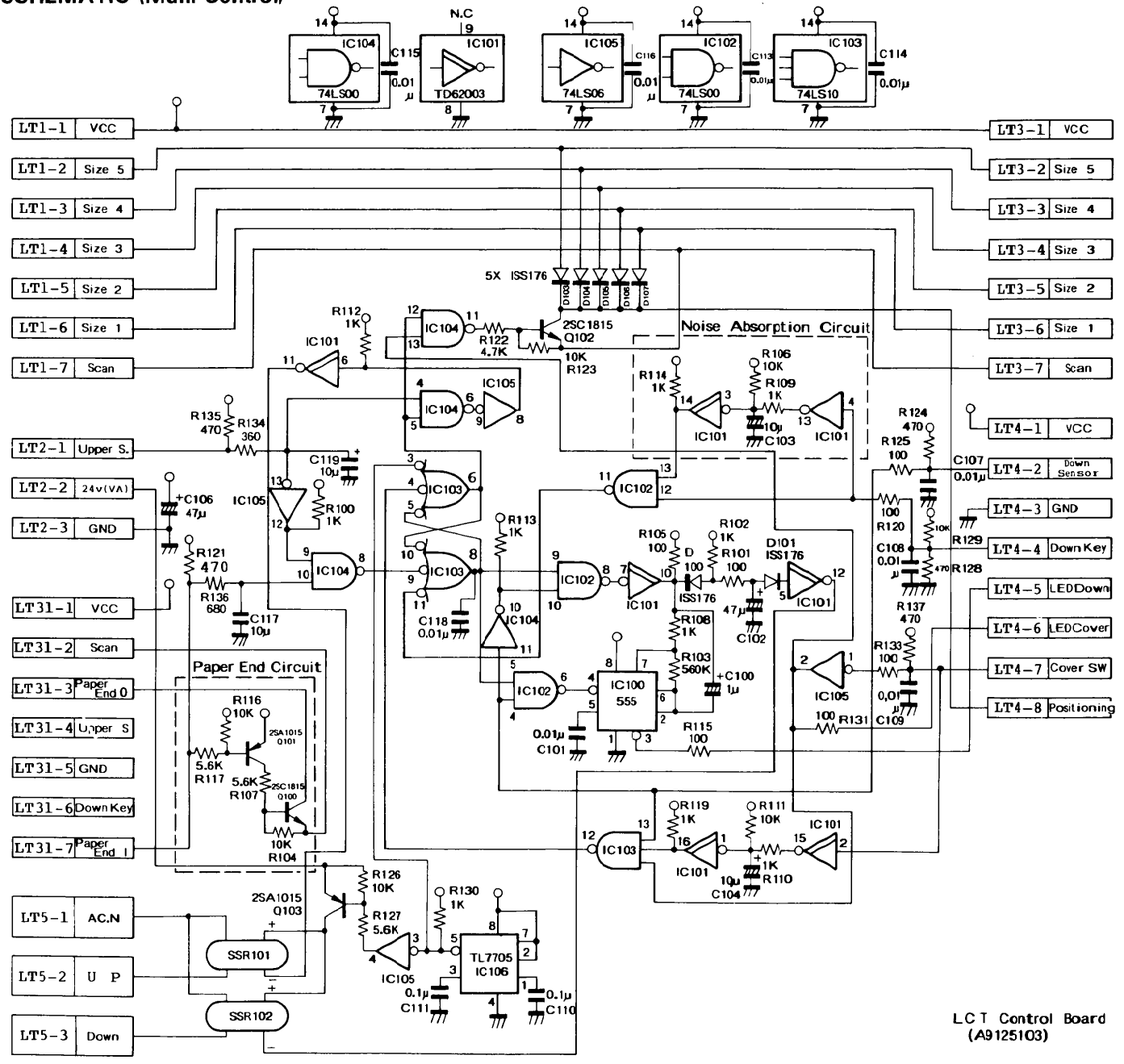

LCT Control Board
(A9125103)

A024

EDITOR BOARD SCHEMATIC

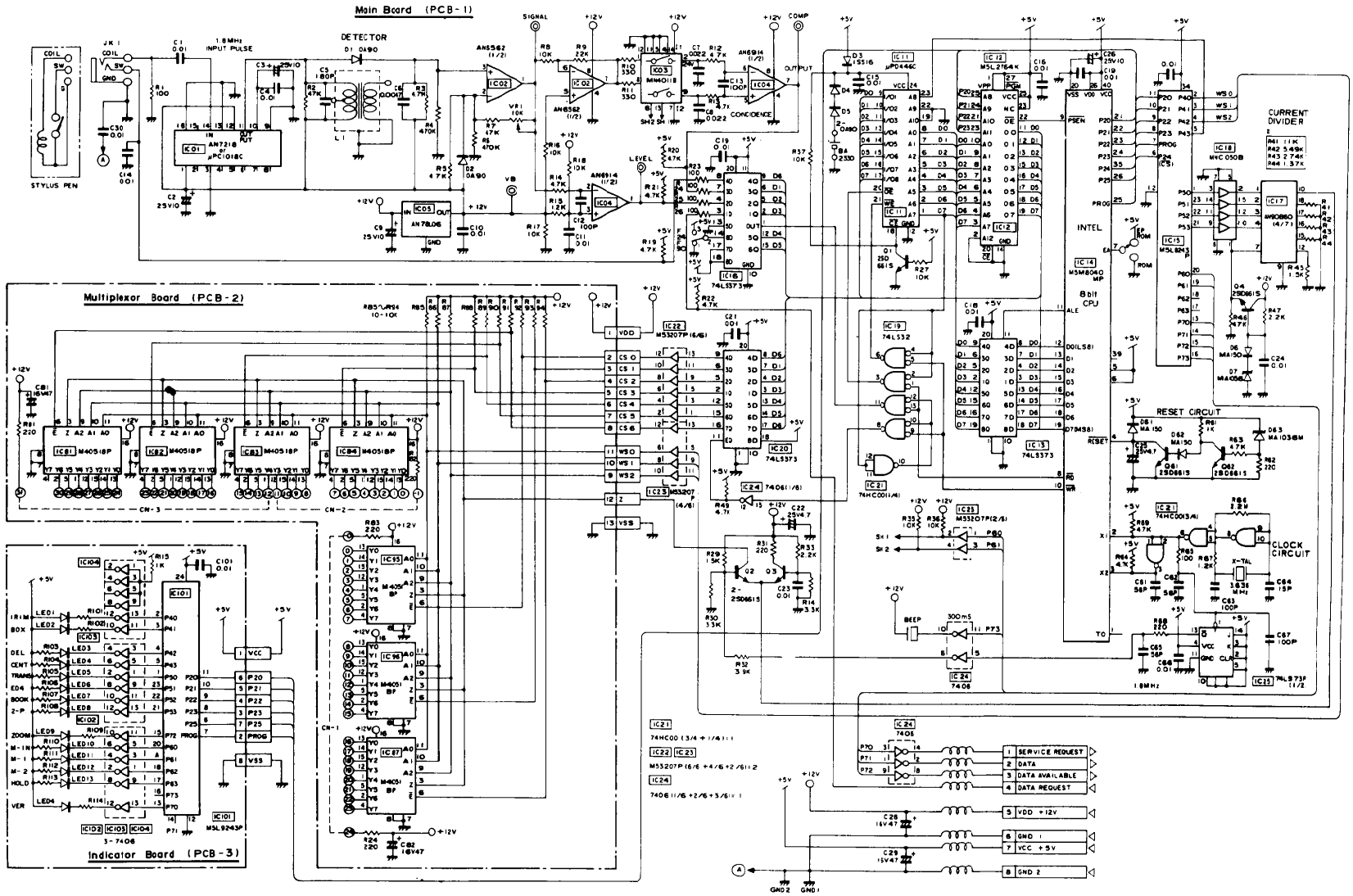

ELECTRICAL COMPONENT LAYOUT (A024)

Copier

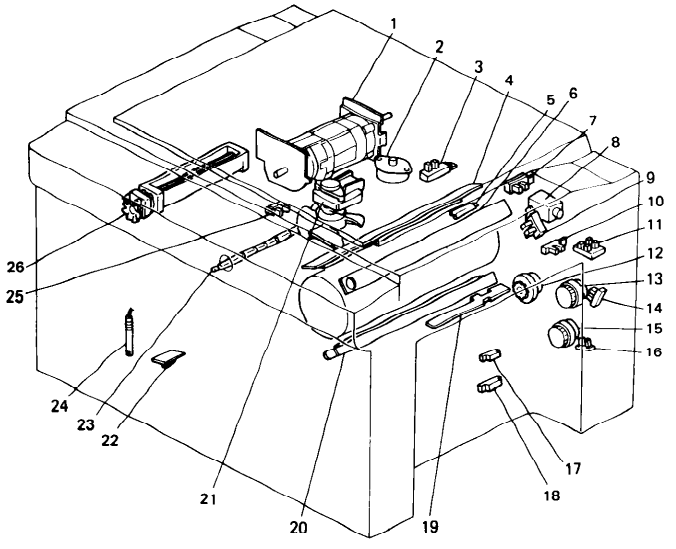

Index No.	Description	Symbol	P to P
1.	Main Motor	M1	G4
2.	Lens Drive Motor	M2	B2
3.	Lens HP Sensor	S1	B2
4.	Quenching Lamp	L1	C8
5.	Drum Heater		G7
6.	Erase Lamp	L2	E3
7.	Pulse Generator Sensor	S2	E1
8.	Toner Supply Solenoid	SOL1	B3
9.	Color Toner End Sensor	S3	B8
10.	Manual Feed Sensor	S4	B8
11.	Color Toner Sensors	S5	B8
12.	Registration MC	MC1	B7
13.	First Paper Feed MC	MC2	C6
14.	First Paper End Sensor	S6	B4
15.	Second Paper Feed MC	MC3	B6
16.	Second Paper End Sensor	S7	B5
17.	First Paper Size Sensor	S8	B4
18.	Second Paper Size Sensor	S9	B5
19.	Registration Sensor	S10	C3
20.	Pre Transfer Lamp	L3	C8
21.	Vacuum Fan Motor	M3	G3
22.	Toner Overflow Sensor	S14	C7
23.	Fusing Lamp	L4	F2
24.	Oil End Sensor	S15	G3
25.	Paper Exit Sensor	S11	F1
26.	Exhaust Blower Motor	M4	G4

Copier

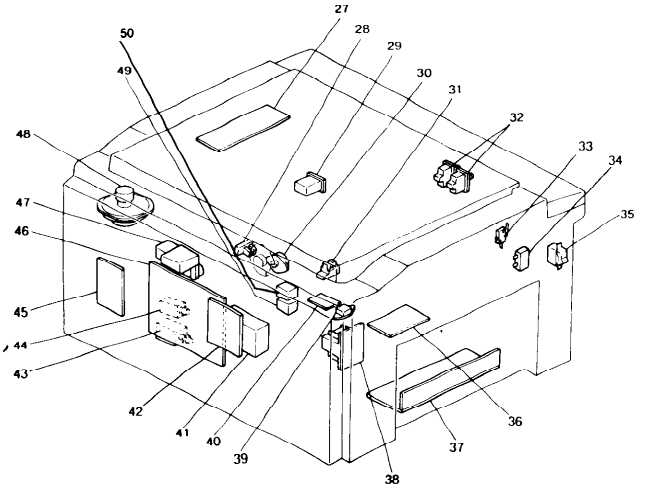

Index No.	Description	Symbol	P to P
27.	Lamp Regulator PCB	PCB1	E4
28.	Second Scanner Home Position Sensor	S12	B2
29.	Total Counter	CO1	C1
30.	Second Scanner Motor	M5	C2
31.	Scanner Home Position Sensor	S13	B2
32.	Front Cover Safety Switches (2)	SW3	G5
33.	Door Switch (1)	SW4	B1
34.	Main Motor Capacitor	C	G4
35.	Main Switch	SW1	G6
36.	Relay PCB	PCB2	F4-F5
37.	DC Power Supply Unit	PSU	E5-F5
38.	Transformer	TR1	G6
39.	Fusing Triac	FT	F3
40.	Heater Control PCB	PCB5	F3
41.	Power Pack-T/S	P1	E2
42.	Interface Board	PCB3	D6-D7
43.	Cleaning Solenoid	SOL2	E1
44.	Pick-off Solenoid	SOL3	F1
45.	Feed Control PCB	PCB4	C4-C8
46.	Main PCB	PCB6	D1-D8
47.	Power Pack-C/B	P2	E2-E3
48.	Scanner Drive Motor	M6	C2
49.	AC Drive Relay	RA1	F4
50.	Main Motor Relay	RA2	F4

ELECTRICAL COMPONENT LAYOUT (A024)

Document Feeder

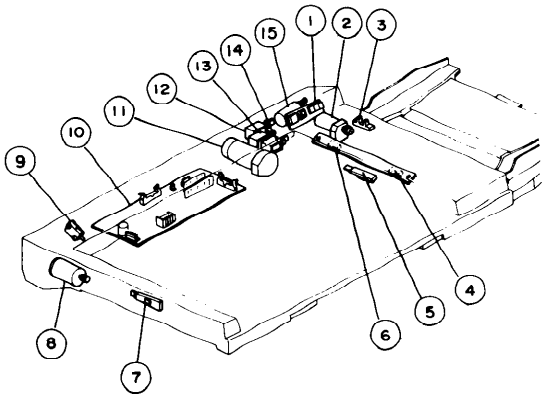

Index No.	Description	Symbol	P to P
1.	Indicator PCB	PCB-10	E8
2.	Feed-in Motor	M-14	F8
3.	Feed-in Sensor	S-34	E8
4.	Entrance Sensor	S-35	F8
5.	Registration Sensor	S-37	F8
6.	Width Sensor	S-36	F8
7.	Exit Sensor	S-38	F8
8.	Feed-out Motor	M-15	F8
9.	Lift Switch	SW-7	F8
10.	DF Main PCB	PCB-11	E8-F8
11.	Belt Drive Motor	M-16	E7
12.	Pick-up Solenoid	SOL-7	F7
13.	Registration Solenoid	SOL-8	F7
14.	Roller Release Solenoid	SOL-9	F7
15.	Stopper Solenoid	SOL-10	F7

Sorter

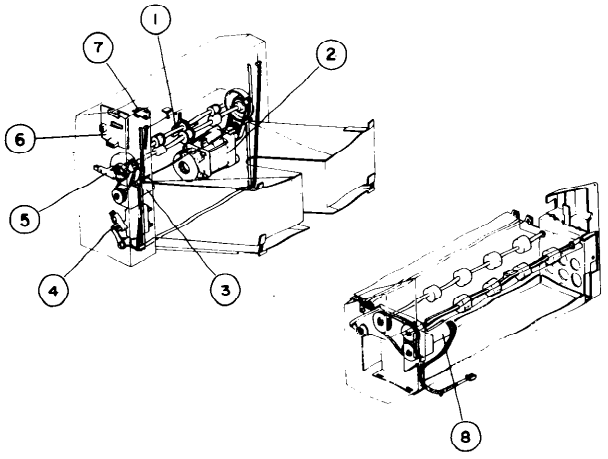

Index No.	Description	Symbol	P to P
1.	Paper Sensor	S-31	F7
2.	Wheel Drive Motor	M-11	F7
3.	Roller Drive Motor	M-12	F7
4.	Bin Home Position Sensor	S-32	E7
5.	Wheel Sensor	S-33	F7
6.	Sorter Control PCB	PCB-9	E6-F6
7.	Cover Safety Switch	SW-8	F7
8.	Relay Drive Motor	M-13	F7

Large Capacity Tray

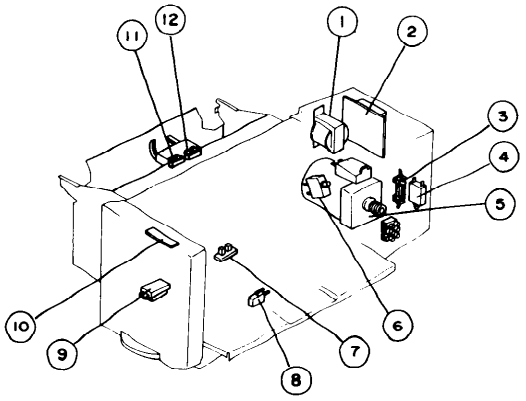

Index No.	Description	Symbol	P to P
1.	LCT Transformer	T2	A4
2.	LCT PCB	PCB-12	A4-A6
3.	AC Fuse (220V)	F-2	A4
4.	Circuit Breaker (115V)	CB-2	A4
5.	LCT Motor	M-17	A5
6.	LCT Safety Switch	S-10	A4
7.	Tray Down Sensor	S-39	A5
8.	Positioning Switch	S-5	A6
9.	Paper Size Sensor	S-40	A6
10.	LCT Operation Panel	PCB-13	A5-A6
11.	Paper End Sensor	A-41	B4
12.	Upper Limit Sensor	S-42	B5-B6

SERVICE PROGRAM MODE TABLE

Mode No.	Function	Data	Factory Setting	Remarks
5 Exposure Lamp OFF	Free run with exposure lamp off. Press the Start key to start free-run. Press the C/S key to stop free run.	0: For editing	0	This Mode is used with Free Run Mode (DIP SW1-2)
11 All Indicators ON	Turns on all indicators on the operation panel.	--	--	Refer to NOTE 1.
15 Auto Reset Time	Selects auto reset of 1 or 3 minutes.	0: 1 min. 1: 3 min. 2: None	0	Auto Reset time can be switched OFF by DIP SW1-4 ON.
17 Auto Cassette Shift	Selects Auto-Cassette Shift mode.	0: ON 1: OFF	0	Copier automatically shifts to another cassette holding the same size paper when paper runs out.
20 Feed Station Priority(LCT)	Selects feed station priority.	0: LCT 1: Cassette	0	
21 APS Priority	Selects APS or manual.	0: APS 1: Manual	0	If DF is installed, APS mode is selected when an original is placed on the DF.
22 Feed Station Priority (1st, 2nd, and 3rd cassette)	Selects feed station priority.	0: 1st 1: 2nd	0	If the first priority cassette is not installed or the cassette is empty, the machine selects another cassette.
23 DF Original Size	Enables originals of various sizes to be fed from the same stack.	0: OFF 1: ON	0	ADF Mode only.
28 Auto Sort Mode	Sort mode is automatically selected when more than 2 originals are set on the DF original table and the entered quantity is greater than 2.	0: Manual 1: Auto	0	Sorter and DF must be installed.
29 Fusing Unit Idle	Selects fusing unit idling mode.	0: No Idling 1: Idling	0	Copier will idle for 10 seconds. Refer to NOTE 3.
30 Toner Supply Mode	Selects toner supply mode.	0: Detect B 1: Fixed 2: Detect A	0	

Mode No.	Function	Data	Factory Setting	Remarks
31 Toner Supply Amount (Detect Mode A)	Determines how much toner is supplied in detect mode A.	0: 30% 1: 15% 2: 45% 3: 80%	0	
32 Toner Supply Amount (Fixed Mode)	Determines how much toner is supplied in fixed mode.	0: 7% 1: 3.5% 2: 10.5% 3: 14%	0	
33 ID Sensor Bias	Sets the bias voltage applied to the bias roller when sensing image density.	0: 470V 1: 440V 2: 500V 3: 530V	0	470V = Normal 440V = Lighter 500V = Darker 530V = Darkest
34 Toner Supply Amount (Detect Mode B)	Determines how much toner is supplied in detect mode B.	0: 2% 1: 4%		
35 Toner Supply	Changes toner supply interval a) ID sensor checks every 5 copies. b) Toner end level changes to 0.65V	0: Standard 1: Increase	0	Standard: Every 10 copies, 0.75V
36 Margin Adjustment	Selects the preset margin adjustment value.	0: 5mm 1: 10mm 2: 15mm	0	
41 Lead Edge Erase Margin Adjustment	Adjusts the lead edge margin.	0 - 15	8 (3.5 mm)	0.8mm per step + 5.6mm to -6.4mm
42 Registration Adjustment	Adjusts registration.	0 - 15	8 (0mm)	1mm per step + 7mm to -8mm
43 Vertical Magnification Adjustment	Adjusts magnification in the paper travel direction.	0 - 15	8 (0%)	0.2% per step + 1.4% to -1.6%
44 Horizontal Magnification Adjustment	Adjusts magnification perpendicular to the direction of paper travel.	0 - 15	8 (0%)	0.2% per step + 1.4% to -1.6%
45 Editing Mode	Selects the editing mode.	0: Standard 1: For editing		It is required to change data "0" to "1" when installing the Editor Board on the copier.

Mode No.	Function	Data	Factory Setting	Remarks
49 Fusing Temperature Change	Changes fusing temperature.	0: Standard 1: Low 2: Higher 3: Highest	0	180 ± 5°C 175 ± 5°C 185 ± 5°C 190 ± 5°C
52 Fusing Temperature	Displays the fusing temperature.	--	--	
54 Vsg Adjustment	Turns on the ID sensor LED.			At that time, the PTL turns on and the drum rotates for about 10 seconds.
55 VSG, VSP Voltage	Displays VSG, VSP voltage.	--	--	Press the enter key twice to display Vsp.
58 ADS Input Reference Voltage	Displays ADS voltage.	--	--	Refer to the ADS adjustment procedure.
59 Bias Voltage	Displays bias voltage.	--	--	Press the Start key to indicate the voltage.
60 Toner Supply Recovery	Recover toner volume if the Vsp is above 0.5V. a) Press Start key. b) Toner supply clutch turns on. c) Free run starts. d) Vsp becomes less than 0.5V. e) Free run stops.	--	--	Use this mode if the image density is low. (Black toner only). Refer to NOTE 2 on color toner.
70 Color Toner Supply Amount	Selects the color toner supply ratio.	0: 14% 1: 7% 2: 21% 3: 28% 4: 35% 5: 42% 6: 49% 7: 56%	0	
72 Bias OFF	Turns off the bias according to the length of the lead edge erase margin.	0: OFF 1: ON		
73 Color Toner Copy Count	Shows the number of color copies made.	0: Red 1: Green 2: Blue		Multiply number by 100. Example: 24 = 2400 sheets
75 ID Sensor Bias (Color Toner)	Sets the bias voltage applied to the bias roller when sensing image density.	0: 590V 1: 620V	0	590V = Normal 620V = darker

Mode No.	Function	Data	Factory Setting	Remarks
76 Sorter Bin Capacity	Sets the stack mode quantity limit.	0: No limit 1: Limit	0	Limit is determined by the paper size. Refer to NOTE 4.
86 PM Counter	Turns on the PM counter.	0: OFF 1: ON	0	For PB machines, "0" is ON "1" is OFF.
87 PM Copy Count	Sets the interval of the PM counter.	0: 80K 1: 80K 2: 120K	0	
88 PM Counter Check	Displays the PM counter.			When the PM count is exceeded, the Service Call and Key Counter indicators blink.
89 PM Counter Reset	Resets the PM counter.			Use after performing PM.
93 Maximum Copy Quantity	Limits the maximum copy quantity that can be entered.	--	0 (999)	The limit quantity is displayed in the copy counter. (Refer to NOTE 5.)
97 Clear Jam Counter	Clears the jam counters.	130: Total 131: Feed 132: Fusing 138: Sorter 139: DF	--	DIP SW 1-1 must be on.
98 Clear All Counters	Clears all counters and returns modes which factory setting is "0" back to "0".			DIP SW1-1 must be on.
99 Clear All Memory	Clears all counters and returns all modes to factory setting.	0: Memory 1: Clear	0	DIP SW1-1 must be on.
130 Paper Jams	Displays the total number of paper jams.	--	--	NOTE 6
131 Feed Jams	Displays the total number of entrance area paper jams.	--	--	NOTE 6
132 Fusing Jams	Displays the total number of fusing unit jams.	--	--	NOTE 6
138 Sorter Jams	Displays the total number of sorter jams.	--	--	NOTE 6
139 DF Jams	Displays the total number of DF jams.	--	--	NOTE 6

NOTE 1:

For sales demonstrations, you can turn on all the indicators without using DIP SW1-8. The procedure is as follows:

1. Press the Mode Clear key.
2. Press the C/S key, then press the Enter key.
3. Enter "11" using the numeral keys.
4. Press the Enter key. To clear this mode, press the Mode Clear key.

NOTE 2:

For the color toner supply recovery, the following procedure is required:

1. Turn off the main switch and turn on DIP switch 1-2.
2. Turn on the main switch, then press the Start key.
3. While pressing the enter key and the "0" key, the toner supply clutch turns on.
4. Press the Clear/Stop key and turn off the main switch, then turn off DIP switch 1 - 2.

NOTE 3: SP Mode No.29

The idling mode may be necessary if the copier has been installed in an environment with low temperature conditions. The idling mode will warm up the fusing rollers enough to ensure fusing at the initial copy run.

Idling Mode: The copier will idle for 10 seconds when the Start key is pressed for the first time after the main switch is turned on.

NOTE: Idling cannot be performed if the machine's temperature is more than 150°C when the main switch is turned on.

NOTE 4: SP Mode No.76

Paper Size	Limit Capacity
A3/DLT	10 sheets
A4/LT	30 sheets
A5/HLT	30 sheets

NOTE 5: SP Mode No.93

To change the limit quantity, perform the following:

1. Turn DIP SW1-8 on.
2. Enter "93" using the numeral keys.
3. Press the Enter key.
4. Enter the desired number using the numeral keys.
5. Press the Enter key.

NOTE 6:

The first 3 digits are shown in the magnification indicator. Press point (" . ") key to display the second 3 digits.

TP. VR. DIP SW (A024)

TEST POINTS

1. Main Board

Number	Function
TP101	Scanner Free Run NOTE 1
TP201	GND
TP202	+5V (Vc)
TP203	+24V (Va)
TP204	Factory Use
TP205	+12V (Vs)
CN212-1	ADS Voltage (Adjust using VR2 on the lamp regulator)
TP206	Input voltage of image density sensor (Adjust using VR201 on the main board)
TP207	GND

2. DF Main Board

Number	Function
TP101	GND
TP102	+24V (Va)
TP103	+12V (Power for motor control IC)
TP104	+5V (Vc)
TP105	Belt drive motor encoder pulse

NOTE 1:
To perform scanner free run, short TP101 and TP207.

VARIABLE RESISTORS

1. Main Board

Number	Function
VR201	Adjusts the image density sensor voltage

2. Lamp Regulator

Number	Function
VR1	Light adjustment
VR2	ADS input adjustment
VR3	Factory Use

3. DF Main Board

Number	Function
VR101	Registration adjustment (0 ± 2.5 mm)
VR103	Belt drive motor speed adjustment (2,500 ± 30 rpm)
VR104	Original entrance sensor output (IC 116-5 > +8V : With paper) (IC 116-5 < +4V : Without paper)
VR105	Original width sensor output (IC 116-7 > +8V : With paper) (IC 116-7 < +4V : Without paper)

DIP SWITCHES

1. Operation Panel

DIP SW 1-1

DIP Switch	Normal	Function
1-1	OFF	Drum conditioning
1-2	OFF	Free run
1-3	OFF	Jam detection disable
1-4	OFF	Sorter instructions
1-5	OFF	Beeper sound disable
1-6	OFF	Copy counter count up/down (ON: down, OFF: up)
1-7	OFF	Manual image density mode priority (ON: manual mode, OFF: ADS mode)
1-8	OFF	SP Mode

2. DF Main Board

DIP SW 101

101-1	101-2	101-3	101-4	Function
ON	OFF	OFF	OFF	Normal mode
ON	OFF	OFF	ON	Free run
ON	ON	OFF	ON	Belt speed adjustment (VR103)
ON	ON	ON	ON	All indicators on

PM TERM LUBRICATION (A024)

16 April '88

NOTE 1:
The location of the parts which should be lubricated at PM, are shown in the following figure:

1. Optics Section
   * Use Launa Oil
   1) Scanner Guide Rod (Lubricate at 3k and 6k after installation if there is scanner noise; after that, every 240k).
   2) Scanner Guide Rail (at every 60k).

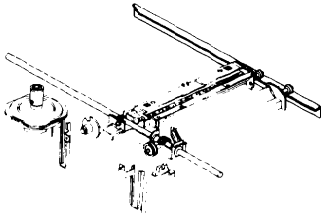

2. Drive Section
   Lubricate the following parts at every 120k.
   1) Toner supply spring clutch
      * Use Mobil Temp 78.
   2) Main Drive Chain
      * Use Spindle Oil.

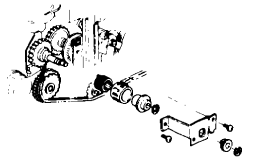

3. Fusing Unit
   Lubricate the drive gear at every 120k using Mobil Temp 78.

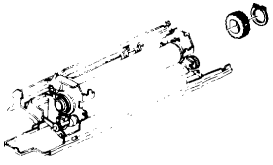

4. Bushings
   Lubricate the bushings at every 120k using Spindle Oil.

COPY IMAGE (A024)

ITEM	ADJUSTMENT STANDARD	DESCRIPTION
Light Intensity	Level 2 should be slightly visible (TO-2) Image Density Key at Level 4.	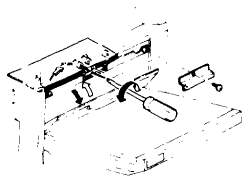
Auto ID Sensor	3 ± 0.06V SP Mode 9, 56	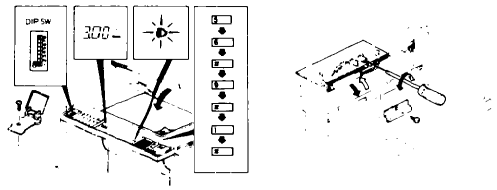
Lead Edge Registration	0 ± 2.0mm (0 ± 0.08")	SP Mode #42 1mm per step +7mm to –8mm
Lead Edge Margin	3.5 ± 2.5mm (0.14" ± 0.1")	SP Mode #41 0.8mm per step +5.6 to –6.4mm
Horizontal and Vertical Magnification	Horizontal ± 0.5% Vertical ± 1.0%	[Horizontal] 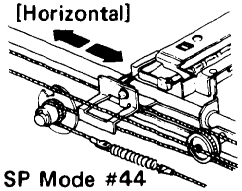 SP Mode #44 0.2% per step +1.4% to –1.6% [Vertical] SP Mode #43 0.2% per step +1.4% to –1.6%

CORONA CURRENT

16 April '88

ITEM	ADJUSTMENT STANDARD	DESCRIPTION
Charge	DC +42.9 ± 0.2μA	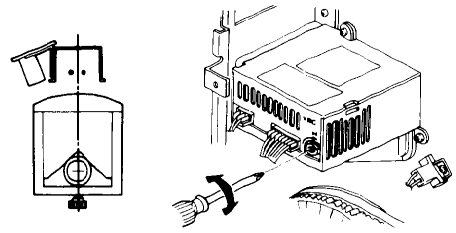
Transfer	DC +19.0 ± 0.4μA	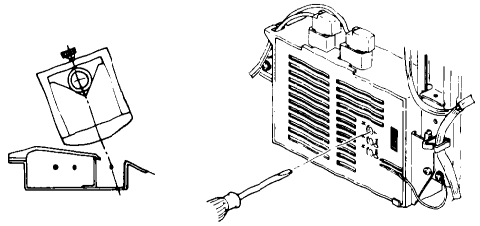
Separation	AC +38.6 ±1.4μA DC –4.2 ±0.4μA	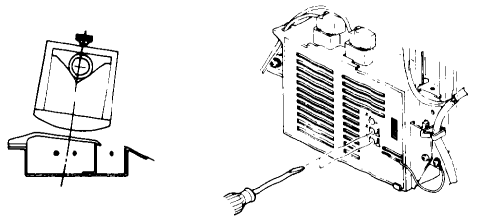

IMAGE DENSITY (Photo Sensor)

ITEM	ADJUSTMENT STANDARD	DESCRIPTION
ID Sensor	4 ± 0.2V	

MECHANICAL ADJUSTMENT (A024)

Exposure Lamp Position
* Filament should be aligned with sight hole

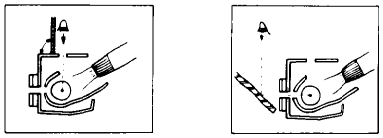

2nd Scanner Height Adjustment

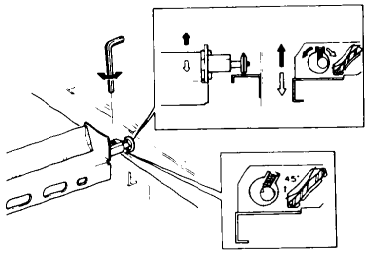

Toner Supply Clutch Lubrication

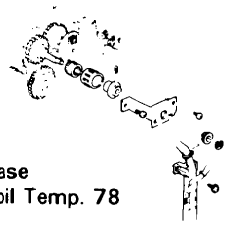

Grease
Mobil Temp. 78

Gap: 0.1mm (0.004")

Doctor Gap: 0.76 ± 0.1mm (0.03" ± 0.004")

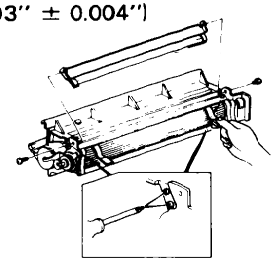

Cleaning Pressure: 13 ± 0.5mm (0.51" ± 0.02")

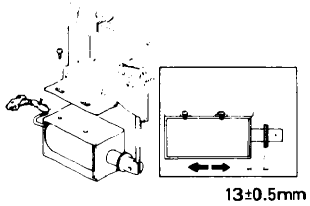

Registration Clutch Adjustment
Gap: 0.1mm (0.004")

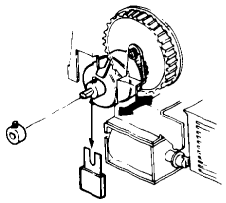

Feed Roller/Friction Pad Gap (1st/2nd Feed)
Gap: 1.6 ± 0.3mm (0.06" ± 0.01")

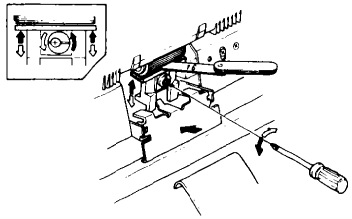

Fusing Pressure

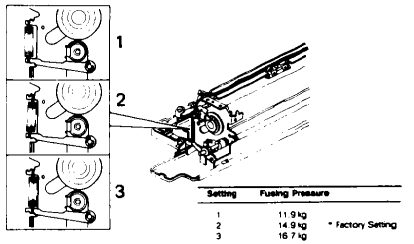

Setting	Fusing Pressure	
1	11.9 kg	
2	14.9 kg	* Factory Setting
3	16.7 kg	

NOTE: Position the front and rear springs in the same position

Stopper Plate Position (DF)
Groove of the cam should be aligned with the "4" calibration mark.

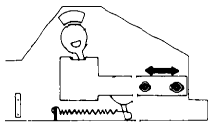

DF Belt Drive Motor Speed
2500 ± 30 rpm

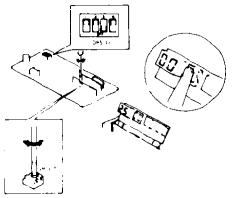

Lead Edge Registration (DF)
0 ± 2.0 mm (0 ± 0.08")

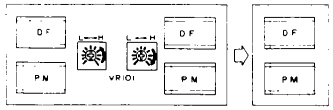

Timing Belt Tension (Sorter)
2^{+3}_{-0} mm $^{+0.12"}_{-0"}$
* Deflection at 200g (0.44lb)

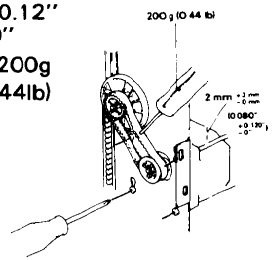

Side Registration (LCT)
0 ± 2.0 mm (0 ± 0.08")

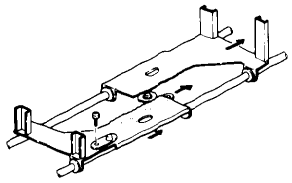

SORTER CONTROL BOARD SCHEMATIC

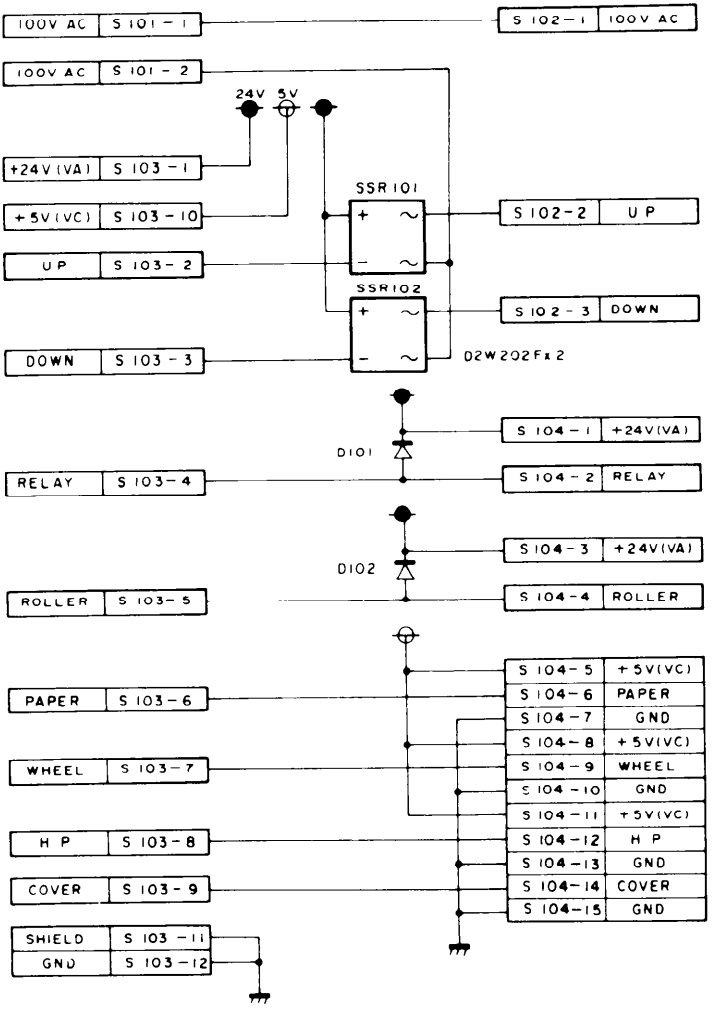

TABLE OF CONTENTS

1. INSTALLATION

Environment 1-1
Machine Level 1-2
Minimum Space Requirement 1-2
Copier Installation 1-4
1. Accessory Check 1-4
2. Installation Procedure 1-5
Color Unit Installation 1-10
1. Accessory Check 1-10
2. Installation Procedure 1-11
Key Counter Holder Installation 1-13
Accessory Counter Installation 1-14
Cassette Modification 1-15
Preparation for Transporting the Copier 1-16
1. Short Haul Transportation 1-16
2. Long Haul Transportation by Vehicle 1-17

2. SERVICE TABLES

PM Table 2-1
Service Tables
Test Points 2-4
Variable Resistors 2-5
Dip Switches 2-6
Service Program Mode (SP Mode) Operation 2-7
Service Program Mode Table 2-8
Service Remarks 2-14
Special Tools and Lubricants 2-19

3. REPLACEMENT AND ADJUSTMENT

Optics 3-1
Development and Toner Supply 3-17
Cleaning 3-26
Quenching 3-34
Paper Feed 3-35
Fusing 3-44
Transport 3-54

Corona 3-57
Others 3-67
Copy Image 3-70

4. ELECTRICAL DATA

Main Board Schematic (Main Control) 4-1
Main Board Schematic (Optics Control) 4-2
Operation Panel Board Schematic (FT4430) 4-3A
Operation Panel Board Schematic (FT4410) 4-3
Paper Feed Control Board Schematic 4-4
DC Power Supply Board Schematic 4-5
Lamp Regulator Schematic 4-6
Fusing Lamp Drive Board Schematic 4-6
Interface Board Schematic (Type-E) 4-7
Timing Chart (Main Frame) 4-8
DF Main Board Schematic 4-9
DF Timing Chart 4-10
LCT Control Board Schematic (Main Control) 4-11
Editor Board Schematic 4-13
Sorter Control Board Schematic 4-15
Electrical Component Layout - Copier 4-17
Electrical Component Layout - DF,Sorter, LCT 4-18
SP Mode 4-19
TP, VR, DIP SW 4-20
PM Term Lubrication 4-20
Copy Image 4-21
Mechanical Adjustment 4-22

5. DOCUMENT FEEDER

Specifications 5-1
Mechanical Component Layout 5-2
Electrical Component Layout 5-3
DF Installation 5-4
Replacement and Adjustment 5-12

6. SORTER

Specifications 6-1
Mechanical Component Layout 6-2

Electrical Component Layout 6-3
Sorter Installation 6-4
Replacement and Adjustment 6-6

LARGE CAPACITY TRAY

Specifications 7-1
Mechanical Component Layout 7-2
Electrical Component Layout 7-3
LCT Installation 7-4
Replacement and Adjustment 7-8

EDITOR BOARD

Installation 8-1

TROUBLESHOOTING

Copy Quality
White Spots 9-1
HAT Image 9-2
Blank Area or Patchy Image 9-3
Unfused Copy 9-3
Jitter 9-4
Hollowing Out 9-5
Vertical White Lines or Bands 9-5
Uneven Density 9-7
Abnormal Image Density 9-9
Vertical Black Lines or Bands 9-9
Black Spots at the Leading Edge 9-12
Dirty Background 9-13

2B 2nd Scanner Home Position Sensor Not Off 9-22
2C Scanner Motor Too Fast 9-23
2D Scanner Motor Too Slow 9-23
31 Drum Thermistor 9-23
32 Image Density Sensor 9-24
53 Fusing Thermistor Abnormal 9-24
54 Fusing Warm-Up Failure 9-25
55 Fusing Overheat 9-25
56 Fusing Temperature Too Low 9-26
61 Pulse Generator Abnormal 9-26
91 Total Counter Malfunction 9-27
93 Optics < = > Main Communication Failure 9-27
ID Sensor Abnormal (No SC Number) 9-28
Defective Sensor Table 9-29

PM TABLE

C: Clean R: Replace L: Lubricate

ITEM	EM	60K	120K	180K	240K	NOTES
OPTICS						
1. Mirrors, lens, reflectors, toner shield glass, ADS	C	C	C	C	C	Silicone cloth or water (cotton pad), blower brush
2. Exposure glass	C	C	C	C	C	Alcohol or water
3. Platen cover sheet	C	C	C	C	C	Alcohol or water (replace if necessary)
4. Scanner guide rod and plate		L	L	L	L	Launa oil or equivalent Refer to the NOTE 1.
5. Guide rod felt		L	L	L	L	Launa oil or equivalent Refer to the NOTE 1.
PAPER FEED						
6. Paper feed roller	C		R		R	Water
7. Friction pad	C		R		R	Water. Refer to the NOTE 2.
8. Paper feed guide plate		C	C	C	C	
9. Registration sensor		C	C	C	C	Blower brush
10. Cassette bottom plate pad		C	C	C	C	Alcohol or water
11. Paper feed sensor		C	C	C	C	Blower brush
AROUND DRUM						
12. Corona wires	C		R		R	Dry cloth
13. Wire cleaner		R	R	R	R	
14. End blocks and casing	C	C	C	C	C	Dry cloth
15. Transfer guide plate		C	C	C	C	Dry cloth
16. Pre-Transfer Lamp	C	C	C	C	C	Dry cloth, discharge before installation.
17. Quenching Lamp	C	C	C	C	C	Dry cloth, discharge before installation.
18. ID sensor	C	C	C	C	C	Blower brush
19. Erase lamp unit		C	C	C	C	Dry cloth
CLEANING UNIT						
20. Cleaning blade		R	R	R	R	Dust with setting powder
21. Cleaning seal		C	C	C	C	Replace if necessary
22. Cleaning brush			R		R	Dust with setting powder

ITEM	EM	60K	120K	180K	240K	NOTES
23. Cleaning unit		C	C	C	C	
24. Pick-off pawls	C	C	C	C	C	Replace if necessary
25. Used toner bottle	C	C	C	C	C	Empty of used toner
DEVELOPMENT UNIT						
26. Developer		R	R	R	R	If necessary
27. Upper brush seal		C	C	C	C	
28. Side seals		C	C	C	C	
29. Development unit guide		C	C	C	C	
30. Toner supply clutch			L		L	Mobil Temp 78 Refer to NOTE 1.
FUSING UNIT						
31. Hot roller		C	R	C	R	
32. Pressure roller		C	R	C	R	If necessary
33. Stripper pawls		C	C	C	C	Replace if necessary
34. Oil supply pad		R	R	R	R	Prime with silicone oil
35. Oil blade		C	R	C	R	Prime with silicone oil
36. Fusing entrance and exit guides		C	C	C	C	Suitable solvent
37. Oil sump		C	C	C	C	
OTHERS						
38. Main drive chain			L		L	Spindle oil Refer to the NOTE 1
39. Transport belt		C	C	C	C	Alcohol or water
40. Bushings			L		L	Spindle oil
DOCUMENT FEEDER						
41. Belt	C	C	C	C	C	Belt cleaner, replace if necessary
42. Pick-up roller	C	C	C	C	C	Water, replace if necessary
43. Feed roller	C	C	C	C	C	Water, replace if necessary
44. Friction roller	C	C	C	C	C	Water, replace if necessary
LARGE CAPACITY TRAY						
45. Pick-up roller	C		R		R	Water

NOTE 1:
The location of the parts which should be lubricated at PM, are shown in the following figure:

1. Optics Section
   * Use Launa Oil
   1) Scanner Guide Rod (Lubricate at 3k and 6k after installation if there is scanner noise; after that, every 240k).
   2) Scanner Guide Rail (at every 60k).

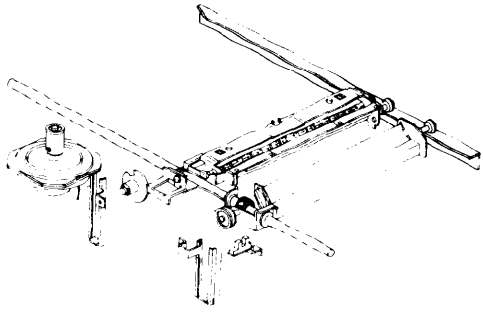

2. Drive Section
   Lubricate the following parts at every 120k.
   1) Toner supply spring clutch
      * Use Mobil Temp 78.
   2) Main Drive Chain
      * Use Spindle Oil.

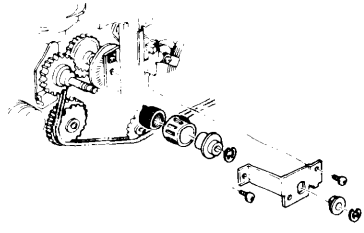

3. Fusing Unit
   Lubricate the drive gear at every 120k using Mobil Temp 78.

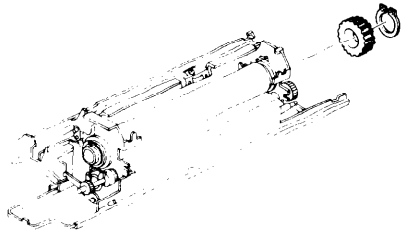

4. Bushings
   Lubricate the bushings at every 120k using Spindle Oil.

NOTE 2:
If the LCT is installed, the friction pad wears faster than with cassettes. Check it at 60 K, and if the feed roller contacts the friction pad holder, replace the friction pad.

SERVICE TABLES

TEST POINTS

1. Main Board

Number	Function
TP101	Scanner Free Run NOTE 1
TP201	GND
TP202	+5V (Vc)
TP203	+24V (VA)
TP204	Factory Use
TP205	+12V (Vs)
CN212-1	ADS Voltage (Adjust using VR2 on the lamp regulator)
TP206	Input voltage of image density sensor (Adjust using VR201 on the main board)
TP207	GND

2. DF Main Board

Number	Function
TP101	GND
TP102	+24V (VA)
TP103	+12V (Power for motor control IC)
TP104	+5V (Vc)
TP105	Belt drive motor encoder pulse

NOTE 1:
To perform scanner free run, short TP101 and TP207.

VARIABLE RESISTORS

1. Main Board

Number	Function
VR201	Adjusts the image density sensor voltage

2. Lamp Regulator

Number	Function
VR1	Light adjustment
VR2	ADS input adjustment
VR3	Factory Use

3. DF Main Board

Number	Function
VR101	Registration adjustment (0 ± 2.5 mm)
VR103	Belt drive motor speed adjustment (2,500 ± 30 rpm)
VR104	Original entrance sensor output (IC 116-5 > +8V : With paper) (IC 116-5 < +4V : Without paper)
VR105	Original width sensor output (IC 116-7 > +8V : With paper) (IC 116-7 < +4V : Without paper)

DIP SWITCHES

1. Operation Panel

DIP SW 1-1

DIP Switch	Normal	Function
1-1	OFF	Drum conditioning
1-2	OFF	Free run
1-3	OFF	Jam detection disable
1-4	OFF	Sorter instructions
1-5	OFF	Beeper sound disable
1-6	OFF	Copy counter count up/down (ON: down, OFF: up)
1-7	OFF	Manual image density mode priority (ON: manual mode, OFF: ADS mode)
1-8	OFF	SP Mode

2. DF Main Board

DIP SW 101

101-1	101-2	101-3	101-4	Function
ON	OFF	OFF	OFF	Normal mode
ON	OFF	OFF	ON	Free run
ON	ON	OFF	ON	Belt speed adjustment (VR103)
ON	ON	ON	ON	All indicators on

SERVICE PROGRAM MODE (SP MODE) OPERATION

The service program mode is used to check and change electrical data or adjustment values.

1. Data Change Mode

1. Remove the DIP SW cover and turn on DIP SW1-8 on the operation panel. (The Service Call indicator will start blinking.)
2. Enter the desired SP Mode number using the numeral keys. (The entered number is displayed in the copy counter.)
3. Press the Enter key. (The SP Mode number is shifted into the Magnification indicator and the actual data is displayed in the copy counter.)
4. If the data is correct, press the Enter key.
5. Enter the desired data using numeral keys. (The data entered is displayed in the copy counter.)
6. Press the Enter key to place the new data in memory. (The copy counter indicates "1", the Ready indicator turns on, and the Start key turns green.)
7. Turn off DIP SW1-8. (The Service Call indicator goes off.)

2. Data Check Mode

1. Perform steps 1 and 2 of the data change mode.
2. Press the Enter key. (The data is displayed in the Magnification indicator.)
3. Perform the adjustment procedure for SP Mode No. 55 and 56 if necessary.
4. Turn off DIP SW1-8.

NOTE: The SP Mode can be cleared by pressing the Clear Mode key or turning off the main switch.

SERVICE PROGRAM MODE TABLE

Mode No.	Function	Data	Factory Setting	Remarks
5 Exposure Lamp OFF	Free run with exposure lamp off. Press the Start key to start free-run. Press the C/S key to stop free run.	0: For editing	0	This Mode is used with Free Run Mode (DIP SW1-2)
11 All Indicators ON	Turns on all indicators on the operation panel.	--	--	Refer to NOTE 1.
15 Auto Reset Time	Selects auto reset of 1 or 3 minutes.	0: 1 min. 1: 3 min. 2: None	0	Auto Reset time can be switched OFF by DIP SW1-4 ON.
17 Auto Cassette Shift	Selects Auto-Cassette Shift mode	0: ON 1: OFF	0	Copier automatically shifts to another cassette holding the same size paper when paper runs out.
20 Feed Station Priority(LCT)	Selects feed station priority.	0: LCT 1: Cassette	0	
21 APS Priority	Selects APS or manual.	0: APS 1: Manual	0	If DF is installed. APS mode is selected when an original is placed on the DF.
22 Feed Station Priority (1st, 2nd, and 3rd cassette)	Selects feed station priority.	0: 1st 1: 2nd	0	If the first priority cassette is not installed or the cassette is empty, the machine selects another cassette.
23 DF Original Size	Enables originals of various sizes to be fed from the same stack.	0: OFF 1: ON	0	ADF Mode only.
28 Auto Sort Mode	Sort mode is automatically selected when more than 2 originals are set on the DF original table and the entered quantity is greater than 2.	0: Manual 1: Auto	0	Sorter and DF must be installed.
29 Fusing Unit Idle	Selects fusing unit idling mode.	0: No idling 1: Idling	0	Copier will idle for 10 seconds. Refer to NOTE 3.
30 Toner Supply Mode	Selects toner supply mode.	0: Detect B 1: Fixed 2: Detect A	0	

Mode No.	Function	Data	Factory Setting	Remarks
31 Toner Supply Amount (Detect Mode A)	Determines how much toner is supplied in detect mode A.	0: 30% 1: 15% 2: 45% 3: 60%	0	
32 Toner Supply Amount (Fixed Mode)	Determines how much toner is supplied in fixed mode.	0: 7% 1: 3.5% 2: 10.5% 3: 14%	0	
33 ID Sensor Bias	Sets the bias voltage applied to the bias roller when sensing image density.	0: 470V 1: 440V 2: 500V 3: 530V	0	470V = Normal 440V = Lighter 500V = Darker 530V = Darkest
34 Toner Supply Amount (Detect Mode B)	Determines how much toner is supplied in detect mode B	0: 2% 1: 4%		
35 Toner Supply	Changes toner supply interval. a) ID sensor checks every 5 copies. b) Toner end level changes to 0.65V.	0: Standard 1: Increase	0	Standard: Every 10 copies, 0.75V.
36 Margin Adjustment	Selects the preset margin adjustment value.	0: 5mm 1: 10mm 2: 15mm	0	
41 Lead Edge Erase Margin Adjustment	Adjusts the lead edge margin.	0 - 15	8 (3.5 mm)	0.8mm per step +5.6mm to -6.4mm
42 Registration Adjustment	Adjusts registration.	0 - 15	8 (0mm)	1mm per step +7mm to -8mm
43 Vertical Magnification Adjustment	Adjusts magnification in the paper travel direction.	0 - 15	8 (0%)	0.2% per step +1.4% to -1.6%
44 Horizontal Magnification Adjustment	Adjusts magnification perpendicular to the direction of paper travel	0 - 15	8 (0%)	0.2% per step +1.4% to -1.6%
45 Editing Mode	Selects the editing mode.	0: Standard 1: For editing		It is required to change data "0" to "1" when installing the Editor Board on the copier.

Mode No.	Function	Data	Factory Setting	Remarks
49 Fusing Temperature Change	Changes fusing temperature.	0: Stanard 1: Low 2: Higher 3: Highest	0	180±5° C 175±5° C 185±5° C 190±5° C
52 Fusing Temperature	Displays the fusing temperature.	--	--	
54 Vsg Adjustment	Turns on the ID sensor LED			At that time, the PTL turns on and the drum rotates for about 10 seconds.
55 VSG, VSP Voltage	Displays VSG, VSP voltage	--	--	Press the enter key twice to display Vsp.
56 ADS Input Reference Voltage	Displays ADS voltage	--	--	Refer to the ADS adjustment procedure.
58 Bias Voltage	Increase Bias Voltage	0:Standard 1:90V up	0	
59 Bias Voltage	Displays bias voltage	--	--	Press the Start key to indicate the voltage.
60 Toner Supply Recovery	Recover toner volume if the Vsp is above 0.5V. a) Press Start key. b) Toner supply clutch turns on. c) Free run starts. d) Vsp becomes less than 0.5V. e) Free run stops.	--	--	Use this mode if the image density is low. (Black toner only). Refer to NOTE 2 on color toner.
70 Color Toner Supply Amount	Selects the color toner supply ratio.	0: 14% 1: 7% 2: 21% 3: 28% 4: 35% 5: 42% 6: 49% 7: 56%	0	
72 Bias OFF	Turns off the bias according to the length of the lead edge erase margin.	0: OFF 1: ON		
73 Color Toner Copy Count	Shows the number of color copies made	0: Red 1: Green 2: Blue		Multiply number by 100. Example: 24 = 2400 sheets
75 ID Sensor Bias (Color Toner)	Sets the bias voltage applied to the bias roller when sensing image density.	0: 590V 1: 620V	0	590V = Normal 620V = darker

Mode No.	Function	Data	Factory Setting	Remarks
76 Sorter Bin Capacity	Sets the stack mode quantity limit.	0: No limit 1: Limit	0	Limit is determined by the paper size. Refer to NOTE 4.
86 PM Counter	Turns on the PM counter.	0: OFF 1: ON	0	For PB machines, "0" is ON "1 is OFF.
87 PM Copy Count	Sets the interval of the PM counter.	0: 80K 1: 60K 2: 120K	0	
88 PM Counter Check	Displays the PM counter.			When the PM count is exceeded, the Service Call and Key Counter indicators blink.
89 PM Counter Reset	Resets the PM counter.			Use after performing PM.
93 Maximum Copy Quantity	Limits the maximum copy quantity that can be entered.	--	0 (999)	The limit quantity is displayed in the copy counter. (Refer to NOTE 5.)
97 Clear Jam Counter	Clears the jam counters.	130: Total 131: Feed 132: Fusing 138: Sorter 139: DF	--	DIP SW1-1 must be on.
98 Clear All Counters	Clears all counters and returns modes which factory setting is "0" back to "0".			DIP SW1-1 must be on.
99 Clear All Memory	Clears all counters and returns all modes to factory setting.	0: Memory 1: Clear	0	DIP SW1-1 must be on.
100 Margin Adj.	Margin Adj. Procedure	0:Right 1:Left	0	Enables alignment of left or right edge of original to the left scale.
130 Paper Jams	Displays the total number of paper jams.	--	--	NOTE 6
131 Feed Jams	Displays the total number of entrance area paper jams.	--	--	NOTE 6
132 Fusing Jams	Displays the total number of fusing unit jams.	--	--	NOTE 6
138 Sorter Jams	Displays the total number of sorter jams.	--	--	NOTE 6
139 DF Jams	Displays the total number of DF jams.	--	--	NOTE 6

NOTE 1:

For sales demonstrations, you can turn on all the indicators without using DIP SW1-8. The procedure is as follows:

1. Press the Mode Clear key.
2. Press the c/s key, then press the Enter key.
3. Enter "11" using the numeral keys.
4. Press the Enter key. To clear this mode, press the Mode Clear key.

NOTE 2:

For the color toner supply recovery, the following procedure is required:

1. Turn off the main switch and turn on DIP switch 1-2.
2. Turn on the main switch, then press the Start key.
3. While pressing the enter key and the "0" key, the toner supply clutch turns on.
4. Press the Clear/Stop key and turn off the main switch, then turn off DIP switch 1 - 2.

NOTE 3: SP Mode No.29

The idling mode may be necessary if the copier has been installed in an environment with low temperature conditions. The idling mode will warm up the fusing rollers enough to ensure fusing at the initial copy run.

Idling Mode: The copier will idle for 10 seconds when the Start key is pressed for the first time after the main switch is turned on.

NOTE: Idling will not be performed if the machine's temperature is more than 150°C when the main switch is turned on.

NOTE 4: SP Mode No.76

Paper Size	Limit Capacity
A3/DLT	10 sheets
A4/LT	30 sheets
A5/HLT	30 sheets

NOTE 5: SP Mode No.93

To change the limit quantity, perform the following:

1. Turn DIP SW1-8 on.
2. Enter "93" using the numeral keys.
3. Press the Enter key.
4. Enter the desired number using the numeral keys.
5. Press the Enter key.

NOTE 6:

The first 3 digits are shown in the magnification indicator.
Press the point (" . ") key to display the second 3 digits.

SERVICE REMARKS

1. Handling the Drum

1. Never touch the drum surface with bare hands.
2. Store the drum in a cool dry place.
3. Always wear gloves when cleaning the drum.
4. Only prime the drum with setting powder when installing new drum.
5. Never expose the drum to light for a long time.
6. Drum conditioning is necessary when a new drum is installed. In addition, it is useful at the following times:

   - When image density is reduced due to over-exposure of the drum.
   - After cleaning the drum.
   - When the drum is lightly scratched.

7. Always keep the drum in the protective sleeve when inserting or pulling the drum out of the copier.
8. Before inserting or pulling out the drum, the cleaning unit should be pulled slightly out to avoid drum damage by the pick-off pawls.
9. Return used drums to the distributor according to standard procedure.

2. Charge Corona

1. Clean the corona wires with a dry cloth or by sliding the corona unit in and out. Do not use emery paper or any solvent for wire cleaning.
2. Do not touch the corona wires with oily hands. Oil stains may cause white bands on copies.
3. Make sure that the corona wires are correctly positioned between the cleaner pads and there are no threads on the casing.
4. When adjusting the drum current, always make sure that the axis of drum shoe is aligned with the corona wire.
5. The corona wire height should be adjusted only when:

   a) The front end block is replaced.
   b) The drum charge current is uneven.

3. Optics

1. Do not adjust the following parts:

   a. Scanner Guide Plate
   b. Fourth Mirror Angle Adjusting Screw
   c. Lens Home Position Sensor
   d. Lens unit rails

2. The lens home position sensor does not have a convenient adjusting procedure. When replacing the sensor, mark the position of the sensor bracket before removing it, and adjust the fine position of the sensor by checking the copy image (horizontal magnification and focus).

3. Do not bend or damage the lens support plate or the mylar strip.

4. Launa oil or an equivalent oil should be used to lubricate or clean the following:

   - Scanner Guide Rod (Cleaning)
   - Scanner Guide Rod Pads (Lubrication)
   - Scanner Guide Plate (Lubrication/Cleaning)

Do not use any other kind of oil.

5. Clean the exposure glass with glass cleaner and a dry cloth to reduce static electricity on the glass.

6. Clean the mirrors with water or a silicone cloth only.

7. Do not touch the following parts with bare hands:

   - Reflectors
   - Exposure Lamp
   - Mirrors and Lens

8. Do not bend the Auto ID fiber optics cable sharply.

9. When adjusting the light intensity, make ten copies before proceeding to check the copy image if the main switch has just been turned on. This is to eliminate the effect of rest time compensation.

10. After adjusting the light intensity, check and adjust the Auto ID sensor.

4. Development

1. Be careful not to nick or scratch the development roller sleeve.
2. Place a sheet of paper under the development unit when it is out of the copier.
3. Be careful not to bend the bias terminal.
4. Clean the drive gears and end magnets after removing used developer.
5. Clean the development unit guide plate before reinstalling the unit.

5. Toner Supply

1. The image density sensor and the pre-transfer lamp unit should be cleaned with a blower brush.
2. Do not touch the sensor pattern with bare hands.
3. Image density sensor adjustment is required when:
   - The ID sensor/PTL board is replaced.
   - The main board is replaced.
   - The drum has been replaced and Vsg is out of specification.
   - Problems with toner supply have occurred and ID sensor check shows Vsg to be out of specification.
4. Grease the toner supply clutch with Mobil Temp 78 periodically to avoid noise and faulty operation.

6. Transfer and Separation

1. The corona wires should be cleaned with a dry cloth.
2. While the drum stay is out and the drum is installed on the drum guide, do not lift up the corona unit. (The corona casing will knock against the drum.)

7. Cleaning

1. When servicing, be careful not to damage the edge of the cleaning blade.
2. Do not touch the cleaning brush with your bare hands.
3. Before pulling out the cleaning unit, place a sheet of paper under it to catch falling toner.

4. Be careful not to damage the drum with the pick-off pawls when pulling out or inserting the cleaning unit.
5. When installing the toner collection bottle cover, be sure that the hooks of the transport plate are positioned underneath the bottle cover.
6. After replacing the cleaning solenoid, adjust the position of the cleaning solenoid.

8. Fusing

1. When removing the fusing unit, keep it in an up-right position so that the silicone oil does not spill.
2. After replacing the oil blade and oil supply pad, prime them with silicone oil.
3. Be careful not to damage the edge of the hot roller strippers or their tension springs.
4. Do not touch the fusing lamp with bare hands.
5. Be sure that the fusing lamp is not in contact with the inner surface of the hot roller.
6. Be sure that the oil end sensor contacts the bottom of the oil tank.
7. When paper creasing occurs, adjust the position of the entrance guide plate or the fusing pressure.

9. Paper Feed

1. When replacing the friction pad, make sure that the friction pad is below the surface of the front lip of the pad holder.
2. When reinstalling the support bracket after cleaning the registration sensor, make sure that the bracket is properly engaged with the groove of the registration clutch stopper.
3. When replacing the friction pad, adjust the gap between the feed roller and the friction pad.
4. Do not touch the feed roller and the friction pad with oily hands.

10. Document Feeder

1. Do not bend the DF interface harness sharply, to avoid damaging the fiber optics cables.
2. When servicing the document feeder, make sure that the main switch of the copier is off.
3. When installing or reinstalling the document feeder, make sure that the document feeder is in the open position.

11. Sorter

1. The sorter has two types of bins; one type is used for odd numbered bins and the others used for even numbers. Be careful not to mix them up.
2. If bin operation is not smooth, lubricate the slot liners and transfer wheels using grease 501 or an equivalent type.

12. Large Capacity Tray

1. Unplug the power supply cord of the LCT before servicing it.
2. Before placing the large capacity tray in the cassette holders, make sure that the paper position feeler is set properly.

13. Others

1. When the main board is removed from the PCB plate, do not put it on a conductive surface. (This is to avoid discharging the battery for the user program memory.)
2. When installing a new main board, remove the RAM from the old main board. Reinstall the old RAM on the new main board, if the old RAM is not faulty.
3. When taking out the drum, be sure that the PTL board has already been removed. If the PTL board is not removed, the drum may be damaged by the PTL board.
4. When installing the PTL board, be sure that the drum stay has been already installed. If the drum stay is not installed, the drum may be damaged by the PTL board.
5. When replacing a sensor, do not overtighten the screw. If the screw is overtightened, the sensor may be damaged.

SPECIAL TOOLS AND LUBRICANTS

Part Number	Description	Q'ty
52159500	Doctor Gap Gauge	1
52059601	Switching Board	1
52059101	Gap Gauge - 0.1 mm	1
52069600	Sensor Checker	1
52039501	Grease (Shinetsu Silicone G-501)	1
54429101	Setting Powder	1
54429106	Drum Shoe	1
54479104	Shoe Adapter	1
54209504	Digital Thermometer	1
54209505	Digital Thermometer Probe	1
54209507	Digital Multimeter	1
54209550	Silicone Oil	1
54479078	Heat Resistant Grease (MT-78)	1
54209516	Test Chart OS-A3 (10pcs/set)	-
54209502	Test Chart OS-A3 (100pcs/set)	-
54429103	Launa Oil	1

OPTICS

1. Exposure Glass Removal

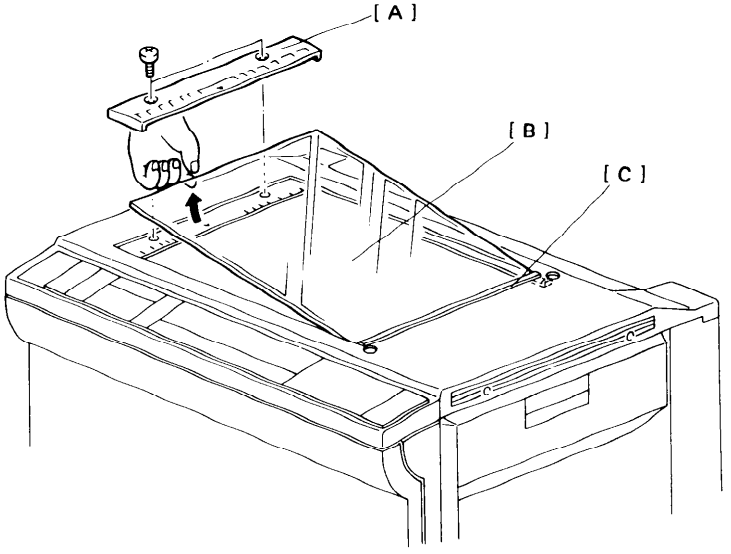

1. Take off the left scale [A] (2 short screws).
2. Grasp the left edge of the exposure glass [B] and lift it up slightly. Slide the other edge out from under the right glass holder [C]. Remove the exposure glass.

NOTE: When reinstalling the exposure glass:

- Make sure that the left edge of the glass is flush with the two tabs to the left of the scale plate.
- Make sure that the right glass holder firmly secures the exposure glass.

2. 2nd Mirror Removal

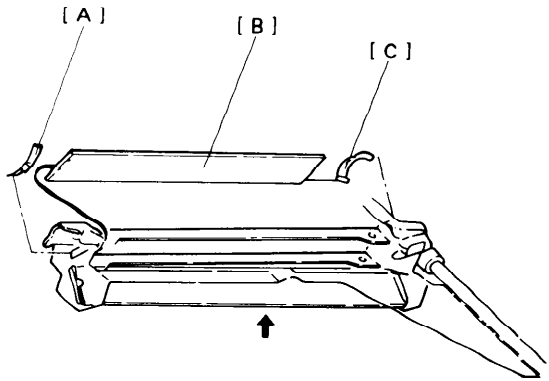

NOTE: This procedure is usually performed in order to make cleaning of the 3rd mirror easier.

1. Turn off the main switch.
2. Remove the exposure glass. (See Exposure Glass Removal.)
3. Move the 1st scanner 2/3 to the right by pushing it at the rear.
4. Remove the front spring plate [A] by pressing the top of the spring and moving the plate towards the front of the machine.
5. Carefully pull the 2nd mirror [B] towards the front of the machine to remove the rear spring plate [C].
6. Lift the mirror out of the machine rear side first.
7. Clean mirrors with silicone cloth or water, and then dry.

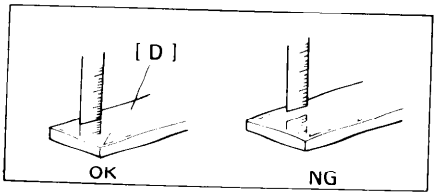

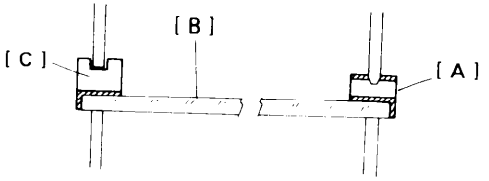

- To Reinstall -

8. Place the rear spring plate [A] in place and hold it with your finger.
9. Insert the 2nd mirror [B] into the front side plate cut out.
10. Insert the rear side of the mirror into the rear spring plate.
11. Locate the bottom of the front spring plate [C] and rotate the top of the spring into position.

NOTE: Make sure that you install the mirrors with the reflecting surface [D] facing the lens as shown.

3. Exposure Lamp Replacement

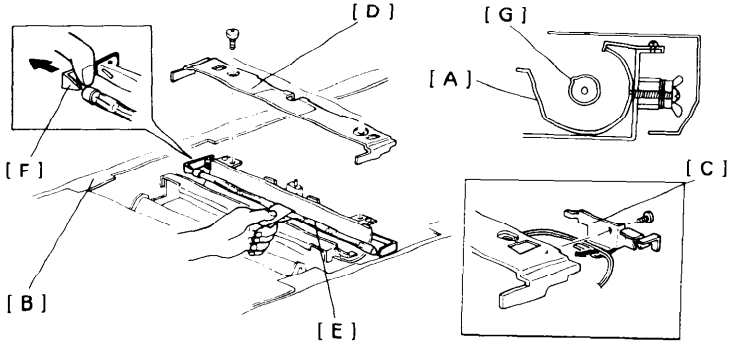

Do not touch the reflector [A] or the new exposure lamp with your bare hands. Use a strip of paper as shown. (Finger oil marks on the lamp or reflectors will be affected by the heat and will result in discoloration.)

1. Turn off the main switch.
2. Remove the exposure glass. (See Exposure Glass Removal.)
3. Move the first scanner to the position where the rear frame [B] is cut out.
4. Remove the front terminal cover [C] (1 screw) and the reflector cover [D] (2 screws) after unhooking the fiber optics cables.
5. Wrap a strip of paper around the exposure lamp [E] as shown.
6. Press the release lever [F] on the rear lamp terminal as shown and take out the lamp.
7. Install a new lamp using a strip of paper. (Set the front terminal first.)

NOTE: The blister [G] on the lamp must point towards the opening of the reflector as shown.

8. Reassemble the 1st scanner.

NOTE: When reinstalling the front terminal cover, be careful not to damage the fiber optics cable.

9. Check the exposure lamp position, the light intensity and auto ID sensor. (See Exposure Lamp Position, Light Intensity and Auto ID Sensor Adjustments.)

4. Auto ID Fiber Cable Replacement

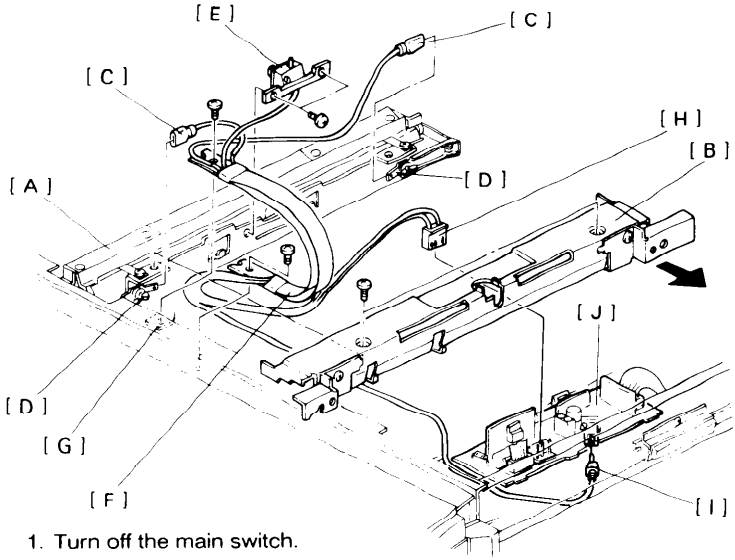

1. Turn off the main switch.
2. Remove the platen cover.
3. Remove the exposure glass (see Exposure Glass Removal) and the upper cover (11 screws).
4. Position the first scanner [A] in the cut out for scanner removal.
5. Move the reflector cover [B] in the direction of the arrow (2 screws).

NOTE: Unhook the fiber optics cable from the reflector cover.

6. Remove the exposure lamp leads [C] from the exposure lamp terminal [D].
7. Remove the auto ID sensor [E] (2 screws).
8. Remove the scanner harness [F] from the harness hold-down block [G] (1 screw).
9. Disconnect the exposure lamp harness [H] and the fiber optics cable [I] from the lamp regulator [J].
10. Replace the auto ID fiber optics cable.

5. Scanner Drive Wire Replacement

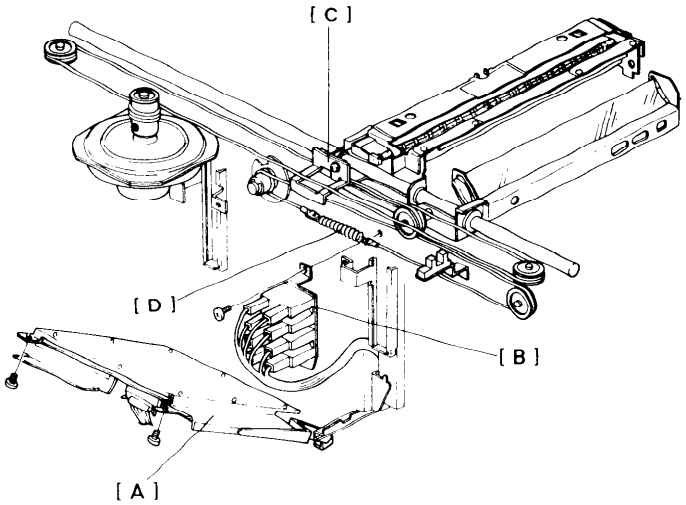

1. Turn off the main switch.
2. Remove the platen cover and the upper cover (11 screws).
3. Remove the left scale (2 short screws) and the exposure glass.
4. Remove the rear cover and lower the PCB plate [A] (2 screws each).
5. Remove the power relay bracket [B] (1 screw).
6. Loosen the wire clamp screw [C].
7. Unhook the tension spring [D] and remove the scanner drive wire.

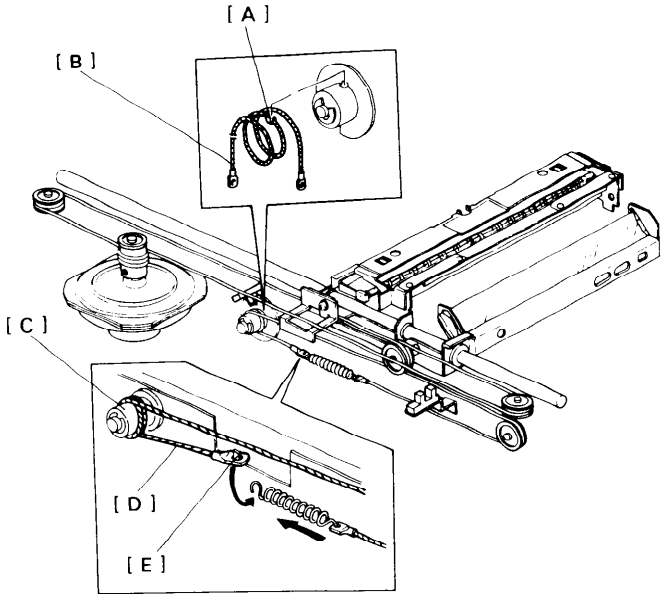

8. Position the bead [A] of the new wire [B] on the groove of the 2nd scanner drive pulley [C] and wrap the wire around the pulley with two and a half turns as shown.

9. Hook the short end [D] of the wire to the stopper [E] as shown.

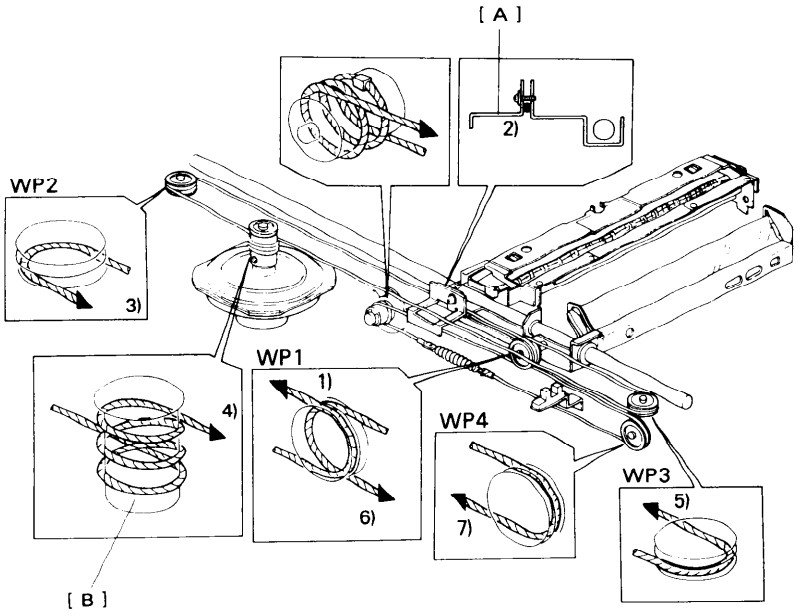

10. Run the scanner drive wire over the pulleys in the following order:

    1) Long end should be in the outer track (WP1)
    2) Lower side (wire clamp [A])
    3) Lower track (WP2)
    4) Three and a half turns from lower to upper (Scanner Drive Pulley [B]).
    5) Lower track (WP3).
    6) Inner track (WP1).
    7) Track (WP4).

11. Pull the ends of the wire together and join them with the tension spring. (See the preceding page.)

12. Rotate the scanner drive pulley and make sure that the scanner drive wire moves smoothly and that there is no overlapping around the scanner drive pulley.

NOTE: Step 12 is important! If overlapping of the scanner drive wire occurs, then the trail edge of A3 (11" x 17") copies may be reduced.

6. Lens Drive Motor Replacement

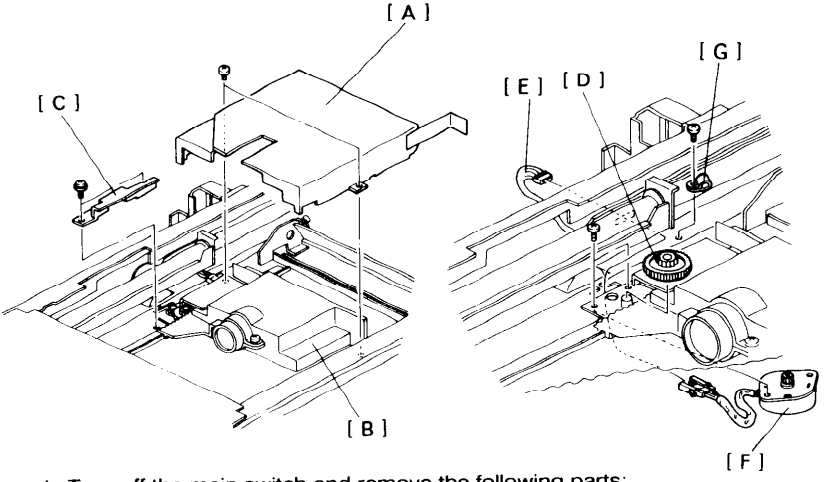

1. Turn off the main switch and remove the following parts:

   1) Development unit
   2) Charge corona unit (1 screw)
   3) Toner collection bottle
   4) Drum stay (1 screw and knob)
   5) Unit
   6) Drum flange and drum - should be covered with a shielding sleeve.

2. Remove the platen cover and the mounting studs.
3. Remove the left scale, the exposure glass, and the upper cover.
4. Move the scanner to the home position.
5. Remove the lens cover [A] (2 screws).
6. Move the lens unit [B] to a reduction position.
7. Remove the lens drive gear cover [C] (2 screws) and the idle gear [D].
8. Remove the rear cover and lower the PCB plate (2 screws each).
9. Disconnect the connector [E] (6p; black) of the lens drive motor [F] and remove the nylon clamp [G] (1 screw).
10. Replace the lens drive motor [F] from the front (2 screws).

7. 2nd Scanner Drive Motor Replacement

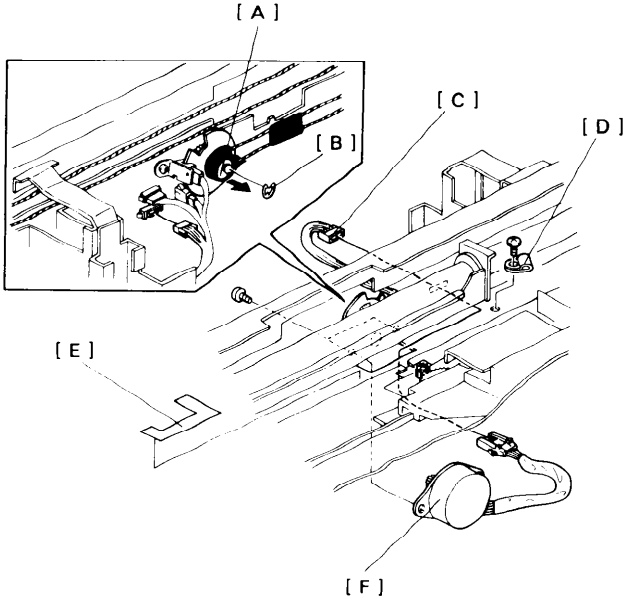

Perform Steps 1 through 6 of "Lens Drive Motor Replacement."

1. Tape the 2nd scanner drive pulley [A] and the scanner drive wire as shown to avoid the scanner wire coming off.
2. Remove the E-ring [B] from the 2nd scanner drive shaft and move the pulley slightly in the direction of the arrow.
3. Disconnect the 2nd scanner drive motor connector [C] (6p; white) and the nylon clamp [D] (1 screw).
4. Remove the mylar [E].
5. Replace the second scanner drive motor [F] from the front (2 screws).

8. Scanner Drive Motor Replacement

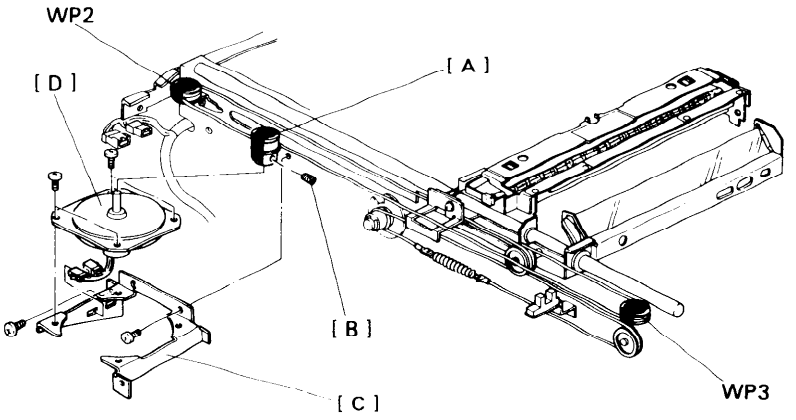

1. Turn off the main switch.
2. Remove the platen cover and the mounting studs.
3. Remove the left scale (2 short screws), the exposure glass, and the upper cover (9 screws).
4. Remove the rear cover 2 (screws).
5. Tape the scanner drive pulley [A] and pulleys WP2 and WP3 as shown to avoid the scanner wire coming off.
6. Loosen the scanner drive pulley (1 Allen screw [B]).
7. Remove the scanner drive pulley from the motor shaft.
8. Remove the motor bracket [C] (3 screws).
9. Remove the scanner drive motor [D] (4 screws and 2 connectors).
10. Install the new scanner drive motor and reassemble.

NOTE: a) When installing the scanner drive motor, make sure the 3p connector is positioned on the left-hand side.

b) When installing the scanner drive pulley on the motor shaft, the scanner drive pulley should be flush with the end of the motor shaft.

11. Examine the scanner drive wire for proper installation.

9. Lens Home Position Sensor Replacement

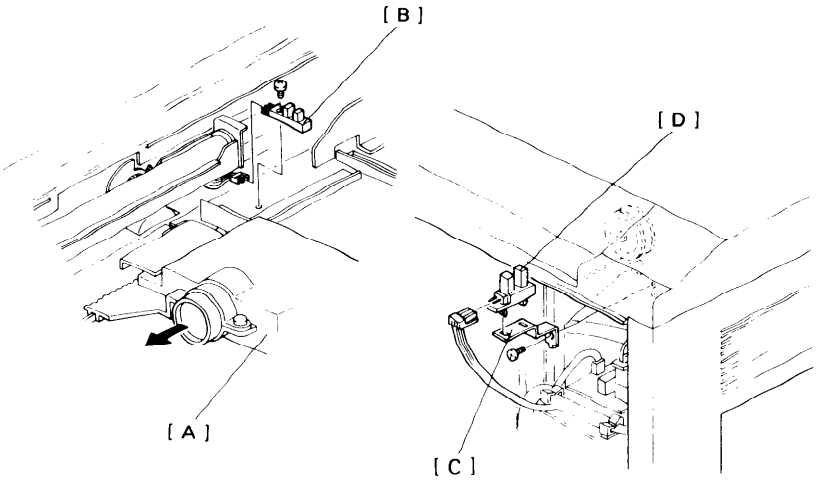

1. Turn off the main switch.
2. Remove the left scale and the exposure glass. (See Exposure Glass Removal.)
3. Remove the lens cover (2 screws) and move the lens unit [A] in the direction of the arrow.
4. Replace the lens home position sensor [B] (1 screw and 1 connector).

NOTE: Do not overtighten the screw when securing the new sensor.

10. Scanner Home Position Sensor Replacement

1. Turn off the main switch.
2. Remove the rear cover (2 screws).
3. Remove the sensor bracket [C] (1 screw).
4. Replace the scanner home position sensor [D] (1 connector).

11. 2nd Scanner Home Position Sensor Replacement

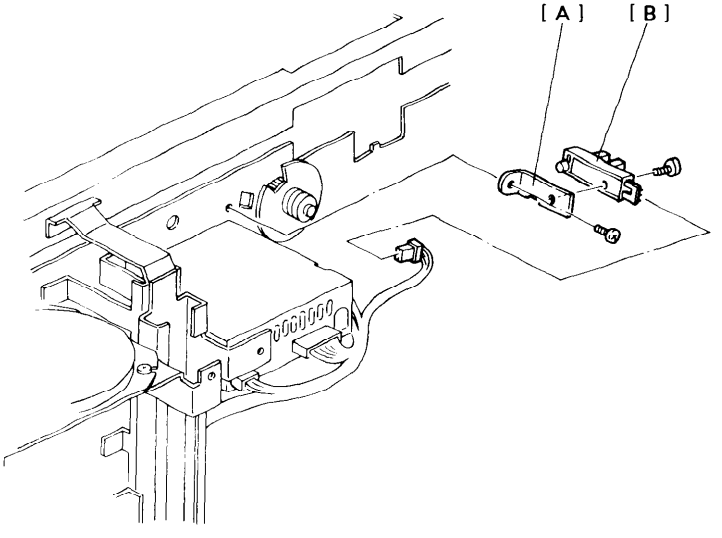

1. Turn off the main switch.
2. Remove the rear cover (2 screws).
3. Remove the sensor bracket [A] (1 screw).
4. Replace the 2nd scanner home position sensor [B] (1 screw and 1 connector).

NOTE: Do not overtighten the screw when securing the new sensor.

12. Exposure Lamp Position Adjustment

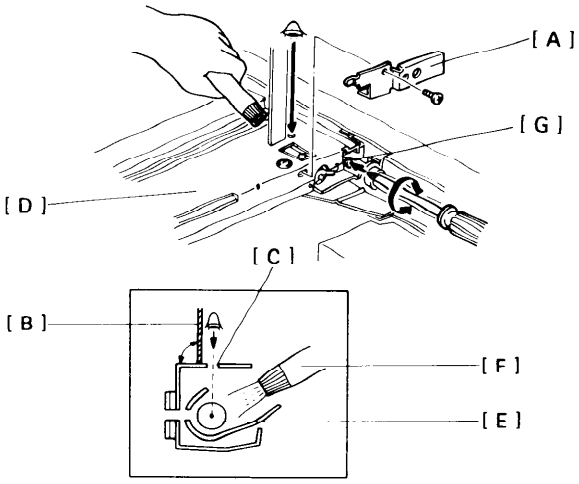

1. Turn off the main switch.
2. Remove the exposure glass. (See Exposure Glass Removal.)
3. Move the first scanner to the position where the rear frame is cut out.
4. Remove the front and rear terminal covers [A] (1 screw each).

- Horizontal Adjustment -

5. Position a scale [B] near the rear sight hole [C] of the reflector cover [D] to form a right angle for viewing alignment as shown.
6. View the lamp filament [E] through the sight hole in parallel with the scale. The filament should be directly beneath the sight hole.

NOTE: If the filament cannot be seen easily, use a pen light [F] to illuminate the exposure lamp.

7. To correct the position of the filament turn the adjusting screw [G].
8. Repeat the above steps from 5 to 7 with the front sight hole.

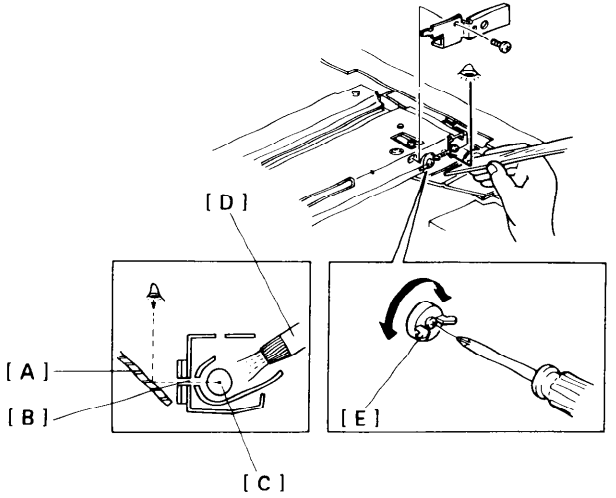

- Vertical Adjustment -

9. Position a mirror [A] beside the rear sight hole [B] at at 450 angle as shown.

NOTE: If you do not have a mirror, remove and use the 2nd mirror.

10. View the lamp filament [C] through the sight hole reflected on the mirror. The filament should be level with the sight hole.

NOTE: If the filament cannot be seen easily, use a pen light [D] to illuminate the exposure lamp.

11. To correct the position of the filament, turn the adjusting knob [E].

12. Repeat the above steps from 9 to 11 with the front sight hole.

13. 2nd Scanner Hight Adjustment

ADJUSTMENT STANDARD: Parallel between the eccentric cam and the 2nd scanner (as shown in figure).

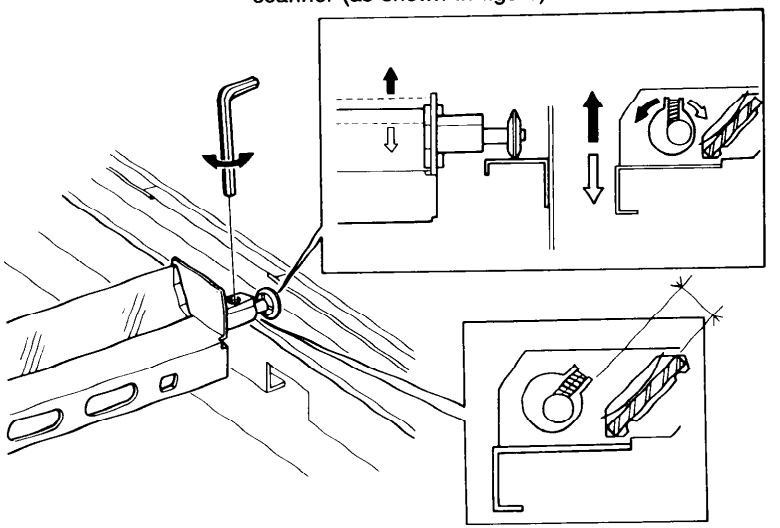

NOTE: It is required to adjust the 2nd Scanner height when non square images appears on a copy.

1. Turn off the main switch.
2. Remove the exposure glass. (See Exposure Glass Removal.)
3. Loosen the allen screw on the eccentric cam[A] using a allen screw key.
4. Adjust the hight by turning the eccentric cam.

   Clock wise: The height is decreased.
   Counterclockwise: The height is increased.

DEVELOPMENT AND TONER SUPPLY

1. Developer Replacement

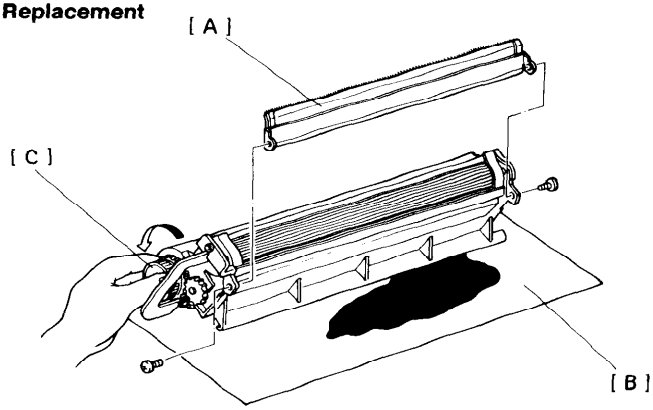

- Be careful not to bend the bias terminal.
- Be careful not to damage the upper brush seal.
- After removing used developer, clean the drive gears and end magnets.

1. Take out the development unit and remove the toner tank (2 screws).
2. Remove the development brush cover [A] (2 screws) and clean it.
3. Set the development unit on a large sheet of paper [B] with the unit's inlet facing downward.
4. Turn the paddle roller knob [C] counterclockwise. The developer will fall out onto the paper.
5. Hold the unit at an angle and dump out the developer that has collected at the ends of the development unit.
6. Repeat the above steps until you have removed all of the developer.
7. Clean the development end magnets.
8. Turn the unit right-side up and pour in one bottle of developer (1 kg).
9. Put the used developer into the empty bottle or disposal bag and dispose it according to the local regulations.
10. Reassemble the toner tank (2 screws) and replace the development unit.

2. Image Density Sensor/PTL Removal

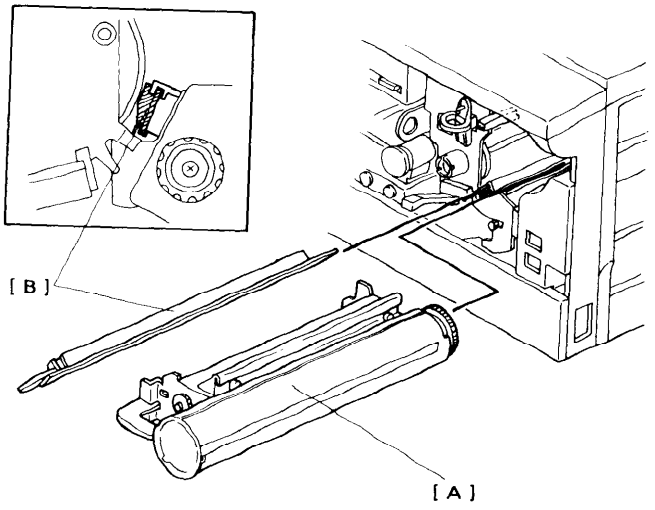

1. Open the front door.
2. Remove the development unit [A].
3. Slide out the image density sensor/PTL [B].
4. Clean and reinstall the ID sensor/PTL.

NOTE: When sliding in the ID sensor/PTL board, make sure that the board is properly located on the rails as shown.

5. Reinstall the development unit.

3. Color Toner End Sensor Replacement

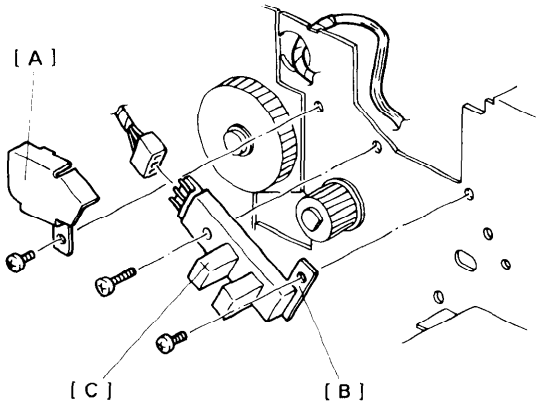

1. Turn off the main switch and remove the following parts:

   - Development unit
   - Charge corona unit (1 screw)
   - Drum stay (1 screw and 1 knob)
   - Cleaning unit
   - Drum flange and drum - should be covered with a shielding sleeve
   - Toner shield glass.

2. Remove the connector cover [A] (1 screw).
3. Remove the sensor bracket [B] (1 screw).
4. Remove the color toner end sensor [C] (1 screw).
5. Reinstall the above parts.

NOTE: Do not overtighten the screw when securing the new sensor.

4. Color Toner Sensor Replacement

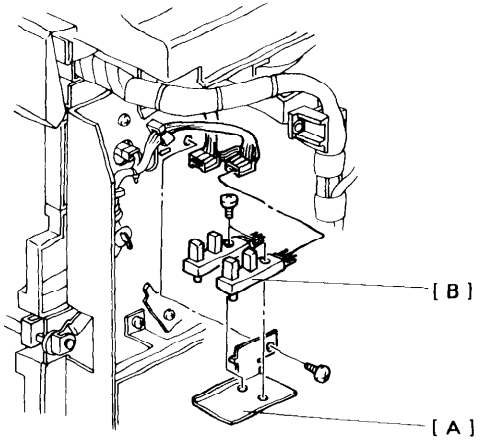

1. Remove the rear cover (2 screws).
2. Remove the color toner sensor bracket [A] (1 screw).
3. Replace the color toner sensors [B] (1 screw and 1 connector each).
4. Reassemble.

NOTE: Do not over tighten the screw when securing the new sensor.

5. Toner Supply Clutch Lubrication

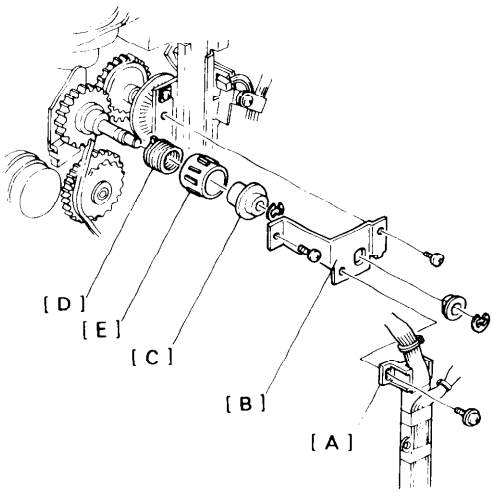

1. Turn off the main switch.
2. Remove the rear cover (2 screws).
3. Remove the screw securing the dc harness guide [A] to the toner supply clutch support bracket [B].
4. Remove the toner supply clutch support bracket.
5. Remove the clutch hub [C] (1 Allen screw), the spring [D], and the sleeve [E].
6. Clean the clutch hub, spring, and gear.
7. Apply the grease (Mobil Temp 78) inside the spring.

NOTE: Make sure that the right-angle projection is inside the notch of the sleeve.

6. Image Density Sensor Check and Adjustment

NOTE: ID sensor adjustment is required in the following cases:

- When the ID sensor/PTL board is replaced.
- When the main board is replaced.
- When the drum has been replaced and Vsg is out of standard.
- When a problem with toner supply occurs and checking the ID sensor shows that Vsg is not within specifications.

ADJUSTMENT STANDARD: +4 ± 0.2V

METHOD A: Readout from the CPU

1. Clean the following parts:
   - Image density sensor
   - Optics (Mirrors, reflectors, lens, and toner shield glass)
   - Charge corona wire with dry cloth
   - Erase lamp unit
   - Quenching lamp.
2. Place 2 or 3 sheets of paper (A3 or 11" x 17") on the exposure glass and lower the platen cover.
3. Confirm that the main switch is off and turn on DIP SW No. 1-1 and No. 1-8 under the instruction cards on the operation panel.

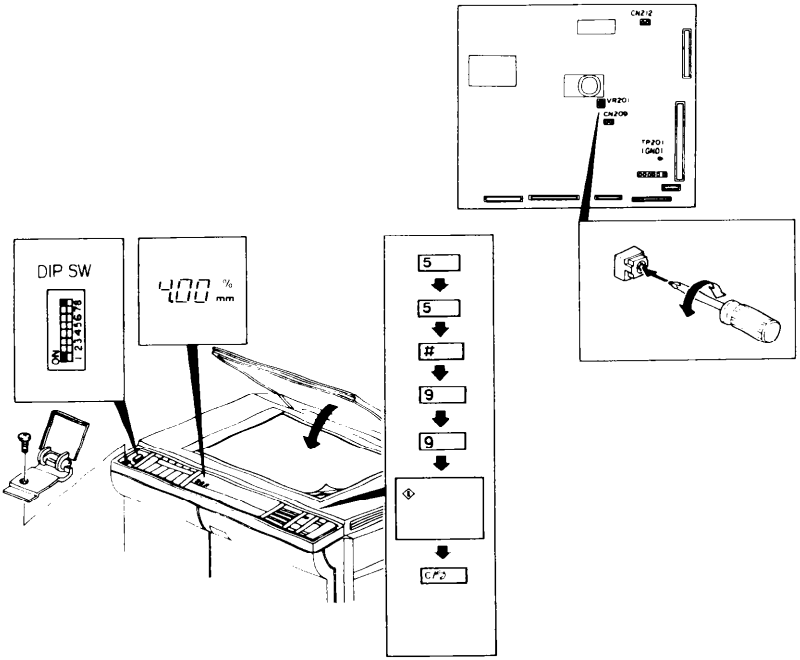

4. Turn on the main switch and allow it to warm up.
5. Enter "55" using the Number keys, then press the Enter key.
6. Enter "99" in the copy counter.
7. Press the Start key to show Vsg in the magnification indicator.
8. If Vsg is incorrect, remove the rear cover (2 screws).
9. While Vsg is displayed, adjust VR201 on the main board to +4 ± 0.2 volts.

NOTE: VR201 clockwise ⇒ increase voltage
VR201 counterclockwise ⇒ decrease voltage.

10. Press the C/S key to stop the copier.
11. Turn off the main switch and turn off DIP SW No. 1-1 and No. 1-8.

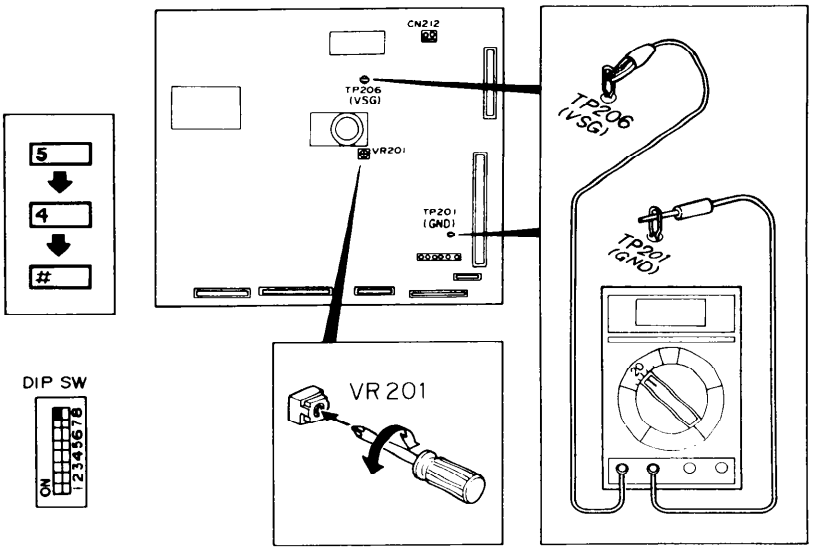

Method B: With a Digital Multimeter

Follow steps 1 through 2 of method A.

1. **Confirm that the main switch is off and turn on DIP SW 1-8 on the Operation Panel.**
2. Hook up the multimeter leads as follows:
   Positive lead to TP206 (Vsg)
   Negative lead to TP201 (Ground) on the main board after selecting the 20-volt-dc setting.
3. Turn on the main switch and enter "54" in the copy counter, then press the Enter key. PTL and ID sensor LED turn on and the drum rotates for about 10 seconds.
4. Adjust VR201 to give a reading of +4 ± 0.2 volts.
5. Turn off the main switch; then, turn off DIP 1-8.

7. Doctor Gap Adjustment

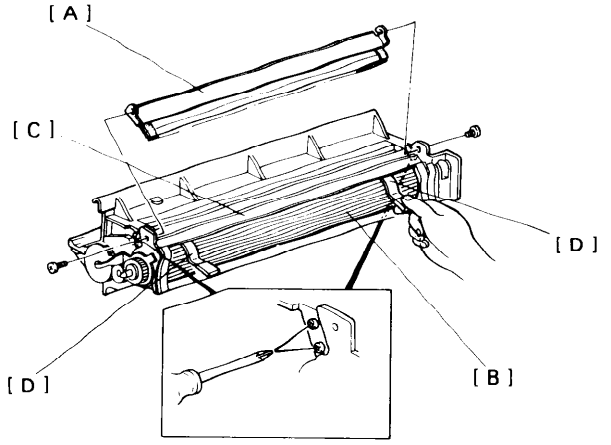

ADJUSTMENT STANDARD: 0.76 ± 0.1 mm (0.03" ± 0.004")

NOTE: This adjustment is done only when the doctor blade has been either removed or replaced.

1. Remove the upper brush seal cover [A] (2 screws).
2. Turn the development roller sleeve [B] in the opposite direction of normal operation to drop the developer into the development tank.
3. Loosen the doctor plate [C] (4 screws).
4. Clean the development roller and insert the Doctor Gap gauges [D] (Part Number #52159500) near both ends of the development roller between the doctor blade.

NOTE: Ensure that there is no developer between the development unit and the gauses.

6. Rotate the gauges downward to remove them.

Do not scratch the sleeve with the gauges.

7. Reassemble the development unit.

CLEANING

1. Cleaning Unit Removal

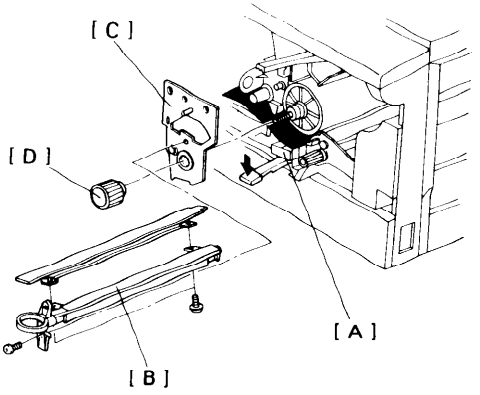

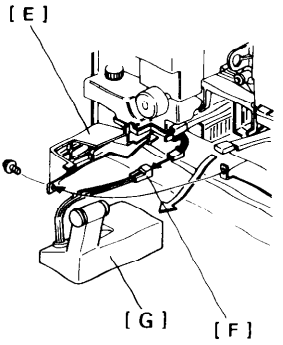

1. Remove the development unit and the PTL board.
2. Lower the T/S corona unit [A].
3. Remove the charge corona unit [B] (1 screw) and the drum stay [C] (1 knob [D] and 1 screw).

NOTE: The drum stay knob has a reverse thread.

4. Swing the toner collection bottle cover [E] to the left (1 screw).
5. Disconnect the toner collection bottle sensor [F] (1 connector).
6. Remove the toner collection bottle [G].
7. Slide out the cleaning unit.

Be sure the pick-off pawls are kept away from the drum when removing the cleaning unit or serious drum damage will result.

2. Cleaning Blade Replacement

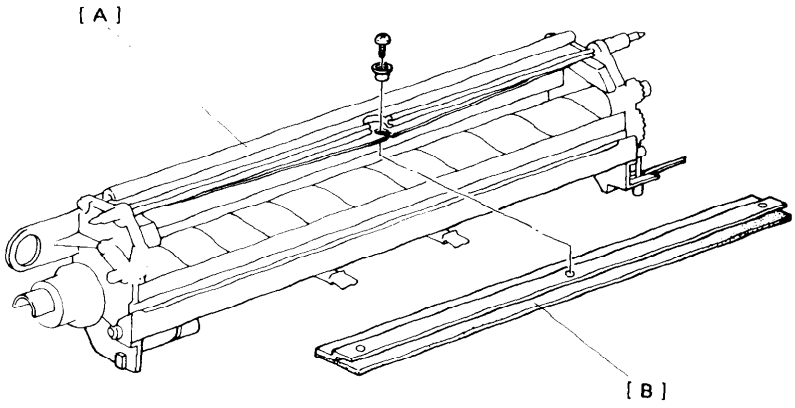

1. Take out the cleaning unit [A]. (See Cleaning Unit Removal.)
2. Remove the cleaning blade [B] (1 screw and 1 bushing).
3. Install the new cleaning blade.

- Be careful not to touch the edge of the new blade.
- After installing the blade, make sure that the blade swivels.

3. Cleaning Brush Replacement

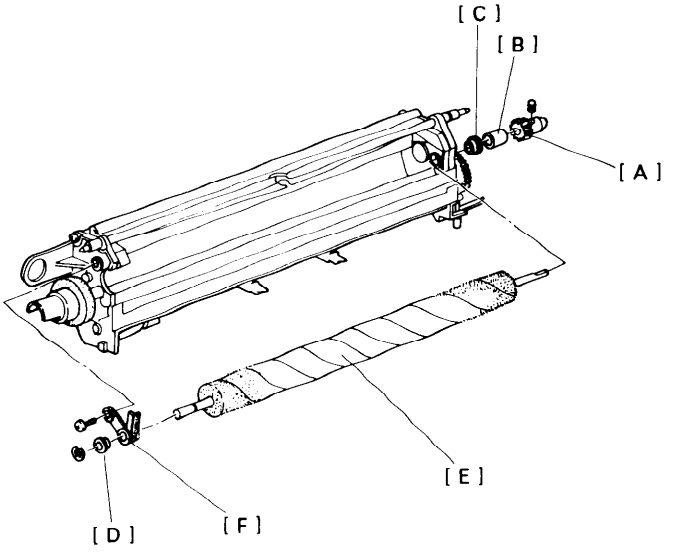

1. Remove the cleaning unit drive gear [A] (1 Allen screw), the collar [B], and the bushing [C] from the rear end of the cleaning brush shaft.
2. Remove the bushing [D] from the front end (1 E-ring).
3. Take out the cleaning brush [E] with the brush shaft holder [F] (1 screw).
4. Take the brush shaft holder off the front end.
5. Install the new cleaning brush and reassemble the unit.

Do not touch the new brush; handle only the shaft.

4. Blade Scraper Replacement

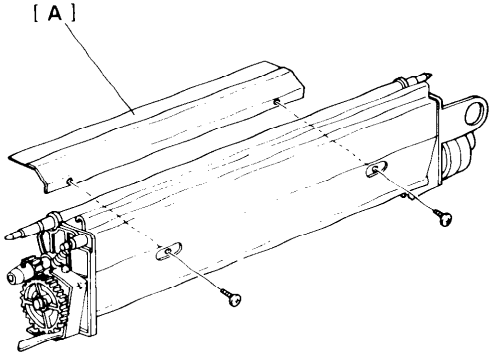

1. Remove the cleaning blade. (See Cleaning Blade Replacement.)
2. Remove the cleaning brush. (See Cleaning Brush Replacement.)
3. Take out the blade scraper [A] (2 screws).
4. Clean the inside of the cleaning unit, and install a new blade scraper.

5. Toner Collection Coil Replacement

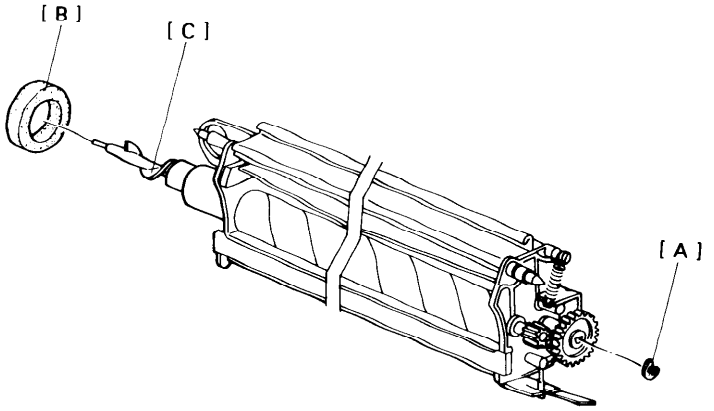

1. Remove the E-ring [A] from the toner collection coil shaft.
2. Remove the bottle joint seal [B].
3. Slide out the toner collection coil [C] from the front side of the cleaning unit.

Toner will fall out when the coil is slid out of the cleaning unit.

4. Clean the inside of the unit and install a new toner collection coil.

6. Pick-off Pawl Replacement

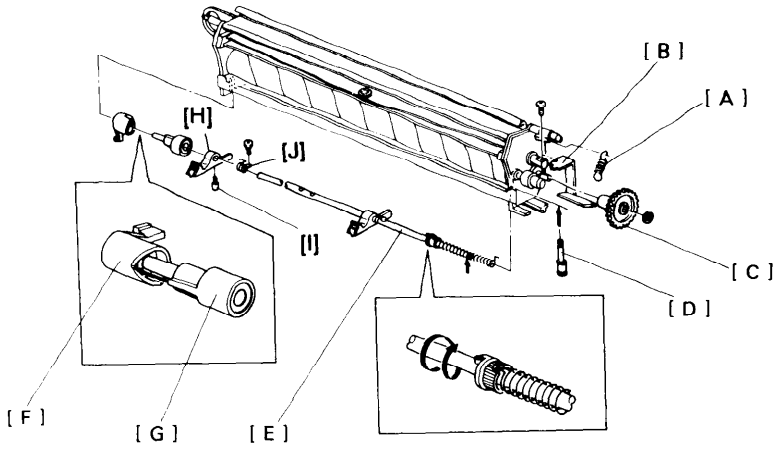

1. Remove the release spring [A] and the pressure lever [B] (1 screw).
2. Remove the collection coil gear [C] from the the toner collection coil shaft (1 E-ring).
3. Remove the pawl shaft pin [D] from the pawl shaft [E].
4. Push the pawl shaft to the rear and slide off the cam holder [F] from the front side plate.
5. Take out the whole pawl shaft assembly.
6. Slide off the cam holder and cam rider [G].
7. Slide off the front pick-off pawl [H] (1 positioning pin [I]) and the front pawl spring [J] (1 screw).
8. Slide off the rear pick-off pawl (1 positioning pin).

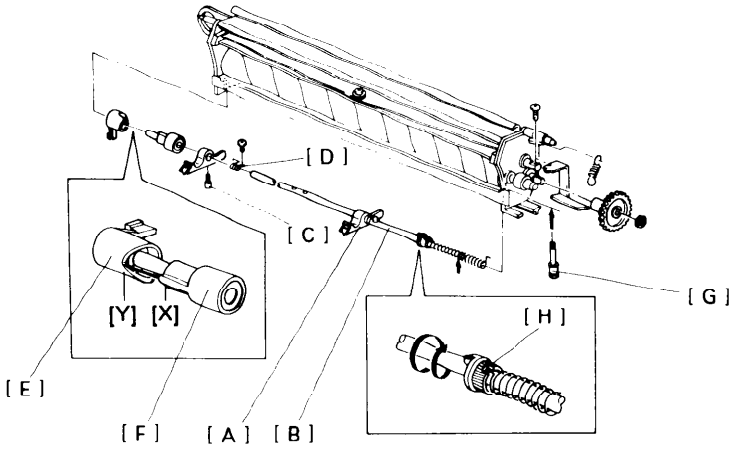

9. Set new pick-off pawls [A] on the shaft [B] and position them with the positioning pins [C] and pawl springs [D].
10. Assemble the pawl shaft assembly and set it on the cleaning unit sliding in the rear end of the shaft to the rear side plate.

NOTE: - When installing the cam holder [E] and the cam rider [F], align X with Y as shown in the figure.

- Make sure that the spring end is in the small hole on the rear side plate.

11. Install the pawl shaft pin [G].
12. Push the spring collar [H] to the rear and rotate it with one turn as shown in the figure. Then set the collar on the pin.

NOTE: Make sure that the end of the spring is correctly positioned in the groove of the collar.

13. Reassemble.

7. Cleaning Pressure Adjustment

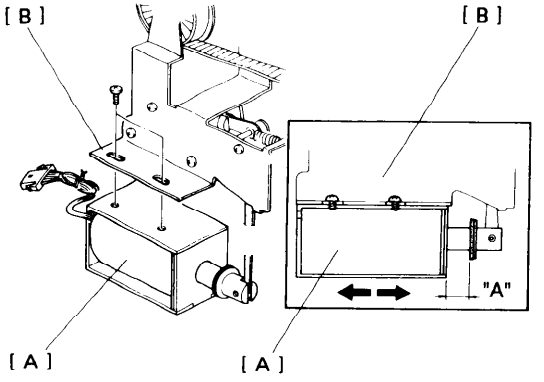

ADJUSTMENT STANDARD: A = 13 ± 0.5 mm (0.51" ± 0.02")

1. Turn off the main switch.
2. Remove the rear cover (2 screws).
3. Disconnect the fiber cables from the interface board if the DF is installed.
4. Lower the main PCB (2 screws).
5. **Disconnect the AD harness from the T&S power pack and remove it (1 screw).**
6. Lightly secure the cleaning solenoid [A] at the center of the bracket [B].
7. Position the cleaning solenoid to measuring the gap "A", then secure the cleaning solenoid.

NOTE: When adjusting the gap "A", make sure that the solenoid plunger is all the way to the right.

QUENCHING

1. Quenching Lamp Replacement

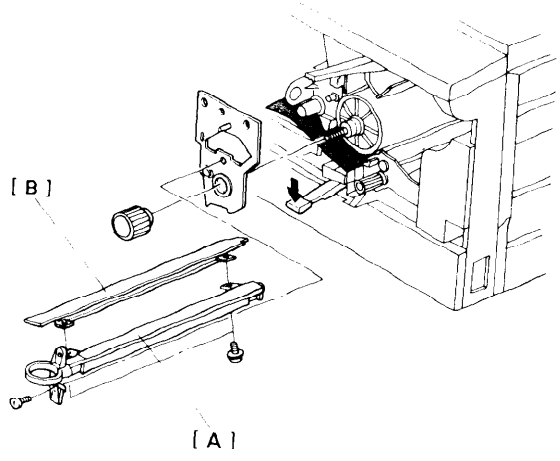

1. Remove the charge corona unit [A] (1 screw).
2. Remove the quenching lamp [B] from the charge corona unit (2 screws).

PAPER FEED

1. Manual Feed Table Removal

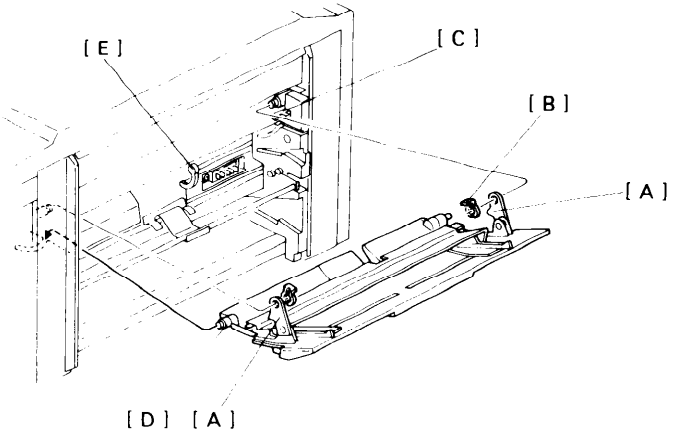

1. Remove the upper manual feed table hinges [A] from the copier (1 snap ring [B] each side).

Be careful not to damage the manual feed sensor [C].

2. Slide the lower manual feed table hinge pins [D] down their respective grooves to remove the table.

Be careful not to damage the paper end feeler [E].

2. Feed Rollers and Friction Pad Replacement

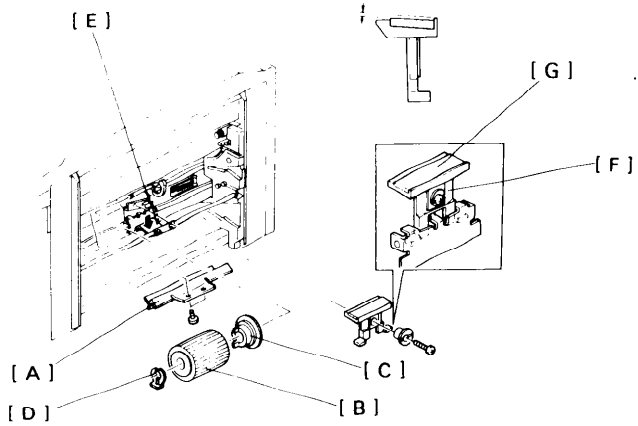

1. Remove the manual feed table (See Manual Feed Table Removal).
2. Remove the upper front guide plate [A] (2 screws).

NOTE: Steps 1 and 2 are for 1st feed station only.

3. Remove the feed roller [B] and hub [C] (1 snap ring [D]).
4. Press down on the cassette arm [E] and remove the friction pad holder [F] (1 screw and 1 cam roller).
5. Strip the old friction pad [G] off and clean the surface of the friction pad holder.
6. Install the new friction pad.
7. Grease the friction pad holder swivel point with Mobil Temp 78.
8. Reinstall the friction pad holder (1 screw and 1 cam roller) while holding down the cassette arm.

NOTE: - Make sure the legs of the friction pad holder are positioned under the spring loaded pad positioning mechanism.

- Adjust the gap between the feed roller and the friction pad. (See "Feed Roller/Friction Pad Gap Adjustment")

9. Reinstall the feed roller and hub (1 snap ring).

3. Registration Sensor Replacement

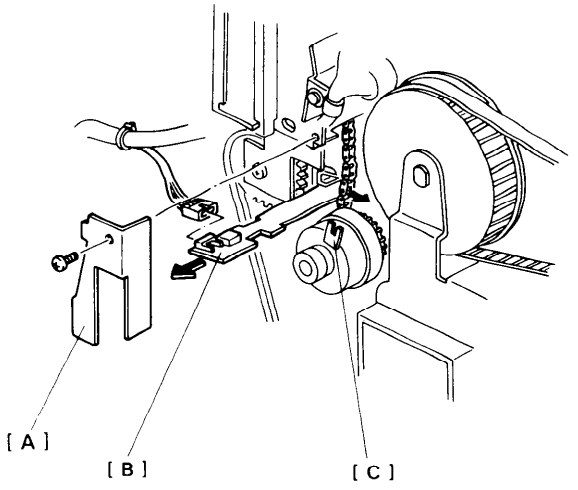

1. Remove the rear cover (2 screws) and lower the PCB plate (2 screws).
2. Remove the support bracket [A] (1 screw).
3. Move the main drive chain to the right of the PCB cut-out and slide out the registration sensor [B] (1 connector).

NOTE: - When sliding in the registration sensor board, make sure that the board is properly located on the rails.

- When reinstalling the support bracket, make sure that the bracket is properly engaged with the groove of the registration clutch stopper [C].

- The support bracket is responsible for holding the registration sensor in place; so, make sure it is correctly positioned.

4. Manual Feed Sensor Replacement

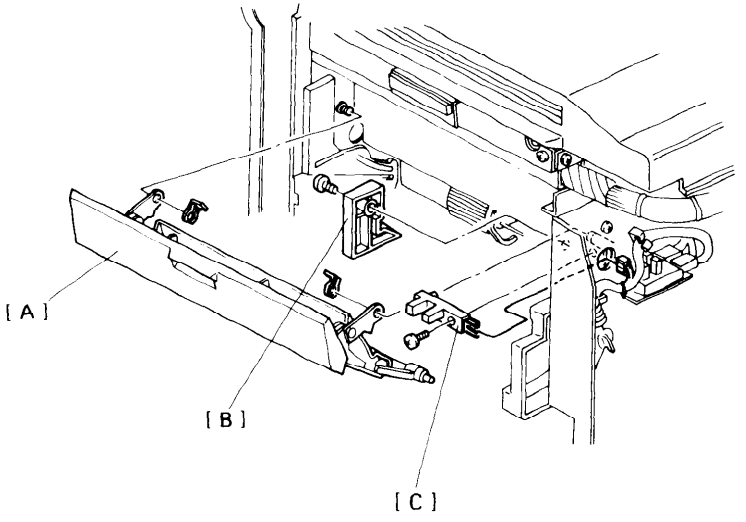

1. Remove the manual feed table [A]. (See Manual Feed Table Removal.)
2. Remove the rear cover (2 screws).
3. Remove the right rear cover (2 screws).
4. Remove the sensor cover [B] (1 screw).
5. Remove the manual feed sensor [C] (1 screw, 1 connector).
6. Install a new sensor.

NOTE: Do not overtighten the screw when securing the new sensor.

5. Paper End Sensor Replacement

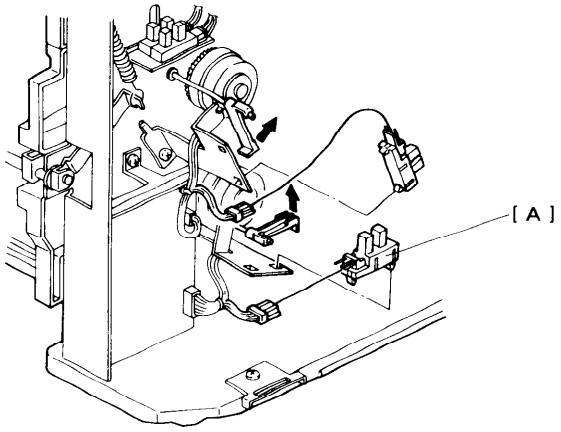

1. Remove the rear cover (2 screws).
2. Remove the paper end sensors [A] (1 connector each).

Be careful not to damage the paper end sensor actuator.

6. Paper Size Sensor Replacement

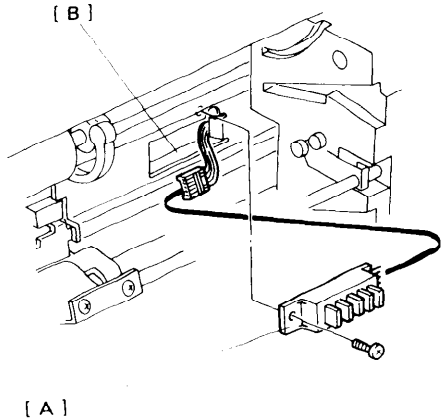

1. Remove the paper size sensor [A] from the sensor bracket [B] (1 screw and 1 connector).
2. Install a new sensor. Position the projection of the sensor in the hole of the sensor bracket.

NOTE: Do not overtighten the screw when securing the new sensor.

7. Feed Pressure Adjustment

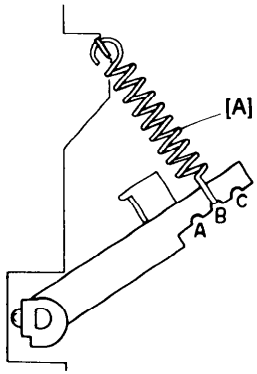

1. Remove the rear cover.
2. Move the pressure spring [A] to the desired position (see the following table).

Setting	Feed Pressure	Function
A	350 g	To prevent multi-feed.
B	400 g	*Factory setting
C	450 g	To prevent feed jam.

8. Registration Clutch Adjustment

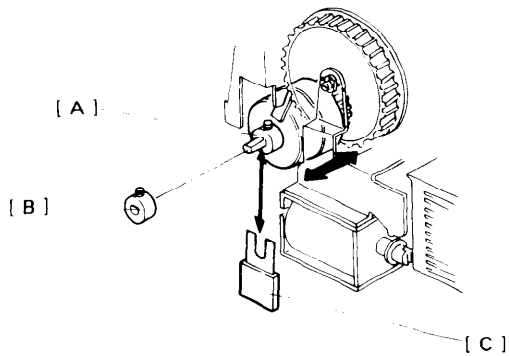

ADJUSTMENT STANDARD: 0.1 mm (0.004")

1. Remove the rear cover (2 screws).
2. Take the adjusting collar [A] off from the registration roller shaft (1 Allen screw).
3. Loosen the screw in the lock collar [B] on the clutch which is to be adjusted (1 Allen screw).
4. Place the adjusting collar next to the lock collar on the clutch shaft.
5. Position a 0.1 mm gap gauge [C] (Part number #52059101) between the two collars.
6. Push the collars and the thickness gauge back until the clutch presses against the rear plate. Tighten the Allen screw in the adjusting collar.
7. Remove the thickness gauge and move the lock collar against the adjusting collar. Tighten the Allen screw in the lock collar.

9. Feed Roller/Friction Pad Gap Adjustment (1st and 2nd Feed Station)

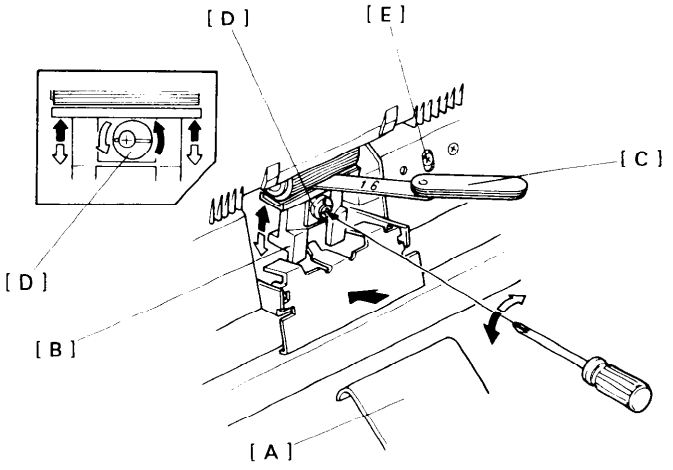

NOTE: This procedure is required when replacing the friction pad.

ADJUSTMENT STANDARD: 1.6 ± 0.3 mm (0.06" ± 0.01")

1. Remove the pressure arm [A] (2 screws).
2. Push down the friction pad holder [B] to make the gap between the feed roller and the pad.
3. Measure the gap between the feed roller and the pad using a gap guage [C].
4. If the gap is not within the adjustment standard, adjust the gap by turning the cam roller [D].

Clockwise:	The gap is decreased.
Counterclockwise:	The gap is increased.

NOTE: Do not adjust the flat screws [E] because they are factory pre-set.

FUSING

1. Fusing Unit Removal

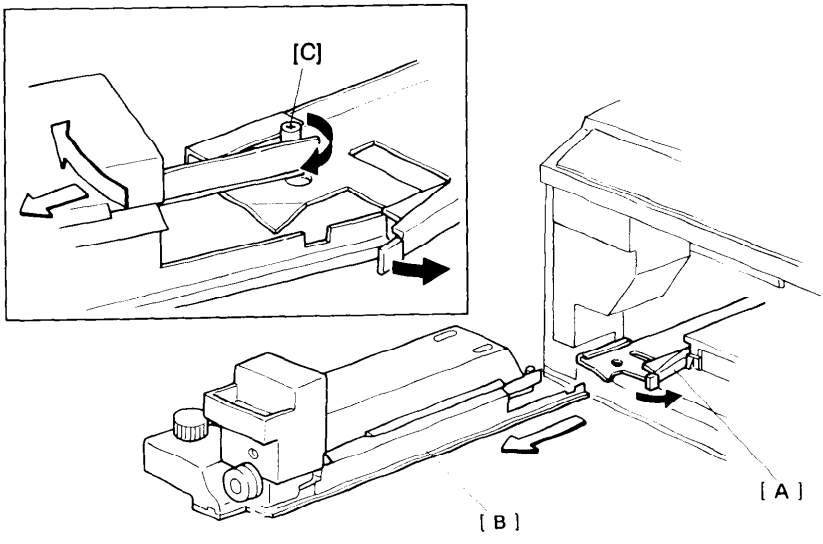

1. Open the left and right front doors.
2. Push the fusing unit release lever [A] to the right.
3. Pull out the fusing unit [B] until it is fully extended.
4. Push the fusing unit release lever to the right, move the fusing unit to the left to disengage the stopper pin [C], and remove the unit from the copier.

NOTE: Keep the fusing unit in an upright position so that silicone oil does not spill.

2. Oil Blade Replacement

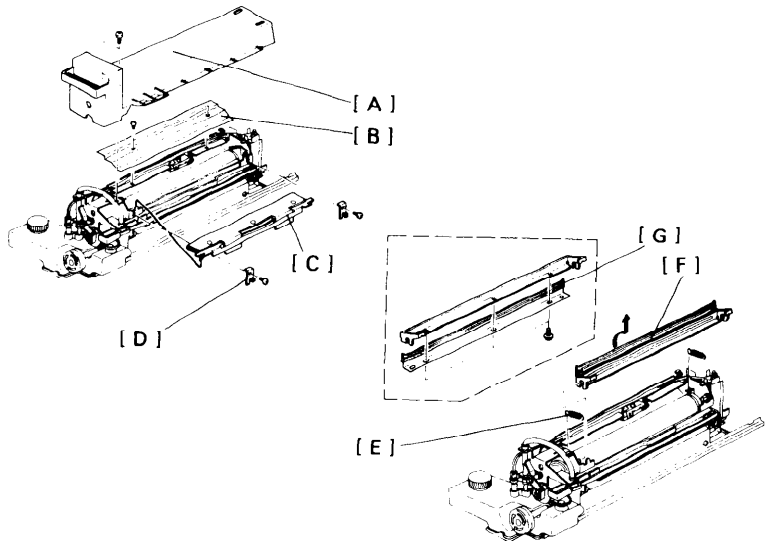

1. Remove the fusing unit. (See Fusing Unit Removal.)
2. Remove the fusing unit cover [A] (2 screws).
3. Remove the pressure plate [B] (2 screws).
4. Remove the oil supply pad [C] (2 screws and 2 clamp plates [D]).
5. Unhook the two tension springs [E].
6. Turn and remove the oil blade assembly [F].
7. Remove all screws (3) from the oil blade assembly and remove the blade [G].

3. Hot Roller Replacement

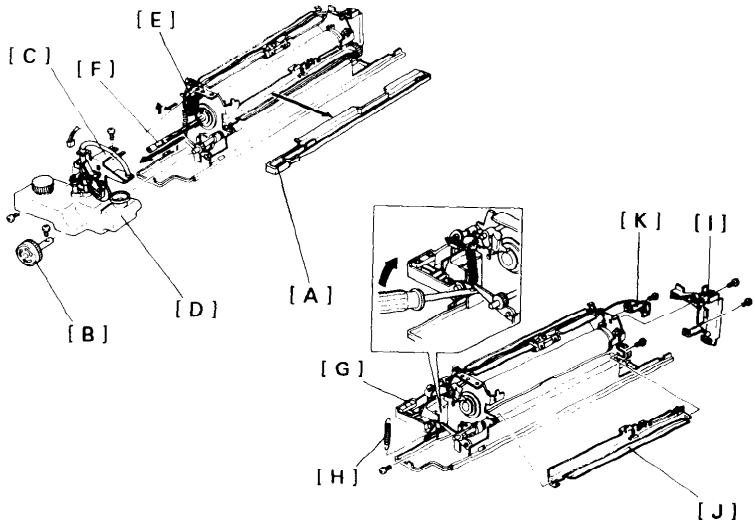

1. Remove the oil blade. (See Oil Blade Replacement.)
2. Remove any excess oil from area surrounding the oil sump [A] and remove the oil sump.
3. Remove the fusing unit knob [B] (1 screw).
4. Remove the oil pump mechanism [C] with the oil tank [D] (2 screws and 1 connector).
5. Rotate the front lamp terminal [E] and remove the fusing lamp [F].

Do not touch the fusing lamp with oily fingers because oil marks may damage the lamp.

6. Swing down the fusing exit assembly [G] and unhook the pressure springs [H].
7. Remove the harness support bracket [I] (2 screws and 2 hooks).
8. Remove the thermistor bracket [J] (2 screws).
9. Remove the rear lamp terminal [K] (1 screw and 1 hook).

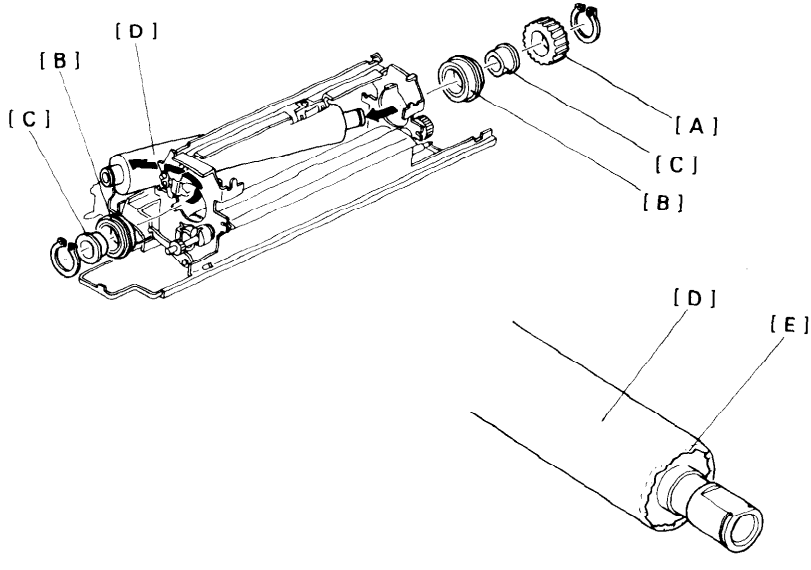

10. Remove the hot roller gear [A], bearings [B], and the collars [C] from both ends of the hot roller [D] (1 C-ring each).
11. Slide the hot roller slightly to the rear and remove the hot roller as shown.
12. Tear the protective paper [E] from the ends of a new hot roller and install it.
13. After the new hot roller is installed, remove the protective paper.

NOTE: When reinstalling the fusing lamp, make sure it does not touch the inside of the hot roller.

4. Pressure Roller Replacement

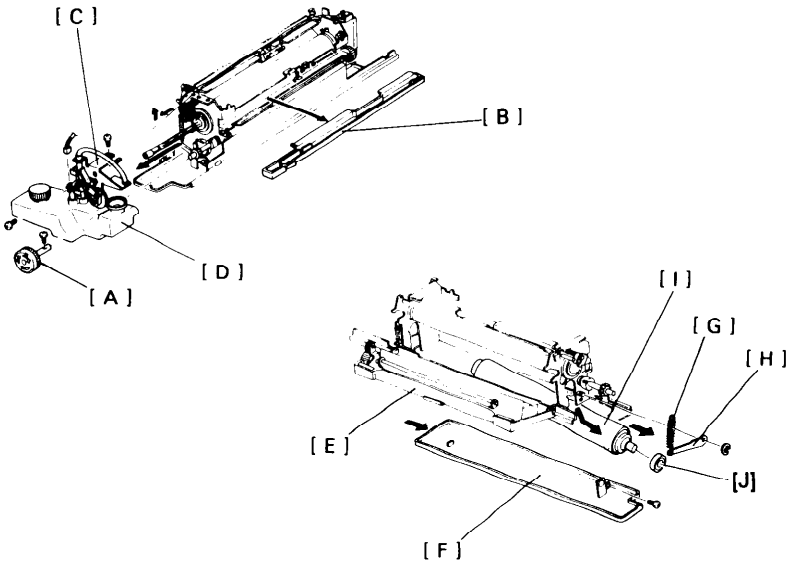

1. Remove the fusing unit and cover (2 screws).
2. Remove the fusing unit knob [A] (1 screw).
3. Remove any excess oil from the oil sump [B].
4. Remove the oil pump mechanism [C] with the oil tank [D] (2 screws and 1 connector).
5. Open and remove the fusing exit assembly [E] (1 E-ring, 1 connector, and 2 springs).
6. Remove the oil pan [F] (4 screws and 4 hooks).
7. Remove the front pressure spring [G].
8. Remove the front pressure lever [H] (1 E-ring).
9. Lift up the upper part of the fusing unit and remove the pressure roller [I].
10. Install the bearings [J] on the new pressure roller.

5. Hot Roller Stripper Replacement

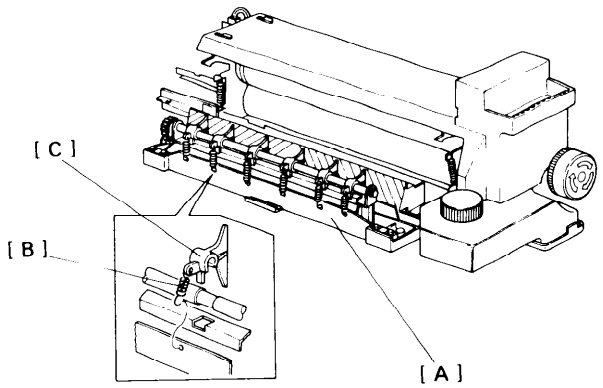

1. Pull out the fusing unit and open the fusing exit assembly [A].
2. Unhook the springs [B] and remove the hot roller strippers [C].
3. Install new strippers and connect the springs.

NOTE: It is best to replace strippers and springs as a set.

6. Thermistor Replacement

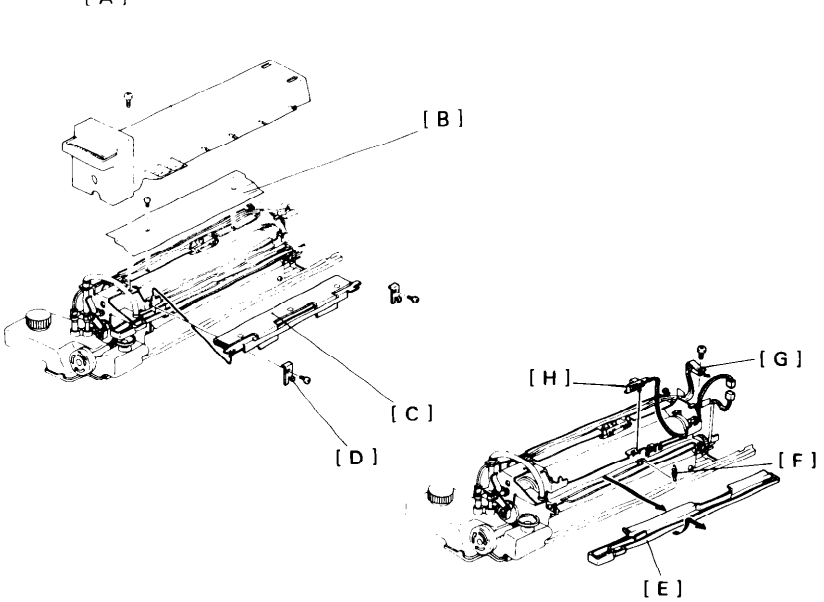

1. Remove the fusing unit.
2. Remove the fusing unit cover [A] (2 screws).
3. Remove the pressure plate [B] (2 screws).
4. Remove the oil supply pad [C] (2 screws and 2 clamp plates [D]).
5. Remove any excess oil from the oil sump and remove the oil sump [E].
6. Unhook the thermistor spring [F].
7. Remove the thermistor wire from the metal wire clamp [G] (1 screw) and remove the thermistor [H] (1 connector).
8. Replace the thermistor and reassemble.

NOTE: Make sure that the thermistor is properly in contact with the hot roller.

7. Thermofuse Replacement

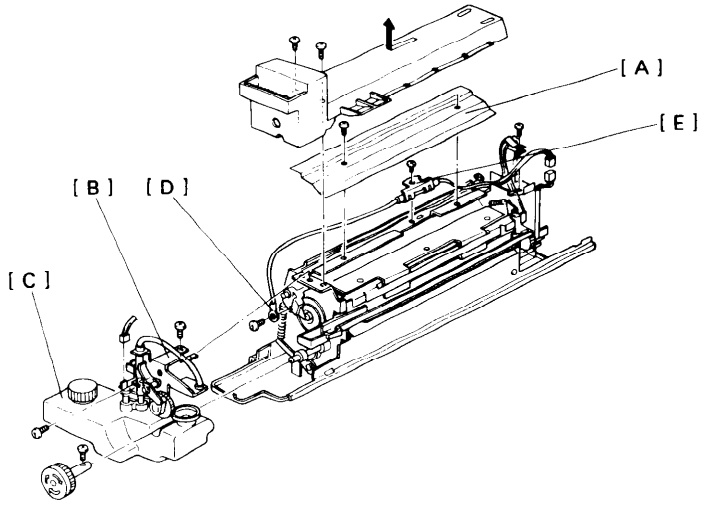

1. Perform steps 1 to 3 of "Thermistor Replacement".
2. Remove the thermofuse bracket [A] (1 screw).
3. Remove the oil pump mechanism [B] with the oil tank [C] (2 screws and 1 connector).
4. Remove the thermofuse wire from the front lamp terminal [D] (1 screw).
5. Disconnect the thermofuse [E] (1 connector) and install the new thermofuse.

8. Fusing Pressure Adjustment

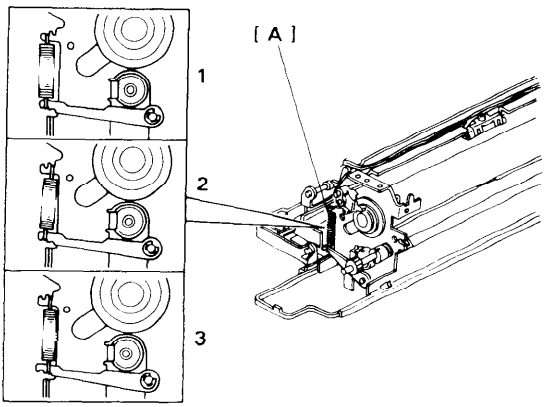

1. Remove the fusing unit.
2. Remove the fusing unit cover (2 screws).
3. Remove the fusing unit knob (1 screw).
4. Remove the oil pump mechanism along with the oil tank (2 screws, 1 connector).
5. Move the pressure springs [A] to the desired position. See the following table:

Setting	Fusing Pressure	
1	11.9 kg	
2	14.9 kg	* Factory Setting
3	16.7 kg	

NOTE: Position the front and rear springs in the same position.

9. Entrance Guide Hight Adjustment

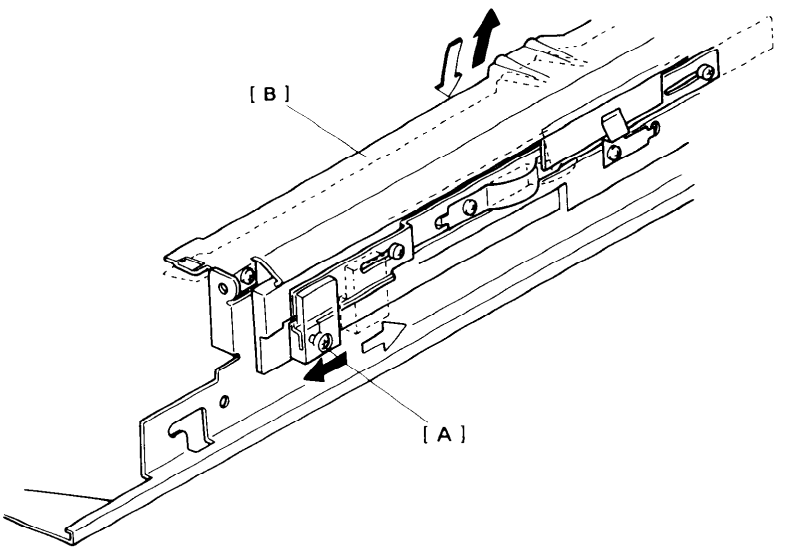

1. Remove the fusing unit.
2. Move the knob [A] to the front to raise the fusing guide plate [B].

   Move the knob to the rear to the rear to lower the fusing guide plate.

   (The movement range is 1 mm.)

NOTE: Normally the entrance guide is set in the lower position (factory setting). Set it in the upper position if paper creasing occurs.

TRANSPORT

1. Transport Unit and Transport Belt Removal

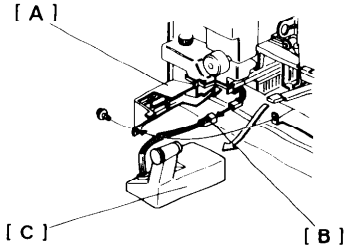

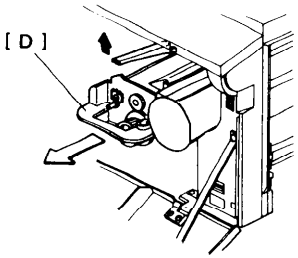

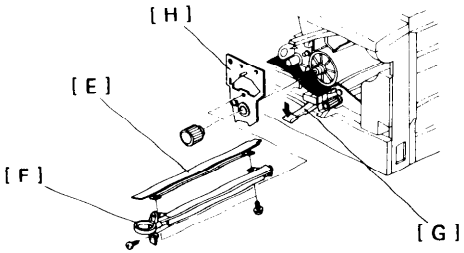

1. Swing the toner collection bottle cover [A] to the left (1 screw).
2. Disconnect the toner overflow sensor connector [B].
3. Remove the toner collection bottle [C].
4. Remove the development unit [D], PTL board [E], and the charge corona unit [F] (1 screw).
5. Lower the T/S corona unit [G].
6. Remove the drum stay [H] (1 knob [I] and 1 screw), the cleaning unit and the drum.

NOTE: Be sure the protective sleeve is installed before removing the drum.

7. Remove the fusing unit.

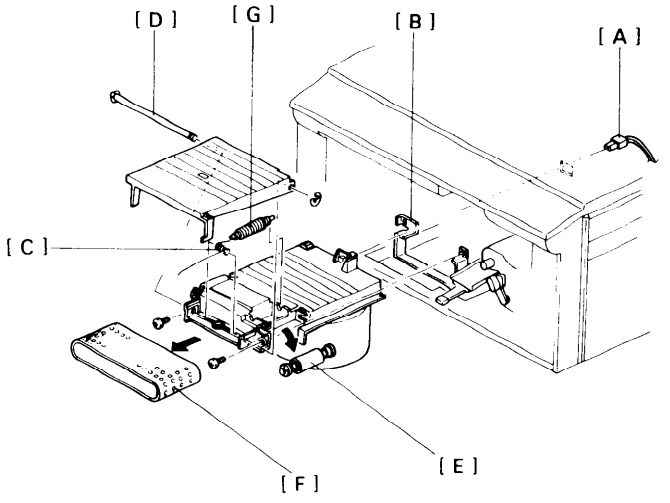

8. Remove the rear cover and lower the PCB plate (2 screws each).
9. Remove the transport and separation power pack (1 screw).
10. Disconnect the vacuum fan connector [A] (2p white) just under the main motor.
11. Remove the transport unit from the mounting bracket [B] (2 screws).
12. Slide the transport unit and vacuum fan out of the copier.

NOTE: When reinstalling the transport unit, be sure the transport gear engages with the drive gear.

13. Remove the front of the transport unit as shown (1 E-ring, 1 spring [C] and 1 shaft [D]).
14. Pull the right transport roller [E] and transport belt [F] to the right and remove the transport rollers [G].
15. Remove the transport belt as shown.

2. Vacuum Fan Motor Replacement

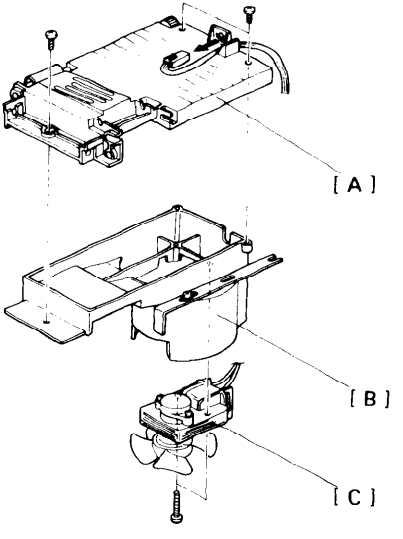

1. Remove the transport belt. (See Transport Unit and Transport Belt Removal.)
2. Remove the transport plate [A] from the vacuum fan unit [B] (3 screws and 1 connector).
3. Remove the fan motor [C] (2 screws).

CORONA

1. Corona Wire Replacement

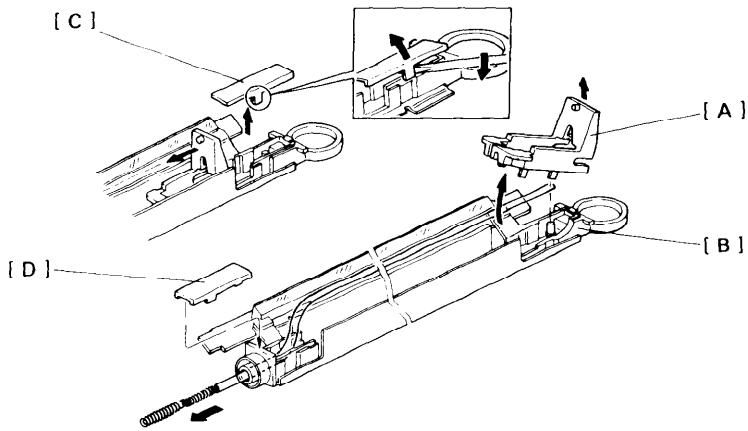

- **Do not handle new corona wires with your bare hands. Oil on the wire will cause uneven charge on the drum.**
- **Do not rub the corona wires with rough material (sandpaper, etc.) as it will damage the corona wires.**
- **When removing the endblock covers, be careful not to break off the side hooks.**
- **Do not use any solvents to clean the wire as it will cause uneven charge on the drum.**

- Charge Corona Wire -

1. Slide the wire cleaner [A] away from the front endblock [B] as shown.
2. Remove the front [C] and rear [D] end block covers.
3. Slide the wire cleaner back to the front end and remove it.

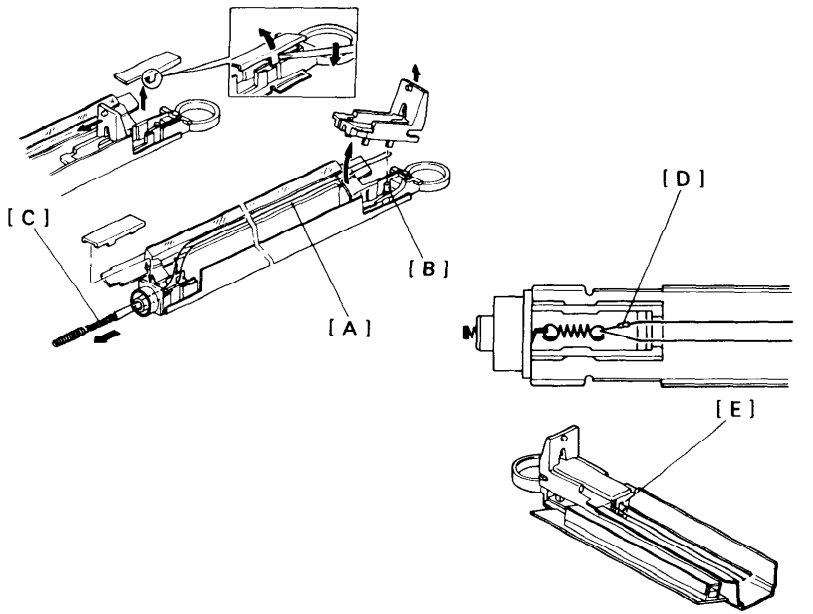

4. Unhook the corona wire [A] from the front anchor post [B] by pulling in the direction of the arrow using a small screw driver.
5. Remove the old corona wire.
6. Clean the endblocks, the covers, and the corona unit casing with a blower brush and dry cloth.
7. Hook the new corona wire onto the tension spring [C]
8. Hook the other end of the wire onto the front anchor post using a small screw driver.

When installing the corona wire, the wire junction [D] should be positioned inside the rear endblock.

9. Reassemble the charge corona unit. Make sure that the corona wire is positioned between the cleaner pads [E].

- T/S Corona Wires -

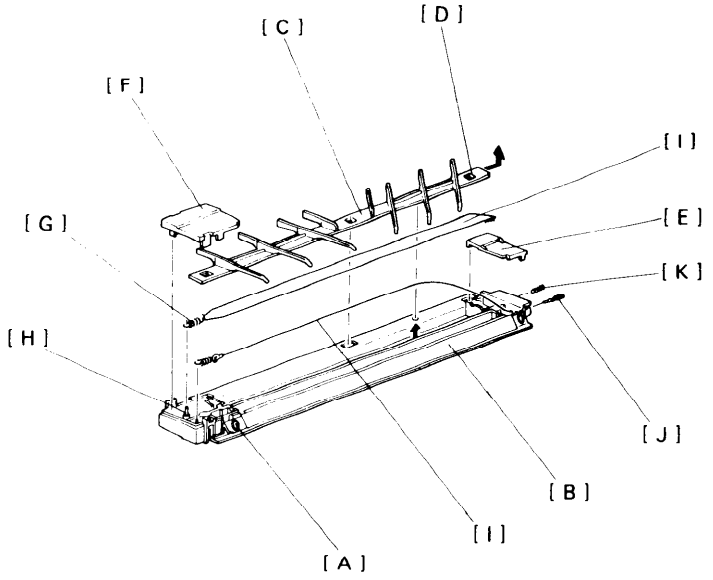

The eccentric cams [A] are used in the production line only to adjust the gap between the guide mylar [B] and the selenium drum.

1. Lower the transport and separation unit then remove it.
2. Slide the corona paper guide [C] to the rear, by pushing up the guide stopper [D] from underneath. Then, remove the guide from the corona unit.
3. Remove the front [E] and rear [F] endblock covers.
4. Unhook the tension springs [G] from the front anchor posts [H] and remove the old corona wires [I].
5. Clean the corona paper guide, the endblocks and covers, and the corona unit casing with a blower brush and dry cloth.
6. Thread the small eyelet [J] of the new transfer corona wire through the hole in the rear endblock and hook it onto the terminal spring [K].

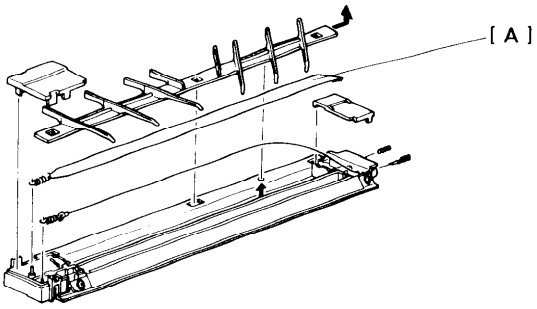

7. Hook the tension spring onto the other end of the corona wire. Then hook the tension spring onto the front endblock anchor post.
8. Insert the wire junction [A] of the new separation corona wire through the hole in the rear endblock and hook the terminal spring onto the nearby wire junction.
9. Hook the tension spring onto the other end of the loop and then hook the spring to the front endblock anchor post.

The separation corona wire should be properly positioned in the grooves of the front and rear endblocks.

10. Reset the endblock covers and the corona paper guide.

2. Drum Current Adjustment

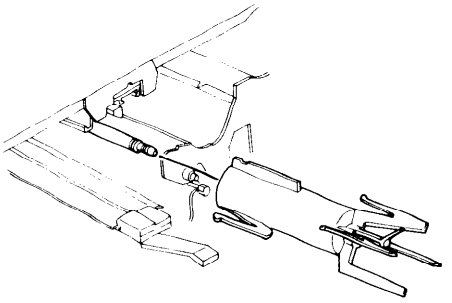

NOTE: The drum currents vary with environmental conditions such as humidity and atmospheric pressure. Generally it is not necessary to adjust the drum currents because they have already been adjusted for a range of environments at the factory.
Drum current adjustment may be required when there are problems with paper separation, incomplete toner transfer, or image density.

- Make sure that the main switch is turned off when you change the range on the digital multimeter. If not, the multimeter may be damaged.
- Take care as high voltage is applied to the corona wires when the main switch is turned on.

- Preparation -

1. Turn off the main switch and remove the following parts:

   - Development unit
   - Charge corona unit (1 screw)
   - Drum stay (1 screw)
   - Toner collection bottle
   - Cleaning unit
   - Drum flange
   - Drum - should be covered with a shielding sleeve
   - Drum guide
   - T/S corona unit

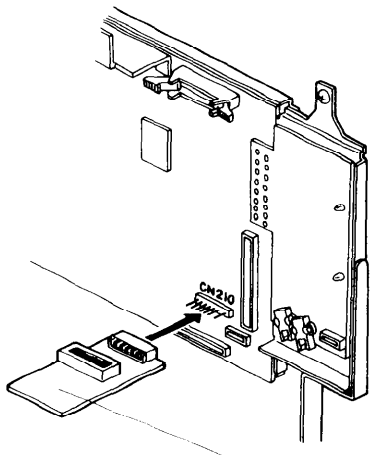

[A]

2. Clean or replace each corona wire. Also clean the corona units and the cleaning unit.
3. Actuate the front safety switch.
4. Remove the rear cover (2 screws).
5. Plug the switching board into connector CN210 of the main board as shown.

NOTE: All the switches on the switching board [A] should be off.

6. Install the drum shoe and adapter on the drum shaft with the lip to the rear.
7. Route the shoe lead wire out through the development unit opening.
8. Connect the drum shoe and the digital multimeter leads as shown on the next page. Positive lead to the red lead clip. Negative lead and the black lead clip to the machine ground.
9. Open the Manual Feed table to keep the Start key red even if the machine is warmed up.

- Charge Corona -

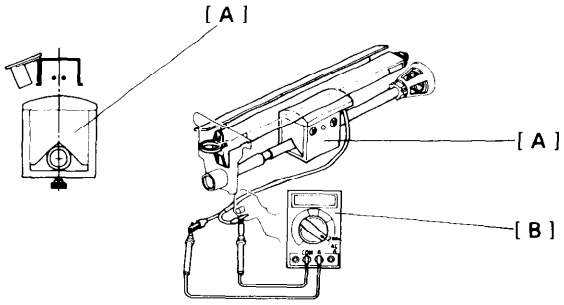

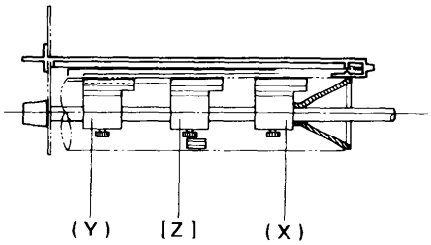

OPTIMUM ADJUSTING VALUE: DC +44.0 ± 0.2 μA

1. Slide the drum shoe [A] to its rear limit as shown (X).
2. Position the drum shoe so that the axis of the current sensing plate is aligned with the charge corona wire as shown.
3. Reinstall the drum stay (1 screw and 1 knob) and the charge corona unit.
4. Select the dc 200 μA range of the digital multimeter [B].
5. Turn on SW 8 of the switching board.
6. Turn on the main switch and note the reading. (Wait 30 seconds for the current to stabilize.)
7. Turn off the main switch, move the drum shoe to the front as shown (Y), and repeat steps 3 to 5.

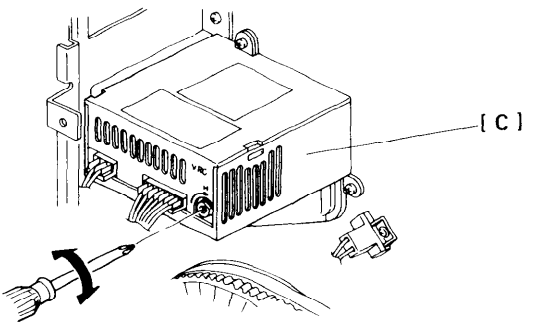

8. Adjust the front corona wire height adjusting screw if the two readings differ. The difference between front and rear should not be more than 0.2 μA.

NOTE: - Turn the adjusting screw clockwise to increase the reading.

- Turn it counterclockwise to decrease the reading.

- After adjusting the front side, confirm the rear reading once again.

9. Turn off the main switch and position the drum shoe on the center of the shaft (Z). (The ID sensor is positioned near the the center of the shaft).

10. Turn on the main switch and adjust the charge corona current by turning "VRC" on the power pack - C/B [C].

11. Turn off the main switch and SW 8.

- Transfer Corona -

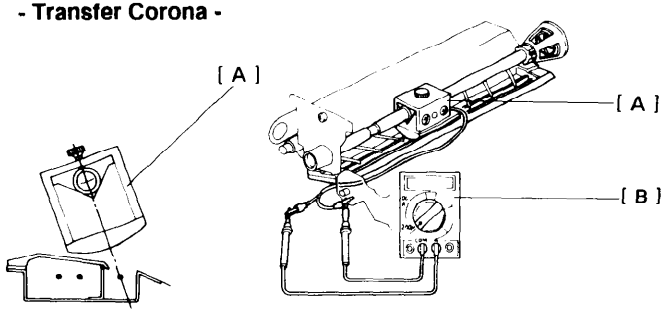

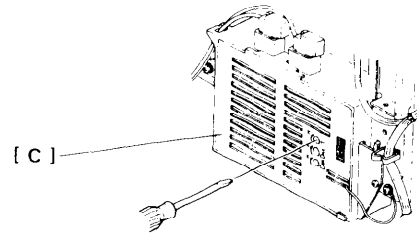

OPTIMUM ADJUSTING VALUE: DC + 19.0 ± 0.4 μA

1. Reinstall the T/S corona unit and position the drum shoe [A] on the center of the shaft so that the axis of the current sensing plate is aligned with the transfer corona wire as shown.
2. Reinstall the cleaning unit and the drum stay (1 screw and 1 knob).
3. Select the dc 200 μA range of the digital multimeter [B].
4. Turn on SW 3 of the switching board.
5. Turn on the main switch and adjust the transfer corona current by turning "T" on the power pack - T/S [C]. (Wait 30 seconds for the corona current to stabilize.)
6. Turn off the main switch and SW 3.

- Separation Corona -

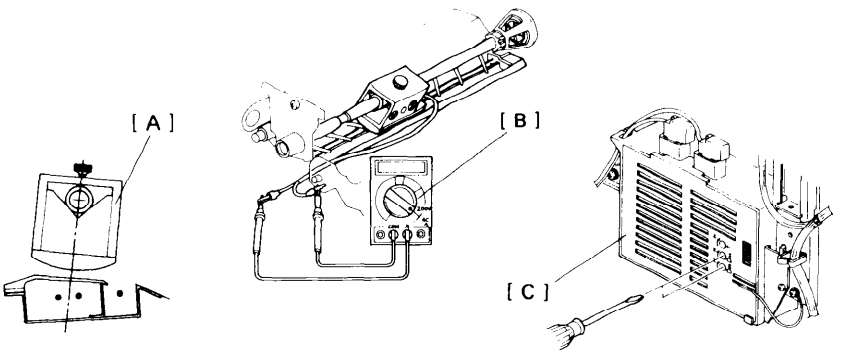

OPTIMUM ADJUSTING VALUE: AC +38.6 ± 1.4 μA
DC - 4.2 ± 0.4 μA

1. Position the drum shoe [A] on the center of the shaft so that the axis of the current sensing plate is aligned between the separation corona wires as shown.
2. Reinstall the drum stay (1 screw and 1 knob) and return the T/S corona unit to its original position.

NOTE: The cleaning unit should also be installed at this time.

3. Turn on SW 4 on the switching board.
4. Select the dc 200 μA range of the digital multimeter [B].
5. Turn on the main switch and adjust the separation dc current by turning "DDC" on the power pack - T/S [C]. (Wait 30 seconds for the corona current to stabilize.)
6. Turn off the main switch and select the ac 200 μA range of the multimeter.
7. Turn on the main switch and adjust the separation ac current by turning "DAC" on the power pack - T/S. (Wait 30 seconds for the corona current to stabilize.)
8. Turn off the main switch.
9. Repeat steps 4 to 8 until both the dc and ac corona currents are within the optimum ranges.
10. Turn off the main switch and SW 4.

OTHERS

1. Operation Panel Removal

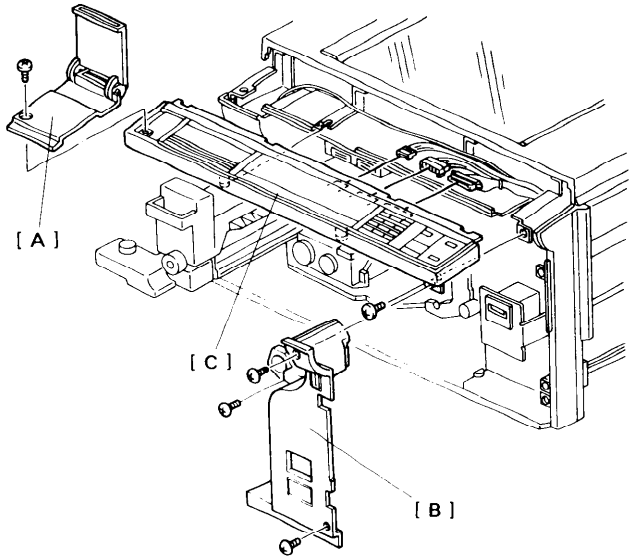

1. Remove the DIP switch cover [A] under the instructions cards (1 screw).
2. Remove the front cover.
3. Remove the right inner cover [B] (3 screws).
4. Remove the operation panel [C] (2 screws and 3 connectors).

2. Power Supply Unit Removal

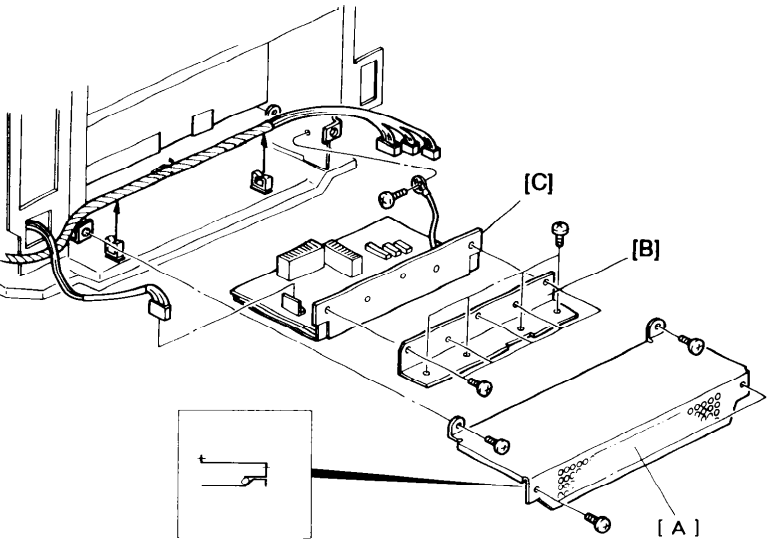

1. Remove the power supply unit cover [A] (4 screws).
2. Remove the heat plate [B] (9 screws).
3. Disconnect all the connectors.
4. Remove the power supply unit [C].

NOTE: When reinstalling the power supply unit cover, the harness should be placed under the cover as shown.

3. Drum Heater Removal

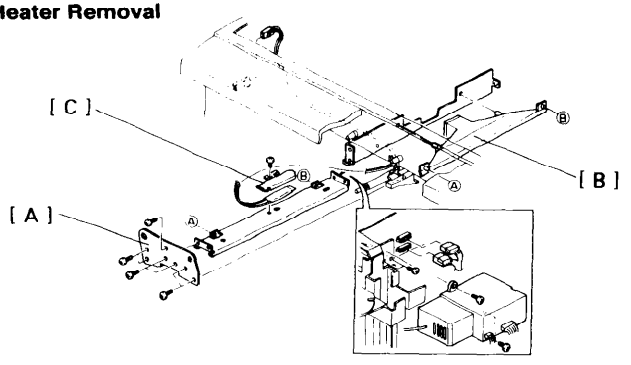

1. Turn off the main switch.
2. Open and remove the front cover and remove the following parts:

   - Development unit
   - Charge corona unit (1 screw)
   - Drum stay (1 screw)
   - Toner collection bottle
   - Cleaning unit
   - Drum flange
   - Drum - should be covered with a shielding sleeve
   - Drum guide
   - T/S corona unit

3. Remove the left inner cover (2 screws), the center inner cover (6 screws), and the rear cover (2 screws).
4. Disconnect the lens drive motor connector and the 2nd drive motor connector.
5. Remove the main charger power pack (2 screws and 3 connectors).
6. Remove the front drum support bracket [A] (7 screws).
7. Remove the duct inlet [B].
8. Remove the main charger unit holder from the rear of the machine (2 screws).
9. Replace the drum heater [C] (1 screw).

NOTE: When installing the drum heater, be sure that the duct outlet is properly positioned.

COPY IMAGE

1. Light Intensity Adjustment

NOTE: - This adjustment should be done when the rest time compensation of the bias voltage is 0V-when the main power switch has just been turned on.

- Auto ID sensor adjustment must be done after light intensity adjustment.

ADJUSTMENT STANDARD: Level 2 of the gray scale on the OS-A3 chart should be just visible on the copy when the 4th level of the density control is selected.

1. Clean the optics (mirrors, lens, reflectors, exposure glass, toner shield glass).
2. Turn on the main switch and allow it to warm up.
3. Set the image density level at the No. 4 position and make 11 test copies of the OS-A3 test chart.
   At that time, it is required to confirm if the auto image density base level is positioned at the No. 4 position. If not, position the base level to No. 4.
4. Confirm that the level 2 of the gray scale is just visible on the 11th copy. If the image density is not correct, proceed to steps 5 to 10.

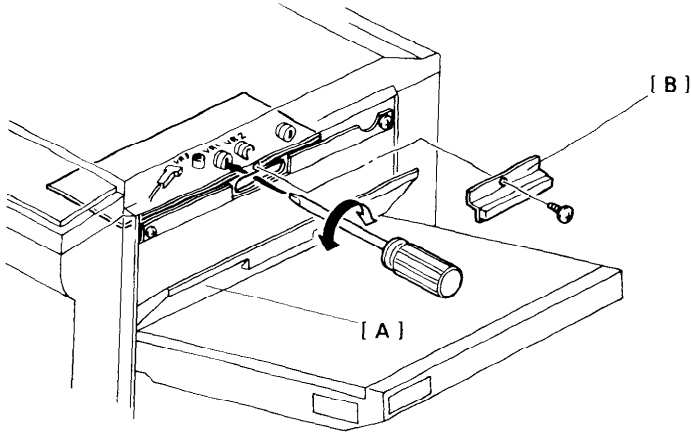

5. Confirm that the main switch is off and turn on DIP SW 1-8 so that copies can be made in spite that the manual feed table is open. Then, turn on the main switch.
6. Open the manual feed table [A].
7. Remove the magnetic catch bracket [B] (1 screw).
8. Adjust VR1 on the lamp regulator board to achieve properly illuminated copies.
9. Confirm that the image density is within the standard.

NOTE: - If the test copies are made within 3 minutes after making previous copies, check the image density on the 4th copy.

- If it is over 3 minutes, check the image density on the 6th copy.
- Check and adjust the light intensity at every visit.

10. Turn off the main switch and reassemble.

2. Auto ID Sensor Adjustment

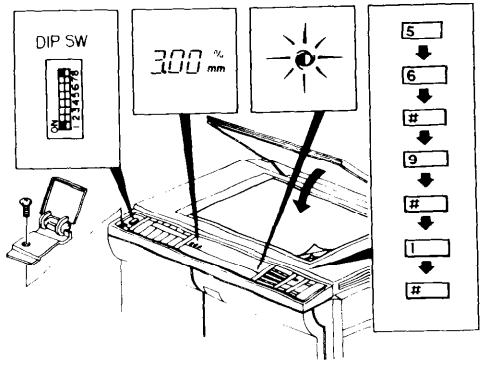

ADJUSTMENT STANDARD: +3 dc ± 0.06 volts

- Method A: Using the CPU -

1. Perform the light intensity adjustment before performing the Auto ID sensor adjustment.
2. Remove the DIP switch cover (1 screws).
3. Turn off the main switch and turn on DIP switche Nos. 1-1 and 1-8.
4. Open the manual feed table and remove the magnet catch bracket (1 screw).
5. Turn on the main switch and allow the copier to warm up.
6. Select the Auto ID mode.

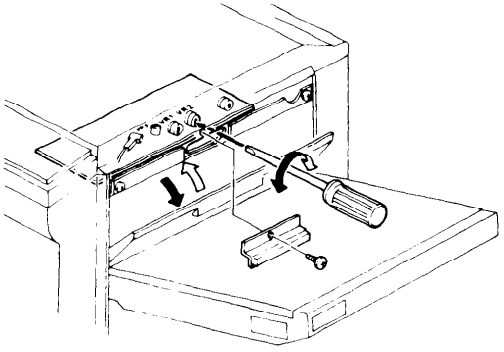

7. Place a few of A3 (11" x 17") paper on the exposure glass.
8. Enter "56" using the numeral keys, then press the Enter key.
9. Enter "99" using the numeral keys ,then press the Start key .
10. Adjust the Auto ID sensor by turning VR2 on the lamp regulator board.

NOTE: - Continue the adjustment procedure until the value is within specifications.

- When adjusting the Auto ID sensor, use the monitor reading after the 3rd scanning operation.

11. Turn off the main switch and the DIP switches, then reassemble.

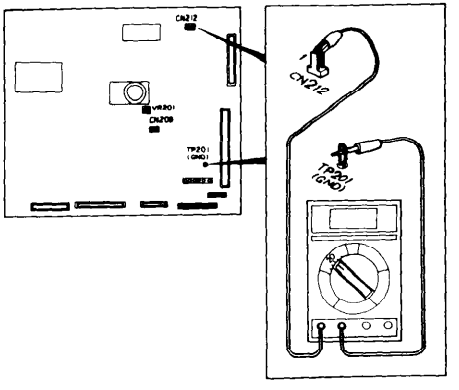

- Method B: Using a Digital Multimeter -

Perform steps 1 and 2 of method A.

1. Confirm that the main switch is off and turn on DIP switch No. 1-1 and No. 1-8 on the operation panel.
2. Open the manual feed table and remove the magnetic catch bracket (1 screws).
3. Remove the rear cover (2 screws).
4. Hook up the multimeter leads as follows:

NOTE: Hook up the positive lead using a crocodile clip as shown.

Positive lead to pin 1 of CN212 on the main board
Negative lead to TP 201 (GND) and select the 20-volt range on the multimeter.

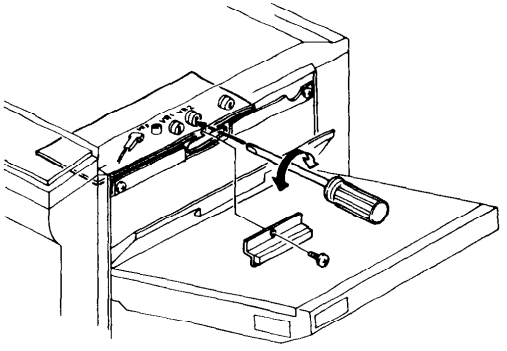

5. Place 5 sheets of paper (A3 or 11" x 17") on the exposure glass.
6. Turn on the main switch and select the Auto ID mode, then enter "99" using the numeral keys. Press the Start key after the copier warms up.
7. Adjust the Auto ID sensor by turning VR2 on the lamp regulator board.

NOTE: Adjust the Auto ID sensor after the 3rd copy cycle has been completed.

8. Press the C/S key to stop the copier.
9. Turn off the main switch and DIP switch No 1-1 and No. 1-8, then reassemble.

3. Horizontal Magnification Adjustment

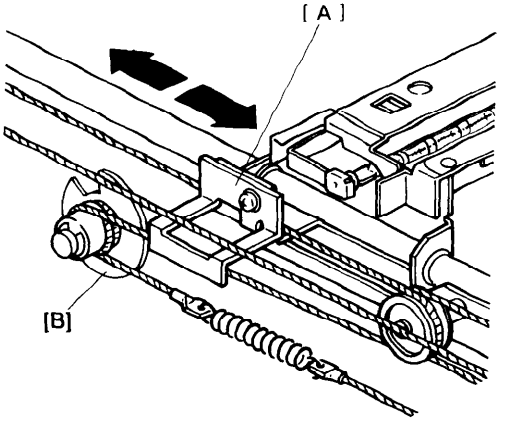

ADJUSTMENT STANDARD: + 0.5% (Full Size)

- Method A: Using the wire clamp

1. Remove the rear cover (2 screws).
2. Remove the two mounting studs and eight screws securing the upper cover.
3. Lift the back edge of the upper cover and loosen the wire clamp [A] (1 screw).
4. Move the clamp to the right to enlarge the copy image. Move it to the left to reduce the copy image. (Viewed from the rear side.)

- Method B: Using SP Mode 44, which can adjust the position of 2nd scanner by turning the drive pulley cam [B].

1. Confirm that the main switch is off and turn on DIP switch No. 1-8 on the operation panel.
2. Enter "44" using the numeral keys, then press the Enter key.
3. Change the data according to the SP Mode Table when making a copy. Adjust the horizontal magnification when changing the data of SP Mode # 44.

4. Vertical Magnification Adjustment

ADJUSTMENT STANDARD: ± 1%

Adjust the vertical component of magnification (scanner forward velocity) using SP mode # 43.

5. Lead Edge Registration Adjustment

ADJUSTMENT STANDARD: 0 ± 2 mm (0 ± 0.08")

1. Place a 150 mm scale on the exposure glass, aligning it with the left scale.
2. Make 3 copies with the ID level at the No. 7 position.
3. Adjust the lead edge registration using SP mode # 42.

6. Lead Edge Erase Margin Adjustment

NOTE: This adjustment should be made after Lead Edge Registration Adjustment.

ADJUSTMENT STANDARD: 3.5 ± 2.5 mm (0.14" ± 0.1")

Adjust the lead edge erase margin using SP Mode # 41.

TABLE OF CONTENTS

1. INSTALLATION

Environment 1-1
Machine Level 1-2
Minimum Space Requirement 1-2
Copier Installation 1-4
1. Accessory Check 1-4
2. Installation Procedure 1-5
Color Unit Installation 1-10
1. Accessory Check 1-10
2. Installation Procedure 1-11
Key Counter Holder Installation 1-13
Accessory Counter Installation 1-14
Cassette Modification 1-15
Preparation for Transporting the Copier 1-16
1. Short Haul Transportation 1-16
2. Long Haul Transportation by Vehicle 1-17

2. SERVICE TABLES

PM Table 2-1
Service Tables
Test Points 2-4
Variable Resistors 2-5
Dip Switches 2-6
Service Program Mode (SP Mode) Operation 2-7
Service Program Mode Table 2-8
Service Remarks 2-14
Special Tools and Lubricants 2-19

3. REPLACEMENT AND ADJUSTMENT

Optics 3-1
Development and Toner Supply 3-17
Cleaning 3-26
Quenching 3-34
Paper Feed 3-35
Fusing 3-44
Transport 3-54

Corona 3-57
Others 3-67
Copy Image 3-70

4. ELECTRICAL DATA

Main Board Schematic (Main Control) 4-1
Main Board Schematic (Optics Control) 4-2
Operation Panel Board Schematic (FT4430) 4-3A
Operation Panel Board Schematic (FT4410) 4-3
Paper Feed Control Board Schematic 4-4
DC Power Supply Board Schematic 4-5
Lamp Regulator Schematic 4-6
Fusing Lamp Drive Board Schematic 4-6
Interface Board Schematic (Type-E) 4-7
Timing Chart (Main Frame) 4-8
DF Main Board Schematic 4-9
DF Timing Chart 4-10
LCT Control Board Schematic (Main Control) 4-11
Editor Board Schematic 4-13
Sorter Control Board Schematic 4-15
Electrical Component Layout - Copier 4-17
Electrical Component Layout - DF,Sorter, LCT 4-18
SP Mode 4-19
TP, VR, DIP SW 4-20
PM Term Lubrication 4-20
Copy Image 4-21
Mechanical Adjustment 4-22

5. DOCUMENT FEEDER

Specifications 5-1
Mechanical Component Layout 5-2
Electrical Component Layout 5-3
DF Installation 5-4
Replacement and Adjustment 5-12

6. SORTER

Specifications 6-1
Mechanical Component Layout 6-2

Electrical Component Layout 6-3
Sorter Installation 6-4
Replacement and Adjustment 6-6

LARGE CAPACITY TRAY

Specifications 7-1
Mechanical Component Layout 7-2
Electrical Component Layout 7-3
LCT Installation 7-4
Replacement and Adjustment 7-8

EDITOR BOARD

Installation 8-1

TROUBLESHOOTING

Copy Quality
White Spots 9-1
HAT Image 9-2
Blank Area or Patchy Image 9-3
Unfused Copy 9-3
Jitter 9-4
Hollowing Out 9-5
Vertical White Lines or Bands 9-5
Uneven Density 9-7
Abnormal Image Density 9-9
Vertical Black Lines or Bands 9-9
Black Spots at the Leading Edge 9-12
Dirty Background 9-13

2B 2nd Scanner Home Position Sensor Not Off 9-22
2C Scanner Motor Too Fast 9-23
2D Scanner Motor Too Slow 9-23
31 Drum Thermistor 9-23
32 Image Density Sensor 9-24
53 Fusing Thermistor Abnormal 9-24
54 Fusing Warm-Up Failure 9-25
55 Fusing Overheat 9-25
56 Fusing Temperature Too Low 9-26
61 Pulse Generator Abnormal 9-26
91 Total Counter Malfunction 9-27
93 Optics < = > Main Communication Failure 9-27
ID Sensor Abnormal (No SC Number) 9-28
Defective Sensor Table 9-29

PM TABLE

C: Clean R: Replace L: Lubricate

ITEM	EM	60K	120K	180K	240K	NOTES
OPTICS						
1. Mirrors, lens, reflectors, toner shield glass, ADS	C	C	C	C	C	Silicone cloth or water (cotton pad), blower brush
2. Exposure glass	C	C	C	C	C	Alcohol or water
3. Platen cover sheet	C	C	C	C	C	Alcohol or water (replace if necessary)
4. Scanner guide rod and plate		L	L	L	L	Launa oil or equivalent Refer to the NOTE 1.
5. Guide rod felt		L	L	L	L	Launa oil or equivalent Refer to the NOTE 1.
PAPER FEED						
6. Paper feed roller	C		R		R	Water
7. Friction pad	C		R		R	Water. Refer to the NOTE 2.
8. Paper feed guide plate		C	C	C	C	
9. Registration sensor		C	C	C	C	Blower brush
10. Cassette bottom plate pad		C	C	C	C	Alcohol or water
11. Paper feed sensor		C	C	C	C	Blower brush
AROUND DRUM						
12. Corona wires	C		R		R	Dry cloth
13. Wire cleaner		R	R	R	R	
14. End blocks and casing	C	C	C	C	C	Dry cloth
15. Transfer guide plate		C	C	C	C	Dry cloth
16. Pre-Transfer Lamp	C	C	C	C	C	Dry cloth, discharge before installation.
17. Quenching Lamp	C	C	C	C	C	Dry cloth, discharge before installation.
18. ID sensor	C	C	C	C	C	Blower brush
19. Erase lamp unit		C	C	C	C	Dry cloth
CLEANING UNIT						
20. Cleaning blade		R	R	R	R	Dust with setting powder
21. Cleaning seal		C	C	C	C	Replace if necessary
22. Cleaning brush			R		R	Dust with setting powder

ITEM	EM	60K	120K	180K	240K	NOTES
23. Cleaning unit		C	C	C	C	
24. Pick-off pawls	C	C	C	C	C	Replace if necessary
25. Used toner bottle	C	C	C	C	C	Empty of used toner
DEVELOPMENT UNIT						
26. Developer		R	R	R	R	If necessary
27. Upper brush seal		C	C	C	C	
28. Side seals		C	C	C	C	
29. Development unit guide		C	C	C	C	
30. Toner supply clutch			L		L	Mobil Temp 78 Refer to NOTE 1.
FUSING UNIT						
31. Hot roller		C	R	C	R	
32. Pressure roller		C	R	C	R	If necessary
33. Stripper pawls		C	C	C	C	Replace if necessary
34. Oil supply pad		R	R	R	R	Prime with silicone oil
35. Oil blade		C	R	C	R	Prime with silicone oil
36. Fusing entrance and exit guides		C	C	C	C	Suitable solvent
37. Oil sump		C	C	C	C	
OTHERS						
38. Main drive chain			L		L	Spindle oil Refer to the NOTE 1
39. Transport belt		C	C	C	C	Alcohol or water
40. Bushings			L		L	Spindle oil
DOCUMENT FEEDER						
41. Belt	C	C	C	C	C	Belt cleaner, replace if necessary
42. Pick-up roller	C	C	C	C	C	Water, replace if necessary
43. Feed roller	C	C	C	C	C	Water, replace if necessary
44. Friction roller	C	C	C	C	C	Water, replace if necessary
LARGE CAPACITY TRAY						
45. Pick-up roller	C		R		R	Water

NOTE 1:
The location of the parts which should be lubricated at PM, are shown in the following figure:

1. Optics Section
   * Use Launa Oil
   1) Scanner Guide Rod (Lubricate at 3k and 6k after installation if there is scanner noise; after that, every 240k).
   2) Scanner Guide Rail (at every 60k).

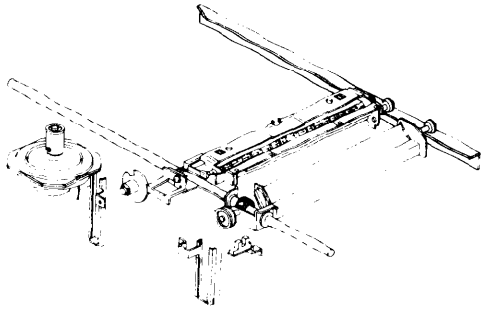

2. Drive Section
   Lubricate the following parts at every 120k.
   1) Toner supply spring clutch
      * Use Mobil Temp 78.
   2) Main Drive Chain
      * Use Spindle Oil.

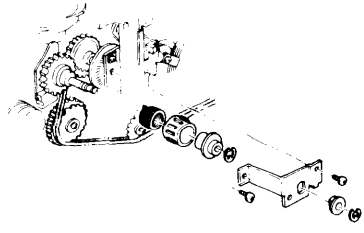

3. Fusing Unit
   Lubricate the drive gear at every 120k using Mobil Temp 78.

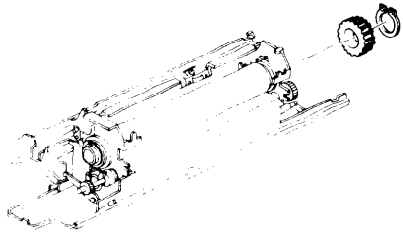

4. Bushings
   Lubricate the bushings at every 120k using Spindle Oil.

NOTE 2:
If the LCT is installed, the friction pad wears faster than with cassettes. Check it at 60 K, and if the feed roller contacts the friction pad holder, replace the friction pad.

SERVICE TABLES

TEST POINTS

1. Main Board

Number	Function
TP101	Scanner Free Run NOTE 1
TP201	GND
TP202	+5V (Vc)
TP203	+24V (VA)
TP204	Factory Use
TP205	+12V (Vs)
CN212-1	ADS Voltage (Adjust using VR2 on the lamp regulator)
TP206	Input voltage of image density sensor (Adjust using VR201 on the main board)
TP207	GND

2. DF Main Board

Number	Function
TP101	GND
TP102	+24V (VA)
TP103	+12V (Power for motor control IC)
TP104	+5V (Vc)
TP105	Belt drive motor encoder pulse

NOTE 1:
To perform scanner free run, short TP101 and TP207.

VARIABLE RESISTORS

1. Main Board

Number	Function
VR201	Adjusts the image density sensor voltage

2. Lamp Regulator

Number	Function
VR1	Light adjustment
VR2	ADS input adjustment
VR3	Factory Use

3. DF Main Board

Number	Function
VR101	Registration adjustment (0 ± 2.5 mm)
VR103	Belt drive motor speed adjustment (2,500 ± 30 rpm)
VR104	Original entrance sensor output (IC 116-5 > +8V : With paper) (IC 116-5 < +4V : Without paper)
VR105	Original width sensor output (IC 116-7 > +8V : With paper) (IC 116-7 < +4V : Without paper)

DIP SWITCHES

1. Operation Panel

DIP SW 1-1

DIP Switch	Normal	Function
1-1	OFF	Drum conditioning
1-2	OFF	Free run
1-3	OFF	Jam detection disable
1-4	OFF	Sorter instructions
1-5	OFF	Beeper sound disable
1-6	OFF	Copy counter count up/down (ON: down, OFF: up)
1-7	OFF	Manual image density mode priority (ON: manual mode, OFF: ADS mode)
1-8	OFF	SP Mode

2. DF Main Board

DIP SW 101

101-1	101-2	101-3	101-4	Function
ON	OFF	OFF	OFF	Normal mode
ON	OFF	OFF	ON	Free run
ON	ON	OFF	ON	Belt speed adjustment (VR103)
ON	ON	ON	ON	All indicators on

SERVICE PROGRAM MODE (SP MODE) OPERATION

The service program mode is used to check and change electrical data or adjustment values.

1. Data Change Mode

1. Remove the DIP SW cover and turn on DIP SW1-8 on the operation panel. (The Service Call indicator will start blinking.)
2. Enter the desired SP Mode number using the numeral keys. (The entered number is displayed in the copy counter.)
3. Press the Enter key. (The SP Mode number is shifted into the Magnification indicator and the actual data is displayed in the copy counter.)
4. If the data is correct, press the Enter key.
5. Enter the desired data using numeral keys. (The data entered is displayed in the copy counter.)
6. Press the Enter key to place the new data in memory. (The copy counter indicates "1", the Ready indicator turns on, and the Start key turns green.)
7. Turn off DIP SW1-8. (The Service Call indicator goes off.)

2. Data Check Mode

1. Perform steps 1 and 2 of the data change mode.
2. Press the Enter key. (The data is displayed in the Magnification indicator.)
3. Perform the adjustment procedure for SP Mode No. 55 and 56 if necessary.
4. Turn off DIP SW1-8.

NOTE: The SP Mode can be cleared by pressing the Clear Mode key or turning off the main switch.

SERVICE PROGRAM MODE TABLE

Mode No.	Function	Data	Factory Setting	Remarks
5 Exposure Lamp OFF	Free run with exposure lamp off. Press the Start key to start free-run. Press the C/S key to stop free run.	0: For editing	0	This Mode is used with Free Run Mode (DIP SW1-2)
11 All Indicators ON	Turns on all indicators on the operation panel.	--	--	Refer to NOTE 1.
15 Auto Reset Time	Selects auto reset of 1 or 3 minutes.	0: 1 min. 1: 3 min. 2: None	0	Auto Reset time can be switched OFF by DIP SW1-4 ON.
17 Auto Cassette Shift	Selects Auto-Cassette Shift mode	0: ON 1: OFF	0	Copier automatically shifts to another cassette holding the same size paper when paper runs out.
20 Feed Station Priority(LCT)	Selects feed station priority.	0: LCT 1: Cassette	0	
21 APS Priority	Selects APS or manual.	0: APS 1: Manual	0	If DF is installed. APS mode is selected when an original is placed on the DF.
22 Feed Station Priority (1st, 2nd, and 3rd cassette)	Selects feed station priority.	0: 1st 1: 2nd	0	If the first priority cassette is not installed or the cassette is empty, the machine selects another cassette.
23 DF Original Size	Enables originals of various sizes to be fed from the same stack.	0: OFF 1: ON	0	ADF Mode only.
28 Auto Sort Mode	Sort mode is automatically selected when more than 2 originals are set on the DF original table and the entered quantity is greater than 2.	0: Manual 1: Auto	0	Sorter and DF must be installed.
29 Fusing Unit Idle	Selects fusing unit idling mode.	0: No idling 1: Idling	0	Copier will idle for 10 seconds. Refer to NOTE 3.
30 Toner Supply Mode	Selects toner supply mode.	0: Detect B 1: Fixed 2: Detect A	0	

Mode No.	Function	Data	Factory Setting	Remarks
31 Toner Supply Amount (Detect Mode A)	Determines how much toner is supplied in detect mode A.	0: 30% 1: 15% 2: 45% 3: 60%	0	
32 Toner Supply Amount (Fixed Mode)	Determines how much toner is supplied in fixed mode.	0: 7% 1: 3.5% 2: 10.5% 3: 14%	0	
33 ID Sensor Bias	Sets the bias voltage applied to the bias roller when sensing image density.	0: 470V 1: 440V 2: 500V 3: 530V	0	470V = Normal 440V = Lighter 500V = Darker 530V = Darkest
34 Toner Supply Amount (Detect Mode B)	Determines how much toner is supplied in detect mode B	0: 2% 1: 4%		
35 Toner Supply	Changes toner supply interval. a) ID sensor checks every 5 copies. b) Toner end level changes to 0.65V.	0: Standard 1: Increase	0	Standard: Every 10 copies, 0.75V.
36 Margin Adjustment	Selects the preset margin adjustment value.	0: 5mm 1: 10mm 2: 15mm	0	
41 Lead Edge Erase Margin Adjustment	Adjusts the lead edge margin.	0 - 15	8 (3.5 mm)	0.8mm per step +5.6mm to -6.4mm
42 Registration Adjustment	Adjusts registration.	0 - 15	8 (0mm)	1mm per step +7mm to -8mm
43 Vertical Magnification Adjustment	Adjusts magnification in the paper travel direction.	0 - 15	8 (0%)	0.2% per step +1.4% to -1.6%
44 Horizontal Magnification Adjustment	Adjusts magnification perpendicular to the direction of paper travel	0 - 15	8 (0%)	0.2% per step +1.4% to -1.6%
45 Editing Mode	Selects the editing mode.	0: Standard 1: For editing		It is required to change data "0" to "1" when installing the Editor Board on the copier.

Mode No.	Function	Data	Factory Setting	Remarks
49 Fusing Temperature Change	Changes fusing temperature.	0: Stanard 1: Low 2: Higher 3: Highest	0	180±5° C 175±5° C 185±5° C 190±5° C
52 Fusing Temperature	Displays the fusing temperature.	--	--	
54 Vsg Adjustment	Turns on the ID sensor LED			At that time, the PTL turns on and the drum rotates for about 10 seconds.
55 VSG, VSP Voltage	Displays VSG, VSP voltage	--	--	Press the enter key twice to display Vsp.
56 ADS Input Reference Voltage	Displays ADS voltage	--	--	Refer to the ADS adjustment procedure.
58 Bias Voltage	Increase Bias Voltage	0:Standard 1:90V up	0	
59 Bias Voltage	Displays bias voltage	--	--	Press the Start key to indicate the voltage.
60 Toner Supply Recovery	Recover toner volume if the Vsp is above 0.5V. a) Press Start key. b) Toner supply clutch turns on. c) Free run starts. d) Vsp becomes less than 0.5V. e) Free run stops.	--	--	Use this mode if the image density is low. (Black toner only). Refer to NOTE 2 on color toner.
70 Color Toner Supply Amount	Selects the color toner supply ratio.	0: 14% 1: 7% 2: 21% 3: 28% 4: 35% 5: 42% 6: 49% 7: 56%	0	
72 Bias OFF	Turns off the bias according to the length of the lead edge erase margin.	0: OFF 1: ON		
73 Color Toner Copy Count	Shows the number of color copies made	0: Red 1: Green 2: Blue		Multiply number by 100. Example: 24 = 2400 sheets
75 ID Sensor Bias (Color Toner)	Sets the bias voltage applied to the bias roller when sensing image density.	0: 590V 1: 620V	0	590V = Normal 620V = darker

Mode No.	Function	Data	Factory Setting	Remarks
76 Sorter Bin Capacity	Sets the stack mode quantity limit.	0: No limit 1: Limit	0	Limit is determined by the paper size. Refer to NOTE 4.
86 PM Counter	Turns on the PM counter.	0: OFF 1: ON	0	For PB machines, "0" is ON "1 is OFF.
87 PM Copy Count	Sets the interval of the PM counter.	0: 80K 1: 60K 2: 120K	0	
88 PM Counter Check	Displays the PM counter.			When the PM count is exceeded, the Service Call and Key Counter indicators blink.
89 PM Counter Reset	Resets the PM counter.			Use after performing PM.
93 Maximum Copy Quantity	Limits the maximum copy quantity that can be entered.	--	0 (999)	The limit quantity is displayed in the copy counter. (Refer to NOTE 5.)
97 Clear Jam Counter	Clears the jam counters.	130: Total 131: Feed 132: Fusing 138: Sorter 139: DF	--	DIP SW1-1 must be on.
98 Clear All Counters	Clears all counters and returns modes which factory setting is "0" back to "0".			DIP SW1-1 must be on.
99 Clear All Memory	Clears all counters and returns all modes to factory setting.	0: Memory 1: Clear	0	DIP SW1-1 must be on.
100 Margin Adj.	Margin Adj. Procedure	0:Right 1:Left	0	Enables alignment of left or right edge of original to the left scale.
130 Paper Jams	Displays the total number of paper jams.	--	--	NOTE 6
131 Feed Jams	Displays the total number of entrance area paper jams.	--	--	NOTE 6
132 Fusing Jams	Displays the total number of fusing unit jams.	--	--	NOTE 6
138 Sorter Jams	Displays the total number of sorter jams.	--	--	NOTE 6
139 DF Jams	Displays the total number of DF jams.	--	--	NOTE 6

NOTE 1:

For sales demonstrations, you can turn on all the indicators without using DIP SW1-8. The procedure is as follows:

1. Press the Mode Clear key.
2. Press the c/s key, then press the Enter key.
3. Enter "11" using the numeral keys.
4. Press the Enter key. To clear this mode, press the Mode Clear key.

NOTE 2:

For the color toner supply recovery, the following procedure is required:

1. Turn off the main switch and turn on DIP switch 1-2.
2. Turn on the main switch, then press the Start key.
3. While pressing the enter key and the "0" key, the toner supply clutch turns on.
4. Press the Clear/Stop key and turn off the main switch, then turn off DIP switch 1 - 2.

NOTE 3: SP Mode No.29

The idling mode may be necessary if the copier has been installed in an environment with low temperature conditions. The idling mode will warm up the fusing rollers enough to ensure fusing at the initial copy run.

Idling Mode: The copier will idle for 10 seconds when the Start key is pressed for the first time after the main switch is turned on.

NOTE: Idling will not be performed if the machine's temperature is more than 150°C when the main switch is turned on.

NOTE 4: SP Mode No.76

Paper Size	Limit Capacity
A3/DLT	10 sheets
A4/LT	30 sheets
A5/HLT	30 sheets

NOTE 5: SP Mode No.93

To change the limit quantity, perform the following:

1. Turn DIP SW1-8 on.
2. Enter "93" using the numeral keys.
3. Press the Enter key.
4. Enter the desired number using the numeral keys.
5. Press the Enter key.

NOTE 6:

The first 3 digits are shown in the magnification indicator.
Press the point (" . ") key to display the second 3 digits.

SERVICE REMARKS

1. Handling the Drum

1. Never touch the drum surface with bare hands.
2. Store the drum in a cool dry place.
3. Always wear gloves when cleaning the drum.
4. Only prime the drum with setting powder when installing new drum.
5. Never expose the drum to light for a long time.
6. Drum conditioning is necessary when a new drum is installed. In addition, it is useful at the following times:

   - When image density is reduced due to over-exposure of the drum.
   - After cleaning the drum.
   - When the drum is lightly scratched.

7. Always keep the drum in the protective sleeve when inserting or pulling the drum out of the copier.
8. Before inserting or pulling out the drum, the cleaning unit should be pulled slightly out to avoid drum damage by the pick-off pawls.
9. Return used drums to the distributor according to standard procedure.

2. Charge Corona

1. Clean the corona wires with a dry cloth or by sliding the corona unit in and out. Do not use emery paper or any solvent for wire cleaning.
2. Do not touch the corona wires with oily hands. Oil stains may cause white bands on copies.
3. Make sure that the corona wires are correctly positioned between the cleaner pads and there are no threads on the casing.
4. When adjusting the drum current, always make sure that the axis of drum shoe is aligned with the corona wire.
5. The corona wire height should be adjusted only when:

   a) The front end block is replaced.
   b) The drum charge current is uneven.

3. Optics

1. Do not adjust the following parts:

   a. Scanner Guide Plate
   b. Fourth Mirror Angle Adjusting Screw
   c. Lens Home Position Sensor
   d. Lens unit rails

2. The lens home position sensor does not have a convenient adjusting procedure. When replacing the sensor, mark the position of the sensor bracket before removing it, and adjust the fine position of the sensor by checking the copy image (horizontal magnification and focus).

3. Do not bend or damage the lens support plate or the mylar strip.

4. Launa oil or an equivalent oil should be used to lubricate or clean the following:

   - Scanner Guide Rod (Cleaning)
   - Scanner Guide Rod Pads (Lubrication)
   - Scanner Guide Plate (Lubrication/Cleaning)

Do not use any other kind of oil.

5. Clean the exposure glass with glass cleaner and a dry cloth to reduce static electricity on the glass.

6. Clean the mirrors with water or a silicone cloth only.

7. Do not touch the following parts with bare hands:

   - Reflectors
   - Exposure Lamp
   - Mirrors and Lens

8. Do not bend the Auto ID fiber optics cable sharply.

9. When adjusting the light intensity, make ten copies before proceeding to check the copy image if the main switch has just been turned on. This is to eliminate the effect of rest time compensation.

10. After adjusting the light intensity, check and adjust the Auto ID sensor.

4. Development

1. Be careful not to nick or scratch the development roller sleeve.
2. Place a sheet of paper under the development unit when it is out of the copier.
3. Be careful not to bend the bias terminal.
4. Clean the drive gears and end magnets after removing used developer.
5. Clean the development unit guide plate before reinstalling the unit.

5. Toner Supply

1. The image density sensor and the pre-transfer lamp unit should be cleaned with a blower brush.
2. Do not touch the sensor pattern with bare hands.
3. Image density sensor adjustment is required when:
   - The ID sensor/PTL board is replaced.
   - The main board is replaced.
   - The drum has been replaced and Vsg is out of specification.
   - Problems with toner supply have occurred and ID sensor check shows Vsg to be out of specification.
4. Grease the toner supply clutch with Mobil Temp 78 periodically to avoid noise and faulty operation.

6. Transfer and Separation

1. The corona wires should be cleaned with a dry cloth.
2. While the drum stay is out and the drum is installed on the drum guide, do not lift up the corona unit. (The corona casing will knock against the drum.)

7. Cleaning

1. When servicing, be careful not to damage the edge of the cleaning blade.
2. Do not touch the cleaning brush with your bare hands.
3. Before pulling out the cleaning unit, place a sheet of paper under it to catch falling toner.

4. Be careful not to damage the drum with the pick-off pawls when pulling out or inserting the cleaning unit.
5. When installing the toner collection bottle cover, be sure that the hooks of the transport plate are positioned underneath the bottle cover.
6. After replacing the cleaning solenoid, adjust the position of the cleaning solenoid.

8. Fusing

1. When removing the fusing unit, keep it in an up-right position so that the silicone oil does not spill.
2. After replacing the oil blade and oil supply pad, prime them with silicone oil.
3. Be careful not to damage the edge of the hot roller strippers or their tension springs.
4. Do not touch the fusing lamp with bare hands.
5. Be sure that the fusing lamp is not in contact with the inner surface of the hot roller.
6. Be sure that the oil end sensor contacts the bottom of the oil tank.
7. When paper creasing occurs, adjust the position of the entrance guide plate or the fusing pressure.

9. Paper Feed

1. When replacing the friction pad, make sure that the friction pad is below the surface of the front lip of the pad holder.
2. When reinstalling the support bracket after cleaning the registration sensor, make sure that the bracket is properly engaged with the groove of the registration clutch stopper.
3. When replacing the friction pad, adjust the gap between the feed roller and the friction pad.
4. Do not touch the feed roller and the friction pad with oily hands.

10. Document Feeder

1. Do not bend the DF interface harness sharply, to avoid damaging the fiber optics cables.
2. When servicing the document feeder, make sure that the main switch of the copier is off.
3. When installing or reinstalling the document feeder, make sure that the document feeder is in the open position.

11. Sorter

1. The sorter has two types of bins; one type is used for odd numbered bins and the others used for even numbers. Be careful not to mix them up.
2. If bin operation is not smooth, lubricate the slot liners and transfer wheels using grease 501 or an equivalent type.

12. Large Capacity Tray

1. Unplug the power supply cord of the LCT before servicing it.
2. Before placing the large capacity tray in the cassette holders, make sure that the paper position feeler is set properly.

13. Others

1. When the main board is removed from the PCB plate, do not put it on a conductive surface. (This is to avoid discharging the battery for the user program memory.)
2. When installing a new main board, remove the RAM from the old main board. Reinstall the old RAM on the new main board, if the old RAM is not faulty.
3. When taking out the drum, be sure that the PTL board has already been removed. If the PTL board is not removed, the drum may be damaged by the PTL board.
4. When installing the PTL board, be sure that the drum stay has been already installed. If the drum stay is not installed, the drum may be damaged by the PTL board.
5. When replacing a sensor, do not overtighten the screw. If the screw is overtightened, the sensor may be damaged.

SPECIAL TOOLS AND LUBRICANTS

Part Number	Description	Q'ty
52159500	Doctor Gap Gauge	1
52059601	Switching Board	1
52059101	Gap Gauge - 0.1 mm	1
52069600	Sensor Checker	1
52039501	Grease (Shinetsu Silicone G-501)	1
54429101	Setting Powder	1
54429106	Drum Shoe	1
54479104	Shoe Adapter	1
54209504	Digital Thermometer	1
54209505	Digital Thermometer Probe	1
54209507	Digital Multimeter	1
54209550	Silicone Oil	1
54479078	Heat Resistant Grease (MT-78)	1
54209516	Test Chart OS-A3 (10pcs/set)	-
54209502	Test Chart OS-A3 (100pcs/set)	-
54429103	Launa Oil	1

OPTICS

1. Exposure Glass Removal

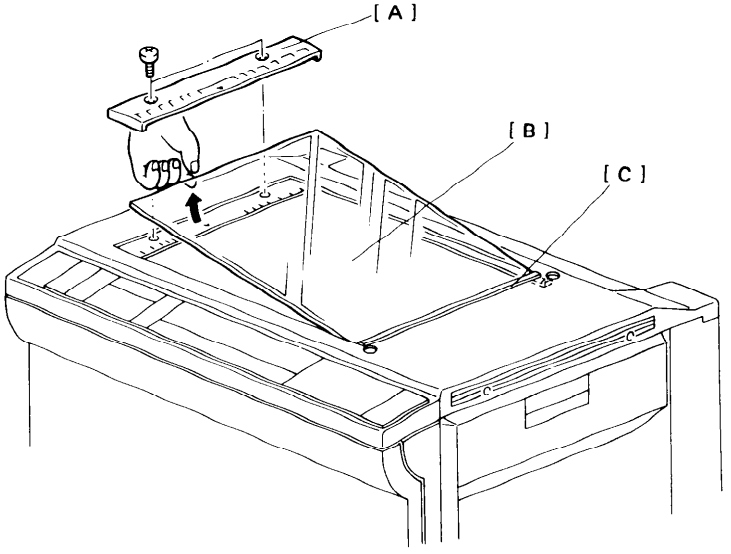

1. Take off the left scale [A] (2 short screws).
2. Grasp the left edge of the exposure glass [B] and lift it up slightly. Slide the other edge out from under the right glass holder [C]. Remove the exposure glass.

NOTE: When reinstalling the exposure glass:

- Make sure that the left edge of the glass is flush with the two tabs to the left of the scale plate.
- Make sure that the right glass holder firmly secures the exposure glass.

2. 2nd Mirror Removal

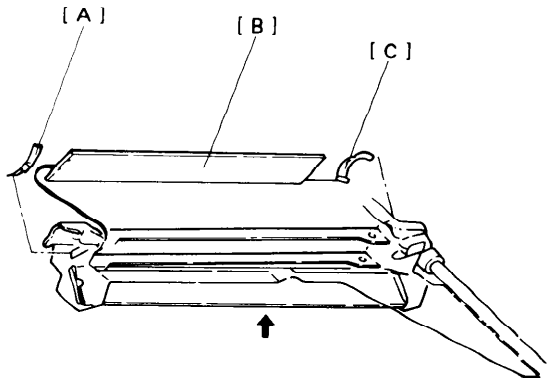

NOTE: This procedure is usually performed in order to make cleaning of the 3rd mirror easier.

1. Turn off the main switch.
2. Remove the exposure glass. (See Exposure Glass Removal.)
3. Move the 1st scanner 2/3 to the right by pushing it at the rear.
4. Remove the front spring plate [A] by pressing the top of the spring and moving the plate towards the front of the machine.
5. Carefully pull the 2nd mirror [B] towards the front of the machine to remove the rear spring plate [C].
6. Lift the mirror out of the machine rear side first.
7. Clean mirrors with silicone cloth or water, and then dry.

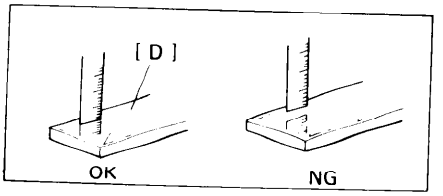

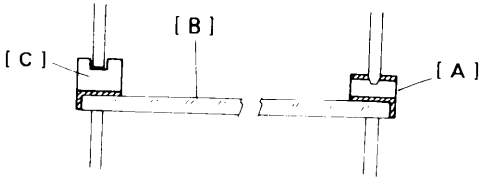

- To Reinstall -

8. Place the rear spring plate [A] in place and hold it with your finger.
9. Insert the 2nd mirror [B] into the front side plate cut out.
10. Insert the rear side of the mirror into the rear spring plate.
11. Locate the bottom of the front spring plate [C] and rotate the top of the spring into position.

NOTE: Make sure that you install the mirrors with the reflecting surface [D] facing the lens as shown.

3. Exposure Lamp Replacement

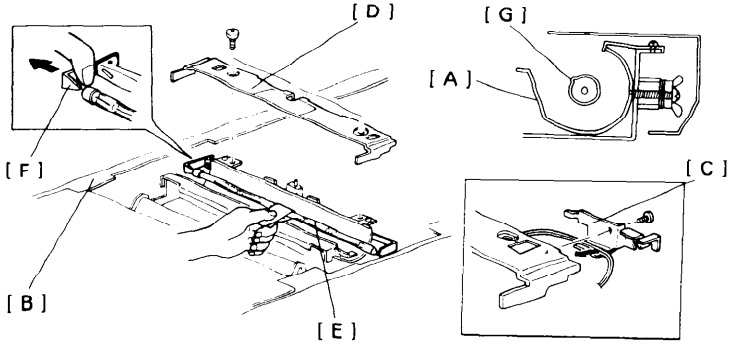

Do not touch the reflector [A] or the new exposure lamp with your bare hands. Use a strip of paper as shown. (Finger oil marks on the lamp or reflectors will be affected by the heat and will result in discoloration.)

1. Turn off the main switch.
2. Remove the exposure glass. (See Exposure Glass Removal.)
3. Move the first scanner to the position where the rear frame [B] is cut out.
4. Remove the front terminal cover [C] (1 screw) and the reflector cover [D] (2 screws) after unhooking the fiber optics cables.
5. Wrap a strip of paper around the exposure lamp [E] as shown.
6. Press the release lever [F] on the rear lamp terminal as shown and take out the lamp.
7. Install a new lamp using a strip of paper. (Set the front terminal first.)

NOTE: The blister [G] on the lamp must point towards the opening of the reflector as shown.

8. Reassemble the 1st scanner.

NOTE: When reinstalling the front terminal cover, be careful not to damage the fiber optics cable.

9. Check the exposure lamp position, the light intensity and auto ID sensor. (See Exposure Lamp Position, Light Intensity and Auto ID Sensor Adjustments.)

4. Auto ID Fiber Cable Replacement

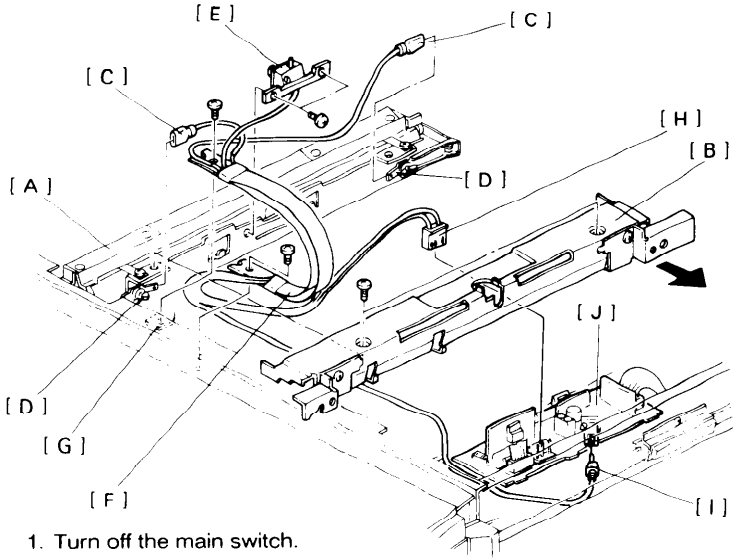

1. Turn off the main switch.
2. Remove the platen cover.
3. Remove the exposure glass (see Exposure Glass Removal) and the upper cover (11 screws).
4. Position the first scanner [A] in the cut out for scanner removal.
5. Move the reflector cover [B] in the direction of the arrow (2 screws).

NOTE: Unhook the fiber optics cable from the reflector cover.

6. Remove the exposure lamp leads [C] from the exposure lamp terminal [D].
7. Remove the auto ID sensor [E] (2 screws).
8. Remove the scanner harness [F] from the harness hold-down block [G] (1 screw).
9. Disconnect the exposure lamp harness [H] and the fiber optics cable [I] from the lamp regulator [J].
10. Replace the auto ID fiber optics cable.

5. Scanner Drive Wire Replacement

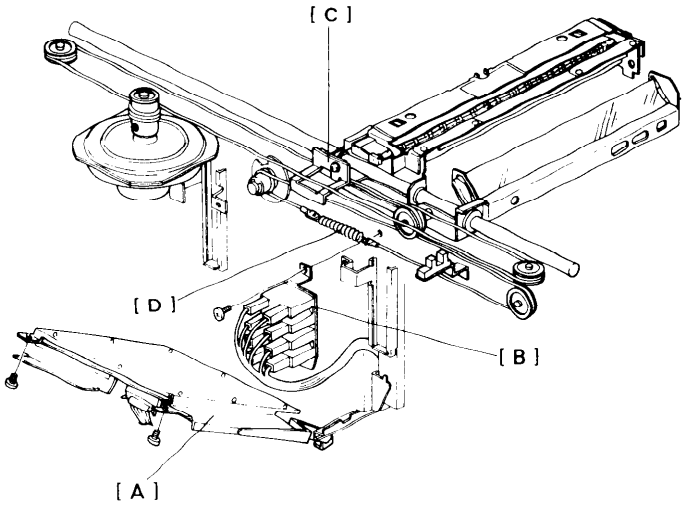

1. Turn off the main switch.
2. Remove the platen cover and the upper cover (11 screws).
3. Remove the left scale (2 short screws) and the exposure glass.
4. Remove the rear cover and lower the PCB plate [A] (2 screws each).
5. Remove the power relay bracket [B] (1 screw).
6. Loosen the wire clamp screw [C].
7. Unhook the tension spring [D] and remove the scanner drive wire.

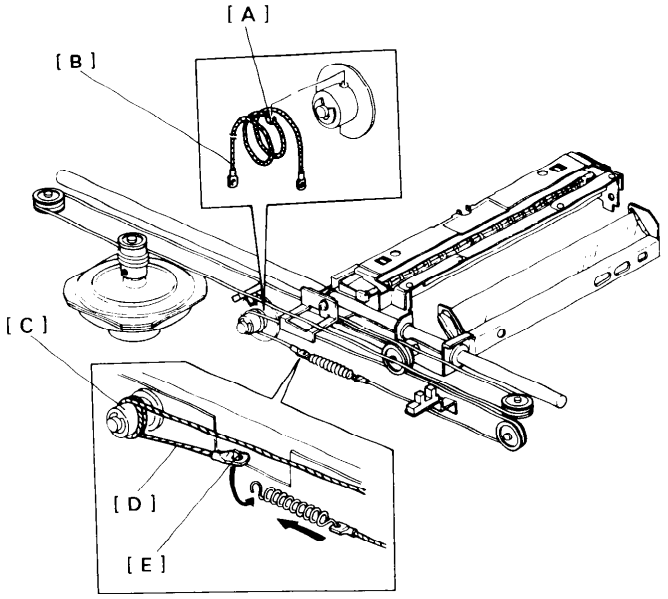

8. Position the bead [A] of the new wire [B] on the groove of the 2nd scanner drive pulley [C] and wrap the wire around the pulley with two and a half turns as shown.

9. Hook the short end [D] of the wire to the stopper [E] as shown.

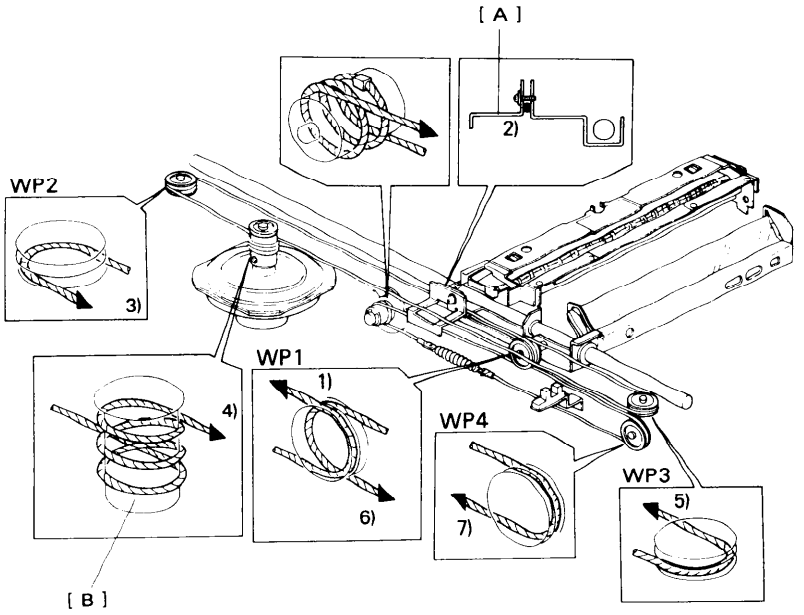

10. Run the scanner drive wire over the pulleys in the following order:

    1) Long end should be in the outer track (WP1)
    2) Lower side (wire clamp [A])
    3) Lower track (WP2)
    4) Three and a half turns from lower to upper (Scanner Drive Pulley [B]).
    5) Lower track (WP3).
    6) Inner track (WP1).
    7) Track (WP4).

11. Pull the ends of the wire together and join them with the tension spring. (See the preceding page.)

12. Rotate the scanner drive pulley and make sure that the scanner drive wire moves smoothly and that there is no overlapping around the scanner drive pulley.

NOTE: Step 12 is important! If overlapping of the scanner drive wire occurs, then the trail edge of A3 (11" x 17") copies may be reduced.

6. Lens Drive Motor Replacement

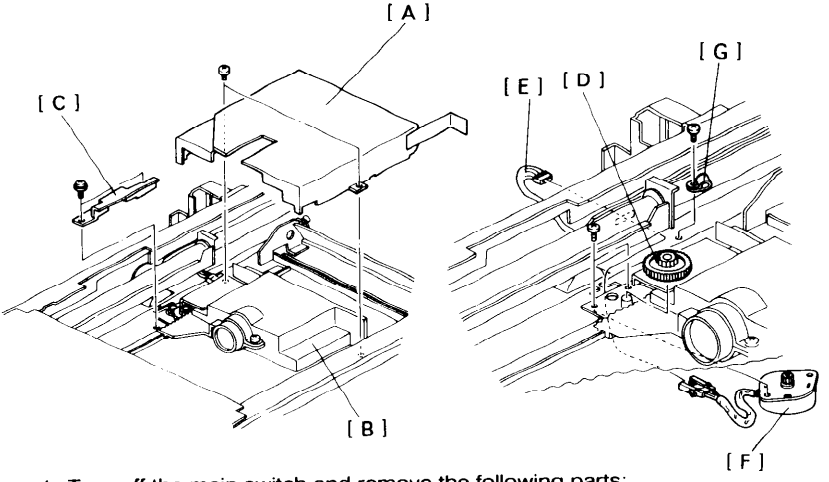

1. Turn off the main switch and remove the following parts:

   1) Development unit
   2) Charge corona unit (1 screw)
   3) Toner collection bottle
   4) Drum stay (1 screw and knob)
   5) Unit
   6) Drum flange and drum - should be covered with a shielding sleeve.

2. Remove the platen cover and the mounting studs.
3. Remove the left scale, the exposure glass, and the upper cover.
4. Move the scanner to the home position.
5. Remove the lens cover [A] (2 screws).
6. Move the lens unit [B] to a reduction position.
7. Remove the lens drive gear cover [C] (2 screws) and the idle gear [D].
8. Remove the rear cover and lower the PCB plate (2 screws each).
9. Disconnect the connector [E] (6p; black) of the lens drive motor [F] and remove the nylon clamp [G] (1 screw).
10. Replace the lens drive motor [F] from the front (2 screws).

7. 2nd Scanner Drive Motor Replacement

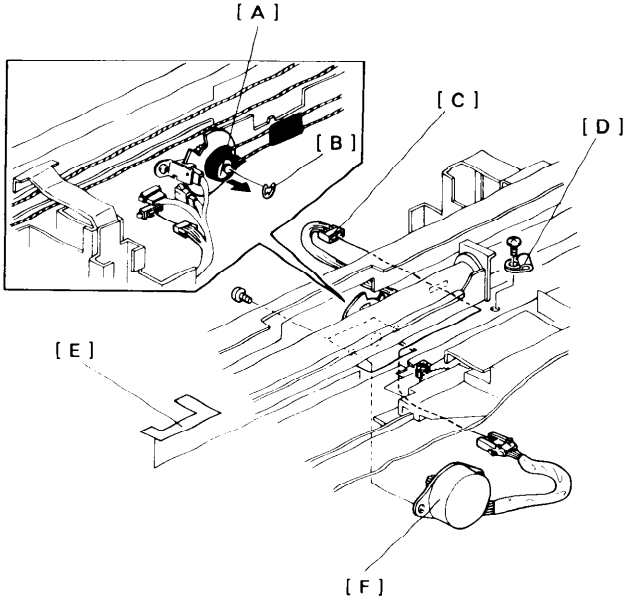

Perform Steps 1 through 6 of "Lens Drive Motor Replacement."

1. Tape the 2nd scanner drive pulley [A] and the scanner drive wire as shown to avoid the scanner wire coming off.
2. Remove the E-ring [B] from the 2nd scanner drive shaft and move the pulley slightly in the direction of the arrow.
3. Disconnect the 2nd scanner drive motor connector [C] (6p; white) and the nylon clamp [D] (1 screw).
4. Remove the mylar [E].
5. Replace the second scanner drive motor [F] from the front (2 screws).

8. Scanner Drive Motor Replacement

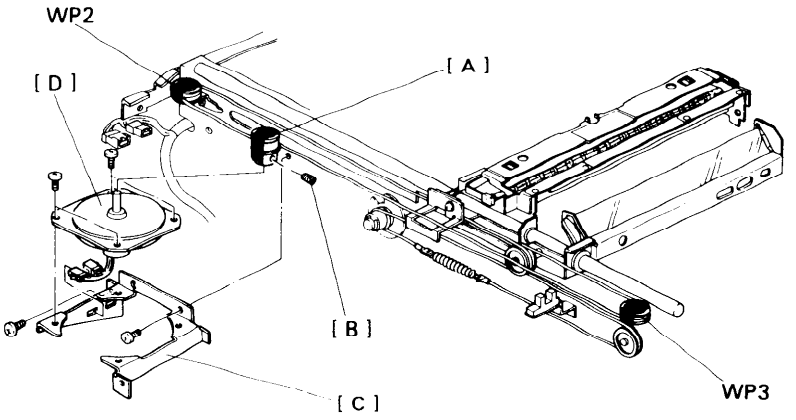

1. Turn off the main switch.
2. Remove the platen cover and the mounting studs.
3. Remove the left scale (2 short screws), the exposure glass, and the upper cover (9 screws).
4. Remove the rear cover 2 (screws).
5. Tape the scanner drive pulley [A] and pulleys WP2 and WP3 as shown to avoid the scanner wire coming off.
6. Loosen the scanner drive pulley (1 Allen screw [B]).
7. Remove the scanner drive pulley from the motor shaft.
8. Remove the motor bracket [C] (3 screws).
9. Remove the scanner drive motor [D] (4 screws and 2 connectors).
10. Install the new scanner drive motor and reassemble.

NOTE: a) When installing the scanner drive motor, make sure the 3p connector is positioned on the left-hand side.

b) When installing the scanner drive pulley on the motor shaft, the scanner drive pulley should be flush with the end of the motor shaft.

11. Examine the scanner drive wire for proper installation.

9. Lens Home Position Sensor Replacement

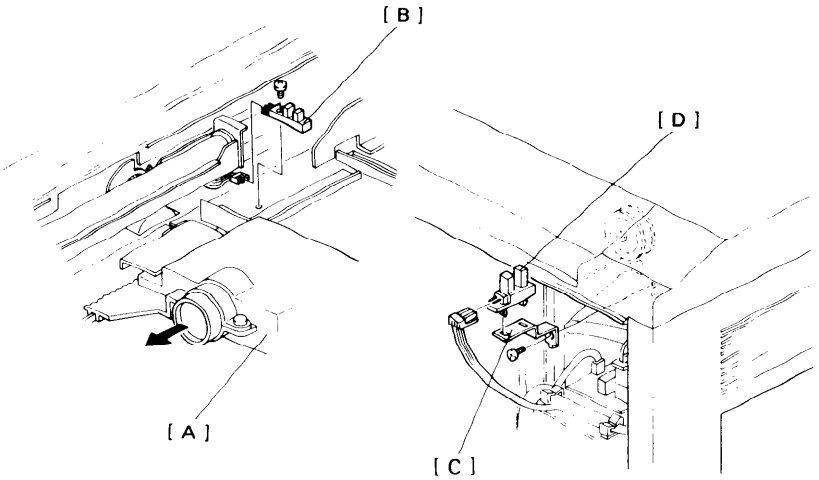

1. Turn off the main switch.
2. Remove the left scale and the exposure glass. (See Exposure Glass Removal.)
3. Remove the lens cover (2 screws) and move the lens unit [A] in the direction of the arrow.
4. Replace the lens home position sensor [B] (1 screw and 1 connector).

NOTE: Do not overtighten the screw when securing the new sensor.

10. Scanner Home Position Sensor Replacement

1. Turn off the main switch.
2. Remove the rear cover (2 screws).
3. Remove the sensor bracket [C] (1 screw).
4. Replace the scanner home position sensor [D] (1 connector).

11. 2nd Scanner Home Position Sensor Replacement

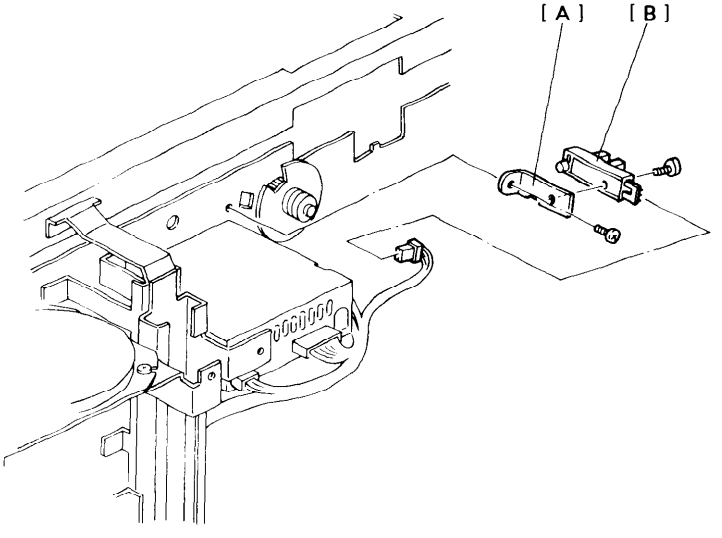

1. Turn off the main switch.
2. Remove the rear cover (2 screws).
3. Remove the sensor bracket [A] (1 screw).
4. Replace the 2nd scanner home position sensor [B] (1 screw and 1 connector).

NOTE: Do not overtighten the screw when securing the new sensor.

12. Exposure Lamp Position Adjustment

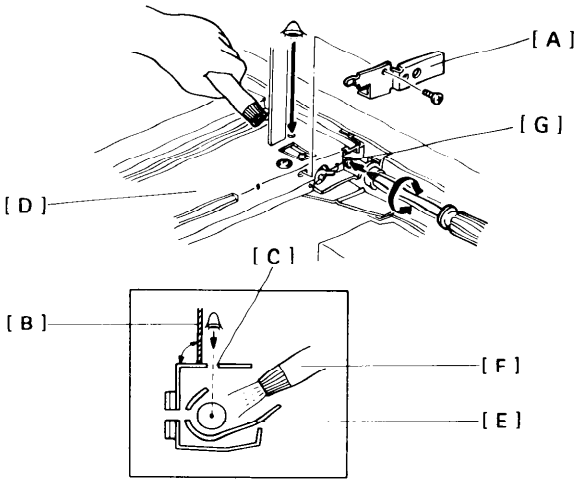

1. Turn off the main switch.
2. Remove the exposure glass. (See Exposure Glass Removal.)
3. Move the first scanner to the position where the rear frame is cut out.
4. Remove the front and rear terminal covers [A] (1 screw each).

- Horizontal Adjustment -

5. Position a scale [B] near the rear sight hole [C] of the reflector cover [D] to form a right angle for viewing alignment as shown.
6. View the lamp filament [E] through the sight hole in parallel with the scale. The filament should be directly beneath the sight hole.

NOTE: If the filament cannot be seen easily, use a pen light [F] to illuminate the exposure lamp.

7. To correct the position of the filament turn the adjusting screw [G].
8. Repeat the above steps from 5 to 7 with the front sight hole.

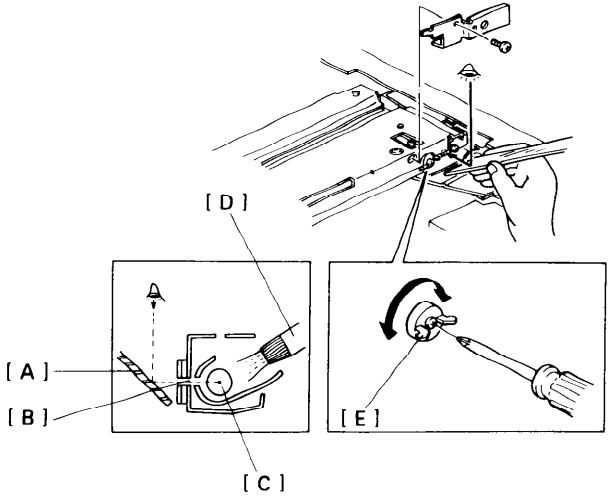

- Vertical Adjustment -

9. Position a mirror [A] beside the rear sight hole [B] at at 450 angle as shown.

NOTE: If you do not have a mirror, remove and use the 2nd mirror.

10. View the lamp filament [C] through the sight hole reflected on the mirror. The filament should be level with the sight hole.

NOTE: If the filament cannot be seen easily, use a pen light [D] to illuminate the exposure lamp.

11. To correct the position of the filament, turn the adjusting knob [E].

12. Repeat the above steps from 9 to 11 with the front sight hole.

13. 2nd Scanner Hight Adjustment

ADJUSTMENT STANDARD: Parallel between the eccentric cam and the 2nd scanner (as shown in figure).

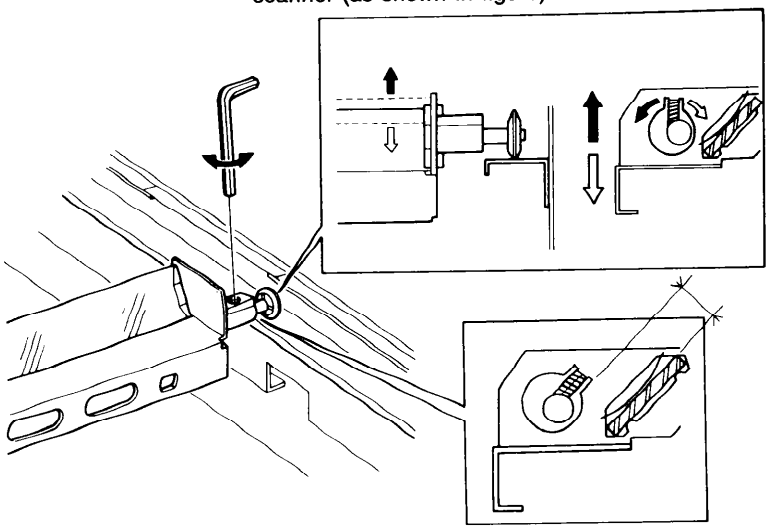

NOTE: It is required to adjust the 2nd Scanner height when non square images appears on a copy.

1. Turn off the main switch.
2. Remove the exposure glass. (See Exposure Glass Removal.)
3. Loosen the allen screw on the eccentric cam[A] using a allen screw key.
4. Adjust the hight by turning the eccentric cam.

   Clock wise: The height is decreased.
   Counterclockwise: The height is increased.

DEVELOPMENT AND TONER SUPPLY

1. Developer Replacement

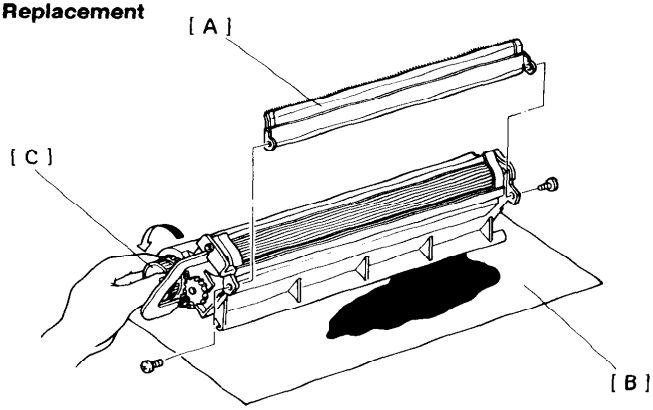

- Be careful not to bend the bias terminal.
- Be careful not to damage the upper brush seal.
- After removing used developer, clean the drive gears and end magnets.

1. Take out the development unit and remove the toner tank (2 screws).
2. Remove the development brush cover [A] (2 screws) and clean it.
3. Set the development unit on a large sheet of paper [B] with the unit's inlet facing downward.
4. Turn the paddle roller knob [C] counterclockwise. The developer will fall out onto the paper.
5. Hold the unit at an angle and dump out the developer that has collected at the ends of the development unit.
6. Repeat the above steps until you have removed all of the developer.
7. Clean the development end magnets.
8. Turn the unit right-side up and pour in one bottle of developer (1 kg).
9. Put the used developer into the empty bottle or disposal bag and dispose it according to the local regulations.
10. Reassemble the toner tank (2 screws) and replace the development unit.

2. Image Density Sensor/PTL Removal

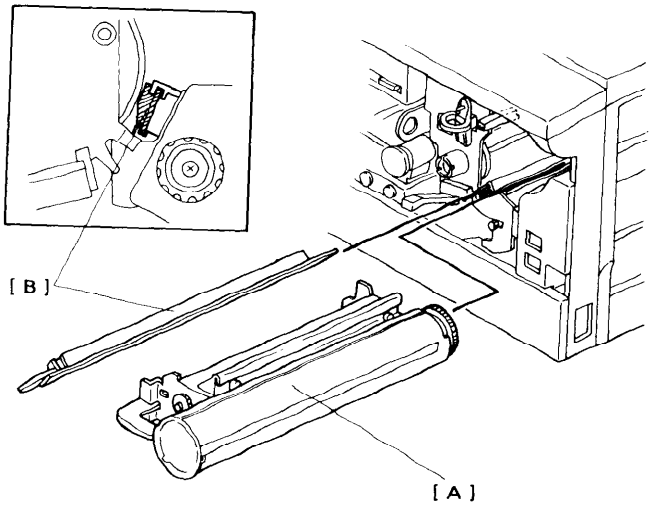

1. Open the front door.
2. Remove the development unit [A].
3. Slide out the image density sensor/PTL [B].
4. Clean and reinstall the ID sensor/PTL.

NOTE: When sliding in the ID sensor/PTL board, make sure that the board is properly located on the rails as shown.

5. Reinstall the development unit.

3. Color Toner End Sensor Replacement

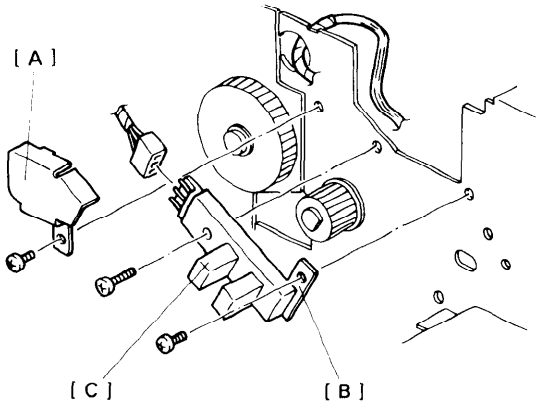

1. Turn off the main switch and remove the following parts:

   - Development unit
   - Charge corona unit (1 screw)
   - Drum stay (1 screw and 1 knob)
   - Cleaning unit
   - Drum flange and drum - should be covered with a shielding sleeve
   - Toner shield glass.

2. Remove the connector cover [A] (1 screw).
3. Remove the sensor bracket [B] (1 screw).
4. Remove the color toner end sensor [C] (1 screw).
5. Reinstall the above parts.

NOTE: Do not overtighten the screw when securing the new sensor.

4. Color Toner Sensor Replacement

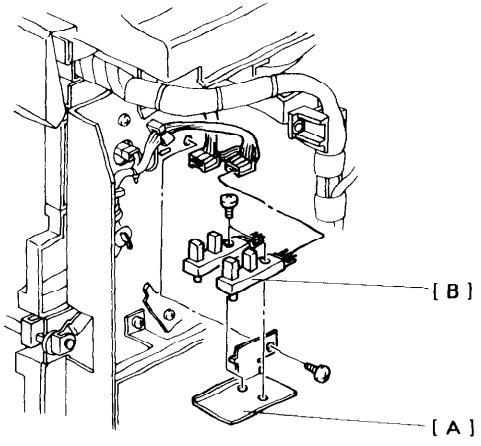

1. Remove the rear cover (2 screws).
2. Remove the color toner sensor bracket [A] (1 screw).
3. Replace the color toner sensors [B] (1 screw and 1 connector each).
4. Reassemble.

NOTE: Do not over tighten the screw when securing the new sensor.

5. Toner Supply Clutch Lubrication

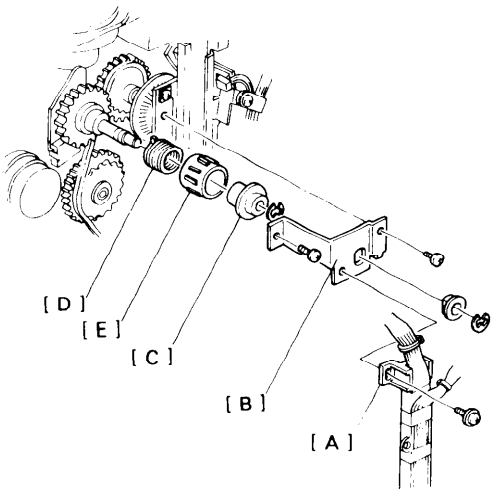

1. Turn off the main switch.
2. Remove the rear cover (2 screws).
3. Remove the screw securing the dc harness guide [A] to the toner supply clutch support bracket [B].
4. Remove the toner supply clutch support bracket.
5. Remove the clutch hub [C] (1 Allen screw), the spring [D], and the sleeve [E].
6. Clean the clutch hub, spring, and gear.
7. Apply the grease (Mobil Temp 78) inside the spring.

NOTE: Make sure that the right-angle projection is inside the notch of the sleeve.

6. Image Density Sensor Check and Adjustment

NOTE: ID sensor adjustment is required in the following cases:

- When the ID sensor/PTL board is replaced.
- When the main board is replaced.
- When the drum has been replaced and Vsg is out of standard.
- When a problem with toner supply occurs and checking the ID sensor shows that Vsg is not within specifications.

ADJUSTMENT STANDARD: +4 ± 0.2V

METHOD A: Readout from the CPU

1. Clean the following parts:
   - Image density sensor
   - Optics (Mirrors, reflectors, lens, and toner shield glass)
   - Charge corona wire with dry cloth
   - Erase lamp unit
   - Quenching lamp.
2. Place 2 or 3 sheets of paper (A3 or 11" x 17") on the exposure glass and lower the platen cover.
3. Confirm that the main switch is off and turn on DIP SW No. 1-1 and No. 1-8 under the instruction cards on the operation panel.

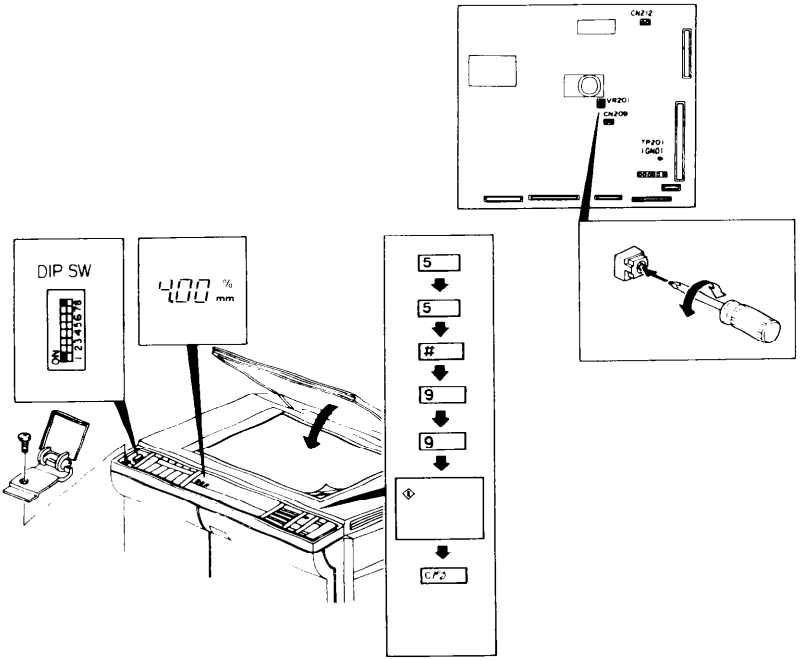

4. Turn on the main switch and allow it to warm up.
5. Enter "55" using the Number keys, then press the Enter key.
6. Enter "99" in the copy counter.
7. Press the Start key to show Vsg in the magnification indicator.
8. If Vsg is incorrect, remove the rear cover (2 screws).
9. While Vsg is displayed, adjust VR201 on the main board to +4 ± 0.2 volts.

NOTE: VR201 clockwise ⇒ increase voltage
VR201 counterclockwise ⇒ decrease voltage.

10. Press the C/S key to stop the copier.
11. Turn off the main switch and turn off DIP SW No. 1-1 and No. 1-8.

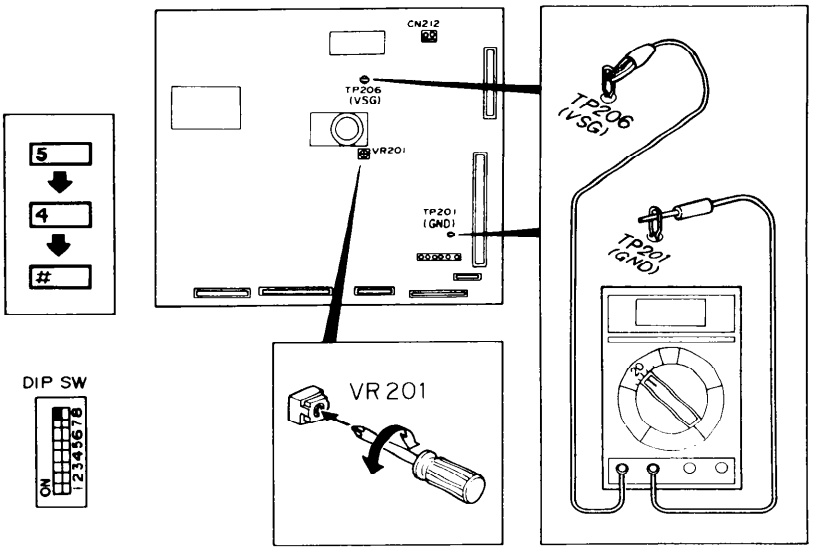

Method B: With a Digital Multimeter

Follow steps 1 through 2 of method A.

1. **Confirm that the main switch is off and turn on DIP SW 1-8 on the Operation Panel.**
2. Hook up the multimeter leads as follows:
   Positive lead to TP206 (Vsg)
   Negative lead to TP201 (Ground) on the main board after selecting the 20-volt-dc setting.
3. Turn on the main switch and enter "54" in the copy counter, then press the Enter key. PTL and ID sensor LED turn on and the drum rotates for about 10 seconds.
4. Adjust VR201 to give a reading of +4 ± 0.2 volts.
5. Turn off the main switch; then, turn off DIP 1-8.

7. Doctor Gap Adjustment

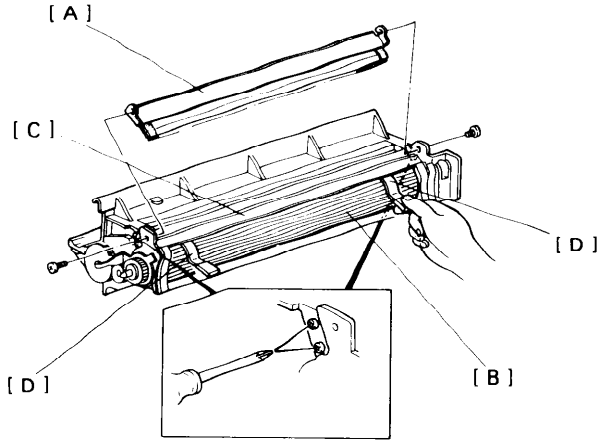

ADJUSTMENT STANDARD: 0.76 ± 0.1 mm (0.03" ± 0.004")

NOTE: This adjustment is done only when the doctor blade has been either removed or replaced.

1. Remove the upper brush seal cover [A] (2 screws).
2. Turn the development roller sleeve [B] in the opposite direction of normal operation to drop the developer into the development tank.
3. Loosen the doctor plate [C] (4 screws).
4. Clean the development roller and insert the Doctor Gap gauges [D] (Part Number #52159500) near both ends of the development roller between the doctor blade.

NOTE: Ensure that there is no developer between the development unit and the gauses.

6. Rotate the gauges downward to remove them.

Do not scratch the sleeve with the gauges.

7. Reassemble the development unit.

CLEANING

1. Cleaning Unit Removal

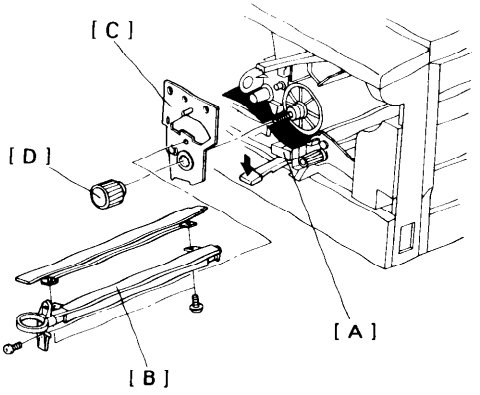

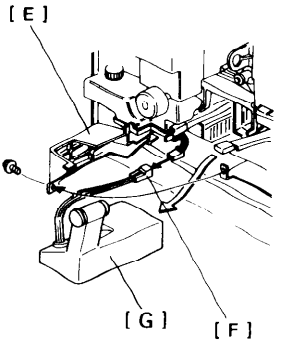

1. Remove the development unit and the PTL board.
2. Lower the T/S corona unit [A].
3. Remove the charge corona unit [B] (1 screw) and the drum stay [C] (1 knob [D] and 1 screw).

NOTE: The drum stay knob has a reverse thread.

4. Swing the toner collection bottle cover [E] to the left (1 screw).
5. Disconnect the toner collection bottle sensor [F] (1 connector).
6. Remove the toner collection bottle [G].
7. Slide out the cleaning unit.

Be sure the pick-off pawls are kept away from the drum when removing the cleaning unit or serious drum damage will result.

2. Cleaning Blade Replacement

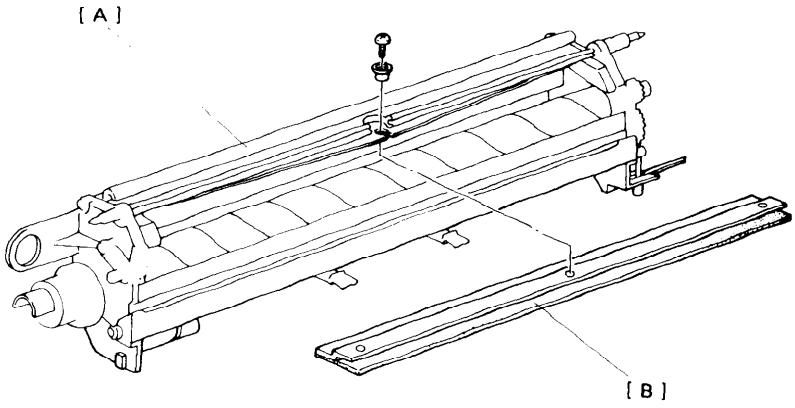

1. Take out the cleaning unit [A]. (See Cleaning Unit Removal.)
2. Remove the cleaning blade [B] (1 screw and 1 bushing).
3. Install the new cleaning blade.

- Be careful not to touch the edge of the new blade.
- After installing the blade, make sure that the blade swivels.

3. Cleaning Brush Replacement

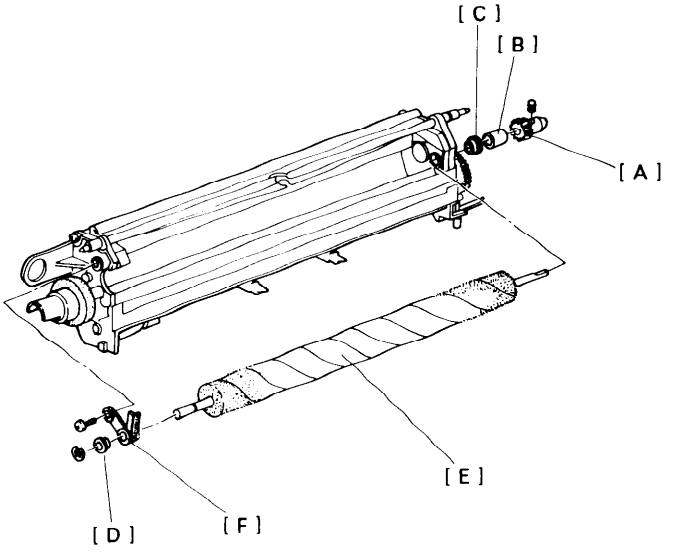

1. Remove the cleaning unit drive gear [A] (1 Allen screw), the collar [B], and the bushing [C] from the rear end of the cleaning brush shaft.
2. Remove the bushing [D] from the front end (1 E-ring).
3. Take out the cleaning brush [E] with the brush shaft holder [F] (1 screw).
4. Take the brush shaft holder off the front end.
5. Install the new cleaning brush and reassemble the unit.

Do not touch the new brush; handle only the shaft.

4. Blade Scraper Replacement

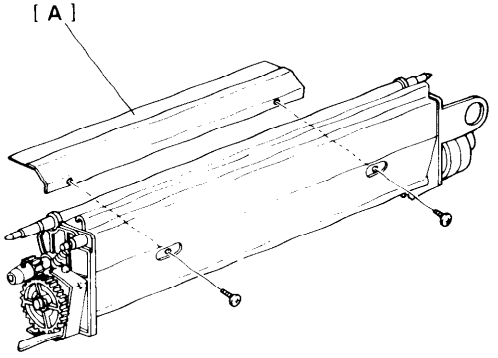

1. Remove the cleaning blade. (See Cleaning Blade Replacement.)
2. Remove the cleaning brush. (See Cleaning Brush Replacement.)
3. Take out the blade scraper [A] (2 screws).
4. Clean the inside of the cleaning unit, and install a new blade scraper.

5. Toner Collection Coil Replacement

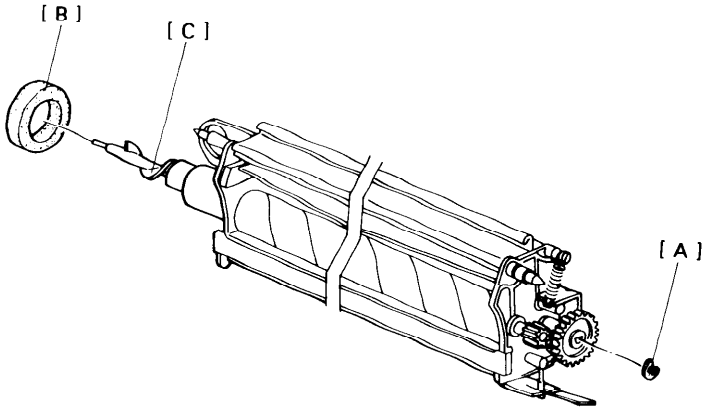

1. Remove the E-ring [A] from the toner collection coil shaft.
2. Remove the bottle joint seal [B].
3. Slide out the toner collection coil [C] from the front side of the cleaning unit.

Toner will fall out when the coil is slid out of the cleaning unit.

4. Clean the inside of the unit and install a new toner collection coil.

6. Pick-off Pawl Replacement

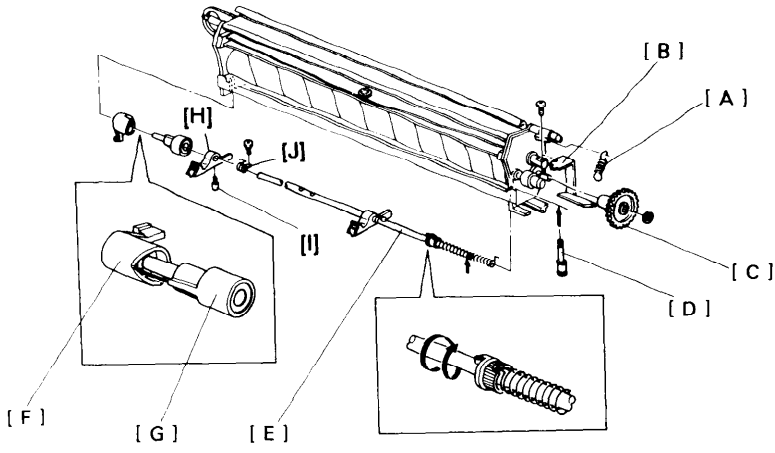

1. Remove the release spring [A] and the pressure lever [B] (1 screw).
2. Remove the collection coil gear [C] from the the toner collection coil shaft (1 E-ring).
3. Remove the pawl shaft pin [D] from the pawl shaft [E].
4. Push the pawl shaft to the rear and slide off the cam holder [F] from the front side plate.
5. Take out the whole pawl shaft assembly.
6. Slide off the cam holder and cam rider [G].
7. Slide off the front pick-off pawl [H] (1 positioning pin [I]) and the front pawl spring [J] (1 screw).
8. Slide off the rear pick-off pawl (1 positioning pin).

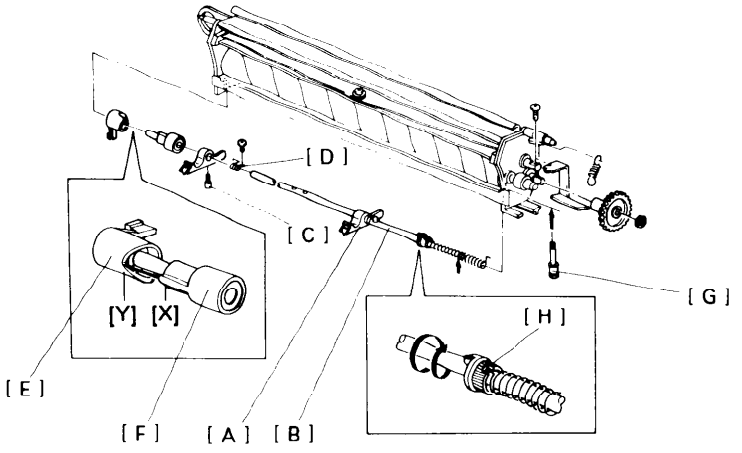

9. Set new pick-off pawls [A] on the shaft [B] and position them with the positioning pins [C] and pawl springs [D].
10. Assemble the pawl shaft assembly and set it on the cleaning unit sliding in the rear end of the shaft to the rear side plate.

NOTE: - When installing the cam holder [E] and the cam rider [F], align X with Y as shown in the figure.

- Make sure that the spring end is in the small hole on the rear side plate.

11. Install the pawl shaft pin [G].
12. Push the spring collar [H] to the rear and rotate it with one turn as shown in the figure. Then set the collar on the pin.

NOTE: Make sure that the end of the spring is correctly positioned in the groove of the collar.

13. Reassemble.

7. Cleaning Pressure Adjustment

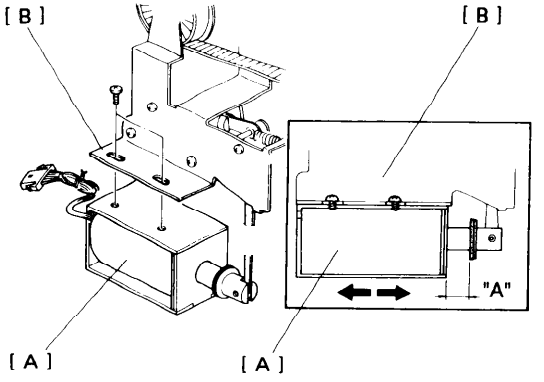

ADJUSTMENT STANDARD: A = 13 ± 0.5 mm (0.51" ± 0.02")

1. Turn off the main switch.
2. Remove the rear cover (2 screws).
3. Disconnect the fiber cables from the interface board if the DF is installed.
4. Lower the main PCB (2 screws).
5. **Disconnect the AD harness from the T&S power pack and remove it (1 screw).**
6. Lightly secure the cleaning solenoid [A] at the center of the bracket [B].
7. Position the cleaning solenoid to measuring the gap "A", then secure the cleaning solenoid.

NOTE: When adjusting the gap "A", make sure that the solenoid plunger is all the way to the right.

QUENCHING

1. Quenching Lamp Replacement

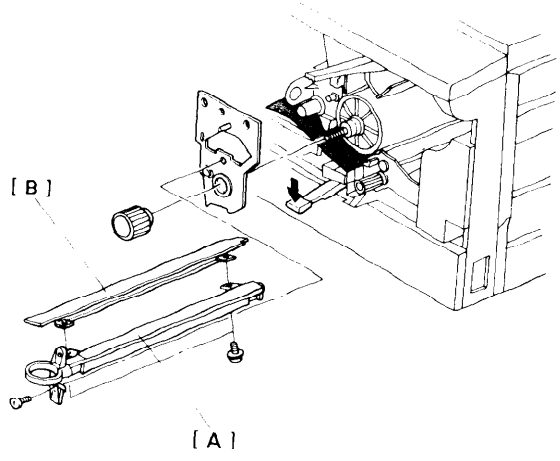

1. Remove the charge corona unit [A] (1 screw).
2. Remove the quenching lamp [B] from the charge corona unit (2 screws).

PAPER FEED

1. Manual Feed Table Removal

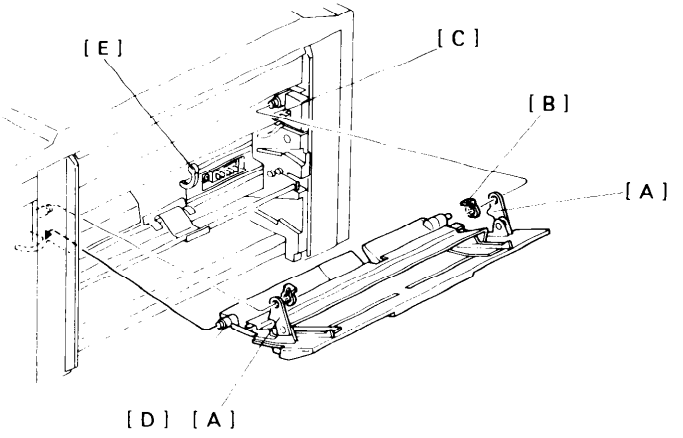

1. Remove the upper manual feed table hinges [A] from the copier (1 snap ring [B] each side).

Be careful not to damage the manual feed sensor [C].

2. Slide the lower manual feed table hinge pins [D] down their respective grooves to remove the table.

Be careful not to damage the paper end feeler [E].

2. Feed Rollers and Friction Pad Replacement

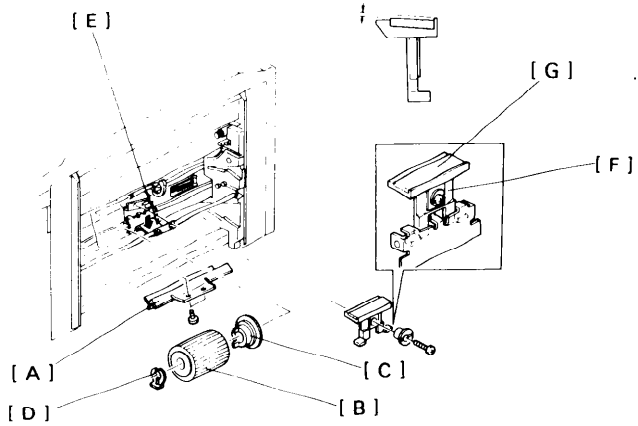

1. Remove the manual feed table (See Manual Feed Table Removal).
2. Remove the upper front guide plate [A] (2 screws).

NOTE: Steps 1 and 2 are for 1st feed station only.

3. Remove the feed roller [B] and hub [C] (1 snap ring [D]).
4. Press down on the cassette arm [E] and remove the friction pad holder [F] (1 screw and 1 cam roller).
5. Strip the old friction pad [G] off and clean the surface of the friction pad holder.
6. Install the new friction pad.
7. Grease the friction pad holder swivel point with Mobil Temp 78.
8. Reinstall the friction pad holder (1 screw and 1 cam roller) while holding down the cassette arm.

NOTE: - Make sure the legs of the friction pad holder are positioned under the spring loaded pad positioning mechanism.

- Adjust the gap between the feed roller and the friction pad. (See "Feed Roller/Friction Pad Gap Adjustment")

9. Reinstall the feed roller and hub (1 snap ring).

3. Registration Sensor Replacement

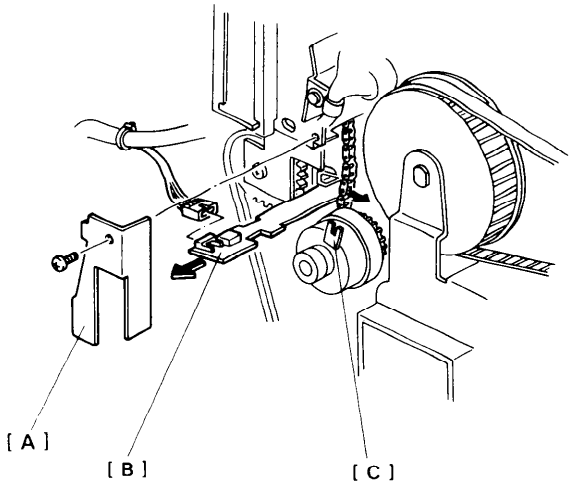

1. Remove the rear cover (2 screws) and lower the PCB plate (2 screws).
2. Remove the support bracket [A] (1 screw).
3. Move the main drive chain to the right of the PCB cut-out and slide out the registration sensor [B] (1 connector).

NOTE: - When sliding in the registration sensor board, make sure that the board is properly located on the rails.

- When reinstalling the support bracket, make sure that the bracket is properly engaged with the groove of the registration clutch stopper [C].

- The support bracket is responsible for holding the registration sensor in place; so, make sure it is correctly positioned.

4. Manual Feed Sensor Replacement

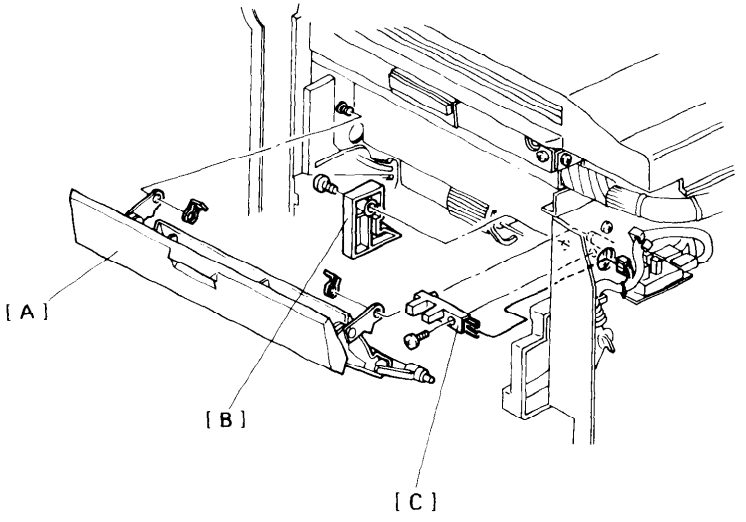

1. Remove the manual feed table [A]. (See Manual Feed Table Removal.)
2. Remove the rear cover (2 screws).
3. Remove the right rear cover (2 screws).
4. Remove the sensor cover [B] (1 screw).
5. Remove the manual feed sensor [C] (1 screw, 1 connector).
6. Install a new sensor.

NOTE: Do not overtighten the screw when securing the new sensor.

5. Paper End Sensor Replacement

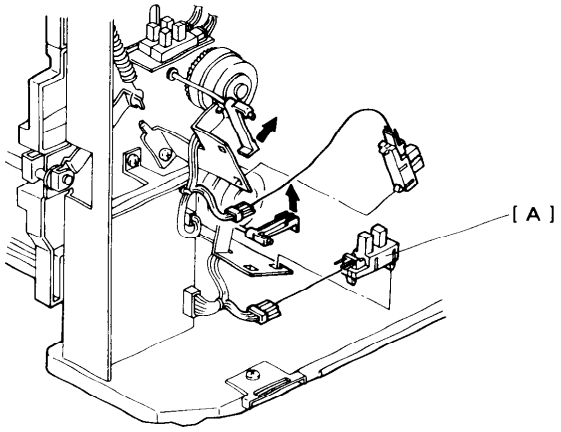

1. Remove the rear cover (2 screws).
2. Remove the paper end sensors [A] (1 connector each).

Be careful not to damage the paper end sensor actuator.

6. Paper Size Sensor Replacement

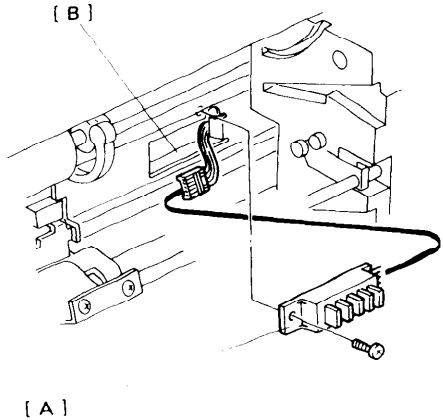

1. Remove the paper size sensor [A] from the sensor bracket [B] (1 screw and 1 connector).
2. Install a new sensor. Position the projection of the sensor in the hole of the sensor bracket.

NOTE: Do not overtighten the screw when securing the new sensor.

7. Feed Pressure Adjustment

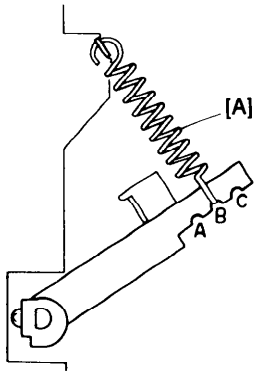

1. Remove the rear cover.
2. Move the pressure spring [A] to the desired position (see the following table).

Setting	Feed Pressure	Function
A	350 g	To prevent multi-feed.
B	400 g	*Factory setting
C	450 g	To prevent feed jam.

8. Registration Clutch Adjustment

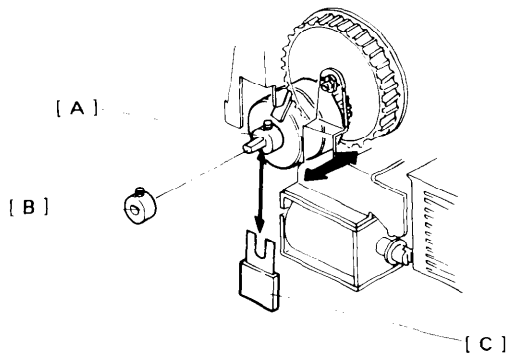

ADJUSTMENT STANDARD: 0.1 mm (0.004")

1. Remove the rear cover (2 screws).
2. Take the adjusting collar [A] off from the registration roller shaft (1 Allen screw).
3. Loosen the screw in the lock collar [B] on the clutch which is to be adjusted (1 Allen screw).
4. Place the adjusting collar next to the lock collar on the clutch shaft.
5. Position a 0.1 mm gap gauge [C] (Part number #52059101) between the two collars.
6. Push the collars and the thickness gauge back until the clutch presses against the rear plate. Tighten the Allen screw in the adjusting collar.
7. Remove the thickness gauge and move the lock collar against the adjusting collar. Tighten the Allen screw in the lock collar.

9. Feed Roller/Friction Pad Gap Adjustment (1st and 2nd Feed Station)

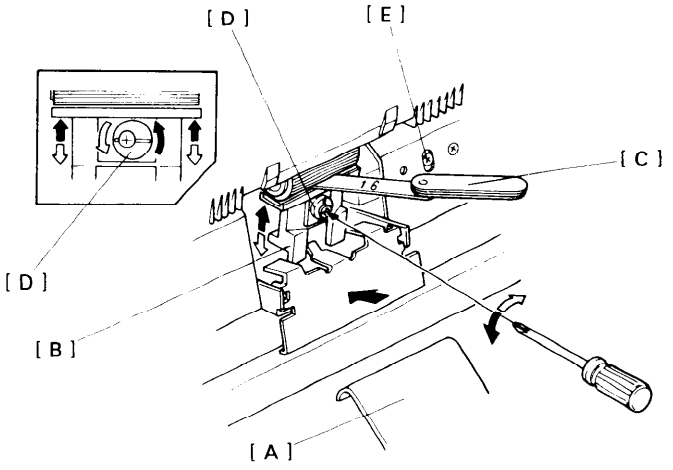

NOTE: This procedure is required when replacing the friction pad.

ADJUSTMENT STANDARD: 1.6 ± 0.3 mm (0.06" ± 0.01")

1. Remove the pressure arm [A] (2 screws).
2. Push down the friction pad holder [B] to make the gap between the feed roller and the pad.
3. Measure the gap between the feed roller and the pad using a gap guage [C].
4. If the gap is not within the adjustment standard, adjust the gap by turning the cam roller [D].

Clockwise:	The gap is decreased.
Counterclockwise:	The gap is increased.

NOTE: Do not adjust the flat screws [E] because they are factory pre-set.

FUSING

1. Fusing Unit Removal

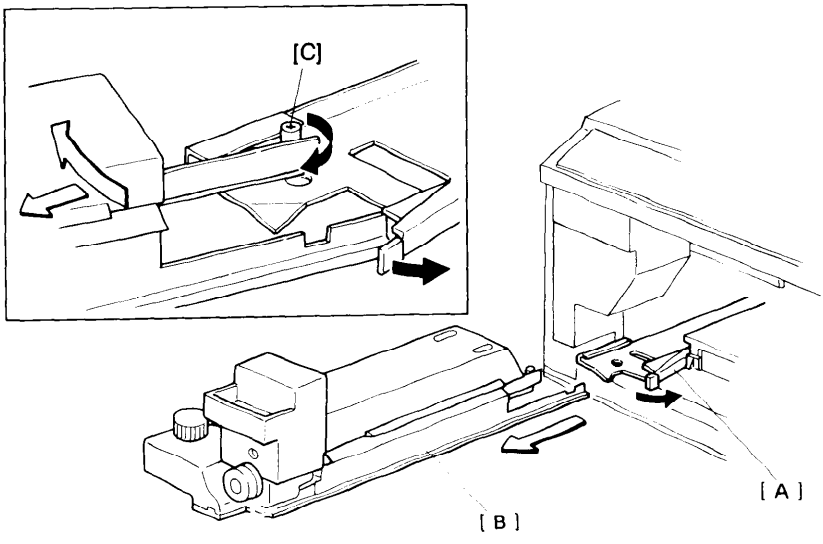

1. Open the left and right front doors.
2. Push the fusing unit release lever [A] to the right.
3. Pull out the fusing unit [B] until it is fully extended.
4. Push the fusing unit release lever to the right, move the fusing unit to the left to disengage the stopper pin [C], and remove the unit from the copier.

NOTE: Keep the fusing unit in an upright position so that silicone oil does not spill.

2. Oil Blade Replacement

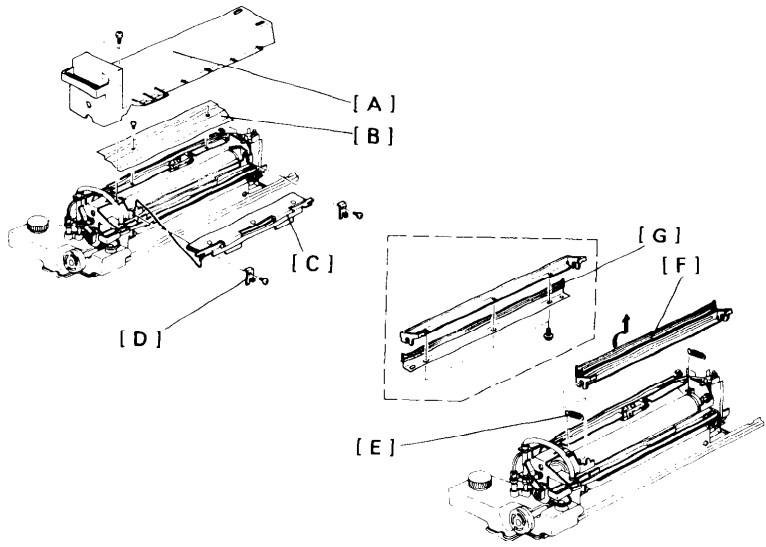

1. Remove the fusing unit. (See Fusing Unit Removal.)
2. Remove the fusing unit cover [A] (2 screws).
3. Remove the pressure plate [B] (2 screws).
4. Remove the oil supply pad [C] (2 screws and 2 clamp plates [D]).
5. Unhook the two tension springs [E].
6. Turn and remove the oil blade assembly [F].
7. Remove all screws (3) from the oil blade assembly and remove the blade [G].

3. Hot Roller Replacement

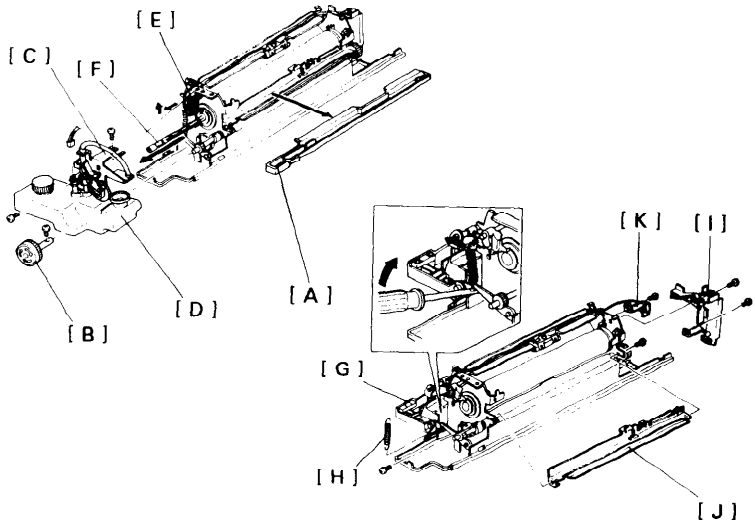

1. Remove the oil blade. (See Oil Blade Replacement.)
2. Remove any excess oil from area surrounding the oil sump [A] and remove the oil sump.
3. Remove the fusing unit knob [B] (1 screw).
4. Remove the oil pump mechanism [C] with the oil tank [D] (2 screws and 1 connector).
5. Rotate the front lamp terminal [E] and remove the fusing lamp [F].

Do not touch the fusing lamp with oily fingers because oil marks may damage the lamp.

6. Swing down the fusing exit assembly [G] and unhook the pressure springs [H].
7. Remove the harness support bracket [I] (2 screws and 2 hooks).
8. Remove the thermistor bracket [J] (2 screws).
9. Remove the rear lamp terminal [K] (1 screw and 1 hook).

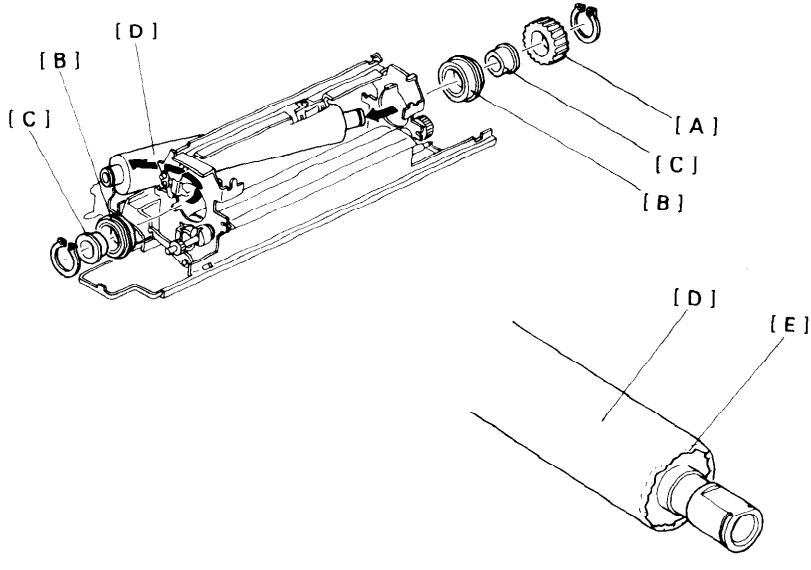

10. Remove the hot roller gear [A], bearings [B], and the collars [C] from both ends of the hot roller [D] (1 C-ring each).
11. Slide the hot roller slightly to the rear and remove the hot roller as shown.
12. Tear the protective paper [E] from the ends of a new hot roller and install it.
13. After the new hot roller is installed, remove the protective paper.

NOTE: When reinstalling the fusing lamp, make sure it does not touch the inside of the hot roller.

4. Pressure Roller Replacement

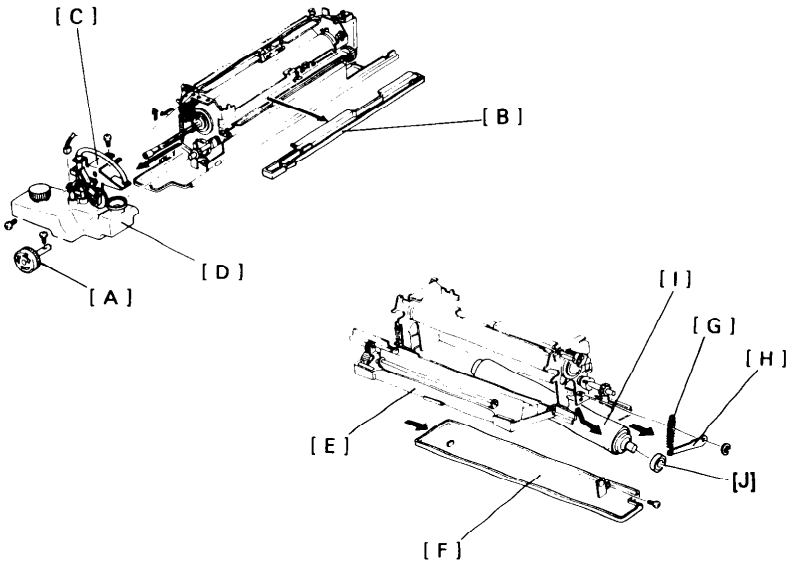

1. Remove the fusing unit and cover (2 screws).
2. Remove the fusing unit knob [A] (1 screw).
3. Remove any excess oil from the oil sump [B].
4. Remove the oil pump mechanism [C] with the oil tank [D] (2 screws and 1 connector).
5. Open and remove the fusing exit assembly [E] (1 E-ring, 1 connector, and 2 springs).
6. Remove the oil pan [F] (4 screws and 4 hooks).
7. Remove the front pressure spring [G].
8. Remove the front pressure lever [H] (1 E-ring).
9. Lift up the upper part of the fusing unit and remove the pressure roller [I].
10. Install the bearings [J] on the new pressure roller.

5. Hot Roller Stripper Replacement

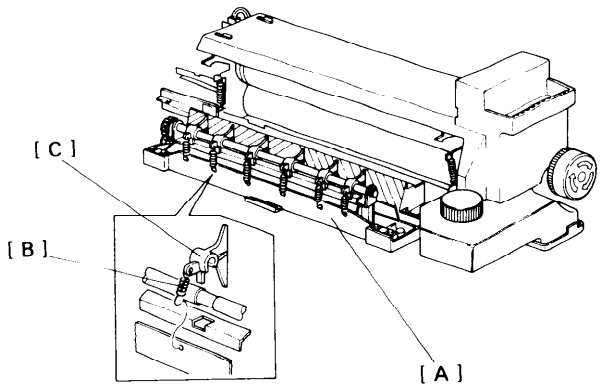

1. Pull out the fusing unit and open the fusing exit assembly [A].
2. Unhook the springs [B] and remove the hot roller strippers [C].
3. Install new strippers and connect the springs.

NOTE: It is best to replace strippers and springs as a set.

6. Thermistor Replacement

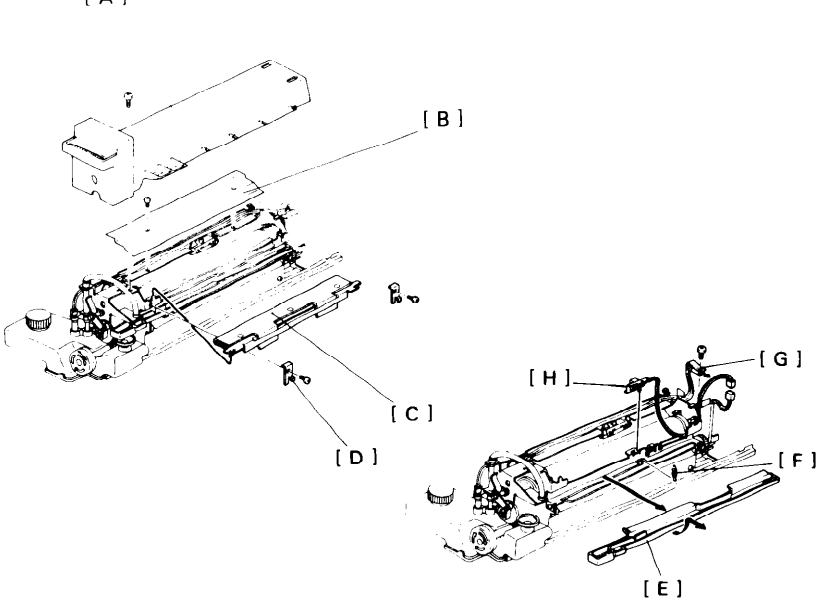

1. Remove the fusing unit.
2. Remove the fusing unit cover [A] (2 screws).
3. Remove the pressure plate [B] (2 screws).
4. Remove the oil supply pad [C] (2 screws and 2 clamp plates [D]).
5. Remove any excess oil from the oil sump and remove the oil sump [E].
6. Unhook the thermistor spring [F].
7. Remove the thermistor wire from the metal wire clamp [G] (1 screw) and remove the thermistor [H] (1 connector).
8. Replace the thermistor and reassemble.

NOTE: Make sure that the thermistor is properly in contact with the hot roller.

7. Thermofuse Replacement

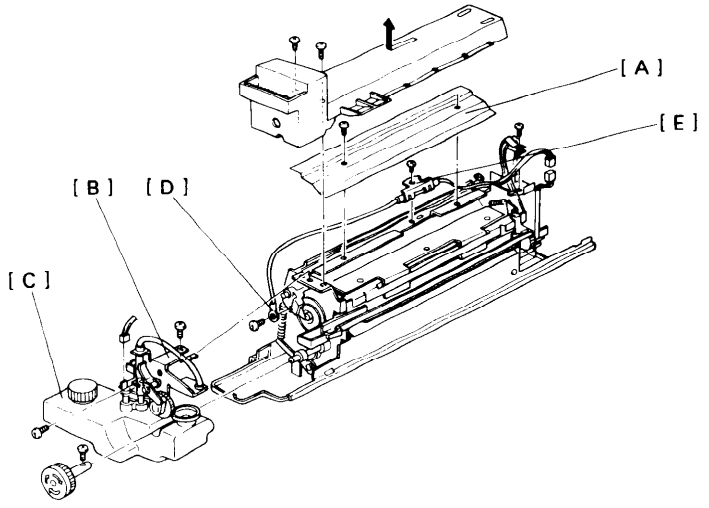

1. Perform steps 1 to 3 of "Thermistor Replacement".
2. Remove the thermofuse bracket [A] (1 screw).
3. Remove the oil pump mechanism [B] with the oil tank [C] (2 screws and 1 connector).
4. Remove the thermofuse wire from the front lamp terminal [D] (1 screw).
5. Disconnect the thermofuse [E] (1 connector) and install the new thermofuse.

8. Fusing Pressure Adjustment

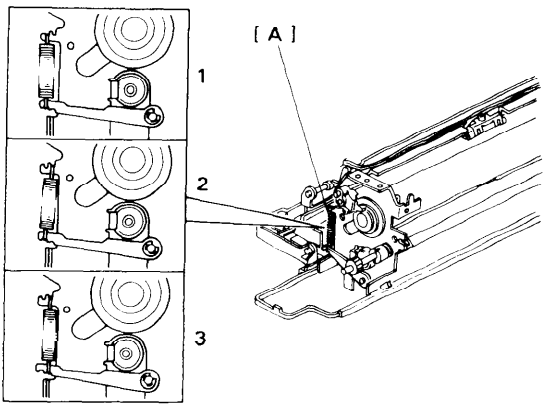

1. Remove the fusing unit.
2. Remove the fusing unit cover (2 screws).
3. Remove the fusing unit knob (1 screw).
4. Remove the oil pump mechanism along with the oil tank (2 screws, 1 connector).
5. Move the pressure springs [A] to the desired position. See the following table:

Setting	Fusing Pressure	
1	11.9 kg	
2	14.9 kg	* Factory Setting
3	16.7 kg	

NOTE: Position the front and rear springs in the same position.

9. Entrance Guide Hight Adjustment

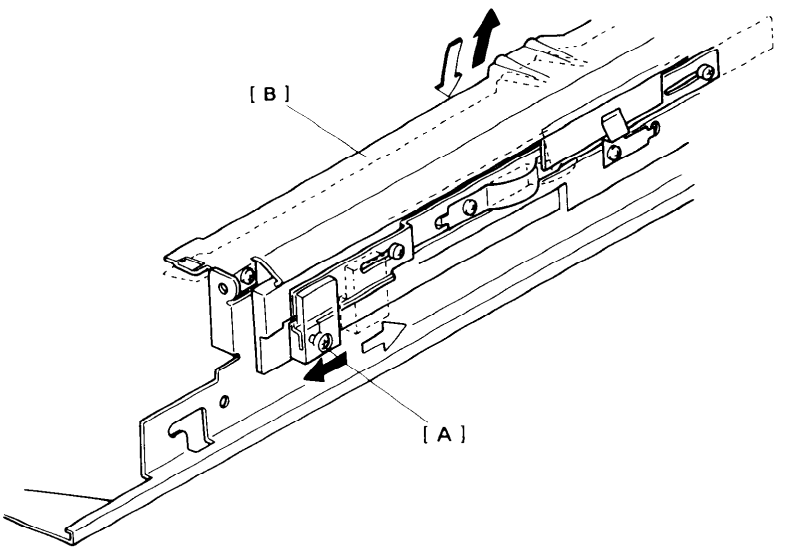

1. Remove the fusing unit.
2. Move the knob [A] to the front to raise the fusing guide plate [B].

   Move the knob to the rear to the rear to lower the fusing guide plate.

   (The movement range is 1 mm.)

NOTE: Normally the entrance guide is set in the lower position (factory setting). Set it in the upper position if paper creasing occurs.

TRANSPORT

1. Transport Unit and Transport Belt Removal

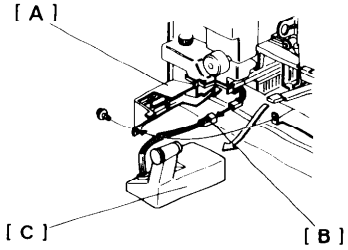

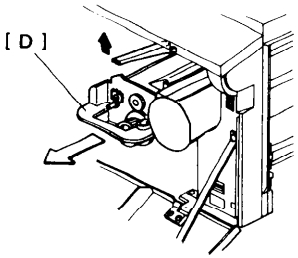

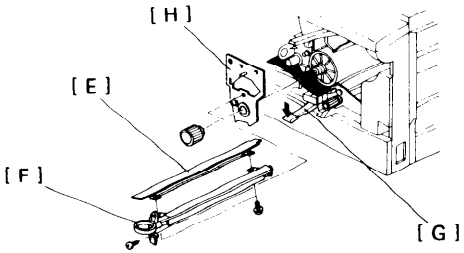

1. Swing the toner collection bottle cover [A] to the left (1 screw).
2. Disconnect the toner overflow sensor connector [B].
3. Remove the toner collection bottle [C].
4. Remove the development unit [D], PTL board [E], and the charge corona unit [F] (1 screw).
5. Lower the T/S corona unit [G].
6. Remove the drum stay [H] (1 knob [I] and 1 screw), the cleaning unit and the drum.

NOTE: Be sure the protective sleeve is installed before removing the drum.

7. Remove the fusing unit.

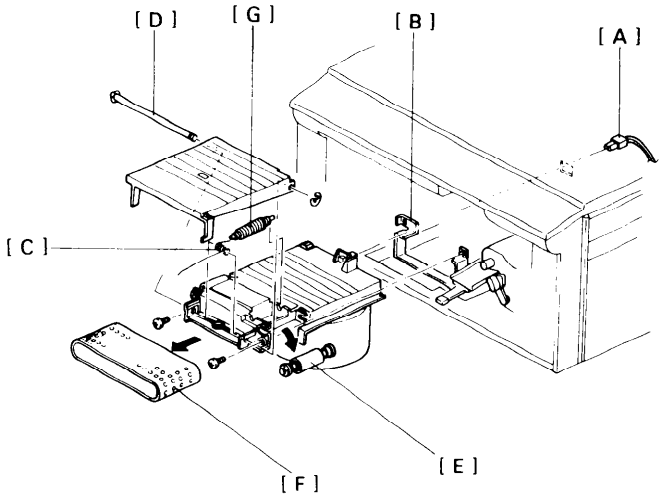

8. Remove the rear cover and lower the PCB plate (2 screws each).
9. Remove the transport and separation power pack (1 screw).
10. Disconnect the vacuum fan connector [A] (2p white) just under the main motor.
11. Remove the transport unit from the mounting bracket [B] (2 screws).
12. Slide the transport unit and vacuum fan out of the copier.

NOTE: When reinstalling the transport unit, be sure the transport gear engages with the drive gear.

13. Remove the front of the transport unit as shown (1 E-ring, 1 spring [C] and 1 shaft [D]).
14. Pull the right transport roller [E] and transport belt [F] to the right and remove the transport rollers [G].
15. Remove the transport belt as shown.

2. Vacuum Fan Motor Replacement

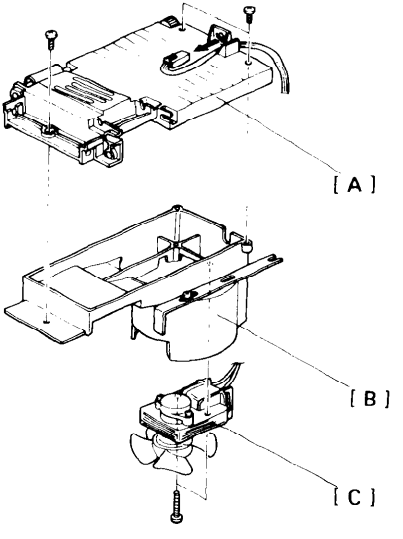

1. Remove the transport belt. (See Transport Unit and Transport Belt Removal.)
2. Remove the transport plate [A] from the vacuum fan unit [B] (3 screws and 1 connector).
3. Remove the fan motor [C] (2 screws).

CORONA

1. Corona Wire Replacement

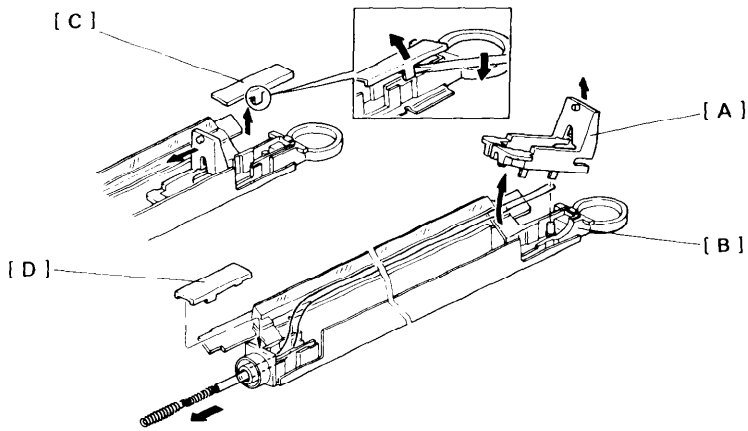

- **Do not handle new corona wires with your bare hands. Oil on the wire will cause uneven charge on the drum.**
- **Do not rub the corona wires with rough material (sandpaper, etc.) as it will damage the corona wires.**
- **When removing the endblock covers, be careful not to break off the side hooks.**
- **Do not use any solvents to clean the wire as it will cause uneven charge on the drum.**

- Charge Corona Wire -

1. Slide the wire cleaner [A] away from the front endblock [B] as shown.
2. Remove the front [C] and rear [D] end block covers.
3. Slide the wire cleaner back to the front end and remove it.

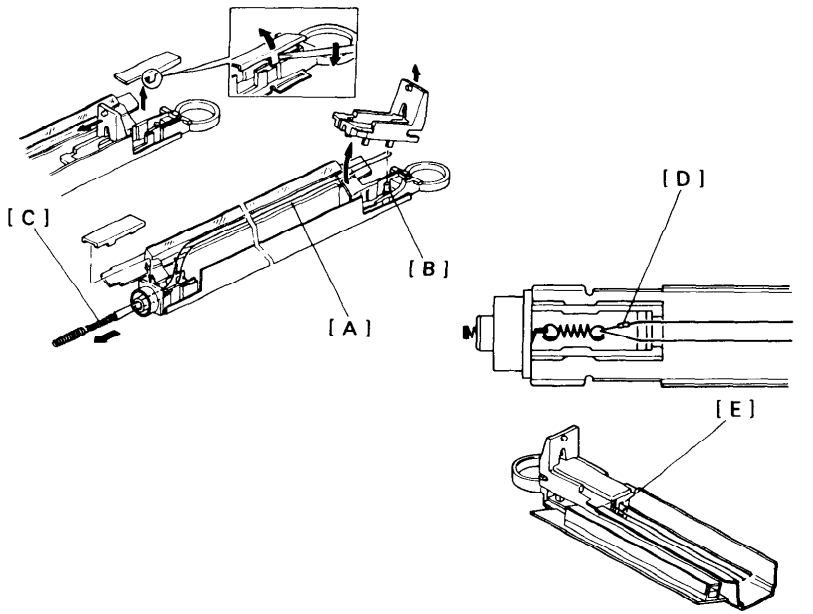

4. Unhook the corona wire [A] from the front anchor post [B] by pulling in the direction of the arrow using a small screw driver.
5. Remove the old corona wire.
6. Clean the endblocks, the covers, and the corona unit casing with a blower brush and dry cloth.
7. Hook the new corona wire onto the tension spring [C]
8. Hook the other end of the wire onto the front anchor post using a small screw driver.

When installing the corona wire, the wire junction [D] should be positioned inside the rear endblock.

9. Reassemble the charge corona unit. Make sure that the corona wire is positioned between the cleaner pads [E].

- T/S Corona Wires -

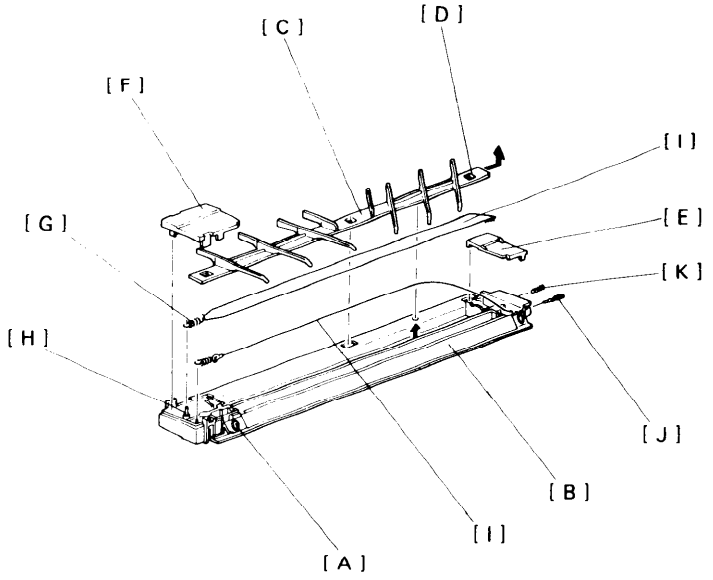

The eccentric cams [A] are used in the production line only to adjust the gap between the guide mylar [B] and the selenium drum.

1. Lower the transport and separation unit then remove it.
2. Slide the corona paper guide [C] to the rear, by pushing up the guide stopper [D] from underneath. Then, remove the guide from the corona unit.
3. Remove the front [E] and rear [F] endblock covers.
4. Unhook the tension springs [G] from the front anchor posts [H] and remove the old corona wires [I].
5. Clean the corona paper guide, the endblocks and covers, and the corona unit casing with a blower brush and dry cloth.
6. Thread the small eyelet [J] of the new transfer corona wire through the hole in the rear endblock and hook it onto the terminal spring [K].

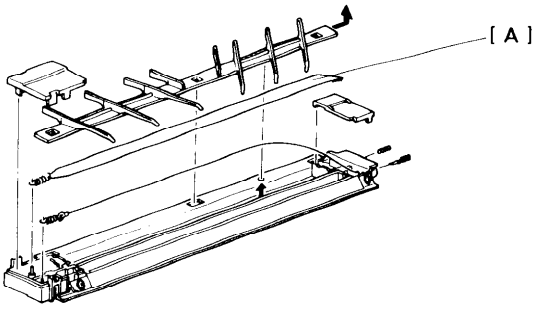

7. Hook the tension spring onto the other end of the corona wire. Then hook the tension spring onto the front endblock anchor post.
8. Insert the wire junction [A] of the new separation corona wire through the hole in the rear endblock and hook the terminal spring onto the nearby wire junction.
9. Hook the tension spring onto the other end of the loop and then hook the spring to the front endblock anchor post.

The separation corona wire should be properly positioned in the grooves of the front and rear endblocks.

10. Reset the endblock covers and the corona paper guide.

2. Drum Current Adjustment

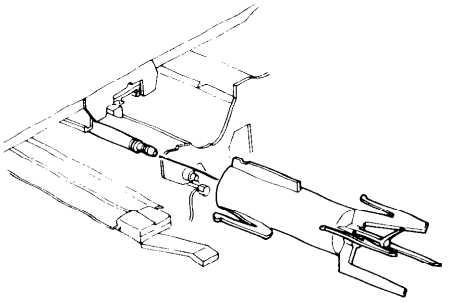

NOTE: The drum currents vary with environmental conditions such as humidity and atmospheric pressure. Generally it is not necessary to adjust the drum currents because they have already been adjusted for a range of environments at the factory.
Drum current adjustment may be required when there are problems with paper separation, incomplete toner transfer, or image density.

- Make sure that the main switch is turned off when you change the range on the digital multimeter. If not, the multimeter may be damaged.
- Take care as high voltage is applied to the corona wires when the main switch is turned on.

- Preparation -

1. Turn off the main switch and remove the following parts:

   - Development unit
   - Charge corona unit (1 screw)
   - Drum stay (1 screw)
   - Toner collection bottle
   - Cleaning unit
   - Drum flange
   - Drum - should be covered with a shielding sleeve
   - Drum guide
   - T/S corona unit

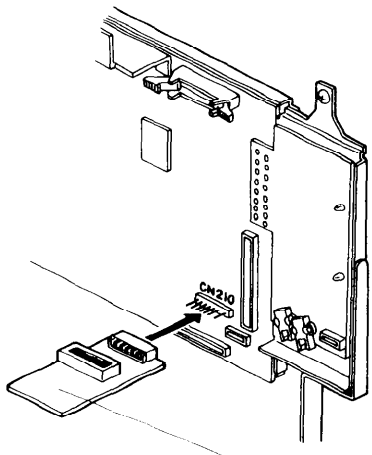

[A]

2. Clean or replace each corona wire. Also clean the corona units and the cleaning unit.
3. Actuate the front safety switch.
4. Remove the rear cover (2 screws).
5. Plug the switching board into connector CN210 of the main board as shown.

NOTE: All the switches on the switching board [A] should be off.

6. Install the drum shoe and adapter on the drum shaft with the lip to the rear.
7. Route the shoe lead wire out through the development unit opening.
8. Connect the drum shoe and the digital multimeter leads as shown on the next page. Positive lead to the red lead clip. Negative lead and the black lead clip to the machine ground.
9. Open the Manual Feed table to keep the Start key red even if the machine is warmed up.

- Charge Corona -

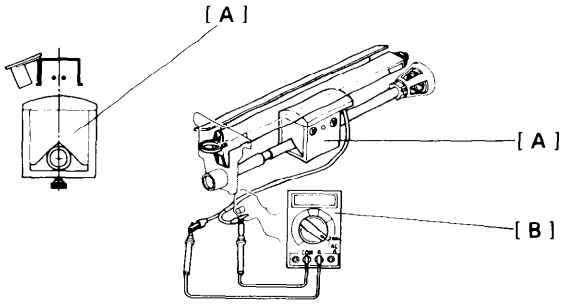

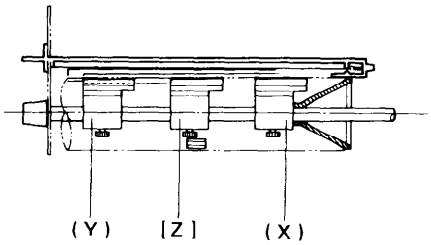

OPTIMUM ADJUSTING VALUE: DC +44.0 ± 0.2 μA

1. Slide the drum shoe [A] to its rear limit as shown (X).
2. Position the drum shoe so that the axis of the current sensing plate is aligned with the charge corona wire as shown.
3. Reinstall the drum stay (1 screw and 1 knob) and the charge corona unit.
4. Select the dc 200 μA range of the digital multimeter [B].
5. Turn on SW 8 of the switching board.
6. Turn on the main switch and note the reading. (Wait 30 seconds for the current to stabilize.)
7. Turn off the main switch, move the drum shoe to the front as shown (Y), and repeat steps 3 to 5.

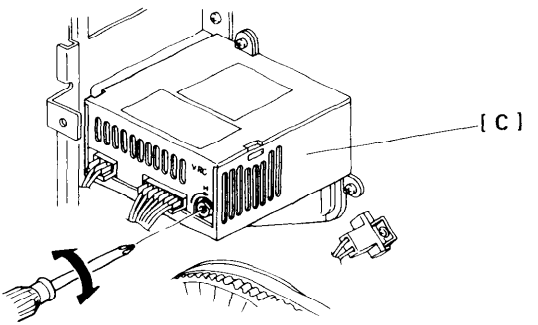

8. Adjust the front corona wire height adjusting screw if the two readings differ. The difference between front and rear should not be more than 0.2 μA.

NOTE: - Turn the adjusting screw clockwise to increase the reading.

- Turn it counterclockwise to decrease the reading.

- After adjusting the front side, confirm the rear reading once again.

9. Turn off the main switch and position the drum shoe on the center of the shaft (Z). (The ID sensor is positioned near the the center of the shaft).

10. Turn on the main switch and adjust the charge corona current by turning "VRC" on the power pack - C/B [C].

11. Turn off the main switch and SW 8.

- Transfer Corona -

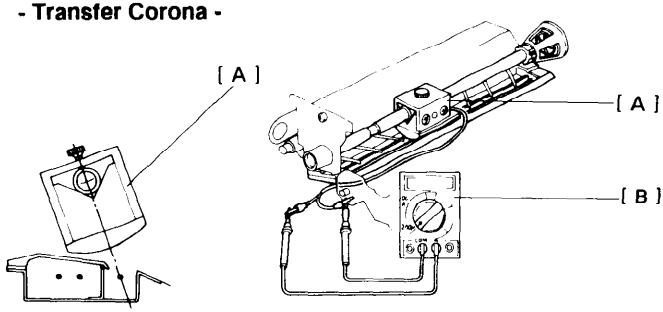

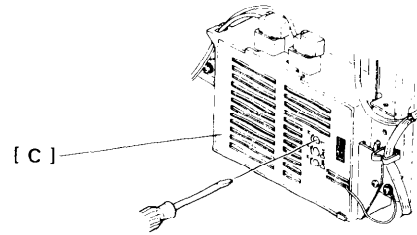

OPTIMUM ADJUSTING VALUE: DC + 19.0 ± 0.4 μA

1. Reinstall the T/S corona unit and position the drum shoe [A] on the center of the shaft so that the axis of the current sensing plate is aligned with the transfer corona wire as shown.
2. Reinstall the cleaning unit and the drum stay (1 screw and 1 knob).
3. Select the dc 200 μA range of the digital multimeter [B].
4. Turn on SW 3 of the switching board.
5. Turn on the main switch and adjust the transfer corona current by turning "T" on the power pack - T/S [C]. (Wait 30 seconds for the corona current to stabilize.)
6. Turn off the main switch and SW 3.

- Separation Corona -

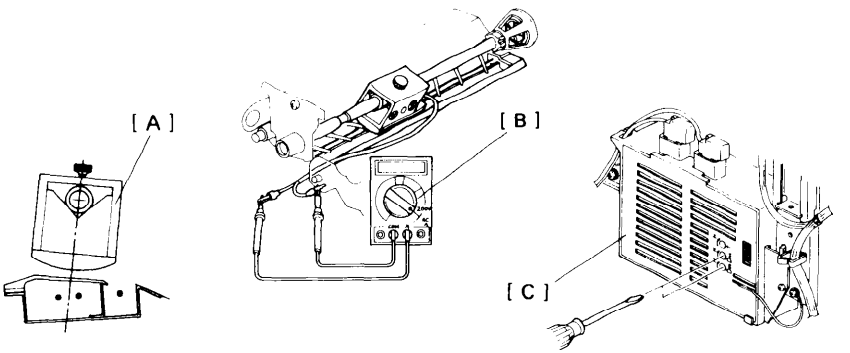

OPTIMUM ADJUSTING VALUE: AC +38.6 ± 1.4 μA
DC - 4.2 ± 0.4 μA

1. Position the drum shoe [A] on the center of the shaft so that the axis of the current sensing plate is aligned between the separation corona wires as shown.
2. Reinstall the drum stay (1 screw and 1 knob) and return the T/S corona unit to its original position.

NOTE: The cleaning unit should also be installed at this time.

3. Turn on SW 4 on the switching board.
4. Select the dc 200 μA range of the digital multimeter [B].
5. Turn on the main switch and adjust the separation dc current by turning "DDC" on the power pack - T/S [C]. (Wait 30 seconds for the corona current to stabilize.)
6. Turn off the main switch and select the ac 200 μA range of the multimeter.
7. Turn on the main switch and adjust the separation ac current by turning "DAC" on the power pack - T/S. (Wait 30 seconds for the corona current to stabilize.)
8. Turn off the main switch.
9. Repeat steps 4 to 8 until both the dc and ac corona currents are within the optimum ranges.
10. Turn off the main switch and SW 4.

OTHERS

1. Operation Panel Removal

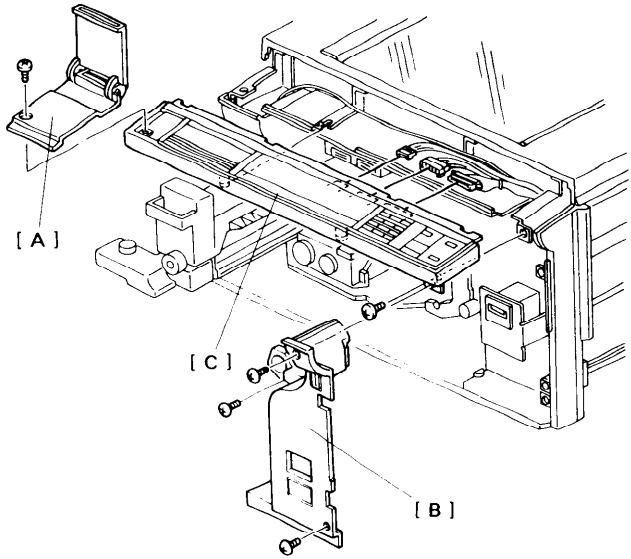

1. Remove the DIP switch cover [A] under the instructions cards (1 screw).
2. Remove the front cover.
3. Remove the right inner cover [B] (3 screws).
4. Remove the operation panel [C] (2 screws and 3 connectors).

2. Power Supply Unit Removal

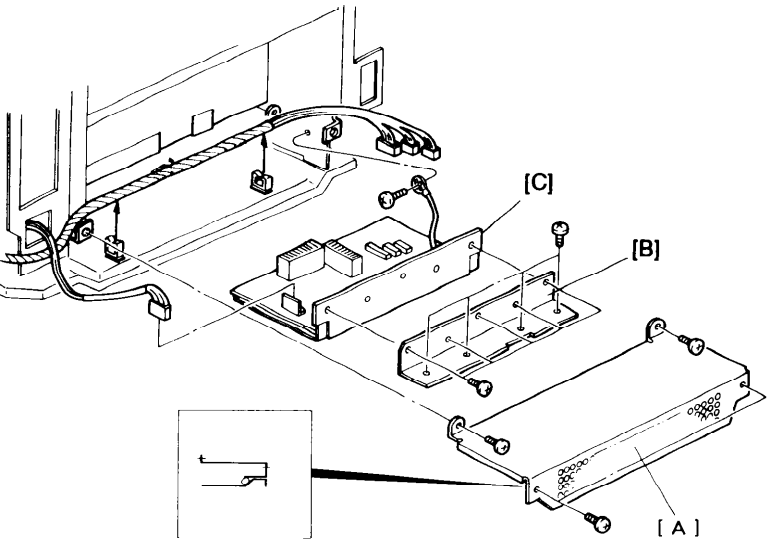

1. Remove the power supply unit cover [A] (4 screws).
2. Remove the heat plate [B] (9 screws).
3. Disconnect all the connectors.
4. Remove the power supply unit [C].

NOTE: When reinstalling the power supply unit cover, the harness should be placed under the cover as shown.

3. Drum Heater Removal

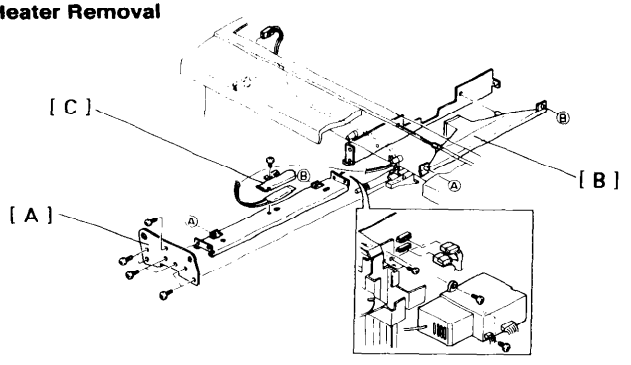

1. Turn off the main switch.
2. Open and remove the front cover and remove the following parts:

   - Development unit
   - Charge corona unit (1 screw)
   - Drum stay (1 screw)
   - Toner collection bottle
   - Cleaning unit
   - Drum flange
   - Drum - should be covered with a shielding sleeve
   - Drum guide
   - T/S corona unit

3. Remove the left inner cover (2 screws), the center inner cover (6 screws), and the rear cover (2 screws).
4. Disconnect the lens drive motor connector and the 2nd drive motor connector.
5. Remove the main charger power pack (2 screws and 3 connectors).
6. Remove the front drum support bracket [A] (7 screws).
7. Remove the duct inlet [B].
8. Remove the main charger unit holder from the rear of the machine (2 screws).
9. Replace the drum heater [C] (1 screw).

NOTE: When installing the drum heater, be sure that the duct outlet is properly positioned.

COPY IMAGE

1. Light Intensity Adjustment

NOTE: - This adjustment should be done when the rest time compensation of the bias voltage is 0V-when the main power switch has just been turned on.

- Auto ID sensor adjustment must be done after light intensity adjustment.

ADJUSTMENT STANDARD: Level 2 of the gray scale on the OS-A3 chart should be just visible on the copy when the 4th level of the density control is selected.

1. Clean the optics (mirrors, lens, reflectors, exposure glass, toner shield glass).
2. Turn on the main switch and allow it to warm up.
3. Set the image density level at the No. 4 position and make 11 test copies of the OS-A3 test chart.
   At that time, it is required to confirm if the auto image density base level is positioned at the No. 4 position. If not, position the base level to No. 4.
4. Confirm that the level 2 of the gray scale is just visible on the 11th copy. If the image density is not correct, proceed to steps 5 to 10.

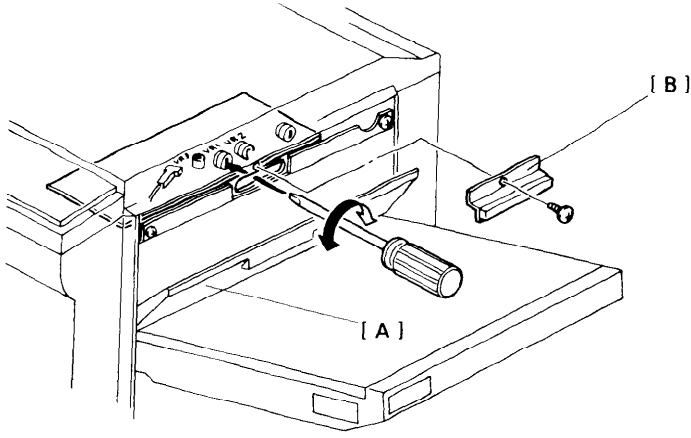

5. Confirm that the main switch is off and turn on DIP SW 1-8 so that copies can be made in spite that the manual feed table is open. Then, turn on the main switch.
6. Open the manual feed table [A].
7. Remove the magnetic catch bracket [B] (1 screw).
8. Adjust VR1 on the lamp regulator board to achieve properly illuminated copies.
9. Confirm that the image density is within the standard.

NOTE: - If the test copies are made within 3 minutes after making previous copies, check the image density on the 4th copy.

- If it is over 3 minutes, check the image density on the 6th copy.
- Check and adjust the light intensity at every visit.

10. Turn off the main switch and reassemble.

2. Auto ID Sensor Adjustment

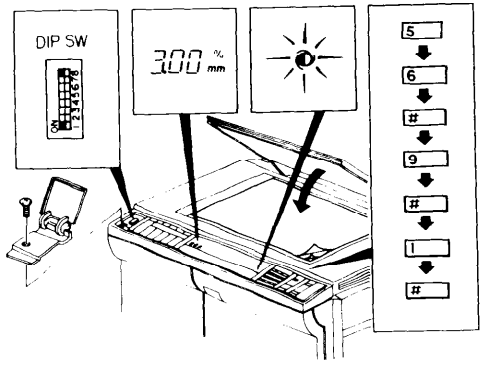

ADJUSTMENT STANDARD: +3 dc ± 0.06 volts

- Method A: Using the CPU -

1. Perform the light intensity adjustment before performing the Auto ID sensor adjustment.
2. Remove the DIP switch cover (1 screws).
3. Turn off the main switch and turn on DIP switche Nos. 1-1 and 1-8.
4. Open the manual feed table and remove the magnet catch bracket (1 screw).
5. Turn on the main switch and allow the copier to warm up.
6. Select the Auto ID mode.

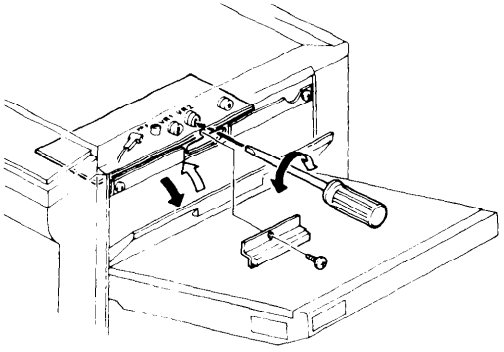

7. Place a few of A3 (11" x 17") paper on the exposure glass.
8. Enter "56" using the numeral keys, then press the Enter key.
9. Enter "99" using the numeral keys ,then press the Start key .
10. Adjust the Auto ID sensor by turning VR2 on the lamp regulator board.

NOTE: - Continue the adjustment procedure until the value is within specifications.

- When adjusting the Auto ID sensor, use the monitor reading after the 3rd scanning operation.

11. Turn off the main switch and the DIP switches, then reassemble.

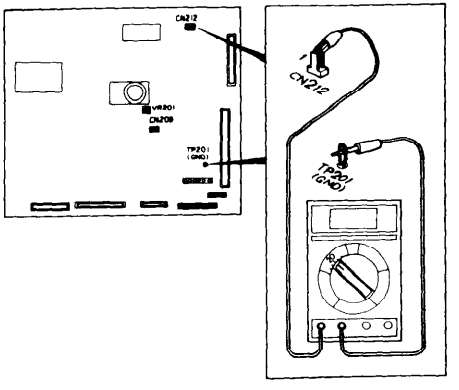

- Method B: Using a Digital Multimeter -

Perform steps 1 and 2 of method A.

1. Confirm that the main switch is off and turn on DIP switch No. 1-1 and No. 1-8 on the operation panel.
2. Open the manual feed table and remove the magnetic catch bracket (1 screws).
3. Remove the rear cover (2 screws).
4. Hook up the multimeter leads as follows:

NOTE: Hook up the positive lead using a crocodile clip as shown.

Positive lead to pin 1 of CN212 on the main board
Negative lead to TP 201 (GND) and select the 20-volt range on the multimeter.

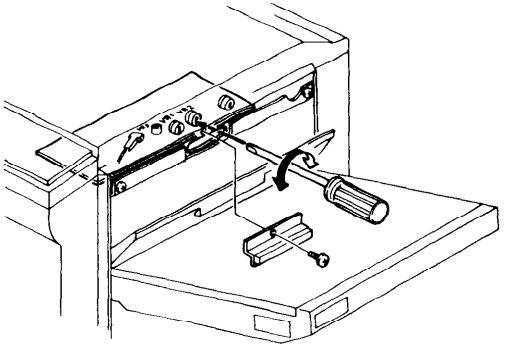

5. Place 5 sheets of paper (A3 or 11" x 17") on the exposure glass.
6. Turn on the main switch and select the Auto ID mode, then enter "99" using the numeral keys. Press the Start key after the copier warms up.
7. Adjust the Auto ID sensor by turning VR2 on the lamp regulator board.

NOTE: Adjust the Auto ID sensor after the 3rd copy cycle has been completed.

8. Press the C/S key to stop the copier.
9. Turn off the main switch and DIP switch No 1-1 and No. 1-8, then reassemble.

3. Horizontal Magnification Adjustment

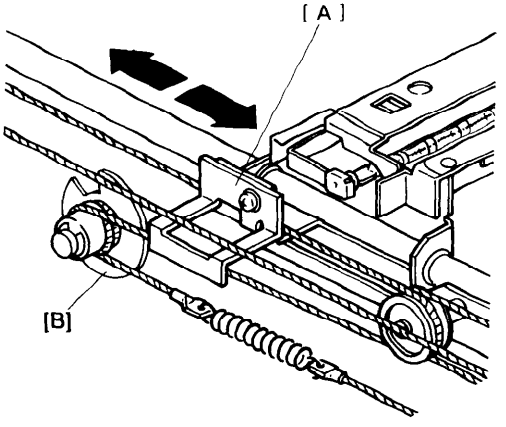

ADJUSTMENT STANDARD: + 0.5% (Full Size)

- Method A: Using the wire clamp

1. Remove the rear cover (2 screws).
2. Remove the two mounting studs and eight screws securing the upper cover.
3. Lift the back edge of the upper cover and loosen the wire clamp [A] (1 screw).
4. Move the clamp to the right to enlarge the copy image. Move it to the left to reduce the copy image. (Viewed from the rear side.)

- Method B: Using SP Mode 44, which can adjust the position of 2nd scanner by turning the drive pulley cam [B].

1. Confirm that the main switch is off and turn on DIP switch No. 1-8 on the operation panel.
2. Enter "44" using the numeral keys, then press the Enter key.
3. Change the data according to the SP Mode Table when making a copy. Adjust the horizontal magnification when changing the data of SP Mode # 44.

4. Vertical Magnification Adjustment

ADJUSTMENT STANDARD: ± 1%

Adjust the vertical component of magnification (scanner forward velocity) using SP mode # 43.

5. Lead Edge Registration Adjustment

ADJUSTMENT STANDARD: 0 ± 2 mm (0 ± 0.08")

1. Place a 150 mm scale on the exposure glass, aligning it with the left scale.
2. Make 3 copies with the ID level at the No. 7 position.
3. Adjust the lead edge registration using SP mode # 42.

6. Lead Edge Erase Margin Adjustment

NOTE: This adjustment should be made after Lead Edge Registration Adjustment.

ADJUSTMENT STANDARD: 3.5 ± 2.5 mm (0.14" ± 0.1")

Adjust the lead edge erase margin using SP Mode # 41.

DOCUMENT FEEDER

SPECIFICATIONS

Original Size:	ADF mode Maximum A3 (11" x 17") Minimum A5 (5 1/2" x 8 1/2") SADF mode Max A3 (11" x 17") Minimum B6 (5 1/2" x 8 1/2") lengthwise
Weight:	Maximum 130 g/m^2 (34 lb) Minimum 40 g/m^2 (11 lb)
Original Feed Modes:	Automatic Feed (ADF mode) Manual Feed one by one (SADF mode)
Original Capacity:	Maximum 50 sheets (80 g/m^2, 20 lb)
Original Separation:	FFR system
Original Transportation:	Flat belt
Original Stop System:	DC servomotor control system
Original Feed Speed:	15 cpm / ADF mode
Power Source:	DC 24V / 5V (from copier)
Power Consumption:	20 W
Dimensions: (W x D x H)	935 mm x 515 mm x 95 mm 36.8" x 20.3" x 3.8"
Weight:	11.5 kg (25.3 lb)
Copier Interface Equipment:	Interface PCB type E

MECHANICAL COMPONENT LAYOUT

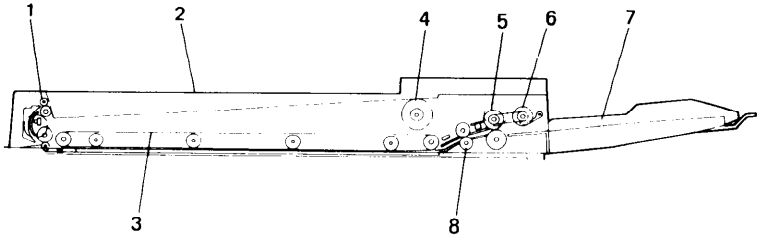

1. Exit Roller
2. DF Cover
3. Drive Belt
4. Drive Pulley
5. Feed Roller
6. Pick-up Roller
7. Original Table
8. Registration Rollers

ELECTRICAL COMPONENT LAYOUT

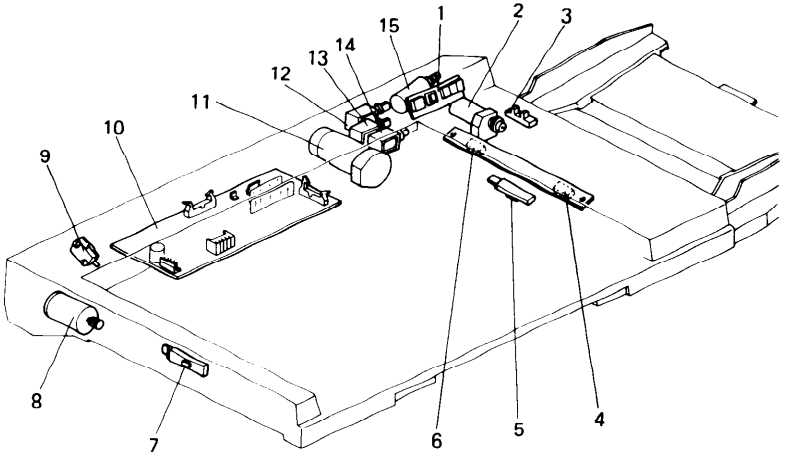

1. Indicator PCB (PCB-10)
2. Feed-in Motor (M-14)
3. Feed-in Sensor (S-34)
4. Entrance Sensor (S-35)
5. Registration Sensor (S-37)
6. Width Sensor (S-36)
7. Exit Sensor (S-38)
8. Feed-out Motor (M-15)
9. Lift Switch (SW-10)
10. DF Main PCB (PCB-11)
11. Belt Drive Motor (M-16)
12. Pick-up Solenoid (Sol-7)
13. Registration Solenoid (Sol-8)
14. Roller Release Solenoid (Sol-9)
15. Stopper Solenoid (Sol-10)

DOCUMENT FEEDER INSTALLATION

1. Accessory Check

Check the quantity and condition of the accessories in the box according to the following list.

1. Installation procedure (115V - English only/220V - five languages)	1
2. New Equipment Condition Report	1
3. Envelop - NECR(115V only)	1
4. Original exit guide	1
5. Flip scale	1
6. Flip scale spring	1
7. Flathead shoulder screw	2
8. Original feed table	1
9. Original table cover	1
10. DF interface harness	1
11. Nylon harness bushing	1
12. Test chart A4	1
13. Flathead screw - M4 x 6	2
14. Ground screw	2
15. Toothed washer	2
16. Pan head screw - M4 x 6	4
17. Pan head screw with washer - M4 x 6	2
18. Pan head screw - M5 x 12	4
19. Multilingual decals (220/240V only)	1 set
20. Ty-wrap	1

Interface PCB type E is also required to install the DF.

Check the accessories according to the following list.

Interface PCB Type E box:

1. PCB Mounting Stud	2

NOTE: - The interface PCB is not necessary with the A024-17 and A024-27 version machines (already equipped at the production line).
- This is not necessary if a sorter is already installed in the machine.
- The exposure glass holders are enclosed with a copier.

2. Installation

16 April '88

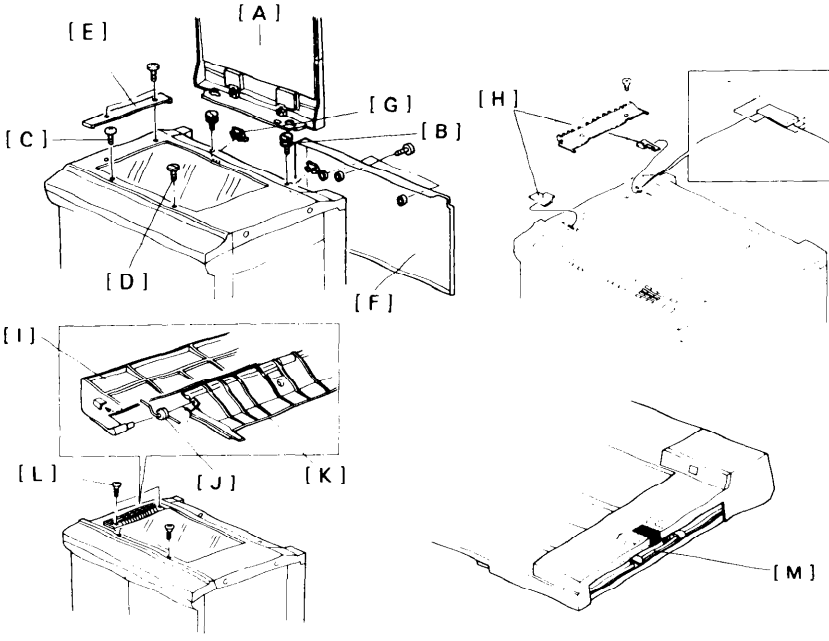

1. Turn off the main switch and unplug the power supply cord of the copier.
2. Remove the following parts:
   A) Platen cover
   B) Mounting stud (2 pcs)
   C) Truss screw
   D) Plastic screw
   E) Left scale (2 screws)
   F) Rear cover (3 screws)
   G) ADF docking hole cap (2 pcs)

NOTE: Save the above parts for future use.

3. Install the exposure glass holders [H] at the left side of the exposure glass as shown (220/240 V only).
4. Set the flip scale [I] (with the flip scale spring [J]) on the original exit guide [K]; then, mount it as shown (2 flathead screws).
5. Secure two flathead shoulder screws [L] as shown in the figure.
6. Remove the strips of shipping tape [M].

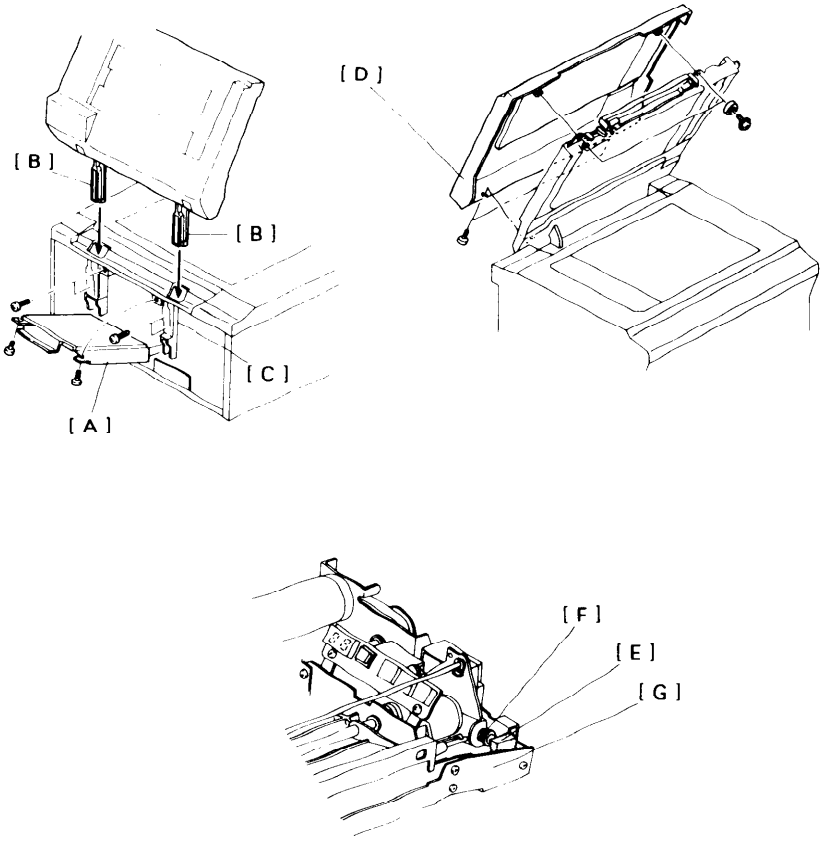

7. Lower the PCB plate [A] (2 screws).
8. Insert the mounting posts [B] into the DF mounting brackets [C].
9. Temporarily secure the mounting posts to the DF mounting brackets (4 screws, M5 x 12).
10. Remove the DF cover [D] (4 screws).
11. Remove the shipping foam [E] between the stopper solenoid [F] and the DF side plate [G].

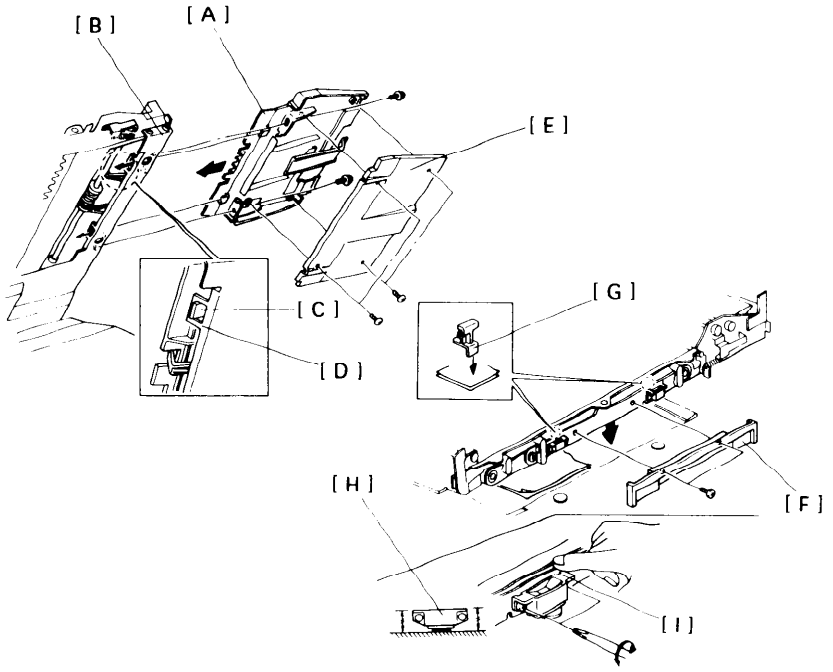

12. Install the original feed table [A] on the right side of the belt unit [B] (2 screws with washer). (Be sure to engage the 2 hooks [C] of the original table with the docking holes [D] of the belt unit).
13. Install the original table cover [E] under the original table (4 screws).
14. Level the DF as follows:
    a) Remove the DF grip plate [F] (2 screws).
    b) Place 2 sheets of A3 (11" x 17") paper between the white belt guide spacers [G] and the exposure glass.
    c) Loosen the mounting screws of the right side magnetic catch [H]. Push down the right side of the magnetic catch bracket [I], then tighten the screws of the right magnetic catch. Repeat this process with the left side magnetic catch.
    d) Remove the 2 sheets of paper.

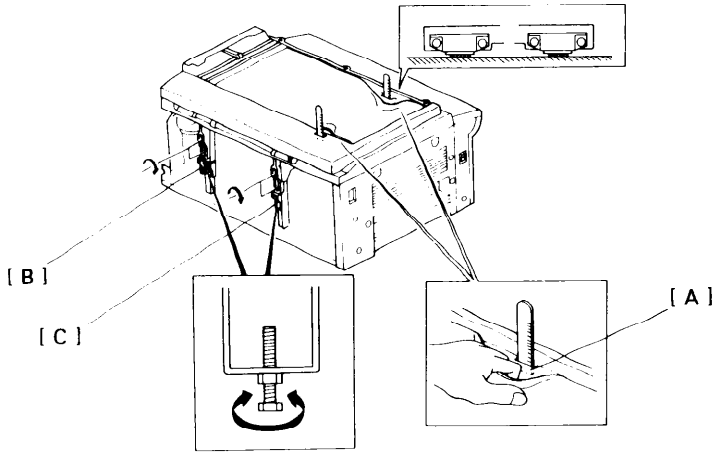

e) Adjust the height of rear side of the belt unit as follows:

1) Lift the upper part of the feed belt out of the way and measure the distance between the top of the access hole [A] in the pressure roller support bracket and the lower part of the feed belt at the front and rear left corners.

2) Adjust the two amounts so that they are the same by using the left height adjusting bolt [B] on the DF mounting bracket.

3) Adjust the right rear height adjusting bolt [C] so that the DF closes properly.

NOTE: Make sure that the belt is properly positioned in the belt guide spacers.

4) Tighten the four screws (M5 x 12) on the mounting posts. Lock the height adjusting bolts [B] and [C] (2 lock nuts).

f) Install the DF grip plate.

g) Check that the DF closes properly

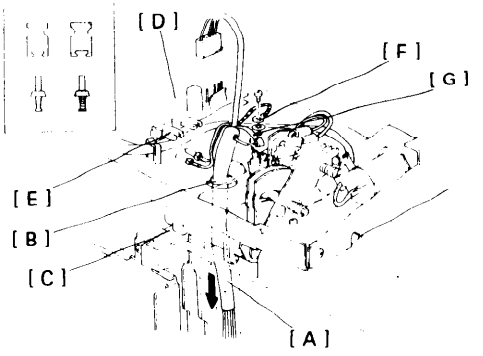

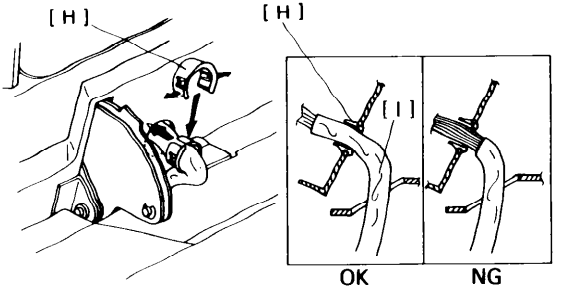

15. Pass the DF interface harness [A] through the harness hole [B] of the DF and the docking hole of the copier [C].

Avoid sharply bending the fiber optics or they will become damaged.

16. Connect the DF interface harness to the DF PCB [D] (3 connectors).

NOTE: The fiber optics connectors [E] have different colours. Be sure to match these colours when making these connections.

17. Secure the DF ground wire [F] on the DF base plate (1 ground screw and toothed washer).

18. Pass the Ty-wrap [G] through the hole of the vinyl tube of the DF harness, and then bind the vinyl tube to the bracket as shown.

19. Open the DF and install the nylon harness bushing [H] from the underside. (This harness bushing should be positioned around the vinyl tube [I] of the DF harness as shown.)

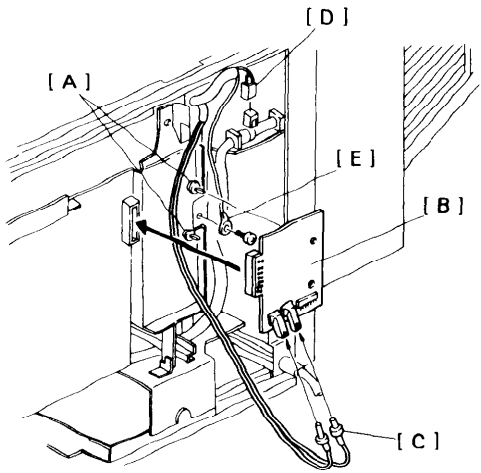

20. Secure the copier PCB plate (2 screws).

21. Fix the two PCB mounting studs [A] on the main board and install the interface board [B]. (This is not necessary if a sorter is already installed in the machine.)

22. Connect the 3 DF connectors.

    a) Connect two fiber optic connectors [C] to the interface board as follows, being careful not to damage them:
       CN806 Brown CN103
       CN807 Black CN104.

    b) Connect the DF harness connector [D] to the copier's ac 4P connector.

23. Secure the ground wire [E] to the ADF right mounting bracket (1 ground screw and toothed washer).

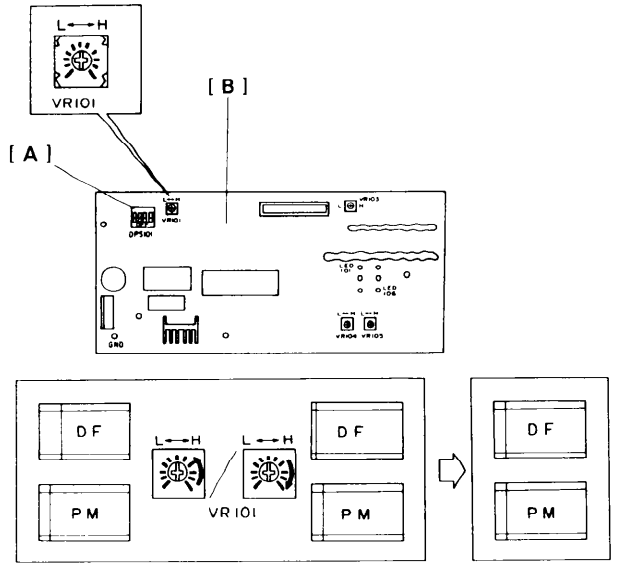

24. Turn on DIP switch 101-2 [A] on the DF main PCB.
25. Adjust the lead edge registration as follows:
    a) Turn on the copier main switch and make a copy in the platen mode using the flip scale and the test chart.
    b) Keep this copy for reference and mark "PM" (Platen Mode) on the reverse side of it.
    c) Make a copy in DF mode using the test chart.
    d) Adjust the DF registration against the platen mode reference ("PM") using VR101 on the DF PCB [B]:
        PM > DF: Turn VR101 clockwise
        PM < DF: Turn VR101 counterclockwise.
    e) Continue to repeat steps "c)" and "d)" until the same registration as in step "b)" is achieved.
26. Replace all covers.
27. Check the operation of the DF and copier system.
28. Fill out the New Equipment Condition Report.

REPLACEMENT AND ADJUSTMENT

1. DF Belt Replacement

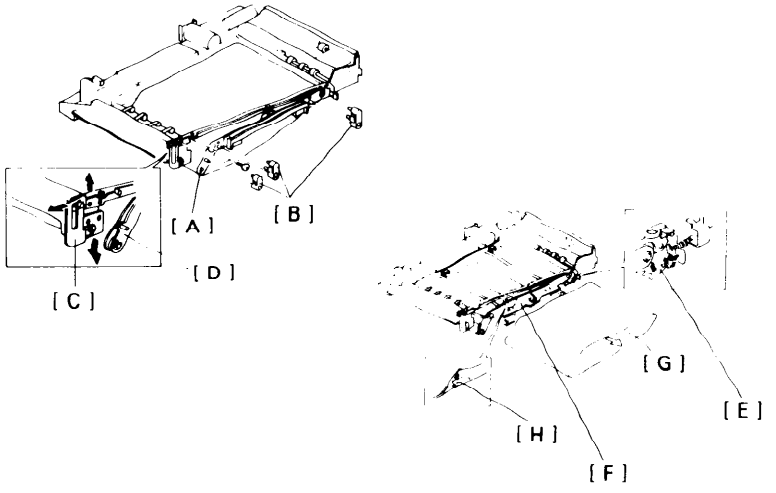

1. Remove the DF cover (4 screws, 2 collars).
2. Remove the 2 screws securing the left side of the front stay [A] and remove the 3 belt unit holders [B].
3. Raise the left end of the front stay and set it in the up position with the lock plate [C].
4. Rotate the belt release bracket [D] counterclockwise and lower the original entrance guide [E].
5. Lower the DF grip bracket [F] and release the belt [G] from the belt guide spacers [H].
6. Slide off the DF belt [G] and replace it.

NOTE: - After installing the DF belt, make sure that the belt is properly positioned in the belt guide spacers.

- When returning the DF grip bracket to its original position, make sure that the DF grip bracket is properly set behind the flathead screw.

2. Pick-up Roller Replacement

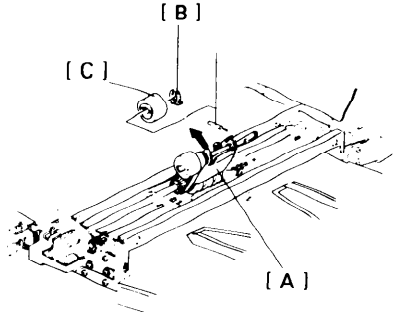

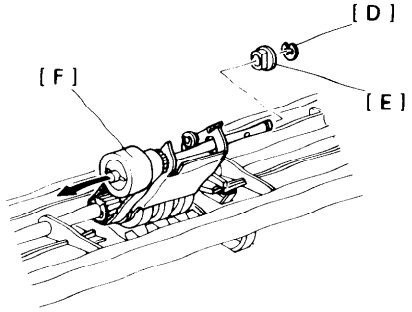

1. Remove the DF cover (4 screws, 2 collars).
2. Lift up the pick-up roller unit [A] and remove the snap ring [B].
3. Slide off the rear pick-up roller [C].

NOTE: Be careful not to lose the pin.

4. Remove the E-ring [D] and bushing [E].
5. Slide off the front pick-up roller assembly [F].

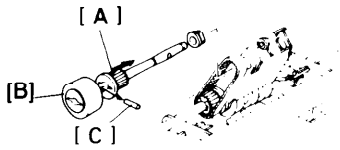

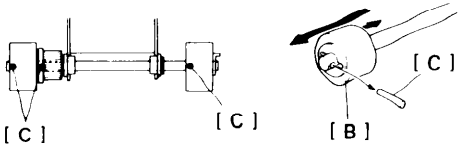

6. Slide off the pulley [A] and the pick-up roller [B].

NOTE: Be sure not to lose the drive pins [C] of the pulley and pick- up roller.

7. Replace the pick-up rollers and reassemble.

3. Feed Roller Replacement

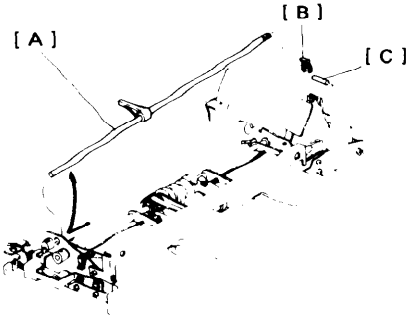

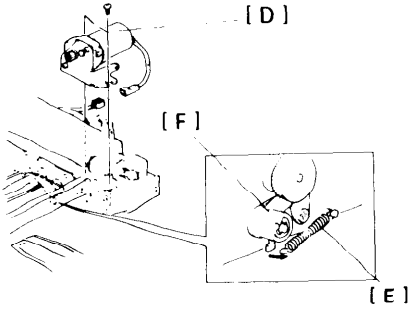

1. Remove the DF cover (4 screws, 2 collars).
2. Remove the pick-up control shaft [A] (1 snap ring [B], 1 pin [C]).
3. Remove the feed-in motor [D] (2 screws).
4. Unhook the spring [E] of the wear prevention lever [F].

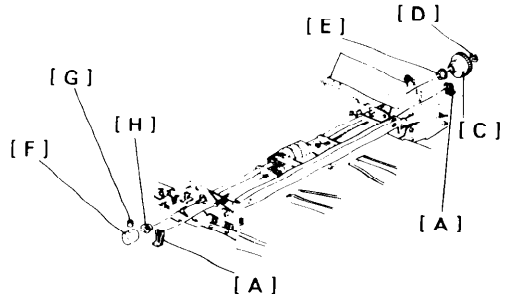

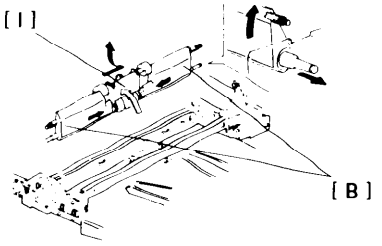

5. Remove the two snap rings [A] fixing the feed-in guides [B].
6. Remove the feed roller drive gear [C] (1 E-ring [D], 1 bearing [E]).
7. Remove the collar [F] (1 Allen screw [G]) and the bearing on the front feed roller shaft [H].
8. Stand the feed roller unit [I] and slide the feed-in guides as shown in the figure.
9. Then slide the unit to the rear, lift the front of the unit, and remove it from the DF.

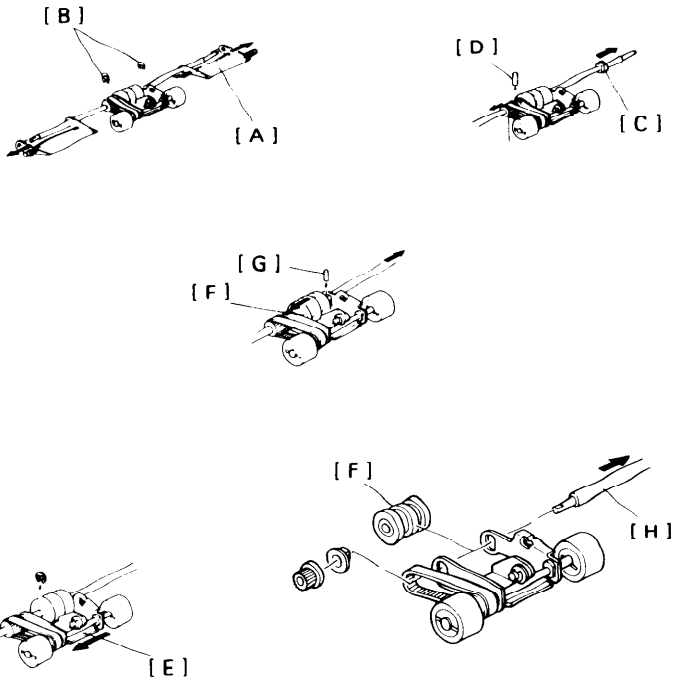

10. Slide off the feed-in guides [A] and remove two E-rings [B].
11. Remove the bushing [C] and slide the pulley towards the front to remove the pulley pin [D].
12. Slide the pick-up roller unit [E] to the front and remove the E-ring.
13. Slide the feed roller [F] to the front and remove the pin.[G]
14. Slide off the feed roller shaft [H].
15. Replace the feed roller and reassemble.

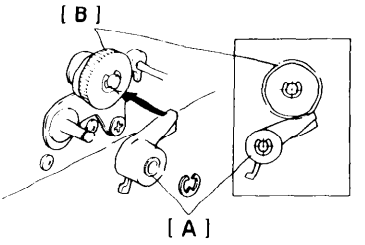

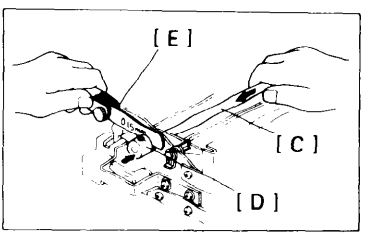

16. When reassembling the feed roller unit, make sure of the following points:
    1) Confirm that the wear prevention lever [A] is to the right of the drive gear [B] as viewed from the rear.
    2) Tighten the Allen screw of the feed roller shaft [C] collar [D] so that the clearance between the bushing and collar is 0.15 mm (check with a thickness gauge [E]).

4. Friction Roller Replacement

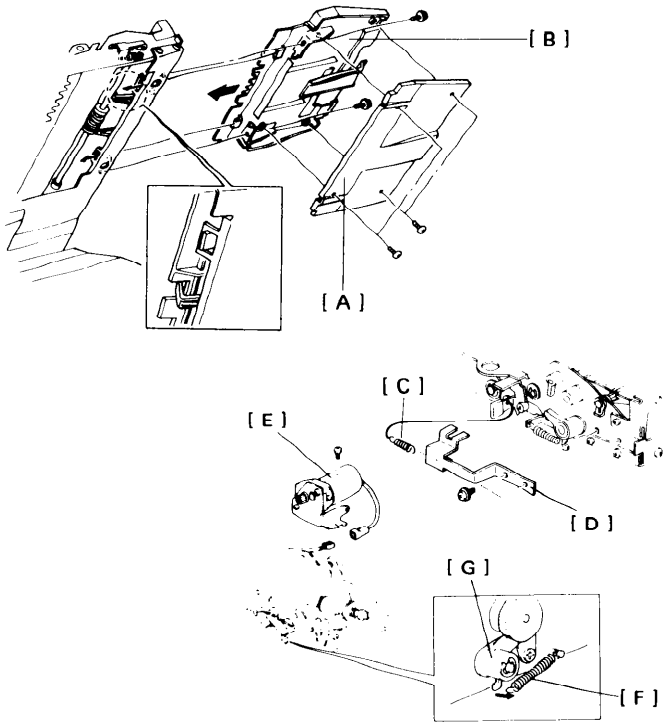

1. Remove the DF cover (4 screws, 2 collars).
2. Remove the original table cover [A] (4 screws).
3. Remove the original table [B] (2 screws).
4. Remove the lever spring [C] and the stopper plate [D] (2 screws).
5. Remove the feed-in motor [E] (2 screws, 1 connector).
6. Unhook the spring [F] of the wear prevention lever [G].

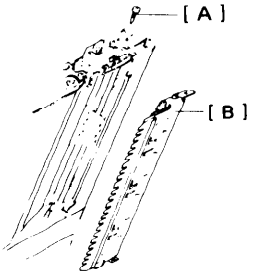

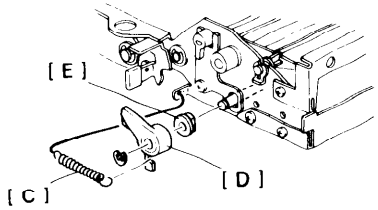

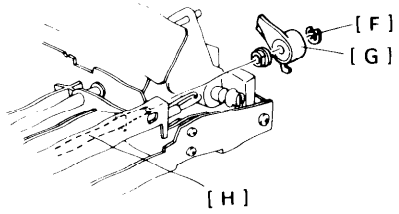

7. Remove the front stud screw [A] and take out the original entrance guide [B].
8. Unhook the spring [C] of the misfeed prevention lever [D] and remove the misfeed prevention lever and the bushing [E] (1 E-ring [F]).
9. Remove the wear prevention lever [G] (1 E-ring) and the bushings on the friction roller shaft [H].

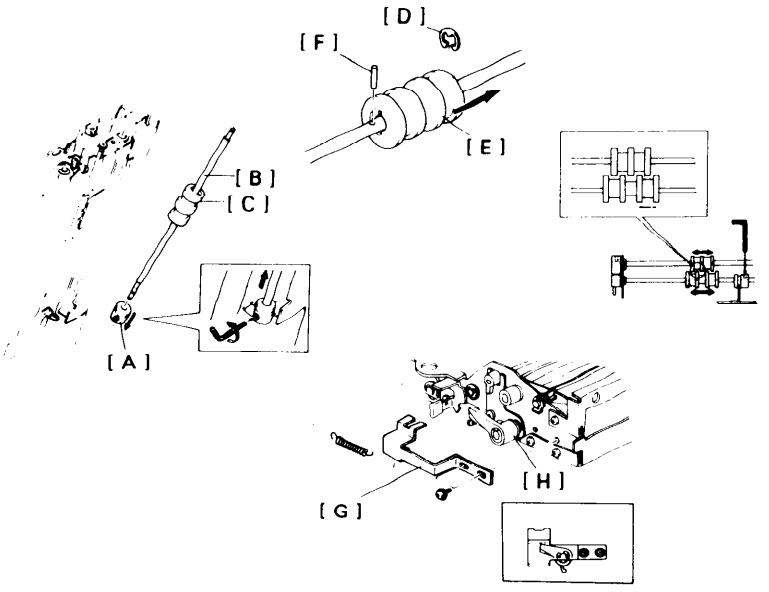

10. Loosen the Allen screw in the collar [A] on the friction roller shaft [B] and remove the friction roller assembly [C].

11. Remove the E-ring [D] and replace the friction roller [E].

NOTE: - Be sure not to lose the pin [F].

- When reassembling the unit, make sure of the following points:

  - When replacing the collar on the friction roller shaft, position the friction roller so that it is centered on the feed roller.

  - When replacing the stopper plate [G], make sure that the misfeed prevention lever [H] is restrained by the stopper plate as shown.

  - Confirm the mounting position of the stopper plate (see Stopper Plate Positioning).

5. Registration Roller Replacement

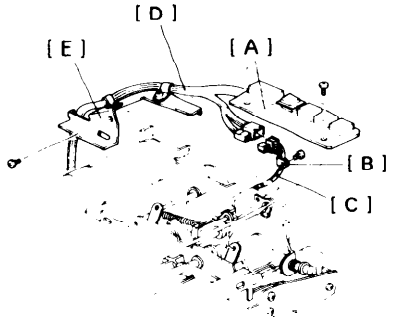

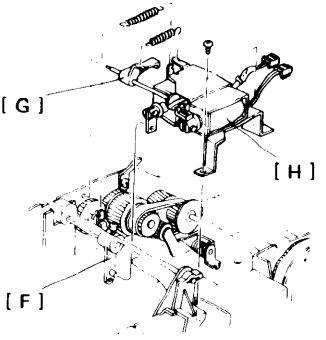

1. Remove the DF cover (4 screws, 2 collars).
2. Remove the indicator board [A] (2 screws).
3. Remove the harness clamp [B] as shown (1 screw).
4. Disconnect the registration solenoid harness [C] and roller release solenoid harness [D] (2 red connectors).
5. Move the indicator board and the harness bracket [E] (1 screw) away from the feed-in section.
6. Remove the springs of the friction roller release lever [F] and the registration clutch lever [G].
7. Remove the solenoid assembly [H] (2 screws).

NOTE: The release solenoid plunger is engaged with the roller release lever.

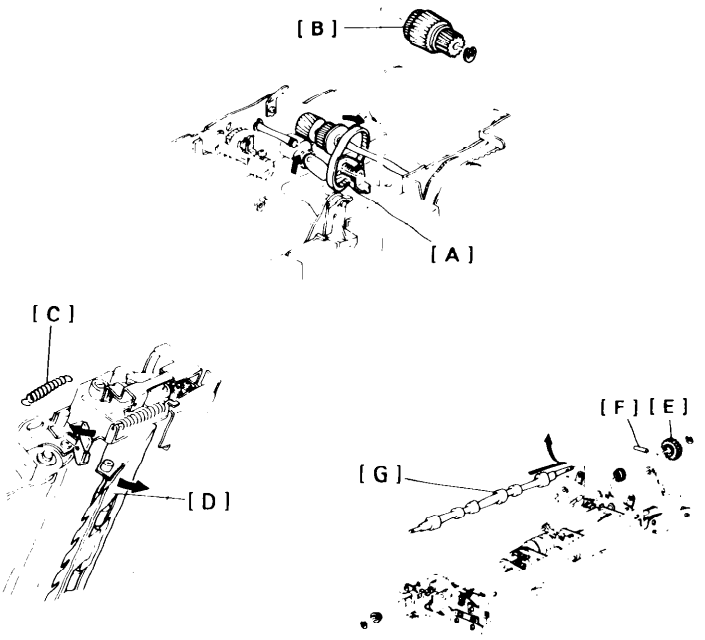

8. Slip off the timing belt [A] while lifting the belt tightener.
9. Remove the registration clutch assembly [B] (1 E-ring).
10. At the front, remove the lever spring [C] and lower the original entrance guide [D].
11. Remove the registration drive gear [E] (1 E-ring, 1 pin [F]).

NOTE: Do not lose the pin.

12. Remove the registration roller [G] as shown in the figure (1 E-ring, 2 bearings).

6. Stopper Plate Position Adjustment

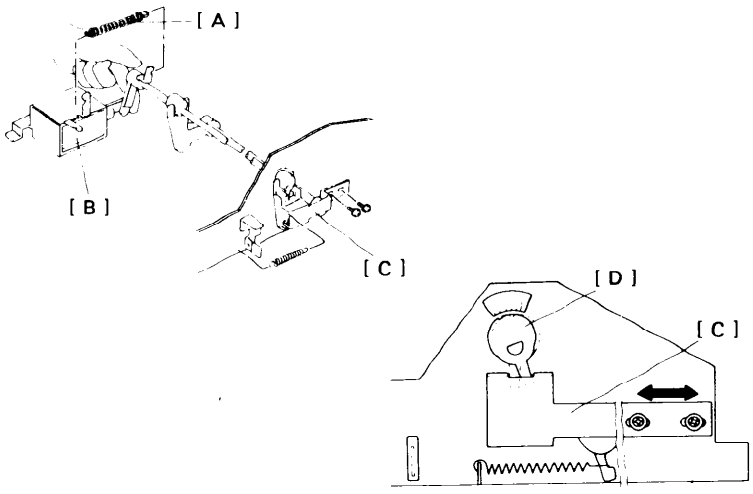

Reinstall the stopper plate as follows:

1. Remove the spring [A] of the friction roller release solenoid [B] and keep the solenoid plunger inside the coil.
2. Loosen the two screws of the stopper plate [C].
3. Position the plate so that the groove of the cam [D] aligns with the ".4" calibration mark.

NOTE: - This means that the overlap of the feed and friction rollers is adjusted to 0.4 mm when the friction roller is released from the feed roller.

- If the cam cannot align with the ".4" mark, reposition the roller release solenoid by loosening the solenoid mounting screws.

4. Replace the spring of the solenoid.

NOTE: - If multiple feeding occurs, increase the overlap by repositioning the stopper plate.

- If the original becomes smeared, decrease the overlap.

7. DF Belt Drive Motor Speed Adjustment

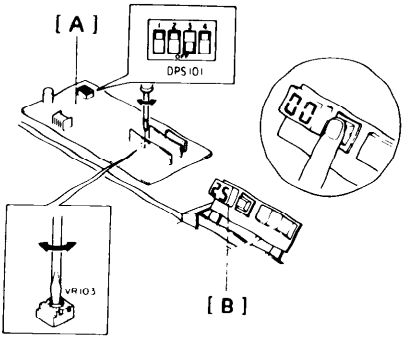

This adjustment should be done when the DF PCB [A] is replaced.

ADJUSTMENT STANDARD : 2500 ± 30 rpm

1. Turn off the main switch.
2. Remove the DF cover (4 screws, 2 collars).
3. Lower the DF unit.
4. Turn on DIP switch nos. 101-2 and 101-4 of the DF main board.
5. Turn on the main switch.

   The belt drive motor will start turning, and the left two digits of the motor speed will be displayed in the original counter. To display the second two digits of the motor speed, press the Counter Reset key.

   For example, if the motor speed is 2500 rpm, "00" will be displayed on the original counter [B] when the Counter Reset key is pressed; "25" will be displayed when it is not pressed.

6. Adjust the motor speed to 2500 ± 30 rpm by turning VR103 on the DF main board.
7. Turn off the main switch, turn off DIP switch nos. 101-2 and 101-4 to the normal position (DIP switch no. 101-1 is on and all others are off), and reassemble.

8. Lead Edge Registration Adjustment

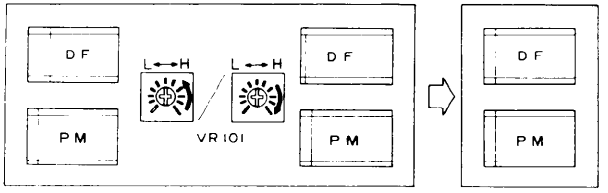

1. Adjust the lead edge registration as follows:
   a) Turn on the copier main switch and make a copy using the test chart in the platen mode using the flip scale to align the original.
   b) Keep this copy for reference and mark "PM" (Platen Mode) on the reverse side of it.
   c) Make a copy using the test chart with the DF.
   d) Adjust the DF registration to match the "PM" reference copy using VR101 on the DF PCB [B].

      PM > DF: Turn VR101 clockwise
      PM < DF: Turn VR101 counterclockwise.

   e) Continue to repeat steps c) and d) until you achieve the same registration as in step b).
2. Replace all covers.
3. Check the operation of the DF and copier system.
4. Fill out the New Equipment Condition Report.

SORTER

SPECIFICATIONS

Paper Size for Bins:	Maximum A3, 11" x 17" Minimum B6, 5 1/2" x 8 1/2"
Paper Weight:	50 to 110 grams (14 to 28 lb)
Number of Bins:	20 bins + proof tray
Bin Capacity:	Sort Mode 30 sheets/A4 (8 1/2" x 11") 10 sheets/A3 (11" x 17") Stack Mode 30 sheets/A4 (8 1/2" x 11") 10 sheets/A3 (11" x 17")
Proof Tray Capacity:	100 sheets (all sizes)
Power Source:	100 V, 50/60 Hz, 0.6 A (from copier)
Power Consumption:	60 W
Dimensions: (W x D x H)	346 mm x 474 mm x 388 mm 13.6" x 18.7" x 15.3"
Weight:	12.4 kg (27.3 lb)
Copier Interface Equipment:	Sorter adapter type E Interface PCB type E

MECHANICAL COMPONENT LAYOUT

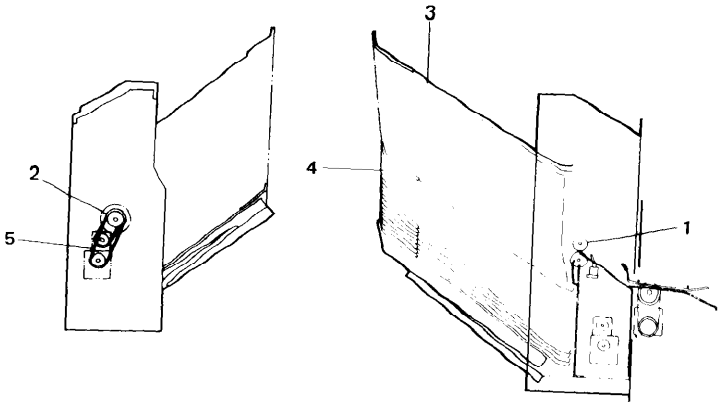

1. Exit Rollers
2. Bin Drive Wheel
3. Proof Tray
4. Bins
5. Roller Drive Belt

ELECTRICAL COMPONENT LAYOUT

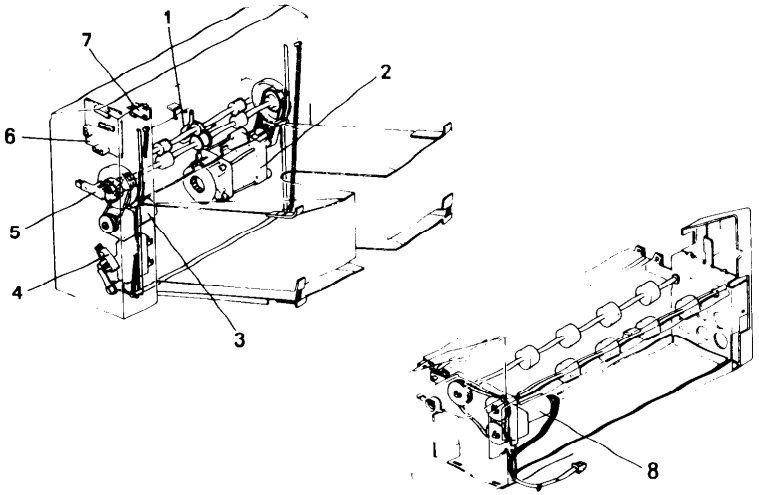

1. Paper Sensor (S-31)
2. Wheel Drive Motor (M-11)
3. Roller Drive Motor (M-12)
4. Bin Home Position Sensor (S-32)
5. Wheel Sensor (S-33)
6. Sorter Control PCB (PCB-9)
7. Cover Safety Switch (SW-9)
8. Relay Drive Motor (M-13)

SORTER INSTALLATION

1. Accessory Check

Check the quantity and condition of the accessories in the box according to the following list:

1. Installation Procedure (115V - English/220V - five languages)	1
2. New Equipment Condition Report	1
3. Envelope-NECR (115V only)	1
4. Grounding Screw	1
5. Toothed Washer	1
6. Knob Screw	2
7. Spacer 4.2 x 12 x 2.9	2
8. Multilingual Decal (220/240V only)	2

Interface PCB Type E and Sorter Adapter Type E are also required to install the sorter.

Check the accessories according to the following list:

Sorter Adapter Type E box:

1. Mounting Stud	2
2. Screw	1

Interface PCB Type E box:

1. PCB Mounting Stud	2

NOTE:
- The interface PCB is not necessary with the A024-17 and A024-27 version machines (already equipped at the production line).
- The interface PCB is not necessary if a DF is already installed in the system.
- The sort/stack key top and key cover are enclosed with the copier.

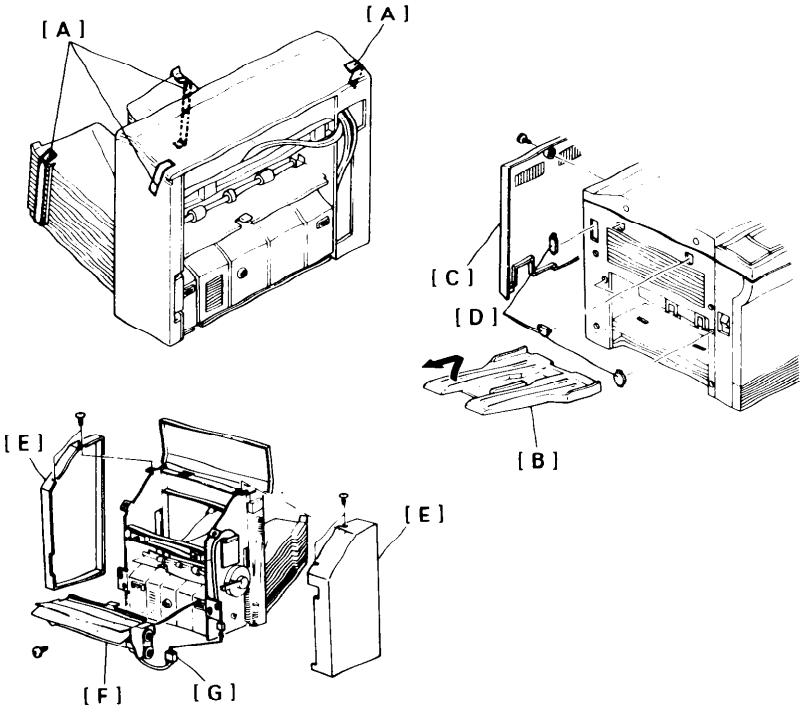

1. Remove the strips [A].
2. Turn off the main switch and unplug the power supply cord of the copier.
3. Remove the receiving tray [B], and rear cover [C] (2 screws).
4. Remove the five plastic caps [D] from the left cover.
5. Remove the sorter covers [E] (2 screws each).
6. Install the sorter adapter [F] on the sorter (1 screw).
7. Connect the sorter adapter harness [G] to the sorter (free white 2P connector).

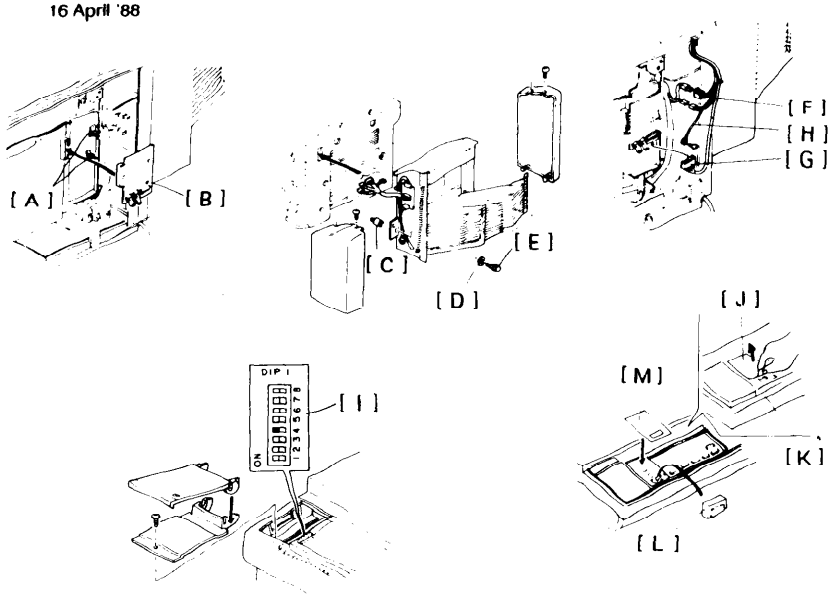

8. Fix the two PCB mounting studs [A] on the main board and install the interface board [B].
9. Screw the mounting studs [C] into the docking hole.
10. Mount the sorter on the copier. Pass the harness through the access hole.
11. Fix the sorter unit to the copier with the spacers [D] and two knob screws [E].
12. Connect the sorter ac harness [F] (free red 2P connector).
13. Connect the sorter dc harness [G] (CN102, free white 4P connector).
14. Secure the sorter ground wire [H] (1 screw with toothed washer).
15. Turn on DIP switch 1-4 [I] on the operation panel.
16. Mount the sorter covers and copier rear cover.
17. Peel off the panel cover [J] at the left end of the operation panel [K].
18. Install the Sort/Stack key top [L] and adhere the Sort/Stack key cover [M].
19. Check the sorter's operation and fill out the New Equipment Condition Report.

REPLACEMENT AND ADJUSTMENT

1. Exit Roller and O-Ring Replacement

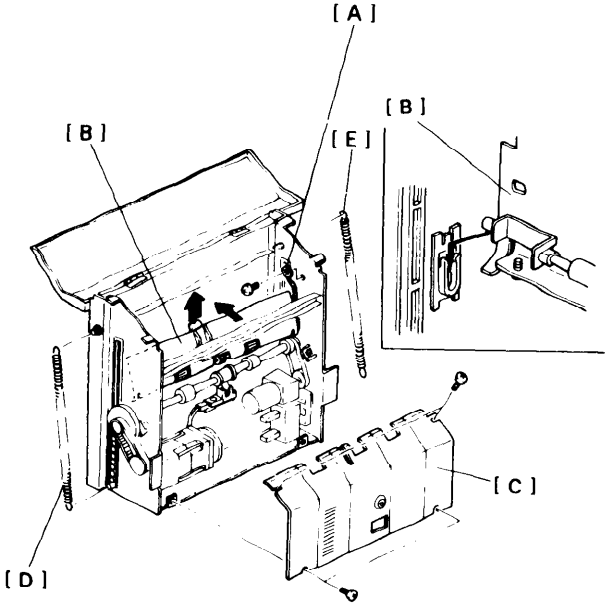

1. Remove the sorter from the copier and the sorter adapter from the sorter.
2. Remove the front and rear covers (2 screws each).
3. Remove the ground wire [A] of the upper guide plate [B] (1 screw).
4. Swing the guide plate up, then remove it by carefully pulling it up.
5. Remove the inner cover [C] (4 screws).
6. Unhook the front [D] and rear [E] pressure springs.

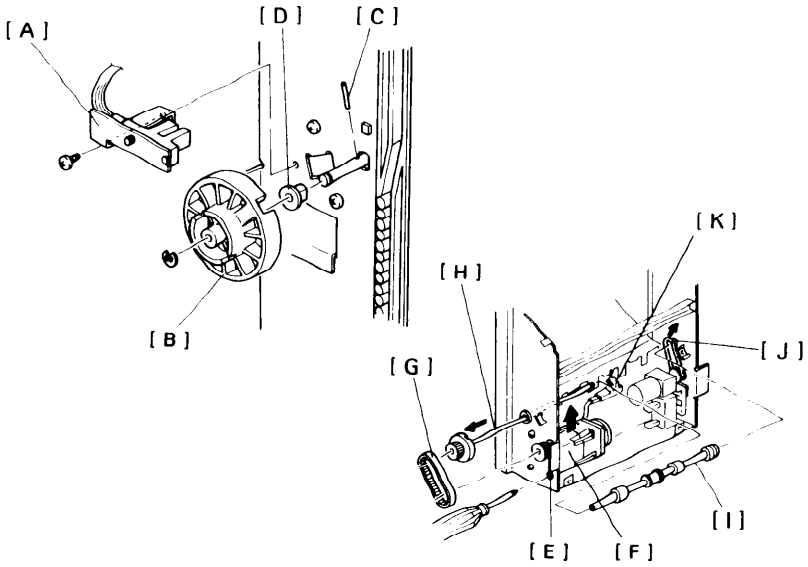

7. Remove the wheel sensor assembly [A] (1 screw).
8. Remove the rear transfer wheel [B] (1 E-ring).

NOTE: Be sure not to lose the pin [C] of the wheel.

9. Remove the pin and bushing [D].
10. Loosen the four mounting screws [E] of the wheel drive motor [F].
11. Lift the wheel drive motor and slip off the timing belt [G].
12. Slide off the wheel drive shaft [H] and remove the exit roller [I] and O-ring [J].

Do not damage the paper sensor [K] when removing the exit roller.

13. Replace the exit roller and O-ring, then reassemble.

NOTE:
- When reinstalling the wheel sensor assembly, be sure that the sensor does not touch the wheel.
- When remounting the wheel drive motor, adjust the timing belt tension. (See the section on Timing Belt Tension Adjustment.)

2. Paper Sensor Replacement

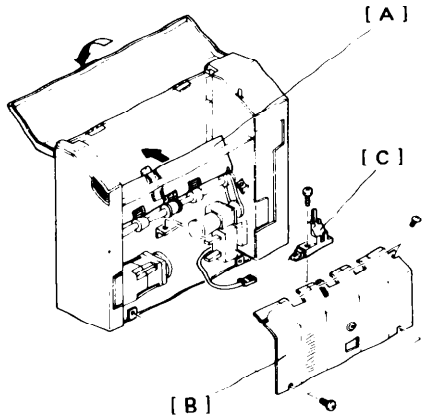

1. Remove the sorter from the copier and the sorter adapter from the sorter.
2. Swing up the guide plate [A].
3. Remove the inner cover [B] (4 screws).
4. Replace the paper sensor [C] (1 screw and 1 connector) and reassemble.

To avoid damaging the sensor, do not over-tighten the sensor mounting screw.

3. Timing Belt Tension Adjustment

ADJUSTMENT STANDARD: 2 $^{+3}_{-0}$ mm; 0.08 $^{+0.12}_{-0}$ inches
(deflection at 200 g (0.44 lb) pressure)

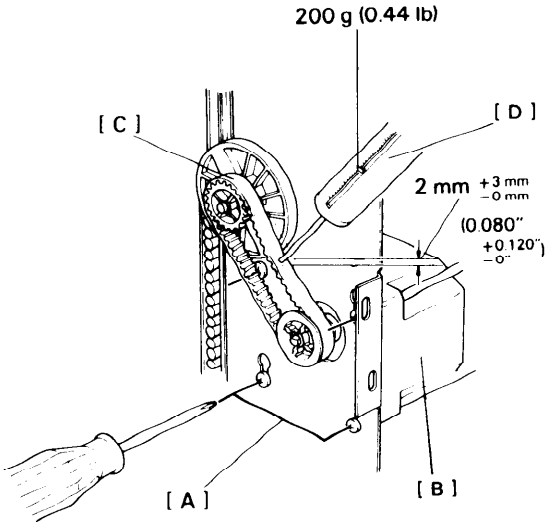

1. Remove the front cover.
2. Loosen the four mounting screws [A] of the wheel drive motor [B].
3. Press the timing belt [C] with a tension gauge [D] as shown in the figure and adjust the tension by repositioning the wheel drive motor.

LARGE CAPACITY TRAY

SPECIFICATIONS

Copy Paper Size:	B4 (length) A4 (length or width) B5 (length or width) 8 1/2" x 14" (length) 8 1/2" x 11" (length or width)
Copy Paper Weight:	50 g to 110 g (14 lb to 28 lb)
Tray Capacity:	1,000 sheets (may vary slightly depending on paper weight)
Lift Time:	Maximum: 12 seconds (50 Hz) 10 seconds (60 Hz)
Power Source:	220 V/60 Hz 0.15 A 220 V/50 Hz 0.15 A 240 V/50 Hz 0.15 A 115 V/60 Hz 0.3 A 115 V/60 Hz 0.3 A
Power Consumption:	Maximum 30 W
Dimensions: (W x D x H)	410 mm x 545 mm x 220 mm 16.2" x 21.5" x 8.7"
Weight:	12 kg (26.4 lb)

MECHANICAL COMPONENT LAYOUT

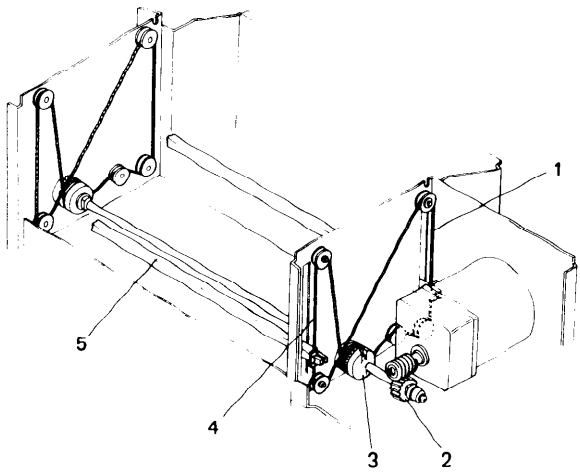

1. Drive Wire
2. Drive Gears
3. Drive Pulley
4. Tray Wire
5. Lift Rods

ELECTRICAL COMPONENT LAYOUT

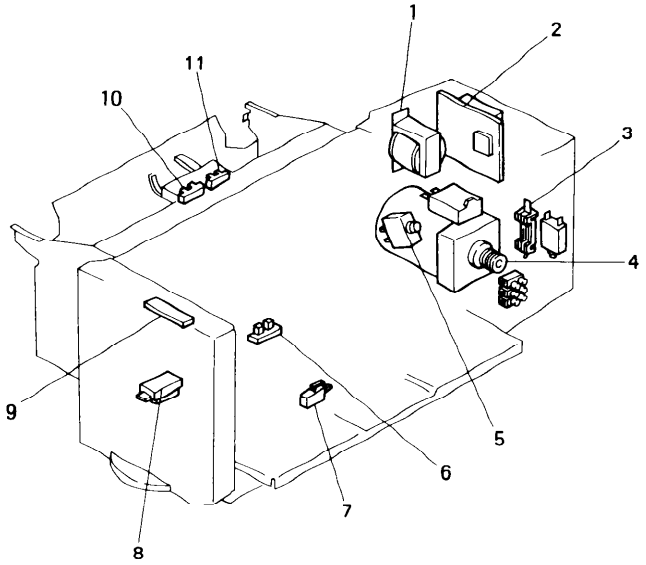

1. LCT transformer (T-2)
2. LCT PCB (PCB-12)
3. Ac fuse (F-2) (220 V)
3. Circuit breaker (CB-2) (115 V)
4. LCT motor (M-17)
5. LCT safety switch (SW-11)

6. Tray down sensor (S-39)
7. Positioning switch (SW-12)
8. Paper size sensor (S-40)
9. LCT operation panel (PCB-13)
10. Paper end sensor (S-41)
11. Upper limit sensor (S-42)

LARGE CAPACITY TRAY INSTALLATION

1. Accessory Check

Check the quantity and condition of the accessories in the box according to the following list:

1. Installation procedure (115V - English only/220V - five languages)	1
2. New Equipment Condition Report	1
3. Envelope - NECR (115V only)	1
4. Pick-up roller assembly	1
5. Feed Gear	1
6. Mounting Bracket (Type A, B, C)	6
7. Screw (M4 x 6)	4
8. Screw (M4 x 8)	1
9. Screw (M4 x 10)	2
10. Clamper	1
11. Caution Decal (115V - English only/220V - five languages)	1
12. Multilingual decals (220/240V only)	1

2. Installation

16 April '88

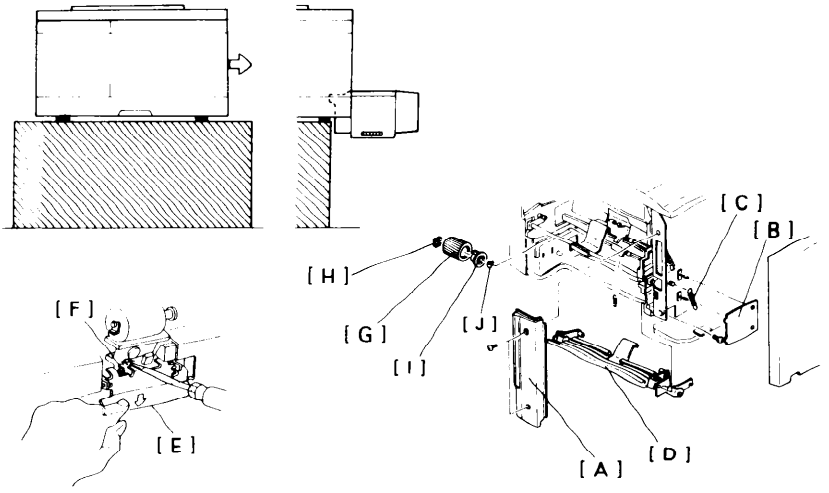

1. Turn off the main switch and unplug the power supply cord of the copier.
2. Move the copier to the right.

NOTE: The copier must be moved to the right so that the large capacity tray can overhang the end of the table.

3. Remove the rear cover (2 screws).
4. Remove the rear right side cover [A] (2 screws).
5. Remove the paper feed PCB [B] (2 studs).
6. Remove the cassette arm lever spring [C].
7. Remove the cassette arm assembly [D] (1 screw).
8. Press the pad positioning plate [E] down and unhook the spring [F] using a small screw driver.
9. Slide off the feed roller [G] (1 snap ring [H]).
10. Remove the nylon hub [I] from the feed roller.
11. Remove the E-ring [J] of the feed roller shaft.
12. Reinstall the paper feed PCB.

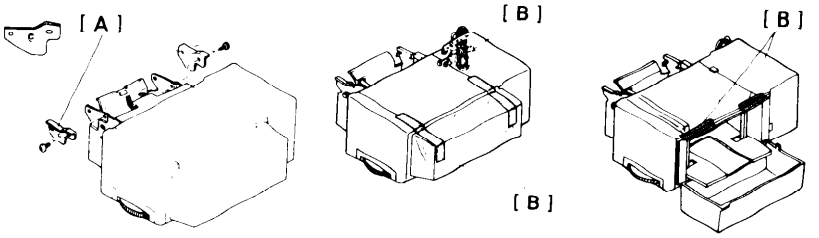

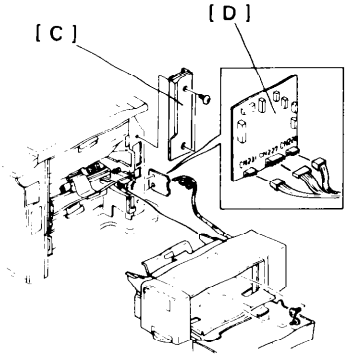

13. Install the mounting bracket [A] (Type C, Chrome) on the large capacity tray (2 screws, M4 x 6 each).
14. Remove the 5 strips of shipping tape [B].
15. Reinstall the rear right side cover [C].
16. Place the large capacity tray in the cassette holder on the 2nd feed station.

NOTE: Make sure that the rib of the tray side plate fits into the groove of the cassette holder.

17. Open the side and top covers and secure the tray to the 2nd feed station (2 screws, M4 x 10).
18. Disconnect CN226 and CN227, and set these connectors to the harness clamp.
19. Connect the tray harness to the paper feed PCB [D] as follows:
    * 3P connector to CN 226
    * 4p connector to CN 231
    * 7p connector to CN 227

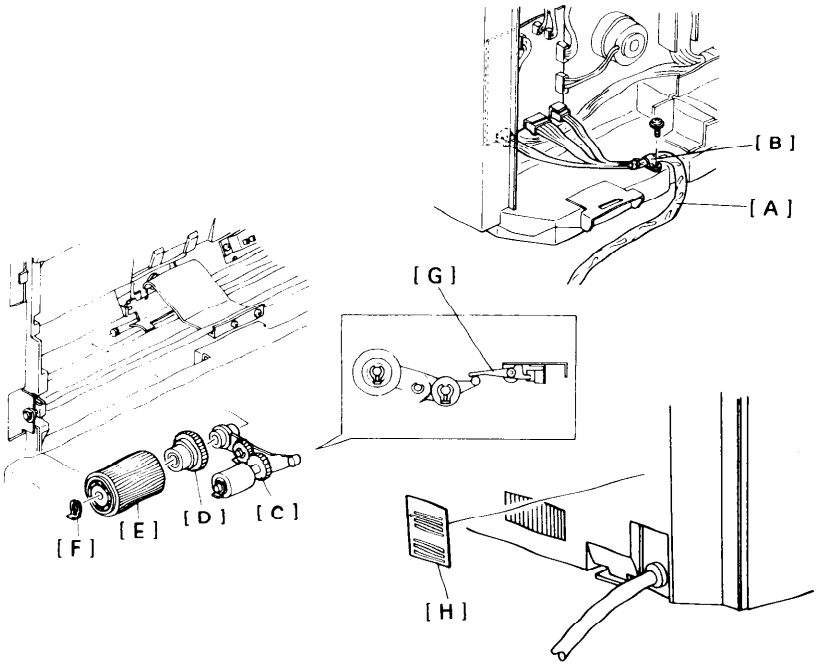

20. Clamp the LCT harness [A] to the base plate with the nylon wire clamp [B].
21 Install the pick-up roller assembly [C] on the feed roller shaft.
22. Install the gear [D] on the feed roller shaft.
23. Reinstall the feed roller [E] (1 snap ring [F]).
24. Make sure that the paper position feeler [G] is positioned as shown.
25. Reinstall all covers.
26. Stick the caution decal [H] on the copier rear cover.
27. Check the operation of the Large Capacity Tray.
28. Fill out the New Equipment Condition Report.

REPLACEMENT AND ADJUSTMENT

1. Tray Wire Replacement

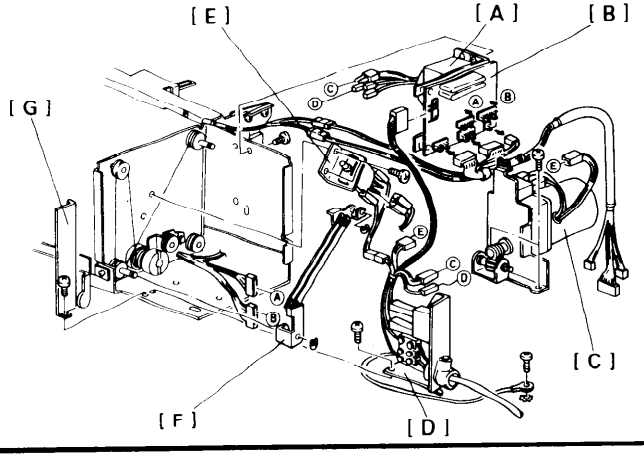

Unplug the tray power supply cord.

- Front Wire -

1. Remove the following parts:

   1) Front cover (2 screws and 1 connector)
   2) Nylon clamp holding the operation board harness (1 screw)

- Rear Wire -

1. Remove the LCT from the copier.
2. Remove the following parts:
   1) Rear cover (5 screws)
   2) Transformer assembly [A] with tray main board [B] (1 screw, 8 connectors, and 1 nylon clamp)
   3) Drive motor assembly [C] (2 screws and 1 connector)
   4) Ac power terminal [D] (2 screws and 1 ground wire)
   5) Safety switch assembly [E] (2 short screws)
   6) Safety switch actuator assembly [F] (2 E-rings)
   7) Shield plate [G] (4 screws)

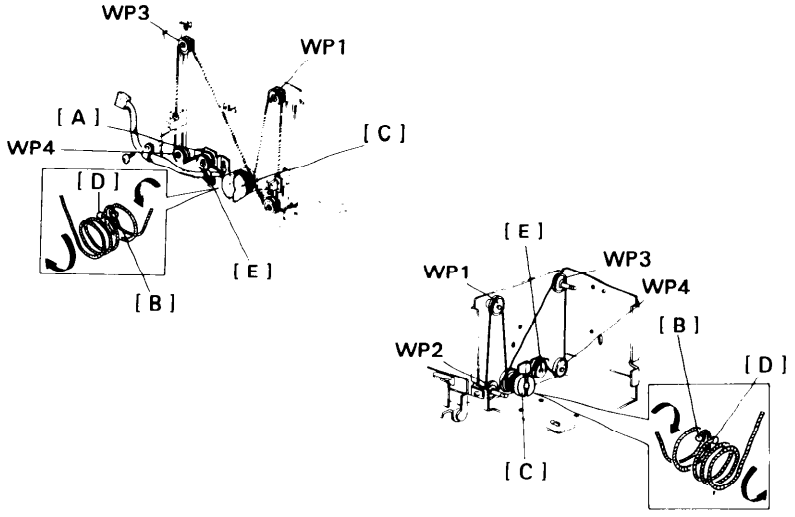

- Common Procedure for Front and Rear Wires -

NOTE: The running directions for the front and rear wires are opposite.

1. Loosen the wire tightener [A] (1 screw).
2. Insert the bead [B] (unmarked) into the rear slot of the drive pulley.
3. Loop the wire around the drive pulley [C], as shown (one and a half turns).
4. Run the wire over WP1, WP2, WP3, and WP4 in turn while also placing the lift rod's ends in the braces.
5. Insert the bead [D] (red) into the other slot of the drive pulley.
6. Loop the wire around the drive pulley, as shown (two and a half turns).
7. Hook the wire on the tightener pulley [E].
8. Move the rods up and down manually to ensure that the drive wire does not overlap on the pulley.
9. Tighten the wire using the tightener (1 screw).
10. Reassemble.

2. Tray Down Sensor and Positioning Switch Replacement

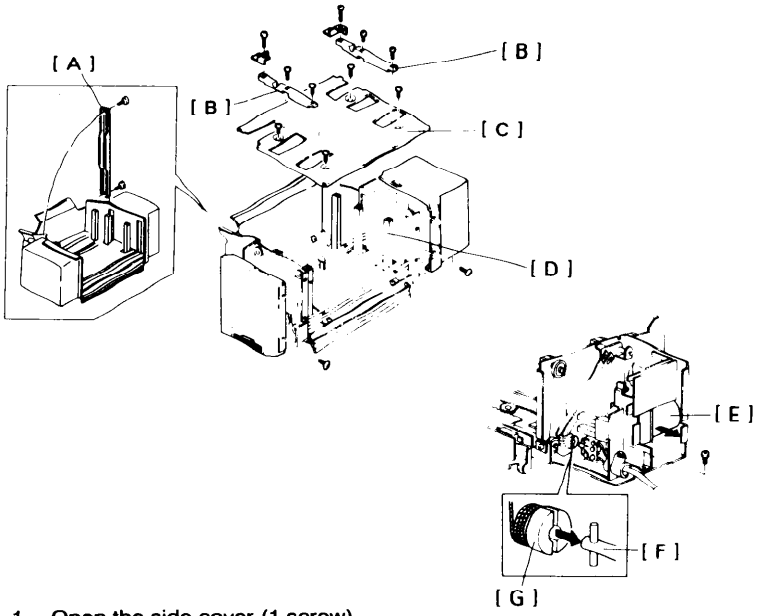

1. Open the side cover (1 screw).
2. Remove the top cover and rear cover (5 screws).
3. Remove the sensor bracket [A] (2 screws). (There is no need to disconnect the sensor connector.)
4. Remove the two post tops [B] (3 screws each).
5. Remove the tray bottom plate [C] (4 screws) taking care not to damage the 6 guide posts [D].
6. Move the tray drive motor assembly [E] (2 screws) to the rear to disengage the tray drive shaft [F] from the wire drive pulley [G].

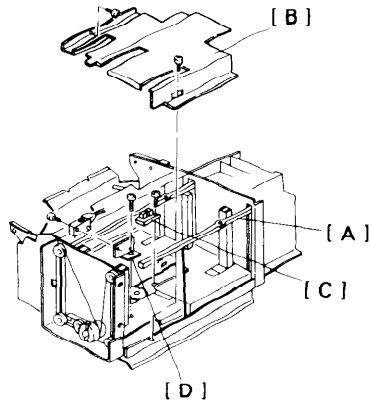

7. Raise the lift rods [A].
8. Remove the front inner cover [B] (1 short and 1 long screw).
9. Replace the tray down sensor [C] (1 screw and 1 connector).
10. Rotate the paper size dial to a smaller size, such as A4R, and remove the positioning switch bracket [D] (1 screw).
11. Replace the positioning switch (2 screws).

3. Paper Size Sensor Replacement

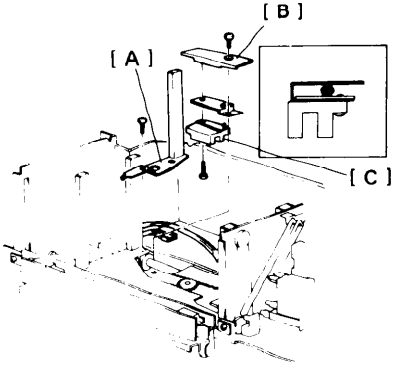

1. Do steps 1 to 8 of the tray down sensor and positioning switch replacement procedure.
2. Remove the front guide post [A] (1 screw and 1 hook).
3. Remove the paper size sensor bracket [B] (1 screw).
4. Replace the paper size sensor [C] (1 screw and 1 connector.)

NOTE: When installing the sensor bracket, make sure that the harness is positioned inside the sensor bracket.

4. Side Registration Adjustment

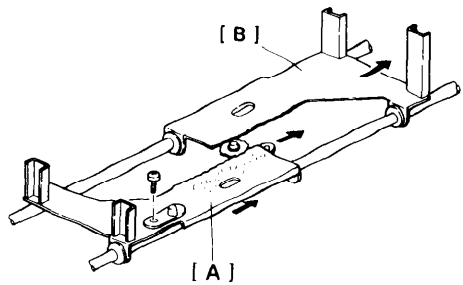

NOTE: Do not move the paper size dial while performing this adjustment.

1. Do steps 1 to 8 of the tray down sensor replacement procedure.
2. Loosen the 2 screws securing the pinion bracket [A].
3. Loosen the screw securing the guide post lock plate [B].
4. Move the pinion bracket while holding the pinion so that the pinion does not turn. (The front and rear guide posts must be equidistant from the center.)
5. Tighten the screws securing the pinion bracket.
6. Tighten the screws securing the guide post lock plates.
7. Confirm that the side registration is adjusted correctly and reassemble.

EDITOR BOARD INSTALLATION

UNPACKING AND INSTALLATION

1. Accessory Check

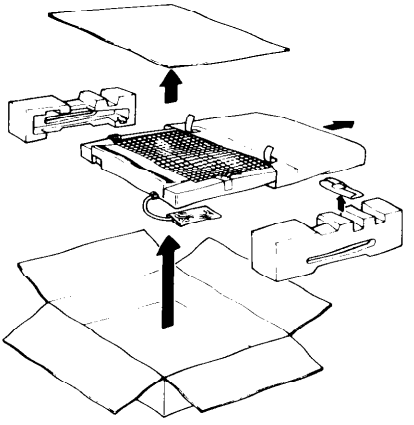

Check the quantity and condition of the accessories in the box according to the following list:

1. Installation Procedure (115V - English only. 220/240V - Five languages)	1
2. New Equipment Condition Report	1
3. NECR Envelope (115V only)	1
4. Operation Instructions (115V - English only. 220/240V - Five languages)	1
5. Stylus	1
6. Cover Plate (FT4430 only)	1
7. Ferrite Core (220/240V only)	1
8. Lock Plate (220/240V only)	1
9. Clamp	1
10. Multilingual Decal (220/240V only)	1
11. Pan Head Screw (M4 x 8)	1

2. Installation Set for RE 11

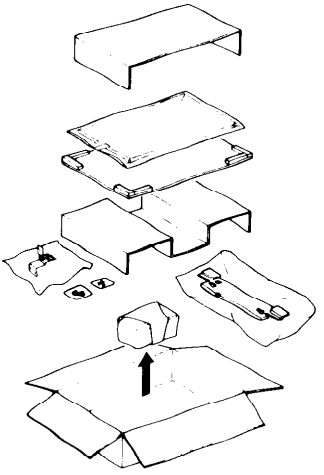

The installation set is required when using the editor as a pressure plate.

Open the box and check the parts according to following list:

1. Pressure Sheet	1
2. Left Hinge	1
3. Right Hinge	1
4. Pan Head Screw (M4 x 12)	12
5. Harness Clamp	2
6. Hinge Bracket (FT5560, - 115V only)	1
7. Mounting Stud (FT5560. - 115V only)	2
8. Pan Head Screw with Washer (M3 x 6) (FT5560, - 115V only)	2

NOTE: When installing the editor on this copier, the optional erase lamp (Editing Interface Adapter Type A) is required.

3. Installation Procedure

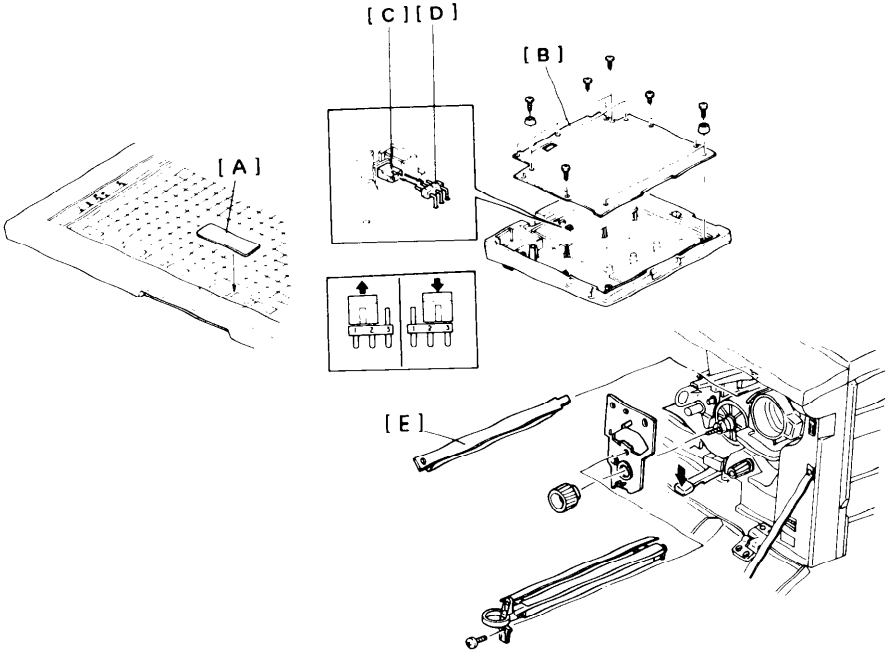

NOTE: - This preparation is only necessary for this copier.
- As this copier does not have either the Shift Image function or the Centering functions, the following procedure prevents the buzzer from sounding if the user mistakenly pushes the Shift Image key or Centering key with the stylus.

1. Place the cover plate [A] over the Shift Image key and the Centering key.
2. Remove the bottom plate [B] of the editor (11 screws).
3. Remove the shorting connector [C] from the connector [D] on the PCB.
4. Reinstall the shorting connector, as shown in the figure.
5. Reinstall the bottom plate.
6. Replace the eraser installed in the machine with the optional erase lamp [E].
7. Turn on DIP SW 1-8 on the operation panel and change SP Mode No. 45 from "0" to "1".

4. Installation Procedure on a Table

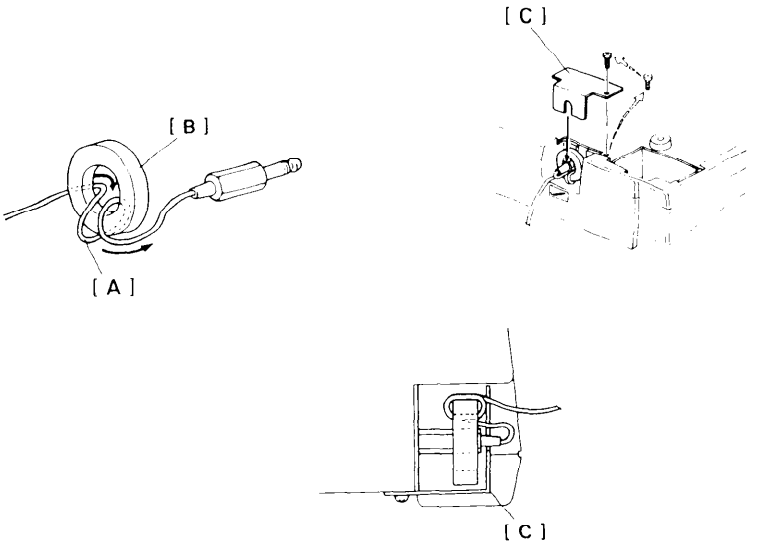

NOTE: This procedure is required if the ADF or platen cover is already installed on the machine.

1. Turn the stylus harness [A] twice around the ferrite core [B] as shown in the figure.

NOTE: Step 1 is only required in the European machines.

2. Plug the stylus jack into the editor board as shown.
3. Remove the screw securing the bottom plate as shown and secure the lock plate [C] to the bottom plate.

NOTE: - Step 3 is only required in the European machines.
- Be sure that the lock plate does not damage the stylus harness.

4. Place the editor on a table.

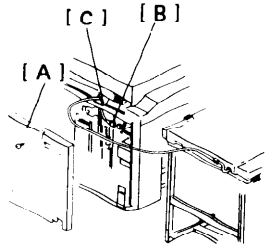

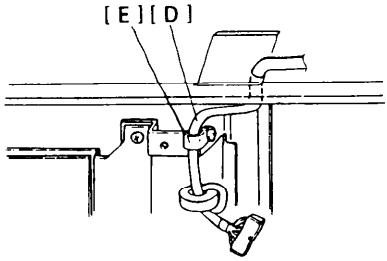

5. Remove the rear cover [A].
6. Connect the editor connector (8 pin) [B] through the docking hole [C] of the DF.

NOTE: If the platen cover is installed on the machine, the connector should be connected through the cutout in the docking hole cap as shown on page 10-8.

7. Clamp the editor harness [D] to the main board bracket with the nylon wire clamp [E].
8. Reinstall the rear cover.
9. Check the operation of the editor.
10. Fill out the New Equipment Condition Report.

5. Installation Procedure on the Machine

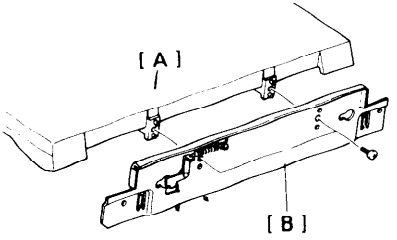

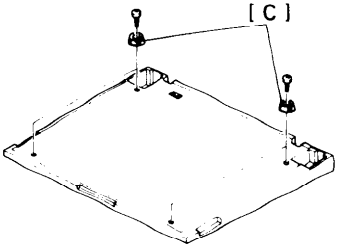

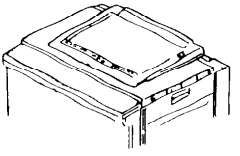

1. Remove the platen cover [A] from the machine.
2. Remove the platen cover hinge bracket [B] from the platen cover.
3. Remove the feet [C] from the editor (4 screws).

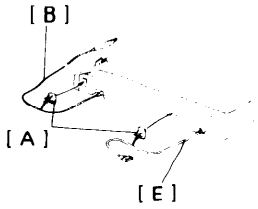

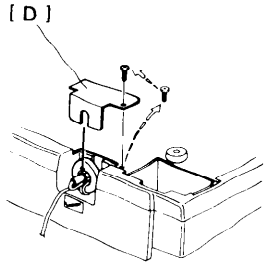

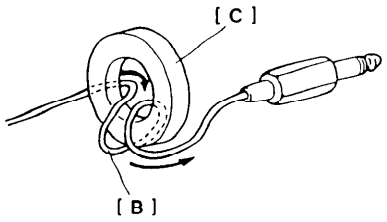

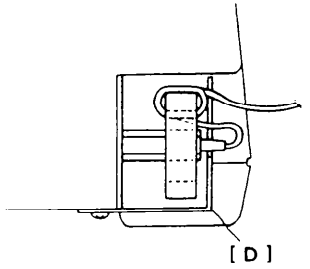

4. Install the clamps [A] on the editor as shown in the figure.
5. Turn the stylus harness [B] twice around the ferrite core [C].

NOTE: Step 5 is only required for European machines.

6. Plug a stylus jack into the editor as shown.
7. Remove the screw securing the bottom plate and secure the lock plate [D] to it.

NOTE: - Step 7 is only required in the European machines.
- Be sure that the lock plate does not damage the stylus harness.

8. Secure the stylus harness and connector harness [E] in the clamps.

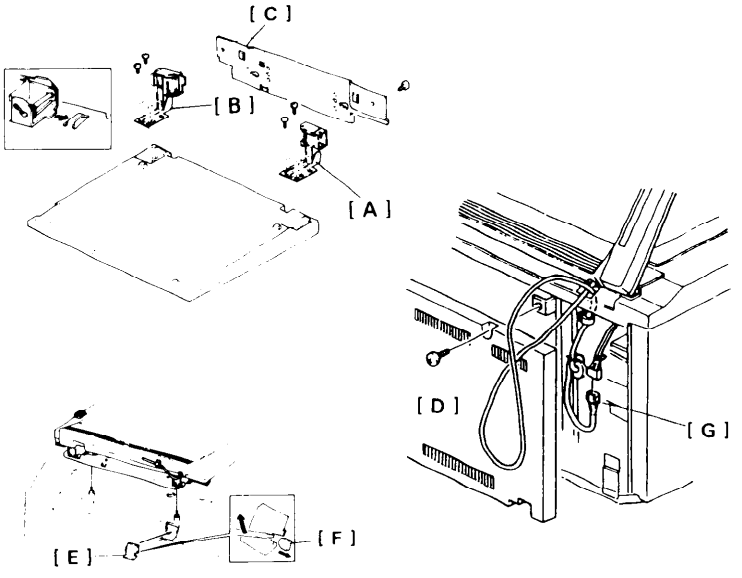

9. Install the left hinge [A] and right hinge [B] on the editor (6 screws each).
10. Install the hinge bracket [C] on the hinges (2 screws).

NOTE: Use the screws which secure the platen cover to the copier.

11. Remove the rear cover [D] and remove the right docking hole cover [E].
12. Remove the cap [F] from the right docking cover using a small screw driver as shown.
13. Connect the editor connector (8 pin) [G] through the docking hole and reinstall the docking hole cover on the copier.

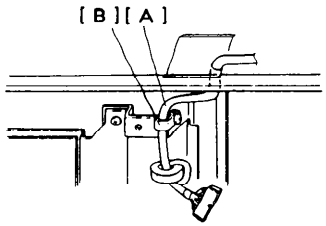

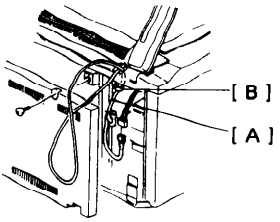

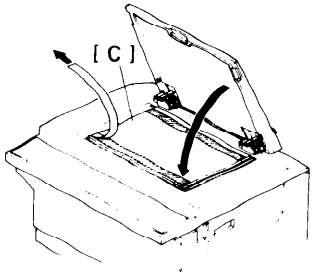

14. Clamp the editor harness [A] to the main board bracket with the nylon wire clamp [B], then reinstall the rear cover.
15. Install the editor on the copier.
16. Put the pressure sheet [C] on the exposure glass so as to align the image area indicators.
17. Remove the seal.
18. Close the editor to complete the installation of the pressure sheet and the editor.
19. Check the operation of the editor.
20. Fill out the New Equipment Condition Report.

COPY QUALITY

WHITE SPOTS

1. Firefly Spots

- Possible Causes -

- Developer too old
- Insufficient toner in developer
- Dirty seals around development unit

- Action -

Is there a small black spot in the center of the white spot?

Y: Is the image density too light?
- Y: ▸ Clean the ends of the development roller.
  ▸ Replace the developer and the side seals.
- N: Correct the light copy condition. Refer to "Light Copy" section.

N: Check and adjust the doctor gap (0.90 mm).

2. Small Spots

- Possible Causes -

- Dirty corona wire.
- Incorrect corona current

- Action -

Perform drum conditioning. If that does not solve the problem, check whether the charge corona current is correct.

Y: Clean the transfer corona wire and adjust the transfer current.

N: Adjust the charge corona current.

3. Dirty Background Around White Spots

- Possible Causes -

- Condensation on the drum due to rapid temperature change. This phenomenon may occur early on winter mornings.

- Action -

The problem should disappear after about 20 copies. If it does not, perform drum conditioning.

HAT IMAGE

- Possible Causes -

- Defective quenching lamp
- Charge corona wire mismounted
- Incorrect corona current
- Old developer

- Action -

Does the quenching lamp turn on?
Y N
| |
| Does CN203-8 drop from +24 volts to ground?
| Y N
| | |
| | ▸ Check the connector and harness.
| |
| Replace the quenching lamp.
Is the charge corona wire properly installed?
Y N
| |
| ▸ Install the charge corona wire correctly.
| ▸ Replace any defective parts.
Is the charge corona current correct?
Y N
| |
| Adjust the charge corona current.
Replace the developer.

BLANK AREA OR PATCHY IMAGE

- Possible Causes -

- Uneven PTL, transfer, or separation coronas.

- Action -

Are the PTL, transfer, and separation corona wires improperly installed?

Y: Clean the PTL, transfer, and separation corona wires and adjust the corona currents.

N:

Clean and reset the wire(s).

UNFUSED COPY

1. Image Can be Easily Rubbed Off

- Possible Causes -

- Thermistor malfunction
- Very low early morning temperatures.
- Copy paper has a very rough surface.

- Action -

Does the problem occur only early in the morning?

Y:

Is the thermistor dirty or damaged?

Y: Clean or replace the thermistor.

N: Increase fusing temperature using SP Mode # 49. If the problem still occurs, increase the fusing pressure.

N:

Select the fusing idling mode using SP Mode # 29.

JITTER

- Possible Causes -

- Vibration in drive mechanism
- Scanner not moving smoothly

- Action -

Does jitter appear on the leading edge of copies?

Y — N

Y: Clean the scanner guide rods; then, apply a small amount of Launa oil to the lubricant pad (if dry).

N: Does the interval of jitter change when making reduced copies?

Y — N

Y: Check the main drive belt. Replace the tensioner spring if it is stretched.

N: Clean the scanner guide rods; then, apply a small amount of Launa oil to the lubricant pad (if dry).

Is the scanner wire tension correct?

Y — N

N: Rehook the tension spring or replace it if stretched.

Y: Check all mechanical parts for incorrect operation.

HOLLOWING OUT

1. Center of Solid Black Areas is Hollow

- Possible Causes -

- Damp paper
- Incorrect transfer or separation corona current.

- Action -

Is the paper damp?
Y N
| |
| ▸ Clean the PTC and T/S corona wires.
| ▸ Check and adjust the transfer and separation corona currents.
Replace the damp paper with fresh paper.

VERTICAL WHITE LINES OR BANDS

1. Lines 80 mm Apart

- Possible Causes -

- Damaged pick-off pawls
- Pick-off mechanism malfunction

- Action -

Does the pick-off pawl mechanism work correctly?
Y N
| |
| Correct or replace any defective parts.
Are the pick-off pawls damaged?
Y N
| |
| Replace the drum
Correct or replace the pick-off pawls, and replace the drum.

2. Straight Sharp Lines

- Possible Causes -

- Drum scratched
- Cleaning blade damaged
- Cleaning brush worn
- Hot roller scratched
- Hot roller strippers worn

- Action -

Start a copy cycle and stop it before the copy reaches the fusing unit.

Do the same lines exist on the unfused copy?

Y — If the surface of the hot roller is scratched, which part is scratching the hot roller surface?
- Oil Blade
- Hot Roller Strippers
- Other

Clean, correct, and/or replace any parts which scratch the hot roller. If the hot roller strippers are badly stained with toner, check and adjust the fusing temperature. Then, replace the hot roller.

N

Is the drum scratched?

Y — Follow troubleshooting section "Uneven Density 1) Uneven density appears in bands."

N

Correct or replace any parts scratching the drum surface.
- Cleaning entrance seal--wavy, bent, burrs
- Cleaning brush
- Brush seals which contact the drum

Are there any foreign substances around the drum that may cause leaking of the drum potential?

Y
- Clean the edge of the cleaning blade. Check that the movement of the blade cleaner is smooth and the cleaner edge is straight.
- Clean all seals.

Remove the foreign substances.

N

3. Fuzzy Lines or Bands

- Possible Causes -

- Dirty corona wire

- Action -

Clean the charge, transfer corona wires, and PTL.

UNEVEN DENSITY

1. Image Density Gradually Changes Across The Copy

- Possible Causes -

- Charge corona wire height not even
- Charge corona wire dirty
- Doctor gap not even

- Action -

Does the darker area follow the image when making reduced copies?

Y — Clean the charge corona wires. Are the charge corona wires incorrectly positioned in the wire cleaner and end block?

Y — Position the wires correctly.

If the problem still exists, check and adjust the doctor gap.

N — Is the charge corona current uneven across the drum?

Y — Adjust the charge corona current and wire height.

N — Clean the transfer corona unit.

Are any of the optics parts stained?

- Toner Shield Glass
- Exposure Glass
- Mirrors, Lens, Reflectors

Y

N

Is the exposure lamp stained black?
Y N
Correct uneven exposure using the adjusting plates.
Replace the exposure lamp.
Clean them.

2. Uneven Density Appears in Bands.

- Possible Causes -

- Exposure lamp misaligned
- Dirty quenching lamp
- Dirty corona wire
- Incorrect corona current

- Action -

Does the darker area move with the image when making reduced copies?
Y N
- Clean the charge corona wire.
- Check and adjust the charge corona current. Make sure it is even across the drum.
- Clean the quenching lamp.
- Clean the transfer corona wire.
- Clean the erase unit.

Are any of the following parts stained or dirty?
- Toner Shield Glass
- Exposure Glass
- Mirrors, Lens, Reflectors

Y N
Is the exposure lamp stained?
Y N
Correct using the adjusting plates. Does the problem still exist?
Y
Align the filament of the exposure lamp.
Replace the exposure lamp.
Clean them.

ABNORMAL IMAGE DENSITY

1. Image Density Is Too High Or Too Low

- Possible Causes -

- Incorrect charge corona current
- ID sensor malfunction

- Action -

Check the output voltage of the ID sensor using SP Mode # 55. Is the voltage correct?

Y N

| Adjust the voltage so that it is within standard.

Check and adjust the charge corona current.

If the image density is too light, use SP Mode # 60 to supply toner.

VERTICAL BLACK LINES OR BANDS

1. Wavy Lines

- Possible Causes -

- Dust between the cleaning blade and drum
- Edge of the cleaning blade deformed
- Insufficient cleaning pressure
- Cleaning mechanism not working properly

- Action -

Clean the edge of the cleaning blade. Do the lines still exist or do they reappear after a short time?

Y

Is the stroke of the cleaning solenoid plunger 4 mm?

Y N

| Adjust the stroke of the cleaning solenoid.

Check the cleaning pressure mechanism. Do all parts move properly?

Y N

Correct or replace any defective parts and check operation again.

Is the edge of the cleaning blade deformed?

Y N

Slightly increase the cleaning pressure.

Replace the cleaning blade.

2. Dotted Lines or Bands

- Possible Causes -

- Pick-off pawl mechanism malfunction
- Scratched drum

- Action -

Do the pick-off pawls swing properly?

Y N

Correct or replace the pick-off pawls, and replace the drum.

Is the gap between the drum and pick-off pawls correct (1.5 ± 1 mm)?

Y N

- If the pick-off pawl mechanism does not work properly, correct or replace any defective parts.
- If the drum is scratched, correct the condition that caused the scratch; then, replace the drum.

Are the pick-off pawls locked by toner or dust

N Y

Clean the pawl shaft and pick-off pawls using alcohol and lubricate with Launa oil.

Are the pawl springs defective.

Y

Replace the springs.

3. Line or Band Appears at The Rear Edge of The Copy (A3 or 11" x 17")

- Possible Cause -

- Toner shield glass mismounted

- Action -

Set the toner shield glass properly.

4. Straight Lines Or Bands

- Possible Causes -

- Hot roller scratched
- Insufficient silicone oil
- Cleaning blade damaged
- Drum scratched

- Action -

Do the lines move with the image when making reduced copies?

Y N

Y:
Start a copy cycle and stop it just before the paper reaches the fusing unit. Then, check if the unused copy has the same lines on it.

Y N

Y:
If the hot roller surface is scratched, clean, correct, or replace any parts scratching the surface.
◂ Oil Blade
▸ Hot Roller Strippers

Note: If the hot roller strippers are badly toner stained, check and adjust the fusing temperature. Replace the hot roller. Check the silicone oil level.

Is the drum scratched?

Y N

Y:
If you cannot solve the problem by following troubleshooting "Uneven Density 2. Uneven density appears in bands", clean the edge of the cleaning blade. Make sure the blade cleaner moves smoothly, and that the cleaner edge is straight.

Determine what scratched the drum and correct it (perhaps the pick-off pawls), and replace the drum.

Refer to "Vertical White Lines 2) Straight sharp line(s)".

5. Lines at Irregular Intervals

- Possible Causes -

- Deformed cleaning blade scraper
- Toner clogged in cleaning unit

- Action -

Is toner clogged in the cleaning unit?

Y N

Y:
- Check the cleaning blade scraper.
  - Is it straight?
  - Does it contact the cleaning blade properly?
  - Does it move correctly?

  Y: Correct or replace any defective parts.

  N: Correct or replace any defective parts.

- Clean the cleaning unit. Check the toner collection coil; replace it if damaged.
- Check RA3. Make sure the cooling fan operates properly.

BLACK SPOTS AT THE LEADING EDGE

- Possible Cause -

- Separation corona wire mismounted

- Action -

Is the separation corona wire properly installed?

Y N

Y: Clean the separation corona wire and T/S corona unit.

N: Clean the separation corona wire and T/S corona unit.

If the separation corona current is incorrect, clean the separation corona wire and adjust the separation corona current.

DIRTY BACKGROUND

1. Dirty Background on Entire Copy Image

- Possible Causes -

- Dirty corona wire
- Toner supply clutch malfunction
- Incorrect lamp regulator output
- Dirty drum and bias thermistors
- Inefficient drum cleaning
- Incorrect corona current
- Drum worn out

- Action -

Note: When the problem occurs after the drum conditioning, make several white copies or cycle the development unit for 2 minutes using free run.

Make a reduced copy with A3/11" x 17" paper. Does the dirty background appear in the erased areas?

Y
- Clean the drum thermistor and bias thermistor surfaces.
- Clean the charge corona wire.
- Clean the optics.

If the problem was not resolved, adjust the lamp regulator output.

If the problem still exists, check and adjust the charge corona current.

N
- Clean the erase unit.
- Clean the drum heater thermistor and bias thermistor surfaces.

Do wavy lines occur with the dirty background?

Y

Does the toner supply clutch turn off?

Y

Is CN230-4 high?

Y

Check/replace the main board.

N

Clean or replace the toner supply clutch.

N

- Check and adjust the charge corona current.
- Clean or replace the cleaning brush.

- Clean the edge of the cleaning blade.
- Check that the edge of the blade scraper is straight and that its movement is smooth. If not, correct or replace any defective parts.

If the problem still exists, one of the following should solve it:
- Replace the cleaning blade.
- Check the quenching lamp; replace if necessary.
- Replace the drum.

BLANK COPY

- Possible Causes -

- Charge corona wire mismounted or broken
- Defective power pack
- Defective main board

- Action -

Is there a faint image?
Y N
| |
| Is the charge corona wire (or unit) incorrectly installed?
| Y N
| | |
| | Does the main board output the correct signal to the power pack
| | (CN206-A22 drops from + 24 volts to ground)?
| | Y N
| | | |
| | | Replace the main board.
| | |
| | ▸ Clean the charge corona unit and remove any foreign
| | substances that might cause a leak.
| | ▸ If the problem still exists, replace the charge power pack.
| |
| Reset the charge corona wire (or unit).
|
Does the density gradually drop when making copies?
Y N
| |
| Is the transfer corona wire (unit) incorrectly installed?
| Y N
| | |
| | Does the main board output the proper T/S trigger signals?
| | Y N
| | | |
| | | Replace the main board.
| | |
| | Replace the transfer corona power pack.
| |
| Reset the transfer corona wire (unit).
|
Check the development drive mechanism and clean or replace any defective parts.

LIGHT COPY

- Possible Causes -

- Development bias not applied or defective bias power pack
- Defective main board
- Defective dc power supply

- Action -

Does the image density change with ID selection?

Y — N

N:

Is the development bias applied?

Y — N

N:

Does the bias power pack receive the proper trigger signal from the main board?

Y — N

N:

Replace the main board.

Y:

Check for electrical continuity between the bias terminal and the development sleeve. Correct any poor contact or faulty wiring. If that isn't effective, replace the bias power pack.

Y:

Does the toner supply clutch work properly?

Y — N

N:

Does CN230-4 drop from +24 volts to ground?

Y — N

N:

Does CN202-A7 go from +24 volts to ground?

Y — N

N:

Replace the main board.

Y:

Replace the paper feed relay board.

Y:

Clean or replace the toner supply clutch.

Other possible causes:

1. Charge corona
2. Transfer corona
3. Development drive mechanism

PAPER CREASING

- Possible Causes -

- If thin copy paper is used, the leading edge may not set correctly between the fusing rollers, resulting in creased copies.
- Paper curl

- Action -

Is thin paper used frequently?

Y: Move the fusing entrance guide to the upper position.

N:

If the paper is curled, reduce the fusing pressure. If this does not solve the creasing problem, instruct the customer to correct the paper curl before copying.

MULTIFEED AND MISFEED

- Possible Causes -

- Incorrect friction between the feed pad and feed roller.
- Very thin or very thick paper is being used.

- Action -

Is the gap between the friction pad and feed roller 1.6 ± 0.3 mm?

Y:

N: Adjust the friction pad/feed roller gap.

Do the feed problems occur mostly with the cassette tray?

Y:

- If multifeeds are common, decrease the friction pad/feed roller gap slightly to increase feed friction.
- If misfeeds (feed failure) are common, increase the friction pad/feed roller gap slightly to decrease feed friction.
- If the customer uses special paper frequently, adjust the friction at one feed station to match the special paper. Instruct the user to use only that station to copy the special paper.

N:

Adjust the friction pad holder position.

If the above measures do not solve the problem, replace the feed roller and friction pad.

SERVICE CALL CONDITIONS

11 EXPOSURE LAMP MALFUNCTION

- Possible Causes -

- Exposure lamp turns on while in standby condition.
- Exposure lamp circuit open (lamp filament broken).
- Cooling fan malfunction.

- Action -

Does the cooling fan work?

Y: Turn the main switch off and on. Does SC 11 remain off?

- Y: Press the Start key. Does lamp trigger (CN204-9) go from + 24 V to 0 V?
  - Y: Replace the lamp regulator.
  - N: Replace the main board.
- N: Turn the main switch off and on. Does SC 11 remain off?
  - Y: Check the cooling fan circuit. Replace the cooling fan if it is defective.
  - N:
    - Replace the exposure lamp if the exposure lamp circuit is open.
    - Replace the lamp regulator if the exposure lamp circuit is not open.

21 SCANNER HOME POSITION SENSOR NOT ON

- Possible Causes -

- Scanner does not move to home position at power on.
- Home position sensor failure.

- Action -

Move the scanner away from the home position. Turn the main switch off and on. Does the scanner move to the home position.

Y N

| Check/repair the scanner drive mechanism.

Manually activate the home position sensor. Does CN101-B7 go from LOW to HIGH?

Y N

| Replace the home position sensor.

Replace the main board.

23 NO REGISTRATION START SIGNAL

- Possible Causes -

- Optics control circuit failure (no registration signal)

- Action -

Replace the main board. If the problem still exists, check the scanner drive motor.

24 NO SCANNER HOME POSITION SIGNAL

- Possible Causes -

- Scanner does not return to home position within 20 seconds after scanner start.
- Optics control circuit failure.
- Scanner home position sensor failure.

- Action -

Does the scanner return to the home position within 20 seconds after scanning starts?

Y N

| |

| Check/repair the scanner drive mechanism.

Does CN101-B7 stay HIGH when the scanner leaves the home position?

Y N

| |

| Replace the main board.

Check the scanner home position sensor circuit. Replace the scanner home position sensor if necessary.

28 LENS HOME POSITION SENSOR NOT ON

- Possible Causes -

- Lens does not move properly.
- Lens home position sensor failure.

- Action -

Does the lens move smoothly?
Y N
| |
| Check/repair the lens drive mechanism.
|

Test the lens home position sensor. (Does CN101-B3 stay LOW?) Replace it if defective.

If the above does not work, replace the main board.

29 LENS HOME POSITION SENSOR NOT OFF

- Possible Causes -

- Lens does not move properly.
- Lens home position sensor failure.

- Action -

Does the lens move smoothly?
Y N
| |
| Check/repair the lens drive mechanism.
|

Test the lens home position sensor. (Does CN101-B3 stay HIGH?) Replace it if defective.

If the above does not work, replace the main board.

2A 2ND SCANNER HOME POSITION SENSOR NOT ON

- Possible Causes -

- Second scanner drive doesn't work properly.
- Second scanner home position sensor failure.

- Action -

Check the action of the second scanner drive mechanism. Does it move correctly?

Y N
| |
| Check/repair the drive mechanism.
|

Test the 2nd scanner home position sensor. (Does CN101-B4 stay LOW?)
Replace it if defective.

If the above does not work, replace the main board.

2B 2ND SCANNER HOME POSITION SENSOR NOT OFF

- Possible Causes -

- Second scanner drive doesn't work properly.
- Second scanner home position sensor failure.

- Action -

Check the action of the second scanner drive mechanism. Does it move correctly?

Y N
| |
| Check/repair the lens drive mechanism.
|

Test the 2nd scanner home position sensor. (Does CN101-B4 stay HIGH?)
Replace it if defective.

If the above does not work, replace the main board.

2C SCANNER MOTOR TOO FAST

- Possible Causes -

- Scanner motor control circuit failure.

- Action -

- Replace the main board.

2D SCANNER MOTOR TOO SLOW

- Possible Causes -

- Scanner motor control circuit failure.

- Action -

Replace the main board.

31 DRUM THERMISTOR

- Possible Causes -

- Drum thermistor circuit open.
- Drum thermistor circuit short.

- Action -

Is the input at CN203-17 less than 0.14 volts?
Y N
| |
| Is the input at CN203-17 about 5 volts?
| Y N
| | |
| | Replace the main board.
| |
Replace the erase unit.

32 IMAGE DENSITY SENSOR

- Possible Causes -

- PTL not set.
- Dirty ID sensor.
- ID sensor circuit failure.

- Action -

Clean the ID sensor and reset the PTL unit.
Adjust Vsg using VR201 on the main board. Vsg should be 4.0 ± 0.2 volts.

If the problem still exists, check the input at CN203-5. Is it less than 1.0 volt?

Y — Replace the main board.
N — Replace the PTL unit.

53 FUSING THERMISTOR ABNORMAL

- Possible Causes -

Thermistor failure. (The input at CN206-B1 is less than 0.5 V.)

- Action -

- Replace the fusing thermistor.

54 FUSING WARM-UP FAILURE

- Possible Causes -

- Fusing lamp blown.
- Thermistor circuit open.

- Action -

SC 54 turns on if the hot roller does not reach 150°C within 8 minutes after the power relay turns on.

Is the fusing lamp filament broken?
Y N
| |
| Is the thermistor circuit open?
| Y N
| | |
| | Check the thermistor. Make sure it is mounted properly and in good contact with the hot roller.
| |
| Replace the thermistor.
|
Replace the fusing lamp.

55 FUSING OVERHEAT

- Possible Causes -

- Thermistor failure (CN206-B1 < 0.5 V).

- Action -

Replace the thermistor.

56 FUSING TEMPERATURE TOO LOW

- Possible Causes -

- Fusing lamp blown.
- Thermistor failure.

- Action -

SC 56 turns on if the hot roller temperature drops below 150°C after warmup is complete.

Is the fusing lamp blown?
Y N
| |
| Replace the thermistor.
|
Replace the fusing lamp.

61 PULSE GENERATOR ABNORMAL

- Possible Causes -

- Main drive malfunction.
- Pulse generator sensor failure.

- Action -

SC 61 lights if the main board does not receive a pulse at CN206- A9 for longer than 1.8 seconds.

Is the main drive mechanism working properly?
Y N
| |
| Check/repair all parts of the main drive mechanism. (Motor, timing belt, etc.)
|
Repair or replace the pulse generator.

91 TOTAL COUNTER MALFUNCTION

- Possible Causes -

- Total counter does not cycle.

- Action -

Is +5 V supplied at CN103-5?
Y N
| |
| Replace the operation panel.
|
Is +24 V supplied at CN103-4?
Y N
| |
| Is there +24 V at CN103-3 of the main board?
| Y N
| | |
| | Check the Vaa power supply. Replace the dc power supply if it is not correct. Replace the main board if Vaa is all right.
| |
| Replace the operation panel.
|
Does CN103-5 pulse from +5 V to 0 V at the start of the copy cycle?
Y N
| |
| Replace the total counter.
|
Replace the operation panel. If the problem still exists, reinstall the operation panel and replace the main board.

93 OPTICS < = > MAIN COMMUNICATION FAILURE

- Possible Causes -

- Data communication error between the main control circuit and the optics control circuit.

- Action -

Replace the main board.

ID SENSOR ABNORMAL (no SC number)

- Possible Causes -

- Dirty ID sensor or ID sensor failure.

- Action -

If Vsg becomes less than 2.5 volts, the SC indicator lights but no number is displayed. The copier shifts to fixed toner supply mode.

Clean the ID sensor.

If the problem still exists, replace the PTC unit.

If the problem still exists, the ID control circuit must be bad; so, replace the main board.

DEFECTIVE SENSOR TABLE

No.	Name	Condition	Problem
S1	Lens Home Position	Open	Lights SC NO. 29 when the main switch is turned on.
		Short	Lights SC No. 28 when the main switch is turned on.
S2	Pulse Generator	Open	Lights SC No. 61 during the copy cycle.
		Short	Same as "Open" condition.
S3	Toner End	Open	The CPU never detects toner end condition.
		Short	Lights "Add Toner" indicator even when enough toner is present.
S4	Manual Feed	Open	Lights "Manual Feed" indicator even when the manual feed table is closed.
		Short	Never lights "Manual Feed" indicator and the manual feed mode does not work.
S5	Color Toner	Open	"Color Toner" does not turn on when there is a color development unit in the machine.
		Short	Lights "Color Toner" indicator when the main switch is turned on.
S6	First Paper End	Open	Lights "Load Paper" indicator even when paper is present.
		Short	Never lights "Load Paper" indicator even when paper is present.
S7	Second Paper End	Open	Same as S6.
		Short	Same as S6.
S8	First Paper Size	Open	Displays incorrect paper size.
		Short	No cassette in place condition is detected if all sensors are shorted.
S9	Second Paper Size	Open	Same as S8.
		Short	Same as S8.

No.	Name	Condition	Problem
S10	Registration	Open	Paper always jams at the registration roller.
		Short	Lights "Check Paper Path" indicator when the main switch is turned on.
S11	Paper Exit	Open	Lights "Check Paper Path" indicator when the main switch is turned on.
		Short	"Check Paper Path" indicator lights 1,010 pulses after pressing the Start key (ON check timing).
S12	Second Scanner Home Position	Open	Lights SC No. 2B 3 seconds after the main switch is turned on.
		Short	Lights SC No. 2A 0.3 seconds after the second scanner motor is turned on.
S13	Scanner Home Position	Open	Lights SC No. 21 when the main switch is turned on.
		Short	Lights SC No. 24 when the main switch is turned on.
S14	Toner Overflow	Open	Never detects used toner bottle full condition.
		Short	Lights "Used Toner Bottle" indicator even when the used toner bottle is in full condition.
S15	Oil End	Open	Never detects low oil condition.
		Short	Lights "Add Oil" indicator even when there is enough oil.

RICOH
CUSTOMER SERVICE GROUP

TECHNICAL SUPPORT DIVISION,

TECHNICAL SERVICES

PRODUCT SUPPORT OVERVIEW

PN: RCTS0001

RICOH

SERVICE NEWS AND INFORMATION

CSG Customer Service Group

Subject: TECHNICAL SERVICES SUPPORT OVERVIEW HANDBOOK April 30, 1993

Distribution: ALL AUTHORIZED SERVICING DEALERS

Control #: 135

The enclosed handbook is an overview of Customer Service Group's Technical Support Division, Technical Services Department, as well as, a reference guide for our communication procedures and guidelines. This handbook is a compilation of several different publications distributed to the field over the last few years.

The convenient and easy-to-use format is designed to be utilized by technicians as a reference guide to services that are available to them as a RICOH Certified technician.

This handbook will be given to each technician attending RICOH's technical training classes and shall be included as part of each future Self-Pace and Customer Administered Training (C.A.T.) package.

Technical Services will issue updates to this handbook as needed. Additional copies may be acquired by ordering Part Number RCTS0001 through normal NSPC channels.

Should you have any questions regarding Technical Services, please call the appropriate Manager directly:

Copier	Beverley Patterson	1-201-882-5787
Facsimile	Gary Sanders	1-201-882-3950
Image Processing	Alan Chervenak	1-201-808-3691

Contents

OVERVIEW

Product Support Group Overview 1-1

Hotline Support Overview 1-2

Hotline Support Flow Chart 1-4

PART/TECHNICAL INQUIRIES and HOTLINE CLOSE-OUT PROGRAM

Part Inquiries 2-1

Technical Inquiries 2-2

Hotline Closeouts 2-3

Technical Services Inquiry/Hotline Close-out Form 2-4

TECHNICAL ALERT and AWARD PROGRAM

Technical Alert Communication Procedure 3-1

Technical Alert Form 3-5

Technical Award Program 3-8

GENERAL INFORMATION

FAX - Communication Troubleshooting 4-1

FAX - Binary, Hexadecimal Conversion 4-2

FAX - Long Distance Telephone Line Testing Tips 4-4

FAX - Part Number Prefix Reference Chart 4-5

COPIER - Part Number Prefix Reference Chart 4-7

COPIER - Ricoh Copier Test Chart Usage 4-12

FAX/COPIER - Packing Guidelines for Machine Return 4-20

FAX/COPIER - Electrostatic Discharge 4-21

FAX/COPIER - Pre-installation - Wall Outlet Check 4-22

FAX/COPIER - Material Safety Data Sheets 4-23

PRODUCT SUPPORT GROUP OVERVIEW

The Technical Service Product Support Group's primary function is the Hotline. The Hotline Product Specialists provide support and assistance to Ricohs Dealer/Direct Field Service Representatives, End-Users, Ricoh Field Operations (RTM's/RPS's/FSM's/RESM's), and Ricoh Internal Groups. Some of the hotline calls may require the specialist to duplicate the problem on machines in the lab, or request assistance from engineers at Ricoh Company, LTD. In addition to Product Support other functions performed by the Product Specialists are:

- **Communication with Ricoh Company, LTD. (Japan)**
  Research and communicate field problems
- **Technical Alerts**
  Research and reply to technical alerts
- **Technical Field Support**
  Assist RTM's/RPS's by conducting on-site visits to resolve specific product issues
- **Regional Nuts & Bolts Meetings**
  Prepare and present information at technical seminars
- **Trade Shows and Photo/Video Shoots**
  Provide technical assistance at trade shows and photo/video shoots
- **Bulletin Development and Verification**
  Create and ensure the accuracy of technical bulletins prior to publication
- **New Product Launch**
  Assist in new product launch and Initial Field Administration Program (IFAP) activities
- **Returned Machine Evaluation**
  Evaluate the condition of machines returned from the field due to extraordinary circumstances
- **Part Modifications**
  Qualify and quantify field requests and coordinate distribution

HOTLINE SUPPORT OVERVIEW

Ricoh provides (emergency) technical support to its Dealers and Direct technicians on an as needed basis. The principle method of interfacing between the field and Ricoh's Technical Services Department is the "Hotline", a toll free telephone service available to all Ricoh TRAINED Service personnel.

If problems of a technical nature arise at any time in the servicing of a Ricoh product or a Ricoh authorized accessory, the Hotline is available for assistance. It is staffed by Technical Product Specialists who will be available to:

- **Provide assistance and answer questions of a technical nature**
- **Guide the technician in resolving field problems**
- **Provide a basis for follow-up by the Regional Technical Manager (RTM), Regional Product Specialist (RPS), or District Manager (FSM)**

The Ricoh Product Support Hotline is available Monday through Friday (except holidays) by dialing 800-53-RICOH (537-4264). Callers will be greeted with an announcement instructing them to select a "prompt" for the appropriate assistance.

Product Support	Prompt	Standard Hours of Operation
Copier	"C" (2)	9:00 a.m. - 7:00 p.m. (Eastern)
Facsimile	"F" (3)	9:00 a.m. - 7:00 p.m. (Eastern)
Printer	"P" (7)	9:00 a.m. - 5:00 p.m. (Eastern)
Close-out	"H" (4)	24 hrs, 7 days a week

TYPES OF SUPPORT CALLS (Hotline, Technical Info, and Information)

When placing a **HOTLINE call, please observe the following guidelines:**

1. The Technician must be a certified Ricoh trained technician on the product in question.
2. The call must be made from the machine location.
3. All proper test equipment, special tools, gauges, etc... must be on hand.
4. The Technician must have available the Ricoh Field Service Manual, Point-to-Point, Parts Manual, etc...
5. All other reasonable methods of resolving the problem must be exhausted prior to calling.

If the criteria for a HOTLINE call is met, the Product Specialist will work with the technician to resolve the problem. This may require several telephone calls. A Hotline ID number will be given to identify the call when following up or closing out the call when the problem is resolved.

Your support means a lot. Every time you place a HOTLINE call the information we capture is used in problem trending and tracking reports. This enables us to work with Ricoh Co., Ltd. (Japan) towards a resolution (if none is available) or utilize this information for future products. Your support will help us monitor our products and continue to assist other Technicians with similar problems.

If the criteria of a Hotline call is not met, we will provide assistance in a generalized manner. For example: If the Technician is not on-site, it is not possible to do the necessary checks to assist in troubleshooting. The Product Specialist will only assist the Technician with a general idea of where the problem may be. In cases of this type, the call will be logged as a TECHNICAL INFO call with no follow-up required by the technician or Ricoh.

We know there are occasions where the information you need is not readily available to you, EDP codes for accessories, supply yields, etc... This type of call is logged as an INFORMATION call. We ask that you please make every effort to obtain the information through the materials existing in the field prior to calling.

For non emergency technical questions please utilize the Technical Inquiry form.

MONTH END REPORTS

At the end of each month a detailed report of Hotline and Information calls is mailed to each Service Manager for review.

This information is distributed to the Service Manager to alert them to potential problem accounts and to assist them in identifying specific areas of training for Field Technicians.

HOTLINE SUPPORT

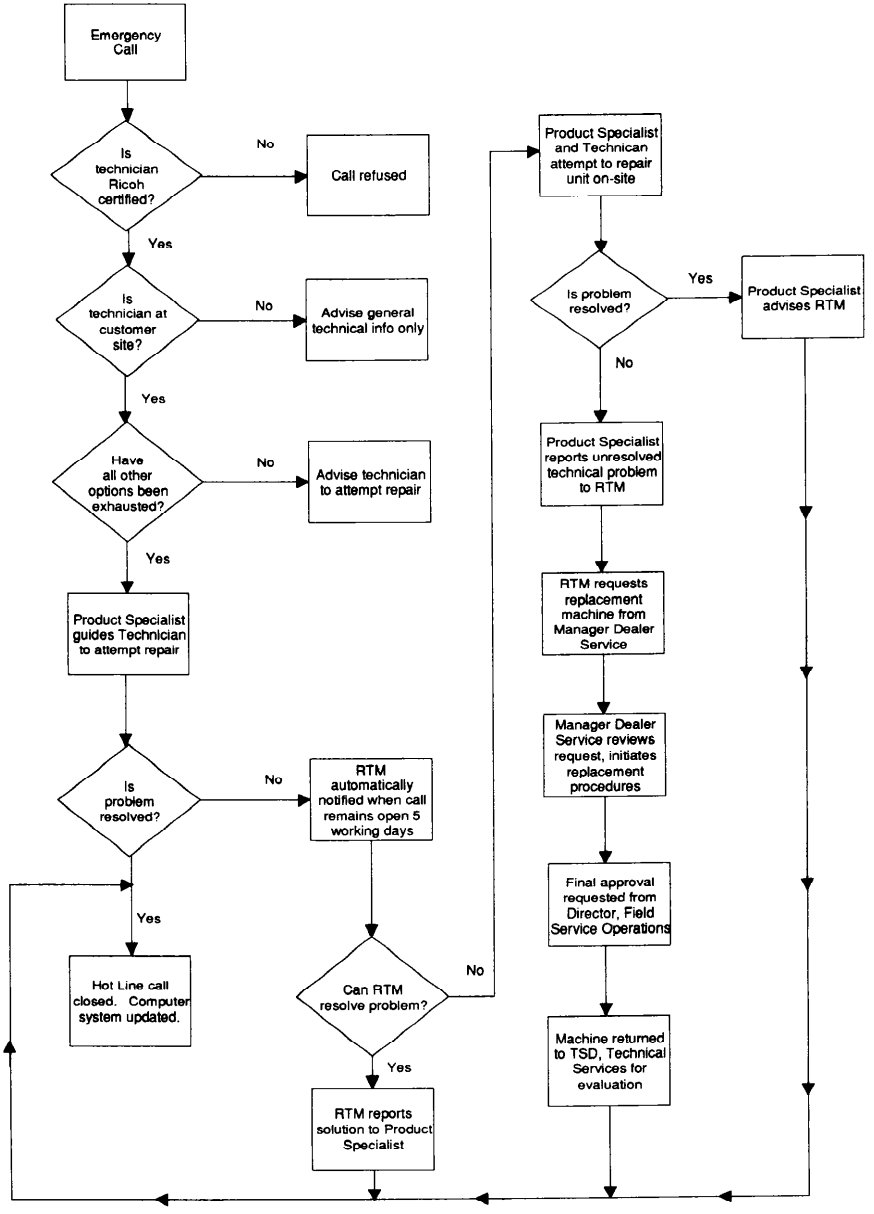

PART INQUIRIES

In an effort to provide a comprehensive response to part related inquires, Technical Services developed an "INQUIRY/HOTLINE CLOSEOUT FAX FORM". This form (Page 2-4) is utilized for other purposes; when submitting a Part Inquiry check the appropriate box.

Please understand that this form is not designed as a substitute for proper use of the Part Catalogs, Field Service Manuals and other technical documentation that is distributed to the field.

Utilize the "INQUIRY/HOTLINE CLOSEOUT FAX FORM" for the following Part Inquiries:

- **Part interchangeability**
- **Part number omissions from the Parts Catalog**
- **Part number errors**

Please provide all appropriate information. For example, a question involving part interchangeability will require the part numbers for all parts as well as the model number and serial number of the equipment. Obviously, questions involving omissions in part catalogs cannot include the part number in question, however, enough detail must be provided to allow us to identify the specific part.

FAX the completed form to Technical Services at **(201) 882-3960**. We will research the question and respond within six (6) working hours to the fax number provided on the inquiry form. We recommend using your office fax number to ensure that you receive our reply.

Please note that incomplete or inaccurate forms will only delay our response to you.

Reminder:
Technical Services no longer accepts part related inquires via the Hotline to enable us to efficiently support emergency technical issues.

The National Order Process Department must be contacted at (800) 524-0199 for all part questions regarding:

- Order Errors
- Damaged Parts/Shipments
- Pricing
- Mislabeling
- Shipping Errors
- ETA's
- Part Substitutions/Chaining

TECHNICAL INQUIRIES

Technical Services has developed an "INQUIRY/HOTLINE CLOSEOUT FAX FORM" for non-emergency technical inquires. This form (Page 2-4) is utilized for other purposes; when submitting a Technical Inquiry check the appropriate box.

Please understand that this form is not designed as a substitute for proper use of the Service Training Manuals, Field Service Manuals and other technical documentation that is distributed to the field.

Utilize the "INQUIRY/HOTLINE CLOSEOUT FAX FORM" for *minor* non-emergency technical issues such as, supply interchangeability, specifications, yields, non emergency bit switch settings, etc... Again, all appropriate information must be provided.

FAX the completed form to Technical Services at **(201) 882-3960**. We will research the question and respond within six (6) working hours to the fax number provided on the form. We recommend using your office fax number to ensure that you receive our reply.

Please note that incomplete or inaccurate forms will only delay our response to you.

HOTLINE CLOSEOUTS

There are two convenient methods for technicians to close-out OPEN Hot Line calls; the toll-free 800 number or via the "INQUIRY/HOTLINE CLOSEOUT FAX FORM".

When using the toll-free number 800-53-RICOH (Prompt "H" available 24 hours a day), be prepared to leave a recorded message with the following information:

1. Hot Line call ID Number.
2. Your name.
3. Your Dealer name and location or District location.
4. Machine model number.
5. Description of the problem and what resolved it.

NOTE: *If the call ID number is lost, it is still possible to close out the call as long as the other pertinent information is provided.*

Technicians may prefer to utilize the "INQUIRY/HOTLINE CLOSEOUT FAX FORM". This form (Page 2-4) is utilized for other purposes; complete all areas pertaining to Hotline Closeout.

FAX the completed form to Technical Services at **(201) 882-3960**.

RICOH TECHNICAL ALERT COMMUNICATION PROCEDURE

A Ricoh Technical Alert (RTA) is a form of written communication to alert TSD, Technical Services of a problem/issue of a technical nature in the field that is beginning to show a trend or may be the start of a potential problem.

Please note it is not meant as a substitute for a Hot Line call. The Hot Line must be used when requiring assistance to resolve a particular problem when you are at the machine site.

The RTA form must be filled out completely and accurately. It is important that as many details about the problem be included, as well as, all actions taken. Ricoh must deal in facts and not generalities. The more facts provided, the quicker the response (Serial Numbers are a must).

The data required for TSD, Technical Services to start an investigation or open an issue shall be comprised of the following:

Standard Information Required for each RTA:

- Product Line
- Model
- Reporter Name
- Date Reported
- System Configuration
- Subject
- Company Name, Address, and Phone Number
- Statement of Problem
- Action Taken/Status
- Serial Numbers (if applicable)
- Meter Readings (if applicable)
- Current Resolution Method
- Service History/Log
- Part Samples

Specific Information Required with each RTA:

Problem/Issue Reported	Information Required				
	Copy/Print Sample	Revision Level	Lot Number	Photo/ Illustration	Part/ Supply Samples
Equipment, Hardware, Firmware (ROM Level)	Yes	Yes	No	Yes	Yes
Documentation	No	Yes	No	Yes	No
Supplies	Yes	No	Yes	No	Yes
Parts	Yes	Yes	Yes	Yes	Yes
Safety/Liability	No	No	No	Yes	Yes
*Software/Application/Interface/Compatibility	Yes	Yes	Yes	Yes	Yes

*Complete entire Computer Peripheral Section of RTA for Ricoh products when they are connected to a computer system.

All Technical Alerts will be acknowledged in writing by Technical Services within five (5) working days of receipt. After the RTA has been reviewed, additional information may be required. Upon completion of the investigation, the written results of Technical Services findings will be provided to the reporter via a "Technical Alert Response Form."

Instructions for Completing the Ricoh Technical Alert Form:

The guidelines and instructions below must be adhered to when submitting Ricoh Technical Alerts:

- **Product Line:**
  Check the appropriate box to indicate which product line the machine is in.
- **Model:**
  Must be specific model. For example: DF57, FT7870, FAX4500L, LP4150, etc...
- **Reported By:**
  Your name.
- **System Configuration:**
  List the accessories and options installed on this particular product.

- **Subject:**
  This should be a summary of the problem observed. For example: Flickering Operation Panel Display, Premature Charge Corona Wire Failure, Compressed Image When Receiving, etc...

- **Dealership/District:**
  The name of your Dealership or Ricoh Service District, address, phone number, and fax number.

- **Statement of Problem:**
  This should list the actual problem or trend that you are experiencing. List all observations as accurately as possible. For example: When feeding three 8 1/2 x 11 originals in duplex 2 mode, the third original misfeeds at DF exit.

- **Cause:**
  List the actual cause if known. Otherwise write "Unknown". If you have an idea of what is causing this problem, indicate as "Possible Cause".

- **Action Taken:**
  List the specific actions you have taken, such as, replacing, cleaning, adjusting, or lubricating components. **Indicate if your actions resolved the problem.** If components were replaced, include the part number of each next to its description.

- **Shipped Via:**
  Indicate the method used to ship the copy/print/part samples to Technical Services (UPS, Mail, Federal Express, etc...) and indicate the actual items sent by checking the appropriate box and providing the part number and description of each.

- **Problem Occurs:**
  Check the appropriate box. If intermittently, briefly describe when it occurs. If an accessory, indicate which accessories are in use when the problem occurs.

- **Time of Failure:**
  Check the appropriate box. If "Other" is checked, briefly describe when in the space provided.

- **Record of Occurrence:**
  List the date of occurrence and serial numbers of all units with this problem. List the meter readings and install dates. Utilize the "Remarks" column to report accessory serial numbers (if appropriate) or other relevant comments.

- **Explanations/Illustrations:**
  Draw or insert the illustration from the appropriate parts/service manual that helps clarify the problem.

- **Current Resolution Method/Recommendations:**
  Describe the method you are currently using to resolve the problem and/or list your recommendations for resolution.

- **Service History/Log:**
  Must be provided with the Technical Alert. Include any applicable code sheet or list to assist in reading the service history.

- **For copy/print quality problem:**
  The following copy/print samples must be provided while using the appropriate Ricoh Test Chart:

Copier

1. An 11 x 17 copy at each ID position.
   Note: If 11 x 17 copy paper is not available, use the largest available copy paper size.
2. Run a white 11 x 17 copy with the ID level set at mid-position.
   Note: ***Do not*** use the back of a test chart, use 3 blank pieces of 11 x 17.
3. With the ID level at mid-position (Level 4), run an 11 x 17 sky shot. Be careful to ensure no interference from overhead lighting.
4. An SP Mode data print out.

Facsimile

1. A received copy in detail mode.
2. A received copy in standard mode.
3. A copy mode sample.
4. A printout of each printer test pattern.
5. System Service Report.
6. System Parameter List

Printer

1. A black page.
2. A white page.
3. Three text pages.

If supplies are in question, a sample with lot numbers should also be sent with the above documentation.

Send All Documentation and Samples To:

Ricoh Corporation
155 Passaic Avenue
Fairfield, NJ 07004
Attn.: Technical Services - Box #32
RTA Enclosed

You may also use our FAX number (201) 882-3960 to submit your Technical Alert (copy/print samples must be mailed).

SAMPLE

Dear:

We are in receipt of your Ricoh Technical Alert. If further information is required, we will be contacting you in the near future. Upon completion of the investigation, the written results of our findings will be provided to you via a "Technical Alert Response Form".

Periodically, Technical Service recognizes and awards a Technical Alert that is most effective in escalating and resolving a field problem. You will be notified if your Technical Alert is selected as an award recipient.

Thank you for your time and interest in Ricoh Corporation.

Sincerely,

Dan Piccoli
Director, Technical Support Division

SAMPLE

TECHNICAL AWARD PROGRAM

Technical Services has developed a Technical Award Program designed to recognize and award Technical Alerts that are most effective in identifying and/or resolving field problems.

All submissions should utilize the new Ricoh Technical Alert Form, dated 1/93. Please discard all existing Rich Idea and Dealer Technical Alert Forms.

ELIGIBILITY CRITERIA:

- **Ricoh Technical Alert (RTA) must be completed with all supporting information.**
- **Reporter must be Ricoh certified on the product in question.**
- **Problem must be able to be reproduced or observed by an authorized Ricoh Technical Representative.**
- **Countermeasure(s) provided (if applicable) must be proven to resolve the problem and must not jeopardize the equipment safety standards.**
- **Suggestions regarding specification and/or design changes will not be considered.**
- **Reporter must be employed by an authorized Ricoh Dealer or Service Technician (FSR) employed by Ricoh Corporation.**

SELECTION PROCESS:

- **RTA must meet all eligibility requirements.**
- **Winners are selected by vote of the appropriate Technical Services staff (Copier, Fax, Printer) subject to approval by Technical Services Manager.**
- **In case of duplicate submissions, the winner will be determined by: 1) completeness 2) technical accuracy 3) receipt date.**

AWARD:

A gift will be presented by a Regional Service Representative on behalf of Technical Services.

Should you have any questions, please call Beverley Patterson or Gary Sanders at Ricoh Technical Services (201) 882-5790.

FAX COMMUNICATION TROUBLESHOOTING CHECKLIST

1. Get specifics about the problem from the customer.

2. Confirm the problem by running a test with the machine(s) they are having trouble with.

3. If the problem occurs, then start to narrow it down .

4. Verify that all Bit Switches are set correctly.

5. Check (if possible) that CSI is programmed with 20 characters or spaces.

6. Enable any built in diagnostic aids (such as the "Communication Parameter Display").

7. Hook up O'Scope and observe the protocol exchange. If you don't have an isolation box, connect the scope leads across the secondary side of the isolation transformer on the NCU.

8. Check the DB levels, incoming and outgoing from your unit.

9. If the problem appears to be a compatibility issue, find out what kind of unit it is (G3, G2, G1) and the manufacturer and Model #. Then consult all Technical Bulletins and any other documentation (Like "Facts Lines") for help.

10. If you suspect a phone line problem, adjust the DB level (if you think it might help). Try both transmitting higher and lower than the original setting. Verify with your O'Scope that your DB level has not changed. Also, adjust the RX equalizer settings.

11. If Step 10 is no help, find out what kind of phone system the customer is using.

a. If it is a direct phone line, which long distance service are they using? (AT&T, MCI, SPRINT etc.). Verify by calling 1-700-555-4141.

b. If behind a PBX, try using an outside line. **Note**: Usually dialing a "9" will get you a so-called outside line. Most PBX's are programmed to route long distance calls over the cheapest route possible which usually means "Outbound" Wats or Tie lines. These may be the very same line you are having trouble with. The only way to be sure is to dial "9" then "0" and have and outside operator (not PBX operator) place the call.

c. If you suspect a "Local Loop" problem (this is tip and ring from the RJxx jack to the PBX or CO). Try another phone jack with a different phone number.

d. Have the other end initiate a phone call to your machine and try to Transmit/Receive on that connection.

12. Find out if the customer has other Fax units in the same or nearby building. If so, do they have similar communications problems? Verify it. If they do, then try to determine the difference between the two units (different phone line, DB level, Bit Switch settings etc.).

13. Try lowering the modem speed (7200,4800,or 2400 BPS) to see if that helps.

14. Swap the modem or NCU if you suspect these to be the problem.

15. If you are having severe problems to all locations, test with a Traffic/Test machine at your or Ricoh's office,

If you have tried all of the above and still have problems, then call Technical Support. Be prepared to give information based on your observations from the check list above.

NUMBER CONVERSION

The following information is designed to give a BASIC guide to proper number conversions.

BINARY

To convert a binary number to decimal, each bit represents one of the values on the scale below. Each value is added to form the decimal equivalent.

	VALUE SCALE									
	128	64	32	16	8	4	2	1		
EXAMPLE	1	0	0	0	0	0	0	0	= 128	(128+0+0+0+0+0+0+0)
				1	0	0	0	0	= 16	(16+0+0+0+0)
					1	1	0	1	= 13	(8+4+0+1)
			1	0	1	0	1	0	= 42	(32+0+8+0+2+0)
					1	1	1	1	= 15	(8+4+2+1)
	BINARY								DECIMAL	

HEXADECIMAL

Begin by first converting decimal to binary and then binary to hexadecimal. To do this break the binary number into **groups of four** and convert as per the conversion chart on page 2. Numeric digits of ten (10) or higher are represented by the ALPHA characters of A-F.

	BINARY												HEXADECIMAL
EXAMPLE									1	0	1	0	= A
									0	1	0	1	= 5
					1	1	1	0	1	0	1	1	= EB
	0	1	1	0	1	1	1	1	0	1	1	1	= 6F7
	1	0	1	0	1	0	1	0	1	0	1	0	= AAA

CONVERSION CHART

DECIMAL	BINARY	HEXADECIMAL
0	0 0 0 0	0
1	0 0 0 1	1
2	0 0 1 0	2
3	0 0 1 1	3
4	0 1 0 0	4
5	0 1 0 1	5
6	0 1 1 0	6
7	0 1 1 1	7
8	1 0 0 0	8
9	1 0 0 1	9
10	1 0 1 0	A
11	1 0 1 1	B
12	1 1 0 0	C
13	1 1 0 1	D
14	1 1 1 0	E
15	1 1 1 1	F

BINARY CODED DECIMAL

A decimal number can be converted to binary coded decimal (BCD). This is achieved by representing the decimal number in four bit groups. (BCD) can never have a binary value greater than (9).

EXAMPLE'S

25								DECIMAL
2				5				Break the decimal number 25 into two groups of four binary digits.
0	0	1	0	0	1	0	1	BCD

125												DECIMAL
1				2				5				Break the decimal number 125 into three groups of four binary digits.
0	0	0	1	0	0	1	0	0	1	0	1	BCD

LONG DISTANCE TELEPHONE LINE TESTING TIPS

When testing a machine that may have problems related to the long distance telephone service used, and you want to determine which long distance carrier the customer is utilizing, dial the following phone number, 1-700-555-4141. You will then hear a recording that states the name of the long distance carrier that the customer is using.

NOTE: *This phone number may not work in all areas.*

If you think that the long distance telephone lines may be the cause of the problem, you can change the carrier service by dialing one of the following access codes before you dial the remote units phone number. Before testing on a different long distance carrier, be sure to obtain the customer's permission.

This is one-time-only switch, if you do not precede the phone number with an access code, the call will be placed on the original long distance carrier.

LONG DISTANCE CARRIER ACCESS CODES	
AT&T	10288 + 1 + Area Code + Phone Number
MCI	10222 + 1 + Area Code + Phone Number
SPRINT	10333 + 1 + Area Code + Phone Number
ALLNET	10444 + 1 + Area Code + Phone Number

Changing long distance carriers will not have an effect on the local telephone service provided (e.g. if your problem lies within the local loop to the central office, changing the long distance carrier will not have any effect).

NOTE: *When a new telephone line is installed, if the person ordering the line does not request a specific long distance carrier to be used on that line, the carrier will be assigned at random from all carriers that service the area.*

FAX PART NUMBER PREFIX REFERENCE

The following chart cross-references the first four digits of a part number with the appropriate model to assist in the indentification of parts.

NOTE: *Please be aware that some interchangeability exists between models*

Part Number Prefix	Model (s)				
5450	R80	R100	D4XX		
5456	R1850				
5457	R1500				
5464	R800	R1000			
5465	R6100				
5466	R6300	R6300R	R6350T		
5467	R3100	R3100T	R3300	R3300TA	R3312
5471	R5000				
5473	SAF-PAK				
5474	R120	R130			
5475	R210	R230	R2100	R2110 (M)	R2112T
5476	R200				
H000	LCT	R830			
H001	R610				
H002	R510				
H003	R205				
H004	FAX2800DI	FAX2800L	SFX2800M	SFX2800TE	
H006	FAX1010L	FAX1000L	LCT		
H007	RF800	FAX07			
H008	FAX7000L	FAXCARD			
H010	FAX08	FAX09	RF850	RF900	
H012	FAX10				
H013	FAX20				
H015	FAX60				
H020	FAX4000L				
H022	FAX10E				

Part Number Prefix	Model (s)				
H023	RF920	FAX20E			
H025	FAX60E				
H027	FAX70E				
H032	RF910	FAX15			
H033	FAX25				
H035	FAX65				
H037	FAX75				
H038	FAX35				
H043	FAX105				
H048	FAX90				
H049	FAX95				
H051	FAX77				
H053	FAX80	SFX80M	SFX80TE		
H055	FAX85				
H059	FAX86				
H060	PF-1				
H065	RF810				
H066	RF860				
H067	FAX12				
H081	FAX3000L	FAX3100L	FAX3200L	FAX4500L	LCT
H110	LCT				
H502	FAX240				
H954	FAX22	FAX21			
S300	RM8000				

COPIER PART NUMBER PREFIX REFERENCE CHART

The following chart cross-references the first four digits of a part number with the appropriate model to assist in the indentification of parts. Please be aware that some interchangeability exists between models.

Part Number Prefix	Model (s)			
75	RT12	TD3001		
178	CS1015			
5203	M10/Ripro			
5205	FT5050			
5206	FT5070			
5209	FT4085			
5211	FT4065	FT4420		
5214	M5/Ripro Jr.	LR2		
5215	FT5010			
5216	FT2050			
5219	FT7060			
5220	FT2070			
5328	WB-1			
5420	FT6200	FT6200F	FT6200FR	FT6200R
5432	FT4700			
5433	FW420			
5441	FT6600			
5442	FT4060	FT4030		
5446	FT6080	FT6085		
5447	FT3020	FT3050		
5448	FT3060			
5875	DF10			
5886	DF31			
5887	CS2030			

Part Number Prefix	Model (s)
5894	DF32
5895	CS1510
5897	RT11 RT16
5899	DF11 DF14
5910	CS1030
5918	DF34
5919	AD100
5920	PS200
5922	PS100
5925	RT14
5937	CS2060
5938	RT20
5940	DF36
6754	CS2011 CS2010
6769	CS1020
6801	CS1040
6803	CS2050
A004	FT5000
A005	FT2010 FT2220
A006	FT4460
A007	FT5590
A008	FT5560
A009	FT4480
A011	FT5520
A012	DS320 (F)
A017	FT3320
A019	FT6620
A024	FT4400 FT4410 FT4430
A027	FT2260
A029	FT7770

Part Number Prefix	Model (s)
A030	NC100
A032	FT4490
A045	FT5570
A046	FT5540
A048	FT4418
A053	FT6750
A054	FT4421
A058	FT7870
A072	NC305
A073	FT5433
A074	FT5733
A075	FT4415
A076	FT3113
A077	FT3313
A083	FT8880
A084	FT8780
A087	FT4427
A088	FT4727
A092	NC8015
A300	SR200
A310	SCU
A318	DF57
A325	PS140
A326	PS250
A327	CS120
A328	Sorter Adapter Type G
A340	RT17
A341	Multi By-Pass Tray
A342	PS150
A352	RDH

Part Number Prefix	Model (s)
A353	SR300
A354	ST23 A/B
A355	RT30
A356	SR30
A365	DF40
A366	ST22
A374	ST24
A411	CS2080
A414	CS2070
A415	PS210
A416	AD400
A418	DF51
A419	DF38 DF39
A420	PS220
A421	RT21
A422	DF52
A423	CS2090
A424	AD500
A428	AD110
A432	PS240
A437	DF53
A438	CS1070
A439	AD600
A444	FAX KIT
A448	PS110
A455	CS1530
A462	CS2065
A463	RT25
A464	PS130
A465	DF54

Part Number Prefix	Model (s)
A467	CS1060
A469	ST20
A490	CS110
A491	AD120
A497	DF56
A498	ST21
A499	DH200
A906	RE11
A912	RT15
A916	RE12
A936	FD300
A937	SR100
A938	DH100
A943	LR1
A946	RE14
A952	MR20
A963	TP1 - FUSER
A984	Slide Projector Unit
A988	RE9
C203	SS950
C206	SS830
C211	VT2130
C300	WB2

RICOH COPIER TEST CHART USAGE

How to evaluate copier operation and copy quality using Ricoh Test Charts.

The Ricoh OS-A-3 Test Chart is designed to help you, the service technician, in evaluation machine operation and copy quality. Copy quality specifications cannot accurately be maintained unless the correct test chart is used. We will use the OS-A-3 Test Chart as an example of how to evaluate machine operation and copy quality. Ricoh has other test charts available which contain the same information as the OS-A-3 Test Chart for the various products. Be sure to use only the test chart which is recommended for that model.

NOTE: *The recommended Test Chart may be located in the "Special Tools" section of the Parts Catalog.*

This section will review the use of each portion of the test chart. We will also discuss some problems that could cause a deficiency in the copy quality of the OS-A-3 Test Chart.

At the completion of the test, you should be able to identify how each portion of the test chart is used to determine correct machine operation and copy quality.

Before we begin, let's discuss the most important factor in maintaining proper machine operation and copy quality - FACTORY SPECIFICATION.

All adjustments to be performed have factory set specifications, usually with a tolerance of plus or minus; for example, 30mm ±2mm. This means the adjustment should be ideally set to 30mm, yet the allowable deviation is plus or minus 2mm. So the adjustment could measure anywhere from 28 to 32mm. This tolerance still allows proper operation of the copier. However, DO NOT exceed these tolerances. A team of factory engineers have established these specifications to yield the most reliable operation and consistent copy quality. Exceeding the specified limits will lower overall machine performance and customer satisfaction.

Before any work can begin to repair a problem, the copier MUST be in specification. If the copier is out of specification, there is no way of determining where the problem lies. Usually, you have to misadjust another adjustment out of specification to resolve the problem, and eventually the maladjusted components can develop larger and more frequent problems.

FOR BEST RESULTS, KEEP IT IN SPECS.

Each section of the OS-A-3 Test Chart to be discussed has been reproduced for easy identification. There cannot be a SET order for setting-up/troubleshooting copy quality. The following is the basic order to use to set-up a new copier. However, it should be noted that even with a new copier, a copy quality problem could arise that would change the order of these checks. For example, a light copy caused by the light intensity not being adjusted could appear to be out of focus. Once light intensity has been darkened, if the copy still appears to be out of focus, then the focus adjustment would need to be performed next before other checks can be made.

1. LIGHT INTENSITY

The specification for light intensity in most Ricoh copiers is to have level 2 of the gray scale slightly visible, or the background present around the photograph slightly visible. (Gray scale, level 2 = background around the photograph)

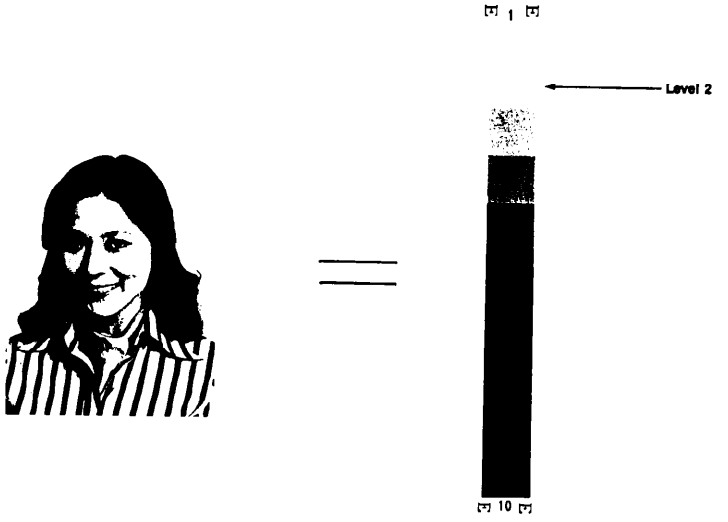

This is accomplished by increasing or decreasing the exposure lamp intensity (voltage).

Before this adjustment is attempted, the condition of the original, optics, developer, charge corona and charge corona current should be checked.

If this adjustment is incorrect, copy quality will be poor. Too much light intensity causes low image density; while too little light causes background on the copy.

DO NOT USE THIS PAGE AS A TEST CHART
FOR REFERENCE ONLY!

2. SIDE-TO-SIDE BALANCE

Using the gray scales on each side of the test chart help you easily determine image balance.

The gray scales are numbered from 1, representing white, to 10 representing black. Each step is a proportionally darker shade than the previous one. To meet the specification, the gray scales on both sides of the copy must reproduce within one block of each other.

There are two areas of the test chart that can be used to determine what area(s) of the copier is causing uneven density; using the gray scale levels 1 - 4 and level 10 or black band on the test chart. If the gray scale levels 1 - 4 are uneven but level 10 or black band is even all the way across the copy, the area causing the problem would be in the optics (i.e., exposure lamp, exposure lamp position, exposure lamp baffle position, mirrors, toner shield glass). If both levels 10 or the black band is uneven, the areas to check would be other than the optical path (i.e., charge corona height and developer unit doctor blade gaps). Both levels 10 or the black band generally eliminate optics because no light is reflected through any optical components.

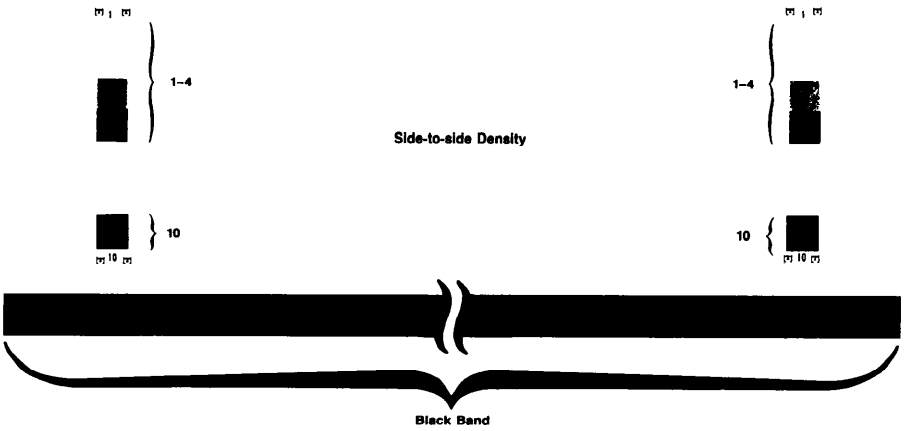

DO NOT USE THIS PAGE AS A TEST CHART
FOR REFERENCE ONLY!

3. FOCUS/MAGNIFICATION

Focus is achieved by first insuring that the magnification is within specification.

Magnification means that if your original image measures 100mm, your copy image should also be 100mm. If the copy image is smaller or larger when using the 1:1 ratio mode, the image is not properly magnified and looks out of focus. To determine proper magnification, measure the 100mm lines extending horizontally and vertically across the test chart.

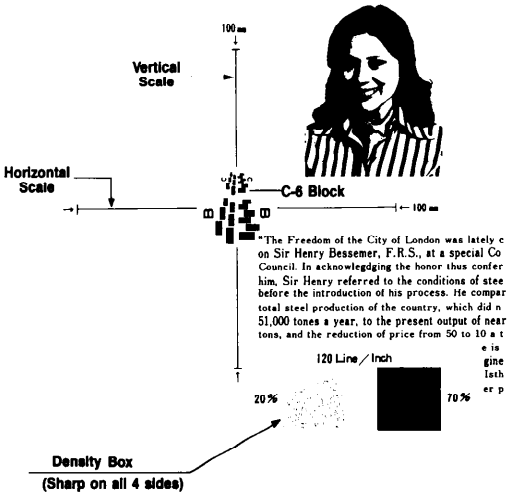

Horizontal magnification is accomplished by changing the magnification of the LENS. Focus is corrected by changing the position of the MIRRORS. Focus also affects the horizontal measurement of the 100mm line on the test chart. In most of the Ricoh copier's, focus is accomplished by moving a wire clamp which secures the first mirror and exposure lamp to the scanner cable. This changes the distance between the first and second scanner assemblies. This adjustment is done until the horizontal 100mm line on the test chart measures 100mm on the copy.

However, in the latest Ricoh products, horizontal magnification is performed by changing the lens magnification and focus is performed by changing the mirror distance, two separate adjustments. Horizontal magnification is checked by measuring the horizontal 100mm line of the test chart. Focus can be checked be observing the following on the OS-A-3 Test Chart:

- **Resolution bars**
- **20% density box**
- **Photograph on test chart**

DO NOT USE THIS PAGE AS A TEST CHART
FOR REFERENCE ONLY!

The resolution bars in the C-6 block should be seen clearly. Using the 20% box, the box should be sharply defined on all four sides. The photograph on the test chart should have a twinkle in both eyes, the part in her hair and the three shades in the shirt should be clearly defined.

Vertical magnification is also important for a properly focused image. The specification on the OS-A-3 Test Chart is the same as for horizontal magnification except the measurement is made vertical. Vertical magnification is controlled by scanner speed. So, if a problem occurs with vertical magnification, the scanner cable, scanner drive pulleys, scanner drive clutch, scanner drive motor, or scanner drive PCB must be checked or adjusted.

4. IMAGE DENSITY

Image density is judged by the image on the copy paper.

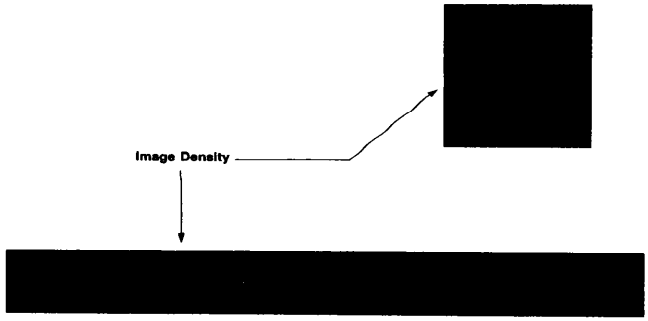

Before the checks for image density can be made, the condition of the original, optics, magnification, side-to-side density, light intensity, corona currents, and developer all need to be correct. Usually the most direct cause of poor image density is under or overtoned developer. The only sure way to eliminate the developer as a potential cause of poor image density is to replace it with fresh developer.

DO NOT USE THIS PAGE AS A TEST CHART
FOR REFERENCE ONLY!

5. LEAD EDGE REGISTRATION

The lead edge of the copy paper must be properly aligned to the latent image of the original to ensure that all printed material is copied.

The scale on the top of the OS-A-3 Test Chart can help you determine if lead edge registration is in specification. The specification varies from model to model. usually because of erase margins. So check each copiers' respective specification.

The scale has 10 equally spaced 1 mm lines. Consult your applicable Field Service Manual for correct specifications. Meeting this specification prevents a black line and distorted image on the lead edge of the copy paper. Lead edge registration is controlled by the timing of the registration rollers.

The timing of the registration rollers is controlled in different ways. Some Ricoh copiers use a registration switch to energize the registration rollers, while other models use pulse counts received at the main board. Both methods accurately register the copy paper to the original's image on the photoconductor surface.

6. LEAD EDGE REGISTRATION

In order to eliminate a shadow or black line on the lead edge of the copy and to assist the separation process a void area is created at the lead edge of the copy paper. This lead edge void area also helps prevent misfeeds in the fuser unit caused by toner at the lead edge of the copy paper. The specification for lead edge erase varies depending upon the model. To measure the lead edge erase, first insure that the lead edge registration is within specification. Once this adjustment is correct simply measure the point at which the image begins to the lead edge of the copy paper to determine the lead edge erase margin.

The method of adjusting the lead edge erase also varies from model to model. The following is one example of how lead edge registration and lead edge erase is performed using the test chart.

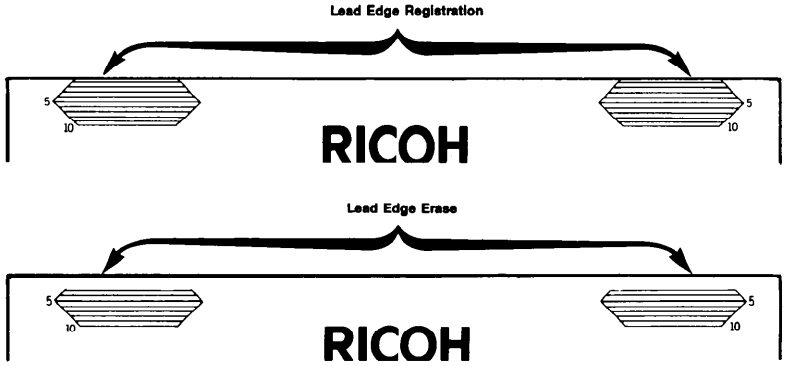

DO NOT USE THIS PAGE AS A TEST CHART
FOR REFERENCE ONLY!

7. SIDE-TO-SIDE REGISTRATION

Like lead edge registration, where the image on the photoconductor surface was registered to the lead edge of the copy paper, the image must also be registered at the side edges of the copy paper.

On each side of the OS-A-3 Test Chart are scales. Here lines are positioned 1mm apart.

The specification for side-to-side registration varies from model to model. On some models adjustment can be performed, while on other models, side-to-side registration is fixed.

The adjustment is usually performed by either moving the lens or paper feed position sideways. Attaining proper side-to-side registration prevents black lines on the edge of the copy and also ensures the proper side erase margins, if used.

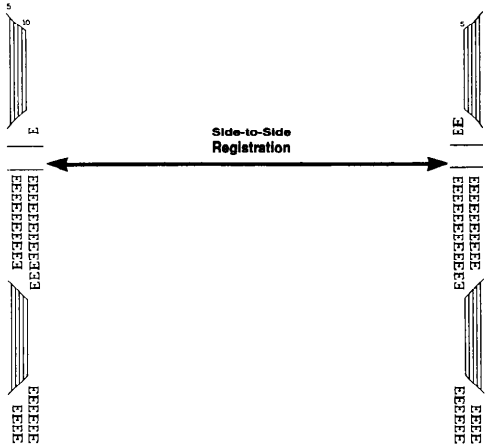

8. JITTER

On each side of the OS-A-3 Test Chart are 2 groups of fine resolution bars. These bars extend almost the entire length of the test chart. The purpose of these bars if the determine if jitter is present on the copy.

Jitter causes a blurred image on the copy. There are usually two types of jitter marks that can be present on the OS-A-3 copy. One is caused by scanner movement, the other by copy paper travel.

To distinguish between the two is relatively easy.

DO NOT USE THIS PAGE AS A TEST CHART
FOR REFERENCE ONLY!

Scanner Movement

If the scanner is stalling, more light will reflect to the photoconductor surface. This causes overexposure of the photoconductor resulting in a WHITE jitter in the resolution bars of the copy.

Copy Paper Travel

If the copy paper is stalled or brought erratically into contact with the developed latent image, the toner will be smeared, causing a BLACK jitter in the resolution bars of the copy.

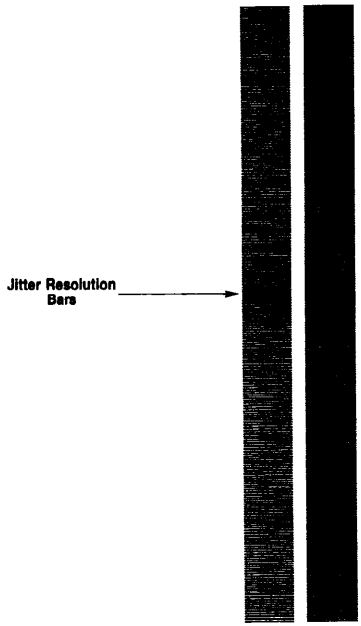

Isolating the cause of jitter can help you correct the problem quickly and accurately. Keep in mind that the jitter bar test is an extremely critical check. Often a jitter seen on the resolution bars is not evident on a normal copy. You should therefore use this part of the test chart as a troubleshooting tool only when jitter is evident on normal copies.

As you can see, the OS-A-3 Test Chart can be a very useful tool in the field. A lot of information can be gathered by observing all areas of the OS-A-3 Test Chart as described.

And Remember!

- **Always use factory specifications**
- **Before troubleshooting a problem, check factory specifications**
- **Do not tweak an adjustment out of specification**
- **Factory specifications: The adjustment that works**

DO NOT USE THIS PAGE AS A TEST CHART
FOR REFERENCE ONLY!

PACKING GUIDELINES FOR MACHINE RETURN TO RICOH

The following guidelines should be observed when preparing a Fax or Copier for return to Ricoh for any reason.

When Applicable

- **Remove the document and copy trays**
- **Remove the handset and handset stand**
- **Remove the paper cassettes**
- **Remove the phone line and power cord**

After removing the above components, place them in a plastic bag and wrap with packing material.

- **Each copier product has a specific "Long Haul Transportation" procedure. This information can be found in the Field Service Manual, Service Overview or Dealer Launch Package**
- **Remove the development unit and vacuum out the toner hopper and developer Reinstall the development unit**
- **Empty Oil Tank**
- **Remove the master unit and place in a protective shielding bag**
- **Tape all covers shut**
- **Place machine in a plastic bag or wrap with protective plastic film (shrink wrap)**
- **Pack the machine and original accessories. Try to locate original carton and packing material. If the carton has been discarded use one comparable to the original.**
- **If new packing must be used make sure it completely surrounds the machine**
- **Clearly write the machine serial number on the outside of the box**
- **Tape the carton shut**
- **Attach a legible copy of the signed Return Authorization (RA) Form to the outside of the unit box**

ESD (ELECTROSTATIC DISCHARGE)

When handling EPROM's, PCB's and other static sensitive devices, the following precautions must be observed to prevent damage to such components.

1. DO NOT open the anti-static container until the component is ready to be installed.
2. DO NOT store these devices near magnetic, electromagnetic, electrostatic or radioactive fields.
3. When installing these devices, leave the machine plugged into a properly grounded outlet. This provides an earth ground to the frame of the machine.
4. Before removing the device from its anti-static container, touch the frame of the machine to discharge any static electricity that may be present. The use of an ESD grounding wrist strap is the best method.
5. Make sure the main switch is in the "OFF" position before removing or installing any device.
6. **WARNING - SHOCK HAZARD**
   Keep hands and conductive tools away from AC components and connectors as the unit is connected to AC power.

PRE-INSTALLATION - WALL OUTLET CHECK

Ricoh recommends all wall outlets be inspected for proper operation where a copier, facsimile or printer product is to be installed. The following procedure has been created to assist the technician.

PROCEDURE:

1. Select the 200 VAC scale on the meter.
2. Connect the "RED" probe to the AC Hot and the "BLACK" probe to the AC neutral.
   * Confirm the voltage reading is within specification as stated in the appropriate FSM.
3. Connect the "RED" probe to the AC Neutral and the "BLACK" probe to ground.
   * Confirm the voltage reading is within specification as stated in the appropriate FSM.
4. Connect the "RED" probe to the AC Hot and the "BLACK" probe to ground.
   * Confirm the voltage reading is within specification as stated in the appropriate FSM.

Wall outlet checks should be performed:

- **At Installation**
- **At a P.M. Cycle**
- **As Part of an I.M.**
- **Before Troubleshooting**

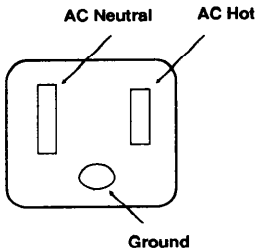

WALL OUTLET

For information regarding line filter and testing equipment, please refer to:

- Service News and Information Control #66, dated 5/2/92 for the ESP power filter
- Service News and Information Control #91, dated 4/24/92 for the SureTest-PRO Wiring Analyzer

1-800-336-MSDS

Ricoh has a toll free "Chemical Safety Hotline" to provide information regarding environmental issues which relate to the office equipment industry.

Call toll free for Material Safety Data Sheets or Safety and Health Information.

***24** hours a day **7** days a week*