POINT TO POINT

Operation Panel Board
A3 Counter (Op.)
Key Counter (Op.)
Total Counter
Stylus
Editor Main Board
Indicator Board
Multiplexer Board
2nd Scanner H.P. Sensor
Lens H.P. Sensor
1st Scanner H.P. Sensor
Lens Drive M
2nd Scanner Drive M
Encoder
Scanner M
Key Card
Registration Sensor
Toner Supply SOL
Tray Lock SOL
Lift Motor
Large Capacity Tray
LCT Main Board
Tray Drive M
Down Sensor
Tray Operation Board
Tray Paper Size Sensor
LCT Paper End Sensor
1st Paper Size Sensor
2nd Paper Size Sensor
3rd Paper Size Sensor
1st Paper End Sensor
2nd Paper End Sensor
3rd Paper End Sensor
Upper Limit Sensor
Positioning SW5
Paper Feed Relay Board
Registration MC
Rel Pee M
3rd Feed MC
2nd Feed MC
1st Feed MC
Cassette Tray Sensor
Tray Lift Sensor
Color Toner E Sensor
Color 1 Sensor
Color 0 Sensor
Manual Feed Sensor
Toner Bottle
ID Sensor
Copier Main Board
Pulse Generator
Cleaning SOL
Separation SOL
Exit Sensor
Fusing Unit
Oil End Sensor
Power Pack (T.D)
Power Pack (C.B)
Erase Unit
TH1
TH2
Heater Contorol Board
Fusing Lamp
Vacum Fan M
Main M
Exposure Lamp
Lamp Regulator
Relay Board
RA1
RA2
RA3
Cooling Fan M
DC Power Supply Unit
FUSE 1 6.3A
FUSE 2 3.15A
FUSE 3 6.3 A
FUSE4 6.3A
Sorter
Interface Board
Indicator Board
Editor
ADF
H.P. Sensor
Wheel Sensor
Paper Sensor
Relay Drive M
Roller Drive M
Wheel Drive M
Belt Drive M
Stopper SOL
Pick-up SOL
Regist SOL
Roller Release M
Original Sensor
Original Width End Sensor
Regist Sensor
Exit Sensor
Feed-in M
Feed-out M
Drum Heater
Anti-Condensation Heater
Noise Filter
Terminal
110/115/220/240Vac

Wire Color Code

- (B)-Black
- (C)-Blue
- (G)-Green
- (H)-Gray
- (M)-Purple
- (P)-Pink
- (R)-Red
- (S)-Sky Blue
- (T)-Brown
- (W)-White
- (Y)-Yellow
- (Z)-Orange

- AC Line
- DC Line
- Pulse Signal
- Signal Direction
- ( ) Wire Color
- Active High
- Active Low
- [ ] Voltage
- Shield

A009

CONNECTOR LAYOUT (A009)

COPIER (DC)

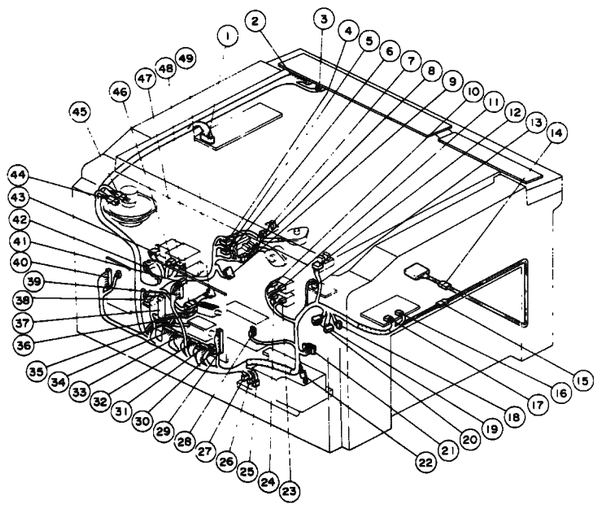

Index No.	CN. No.	Component	Type	P to P
1	CN3	Lamp Regulator	11P/B	E4
2	CN101	Operation Panel	26P/B	C1
3	CN102	Operation Panel	14P/B	C1-C2
4	CN111	Lens Drive Motor	6P/B	C2
5	CN112	2nd Scanner Drive Motor	6P/W	C2
6	CN116	2nd Scanner H.P. Sensor	3P/B	B2
7	CN117	Lens H.P. Sensor	3P/W	B2
8	CN47	(Intermediate)	3P/W	B2
9	CN301	Quenching Lamp	3P/B	C8
10	T3	Main Motor Relay	—/C	F4
11	T4	Main Motor Relay	—/C	F4
12	CN115	First Scanner H.P. Sensor	3P/W	B2-B3
13	CN301	Heater Control Board	2P/W	F3
14	CN616	Toner Bottle	3P/W	C7
15	CN46	(Intermediate)	3P/W	D7
16	CN2	Relay Board	4P/W	F4
17	CN1	Relay Board	4P/B	F5
18	CN503	Sorter DC Harness	4P/W	F6
19	CN613	Editor DC Harness	8P/W-R	D8
20	CN502	DF DC Harness	4P/W	E7
21	CN600	(Intermediate)	12P/B	E1-E2
22	CN618	Oil End	2P/Y	E2
23	T2	Power Relay	—/W	F4
24	T1	Power Relay	—/W	F4
25	CN3	DC Power Supply Board	4P/B	E5

Index No.	CN. No.	Component	Type	P to P
26	CN4	DC Power Supply Board	8P/B	E6-F6
27	CN2	DC Power Supply Board	15P/B	E5-E6
28	CN612	Power Pack (T & S)	4P/B	E2
29	CN206	Main Board	50P/B	D1-D5/D8
30	CN213	Main Board	6P/B	D1
31	CN205	Main Board	15P/B	D5-D6
32	CN204	Main Board	11P/B	D4
33	CN203	Main Board	18P/B	D3/D8
34	CN610	Separation Solenoid	2P/T	E1
35	CN202	Main Board	30/P	D4-D7
36	CN611	Cleaning Solenoid	2P/W	E1
37	CN201	Main Board	40P/B	D1
38	CN1	Registration Sensor	3P/W	C3
39	CN101	Main Board	26P/B	D2-D3
40	CN102	Main Board	2P/W	D2
41	CN220	Paper Feed Board	30P/B	C4-C7
42	CN614	Pulse Generator	3P/W	E1
43	CN303	Erase Unit	18P/B	E3
44	CN118	Scanner Motor	2P/W	C2
45	CN113	Encorder	3P/W	C2
46	CN2	Thermister — 2 P.P.(C & B)	2P/B	E3
47	CN1	Power Pack (C & B)	7P/B	E2-E3
48	CN49	(Intermediate)	5P/W	D8
49	CN300	PTL & ID Sensor Board	12P/B	C8

COPIER (DC)

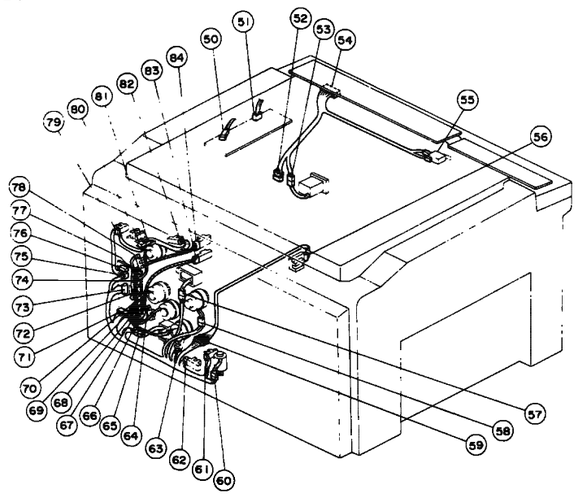

Index No.	CN. No.	Component	Type	P to P
50	CN4	Lamp Regulator	1P/B	E4
51	CN1	Lamp Regulator	4P/W	E4
52	CN22	[redacted]er	2P/W	B1
53	CN20	Total Counter	4P/W	C1
54	CN103	Operation Panel	14P/B	B1-C1
55	—	Door Switch	—/W	B1
56	CN32	Third Paper Size Sensor	7P/W	B5-B6
57	CN26	Toner Supply Solenoid	2P/G	B4
58	CN40	Registration M.C.	2P/G	B7
59	CN33	(Intermediate)	12P/B	C5-C6
60	CN24	Lift Motor	2P/G	B3-C3
61	CN38	Tray Lift Sensor	3P/W	C7
62	CN39	Cassette Tray Sensor	3P/W	B7
63	CN31	Third Paper End Sensor	3P/W	C5
64	CN29	Second Paper End Sensor	3P/W	C5
65	CN25	Tray Lock Solenoid	2P/B	B4
66	CN227	Paper Feed Board	7P/W	C5
67	CN226	Paper Feed Board	3P/W	C5
68	CN232	Paper Feed Board	2P/W	C7
69	CN233	Paper Feed Board	3P/B	C7
70	CN229	Paper Feed Board	11P/B	C4/C5-C6
71	CN223	Paper Feed Board	2P/B	C7

Index No.	CN. No.	Component	Type	P to P
72	CN225	Paper Feed Board	7P/W	C4
73	CN228	Paper Feed Board	12P/W	C5
74	CN224	Paper Feed Board	3P/W	C4
75	CN230	Paper Feed Board	4P/B	C4/C7
76	CN221	Paper Feed Board	6P/B	C8
77	CN222	Paper Feed Board	2P/B	C6
78	CN27	First Paper End Sensor	3P/W	C4
79	CN34	Manual Feed Sensor	3P/B	B8-C8
80	CN36	Color 1 Sensor	3P/B	B8
81	CN35	Color 0 Sensor	3P/B	B8
82	CN37	Color Toner End Sensor	3P/B	B8
83	CN30	Second Paper Size Sensor	7P/W	B5
84	CN28	First Paper Size Sensor	7P/W	B4-B5

OPIER (AC)

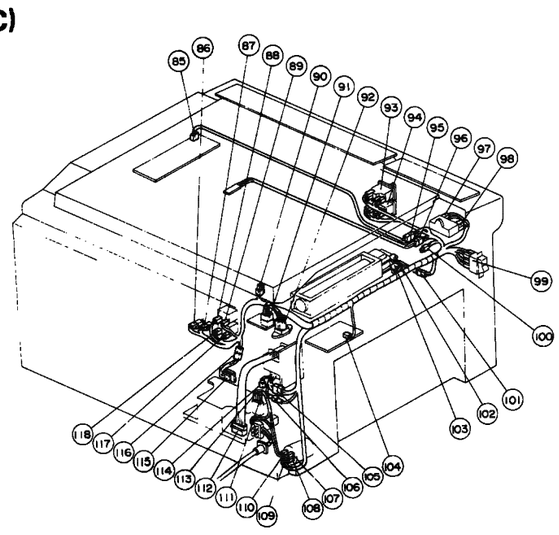

Index No.	CN. No.	Component	Type	P to P
85	CN1	Lamp Regulator	4P/W	E4
86	CN12	Vacuum Fan Motor	2P/W	G3
87	CN13	Main Motor	3P/R	G4
88	T10	Main Motor Relay	1P/T	G4
89	T9	Main Motor Relay	1P/R	G4
90	CN2	Soroter AC Harness	2P/R	F6
91	CN302	Heater Control Board	2P/B	F3
92	—	Triac	—	F2-F3
93	—	Door Safety Switch 3	—	G5
94	—	Door Safety Switch 2	—	G5
95	CN48	Lamp Regulator	2P/W	F4
96	CN6	Drum Heater	2P/R	G7
97	T11	Main Motor Capacitor	2P/W	G4
98	T12	Main Motor Capacitor	2P/W	G4
99	—	Main Switch	—	G6
100	CN7	Anti condensation Heater	2P/R	G7
101	CN5	(Intermediate)	3P/W	G4
102	T31	Cooling Fan Motor	1P/C	G4
103	T30	Cooling Fan Motor	1P/C	G4
104	CN3	Relay Board	2P/W	G4
105	CN51	Main Transformer	2P/W	G6
106	CN60	Main Transformer (220V)	1P/W	G6

Index No.	CN. No.	Component	Type	P to P
107	CN53	Main Transformer (240V)	1P/R	G6
108	T32	Noise Filter	—/W	G7
109	T22	Noise Filter	—/Y	G7
110	T23	Noise Filter	—/Y	G7
111	T33	Noise Filter	—/W	G7
112	T34	Circuit Breaker	—/Y	G8
113	T35	Circuit Breaker	—/Y	G8
114	CN1	DC Power Supply Board	6P/W	F5-F6
115	600	(Intermediate)	12P/B	G3
116	CN44	(Intermediate)	2P/W	F3-G3
117	T7	Power Relay	—/W	G4
118	T8	Power Relay	—/W	G4

DOCUMENT FEEDER

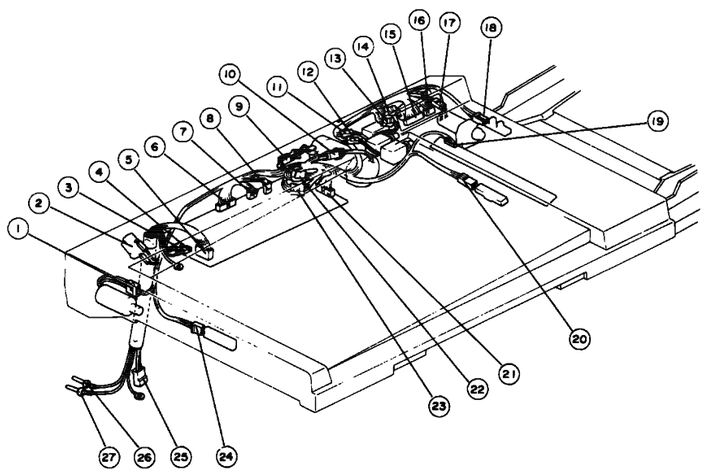

Index No.	CN. No.	Component	Type	P to P
1	DF213	Feed-out Motor	2P/G	F8
2	SW7	Lift Switch	—	F8
3	DF107	DF Interface Harness	1P/G	E7
4	DF106	DF Interface Harness	1P/T	E7
5	DF101	DF Main Board	5P/W	E7
6	DF104	DF Main Board	20P/B	E7-E8
7	DF103	DF Main Board	4P/W	E7
8	DF102	DF Main Board	2P/W	E7
9	DF211	Belt Drive Motor	2P/W	E7
10	DF212	Motor Encorder	4P/W	E7
11	DF210	Registration Solenoid	3P/R	F7
12	DF208	Roller Release Solenoid	2P/R	F7
13	DF209	Pick-up Solenoid	2P/W	F7
14	DF207	Stopper Solenoid	3P/W	F7
15	DF201	Indicator Board	15P/W	E8
16	DF202	Indicator Board	6P/W	E7
17	DF206	Feed-in Motor	2P/W	F8
18	DF205	Original Sensor	3P/W	E8
19	DF204	Original Width / Entrance Sensor	4P/W	F8
20	DF203	Registration Sensor	3P/W	F8
21	DF105	DF Main Board	30P/B	F7/E8-F8
22	DF216	(Intermediate)	3P/W	F8

Index No.	CN. No.	Component	Type	P to P
23	DF217	(Intermediate)	4P/W	F8
24	DF214	Exit Sensor	3P/W	F8
25	DF7	DF DC Harness	4P/W	E7
26	CN108	DF Inter face Harness	1P/B	D7
27	CN109	DF Inter face Harness	1P/T	D7

SORTER

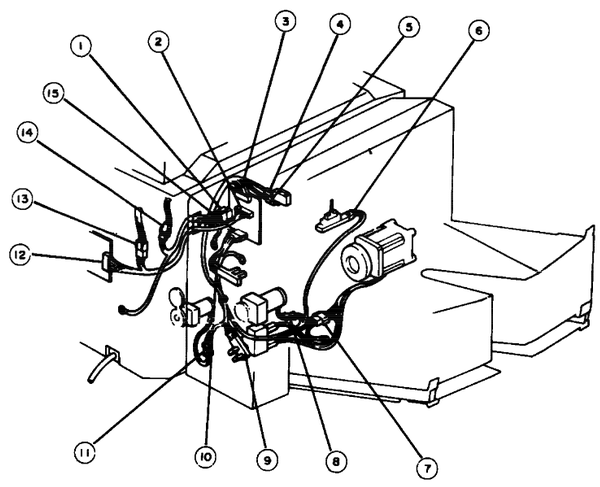

Index No.	CN. No.	Component	Type	P to P
1	S101	Sorter Control Board	2P/W	F6
2	S103	Sorter Control Board	12P/R	E6/F6
3	S104	Sorter Control Board	15P/W	E6-F6
4	S2	Cover Safety Switch (SW8)	—	F7
5	S1	Cover Safety Switch (SW8)	—	F7
6	S116	Paper Sensor	3P/W	F7
7	S117	Wheel Drive Motor	3P/W	F7
8	S115	Roller Drive Motor	2P/W	F7
9	S113	Home Position Sensor	3P/W	E7
10	S111	Wheel Sensor	3P/W	E7
11	S114	Relay Drive Motor	2P/W	F7
12	CN102	Sorter Interface Harness	11P/W	D6
13	CN503	Sorter DC Harness	4P/W	F6
14	CN2	Sorter AC Harness	2P/R	F6
15	S102	Sorter Control Board	3P/W	F7

LCT

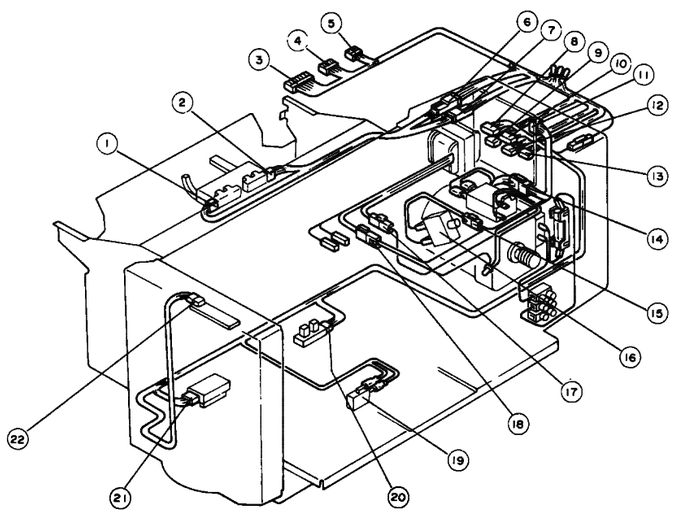

Index No.	CN. No.	Component	Type	P to P
1	LT10	LCT Paper End Sensor	3P/B	4B
2	LT14	Upper Limit Sensor	3P/W	B5-B6
3	LT40	Tray Interface Harness	7P/W	B5
4	LT42	Tray Interface Harness	4P/W	B5
5	LT41	Tray Interface Harness	3P/R	B6
6	LT13	(Intermediate)	3P/W	B5
7	LT15	(Intermediate)	3P/R	B4
8	LT4	LCT Main Board	8P/W	A5-A6
9	LT2	LCT Main Board	3P/R	B6
10	LT3	LCT Main Board	7P/W	A6
11	LT5	LCT Main Board	3P/W	A4-A5
12	LT1	LCT Main Board	7P/R	B5
13	LT31	LCT Main Board	7P/Y	B4
14	LT6	Tray Drive Motor	3P/W	A5
15	LT20	(Intermediate)	2P/R	A4
16	SW10	Cover Safety Switch	—	A4
17	LT7	Transformer	1P/W	A4
18	LT8	Transformer	2P/R	A4
19	SW5	Positioning Switch	—	A6
20	LT17	Down Sensor	3P/W	A5
21	LT16	Tray Paper Size Sensor	7P/W	A6
22	LT18	Tray Operation Board	4P/W	A5-A6

COPY IMAGE (A009)

ITEM	ADJUSTMENT STANDARD	DESCRIPTION
Light Intensity	Level 2 should be slightly visible (TO-2) Image Density Key at Level 4.	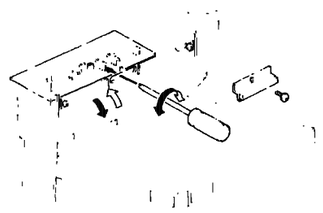
Auto ID Sensor	3 ± 0.06V SP Mode 9, 56	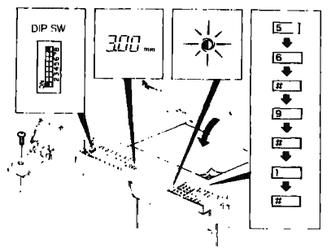 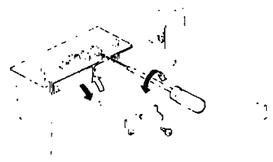
Lead Edge Registration	0 ± 2.0mm (0 ± 0.08")	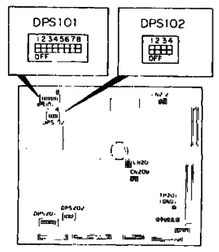 - Lead Edge Registration - DPS101 (On the Main Board) SW.NO. 0:OFF 1:ON 1 0 0 0 0 0 0 0 0 1 1 1 1 1 1 1 1 2 0 0 0 0 1 1 1 1 0 0 0 0 1 1 1 1 3 0 0 1 1 0 0 1 1 0 0 1 1 0 0 1 1 4 0 1 0 1 0 1 0 1 0 1 0 1 0 1 0 1 Narrower ← 1.0mm/Step → Wider
Lead Edge Margin	3.5 ± 2.5mm (0.14" ± 0.1")	- Lead Edge Margin - DPS101 (On the Main Board) SW.NO. 0:OFF 1:ON 5 0 0 0 0 0 0 0 0 1 1 1 1 1 1 1 1 6 0 0 0 0 1 1 1 1 0 0 0 0 1 1 1 1 7 0 0 1 1 0 0 1 1 0 0 1 1 0 0 1 1 8 0 1 0 1 0 1 0 1 0 1 0 1 0 1 0 1 Narrower ← 0.8mm/Step → Wider
Horizontal and Vertical Magnification	Horizontal ± 0.5% Vertical ± 1.0%	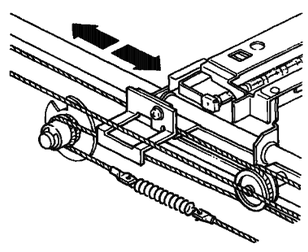 - Vertical Magnification - DPS102 (On the Main Board) SW.NO. 0:OFF 1:ON 2 1 1 1 1 0 0 0 0 3 1 1 0 0 1 1 0 0 4 1 0 1 0 1 0 1 0 Narrower ← 2%/Step → Wider

CORONA CURRENT

15 March 87

ITEM	ADJUSTMENT STANDARD	DESCRIPTION
Charge	DC + 42.4 ± 0.2μA	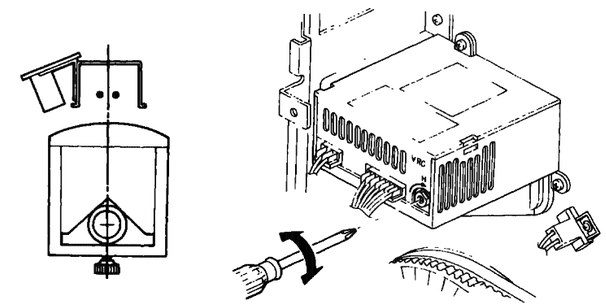
Transfer	DC + 18.6 ± 0.4μA	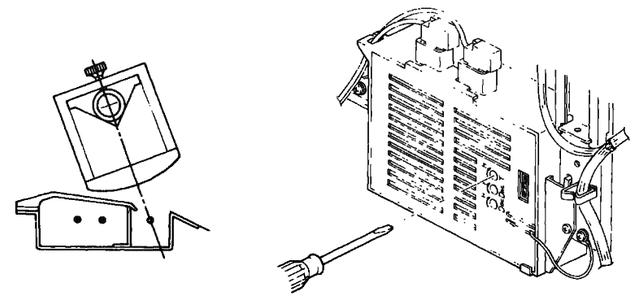
Separation	AC + 39.2 ± 1.5μA DC – 2.7 ± 0.3μA	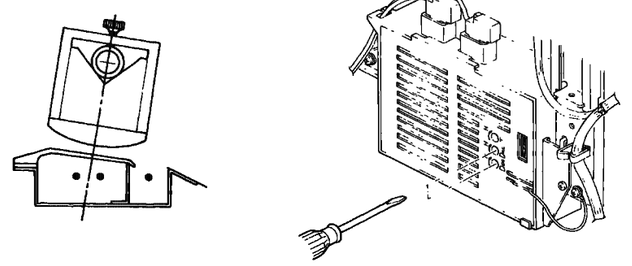

IMAGE DENSITY (Photo Sensor)

ITEM	ADJUSTMENT STANDARD	DESCRIPTION
ID Sensor	4 ± 0.2V	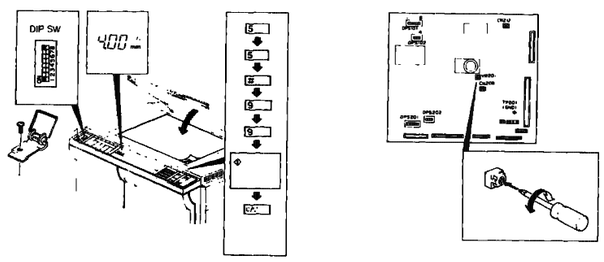

TP. VR. DIP SW (A009)

1. Test Points

- Main Board -

Number	Function
TP201	GND
TP202	+5V (Vc)
TP203	+24V (VA)
TP204	Factory Use
TP205	+12V (Vs)
CN212-1	ADS Voltage (Adjust using VR2 on the lamp regulator)
CN209-1	Input voltage of image density sensor (Adjust using VR201 on the main board)

- DF Main Board -

Number	Function
TP101	GND
TP102	+24V (VA)
TP103	+12V (Power for motor control IC)
TP104	+5V (Vc)
TP105	Belt drive motor encoder pulse

2. Variable Resisters

- Main Board -

Number	Function
VR201	Adjust the image density sensor voltage

- Lamp Regulator -

Number	Function
VR1	Light adjustment
VR2	ADS input adjustment
VR3	Factory Use

- DF Main Board -

Number	Function
VR101	Registration adjustment (0 ± 2.5 mm)
VR103	Belt drive motor speed adjustment (2,500 ± 30 rpm)
VR104	Original entrance sensor output (IC 116-5 > +8V : With paper) (IC 116-5 < +4V : Without paper)
VR105	Original width sensor output (IC 116-7 > +8V : With paper) (IC 116-7 < +4V : Without paper)

3. Dip Switches

- Main Board -

DIP 101

DIP Switch	Normal	Function
101-1	---	Lead edge registration adjustment
101-2	---	Lead edge registration adjustment
101-3	---	Lead edge registration adjustment
101-4	---	Lead edge registration adjustment
101-5	---	Lead edge blank margin adjustment
101-6	---	Lead edge blank margin adjustment
101-7	---	Lead edge blank margin adjustment
101-8	---	Lead edge blank margin adjustment

(Lead edge regist./blank margin adjustment interval = 1.0 mm per step. See the adjustment procedure.)

DIP 102

DIP Switch	Normal	Function
102-1	OFF	Scanner free run
102-2	---	Vertical magnification adjustment
102-3	---	Vertical magnification adjustment
102-4	---	Vertical magnification adjustment

(Vertical magnification adjustment interval = 0.2% per step. See the vertical magnification adjustment procedure.)

DIP 201

DIP Switch	Normal	Function
201-1	OFF	Toner supply mode (ON: fixed, OFF: detect)
201-2	ON	Toner supply amount (Note 1)
201-3	OFF	Toner supply amount (Note 1)
201-4	OFF	Image density adjustment (Note 2)
201-5	ON	Image density adjustment (Note,2)
201-6	OFF	Increase bias (+30 V; Color)
201-7	OFF	Increase bias (+90 V)
201-8	OFF	ID sensor LED ON

NOTE 1: Dip SW 201-1, 2, 3

201-2	201-3	Detect Mode (201-1 OFF)	Fixed Mode (201-1 ON)
OFF	OFF	15%	3.5%
ON	OFF	30%	7.0%
OFF	ON	45%	10.5%
ON	ON	60%	14.0%

NOTE 2: Dip SW 201-4, 5

201-4	201-5	Image Density	ID sensor Bias
OFF	OFF	Light (least toner)	470V
ON	OFF	Lighter (less toner)	440V
OFF	ON	Normal	500V
ON	ON	Dark (more toner)	530V

DIP 202

DIP Switch	Normal	Function
102-1	OFF	Sorter instructions
102-2	OFF	Auto cassette shift disable
102-3	OFF	Not used
102-4	OFF	Not used

- Operation Panel -

DIP 1

DIP Switch	Normal	Function
1-1	OFF	Drum conditioning
1-2	OFF	Free run
1-3	OFF	Jam detection disable
1-4	OFF	Auto reset disable
1-5	OFF	Beeper sound disable
1-6	OFF	Copy counter count up/down (ON: down, OFF: up)
1-7	OFF	Manual image density mode priority (ON: manual mode, OFF: ADS mode)
1-8	OFF	SP Mode

- DF Main Board -

DIP101

101-1	101-2	101-3	101-4	Function
ON	OFF	OFF	OFF	Normal mode
ON	OFF	OFF	OFF	Free run
ON	ON	OFF	ON	Belt speed adjustment (VR103)
ON	ON	ON	ON	All indicator on

ELECTRICAL COMPONENT LAYOUT (A009)

Document Feeder

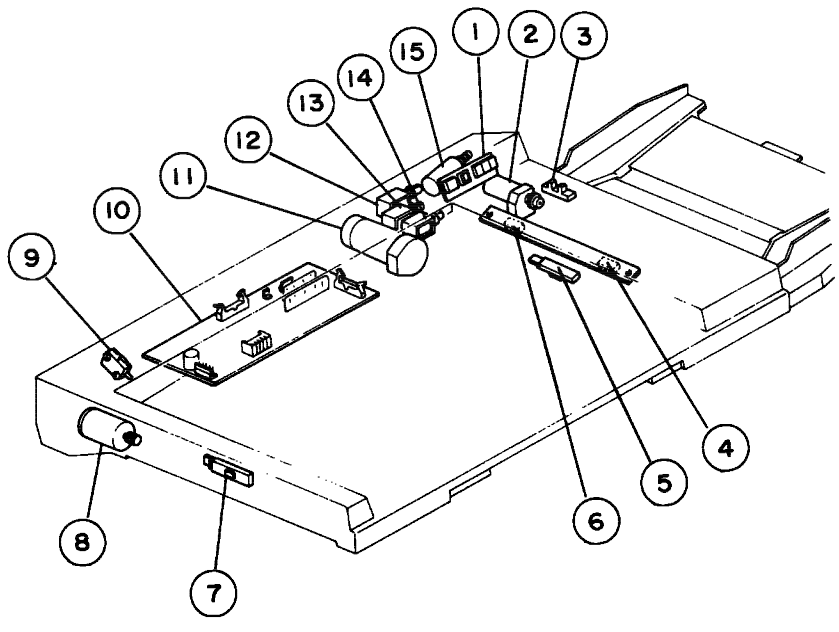

Index No.	Description	Symbol	P to P
1.	Indicator PCB	PCB-10	E8
2.	Feed-in Motor	M-14	F8
3.	Feed-in Sensor	S-34	E8
4.	Entrance Sensor	S-35	F8
5.	Registration Sensor	S-37	F8
6.	Width Sensor	S-36	F8
7.	Exit Sensor	S-38	F8
8.	Feed-out Motor	M-15	F8
9.	Lift Switch	SW-7	F8
10.	DF Main PCB	PCB-11	E8-F8
11.	Belt Drive Motor	M-16	E7
12.	Pick-up Solenoid	SOL-7	F7
13.	Registration Solenoid	SOL-8	F7
14.	Roller Release Solenoid	SOL-9	F7
15.	Stopper Solenoid	SOL-10	F7

Sorter

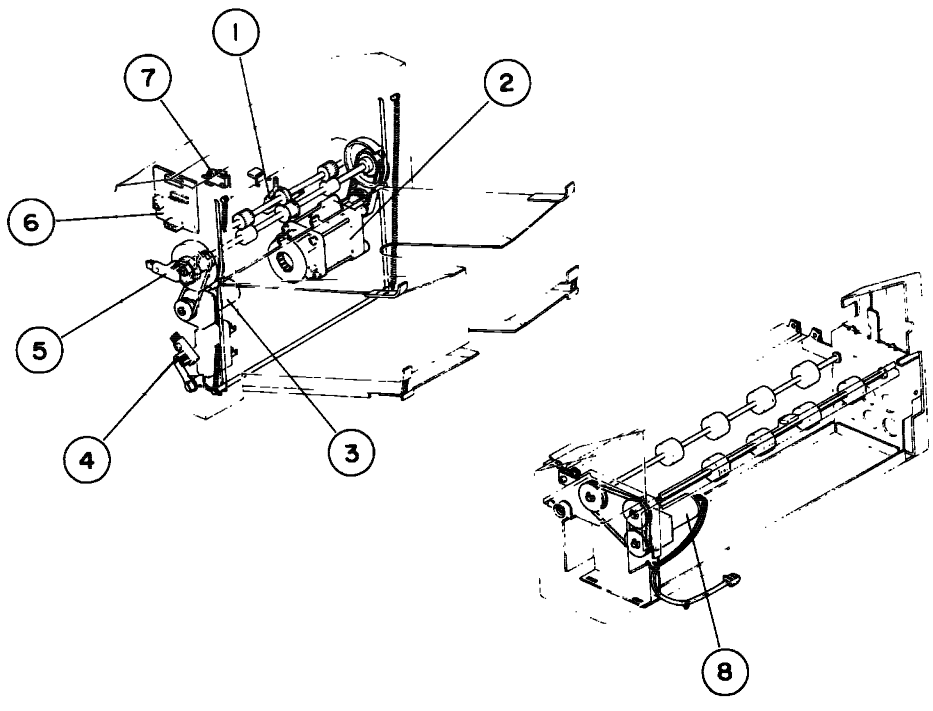

Index No.	Description	Symbol	P to P
1.	Paper Sensor	S-31	F7
2.	Wheel Drive Motor	M-11	F7
3.	Roller Drive Motor	M-12	F7
4.	Bin Home Position Sensor	S-32	E7
5.	Wheel Sensor	S-33	F7
6.	Sorter Control PCB	PCB-9	E6-F6
7.	Cover Safety Switch	SW-6	F7
8.	Relay Drive Motor	M-13	F7

Large Capacity Tray

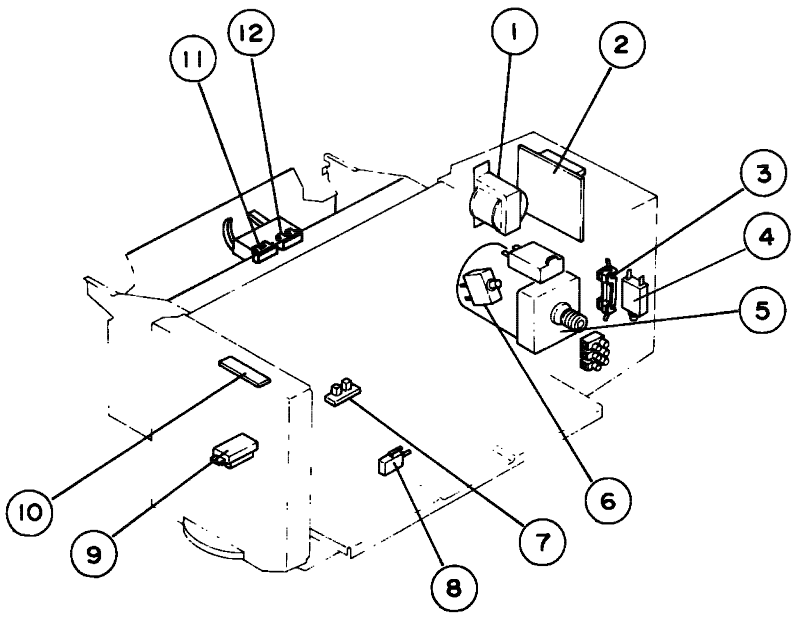

Index No.	Description	Symbol	P to P
1.	LCT Transformer	T2	A4
2.	LCT PCB	PCB-12	A4-A6
3.	AC Fuse (220V)	F-2	A4
4.	Circuit Beaker (115V)	CB-2	A4
5.	LCT Motor	M-17	A5
6.	LCT Safety Switch	S-10	A4
7.	Tray Down Sensor	S-39	A5
8.	Positioning Switch	S-5	A6
9.	Paper Size Sensor	S-40	A6
10.	LCT Operation Panel	PCB-13	A5-A6
11.	Paper End Sensor	A-41	B4
12.	Upper Limit Sensor	S-42	B5-B6

ELECTRICAL COMPONENT LAYOUT (A009)

15 March, '87

Copier

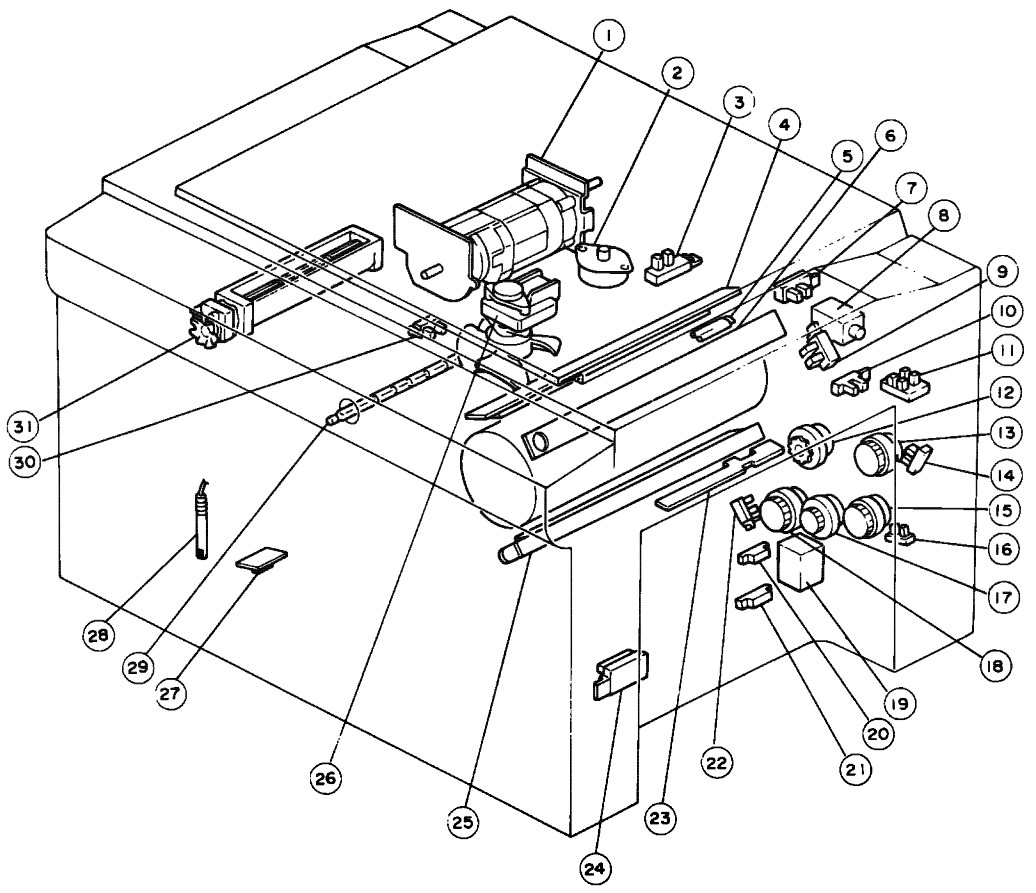

Index No.	Description	Symbol	P to P
1.	Main Motor	M1	G4
2.	Lens Drive Motor	S13	B2
3.	Lens HP Sensor	S1	B2
4.	Quenching Lamp	L1	C8
5.	Drum Heater	H	G7
6.	Erase Lamp	L2	E3
7.	Pulse Generator Sensor	S2	E1
8.	Toner Supply Solenoid	SOL1	B3
9.	Color Toner End Sensor	S3	B8
10.	Manual Feed Sensor	S4	B8
11.	Color Toner Sensors	S5	B8
12.	Registration MC	MC1	B7
13.	First Paper Feed MC	MC2	C6
14.	First Paper End Sensor	S6	B4
15.	Second Paper Feed MC	MC3	B6
16.	Second Paper End Sensor	S7	B5
17.	Relay Feed MC	MC4	B7
18.	Third Paper Feed MC	MC5	B6
19.	Tray Lock Solenoid	SOL2	B3
20.	First Paper Size Sensor	S8	B4
21.	Second Paper Size Sensor	S9	B5
22.	Third Paper End Sensor	S16	B5
23.	Registration Sensor	S10	C3
24.	Third Paper Size Sensor	S11	B6
25.	Pre Transfer Lamp	L3	C8
26.	Vacuum Fan Motor	M3	G3
27.	Toner Overflow Sensor	S17	C7
28.	Oil End Sensor	S18	F2
29.	Fusing Lamp	L4	G3
30.	Paper Exit Sensor	S12	F1
31.	Exhaust Blower Motor	M4	G4

Copier

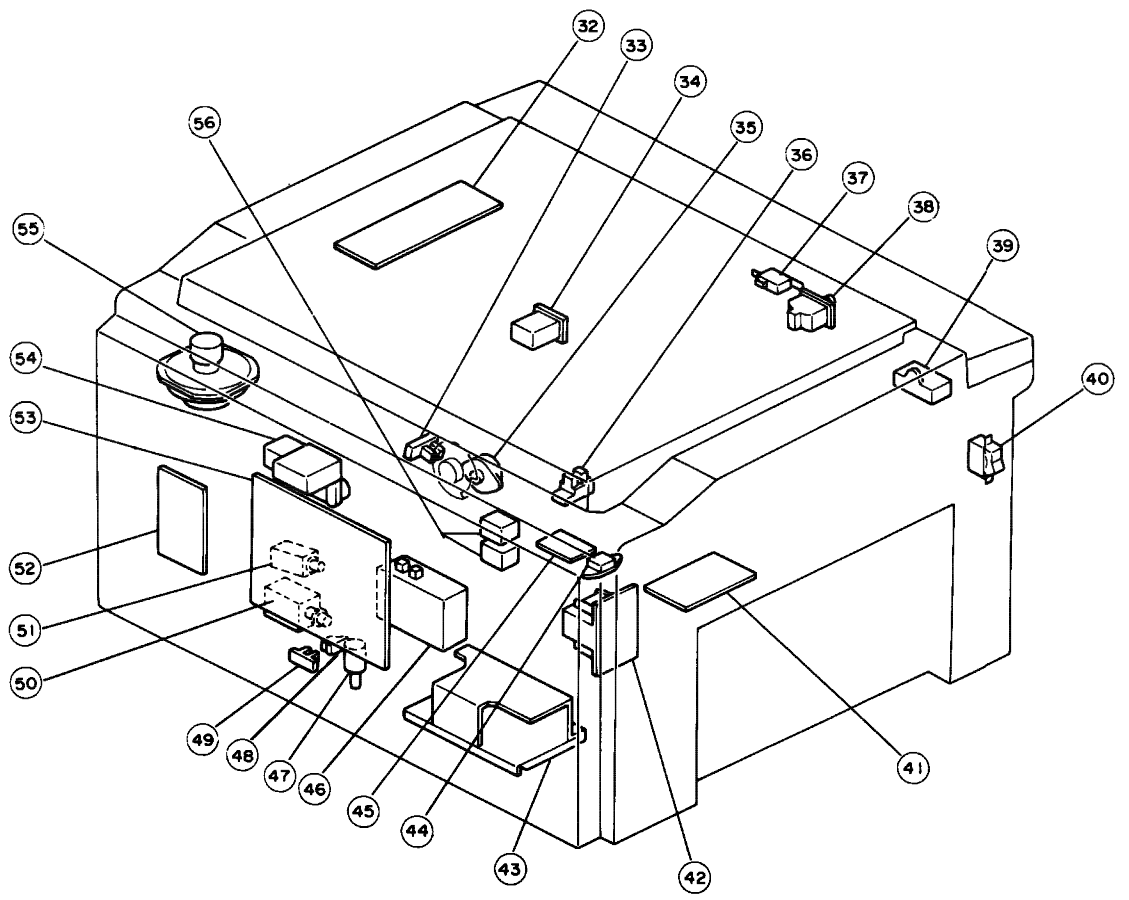

Index No.	Description	Symbol	P to P
32.	Lamp Regulator PCB	PCB1	E4
33.	Second Scanner Home Position Sensor	M2	C2
34.	Total Counter	CO1	C1
35.	Second Scanner Motor	M5	C2
36.	Scanner Home Position Sensor	S1	B2
37.	Door Switch	SW4	B1
38.	Front Cover Safety Switch	SW2,SW3	G5
39.	Main Motor Capacitor	C	G4
40.	Main Switch	SW1	G6
41.	Relay PCB	PCB2	F4-F5
42.	Transformer	TR1	G6
43.	DC Power Supply Unit	PSU	E5-F5
44.	Fusing Triac	FT	F3
45.	Heater Control PCB	PCB5	F3
46.	Power Pack — T/S	P1	E2
47.	Cassette Tray Lift Motor	M6	B3
48.	Cassette Tray Lift Sensor	S19	B7
49.	Cassette Tray Sensor	S15	B7
50.	Cleaning Solenoid	SOL3	E1
51.	Pick-off Solenoid	SOL4	F1
52.	Feed Control PCB	PCB3	C4-C8
53.	Main PCB	PCB4	D1-D8
54.	Power Pack — C/B	P2	E2-E3
55.	Scanner Drive Motor	M7	C2
56.	AC Drive Relay	R1	F4

MECHANICAL ADJUSTMENT (A009)

Exposure Lamp Position
* Filament should be aligned with sight hole

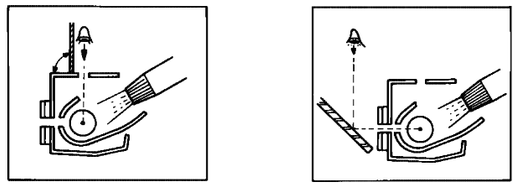

Toner Supply Clutch Lubrication

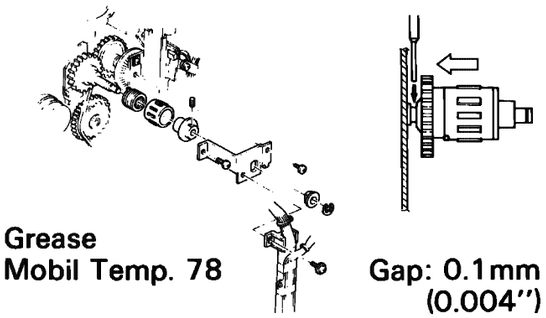

Grease
Mobil Temp. 78

Gap: 0.1mm
(0.004")

Doctor Gap: 0.76 ± 0.1mm
(0.03" ± 0.004")

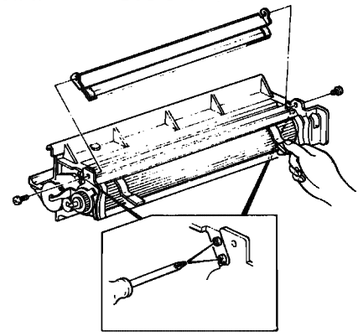

Cleaning Pressure: 13 ± 0.5mm
(0.51" ± 0.02")

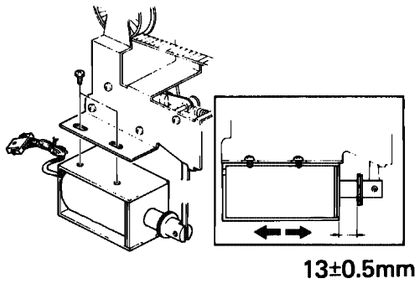

13±0.5mm

Registration Clutch Adjustment
Gap: 0.1mm (0.004")

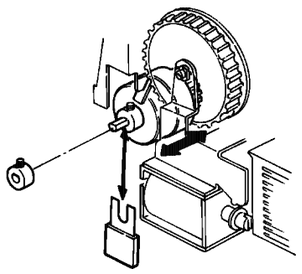

Feed Roller/Friction Pad Gap (1st/2nd Feed)
Gap: 1.6 ± 0.3mm (0.06" ± 0.01")

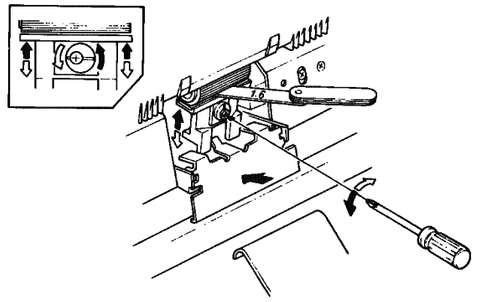

Feed Roller/Friction Pad Gap
(Cassette Tray)
Gap: 7.3 ± 0.3mm (0.29" ± 0.01")

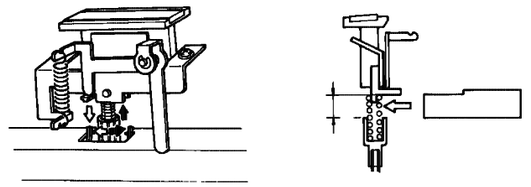

Friction Pad Holder Position
(Cassette Tray)
Gap: 1.7 ± 0.2mm (0.07" ± 0.008")

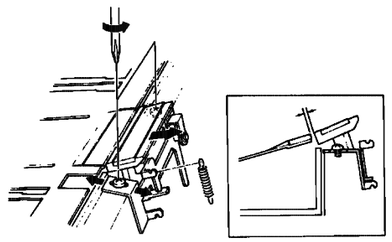

Horizontal Registration (Cassette Tray)
0 ± 2mm (0 ± 0.08")

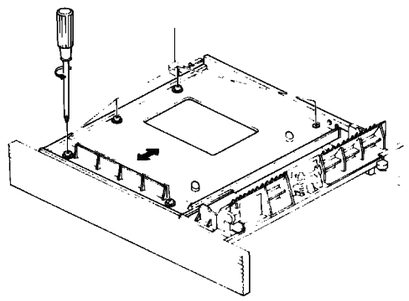

Fusing Pressure

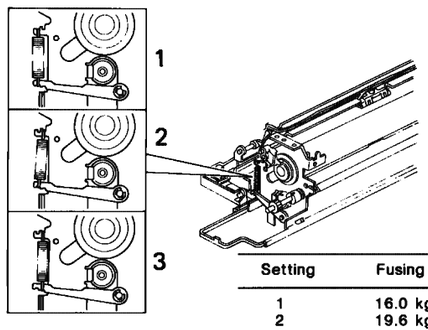

Setting	Fusing Pressure	
1	16.0 kg	
2	19.6 kg	* Factory Setting
3	20.4 kg	

Stopper Plate Position (DF)
Groove of the cam should be aligned with the "4" calibration mark.

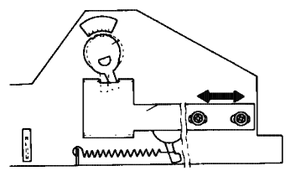

DF Belt Drive Motor Speed
2500 ± 30 rpm

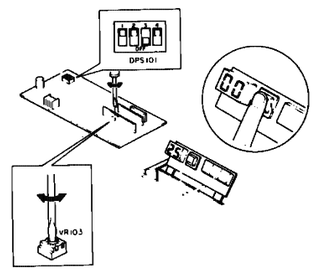

Lead Edge Registration (DF)
0 ± 2.0 mm (0 ± 0.08")

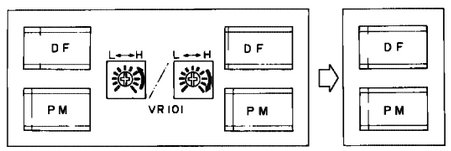

Timing Belt Tension (Sorter)
2^{+3}_{-0} mm $^{+0.12"}_{-0"}$

* Deflection at 200g
(0.44lb)

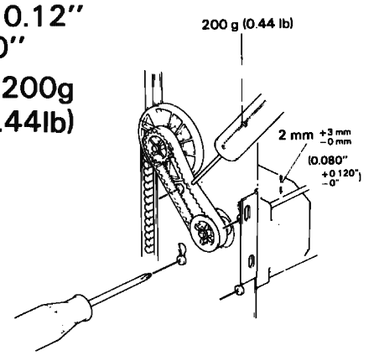

Side Registration (LCT)
0 ± 2.0 mm (0 ± 0.08")

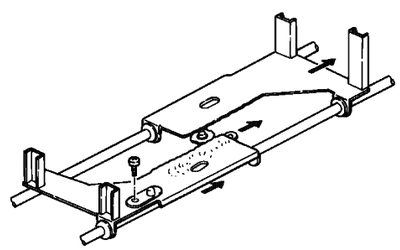

5. Service Program Mode Table

Mode No.	Function	Data	Factory Setting	Remarks
5 Exposure Lamp OFF	Exposure lamp ON/OFF	0: ON 1: OFF	0	
9 ADS	ADS voltage adjustment	-	-	For use with SP Mode "56". Refer to the ADS adjustment procedure.
11 All Indicators ON	Turns on all indicators on the operation panel.	-	-	
15 Auto Reset Time	Selects auto reset of 1 or 3 minutes.	0: 1 min. 1: 3 min.	0	Auto Reset time can be switched OFF by DIP SW 1-4 ON.
20 Feed Station Priority (LCT)	Selects feed station priority.	0: LCT 1: SP 22	0	Refer to the NOTE 1.
21 APS Priority	Selects APS or manual.	0: APS 1: Manual	0	If DF is installed.
22 Feed Station Priority (1st, 2nd, and 3rd cassette)	Selects feed station priority.	0: 1st 1: 2nd 2: 3rd	0	Refer to the NOTE 1.
23 DF Original Size	Enables originals of various sizes to be fed from the same stack.	0: OFF 1: ON	0	ADF Mode only.
28 Auto Sort Mode	Selects Sort Mode automatically in ADF mode.	0: Manual 1: Auto	0	Sorter and DF must be installed.
29 Fusing Unit Idle	Selects fusing unit idling mode	0: No idling 1: Idling	0	Copier will idle for 10 seconds. Refer to the NOTE 3.
35 Toner Supply	Changes toner supply interval. a) ID sensor checks every 5 copies. b) Toner end level changes to 0.65V.	0: Standard 1: Increase	0	Standard: Every 10 copies, 0.75V.
49 Fusing Temperature Change	Changes fusing temp.	0: Standard 1: Low 2: Higher 3: Highest	0	178 - 184° 174 - 180° 182 - 188° 186 - 192°
52 Fusing Temperature	Displays the fusing temperature.	-	-	
55 VSG, VSP Voltage	Displays VSG, VSP voltage	-	-	Press the enter key twice to Display Vsp.
56 ADS Input Reference Voltage	Displays ADS voltage	-	-	For use with SP Mode "9". Refer to the ADS adjustment procedure.
59 Bias Voltage	Displays bias voltage	-	-	Press the Print key to indicate the voltage.
60 Toner Supply Recovery	Recover toner volume if the Vsp is above 0.5V. a) Press Print key. b) Toner supply clutch turns on. c) Free run starts. d) Vsp becomes less than 0.5V. e) Free run stops.	-	-	Use this mode if the image density is low. (Black toner only). Refer to the NOTE 2 for color toner
70 Color Toner Supply Amount	Selects the color toner supply ratio.	0: 14% 1: 7% 2: 21% 3: 28% 4: 35% 5: 42% 6: 49% 7: 56%	0	
73 Color Toner Copy Count	Shows the number of color copies made	0: Red 1: Green 2: Blue		Multiply number by 100. Example: 24 = 2400 sheets
76 Sorter Bin Capacity	Set the Batch mode quantity limit.	0: No limit 1: Limit	0	Limit is determined by paper size. Refer to the NOTE 4.
93 Maximum Copy Quantity	Limits the maximum copy quantity that can be entered.	-	0 (999)	The limit quantity is displayed in the copy counter. (Refer to the NOTE 5.)
99 Clear All Memory	Clear All counters and returns all modes to factory setting.	0: Memory 1: Clear	0	DIP SW 1-1 must be ON.

NOTE 1: SP Mode No.20 and 22.

Feed Station Priority

	LCT Not Installed			LCT Installed			
SP Mode 20	X	X	X	0	1	1	1
SP Mode 22	0	1	2	X	0	1	2
First Priority	1st	2nd	3rd	2nd	1st	2nd	3rd
Second Priority	2nd	3rd	1st	3rd	2nd	3rd	1st
Third Priority	3rd	1st	2nd	1st	3rd	1st	2nd

- If no cassettes are installed, the machine returns to the first priority setting.
- The "X" mark means "don't care".
- If a cassette is not installed or the cassette is empty, the machine selects the next priority.

NOTE 2: SP Mode No.60.

For the color toner supply recovery, the following procedure is required:

1. Turn off the main switch and turn on DIP switch 1-2.
2. Turn on the main switch, then press the Print key.
3. While pressing the enter key and the "0" key, the toner supply clutch turns on.
4. Press the Clear/Stop key and turn off the main switch, then turn off DIP switch 1 - 2.

NOTE 3: SP Mode No.29

The idling mode may be necessary if the copier has been installed in an environment with low temperature place.
The idling mode will warm up the fusing rollers enough to ensure the fusing ability at initial copy run.

Idling Mode: The copier will idle for 10 seconds only when the main switch turned on and the Print key turned on.

NOTE 4: SP Mode No.76

Paper Size	Limit Capacity
DLT	10 sheets
LT	30 sheets
HLT	30 sheets

NOTE 5: SP Mode No.93

To change the limit quantity, perform the following:

1. Turn the DIP SW 1-8.
2. Enter "93" using the numeral keys.
3. Press the Enter key.
4. Enter a desired number using numeral keys.
5. Press the Enter key.