RICOH FT4480
PARTS CATALOG

FT4480 PARTS CATALOG
MASTER INDEX

	Fiche	Row/ Frame
FT4480 COPIER (A009)		
Parts Location & List	**2 of 4**	**A5 - G8**
	3 of 4	**A5 - C2**
Parts Index	**3 of 4**	**C3 - E7**
DF39 (A419)		
Parts Location & List	**3 of 4**	**G5 - G7**
	4 of 4	**A5 - B7**
Parts Index	**4 of 4**	**B8 - C5**
RT15 (A912)		
Parts Location & List	**4 of 4**	**C8 - E3**
Parts Index	**4 of 4**	**E5 - E9**
EDIT BOARD		
Edit Board	**4 of 4**	**F1 - F2**
MODIFIED PARTS REFERENCE	**4 of 4**	**F5**
ADDITIONAL ACCESSORIES:		
CS2070 (A414) Parts Location & List	**1 of 1**	**A1 - A9**
Parts Index	**1 of 1**	**B1 - B4**

DF39 PARTS CATALOG INDEX

	PAGE	FICHE	ROW/ FRAME
DF39 (A419)			
1. Document Feeder I	2	3 of 4	G5-G7
2. Document Feeder II	4	4 of 4	A5-A7
3. Document Feeder III	6	4 of 4	B1-B3
4. DF Main Board	8	4 of 4	B4-B5
5. DF Harness	10	4 of 4	B6-B7
Parts Index	13	4 of 4	B8-C5

2. DOCUMENT FEEDER II (A419)

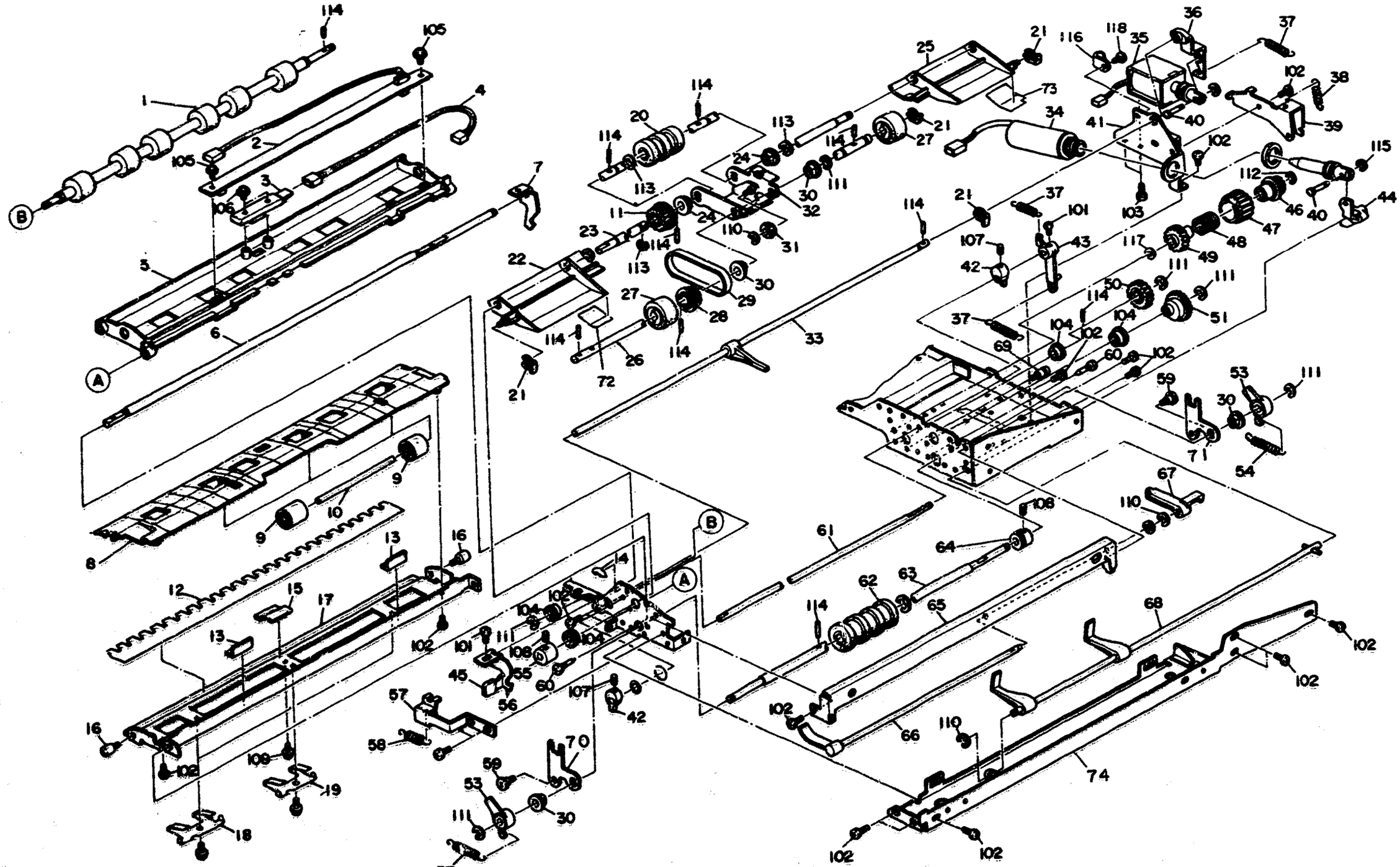

2. DOCUMENT FEEDER II (A419)

May 1, '87

Index No.	Parts No.	Description	Q'ty Per Assembly
1	59182155	Registration Roller	1
2	59185631	Paper Size Sensor	1
3	59185722	Photosensor	1
4	59185821	Registration Sensor Harness	1
5	59182520	Upper Feed-in Guide	1
6	59182168	Release Lever Shaft	1
7	59182172	Rear Release Lever	1
8	59182610	Lower Feed-in Guide	1
9	58942412	Roller	2
10	58942413	Relay Roller Shaft	1
11	58942186	Separation Roller Pulley	1
12	59182623	Paper Guide Mylar	1
13	58755501	Sensor Pad	2
14	59182781	Decal - Feed-in	1
15	59182624	Seal - 12 x 17 x 0.7 mm	1
16	54131875	Knob Screw	2
17	59182621	Entrance Guide	1
18	59182615	Spring Plate	1
19	59182616	Middle Spring Plate	1
20	58942181	Upper Separation Roller	1
21	54472681	Snap Ring	1
22	59182225	Front Feed-in Guide	1
23	59182224	Feed Roller Shaft	1
24	50530223	Bushing - 8mm	2
25	59182226	Rear Feed-in Guide	1
26	59182220	Pick-up Roller Shaft	1
27	58942171	Original Feed Roller	2
28	59182223	Pulley - 24T	1
29	58942174	Timing Belt	1
30	50530447	Bushing - M6	2
31	58942163	Clutch Spring	1
32	59182215	Pick-up Roller Bracket	1
33	59182375	Pick-up Control Shaft	1
34	59185501	Stopper Solenoid	1
35	59185515	Pick-up Solenoid	1

Index No.	Parts No.	Description	Q'ty Per Assembly
36	59182371	Pick-up Lever	1
37	58942176	Spring - Detent Arm	1
38	58942293	Spring - Original Stopper	1
39	59182373	Stopper Bracket	1
40	58942229	Solenoid Pin	2
41	59182370	Pick-up Solenoid Bracket	1
42	59182105	Eccentric Cam	2
43	59182340	Release Arm	1
44	59182372	Stopper Lever	1
45	67541242	Knob Cap	1
45	A4112531	Knob Cap	1
46	59182158	Pulley - 25T	1
47	59182164	Clutch Sleeve	1
48	59182163	Clutch Spring	1
49	59182159	Gear - 24T	1
50	59182156	Gear - 24T	1
51	59182230	Gear - 45T	1
52	59182102	Adjusting Plate	1
53	59182106	One Way Bearing Lever	1
54	58942176	Spring - Detent Arm	1
55	59182210	Collar - 6mm	1
56	59182170	Front Release Lever	1
57	59182108	Adjusting Plate	1
58	52012832	Feed Clutch Spring	1
59	54132298	Stepped Screw - M4	1
60	54462824	Screw - Duplex Guide Plate	2
61	59182103	Eccentric Cam Shaft	1
62	58942183	Lower Separation Roller	1
63	59182101	Separation Roller Shaft	1
64	58942264	Collar	1
65	59182252	Right Stay	1
66	59182260	Feed-in Sensor Feeler	1
67	59182250	Sensor Actuator	1
68	59182150	Feed-in Stopper	1
69	54032049	Spring Anchor	1

Index No.	Parts No.	Description	Q'ty Per Assembly
70	A4182102	Front Adjusting Plate	
71	A4182103	Rear Adjusting Plate	
72	A4182225	Front Mylar Seal Paper Feed	
73	A4182226	Rear Mylar Seal Paper Feed	
74	A4193355	Right Frame	

Index No.	Parts No.	Description	Q'ty Per Assembly
101	03130060W	Philips Pan Head Screw - M3 x 6	
102	03140060W	Philips Pan Head Screw - M4 x 6	
103	03130040W	Philips Pan Head Screw - M3 x 4	
104	08053145	Ball Bearing - 6 x 12 x 4 mm	
105	09654006W	Tapping Screw - M4 x 6	
106	09653010W	Tapping Screw with Flat Washer - M3 x 10	
107	05740040E	Hexagon Headless Set Screw - M4 x 4	
108	05730040W	Hexagon Headless Set Screw - M3 x 4	
109	09514006W	Philips Screw with Flat Washer - M4 x 6	
110	07200030E	Retaining Ring - M3	
111	07200050E	Retaining Ring - M5	
112	07200040E	Retaining Ring - M4	
113	07200060W	Retaining Ring - M6	
114	06320100E	Pin - M2 x 10	
115	07200025E	Retaining Ring - M2.5	
116	11050008	Nylon Clip - 2N	
117	08074005	Washer - 5.1x8x0.2mm	
118	0314008W	Philips Pan Head Screw - M4x8	

3. DOCUMENT FEEDER III (A419)

Rev. 1/89

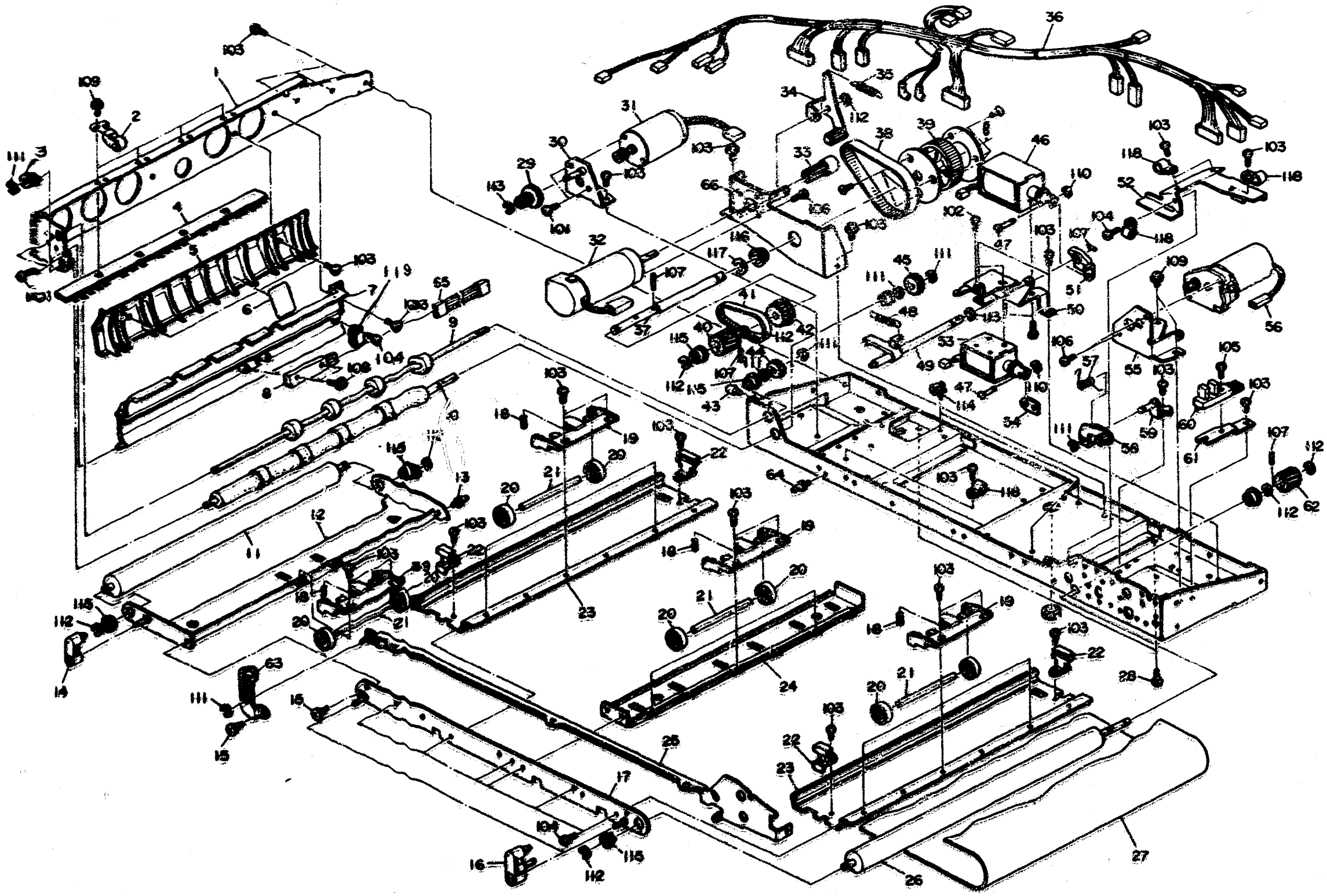

3. DOCUMENT FEEDER III (A419)

May 1, '87

Index No.	Parts No.	Description	Q'ty Per Assembly
1	59183563	Left Frame	1
2	59183585	Upper Exit Roller	1
3	50530447	Bushing - M6	2
4	59183562	Antistatic Brush	1
5	59183561	Left Exit Guide	1
6	58755501	Sensor Pad	1
7	59183566	Right Exit Guide	1
8	59185722	Photosensor	1
9	59183536	Exit Roller	1
10	59183537	Lower Exit Roller	1
11	59183370	Belt Roller	1
12	59183365	Belt Release Bracket	1
13	59183125	Stud - M4	1
14	59183092	Belt Unit Holder - B	1
15	54131882	Stepped Screw	2
16	59183007	Belt Unit Holder - A	1
17	59183395	Front Belt Unit Plate	1
18	59183380	Spring - Floating Roller	2
19	59183383	Holder - Floating Roller	2
20	59183381	Floating Roller	4
21	58751540	Shaft - Floating Roller	2
22	59183382	Belt Stopper	4
23	59181556	Belt Stay	2
24	59183385	Belt Unit Stay	1
25	59183351	Front Frame	1
26	59183369	Belt Drive Roller	1
27	A4191120	Original Feed Belt (Yellow)	1
27	A4191125	Original Feed Belt (White)	1
28	58943121	Base Damper	2
29	59183146	Gear - 16T/33T	1
30	59183523	Exit Motor Bracket	1
31	59183616	Exit Drive Motor - DC1.69W	1
32	59365501	Transport Drive Motor - DC 21W	1
33	59182270	Pulley - 15T	1
34	59182321	Timing Belt Tightener	1
35	59182307	Spring - Drive Motor Tension	1
36	59185811	Main Harness	1
37	59182311	Middle Drive Shaft	1
38	59182316	Timing Belt - P2M 208	1
39	59182295	Pulley - 79T	1
40	59182317	Gear - 19T	1
41	59182314	Timing Belt - MM63	1
42	59182313	Pulley - 30T	1
43	59183120	Stud - M4	1
44	59183538	Gear - 38T	1
45	59183539	Gear - 44T	1
46	59185525	Registration Solenoid	1
47	58942229	Solenoid Pin	1
48	54083253	Spring - Cassette Detect Board	1
49	59182330	Clutch Lever	1
50	59182324	Solenoid Bracket	1
51	59182325	Stopper Lever	1
52	59182385	Harness Backet Ass'y	1
53	59185516	Release Solenoid	1
54	59182327	Release Lever	1
55	59182355	Feed-in Motor Bracket	1
56	59182349	Feed-in Motor Ass'y - DC 5.5W	1
57	59182289	Spring	1
58	59182285	Tightener Stud	1
59	59182275	Timing Belt Tightener	1
60	52155230	Photointerrupter - L Type	1
61	59182380	Sensor Bracket	1
62	59182318	Gear - 19T	1
63	59183093	Link	1
64	59183125	Stud - M4	1
65	59185825	Exit Sensor Harness	1
66	59182301	Motor Bracket	1

Index No.	Parts No.	Description	Q'ty Per Assembly
101	03430060W	Philips Pan Head Screw - M3 x 6	
102	03130040W	Philips Pan Head Screw - M3 x 4	
103	03140060W	Philips Pan Head Screw - M4 x 6	
104	03140080W	Philips Pan Head Screw - M4 x 8	
105	03140100W	Philips Pan Head Screw - M4 x 10	
106	03130060W	Philips Pan Head Screw - M3 x 6	
107	06320100E	Pin - M2 x 10	
108	09653010W	Tapping Screw with Flat Washer - M3 x 10	
109	09514006W	Philips Screw with Flat Washer - M4 x 6	
110	07200025E	Retaining Ring - M2.5	
111	07200040E	Retaining Ring - M4	
112	07200050E	Retaining Ring - M5	
113	07200030E	Retaining Ring - M3	
114	11050087	Clamp	
115	08053145	Ball Bearing - 6 x 12 x 4 mm	
116	08053291	Ball Bearing - 8 x 16 x 5 mm	
117	07200070E	Retaining Ring - M7	
118	11050034	Nylon Clip - 7N	
119	11050008	Nylon Clip - 2N	

Index No.	Parts No.	Description	Q'ty Per Assembly

4. DF MAIN BOARD (A419)

May 1, '87

SYMBOL NO. : PRINTED NUMBER ON THE BOARD
INDEX No. : REFERENCE NUMBER OF NEXT PAGE

CAPACITOR

SYMBOL NO.	INDEX NO.
C101	135
C102	137
C103	137
C104	138
C105	139
C106	136
C108	141
C109	141
C110	144
C111	144
C112	144
C113	144
C114	143
C115	144
C116	144
C117	144
C118	144
C119	144
C120	144
C121	144
C122	144
C123	144
C124	144
C125	144
C126	144
C127	144
C128	144
C129	144
C130	144
C131	144
C132	144
C133	144
C134	144
C135	144
C136	144
C138	144
C140	142
C141	153
C142	140
C143	144
C144	144
C145	144
C146	144
C147	144
C148	137
C149	139

COIL

SYMBOL NO.	INDEX NO.
L101	134

OSCILLATOR

SYMBOL NO.	INDEX NO.
OSC101	125

DIP SW.

SYMBOL NO.	INDEX NO.
DIP101	110

FUSE

SYMBOL NO.	INDEX NO.
FU101	108
FU102	109

TRANSISTOR

SYMBOL NO.	INDEX NO.
Q101	111
Q102	111

CONNECTOR

SYMBOL NO.	INDEX NO.
CN101	103
CN102	102
CN103	104
CN104	105
CN105	106

DIODE

SYMBOL NO.	INDEX NO.
D101	113
D103	113
D104	113

LED

SYMBOL NO.	INDEX NO.
LED101	114
LED102	114
LED103	114
LED104	114
LED105	114
LED106	114

RESISTOR

SYMBOL NO.	INDEX NO.
R101	154
R102	126
R103	157
R104	128
R105	154
R106	129
R107	129
R108	159
R109	158
R110	127
R111	155
R112	155
R113	156
R114	156
R115	146
R116	146
R117	146
R118	146
R119	146
R120	146
R121	146
R122	146
R123	146
R124	146
R125	146
R126	146
R127	152
R128	152
R129	152
R130	152
R131	149
R132	149
R133	149
R134	149
R135	149
R136	149
R137	149
R138	149
R139	145
R140	145
R141	145
R142	145
R143	145
R144	145
R145	149
R146	149
R147	149
R148	149
R149	149
R150	145
R151	145
R152	145
R153	145
R154	145
R155	145
R156	145
R157	145
R158	150
R159	146
R160	149
R162	152
R163	149
R164	149
R165	149
R166	149
R167	149
R168	149
R169	149
R170	149
R171	149
R172	149
R173	146
R174	150
R175	150
R176	147
R177	149
R178	147
R179	149
R180	149
R181	147
R182	147
R183	149
R184	147
R185	149
R186	149
R187	147
R188	149
R189	149
R190	146
R191	149
R192	149
R193	148
R194	151
R195	148
R196	151
R197	148
R198	150
R199	151
R200	147
R201	151
R202	150
R203	148
R204	148
R205	148

TEST PIN

SYMBOL NO.	INDEX NO.
TP101	101
TP102	101
TP103	101
TP104	101
TP105	101

POTENTIOMETER

SYMBOL NO.	INDEX NO.
VR101	131
VR103	132
VR104	133
VR105	133

RESISTOR ARRAY

SYMBOL NO.	INDEX NO.
RAY101	130

IC

SYMBOL NO.	INDEX NO.
IC101	116
IC102	2
SOCKET	107
IC103	122
Heat Sink	160
IC104	119
IC105	118
IC106	117
IC107	124
IC108	120
IC109	115
IC110	121
IC111	123
IC112	112
IC113	4
IC114	3
IC115	123
IC116	123

4. DF MAIN BOARD (A419)

May 1, '87

Index No.	Parts No.	Description	Q'ty Per Assembly
1	A4195602	DF Main Board	
2	A4195603	IC - HM482764G-3	
3	59185701	IC - HCTL-1	
4	59185702	IC - HCTL-2	
101	11010328	Connector Pin Contact	
102	11020958	Connector - 2P	
103	11030881	Connector - 4P	
104	11031726	Connector - 4P	
105	11033020	Connector - 20P	
106	11033022	Connector - 30P	
107	11040271	Connector - 30P	
108	11040333	LSI Socket - 28P	
109	11070413	Fuse - 3A	
110	12040883	Dip Switch	
111	14000100	Transistor - 2SA683	
112	14010329	IC - MP4503	
113	14010832	Diode - DSA1A1	
114	14030308	LED - TLR-102A	
115	14070604	IC - TC4049BP	
116	14071026	IC - SN74LS373N	
117	14071094	IC - HD74LS93P	
118	14071334	IC - μPD7810G	
119	14071337	IC - MN1215Q	
120	14071348	IC - TD62304P	
121	14071535	IC - TD62308AP	
122	14080076	IC - μPC14312	
123	14080099	IC - HA17901P	
124	14080408	IC - PST518A	
125	15030070	Ceramic Oscillator - 10MHz	
126	16000644	Resistor - 1KΩ 1W	

Index No.	Parts No.	Description	Q'ty Per Assembly
127	16000569	Resistor - 0.2Ω 1W	
128	16000576	Resistor - 33Ω 5W	
129	16011732	Resistor - 390Ω 1W	
130	16017326	Resistor Array - 10KΩ	
131	16018145	Variable Resistor - 5KΩ	
132	16018147	Variable Resistor - 10KΩ 0.5W	
133	16018157	Variable Resistor - 100KΩ	
134	16020953	Coil - 800UH 2.5A	
135	16041358	Capacitor - 1000μF 10V	
136	16041381	Capacitor - 4.7μF 50V	
137	16041382	Capacitor - 10μF 50V	
138	16041383	Capacitor - 22μF 50V	
139	16041386	Capacitor - 100μF 50V	
140	16060658	Capacitor - 0.1μF 50V	
141	16061184	Capacitor - 27PF 50V	
142	16061336	Capacitor - 1000PF 50V	
143	16061451	Capacitor - 0.1μF 50V	
144	16061452	Capacitor - 0.01μF 50V	
145	16100045	Resistor - 270Ω 1/8W ±5%	
146	16100053	Resistor - 1KΩ 1/8W ±5%	
147	16100057	Resistor - 1.5KΩ 1/8W ±5%	
148	16100065	Resistor - 3.3KΩ 1/8W ±5%	
149	16100067	Resistor - 4.7KΩ 1/8W ±5%	
150	16100071	Resistor - 10KΩ ±5%	
151	16100079	Resistor - 22KΩ 1/8W ±5%	
152	16100107	Resistor - 111Ω 1/8W ±5%	
153	16100286	Capacitor - 100PF 50V ±10%	
154	16114103	Resistor - 10KΩ 1/4T ±5%	
155	16114222	Resistor - 2.2KΩ 1/4T ±5%	
156	16114330	Resistor - 330Ω 1/4T ±5%	
157	16114472	Resistor - 4.7KΩ 1/4T ±5%	
158	16114562	Resistor - 5.6KΩ 1/4T ±5%	
159	16116821	Resistor - 820Ω 1/2W	
160	10050767	Heat Sink	

5. DF HARNESS (A419)

April 1,'87

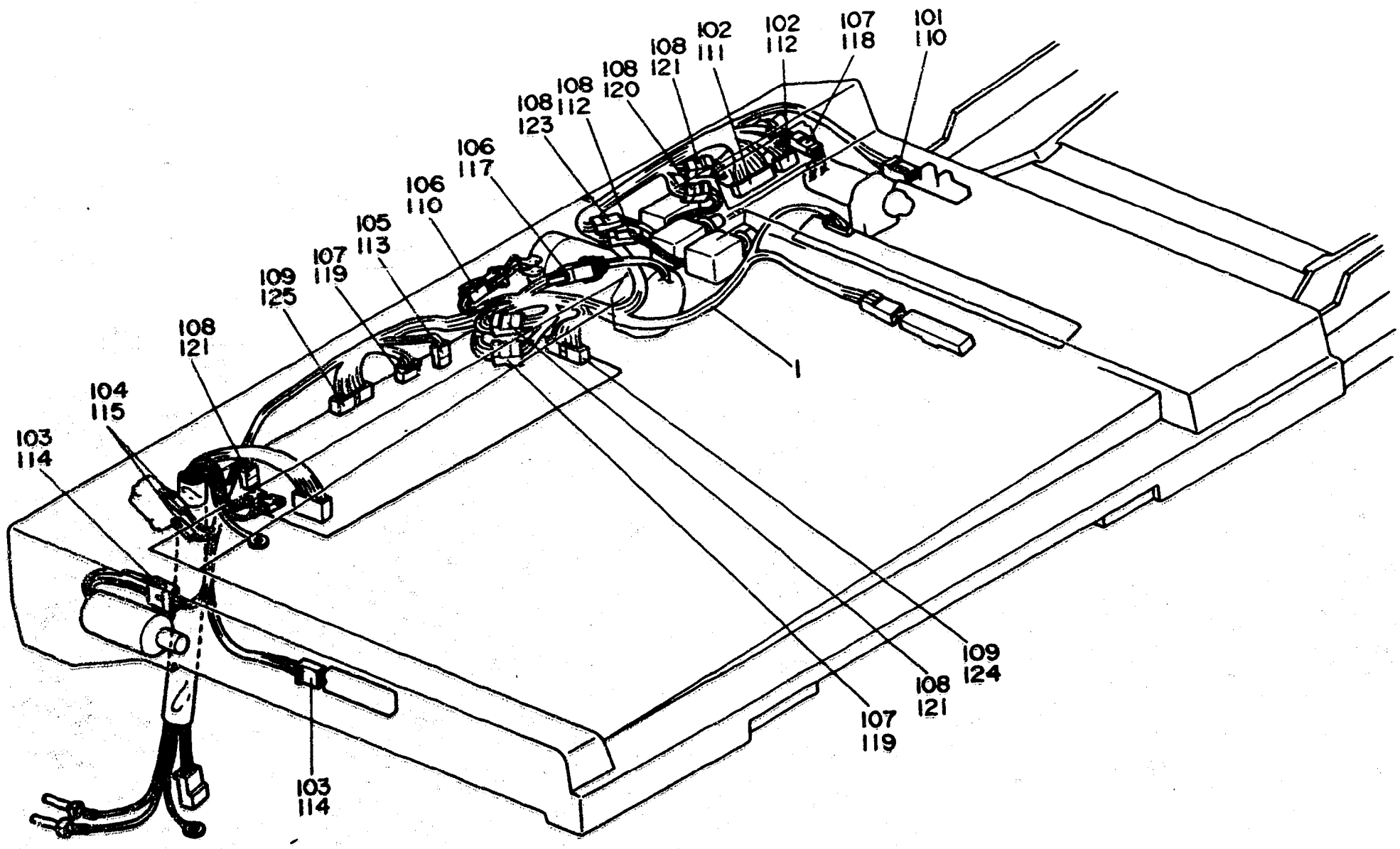

5. DF HARNESS (A419)

May 1, '87

Index No.	Parts No.	Description	Q'ty Per Assembly
1	59185811	Main Harness	1
101	11001089	Socket - MATE-N-LOCK	
102	11001147	Socket - MATE-N-LOCK	
103	11001159	Socket - Mate-N-Lock	
104	11001169	Fastening Receptacle	
105	11001190	Socket - Mate-N-Lock	
106	11001240	Socket - Mate-N-Lock	
107	11001327	Contact	
108	11001328	Contact	
109	11001348	Pin Contact	
110	11021089	Connector - 3P	
111	11021244	Connector - 15P	
112	11021289	Connector - 6P	
113	11021350	Connector - 5239-2P	
114	11021396	Connector - 2P	
115	11021408	Receptacle Housing	
116	11021515	Connector - 2P	
117	11021517	Connector - 4P	
118	11021910	Connector - 2P	
119	11021912	Connector - 4P	
120	11021964	Connector - 2P	
121	11021965	Connector - 3P	
122	11021970	Connector - 2P	
123	11021971	Connector - 3P	
124	11030660	Connector - 16P	
125	11030662	Connector - 20P	

Index No.	Parts No.	Description	Q'ty Per Assembly

PARTS INDEX

Parts No.	Description	Page and Index No.
A4182102	Front Adjusting Plate	5-70
A4182103	Rear Adjusting Plate	5-71
A4182225	Front Mylar Seal Paper Feed	5-72
A4182226	Rear Mylar Seal Paper Feed	5-73
A4191120	Original Feed Belt (Yellow)	7- 27
A4191125	Original Feed Belt (White)	7- 27
A4192645	Key Top (D)	3- 21
A4192718	Original Feed Table - LT/LDG	3- 25
A4192719	Original Feed Table - A4/A3 (C)	3- 25
A4192726	Rack - Front Original Guide	3- 33
A4192728	Rack - Rear Original Guide	3- 27
A4192730	Front Original Guide	3- 28
A4192740	Rear Original Guide	3- 26
A4192752	Original Table Cover	3- 4
A4192760	Original Table Extender	3- 34
A4192775	Front Table Bracket	3- 38
A4192776	Rear Table Bracket	3- 37
A4193111	Bracket	3- 53
A4193355	Right Frame	5-74
A4193365	Harness Bracket	3- 60
A4193749	DF Cover Ass'y - 220/240V (C)	3- 3
A4193750	DF Cover Ass'y - 115V	3- 3
A4193754	DF Cover Assembly - 115V	3-3
A4193770	Grip	3- 12
A4193781	Display Panel - 115V	3- 1
A4193782	Display Panel - 220/240V	3- 1
A4193875	Original Exit Guide	3- 17
A4193877	Shoulder Screw - Scale	3-106
A4193911	Flip Scale - LT/LDG	3- 13
A4193912	Flip Scale - A4/A3 (C)	3- 13
A4193981	Decal - Misfeed-Removal	3- 14
A4193986	Decal-Misfeed Removal-Multi Language	3-14

Parts No.	Description	Page and Index No.
A4194002	Decal - Dip SW	3- 2
A4195602	DF Main Board	3- 20
A4195602	DF Main Board	9- 1
A4195603	IC - HN482764G-3	9- 2
A4195621	Display Board	3- 22
A4198611	Installation Procedure - English	3- *
A4198616	Installation Procedure - 5 Language	3- *
A4112531	Knob Cap	5-45

Parts No.	Description	Page and Index No.
50530223	Bushing - 8mm	5- 24
50530447	Bushing - M6	5- 30
50530447	Bushing - M6	7- 3
50560509	Nut Plate - Microswitch	3- 6
52012832	Feed Clutch Spring	5- 58
52155230	Photointerrupter - L Type	7- 50
54032048	Bushing - 4mm	3- 39
54032049	Spring Anchor	5- 69
54083253	Spring - Cassette Detect Board	7- 48
54131875	Knob Screw	5- 16
54131882	Stepped Screw	7- 15
54132298	Stepped Screw - M4	5- 59
54432657	Gear - 28Z	3- 30
54432660	Spacer - 6 x 22 x 0.5 mm	3- 32
54432660	Spacer - 6 x 22 x 0.5 mm	3- 35
54432712	Cork Pad	3- 29
54432713	Wave Washer	3- 31
54462824	Screw - Duplex Guide Plate	5- 60
54472681	Snap Ring	5- 21
58751540	Shaft - Floating Roller	7- 21
58753287	Spring - Brake Shoe	3- 41
58753553	Ring - Holder	3- 52
58755501	Sensor Pad	5- 13
58755501	Sensor Pad	7- 6
58755510	Shoulder Screw - M5	3- 15
58863114	Roller Cover	3- 59
58942163	Clutch Spring	5- 31
58942171	Original Feed Roller	5- 27
58942174	Timing Belt	5- 29
58942176	Spring - Detent Arm	5- 37
58942176	Spring - Detent Arm	5- 54
58942181	Upper Separation Roller	5- 20
58942183	Lower Separation Roller	5- 62
58942186	Separation Roller Pulley	5- 11
58942229	Solenoid Pin	5- 40

Parts No.	Description	Page and Index No.
58942229	Solenoid Pin	7- 47
58942264	Collar	5- 64
58942293	Spring - Original Stopper	5- 38
58942412	Roller	5- 9
58942413	Relay Roller Shaft	5- 10
58942747	Mylar - Original Guides	3- 18
58943121	Base Damper	7- 28
58943215	Brake Stopper	3- 49
58943218	Aid Pad	3- 43
58943218	Aid Pad	3- 45
58943219	Leaf Spring Holder	3- 47
59181556	Belt Stay	7- 23
59182101	Separation Roller Shaft	5- 63
59182102	Adjusting Plate	5- 52
59182103	Eccentric Cam Shaft	5- 61
59182105	Eccentric Cam	5- 42
59182106	One Way Bearing Lever	5- 53
59182108	Adjusting Plate	5- 57
59182150	Feed-in Stopper	5- 68
59182155	Registration Roller	5- 1
59182156	Gear - 24T	5- 50
59182158	Pulley - 25T	5- 46
59182159	Gear - 24T	5- 49
59182163	Clutch Spring	5- 48
59182164	Clutch Sleeve	5- 47
59182168	Release Lever Shaft	5- 6
59182170	Front Release Lever	5- 56
59182172	Rear Release Lever	5- 7
59182210	Collar - 6mm	5- 55
59182215	Pick-up Roller Bracket	5- 32
59182220	Pick-up Roller Shaft	5- 26
59182223	Pulley - 24T	5- 28
59182224	Feed Roller Shaft	5- 23
59182225	Front Feed-in Guide	5- 22
59182226	Rear Feed-in Guide	5- 25

Parts No.	Description	Page and Index No.
59182230	Gear - 45T	5- 51
59182250	Sensor Actuator	5- 67
59182252	Right Stay	5- 65
59182260	Feed-in Sensor Feeler	5- 66
59182270	Pulley - 15T	7- 33
59182275	Timing Belt Tightener	7- 59
59182285	Tightener Stud	7- 58
59182289	Spring	7- 57
59182295	Pulley - 79T	7- 39
59182301	Motor Bracket	7- 66
59182307	Spring - Drive Motor Tension	7- 35
59182311	Middle Drive Shaft	7- 37
59182313	Pulley - 30T	7- 42
59182314	Timing Belt - MM63	7- 41
59182316	Timing Belt - P2M 208	7- 38
59182317	Gear - 19T	7- 40
59182318	Gear - 19T	7- 62
59182321	Timing Belt Tightener	7- 34
59182324	Solenoid Bracket	7- 50
59182325	Stopper Lever	7- 51
59182327	Release Lever	7- 54
59182330	Clutch Lever	7- 49
59182340	Release Arm	5- 43
59182349	Feed-in Motor Ass'y - DC 5.5W	7- 56
59182355	Feed-in Motor Bracket	7- 55
59182370	Pick-up Solenoid Bracket	5- 41
59182371	Pick-up Lever	5- 36
59182372	Stopper Lever	5- 44
59182373	Stopper Bracket	5- 39
59182375	Pick-up Control Shaft	5- 33
59182380	Sensor Bracket	7- 61
59182385	Harness Backet Ass'y	7- 52
59182390	Display Board Bracket	3- 23
59182520	Upper Feed-in Guide	5- 5
59182610	Lower Feed-in Guide	5- 8

Parts No.	Description	Page and Index No.
59182615	Spring Plate	5- 18
59182616	Middle Spring Plate	5- 19
59182621	Entrance Guide	5- 17
59182623	Paper Guide Mylar	5- 12
59182624	Seal - 12 x 17 x 0.7 mm	5- 15
59182725	Mylar - Feed-in	3- 24
59182770	Extender Spring Plate	3- 36
59182781	Decal - Feed-in	5- 14
59183007	Belt Unit Holder - A	7- 16
59183040	Shoulder Screw - M4	3- 8
59183092	Belt Unit Holder - B	7- 14
59183093	Link	7- 63
59183120	Stud - M4	7- 43
59183125	Stud - M4	7- 13
59183125	Stud - M4	7- 64
59183146	Gear - 16T/33T	7- 29
59183156	Left Bracket - Torsion Spring	3- 40
59183160	Right Bracket - Torsion Spring	3- 57
59183210	Right Brake Plate	3- 48
59183217	Left Brake Plate	3- 44
59183225	Brake Plate Bracket	3- 42
59183225	Brake Plate Bracket	3- 46
59183230	Left Mounting Plate	3- 50
59183235	Right Mounting Post	3- 56
59183243	Left Spring Plate	3- 51
59183244	Right Spring Pipe	3- 55
59183249	Spring Holder	3- 54
59183250	Torsion Spring - 1.0mm	3- 58
59183255	Brake Plate Bracket	3- 5
59183261	Brake Plate Stopper	3- 7
59183351	Front Frame	7- 25
59183365	Belt Release Bracket	7- 12
59183369	Belt Drive Roller	7- 26
59183370	Belt Roller	7- 11
59183380	Spring - Floating Roller	7- 18

Rev. 1/89

Parts No.	Description	Page and Index No.
59183381	Floating Roller	7- 20
59183382	Belt Stopper	7- 22
59183383	Holder - Floating Roller	7- 19
59183385	Belt Unit Stay	7- 24
59183390	Grip Plate	3- 10
59183394	Seal - 15 x 30 mm	3- 9
59183395	Front Belt Unit Plate	7- 17
59183516	Exit Drive Motor - DC1.69W	7- 31
59183523	Exit Motor Bracket	7- 30
59183536	Exit Roller	7- 9
59183537	Lower Exit Roller	7- 10
59183538	Gear - 38T	7- 44
59183539	Gear - 44T	7- 45
59183561	Left Exit Guide	7- 5
59183562	Antistatic Brush	7- 4
59183563	Left Frame	7- 1
59183566	Right Exit Guide	7- 7
59183585	Upper Exit Roller	7- 2
59183855	Spring - Flip Scale	3- 16
59184226	Multi-Lingual Decal	3- *
59185501	Stopper Solenoid	5- 34
59185515	Pick-up Solenoid	5- 35
59185516	Release Solenoid	7- 53
59185525	Registration Solenoid	7- 46
59185631	Paper Size Sensor	5- 2
59185701	IC - MCTL-1	9- 3
59185702	IC - MCTL-2	9- 4
59185711	Fiber Output Connector	3-62
59185712	Fiber Input Connector	3-63
59185722	Photosensor	5- 3
59185722	Photosensor	7- 8
59185801	Interface Harness	3- 19
59185811	Main Harness	7- 36
59185811	Main Harness	11- 1
59185821	Registration Sensor Harness	5- 4

Parts No.	Description	Page and Index No.
59185825	Exit Sensor Harness	7- 65
59362480	Magnet Catch Ass'y	3- 11
59365501	Transport Drive Motor - DC 21W	7- 32
67541242	Knob Cap	5- 45

B04

Parts No.	Description	Page and Index No.
03130040W	Philips Pan Head Screw - M3 x 4	5-103
03130040W	Philips Pan Head Screw - M3 x 4	7-102
03130060W	Philips Pan Head Screw - M3 x 6	5-101
03130060W	Philips Pan Head Screw - M3 x 6	7-106
03130160W	Philips Pan Head Screw - M3 x 16	3-101
03130160W	Philips Pan Head Screw - M3 x 16	3-110
03140060W	Philips Pan Head Screw - M4 x 6	3-102
03140060W	Philips Pan Head Screw - M4 x 6	5-102
03140060W	Philips Pan Head Screw - M4 x 6	7-103
03140080W	Philips Pan Head Screw - M4x8	7-104
03140080W	Philips Pan Head Screw - M4x8	5-118
03140080W	Philips Pan Head Screw - M4 x 8	7-104
03140100W	Philips Pan Head Screw - M4 x 10	7-105
03140350W	Philips Pan Head Screw - M4 x 35	3-108
03150120W	Philips Pan Head Screw - M5x12	3-113
03160100S	Philips Pan Head Screw - M6 x 10	3-104
03240060W	Philips Sunken Head Screw - M4 x 6	3-106
03430060W	Philips Pan Head Screw - M3x6	3-101
03430060W	Philips Pan Head Screw - M3 x 6	7-101
03440600D	Philips Truss Head Screw - M4 x 6	3-105
03450080D	Philips Truss Head Screw - M5x8	3-114
05730040W	Hexagon Headless Set Screw - M3 x 4	5-108
05740040E	Hexagon Headless Set Screw - M4 x 4	5-107
06320100E	Pin - M2 x 10	5-114
06320100E	Pin - M2 x 10	7-107
07200025E	Retaining Ring - M2.5	5-115
07200025E	Retaining Ring - M2.5	7-110
07200030E	Retaining Ring - M3	5-110
07200030E	Retaining Ring - M3	7-113
07200040E	Retaining Ring - M4	3-111
07200040E	Retaining Ring - M4	5-112
07200040E	Retaining Ring - M4	7-111
07200050E	Retaining Ring - M5	5-111
07200050E	Retaining Ring - M5	7-112

Parts No.	Description	Page and Index No.
07200060W	Retaining Ring - M6	5-113
07200070E	Retaining Ring - M7	7-117
08053145	Ball Bearing - 6 x 12 x 4 mm	5-104
08053145	Ball Bearing - 6 x 12 x 4 mm	7-115
08053291	Ball Bearing - 8 x 16 x 5 mm	7-116
08074005	Washer - 5.1x8x0.2mm	5-117
09514006W	Philips Screw with Flat Washer - M4 x 6	5-109
09514006W	Philips Screw with Flat Washer - M4 x 6	7-109
09515008W	Philips Screw with Flat Washer - M5 x 8	3-107
09653010W	Tapping Screw with Flat Washer - M3 x10	5-106
09653010W	Tapping Screw with Flat Washer - M3 x10	7-108
09654006W	Tapping Screw - M4 x 6	5-105
10050767	Heat Sink	9-160
11001089	Socket - MATE-N-LOCK	11-101
11001147	Socket - MATE-N-LOCK	11-102
11001159	Socket - Mate-N-Lock	11-103
11001169	Fastening Receptacle	11-104
11001190	Socket - Mate-N-Lock	11-105
11001240	Socket - Mate-N-Lock	11-106
11001327	Contact	11-107
11001328	Contact	11-108
11001348	Pin Contact	11-109
11010328	Connector Pin Contact	9-101
11020958	Connector - 2P	9-102
11021089	Connector - 3P	11-110
11021244	Connector - 15P	11-111
11021289	Connector - 6P	11-112
11021350	Connector - 5239-2P	11-113
11021396	Connector - 2P	11-114
11021408	Receptacle Housing	11-115
11021515	Connector - 2P	11-116
11021517	Connector - 4P	11-117
11021910	Connector - 2P	11-118
11021912	Connector - 4P	11-119
11021964	Connector - 2P	11-120

Rev. 1/89

Parts No.	Description	Page and Index No.
11021965	Connector - 3P	11-121
11021970	Connector - 2P	11-122
11021971	Connector - 3P	11-123
11030660	Connector - 16P	11-124
11030662	Connector - 20P	11-125
11030881	Connector - 4P	9-103
11031726	Connector - 4P	9-104
11033020	Connector - 20P	9-105
11033022	Connector - 30P	9-106
11040271	Connector - 30P	9-107
11040333	LSI Socket - 28P	9-108
11050008	Nylon Clip - 2N	5-116
11050008	Nylon Clip - 2N	7-119
11050034	Nylon Clip - 7N	7-118
11050047	Ty Wrap	3-113
11050087	Clamp	7-114
11050192	Locking Support	3-112
11060430	Bushing - 13mm	3-109
11070413	Fuse - 3A	9-109
12040770	Reed Microswitch	3- 4
12040770	Reed Microswitch	3-103
12040883	Dip Switch	9-110
14000100	Transistor - 2SA683	9-111
14010329	IC - MP4503	9-112
14010832	Diode - DSA1A1	9-113
14030308	LED - TLR-102A	9-114
14070604	IC - TC40498P	9-115
14071026	IC - SN74LS373N	9-116
14071094	IC - HD74LS93P	9-117
14071334	IC - μPD78103	9-118
14071337	IC - MN12150	9-119
14071348	IC - TD62304P	9-120
14071535	IC - TD62308AP	9-121
14080076	IC - μPC14312	9-122
14080099	IC - HA17901P	9-123
14080408	IC - PST518A	9-124

Parts No.	Description	Page and Index No.
15030070	Ceramic Oscillator - 10MHz	9-125
16000544	Resistor - 1KΩ 1W	9-126
16000569	Resistor - 0.2Ω 1W	9-127
16000576	Resistor - 33Ω 5W	9-128
16011732	Resistor - 390Ω 1W	9-129
16017326	Resistor Array - 10KΩ	9-130
16018145	Variable Resistor - 5KΩ	9-131
16018147	Variable Resistor - 10KΩ 0.5W	9-132
16018157	Variable Resistor - 100KΩ	9-133
16020953	Coil - 800UH 2.5A	9-134
16041358	Capacitor - 1000μF 10V	9-135
16041381	Capacitor - 4.7μF 50V	9-136
16041382	Capacitor - 10μF 50V	9-137
16041383	Capacitor - 22μF 50V	9-138
16041386	Capacitor - 100μF 50V	9-139
16060658	Capacitor - 0.1μF 50V	9-140
16061184	Capacitor - 27PF 50V	9-141
16061336	Capacitor - 1000PF 50V	9-142
16061451	Capacitor - 0.1μF 50V	9-143
16061452	Capacitor - 0.01μF 50V	9-144
16100045	Resistor - 270Ω 1/8W ±5%	9-145
16100053	Resistor - 1KΩ 1/8W ±5%	9-146
16100057	Resistor - 1.5KΩ 1/8W ±5%	9-147
16100065	Resistor - 3.3KΩ 1/8W ±5%	9-148
16100067	Resistor - 4.7KΩ 1/8W ±5%	9-149
16100071	Resistor - 10KΩ ±5%	9-150
16100079	Resistor - 22KΩ 1/8W ±5%	9-151
16100107	Resistor - 111Ω 1/8W ±5%	9-152
16100286	Capacitor - 100PF 50V ±10%	9-153
16114103	Resistor - 10KΩ 1/4T ±5%	9-154
16114222	Resistor - 2.2KΩ 1/4T ±5%	9-155
16114330	Resistor - 330Ω 1/4T ±5%	9-156
16114472	Resistor - 4.7KΩ 1/4T ±5%	9-157
16114562	Resistor - 5.6KΩ 1/4T ±5%	9-158
16116821	Resistor - 820Ω 1/2W	9-159

RT15(A912)



RT15 PARTS CATALOG INDEX

	PAGE	FICHE	ROW/ FRAME
RT15 (A912)			
1. LCT I	2	4 of 4	C8-C9
2. LCT II	4	4 of 4	D1-D2
3. LCT III	6	4 of 4	D3-D5
4. LCT Board	8	4 of 4	D6-D7
5. LCT Harness	10	4 of 4	D8-D9
6. Decal	12	4 of 4	E1-E3
Parts Index	14	4 of 4	E5-E9
EDIT BOARD	1	4 of 4	F1-F2

1. LCT I (A912)

May 1, '87

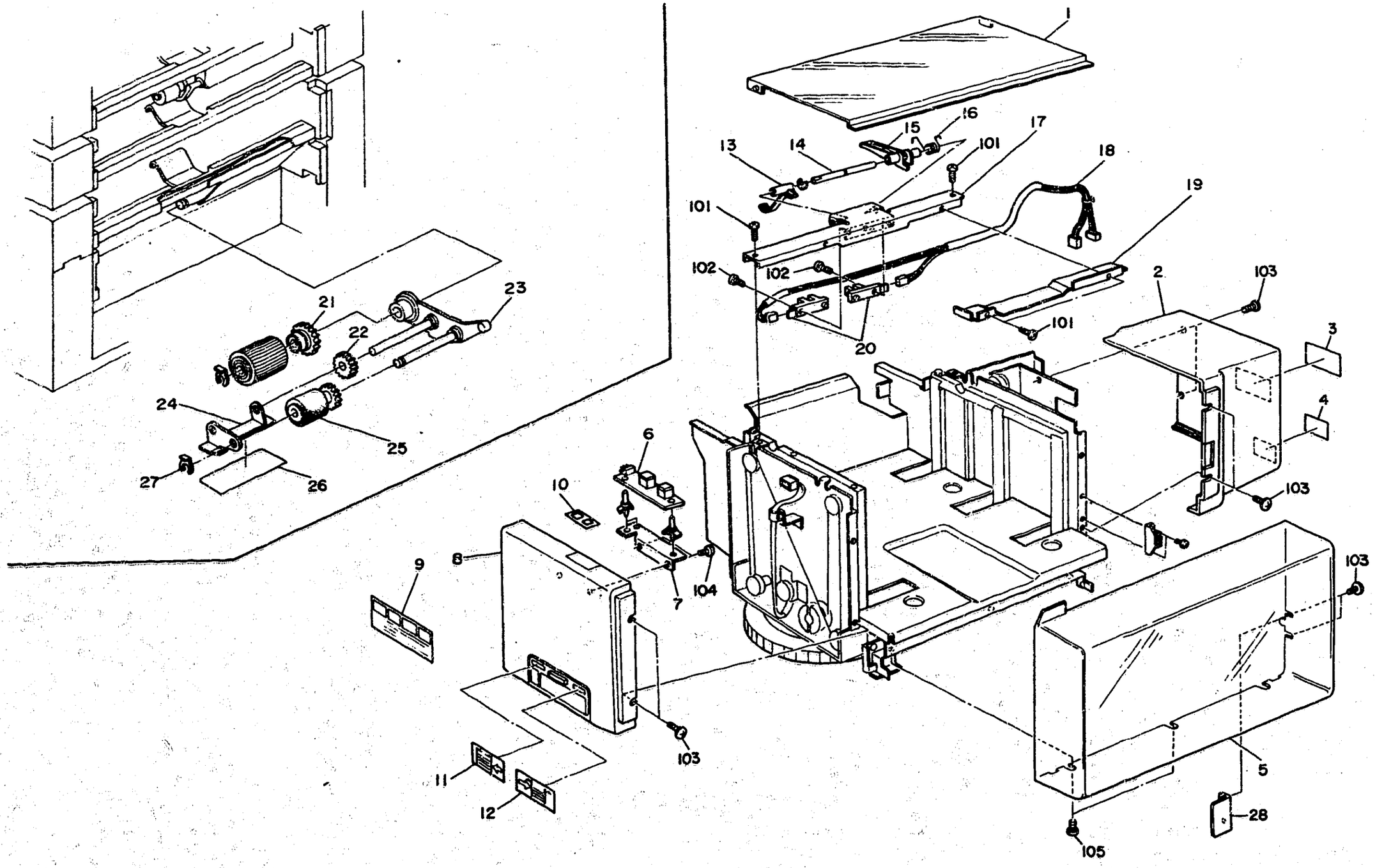

1. LCT I (A912)

Rev. 1/89

Index No.	Parts No.	Description	Q'ty Per Assembly
*	A9124224	Multi – Langual Decal	
*	A9128610	Installation Procedure – English	1
*	A9128615	Installation Procedure – 5 Languages	1
1	A9122621	Top Cover	1
2	A9122612	Rear Cover - 115V	1
2	A9122613	Rear Cover - 220V/240V	1
3	A9122681	Decal - English, French - 115V	1
3	54468906	Decal - English, French - 220V/240V	1
4	54421372	Decal - Power Source - 220V	1
5	A9122631	Side Cover	1
6	A9125010	Operation Board	1
7	58971272	Operation Board Mounting Bracket	1
8	A9122610	Front Cover	1
9	A9122598	Decal - Instructions	1
10	A9122596	Operation Skin	1
11	A9122594	Decal - Increase Size	1
12	A9122595	Decal - Decrease Size	1
13	A9122546	Paper End Plate	1
14	AA148023	Feeler Shaft	1
15	A9122547	Paper Position Feeler	1
16	AA066011	Spring - Paper Position Feeler	1
17	A9122540	Sensor Bracket	1
18	A9125202	Pick-up Harness	1
19	A9122549	Harness Cover	1
20	52055250	L.E.D, Sensor Type S	2
21	A8017034	Feed Gear - 30T	1
22	A8013098	Idle Gear - 21T	1
23	A9122520	Pick-up Roller - Holder	1
24	A9122530	Pick-up Guide	1
25	A9122528	Pick-up Roller	1
26	AA150007	Guide Seal - Pick-up	
27	54472681	Snap Ring	1
28	59252334	Plate - Magnet Catch	1

Index No.	Parts No.	Description	Q'ty Per Assembly
101	04340060W	Tapping Screw - M4 x 6	
102	04340100W	Tapping Screw - M4 x 10	
103	08025094	Tapping Truss Head Screw - M4 x 8	
104	03140040W	Philips Pan Head Screw - M4 x 4	
105	09644008W	Tapping Screw with Flat Washer - M4 x 8	

2. LCT II (A912)

May 1, '87

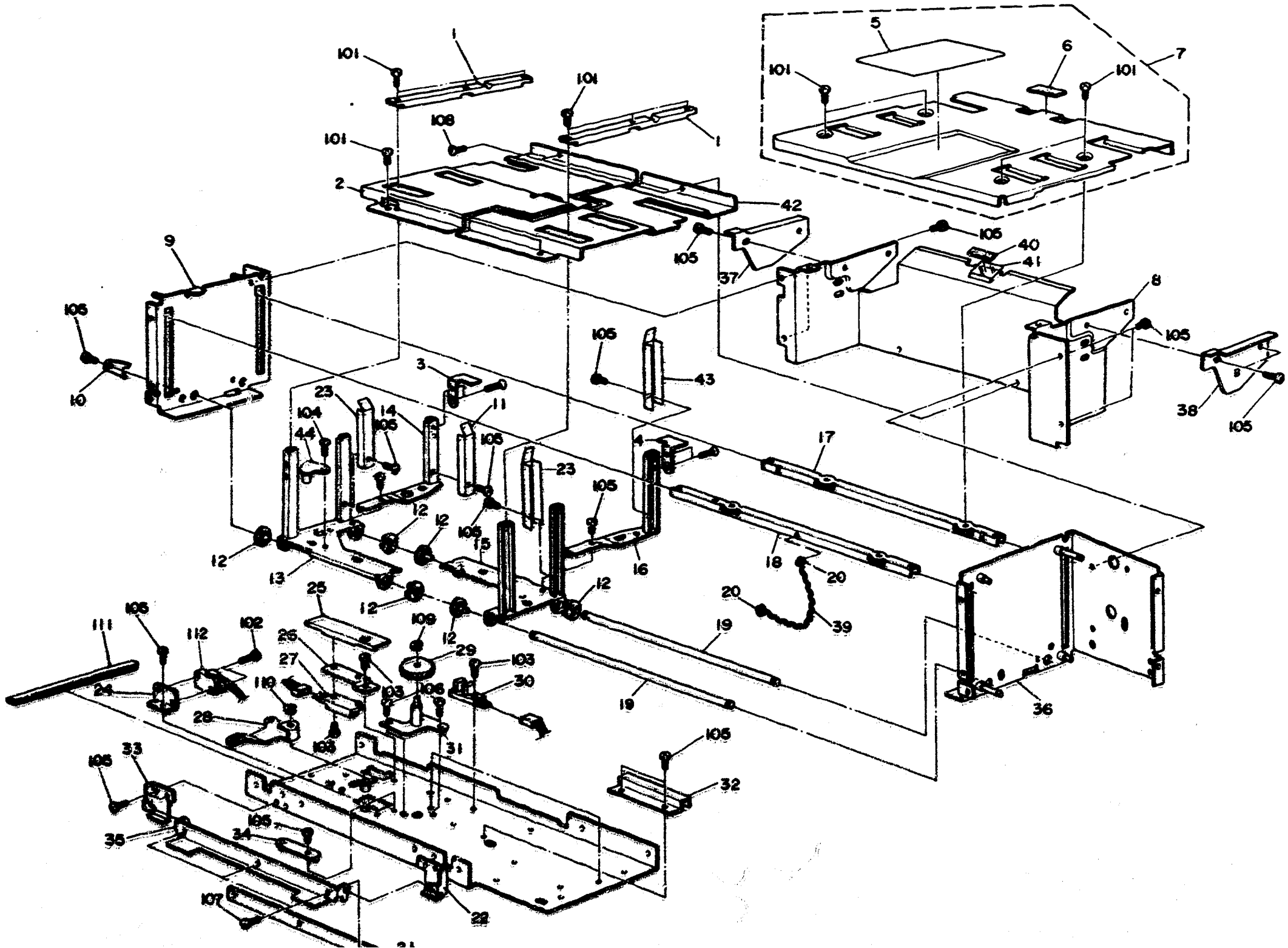

2. LCT II (A912)

Rev. 1/89

Index No.	Parts No.	Description	Q'ty Per Assembly
1	A9122573	Lift Stay	2
● 2	A9123587	Front Inner Cover	1
● 3	A9123575	Front Paper Guide	1
● 4	A9123576	Rear Paper Guide	1
5	A9122582	Decal - Paper Size	1
6	54472927	Friction Pad - B	1
7	A9122580	Tray Bottom Plate	1
8	A9123551	Feed-in Guide	1
9	59252211	Front Side Plate	1
10	59252255	Side Guide Stopper	1
11	A9122647	Front Side Post Spring Plate	1
12	58971455	Bushing	6
13	58971451	Front Post Rack	1
● 14	A9123640	Front Guide Post	1
15	58971457	Rear Post Rack	1
● 16	A9123641	Rear Guide Post	1
17	59252257	Left Lift Stay	1
18	58971372	Right Lift Rod	1
19	59252249	Side Guide Shaft	2
20	59252259	Hook	2
21	59252331	Holder - Side Cover	1
22	59252204	Rear Bracket	1
23	58971458	Side Post Spring Plate	2
24	58971493	Micro Switch Mounting Bracket	1
25	58971497	Harness Cover 1	1
26	58971496	Sensor Mounting Bracket	1
27	52055253	Photointerruptor Pack	1
28	58971473	Size Lever	1
29	54432657	Gear - 28Z	1
30	52065250	L.E.D. Sensor Type S	1
31	58974103	Bracket - Shaft	1
32	58971498	Harness Cover 2	1
33	59252203	Front Bracket	1
34	58974477	Leaf Spring	1
35	59252233	Side Cover Plate	1

Index No.	Parts No.	Description	Q'ty Per Assembly
36	A9122570	Rear Side Plate	1
37	A9122565	Front Mounting Bracket - Type B	1
37	A9122561	Front Mounting Bracket - Type C	1
37	A9122563	Front Mounting Bracket - Type A	1
38	A9122566	Rear Mounting Bracket - Type B	1
38	A9122562	Rear Mounting Bracket - Type C	1
38	A9122564	Rear Mounting Bracket - Type A	1
39	59252258	Stopper Chain	1
40	A9122553	Pad - 14 x 38 mm	1
41	AA150008	Guide Seal - Paper Feed	1
● 42	A9123588	Rear Inner Cover	1
43	A9122646	Rear Side Post Spring Plate	1
44	58974153	Bracket - Size Shaft	1
● 45	A0123577	Shoulder Screw M3	4
101	03130060W	Philips Pan Head Screw - M3 x 6	
102	03130120W	Philips Pan Head Screw - M3 x 12	
103	03140100W	Philips Pan Head Screw - M4 x 10	
104	03140060W	Philips Pan Head Screw - M4 x 6	
105	04340060W	Tapping Screw - M4 x 6	
106	09513008W	Philips Screw with Flat Washer - M3 x 8	
107	09644008W	Tapping Screw with Flat Washer - M4 x 8	
108	03140040W	Philips Pan Head Screw - M4 x 4	
109	07200040E	Retaining Ring - M4	
110	07200060E	Retaining Ring - M6	
111	10050383	Edging - B	
112	12040192	Microswitch - UL	

LAST FRAME OF CATALOG FICHE

3. LCT III (A912)

Rev. 1/89

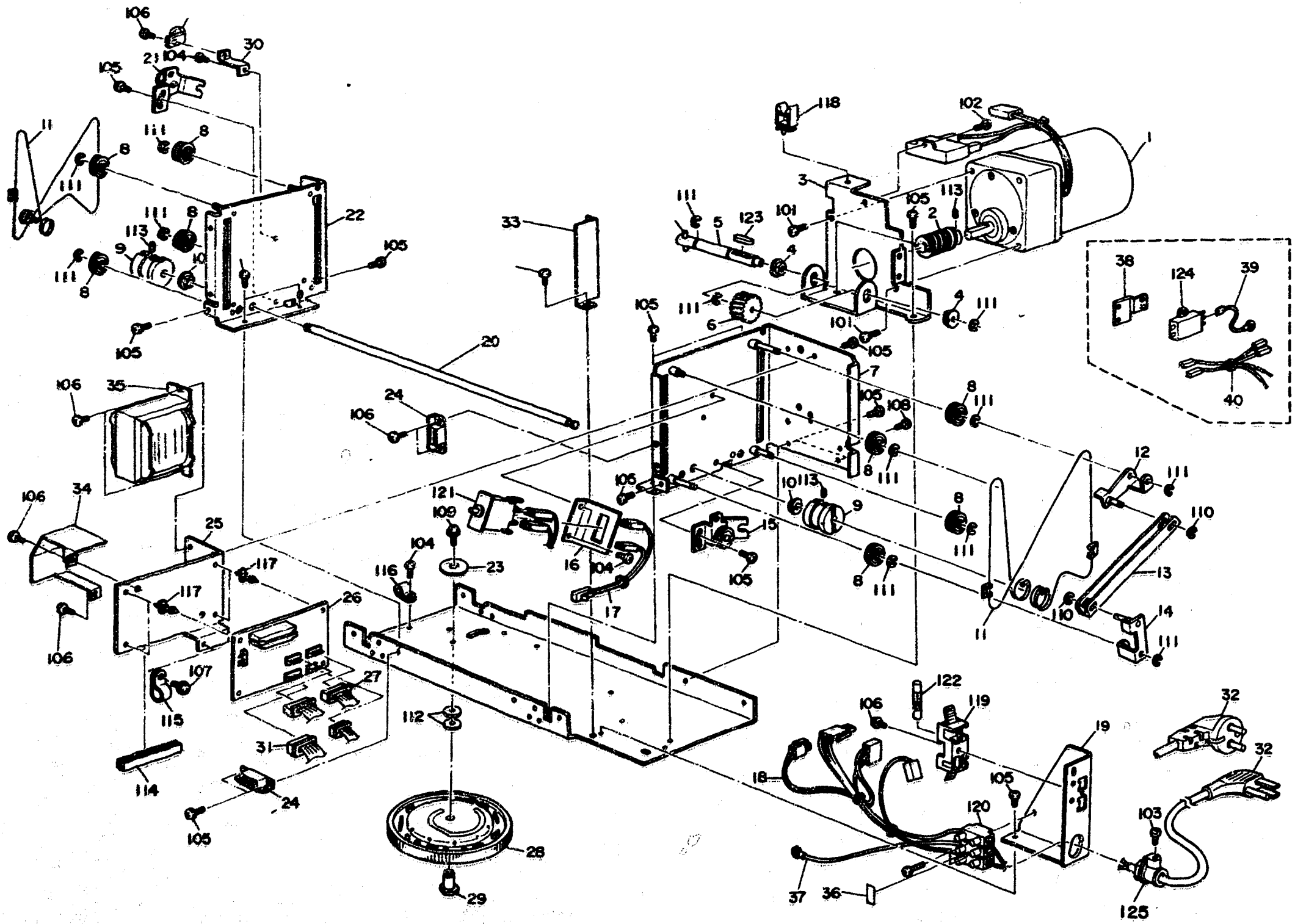

3. LCT III (A912)

Rev. 1/89

Index No.	Parts No.	Description	Q'ty Per Assembly
1	54465411	Tray Drive Motor - AC 7/8W/115V	1
1	54465412	Tray Drive Motor - AC 7/8W/220V	1
2	58971352	Worm Gear - M5 x 5	1
3	58971351	Drive Motor Bracket	1
4	50530223	Bushing - 8mm	2
5	59252239	Drive Gear Shaft	1
6	54462702	Gear - 22T	1
7	A9122570	Rear Side Plate	1
8	54462620	Idler Pulley - 20	8
9	59252246	Drive Pulley	2
10	50530419	Bushing - 10mm - Long - 7mm	2
11	59252241	Drive Wire	2
12	58971274	Upper Actuator Lever	1
13	58971279	Safety Switch Actuator	1
14	58971277	Lower Actuator Lever	1
15	59252253	Rear Wire Tightener	1
16	58971126	Safety Switch Bracket	1
17	59255212	Safety Switch Harness	1
18	59255211	AC Harness - 115V	1
18	59255215	AC Harness - 220V/240V	1
19	59252266	Power Cord Bracket	1
20	59252247	Drive Shaft	1
21	59252251	Front Wire Tightener	1
22	59252211	Front Side Plate	1
23	58971472	Washer - 4.5x24x2mm	1
24	50540536	Magnet Catch Ass'y	2
25	59252265	PCB Bracket	1
26	A9125103	Tray Control Board	1
27	59255206	DC Harness	1
28	A9122585	Paper Size Decal	1
29	59252235	Dial Shaft	1
30	58971125	Nylon Clamp Stay	1
31	A9125205	Interface Harness	1
32	67697930	Power Supply Cord - 115V	1
32	54087968	Power Supply Cord - 220V	1

Index No.	Parts No.	Description	Q'ty Per Assembly
33	A9122555	Trans Cover	1
34	A9122556	Shield Plate	1
35	58975520	Transformer - 115V, 220V, 240V/30W	1
36	54034335	Decal - Terminal - 115V	1
37	AZ020001	Ground Inductor	1
38	58971514	Noise Filter Bracket - 220V/240V	1
39	58975555	Noise Filter Grounding Wire	1
40	59255216	Noise Filter Harness	1
101	03150080W	Philips Pan Head Screw - M5 x 8	
102	03140100W	Philips Pan Head Screw - M4 x 10	
103	03140060W	Philips Pan Head Screw - M4 x 6	
104	03140050W	Philips Pan Head Screw - M4 x 5	
105	04340060W	Tapping Screw - M4 x 6	
106	04340080W	Tapping Screw - M4 x 8	
107	09644008W	Tapping Screw with Flat Washer - M4 x 8	
108	08011185	Philips Truss Head Screw - M4 x 8	
109	09654010W	Tapping Screw with Flat Washer - M4 x 10	
110	07200030E	Retaining Ring - M3	
111	07200040E	Retaining Ring - M4	
112	08077021	Spacer	
113	05740050E	Hexagon Headless Set Screw - M4 x 5	
114	10050383	Edging - B	
115	11050011	Nylon Clip - 8N	
116	10050008	Nylon Clip	
117	11060336	Nylon Stud	
118	11050108	Nylon Clip	
119	11040323	Fuse Holder	
120	11010359	Terminal - 3P	
121	12041280	Push Switch (D)	
122	11070271	Fuse - 3A	

Rev. 1/89

Index No.	Parts No.	Description	Q'ty Per Assembly
122	11070487	Circuit Breaker - 115V	
123	09300400	Parallel Key	
124	16020974	Noise Filter - 220/240V	
125	11060442	Cord Clamp	

Index No.	Parts No.	Description	Q'ty Per Assembly

4. LCT BOARD (A912)

May 1, '87

SYMBOL NO. : PRINTED NUMBER ON THE BOARD
INDEX No. : REFERENCE NUMBER OF NEXT PAGE

CONNECTOR

SYMBOL NO.	INDEX NO.
CN100	105
CN101	104
CN102	102
CN103	103
CN104	101
CN105	106

CAPACITOR

SYMBOL NO.	INDEX NO.
C100	116
C101	119
C102	118
C103	117
C104	117
C105	117
C106	118
C107	119
C108	119
C109	119
C110	120
C111	120
C112	119
C113	119
C114	119
C115	119
C116	119
C117	119

RESISTOR

SYMBOL NO.	INDEX NO.
R100	122
R101	123
R102	122
R103	128
R104	123
R105	121
R106	122
R107	125
R108	122
R109	121
R110	121
R111	122
R112	122
R113	122
R114	122
R115	121
R116	123
R117	125
R118	124
R119	122
R120	121
R121	125
R122	126
R123	123
R124	125
R125	121
R126	123
R127	127
R128	125
R130	122
R130	125
R131	121
R133	121
R134	121
R136	121

DIODE

SYMBOL NO.	INDEX NO.
D100	110
D101	110
D102	110
D103	110
D104	110
D105	110
D106	110
D107	110

TRANSISTOR

SYMBOL NO.	INDEX NO.
Q100	108
Q101	109
Q102	108
Q103	109

IC

SYMBOL NO.	INDEX NO.
IC100	114
IC101	113
IC102	111
IC103	112
IC104	111
IC105	112
IC106	115

SSR

SYMBOL NO.	INDEX NO.
SSR100	107
SSR101	107

May 1, '87

4. LCT BOARD (A912)

Index No.	Parts No.	Description	Q'ty Per Assembly
1	A9125103	Tray Control	1
101	11031247	Connector - 3P	
102	11031729	Connector - 7P	
103	11031730	Connector - 8P	
104	11031739	Connector - 3P	
105	11031743	Connector - 7P	
106	11031757	Connector - 7P	
107	12081047	Solid State Relay - 240V/3A	
108	14000072	Transistor - 2SC372Y	
109	14000135	Transistor - 2SA1015-Y	
110	14010825	Diode - 1SS176	
111	14070520	IC - HD74LS00	
112	14070622	IC - HD74LS10P	
113	14070981	IC - TD62503P	
114	14080124	IC - LM555CN	
115	14080412	IC - 7705CP	
116	16040909	Capacitor - 1μF 35V	
117	16041363	Capacitor - 10μF 25V	
118	16041366	Capacitor - 47μF 25V	
119	16061336	Capacitor - 1000PF 50V	
120	16061458	Capacitor - 0.1μF 50V	
121	16114101V	Resistor - 1KΩ 1/4V ±5%	
122	16114102V	Resistor - 1KΩ 1/4W ±5%	
123	16114103V	Resistor - 10KΩ 1/4V ±5%	
124	16114104V	Resistor - 100KΩ 1/4T ±5%	
125	16114471V	Resistor - 470Ω 1/4W ±5%	
126	16114472V	Resistor - 4.7KΩ 1/4W ±5%	
127	16114562V	Resistor - 5.6KΩ 1/4W ±5%	
128	16114564V	Resistor - 560Ω 1/4W	

Index No.	Parts No.	Description	Q'ty Per Assembly

5. LCT HARNESS (A912)

May 1, '87

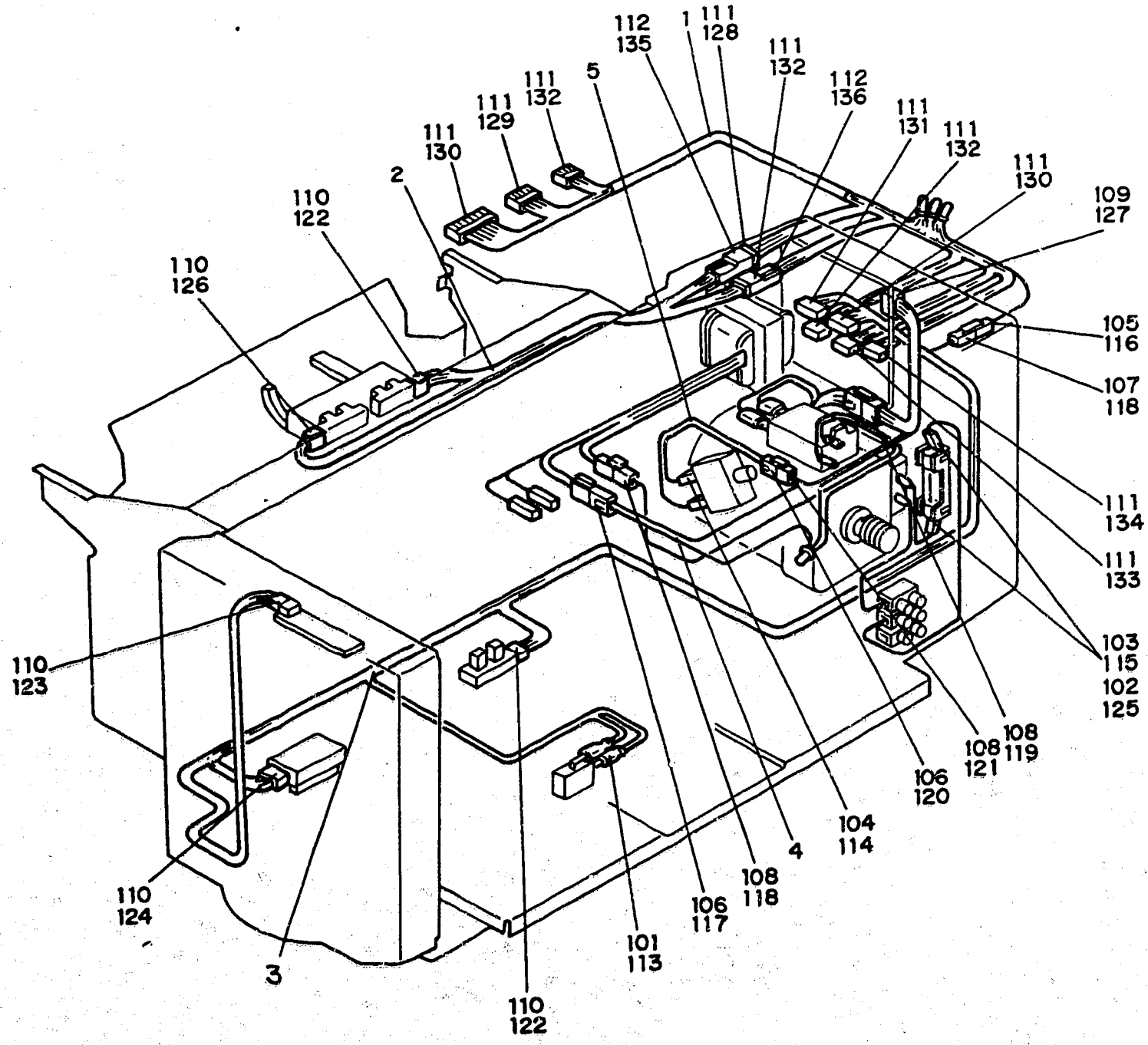

5. LCT HARNESS (A912)

Index No.	Parts No.	Description	Q'ty Per Assembly
1	A9125205	Interface Harness	1
2	A9125202	Pick-up Harness	1
3	59255206	DC Harness	1
4	59255211	AC Harness - 115V	1
4	59255215	AC Harness - 220/240V	1
5	59255212	Safety Switch Harness	1
101	11000277	Fastening Receptacle	
102	11000885	Fastening Receptacle - 220V/240V	
103	11001169	Fastening Receptacle - 115V	
104	11001172	Fastening Receptacle	
105	11001238	Pin - MATE-N-LOCK	
106	11001239	Pin - MATE-N-LOCK	
107	11001240	Socket - MATE-N-LOCK	
108	11001241	Socket - MATE-N-LOCK	
109	11001247	Terminal	
110	11001249	Receptacle Terminal	
111	11001327	Contact	
112	11001328	Contact	
113	11020796	Connecting Sleeve 3.0 mm - 220V	
114	11021404	Receptacle Housing	
115	11021408	Connector - 1P - 115V	
116	11021506	Connector - 1P	
117	11021507	Connector - 2P	
118	11021514	Connector - 1P	
119	11021516	Connector - 3P	
120	11021524	Connector - 2P (Red)	
121	11021532	Connector - 2P	
122	11021620	Connector - 3P	
123	11021621	Receptacle Housing - 3P	
124	11021623	Receptacle Housing - 7P	
125	11021745	Receptacle Sleeve	
126	11021786	Connector - 3P	
127	11021815	Connector - 3P	
128	11021911	Connector - 3P	
129	11021912	Connector - 4P	
130	11021915	Connector - 7P	
131	11021916	Connector - 8P	
132	11021925	Connector - 3P	
133	11021929	Connector - 7P	
134	11021943	Receptacle Housing	
135	11021965	Connector - 3P	
136	11021971	Connector - 3P	

6. DECAL (A912)

Rev. 1/89

1

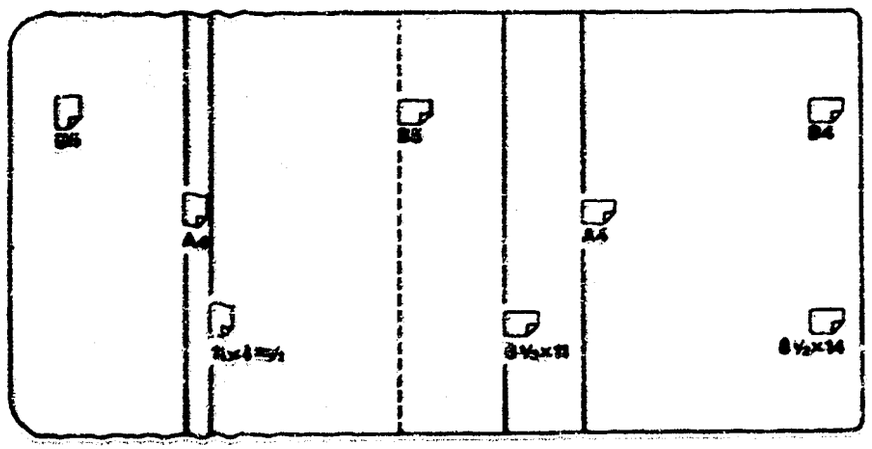

2

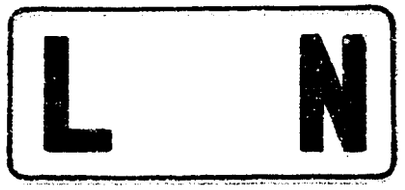

3

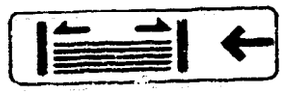

4



5

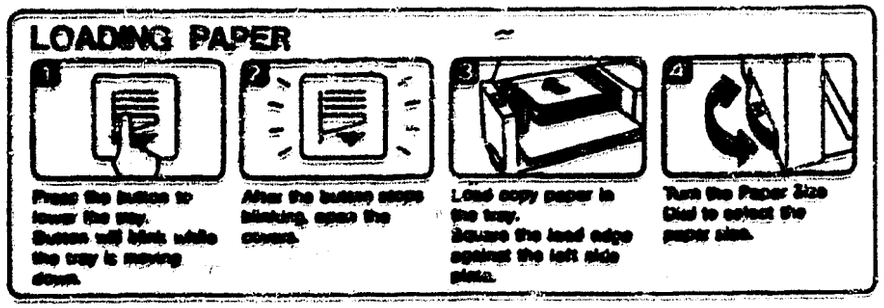

6



7

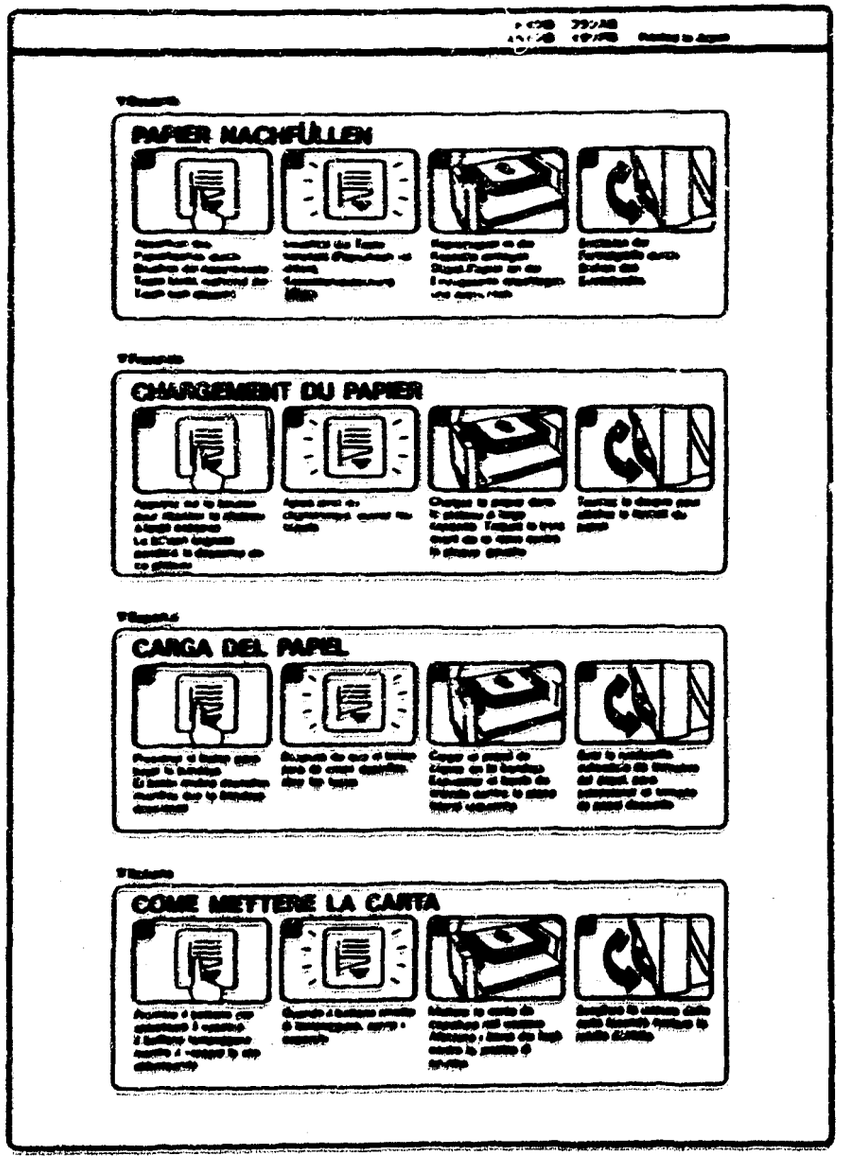

8

CAUTION

THIS UNIT HAS MORE THAN ONE POWER-SUPPLY CORD. DISCONNECT TWO POWER-SUPPLY. CORDS BEFORE SERVICING TO AVOID ELECTRICAL SHOCK.

ACHTUNG

VOR ENTFERNEN DER RÜCKWAND ALLE NETZSTECKER ZIEHEN.

9

Attention: This machine is set for 220V/50Hz.
Achtung : Dieses Gerät ist auf 220V/50Hz eingestellt.

6. DECAL (A912)

Rev. 1/89

Index No.	Part No.	Description	Q'ty Per Assembly
1	A912 2582	Decal - Paper Size	1
2	5403 4335	Decal - Terminal - 115V	1
3	A912 2594	Decal - Increase Size	1
4	A912 2595	Decal - Decrease Size	1
5	A912 2598	Decal - Instructions	1
6	A912 2681	Decal - English, French - 115V	2
7	A912 4224	Multi - Lingual Decal - Ricoh	1
8	5446 8906	Decal - English, German - 220/240V	1
9	5442 1372	Decal - Power Source - 220V	1

Index No.	Part No.	Description	Q'ty Per Assembly

PARTS INDEX

Parts No.	Description	Page and Index No.
A0123577	Shoulder Screw M3	5- 45
A9122520	Pick-up Roller - Holder	3- 23
A9122528	Pick-up Roller	3- 25
A9122530	Pick-up Guide	3- 24
A9122540	Sensor Bracket	3- 17
A9122546	Paper End Plate	3- 13
A9122547	Paper Position Feeler	3- 15
A9122549	Harness Cover	3- 19
A9122551	Feed-in Guide	5- 8
A9122553	Pad - 14 x 38 mm	5- 40
A9122555	Trans Cover	7- 33
A9122556	Shield Plate	7- 34
A9122561	Front Mounting Bracket - Type C	5- 37
A9122562	Rear Mounting Bracket - Type C	5- 38
A9122563	Front Mounting Bracket - Type A	5- 37
A9122564	Rear Mounting Bracket - Type A	5- 38
A9122565	Front Mounting Bracket - Type B	5- 37
A9122566	Rear Mounting Bracket - Type B	5- 38
A9122570	Rear Side Plate	5- 36
A9122570	Rear Side Plate	7- 7
A9122573	Lift Stay	5- 1
A9122575	Front Paper Guide	5- 3
A9122576	Rear Paper Guide	5- 4
A9122580	Tray Bottom Plate	5- 7
A9122582	Decal - Paper Size	5- 5
A9122582	Decal - Paper Size	12- 1
A9122585	Paper Size Decal	7- 28
A9122587	Front Inner Cover	5- 2
A9122588	Rear Inner Cover	5- 42
A9122594	Decal - Increase Size	3- 11
A9122594	Decal - Increase Size	12- 3
A9122595	Decal - Decrease Size	3- 12
A9122595	Decal - Decrease Size	12- 4
A9122596	Operation Skin	3- 10
A9122598	Decal - Instructions	3- 9
A9122598	Decal - Instructions	12- 5

Parts No.	Description	Page and Index No.
A9122610	Front Cover	3- 8
A9122612	Rear Cover - 115V	3- 2
A9122613	Rear Cover - 220V/240V	3- 2
A9122621	Top Cover	3- 1
A9122631	Side Cover	3- 5
A9122640	Front Guide Post	5- 14
A9122641	Rear Guide Post	5- 16
A9122646	Rear Side Post Spring Plate	5- 43
A9122647	Front Side Post Spring Plate	5- 11
A9122681	Decal - English, French - 115V	3- 3
A9122681	Decal - English, French - 115V	12- 6
A9124224	Multi - Lingual Decal	3- *
A9124224	Multi - Lingual Decal - Ricoh	12- 7
A0123551	Feed-in Guide	5- 8
A9123575	Front Paper Guide	5- 3
A9123576	Rear Paper Guide	5- 4
A9123587	Front Inner Cover	5- 2
A9123588	Rear Inner Cover	5- 42
A9123640	Front Guide Post	5- 14
A9123641	Rear Guide Post	5- 16
A9125010	Operation Board	3- 6
A9125103	Tray Control Board	7- 26
A9125103	Tray Control	9- 1
A9125202	Pick-up Harness	3- 18
A9125202	Pick-up Harness	11- 2
A9125205	Interface Harness	7- 31
A9125205	Interface Harness	11- 1
A9128610	Installation Procedure - English	3- *
A9128615	Installation Procedure - 5 Languages	3- *
54034335	Decal - Terminal - 115V	12- 2
54421372	Decal - Power Source - 220V	12- 9
54468906	Decal - English, German - 220V/240V	12- 8

Parts No.	Description	Page and Index No.
AA066011	Spring - Paper Position Feeler	3- 16
AA148023	Feeler Shaft	3- 14
AA150007	Guide Seal - Pick-up	3- 26
AA150008	Guide Seal - Paper Feed	5- 41
AB013098	Idle Gear - 21T	3- 22
AB017034	Feed Gear - 30T	3- 21
AZ020001	Ground Inductor	7- 37

Parts No.	Description	Page and Index No.
50530223	Bushing - 8mm	7- 4
50530419	Bushing - 10mm - Long - 7mm	7- 10
50540536	Magnet Catch Ass'y	7- 24
52055250	L.E.D. Sensor Type S	3- 20
52055250	L.E.D. Sensor Type S	5- 30
52055253	Photointerruptor Pack	5- 27
54034335	Decal - Terminal - 115V	7- 36
54087968	Power Supply Cord - 220V	7- 32
54421372	Decal - Power Source - 220V	3- 4
54432657	Gear - 28Z	5- 29
54462620	Idler Pulley - 20	7- 8
54462702	Gear - 22T	7- 6
54465411	Tray Drive Motor - AC 7/8W/115V	7- 1
54465412	Tray Drive Motor - AC 7/8W/220V	7- 1
54468906	Decal - English, French - 220V/240V	3- 3
54472681	Snap Ring	3- 27
54472927	Friction Pad - B	5- 6
58971125	Nylon Clamp Stay	7- 30
58971126	Safety Switch Bracket	7- 16
58971272	Operation Board Mounting Bracket	3- 7
58971274	Upper Actuator Lever	7- 12
58971277	Lower Actuator Lever	7- 14
58971279	Safety Switch Actuator	7- 13
58971351	Drive Motor Bracket	7- 3
58971352	Worm Gear - M5 x 5	7- 2
58971372	Right Lift Rod	5- 18
58971451	Front Post Rack	5- 13
58971455	Bushing	5- 12
58971457	Rear Post Rack	5- 15
58971458	Side Post Spring Plate	5- 23
58971472	Washer - 4.5x24x2mm	7- 23
58971473	Size Lever	5- 28
58971493	Micro Switch Mounting Bracket	5- 24
58971496	Sensor Mounting Bracket	5- 26
58971497	Harness Cover 1	5- 25

Parts No.	Description	Page and Index No.
58971498	Harness Cover 2	5- 32
58971514	Noise Filter Bracket - 220V/240V	7- 38
58974103	Bracket - Shaft	5- 31
58974153	Bracket - Size Shaft	5- 44
58974477	Leaf Spring	5- 34
58975520	Transformer - 115V, 220V, 240V/30W	7- 35
58975555	Noise Filter Grounding Wire	7- 39
59252203	Front Bracket	5- 33
59252204	Rear Bracket	5- 22
59252211	Front Side Plate	5- 9
59252211	Front Side Plate	7- 22
59252233	Side Cover Plate	5- 35
59252235	Dial Shaft	7- 29
59252239	Drive Gear Shaft	7- 5
59252241	Drive Wire	7- 11
59252246	Drive Pulley	7- 9
59252247	Drive Shaft	7- 20
59252249	Side Guide Shaft	5- 19
59252251	Front Wire Tightener	7- 21
59252253	Rear Wire Tightener	7- 15
59252255	Side Guide Stopper	5- 10
59252257	Left Lift Stay	5- 17
59252258	Stopper Chain	5- 39
59252259	Hook	5- 20
59252265	PCB Bracket	7- 25
59252266	Power Cord Bracket	7- 19
59252331	Holder - Side Cover	5- 21
59252334	Plate - Magnet Catch	3- 28
59255206	DC Harness	7- 27
59255206	DC Harness	11- 3
59255211	AC Harness - 115V	7- 18
59255211	AC Harness - 115V	11- 4
59255212	Safety Switch Harness	7- 17
59255212	Safety Switch Harness	11- 5
59255215	AC Harness - 220V/240V	11- 4

Parts No.	Description	Page and Index No.
59255215	AC Harness - 220/240V	11- 5
59255216	Noise Filter Harness	7- 40
67697930	Power Supply Cord - 115V	7- 32

Parts No.	Description	Page and Index No.
03130060W	Philips Pan Head Screw - M3 x 6	5-101
03130120W	Philips Pan Head Screw - M3 x 12	5-102
03140040W	Philips Pan Head Screw - M4 x 4	3-104
03140040W	Philips Pan Head Screw - M4 x 4	5-108
03140050W	Philips Pan Head Screw - M4 x 5	7-104
03140060W	Philips Pan Head Screw - M4 x 6	5-104
03140060W	Philips Pan Head Screw - M4 x 6	7-103
03140100W	Philips Pan Head Screw - M4 x 10	5-103
03140100W	Philips Pan Head Screw - M4 x 10	7-102
03150080W	Philips Pan Head Screw - M5 x 8	7-101
04340060W	Tapping Screw - M4 x 6	3-101
04340060W	Tapping Screw - M4 x 6	5-105
04340060W	Tapping Screw - M4 x 6	7-105
04340080W	Tapping Screw - M4 x 8	7-106
04340100W	Tapping Screw - M4 x 10	3-102
05740050E	Hexagon Headless Set Screw - M4 x 5	7-113
07200030E	Retaining Ring - M3	7-110
07200040E	Retaining Ring - M4	5-109
07200040E	Retaining Ring - M4	7-111
07200060E	Retaining Ring - M6	5-110
08011185	Philips Truss Head Screw - M4 x 8	7-108
08025094	Tapping Truss Head Screw - M4 x 8	3-103
08077021	Spacer	7-112
09300400	Parallel Key	7-123
09513008W	Philips Screw with Flat Washer - M3 x 8	5-106
09644008W	Tapping Screw with Flat Washer - M4 x 8	3-105
09644008W	Tapping Screw with Flat Washer - M4 x 8	5-107
09644008W	Tapping Screw with Flat Washer - M4 x 8	7-107
09654010W	Tapping Screw with Flat Washer - M4 x 10	7-109
10050008	Nylon Clip - 2N	7-116
10050383	Edging - B	5-111
10050383	Edging - B	7-114
11000277	Fastening Receptacle	11-101
11000885	Fastening Receptacle - 220V/240V	11-102
11001169	Fastening Receptacle - 115V	11-103
11001172	Fastening Receptacle	11-104

Parts No.	Description	Page and Index No.
11001238	Pin - MATE-N-LOCK	11-105
11001239	Pin - MATE-N-LOCK	11-106
11001240	Socket - MATE-N-LOCK	11-107
11001241	Socket - MATE-N-LOCK	11-108
11001247	Terminal	11-109
11001249	Receptacle Terminal	11-110
11001327	Contact	11-111
11001328	Contact	11-112
11010359	Terminal - 3P	7-120
11020796	Connecting Sleeve 3.0 mm - 220V	11-113
11021404	Receptacle Housing	11-114
11021408	Connector - 1P - 115V	11-115
11021506	Connector - 1P	11-116
11021507	Connector - 2P	11-117
11021514	Connector - 1P	11-118
11021516	Connector - 3P	11-119
11021524	Connector - 2P (Red)	11-120
11021532	Connector - 2P	11-121
11021620	Connector - 3P	11-122
11021621	Receptacle Housing - 3P	11-123
11021623	Receptacle Housing - 7P	11-124
11021745	Receptacle Sleeve	11-125
11021786	Connector - 3P	11-126
11021815	Connector - 3P	11-127
11021911	Connector - 3P	11-128
11021912	Connector - 4P	11-129
11021915	Connector - 7P	11-130
11021916	Connector - 8P	11-131
11021925	Connector - 3P	11-132
11021929	Connector - 7P	11-133
11021943	Receptacle Housing	11-134
11021965	Connector - 3P	11-135
11021971	Connector - 3P	11-136
11031247	Connector - 3P	9-101
11031729	Connector - 7P	9-102

Parts No.	Description	Page and Index No.
11031730	Connector - 8P	9-103
11031739	Connector - 3P	9-104
11031743	Connector - 7P	9-105
11031757	Connector - 7P	9-106
11040323	Fuse Holder	7-119
11050008	Nylon Clip	7-116
11050011	Nylon Clip - 8N	7-115
11050108	Nylon Clip	7-118
11050383	Edging - B	7-114
11060336	Nylon Stud	7-117
11060442	Cord Clamp	7-125
11070271	Fuse - 3A	7-122
11070487	Circuit Breaker - 115V	7-122
12040192	Microswitch - UL	5-112
12041280	Push Switch (D)	7-121
12081047	Solid State Relay - 240V/3A	9-107
14000072	Transistor - 2SC372Y	9-108
14000135	Transistor - 2SA1015-Y	9-109
14010825	Diode - 1SS176	9-110
14070520	IC - HD74LS00	9-111
14070622	IC - HD74LS10P	9-112
14070981	IC - TD62503P	9-113
14080124	IC - LM555CN	9-114
14080412	IC - 7705CP	9-115
16020974	Noise Filter - 200V/240V	7-124
16040909	Capacitor - 1μF 35V	9-116
16041363	Capacitor - 10μF 25V	9-117
16041366	Capacitor - 47μF 25V	9-118
16061336	Capacitor - 1000PF 50V	9-119
16061458	Capacitor - 0,1μF 50V	9-120
16114101V	Resistor - 1KΩ 1/4V ±5%	9-121
16114102V	Resistor - 1KΩ 1/4W ±5%	9-122
16114103V	Resistor - 10KΩ 1/4V ±5%	9-123
16114104V	Resistor - 100KΩ 1/4T ±5%	9-124
16114471V	Resistor - 470Ω 1/4W ±5%	9-125
16114472V	Resistor - 4.7KΩ 1/4W ±5%	9-126
16114562V	Resistor - 5.6KΩ 1/4W ±5%	9-127
16114564V	Resistor - 560Ω 1/4W	9-128

Rev. 1/89

EDIT BOARD

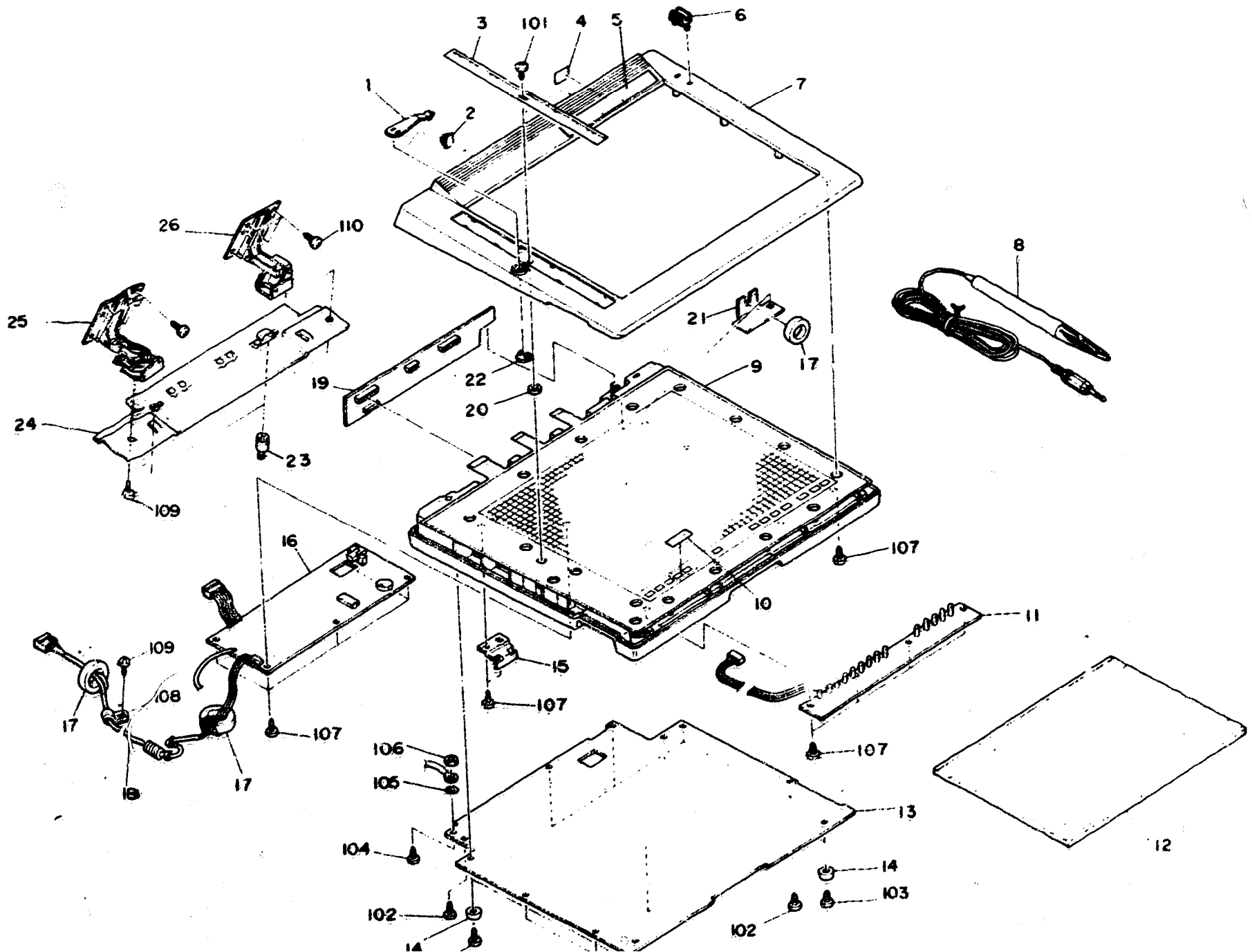

EDIT BOARD

Rev. 1/89

Index No.	Parts No.	Description	Q'ty Per Assembly
•	A9063601	Operating Instructions - English	1
•	A9063602	Operating Instructions - German	1
•	A9063603	Operating Instructions - French	1
•	A9063604	Operating Instructions - Italian	1
•	A9063605	Operating Instructions - Spanish	1
•	A9064226	Multi-Lingual Decal - Europe	1
•	A9063610	Installation Procedure - Five Languages	1
•	A9063611	Installation Procedure - Englisn	1
1	A9061264	Original Holder	1
2	A9031304	Clamp	2
3	A9061273	Scale - LT	1
3	A9061274	Scale - A3/A4	3
4	A9061252	Decal - Stylus	1
5	A9061503	Operation Decal - English	1
5	A9061504	Operation Decal - Europe	1
6	A9061261	Stylus Holder	1
7	A9061270	Upper Cover	1
8	A9065105	Stylus	1
8	A9065106	Stylus - Europe	1
9	A9061320	Frame - LT	1
9	A9061330	Frame - A3/A4	1
10	A9061280	Cover Plate - FT4480	1
11	A9065100	Indicator Board	1
12	A9081451	Platen Cover	1
13	A9061350	Bottom Cover	1
14	A9061351	Rubber Foot	4
15	A9061301	Harness Supporter	1
16	A9065101	Main Board - LT	1
16	A9065109	Main Board - A3/A4	1
17	A9065104	Core Ring	2/Europe 3
18	A9065103	Harness - 115V	1
18	A9065108	Harness - 220/240V	1
19	A9065102	Multiplexer Board	1
20	A9061355	Hexagon Nut - M3	1
21	A9065110	Lock Plate - Europe	1

Index No.	Parts No.	Description	Q'ty Per Assembly
22	A9061265	Support - Original Holder	1
23	AA143026	Platen Cover Stud - FT5560	2
23	52151667	Platen Cover Stud - FT4480	2
24	A9081660	Platen Cover Hinge Bracket	1
25	A9081302	Left Hinge	1
26	A9081303	Right Hinge	1
101	09713006A	Polycarbonate Screw - M3 x 6	
102	04130102W	Tapping Screw - M3 x 10	
103	041301628	Tapping Screw - M3 x 16	
104	03130080W	Philips Pan Head Screw - M3 x 8	
105	070500308	Toothed Washer - M3	
106	071000308	Hexagon Nut - M3	
107	041301028	Tapping Screw - M3 x 10	
108	11050016	Nylon Clip - 4N	
109	03140080W	Philips Pan Head Screw - M4 x 8	
110	04140122W	Tapping Screw - M4 x 12	

MODIFIED PARTS REFERENCE

MODIFIED PARTS REFERENCE

Rev. 1/89

NEW PART NUMBER	OLD PART NUMBER	BULLETIN REFERENCE
A9123587	A9122587	TSB4480-015
A9123640	A9122640	TSB4480-015
A9123588	A9122588	TSB4480-015
A9123641	A9122641	TSB4480-015
A9123575	A9122575	TSB4480-015
A9123576	A9122576	TSB4480-015
A0123577	03230060W	TSB4480-015
AA060117	52044694	TSB4480-016
A0092628	A0092610	TSB4480-016
A0095834	A0095831	TSB4480-018
	A0085829	TSB4480-018
11060366		TSB4480-018
11500003	28010040	TSB4480-018
	04340080W	TSB4480-018
AX500014	A0095215	TSB4480-026
AX500017	A0245211	TSB4480-026
	A0091712	TSB4480-031
A0081704	52091694	TSB4480-031
52091695	A0091663	TSB4480-031

NEW PART NUMBER	OLD PART NUMBER	BULLETIN REFERENCE
	09514006W	TSB4480-031
A0241721	52111690	TSB4480-031
A0241650		TSB4480-031
A0242580	AA140081	TSB4480-036
A0242575	A0082657	TSB4480-036
A0242577	A0082659	TSB4480-036
A0242579	52151134	TSB4480-036
A0242573	A0082663	TSB4480-036
A0082664	A0082663	TSB4480-036
AA060080	52152665	TSB4480-036
52031190	52152662	TSB4480-036
A0242655	A0082640	TSB4480-036
A0242656	A0082641	TSB4480-036
A0242658	A0082642	TSB4480-036
A0325818	A0095818	TSB4480-036
A0242593	52152594	TSB4480-036

RICOH FT4480
PARTS CATALOG

FT4480 PARTS CATALOG
MASTER INDEX

	Fiche	Row/ Frame
FT4480 COPIER (A00/)		
Parts Location & List	**2 of 4**	**A5 - G8**
	3 of 4	**A5 - C2**
Parts Index	**3 of 4**	**C3 - E7**
DF39 (A419)		
Parts Location & List	**3 of 4**	**G5 - G7**
	4 of 4	**A5 - B7**
Parts Index	**4 of 4**	**B8 - C5**
RT15 (A912)		
Parts Location & List	**4 of 4**	**C8 - E3**
Parts Index	**4 of 4**	**E5 - E9**
EDIT BOARD		
Edit Board	**4 of 4**	**F1 - F2**
MODIFIED PARTS REFERENCE	**4 of 4**	**F5**
ADDITIONAL ACCESSORIES:		
CS2070 (A414) Parts Location & List	**1 of 1**	**A1 - A9**
Parts Index	**1 of 1**	**B1 - B4**

FT4480 PARTS CATALOG INDEX

	PAGE	FICHE	ROW/ FRAME
Copier (A009)			
1. Exterior	2	2 of 4	A5-A7
2. Regist. and 3rd Paper Feed	4	2 of 4	A8-A9
3. Platen Cover and Cassette	6	2 of 4	B1-B3
4. 1st and 2nd Paper Feed	8	2 of 4	B4-B6
5. 3rd Paper Lift	10	2 of 4	B7-B8
6. Cassette Tray	12	2 of 4	C1-C2
7. Frame	14	2 of 4	C3-C4
8. Optics 1	16	2 of 4	C5-C6
9. Optics 2	18	2 of 4	C7-C8
10. Around Drum	20	2 of 4	D1-D3
11. Cleaning Unit	22	2 of 4	D4-D5
12. Development Unit	24	2 of 4	D6-D7
13. Drive Section	26	2 of 4	E1-E3
14. Paper Transport	28	2 of 4	E4-E5
15. Fusing Unit	30	2 of 4	E6-E8
16. Paper Exit	32	2 of 4	F1-F2
17. Electrical Section 1	34	2 of 4	F3-F4
18. Electrical Section 2	36	2 of 4	F5-F6
19. Main Board	38	2 of 4	F7-F9
20. DC Power Supply Board	40	2 of 4	G1-G2
21. Fusing Lamp Drive Board	42	2 of 4	G3-G4
22. Power Relay Board	44	2 of 4	G5-G6
23. Power Feed Control Board	46	2 of 4	G7-G8
24. AC Main Harness	48	3 of 4	A5-A6
25. DC Main Harness	50	3 of 4	A7-A8
26. Harness - 3rd Feed	52	3 of 4	B1-B2
27. Fusing Unit Harness	54	3 of 4	B3-B4
28. Control Harness	56	3 of 4	B5-B6
29. Harness Paper Feed	58	3 of 4	B7-B8
30. Special Tool	60	3 of 4	C1-C2
Parts Index	63	3 of 4	C3-E7

24. AC MAIN HARNESS (A009)

May 1, '87

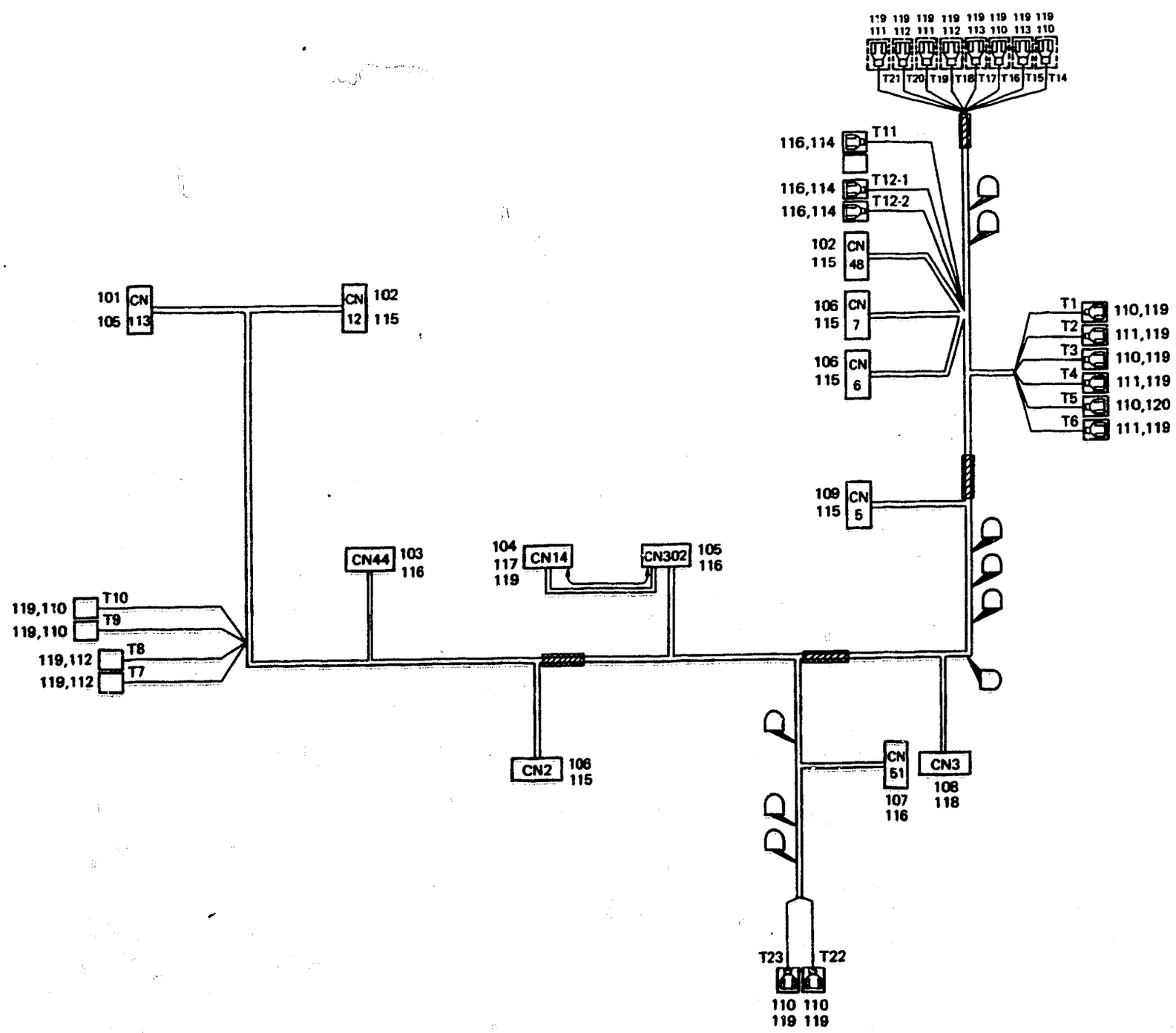

24. AC MAIN HARNESS (A009)

May 1, '87

Index No.	Parts No.	Description	Q'ty Per Assembly
1	A0096026	AC Main Harness - 115V	1
	A0096027	AC Main Harness - 220V	1
101	11021533	Connector - 3P	
102	11021515	Connector - 2P	
103	11020983	Connector - 2P	
104	11021696	Connector - 3P	
105	11020987	Connector - 6P	
106	11021532	Connector - 2P	
107	11020782	Connector - 4P	
108	11021896	Connector - 2P	
109	11021516	Connector - 3P	
110	11021402	Receptacle Housing - 1P	
111	11021403	Receptacle Housing	
112	11021404	Receptacle Housing	
113	11021401	Receptacle Housing - 1P	
114	11021522	Connector - 2P	
115	11001241	Socket - MATE-N-LOCK	
116	11001062	Socket - MATE-N-LOCK	
117	11001169	Fastening Receptacle	
118	11001247	Terminal	
119	11001171	Fastening Receptacle	
120	11001172	Fastening Receptacle	

Index No.	Parts No.	Description	Q'ty Per Assembly

25. DC MAIN HARNESS (A009)

May 1, '87

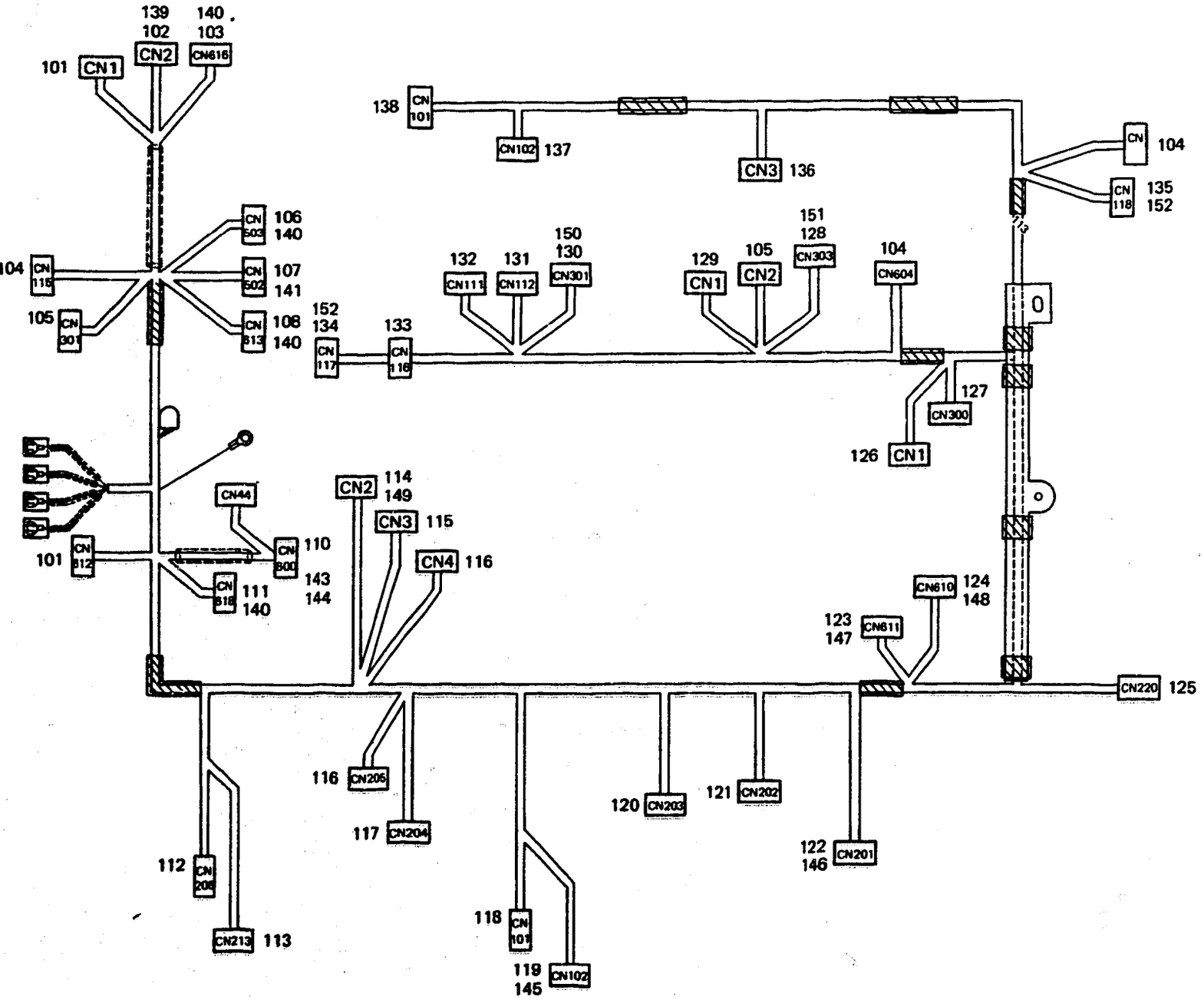

26. HARNESS - 3RD FEED (A009)

May 1, '87

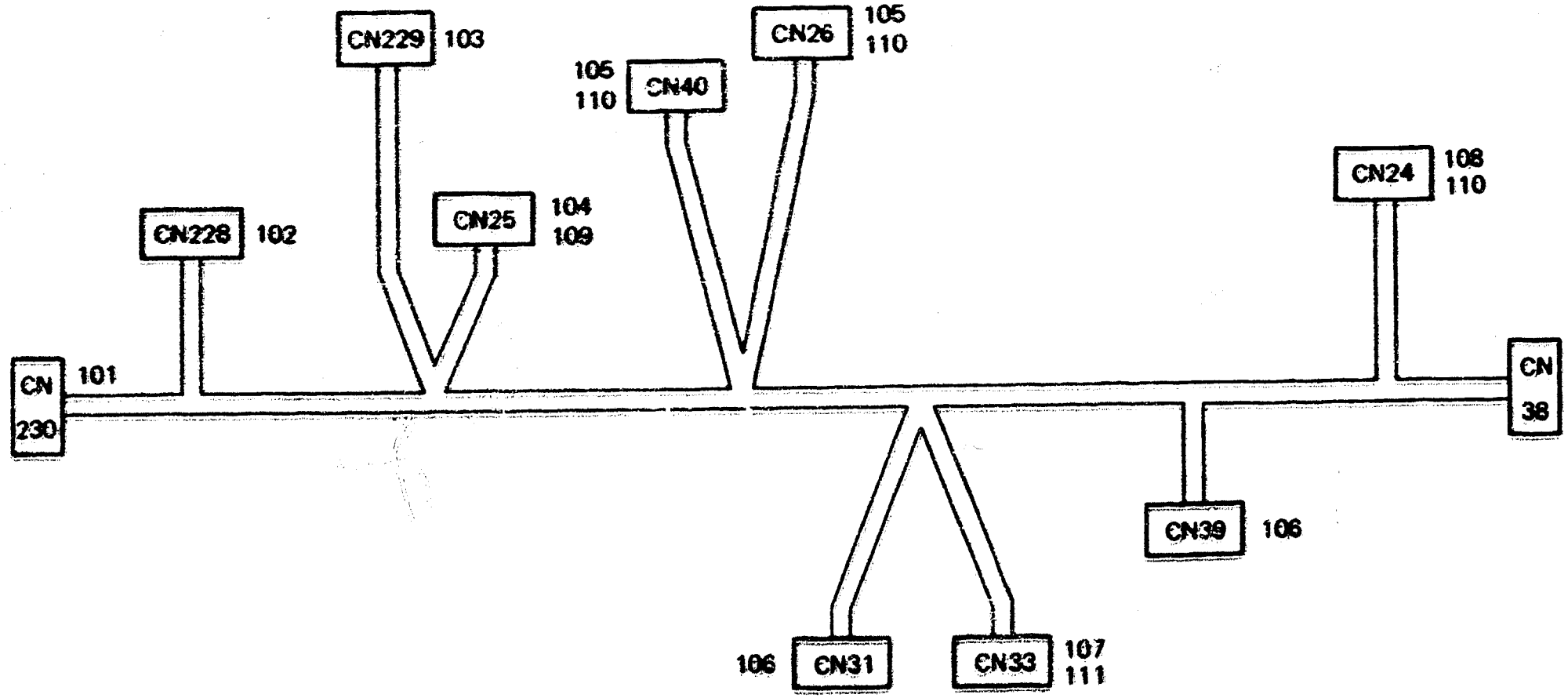

26. HARNESS - 3RD FEED (A009)

May 1, '87

Index No.	Parts No.	Description	Q'ty Per Assembly
1	A0095271	Harness - 3rd Feed	1
101	11022124	MT Connector - 4P	
102	11031372	Connector - 12P	
103	11022540	Connector - 11P	
104	11022038	Connector - 2P	
105	11021306	Connector - 3P	
106	11031897	Connector - 3P	
107	11022099	Connector - 12P	
108	11021396	Connector - 2P	
109	11001330	Socket Contact	
110	11001159	Socket - MATE-N-LOCK	
111	11001346	Pin Contact	

Index No.	Parts No.	Description	Q'ty Per Assembly

27. FUSING UNIT HARNESS (A009)

May 1, '87

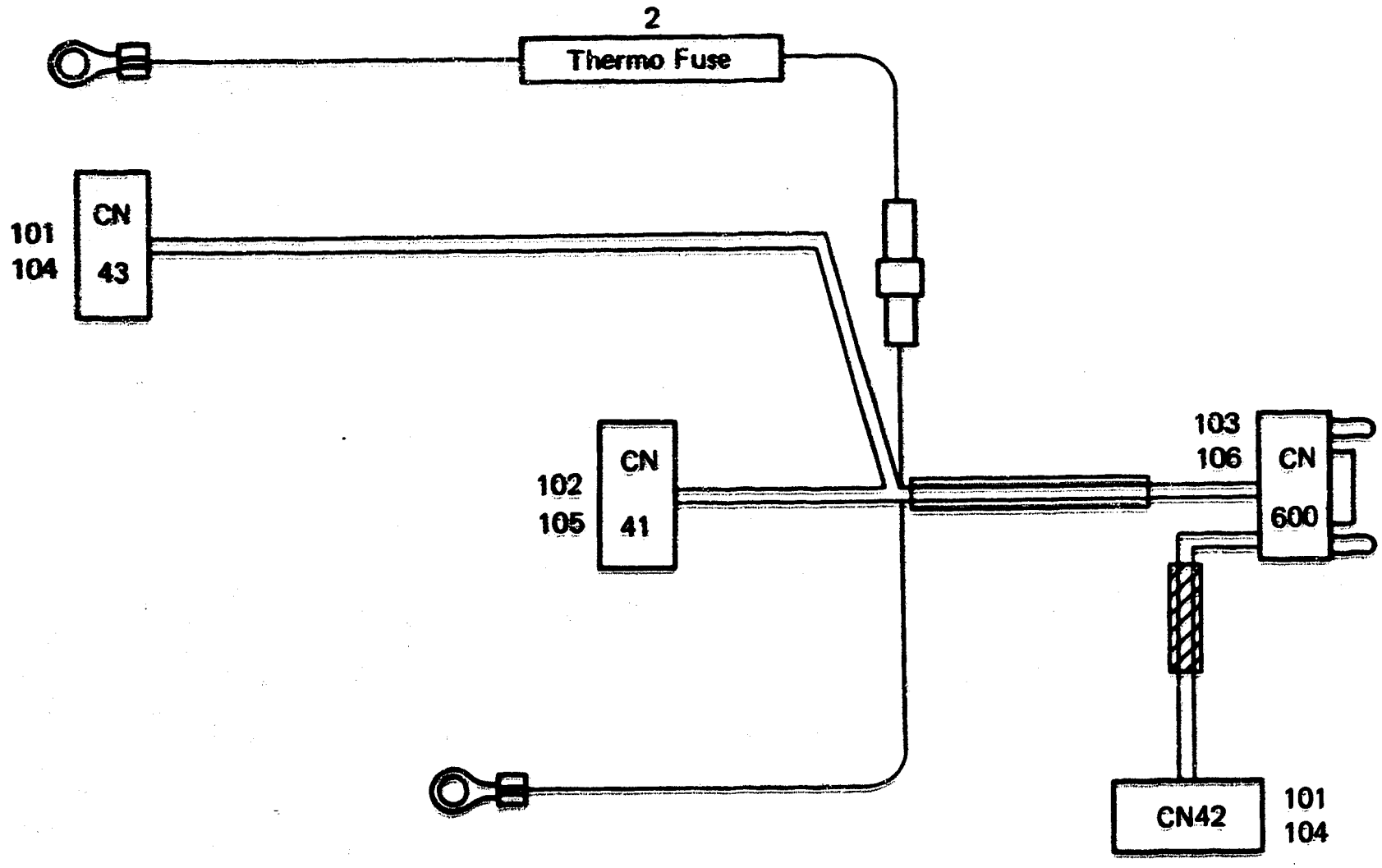

27. FUSING UNIT HARNESS (A009)

May 1, '87

Index No.	Parts No.	Description	Q'ty Per Assembly
1	A0096031	Fusing Unit Harness	1
2	A0095431	Thermo Fuse	1
101	11021620	Connector - 3P	
102	11021910	Connector - 2P	
103	11022099	Connector - 12P	
104	11001249	Receptacle Terminal	
105	11001327	Contact	
106	11001339	Pin Contact	

Index No.	Parts No.	Description	Q'ty Per Assembly

28. CONTROL HARNESS (A009)

May 1, '87

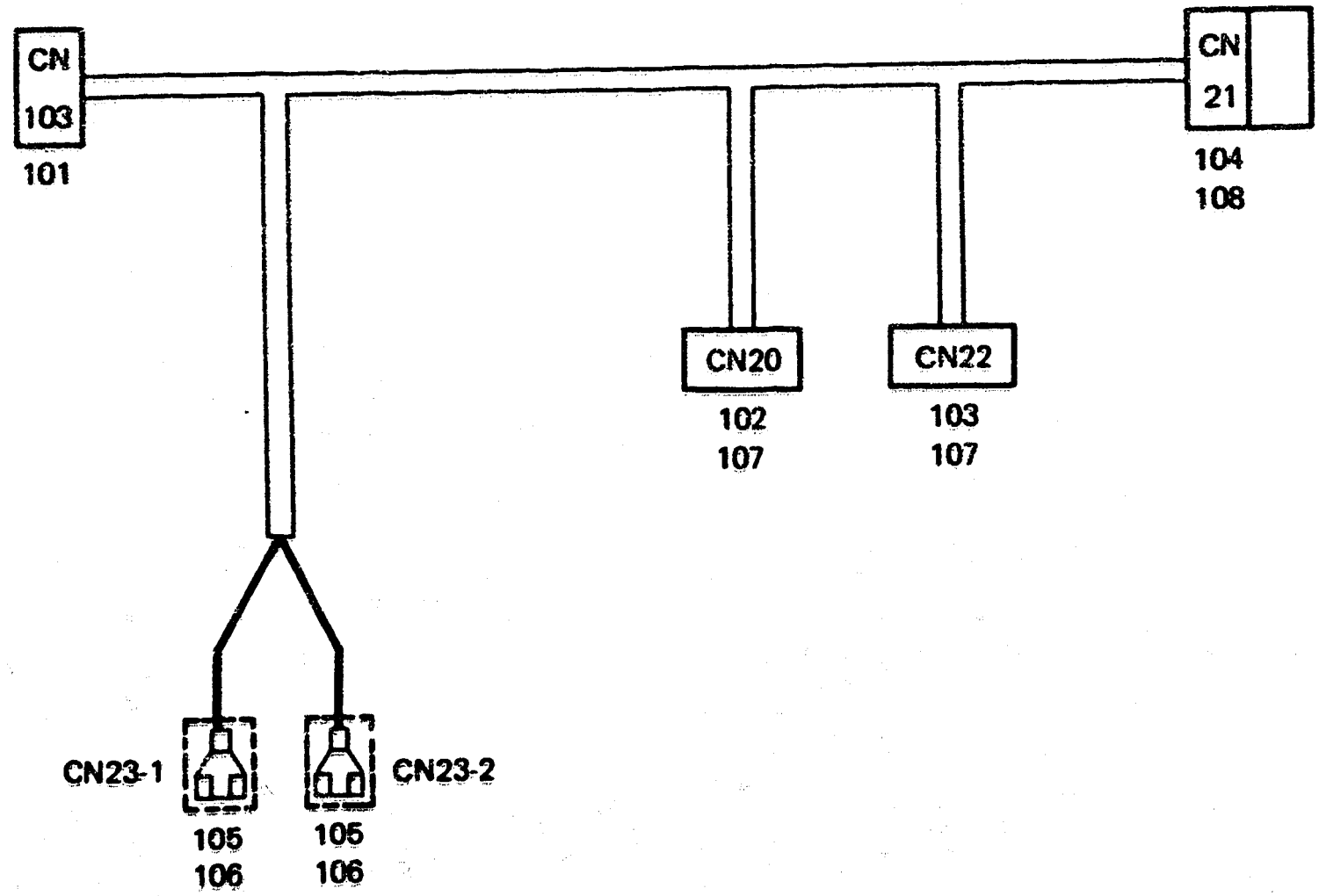

28. CONTROL HARNESS (A009)

May 1, '87

Index No.	Parts No.	Description	Q'ty Per Assembly
1	A0096002	Counter Harness	1
101	11031345	Connector - 14P	
102	11021509	Connector - 4P	
103	11021515	Connector - 2P	
104	11020185	Connector - 4P	
105	11021408	Connector - 1P	
106	11001169	Fastening Receptacle	
107	11001240	Socket - MATE-N-LOCK	
108	11000844	Socket - MATE-N-LOCK	

Index No.	Parts No.	Description	Q'ty Per Assembly

29. HARNESS PAPER FEED (A009)

May 1, '87

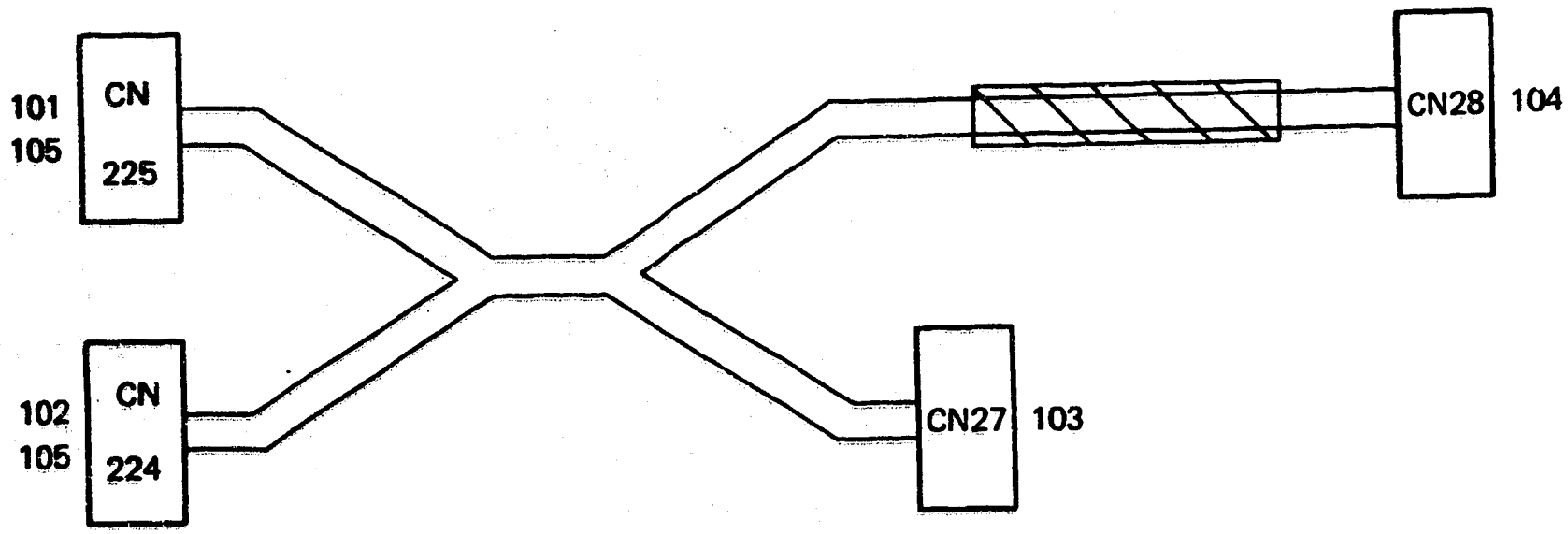

29. HARNESS PAPER FEED (A009)

May 1, '87

Index No.	Parts No.	Description	Q'ty Per Assembly
1	A0095270	Harness Paper Feed	1
101	11021915	Connector - 7P	
102	11021911	Connector - 3P	
103	11031897	Connector - 3P	
104	11022931	Connector - 6P	
105	11001327	Contact	

Index No.	Parts No.	Description	Q'ty Per Assembly

0. SPECIAL TOOL (A009)

May 1, '87

1

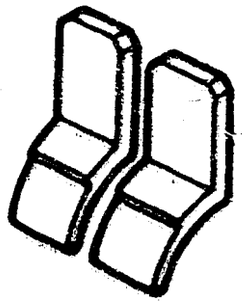

2

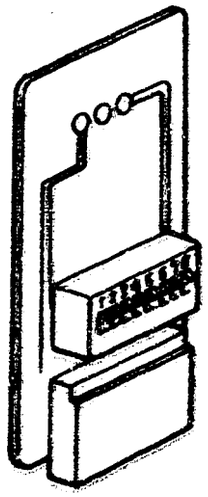

3

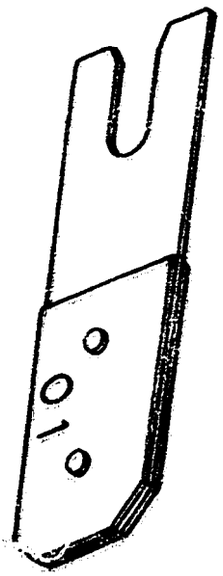

4

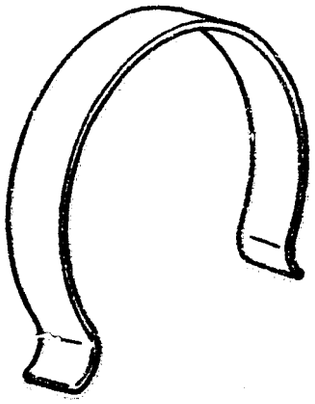

5

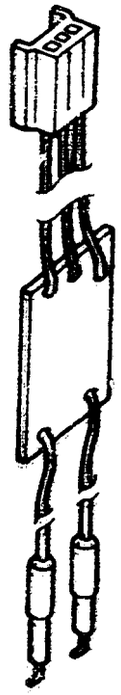

6

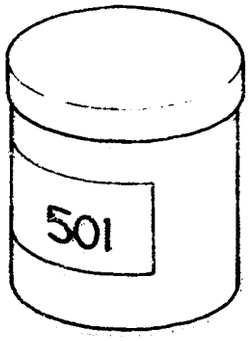

7



8

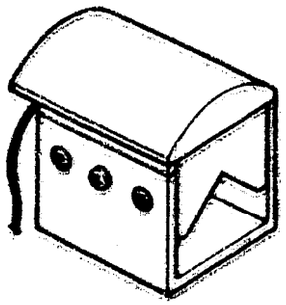

9

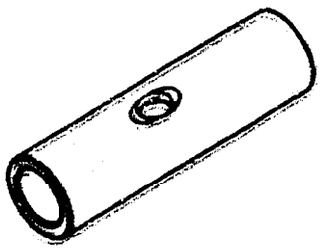

10

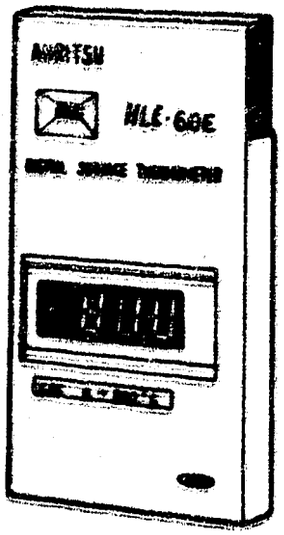

11



12

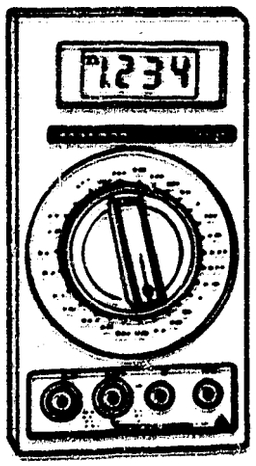

30. SPECIAL TOOL (A009)

May 1, '87

Index No.	Parts No.	Description	Q'ty Per Assembly
1	52159500	OG Gauge (2 pcs/1 set)	1
2	52059601	Switching Board	1
3	52059101	Gap Gauge	1
4	52059111	Omega Clamp	1
5	52069600	Sensor Checker	1
6	52039501	Grease 501	1
7	54429101	Setting Powder	1
8	54429106	Drum Shoe	1
9	54479104	Shoe Adaptor	1
10	54209504	Thermo Meter - HLC60-E	1
11	54209505	Probe - HLC60-E	1
12	54209507	Digital Multimeter - BECKMAN-RMS3030	1
13	54209550	Silicone Oil	1
14	54479078	Heat Resisting Grease MT-78	1
15	54209516	Test Chart - OS-A3 (10 pcs/set)	1
15	54209502	Test Chart - OS-A3 (100 pcs/set)	1
16	54429103	Launa Oil	1

13

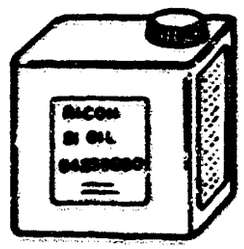

14

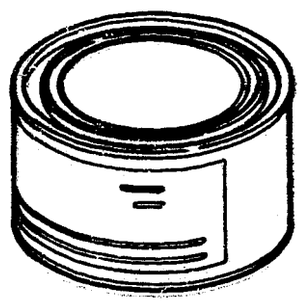

15

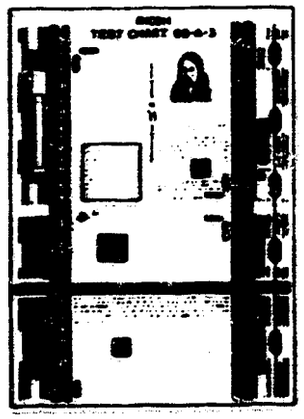

16



17

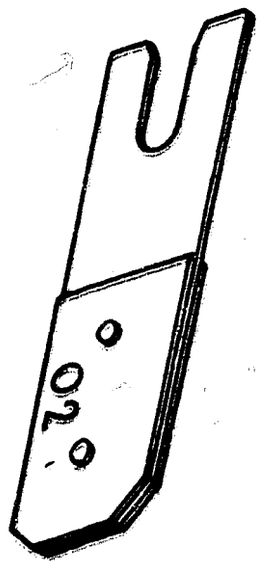

PARTS INDEX

Parts No.	Description	Page and Index No.
A0090225	Fusing Unit – 115V	31– *
A0091056	Left Front Grip - Bottom Plate	15-15
A0091057	Rear Grip - Bottom Plate	15-10
A0091116	Pulse Generator Bracket	27-17
A0091140	Shielding Plate	15-13
A0091151	Receiving Tray Holder	15-19
A0091159	Outlet Fan Motor - AC20.5/18W	29- 7
A0091206	Right Front Door - LT	3-22
A0091207	Left Front Door - LT	3-21
A0091209	Left Cover - LT	3- 5
A0091211	Left Cover - A4	3- 5
A0091222	Right Front Door - A4	3-22
A0091223	Left Front Door - A4	3-21
A0091233	Upper Cover - A4	3- 6
A0091245	Right Inner Cover - A4	3-32
A0091282	Decal - Toner Supply	3-54
A0091283	Decal - Misfeed Removal	3-55
A0091286	Right Front Cover - LT	3-33
A0091287	Right Rear Cover - LT	3-50
A0091288	Upper Cover - LT	3- 6
A0091290	Rear Cover - LT	3-51
A0091292	Left Inner Cover - LT	3-16
A0091294	Center Inner Cover - LT	3-29
A0091295	Right Inner Cover - LT	3-32
A0091300	Cassette Tray Cover	13- 1
A0091324	Inner Cover - Paper Feed	5-11
A0091350	Right Hinge Pin	15-17
A0091351	Left Hinge Pin	15-25
A0091353	Right Hinge Cover	3-24
A0091354	Left Hinge Cover	3-17
A0091355	Upper Right Hinge	3-23
A0091356	Upper Left Hinge	3-18
A0091357	Lower Hinge	3-19
A0091360	Support Plate - Rear Cover	15-12
A0091362	Counter Bracket	37- 4
A0091363	Right Cover Bracket	15- 1

Parts No.	Description	Page and Index No.
A0091364	Left Cover Bracket	15- 7
A0091365	Right Door Catch	3-27
A0091366	Left Door Catch	3-20
A0091382	Right Front Cover - A4	3-33
A0091383	Right Rear Cover - A4	3-50
A0091386	Rear Cover - A4	3-51
A0091391	Shutter - Right Front Door	3-26
A0091396	Center Inner Cover - A4	3-29
A0091397	Left Inner Cover - A4	3-16
A0091398	Inner Cover - Cassette Tray	13- 2
A0091444	Dip Sw. Cover – LT	3–56
A0091453	Operation Panel Bracket - Left	3-15
A0091454	Operation Panel Bracket - Center	3- 8
A0091455	Operation Panel Bracket - Right	3-31
A0091456	Operation Panel Mounting Bracket	3-30
A0091461	Instruction Cards Cover - A4	3-12
A0091462	Instruction Cards Cover - LT	3-12
A0091463	Indicator Cover	3-60
A0091465	Slide Cover - LT	3-59
A0091467	Margin Cover - LT	3-93
A0091468	Margin Cover - A4	3-93
A0091471	Dip Sw Cover - A4	3-56
A0091472	Dip Sw Cover - LT	3-56
A0091474	Indicator Film - LT	3-25
A0091475	Indicator Film - A4	3-25
A0091476	Sort/Stack Cover	3-14
A0091479	Slide Cover - A4	3-59
A0091656	Scanner Guide Rod	19-22
A0091657	Development Unit Cover	17-16
A0091658	Scanner Motor Bracket	19-41
A0091662	Scanner Motor Pulley	19-39
A0091663	1st Scanner	19-46
A0091668	Right Guide - Toner Shielding Cover	17-24
A0091673	Platen Cover Bracket - Left	15- 3
A0091674	Platen Cover Bracket - Right	15- 6
A0091675	DF Mounting Bracket - Right	15- 5

Rev. 1/89

Parts No.	Description	Page and Index No.
A0091682	Scanner Home Sensor Bracket	19-44
A0091683	Sensor Shutter	17- 4
A0091686	Wire Stopper Plate	19- 8
A0091687	Aid Guide - Development Unit	21-18
A0091688	Stopper Plate.	21-71
A0091689	Joint Bracket	15-20
A0091692	Front Scanner Guide	19-30
A0091694	DF Mounting Bracket - Left	15- 4
A0091698	Seal - 210 x 10 x 2mm	17-26
A0091702	Scale Bracket - LT	3-13
A0091703	Scale Bracket - A4	3-13
A0091705	Lens Housing	17- 6
A0091706	Mylar Sheet - 24 x 54mm	17- 5
A0091708	4th Mirror Cover	17-11
A0091712	Guide Roller Bracket - 1st Scanner	19-19
A0092052	Main Corona Unit Rail	21-60
A0092058	Cleaning Unit Rail	21-56
A0092073	Front Drum Support	21-63
A0092075	Erase Lamp Guide	21-61
A0092080	Heater Cover	21-58
A0092151	Duct - Main Corona	21-57
A0092156	Inlet Duct	29- 1
A0092260	T&S Corona Rail	21-48
A0092273	Release Link Bracket	21-50
A0092274	Release Link Shaft	21-51
A0092275	Release Link - T&S Corona	21-54
A0092280	Release Link Spring	21-52
A0092281	Stopper - T & S Holder	21-65
A0092290	T&S Receptacle	21-47
A0092320	T&S Corona Guide	21-28
A0092331	T&S Corona Lever	21-24
A0092341	Decal - T&S Corona	21-23
A0092345	Pad - 10 x 8 x 1mm	21-27
A0092360	Rear Drum Support	21-66
A0092405	Timing Pulley - 48T	21-43
A0092419	Drum Stay Ass'y	21-64

Parts No.	Description	Page and Index No.
A0092420	Drum Stay Plate	21-67
A0092572	Frame - Cassette Holder	13-30
A0092579	Exit Guide - Cassette Holder	13- 4
A0092580	Bottom Cover - Cassette Holder	13- 3
A0092581	Right Upper Guide - Cassette Holder	13-13
A0092582	Left Upper Guide - Cassette Holder	13-23
A0092583	Right Lower Guide - Cassette Holder	13-26
A0092584	Left Lower Guide - Cassette Holder	13-22
A0092587	Stopper Bracket - Cassette Holder	13-17
A0092588	Release Lever - 3rd Cassette	13-14
A0092589	Stopper Shaft	13-15
A0092590	Pressure Release Shaft	13-16
A0092591	Front Bracket - 3rd Cassette Feed	13-31
A0092592	Spring - Pressure Release Lever	13-18
A0092595	Connector Bracket - Size Switch	13-20
A0092596	Connector Bracket	15- 8
A0092597	Paper Size Sensor Bracket	13-25
A0092603	Friction Spring - Holder	13-29
A0092604	Adjusting Screw - Friction	13-28
A0092605	Pad Holder	13- 7
A0092606	Friction Pad Bracket	13-10
A0092609	Friction Pad Guide	13- 9
A0092610	Release Lever - Friction Pad	13-11
A0092612	Lower Guide Plate	9-23
A0092619	Right Guide - Cassette Holder	11-10
A0092622	Left Guide - Cassette Holder	11- 4
A0092626	Decal - Cassette Tray	13-21
A0092627	Cassette Stopper	13-32
A0092628	Release Lever Friction Pad	13-11
A0092632	Tray Lift Bracket	11-36
A0092634	Gear Ass'y - 45T	11-32
A0092636	Lift Motor Bracket	11-18
A0092639	Lift Motor Lever	11-31
A0092640	Guide - Sleeve	11-30
A0092641	Stopper Lever Bracket	11-16
A0092644	Stopper Lever	11-17
A0092645	Lift Lever Guide	11-29

Rev. 10/91

Parts No.	Description	Page and Index No.
A0092646	Release Lever	11-19
A0092647	Lift Sensor Bracket	11-38
A0092648	Set Sensor Bracket	11-35
A0092651	Lift Shaft - Bottom Plate	11-12
A0092652	Pressure Arm	11-26
A0092653	Stopper Release Lever	11-27
A0092654	3rd Lift Arm	11-11
A0092661	Lock Solenoid Bracket	11-20
A0092664	3rd Feed Clutch Stopper	11-24
A0092666	Holder Lock Solenoid	11-21
A0092667	Cushion - Exposure Glass	3-52
A0092672	3rd Paper Feed Stay	5-19
A0092673	Paper Feed Shaft Bracket	5-22
A0092674	3rd Feed Shaft	5-23
A0092675	Front Exit Guide - 3rd Feed	5-28
A0092676	Rear Exit Guide - 3rd Feed	5-29
A0092677	Exit Guide Plate Holder - 3rd Feed	5-24
A0092678	Paper End Feeler	5-21
A0092680	Actuator - Paper End Sensor	5-42
A0092687	Balance Wheel - 3rd Paper Feed	5-25
A0092693	Relay Drive Roller	5-32
A0092694	Relay Driven Roller	5-30
A0092695	Bushing Holder	5-41
A0092697	Relay Roller Knob	5-12
A0092699	Right Guide Plate - 3rd Feed	5-31
A0092702	Left Guide Plate - 3rd Feed	5-17
A0092704	Holder - Left Guide Plate	5-18
A0092705	Guide Plate Knob - Lower	5-16
A0092722	Click Bracket	11-13
A0092725	Click Lever	11-14
A0092729	Magnet Ass'y - Manual Feed	3-36
A0092751	Registration Roller Knob	5- 8
A0092752	Feed Shaft	9-32
A0092756	Upper Size Sensor Bracket	9- 5
A0092757	Upper Lift Arm	9-61

Parts No.	Description	Page and Index No.
A0092758	Paper End Sensor Bracket	9-46
A0092771	PTL Guide	5- 2
A0092795	Lower Arm	9-22
A0092797	Spring - Friction Pad - Upper	9-10
A0092798	Fixing Pad Bracket	9-16
A0092799	Spring - Friction Pad	9-20
A0092802	Supporter - Registration	27-18
A0092805	Lower Size Sensor Bracket	9-17
A0092807	Lower Lift Arm	9-37
A0092812	Guide Roller Bracket - Front Right	11- 5
A0092817	Guide Roller Bracket - Front Left	11- 3
A0092821	Guide Roller Bracket - Middle Left	11- 2
A0092824	Guide Roller	11- 1
A0093009	Toner Supply Unit	25-41
A0093488	Development Drive Holder	27-14
A0093550	Cleaning Unit	23- *
A0093551	Cleaning Unit Casing	23- 1
A0093552	Front Side Plate - Cleaning	23- 6
A0093558	Rear Side Plate - Cleaning	23-27
A0093561	Bushing Holder	23- 8
A0093565	Cleaning Blade	23-15
A0093585	Blade Cleaner	23- 2
A0093598	Side Seal	23-22
A0093599	Brush Seal	23-26
A0093606	Toner Collection Coil	23-30
A0093620	Toner Seal - Cleaning	23-44
A0093635	Pressure Arm	27-23
A0093639	Cleaning Solenoid	27-21
A0093689	Actuator - Pick-off Pawl	23-23
A0093694	Pick-off Solenoid	27-22
A0093696	Pick-off Pawl Lever	27-25
A0093701	Solenoid Bracket	27-19
A0093821	Right Separation Plate	29-32
A0093836	Separation Plate - Left	15-18
A0093877	Plate	29-25
A0093884	Toner Collection Bottle Cover	29-12

Rev. 1/89

Parts No.	Description	Page and Index No.
A0093928	Duct	29-24
A0093942	Transport Guide Roller .	29-20
A0094051	Front Side Plate - Fusing	31-24
A0094052	Rear Side Plate - Fusing	31-23
A0094100	Left Side Guide - Fusing Unit	31-54
A0094304	Release Spring Holder	33-20
A0094314	Exit Roller Bracket	33-13
A0094315	Shaft - Exit Roller Bracket	33-14
A0094316	Shaft - Hot Roller Stripper	33-15
A0094317	Stripper Pawl Plate	33-19
A0094318	Upper Exit Guide	33- 2
A0094320	Magnet Holder	33- 5
A0094480	Fusing Unit - 220V	31- *
A0094490	Fusing Unit - 115V	31- *
A0095111	Main Motor - AC24.5W	29- 6
A0095125	Power Relay Board - 60Hz	35-15
A0095125	Power Relay Board - 60Hz	45- 1
A0095142	Control Board - LT	3-90
A0095143	Control Board - A4	3-90
A0095180	Optics Harness	19-21
A0095185	Lamp Regulator Harness	17-17
A0095210	Erase Lamp	21-62
A0095211	PTL/ID Sensor Board	5- 1
A0095212	Quenching Lamp	21- 1
A0095245	Drum Heater - 10W	21-59
A0095246	Drum Heater	21-59
A0095250	Feed Control Board	37- 9
A0095250	Feed Control Board	47- 1
A0095253	Regist Sensor Board	5- 3
A0095270	Harness - Paper Feed	37- 7
A0095270	Harness - Paper Feed	37-10
A0095270	Harness Paper Feed	59- 1
A0095271	Harness - 3rd Feed	37-11
A0095271	Harness - 3rd Feed	53- 1
A0095272	Paper Size Switch Harness	13-19
A0095273	Harness - Development	37- 6

Parts No.	Description	Page and Index No.
A0095274	Harness - PTL	5- 5
A0095301	Main Board	35- 7
A0095301	Main Board	39- 1
A0095302	IC - HN27256G - 25	39- 2
A0095303	IC - μPD7811G	39- 3
A0095334	Bracket - Safety Switch	37-15
A0095335	Lever - Safety Switch	37-12
A0095339	Shaft - Safety Switch Lever	37-13
A0095400	Fusing Lamp Drive Board - 115V	35-10
A0095400	Fusing Lamp Drive Board - 115V	43- 1
A0095431	Thermofuse Ass'y	31- 5
A0095431	Thermo Fuse	55- 2
A0095500	Power Supply Unit	35- 9
A0095500	Power Supply Unit	41- 1
A0095520	Photointerruptor	11-34
A0095521	Photointerruptor	13-24
A0095800	Heat Sink Fins - Main Board	35-17
A0095801	Main Board Bracket	35- 6
A0095809	Harness Support Plate	11- 9
A0095817	Relay Bracket	35-16
A0095818	Bracket - Paper Feed Control Board	37- 8
A0095819	Stay - Side Plate	15-26
A0095821	Right Bracket - Main Board	35- 3
A0095822	Mylar	35-22
A0095825	Connector Bracket - Fusing Unit	15- 9
A0095827	Fan Motor Bracket	29- 5
A0095828	Left Harness Cover	37-16
A0095829	Power Supply Cord Holder	35-12
A0095831	Bracket - Power Supply Cord - 115V	35-11
A0095832	Bracket - Power Supply Cord - 220V	35-11
A0095833	Bracket - T&S Power Pack	35- 5
A0095834	Bracket - Power Supply Cord - 115V	35-11
A0096001	Harness - Toner Overflow Sensor	29- 2
A0096002	Counter Harness	37- 1
A0096002	Counter Harness	57- 1
A0096006	Fusing Lamp Drive Board - 220V	35-10
A0096006	Fusing Lamp Drive Board - 220/240V	43- 1

Parts No.	Description	Page and Index No.
A0096007	Lamp Regulator - 115V	17-15
A0096008	Lamp Regulator - 220V	17-15
A0096012	Power Relay Board - 50Hz	35-15
A0096012	Power Relay Board - 50Hz	45- 1
A0096021	DC Main Harness	35- 2
A0096021	DC Main Harness	51- 1
A0096026	AC Main Harness - 115V	37-14
A0096026	AC Main Harness - 115V	49- 1
A0096027	AC Main Harness - 220V	37-14
A0096027	AC Main Harness - 220V	49- 1
A0096031	Fusing Unit Harness	31-17
A0096031	Fusing Unit Harness	55- 1
A0096450	Operation Panel - LT	3-88
A0096451	Operation Panel Cover - LT	3-58
A0096550	Operation Panel - A4	3-88
A0096551	Operation Panel Cover - A4	3-58
A0096556	Mylar Sheet - 90x110mm	3-103
A0096615	Exit Cover	33- 3
A0098610	Instruction Cards - English	3-57
A0098630	Instruction Cards - Multi-Language	3-57
A0099501	Toner Collection Bottle	29-14
A0098604	Operating Instructions - English	3-94
A0098605	Operating Instructions - Multi-Language	*
A0098606	Operating Instructions - German	*
A0098607	Operating Instructions - French	*
A0098608	Operating Instructions - Italian	*
A0098609	Operating Instructions - Spanish	*
A0099502	Toner Collection Bottle	29-14
A0081305	ADF Cap - Upper Cover	3- 9
A0081307	Left Cover Cap - Sorter	3- 2
A0081351	Cap - Left Cover - L	3- 3
A0081352	Cap - Left Cover - S	3- 4
A0081666	Front Platen Cover	7- 4

Parts No.	Description	Page and Index No.
A0081675	Platen Cover Hinge Ass'y	7-22
A0081676	Mounting Bracket - Platen Cover	7- 9
A0081704	Guide Roller - 1st Scanner	19-17
A0081704	Guide Roller - 1st Scanner	19-26
A0082284	Paper Guide	5- 4
A0082555	Arm Pad Ass'y	9-12
A0082559	Lower Paper Feed Stay	9-34
A0082574	Upper Guide	9-69
A0082578	Upper Arm	9-26
A0082583	Pad Holder	9-14
A0082602	Upper Guide Plate	9- 1
A0082604	Feed Roller	9- 4
A0082606	Middle Guide Plate	9- 8
A0082626	Paper End Actuator	9-50
A0082640	Front Cassette Holder	9-24
A0082641	Rear Cassette Holder	9-41
A0082642	Manual Feed Guide	9-42
A0082648	Upper Front Arm	9-62
A0082652	Upper Rear Arm	9-60
A0082657	Lower Front Arm	9-35
A0082659	Lower Rear Arm	9-38
A0082663	Pressure Arm	9-44
A0082664	Pressure Arm	9-71
A0082686	Manual Feed Cover	3-46
A0082688	Side Fence Gear	3-47
A0082698	Manual Feed Table	3-44
A0082710	Bottom Plate	7-29
A0082727	Side Fence - Rear	7-26
A0082734	Large Cassette Cover	7-25
A0082737	Small Cassette Cover	7-25
A0083571	Tape - Entrance Seal	23-42
A0084097	Pressure Lever	31-33
A0084110	Right Rail - Fusing	31-55
A0084115	Lower Entrance Guide	31-56
A0084145	Oil Pan	31-34

Parts No.	Description	Page and Index No.
A0084171	Fusing Unit Cover	31-40
A0084178	Bracket - Thermistor	31-36
A0084179	Upper Entrance Guide	31-16
A0084183	Unit Lock Lever	15-24
A0085829	Harness Guide	35-18
A0085854	Cover - Counter	37- 3
A0088998	Editing Sheet - A4	7-37
A0088999	Editing Sheet - LT	7-37
A0241719	Spacer 7.5x12x0.5mm	19-54
A0242573	Pressure Arm	9-70
A0242575	Lower Front Arm	9-35
A0242577	Lower Rear Arm	9-38
A0242579	Lower Paper Feed Stay	9-39
A0242580	Shaft - Lower Paper Feed	9-6
A0242593	Sprocket 30T	27-55
A0242655	Front Cassette Holder	9-24
A0242656	Rear Cassette Holder	9-41
A0242658	Manual Feed Guide	9-42
A0321733	Bushing - Second Scanner	19-49
A0322321	T&S Corona Guide	21-28
A0322402	Right Rail - Fusing	31-55
A0322671	Upper Registration Roller	5-13
A0322675	Lower Registration Roller	5-14
A0324117	Spring Plate Stopper	31-70
A0325818	Bracket - Paper Feed Control Board	37-8

Parts No.	Description	Page and Index No.
A0073785	Toner Collection Bottle Cap	29-13
A0241615	Scanner Wire Stopper	17-51
A0241650	2nd Scanner Shaft	19-52
A0241721	2nd Scanner	19-27
A0244111	Pressure Lever - Front	31-33
A0244115	Pressure Lever - Rear	31-69
A4069505	Platen Cover Sheet - 10sheet / set	7-7
A4265111	Interface Board Type E	35-23

Parts No.	Description	Page and Index No.
AA000008	Decal - A2	5- 9
AA000009	Decal - A3	5- 7
AA000010	Decal - A4	5-10
AA001024	Decal - Front Scale - A4	3-86
AA001025	Decal - Rear Scale - A4	3-87
AA001031	Decal - Front Scale - LT	3-86
AA001032	Decal - Rear Scale - LT	3-87
AA001035	Decal - Toner Hopper	3-89
AA001039	Decal - B	31-42
AA002003	Decal 8-1/2 x 14	7-36
AA002004	Decal 11 x 17	7-36
AA002005	Decal 8-1/2 x 11R	7-36
AA002006	Decal 11 x 8-1/2	7-36
AA002007	Decal - A3	7-36
AA002008	Decal - A4 Lengthwise	7-36
AA002009	Decal - A4	7-36
AA002010	Decal - Paper Level	7-28
AA002012	Decal - Manual Feed - LT	3-101
AA010003	Ozone Filter - 20	15-11
AA021006	Magnet	33- 4
AA036001	Oil Bottle Cap	31-50
AA060048	Spring - Charge Wire	21- 6
AA060052	Pressure Spring	31-10
AA060054	Spring - Lock Solenoid	11-23
AA060117	Spring	13-12
AA060080	Spring - Lower Lift	9-45
AA063119	Spring-Toner Collection Bottle	29-15
AA066016	Spring - Pick-off Pawl	23-34
AA080014	Bushing - 5 x 8 x 8mm	33-21
AA080027	Bushing	11-25
AA080066	Bushing - 2x12mm	31-73
AA082005	Bushing - Drum Shaft	21-44
AA082023	Bushing - 8mm	31-57
AA115003	Wire Clamp	31-64
AA132014	Collar - Friction Pad Arm	9-15
AA132017	Pressure Roller	27-13
AA140041	Shaft	9-36
AA140081	Shaft	9- 6

Parts No.	Description	Page and Index No.
AA140295	Fusing Unit Shaft	31-32
AA143026	Stud - Platen Cover Mounting	7-24
AA150064	Seal - 13x330mm	23-45
AA150205	Seal - 20x72mm	25-62
AA151095	Seal - 10x30	29-27
AA151150	Seal - 2x12x64	23-4
AA151194	Seal - Right	25-34
AA151284	Seal - 15x26x3mm	29-39
AA151380	Seal-Blade Front	23-39
AA151381	Seal-Blade Rear	23-28
AA161033	Cushion - 20x5x1mm	19-29
AB013232	Gear - 24T	25-20
AB013233	Gear - 17T	25-35
AB017035	Gear and Sprocket - 19T/20T	5-46
AB017036	Gear - 33T	23-21
AB023028	Sprocket - 21T	27-11
AC001006	Platen Cover Ass'y	7- 1
AC020005	Lens - F8	17- 2
AC041034	Left Scale - LT	3- 7
AC041035	Left Scale - A4	3- 7
AD004010	Main Corona Unit	21- 2
AD004013	T&S Crona Unit	21-19
AD004053	T&S Corona Unit	21-19
AD015001	Drum Shaft	21-37
AD022039	Front End Block - T&S Corona	21-22
AD022040	Rear End Block - T&S Corona	21-31
AD022041	Front End Block Cover - T&S Corona	21-20
AD022042	Rear End Block Cover - T&S Corona	21-29
AD022043	Front End Block - Main Corona	21-10
AD022044	Cleaner - Main Corona Wire	21-12
AD022046	Rear End Block - Main Corona	21- 5
AD022047	Rear Cover - Main Corona	21- 7
AD022048	Front Cover - Main Corona	21-11
AD022049	Adjusting Screw	21- 9
AD023012	T&S Corona Unit Casing	21-25
AD023013	Main Corona Unit Casing	21- 3
AD024002	Terminal Spring	21- 4
AD025004	Pick-off Pawl	23-36
AD025009	Pick-off Pawl	23-36
AF010001	Large Cassette Body	7-35

Parts No.	Description	Page and Index No.
AF010002	Small Cassette Body	7-35
AF016001	Rear Side Fence	3-41
AF016002	Front Side Fence	3-40
AF017001	Rear Fence	7-34
AF040001	Upper Exit Roller	33-18
AF040002	Lower Exit Roller	33- 9
AF043002	Copy Tray	3- 1
AG011069	Key Top	3-11
AG011070	Key Top - 1	3-85
AG011071	Key Top - 2	3-84
AG011072	Key Top - 3	3-83
AG011073	Key Top - 4	3-65
AG011074	Key Top - 5	3-66
AG011075	Key Top - 6	3-67
AG011076	Key Top - 7	3-68
AG011077	Key Top - 8	3-69
AG011078	Key Top - 9	3-70
AG011079	Key Top - 0	3-73
AG011080	Key Top - Point	3-72
AG011081	Key Top - Mode Clear	3-62
AG011082	Key Top - C/S	3-71
AG011083	Key Top - AOS	3-74
AG011084	Key Top - Paper Selection	3-77
AG011085	Key Top - Full Size	3-78
AG011086	Key Top - Enlarge	3-79
AG011087	Key Top - Reduce	3-80
AG011088	Key Top - Darker	3-75
AG011089	Key Top - Lighter	3-76
AG011090	Key Top - Interrupt	3-61
AG011091	Key Top - Enter	3-63
AG011092	Key Top - Zoom Up	3-81
AG011093	Key Top - Zoom Down	3-82
AG011153	Key Top - Start	3-64
AG011214	Key Top - Start	3-64
AG021001	Original Holder	7- 2

Parts No.	Description	Page and Index No.
AG050011	Knob - Fusing	31-30
AG051021	Development Unit Band	25-8
AG051052	Development Unit Band	25-8
AW020006	Photointerruptor - EE-SX460-P2	9-47
AW020006	Photointerruptor - EE-SX460-P2	19-43
AW020006	Photointarupter - EE-SX460-P2	27-16
AW020007	Photointerruptor - on 1531LA2-(A)4	33- 7
AW500001	Paper Size Switch	9-18
AX050006	Stepper Motor - DC7.5W - Lens	17-20
AX050007	Stepper Motor - DC7.5W - 2nd Scanner	17-18
AX060004	Scanner Motor - DC50W	19-40
AX210004	Paper Feed Clutch	9-48
AX210005	Relay Roller Clutch	5- 6
AX210006	Paper Feed Clutch - 3rd Feed	5-35
AX210011	Registration Clutch	5-36
AX440005	Fusing Lamp - 115V/800W	31-26
AX440006	Fusing Lamp - 230V/840W	31-26
AX500014	Quenching Lamp	21-1
AX500017	PLT/ID Sensor Board	5-1
AZ130004	Transformer - 115V/100V	35-14
AZ140003	Transformer - 220V	35-14
AZ320003	Power Pack - T&S	35- 4
AZ320004	Power Pack - Main	35- 1

Parts No.	Description	Page and Index No.
50530223	Bushing - 8mm	5-45
50530223	Bushing - 8mm	9-54
50530223	Bushing - 8mm	11- 6
50530223	Bushing - 8mm	27-42
50530223	Bushing - 8mm	27-53
50530223	Bushing - 8mm	31-57
50530447	Bushing - M6	9-67
50530447	Bushing - M6	27-52
50530447	Bushing - M6	29-31
50530447	Bushing - M6	33-22
50540440	Magnet Catch Ass'y	3-28
52031190	Bushing - 8x10x4mm	9-72
52032679	Pinion Tightening Screw - M4 x 5	5-34
52034146	Thermistor Spring	31-39
52039501	Grease 501	61- 6
52044694	Spring	11-15
52044694	Spring	13-12
52051083	Sprocket - 30T/50Hz	27-41
52051084	Sprocket - 27T/60Hz	27-41
52051099	Fusing Drive Shaft	27-35
52051105	Chain Tightener	27-45
52051121	Belt Tightener	27-43
52051336	Front Cover Chain	25- 8
52051694	Adjusting Cam - Start Lever	19-18
52052063	Seal - Duct	21-55
52052121	Spring Plate	21-41
52052697	Bushing - Upper Registration Roller	5-39
52052698	Relay Roller Spring	5-40
52052866	Magnetic Clutch Collar	5-37
52052960	Actuator - A3	7-33
52052961	Actuator - B4	7-33
52052962	Actuator - A4R	7-33
52052963	Actuator - A5R	7-33
52052964	Actuator - A4	7-33
52052965	Actuator - B5	7-33
52052966	Actuator - A5	7-33

Parts No.	Description	Page and Index No.
52052967	Actuator - A5R	7-33
52052968	Actuator - B6	7-33
52052969	Actuator - A6R	7-33
52052970	Actuator - LG	7-33
52052971	Actuator - 11" x 17"	7-33
52052972	Actuator - 11" x 15"	7-33
52052973	Actuator - 11" x 14"	7-33
52052974	Actuator - 8-1/2 x 13"	7-33
52052975	Actuator - 8-1/4 x 13"	7-33
52052976	Actuator - 8 x 13	7-33
52052977	Actuator - 8 x 10-1/2	7-33
52052978	Actuator - 8 x 10	7-33
52052979	Actuator - 11 x 8-1/2	7-33
52052992	Actuator - 5-1/2 x 8-1/2	7-33
52052993	Actuator - 8-1/2 x 5	7-33
52052996	Actuator - 8-1/2 x 11R	7-33
52052997	Actuator - 8-1/2 x 14	7-33
52053103	Bushing - 6mm	25-14
52053306	Gear - 18T	25-38
52053306	Gear - 18T	27- 3
52053467	Boss - Toner Supply Clutch	27-10
52053575	Cleaning Blade Holder	23-13
52053582	Gear - 15T	23-19
52053583	Rear Guide Pin - Cleaning	23-16
52053602	Seal - Front Outer	23- 9
52053603	Seal - Rear Outer	23-43
52053604	Seal - Front Inner	23-12
52053605	Seal - Rear Inner	23-11
52053617	Pressure Arm	23-18
52053637	Spring - Cleaning Blade	27-24
52053673	Setting Pin	23-40
52053821	Terminal Spring	21-30
52053872	Rear Bracket - T&S Corona	21-40
52053950	Cam	23-38
52053958	Pick-off Pawl Shaft	23-33
52053966	Set Screw	23-25

Parts No.	Description	Page and Index No.
52053975	Cam	23-37
52053981	Collar	23-32
52054135	Fusing Shaft Collar	31-25
52054181	Gear - 18T	31-11
52054305	Spring - Hot Roller Stripper	33-16
52054321	Bushing - 20mm	31-22
52055250	LED Sensor Type S	9-55
52055250	LED Sensor Type - S	27-16
52055251	LED Sensor Type - T	17-10
52055251	LED Sensor Type - T	19-48
52055313	Registration Clutch	5-36
52059101	Gap Gauge	61- 3
52059111	Omega Clamp	61- 4
52059601	Switching Board	61- 2
52069600	Sensor Checker	61- 5
52074837	Bushing - 8 x 12 x 3mm	27-56
52091694	Guide Roller - 1st Scanner	19-17
52091694	Guide Roller - 1st Scanner	19-26
52091695	Bracket 1st Scanner	19-46
52091704	Reflector - Aid	19- 3
52091735	Pulley	19-33
52091870	Left Pulley	19-35
52091875	Right Pulley	19-47
52094149	Fusing Unit Shaft	31-32
52094400	Oil Pump Bracket	31-47
52094405	Oil Pump Lever	31-48
52094407	Cam Gear - 32T	31-49
52094408	Gear - 16T	31-31
52094409	Oil Tube - 105mm	31-52
52094410	Oil Tube - 140mm	31-43
52095320	Oil End Sensor	31-58
52111690	2nd Scanner	19-27
52111701	Lamp Terminal Insulator	19-11
52111702	Lamp Terminal Spacer	19-10
52111710	1st Mirror	19-15
52111721	Exposure Lamp Terminal - Release	19- 9

Parts No.	Description	Page and Index No.
52111724	Exposure Lamp Terminal - Fix	19-20
52111725	Rear Cover - Lamp Terminal	19- 6
52111726	Front Cover - Lamp Terminal	19-12
52111733	Bushing - 2nd Scanner	19-49
52111734	Idle Pulley	19-34
52111742	2nd Mirror	19-25
52111750	Lens Holder	17- 3
52111870	Seal - M14	17-28
52111890	Spring - Scanner Drive Wire	19-36
52111969	Lamp Terminal Sheet	19-28
52112259	Spacer - M20 x 0.1	21-16
52112267	Drum Shaft Knob	21-15
52112278	Drum Flange Spring	21-34
52112285	Rear Flange	21-39
52112365	Bushing - 12 x 19 x 11mm	21-17
52112800	Rear Platen Cover	7- 3
52114078	Spring - Fusing Drive Gear	31-19
52115809	Decal - Terminal - 115V	35-19
52117441	Guide Rail - Lens Drive	17-27
52117444	Gear - 67T	17- 8
52117451	Glass Shield Rail	17-22
52117452	Front Guide - Lens Bracket	17- 1
52117453	Rear Guide - Lens Bracket	17- 7
52117460	Bracket - 2nd Scanner Home Sensor	19-42
52117461	Scanner Drive Wire	19-37
52117464	Pulley - 2nd Scanner Position	19-38
52117474	Seal - Glass Shield	17-25
52117475	Sub Harness - Optics	17-14
52117492	Seal - A	17- 9
52117493	Lens Motor Seal	17-19
52151085	Cover Motor	29- 9
52151090	Pulse Generator Disk	27-12
52151096	Fusing Drive Bracket	27-30
52151103	Ratchet - Sleeve - Paper Feed	27- 9
52151104	Spring Clutch	27- 8

Parts No.	Description	Page and Index No.
52151105	Fusing Chain Stopper	27-29
52151111	Fusing Bracket	27-28
52151133	Left Stay	15-27
52151134	Lower Paper Feed Stay - Right	9-39
52151667	Platen Cover Stud	3-10
52151691	Reflector Cover	19- 4
52151696	Main Reflector	19- 7
52151857	Harness Clamp	19-50
52152066	Fan Cover	29- 3
52152119	T&S Corona Guide Plate	21-32
52152131	T&S Corona Holder	21-45
52152315	Decal - Drum Knob	21-14
52152570	Upper Paper Feed Stay	9-64
52152579	Shaft	9-19
52152580	Spring Anchor	9-27
52152582	Spring	9-28
52152594	Sprocket - 30T	27-55
52152597	Idle Gear - 30T	9-52
52152597	Idle Gear - 30T	27-54
52152600	Upper Feed Guide Plate	9-63
52152605	Feed Roller Guide	9-51
52152612	Regist Guide Plate	5-15
52152618	Feed Roller Hub	5-26
52152618	Feed Roller Hub	9-31
52152619	Feed Roller	5-27
52152619	Feed Roller	9-30
52152621	Snap Ring - M6	9-29
52152622	Upper Feed Shaft Bracket	9-65
52152624	Paper End Feeder	9-33
52152626	Paper End Actuator	9-50
52152629	Upper Pad Mounting Plate	9-25
52152630	Lower Feed Shaft Bracket	9-40
52152644	Spring - Friction Pad	13-27
52152662	Bushing	9-66
52152665	Spring - Lower Lift	11-28
52152665	Spring - Lower Lift	9-45

Parts No.	Description	Page and Index No.
52152670	Upper Regist Roller	5-13
52152671	Lower Regist Roller	5-14
52152672	Bushing	5-38
52152674	Lower Pad Mounting Plate	9-21
52152678	Spring Plate - Manual Feed Table	3-45
52152679	Upper Guide - Manual Feed	3-38
52152680	Front Manual Feed Link	3-42
52152681	Rear Manual Feed Link	3-49
52152685	Magnetic Rubber	3-37
52152687	Gear - 16T	3-48
52152691	Brake	3-92
52152693	Plate	3-91
52152713	Bottom Plate Pad	7-30
52152716	Front Side Fence	7-31
52152720	Front Side Holder	7-32
52152731	Rear Side Holder	7-27
52152832	Platen Cover Hinge Ass'y	7-22
52152833	Base Holder	7-10
52152834	Arm Holder	7-11
52152835	Crank	7-12
52152838	Rubber Magnet	7-23
52152839	Balancer Spring	7-13
52152840	Pin - 4 x 115 mm	7-14
52152841	Pin - 4 x 100 mm	7-15
52152842	Right Spring - Platen Cover	7-16
52152843	Left Spring - Platen Cover	7-17
52152844	Slide Supporter	7-18
52152845	Plate Magnet	7-19
52152846	Platen Base	7-20
52153000	Development Unit	25- *
52153008	Hopper Ass'y	25-41
52153051	Side Seal - Right	25-18
52153052	Side Seal - Left	25- 7
52153056	Seal Development	25-32
52153060	Seal - 52 x 4mm	25-25

Parts No.	Description	Page and Index No.
52153072	Side Magnet	25-31
52153074	Lower Casing	25-33
52153083	Paddle Roller	25-27
52153085	Seal - Paddle Roller	25-24
52153089	Developer Knob	25-29
52153095	Adjusting Plate - Magnet Angle	25-12
52153097	Sheet	25-26
52153101	Gear - 44T	25-28
52153102	Gear - 39T	25-23
52153108	Spacer - Development Sleeve	25-21
52153110	Bearing Retainer	25-22
52153111	Gear - 15T	25-20
52153115	Gear - 17T	25-35
52153120	Toner Supply Guide	25-30
52153124	Development Sleeve	25-19
52153133	Seal - Right	25-34
52153140	Upper Casing	25-10
52153153	Mylar - 6 x 35mm	25-11
52153154	Seal - Upper	25- 3
52153155	Seal - Doctor	25- 5
52153161	Doctor Plate	25- 4
52153162	Side Seal - Doctor Blade	25- 6
52153165	Development Auger	25-13
52153167	Gear - 25T	25-15
52153175	Backspill Plate	25-16
52153180	Seal - Ring	25-17
52153191	Entrance Seal Ass'y	25- 2
52153193	Seal - Entrance	25- 1
52153201	Mylar Seal - Front Upper Guide	9-68
52153203	Seal - 1 x 10 x 60mm	9-53
52153204	Seal - 4 x 10 x 370mm	9-58
52153256	Seal - Toner Supply	25-43
52153270	Seal - Front	25-45
52153271	Seal - Rear	25-42
52153278	Seal	25-40

Parts No.	Description	Page and Index No.
52153281	Pin	25-37
52153302	Toner Supply Roller	25-44
52153321	Gear - 56T	25-39
52153327	Shaft Agitator	25-48
52153328	Joint Hopper	25-47
52153347	Spring - Gear	25-46
52153381	Sensor Bracket	9-56
52153394	Seal - 12 x 406 mm	25-49
52153395	Seal - 12 x 75 mm	25-50
52153462	Toner Supply Bracket	27- 5
52153469	Boss - Toner Supply Clutch	27-10
52153470	Gear - 42T	27-47
52153471	Supply Shaft	27- 4
52153472	Development Shaft	27-48
52153475	Sprocket - 19T	27-11
52153476	Gear - 26T	27- 6
52153478	Boss - Toner Supply Clutch	27-10
52153481	Sensor Bracket	9-57
52153482	Sensor Cover	9-59
52153486	Bias Terminal	27- 7
52153489	Toner Supply Drive Holder	27-15
52153555	Rubber Seal - Cleaning Small	23- 5
52153582	Cleaning Brush	23-29
52153589	Seal - 6 x 8 x 105mm	23- 4
52153600	Seal - Blade Front	23-39
52153601	Seal - Blade Rear	23-28
52153675	Roller Holder	29-23
52153677	Roller	29-22
52153680	Sheel - 19 x 36 x 10mm	23-35
52153851	Spring - Guide Plate	29-16
52153853	Transport Guide Plate	29- 8
52153855	Guide Plate Shaft	29-11
52153860	Cushion	27-39
52153861	Follower	27-51
52153865	Sprocket - 20T	27-34

Parts No.	Description	Page and Index No.
52153869	Toner Collection Bottle Cam	27-38
52153872	Gear - 45T	27-37
52153873	Follower Shaft	27-50
52153878	Sheet	29-26
52153887	Sensor Holder	29-33
52153888	Both Side Tape - Holder	29-35
52153889	Spring - Toner Collection Bottle	29-15
52153910	Transport Frame	29-18
52153917	Transport Drive Roller	29-10
52153923	Driven Roller	29-19
52153931	Bushing - 8mm	29-29
52153951	Chain Guide	27-33
52153978	Transport Belt	29-17
52154063	Lower Exit Guide	33-10
52154086	Gear - 40Z	31-21
52154093	Upper Frame	31- 3
52154116	Oil Blade Holder	31- 7
52154117	Oil Blade	31-13
52154121	Spring - Oil Blade	31- 4
52154130	Oil Supply Pad	31- 1
52154169	Mylar - Fusing Entrance	31-60
52154181	Fusing Unit Rail	15-21
52154195	Oil Sump	31-35
52154196	Oil Sump Holder	31-37
52154208	Spring Plate - Oil Supply Pad	31- 2
52154225	Oil Tank	31-51
52154282	Pressure Roller	31- 9
52154320	Hot Roller	31- 8
52154411	Spring Plate	31-59
52154444	Pin	15-23
52154497	Exit Antistatic Brush	33- 1
52155230	Photointerruptor - L Type	5-33
52155250	Thermistor	31-38
52155275	Terminal Block Harness	35-20
52155303	Exposure Lamp - 85V/250W	19- 5

Parts No.	Description	Page and Index No.
52155304	Toner Overflow Sensor	29-34
52155371	Grounding Wire	21-49
52155426	Vacuum Fan Motor - 14/12W	29-28
52155471	Shorting Connector	35-21
52155818	Connector Unit Bracket	31-15
52155827	Control Board Angle	35- 8
52158710	Seal	25-40
52159002	Hot Roller Stripper (6 pcs/set)	33-17
52159003	Seal Cleaning Unit	23- 7
52159500	DG Gauge (2 pcs/1 set)	61- 1
52162844	Friction Pad	9-13
52162844	Friction Pad	13- 6
54003392	Bushing Paper Spool	31-20
54031145	Cover - Key Counter	3-34
54032048	Bushing - 4mm	29-30
54032075	Stepped Screw	9- 2
54032075	Stepped Screw	15- 2
54082035	Stepped Screw - M4	11- 8
54085160	Short Connector	37- 5
54091705	Reflector Clamp	19-13
54091855	Mounting Pin	31-53
54117491	Seal - B	17-13
54131812	Spring - Drum Return Arm	27-20
54132866	Spring - Registration Roller	33- 6
54154310	Valve - Oil Pump	31-45
54182116	Spacer - Guard	23-24
54182859	Spring - Regist Roller (Front)	23-17
54191057	Rubber Foot	15-16
54201515	Plate - Key Counter	3-35
54204193	Collar - Pressure Cam	23-20
54204867	Decal - Thermofuse, 169°C	31- 6
54209502	Test Chart - OS-A3 (100 pcs/set)	61-15
54209504	Thermo Meter - HLC60-E	61-10
54209505	Probe - HLC60-E	61-11
54209507	Digital Multimeter - BECKMAN-RMS3030	61-12
54209516	Test Chart - OS-A3 (10 pcs/set)	61-15

Parts No.	Description	Page and Index No.
54209550	Silicone Oil	61-13
54347916	High Voltage Decal	21-13
54347916	High Voltage Decal	27-49
54395246	Totalizer Ass'y	37- 2
54421054	Right Front Grip - Bottom Plate	15-14
54421099	Gear - 24Z	27-36
54421100	Coupled Sprocket and Gear	27-32
54421110	Sprocket - 20T	27-31
54421110	Sprocket - 20T	27-44
54421111	Spring - Main Drive Tightener	27-40
54421127	Timing Belt - Drum Drive	27-27
54421657	Seal - 15 x 214 x 13	7-21
54421702	Small Screw - M3	19-16
54421703	Wing - Center	19- 2
54421704	Wing - Side	19- 1
54421711	Spring Plate - 1st Mirror	19-14
54421741	Rear Spring Plate - 2nd and 3rd Mirror	19-23
54421742	Front Spring Plate - 2nd and 3rd Mirror	19-24
54421748	Cleaner - Guide Rod	19-32
54421825	Glass Shield	17-12
54421845	4th Mirror	17-23
54421847	Spring Plate - 4th Mirror	17-21
54421864	Cushion - Guide Rod	19-31
54421924	Cushion - Exposure Glass	19-29
54421942	Film (Small) - Harness Slide	17-29
54421950	Seal - Glass	3-53
54421950	Seal - Glass	19-45
54422108	Spring Corona Wire	21-21
54422143	Fan - Main Corona	29- 4
54422638	Collar - Friction Pad Arm	13- 5
54422642	Shoulder Screw - M3	9-11
54422642	Shoulder Screw - M3	13- 8
54422675	Decal - Middle Guide	9- 9
54422692	Rear Spring - Middle Guide	9- 7
54422693	Front Spring - Middle Guide	9- 3

Parts No.	Description	Page and Index No.
54422754	Spring - Registration Roller	5-43
54423109	Seal - Development Roller	25- 9
54423154	Holder - Development Unit	27-46
54423233	Spring Drive Wheel	27- 2
54423570	Shoulder Sleeve	23-14
54423585	Bushing	21-53
54423593	Seal - Cleaning Blade Shaft	23-10
54423872	Gear - 16Z	29-21
54423904	Spring - Pick-off Pawl Slide	23-31
54424151	Gear - 30Z	31-18
54424186	Spring - Fusing Unit Release Lever	15-22
54424202	Rear Bracket - Lamp Terminal	31-12
54424420	Decal - High Temperature	31-41
54424421	Decal - Small	31-14
54424485	Feeler - Paper Exit Sensor	33- 8
54424491	Actuator - Paper Exit Sensor	33-11
54424492	Gear - 20T	33-12
54424494	Gear - 19Z	33-25
54424495	Slip Clutch	33-24
54425821	Connector Holder - 2nd Quenching	21-42
54429003	Main Corona Wire (10 pcs/set)	21- 8
54429004	T&S Corona Wire	21-26
54429101	Setting Powder	61- 7
54429103	Launa Oil	61-16
54429106	Drum Shoe	61- 8
54429510	Selenium Drum	21-36
54432668	Bushing	5-20
54432668	Bushing	9-49
54462862	Gear - 36T	9-43
54462901	Collar - 6mm	5-44
54463707	Bushing - 6 x 10 x 6mm	23-41
54472257	Front Drum Flange	21-35
54472286	Drum Guide	21-38
54472681	Snap Ring	3-43
54472681	Snap Ring	21-46

Parts No.	Description	Page and Index No.
54472804	Gear - 15T	11-41
54472805	Slide Pin Holder	11-37
54472806	Gear - 15T & 40T	11-40
54472812	Slide Gear Spring	11-28
54472812	Slide Gear Spring	11-33
54473236	Gear - 23T	25-36
54473361	Toner Supply Solenoid	27- 1
54474216	Front Lamp Terminal - Fusing Unit	31-29
54474220	Lamp Terminal Stud	31-27
54474221	Lamp Holder Spring	31-28
54474229	Sleeve - Oil Pump	31-46
54474241	Tube Clamp	31-44
54475430	Lift Motor - DC 0.98W	11-39
54479078	Heat Resisting Grease MT-78	61-14
54479104	Shoe Adaptor	61- 9
54482803	Pad - Platen Cover	7- 6
54482806	Platen Cover Arm	7- 8
54482824	Flex Hinge - Platen Cover	7- 5
58752067	Bushing	33-23
58753026	Spring - Original Feed Arm	27-26
58874400	Guide Roller - Driven Unit	11-22
67542866	Roller - Positioning Guide	11- 7

Parts No.	Description	Page and Index No.
03130040W	Philips Pan Head Screw - M3 x 4	19-101
03130050W	Philips Pan Head Screw - M3 x 5	11-103
03130050W	Philips Pan Head Screw - M3 x 5	27-103
03130060W	Philips Pan Head Screw - M3 x 6	17-105
03130060W	Philips Pan Head Screw - M3 x 6	23-105
03130060W	Philips Pan Head Screw - M3 x 6	25-105
03130060W	Philips Pan Head Screw - M3 x 6	27-105
03130060W	Philips Pan Head Screw - M3 x 6	31-105
03130080W	Philips Pan Head Screw - M3 x 8	19-106
03130080W	Philips Pan Head Screw - M3 x 8	23-106
03130100W	Philips Pan Head Screw - M3 x 10	19-107
03130120W	Philips Pan Head Screw - M3 x 12	9-108
03130120W	Philips Pan Head Screw - M3 x 12	13-108
03130120W	Philips Pan Head Screw - M3 x 12	37-108
03140050W	Philips Pan Head Screw - M4 x 5	21-112
03140060M	Philips Pan Head Screw - M4 x 6	21-113
03140060W	Philips Pan Head Screw - M4 x 6	5-114
03140060W	Philips Pan Head Screw - M4 x 6	21-114
03140060W	Philips Pan Head Screw - M4 x 6	25-114
03140060W	Philips Pan Head Screw - M4 x 6	27-114
03140080M	Philips Pan Head Screw - M4 x 8	21-115
03140080W	Philips Pan Head Screw - M4 x 8	3-116
03140080W	Philips Pan Head Screw - M4 x 8	9-116
03140080W	Philips Pan Head Screw - M4 x 8	21-116
03140080W	Philips Pan Head Screw - M4 x 8	23-116
03140080W	Philips Pan Head Screw - M4 x 8	27-116
03140080W	Philips Pan Head Screw - M4 x 8	35-115
03140100W	Philips Pan Head Screw - M4 x 10	5-117
03140100W	Philips Pan Head Screw - M4 x 10	17-117
03140100W	Philips Pan Head Screw - M4 x 10	19-117
03140100W	Philips Pan Head Screw - M4 x 10	25-117
03140100W	Philips Pan Head Screw - M4 x 10	31-117
03140120W	Philips Pan Head Screw - M4 x 12	9-118
03140120W	Philips Pan Head Screw - M4 x 12	11-118
03140120W	Philips Pan Head Screw - M4 x 12	13-118

Parts No.	Description	Page and Index No.
03140120W	Philips Pan Head Screw - M4 x 12	27-118
03140120W	Philips Pan Head Screw - M4 x 12	31-118
03140120W	Philips Pan Head Screw - M4 x 12	37-118
03140200W	Philips Pan Head Screw - M4 x 20	25-120
03150080W	Philips Pan Head Screw - M5 x 8	7-122
03150080W	Philips Pan Head Screw - M5 x 8	29-122
032300408	Philips Sunken Head Screw - M3 x 4	29-125
03230040W	Philips Sunken Head Screw - M3 x 4	13-126
03230080W	Philips Sunken Head Screw - M3 x 8	9-128
03240040W	Philips Sunken Head Screw - M4 x 4	13-129
03240060W	Philips Sunken Head Screw - M4 x 6	11-130
03240060W	Philips Sunken Head Screw - M4 x 6	21-130
03240080W	Philips Sunken Head Screw - M4 x 8	15-131
03440060W	Philips Truss Head Screw - M4 x 6	3-135
03440060W	Philips Truss Head Screw - M4 x 6	5-135
041401028	Tapping Screw - M4 x 10	7-139
04140102W	Tapping Screw - M4 x 10	29-139
04340060W	Tapping Screw - M4 x 6	3-140
04340060W	Tapping Screw - M4 x 6	9-140
04340060W	Tapping Screw - M4 x 6	15-140
04340060W	Tapping Screw - M4 x 6	17-140
04340060W	Tapping Screw - M4 x 6	19-140
04340060W	Tapping Screw - M4 x 6	21-140
04340060W	Tapping Screw - M4 x 6	27-140
04340060W	Tapping Screw - M4 x 6	31-140
04340060W	Tapping Screw - M4 x 6	37-140
04340080W	Tapping Screw - M4 x 8	3-141
04340080W	Tapping Screw - M4 x 8	5-141
04340080W	Tapping Screw - M4 x 8	9-141
04340080W	Tapping Screw - M4 x 8	11-141
04340080W	Tapping Screw - M4 x 8	13-141
04340080W	Tapping Screw - M4 x 8	15-141
04340080W	Tapping Screw - M4 x 8	17-141
04340080W	Tapping Screw - M4 x 8	19-141
04340080W	Tapping Screw - M4 x 8	21-141
04340080W	Tapping Screw - M4 x 8	27-141
04340080W	Tapping Screw - M4 x 8	29-141

Parts No.	Description	Page and Index No.
04340080W	Tapping Screw - M4 x 8	31-141
04340080W	Tapping Screw - M4 x 8	33-141
04340080W	Tapping Screw - M4 x 8	35-141
04340080W	Tapping Screw - M4 x 8	37-141
04340100W	Tapping Screw - M4 x 10	27-142
04340100W	Tapping Screw - M4 x 10	31-142
04340120W	Tapping Screw - M4 x 12	3-252
04340120W	Tapping Screw - M4 x 12	35-143
05740040E	Hexagon Headless Set Screw - M4x4	19-216
05740050E	Hexagon Headless Set Screw - M4 x 5	27-147
05740060E	Hexagon Headless Set Screw - M4 x 6	19-148
05740060E	Hexagon Headless Set Screw - M4 x 6	29-148
05740080E	Hexagon Headless Set Screw - M4 x 8	23-149
0575005E	Hexagon Headless Set Screw - M5 x 5	27A-227
05750060E	Hexagon Headless Set Screw - M5 x 6	5-150
05750060E	Hexagon Headless Set Screw - M5 x 6	27-150
05840160B	Hexagon Bolt - M4x6, DF Hight Adjust	15-229
07100040B	Hexagon Nut - M4, DF Hight Adjust	15-230
07200025E	Retaining Ring - M2.5	9-161
07200025E	Retaining Ring - M2.5	23-161
07200025E	Retaining Ring - M2.5	25-161
07200030E	Retaining Ring - M3	5-163
07200030E	Retaining Ring - M3	9-163
07200030E	Retaining Ring - M3	11-163
07200030E	Retaining Ring - M3	13-163
07200030E	Retaining Ring - M3	21-163
07200030E	Retaining Ring - M3	31-163
07200030E	Retaining Ring - M3	33-163
07200040E	Retaining Ring - M4	5-165
07200040E	Retaining Ring - M4	9-165
07200040E	Retaining Ring - M4	11-165
07200040E	Retaining Ring - M4	15-165
07200040E	Retaining Ring - M4	19-165
07200040E	Retaining Ring - M4	23-165
07200040E	Retaining Ring - M4	27-165
07200040E	Retaining Ring - M4	29-165
07200040E	Retaining Ring - M4	33-165

Parts No.	Description	Page and Index No.
07200040E	Retaining Ring - M4	37-165
07200050E	Retaining Ring - M5	3-168
07200050E	Retaining Ring - M5	5-168
07200050E	Retaining Ring - M5	9-168
07200050E	Retaining Ring - M5	11-168
07200050E	Retaining Ring - M5	25-168
07200050E	Retaining Ring - M5	27-168
07200050E	Retaining Ring - M5	29-168
07200050E	Retaining Ring - M5	31-168
07200060E	Retaining Ring - M6	5-170
07200060E	Retaining Ring - M6	9-170
07200060E	Retaining Ring - M6	11-170
07200060E	Retaining Ring - M6	19-170
07200060E	Retaining Ring - M6	27-170
07200060E	Retaining Ring - M6	29-170
07200060E	Retaining Ring - M6	31-170
07200070E	Retaining Ring - M7	19-171
07200070E	Retaining Ring - M7	25-171
07200070E	Retaining Ring - M7	31-171
07250100E	Retaining Ring C - M10	21-173
07250120E	Retaining Ring C - M12	5-174
07250120E	Retaining Ring C - M12	21-174
07250140E	Retaining Ring (C Type) - M14	25-175
07250180E	Retaining Ring C - M18	21-176
07250200E	Retaining Ring C - M20	31-177
07250220E	Retaining Ring - M22	25-178
07403008	Ball Bearing	27-180
08011179	Philips Screw with Toothed Washer	11-181
08011179	Philips Screw with Toothed Washer	35-182
08025085	Tapping Screw - M4 x 8	3-183
08025085	Tapping Screw - M4 x 8	5-183
08025085	Tapping Screw - M4 x 8	9-183
08025086	Tapping Screw - M4 x 10	13-184
08025094	Tapping Truss Head Screw - M4 x 8	3-185
08025094	Tapping Truss Head Screw - M4 x 8	5-185

Parts No.	Description	Page and Index No.
08050083	Retaining Ring - M4	7-289
08053104	Ball Bearing - 8 x 22 x 7mm	31-193
08053235	Ball Bearing - 15 x 32 x 9mm	25-195
08053270	Ball Bearing - 8 x 16 x 5mm	11-196
08053291	Ball Bearing - 8 x 16 x 5mm	5-197
08053377	Ball Bearing - 25 x 42 x 9 mm	31-198
08053383	Bushing - M5	21-199
08053426	Ball Bearing - 15x32x9mm	25A-195
08090059	Contact Glass	3-206
09161236	Bushed Roller Chain - 236P	27-207
09503005M	Philips Screw with Lock Washer - M3 x 5	31-208
09513005	Philips Screw with Flat Washer - M3 x 5	31-210
09513006W	Philips Screw with Flat Washer - M3 x 6	3-211
09513006W	Philips Screw with Flat Washer - M3 x 6	17-211
09513006W	Philips Screw with Flat Washer - M3 x 6	19-211
09513006W	Philips Screw with Flat Washer - M3 x 6	21-211
09513008W	Philips Screw with Flat Washer - M3 x 8	37-212
09514005W	Philips Screw with Flat Washer - M4 x 5	13-213
09514006W	Philips Screw with Flat Washer - M4 x 6	11-214
09514006W	Philips Screw with Flat Washer - M4 x 6	19-215
09514006W	Philips Screw with Flat Washer - M4 x 6	21-214
09514008W	Philips Screw with Flat Washer - M4 x 8	5-215
09514008W	Philips Screw with Flat Washer - M4 x 8	17-215
09514008W	Philips Screw with Flat Washer - M4 x 8	21-215
09514008W	Philips Screw with Flat Washer - M4 x 8	25-215
09514008W	Philips Screw with Flat Washer - M4 x 8	35-215
09514012W	Philips Screw with Flat Washer - M4 x 12	21-217
09530120	Hexagon Bolt - M3 x 12	17-152
09533006W	Philips Screw with Flat Washer - M3 x 6	21-219
09644008W	Tapping Screw with Flat Washer - M4 x 8	3-220
09644008W	Tapping Screw with Flat Washer - M4 x 8	5-220
09644008W	Tapping Screw with Flat Washer - M4 x 8	9-220
09644008W	Tapping Screw with Flat Washer - M4 x 8	11-220
09644008W	Tapping Screw with Flat Washer	13-228
09644008W	Tapping Screw with Flat Washer - M4 x 8	17-220
09644008W	Tapping Screw with Flat Washer - M4 x 8	29-220
09644008W	Tapping Screw with Flat Washer - M4 x 8	31-220

Parts No.	Description	Page and Index No.
09644008W	Tapping Screw with Flat Washer - M4 x 8	33-220
09644008W	Tapping Screw with Flat Washer - M4 x 8	35-220
09644008W	Tapping Screw with Flat Washer - M4 x 8	37-220
09644010W	Philips Screw with Flat Washer - M4 x 10	7-221
09644010W	Tapping Screw with Flat Washer - M4 x 10	29-221
09644014W	Tapping Screw with Flat Washer - M4 x 14	11-222
09644014W	Tapping Screw - M4 x 4	15-222
09653006W	Tapping Screw with Flat Washer - M3 x 6	3-223
09654008W	Tapping Screw with Flat Washer - M4 x 8	5-226
09654008W	Tapping Screw with Flat Washer - M4 x 8	25-226
09654008W	Tapping Screw with Flat Washer - M4 x 8	27-226
09654008W	Tapping Screw with Flat Washer - M4 x 8	33-226
09654010W	Tapping Screw with Flat Washer - M4 x 10	13-227
09654012W	Tapping Screw with Flat Washer - M4x12	25-227
10050383	Edging - B	15-228
11000844	Socket - MATE-N-LOCK	57-108
11000882	Socket - MATE-N-LOCK	51-150
11001061	Pin - MATE-N-LOCK	51-142
11001062	Socket - MATE-N-LOCK	49-116
11001096	Connector - 12P	47-106
11001159	Socket - MATE-N-LOCK	51-147
11001159	Socket - MATE-N-LOCK	53-110
11001169	Fastening Receptacle	49-117
11001169	Fastening Receptacle	57-106
11001171	Fastening Receptacle	49-119
11001172	Fastening Receptacle	49-120
11001239	Pin - MATE-N-LOCK	51-141
11001240	Socket - MATE-N-LOCK	57-107
11001241	Socket - MATE-N-LOCK	49-115
11001247	Terminal	49-118
11001247	Terminal	51-145
11001249	Receptacle Terminal	51-139
11001249	Receptacle Terminal	55-104
11001259	Socket - MATE-N-LOCK	51-152
11001327	Contact	51-140
11001327	Contact	55-105

Parts No.	Description	Page and Index No.
11001327	Contact	59-105
11001329	Socket Contact	51-148
11001330	Socket Contact	53-109
11001339	Pin Contact	55-106
11001341	Pin Contact	51-143
11001346	Pin Contact	51-144
11001346	Pin Contact	53-111
11001349	Contact	51-149
11001356	Pin Contact	51-151
11010359	Terminal - 3P	35-287
11020185	Connector - 4P	57-104
11020782	Connector - 4P	49-107
11020983	Connector - 2P	49-103
11020984	Connector - 2P	51-109
11020987	Connector - 6P	49-105
11020997	Connector - 6P	43-104
11021089	Connector - 3P	51-134
11021172	EI Connector - 4P	45-102
11021306	Connector - 3P	53-105
11021396	Connector - 2P	53-108
11021397	Connector - 2P	51-123
11021401	Receptacle Housing - 1P	49-113
11021402	Receptacle Housing - 1P	49-110
11021403	Receptacle Housing	49-111
11021404	Receptacle Housing	49-112
11021408	Connector - 1P	57-105
11021412	Receptacle Housing - 2P	51-135
11021509	Connector - 4P	51-107
11021509	Connector - 4P	57-102
11021515	Connector - 2P	49-102
11021515	Connector - 2P	57-103
11021516	Connector - 3P	49-109
11021522	Connector - 2P	49-114
11021532	Connector - 2P	49-106
11021533	Connector - 3P	49-101

Parts No.	Description	Page and Index No.
11021567	Connector - 2P	39-122
11021620	Connector - 3P	55-101
11021621	Receptacle Housing - 3P	51-102
11021677	Connector - 3P	51-130
11021696	Connector - 3P	49-104
11021896	Connector - 2P	49-108
11021896	Connector - 2P	51-119
11021910	Connector - 2P	55-102
11021911	Connector - 3P	51-103
11021911	Connector - 3P	59-102
11021912	Connector - 4P	51-106
11021915	Connector - 7P	59-101
11021916	Connector - 8P	51-108
11021938	Connector - 2P	51-111
11021962	Socket Housing - 2P	51-124
11022038	Connector - 2P	53-104
11022099	Connector - 12P	51-110
11022099	Connector - 12P	53-107
11022099	Connector - 12P	55-103
11022117	Connector - 2P	43-103
11022117	Connector - 2P	47-103
11022118	Spring Header - 4P	41-117
11022118	Spring Header - 4P	47-108
11022119	Connector - 6P	39-125
11022120	Connector - 8P	41-118
11022122	Spring Header - 15P	39-118
11022122	Spring Header - 15P	41-116
11022123	Connector - 2P	51-105
11022124	MT Connector - 4P	51-101
11022124	MT Connector - 4P	51-114
11022124	MT Connector - 4P	53-101
11022125	MT Connector - 6P	51-113
11022125	MT Connector - 6P	51-137
11022128	MT Connector - 15P	51-116
11022227	Spring Header - 4P	45-101

Parts No.	Description	Page and Index No.
11022260	Connector - 18P	39-116
11022264	Spring Header - 3P	47-111
11022278	Connector - 18P	51-128
11022346	Spring Header - 2P	47-110
11022533	Connector - 11P	39-117
11022533	Connector - 11P	47-107
11022537	Connector - 3P	51-126
11022540	Connector - 11P	51-117
11022540	Connector - 11P	51-136
11022540	Connector - 11P	53-103
11022800	Connector - 40P	51-122
11022805	Spring Header - 30P	47-101
11022807	Connector - 50P	51-112
11022810	Connector - 30P	51-121
11022810	Connector - 30P	51-125
11022811	Connector - 26P	51-118
11022818	Connector - 40P	51-146
11022825	Connector - 26P	39-112
11022826	Connector - 30P	39-115
11022828	Connector - 40P	39-114
11022829	Connector - 50P	39-119
11022838	Connector - 40P	51-138
11022843	Connector - 18P	51-120
11022844	Connector - 7P	51-129
11022928	Connector - 8P	51-115
11022930	Connector - 5P	51-127
11022931	Connector - 6P	51-131
11022931	Connector - 6P	59-104
11022985	Receptacle - 12P	39-124
11023100	Connector - 30P	39-120
11030347	Connector - 8P	39-123
11030750	Pin Housing - 2P	39-113
11030781	Connector - 6P	47-102
11031169	Connector - 6P	41-115
11031239	Connector - 10P	51-132

Parts No.	Description	Page and Index No.
11031345	Connector - 14P	57-101
11031372	Connector - 12P	53-102
11031429	Connector - 3P	51-133
11031591	Connector - 2P	45-103
11031725	Connector - 3P	47-104
11031726	Connector - 4P	47-109
11031729	Connector - 7P	47-105
11031894	Connector - 20P	39-121
11031897	Connector - 3P	51-104
11031897	Connector - 3P	53-106
11031897	Connector - 3P	59-103
11050008	Nylon Clip - 2N	17-257
11050159	PCB Stud	35-253
11050194	PCB Stud	35-235
11050196	Harness Clamp	21-236
11050196	Harness Clamp	29-236
11050196	Harness Clamp	37-236
11050197	Wire Saddle	35-237
11050201	Harness Clamp	35-238
11050201	Harness Clamp	37-238
11060366	Cord Clamp - 115V	35-256
11060395	Locking Support	35-241
11060395	Locking Support	37-241
11070238	Circuit Breaker - 15A - 115V	35-260
11070286	Circuit Breaker - 8V - 220V	35-260
11070321	Fuse - 0.5A	47-117
11070354	Fuse - 3.15A/125V	41-120
11070392	Fuse - 6.3A	41-119
11500003	Power Supply Cord - 115V	35-13
12040687	Microswitch - 220V	37-245
12041078	Microswitch - 115V	37-245
12041480	Push Switch	39-174
12041482	Dip Switch	39-173
12041517	Push Switch	37-246
12041520	Switch	37-255
12081064	Relay - DC 24V (115V)	45-106
12081065	Relay - DC 24V (220V)	45-106

Parts No.	Description	Page and Index No.
12081133	Relay - DC 24V	35-258
14000305	Transistor - 2SC1815	43-110
14000369	IC - 2SA1213	39-167
14010185	Transistor - 2SC2581	41-123
14010200	Transistor - 2SD633	41-121
14010257	Transistor - 2SC2315	41-122
14010265	Transistor - 2SD1277	39-166
14010296	Transistor - 2SA1162Y	39-168
14010298	Transistor - 2SC2712YTE85L	39-169
14010320	Transistor - 2SB951	39-165
14010426	Transister - 2SD1277	39-177
14010611	Diode - 1S1588	47-112
14010835	Diode - 1SS190	39-172
14020110	Diode - V06C	39-171
14020388	Diode - W03C	41-131
14020388	Diode - W03C	47-113
14020414	Zener Diode - RD27F-B1	41-130
14020454	Zener Diode - RD7.5FB	41-128
14020467	Diode - S5566G	45-104
14020550	Zener Diode - HZ16-3	41-129
14020601	Rectifier - RBV - 401	41-127
14020642	Zener Diode - RD8.2M-B1	39-170
14030255	Light Emitting Diode	41-132
14050127	Photothyristor - TLP541G (115V)	43-105
14050130	Rectifier - 400V, 1.0A IG4B42 (115V)	43-102
14050151	Photothyristor - TLP545J (220V)	43-105
14050152	Rectifier - 1J4B42 (220V)	43-102
14050153	Triac - TG16C40 - 115V	37-256
14050154	Triac - TG16C60 - 220/240V	37-256
14050176	Rectifier - RBV - 601	41-126
14071305	IC - SN7406NS	39-159
14071610	IC - SN7407NS	39-164
14071718	IC - TC74HC08F	39-153
14071729	IC - TC74HC14FP	39-152
14071741	IC - SN74LS32NS	39-161
14071846	IC - CS74LS42NS	39-155

Parts No.	Description	Page and Index No.
14071882	IC - SN74LS373NS	39-156
14071883	IC - TC4050BF	39-162
14072051	IC - SN74LS00NS	39-150
14072052	IC - SN74LS74ANS	39-151
14072054	IC - TD62308F	39-149
14072055	IC - TD62304F	39-163
14072057	IC - M5M82C55AFP-5	39-158
14072058	IC - M5M82C54FP-6	39-148
14072073	Microprocessor - MPD78C10GF	39-154
14072273	IC - TA8050P	47-114
14080363	Regulator IC - STR9005	41-124
14080382	IC - S1 - 3122V	41-125
14080395	IC - AN6912S	39-160
14080537	IC - 7705CPS-8	39-157
15030085	Oscillator - 10MHz	39-175
16000487	Resistor - 0.47Ω 5T ±10%	41-111
16000665	Resistor - 260Ω 1ST	45-105
16017508	Resistor Array - 4.7KΩ	47-116
16018428	Resistor - 2KΩ 0.3T	39-176
16020920	Noise Killer - 0.1μF, 120Ω (220V)	43-111
16020923	Noise Filter - 115V	35-286
16020940	Noise Killer - 0.1μF, 10Ω (115V)	43-111
16041239	Capacitor - 470μF 50V	41-107
16041354	Capacitor - 100μF 10V	39-104
16041363	Capacitor - 10μF 25V	39-106
16041367	Capacitor - 100μF 25V	41-102
16041380	Capacitor - 3.3μF 10V	41-105
16041381	Capacitor - 4.7μF 50V	39-110
16041382	Capacitor - 10μF 50V	39-107
16041383	Capacitor - 22μF 50V	39-111
16041386	Capacitor - 100μF 50V	39-105
16041386	Capacitor - 100μF 50V	41-106
16041785	Capacitor - 2200μF 35V	41-104
16041786	Capacitor - 4700μF 25V	41-101
16060689	Capacitor - 0.01μF 50V	43-101

Parts No.	Description	Page and Index No.
16061037	Capacitor - 10μF 250V +10 -5%	37-259
16061208	Capacitor - 100PF ±5% 50V	39-103
16061336	Capacitor - 1000pF 50V	41-103
16061380	Capacitor - 0.33μF 63V - 220V	37-259
16061452	Capacitor - 0.01μF 50V	39-108
16061453	Capacitor - 0.1μF 25V	39-109
16061454	Capacitor - 0.01μF 50V	39-101
16061455	Capacitor - 470PF 25V	39-102
16100017	Resistor - 10Ω 1/8T ±5%	39-146
16100025	Resistor - 22Ω 1/8W ±5%	39-128
16100039	Resistor - 150Ω 1/8W ±5%	39-129
16100041	Resistor - 180Ω 1/8W ±5%	39-130
16100047	Resistor - 330Ω 1/8W ±5%	39-147
16100048	Resistor - 390Ω 1/8W ±5%	39-131
16100053	Resistor - 1KΩ 1/8W ±5%	39-134
16100055	Resistor - 1.2KΩ 1/8W ±5%	39-135
16100057	Resistor - 1.5KΩ 1/8W ±5%	39-136
16100065	Resistor - 3.3KΩ 1/8W ±5%	39-126
16100067	Resistor - 4.7KΩ 1/8W ±5%	39-127
16100071	Resistor - 10KΩ ±5%	39-138
16100073	Resistor - 12KΩ 1/8W ±5%	39-141
16100083	Resistor - 33KΩ 1/8W ±5%	39-140
16100085	Resistor - 47KΩ 1/8W ±5%	39-142
16100089	Resistor - 100KΩ 1/8W ±5%	39-143
16100107	Resistor - 1MΩ 1/8W ±5%	39-145
16100278	Resistor - 1KΩ 1/8W ±2%	39-133
16100281	Resistor - 9.1KΩ 1/8W ±2%	39-137
16100408	Resistor - 680Ω 1/8W ±2%	39-132
16100409	Resistor - 120KΩ 1/8W ±5%	39-144
16114102	Resistor - 1KΩ 1/4T ±5%	41-112
16114104	Resistor - 100KΩ 1/4V ±5%	41-108
16114122	Resistor - 1.2KΩ 1/4T ±5%	41-110
16114181	Resistor - 180Ω 1/4T ±5%	43-107
16114273	Resistor - 27KΩ 1/4T ±5%	43-106
16114471	Resistor - 470Ω 1/4T ±5%	41-109

Parts No.	Description	Page and Index No.
16114563	Resistor - 56KΩ 1/4T ±5%	43-108
16116120	Resistor - 10Ω 1/2T .	47-115
16116152	Resistor - 1.5kΩ 1/2T ±5%	41-113
16116224	Resistor - 220KΩ 1/2W ±5%	43-109
16116242	Resistor - 2.4kΩ 1/2T ±5%	41-114
28010027	Power Supply Cord - 220V	35-13
28010039	Power Supply Cord - ROC	35-13
28010040	Power Supply Cord - 115V	35-13

Parts No.	Description	Page and Index No.

RICOH FT4480
PARTS CATALOG

FT4480 PARTS CATALOG
MASTER INDEX

	Fiche	Row/ Frame
FT4480 COPIER (A009)		
Parts Location & List	**2 of 4**	**A5 - G8**
	3 of 4	**A5 - C2**
Parts Index	**3 of 4**	**C3 - E7**
DF39 (A419)		
Parts Location & List	**3 of 4**	**G5 - G7**
	4 of 4	**A5 - B7**
Parts Index	**4 of 4**	**B8 - C5**
RT15 (A912)		
Parts Location & List	**4 of 4**	**C8 - E3**
Parts Index	**4 of 4**	**E5 - E9**
EDIT BOARD		
Edit Board	**4 of 4**	**F1 - F2**
MODIFIED PARTS REFERENCE	**4 of 4**	**F5**
ADDITIONAL ACCESSORIES:		
CS2070 (A414) Parts Location & List	**1 of 1**	**A1 - A9**
Parts Index	**1 of 1**	**B1 - B4**

FT4480 PARTS CATALOG INDEX

	PAGE	FICHE	ROW/ FRAME
Copier (A009)			
1. Exterior	2	2 of 4	A5-A7
2. Regist. and 3rd Paper Feed	4	2 of 4	A8-A9
3. Platen Cover and Cassette	6	2 of 4	B1-B3
4. 1st and 2nd Paper Feed	8	2 of 4	B4-B6
5. 3rd Paper Lift	10	2 of 4	B7-B8
6. Cassette Tray	12	2 of 4	C1-C2
7. Frame	14	2 of 4	C3-C4
8. Optics 1	16	2 of 4	C5-C6
9. Optics 2	18	2 of 4	C7-C8
10. Around Drum	20	2 of 4	D1-D3
11. Cleaning Unit	22	2 of 4	D4-D5
12. Development Unit	24	2 of 4	D6-D7
13. Drive Section	26	2 of 4	E1-E3
14. Paper Transport	28	2 of 4	E4-E5
15. Fusing Unit	30	2 of 4	E6-E8
16. Paper Exit	32	2 of 4	F1-F2
17. Electrical Section 1	34	2 of 4	F3-F4
18. Electrical Section 2	36	2 of 4	F5-F6
19. Main Board	38	2 of 4	F7-F9
20. DC Power Supply Board	40	2 of 4	G1-G2
21. Fusing Lamp Drive Board	42	2 of 4	G3-G4
22. Power Relay Board	44	2 of 4	G5-G6
23. Power Feed Control Board	46	2 of 4	G7-G8
24. AC Main Harness	48	3 of 4	A5-A6
25. DC Main Harness	50	3 of 4	A7-A8
26. Harness - 3rd Feed	52	3 of 4	B1-B2
27. Fusing Unit Harness	54	3 of 4	B3-B4
28. Control Harness	56	3 of 4	B5-B6
29. Harness Paper Feed	58	3 of 4	B7-B8
30. Special Tool	60	3 of 4	C1-C2
Parts Index	63	3 of 4	C3-E7

1. EXTERIOR (A009)

Rev. 1/89

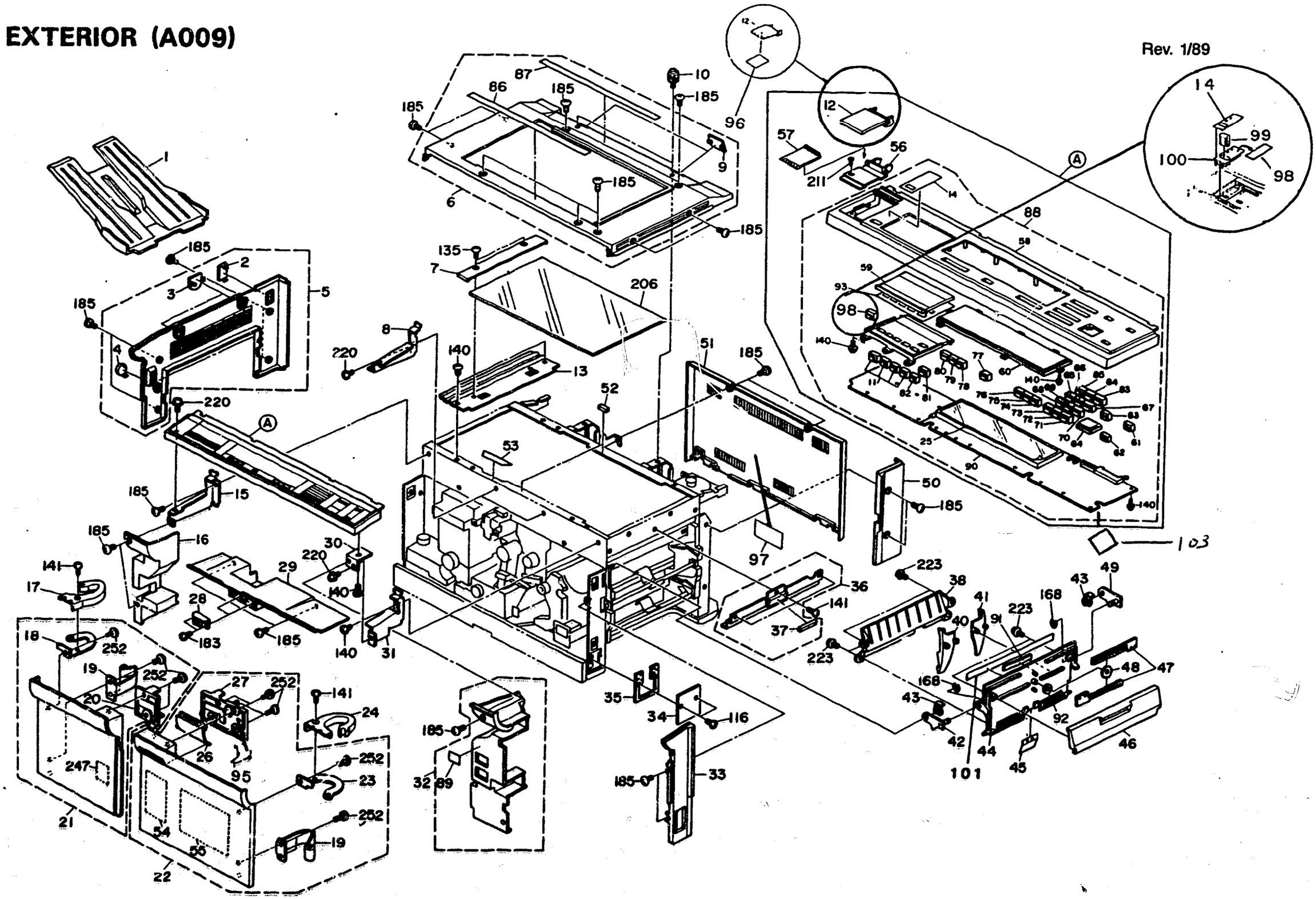

1. EXTERIOR (A009)

Rev. 1/89

Index No.	Parts No.	Description	Q'ty Per Assembly
1	AF043002	Copy Tray	1
2	A0081307	Left Cover Cap - Sorter	1
3	A0081351	Cap - Left Cover - L	1
4	A0081352	Cap - Left Cover - S	1
5	A0091209	Left Cover - LT	1
	A0091211	Left Cover - A4	1
6	A0091288	Upper Cover - LT	1
	A0091233	Upper Cover - A4	1
7	AC041034	Left Scale - LT	1
	AC041035	Left Scale - A4	1
8	A0091454	Operation Panel Bracket - Center	2
9	A0081305	ADF Cap - Upper Cover	2
10	52151667	Platen Cover Stud	2
11	AG011069	Key Top	5
12	A0091462	Instruction Cards Cover - LT	1
	A0091461	Instruction Cards Cover - A4	1
13	A0091702	Scale Bracket - LT	1
	A0091703	Scale Bracket - A4	1
14	A0091495	Sort/Stack Sheet	1
15	A0091453	Operation Panel Bracket - Left	1
16	A0091292	Left Inner Cover - LT	1
	A0091397	Left Inner Cover - A4	1
17	A0091354	Left Hinge Cover	1
18	A0091356	Upper Left Hinge	1
19	A0091357	Lower Hinge	2
20	A0091366	Left Door Catch	1
21	A0091207	Left Front Door - LT	1
	A0091223	Left Front Door - A4	1
22	A0091206	Right Front Door - LT	1
	A0091222	Right Front Door - A4	1
23	A0091355	Upper Right Hinge	1
24	A0091353	Right Hinge Cover	1
25	A0091474	Indicator Film - LT	1
	A0091475	Indicator Film - A4	1
26	A0091391	Shutter - Right Front Door	1

Index No.	Parts No.	Description	Q'ty Per Assembly
27	A0091365	Right Door Catch	1
28	50540440	Magnet Catch Ass'y	2
29	A0091294	Center Inner Cover - LT	1
	A0091396	Center Inner Cover - A4	1
30	A0091456	Operation Panel Mounting Bracket	1
31	A0091455	Operation Panel Bracket - Right	1
32	A0091295	Right Inner Cover - LT	1
	A0091245	Right Inner Cover - A4	1
33	A0091286	Right Front Cover - LT	1
	A0091382	Right Front Cover - A4	1
34	54031145	Cover - Key Counter	1
35	54201515	Plate - Key Counter	1
36	A0092729	Magnet Ass'y - Manual Feed	1
37	52152685	Magnetic Rubber	1
38	52152679	Upper Guide - Manual Feed	1
40	AF016002	Front Side Fence	1
41	AF016001	Rear Side Fence	1
42	52152680	Front Manual Feed Link	1
43	54472681	Snap Ring	2
44	A0082698	Manual Feed Table	1
45	52152678	Spring Plate - Manual Feed Table	1
46	A0082686	Manual Feed Cover	1
47	A0082688	Side Fence Gear	2
48	52152687	Gear - 16T	1
49	52152681	Rear Manual Feed Link	1
50	A0091287	Right Rear Cover - LT	1
	A0091383	Right Rear Cover - A4	1
51	A0091215	Rear Cover - LT	1
	A0091386	Rear Cover - A4	1
52	A0092667	Cushion - Exposure Glass	2
53	54421950	Seal - Glass	3
54	A0091282	Decal - Toner Supply	1
55	A0091283	Decal - Misfeed Removal	1

Index No.	Parts No.	Description	Q'ty Per Assembly
56	A0091444	Dip Sw Cover - LT	1
	A0091471	Dip Sw Cover - A4	1
57	A0098610	Instruction Cards - LT	1
58	A0096451	Operation Panel Cover - LT	1
	A0096551	Operation Panel Cover - A4	1
59	A0091465	Slide Cover - LT	1
	A0091479	Slide Cover - A4	1
60	A0091463	Indicator Cover	1
61	AG011090	Key Top - Interrupt	1
62	AG011081	Key Top - Mode Clear	1
63	AG011091	Key Top - Enter	1
64	AG011214	Key Top - Start	1
65	AG011073	Key Top - 4	1
66	AG011074	Key Top - 5	1
67	AG011075	Key Top - 6	1
68	AG011076	Key Top - 7	1
69	AG011077	Key Top - 8	1
70	AG011078	Key Top - 9	1
71	AG011082	Key Top - C/S	1
72	AG011080	Key Top - Point	1
73	AG011079	Key Top - 0	1
74	AG011083	Key Top - ADS	1
75	AG011088	Key Top - Darker	1
76	AG011089	Key Top - Lighter	1
77	AG011084	Key Top - Paper Selection	1
78	AG011085	Key Top - Full Size	1
79	AG011086	Key Top - Enlarge	1
80	AG011087	Key Top - Reduce	1
81	AG011092	Key Top - Zoom Up	1
82	AG011093	Key Top - Zoom Down	1
83	AG011072	Key Top - 3	1
84	AG011071	Key Top - 2	1
85	AG011070	Key Top - 1	1
86	AA001031	Decal - Front Scale - LT	1

Index No.	Parts No.	Description	Q'ty Per Assembly
86	AA001024	Decal - Front Scale - A4	1
87	AA001032	Decal - Rear Scale - LT	1
	AA001025	Decal - Rear Scale - A4	1
88	A0096450	Operation Panel - LT	1
	A0096550	Operation Panel - A4	1
89	AA001035	Decal - Toner Hopper	1
90	A0095142	Control Board - LT	1
	A0095143	Control Board - A4	1
91	52152693	Plate	1
92	52152691	Brake	1
93	A0091467	Margin Cover - LT	1
	A0091468	Margin Cover - A4	1
94	A0098604	Operating Instructions	
95	A0091367	Spring - Shutter	
96	A0091404	DIP SW Decal - Operation Panel	
97	A0091408	Service Decal	
98	A0091557	Sort/Stack Cover Plate	
99	A0091531	Key Top Sort/Stack	
100	A0091476	Panel - Sort/Stack	
101	AA002012	Decal — Manual Feed	1
103	A0096566	Mylar Sheet - 90x110mm	1
104	A0249506	Filter - 35 x 80	2
105	A0249507	Filter - 35 x 160	1
116	03140080W	Philips Pan Head Screw - M4 x 8	
135	03440060W	Philips Truss Head Screw - M4 x 6	
140	04340060W	Tapping Screw - M4 x 6	
141	04340080W	Tapping Screw - M4 x 8	
168	07200050E	Retaining Ring - M5	
183	08025085	Tapping Screw - M4 x 8	
185	08025094	Tapping Truss Head Screw - M4 x 8	
206	08090059	Contact Glass	
211	09513006W	Philips Screw with Flat Washer - M3 x 6	
220	09644008W	Tapping Screw with Flat Washer - M4 x 8	
223	09653006W	Tapping Screw with Flat Washer - M3 x 6	
252	04340120W	Tapping Screw - M4 x 12	

2. REGISTRATION AND 3RD PAPER FEED (A009)

Rev. 1/89

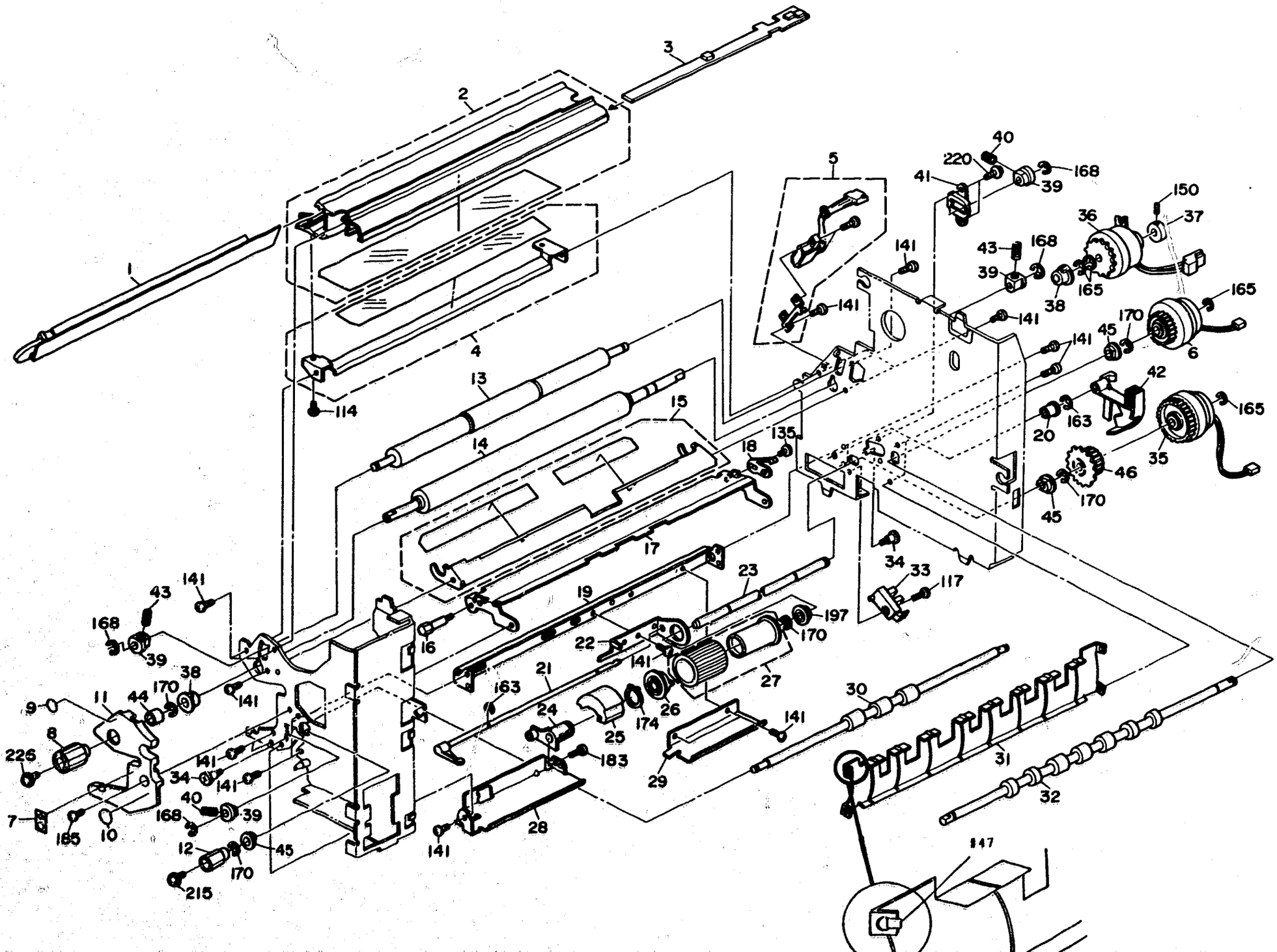

2. REGISTRATION AND 3RD PAPER FEED (A009)

Rev. 10/91

Index No.	Parts No.	Description	Q'ty Per Assembly
● 1	AX500017	PTL/ID Sensor Board	1
2	A0092771	PTL Guide	1
3	A0095253	Regist Sensor Board	1
4	A0082284	Paper Guide	1
5	A0095274	Harness - PTL	1
6	AX210005	Relay Roller Clutch	1
7	AA000009	Decal - A3	1
8	A0092751	Registration Roller Knob	1
9	AA000008	Decal - A2	1
10	AA000010	Decal - A4	1
11	A0091324	Inner Cover - Paper Feed	1
12	A0092697	Relay Roller Knob	1
● 13	A0322671	Upper Regist Roller	1
● 14	A0322675	Lower Regist Roller	1
15	52152612	Regist Guide Plate	1
16	A0092705	Guide Plate Knob - Lower	1
17	A0092702	Left Guide Plate - 3rd Feed	1
18	A0092704	Holder - Left Guide Plate	1
19	A0092672	3rd Paper Feed Stay	1
20	54432668	Bushing	1
21	A0092678	Paper End Feeler	1
22	A0092673	Paper Feed Shaft Bracket	1
23	A0092689	3rd Feed Shaft	1
24	A0092677	Exit Guide Plate Holder - 3rd Feed	1
25	A0092687	Balance Wheel - 3rd Paper Feed	1
26	52152618	Feed Roller Hub	1
27	52152619	Feed Roller	1
28	A0092688	Front Exit Guide - 3rd Feed	1
29	A0092676	Rear Exit Guide - 3rd Feed	1
30	A0092694	Relay Driven Roller	1
31	A0092699	Right Guide Plate - 3rd Feed	1
32	A0092693	Relay Drive Roller	1
33	52155230	Photointerruptor - L Type	1
34	52032679	Pinion Tightening Screw - M4 x 5	2
35	AX210006	Paper Feed Clutch - 3rd Feed	1
36	AX210011	Registration Clutch	1
37	52052866	Magnetic Clutch Collar	1
38	52152672	Bushing	2
39	52052697	Bushing - Upper Registration Roller	4
40	52052698	Relay Roller Spring	2
41	A0092695	Bushing Holder	1
42	A0092680	Actuator - Paper End Sensor	1
43	54422754	Spring - Registration Roller	2
44	54462901	Collar - 8mm	1
45	50530223	Bushing - 8mm	2
46	AB017035	Gear and Sprocket - 19T/20T	1
	AA151144		
114	03140060W	Philips Pan Head Screw - M4 x 6	
117	03140100W	Philips Pan Head Screw - M4 x 10	
135	03440060W	Philips Truss Head Screw - M4 x 6	
141	04340080W	Tapping Screw - M4 x 8	
150	05750060E	Hexagon Headless Set Screw - M5 x 6	
163	07200030E	Retaining Ring - M3	
165	07200040E	Retaining Ring - M4	
168	07200050E	Retaining Ring - M5	
170	07200060E	Retaining Ring - M6	
174	07250120E	Retaining Ring C - M12	
183	08025085	Tapping Screw - M4 x 8	
185	08025094	Tapping Truss Head Screw - M4 x 8	
197	08053291	Ball Bearing - 8 x 16 x 5mm	
215	09514008W	Philips Screw with Flat Washer - M4 x 8	
220	09644008W	Tapping Screw with Flat Washer - M4 x 8	
226	09654008W	Tapping Screw with Flat Washer - M4 x 8	

• NOTE: REFER TO LAST FRAME OF CATALOG FICHE.

3. PLATEN COVER AND CASSETTE (A009)

May 1, '87

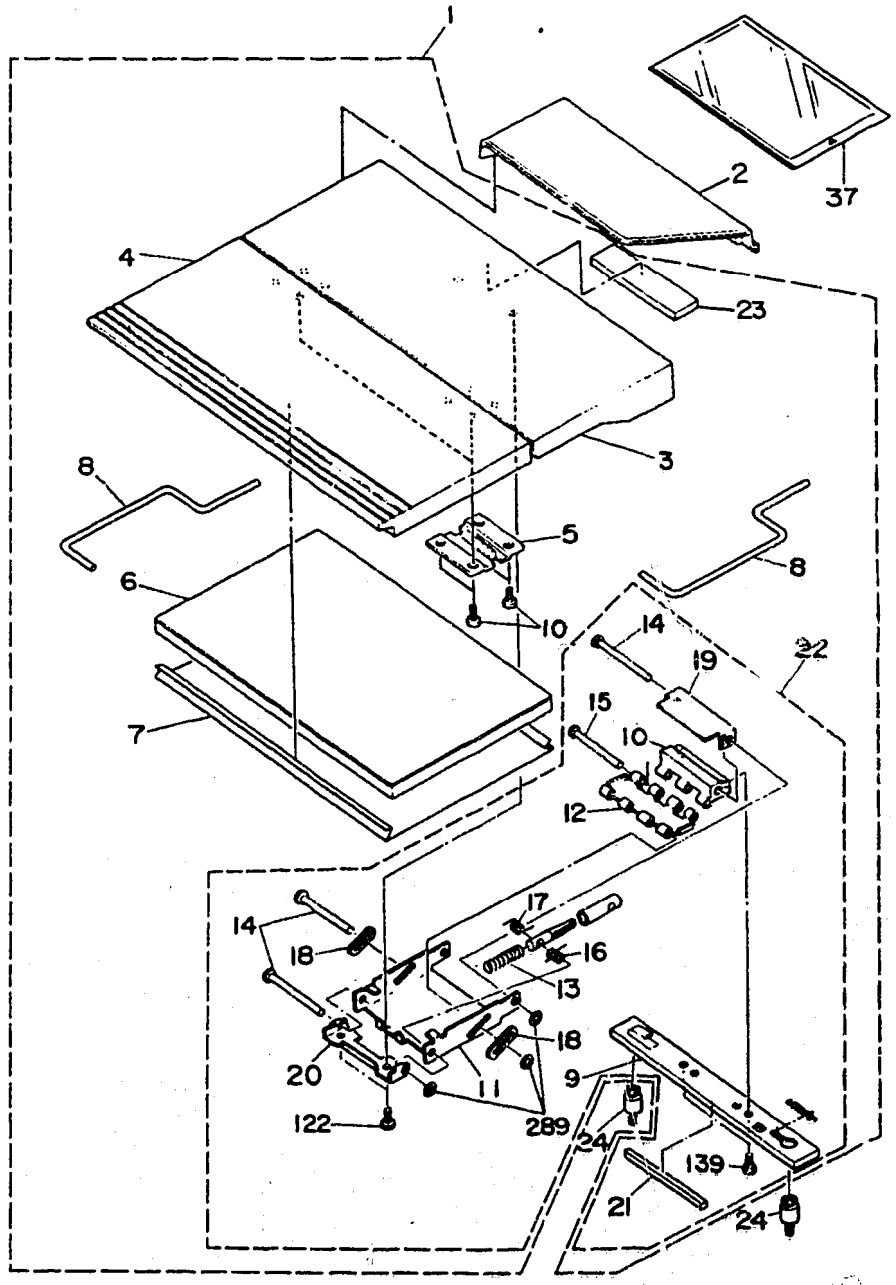

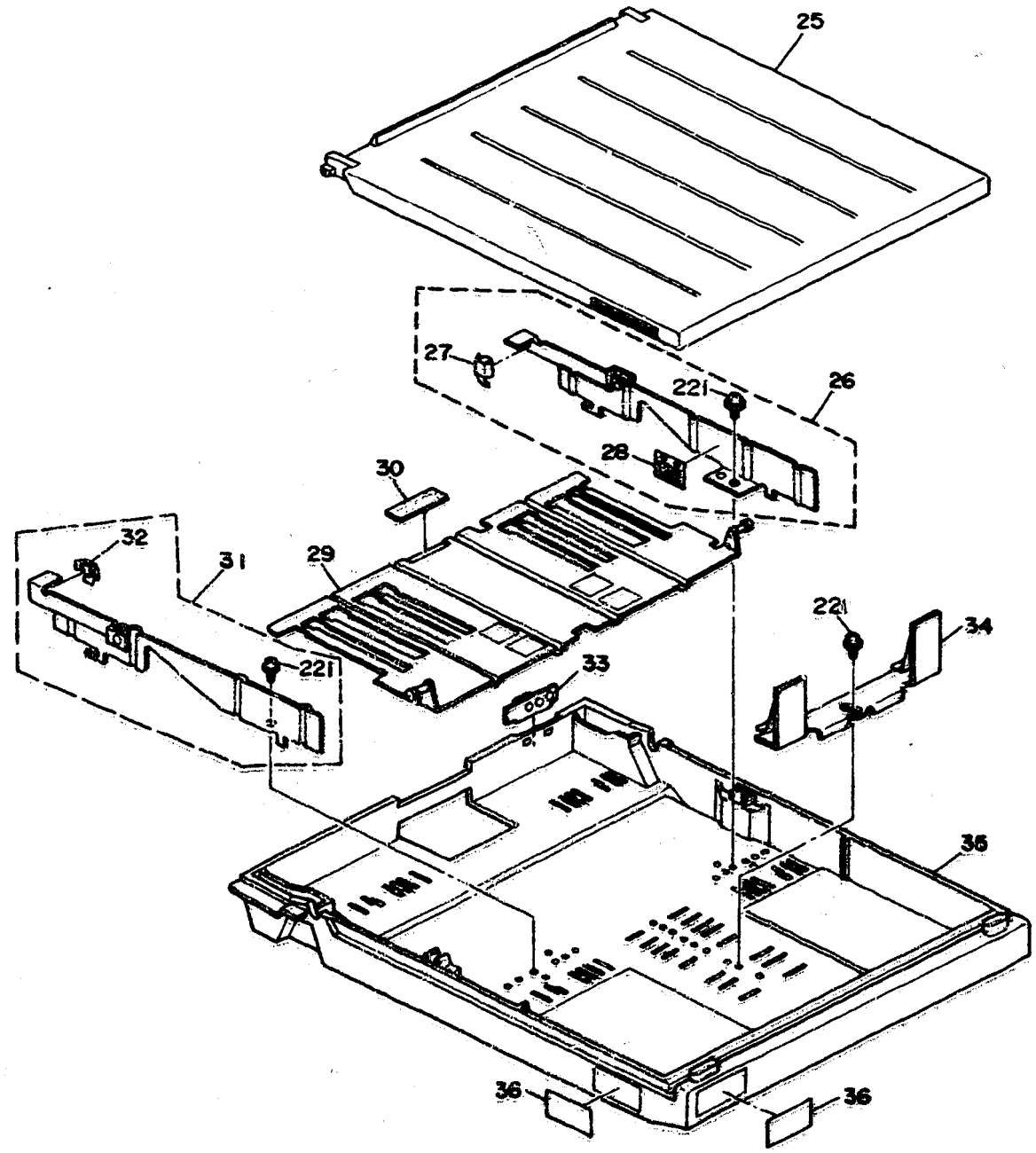

3. PLATEN COVER AND CASSETTE (A009)

Rev. 1/89

Index No.	Parts No.	Description	Q'ty Per Assembly
1	AC001006	Platen Cover Ass'y	1
2	AG021001	Original Holder	1
3	52112800	Rear Platen Cover	1
4	A0081666	Front Platen Cover	1
5	54482824	Flex Hinge - Platen Cover	1
6	54482803	Pad - Platen Cover	1
7	A4069505	Platen Cover Sheet - 10sheet/set	1
8	54482806	Platen Cover Arm	2
9	A0081676	Mounting Bracket - Platen Cover	1
10	52152833	Base Holder	1
11	52152834	Arm Holder	2
12	52152835	Crank	1
13	52152839	Balancer Spring	1
14	52152840	Pin - 4 x 115 mm	1
15	52152841	Pin - 4 x 100 mm	1
16	52152842	Right Spring - Platen Cover	1
17	52152843	Left Spring - Platen Cover	1
18	52152844	Slide Supporter	2
19	52152845	Plate Magnet	1
20	52152846	Platen Base	1
21	54421657	Seal - 15 x 214 x 13	1
22	A0081675	Platen Cover Hinge Ass'y	1
23	52152838	Rubber Magnet	1
24	AA143026	Stud - Platen Cover Mounting	2
25	A0082734	Large Cassette Cover	1
	A0082737	Small Cassette Cover	1
26	A0082727	Side Fence - Rear	1
27	52152731	Rear Side Holder	1
28	AA002010	Decal - Paper Level	1
29	A0082710	Bottom Plate	1
30	52152713	Bottom Plate Pad	1
31	52152716	Front Side Fence	1
32	52152720	Front Side Holder	1
33	52052960	Actuator - A3	1
	52052961	Actuator - B4	1

Index No.	Parts No.	Description	Q'ty Per Assembly
33	52052962	Actuator - A4R	1
	52052963	Actuator - A5R	1
	52052964	Actuator - A4	1
	52052965	Actuator - B5	1
	52052966	Actuator - A5	1
	52052967	Actuator - A5R	1
	52052968	Actuator - B6	1
	52052969	Actuator - A6R	1
	52052970	Actuator - LG	1
	52052971	Actuator - 11" x 17"	1
	52052972	Actuator - 11" x 15"	1
	52052973	Actuator - 11" x 14"	1
	52052974	Actuator - 8-1/2 x 13"	1
	52052975	Actuator - 8-1/4 x 13"	1
	52052976	Actuator - 8 x 13	1
	52052977	Actuator - 8 x 10-1/2	1
	52052978	Actuator - 8 x 10	1
	52052979	Actuator - 11 x 8-1/2	1
	52052992	Actuator - 5-1/2 x 8-1/2	1
	52052993	Actuator - 8-1/2 x 5	1
	52052996	Actuator - 8-1/2 x 11R	1
	52052997	Actuator - 8-1/2 x 14	1
34	AF017001	Rear Fence	1
35	AF010001	Large Cassette Body	1
	AF010002	Small Cassette Body	1
36	AA002015	Decal Sheets - Small - LT/LDG	1
	AA002017	Decal Sheets - Large - LT/LDG	1
			1
			1
	AA002007	Decal - A3	1
	AA002008	Decal - A4 Lengthwise	1
	AA002009	Decal - A4	1
37	A0088999	Editing Sheet - LT	1
	A0088998	Editing Sheet - A4	1

Index No.	Parts No.	Description	Q'ty Per Assembly
122	03150080W	Philips Pan Head Screw - M5 x 8	
139	04140102B	Tapping Screw - M4 x 10	
221	09644010W	Philips Screw with Flat Washer - M4 x 10	
289	08050083	Retaining Ring - M4	

Index No.	Parts No.	Description	Q'ty Per Assembly

4. 1ST AND 2ND PAPER FEED (A009)

Rev. 1/89

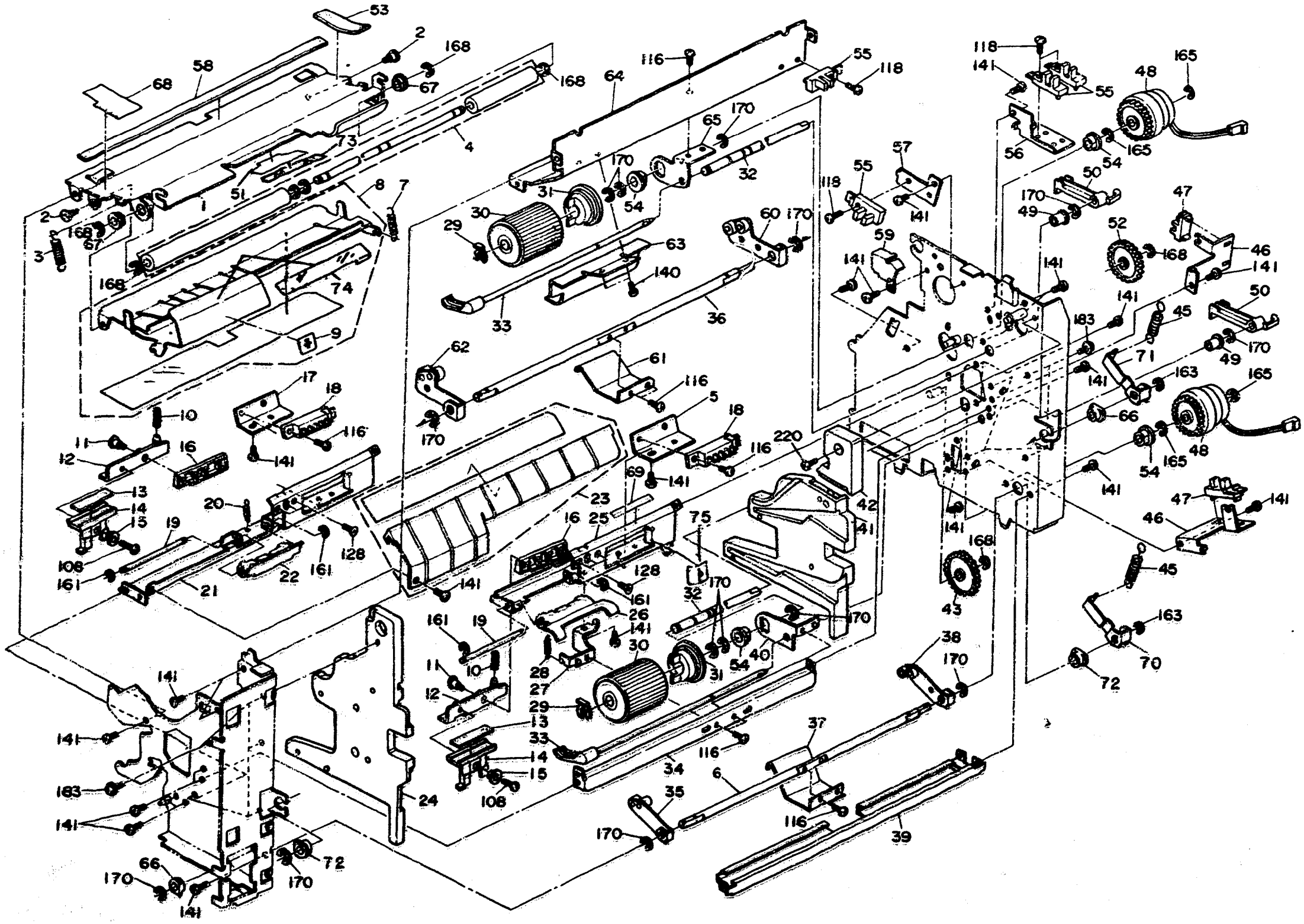

4. 1ST AND 2ND PAPER FEED (A009)

Rev. 1/89

Index No.	Parts No.	Description	Q'ty Per Assembly
1	A0082602	Upper Guide Plate	1
2	54032075	Stepped Screw	2
3	54422693	Front Spring - Middle Guide	1
4	A0082604	Feed Roller	1
5	A0092756	Upper Size Sensor Bracket	1
● 6	A0242580	Shaft – Lower Paper Feed	1
7	54422692	Rear Spring - Middle Guide	1
8	A0082616	Middle Guide Plate	1
9	AA001051	Decal - Middle Guide	1
10	52152644	Spring - Friction Pad	2
11	54422642	Shoulder Screw - M3	2
12	A0082555	Arm Pad Ass'y	2
13	52162844	Friction Pad	2
14	A0082583	Pad Holder	2
15	AA132014	Collar - Friction Pad Arm	2
16	A0092798	Fixing Pad Bracket	2
17	A0092806	Lower Size Sensor Bracket	2
18	AW500001	Paper Size Switch	2
19	52152579	Shaft	2
20	52152644	Spring - Friction Pad	1
21	52152674	Lower Pad Mounting Plate	1
22	A0092795	Lower Arm	1
23	A0092612	Lower Guide Plate	1
● 24	A0242655	Front Cassette Holder	1
25	52152629	Upper Pad Mounting Plate	1
26	A0082578	Upper Arm	1
27	52152580	Spring Anchor	1
28	52152582	Spring	1
29	52152621	Snap Ring - M6	2
30	52152619	Feed Roller	2
31	52152618	Feed Roller Hub	2
32	A0092752	Feed Shaft	2
33	52152624	Paper End Feeder	2
34	A0082569	Lower Paper Feed Stay	1
● 35	A0242575	Lower Front Arm	1
36	AA140041	Shaft	1
37	A0092807	Lower Lift Arm	1
● 38	A0242577	Lower Rear Arm	1
● 39	A0242579	Lower Paper Feed Stay	1
40	52152630	Lower Feed Shaft Bracket	1
● 41	A0242656	Rear Cassette Holder	1
● 42	A0242658	Manual Feed Guide	1
43	54462862	Gear - 36T	1
● 44	A0082663	Pressure Arm	2
● 45	AA060080	Spring - Lower Lift	2
46	A0092758	Paper End Sensor Bracket	2
47	AW020006	Photointerruptor - EE-SX460-P2	2
48	AX210004	Paper Feed Clutch	2
49	54432668	Bushing	2
50	A0082626	Paper End Actuator	2
51	52152605	Feed Roller Guide	1
52	52152597	Idle Gear - 30T	1
53	52153203	Seal - 1 x 10 x 60mm	1
54	50530223	Bushing - 8mm	2
55	52055250	LED Sensor Type S	4
56	52153381	Sensor Bracket	1
57	52153481	Sensor Bracket	1
58	52153204	Seal - 4 x 10 x 370mm	1
59	52153482	Sensor Cover	1
60	A0082652	Upper Rear Arm	1
61	A0092757	Upper Lift Arm	1
62	A0082648	Upper Front Arm	1
63	52152600	Upper Feed Guide Plate	1
64	52152570	Upper Paper Feed Stay	1
65	52152622	Upper Feed Shaft Bracket	1
● 66	52152662	Bushing	4
67	50530447	Bushing - M6	2
68	52153201	Mylar Seal - Front Upper Guide	1
69	A0082574	Upper Guide	1

• NOTE: REFER TO LAST FRAME OF CATALOG FICHE.

Index No.	Parts No.	Description	Q'ty Per Assembly
• 70	A0242573	Pressure Arm	1
• 71	A0082664	Pressure Arm	1
• 72	52031190	Bushing – 8x10x4mm	2
73	A0242707	Seal – 9.5x75mm	1
74	A0242706	Seal – 15x143mm	1
75	A0092906	Connector Seal – 1st And 2nd Paper Feed	1
108	03130120W	Philips Pan Head Screw - M3 x 12	
116	03140080W	Philips Pan Head Screw - M4 x 8	
118	03140120W	Philips Pan Head Screw - M4 x 12	
128	03230080W	Philips Sunken Head Screw - M3 x 8	
140	04340060W	Tapping Screw - M4 x 6	
141	04340080W	Tapping Screw - M4 x 8	
161	07200025E	Retaining Ring - M2.5	
163	07200030E	Retaining Ring - M3	
165	07200040E	Retaining Ring - M4	
168	07200050E	Retaining Ring - M5	
170	07200060E	Retaining Ring - M6	
183	08025085	Tapping Screw - M4 x 8	
220	09644008W	Tapping Screw with Flat Washer - M4 x 8	

Index No.	Parts No.	Description	Q'ty Per Assembly

• NOTE: REFER TO LAST FRAME OF CATALOG FICHE.

5. 3RD PAPER LIFT (A009)

Rev. 2/91

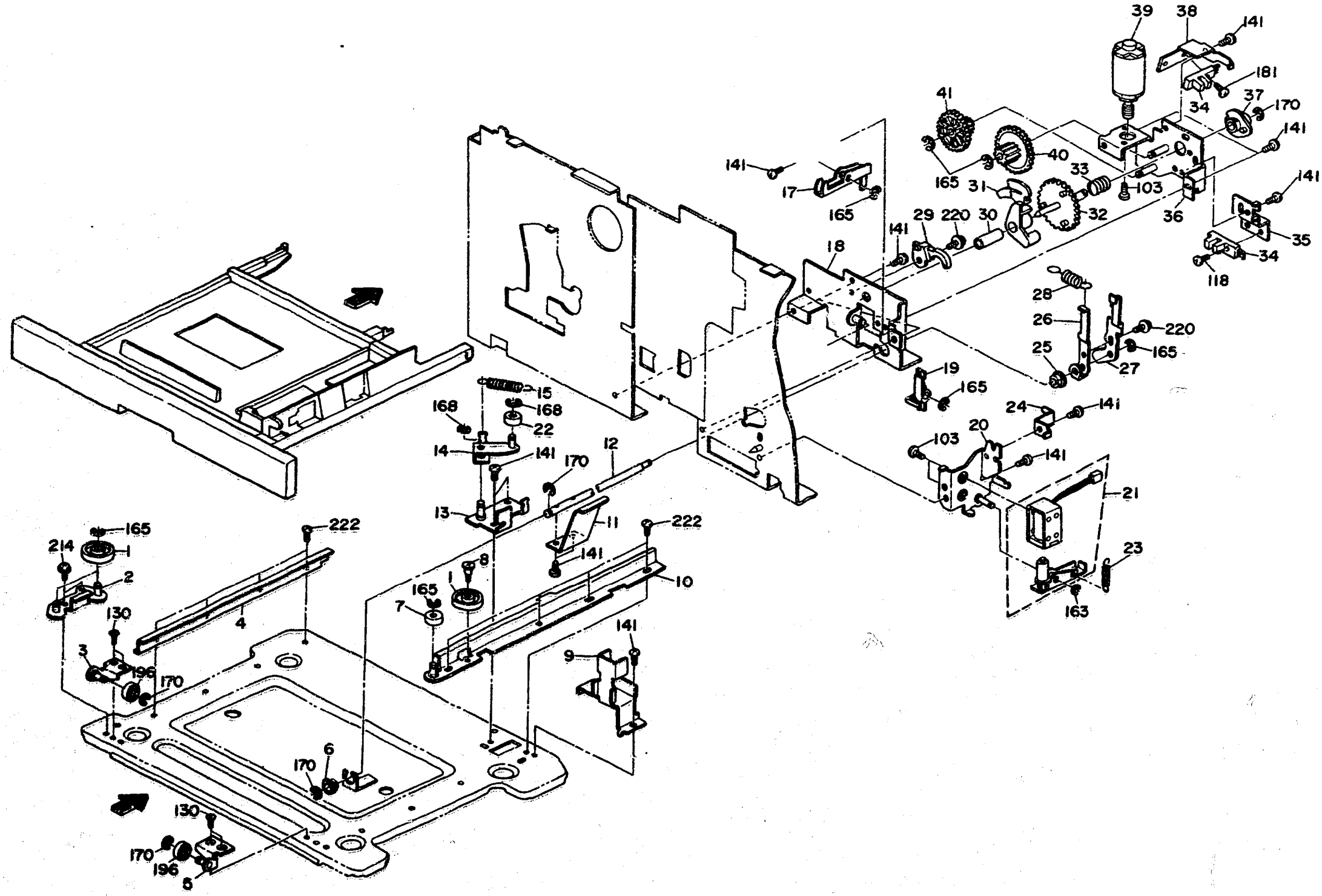

5. 3RD PAPER LIFT (A009)

Rev. 2/91

Index No.	Parts No.	Description	Q'ty Per Assembly
1	A0092824	Guide Roller	1
2	A0092821	Guide Roller Bracket - Middle Left	1
3	A0092817	Guide Roller Bracket - Front Left	1
4	A0092622	Left Guide - Cassette Holder	1
5	A0092812	Guide Roller Bracket - Front Right	1
6	50530223	Bushing - 8mm	1
7	67542866	Roller - Positioning Guide	1
8	54082035	Stepped Screw - M4	1
9	A0095809	Harness Support Plate	1
10	A0092619	Right Guide - Cassette Holder	1
11	A0092654	3rd Lift Arm	1
12	A0092651	Lift Shaft - Bottom Plate	1
13	A0092722	Click Bracket	1
14	A0092725	Click Lever	1
15	52044694	Spring	1
16			1
17	A0092644	Stopper Lever	1
18	A473 2636	Lift Motor Bracket	1
19	A0092646	Release Lever	1
20	A0092661	Lock Solenoid Bracket	1
21	A0092666	Holder Lock Solenoid	1
22	58874400	Guide Roller - Driven Unit	1
23	AA060054	Spring - Lock Solenoid	1
24	A0092664	3rd Feed Clutch Stopper	1
25	AA080027	Bushing	1
26	A0092652	Pressure Arm	1
27	A0092653	Stopper Release Lever	1
28	52152665	Spring - Lower Lift	1
29	A0092645	Lift Lever Guide	1
30	A0092640	Guide - Sleeve	1
31	A0092639	Lift Motor Lever	1
32	A0092634	Gear Ass'y - 45T	1
33	54472812	Slide Gear Spring	1
34	A0095520	Photointerruptor	2
35	A0092648	Set Sensor Bracket	1
36	A0092632	Tray Lift Bracket	1
37	54472805	Slide Pin Holder	1
38	A0092647	Lift Sensor Bracket	1
39	54475430	Lift Motor - DC 0.98W	1
40	54472806	Gear - 15T & 40T	1
41	54472804	Gear - 15T	1
103	03130050W	Philips Pan Head Screw - M3 x 5	
118	03140120W	Philips Pan Head Screw - M4 x 12	
130	03240060W	Philips Sunken Head Screw - M4 x 6	
141	04340080W	Tapping Screw - M4 x 8	
163	07200030E	Retaining Ring - M3	
165	07200040E	Retaining Ring - M4	
168	07200050E	Retaining Ring - M5	
170	07200060E	Retaining Ring - M6	
181	08011179	Philips Screw with Toothed Washer	
196	08053270	Ball Bearing - 8 x 16 x 5mm	
214	09514006W	Philips Screw with Flat Washer - M4 x 6	
220	09644008W	Tapping Screw with Flat Washer - M4 x 8	
222	09644014W		

6. CASSETTE TRAY (A009)

Rev. 1/89

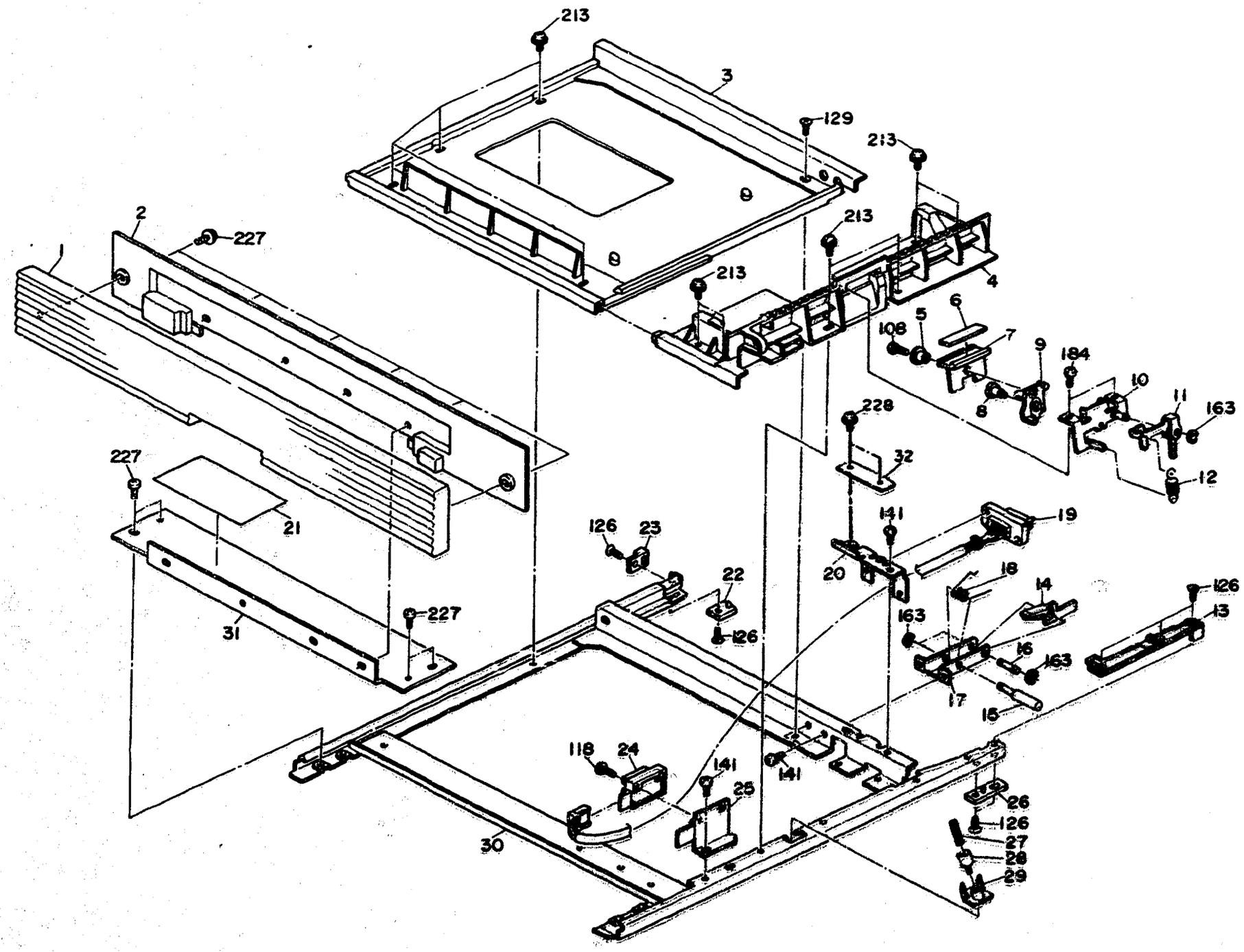

6. CASSETTE TRAY (A009)

Index No.	Parts No.	Description	Q'ty Per Assembly
1	A0091390	Cover – Paper Feed	1
2	A0091398	Inner Cover - Cassette Tray	1
3	A0092580	Bottom Cover - Cassette Holder	1
4	A0092579	Exit Guide - Cassette Holder	1
5	54422638	Collar - Friction Pad Arm	1
6	52162844	Friction Pad	1
7	A0092605	Pad Holder	1
8	54422642	Shoulder Screw - M3	1
9	A0092609	Friction Pad Guide	1
10	A0092606	Friction Pad Bracket	1
● 11	A0092628	Release Lever - Friction Pad	1
● 12	AA060117	Spring	1
13	A0092581	Right Upper Guide - Cassette Holder	1
14	A0092588	Release Lever - 3rd Cassette	1
15	A0092589	Stopper Shaft	1
16	A0092590	Pressure Release Shaft	1
17	A0092587	Stopper Bracket - Cassette Holder	1
18	A0092592	Spring - Pressure Release Lever	1
19	A0096272	Paper Size Switch Harness	1
20	A0092595	Connector Bracket - Size Switch	1
21	A0092626	Decal - Cassette Tray	1
22	A0092584	Left Lower Guide - Cassette Holder	1
23	A0092582	Left Upper Guide - Cassette Holder	1
24	A0096521	Photointerruptor	1
25	A0092597	Paper Size Sensor Bracket	1
26	A0092583	Right Lower Guide - Cassette Holder	1
27	52152644	Spring - Friction Pad	1
28	A0092604	Adjusting Screw - Friction	1
29	A0092603	Friction Spring - Holder	1
30	A0092572	Frame - Cassette Holder	1
31	A0092591	Front Bracket - 3rd Cassette Feed	1
32	A0092627	Cassette Stopper	1

Index No.	Parts No.	Description	Q'ty Per Assembly
108	03130120W	Philips Pan Head Screw - M3 x 12	
118	03140120W	Philips Pan Head Screw - M4 x 12	
126	03230040W	Philips Sunken Head Screw - M3 x 4	
129	03240040W	Philips Sunken Head Screw - M4 x 4	
141	04340080W	Tapping Screw - M4 x 8	
163	07200030E	Retaining Ring - M3	
184	08025086	Tapping Screw - M4 x 10	
213	09514005W	Philips Screw with Flat Washer - M4 x 5	
227	09654010W	Tapping Screw with Flat Washer - M4 x 10	
228	09644008W	Tapping Screw with Flat Washer	2

• NOTE: REFER TO LAST FRAME OF CATALOG FICHE.

7. FRAME (A009)

Rev. 1/

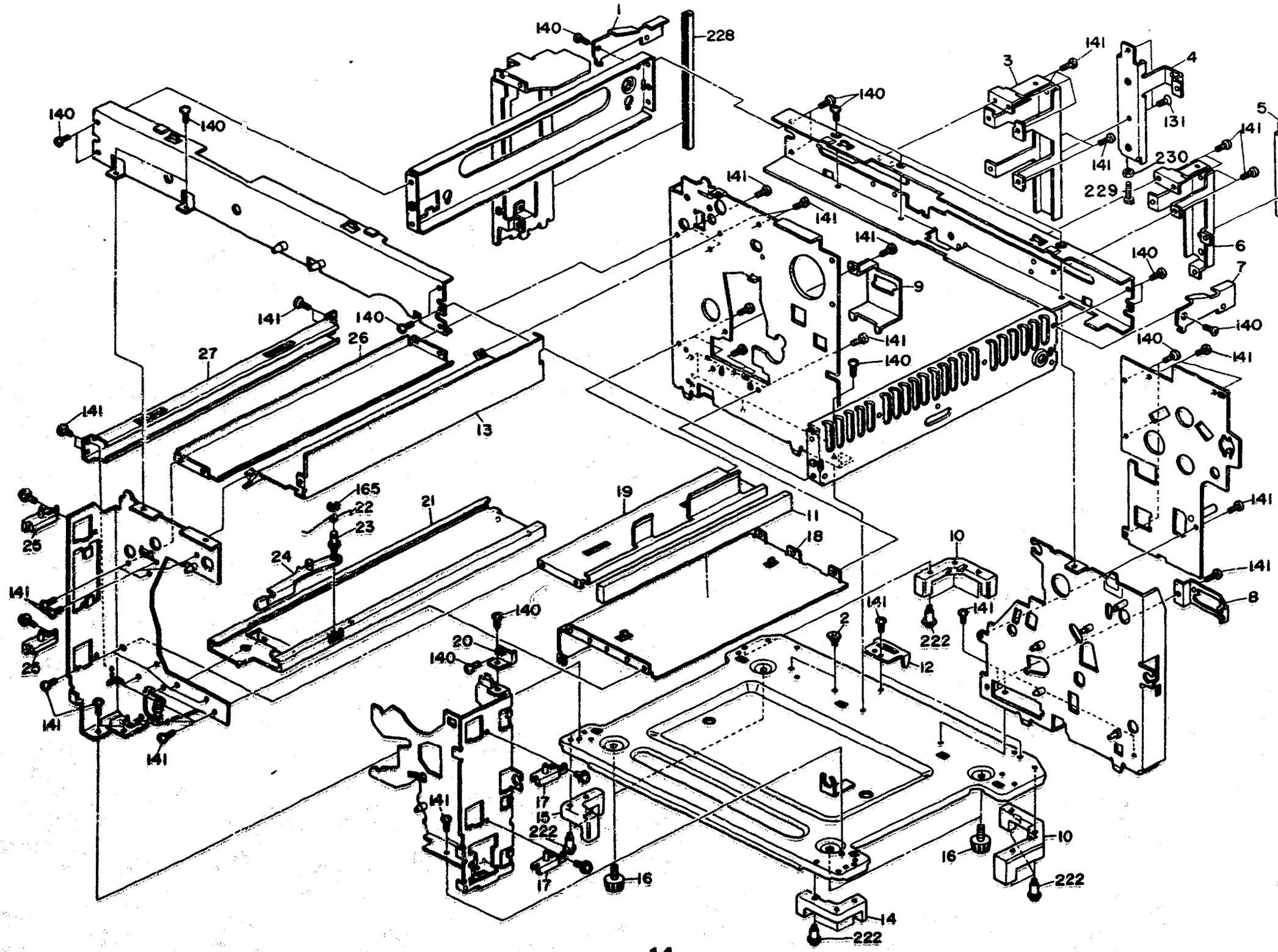

7. FRAME (A009)

Index No.	Parts No.	Description	Q'ty Per Assembly
1	A0091363	Right Cover Bracket	1
2	54032075	Stepped Screw	2
3	A0091673	Platen Cover Bracket - Left	1
4	A0091694	DF Mounting Bracket - Left	1
5	A0091675	DF Mounting Bracket - Right	1
6	A0091674	Platen Cover Bracket - Right	1
7	A0091364	Left Cover Bracket	1
8	A0092596	Connector Bracket	1
9	A0095825	Connector Bracket - Fusing Unit	1
10	A0091057	Rear Grip - Bottom Plate	2
11	AA010003	Ozone Filter - 20	1
12	A0091360	Support Plate - Rear Cover	1
13	A0091140	Shielding Plate	1
14	54421054	Right Front Grip - Bottom Plate	1
15	A0091056	Left Front Grip - Bottom Plate	1
16	54191057	Rubber Foot	4
17	A0091350	Right Hinge Pin	2
18	A0093836	Separation Plate - Left	1
19	A0091151	Receiving Tray Holder	1
20	A0091689	Joint Bracket	1
21	52154181	Fusing Unit Rail	1
22	54424186	Spring - Fusing Unit Release Lever	1
23	52154444	Pin	1
24	A0084190	Unit Lock Lever	1
25	A0091351	Left Hinge Pin	2
26	A0095819	Stay - Side Plate	1
27	52151133	Left Stay	1

Index No.	Parts No.	Description	Q'ty Per Assembly
131	03240080W	Philips Sunken Head Screw - M4 x 8	
140	04340060W	Tapping Screw - M4 x 6	
141	04340080W	Tapping Screw - M4 x 8	
165	07200040E	Retaining Ring - M4	
222	09644014W	Tapping Screw - M4 x 4	
228	10050383	Edging - B	
229	05840160B	Hexagon Bolt - M4x6 DF Hight Adjust	2
230	07100040B	Hexagon Nut - M4 DF Hight Adjust	2

8. OPTICS 1 (A009)

May 1, '87

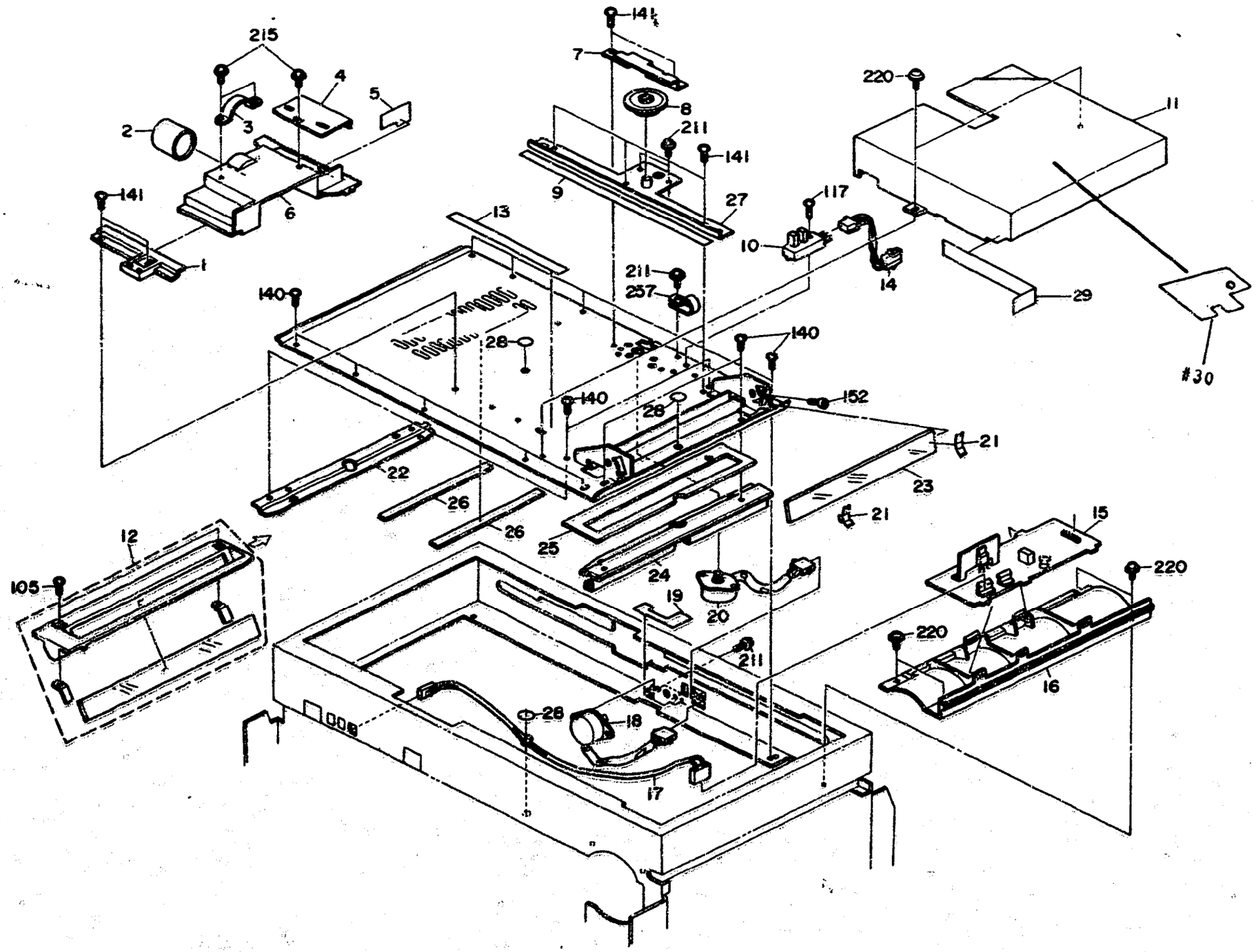

8. OPTICS 1 (A009)

Rev. 1/89

Index No.	Parts No.	Description	Q'ty Per Assembly
1	52117452	Front Guide - Lens Bracket	1
2	AC020005	Lens - F8	1
3	52111750	Lens Holder	1
4	A0091683	Sensor Shutter	1
5	A0091706	Mylar Sheet - 24 x 54mm	1
6	A0091705	Lens Housing	1
7	52117453	Rear Guide - Lens Bracket	1
8	52117444	Gear - 67T	1
9	52117492	Seal - A	1
10	52055251	LED Sensor Type - T	1
11	A0091708	4th Mirror Cover	1
12	54421825	Glass Shield	1
13	54117491	Seal - B	1
14	52117475	Sub Harness - Optics	1
15	A0096007	Lamp Regulator - 115V	1
	A0096008	Lamp Regulator - 220V	1
16	A0091657	Development Unit Cover	1
17	A0095185	Lamp Regulator Harness	1
18	AX050007	Stepper Motor - DC7.5W - 2nd Scanner	1
19	52117493	Lens Motor Seal	1
20	AX050006	Stepper Motor - DC7.5W - Lens	1
21	54421847	Spring Plate - 4th Mirror	2
22	52117451	Glass Shield Rail	1
23	54421845	4th Mirror	1
24	A0091668	Right Guide - Toner Shielding Cover	1
25	52117474	Seal - Glass Shield	1
26	A0091698	Seal - 210 x 10 x 2mm	2
27	52117441	Guide Rail - Lens Drive	1
28	52111870	Seal - M14	3
29	54421942	Film (Small) - Harness Slide	1
30	A0091704	...et - L	

Index No.	Parts No.	Description	Q'ty Per Assembly
105	03130060W	Philips Pan Head Screw - M3 x 6	
117	03140100W	Philips Pan Head Screw - M4 x 10	
140	04340060W	Tapping Screw - M4 x 6	
141	04340080W	Tapping Screw - M4 x 8	
152	09530120	Hexagon Bolt - M3 x 12	
211	09513006W	Philips Screw with Flat Washer - M3 x 6	
215	09514008W	Philips Screw with Flat Washer - M4 x 8	
220	09644008W	Tapping Screw with Flat Washer - M4 x 8	
257	11050008	Nylon Clip - 2N	

9. OPTICS 2 (A009)

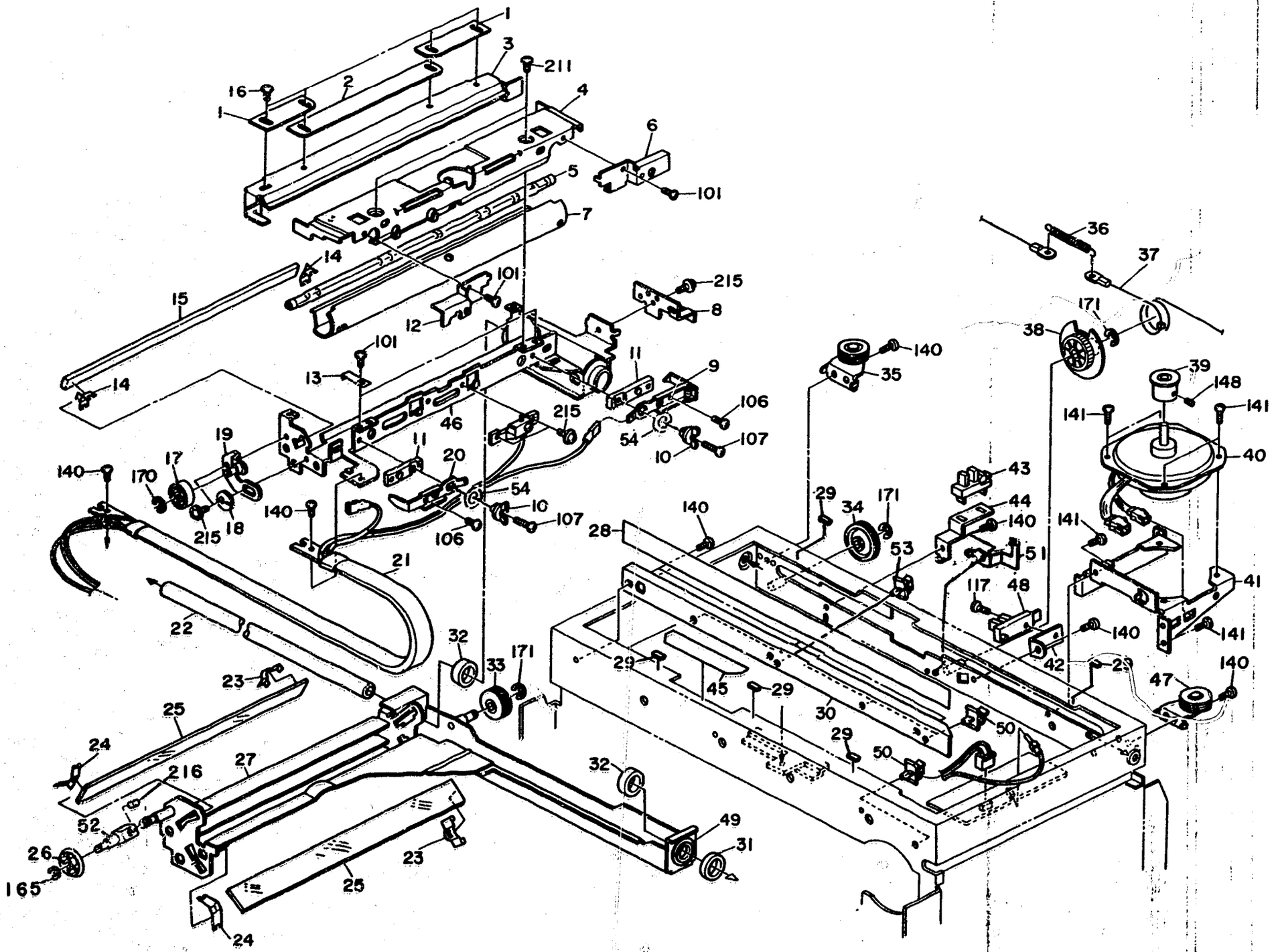

9. OPTICS 2 (A009)

Index No.	Parts No.	Description	Q'ty Per Assembly
1	54421704	Wing - Side	2
2	54421703	Wing - Center	1
3	52091704	Reflector - Aid	1
4	52151691	Reflector Cover	1
5	52155303	Exposure Lamp - 85V/250W	1
6	52111725	Rear Cover - Lamp Terminal	1
7	52151696	Main Reflector	1
8	A0091686	Wire Stopper Plate	1
9	52111721	Exposure Lamp Terminal - Release	1
10	52111702	Lamp Terminal Spacer	2
11	52111701	Lamp Terminal Insulator	2
12	52111726	Front Cover - Lamp Terminal	1
13	54091705	Reflector Clamp	1
14	54421711	Spring Plate - 1st Mirror	2
15	52111710	1st Mirror	1
16	54421702	Small Screw - M3	1
● 17	A0081704	Guide Roller - 1st Scanner	1
● 18	52051694	Adjusting Cam - Start Lever	1
● 19	A0091712	Guide Roller Bracket - 1st Scanner	1
20	52111724	Exposure Lamp Terminal - Fix	1
21	A0095180	Optics Harness	1
22	A0091656	Scanner Guide Rod	1
23	54421741	Rear Spring Plate - 2nd and 3rd Mirror	2
24	54421742	Front Spring Plate - 2nd and 3rd Mirror	2
25	52111742	2nd Mirror	2
● 26	A0081704	Guide Roller - 1st Scanner	1
● 27	A0241721	2nd Scanner	1
28	52111969	Lamp Terminal Sheet	1
29	AA161033	Cushion - 20x5x1mm	5
30	A0091692	Front Scanner Guide	1
31	54421864	Cushion - Guide Rod	1
32	54421748	Cleaner - Guide Rod	2
33	52091735	Pulley	1
34	52111734	Idle Pulley	1
35	52091870	Left Pulley	1

Index No.	Parts No.	Description	Q'ty Per Assembly
36	52111890	Spring - Scanner Drive Wire	1
37	52117461	Scanner Drive Wire	1
38	52117464	Pulley - 2nd Scanner Position	1
39	A0091662	Scanner Motor Pulley	1
40	AX060004	Scanner Motor - DC50W	1
41	A0091658	Scanner Motor Bracket	1
42	52117460	Bracket - 2nd Scanner Home Sensor	1
43	AW020006	Photointerruptor - EE-SX460-P2	1
44	A0091682	Scanner Home Sensor Bracket	1
45	54421950	Seal - Glass	1
● 46	52091695	Bracket - 1st Scanner	1
47	52091875	Right Pulley	1
48	52055251	LED Sensor Type - T	1
49	A0321733	Bushing - 2nd Scanner	1
50	11050095	Harness Clamp - 6.5 mm	5
51	A0241615	Scanner Wire Stopper	1
52	A0241650	2nd Scanner Shaft	1
53	11050094	Harness Clamp - 5.3mm	1
54	A0241719	Spacer - 7.5x12x0.5mm	2
101	03130040W	Philips Pan Head Screw - M3 x 4	
106	03130080W	Philips Pan Head Screw - M3 x 8	
107	03130100W	Philips Pan Head Screw - M3 x 10	
117	03140100W	Philips Pan Head Screw - M4 x 10	
140	04340060W	Tapping Screw - M4 x 6	
141	04340080W	Tapping Screw - M4 x 8	
148	05740060E	Hexagon Headless Set Screw - M4 x 6	
165	07200040E	Retaining Ring - M4	
170	07200060E	Retaining Ring - M6	
171	07200070E	Retaining Ring - M7	
211	09513006W	Philips Screw with Flat Washer - M3 x 6	
● 215	09514006W	Philips Screw with Flat Washer - M4 x 6	
● 216	05740040E	Hexagon Headless Set Screw - M4x4	1

● NOTE: REFER TO LAST FRAME OF CATALOG FICHE.

10. AROUND DRUM (A009)

Rev. 1

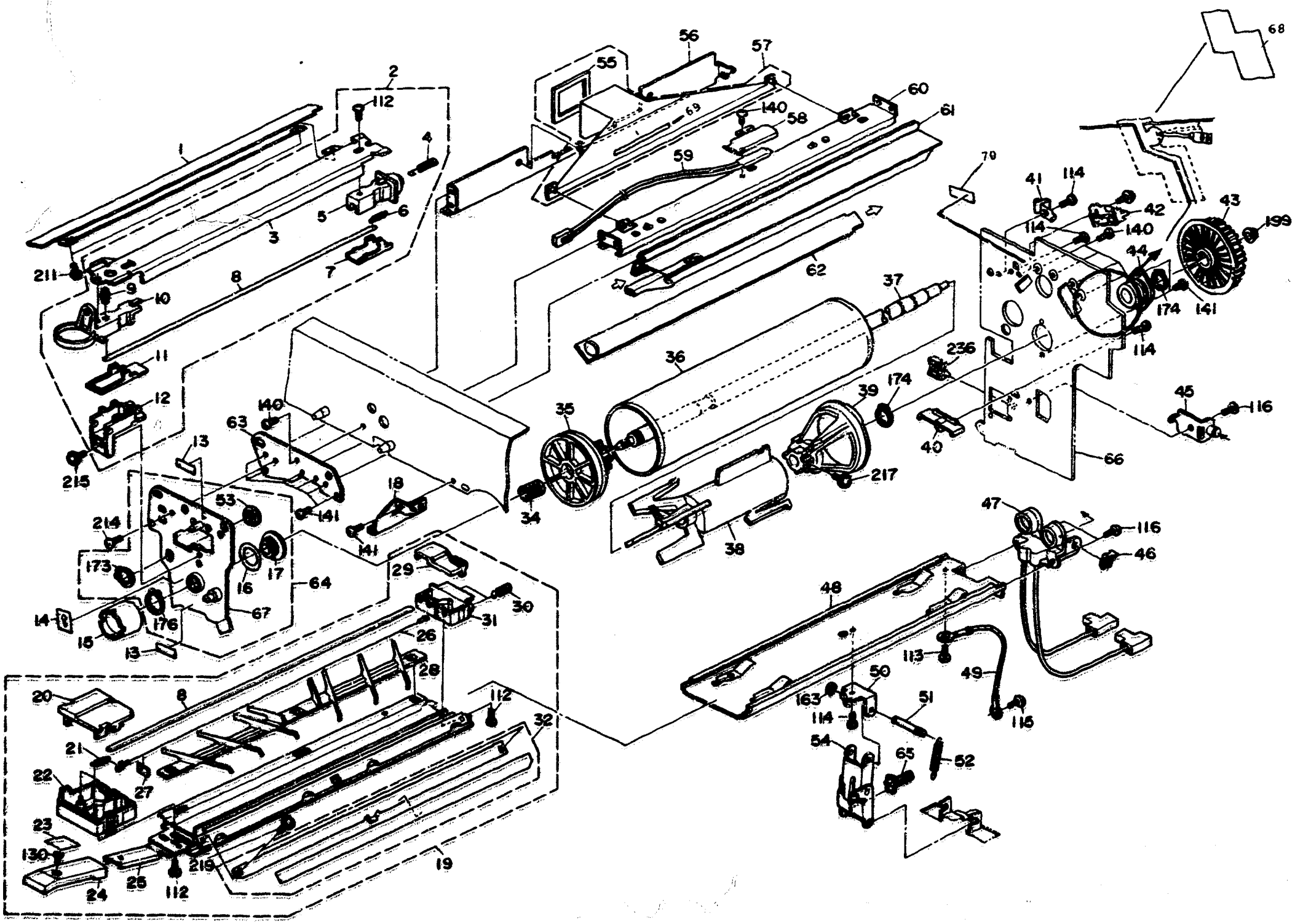

10. AROUND DRUM (A009)

Index No.	Parts No.	Description	Q'ty Per Assembly
1	AX500014	Quenching Lamp	1
2	A0004010	Main Corona Unit	1
3	A0023013	Main Corona Unit Casing	1
4	A0024002	Terminal Spring	1
5	A0022046	Rear End Block - Main Corona	1
6	AA060048	Spring - Charge Wire	1
7	A0022047	Rear Cover - Main Corona	1
8	54429003	Main Corona Wire (10 pcs/set)	2
9	A0022049	Adjusting Screw	1
10	A0022043	Front End Block - Main Corona	1
11	A0022048	Front Cover - Main Corona	1
12	A0022044	Cleaner - Main Corona Wire	1
13	54347916	High Voltage Decal	2
14	52152315	Decal - Drum Knob	1
15	52112267	Drum Shaft Knob	1
16	52112259	Spacer - M20 x 0.1	1
17	52112365	Bushing - 12 x 19 x 11mm	1
18	A0091687	Aid Guide - Development Unit	1
19	AD004053	T&S Crona Unit	1
20	A0022041	Front End Block Cover - T&S Corona	1
21	54422108	Spring Corona Wire	1
22	A0022039	Front End Block - T&S Corona	1
23	A0092341	Decal - T&S Corona	1
24	A0092331	T&S Corona Lever	1
25	A0023012	T&S Corona Unit Casing	1
26	54429004	T&S Corona Wire	1
27	A0092345	Pad - 10 x 8 x 1mm	1
28	A0322321	T&S Corona Guide	1
29	A0022042	Rear End Block Cover - T&S Corona	1
30	52053821	Terminal Spring	1
31	A0022040	Rear End Block - T&S Corona	1
32	A0323860	T&S Corona Guide Plate	1
33	Not used		
34	52112278	Drum Flange Spring	1
35	54472257	Front Drum Flange	1
36	54429510	Selenium Drum	1
37	A0015001	Drum Shaft	1
38	54472286	Drum Guide	1
39	52112285	Rear Flange	1
40	52053872	Rear Bracket - T&S Corona	1
41	52052121	Spring Plate	1
42	54425821	Connector Holder - 2nd Quenching	1
43	A0092405	Timing Pulley - 48T	1
44	AA082005	Bushing - Drum Shaft	1
45	52152131	T&S Corona Holder	1
46	54472681	Snap Ring	1
47	A0092290	T&S Receptacle	1
48	A0092260	T&S Corona Rail	1
49	52155371	Grounding Wire	1
50	A0092273	Release Link Bracket	1
51	A0092274	Release Link Shaft	1
52	A0092280	Release Link Spring	1
53	54423585	Bushing	1
54	A0092275	Release Link - T&S Corona	1
55	52052063	Seal - Duct	1
56	A0092055	Cleaning Unit Rail	1
57	A0092151	Duct - Main Corona	1
58	A0092080	Heater Cover	1
59	A0095246	Drum Heater	1
60	A0092052	Main Corona Unit Rail	1
61	A0092075	Erase Lamp Guide	1
62	A0095210	Erase Lamp	1
63	A0092073	Front Drum Support	1
64	A0092419	Drum Stay Ass'y	1
65	A0092281	Stopper - T & S Holder	1
66	A0092360	Rear Drum Support	1
67	A0092420	Drum Stay Plate	1
68	A0092833	Shield Seal	
69	A0092060	Seal - 10 X 140	
70	54347916	Decal — High Voltage	
71	A0091688	Stopper Plate	1

• NOTE: REFER TO LAST FRAME OF CATALOG FICHE.

Index No.	Parts No.	Description	Q'ty Per Assembly
112	03140050M	Philips Pan Head Screw - M4 x 5	
113	03140060M	Philips Pan Head Screw - M4 x 6	
114	03140060M	Philips Pan Head Screw - M4 x 6	
115	03140080M	Philips Pan Head Screw - M4 x 8	
116	03140080M	Philips Pan Head Screw - M4 x 8	
130	03240060M	Philips Sunken Head Screw - M4 x 6	
140	04340060M	Tapping Screw - M4 x 6	
141	04340080M	Tapping Screw - M4 x 8	
163	07200030E	Retaining Ring - M3	
173	07250100E	Retaining Ring C - M10	
174	07250120E	Retaining Ring C - M12	
176	07250180E	Retaining Ring C - M18	
199	08053383	Bushing - M5	
211	09513006M	Philips Screw with Flat Washer - M3 x 6	
214	09514006M	Philips Screw with Flat Washer - M4 x 6	
215	09514008M	Philips Screw with Flat Washer - M4 x 8	
217	09514012M	Philips Screw with Flat Washer - M4 x 12	
219	09533006M	Philips Screw with Flat Washer - M3 x 6	
236	11050196	Harness Clamp	

Index No.	Parts No.	Description	Q'ty Per Assembly

11. CLEANING UNIT (A009)

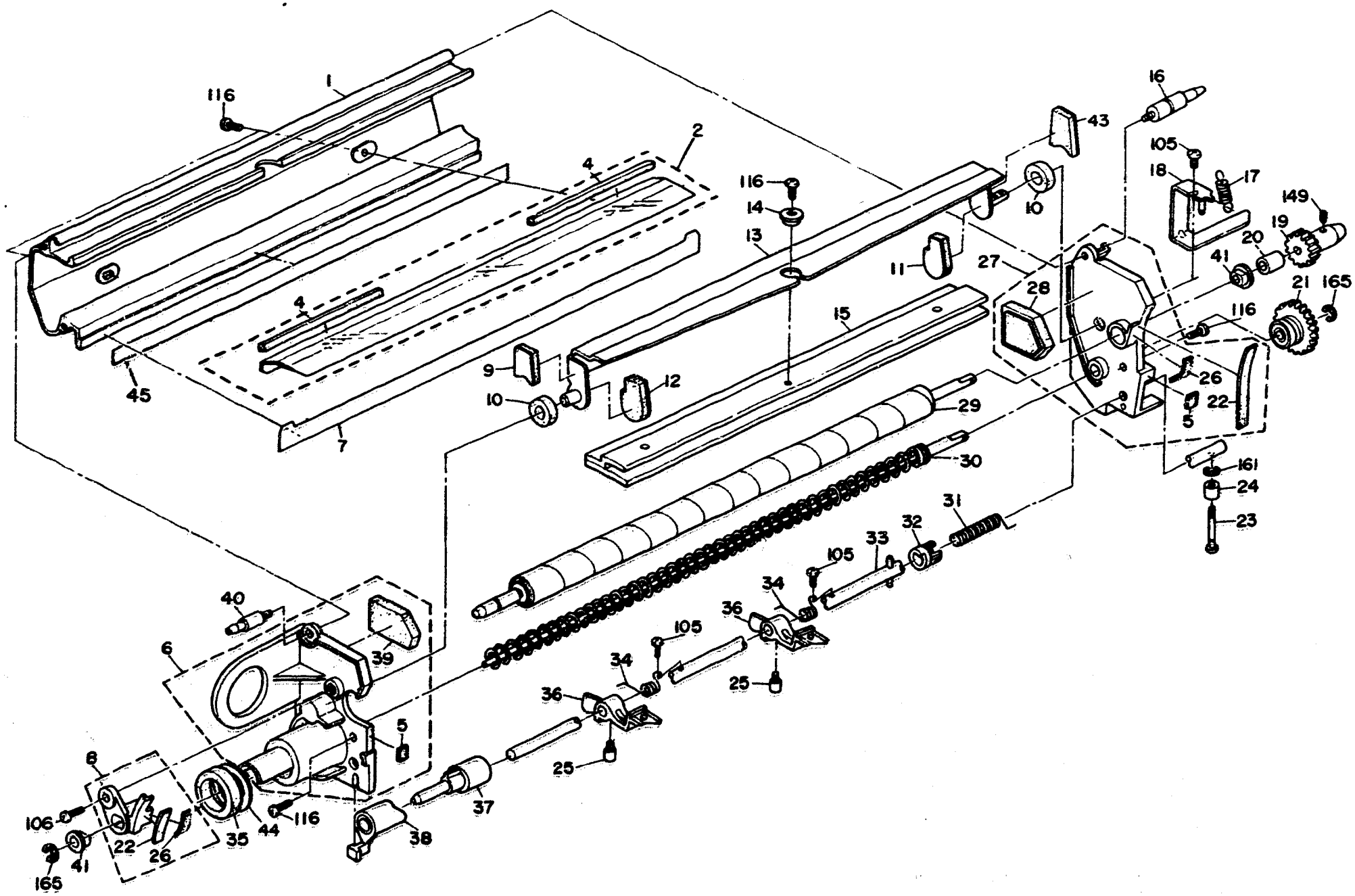

11. CLEANING UNIT (A009)

Index No.	Parts No.	Description	Q'ty Per Assembly
*	A0093550	Cleaning Unit	1
1	A0093551	Cleaning Unit Casing	1
2	A0093585	Blade Cleaner	1
4	AA151150	Seal - 2x12x64mm	2
5	52153555	Rubber Seal - Cleaning Small	2
6	A0093552	Front Side Plate - Cleaning	1
7	52159003	Seal Cleaning Unit	1
8	A0093561	Bushing Holder	1
9	52053602	Seal - Front Outer	1
10	54423593	Seal - Cleaning Blade Shaft	2
11	52053605	Seal - Rear Inner	1
12	52053604	Seal - Front Inner	1
13	52053575	Cleaning Blade Holder	1
14	54423570	Shoulder Sleeve	1
15	A0093565	Cleaning Blade	1
16	52053583	Rear Guide Pin - Cleaning	1
17	54182859	Spring - Regist Roller (Front)	1
18	52053617	Pressure Arm	1
19	52053582	Gear - 15T	1
20	54204193	Collar - Pressure Cam	1
21	A8017036	Gear - 33T	1
22	A0093598	Side Seal	2
23	A0093689	Actuator - Pick-off Pawl	1
24	54182116	Spacer - Guard	1
25	52053966	Set Screw	2
26	A0093599	Brush Seal	2
27	A0093558	Rear Side Plate - Cleaning	1
28	AA151381	Seal - Blade Rear	1
29	52153582	Cleaning Brush	1
30	A0093606	Toner Collection Coil	1
31	54423904	Spring - Pick-off Pawl Slide	1
32	52053981	Collar	1
33	52053958	Pick-off Pawl Shaft	1
34	AA066016	Spring - Pick-off Pawl	2
*35	A0093680	Sheel - 19 x 36 x 10mm	1
36	AD025009	Pick-off Pawl	2
37	52053975	Cam	1
38	52053950	Cam	1
39	AA151380	Seal - Blade Front	1
40	52053673	Setting Pin	1
41	54463707	Bushing - 6 x 10 x 6mm	2
43	52053603	Seal - Rear Outer	1
44	A0093620	Toner Seal - Cleaning	1
45	AA150064	Seal - 13x330mm	1
105	03130060W	Philips Pan Head Screw - M3 x 6	
106	03130080W	Philips Pan Head Screw - M3 x 8	
116	03140080W	Philips Pan Head Screw - M4 x 8	
149	05740080E	Hexagon Headless Set Screw - M4 x 8	
161	07200025E	Retaining Ring - M2.5	
165	07200040E	Retaining Ring - M4	

12. DEVELOPMENT UNIT (A009)

Rev. 10/90

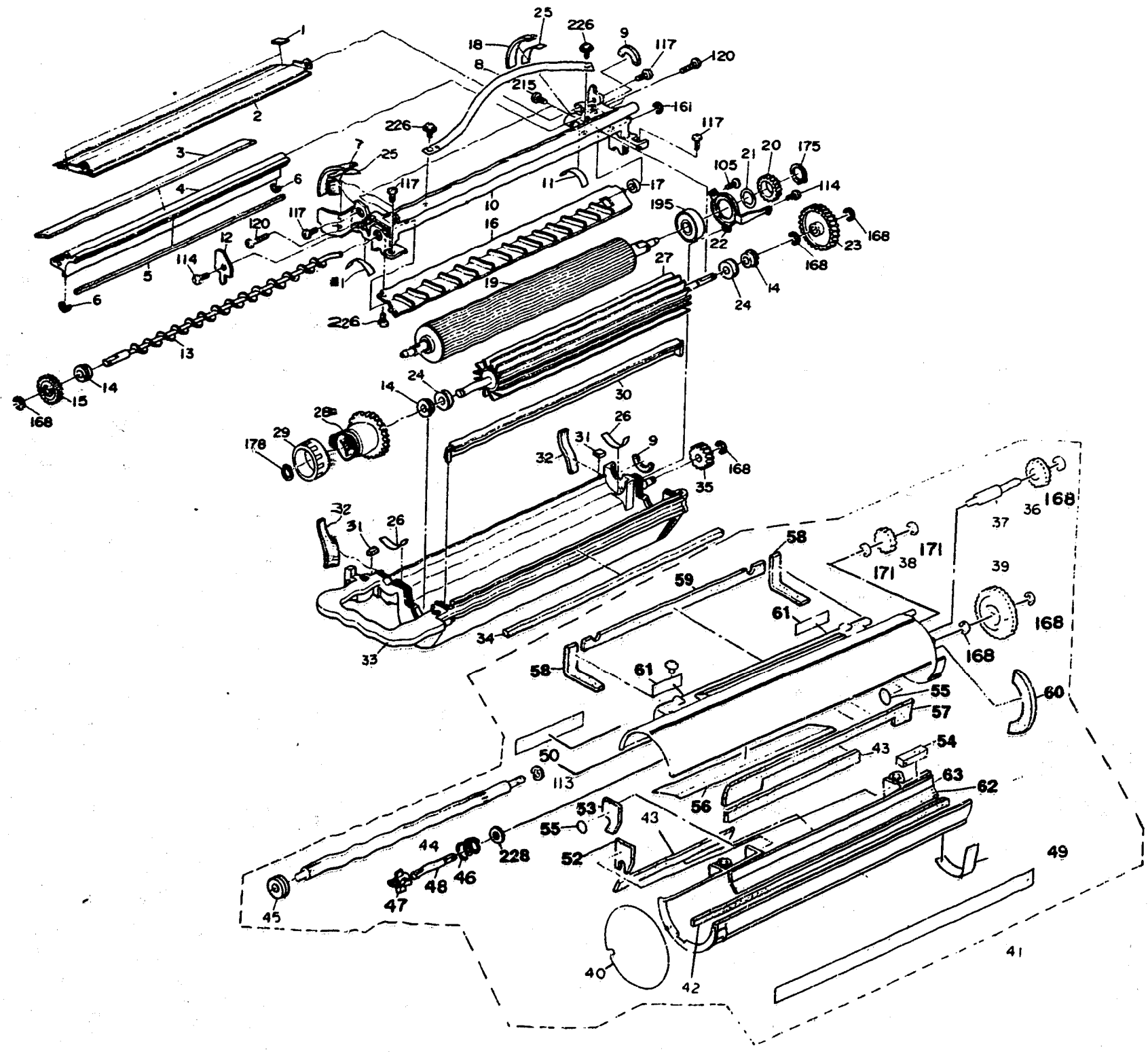

12. DEVELOPMENT UNIT (A009)

Index No.	Parts No.	Description	Q'ty Per Assembly
*	52153000	Development Unit	1
1	52153193	Seal - Entrance	2
2	52153191	Entrance Seal Ass'y	1
3	52153154	Seal - Upper	1
4	52153161	Doctor Plate	1
5	52153155	Seal - Doctor	1
6	52153162	Side Seal - Doctor Blade	2
7	52153052	Side Seal - Left	1
8	AG051052	Development Unit Band	1
9	54423109	Seal - Development Roller	2
10	52153140	Upper Casing	1
11	52153153	Mylar - 6 x 35mm	2
12	52153095	Adjusting Plate - Magnet Angle	1
13	52153165	Development Auger	1
14	52053103	Bushing - 6mm	3
15	52153167	Gear - 25T	1
16	52153175	Backspill Plate	1
17	52153180	Seal - Ring	1
18	52153051	Side Seal - Right	1
19	52153124	Development Sleeve	1
20	AB013232	Gear - 24T	1
21	52153108	Spacer - Development Sleeve	1
22	52153110	Bearing Retainer	1
23	52153102	Gear - 39T	1
24	52153085	Seal - Paddle Roller	2
25	52153060	Seal - 52 x 4mm	1
26	52153097	Sheet	2
27	52153083	Paddle Roller	1
28	52153101	Gear - 44T	1
29	52153089	Developer Knob	1
30	52153120	Toner Supply Guide	1
31	52153072	Side Magnet	2
32	52153056	Seal Development	2
33	52153074	Lower Casing	1
34	AA151194	Seal - Right	1
35	AB013233	Gear - 17T	1
36	54473236	Gear - 23T	1
37	52153281	Pin	1
38	52053306	Gear - 18T	1
39	52153321	Gear - 56T	1
40	52158710	Seal	1
41	A0093009	Toner Supply Unit	1
42	52153271	Seal - Rear	1
43	52153256	Seal - Toner Supply	1
44	52153302	Toner Supply Roller	1
45	52153270	Seal - Front	1
46	52153347	Spring - Gear	1
47	52153328	Joint Hopper	1
48	52153327	Shaft Agitator	1
49	52153394	Seal - 12 x 406 mm	1
50	52153395	Seal - 12 x 75 mm	1
52	52153270	Seal - Front	1
53	52153271	Seal - Rear	1
54	52153278	Seal	1
55	52153313	Seal - 10mm	2
56	52153254	Upper Casing Sheet	1
57	52153255	Seal - Upper Casing	1
58	52153285	Seal - 3x7x63mm	2
59	52153290	Seal	1
60	52153295	Hopper Filter	1
61	52153399	Seal - 50x19mm	2
62	AA150205	Seal - 20 x 72 mm	1
63	52153275	Seal	1

12. DEVELOPMENT UNIT (A009)

INDEX NO.	PART NO.	DESCRIPTION	Q'TY. PER ASSEMBLY
105	03140060W	Philips Pan Head Screw - M4x6	
114	03140060W	Philips Pan Head Screw - M4x6	
117	03140100W	Philips Pan Head Screw - M4x10	
120	03140200W	Philips Pan Head Screw - M4x2	
161	07200025E	Retaining Ring - M2.5	
168	07200050E	Retaining Ring - M5	
171	07200070E	Retaining Ring - M7	
175	07250140E	Retaining Ring (C Type) - M14	
178	07270060E	Retaining Ring - M6	
195	08053426	Ball Bearing - 15x32x9mm	
215	09514008W	Philips Screw with Flat Washer - M4x8	
226	09654008W	Tapping Screw with Flat Washer - M4x8	
227	09654012W	Tapping Screw with Flat Washer - M4x12	
228	08074103	Spacer - 0.5mm	

INDEX NO.	PART NO.	DESCRIPTION	Q'TY. PER ASSEMBLY

13. DRIVE SECTION (A009)

Rev.

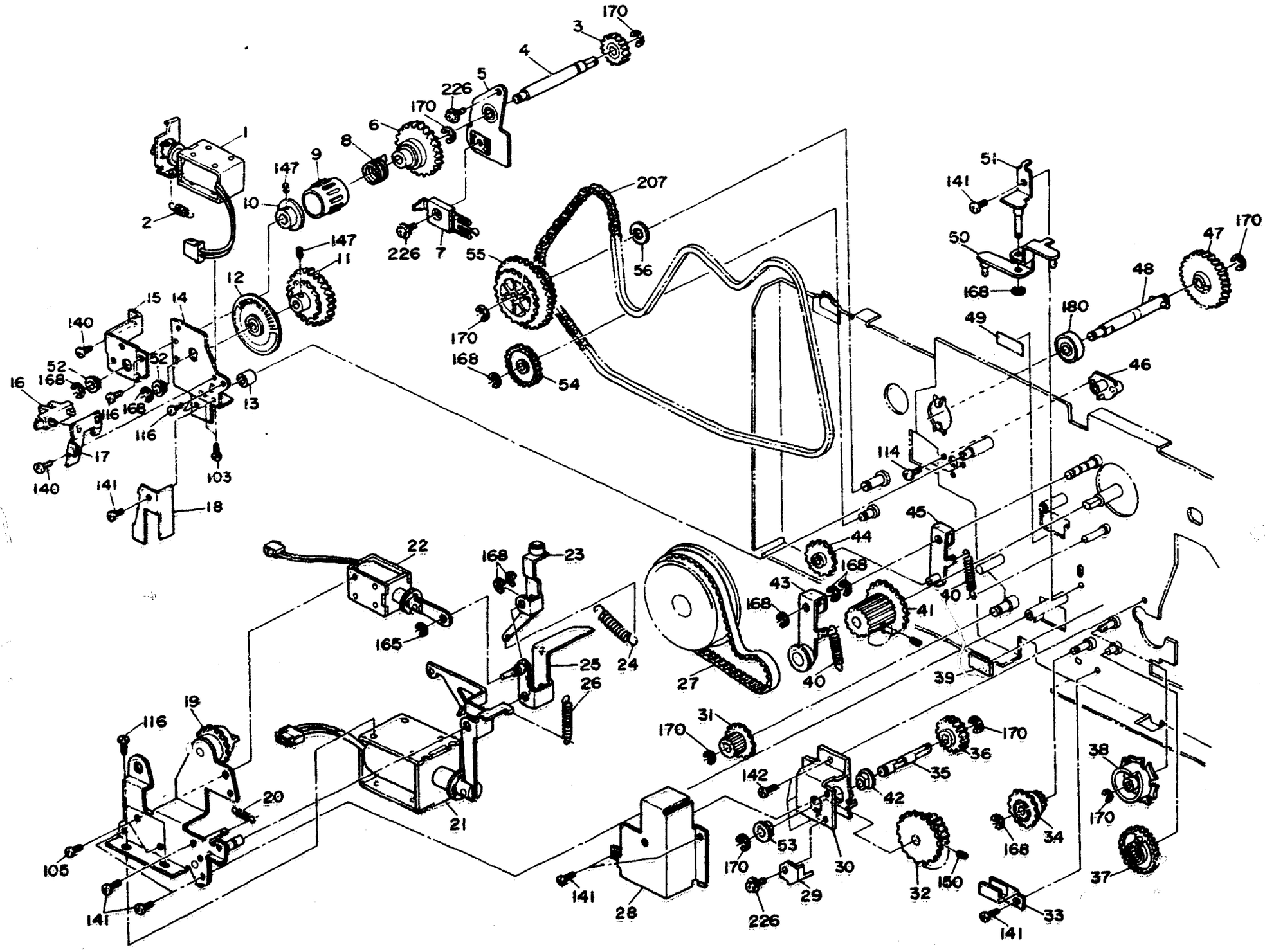

13. DRIVE SECTION (A009)

Index No.	Parts No.	Description	Q'ty Per Assembly
1	54473361	Toner Supply Solenoid	1
2	54423233	Spring Drive Wheel	1
3	52053306	Gear - 18T	1
4	52153471	Supply Shaft	1
5	52153462	Toner Supply Bracket	1
6	52153476	Gear - 26T	1
7	52153486	Bias Terminal	1
8	52151104	Spring Clutch	1
9	52151103	Ratchet - Sleeve - Paper Feed	1
10	52053467	Boss - Toner Supply Clutch	1
11	AB023028	Sprocket - 21T	1
12	52151090	Pulse Generator Disk	1
13	AA132017	Pressure Roller	1
14	A0093488	Development Drive Holder	1
15	52153489	Toner Supply Drive Holder	1
16	AW020006	Photo Interrupter - EE-SX460-P2	1
17	A0091116	Pulse Generator Bracket	1
18	A0092802	Supporter - Registration	1
19	A0093701	Solenoid Bracket	1
20	54131812	Spring - Drum Return Arm	1
21	A0093639	Cleaning Solenoid	1
22	A0093694	Pick-off Solenoid	1
23	A0093635	Pressure Arm	1
24	52053637	Spring - Cleaning Blade	1
25	A0093696	Pick-off Pawl Lever	1
26	58753026	Spring - Original Feed Arm	1
27	54421127	Timing Belt - Drum Drive	1
28	52151111	Fusing Bracket	1
29	52151105	Fusing Chain Stopper	1
30	52151096	Fusing Drive Bracket	1
31	54421110	Sprocket - 20T	1
32	54421100	Coupled Sprocket and Gear	1
33	52153951	Chain Guide	1
34	52153865	Sprocket - 20T	1
35	52051099	Fusing Drive Shaft	1
36	54421099	Gear - 24Z	1
37	52153872	Gear - 45T	1
38	52153869	Toner Collection Bottle Cam	1
39	52153860	Cushion	1
40	54421111	Spring - Main Drive Tightener	2
41	52051083	Sprocket - 30T/50Hz	1
	52052074	Sprocket - 27T/60Hz	1
42	50530223	Bushing - 8mm	1
43	52051121	Belt Tightener	1
44	54421110	Sprocket - 20T	1
45	52051105	Chain Tightener	1
46	54423154	Holder - Development Unit	1
47	52153470	Gear - 42T	1
48	52143474	Development Shaft	1
49	54347916	High Voltage Decal	1
50	52153873	Follower Shaft	1
51	52153861	Follower	1
52	50530447	Bushing - M6	2
53	50530223	Bushing - 8mm	1
54	52152597	Idle Gear - 30T	1
● 55	A0242593	Sprocket - 30T	1
● 56	52074837	Bushing - 8 x 12 x 3mm	1

• NOTE: REFER TO LAST FRAME OF CATALOG FICHE.

Index No.	Parts No.	Description	Q'ty Per Assembly
103	03130050W	Philips Pan Head Screw - M3 x 5	
105	03130060W	Philips Pan Head Screw - M3 x 6	
114	03140060W	Philips Pan Head Screw - M4 x 6	
116	03140080W	Philips Pan Head Screw - M4 x 8	
118	03140120W	Philips Pan Head Screw - M4 x 12	
140	04340060W	Tapping Screw - M4 x 6	
141	04340080W	Tapping Screw - M4 x 8	
142	04340100W	Tapping Screw - M4 x 10	
147	05740050E	Hexagon Headless Set Screw - M4 x 5	
150	05750060E	Hexagon Headless Set Screw - M5 x 6	
165	07200040E	Retaining Ring - M4	
168	07200050E	Retaining Ring - M5	
170	07200060E	Retaining Ring - M6	
180	07403008	Ball Bearing	
207	09161236	Bushed Roller Chain - 236P	
226	09654008W	Tapping Screw with Flat Washer - M4 x 8	
227	05750050E	Hexagon Headless Set Screw M5x5	

Index No.	Parts No.	Description	Q'ty Per Assembly

14. PAPER TRANSPORT (A032)

Jan. 31, '89

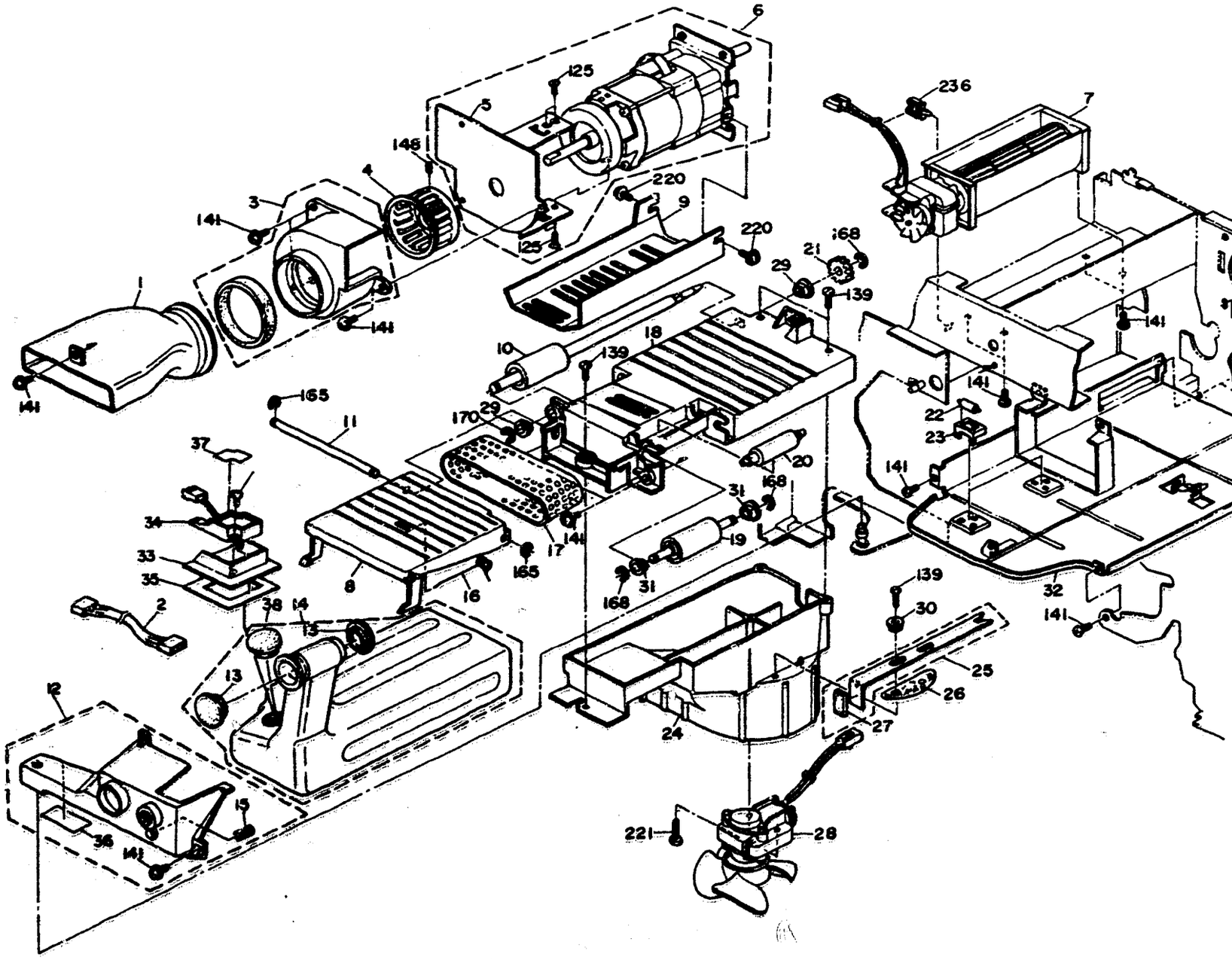

14. PAPER TRANSPORT (A009)

Rev. 10/9

Index No.	Parts No.	Description	Q'ty Per Assembly
1	A0092156	Inlet Duct	1
2	A0096001	Harness - Toner Overflow Sensor	1
3	52152066	Fan Cover	1
4	54422143	Fan - Main Corona	1
5	A0095827	Fan Motor Bracket	1
6	A0095111	Main Motor - AC24.5W	1
7	A0091159	Outlet Fan Motor - AC20.5/18W	1
8	52153853	Transport Guide Plate	1
9	52151085	Cover Motor	1
10	52153917	Transport Drive Roller	1
11	52153855	Guide Plate Shaft	1
12	A0093883	Toner Collection Bottle Cover	1
13	A0073785	Toner Collection Bottle Cap	2
14	A009 9502	Toner Collection Bottle	1
15	AA063119	Spring - Toner Collection Bottle	1
16	52153851	Spring - Guide Plate	1
17	52153978	Transport Belt	1
18	52153910	Transport Frame	1
19	52153923	Driven Roller	1
20	A0093942	Transport Guide Roller	1
21	54423872	Gear - 16Z	1
22	52153677	Roller	1
23	52153675	Roller Holder	1
24	A0093928	Duct	1
25	A0093877	Plate	1
26	A0093880	Seal - Duct	1
27	AA151095	Seal - 10 x 30	1
28	52155426	Vacuum Fan Motor - 14/12W	1
29	52153931	Bushing - 8mm	1
30	54032048	Bushing - 4mm	1
31	50530447	Bushing - M6	2
32	A0093821	Right Separation Plate	1
33	52153887	Sensor Holder	1
34	52155304	Toner Overflow Sensor	1
35	52153888	Both Side Tape - Holder	1
36	A0093888	Seal - Toner Collection Bottle Cover	
37	A0093666	Seal - Overflow Sensor	
38	54423664	Toner Collection Bottle Cap - Small	

Index No.	Parts No.	Description	Q'ty Per Assembly
122	03150080W	Philips Pan Head Screw - M5 x 8	
125	03230040B	Philips Sunken Head Screw - M3 x 4	
139	04140102W	Tapping Screw - M4 x 10	
141	04340080W	Tapping Screw - M4 x 8	
148	05740060E	Hexagon Headless Set Screw - M4 x 6	
165	07200040E	Retaining Ring - M4	
168	07200050E	Retaining Ring - M5	
170	07200060E	Retaining Ring - M6	
220	09644008W	Tapping Screw with Flat Washer - M4 x 8	
221	09644010W	Tapping Screw with Flat Washer - M4 x 10	
236	11050196	Harness Clamp	
39	AA151284	Seal - 15x26x3mm	1

15. FUSING UNIT (A009)

Rev. 10/

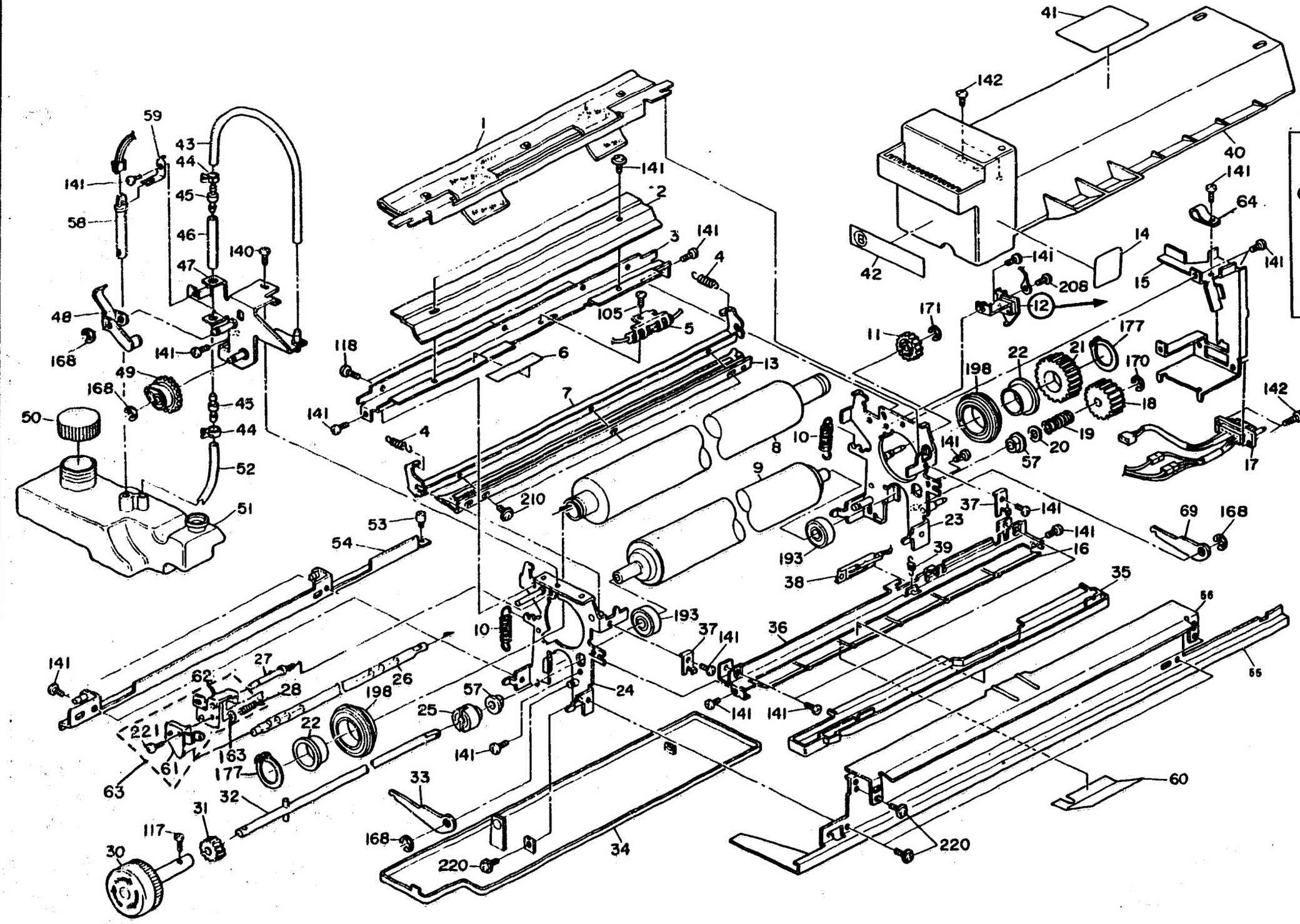

15. FUSING UNIT (A009)

Rev. 10/9

Index No.	Parts No.	Description	Q'ty Per Assembly
*	A0090225	Fusing Unit - 115V	1
*	A0094480	Fusing Unit - 220V	1
1	52154130	Oil Supply Pad	1
2	52154208	Spring Plate - Oil Supply Pad	1
3	52154093	Upper Frame	1
4	52154121	Spring - Oil Blade	2
5	A0095431	Thermofuse Ass'y	1
6	54204867	Decal - Thermofuse, 169°C	1
7	52154116	Oil Blade Holder	1
8	52154320	Hot Roller	1
9	52154282	Pressure Roller	1
10	AA060101	Pressure Spring	2
11	52054181	Gear - 18T	1
12	54424202	Rear Bracket - Lamp Terminal Assy.	1
13	52154117	Oil Blade	1
14	54424421	Decal - Small	1
15	52155818	Connector Unit Bracket	1
16	A0084179	Upper Entrance Guide	1
17	A0096031	Fusing Unit Harness	1
18	54424151	Gear - 30Z	1
19	52114078	Spring - Fusing Drive Gear	1
20	54003392	Bushing Paper Spool	1
21	52154086	Gear - 40Z	1
22	52054321	Bushing - 20mm	2
23	A0094052	Rear Side Plate - Fusing	1
24	A0094051	Front Side Plate - Fusing	1
25	52054135	Fusing Shaft Collar	1
26	AX440005	Fusing Lamp - 115V/800W	1
	AX440006	Fusing Lamp - 230V/840W	1
27	54474220	Lamp Terminal Stud	1
28	54474221	Lamp Holder Spring	1
29	54474216	Front Lamp Terminal - Fusing Unit	1
30	AG050011	Knob - Fusing	1
31	52094408	Gear - 16T	1
32	AA140295	Fusing Unit Shaft	1
33	A0244111	Pressure Lever - Front	1
34	A0084145	Oil Pan	1
35	52154195	Oil Sump	1
36	A0084178	Bracket - Thermistor	1
37	52154196	Oil Sump Holder	1
38	52155250	Thermistor	1
39	52034146	Thermistor Spring	1
40	A0084172	Fusing Unit Cover	1
41	54424421	Decal - High Temperature	1
42	AA001039	Decal - B	1
43	52094410	Oil Tube - 140mm	1
44	54474241	Tube Clamp	2
45	54154310	Valve - Oil Pump	2
46	54474229	Sleeve - Oil Pump	1
47	52094400	Oil Pump Bracket	1
48	52094405	Oil Pump Lever	1
49	52094407	Cam Gear - 32T	1
50	AA036001	Oil Bottle Cap	1
51	52154225	Oil Tank	1
52	52094409	Oil Tube - 105mm	1
53	54091855	Mounting Pin	1
54	A0094100	Left Side Guide - Fusing Unit	1
• 55	A0324112	Right Rail - Fusing	1
56	A0084115	Lower Entrance Guide	1
• 57	AA082023	Bushing - 8mm	2
58	52095320	Oil End Sensor	1
59	52154411	Spring Plate	1
60	52154169	Mylar - Fusing Entrance	1
61	A0074274	Front Lamp Terminal - Fusing Unit	1
62	A0074273	Front Lamp Terminal Bracket	1
63	A0074272	Front Lamp Terminal Ass'y	1
64	AA115003	Wire Clamp	1
65	54324117	Insulator A	1
66	54154097	Lamp Terminal	1
67	54324118	Insulator B	1
68	54424201	Rear Bracket - Lamp Terminal	1

* Refer to Last Frame of Catalog Fische

Index No.	Parts No.	Description	Q'ty Per Assembly
69	A0244115	Pressure Lever - Rear	1
70	A0324117	Spring Plate Stopper	1
73	AA080066	Bushing - 2 x 12mm	1
105	03130060W	Philips Pan Head Screw - M3 x 6	
117	03140100W	Philips Pan Head Screw - M4 x 10	
118	03140120W	Philips Pan Head Screw - M4 x 12	
140	04340060W	Tapping Screw - M4 x 6	
141	04340080W	Tapping Screw - M4 x 8	
142	04340100W	Tapping Screw - M4 x 10	
163	07200030E	Retaining Ring - M3	
168	07200050E	Retaining Ring - M5	
170	07200060E	Retaining Ring - M6	
171	07200070E	Retaining Ring - M7	
177	07250200E	Retaining Ring C - M20	
193	08053104	Ball Bearing - 8 x 22 x 7mm	
198	08053377	Ball Bearing - 25 x 42 x 9 mm	
208	09503005M	Philips Screw with Lock Washer - M3 x 5	
210	09513005	Philips Screw with Flat Washer - M3 x 5	
220	09644008W	Tapping Screw with Flat Washer - M4 x 8	
221	0313012W	Philips Pan Head Screw M3X12	2

Index No.	Parts No.	Description	Q'ty Per Assembly

16. PAPER EXIT (A009)

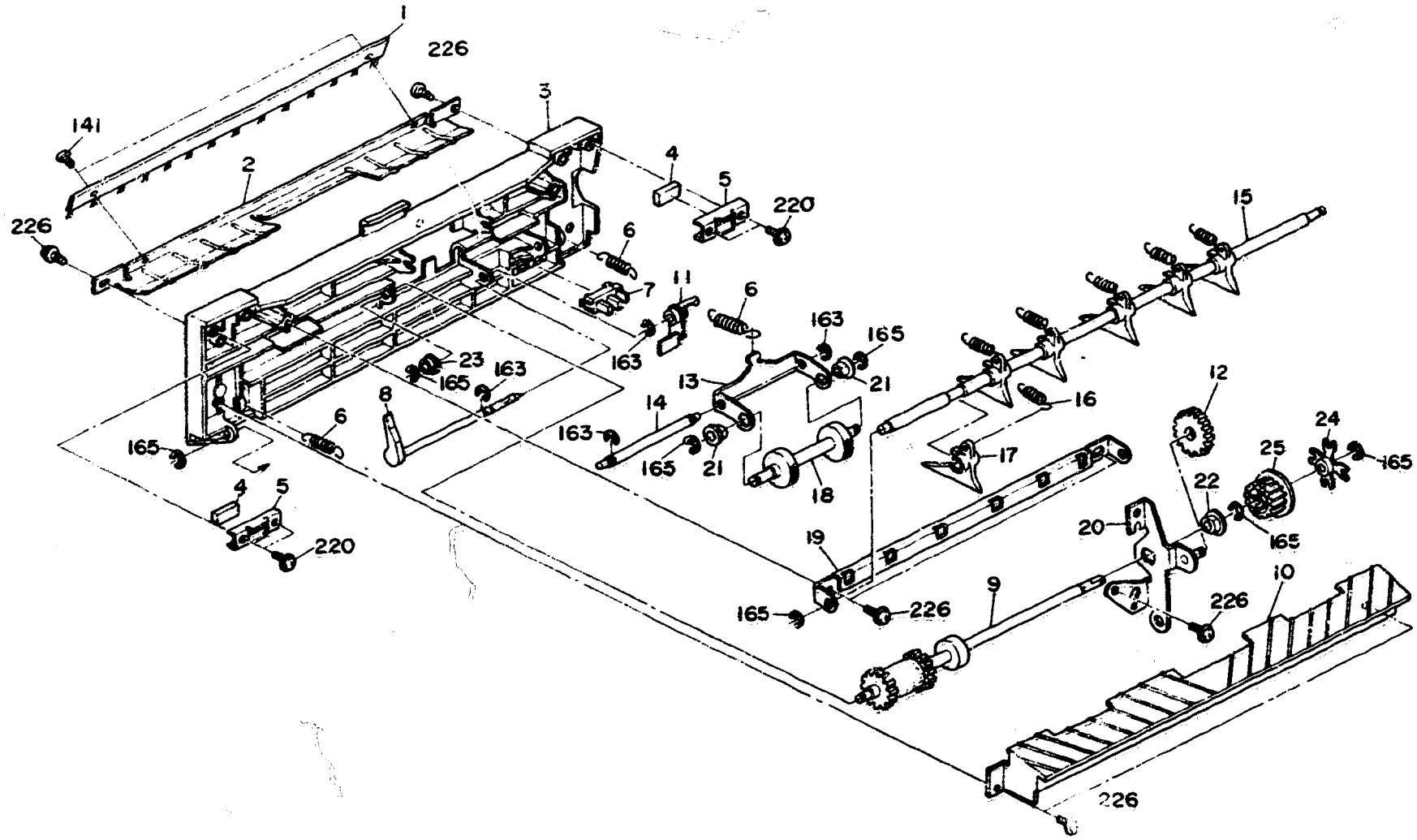

16. PAPER EXIT (A009)

Index No.	Parts No.	Description	Q'ty Per Assembly
1	52154497	Exit Antistatic Brush	1
2	A0094318	Upper Exit Guide	1
3	A0096615	Exit Cover	1
4	AA021006	Magnet	2
5	A0094320	Magnet Holder	2
6	54132866	Spring - Registration Roller	3
7	AM020007	Photointerruptor - on 1531LA2-(A)4.	1
8	54424485	Feeler - Paper Exit Sensor	1
9	AF040002	Lower Exit Roller	1
10	52154063	Lower Exit Guide	1
11	54424491	Actuator - Paper Exit Sensor	1
12	54424492	Gear - 20T	1
13	A0094314	Exit Roller Bracket	1
14	A0094315	Shaft - Exit Roller Bracket	1
15	A0094316	Shaft - Hot Roller Stripper	1
16	52054305	Spring - Hot Roller Stripper	5
17	52159002	Hot Roller Stripper (6 pcs/set)	1
18	AF040001	Upper Exit Roller	1
19	A0094317	Stripper Pawl Plate	1
20	A0094304	Release Spring Holder	1
21	AA080014	Bushing - 5 x 8 x 9mm	2
22	50530447	Bushing - M6	1
23	58752067	Bushing	1
24	54424495	Slip Clutch	1
25	54424494	Gear - 19Z	1
141	04340080W	Tapping Screw - M4 x 8	
163	07200030E	Retaining Ring - M3	
165	07200040E	Retaining Ring - M4	
220	09644008W	Tapping Screw with Flat Washer - M4 x 8	
226	09654008W	Tapping Screw with Flat Washer - M4 x 8	

Index No.	Parts No.	Description	Q'ty Asse

17. ELECTRICAL SECTION 1 (A009)

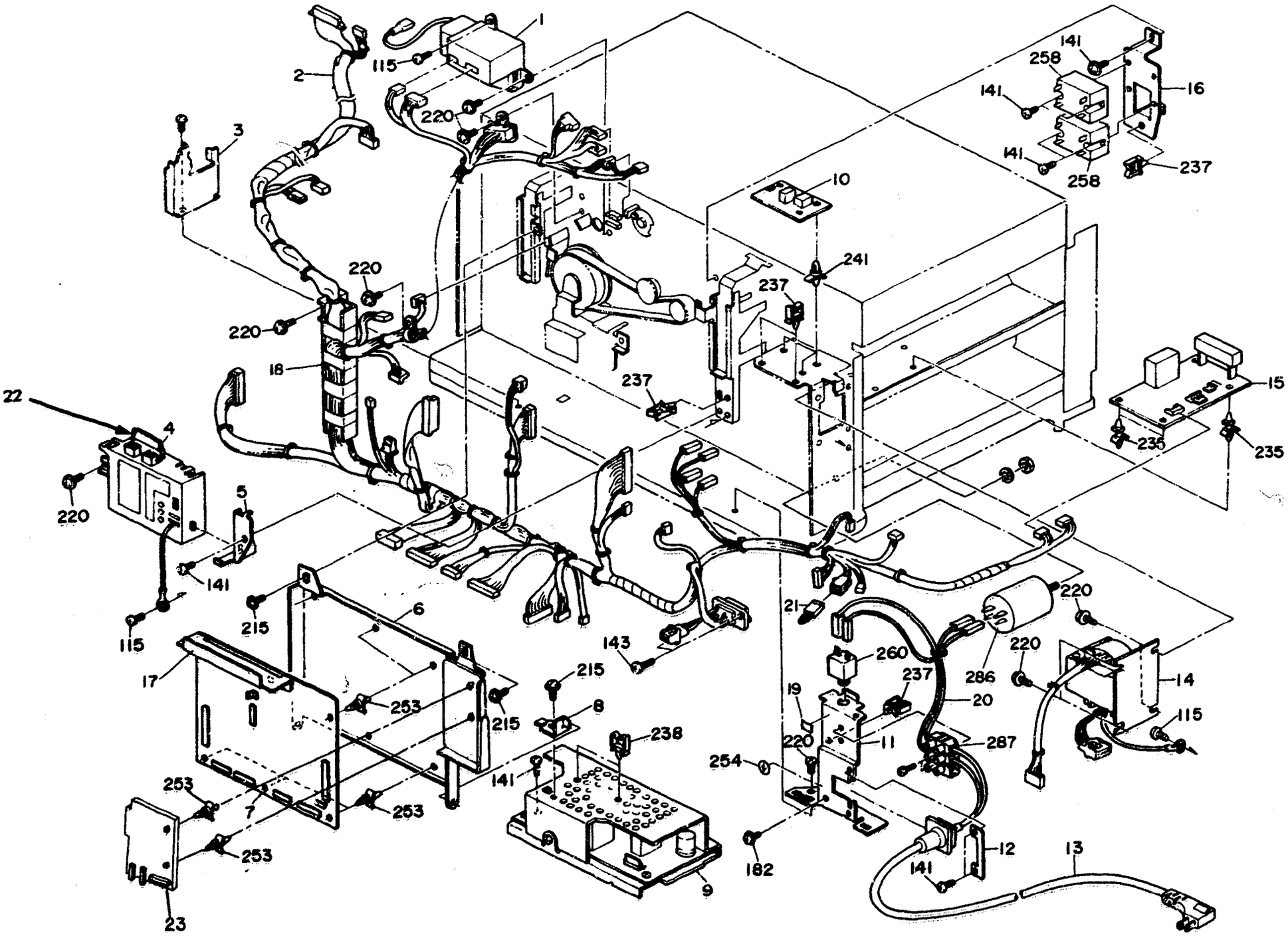

17. ELECTRICAL SECTION 1 (A009)

Index No.	Parts No.	Description	Q'ty Per Assembly
1	AZ320004	Power Pack - Main	1
2	A0096021	DC Main Harness	1
3	A0095821	Right Bracket - Main Board	1
4	AZ320003	Power Pack - T&S	1
5	A0095833	Bracket - T&S Power Pack	1
6	A0095801	Main Board Bracket	1
7	A0095301	Main Board	1
8	52155827	Control Board Angle	1
9	A0095500	Power Supply Unit	1
10	A0095400	Fusing Lamp Drive Board - 115V	1
	A0096006	Fusing Lamp Drive Board - 220V	1
● 11	A0095834	Bracket - Power Supply Cord - 115V	1
	A0095832	Bracket - Power Supply Cord - 220V	1
● 12	A0095829	Power Supply Cord Holder	1
● 13	11500003	Power Supply Cord - 115V	1
	28010039	Power Supply Cord - ROC	1
	28010027	Power Supply Cord - 220V	1
14	AZ130004	Transformer - 115V/100V	1
	AZ140003	Transformer - 220V	1
15	A0095125	Power Relay Board - 60Hz	1
	A0096012	Power Relay Board - 50Hz	1
16	A0095817	Relay Bracket	1
17	A0095800	Heat Sink Fins - Main Board	1
18	A0085829	Harness Guide	1
19	52115809	Decal - Terminal - 115V	1
20	52155275	Terminal Block Harness	1
21	52155471	Shorting Connector	1
22	A0095822	Mylar	1
23	A4265111	Interface Board Type E	1

Index No.	Parts No.	Description	Q'ty Asse
115	03140080W	Philips Pan Head Screw - M4 x 8	
● 141	04340080W	Tapping Screw - M4 x 8	
143	04340120W	Tapping Screw - M4 x 12	
182	08011179	Philips Screw with Toothed Washer	
215	09514008W	Philips Screw with Flat Washer - M4 x 8	
220	09644008W	Tapping Screw with Flat Washer - M4 x 8	
235	11050194	PCB Stud	
237	11050197	Wire Saddle	
238	11050201	Harness Clamp	
241	11060395	Locking Support	
253	11050159	PCB Stud	
● 256	11060366	Cord Clamp 115V	
258	12081133	Relay - DC 24V	
260	11070238	Circuit Breaker - 15A - 115V	
	11070286	Circuit Breaker - 8V - 220V	
286	16020923	Noise Filter - 115V	
287	11010359	Terminal - 3P	

18. ELECTRICAL SECTION 2 (A009)

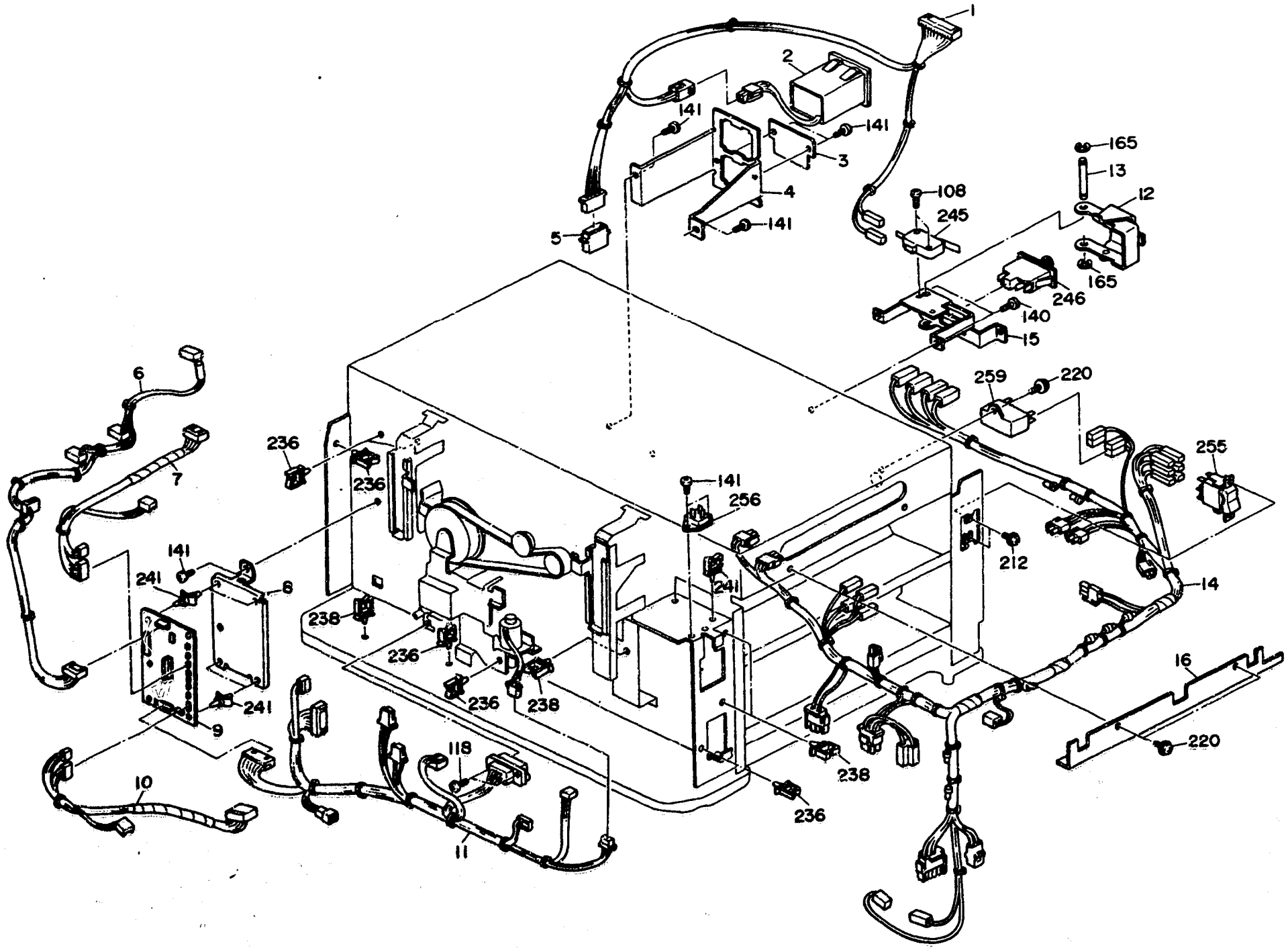

18. ELECTRICAL SECTION 2 (A009)

Index No.	Parts No.	Description	Q'ty Per Assembly
1	A0096002	Counter Harness	1
2	54395246	Totalizer Ass'y	1
3	A0085854	Cover - Counter	1
4	A0091362	Counter Bracket	1
5	54085160	Short Connector	1
6	A0095273	Harness - Development	1
7	A0095270	Harness - Paper Feed	2
8	A0325818	Bracket - Paper Feed Control Board	1
9	A0095250	Feed Control Board	1
10	A0095270	Harness - Paper Feed	1
11	A0095271	Harness - 3rd Feed	1
12	A0095335	Lever - Safety Switch	1
13	A0095339	Shaft - Safety Switch Lever	1
14	A0096026	AC Main Harness - 115V	1
	A0096027	AC Main Harness - 220V	1
15	A0095334	Bracket - Safety Switch	1
16	A0095828	Left Harness Cover	1

Index No.	Parts No.	Description	Q'ty P Assemb
108	03130120W	Philips Pan Head Screw - M3 x 12	
118	03140120W	Philips Pan Head Screw - M4 x 12	
140	04340060W	Tapping Screw - M4 x 6	
141	04340080W	Tapping Screw - M4 x 8	
165	07200040E	Retaining Ring - M4	
212	09513008W	Philips Screw with Flat Washer - M3 x 8	
220	09644008W	Tapping Screw with Flat Washer - M4 x 8	
236	11050196	Harness Clamp	
238	11050201	Harness Clamp	
241	11060395	Locking Support	
245	12041078	Microswitch - 115V	
	12040687	Microswitch - 220V	
246	12041517	Push Switch	
255	12041520	Switch	
256	14050153	Triac - TG16C40 - 115V	
	14050154	Triac - TG16C60 - 220/240V	
259	16061037	Capacitor - 10μF 250V +10 -5%	
	16061380	Capacitor - 0.33μF 63V - 220V	

19. MAIN BOARD (A009)

SYMBOL NO. : PRINTED NUMBER ON THE BOARD
INDEX NO. : REFERENCE NUMBER OF NEXT PAGE

CAPACITOR

SYMBOL NO.	INDEX NO.
C101 ~ C103 C105 C106 C108 ~ C116 C205 C207 ~ C226 C228 C263 C275 ~ C278	101
C104 C270 C271 C274	102
C107	103
C201	104
C202 C117	105
C203	106
C204	107
C206	108
C264 ~ C267	109
C269	110
C272 C273	111

SYMBOL NO.	INDEX NO.
CN101	112
CN107	113
CN201	114
CN202	115
CN203	116
CN204	117
CN205	118
CN206	119
CN207	120
CN208	121
CN209 CN212	122
CN210	123
CN211	124
CN213	125

CONNECTOR

SYMBOL NO.	INDEX NO.
R101 ~ R103 R110 R292 ~ R294 R296 ~ R304 R306 ~ R311 R320 ~ R324 R338 R340	126
R104 ~ R106 R111 ~ R122 R125 R205 ~ R208 R241 ~ R275	127
R201	128
R223 ~ R230	129

RESISTOR

SYMBOL NO.	INDEX NO.
R203	130
R276 ~ R283	131
R210 R215	132
R214	133
R239 R240	134
R212 R284 ~ R291	135
R131 ~ R138	136
R233 ~ R238 R305	137
R123 R124 R213 R217 R218	138
R107 ~ R109 R219 R220	139
R127 ~ R130 R211	140

SYMBOL NO.	INDEX NO.
R202 R204 R209 R231 R232 R295 R312 ~ R319 R325 ~ R330 R332 ~ R337 R339 R341 ~ R343	141
R331	142
R221	143
R216	144
R222	145
R126	146
R139	147

IC

SYMBOL NO.	INDEX NO.
IC101 IC102	148
IC103 IC104 IC216	149
IC105	150
IC160 IC107	151
IC108 IC229	152
IC109	153
IC201 IC202	154
IC203	155
IC204	156
IC206	157
IC207 IC208 IC209 IC210	158
IC211	159
IC212	160
IC214	161
IC215	162
IC217 IC218 IC219 IC220 IC221 IC222	163

SYMBOL NO.	INDEX NO.
IC223 IC224 IC225 IC226 IC227 IC228	164

TRANSISTOR

SYMBOL NO.	INDEX NO.
Q105 Q106	165
Q107 Q108	177
Q201 ~ Q208	167
Q210	168
Q101 ~ Q104 Q209	169

DIODE

SYMBOL NO.	INDEX NO.
ZD201	170
D101 ~ D104	171
D201 ~ D211	172

DIP SW

SYMBOL NO.	INDEX NO.
DPS101 DPS201	173
DPS102 DPS202	174

OSCILLATOR

SYMBOL NO.	INDEX NO.
OSC101	175

POTENTIOMETER

SYMBOL NO.	INDEX NO.
VR201	176

19. MAIN BOARD (A009)

Index No.	Parts No.	Description	Q'ty Per Assembly
1	A0095301	Main Board	1
2	A0095302	IC - HN27256G - 25	1
3	A0095303	IC - μPD7811G	1
101	16061454	Capacitor - 0.01μF 50V	
102	16061455	Capacitor - 470PF 25V	
103	16061208	Capacitor - 100PF ±5% 50V	
104	16041354	Capacitor - 100μF 10V	
105	16041386	Capacitor - 100μF 50V	
106	16041363	Capacitor - 10μF 25V	
107	16041382	Capacitor - 10μF 50V	
108	16061452	Capacitor - 0.01μF 50V	
109	16061453	Capacitor - 0.1μF 25V	
110	16041381	Capacitor - 4.7μF 50V	
111	16041383	Capacitor - 22μF 50V	
112	11022825	Connector - 26P	
113	11030750	Pin Housing - 2P	
114	11022828	Connector - 40P	
115	11022826	Connector - 30P	
116	11022260	Connector - 18P	
117	11022533	Connector - 11P	
118	11022122	Spring Header - 15P	
119	11022829	Connector - 50P	
120	11023100	Connector - 30P	
121	11031894	Connector - 20P	
122	11021567	Connector - 2P	
123	11030347	Connector - 8P	
124	11022985	Receptacle - 12P	
125	11022119	Connector - 6P	
126	16100065	Resistor - 3.3KΩ 1/8W ±5%	
127	16100067	Resistor - 4.7KΩ 1/8W ±5%	
128	16100025	Resistor - 22Ω 1/8W ±5%	
129	16100039	Resistor - 150Ω 1/8W ±5%	
130	16100041	Resistor - 180Ω 1/8W ±5%	
131	16100048	Resistor - 390Ω 1/8W ±5%	
132	16100408	Resistor - 680Ω 1/8W ±2%	
133	16100278	Resistor - 1KΩ 1/8W ±2%	
134	16100053	Resistor - 1KΩ 1/8W ±5%	
135	16100055	Resistor - 1.2KΩ 1/8W ±5%	
136	16100057	Resistor - 1.5KΩ 1/8W ±5%	
137	16100281	Resistor - 9.1KΩ 1/8W ±2%	
138	16100071	Resistor - 10KΩ ±5%	
140	16100083	Resistor - 33KΩ 1/8W ±5%	
141	16100073	Resistor - 12KΩ 1/8W ±5%	
142	16100085	Resistor - 47KΩ 1/8W ±5%	
143	16100089	Resistor - 100KΩ 1/8W ±5%	
144	16100409	Resistor - 120KΩ 1/8W ±5%	
145	16100107	Resistor - 1MΩ 1/8W ±5%	
146	16100017	Resistor - 10Ω 1/8T ±5%	
147	16100047	Resistor - 330Ω 1/8W ±5%	
148	14072058	IC - M5M82C54FP-6	
149	14072054	IC - TD62308F	
150	14072051	IC - SN74LS00NS	
151	14072052	IC - SN74LS74ANS	
152	14071729	IC - TC74HC14FP	
153	14071718	IC - TC74HC08F	
154	14072073	Microprocessor - MPD78C10GF	
155	14071846	IC - CS74LS42NS	
156	14071882	IC - SN74LS373NS	
157	14080537	IC - 7705CPS-B	
158	14072057	IC - M5M82C55AFP-5	
159	14071305	IC - SN7406NS	
160	14080395	IC - AN6912S	
161	14071741	IC - SN74LS32NS	
162	14071883	IC - TC40508F	
163	14072055	IC - TD62304F	

Index No.	Parts No.	Description	Q'ty Per Assembly
164	14071610	IC - SN7407NS	
165	14010320	Transistor - 2SB951	
166	14010265	Transistor - 2SD1277	
167	14000369	IC - 2SA1213	
168	14010296	Transistor - 2SA1162Y	
169	14010298	Transistor - 2SC2712YTE85L	
170	14020642	Zener Diode - RD8.2M-B1	
171	14020110	Diode - V06C	
172	14010835	Diode - 1SS190	
173	12041482	Dip Switch	
174	12041480	Push Switch	
175	15030085	Oscillator - 10MHz	
176	16018428	Resistor - 2KΩ 0.3T	
177	14010426	Transistor - 2SD1277	

Index No.	Parts No.	Description	Q'ty P Assem

20. DC POWER SUPPLY BOARD (A009)

SYMBOL NO. : PRINTED NUMBER ON THE BOARD
INDEX NO. : REFERENCE NUMBER OF NEXT PAGE

CAPACITOR

SYMBOL NO.	INDEX NO.
C1 C2	101
C3 C6	102
C4 C7 C9 C12 C14 C17	103
C5 C8	104
C10 C15	105
C11 C16	106
C13	107

RESISTOR

SYMBOL NO.	INDEX NO.
R1	108
R2	109
R3	110
R4 R8 R9	111
R5 R10	112
R6 R7	113
R11	114

CONNECTOR

SYMBOL NO.	INDEX NO.
CN1	115
CN2	116
CN3	117
CN4	118

FUSE

SYMBOL NO.	INDEX NO.
FU1 FU3 FU4	119
FU2 R104	120

TRANSISTOR

SYMBOL NO.	INDEX NO.
Q1	121
Q2	122
Q3	123

IC

SYMBOL NO.	INDEX NO.
IC1	124
IC2	125

RECTIFIER

SYMBOL NO.	INDEX NO.
DB1 DB3 DB4	126
DB2	127

DIODE

SYMBOL NO.	INDEX NO.
ZD1	128
ZD2	129
ZD3	130
D1 D3 D4	126
D2	127

LED

SYMBOL NO.	INDEX NO.
LED1 LED2 LED3 LED4	132

20. DC POWER SUPPLY BOARD (A009)

Index No.	Parts No.	Description	Q'ty Per Assembly
1	A0095500	Power Supply Unit	1
101	16041786	Capacitor - 4700uF 25V	
102	16041367	Capacitor - 100uF 25V	
103	16061336	Capacitor - 1000pF 50V	
104	16041785	Capacitor - 2200uF 35V	
105	16041380	Capacitor - 3.3uF 10V	
106	16041386	Capacitor - 100uF 50V	
107	16041239	Capacitor - 470uF 50V	
108	16114104	Resistor - 100KΩ 1/4W ±5%	
109	16114471	Resistor - 470Ω 1/4T ±5%	
110	16114122	Resistor - 1.2KΩ 1/4T ±5%	
111	16000487	Resistor - 0.47Ω 5T ±10%	
112	16114102	Resistor - 1KΩ 1/4T ±5%	
113	16116152	Resistor - 1.5kΩ 1/2T ±5%	
114	16116242	Resistor - 2.4kΩ 1/2T ±5%	
115	11031169	Connector - 6P	
116	11022122	Spring Header - 15P	
117	11022118	Spring Header - 4P	
118	11022120	Connector - 8P	
119	11070392	Fuse - 6.3A	
120	11070354	Fuse - 3.15A/125V	
121	14010200	Transistor - 2SD633	
122	14010257	Transistor - 2SC2315	
123	14010185	Transistor - 2SC2581	
124	14080363	Regulator IC - STR9005	
125	14080382	IC - S1 - 3122V	
126	14050176	Rectifier - RBV - 601	
127	14020601	Rectifier - RBV - 401	
128	14020454	Zener Diode - RD7.5FB	
129	14020550	Zener Diode - HZ16-3	
130	14020414	Zener Diode - RD27F-B1	
131	14020388	Diode - W03C	
132	14030255	Light Emitting Diode	

21. FUSING LAMP DRIVE BOARD (A009)

SYMBOL NO. : PRINTED NUMBER ON THE BOARD
INDEX NO. : REFERENCE NUMBER OF NEXT PAGE

CAPACITOR

SYMBOL NO.	INDEX NO.
C301	101

CONNECTOR

SYMBOL NO.	INDEX NO.
CN301	103
CN302	104

RESISTOR

SYMBOL NO.	INDEX NO.
R301	106
R302	107
R303	108
R304	109

TRANSISTOR

SYMBOL NO.	INDEX NO.
Q301	110

NOISE KILLER

SYMBOL NO.	INDEX NO.
SK301	111

RECTIFIER

SIMBOL NO.	INDEX NO.
DB301	102

PHOTOTHYRISTOR

SIMBOL NO.	INDEX NO.
PC301	105

21. FUSING LAMP DRIVE BOARD (A009)

May 1, '8

Index No.	Parts No.	Description	Q'ty Per Assembly
1	A0095400	Fusing Lamp Drive Board - 115V	1
	A0096006	Fusing Lamp Drive Board - 220/240V	1
101	16060689	Capacitor - 0.01uF 50V	
102	14050130	Rectifier - 400V, 1.0A IG4842 (115V)	
	14050152	Rectifier - 1J4842 (220V)	
103	11022117	Connector - 2P	
104	11020997	Connector - 6P	
105	14050127	Photothyristor - TLP541G (115V)	
	14050151	Photothyristor - TLP545J (220V)	
106	16114273	Resistor - 27KΩ 1/4T ±5%	
107	16114181	Resistor - 180Ω 1/4T ±5%	
108	16114563	Resistor - 56KΩ 1/4T ±5%	
109	16116224	Resistor - 220KΩ 1/2W ±5%	
110	14000305	Transistor - 2SC1815	
111	16020940	Noise Killer - 0.1μF, 10Ω (115V)	
	16020920	Noise Killer - 0.1μF, 120Ω (220V)	

Index No.	Parts No.	Description	Q'ty Per Assembly

22. POWER RELAY BOARD (A009)

May 1, '87

SYMBOL NO. : PRINTED NUMBER ON THE BOARD
INDEX NO. : REFERENCE NUMBER OF NEXT PAGE

CONNECTOR

SYMBOL NO.	INDEX NO.
CN1	101
CN2	102
CN3	103

DIODE

SYMBOL NO.	INDEX NO.
D1 D2 D3	104

RESISTOR

SYMBOL NO.	INDEX NO.
R1	105

RESISTOR ARRAY

SYMBOL NO.	INDEX NO.
RA3	106

22. POWER RELAY BOARD (A009)

May 1, '87

Index No.	Parts No.	Description	Q'ty Per Assembly
1	A0095125	Power Relay Board - 60Hz	1
	A0096012	Power Relay Board - 50Hz	1
101	11022227	Spring Header - 4P	
102	11021172	EI Connector - 4P	
103	11031591	Connector - 2P	
104	14020467	Diode - S5566G	
105	16000665	Resistor - 260Ω 15T	
106	12081064	Relay - DC 24V (115V)	
	12081065	Relay - DC 24V (220V)	

Index No.	Parts No.	Description	Q'ty Per Assembly

23. PAPER FEED CONTROL BOARD (A009)

SYMBOL NO. : PRINTED NUMBER ON THE BOARD
INDEX NO. : REFERENCE NUMBER OF NEXT PAGE

CONNECTOR

SYMBOL NO.	INDEX NO.
CN220	101
CN221	102
CN222 CN223	103
CN224 CN226	104
CN225 CN227	105
CN228	106
CN229	107
CN230	108
CN231	109
CN232	110
CN233	111

DIODE

SYMBOL NO.	INDEX NO.
D220 ~ D237	112
D238 ~ D242	113

IC

SYMBOL NO.	INDEX NO.
IC220	114

RESISTOR

SYMBOL NO.	INDEX NO.
R220 R221	115

RESISTOR ARRAY

SYMBOL NO.	INDEX NO.
RAY220	116

FUSE

SYMBOL NO.	INDEX NO.
FU5	117

Rev. 1/89

23. PAPER FEED CONTROL BOARD (A009)

Index No.	Parts No.	Description	Q'ty Per Assembly
1	A0095250	Feed Control Board	1
101	11022805	Spring Header - 30P	
102	11030781	Connector - 6P	
103	11022117	Connector - 2P	
104	11031725	Connector - 3P	
105	11031729	Connector - 7P	
106	11001096	Connector - 12P	
107	11022533	Connector - 11P	
108	11022118	Spring Header - 4P	
109	11031726	Connector - 4P	
110	11022346	Spring Header - 2P	
111	11022264	Spring Header - 3P	
112	14010611	Diode - 1S1588	
113	14020383	Diode - W03C	
114	14072273	IC - TA8050P	
115	16116120	Resistor - 10Ω 1/2T	
116	16017508	Resistor Array - 4.7kΩ	
117	11070321	Fuse - 0.5A	

Index No.	Parts No.	Description	Q'ty Per Assembly