RICOH®
CUSTOMER SERVICE GROUP

FT4480/4430/4410 SERVICE TRAINING MANUAL

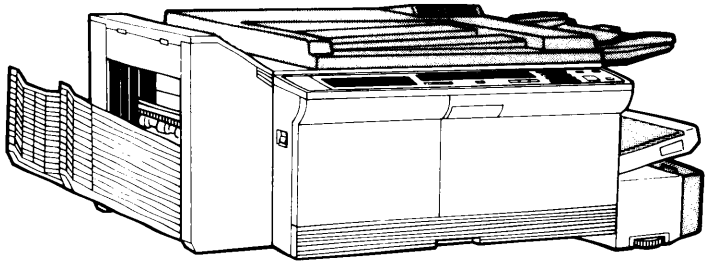

FT4480/4430/4410 STM TABLE OF CONTENTS

FT4480

Section

1. OVERALL MACHNE INFORMATION
2. DETAILED SECTION DESCRIPTIONS
3. DOCUMENT FEEDER
4. SORTER
5. LARGE CAPACITY TRAY

FT4430

Section

1. OVERALL MACHNE INFORMATION
2. DETAILED SECTION DESCRIPTIONS

FT4410

Section

1. OVERALL MACHNE INFORMATION
2. DETAILED SECTION DESCRIPTIONS
3. DOCUMENT FEEDER
4. SORTER
5. LARGE CAPACITY TRAY

TABLE OF CONTENTS

1. OVERALL MACHNE INFORMATION

Specifications 1-1
Operation Panel 1-5
Section A 1-5
Section B 1-6
Section C 1-7
Copy Process 1-8
Functional Operation 1-9
Paper Path 1-10
Paper Feed 1-10
Registration 1-11
Image Transfer 1-11
Paper Separation 1-11
Fusing 1-11
Mechanical Component Layout 1-12
Drive Layout 1-13
Electrical Component Layout 1-14
Electrical Component Descriptions 1-16
AC and DC Power Distribution 1-19
Overall Machine Control 1-20
Operation Panel Control 1-21

2. DETAILED SECTION DESCRIPTIONS

Drum 2-1
1. Selenium Drum 2-1
2. Handling the Drum 2-2
Drum Charge 2-3
1. Overview 2-3
2. Corona Wire Cleaner 2-4
3. Charge Corona Power Pack 2-5
Erase 2-6
1. Overview 2-6
2. Lead Edge Erase 2-7
3. Side Erase 2-7
4. Trail Edge Erase 2-9
5. Erase Lamp Circuit 2-10
Optics 2-12
1. Overview 2-12
2. Scanner Drive 2-13

3. Lens/Mirror Positioning 2-15
4. Stepper Motor Control 2-19
5. Automatic Image Density Sensing 2-20
6. Exposure Lamp Control 2-21
7. Service Call Conditions 2-22
Development 2-23
1. Overview 2-23
2. Drive Mechanism 2-24
3. Seals and End Magnets 2-25
4. Cross Mising 2-26
5. Image Density Control 2-27
6. Bias for ID Sensing 2-31
7. Bias Control Circuit 2-32
8. Color Development 2-33
9. Service Call Conditions 2-35
Toner Density Detection and Toner Supply 2-36
1. Toner Density Detection 2-36
2. Toner Density Control 2-37
3. Toner Supply 2-38
4. Toner Supply Amount 2-40
5. Toner End Detection 2-41
6. Color Toner Density Detection and Color Toner Supply 2-41
7. Service Call Condition 2-43
Image Transfer and Separation 2-44
1. Pre-Transfer Lamp (PTL) 2-44
2. Image Transfer 2-44
3. Paper Separation 2-45
4. Pre-Transfer Lamp Circuit 2-46
5. transfer/Separation Corona Circuit 2-47
6. Pick-Off Mechanism 2-48
7. Pick-Off Circuit 2-50
Drum Cleaning 2-51
1. Overview 2-51
2. Drive Mechanism 2-52
3. Cleaning Blade 2-53
4. Toner Collection Bottle Vibration 2-54
5. Toner Overflow Sensor Circuit 2-55
6. Cleaning Solenoid Circuit 2-56
Quenching Lamp 2-57
Paper Feed and Registration 2-58
1. Overview 2-58
2. Friction Pad Feed System 2-59
3. Paper Lift Mechanism 2-60

4. Paper End Detection 2-62
5. Paper Size Detection 2-63
6. Paper Feed Drive 2-64
7. Manual Feed 2-65
8. Feed and Registration Timing 2-66
Paper Transport 2-69
Image Fusing and Paper Exit 2-70
1. Overview 2-70
2. Fusing Drive Mechanism 2-71
3. Oil Supply and Cleaning 2-72
4. Oil End Sensor 2-73
5. Fusing Exit Assembly 2-74
6. Fusing Control 2-75
7. Service Call Conditions 2-76

3. DOCUMENT FEEDER

1. Specifications 3-1
2. Mechanical Component Layout 3-2
3. Electrical Component Layout 3-3
4. Basic Operation 3-4
5. Feed-in Unit Mechanism 3-5
6. Separation Mechanism 3-6
7. Misfeed Prevention 3-7
8. Wear Prevention 3-8
9. Friction Roller Release Mechanism 3-9
10. Registration 3-10
11. Feed-out Mechanism 3-11
12. Lifting Mechanism 3-12
13. Misfeed Check 3-13

4. SORTER

1. Specifications 4-1
2. Mechanical Component Layout 4-2
3. Electrical Component Layout 4-3
4. Basic Operation 4-4
5. Bin Drive Mechanism 4-6
6. Exit Rollers 4-8
7. Electrical Control 4-9

5. LARGE CAPACITY TRAY

1. Specifications 5-1
2. Mechanical Component Layout 5-2
3. Electrical Component Layout 5-3
4. Mechanical Operation 5-4
5. Electrical Operation 5-7

SPECIFICATIONS

Configuration:	Desk top
Copying Process:	Dry electrostatic transfer system
Original:	Sheet/book
Original Size:	Maximum 11" x 17"
Copy Paper Size:	Maximum 11" x 17" Minimum 5 1/2" x 8 1/2"
Copy Paper Weight:	Cassette feed 52 to 128 g/m^2 (14 lb to 34 lb) Manual feed 52 to 157 g/m^2 (14 lb to 42 lb)
Reproduction Ratios:	See the following table:

Enlargement	1 : 1.55 1 : 1.29 1 : 1.21
Full Size	1 : 1
Reduction	1 : 0.93 1 : 0.77 1 : 0.74 1 : 0.65

Zoom:	From 65% to 155% in 1% steps
Reproduction Ratio Change:	Full size ⇒ Enlargement or Full size ⇒ Reduction in less than 5 seconds Enlargement ⇒ Reduction or Reduction ⇒ Enlargement in less than 6.5 seconds

Copying Speed:	The copy speed (in copies per minute) is shown in the following tables: LDG LG LT LT(R) 10 12 18 13 When used with a document feeder, LT speed is 14 cpm (sideways).
First Copy Time:	6.0 seconds ($8_{1/2}$" x 11" side ways)
Warm-up Time:	Approximately 100 seconds (23°C)
Copy Number Input:	Numeral keys, 1 to 999, (count up or count down)
Special Functions:	- 2 single copies mode - Auto paper select and auto reduce/enlarge mode (with ADF only)
Manual Image Density Selection:	7 Steps (Development bias variable)
Automatic Reset:	1 min. standard setting; can also be set to 3 min. or no auto reset. All functions canceled except cassette selection. Quantity entered returns to "1", and reproduction ratio returns to full size.
Paper Feed:	- Double universal cassette feed, 250 sheets each (auto cassette shift) - Manual feed table - Optional large capacity tray (LCT) at second feed station.
Paper Feed System:	Friction-pad system
Exposure System:	Slit exposure, moving optics
Lens:	Through lens, F8, f = 180mm
Light Source:	Halogen lamp (85 V, 290 W)
Photoconductor:	Selenium drum (F type)

Charge System:	Dual wire dc corona
Erase:	LED lamp unit (34 LEDs)
Development System:	Magnetic brush roller
Toner Density Control:	Automatic, direct density sensing
Development Bias System:	Automatic voltage change (The control board monitors the selected image density level, drum temperature, and rest time.)
Toner Replenishment:	Cartridge exchange (300 g/cartridge)
Toner Consumption:	Approx. 7,000 copies/cartridge (A4 7% original)
Cleaning System:	Blade and brush
Quenching System:	Photo-quenching
Image Transfer:	Single wire dc corona, pre-transfer lamp
Paper Separation:	Dual wire ac corona and pick-off pawls
Image Fusing:	Heat/pressure - roller type
Fusing Lamp:	Halogen lamp (840 W)
Electronic Control System:	8-bit microprocessor
Copy Tray Capacity:	250 sheets (10" x 14") 100 sheets (11" x 17")
Self-diagnostics:	19 codes, displayed in the copy counter
Power Source:	110V/60Hz....15A 115V/60Hz....15A

Power Consumption:	Warm-up:	1.0 kW
	Stand-by:	0.08 kW
	Copying:	0.42 kW
	Maximum:	1.22 kW
Dimensions: (W x D x H)	Copier only:	28.9 x 25.8 x 15.4 inches
	Full System:	52.9 x 25.8 x 18.2 inches
Weight:	65 kg (143 lb) (Copier only) 100 kg (221 lb) (Full system without table)	
Optional Equipment:	Document Feeder Sorter (20 bins) Large Capacity Tray Color Development Unit (Red, Blue, Green)	

OPERATION PANEL

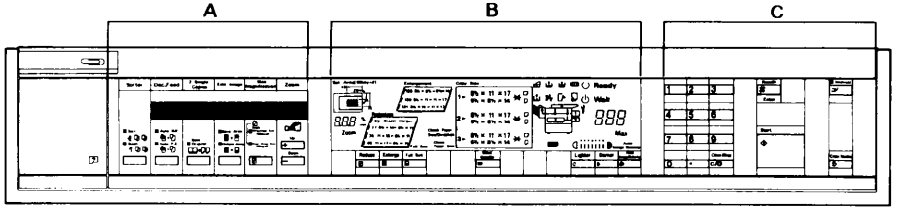

1 Section A

(LT/LDG Version)

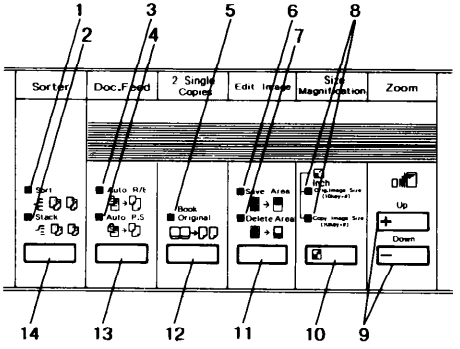

(A4/A3 Version)

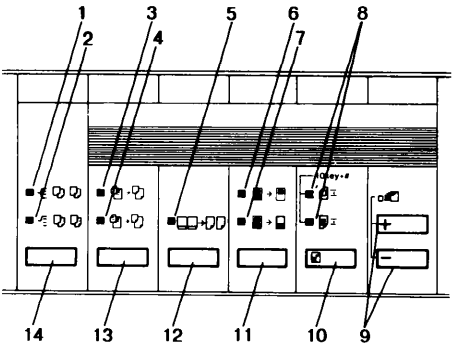

1. Sort Indicator
2. Stack Indicator
3. Auto Reduce/Enlarge Indicator
4. Auto Paper Select Indicator
5. 2 Single Copies Indicator
6. Save Area Indicator
7. Delete Area Indicator
8. Size Magnification Indicators
9. Zoom Keys
10. Size Magnification Key
11. Edit Image Key
12. 2 Single Copies Key
13. Auto Selection Key
14. Sorter Key

2. SECTION B (LT/LDG VERSION)

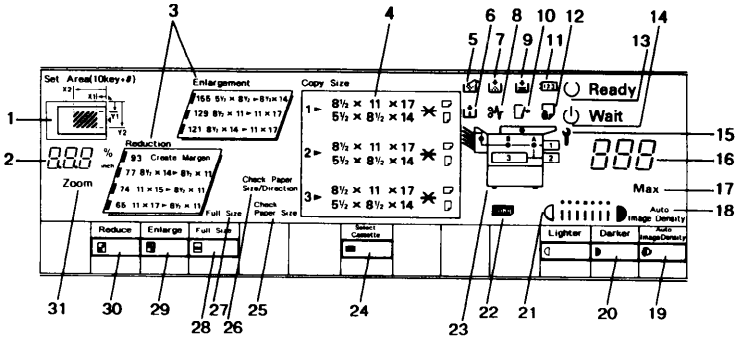

(A4/A3 VERSION)

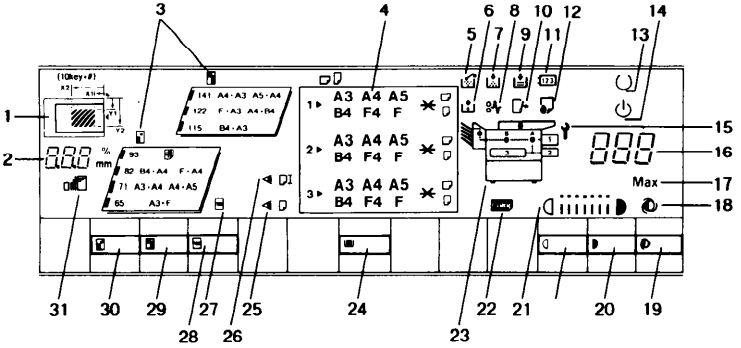

1. Set Area Indicator
2. Magnification Ratio Indicator
3. Magnification Indicators
4. Paper Size Indicators
5. Used Toner Bottle Indicator
6. Add Oil Indicator
7. Add Toner Indicator
8. Check Paper Path Indicator
9. Load Paper Indicator
10. Close Door Indicator
11. Set Key Counter Indicator
12. Manual Feed Indicator
13. Ready Indicator
14. Wait Indicator
15. Call Service Indicator
16. Copy Counter
17. Max Indicator
18. Auto Image Density Indicator
19. Auto Image Density Key
20. Image Density Keys
21. Manual Image Density Indicator
22. Color Toner Indicator
23. Misfeed Location Display
24. Select Cassette Key
25. Check Paper Size Indicator
26. Check Paper Size/Direction Indicator
27. Full Size Indicator
28. Full Size Key
29. Enlarge Key
30. Reduce Key
31. Zoom Indicator

3. SECTION C

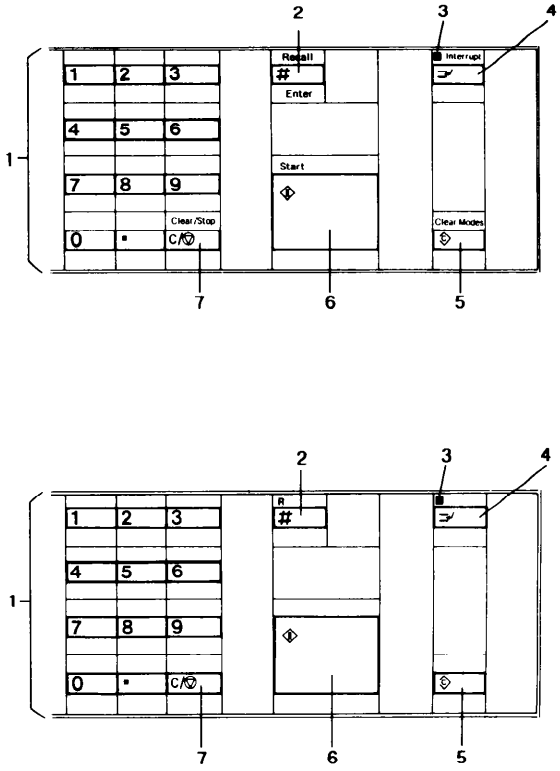

1. Number Keys
2. Recall/Enter Key
3. Interrupt Indicator
4. Interrupt Key
5. Clear Modes Key
6. Start Key
7. Clear/Stop Key

COPY PROCESS

1.DRUM CHARGE
In the dark the charge corona unit gives a uniform positive charge to the selenium drum. The charge remains on the surface of the drum because the photoconductive selenium has high electrical resistance in the dark.

2.ERASE
The erase lamp illuminates the areas of the charged drum surface that will not be used for the copy image. The resistance of the drum in the illuminated areas drops and the charge on those areas dissipates.

9.QUENCHING
The light from the LED electrically neutralizes the surface of the selenium drum.

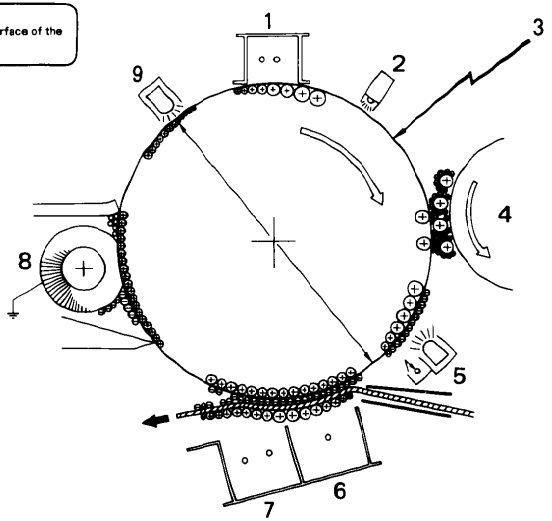

3.EXPOSURE
An image of the original is reflected to the selenium drum surface via the optics assembly. The charge on the drum surface is dissipated in direct proportion to the intensity of the reflected light, thus producing an electrical latent image on the drum surface.

4.DEVELOPMENT
Negatively charged toner is attracted to the positively charged areas of the drum, thus developing the latent image. (The negative triboelectirc charge is caused by rubbing action between the carrier and toner particles.)

8.CLEANING
The cleaning brush removes part of the toner on the drum and loosens the remainder. The cleaning blade then scrapes off the loosened toner.

5.PRE-TRANSFER LAMP (PTL)
The PTL illuminates the drum to remove all positive charge from the exposed areas of the drum. This prevents the toner particles from being reattracted to the drum surface during paper separation and makes paper separation easier.

7.PAPER SEPARATION
A strong ac corona discharge is applied to the reverse side of the copy paper, gradually reducing the positive charge on the copy paper and breaking the electrical attraction between the paper and the drum. Then, the stiffness of the copy paper causes it to separate from the drum surface. The pick-off pawls help to separate paper which has low stiffness.

6.IMAGE TRANSFER
Paper is fed to the drum surface at the proper time so as to align the copy paper and the developed image on the drum surface. Then, a strong positive charge is applied to the reverse side of the copy paper, providing the electrical force to pull the toner particles from the drum surface to the copy paper. At the same time, the copy paepr is electrically attracted to the drum surface.

FUNCTIONAL OPERATION

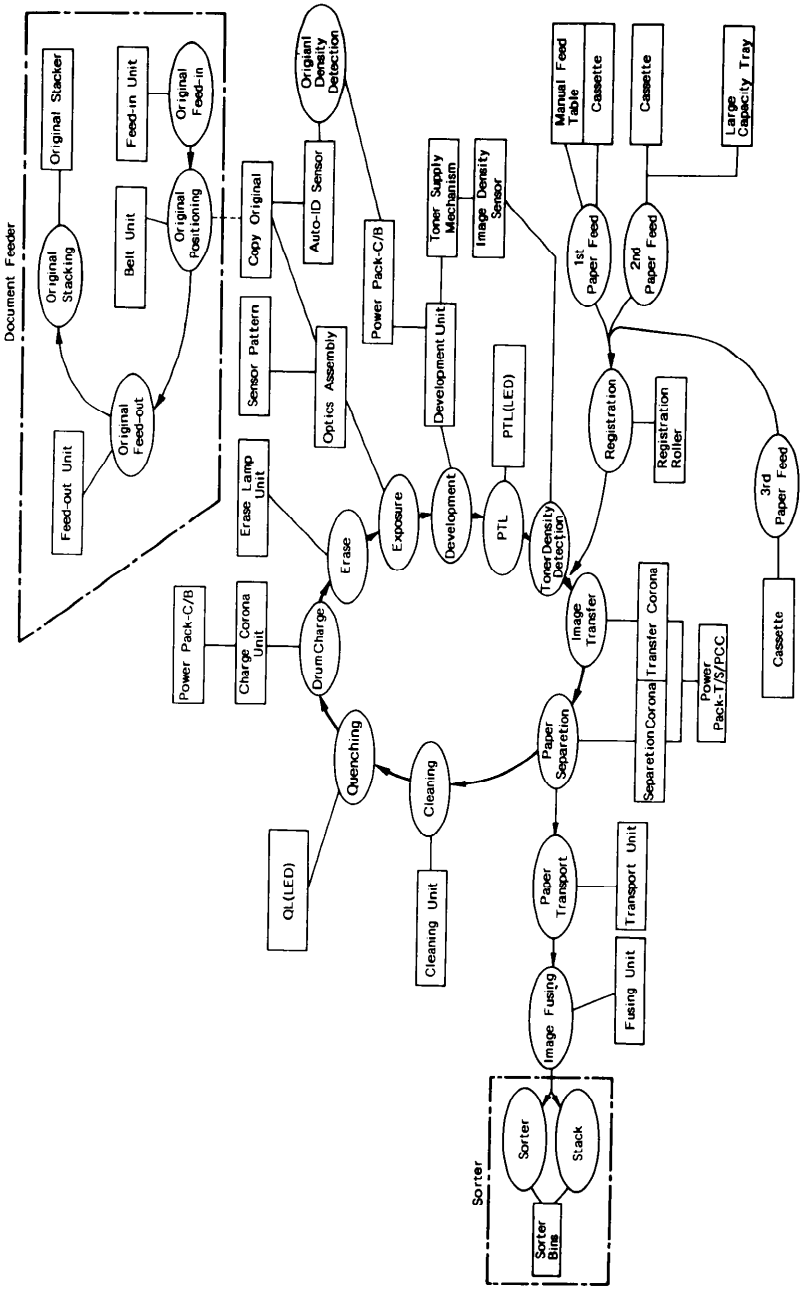

PAPER PATH

Paper feed starts from one of the three paper feed stations: two external cassettes and one internal cassette tray. The path followed depends on which cassette the operator has selected. For copy processing, all sheets follow the same path from the paper feed mechanism through the fusing unit. After that, copies are delivered to the receiving tray.

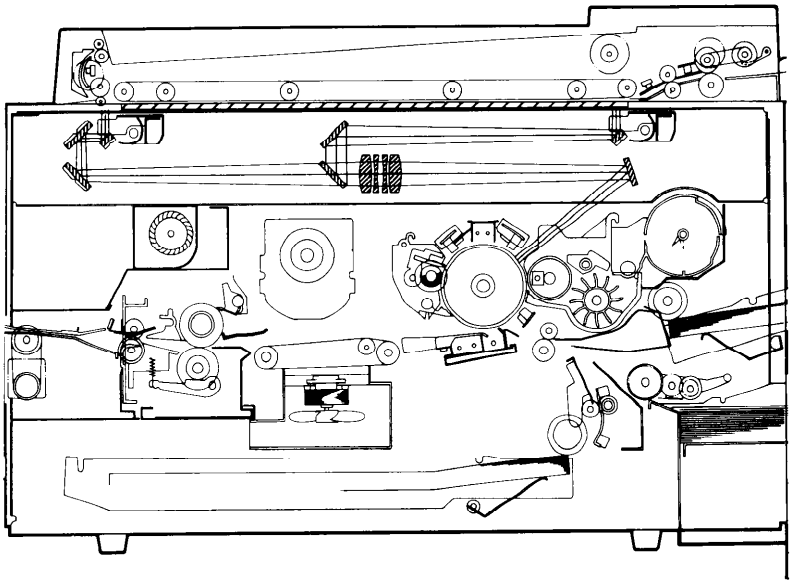

- PAPER FEED -

A friction pad and feed roller mechanism separates one sheet of paper from the paper stack and feeds it to the registration rollers. If the paper is fed from the internal cassette tray, relay rollers move the paper to the registration rollers. The registration rollers are not turning at this time. The paper buckles slightly when the leading edge reaches the registration rollers. Buckling seats the sheet securely between the registration rollers and corrects skew.

- REGISTRATION -

At the programmed time, the registration rollers start turning to feed the paper to the drum.

- IMAGE TRANSFER -

The toner image on the drum surface is pulled from the drum onto the passing paper by the transfer corona.

- PAPER SEPARATION -

The separation corona breaks the electrostatic attraction between the paper and the drum. The suction of the vacuum fan pulls the paper onto the transport belt. The transport belt moves the paper with the developed copy image to the fusing unit.

- FUSING -

The paper passes between two rollers which bond the toner image to the paper by applying heat and pressure. At this point the copy is complete.

MECHANICAL COMPONENT LAYOUT

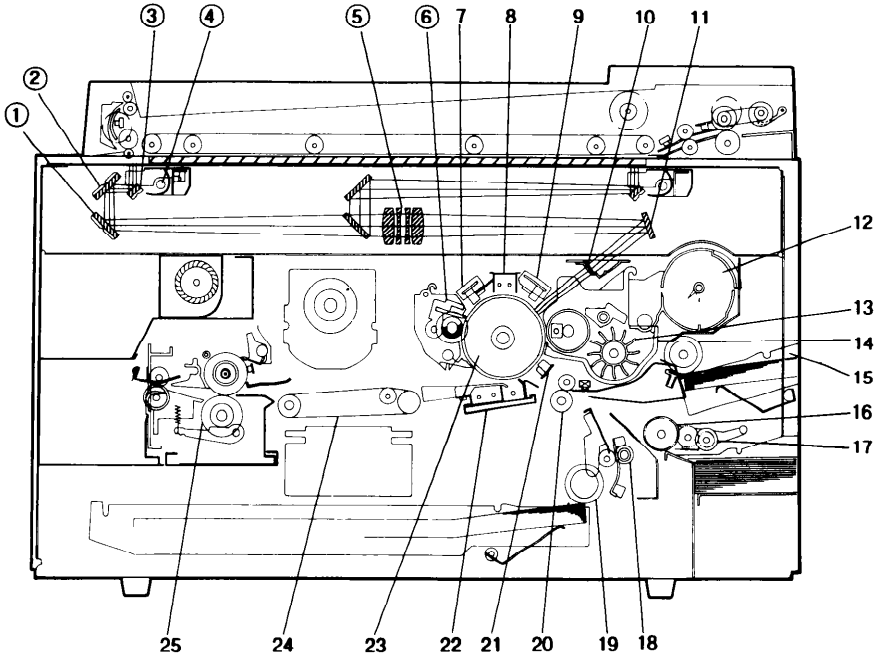

1. Third Mirror
2. Second Mirror
3. First Mirror
4. Exposure Lamp
5. Lens
6. Cleaning Unit
7. Quenching Lamp
8. Main Corona Unit
9. Erase Lamp Unit
10. Toner Shield Glass
11. Fourth Mirror
12. Toner Cartridge
13. Development Unit
14. First Feed Roller
15. First Cassette
16. Second Feed Roller
17. Pick-up Roller (LCT)
18. Relay Roller
19. Third Feed Roller
20. Registration Roller
21. Pre-Transfer Lamp (PTL) /Image Density Sensor Board
22. Transfer/Separation Corona Unit
23. Selenium Drum
24. Transport Belt
25. Fusing Unit

DRIVE LAYOUT

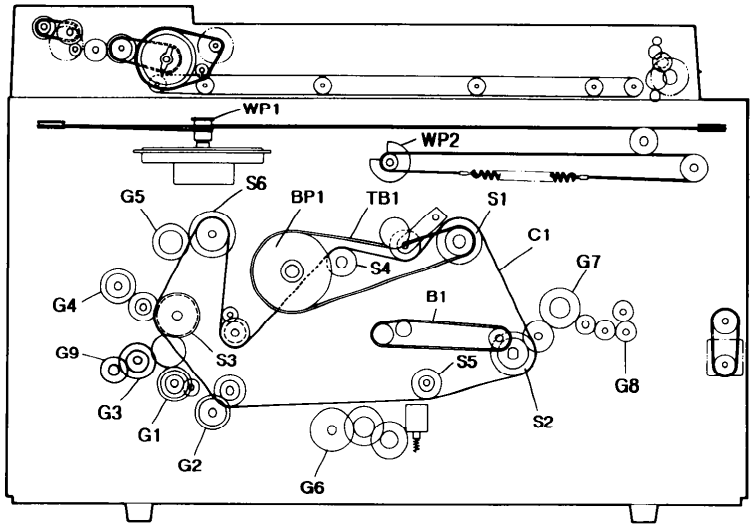

GEARS

G1 Relay Clutch Gear
G2 Third Feed Clutch Gear
G3 Second Feed Clutch Gear
G4 First Feed Clutch Gear
G5 Toner Supply Clutch Gear
G6 Third Feed Cassette Lift Gear
G7 Hot Roller Drive Gear
G8 Exit Roller Drive Gear
G9 Pick-up Roller Drive Gear(LCT)

SPROCKETS

S1 Main Motor Sprocket
S2 Fusing Drive Sprocket
S3 Feed Drive Sprocket
S4 Cleaning Drive Sprocket
S5 Toner Collection Bottle Drive Sprocket
S6 Development Drive Sprocket

WIRE PULLEYS

WP1 Scanner Drive Pulley
WP2 Second Scanner Drive Pulley

TIMING BELT

TB1 Drum Drive Belt

BELT

B1 Transport Belt

BELT PULLEY

BP1 Drum Drive Pulley

CHAINS

C1 Main Drive Chain

Rev. 8/89

ELECTRICAL COMPONENT LAYOUT

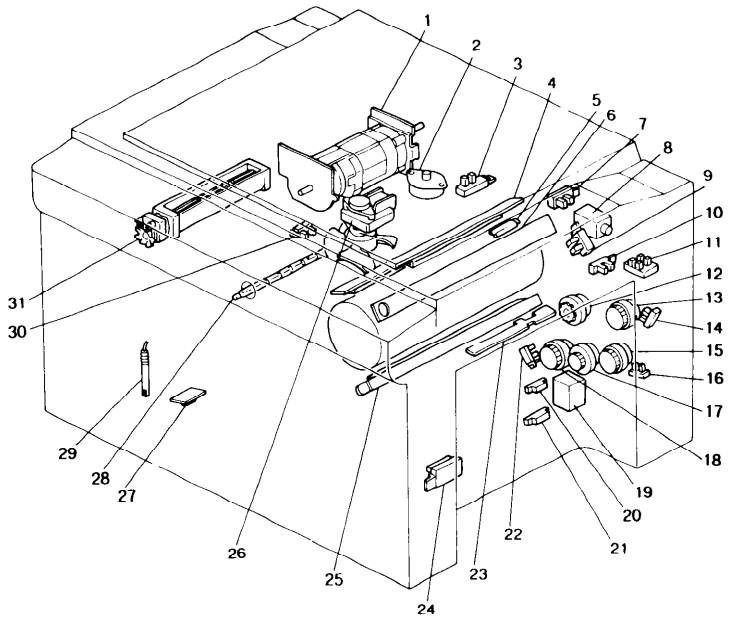

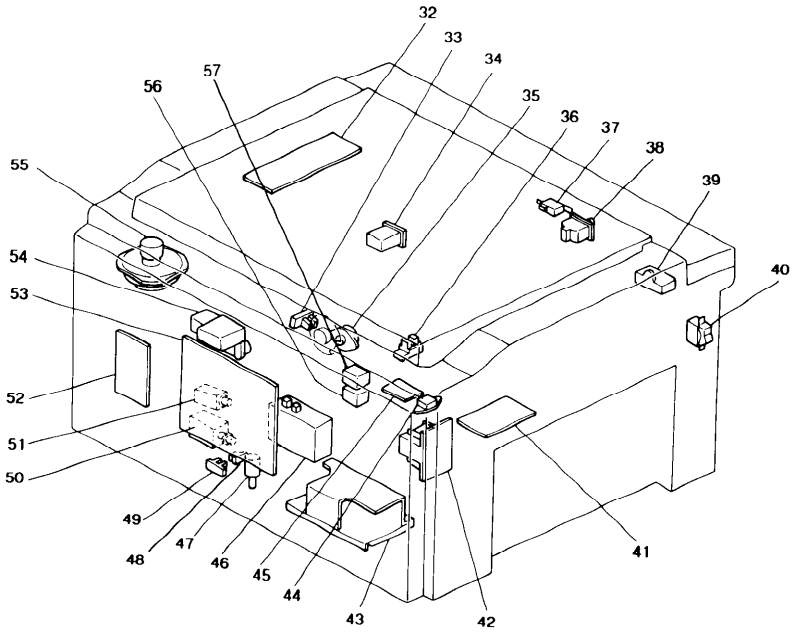

1. Main Motor - M1
2. Lens Drive Motor - M2
3. Lens HP Sensor - S1
4. Quenching Lamp - L1
5. Drum Heater

6. Erase Lamp - L2
7. Pulse Generator Sensor - S2
8. Toner Supply Solenoid - SOL1
9. Color Toner End Sensor - S3
10. Manual Feed Sensor - S4

11. Color Toner Sensors - S5
12. Registration MC - MC1
13. First Paper Feed MC - MC2
14. First Paper End Sensor - S6
15. Second Paper Feed MC - MC3

16. Second Paper End Sensor - S7
17. Relay Feed MC - MC4
18. Third Paper Feed MC - MC5
19. Tray Lock Solenoid - SOL2
20. First Paper Size Sensor - S8

21. Second Paper Size Sensor - S9
22. Third Paper End Sensor - S16
23. Registration Sensor - S10
24. Third Paper Size Sensor - S11
25. Pre Transfer Lamp - L3

26. Vacuum Fan Motor - M3
27. Toner Overflow Sensor - S17
28. Fusing Lamp - L4
29. Oil End Sensor - S18
30. Paper Exit Sensor - S12

31. Exhaust Blower Motor - M4
32. Lamp Regulator PCB - PCB1
33. Second Scanner Home Position Sensor - S13
34. Total Counter - CO1

35. Second Scanner Motor - M5
36. Scanner Home Position Sensor - S1
37. Door Switch - SW4
38. Front Cover Safety Switch - SW2/3
39. Main Motor Capacitor - C

40. Main Switch - SW1
41. Relay PCB - PCB2
42. Transformer - TR1
43. DC Power Supply Unit - PSU
44. Fusing Triac - FT

45. Heater Control PCB - PCB5
46. Power Pack - T/S - P1
47. Cassette Tray Lift Motor - M6
48. Cassette Tray Lift Sensor - S19
49. Cassette Tray Sensor - S15

50. Cleaning Solenoid - SOL3
51. Pick-off Solenoid - SOL4
52. Feed Control PCB - PCB3
53. Main PCB - PCB4
54. Power Pack - C/B - P2

55. Scanner Drive Motor - M7
56. Fusing Lamp Relay - RA1
57. Main Motor Relay - RA2

ELECTRICAL COMPONENT DESCRIPTIONS

SYMBOL	NAME	FUNCTION	LOCATION
MOTORS			
M1	Main Motor	Drives all main unit components except optics unit and fans/blower. (100 Vac)	1
M2	Lens Drive Motor	Positions the lens. (dc stepper)	2
M3	Vacuum Fan Motor	Provides suction so that paper is held firmly on the transport belt. (100 Vac)	26
M4	Exhaust Blower Motor	Removes heat form around the fusing unit. (100 Vac)	31
M5	Second Scanner Motor	Positions the second scanner. (dc stepper)	35
M6	Third Cassette Lift Motor	Raises the cassette bottom plate.	47
M7	Scanner Drive Motor	Drives the scanner. (dc stepper) .	55
MAGNETIC CLUTCHES			
MC1	Registration MC	Drives the registration rollers.	12
MC2	First Paper Feed MC	Starts paper feed from the first paper feed station.	13
MC3	Second Paper Feed MC	Starts paper feed from the second paper feed station.	15
MC4	Relay Feed MC	Starts transfer of paper from 3rd feed station to regist rollers.	17
MC5	Third Paper Feed MC	Starts paper feed from the third paper feed station.	18
SOLENOIDS			
SOL1	Toner Supply Solenoid	Energizes to supply toner.	8
SOL2	Tray Lock Solenoid	Prevents the cassette tray being pulled out while bottom plate is raised.	19
SOL3	Cleaning Solenoid	Moves the cleaning blade against the drum.	50
SOL4	Pick-off Solenoid	Brings the pick-off pawls into contact with the drum.	51
SWITCHES			
SW1	Main Switch	Supplies Power to Copier	40
SW2/3	Front Cover Safety Switch	Cuts ac power to ac components.	38
SW4	Door Switch	Enables the Door Open Indicator	37

SYMBOL	NAME	FUNCTION	LOCATION
SENSORS			
S1	Lens Home Position	Informs the CPU when the lens is at the full size position.	3
S2	Pulse Generator	Supplies timing pulses to the main board.	7
S3	Color Toner End Sensor	Detects when it is time to add toner.	9
S4	Manual Feed Sensor	Detects when the manual feed table is open.	10
S5	Color Toner Sensors	Detects which color toner development unit is installed.	11
S6	First Paper End Sensor	Informs the CPU when the first cassette runs out of paper.	14
S7	Second Paper End Sensor	Informs the CPU when the second cassette runs out of paper.	16
S8	First Paper Size Sensor	Determines what size paper is in the first cassette.	20
S9	Second Paper Size Sensor	Determines what size paper is in the second cassette.	21
S10	Registration Sensor	Misfeed detector and ON/OFF timing.	23
S11	Third Paper Size Sensor	Determines what size paper is in the third cassette.	24
S12	Paper Exit Sensor	Misfeed Detector.	30
S13	Second Scanner Home Position Sensor	Informs the CPU when the second scanner is at the home position.	33
S14	Scanner Home Position Sensor	Informs the CPU when the scanner is at the home position.	36
S15	Cassette Tray Sensor	Senses when the cassette tray is set.	49
S16	Third Paper End Sensor	Determines the paper end condition of the cassette tray.	22
S17	Toner Overflow Sensor	Detects when the used toner bottle is full.	27
S18	Oil End Sensor	Detect a low oil condition.	29
S19	Cassette Tray Lift Sensor	Determines when the paper has reached the correct feed position.	48
PRINTED CIRCUIT BOARDS			
PCB1	Lamp Regulator PCB	Regulates the exposure lamp voltage.	32
PCB2	Relay PCB	Main power relay. Provides 100 volts ac to motors and circuits.	41
PCB3	Feed Control PCB	Contains multiplexing circuitry to control feed components.	52
PCB4	Main PCB	Controls all copier functions both directly and through other PCBs.	53
PCB5	Heater Control PCB	Controls heater switching.	45

SYMBOL	NAME	FUNCTION	LOCATION
LAMPS			
L1	Quenching Lamp	Neutralizes any charge remaining on the drum surface after cleaning.	4
L2	Erase Lamp	Discharges the drum outside of the image area. Provides lead/trail edge erase and editing functions.	6
L3	Pre-Transfer Lamp	Reduces charge on the drum surface before transfer.	25
L4	Fusing Lamp	Provides heat to the fusing unit.	28
POWER PACKS			
P1	Power Pack - T/S	Provides dc voltage for the transfer and provides ac and dc voltage for separation coronas.	46
P2	Power Pack - C/B	Provides high voltage power for the charge corona and the development roller bias.	53
TRANSFORMER			
TR1	Transformer	Steps down the wall voltage to 100 Vac.	42
COUNTER			
CO1	Total Counter	Keeps track of the total number of copies made.	34
RELAYS			
RA1	AC Drive Relay	Main Power Relay Fusing Lamp and Heater Control Board.	56
RA2	AC Drive Relay	Main Motor	57
OTHERS			
C	Main Motor Capacitor	Start Capacitor	36
FT	Fusing Triac	Switches fusing lamp on and off.	44
PSU	DC Power Supply Unit	Rectifies 100 Vac input and outputs dc voltages.	43

AC AND DC POWER DISTRIBUTION

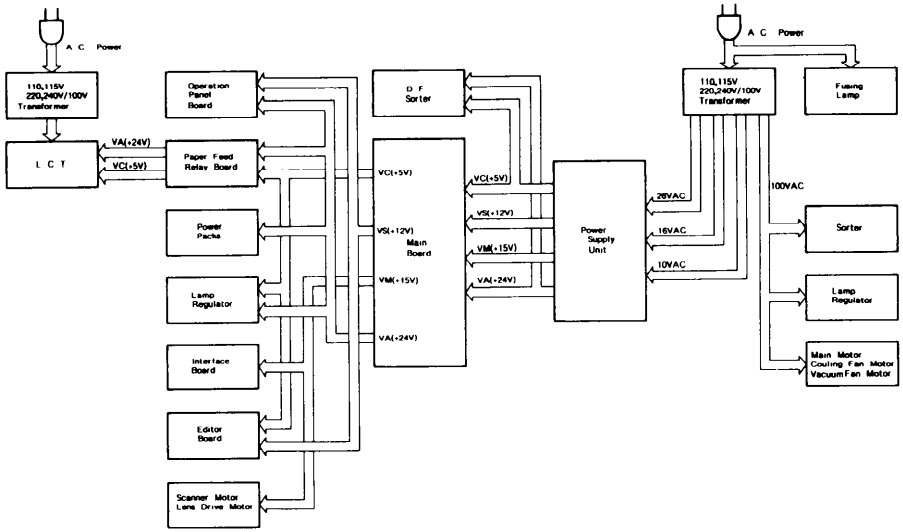

The ac power supply is filtered then distributed to the fusing lamp and the main transformer. The transformer supplies 100 volts to the cooling fan, vacuum fan, and the main motor.

The dc power supply unit receives ac 26, 16, and 10 volts, via fuses, from the main transformer. These voltages are rectified and regulated to 24, 15 and 12, and 5 volts respectively and distributed to the sorter, ADF, and the copier main board. All supplies have their own ground line.

The main board supplies voltage to all copier electrical components including: power packs, PCBs, and relays. It also supplies the editor.

The LCT has a separate power supply.

OVERALL MACHINE CONTROL

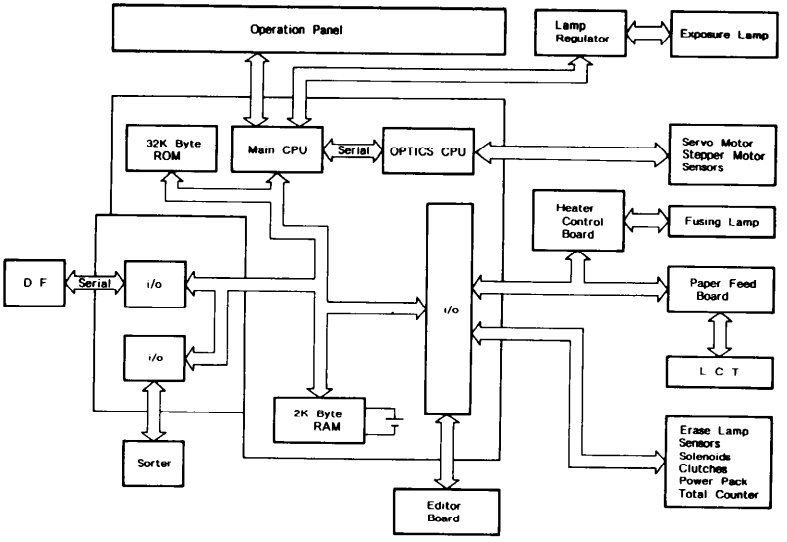

The base copier has two CPUs on the main board that control all machine operations (the main CPU and the optics CPU).

The main CPU is the main controller of this copier. It monitors the input signals from sensors and controls the electrical devices through programmable I/O devices. The main board has a RAM (2 kbyte) for the service program function. A battery backs up the power to this RAM. This CPU controls the fusing lamp, via the heater control board, the exposure lamp, via the lamp regulator, and motors directly from the main board.

The optics CPU controls the servomotor (15 volts) and the stepper motors (24 volts) for the optics section.

The interface board is connected to the copier main board when the document feeder or sorter is installed.

OPERATION PANEL CONTROL

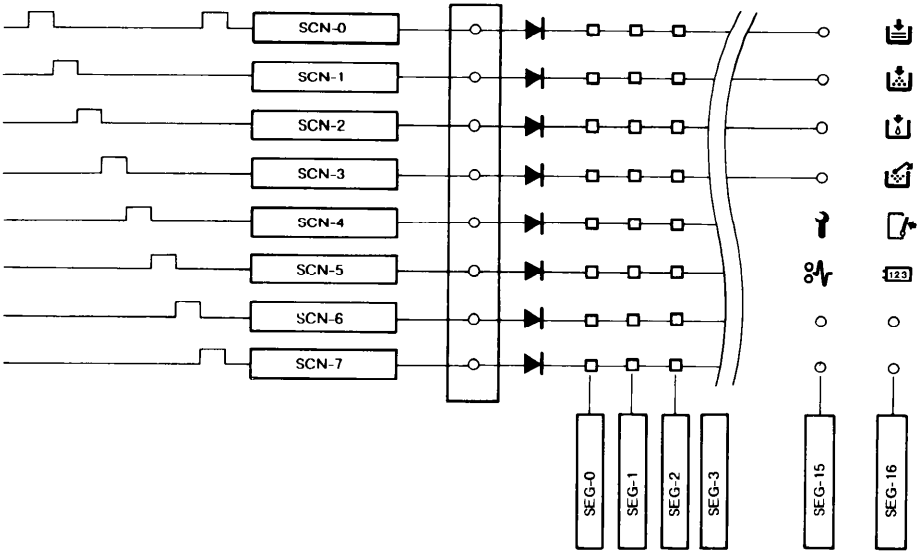

The CPU controls all functions of the operation panel. The CPU sends data to programmable I/O devices which form a multiplexing circuit consisting of 8 scan lines and 17 segment lines. Transistors drive all the scan lines at 12 volts to reduce effects from noise.

The multiplexing circuit lights all displays and monitors all keys of the operation panel. The door switch is also monitored by this circuit and acts like any other operation panel key. The counters are also controlled by the operation panel multiplexing circuit and act like the operation panel lamps.

DRUM

1. Selenium Drum

Selenium has the characteristics of:

1. Being able to accept a high positive electrical charge in the dark. (The electrical resistance of selenium is high in the absence of light.)

2. Dissipating the electrical charge when exposed to light. (The conductivity of selenium is greatly enhanced by exposure to light.)

3. Dissipating an amount of charge in direct proportion to the intensity of the light. That is, where a stronger light illuminates the selenium surface, a smaller voltage remains on the selenium.

The sensitivity of selenium changes slightly with variations in the surface temperature of the drum. (Under cool conditions, the drum may be excessively charged; this will result in background or excessive image density.) To prevent this, the CPU monitors the temperature variations around the drum and changes the development bias accordingly.

Drum sensitivity also depends on how long the drum has rested between copy runs. The copier's CPU compensates for changes in drum sensitivity due to rest time by changing the development bias. This prevents variations in image density at the beginning of copy runs

The selenium drum used in this model has high sensitivity, good color reproduction, and good reproduction of low contrast originals (pencil originals, etc.)

2. Handling the Drum

1. Never touch the drum surface with bare hands.
2. Store the drum in a cool dry place away from heat.
3. When cleaning the drum, always use a pair of gloves.
4. Prime the drum with setting powder only when installing a new drum.
5. Never expose the drum to light for long periods.
6. Drum conditioning is necessary after installing a new drum. In addition, it should be done at the following times:
   1) When image density is reduced due to over exposure of the drum
   2) After cleaning the drum
   3) When the drum is lightly scratched.
7. Always keep the drum in the protective sleeve when inserting or pulling the drum out of the copier.
8. Before inserting or pulling out the drum, pull the cleaning unit out slightly to avoid scratching the drum on the pick-off pawls.
9. Return used drums to the distributor according to standard procedure.

DRUM CHARGE

1. Overview

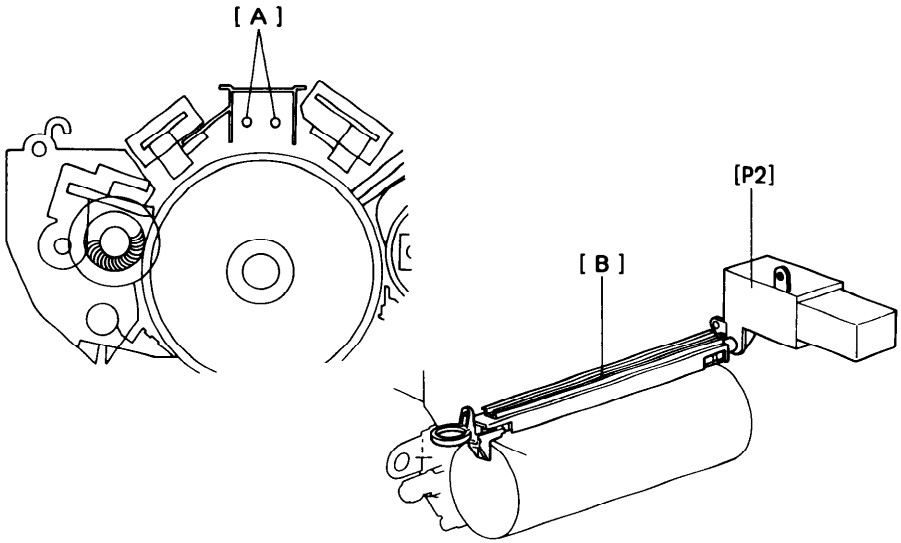

This copier uses a dual wire corotron [A] and a highly sensitive selenium drum. The corona wires generate a corona of positive ions when a the charge power pack [P2] applies a high positive voltage. The selenium coating receives a uniform positive charge (750 ± 50 volts) as it rotates past the corona unit [B].

The main motor fan [C] provides a smooth flow of air to the interior of the charge corona unit to prevent uneven build-up of positive ions. (An uneven build up of positive ions could cause uneven image density.)

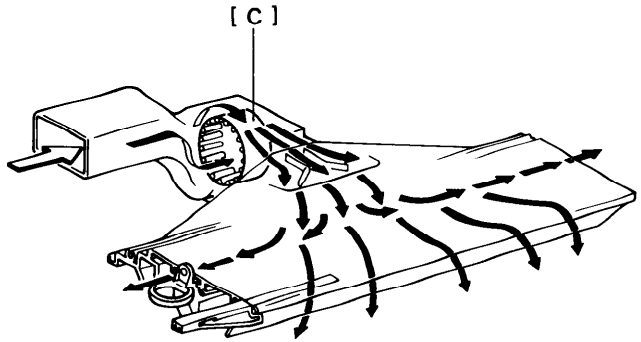

2. Corona Wire Cleaner

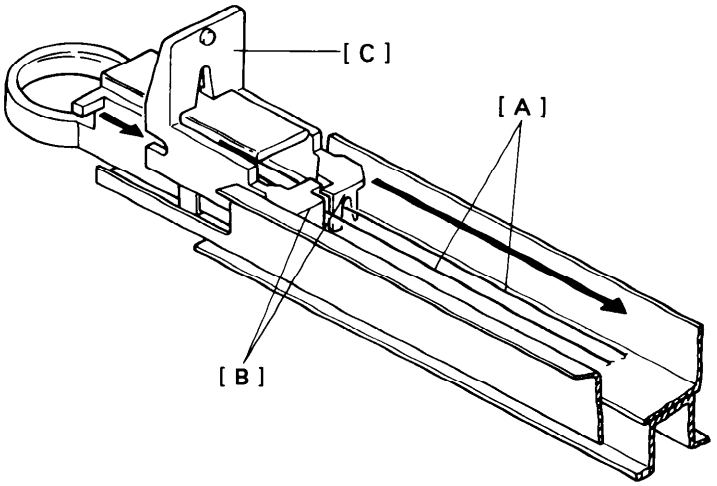

The flow of air around the charge corona wires [A] may deposit paper dust or toner particles on the corona wires. These particles may interfere with charging and cause low density bands on copies. The wire cleaner [B] allows the operator to correct this problem by simply pulling out and pushing in the corona unit.

Each corona wire is held between two pads on the wire cleaner bracket [C]. The wires ride between the pads when the unit is pulled out, and the pads clean off any particles on the wires.

3. Charge Corona Power Pack

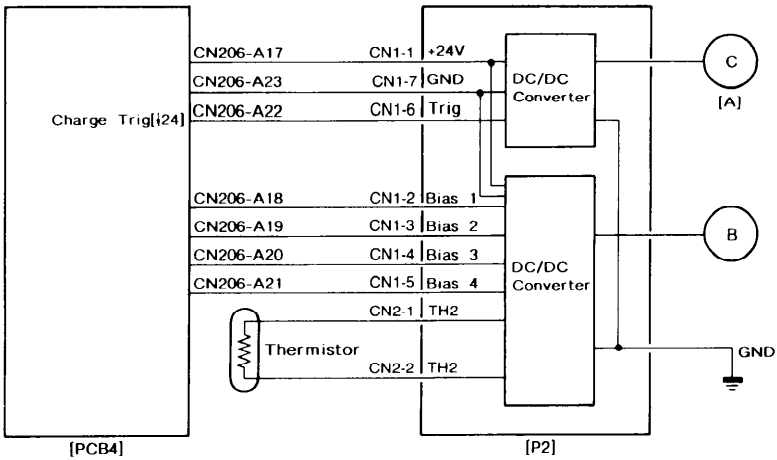

The circuit operation for the charge corona [A] begins with the input of +24 volts to the power pack at CN617-1. This power supply is used for the high voltage coronas.

The charge corona turns on 0.42 second after the Start key is pressed. A LOW signal from the main board (at CN206-A22) energizes the power pack.

The charge corona always turns on at the same time, but the off timing depends on paper size.

ERASE

1. Overview

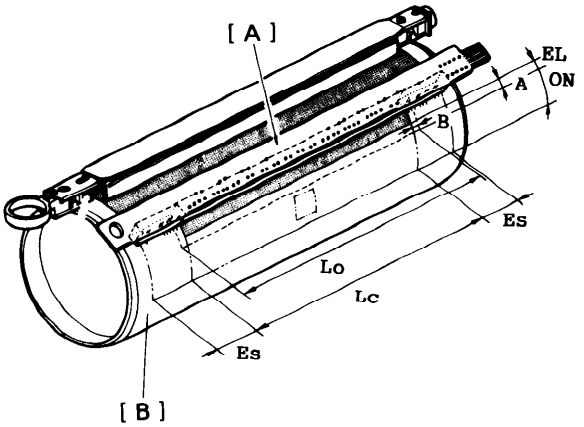

A: Lead Edge Erase Margin
B: Side Margins -- 2 ± 2 mm each (For full size copies, the total of both side margins is less than 4 mm.)
Lo: Original Image width
Lc: Charged width on the Drum
EL: Lead Edge Erase
Es: Side Erase
R: Paper Lead Edge Registration -- 0 ± 2 mm
A+R: Lead Edge Blank Margin -- 3.5 ± 2.5 mm

The erase lamp [A] consists of a line of LEDs extending across the full width of the drum [B].

The erase lamp has three functions: lead edge erase, side erase, and trail edge erase. Trail edge erase begins after the trailing edge of the copy paper; therefore, the trailing edge of the copy will not be erased.

The erase lamp unit [A] also has two thermistors: TH-1 and TH-2. Both of these thermistors detect the temperature around the drum. TH-1 selects the proper rest time compensation, and TH-2 controls the development bias voltage.

2. Lead Edge Erase

The entire line of LEDs turns on when the main motor turns on. They stay on until the erase margin slightly overlaps the lead edge of original image area on the drum (Lead Edge Erase Margin). This prevents the toner density sensor pattern from being developed on every copy cycle and prevents the edge of the original from appearing on the copy image. The width of the lead edge blank margin can be adjusted using DIP switches SW101-5, -6, -7, and -8.

Lead Edge Erase

	Narrower ← → Wider															
DIP SW101-5	0	0	0	0	0	0	0	0	1	1	1	1	1	1	1	1
DIP SW101-6	0	0	0	0	1	1	1	1	0	0	0	0	1	1	1	1
DIP SW101-7	0	0	1	1	0	0	1	1	0	0	1	1	0	0	1	1
DIP SW101-8	0	1	0	1	0	1	0	1	0	1	0	1	0	1	0	1

0:OFF
1:ON
One Step:0.8mm(0.03")

During image density detection cycles (once every ten cycles), the center block of erase lamps turns off long enough for the sensor pattern to be developed.

3. Side Erase

Based on the paper size and on the reproduction ratio, the LEDs turn on in pairs (one on either side) to discharge the drum potential on both sides. This reduces toner consumption and drum cleaning load.

The CPU adjusts the side erase margin to be as near as possible to the actual image size, even when using the zoom function. However, since the erase lamp LEDs will not work in precise one millimeter intervals, the side erase margin varies slightly depending on the reproduction ratio. The width of the side erase margin varies from 0 mm to a maximum of 6 mm (total of both sides).

- SIDE ERASE OPERATION -

The tables below show which erase lamps turn off, according to the paper size and reproduction ratio selected. Note that A3 side edge erase occurs because the charge corona end block covers stop the edges of the drum from receiving charge.

	OFF LED	Reproduction Ratio	Paper Size	Erase Width(mm)
1	1-64	98-155%	A3 A4 Sidewise	2x2
2	2-63	94-98%		6x2
3	3-62	91-94%	DLT LT Sidewise	11x2
4	4-61	87-91%		16x2
5	5-60	85-87%	B4	22x2
6	6-59	81-85%		26x2
7	7-58	78-81%		30x2
8	8-57	76-78%		34x2
9	9-56	73-76%		38x2
10	10-55	71-73%	LG,F4 LTR,HLT	42x2
11	11-54	69-71%	A4 Lengthwise A5 Sidewise	45x2
12	12-53	66-69%	F	49x2
13	13-52	65-66%		55x2
14	14-51	All Reproduction Ratio	B5 Lengthwise B6 Sidewise	60x2
15	17-48	All Reproduction Ratio	A5 Lengthwise	76x2
16	19-46	All Reproduction Ratio	B6 Lengthwise	86x2
17	22-43	All Reproduction Ratio	A6	98x2
18	30-35		ID Sensor Pattern	135x2

4. Trail Edge Erase

Normally, the erase lamps turn on after the trailing edge of the latent image has passed. Therefore, a trail edge erase margin cannot be observed on the copy. Trail edge erase on timing is the same as charge corona off timing. During enlargement or reduction, the trail erase on timing changes according to the paper size and the reproduction ratio.

5. Erase Lamp Circuit

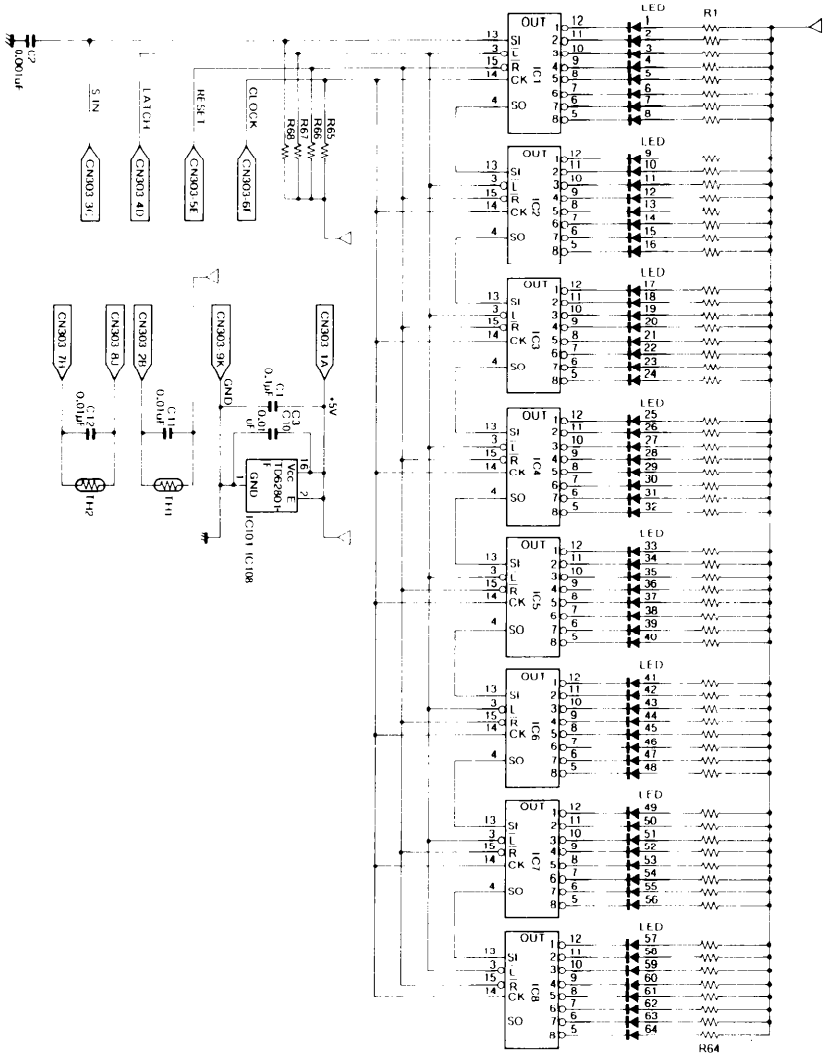

This copier uses 64 LEDs in the erase lamp unit. The large number of LEDs allows fine control of the side erase margins as well as the editing functions (save/delete).

Shift register drivers control the LEDs. Initially, the RESET signal (LOW active) turns off all the shift registers. Then the main board (CN203-13) sends erase lamp data to the shift registers from (CN303-3C.)

After the RESET signal goes back to HIGH, the shift registers start accepting data. If the data line is HIGH at the time of the CLOCK pulse (rising edge), the shift register is set to turn the LED on; if it is LOW, the the shift register is set to keep the LED off. The data in the shift registers is shifted right one position at the start of each clock cycle; so, it takes 64 CLOCK pulses to set the shift registers for all the LEDs.

After all data bits have been sent, the main board sends the LATCH signal to turn on the erase lamp unit. The latch signal sets the shift registers which turn on all LEDs for which data bits have been set.

The center section of LEDs turns on and off as a block, and the outer LEDs turn on and off in pairs.

OPTICS

1. Overview

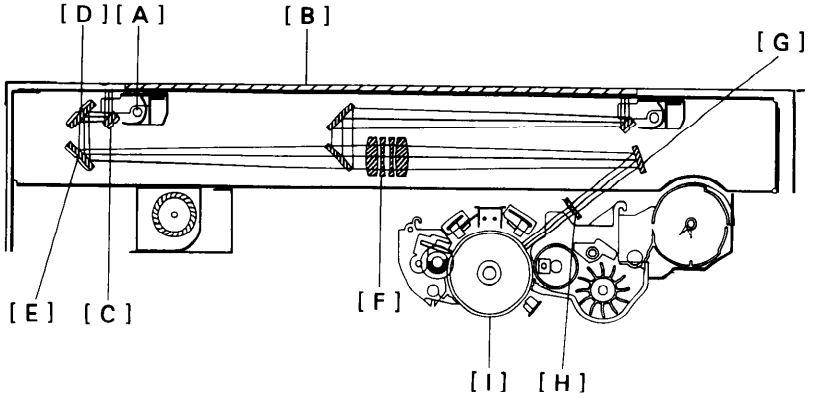

During the copy cycle, an image of the original is reflected onto the drum surface via the optics assembly as follows.

Light Path:

Exposure Lamp [A] --> Original [B] --> First Mirror [C] -->

Second Mirror [D] --> Third Mirror [E] --> Lens [F] -->

Fourth Mirror [G] --> Toner Shield Glass [H] --> Drum [I]

The cooling blower [J] circulates cool air into the optics cavity. The air flows from the right to the left in the optics cavity and exhausts through the vents in the top cover. This blower operates during every copy cycle.

This model has eight standard reproduction ratios: four reduction ratios, three enlargement ratios, and full size. In addition, it has a zoom function. The user can change the reproduction ratio in one percent steps from 65% to 155%.

Stepper motors are used to change the positions of the lens and mirrors. Separate motors are used because of the wide range of reproduction ratios. The scanner drive motor is a servomotor and is controlled by the optics CPU. The scanner drive motor changes the scanner speed depending on the reproduction ratio.

This copier has two special functions: (1) the 2 Single Copies mode, which makes two single copies from a bound document, and (2) the Image Edit mode which can save or delete sections of the image. The Edit Image functions are achieved by turning individual erase lamp LEDs ON/ OFF.

2. Scanner Drive

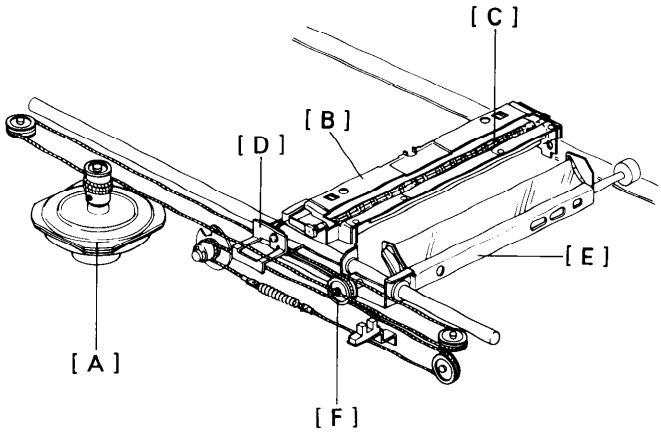

- SCANNER DRIVE MECHANISM -

This model uses a dc servomotor [A] to drive the scanners.

The first scanner [B], which consists of the exposure lamp [C] and the first mirror, is connected to the scanner drive wire by the wire clamp [D]. The second scanner [E], which consists of the second and third mirrors, is connected to the scanner drive wire by a movable pulley (the second scanner pulley [F]).

The pulley moves the second scanner at half the velocity of the first scanner. This is to maintain the focal distance between the original and the lens during scanning. This relationship can be expressed as:

$$V_{1r} = 2(V_{2r}) = V_D/r$$

where: r = Reproduction ratio
V_{1r} = First scanner velocity (when the reproduction ratio is "r")
V_{2r} = Second scanner velocity (when the reproduction ratio is "r")
V_D = Drum peripheral velocity (150 mm/s)

The wire clamp for the first scanner also works as the actuator of the home position sensor. The CPU controls both the Registration and return timing.

SCANNER MOTOR CONTROL -

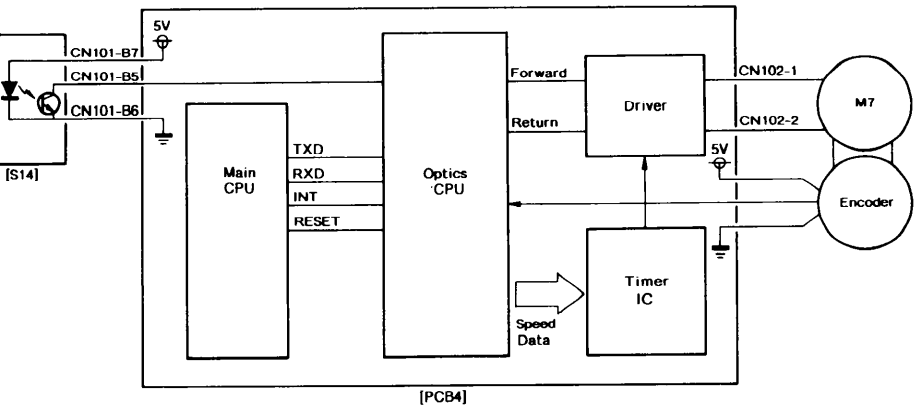

The scanner drive motor [M7] is a servomotor. The optics CPU on the main board [PCB 4] controls the speed of this servomotor. The main CPU and the optics CPU communicate through a serial interface bus.

At the programmed time, the main CPU sends a scanner start signal to the optics CPU. The optics CPU then checks the drum speed by monitoring the pulses from the pulse generator. Based on this input, the optics CPU determines the proper speed for the scanner drive motor. The optics CPU sends the speed data to the timer IC which sends the motor drive pulses.

An encoder on the servomotor has a magnetic sensors that generates pulse signals. The optics CPU monitors the scanner speed by these pulse signals and uses this data to regulate the servomotor speed.

The home position sensor [S14] informs the optics CPU whether the first scanner is in the home position.

3. Lens/Mirror Positioning

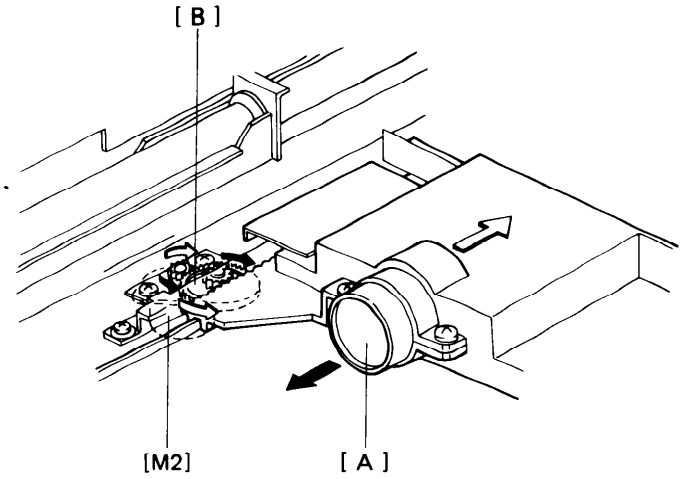

- LENS DRIVE -

The lens drive motor [M2] (stepper motor) changes the lens [A] position in accordance with the selected reproduction ratio to provide the proper optical distance between the lens and the drum surface.

The lens drive motor drives the entire lens unit through an idle gear [B]. The rotation of the lens drive pulley moves the lens back and forth in discrete steps.

- Lens Positioning -

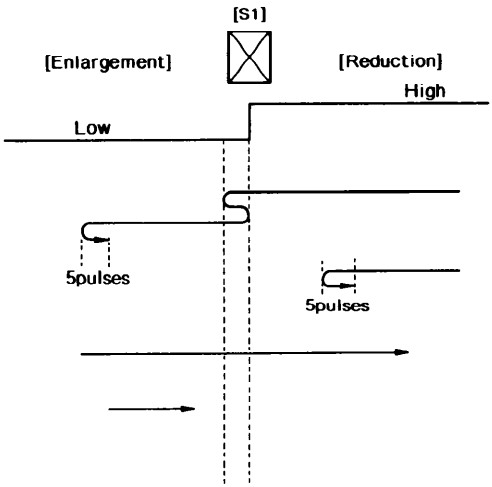

The lens home position sensor [S1] informs the optics CPU when the lens is at the full size position (home position). The optics PCB determines the lens stop position in reduction and enlarge modes by counting the number of steps the motor makes with reference to the lens home position. After changing the reproduction ratio, the lens moves directly to the selected magnification position.

Lens home position is registered each time the lens starts from or passes through the lens home position sensor. As the lens moves from the enlargement side to the reduction side, it registers the home position. At registration there is a LOW to HIGH voltage change at CN101-B1 of the main board. This occurs when the actuator blade enters the lens home position sensor.

A small vibration can be observed when the lens moves through home position from reduce to enlarge because the lens is going in the wrong direction to register. The lens overshoots the home position by only one step before going back to reference home position.

- Second Scanner Drive -

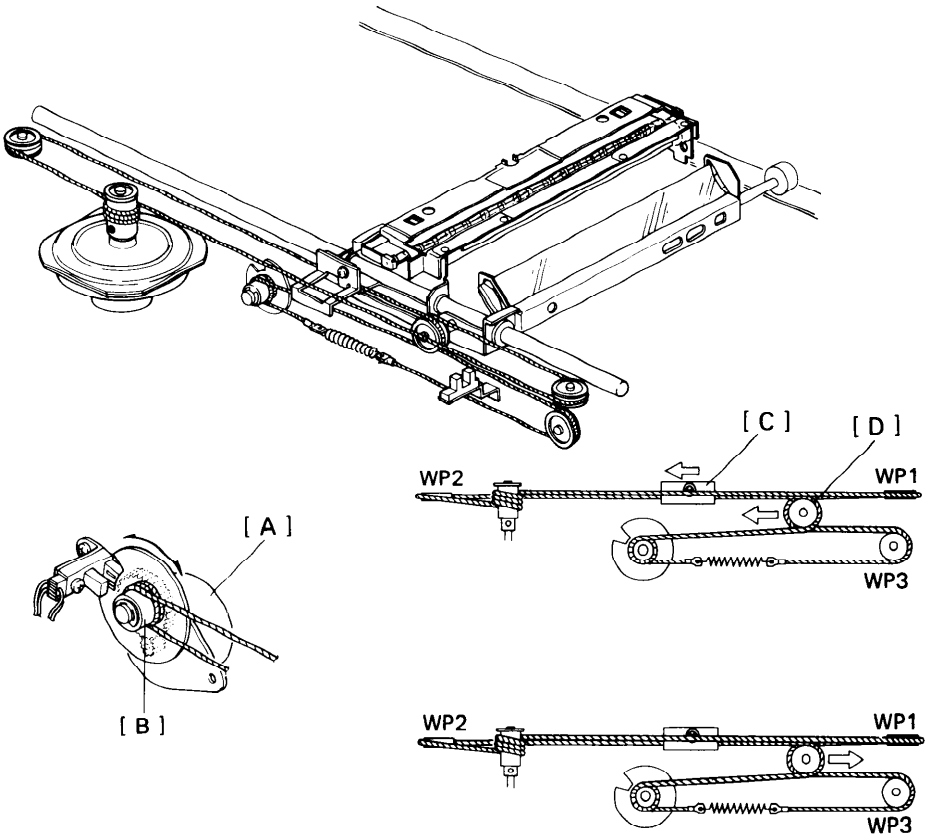

To provide the proper optical distance between the original and the lens, this model uses a stepper motor [A] to move the second scanner. A separate motor is used because the second scanner must travel a long distance to accommodate the wide range of reproduction ratios. The single scanner drive wire provides the second scanner with drive as well as correcting the second scanner position.

When the second scanner drive pulley [B] turns to change the scanner position, WP1 and WP2 do not turn. So, the wire clamp [C] stays at the home position and only the second scanner pulley [D] moves. When the scanner drive pulley turns, WP3 does not rotate; however, the second scanner pulley and the wire clamp do move.

As the second drive motor drives the second drive pulley directly, then the second scanner can be positioned manually (for maintenance etc.).

- Second Scanner Positioning -

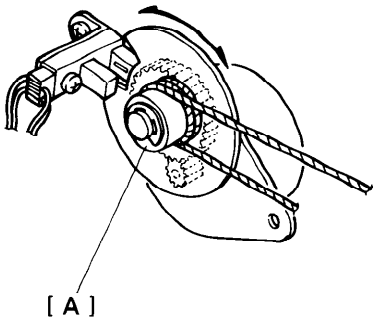

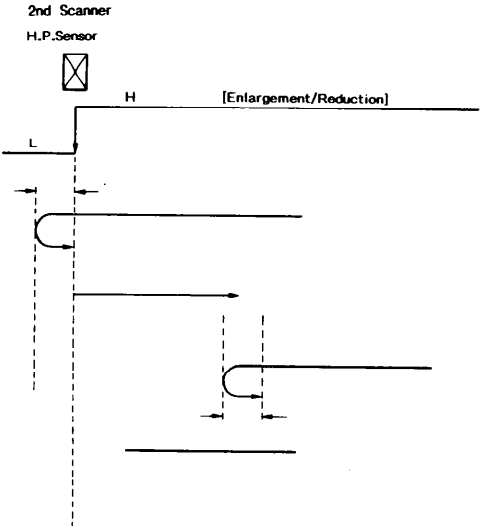

Like the lens, the second scanner is positioned by counting the number of steps from the home position. Second scanner home position is determined by a HIGH to LOW to HIGH change at CN101-B2 of the main board.

When moving away from the home position, the second scanner drive pulley [A] turns clockwise and moves the second scanner directly to the selected position. However, when moving closer to the home position (pulley turning counterclockwise), the second scanner overshoots the selected position by 5 steps and then returns to the selected position. This takes out any mechanical play.

4. Stepper Motor Control

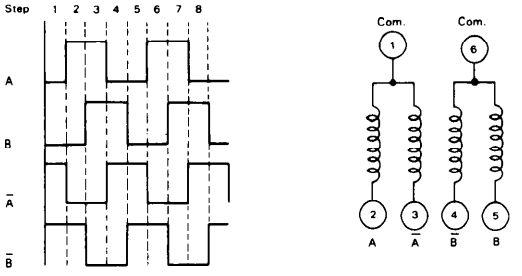

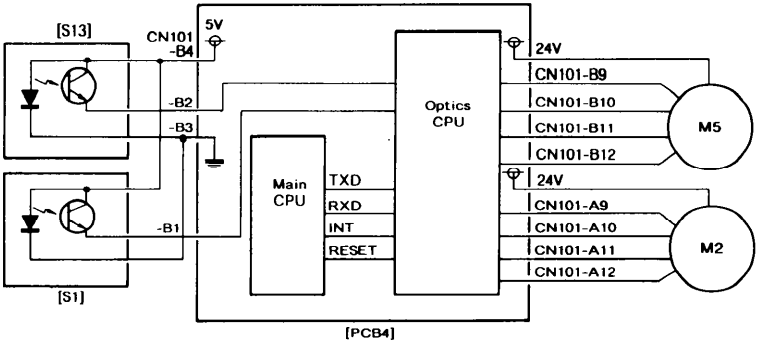

Both the lens drive motor [M2] and the second scanner drive motor [M5] are stepper motors. The stators of these stepper motors have four coils (labeled A, B, A and B above), and the rotors are permanent magnets.

Pulse signals energize the four coils as shown in the above illustration. The rotor turns in discrete steps.

5. Automatic Image Density Sensing

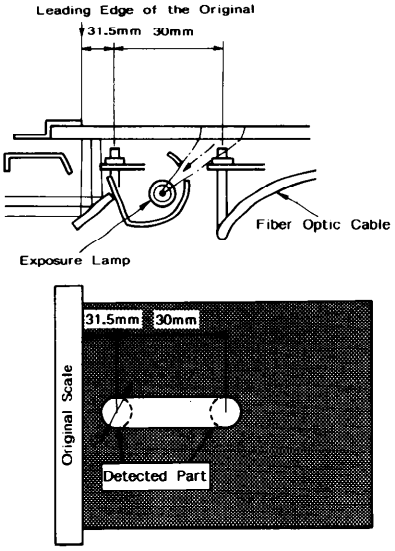

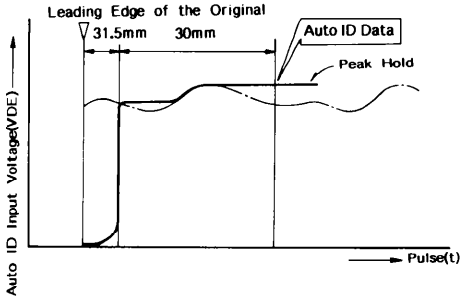

The input for the automatic image density circuit is via a fiber optic cable [A] that is mounted on the first scanner. Light from the exposure lamp [B] passes through a small hole in the reflector, reflects from the original, and is collected by the fiber optic cable. The sampled strip starts 31.5 millimeters from the leading edge of the original and is 8 millimeters wide and 30 millimeters long.

The fiber optic cable conducts the light to a sensor (photodiode) on the lamp regulator. The sensor circuit converts the light intensity to a voltage level. The detected voltage is adjustable via a variable resistor on the lamp regulator board. A peak hold circuit keeps the maximum voltage.

The lamp regulator sends the the maximum voltage value to the main board. The CPU then computes the correct image density and adjusts the development bias accordingly. (See the section on image density control for more information.)

6. Exposure Lamp Control

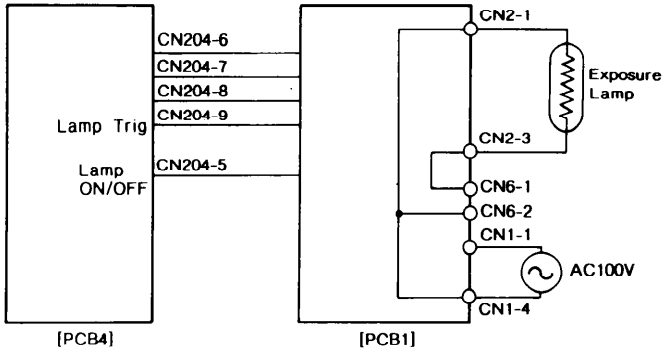

The lamp regulator board controls the exposure lamp. The voltage applied to the exposure lamp is determined by the combination of HIGH and LOW signals at CN204-6, -7, and -8.

The main CPU sends the lamp trigger signal 0.13 seconds after the registration clutch turns off.

The main CPU constantly monitors CN204-5 to check whether the lamp is on or off. If CN204-5 bocomes HIGH when CN204-9 is LOW (lamp ON) or CN204-5 bocomes LOW when CN204-9 is HIGH (lamp OFF), the CPU displays SC11. RA1-RA3 opens at the same time, cutting the +24V power line.

7. Service Call Conditions

SELF DIAGNOSTIC CODE 11:

Exposure Lamp Malfunction
Code 11 is displayed if the lamp monitor voltage is detected during standby (lamp on), or if the lamp filament opens.

SELF DIAGNOSTIC CODE 21:

Scanner Home Position Check
Code 21 is displayed if the scanner home position sensor stays deactivated for more than 2 seconds. This code is effective only when the scanner home position is initialized.

SELF DIAGNOSTIC CODE 23:

No Registration Start Signal
Code 23 is displayed if the optics CPU does not send the registration start signal to the main CPU. The main board waits 4 seconds for this signal.

SELF DIAGNOSTIC CODE 24:

No Scanner Home Position Signal
Code 24 is displayed if the optics CPU does not send the scanner home position signal to the main CPU. The main board waits 20 seconds for this signal.

SELF DIAGNOSTIC CODES 28 AND 29:

Lens Home Position Check
Code 28 is displayed if the lens home position sensor stays deactivated more then 3 seconds. Code 29 is displayed if the lens home position sensor stays activated moer than 3 seconds.

SELF DIAGNOSTIC CODES 2A AND 2B:

Second Scanner Home Position
At certain times (power ON, clear, timer) the second scanner either moves to its home position or moves out and back. Code 2A is displayed if the second scanner home position sensor stays deactivated longer than 2.5 seconds. Code 2B is displayed if the second scanner home position sensor stays activated longer than 2.5 seconds.

SELF DIAGNOSTIC CODES 2C AND 2D:

Scanner Motor Encoder Frequency
Code 2C is displayed if the frequency of the signal from the scanner motor encoder is too high. Code 2D is displayed if the frequency of the scanner motor's signal is too low.

DEVELOPMENT

1. Overview

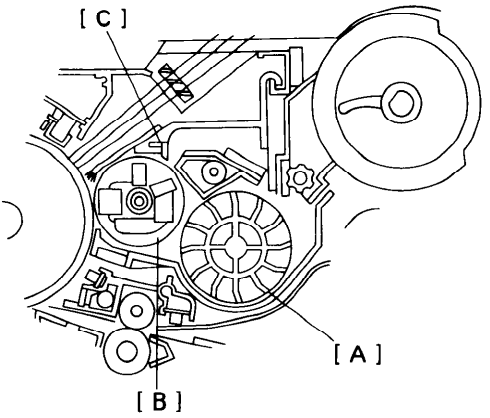

When the main motor turns on, the paddle roller [A] and development roller [B] start turning. The paddle roller picks up developer in its paddles and transports it to the development roller. Internal permanent magnets in the development roller attract the developer to the development roller sleeve.

The turning sleeve of the development roller then carries the developer past the doctor blade [C]. The doctor blade trims the developer to the desired thickness and creates backspill to the cross-mixing mechanism.

The development roller continues to turn, carrying the developer to the selenium drum. When the developer brush contacts the drum surface, the positively charged areas of the drum surface attract and hold the negatively charged toner. In this way, the latent image is developed.

Positive bias is applied to the development roller to prevent toner from being attracted to non-image areas on the drum that may have residual positive charge. The bias also controls image density.

After turning about 100 degrees more, the development roller releases the developer to the developer tank. The developer is agitated by the paddle roller and the cross-mixing mechanism.

2. Drive Mechanism

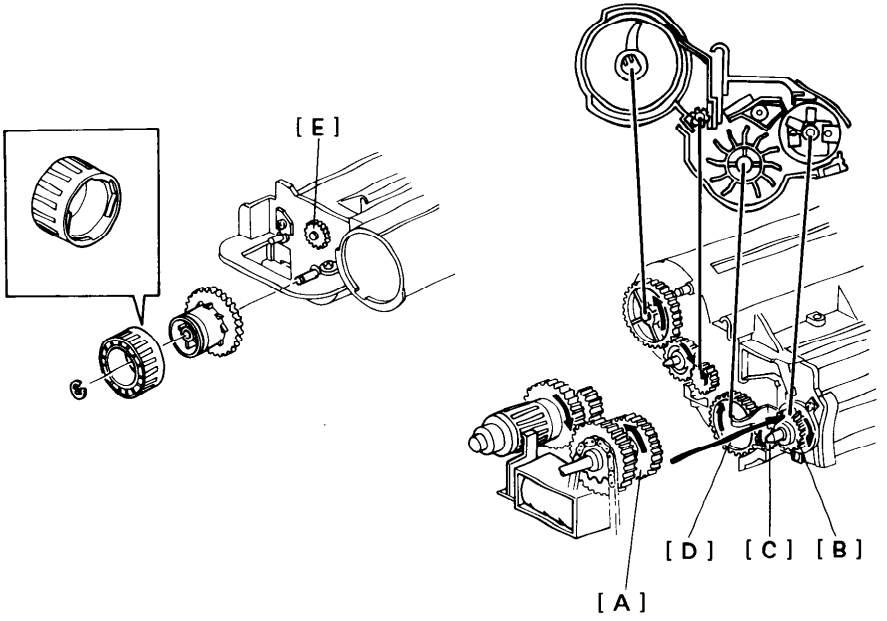

The development drive gear [A] drives the gears of the development unit when the main motor is turning. The rotation is transmitted from the development drive gear to the development roller gear [B] and then through an idle gear [C] to the paddle roller gear [D]. A gear on the front end of the paddle roller shaft drives the auger gear [E].

The paddle roller shaft has a knob on its front end to facilitate gear engagement and to turn the rollers for developer exchange. The paddle roller knob has a one-way clutch inside. The one way clutch prevents the development roller from turning in the opposite direction, which would cause the developer brush to damage the upper brush seal.

3. Seals and End Magnets

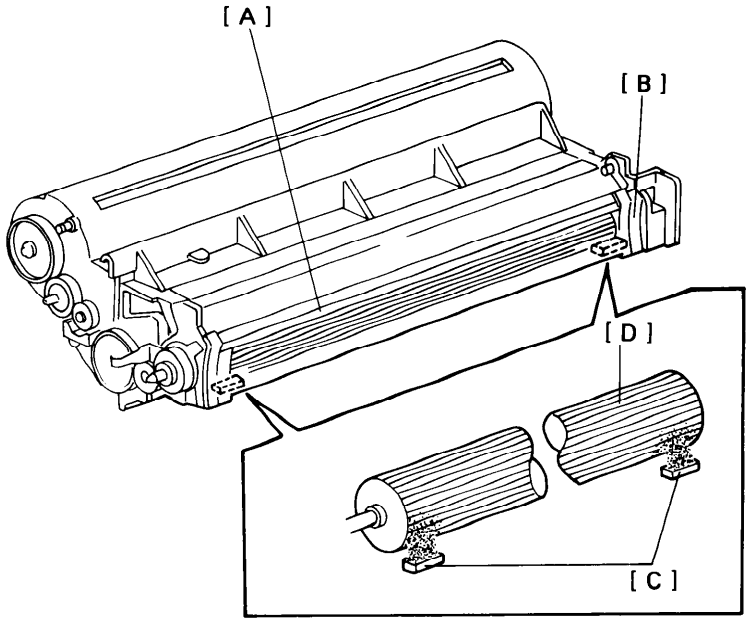

Several seals prevent toner from spilling out into the copier. The upper brush seal [A] prevents particles from scattering upward. The side seals [B] at the ends of the development unit contact the drum ends out of the image area; they prevent toner from scattering out the sides.

Since the internal permanent magnets are shorter than the development roller sleeve the toner tends to scatter from both ends. To reduce this scattering of toner, small magnets [C] are mounted under the ends of the development roller [D]. These magnets create small magnetic fields that stop developer particles from scattering.

4. Cross-mixing

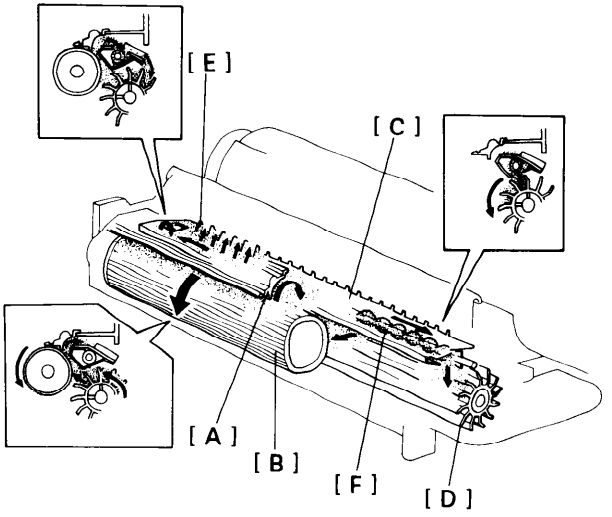

This copier uses a standard cross-mixing mechanism to keep the toner and developer evenly mixed. It also helps agitate the developer to prevent clumping and helps create the triboelectric charge.

The developer on the turning development roller is split into two parts by the doctor blade [A]. The part that stays on the development roller [B] forms the magnetic brush and develops the latent image on the drum. The part that is trimmed off by the doctor blade goes to the backspill plate [C].

As the developer slides down the backspill plate to the paddle roller [D], the mixing vanes [E] move it slightly toward the rear of the unit. Part of the developer falls into the auger inlet and is transported to the front of the unit by the mixing auger [F].

5. Image Density Control

Image density is controlled by changing two items: (1) the strength of the bias voltage applied to the development roller sleeve, and (2) the strength of the voltage applied to the exposure lamp.

Applying a bias voltage to the development sleeve reduces the potential between the development roller and the drum, thereby reducing the amount of toner transferred. As the bias voltage becomes greater, the copy image becomes lighter. Similarly, increasing the voltage to the exposure lamp causes an increase in light intensity which also results in lighter copies.

The method of control is different depending on whether the image density is manually selected or the automatic ID system is used.

- MANUAL IMAGE DENSITY CONTROL -

Manual Image Density Control

		Image Density Level (Auto Image Density Base Level)							Lamp Voltage(V)
		1	2	3	4	5	6	7	
Manually Selected ID Level	1	230	260	290	320	380	440	500	Vo-2.5
	2	200	230	260	290	350	410	470	Vo
	3	200	200	230	260	320	380	440	Vo+2.5
	4	200	200	230	260	320	380	440	Vo+5
	5	200	200	230	260	320	380	440	Vo+7.5
	6	200	200	230	260	320	380	440	Vo+10
	7	230	260	290	320	380	440	500	Vo+10
		Development Bias Voltage (V)							

When image density is set manually, the bias depends on two factors: the auto image density base level, and the manually selected ID level. (See the above table.) The exposure lamp voltage also varies as shown in the table.

NOTE: **To set the auto image density base level, simultaneously press and hold the Clear/Stop key and press the Auto ID key. Then, select the base level using them manual ID keys.**

- Automatic Image Density Control -

Bias Data				Bias Output(V)
SEL4	SEL3	SEL2	SEL1	
0	0	0	1	200
0	0	1	0	230
0	0	1	1	260
0	1	0	0	290
0	1	0	1	320
0	1	1	0	350
0	1	1	1	380
1	0	0	0	410
1	0	0	1	440
1	0	1	0	470
1	0	1	1	500
1	1	0	0	530
1	1	0	1	560
1	1	1	0	590
1	1	1	1	620
0	0	0	0	MAX50

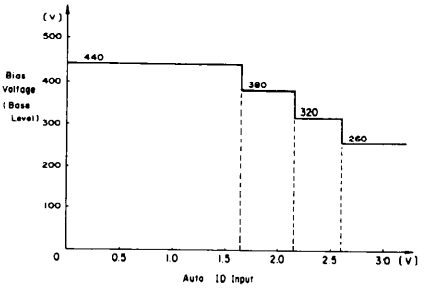

Auto Image Density Control

Auto Image Density Sensor Output Voltage	Image Density Level (Auto Image Density Adjustment) 1	2	3	4	5	6	7	Lamp Voltage[V]
5V-2.6V	200	200	230	260	320	380	440	Vo+5
2.6V-2.16V	230	260	290	320	380	440	500	
2.16V-1.65V	290	320	350	380	440	500	560	
1.65V-0V	350	380	410	440	500	560	620	

Development Bias Voltage (V)

When automatic image density control is on, the exposure lamp voltage is set to Vo+5 volts. A change in the bias voltage only controls the image density. The normal factory setting is the fourth column; however, this setting can be changed for troubleshooting or to satisfy customer requirements by selecting the Auto ID mode, holding down the Clear/Stop key, and pressing the image density keys.

At the start of the copy cycle the original sensing mechanism measures the background density of the original image. It does this by measuring the strength of the light reflected from a 30-mm strip near the leading edge of the original. A fiber optic cable pipes the reflected light to a photodiode on the lamp regulator board. The photodiode is the input element of the auto ID circuit.

The CPU checks the voltage output by the auto ID circuit. This circuit has a peak hold function. The peak hold voltage corresponds to the maximum reflectivity of the original. The CPU then determines the proper bias base level, with reference to the peak hold voltage, and sends a 4-bit control signal to the power pack. The power pack then applies the proper bias to the development roller.

- Bias Compensation Factors -

As discussed previously, either the automatic image density system or the operator, through the image density keys, sets the bias base level (V_1). The CPU increases the bias base level as necessary to compensate for the rest time between copy runs and the drum temperature, both of which affect drum sensitivity.

TD: 10°C-20°C

Copy# / Rest Time	1	2	3	4-5	6-10
0-10sec	One step down from previous states				
10sec-3min					
3min-50min	30	30	0	0	0
50min-2hr	30	30	30	0	0
2hr-	60	30	30	30	0

TD: 20°C-45°C

Copy # / Rest Time	1	2	3	4-5	6-10
0-10sec	One step down from previous states				
10sec-3min	30	30	30	0	0
3min-50min	60	60	30	30	0
50min-2hr	90	60	60	30	30
2hr-	120	90	90	60	30

TD: Drum Temperature

- Rest Time Compensation (V2) -

The drum sensitivity often drops slightly over the first few cycles of a copy run. This is because the light from the exposure lamp fatigues the drum slightly, and it takes a few copies for the selenium to restabilize. The amount that the sensitivity drops depends on the drum's temperature and the rest time between copy runs (the longer the rest time, the greater the change).

The copier increases the bias at the beginning of each copy run to prevent variations in the image density of the first few copies produced. The above two tables show the amount of bias increase. If the drum temperature is less than 10 degrees Celsius, no rest time compensation is applied.

When the main switch is turned on, the CPU automatically selects the "greater than two hours" rest time compensation level.

- Drum Temperature Compensation (V3) -

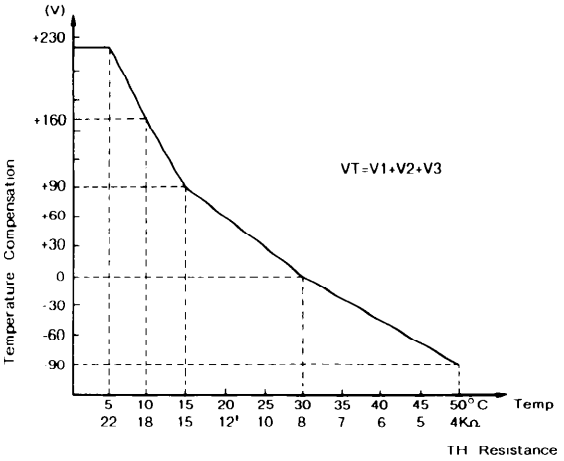

The Charge/Bias Power Pack monitors drum temperature through a thermistor (TH-2), and it increases or decreases the bias voltage to compensate for variations in drum sensitivity that are induced by temperture changes in the drum cavity. The temperature compensation is effective from 5 degrees to 45 degrees (Celsius).

As shown by the "knee" in the above chart, the temperature compensation factor depends on the temperature range. Between 5°C and 15°C, the change in V_3 is -14 V/°C; between 15°C and 50°C, the change in V_3 is -5 to -6V/°C.

Total Bias (VT) -

The total bias applied to the development roller sleeve is the sum of the base bias and the two compensating factors.

6. Bias for ID Sensing

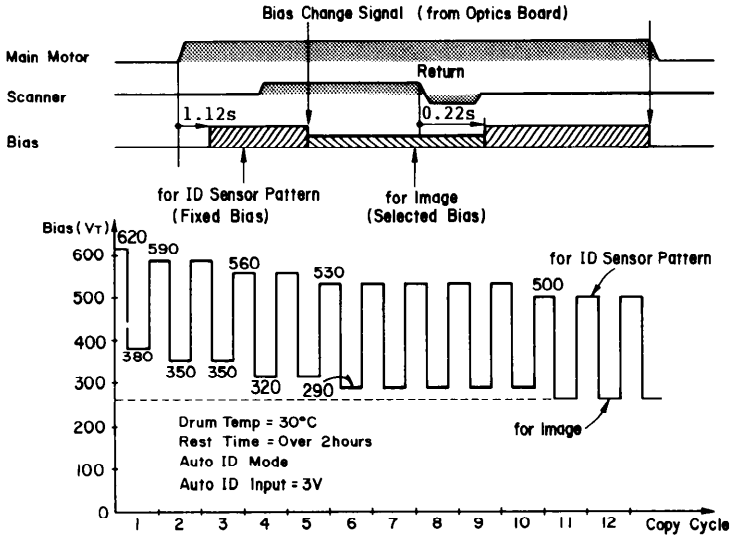

To develop the ID sensor pattern consistently, the CPU applies a fixed base bias level to the development roller at the beginning of each copy cycle. The fixed base bias is 500 volts (DIP switch selectable) after ten copies; prior to which, it is affected by drum cavity temperature and drum rest time.

The CPU applies the ID sensor bias to the development roller about 1.12 seconds after the Start key is pressed. Just after the sensor pattern is developed, the CPU changes the bias output to the level selected by auto ID sensor or the operator for image development. The bias output remains at this level until 0.22 second after the scanner starts returning.

The ID sensor bias can be changed to adjust the overall image density by DIP switch 201 (on the main board) as follows:

ID Sensor Bias (DIP SW201)

201-4	201-5	Base Bias
OFF	OFF	470V
ON	OFF	440V
OFF	ON	500V
ON	ON	530V

Normally DIP SW201-4 is off and 5 is on (factory preset).

7. Bias Control Circuit

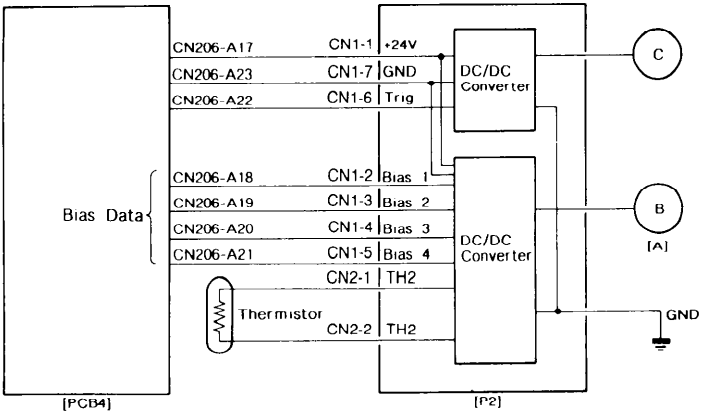

The CPU sends a bias trigger signal and a 4-bit control signal to turn on the development bias of the power pack. (See the above table.) These signals depend on the Image Density level position and the copier's rest time.

After receiving these signals, the power pack outputs the proper bias voltage, which is further compensated for temperature (the resistance of the bias thermistor located on the erase lamp unit).

The bias voltage can be displayed on the operation panel by using SP mode 59. The displayed value does not include the temperature compensation factor.

8. Color Development

- Overview -

This copier has mono-color copying capability in red, green, and blue as well as standard black. To change colors, the development unit must be replaced.

To detect which color is used, an actuator is mounted on the development unit. Since the reflectivity varies with the color of the toner, the toner end detection system uses a mechanical detection system instead of an ID sensor detection system.

- Bias Control -

Due to the differences in the characteristics of black and color toner, the CPU changes the bias control when it detects a color development unit.

- Base Bias for Color -

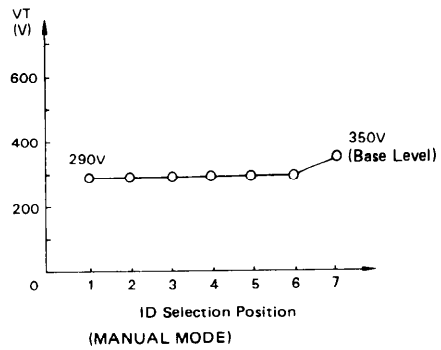

(MANUAL MODE)

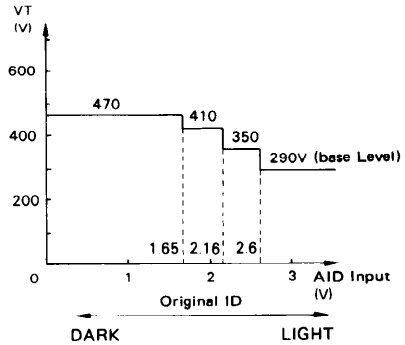

(AUTO ID MODE)

- Bias for ID Sensing -

Since the reflectivity of color toner varies with the color type, the ID sensor is used only to detect overtoning. Just as for black copies, the image density is sensed once in 10 copy cycles.

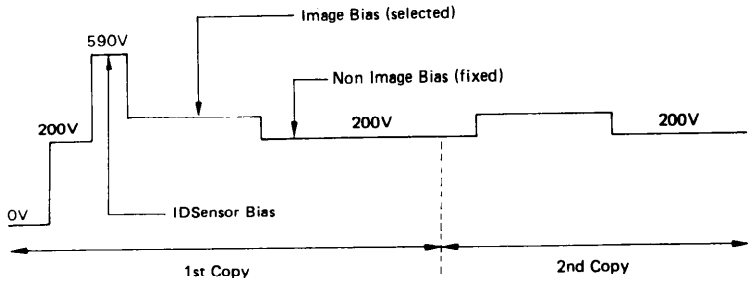

The ID sensor bias can be changed to adjust the color image density by using DIP SW201-6 (on the main board) as follows:

DIP SW201-6	ID Sensor Bias
OFF	590 volts
ON	620 volts

Normally, DIP SW201-6 is off. When it is turned on, the threshold level for toner supply inhibition is increased. This causes the toner density to become higher. (See the section on color toner density control.)

- **COLOR DETECTION** -

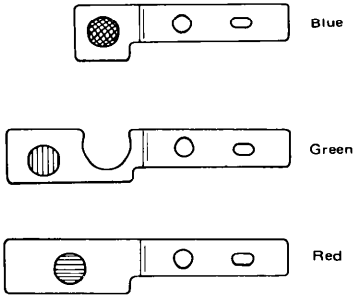

Color Toner Sensors*

S-A	S-B	Toner
OFF	OFF	Black
ON	OFF	Blue
OFF	ON	Green
ON	ON	Red

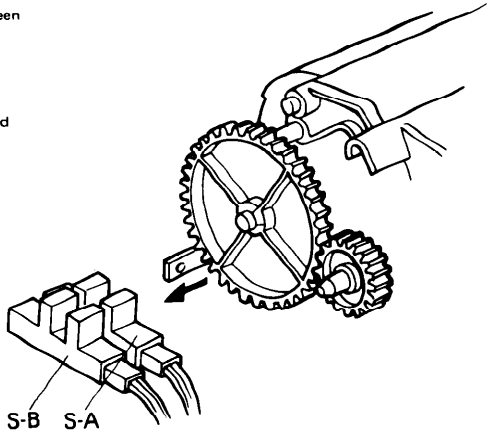

Three actuators, each having a different shape, are used to distinguish between the different toner colors. When a color development unit is installed in the copier, the actuator activates the color toner sensors. The CPU determines which color unit is installed based on the input from these two sensors. (See the preceding table.)

* ON = actuator blocking the gap of the photo-interruptor.

9. Service Call Condition

SELF DIAGNOSTIC CODE 31:

Drum Themistor Open
Code 31 is displayed if the drum thermistor circuit becomes open.

TONER DENSITY DETECTION AND TONER SUPPLY

1. Toner Density Detection

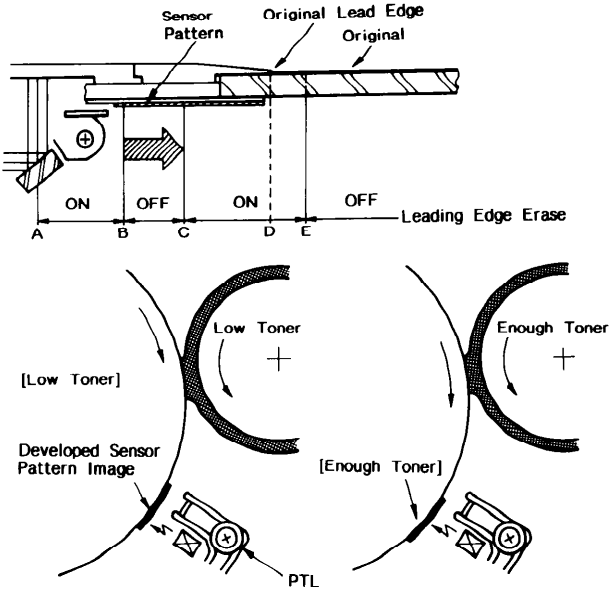

The main CPU checks toner density by directly sensing the image density at the beginning of the first copy cycle after the main switch is turned on, and at every 10th copy after that.

During the check cycles, the sensor pattern is exposed prior to exposure of the original. After the sensor pattern is developed, its reflectivity is checked by the image density sensor (which is a photosensor). The CPU notes the reflectivity. If the reflected light is too strong, indicating a too low toner density condition, it adds toner to the development unit.

The toner is not added all at once. The CPU energizes the toner supply solenoid for the proper amount of time to add a selected amount of toner over the next 10 cycles.

2. Toner Density Control

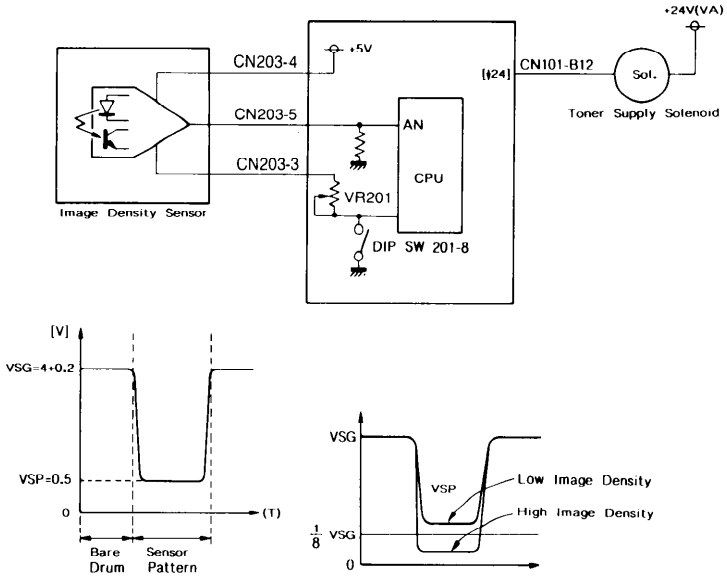

The image density sensor checks the density of the sensor pattern image once every 10 copy cycles. The CPU receives two voltage values directly from the sensor: the value for the bare drum (Vsg) and the value for the sensor pattern (Vsp). These two values are then compared to determine whether more toner should be added.

1. Vsp $\leq$ 1/8 Vsg.....High image density (no toner is added)

2. Vsp > 1/8 Vsg.....Low image density (toner is added)

When the image density is too low, the CPU activates the toner supply solenoid to add a selected amount of toner over the next 10 copy cycles.

SP Mode # 35 changes the toner end detection level and the timing cycle. The detection level drops to 0.65 and the monitoring cycle is every 5 copy cycles.

DIP SW 201-8 is used to turn on the LED of the sensor manually. VR201 adjusts the light intensity of the sensor LED. Therefore, the photosensor Vsg can be correctly calibrated.

If Vsg becomes less than 2.5 volts, the CPU determines that the sensed data is abnormal. It then changes from detect mode to fixed supply mode. The amount supplied is determined by the settings of DIP SW201-2 and -3 and -4. At the same time the Service Call indicator starts blinking. However, copies can still be made.

3. Toner Supply

- Roller Drive Mechanism -

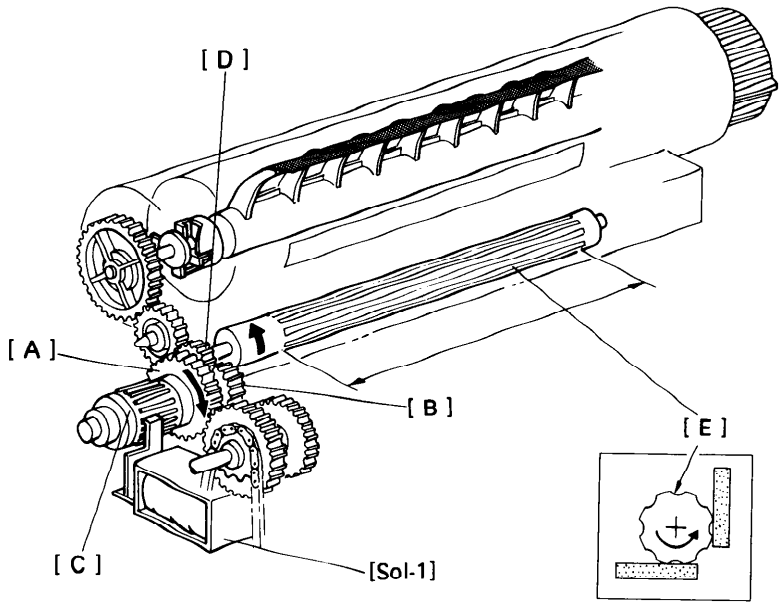

The toner supply clutch gear [A] turns when the main motor is on. The transmission of this rotation to the toner supply drive gear [B] is controlled by the toner supply clutch [C].

When the toner supply solenoid [SOL1] energizes, the toner supply clutch engages and starts turning the toner supply drive gear. The toner supply drive gear turns the toner supply roller gear [D]. Toner catches in the grooves on the toner supply roller [E]. Then, as the grooves turn past the opening, the toner drops into the development unit.

The toner supply opening is the same width as A4 lengthwise (8 1/2" X 11") and is located at the center of the developer tank. This is to reduce toner scattering from both the ends of the development roller even if small size paper is used continuously.

- Toner Agitator Drive Mechanism -

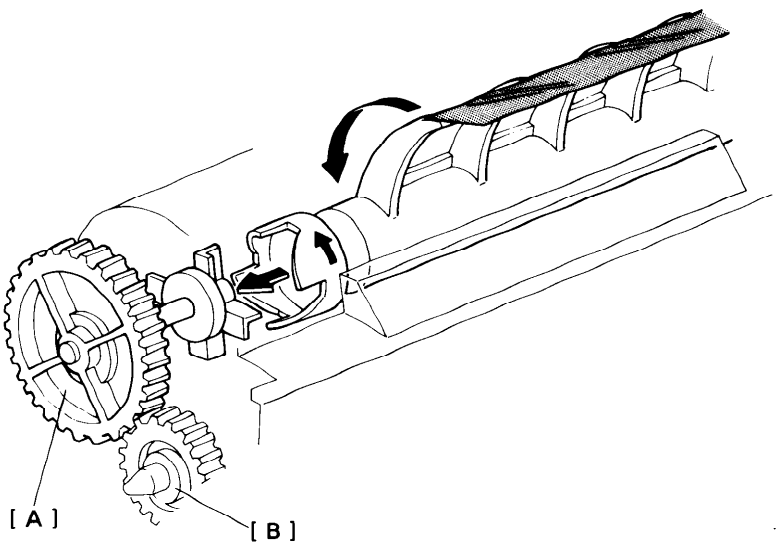

The toner agitator mechanism, contained in the toner cartridge, prevents toner from blocking.

The toner supply roller gear engages the toner agitator gear [A] through an idle gear [B]. Therefore, the toner agitator gear turns whenever the toner supply clutch is engaged.

Rotation passes through the toner cartridge casing to the agitator junction.

4. Toner Supply Amount

Dip SW	Fixed Supply Mode				Detect Supply Mode			
201 - 1	1 (ON)				0 (OFF)			
2	0	1	0	1	0	1	0	1
3	0	0	1	1	0	0	1	1
	3.5%	7%	10.5%	14%	15%	30%	45%	60%

This copier has two different ways of controlling the amount of toner supplied. Normally, the detect supply system controls toner supply; however, a fixed supply system can also be selected. When a color toner development unit is installed, the CPU automatically selects fixed supply mode.

- DETECT SUPPLY MODE -

When DIP SW 201-1 is off, the standard detect supply mode is selected. If a low image density condition is detected, a small amount of toner is supplied on each of the next 10 copy cycles as determined by the setting of DIP SW's 201-2 and -3 as shown in the above table.

Toner supply starts 0.52 second after the scanner motor reverses. (Toner is supplied at this time to prevent toner spattering on the copies.) The actual amount of toner added is determined by controlling the on time of the toner supply solenoid, which activates a spring clutch.

- FIXED SUPPLY MODE -

When DIP SW 201-1 is on or a color development unit is installed, the fixed supply mode is selected. In this case, a fixed amount of toner is added every copy cycle as determined by the setting of the DIP SW201-2 and -3. When a color development unit is installed, a fixed amount of toner is determined by the setting of SP Mode #70. The length of time that the toner supply solenoid is energized depends on the data set into the SP mode #70 and the paper size.

5. Toner End Detection

The CPU uses the image density sensor to detect a toner end condition. This method is effective in both detect and fixed supply modes.
If Vsp becomes greater than 0.75 volt, the CPU determines that it is time to add toner and starts blinking the Add Toner indicator.
After the indicator starts blinking, the operator can make up to 50 copies. If a new toner cartridge is not added within that 50 copy interval, the Add Toner indicator stops blinking (stays on) and copying is inhibited.
The toner end condition is reset by opening and closing the front cover.

6. Color Toner Density Detection and Color Toner Supply

- COLOR TONER DENSITY CONTROL -

When a color development unit is used, the CPU automatically selects the fixed toner supply mode. SP Mode # 70 determines the supply amount.

The CPU calculates the threshold level for toner supply inhibition when the color development installation procedure is completed. This level is determined by calculating the average of Vsp and Vsg while using new developer.

Since the fixed supply system is selected when in color toner mode, it is necessary to inhibit toner supply if the toner density becomes high to prevent over-toning. The CPU checks Vsp once in 10 copy cycles. If Vsp becomes lower than the threshold level, the CPU stops supplying toner. Toner supply resumes when Vsp rises above the threshold level again.

A RAM stores the threshold level data for the three colors. The CPU selects the correct threshold level from this RAM after checking the color signal from the color toner sensors. The power supply for the RAM has battery backup so the data will not be lost if the power supply is disconnected.

The RAM keeps not only the threshold level data but also the number of copies made with each color. This data can be displayed on the operation panel by using SP Mode 73.

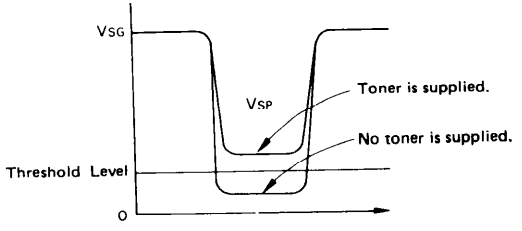

- Color Toner End Detection -

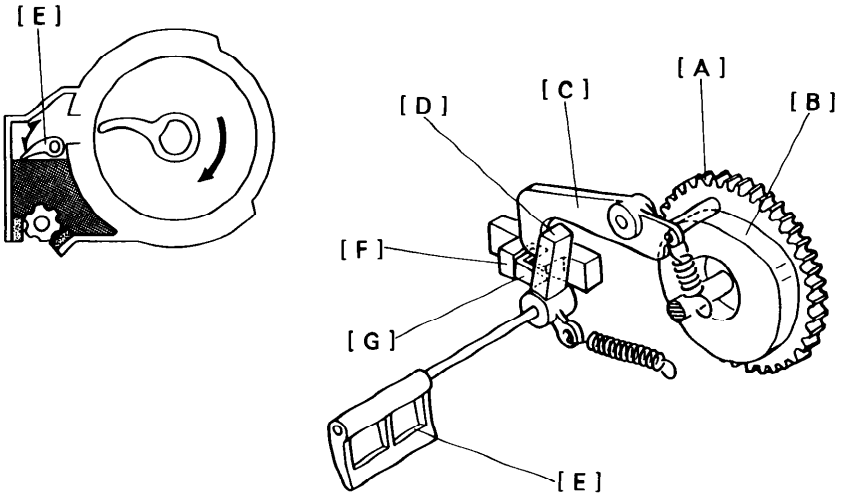

The toner agitator gear [A] has a cam [B] (the toner end cam) on its inner surface, and it rotates only when toner is supplied. The cam follower on the end of the toner end lever [C] rides on the surface of the toner end cam (spring pressure). The opposite end of the toner end lever alternately presses and releases the toner end arm [D] as the cam turns. The toner end plate [E], which is in the toner hopper, is mounted on the same shaft as the toner end arm.

When there is sufficient toner in the hopper, the toner end plate is prevented from moving by the toner. Therefore, even when the toner end lever drops to the lowest position on the cam (releasing the toner end arm), the toner end arm does not move and the toner end sensor [F] is not activated.

When there is insufficient toner in the hopper, the toner end plate can move. When the toner end lever releases the toner end arm, the toner end plate lowers and the actuator [G] on the toner end arm moves into the toner end sensor. The CPU receives a single pulse from the toner end sensor.

If this condition is detected by the CPU more than seven times consecutively, the Add Toner indicator starts blinking.

After the indicator starts blinking, 50 copies can be made. If a new toner cartridge is not added within that 50 copy interval, the Add Toner indicator stops blinking (stays on) and copying is inhibited.

- ABNORMAL CONDITION -

If Vsg becomes lower than 3.2 volts, the machine will reduce toner supply to half of the normal supply amount. (For example, the amount of toner supply will change from 14% to 7% when "0" is stored in SP Mode No. 70.) In this condition, the Service Call indicator is not displayed and the machine can be operated .

7. Service Call Condition

SERVICE CALL INDICATOR BLINKS (NO CODE):

ID Sensor Abnormal
The Service Call indicator starts blinking if Vsg becomes less than 2.5 volts. When this happens, the machine automatically shifts to the fixed supply mode. Operation is possible.

SC32

Displayed if PTL/ID sensor board circuit opens or is not set properly. Also if Vsg becomes less than 1.0VDC

IMAGE TRANSFER AND PAPER SEPARATION

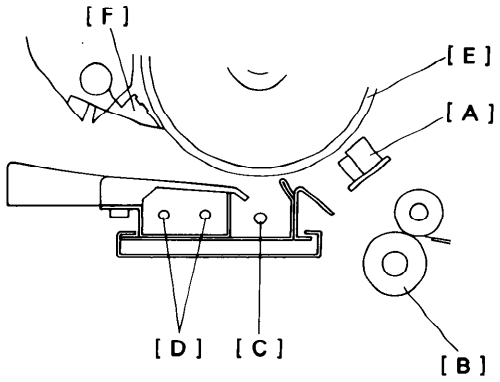

1. Pre-Transfer Lamp (PTL)

After the latent image is developed but before the image is transferred to the copy paper, the drum surface is illuminated by the pre-transfer lamp [A]. This illumination reduces the positive potential on the drum surface. This prevents the toner particles from being re-attracted to the positively charged drum during the paper separation process. It also makes image transfer and paper separation easier.

2. Image Transfer

The registration rollers [B] feed the copy paper through the transfer entrance guides to the transfer section. A high positive voltage (+5.6 kilovolts) is applied to the transfer corona wire [C], and the corona wire generates positive ions. These positive ions are applied to the copy paper, and the positive charge attracts the negatively charged toner away from the drum and onto the paper. In addition, the paper is held against the drum by the negative counter charge on the drum.

3. Paper Separation

After image transfer the copy must be separated from the drum. To break the attraction between the paper and the drum, the separation corona wire [D] applies an ac corona (500 Hz) to the reverse side of the paper. The stiffness and weight of the paper causes it to separate from the drum [E].

The separation corona has a small dc bias but its affect is negligible. A dc bias is unnecessary because the separation corona is wide and diffuse. The positive charge on the paper (from the transfer corona) is not completely discharged until the paper is far enough from the drum that the toner will not be reattracted to the drum. The two pick-off pawls [F] ensure that thin, low-stiffness paper or upward curled paper separates completely.

4. Pre-Transfer Lamp Circuit

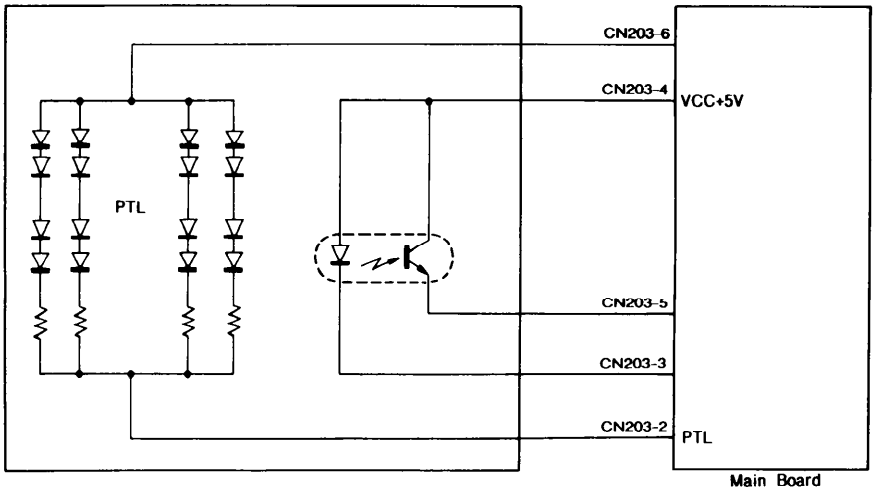

When the Start key is pressed, the main board outputs a LOW signal to activate the pre-transfer lamp. The pre-transfer lamp, like the erase lamp, is an array of LEDs. However, the CPU does not control the individual elements of the pre-transfer lamp as it does the erase lamp. Instead, all of the LEDs turn on and off simultaneously.

5. Transfer/Separation Corona Circuit

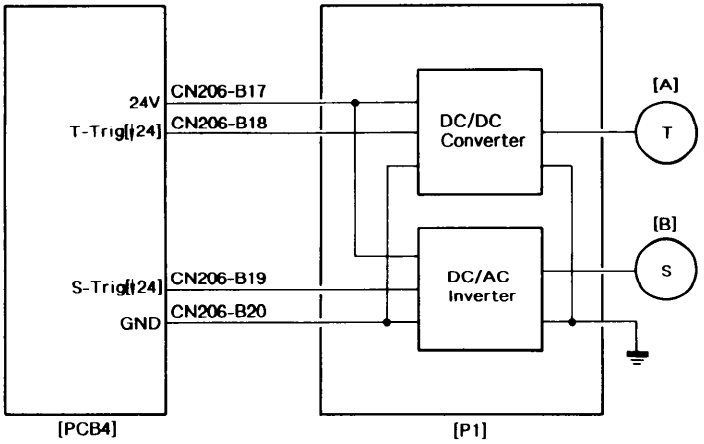

When the Start key is pressed, the main board sends LOW signals to energize the power pack for the transfer and separation coronas. The power pack has a dc to dc converter and a dc to ac inverter. The dc to dc converter changes +24 volts to +5.6 kilovolts for the transfer corona. The inverter changes +24 volts to 5.0 kilovolts ac (500 Hz) with a negative dc bias (about -60 V) for the separation corona.

6. Pick-off Mechanism

- Touch and Release Mechanism -

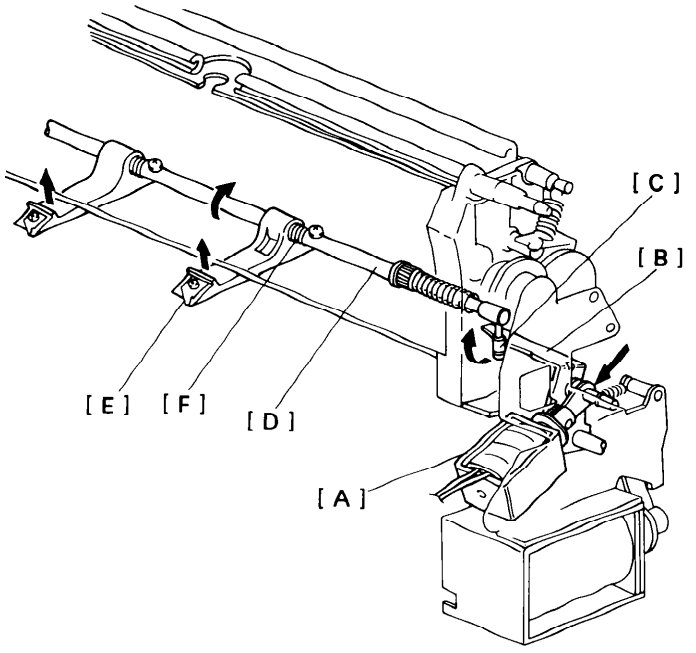

The pick-off solenoid [A] energizes 1.69 seconds after the Start key is pressed. The pick-off lever [B] rotates counterclockwise (rear view) and pushes the pawl shaft pin [C]. Then the pawl shaft [D] rotates clockwise and the pick-off pawls [E] touch the drum. The pawl springs [F] hold the pick-off pawls on the shaft and prevent them from touching the drum too strongly.

When the leading edge of the paper passes the pick-off area and just before it reaches the fusing unit, the pick-off solenoid turns off. The pick-off lever spring then rotates the pick-off lever and moves the pick-off pawls away from the drum.

- Side to Side Movement -

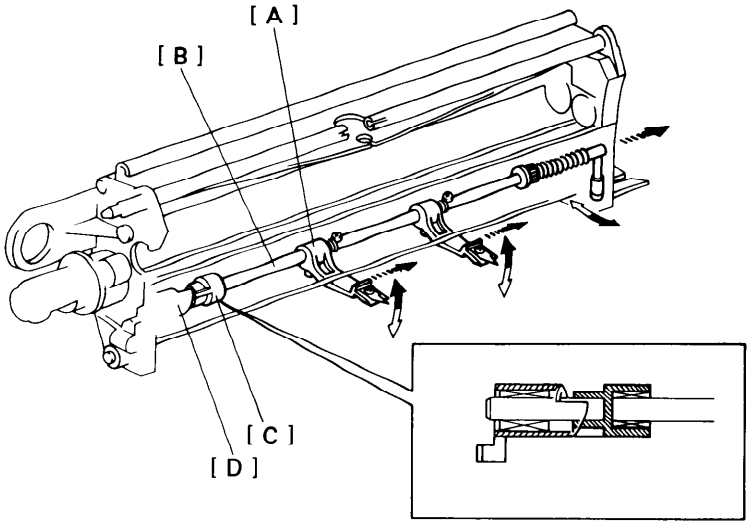

The pick-off pawls [A] do not always contact the drum in the same place but instead move slightly to the side on each copy cycle.

The pick-off pawl shaft [B] and the cam rider [C] are joined by a one-way bearing [D]. Each time the pick-off pawl solenoid turns on, the one-way bearing causes the cam rider to turn together with the pick-off pawl shaft. As the cam rider turns, it and the pawl shaft are forced to move laterally by a cam. However, when the pawl shaft rotates the pawls away from the drum the cam rider does not turn.

Pawl lateral movement is 0.1 to 0.2 millimeter per copy cycle. After the pick-off pawls move about 8 millimeters, the cam rider passes the "step" of the cam and the pawl shaft is returned to its start position by the pawl shaft spring.

7. Pick-off Circuit

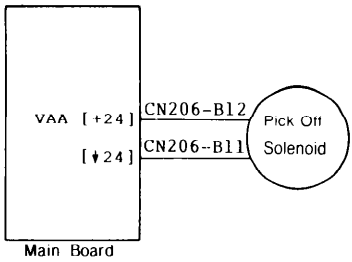

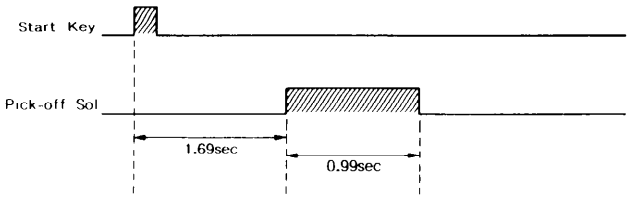

The main PCB supplies +24 volts to the pick-off solenoid at CN206-B12. The CPU supplies a LOW signal at CN206-B11 1.69 seconds after the Start key is pressed. This LOW signal energizes the pick-off solenoid.

The CPU waits 0.99 second before turning off the pick-off solenoid. The leading edge of the paper has just passed the pick-off area at this time.

DRUM CLEANING

1. Overview

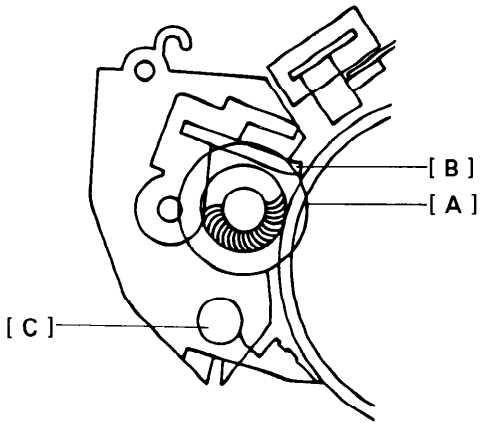

The cleaning brush [A] and cleaning blade [B] remove any toner remaining on the drum after the image is transferred to the paper.

The cleaning brush and drum move in opposite directions at their point of contact. The cleaning brush removes paper dust and nearly half of the toner from the drum surface to reduce the cleaning load placed on the blade.

Next, the cleaning blade removes the remaining toner. The falling toner catches in the fibers of the cleaning brush and is carried inside the cleaning unit. As the brush turns inside the cleaning unit, it rubs against a beater ridge, which dislodges the toner particles. The toner particles fall onto the toner collection coil [C].

The toner collection coil transports the used toner to the front of the machine where it falls into the used toner bottle.

2. Drive Mechanism

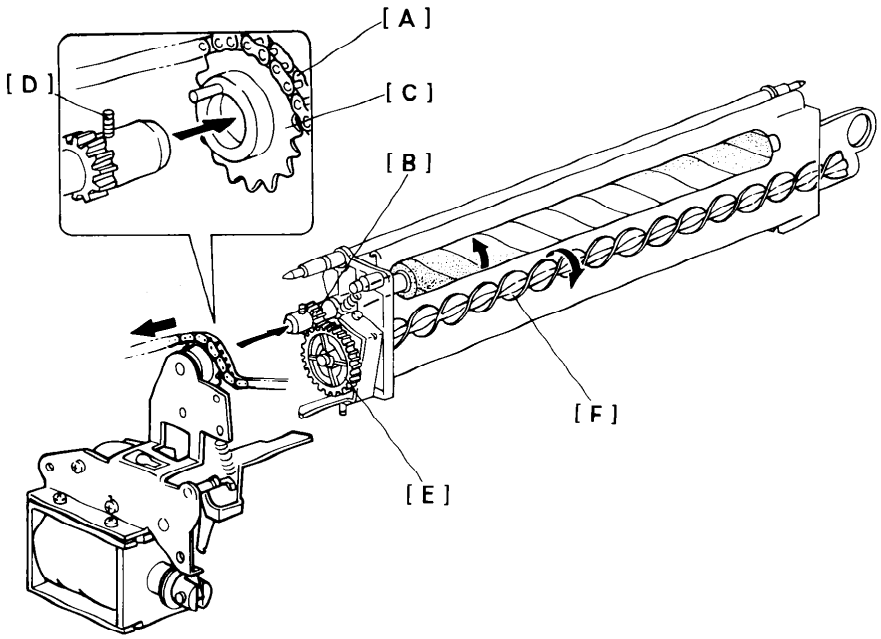

The main chain [A] drives the cleaning unit when the main motor is on. The brush gear [B] is fitted into the cleaning drive sprocket [C]. A pin on the inside of the sprocket drives an allen screw [D] on the shaft of the gear, turning the gear. The brush gear drives the coil gear [E] directly, and the toner in the unit is transported to the used toner bottle by the toner collection coil [F].

3. Cleaning Blade

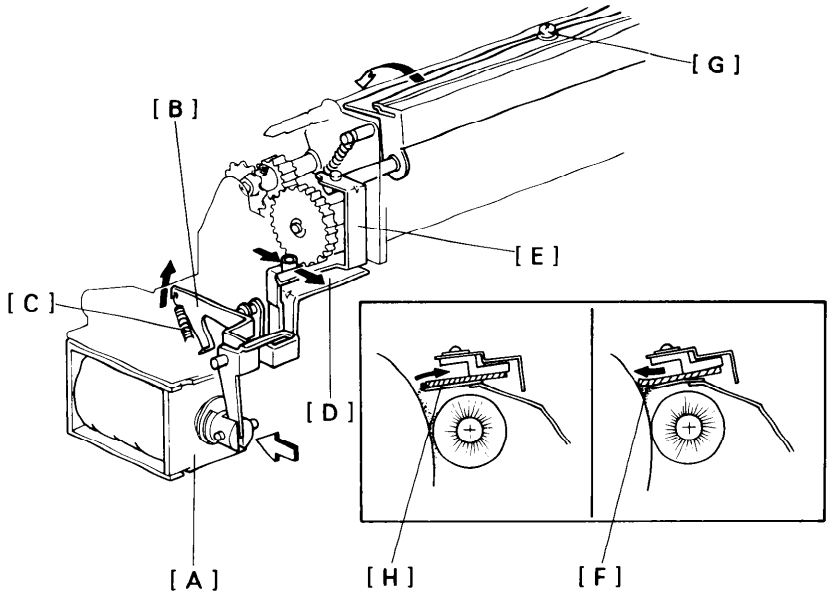

The cleaning pressure mechanism is shown above. When the cleaning solenoid [A] is energized, it turns the cleaning solenoid lever [B] clockwise (rear view). Due to the pull of the cleaning blade pressure spring [C], the pressure arm [D] also turns clockwise and pushes the cleaning blade lever [E] up. The cleaning blade holder then rotates and the cleaning blade [F] presses against the drum. The pressure spring limits the blade pressure.

The cleaning blade is mounted by a single swivel screw [G] at its exact center of gravity. With this type of mounting the blade sets parallel and applies even pressure automatically. Also since pressure is transmitted in the center, a single pressure spring is used. Side-to-side movement is applied to the cleaning blade to prevent uneven wear and ensure efficient cleaning.

The blade scraper [H] is mounted in contact with the bottom of the cleaning blade. When pressure is applied to the cleaning blade, it is forced forward and bends at its outer edge. When pressure is released from the blade, it snaps back to its original shape. At this time, the blade scraper [H] scrapes off the excess toner and paper dust from the edge of the blade. This helps to maintain efficient cleaning. The blade pressure is released when there is no key input for 15 minutes, when a paper misfeed occurs, or when the safety switches are open. The blade scraper also prevents toner from scattering inside the copier by keeping toner inside the cleaning unit.

4. Toner Collection Bottle Vibration

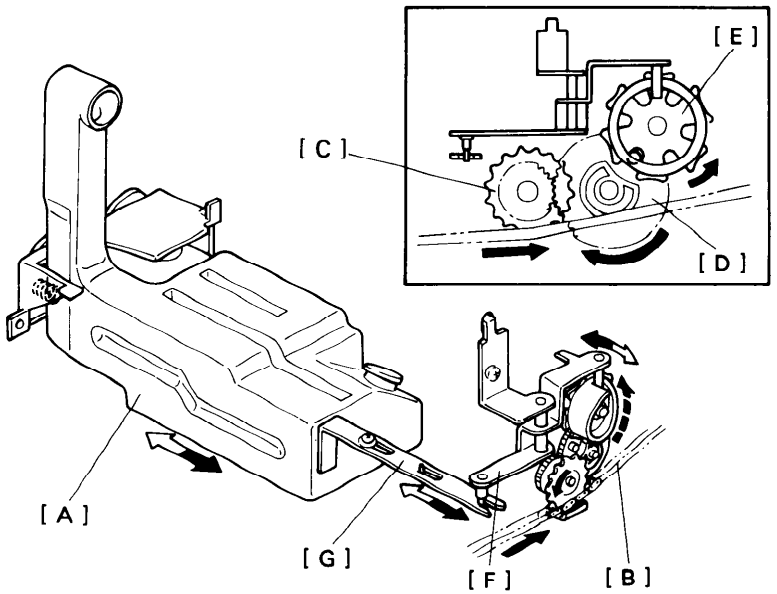

The toner collection bottle [A] is vibrated to prevent toner from building up in one place and activating the toner overflow sensor too early.

The main drive chain [B] turns the drive sprocket [C]. The drive sprocket has a gear on the reverse side which turns the cam drive gear [D]. A pin on the cam drive gear rotates the cam wheel [E]. This wheel has six slots in which the pin catches; so, the cam wheel turns 1/6 of a revolution for each full turn of the cam drive gear.

The cam part of the cam wheel pushes the cam lever [F] out as it turns. The pin on the other end of the cam lever pushes the vibration link [G] toward the front of the copier. This link pushes the toner collection bottle against the spring installed inside the bottle cover. When the cam wheel completes one turn, the cam lever is released and the spring pushes the toner collection bottle quickly toward the rear of the copier. This action keeps the toner level inside the toner collection bottle.

5. Toner Overflow Sensor Circuit

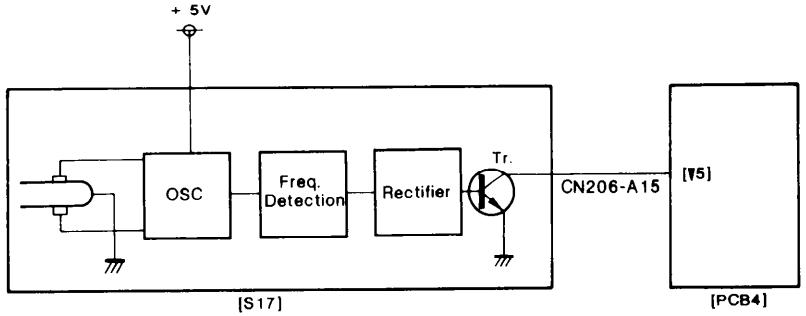

The toner overflow sensor [S17] signals the CPU when the toner collection bottle is full.

A tiny tuning fork is used as the sensing element of the toner overflow sensor. This tuning fork is a damping element in a multivibrator circuit. As long as there is nothing in contact with the tuning fork, the vibrating frequency of the circuit stays low and the transistor stays off.

When toner presses against the tuning fork, the resistance of the piezo-electric elements that are in contact with the tuning fork changes and the vibrating frequency increases. The frequency detection circuit passes the higher frequency signal to the rectifier which activates the switching transistor. The transistor sends a LOW signal to CN206-A15.

When the CPU detects this LOW signal, it stops the copier, lights the Used Toner Bottle indicator, and blinks the Service Call indicator.

6. Cleaning Solenoid Circuit

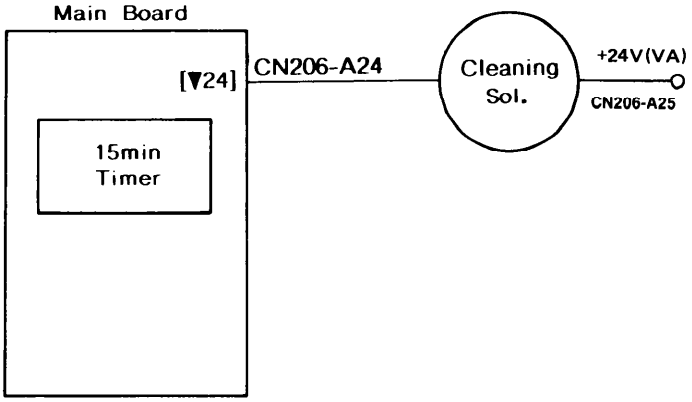

When the Start key is pressed or the main switch is turned on, the CPU sends a LOW signal to CN206-A24. This signal energizes the cleaning solenoid. Fifteen minutes after the main motor turns off, this signal becomes high again, turning off the solenoid. This releases the cleaning blade from the drum. When the cleaning blade is released, the edge of the blade is cleaned.

The fifteen minute delay for the release of the cleaning blade is to avoid toner scattering. Toner scattering is increased if the cleaning blade is released too frequently.

QUENCHING LAMP

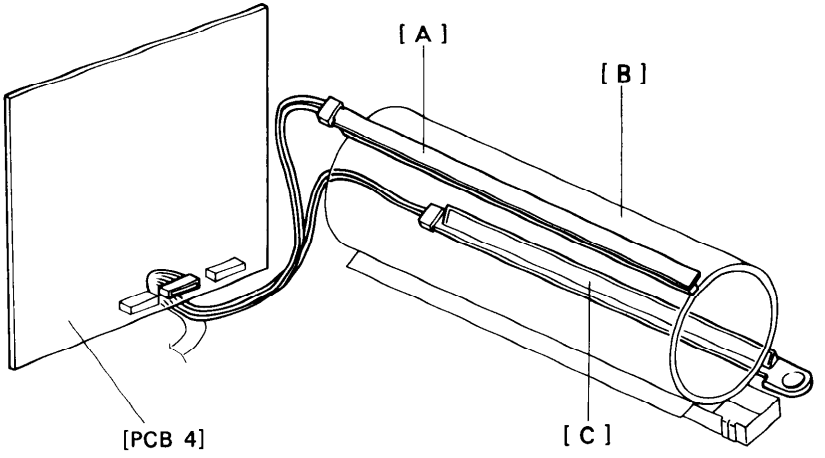

In preparation for the next copy cycle, light from the quenching lamp [A] neutralizes any charge remaining on the drum [B].

The LED array lamp used for quenching is similar to the pre-transfer lamp (PTL) [C]; however, the light intensity of the quenching lamp is less than that of the PTL.

PAPER FEED AND REGISTRATION

1. Overview

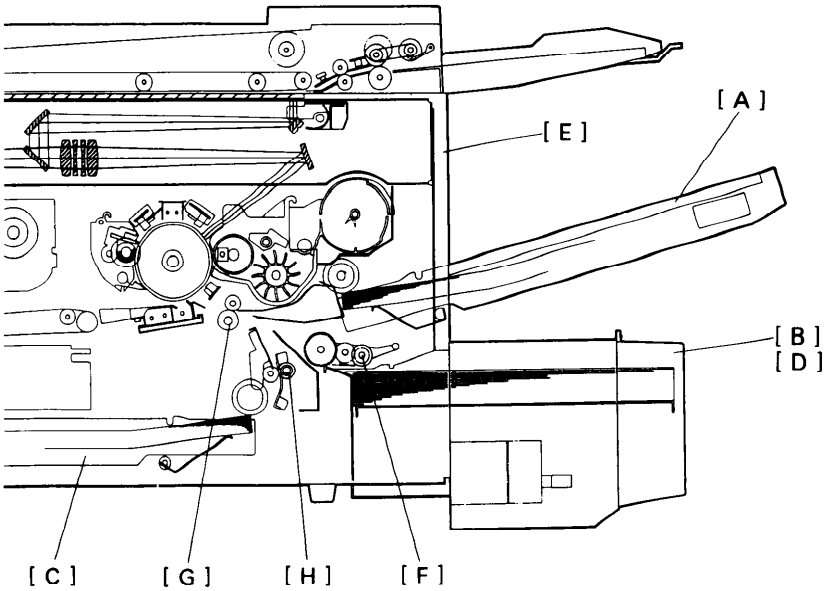

This model has three paper feed stations. The first cassette [A] and second cassette [B] are located on the right side of the copier, and the third cassette [C] is located in a tray inside the copier. The capacity of each of the cassettes is 250 sheets.

As an option the second cassette can be replaced with a 1,000 sheet large capacity tray [D]. This would increase the maximum paper capacity to 1,500 sheets.

Paper can also be fed using the manual feed table [E], which utilizes the feed mechanism of the first feed station.

All three feed stations use the feed roller and friction pad feed mechanism. The LCT also uses a pick-up roller [F]. During paper feed, the top sheet of paper separates from the stack and is fed to the registration rollers. The friction pad prevents all but the top sheet from feeding.

The feed rollers of the first feed station feed the top sheet directly to the registration rollers [G]. The third feed station (cassette tray), however, feeds the top sheet to relay rollers [H], which then feed the sheet to the registration rollers.

2. Friction Pad Feed System

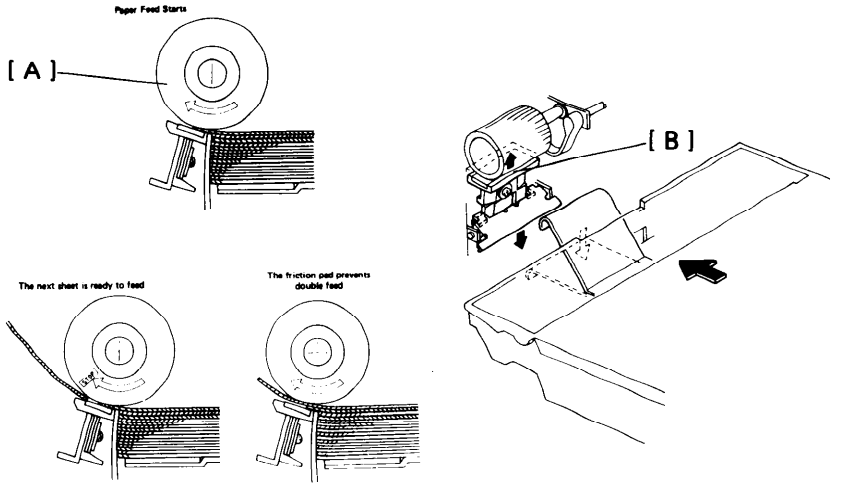

This copier uses a feed roller and friction pad paper feed system. The friction pad separates a single sheet from the top of the stack of paper.

When the feed roller [A] starts turning, it forces a single sheet of paper across the friction pad [B]. The roller stops turning when the paper reaches the registration rollers.

At that time the friction pad is pressing the paper up against the feed roller. So, when the registration rollers start turning, the friction of the moving paper as it is pulled from under the feed roller causes the feed roller to start turning again. As the trailing edge clears the leading edge of the paper stack, the feed roller catches on the next sheet and starts moving it forward. The feed roller stops turning when the trailing edge of the first sheet leaves the feed roller. The leading edge of the next sheet is then held ready for feeding between the friction pad and feed roller.

Sometimes sheets of paper tend to stick together (perhaps due to static electricity or poorly cut edges). When this happens, two sheets may feed between the feed roller and friction pad. However, the coefficient of friction between the friction pad and lower sheet is much greater than that between the two sheets of paper; so, the top sheet slips through while the pad holds the lower sheet.

The friction pad holder is mounted on one end of the swivel plate with a swivel screw; so, it automatically applies even pressure against the feed roller and the copy paper. The pad pressure spring on the other end of the swivel plate (reverse side) provides the pressure. After removing the cassette, the pad pressure is released.

3. Paper Lift Mechanism

- FIRST AND SECOND FEED STATIONS -

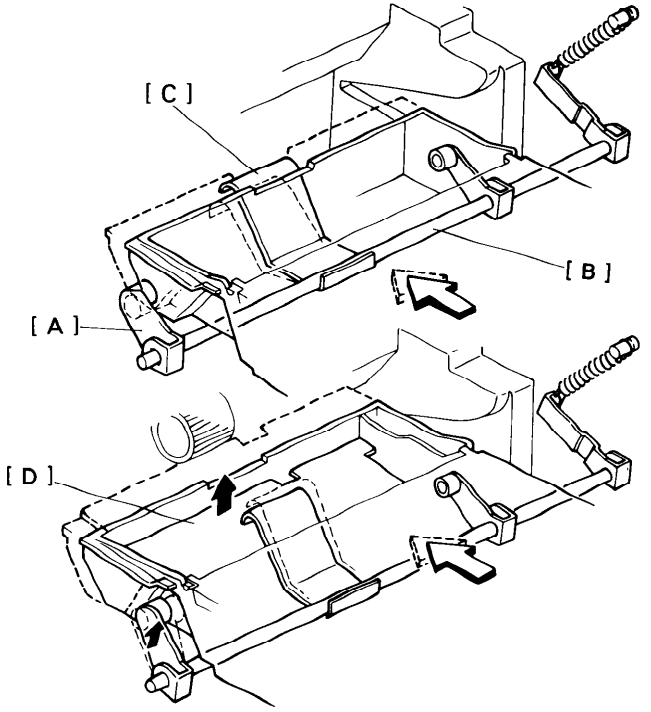

When a cassette is inserted into the copier, the curved release guides on the sides of the cassette press against the rollers on the release levers [A] and force the release levers down. The release levers rotate the cassette arm shaft [B], moving the cassette arm down and out of the way. When the cassette is fully seated, the release guides allow the release levers to move back up. The cassette arm [C] presses up the cassette bottom plate [D] until the paper contacts the paper feed roller.

- THIRD FEED STATION -

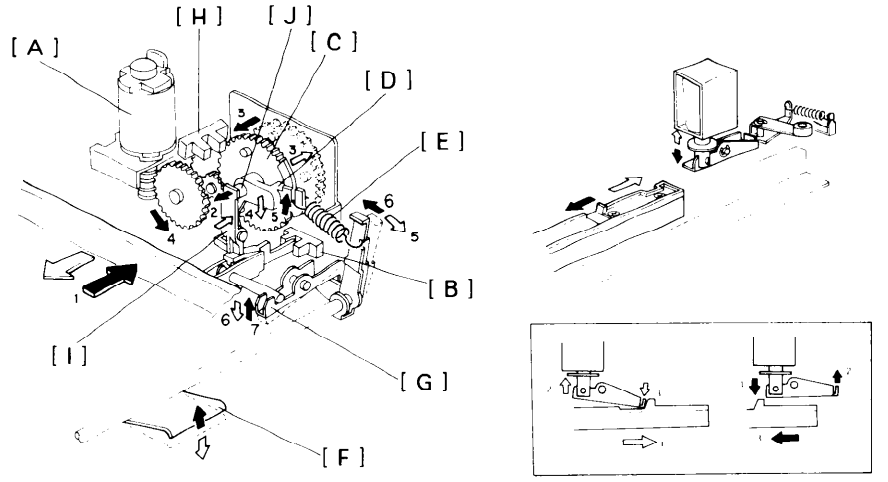

A small dc motor [A] lifts the bottom plate of the third (internal) cassette.

When the cassette tray is fully inserted, actuating the cassette tray sensor [B], the lift motor rotates to lift the cassette bottom plate. As the motor turns, a pin on the lift gear [C] rotates the actuator lever [D] counterclockwise. The actuator lever pulls the cassette arm spring [E], which raises the cassette arm [F]. Similtaneously, the lock lever [G] raises and locks the cassette tray to prevent the bottom plate from crushing the cassette arm when pulling out the cassette tray. The motor stops when the lift sensor [H] detects the actuator lever.

When the cassette tray is pulled out, the release lever [I] pushes the lift gear shaft [J], causing the lift gear to move inward against the pressure of the lift gear spring. When this happens, the actuator lever is released, the cassette arm drops, and the lock lever is released.

- LOCK MECHANISM -

The lock solenoid actuates the lock mechanism. The lock mechanism holds the third feed station in position at the following times: 1) while the third feed station is in use, 2) when the third feed lift motor is actuated. The solenoid is deactuated when another feed station is selected or when the front door is opened.

- LIFT MOTOR -

The lift motor is raised when the third feed station is first set. It is lowered completely at paper end to ensure there is no damage to the paper end sensor's feeler, and partially during a paper jam from the third feed unit to release pressure on the paper.

4. Paper End Detection

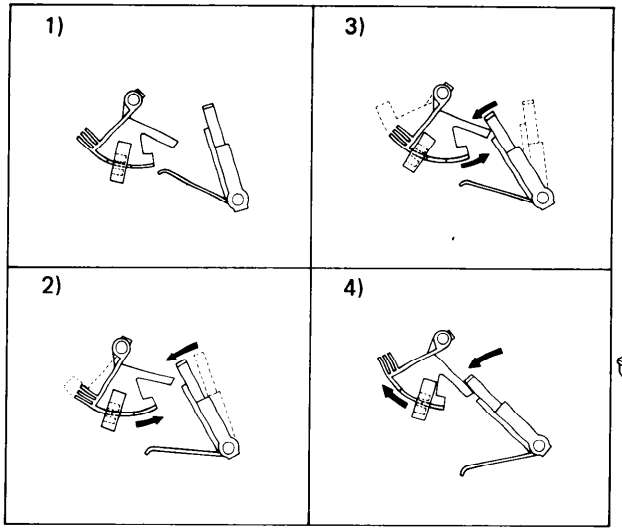

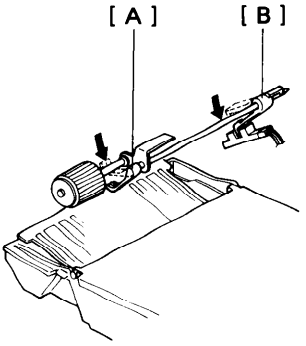

When a cassette or the LCT runs out of paper, the paper end feeler [A] drops through a slot in the cassette (or LCT) bottom plate. The paper end actuator [B], which is on the same shaft as the paper end feeler, pivots into the detector (photointerrupter). The paper end sensor [C] then sends a HIGH signal to the CPU, informing it that the cassette is empty. Then the Add Paper indicator turns on, the Print key turns red, and the machine stops after the copy is finished.

Four conditions apply for the paper end sensor in the cassette tray:

1) When paper is in the cassette tray and the motor has raised the bottom plate to the feed position, the slot of the actuator is between the photosensor elements [figure i], and the sensor output is LOW.
2) When a jam occurs, the lift motor rotates in reverse, lowering the cassette arm lever along with the bottom plate. This pivots the actuator to the right. The motor stops when the solid section of the actuator moves between the photosensor elements (LOW to HIGH) (figure iv).
3) At paper end, the actuator pivots to the right and the solid section of the actuator moves between the photosensor elements (LOW to HIGH) as shown in figure ii.
   The lift motor then begins to rotate in reverse lowering the cassette arm lever which pushes down on the actuator as shown in figure iii.
4) The motor stops rotating after the sensor goes from HIGH to LOW to HIGH as shown in figure iv.

At paper end, the tray lift motor lowers the bottom plate to prevent damage to the sensor's feeler.

5. Paper Size Detection

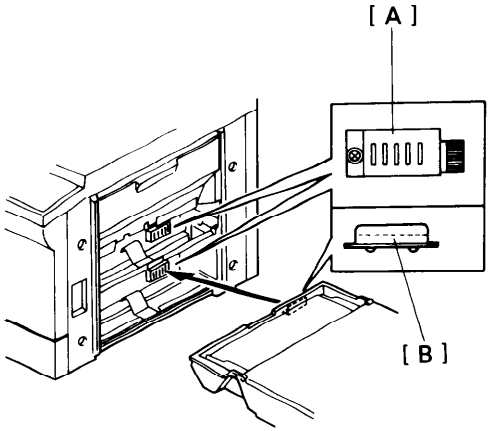

Paper Size	Sensor No	Operation Panel Indication	
	1 2 3 4 5	220V	115V
A3	1 0 0 0 0	A3	•
B4	1 1 0 0 0	B4	•
A4 sidewise	0 0 1 0 0	A4	•
A4 lengthwise	1 0 1 0 0	A4R	•
B5 sidewise	0 1 1 0 0	•	•
B5 lengthwise	1 1 1 0 0	•	•
A5 sidewise	0 0 0 1 0	A5	•
A5 lengthwise	1 0 0 1 0	A5R	•
B6 sidewise	0 1 0 1 0	•	•
B6 lengthwise	1 1 0 1 0	•	•
Return Post Card	0 0 1 1 0	•	•
Post Card	0 0 1 1 0	•	•
11" x 17"	0 0 0 0 1	•	11" x 17"
11" x 8-1 2"	1 0 0 0 1	•	11" x 8-1 2"
11" x 15"	0 1 0 0 1	•	11" x 15"
10" x 14"	1 1 0 0 1	•	•
8-1 2" x 14"	0 0 1 0 1	•	8-1 2" x 14"
8-1 2" x 13"	1 0 1 0 1	F4	•
8-1 2" x 11"	0 1 1 0 1	•	8-1 2" x 11"R
8-1 2" x 5-1 2"	1 1 1 0 1	•	8-1 2" x 5-1 2"
8-1 2" x 13" (14")	0 0 0 1 1	•	•
8" x 13" (14")	1 0 0 1 1	F	•
8" x 10-1 2"	0 1 0 1 1	•	•
8" x 10"	1 1 0 1 1	•	•
5-1 2" x 8-1 2"	0 0 1 1 1	•	5-1 2" x 8-1 2"
No Cassette	1 1 1 1 1	•	•

1 Notch Low (0V)
0 No Notch High (5V)

[Actuator Plate Combination Table]

An array of five photointerruptors in the cassette entrance detect the cassette tray paper size. The paper size sensors [A] are actuated by a plate on the front of the cassette. Each paper size has its own unique combination of notches in the actuator plate [B]. The CPU reads which photointerruptors have been deactivated (HIGH -> LOW) by the actuator plate to determine which size cassette has been inserted.

The first and second feed stations have microswitches instead of photo-interruptors.

6. Paper Feed Drive

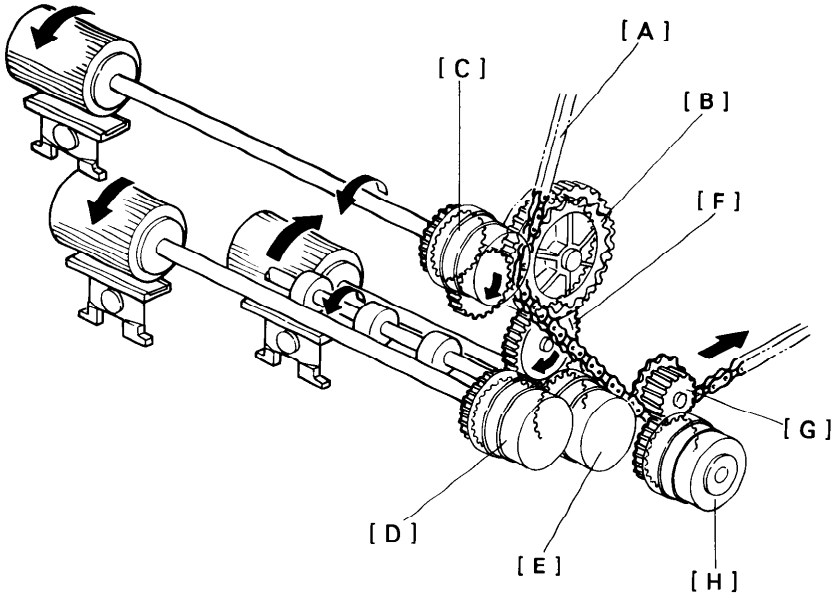

The main drive chain [A] turns the paper feed drive sprockets. The upper drive sprocket [B] turns the first magnetic clutch [C], the second feed magnetic clutch [D], and the relay roller magnetic clutch [E] through the idle gears [F].

- THIRD FEED STATION -

The lower drive sprocket [G] turns the third feed magnetic clutch [H]. The lower feed rollers and the relay rollers all rotate at the same speed. The relay rollers turn off 0.18 second after the registration sensor turns on. At the 1,000th pulse, the relay clutch and the registration clutch both turn on.

7. Manual Feed

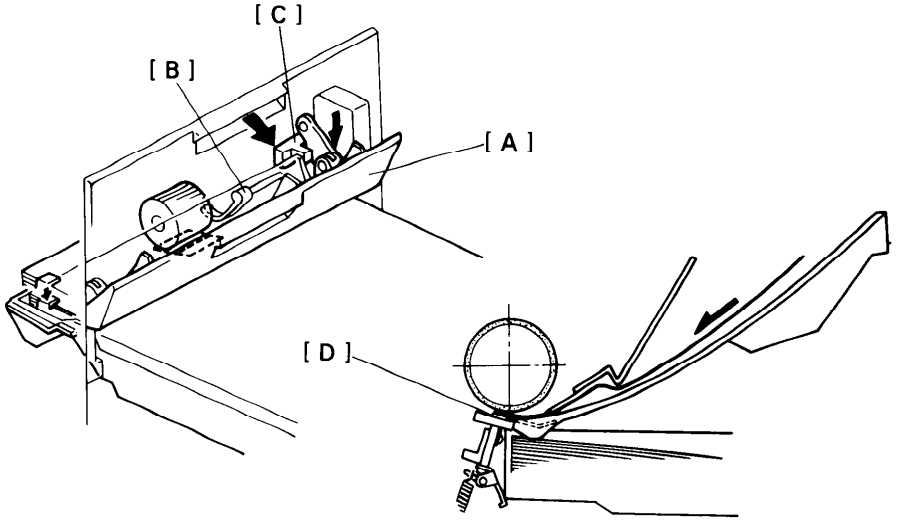

The manual feed table [A] uses the same feed mechanism as the first cassette. When the manual feed table is opened, it forces down the copy paper in the first cassette, clearing the way for manual feed. A slot in the manual feed table allows the paper end feeler [B] to drop down and the Add Paper indicator turns on. At the same time the rear arm of the tray activates the manual feed sensor [C] and the Manual Feed indicator turns on.

When the manual feed table is opened and the copy paper in the first cassette is forced down, the top sheet of paper still remains between the paper feed roller and the friction pad [D]. The spring plate installed on the manual feed table is positioned between the paper feed roller and the top sheet of paper, preventing the top sheet of paper from being fed with the manual feed paper.

The first cassette must be installed to use manual feed. If it is not, the friction pad will separate from the feed roller, making paper feed impossible. If the manual feed table is opened without the first cassette inserted, the Manual Feed indicator and the First Cassette indicator blink and the Start key turns red.

8. Feed and Registration Timing

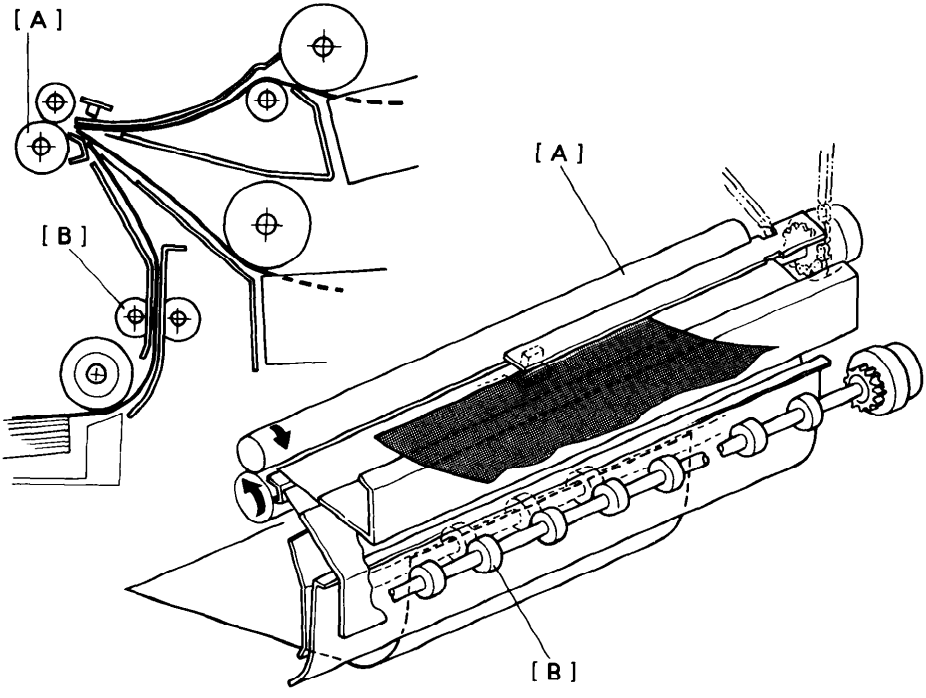

- RELAY ROLLERS -

Paper feed timing varies depending on the feed station selected. The third feed station is too far from the registration rollers [A] for the feed rollers to transport the paper to the registration rollers. A set of relay rollers [B] assists in moving the paper from the 3rd feed station to the registration rollers.

- Roller Timing -

The following table shows the timing of the rollers used with the various feed stations.

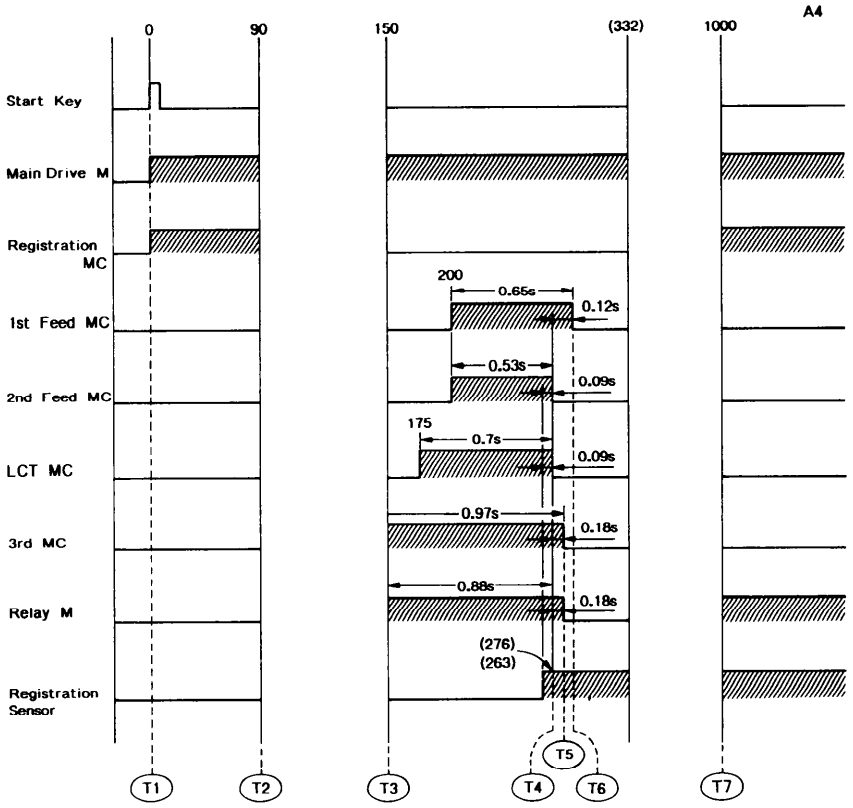

T1--- If the cleaning solenoid is on and the Start key is pressed, then the main motor and the registration clutch turn on.

T2--- The selected paper feed station's paper feed clutch turns on 0.63 second after the Start key is pressed. At the same time, the registration clutch turns off.

T3--- If the 3rd paper feed station is selected, the relay clutch turns on at the same time as the 3rd paper feed clutch.

T4--- If the 2nd paper feed station is selected, the 2nd paper feed clutch and the LCT clutch turn off 0.09 second after the registration sensor turns on.

T5--- If the 3rd paper feed station is selected, the 3rd paper feed clutch and the relay clutch turn off 0.18 (depends on the paper size) second after the registration sensor turns on.

T6--- If the 1st paper feed station is selected, the 1st paper feed clutch turns off 0.12 second after the registration clutch turns on.

T7--- The registration start signal appears at the 1000th pulse. This compensates for differences in the length of the paper paths for each feed station.

- REGISTRATION -

After the leading edge of the copy paper reaches the registration rollers, the optics CPU sends the registration start signal (1,000th pulse) to the main CPU. At this time, the main CPU energizes the registration clutch to feed the copy paper for image transfer.

PAPER TRANSPORT

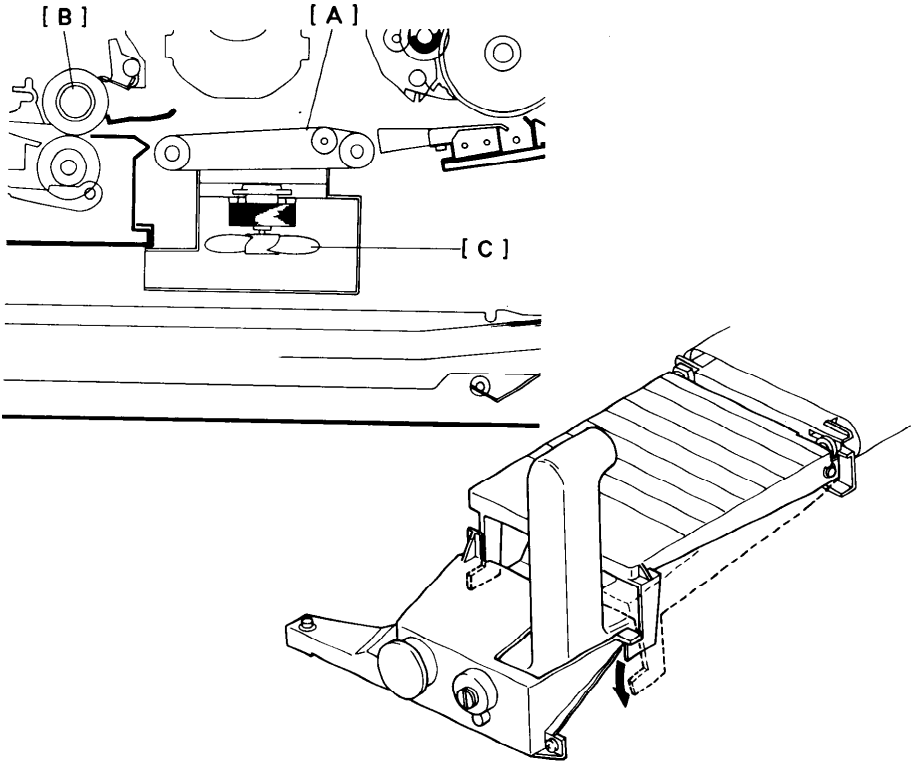

The copy paper rides on the transport belt [A] to the fusing unit [B].

A vacuum fan [C] holds the paper firmly against the belt so there is enough friction between the paper and the belt for smooth transportation. The transport belt is directly gear driven (no clutch); so, it turns constantly when the main motor is on.

The front part of the transport unit is hinged and can be pressed down for easy jam removal.

IMAGE FUSING AND PAPER EXIT

1. Overview

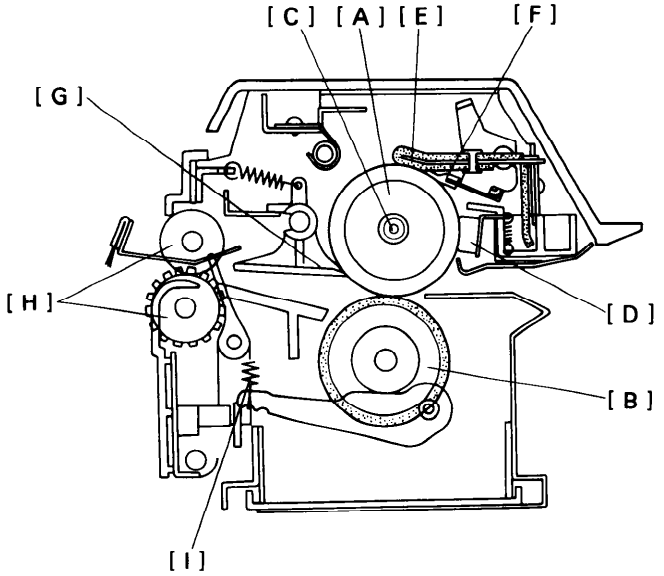

Two fusing rollers, which apply heat and pressure, fuse the image to the copy paper. The hot roller [A] is made of teflon, and the pressure roller [B] is made of silicone rubber. Pressure is constantly applied between the rollers. There is no pressure release mechanism.

The fusing lamp [C], which is located at the hot roller axis, is turned on and off to maintain the operating temperature. The temperature control circuit monitors the hot roller surface temperature through a thermistor [D].

The oil supply pad [E] applies silicone oil to the hot roller. The oil blade [F] then spreads the oil evenly across the hot roller. The oil reduces the adhesion between paper and the hot roller (reducing misfeeds), reduces paper curl, and helps to keep the roller clean by reducing the amount of toner transferred to the hot roller surface. The oil supply pad also works as the hot roller cleaning pad.

The hot roller strippers [G] separate the copy from the hot roller and direct it to the fusing exit rollers [H].

The lock position of the pressure lever tension springs [I] adjusts the roller pressure.

2. Fusing Drive Mechanism

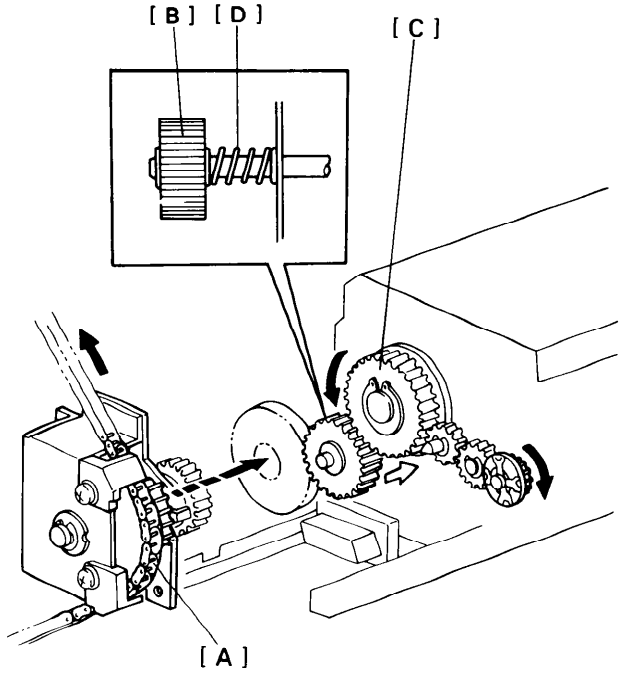

The fusing drive gear [A] turns the release gear [B] which drives the hot roller gear [C]. Rotation passes from the hot roller gear through two idle gears to the exit rollers. The friction between two fusing rollers drives the pressure roller.

The release gear spring [D] allows the release gear to move in and out. This prevents the gears from being damaged if they should not engage correctly when the fusing unit is set. Also, by pulling the fusing knob out slightly, the operator can disengage the release gear and the fusing drive gear so that the fusing rollers can be turned easily for removing misfeeds.

3. Oil Supply and Cleaning

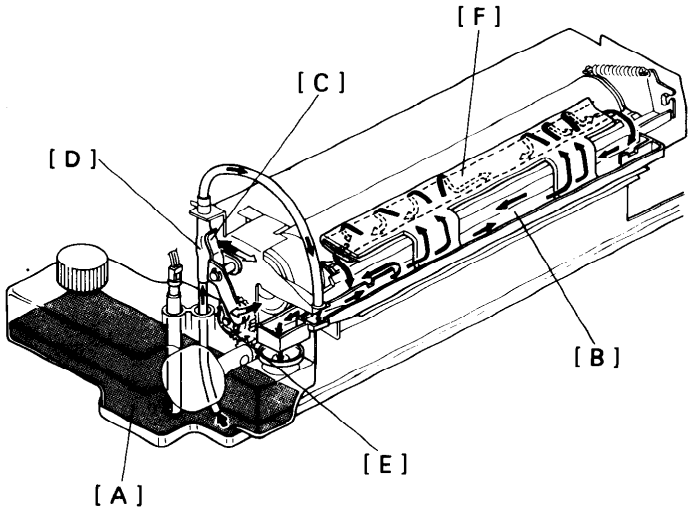

Silicone oil is applied to the hot roller to help prevent toner and paper from sticking to the hot roller, to reduce paper curl, and to help in roller cleaning.

A small one-way valve pump moves the oil from the oil tank [A] (capacity 580 cc) to the oil sump [B]. The oil pump lever [C] alternately presses and releases the rubber sleeve [D] between the valves as the oil cam [E] turns.

The felt wick soaks up oil and supplies it to the top of the oil supply pad [F]. The oil supply pad then applies the oil to the hot roller as it turns. The oil blade spreads and levels the oil on the hot roller. Excess oil flows along the blade toward the ends of the roller. At the ends, oil skimmers scrape off the excess oil and return it to the oil sump. Oil flows out through a hole in the bottom of the oil sump and returns to the oil tank.

The oil supply pad both distributes oil to the hot roller and removes toner and foreign matter from the hot roller surface.

4. Oil End Sensor

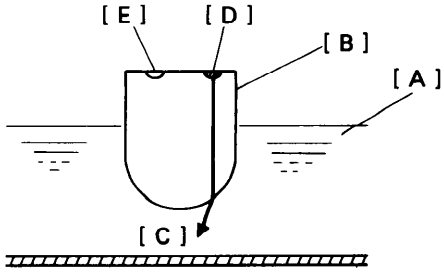

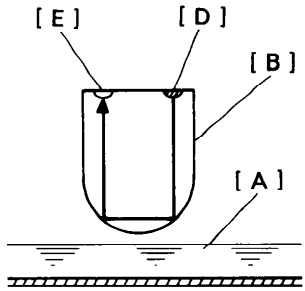

Oil end detection is based on the difference between the index of refraction of air and the index of refraction of silicone oil.

The index of refraction of silicone oil (1.40) is very near that of the sensor casing (1.49); so, the oil-casing interface has a very large critical angle. As a result, when oil [A] covers the sensor [B], light [C] from the LED [D] is only refracted slightly at the boundary between the casing and the oil. The phototransistor [E] stays off.

However, the index of refraction of air is much lower (1.00). So, the critical angle for the air-casing interface is much less than that of the oil-casing interface. Light from the LED strikes the air-casing interface at an angle greater than the critical angle. So, when oil runs out, light from the LED reflects instead of refracting and activates the phototransistor.

5. Fusing Exit Assembly

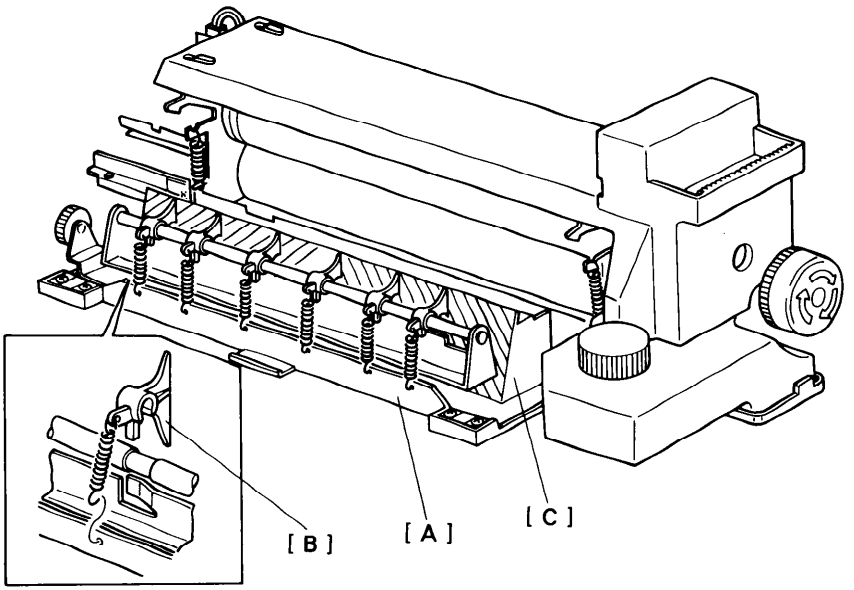

The fusing exit assembly [A] includes the fusing roller strippers [B], the lower fusing exit guide [C], the exit sensor, and the antistatic brush.

The hot roller strippers prevent copy paper from wrapping around the hot roller. They slide between the paper and the roller, and then direct the paper to the fusing exit rollers.

The lower fusing exit guide prevents the copy paper from wrapping around the pressure roller. Although the lower fusing exit guide is not touching the pressure roller, it will catch the leading edge of the copy paper due to the face curl of the paper. (The face curl is caused by the pressure between the teflon hot roller and silicone rubber pressure roller.)

6. Fusing Control

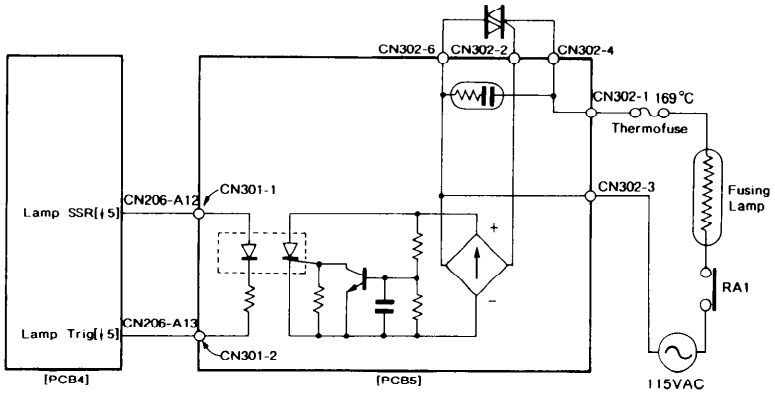

The main CPU controls the fusing lamp. The main CPU monitors the temperature of the fusing roller through a thermistor.

The main CPU sends the fusing lamp trigger signal (LOW) until the temperature of the fusing roller reaches 180°C (ready temperature). The low trigger signal turns on a photothyristor, which turns on the triac controlling the ac voltage to the lamp.

The main CPU controls the fusing temperature within 180°C ± 3°C. This control range can be changed by SP # 49.

7. Service Call Conditions

SELF-DIAGNOSTIC CODE 53:

Thermistor Open
The main CPU checks the conductivity of the thermistor. Code 53 is displayed if the thermistor is open circuit.

SELF-DIAGNOSTIC CODE 54:

No Warm-up Signal
Code 54 is displayed if the hot roller does not reach the ready temperature within 8 minutes after the power is turned on.

SELF-DIAGNOSTIC CODE 55:

Overheat
The main CPU checks the conductivity of the thermistor. Code 55 is displayed if the resistance of the thermistor becomes too low. This occurs if the hot roller temperature is in the 200° - 240°C range.

SELF-DIAGNOSTIC CODE 56:

Temperature Too Low
Code 56 is displayed if the CPU detects that the temperature of the hot roller is less than 150°C after the CPU detects the ready signal.

DOCUMENT FEEDER

1. Specifications

Original Size:	ADF mode Maximum A3 (11" x 17") Minimum A5 (5 1/2 x 8 1/2) SADF mode Max A3 (11" x 17") Minimum B6 (5 1/2 x 8 1/2) lengthwise
Original Weight:	Maximum 130 g/m^2 (34 lb) Minimum 40 g/m^2 (11 lb)
Original Feed Modes:	Automatic Feed (ADF mode) Manual Feed one by one (SADF mode)
Original Capacity:	Maximum 50 sheets (80 g/m^2, 20 lb)
Original Separation:	FFR system
Original Transportation:	Flat belt
Original Stop System:	DC servomotor control system
Original Feed Speed:	17 cpm / ADF mode
Power Source:	DC 24V / 5V (from copier)
Power Consumption:	20 W
Dimensions:	935 mm (W) x 515 mm (D) x 95 mm (H) 36.8" (W) x 20.3" (D) x 3.7" (H)
Weight:	11.5 kg (25.3 lb)
Copier Interface Equipment:	Interface PCB type E

2. Mechanical Component Layout

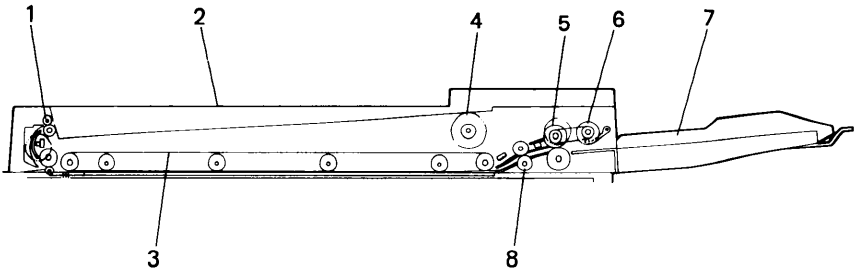

1. Exit Roller
2. DF Cover
3. Drive Belt
4. Drive Pulley
5. Feed Roller
6. Pick-up Roller
7. Original Table
8. Registration Rollers

3. Electrical Component Layout

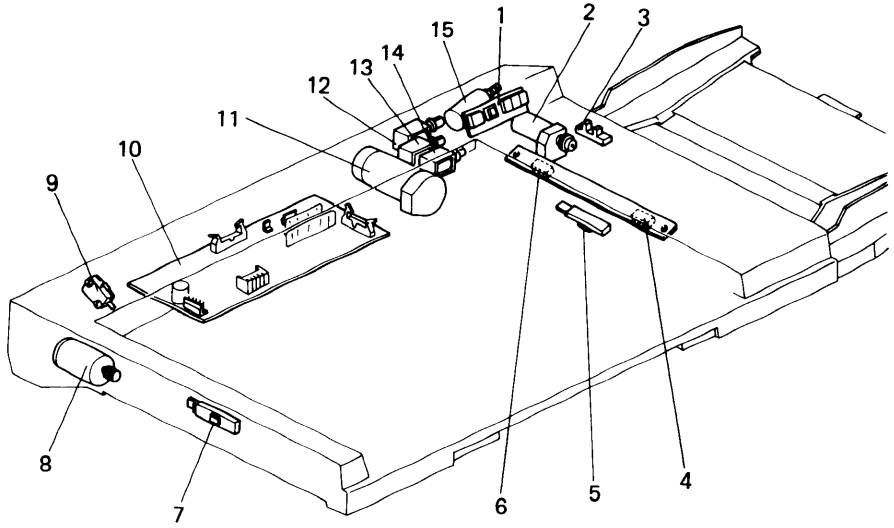

1. Indicator PCB (PCB-10)
2. Feed-in Motor (M-14)
3. Feed-in Sensor (S-34)
4. Entrance Sensor (S-35)
5. Registration Sensor (S-37)
6. Width Sensor (S-36)
7. Exit Sensor (S-38)
8. Feed-out Motor (M-15)
9. Lift Switch (SW-10)
10. DF Main PCB (PCB-11)
11. Belt Drive Motor (M-16)
12. Pick-up Solenoid (Sol-7)
13. Registration Solenoid (Sol-8)
14. Roller Release Solenoid (Sol-9)
15. Stopper Solenoid (Sol-10)

4. Basic Operation

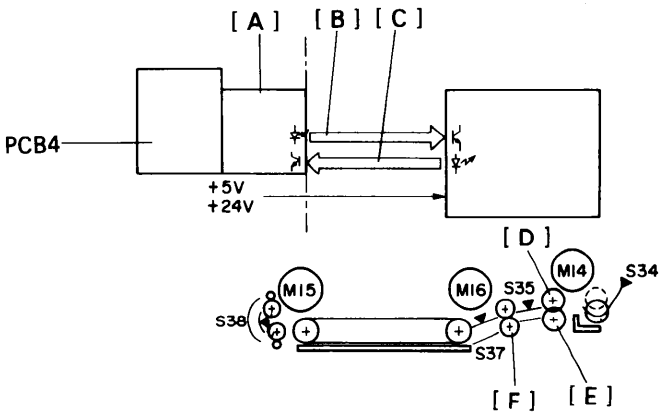

The DF has its own CPU which controls all of the DF functions. The DF CPU communicates with the copier through an interface board [A] and serial interface bus [B]. Fiber optics [C] are used for the serial interface bus because they are unaffected by electrical noise.

When an original is set on the original table, the original sensor [S34] is activated. The DF CPU then selects either the ADF or SADF mode depending on the number of originals set. If one original is set, SADF is selected. If more than one original is set at the same time, ADF is selected.

The DF CPU energizes the stopper and pick-up solenoids, and then turns on the feed-in motor [M14]. The feed [D] and friction rollers [E] separate and feed an original to the registration rollers [F].

A short time after the original reaches the registration roller the DF CPU turn on the belt drive motor [M16] and energizes the registration solenoid. The time lag enables the original skew to be corrected. The belt then feeds the original to the exposure glass, while the CPU counts the pulses of the M16 encoder. At the proper time, the CPU stops M16.

When the DF CPU receives the feed-out signal from the copier, it turns on the feed-out motor [M15] until the exit sensor [S38] is deactuated by the trailing edge of the original.

As the exit sensor is inside the exit unit, the trailing edge of the original is still in the exit unit. After 0.4 second, the CPU turns on M15 to feed the original out completely. This stacks the originals tidily.

5. Feed-in Unit Mechanism

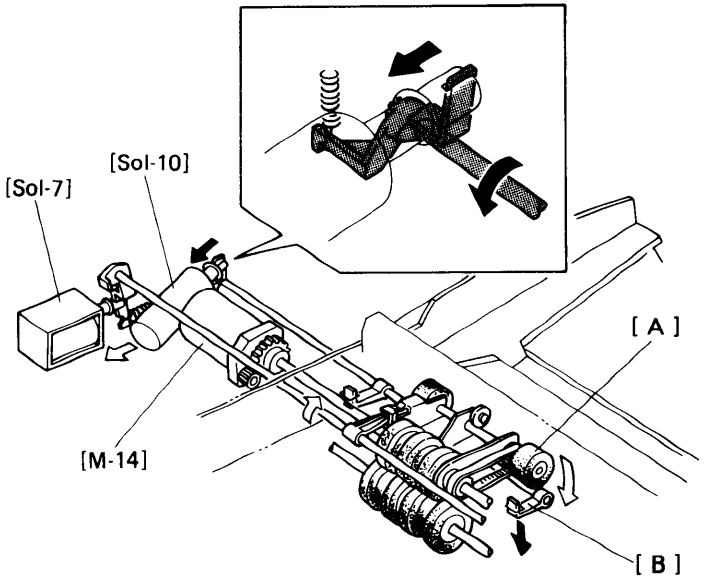

After an original is inserted into the feed-in unit and the Start key is pressed, the DF CPU energizes the pick-up solenoid [Sol-7] and the pick-up roller [A] drops onto the top of the original(s). At the same time, the DF CPU energizes the original stopper solenoid [Sol-10] to retract the stopper claws [B].

In ADF mode, the original stopper claws stay underneath the original feed table until all the originals have been fed. In SADF mode, the stopper claws rise up for each original.

200 ms after energizing the solenoids, the DF CPU turns on the feed-in motor [M-14] which rotates the feed and pick-up rollers.

6. Separation Mechanism

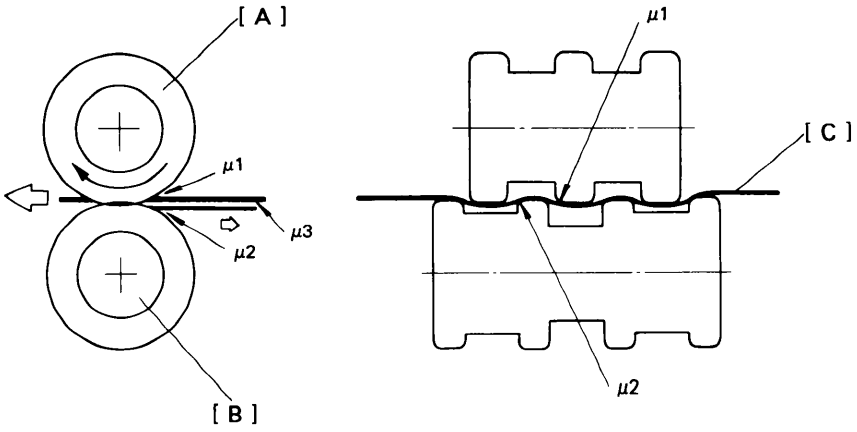

μ1 ----- Coefficient of friction between the feed rollers and the original.

μ2 ----- Coefficient of friction between the friction rollers and the original.

μ3 ----- Coefficient of friction between originals.

This model uses an FFR (Feed and Friction Roller) original feed system with three sets of rollers (feed, friction and pick-up roller). The feed [A] and friction rollers [B] have grooves in them which interlock with one another. The rollers interlock to decrease damage to the originals [C], especially pencil written originals, from direct roller-to-roller pressure.

The pick-up roller sometimes sends more than one original to the feed and friction rollers. When this happens, the friction rollers strip the extra original from the top original as follows: μ1 is greater than μ3, and because μ2 is greater than μ3, the top original will slide past the friction rollers while lower originals are stopped.

7. Misfeed Prevention

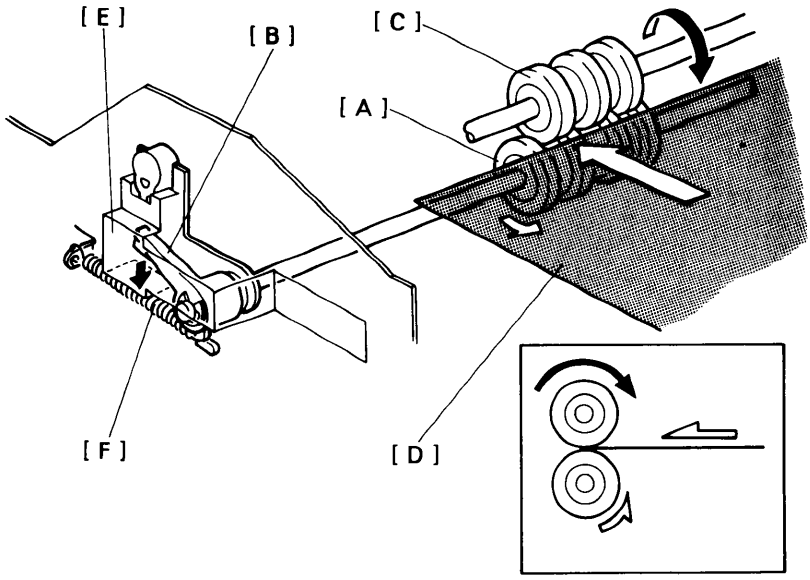

The front side of the friction roller [A] is attached to the misfeed prevention lever [B] through a one-way clutch.

When the leading edge of an original first contacts the feed [C] and friction rollers [A], the friction roller is stationary. As the leading edge is fed between these rollers, the friction roller rotates counter-clockwise a few degrees to help feed thick originals [D]. After the friction roller has rotated a few degrees, the misfeed prevention lever contacts the stopper plate [E] and the friction roller stops rotating. At this point, the separation mechanism will eliminate double feed.

When the trailing edge of the original passes the friction roller, the spring [F] returns the lever to its original position without rotating the friction roller shaft.

8. Wear Prevention

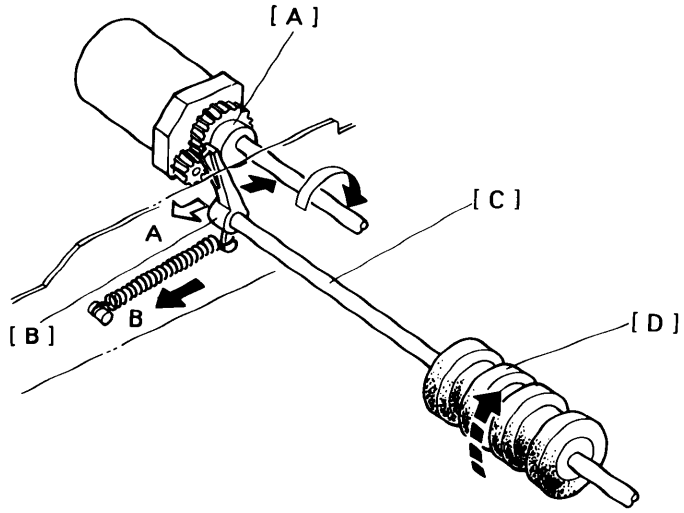

The rear side of the feed roller shaft drive gear has an eccentric cam [A]. This cam contacts the wear prevention lever [B] which is attached via a one-way clutch to the friction roller shaft [C]. This lever is free to rotate in the direction of the white arrow **A**.

As the feed roller drive gear rotates, the high point of the cam pushes back the wear prevention lever in the **A** direction. As the cam rotates to the low point, a spring returns the wear prevention lever to its original position (black arrow **B**). When the wear prevention lever returns, it rotates the friction roller shaft, through the one-way clutch.

Every time the feed roller shaft rotates once, the friction roller shaft is rotated a few degrees. This prevents the friction roller [D] from wearing unevenly or too quickly.

9. Friction Roller Release Mechanism

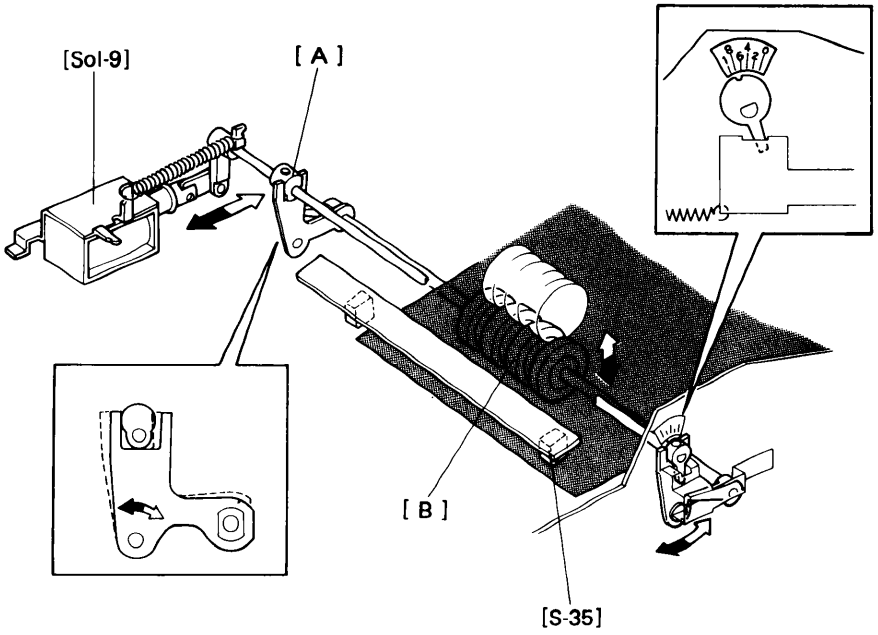

In the ADF mode, when the original activates the original entrance sensor [S-35], the DF CPU energizes the roller release solenoid [Sol-9]. This action rotates the roller release cam shaft, which has an eccentric cam [A] on each end, to decrease the overlap of the feed and friction rollers. This is to prevent the original from being smeared by the friction roller [B]. The overlap is 0.9 mm when the solenoid is off, and 0.4 mm when it is on.

In the SADF mode, it is not necessary to separate the originals, so the DF CPU energizes the roller release solenoid and releases the friction roller before feeding the original.

10. Registration

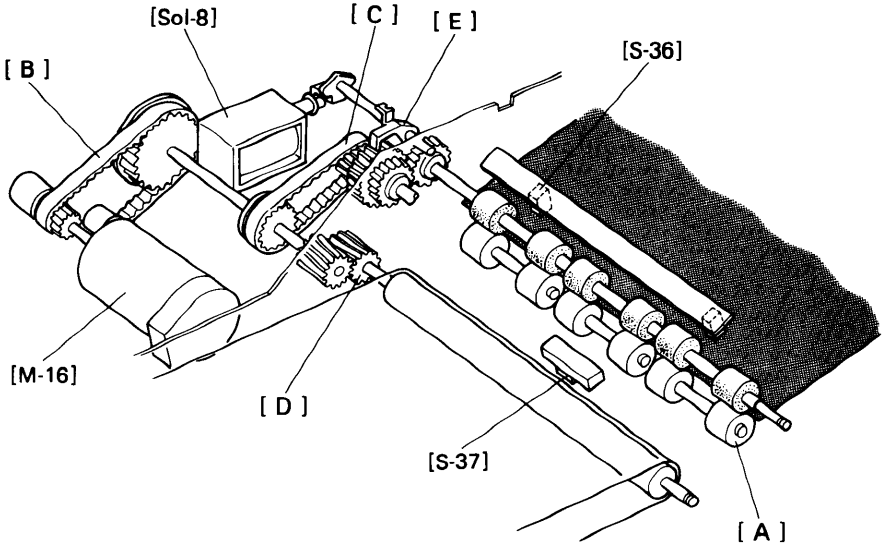

The DF CPU stops the feed-in motor [M14] 30 milliseconds after the leading edge of the original activates the original entrance sensor [S-35]. The original's own forward momentum, which causes the original to align against the registration roller [A], corrects for skew.

After a further 30 milliseconds, the DF CPU energizes the belt drive motor [M-16] and the registration solenoid [Sol-8]. Rotation of the belt drive motor is transmitted to the feed belt and registration rollers via the timing belts [B and C], belt drive gear [D], registration clutch [E], and registration roller gear.

The DF CPU starts counting the pulses from M16 when the leading edge of the original activates the registration sensor [S-37]. When the pulse count reaches 1,962 pulses (about 940 ms), the original is at the proper position, and the DF CPU stops M16.

In Auto Paper Selection or Auto R/E mode the ADF automatically determines the original size. The registration sensor and the original width sensor [S-36] measure the original size. The registration sensor measures the length of the original by counting the M16 pulses as the original passes under it. Then, if the original size cannot be determined from the length alone, the CPU checks whether the original has actuated the original width sensor. Based on the input from these two sensors, the correct original size can be determined.

The registration sensor is also a jam detector.

11. Feed-out Mechanism

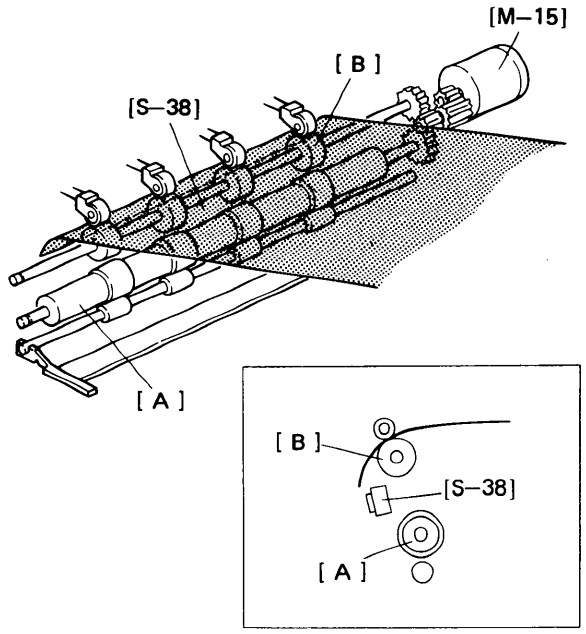

When the DF CPU receives the feed-out signal, it energizes the belt drive and feed-out motors. The feed-out motor [M-15] drives both the lower exit roller [A] and the upper exit roller [B] through an idle gear.

When the exit sensor [S-38] detects the trailing edge of the original, the CPU reduces the speed of the feed-out motor to feed the original our completely. This is done to stack the originals neatly.

12. Lifting Mechanism

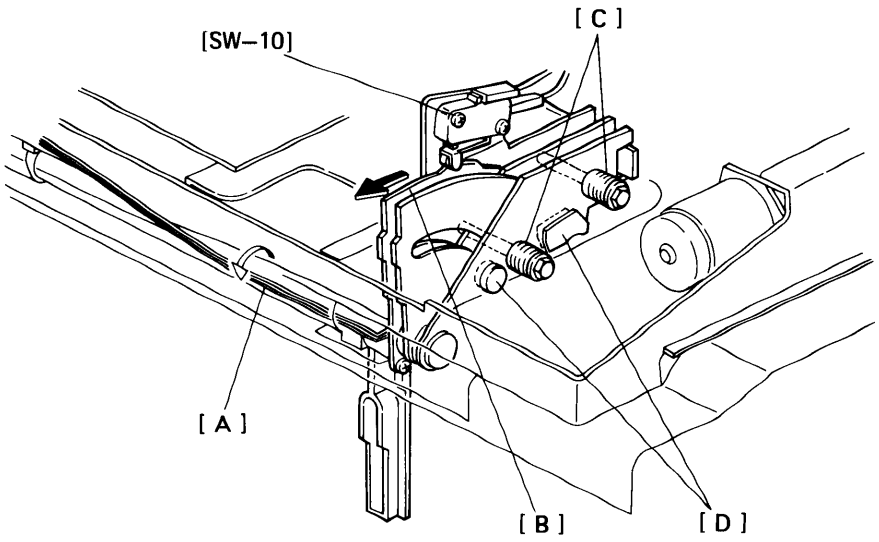

The torsion spring [A] is installed inside the torsion spring collars. A screw fixes the center of the torsion spring, and both sides of the spring are twisted when the belt unit is lowered. The spring tension makes it easier to lift up the belt unit.

The cam plates [B] are sandwiched between the brake shoes [C], which are under pressure from the brake shoe springs [D]. This causes friction between the cam plate and the brake shoes.

When the belt unit is lifted up, the lift switch [SW-10] is turned on by the detent arm as it moves along the cam plate. When the lift switch is turned on, DF modes are prohibited. At the same time, the DF CPU sends a signal to the copier CPU. This signal enables the copier to operate without the document feeder.

13. Misfeed Check

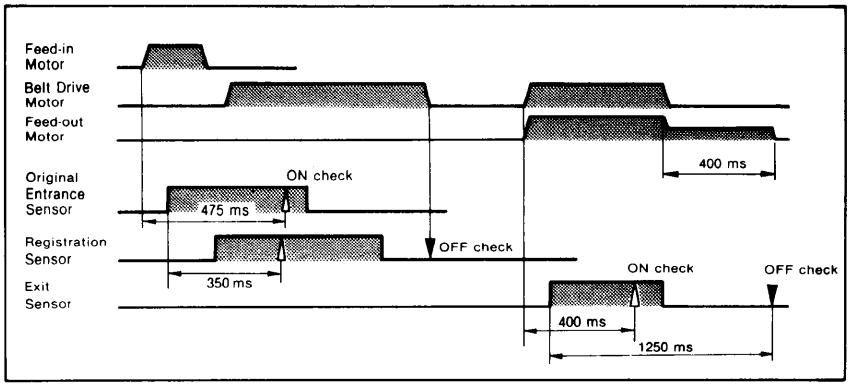

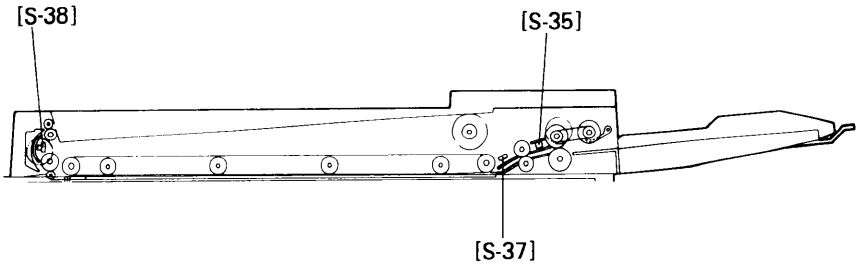

Three sensors are used for misfeed checks: the entrance sensor [S-35], registration sensor [S-37], and exit sensor [S-38]. After the feed-in motor [M-14] is energized, the original activates the entrance sensor. The DF CPU checks to see if the entrance sensor has been activated (entrance sensor ON check) 475 ms after the feed-in motor has been energized. Then, 350 ms after the entrance sensor is activated, the DF CPU checks to see if the registration sensor has been activated (registration sensor ON check).

The OFF check is carried out when the belt drive motor [M-16] is de-energized. The DF CPU checks to see if the registration sensor has been deactivated (registration sensor OFF check). There is no off check for the entrance sensor.

The ON check for the exit sensor occurs 400 ms after the feed-out and belt drive motors are re-energized. The OFF check for the exit sensor is done 1,250 ms after the exit sensor is activated. When a misfeed is detected, the DF CPU stops the DF and sends a misfeed signal to the copier. The lift switch cancels a misfeed condition.

SORTER

1. Specifications

Paper Size for Bins:	Maximum A3, 11" x 17" Minimum A5, 5 1/2" x 8 1/2"
Paper Weight:	50 to 110 grams (14 to 28 lb)
Number of Bins:	20 bins + proof tray
Bin Capacity:	Sort Mode 35 sheets/A4 (8 1/2" x 11") 10 sheets/A3 (11" x 17") Stack Mode 30 sheets/A4 (8 1/2" x 11") 10 sheets/A3 (11" x 17")
Proof Tray Capacity:	100 sheets (all sizes)
Power Source:	100 V, 50/60 Hz, 0.6 A (from copier)
Power Consumption:	60 W
Dimensions:	346 mm(W) x474 mm(D) x 388 mm(H) 13.6"(W) x 18.7"(D) x 15.3"(H)
Weight:	12.4 kg (27.3 lb)
Copier Interface Equipment:	Sorter adapter type E Interface PCB type E

2. Mechanical Component Layout

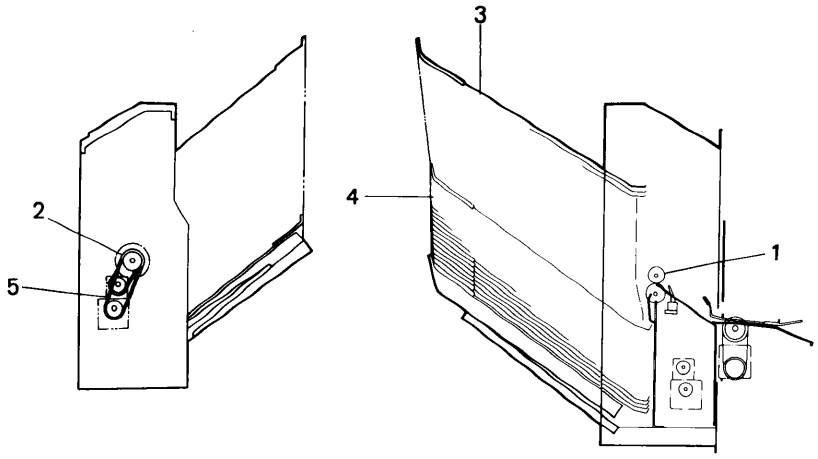

1. Exit Rollers
2. Bin drive Wheel
3. Proof Tray
4. Bins
5. Roller Drive Belt

3. Electrical Component Layout

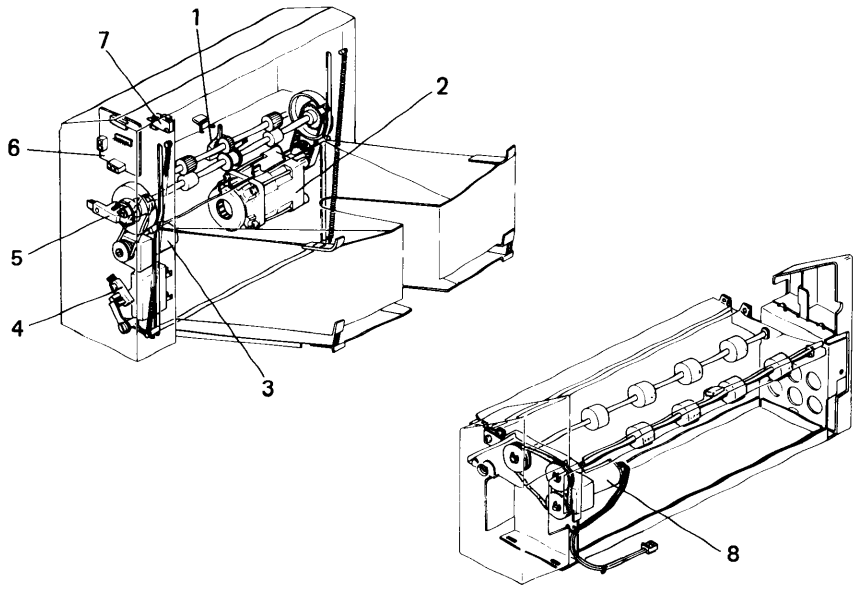

1. Paper sensor (S-31)
2. Wheel drive motor (M-11)
3. Roller drive motor (M-12)
4. Bin home position sensor (S-32)
5. Wheel sensor (S-33)
6. Sorter Control PCB (PCB-9)
7. Cover safety switch (SW-9)
8. Relay drive motor (M-13)

4. Basic Operation

- Clear Mode -

When the main switch of the copier is turned on, the sorter automatically assumes the clear mode. It also changes to the clear mode if the sort or stack mode is recalled or if the interrupt key is pressed. In the clear mode, all copies are stacked on the proof tray.

Sorter operation starts when a sheet of copy paper actuates the copier exit sensor. At this time the roller drive motor and relay drive motor energize. The motors de-energize when the paper exits the copier and the paper sensor is deactuated. The paper sensor signal is sent to the copier through an interface board to check for paper misfeed. The wheel drive motor does not turn on when in the clear mode.

- Sort Mode -

After the sort mode is selected by pressing the Sorter key, the wheel drive motor turns on to move the proof tray up. When the first sheet of paper activates the paper exit sensor, the roller drive motor turns on. Shortly after the paper sensor turns off (345 ms later), the wheel drive motor turns and advances the bins one step. When the wheel sensor is activated, the wheel drive motor turns off.

- Stack Mode -

As in the sort mode, the roller drive motor turns on when the first sheet of paper actuates the copier exit sensor. All copies of the copy run are then fed to the first bin. When the final copy passes the paper sensor, the wheel drive motor turns on and advances the bins one step.

There are no limits on the number of copies that can be entered up to the full 99 copy limit of the copier. However, the physical capacity of the bins is a good deal less. (See "Bin Capacity" in the specifications.)

When all 20 bins have been used, the wheel drive motor turns on until all the bins have been lowered (including the proof tray). At the same time, the Max indicator blinks.

- EXAMPLE OF SORT MODE OPERATION -

"3" copies entered/Start key pressed 3 times.

- Start key ON -

1) The first copy feeds to the first bin [A]. After the paper detector turns off, the wheel drive motor turns on and moves the first bin up.

2) The same action as #1.

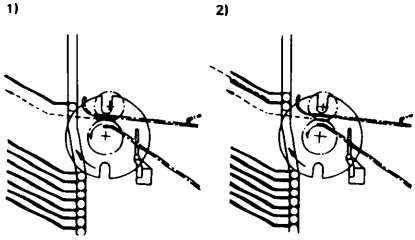

3) The third copy feeds to the third bin. The wheel drive motor does not turn on after the paper sensor turns off. (The sorter will stay at this position until auto-reset or until copying resumes.)

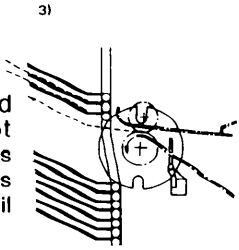

- Start Key ON -

4) The first copy is fed to the third bin. After the paper detector turns off, the wheel drive motor turns on and moves the second bin down.

5) The same as #4.

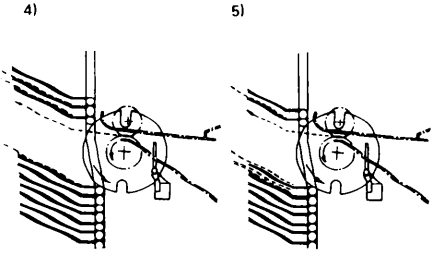

6) The third copy is fed to the first bin. The wheel drive motor does not turn on after the paper sensor turns off.

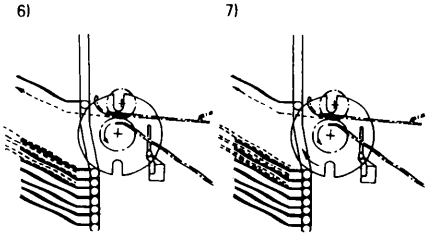

- Start Key ON -

7) The first sequence (1, 2, and 3) is repeated.

5. Bin Drive Mechanism

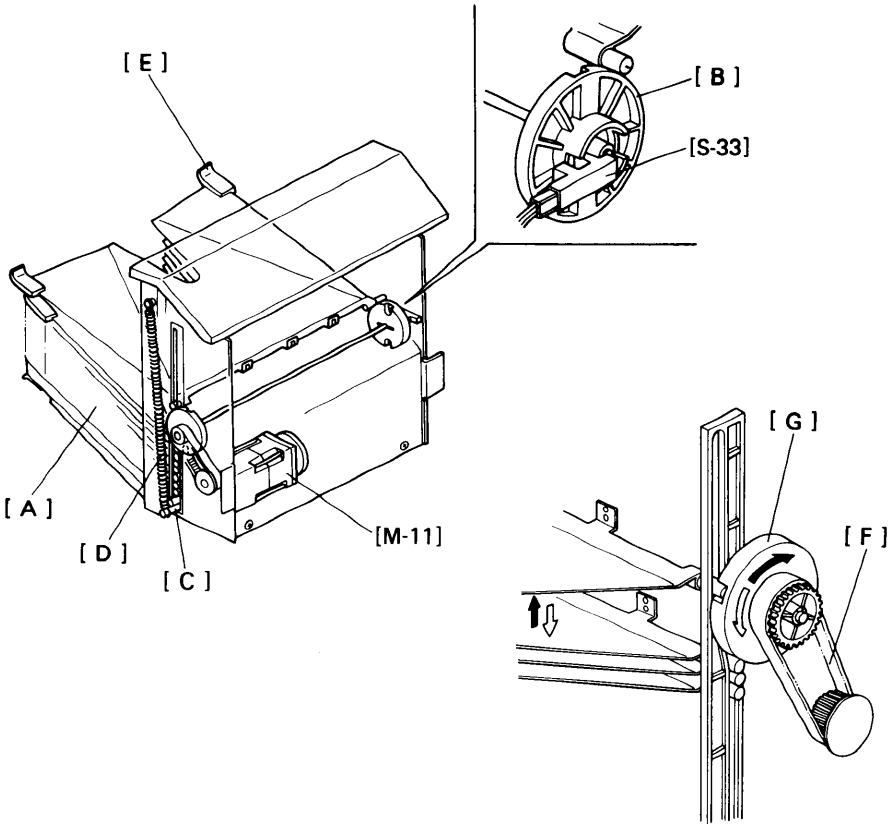

The bin drive mechanism moves the bins [A] up and down to receive copies under the direction of the copier CPU. The main components in this mechanism are the wheel drive motor [M11], the two transfer wheels [B], the wheel sensor [S33], and the bins themselves.

Pins on either side of each bin are inserted into slots in the sorter side frame. The pins slide up and down in these slots. The bins rest on each other with the lower one resting on the lift bar [C]. The springs [D], on either end of the lift bar, lift it up forcing the bin pins against the transfer wheels. Plastic spacers [E] on the left end of the bins hold them apart.

To move the bins up, the bin drive motor turns clockwise (as viewed from the front). A timing belt [F] turns the transfer wheels [G].

The transfer wheels have two slots in them 180 degrees apart. As the transfer wheels turn, these slots engage the pins of the bins and lift them up. Each time the transfer wheels turn 180 degrees, they raise one bin.

The CPU counts the bins using the wheel sensor. A cylindrical actuator [H] on the front transfer wheel turns the wheel sensor on and off. This actuator has two notches that are 180 degrees apart. The wheel sensor turns on each time one of the slots passes through the sensor.

To move the bins down, the CPU reverses the bin drive motor and the above process reverses.

The home position sensor is located at the lower rear end of the sorter. When all the bins are lowered, the lift bar presses down on the actuator [I], actuating the sensor. The CPU checks the sensor whenever the power is turned on. At this time, if the bins are not in the home position, the sensor will deactuate and inform the CPU to return the sorter to the home position.

6. Bins

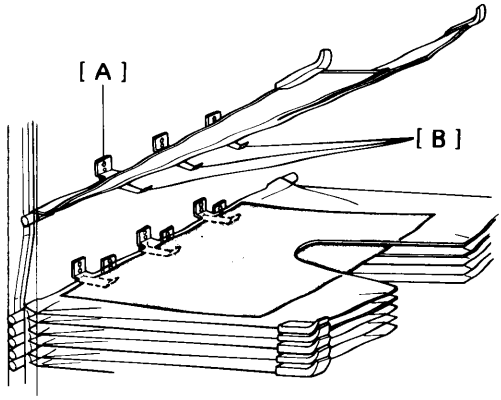

The proof tray and the twenty bins are all basically the same. Formed out of thin flexible steel plate, they have spacers on the left end to hold them apart, and pins at the front and rear of the right end, which are inserted in guide slots in the sorter frame.

On the right edge, the bins have stoppers [A] which prevent copies from sliding back into the sorter after they have been fed out. The pattern of these stoppers is different for even and odd numbered bins.

Three leaf springs [B] on the underside of each bin hold the copies flat in the underlying bin.

7. Exit Rollers

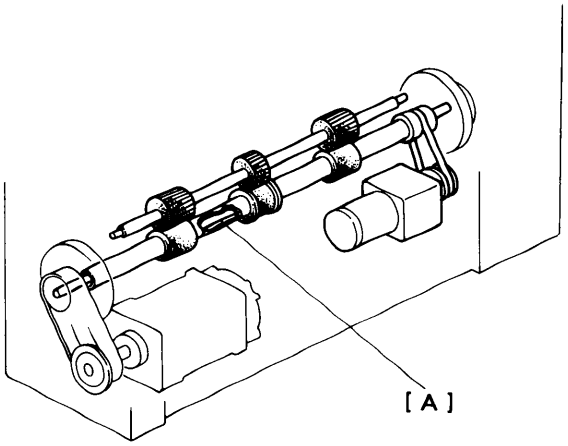

The exit roller shaft is hollow and is mounted on the transfer wheel shaft [A] (coaxial). When the copy actuates the copier's exit sensor, the CPU sends a signal to the sorter to turn on the roller drive motor. The roller drive motor turns off at the same time as the copier main motor (M-12).

8. Electrical Control

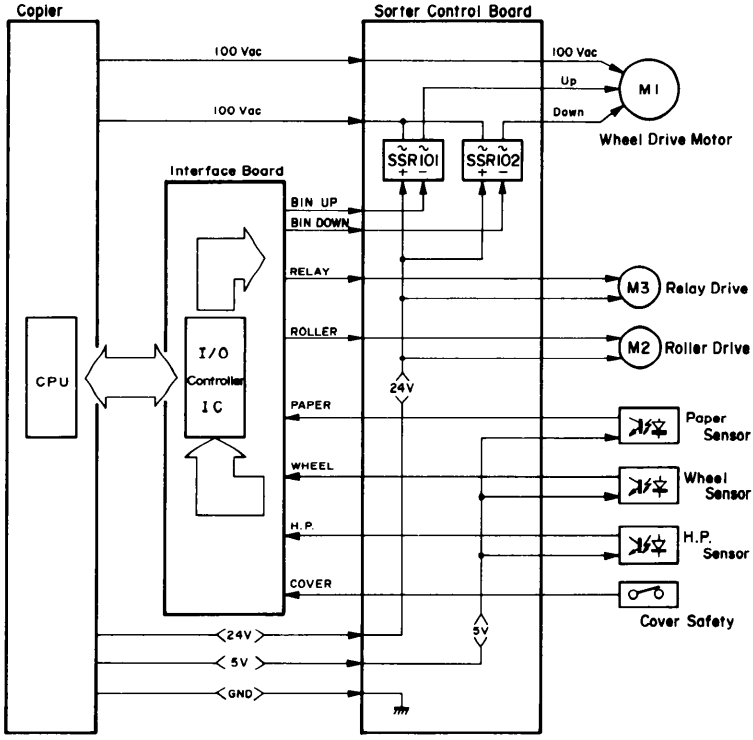

The copier CPU, through an I/O controller IC on the interface board, controls all the functions of the sorter.

The copier supplies 100 volts ac to the wheel drive motor and the SSRs. SSR 101 turns the wheel drive motor to move the bins up and SSR 102 is for the down operation.

The copier supplies two dc power levels, +5 volts and +24 volts, for the dc components.

Signals from the sensors and the safety switch are sent to the copier CPU through the interface board. The copier CPU operates motors through the interface board and SSR's.

LARGE CAPACITY TRAY

1. Specifications

Copy Paper Size:	B4 (lengthwise) A4 (lengthwise or sideways) B5 (lengthwise or sideways) 8 1/2" x 14" (lengthwise) 8 1/2" x 11" (lengthwise or sideways)
Copy Paper Weight:	50 g to 110 g (14 lb to 28 lb)
Tray Capacity:	1,000 sheets (may vary slightly depending on paper weight)
Lift Time:	Maximum: 12 seconds (50Hz) 10 seconds (60Hz)
Power Source:	220 V/50 Hz 0.15 A 240 V/50 Hz 0.15 A 115 V/60 Hz 0.3 A 110 V/60 Hz 0.3 A
Power Consumption:	Maximum 30 W
Dimensions:	410mm(W) x 545mm(D) x 220mm(H) 16.1"(W) x 21.5"(D) x 8.7"(H)
Weight:	12 kg (26.4 1b)

2. Mechanical Component Layout

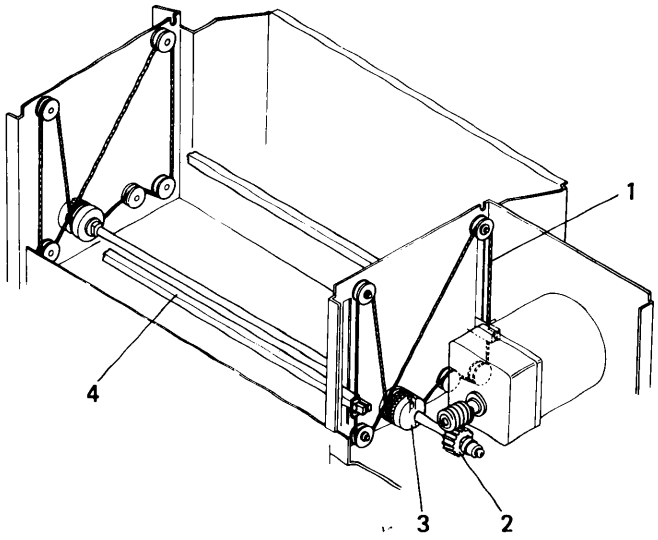

1. Drive Wire
2. Drive Gears
3. Drive Pulley
4. Tray Wire
5. Lift Rods

3. Electrical Component Layout

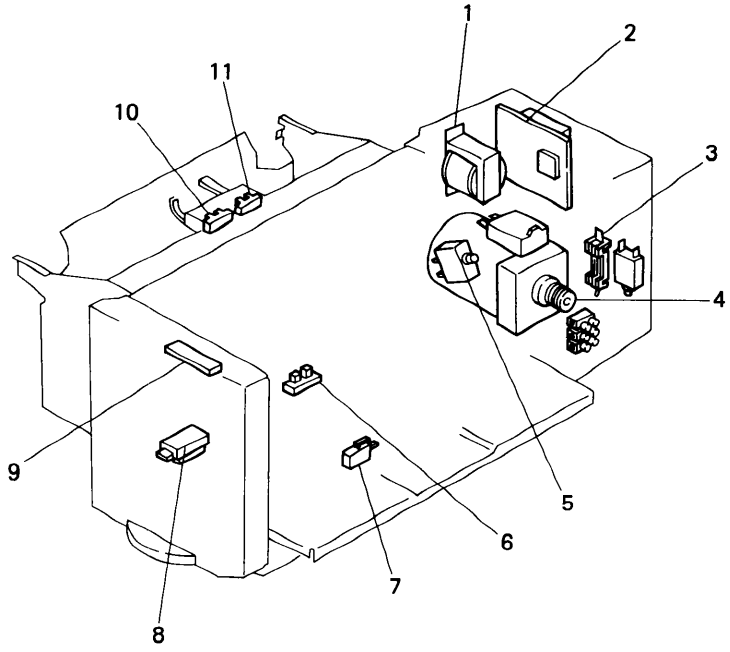

1. LCT transformer (T-2)
2. LCT PCB (PCB-12)
3. AC fuse (F-2) (220 V)
3. Circuit breaker (CB-2) (115 V)
4. LCT motor (M-17)
5. LCT safety switch (SW-11)

6. Tray down sensor (S-39)
7. Positioning switch (SW-12)
8. Paper size sensor (S-40)
9. LCT operation panel (PCB-13)
10. Paper end sensor (S-41)
11. Upper limit sensor (S-42)

4. Mechanical Operation

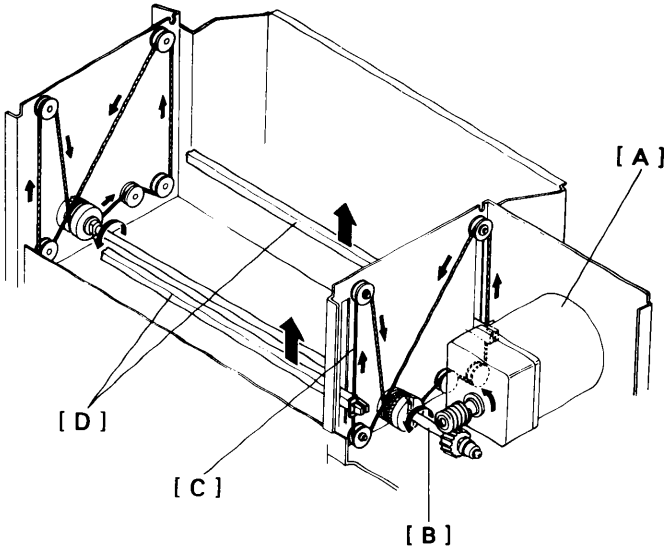

- Drive Mechanism -

A reversible ac motor [A] drives the LCT's bottom plate up and down.

The motor's drive is transmitted directly to the tray drive shaft [B] via a worm gear and worm wheel. The tray wires [C] have braces on them; these braces hold the ends of the two lift rods which support the tray bottom plate. The braces on the wires raise the lift rods [D] and the tray bottom plate when the pulley turns counterclockwise, and they lower them when the pulley turns clockwise.

- PICK-UP ROLLER MECHANISM -

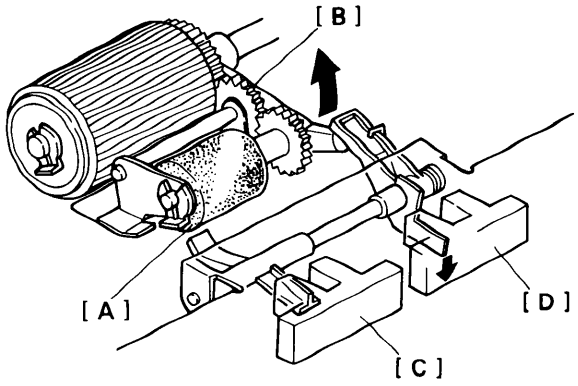

The pick-up roller [A] is driven by a drive gear [B] to initialize feed paper from the LCT.

The paper end sensor [C] and the upper limit sensor [D] are incorporated in the LCT not the copier. The paper end sensor is used to detect paper end and the upper limit sensor detects when the tray has reached its upper limit when the tray is being raised.

- Paper Size Detection -

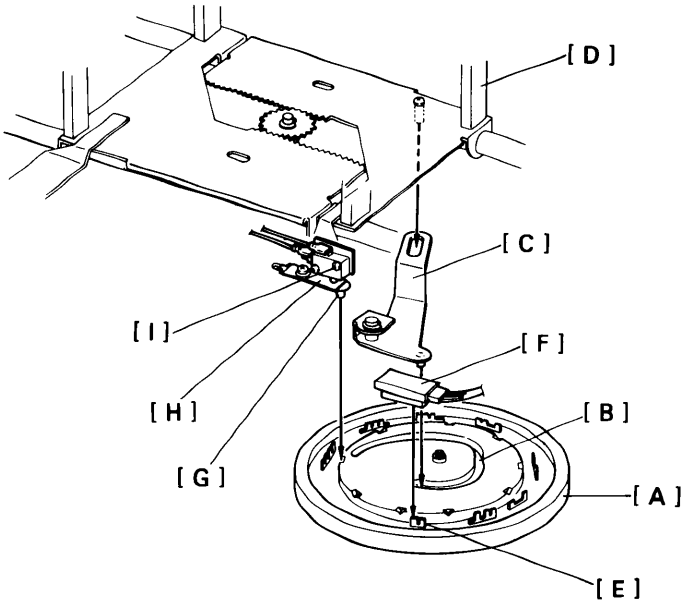

The paper size dial controls side post positioning and paper size detection.

When the paper size dial [A] is rotated, the cam groove [B] moves the size lever [C], which repositions the guide posts [D]. When the dial reaches a standard paper size, one of the actuator plates [E] enters the paper size sensor [F]. At the same time, the pin [G] on the leaf spring [H] drops into a notch on the inside rim of the dial and the positioning switch [I] deactuates.

When the positioning switch opens, the scan signal is applied to the LCT paper size sensor. The paper size sensor then reads the pattern of the actuator plate and sends paper size data to the copier's CPU.

When the paper size dial is positioned at a non-standard paper size, the positioning switch is actuated (closed). In this case, the LCT cannot be used; the Load Paper indicator lights and no paper size is displayed on the operation panel. This prevents the skewing that would occur if the guide posts were not at the correct position.

5. Electrical Operation

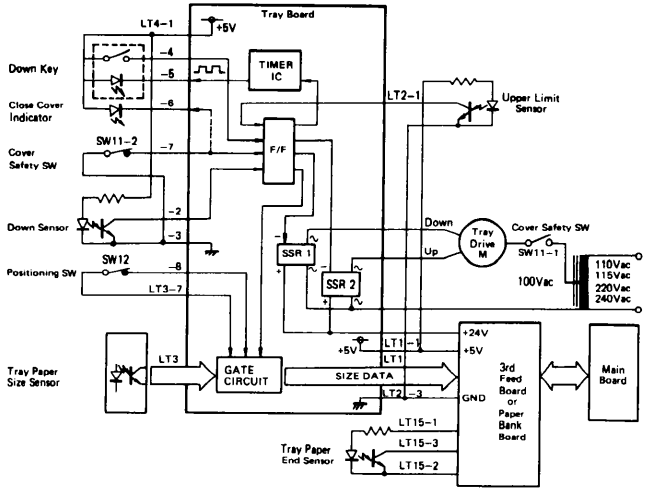

- DOWN OPERATION -

The bottom plate moves down only when the Down key is pressed or paper end occurs. When the Down key is pressed, the flip-flop changes state (all outputs change from LOW to HIGH or vice versa). Then, three things happen simultaneously: (1)The gate circuit turns off, preventing size data from being sent to the copier; (2) The timer circuit turns on, causing the LED in the down key to blink; and (3) SSR1 turns on, energizing the drive motor to move the tray down.

The down sensor is actuated when the bottom plate is fully lowered. This causes the flip-flop to change back to its original state, which turns off SSR1 and resets the timer circuit. The LED in the Down key stays continuously on.

- UP OPERATION -

Opening and closing the upper or side LCT cover while the bottom plate is in the down position starts the up operation. This causes the gate circuit to send paper size data to the copier. At the same time the cover safety switch changes the state of the flip-flop and the flip-flop energizes SSR2, which turns on the drive motor to move the tray up. The drive motor stays on until the paper pushes up the pick-up roller. The actuator on the pick-up roller bracket then moves out of the upper limit sensor; this again changes the flip-flop's state and the motor stops.

The cover safety switch prevents operation if the cover is open as this opens the ac 100 volt line.

TABLE OF CONTENTS

1. OVERALL MACHNE INFORMATION

Specifications 1-1
Operation Panel 1-5
Section A 1-5
Section B 1-6
Section C 1-7
Copy Process 1-8
Functional Operation 1-9
Paper Path 1-10
1. Paper Feed 1-10
2. Registration 1-11
3. Image Transfer 1-11
4. Paper Separation 1-11
5. Fusing 1-11
Mechanical Component Layout 1-12
Drive Layout 1-13
Electrical Component Layout 1-14
Electrical Component Descriptions 1-16
AC and DC Power Distribution 1-19
Overall Machine Control 1-20
Operation Panel Control 1-21

2. DETAILED SECTION DESCRIPTIONS

Drum 2-1
Selenium Drum 2-1
Handling the Drum 2-2
Drum Charge 2-3
Overview 2-3
Corona Wire Cleaner 2-4
Charge Corona Power Pack 2-5
Erase 2-6
Overview 2-6
Lead Edge Erase 2-7
Side Erase 2-7
Trail Edge Erase 2-9
Erase Lamp Circuit 2-10
Optics 2-12
Overview 2-12
Scanner Drive 2-13

Lens/Mirror Positioning 2-15
Stepper Motor Control 2-19
Automatic Image Density Sensing 2-20
Exposure Lamp Control 2-21
Service Call Conditions 2-22
Development 2-23
Overview 2-23
Drive Mechanism 2-24
Seals and End Magnets 2-25
Cross Mixing 2-26
Image Density Control 2-27
Bias for ID Sensing 2-31
Bias for Control Circuit 2-32
Color Development 2-33
Service Call Conditions 2-35
Toner Density Detection and Toner Supply 2-36
Toner Density Detection 2-36
Toner Density Control 2-37
Toner Supply 2-39
Toner Supply Amount 2-41
Toner End Detection 2-42
Service Call Condition 2-44
Image Transfer and Separation 2-44
Pre-Transfer Lamp (PTL) 2-45
Image Transfer 2-45
Paper Separation 2-46
Pre-Transfer Lamp Circuit 2-47
Transfer/Separation Corona Circuit 2-48
Pick-Off Mechanism 2-49
Pick-Off Circuit 2-51
Drum Cleaning 2-52
Overview 2-52
Drive Mechanism 2-53
Cleaning Blade 2-54
Toner Collection Bottle Vibration 2-55
Toner Overflow Sensor Circuit 2-56
Cleaning Solenoid Circuit 2-57
Quenching Lamp 2-58
Paper Feed and Registration 2-59
Overview 2-59
Friction Pad Feed System 2-60
Paper Lift Mechanism 2-61
Paper Size Detection 2-63
Paper Feed Drive 2-64

Manual Feed 2-65
Feed and Registration Timing 2-66
Paper Transport 2-68
Image Fusing and Paper Exit 2-69
Overview 2-69
Fusing Drive Mechanism 2-70
Oil Supply and Cleaning 2-71
Oil End Sensor 2-72
Fusing Exit Assembly 2-73
Fusing Control 2-74
Image Fusing 2-75
Service Call Conditions 2-76

SPECIFICATIONS

Configuration: Desk top

Copying Process: Dry electrostatic transfer system

Original: Sheet/book

Original Size: Maximum A3 (11" x 17")

Copy Paper Size: Maximum A3 (11" x 17")
Minimum A6 ($5_{1/2}$" x $8_{1/2}$")

Copy Paper Weight:

Cassette feed	52 to 128 g/m^2 (14 lb to 34 lb)
Manual feed	52 to 157 g/m^2 (14 lb to 42 lb)

Reproduction Ratios: See the following table:

	A4 Version	Letter Version
Enlargement	1:1.41 1:1.22 1:1.15	1:1.55 1:1.29 1:1.21
Full Size	1:1	1:1
Reduction	1:0.93 1:0.82 1:0.71 1:0.65	1:0.93 1:0.77 1:0.74 1:0.65

Zoom: From 65% to 155% in 1% steps

Reproduction Ratio Change: Full size ⇒ Enlargement or
Full size ⇒ Reduction in less than 5 seconds

Enlargement ⇒ Reduction or
Reduction ⇒ Enlargement in less than 6.5 seconds

Copying Speed:

The copy speed (in copies per minute) is shown in the following tables:

A4 Version					
A3	B4	A4	B5	A4R	B5R
11	13	20	20	15	15

Letter Version			
LDG	LG	LT	LT(R)
12	15	22	16

When used with a document feeder, A4 (LT) speed is 17 cpm (sideways).

First Copy Time: 6.0 seconds (A4 or 8 1/2" x 11")

Warm-up Time: Approximately 100 seconds (23°C)

Copy Number Input: Numeral keys, 1 to 999, (count up or count down)

Special Functions:
- Margin adjustment
- Auto size magnification mode
- 2 single copies mode
- Auto paper select and auto reduce/enlarge mode (with ADF only)

Manual Image Density Selection: 7 Steps (Development bias variable)

Automatic Reset: 1 min. standard setting; can also be set to 3 min. or no auto reset.
All functions canceled except cassette selection. Quantity entered returns to "1", and reproduction ratio returns to full size.

Paper Feed:	- Double universal cassette feed, 250 sheets each (auto cassette shift) - Manual feed table - Optional large capacity tray (LCT) at second feed station.
Paper Feed System:	Friction-pad system
Exposure System:	Slit exposure, moving optics
Lens:	Through lens, F8, f = 180mm
Light Source:	Halogen lamp (85 V, 290 W)
Photoconductor:	Selenium drum (F type)
Charge System:	Dual wire dc corona
Erase:	LED lamp unit (34 LEDs)
Development System:	Magnetic brush roller
Toner Density Control:	Automatic, direct density sensing
Development Bias System:	Automatic voltage change (The control board monitors the selected image density level, drum temperature, and rest time.)
Toner Replenishment:	Cartridge exchange (300 g/cartridge)
Toner Consumption:	Approx. 7,000 copies/cartridge (A4 7% original)
Cleaning System:	Blade and brush
Quenching System:	Photo-quenching
Image Transfer:	Single wire dc corona, pre-transfer lamp
Paper Separation:	Dual wire ac corona and pick-off pawls
Image Fusing:	Heat/pressure - roller type
Fusing Lamp:	Halogen lamp (840 W)

Electronic Control System:	8-bit microprocessor	
Copy Tray Capacity:	250 sheets (B4 / 10" x 14") 100 sheets (A3 / 11" x 17")	
Self-diagnostics:	19 codes, displayed in the copy counter	
Power Source:	110V/60Hz....15A 115V/60Hz....15A 220V/50Hz....8A 220V/60Hz....8A 240V/50Hz....8A	
Power Consumption:	Warm-up: Stand-by: Copying: Maximum:	1.0 kW 0.08 kW 0.42 kW (A4 sideways) 1.22 kW
Dimensions: (W x D x H)	Copier only: Full System:	734 x 654 x 390 mm 28.9 x 25.8 x 15.4 inches 1363 x 654 x 460 mm 53.7 x 25.7 x 14.1 inches
Weight:	65 kg (143 lb) (Copier only) 100 kg (221 lb) (Full system without table)	
Optional Equipment:	Document Feeder Sorter (20 bins) Large Capacity Tray Editor Board (requires editing eraser lamp) Color Development Unit (Red, Blue, Green)	

OPERATION PANEL

(LT/LDG Version)

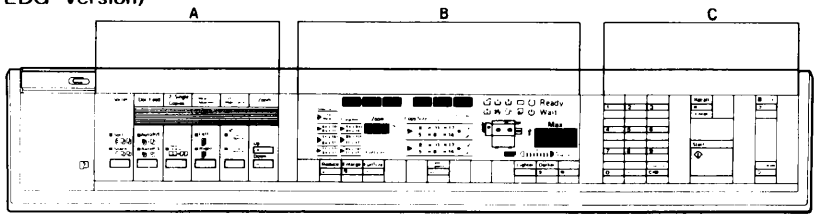

SECTION A

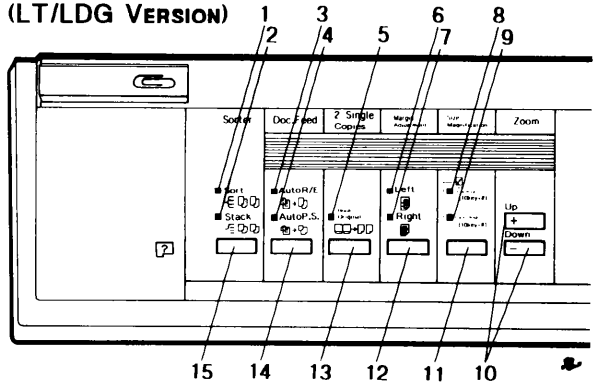

1. Sort Indicator
2. Stack Indicator
3. Auto Reduce/Enlarge Indicator
4. Auto Paper Select Indicator
5. 2 Single Copies Indicator
6. Left Margin Adjustment Indicator
7. Right Margin Adjustment Indicator
8. Original Image Size Indicator
9. Copy Image Size Indicator
10. Zoom Keys
11. Size Magnification Key
12. Margin Adjustment Key
13. 2 Single Copies Key
14. Auto Selection Key
15. Sorter Key

SECTION B

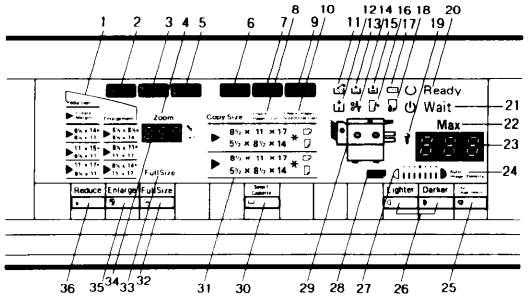

1. Magnification Indicator
2. Editor Mode Display
3. Margin Adjustment Display
4. Zoom Indicator
5. Size Magnification Display
6. Auto Paper Select Display
7. Auto Reduce/Enlarge Display
8. Check Paper Size Indicator
9. 2 Single Copies Display
10. Check Paper Size/Direction Indicator
11. Used Toner Bottle Indicator
12. Add Oil Indicator
13. Add Toner Indicator
14. Check Paper Path Indicator
15. Load Paper Indicator
16. Close Cover Indicator
17. Set Key Counter Indicator
18. Manual Feed Indicator
19. Call Service Indicator
20. Ready Indicator
21. Wait Indicator
22. Max Indicator
23. Copy Counter
24. Auto Image Density Indicator
25. Auto Image Density Key
26. Manual Image Density Key
27. Manual Image Density Indicator
28. Color Toner Indicator
29. Misfeed Location Display
30. Select Cassette Key
31. Paper Size Indicator
32. Full Size Key
33. Full Size Indicator
34. Magnification Ratio Indicator
35. Enlarge Key
36. Reduce Key

SECTION C

(LT/LDG Version)

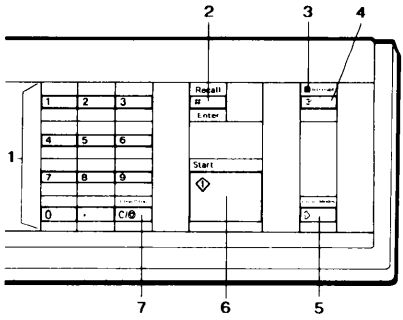

1. Number Keys
2. Recall/Enter Key
3. Interrupt Indicator
4. Interrupt Key
5. Clear Modes Key
6. Start Key
7. Clear/Stop Key

COPY PROCESS

1. Drum Charge
In the dark the charge corona unit gives a uniform positive charge to the selenium drum the charge remains on the surface of the drum because the photoconductive selenium has high electrical resistance in the dark.

2. Erase
The erase lamp illuminates the areas of the charged drum surface that will not be used for the copy image. The resistance of the drum in the illuminated areas drops and the charge on those areas dissipates.

3. Exposure
An image of the original is reflected to the drum surface via the optics. The charge on the drum surface is dissipated in direct proportion to the intensity of the reflected light, thus producing an electrical latent image on the drum surface.

4. Development
Negatively charged toner is attracted to the positively charged areas of the drum, developing the latent image. The negative triboelectric chzarge is caused by rubbing action between the carrier and toner particles.)

5. Pre-Transfer Lamp (PTL)
The PTL illuminates the drum to remove all positive charge from the exposed areas of the drum. This prevents the toner particles from being reattracted to the drum surface during paper separation and makes paper separation easier.

6. Image Transfer
Paper is fed to the drum surface at the proper time so as to align the copy paper and the developed image on the drum surface. Then, a strong positive charge is applied to the reverse side of the copy paper, providing the electrical force to pull the toner particles from the drum surface to the copy paper. At the same time, the copy paper is electrically attracted to the drum surface.

7. Paper Separation
A strong ac corona discharge is applied to the reverse side of the copy paper, gradually reducing the positive charge on the copy paper and breaking the electrical attraction between the paper and the drum. Then, the stiffness of the copy paper causes it to separate from the drum surface. The pick-off pawls help to separate paper which has low stiffness.

8. Cleaning
The cleaning brush removes part of the toner on the drum and loosens the remainder. The cleaning blade then scrapes off the loosened toner.

9. Quenching
The light from the LEDs of the quenching lamp electrically neutralizes the surface of the drum.

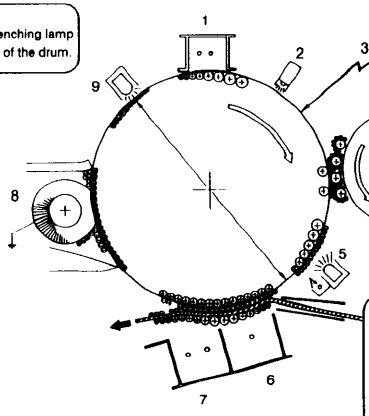

FUNCTIONAL OPERATION

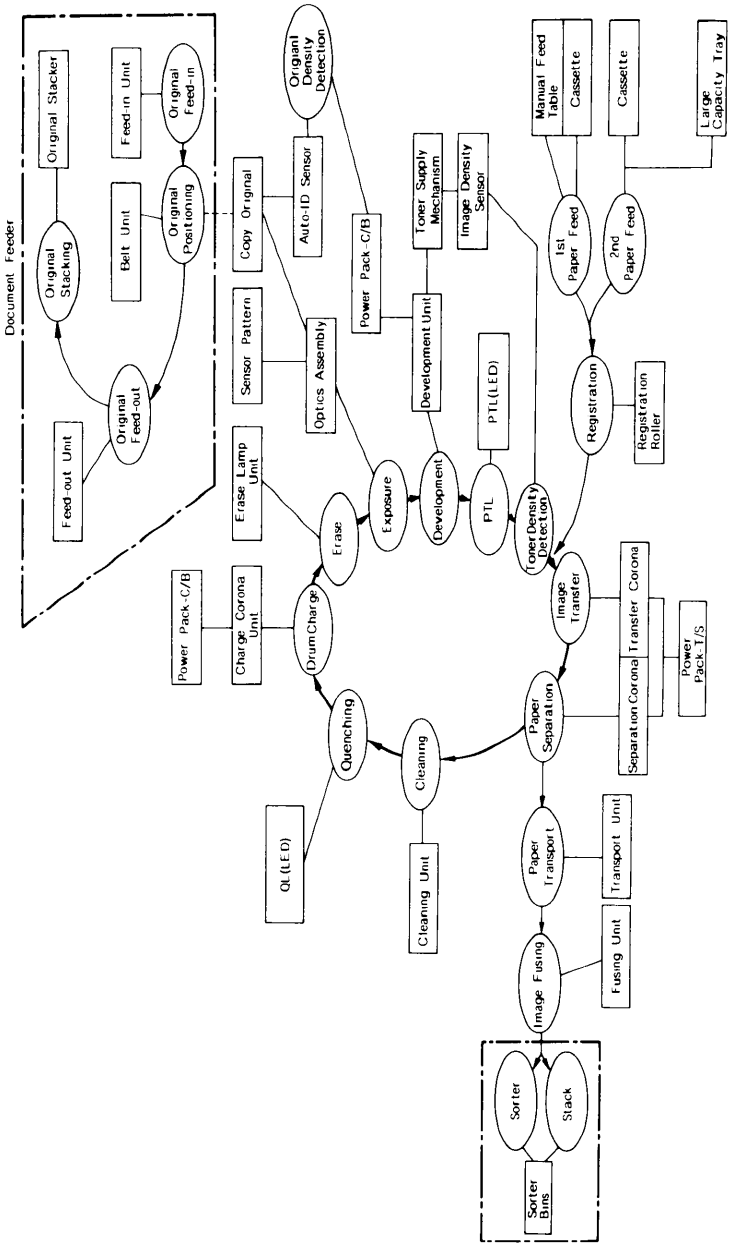

PAPER PATH

Paper feed starts from one of the two paper feed stations. The path followed depends on which cassette the operator has selected. For copy processing, all sheets follow the same path from the paper feed mechanism through the fusing unit. After that, copies are delivered to the receiving tray.

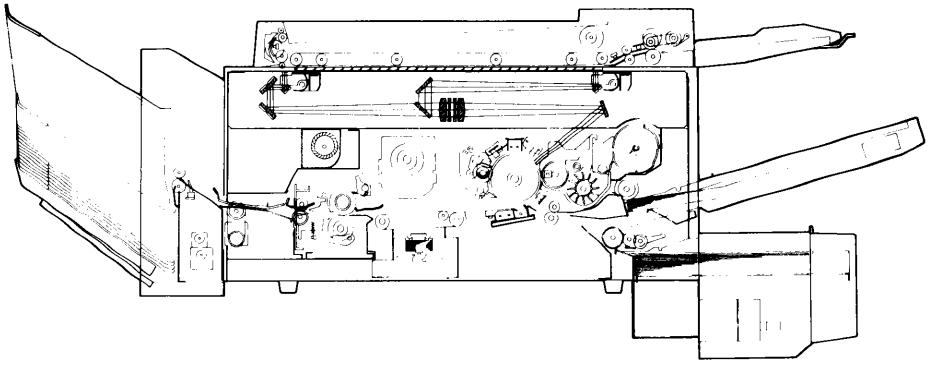

1. Paper Feed

A friction pad and feed roller mechanism separates one sheet of paper from the paper stack and feeds it to the registration rollers. The registration rollers are not turning at this time. The paper buckles slightly when the leading edge reaches the registration rollers. Buckling seats the sheet securely between the registration rollers and corrects skew.

2. Registration

At the programmed time, the registration rollers start turning to feed the paper to the drum.

3. Image Transfer

The toner image on the drum surface is pulled from the drum onto the passing paper by the transfer corona.

4. Paper Separation

The separation corona breaks the electrostatic attraction between the paper and the drum. The suction of the vacuum fan pulls the paper onto the transport belt. The transport belt moves the paper with the developed copy image to the fusing unit.

5. Fusing

The paper passes between two rollers which bond the toner image to the paper by applying heat and pressure. At this point the copy is complete.

MECHANICAL COMPONENT LAYOUT

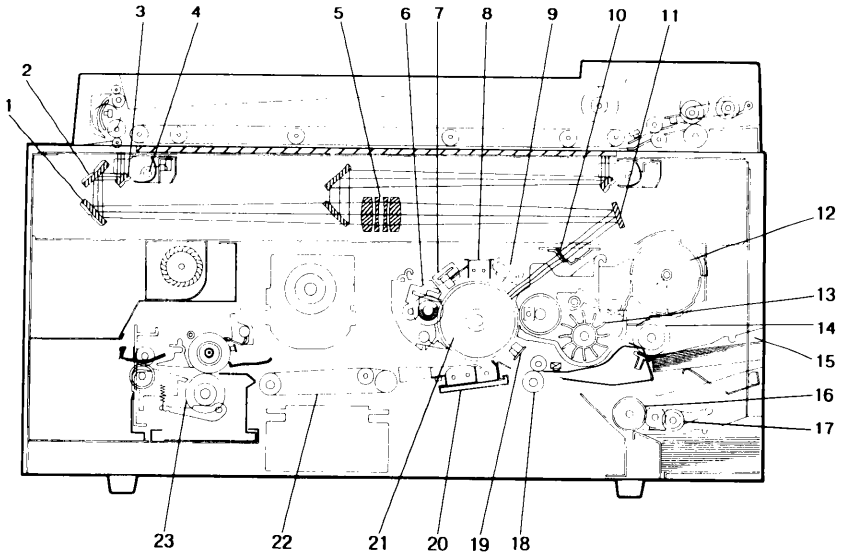

1. Third Mirror
2. Second Mirror
3. First Mirror
4. Exposure Lamp
5. Lens
6. Cleaning Unit
7. Quenching Lamp
8. Corona Unit
9. Erase Lamp Unit
10. Toner Shield Glass
11. Fourth Mirror
12. Toner Cartridge
13. Development Unit
14. First Feed Roller
15. First Cassette
16. Second Feed Roller
17. Pick-up Roller (LCT)
18. Registration Roller
19. Pre-Transfer Lamp (PTL) /Image Density Sensor Board
20. Transfer/Separation Corona Unit
21. Selenium Drum
22. Transport Belt
23. Fusing Unit

DRIVE LAYOUT

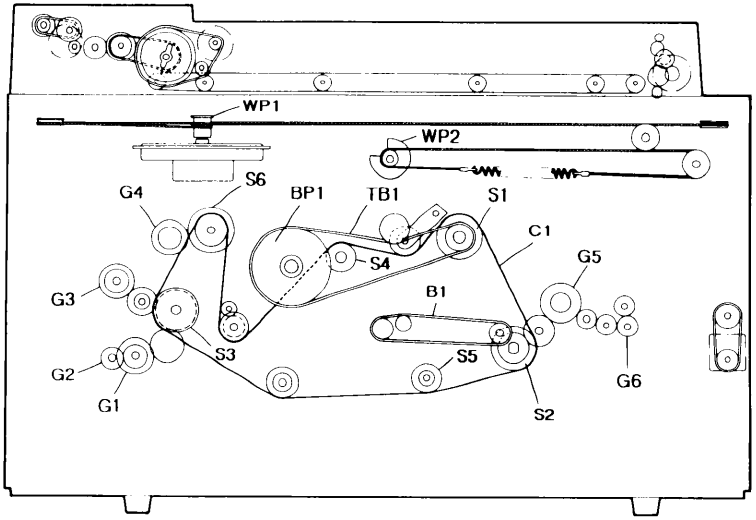

Gears

G1 Second Feed Clutch Gear
G2 Pick-up Roller Drive Gear(LCT)
G3 First Feed Clutch Gear
G4 Toner Supply Clutch Gear
G5 Hot Roller Drive Gear
G6 Exit Roller Drive Gear

Sprockets

S1 Main Motor Sprocket
S2 Fusing Drive Sprocket
S3 Feed Drive Sprocket
S4 Cleaning Drive Sprocket
S5 Toner Collection Bottle Drive Sprocket
S6 Development Drive Sprocket

Wire Pulleys

WP1 Scanner Drive Pulley
WP2 Second Scanner Drive Pulley

Timing Belt

TB1 Drum Drive Belt

Belt

B1 Transport Belt

Belt Pulley

BP1 Drum Drive Pulley

Chains

C1 Main Drive Chain

ELECTRICAL COMPONENT LAYOUT

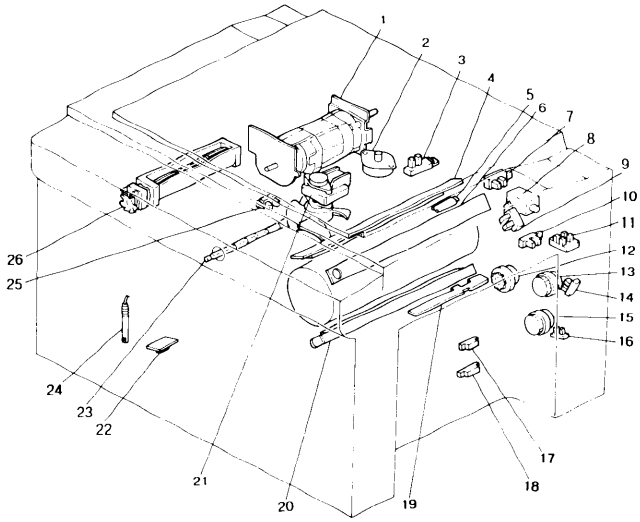

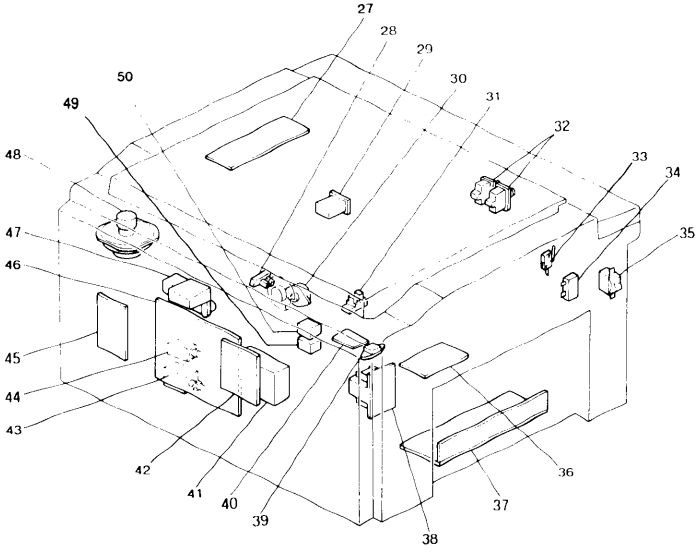

1. Main Motor - M1
2. Lens Drive Motor - M2
3. Lens HP Sensor - S1
4. Quenching Lamp - L1
5. Drum Heater

6. Erase Lamp - L2
7. Pulse Generator Sensor - S2
8. Toner Supply Solenoid - SOL1
9. Color Toner End Sensor - S3
10. Manual Feed Sensor - S4

11. Color Toner Sensors - S5
12. Registration MC - MC1
13. First Paper Feed MC - MC2
14. First Paper End Sensor - S6
15. Second Paper Feed MC - MC3

16. Second Paper End Sensor - S7
17. First Paper Size Sensor - S8
18. Second Paper Size Sensor - S9
19. Registration Sensor - S10
20. Pre Transfer Lamp - L3

21. Vacuum Fan Motor - M3
22. Toner Overflow Sensor - S14
23. Fusing Lamp - L4
24. Oil End Sensor - S15
25. Paper Exit Sensor - S11
26. Exhaust Blower Motor - M4

27. Lamp Regulator PCB - PCB1
28. Second Scanner Home Position Sensor - S12
29. Total Counter - CO1
30. Second Scanner Motor - M5

31. Scanner Home Position Sensor - S13
32. Front Cover Safety Switches - SW2 - SW3
33. Door Switch - SW4
34. Main Motor Capacitor - C

35. Main Switch - SW1
36. Relay PCB - PCB2
37. DC Power Supply Unit - PSU
38. Transformer - TR1
39. Fusing Triac - FT

40. Heater Control PCB - PCB5
41. Power Pack - T/S - P1
42. Interface Board - PCB3
43. Cleaning Solenoid - SOL2
44. Pick-off Solenoid - SOL3

45. Feed Control PCB - PCB4
46. Main PCB - PCB6
47. Power Pack - C/B - P2
48. Scanner Drive Motor - M6
49. AC Drive Relay - RA1
50. Main Motor Relay - RA2

ELECTRICAL COMPONENT DESCRIPTIONS

SYMBOL	NAME	FUNCTION	LOCATION
Motors			
M1	Main Motor	Drives all main unit components except the optics unit and fans/blowers. (100 Vac)	1
M2	Lens Drive Motor	Positions the lens. (dc servo)	2
M3	Vacuum Fan Motor	Provides suction so that paper is held firmly on the transport belt. (100 Vac)	21
M4	Exhaust Blower Motor	Removes heat from around the fusing unit. (100 Vac)	26
M5	Second Scanner Motor	Positions the second scanner.(dc stepper)	30
M6	Scanner Drive Motor	Drives the scanner. (dc servo)	48
Magnetic Clutches			
MC1	Registration MC	Drives the registration rollers.	12
MC2	First Paper Feed MC	Starts paper feed from the first paper feed station.	13
MC3	Second Paper Feed MC	Starts paper feed from the second paper feed station.	15
Solenoids			
SOL1	Toner Supply Solenoid	Energizes to supply toner.	8
SOL2	Cleaning Solenoid	Moves the cleaning blade against the drum.	43
SOL3	Pick-off Solenoid	Brings the pick-off pawls into contact with the drum.	44
Switches			
SW1	Main Switch	Supplies power to the copier.	35
SW2	Front Cover Safety Switch	Cuts ac power to fusing lamp and heater control board.	32
SW3	Front Cover Safety Switch	Cuts ac power to ac components.	32
SW4	Door Switch	Enables the Door Open indicator.	33

SYMBOL	NAME	FUNCTION	LOCATION
Sensors			
S1	Lens Home Position Sensor	Informs the CPU when the lens is at the full size position.	3
S2	Pulse Generator Sensor	Supplies timing pulses to the main board.	7
S3	Color Toner End Sensor	Detects when it is time to add toner.	9
S4	Manual Feed Sensor	Detects when the manual feed table is open.	10
S5	Color Toner Sensors	Detects which color toner development unit is installed.	11
S6	First Paper End Sensor	Informs the CPU when the first cassette runs out of paper.	14
S7	Second Paper End Sensor	Informs the CPU when the second cassette runs out of paper.	16
S8	First Paper Size Sensor	Determines what size paper is in the first cassette.	17
S9	Second Paper Size Sensor	Determines what size paper is in the second cassette.	18
S10	Registration Sensor	Misfeed detector and ON/OFF timing.	19
S11	Paper Exit Sensor	Misfeed detector.	25
S12	Second Scanner Home Position Sensor	Informs the CPU when the second scanner is at the home position.	28
S13	Scanner Home Position Sensor	Informs the CPU when the scanner is at the home position.	31
S14	Toner Overflow Sensor	Detects when the used toner bottle is full.	22
S15	Oil End Sensor	Detects low oil condition.	24
Printed Circuit Boards			
PCB1	Lamp Regulator PCB	Regulates the exposure lamp voltage.	27
PCB2	Relay PCB	Main power relay. Provides 100 volts ac to motors and circuits.	36
PCB3	Interface PCB	Interfaces the data between the copier main board and the sorter and/or DF main boards.	42
PCB4	Feed Control PCB	Contains multiplexing circuitry to control feed components.	45
PCB5	Heater Control PCB	Controls heater switching.	40
PCB6	Main PCB	Controls all copier functions both directly and through other PCBs.	46

SYMBOL	NAME	FUNCTION	LOCATION
Lamps			
L1	Quenching Lamp	Neutralizes any charge remaining on the drum surface after cleaning.	4
L2	Erase Lamp	Discharges the drum outside the image area. Provides lead/trail edge erase and editing functions.	6
L3	Pre-Transfer Lamp	Reduces charge on the drum surface before transfer.	20
L4	Fusing Lamp	Provides heat to the fusing unit.	23
Power Packs			
P1	Power Pack - T/S	Provides dc voltage for the transfer and provides ac and dc voltage for the separation corona.	41
P2	Power Pack - C/B	Provides high voltage power for the charge corona and the development roller bias.	47
Transformer			
TR1	Transformer	Steps down the wall voltage to 100 Vac.	38
Counter			
CO1	Total Counter	Keeps track of the total number of copies made.	29
Relays			
RA1	AC Drive Relay	Main power relay to fusing lamp and heater control board.	49
RA2	AC Drive Relay	Main power relay to main motor and exposure lamp.	50
Others			
C	Main Motor Capacitor	Start capacitor	34
FT	Fusing Triac	Switches the fusing lamp on and off.	39
PSU	DC Power Supply Unit	Rectifies the 100 Vac input and outputs dc voltages.	37

AC AND DC POWER DISTRIBUTION

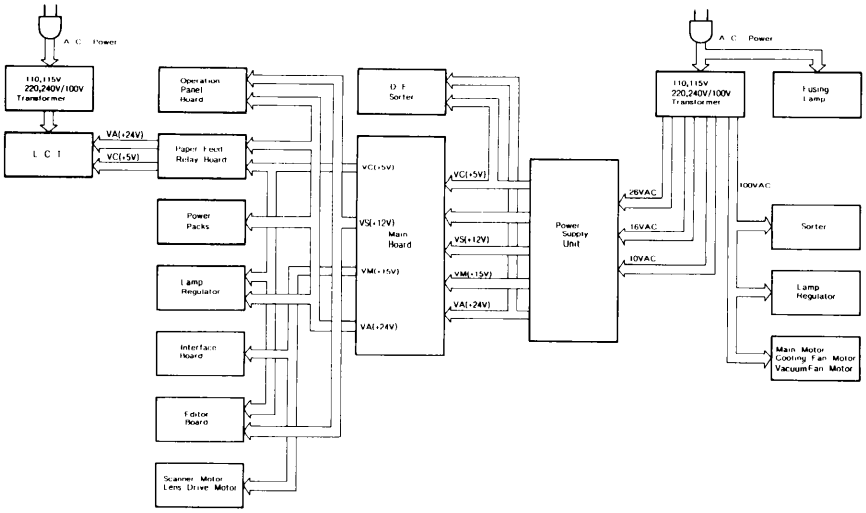

The ac power supply is filtered then distributed to the fusing lamp and the main transformer. The transformer supplies 100 volts to the cooling fan, vacuum fan, and the main motor.

The dc power supply unit receives ac 26, 16, and 10 volts, via fuses, from the main transformer. These voltages are rectified and regulated to 24, 15 and 12, and 5 volts respectively and distributed to the sorter, ADF, and the copier main board. All supplies have their own ground line.

The main board supplies voltage to all copier electrical components including power packs, PCBs, and relays. It also supplies the editor board option, when installed.

The LCT has a separate power supply.

OVERALL MACHINE CONTROL

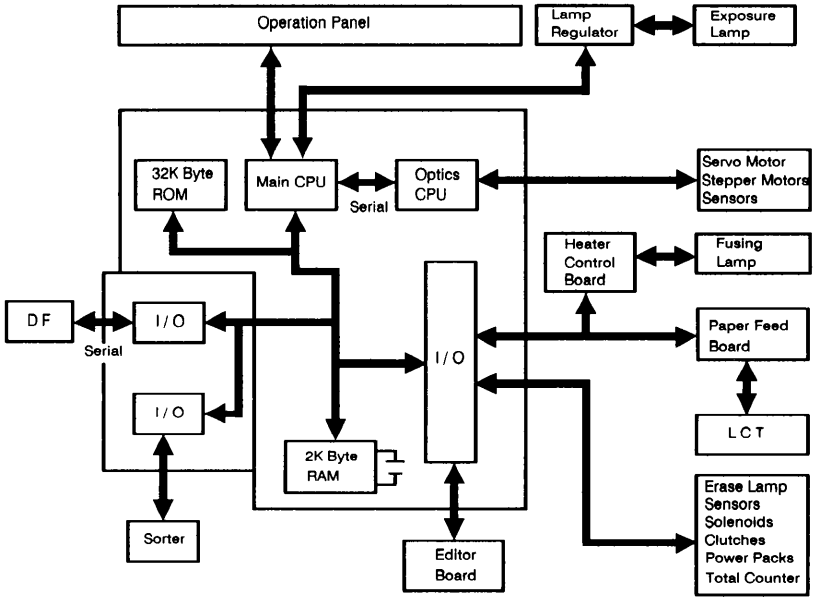

The base copier has two CPUs on the main board that control all machine operations (the main CPU and the optics CPU).

The main CPU is the main controller of this copier. It monitors the input signals from sensors and controls the electrical devices through programmable I/O devices. The main board has a RAM (2 kilobytes) for the service program function. A battery backs up the power to this RAM. This CPU controls the fusing lamp via the heater control board the exposure lamp, via the lamp regulator, and motors directly from the main board.

The optics CPU controls the servomotor (15 volts) and the stepper motors (24 volts) for the optics section.

The interface board is connected to the copier main board when the document feeder and/or sorter are installed.

OPERATION PANEL CONTROL

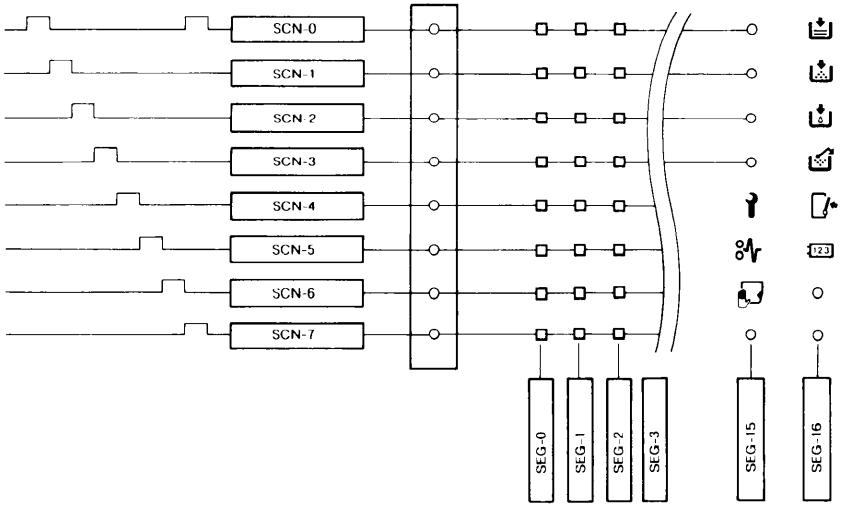

The CPU controls all functions of the operation panel. The CPU sends data to programmable I/O devices which form a multiplexing circuit consisting of 8 scan lines and 17 segment lines. Transistors drive all the scan lines at 12 volts to reduce effects from noise.

The multiplexing circuit lights all displays and monitors all keys of the operation panel. The door switch is also monitored by this circuit and acts like any other operation panel key. The counters are also controlled by the operation panel multiplexing circuit and act like the operation panel lamps.

DRUM

SELENIUM DRUM

Selenium has the characteristics of:

1. Being able to accept a high positive electrical charge in the dark. (The electrical resistance of selenium is high in the absence of light.)
2. Dissipating the electrical charge when exposed to light. (The conductivity of selenium is greatly enhanced by exposure to light.)
3. Dissipating an amount of charge in direct proportion to the intensity of the light. That is, where a stronger light illuminates the selenium surface, a smaller voltage remains on the selenium.

The sensitivity of selenium changes slightly with variations in the surface temperature of the drum. (Under cool conditions, the drum may be excessively charged; this will result in background or excessive image density.) To prevent this, the CPU monitors the temperature variations around the drum and changes the development bias accordingly. Also, during cold periods, the drum heater warms the drum.

Drum sensitivity also depends on how long the drum has rested between copy runs. The copier's CPU compensates for changes in drum sensitivity due to rest time by changing the development bias. This prevents variations in image density at the beginning of copy runs.

The selenium drum used in this model has high sensitivity, good color reproduction, and good reproduction of low contrast originals (pencil originals, etc.).

HANDLING THE DRUM

1. Never touch the drum surface with bare hands.
2. Store the drum in a cool dry place away from heat.
3. When cleaning the drum, always wear gloves.
4. Prime the drum with setting powder only when installing a new drum.
5. Never expose the drum to light for long periods.
6. Drum conditioning is necessary after installing a new drum. In addition, it should be done at the following times:

   1) When image density is reduced due to overexposure of the drum
   2) After cleaning the drum
   3) When the drum is lightly scratched.

7. Always keep the drum in the protective sleeve when inserting or pulling the drum out of the copier.
8. Before inserting or pulling out the drum, pull the cleaning unit out slightly to avoid scratching the drum on the pick-off pawls.
9. Return used drums to the distributor according to standard procedure.

DRUM CHARGE

OVERVIEW

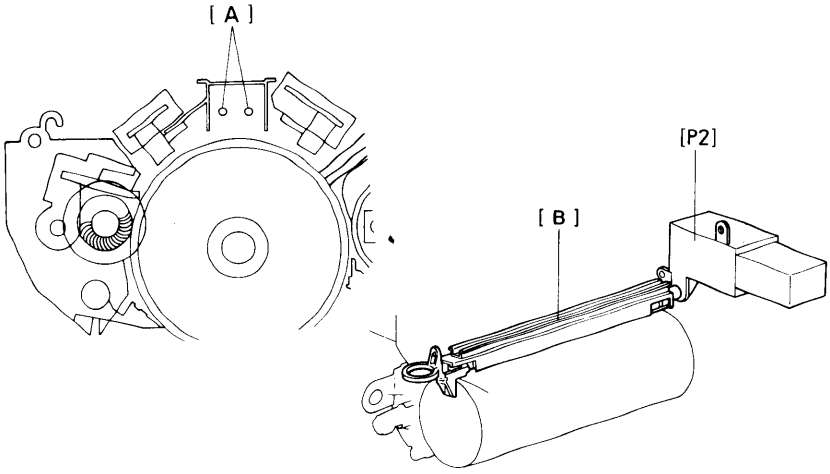

This copier uses a dual wire corotron [A] and a highly sensitive selenium drum. The corona wires generate a corona of positive ions when the charge power pack [P2] applies a high positive voltage. The selenium coating receives a uniform positive charge (750 ± 50 volts) as it rotates past the corona unit [B].

The main motor fan [C] provides a smooth flow of air to the interior of the charge corona unit to prevent uneven build-up of positive ions. (An uneven build up of positive ions could cause uneven image density.)

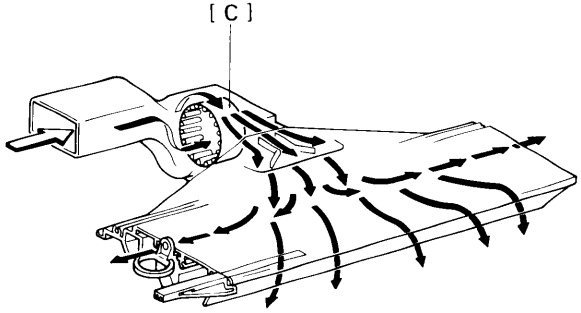

CORONA WIRE CLEANER

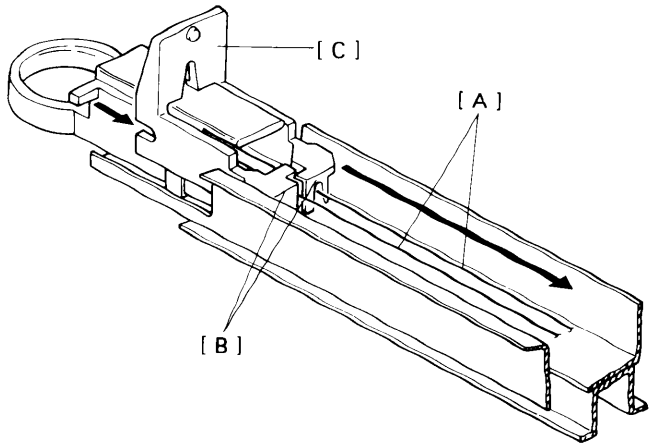

The flow of air around the charge corona wires [A] may deposit paper dust or toner particles on the corona wires. These particles may interfere with charging and cause low density bands on copies. The wire cleaner [B] allows the operator to correct this problem by simply pulling out and pushing in the corona unit.

Each corona wire is held between two pads on the wire cleaner bracket [C]. The wires ride between the pads when the unit is pulled out, and the pads clean off any particles on the wires.

CHARGE CORONA POWER PACK

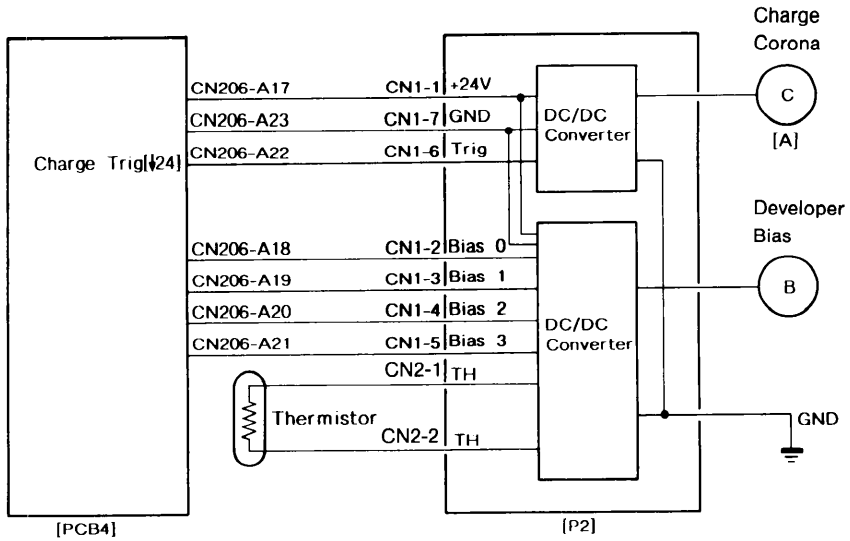

The circuit operation for the charge corona [A] begins with the input of +24 volts to the power pack at CN1-1. This power supply is used for the high voltage coronas.

The charge corona turns on 0.42 second after the Start key is pressed. A LOW signal from the main board (at CN206-A22) energizes the power pack.

The charge corona always turns on at the same time, but the off timing depends on paper size.

ERASE

OVERVIEW

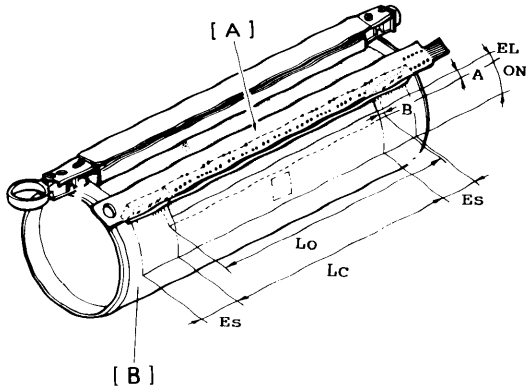

A: Lead Edge Erase Margin
B: Side Margins -- 2 ± 2 mm each (For full size copies, the total of both side margins is less than 4 mm.)
Lo: Original Image width
Lc: Charged width on the Drum
EL: Lead Edge Erase
Es: Side Erase
R: Paper Lead Edge Registration -- 0 ± 2 mm (Not shown)
A + R: Lead Edge Blank Margin -- 3.5 ± 2.5 mm

The erase lamp [A] consists of a line of LEDs extending across the full width of the drum [B].

The erase lamp has three functions: lead edge erase, side erase, and trail edge erase. Trail edge erase begins after the trailing edge of the copy paper; therefore, the trailing edge of the copy will not be erased.

The erase lamp unit [A] also has two thermistors: TH-1 and TH-2. Both of these thermistors detect the temperature around the drum. TH-1 selects the proper rest time compensation, and TH-2 controls the development bias voltage.

LEAD EDGE ERASE

The entire line of LEDs turns on when the main motor turns on. They stay on until the erase margin slightly overlaps the lead edge of the original image area on the drum (Lead Edge Erase Margin). This prevents the toner density sensor pattern from being developed on every copy cycle and prevents the edge of the original from appearing on the copy image. The width of the lead edge erase margin can be adjusted using SP Mode # 41.

During image density detection cycles (once every ten cycles), the center block of erase lamps turns off long enough for the sensor pattern to be developed.

SIDE ERASE

Based on the paper size and on the reproduction ratio, the LEDs turn on in pairs (one on either side) to discharge the drum potential on both sides. This reduces toner consumption and drum cleaning load.

The CPU adjusts the side erase margin to be as near as possible to the actual image size, even when using the zoom function. However, since the erase lamp LEDs will not work in precise one millimeter intervals, the side erase margin varies slightly depending on the reproduction ratio. The width of the side erase margin varies from 0 mm to a maximum of 6 mm (total of both sides).

1. Side Erase Operation

The tables below show which erase lamps turn off, according to the paper size and reproduction ratio selected. Note that A3 side edge erase occurs because the charge corona end block covers stop the edges of the drum from receiving charge.

	OFF LED	Reproduction Ratio	Paper Size	Erase Width (mm)
1	1 - 34	97 - 155%	A3 A4 width	2 x 2
2	2 - 33	94 - 96%	DLT LT width	9 x 2
3	3 - 32	89 - 93%		15 x 2
4	4 - 31	83 - 88%	B4 B5 width	24 x 2
5	5 - 30	78 - 82%		32 x 2
6	6 - 29	73 - 77%	LG, F4 LTR, HLT	40 x 2
7	7 - 28	68 - 82%	A4 Length A5 width, F	47 x 2
8	8 - 27	65 - 67%		55 x 2
9	9 - 26	-	B5 Length B6 width	62 x 2
10	10 - 25	-		67 x 2
11	11 - 24	-		72 x 2
12	16 - 19	-	A5 Length B6 Length	78 x 2
13	0	-		125.5 x 2

TRAIL EDGE ERASE

Normally, the erase lamps turn on after the trailing edge of the latent image has passed. Therefore, a trail edge erase margin cannot be observed on the copy. Trail edge erase ON timing is the same as charge corona OFF timing. During enlargement or reduction, the trail erase ON timing changes according to the paper size and the reproduction ratio.

ERASE LAMP CIRCUIT

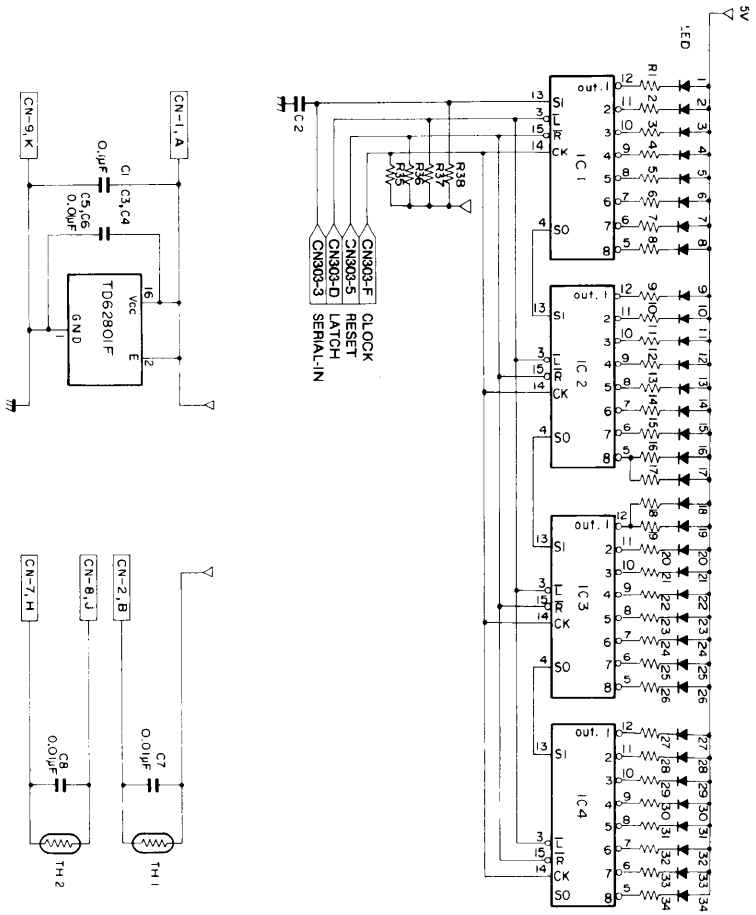

This copier uses 34 LEDs in the erase lamp unit.

Shift register drivers control the LEDs. Initially, the RESET signal (LOW active) turns off all the shift registers. Then the main board sends erase lamp data to the shift registers from CN203-13 to connect CN303-3 on the erase lamp unit.

After the RESET signal goes back to HIGH, the shift registers start accepting data. If the data line is HIGH at the time of the CLOCK pulse (rising edge), the shift register is set to turn the LED on; if it is LOW, the the shift register is set to keep the LED off. The data in the shift registers is shifted right one position at the start of each clock cycle; so, it takes 34 CLOCK pulses to set the shift registers for all the LEDs.

After all data bits have been sent, the main board sends the LATCH signal to turn on the erase lamp unit. The latch signal causes the shift registers to turn on all LEDs for which data bits have been set to do so.

The center section of LEDs turns on and off as a block, and the outer LEDs turn on and off in pairs.

OPTICS

OVERVIEW

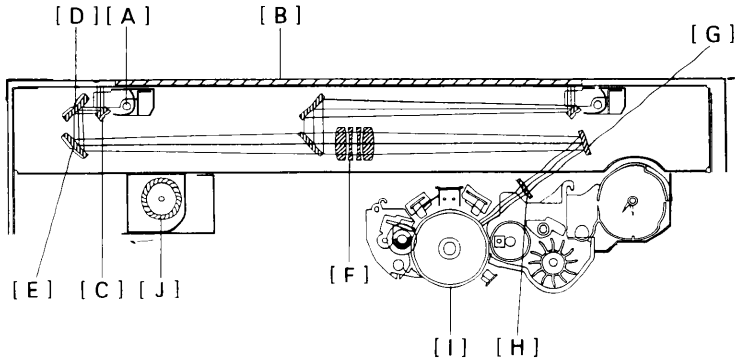

During the copy cycle, an image of the original is reflected onto the drum surface via the optics assembly as follows.

Light Path:

Exposure Lamp [A] --> Original [B] --> First Mirror [C] -->

Second Mirror [D] --> Third Mirror [E] --> Lens [F] -->

Fourth Mirror [G] --> Toner Shield Glass [H] --> Drum [I]

The cooling blower [J] circulates cool air into the optics cavity. The air flows from the right to the left in the optics cavity and exhausts through the vents in the top cover. This blower operates during every copy cycle.

This model has eight standard reproduction ratios: four reduction ratios, three enlargement ratios, and full size. In addition, it has a zoom function. The user can change the reproduction ratio in one percent steps from 65% to 155%.

Stepper motors are used to change the positions of the lens and mirrors. Separate motors are used because of the wide range of reproduction ratios. The scanner drive motor is a servomotor and is controlled by the optics CPU. The scanner drive motor changes the scanner speed depending on the reproduction ratio.

This copier has a special function: the 2 Single Copies mode, which makes two single copies from a bound document.

SCANNER DRIVE

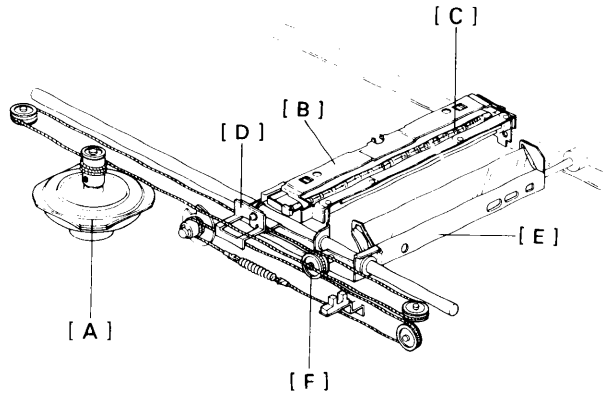

1. Scanner Drive Mechanism

This model uses a dc servomotor [A] to drive the scanners.

The first scanner [B], which consists of the exposure lamp [C] and the first mirror, is connected to the scanner drive wire by the wire clamp [D]. The second scanner [E], which consists of the second and third mirrors, is connected to the scanner drive wire by a movable pulley (the second scanner pulley [F]).

The pulley moves the second scanner at half the velocity of the first scanner. This is to maintain the focal distance between the original and the lens during scanning. This relationship can be expressed as:

$$V1r = 2(V2r) = VD/r$$

where: r = Reproduction ratio
V1r = First scanner velocity (when the reproduction ratio is "r")
V2r = Second scanner velocity (when the reproduction ratio is "r")
VD = Drum peripheral velocity (150 mm/s)

The wire clamp for the first scanner also works as the actuator of the home position sensor. The CPU controls both the registration and return timing.

2. Scanner Motor Control

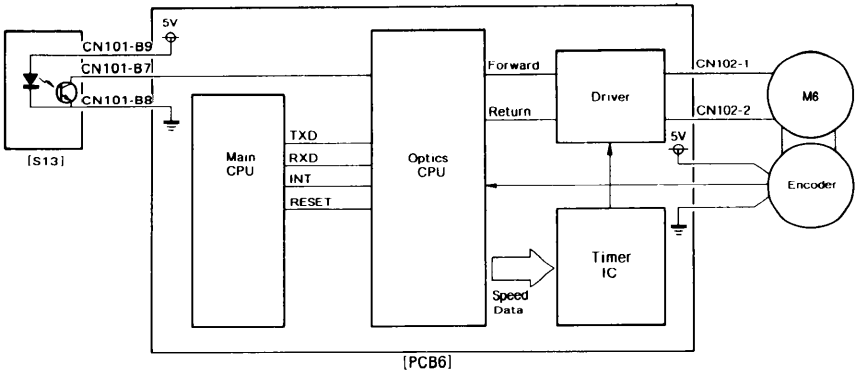

The scanner drive motor [M6] is a servomotor. The optics CPU on the main board [PCB 6] controls the speed of this servomotor. The main CPU and the optics CPU communicate through a serial interface bus.

At the programmed time, the main CPU sends a scanner start signal to the optics CPU. The optics CPU then checks the drum speed by monitoring the pulses from the pulse generator. Based on this input, the optics CPU determines the proper speed for the scanner drive motor. The optics CPU sends the speed data to the timer IC which sends the motor drive pulses.

The encoder on the servomotor has a photointerrupter that generates pulse signals. The optics CPU monitors the scanner speed by these pulse signals and uses this data to regulate the servomotor speed.

The home position sensor [S13] informs the optics CPU whether the first scanner is in the home position.

LENS/MIRROR POSITIONING

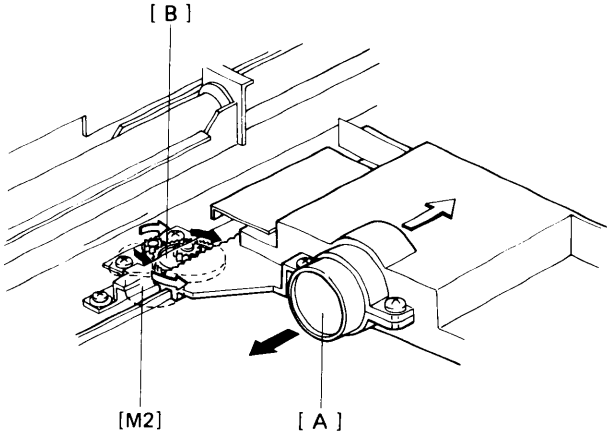

1. Lens Drive

The lens drive motor [M2] (stepper motor) changes the lens [A] position in accordance with the selected reproduction ratio to provide the proper optical distance between the lens and the drum surface.

The lens drive motor drives the entire lens unit through an idle gear [B]. The rotation of the lens drive pulley moves the lens back and forth in discrete steps.

2. Lens Positioning

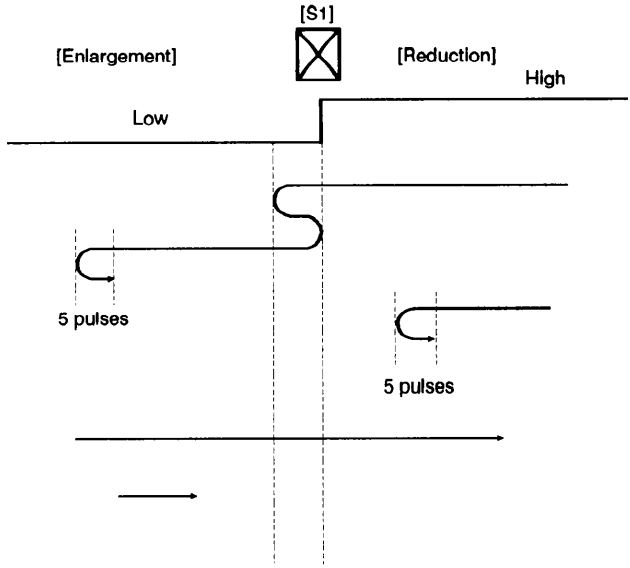

The lens home position sensor [S1] informs the optics CPU when the lens is at the full size position (home position). The optics PCB determines the lens stop position in reduction and enlargement modes by counting the number of steps the motor makes with reference to the lens home position. After changing the reproduction ratio, the lens moves directly to the selected magnification position.

Lens home position is registered each time the lens starts from or passes through the lens home position sensor. As the lens moves from the enlargement side to the reduction side, it registers the home position. At registration there is a LOW to HIGH voltage change at CN101-B3 of the main board. This occurs when the actuator blade enters the lens home position sensor.

A small vibration can be observed when the lens moves through home position from reduction to enlargement because the lens is going in the wrong direction to register. The lens overshoots the home position by only one step before going back to reference home position.

3. Second Scanner Drive

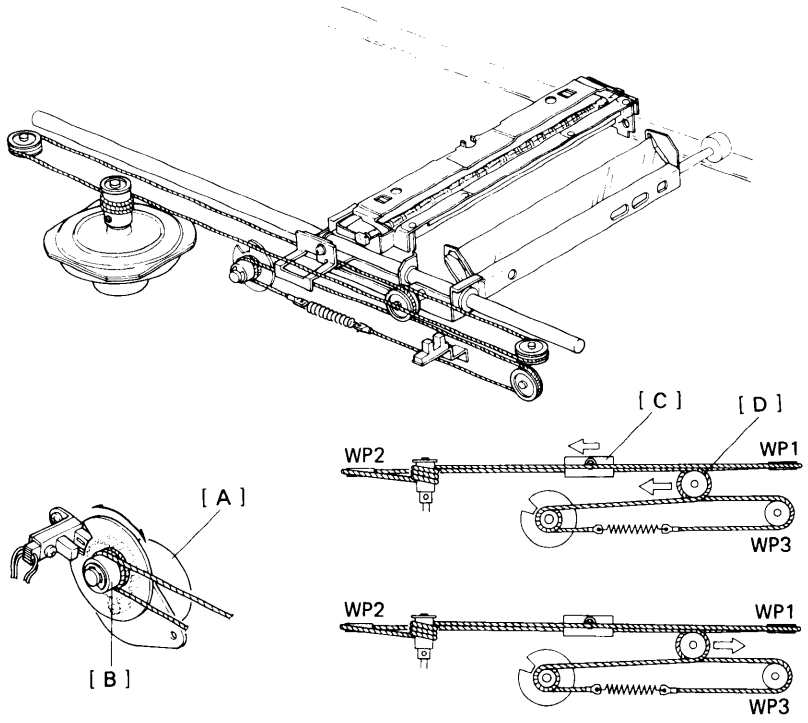

To provide the proper optical distance between the original and the lens, this model uses a stepper motor [A] to move the second scanner. A separate motor is used because the second scanner must travel a long distance to accommodate the wide range of reproduction ratios. The single scanner drive wire provides the second scanner with drive as well as correcting the second scanner position.

When the second scanner drive pulley [B] turns to change the scanner position, WP1 and WP2 do not turn. So, the wire clamp [C] stays at the home position and only the second scanner pulley [D] moves. When the scanner drive pulley turns, WP3 does not rotate; however, the second scanner pulley and the wire clamp do move.

As the second drive motor drives the second drive pulley directly, then the second scanner can be positioned manually (for maintenance etc.).

4. Second Scanner Positioning

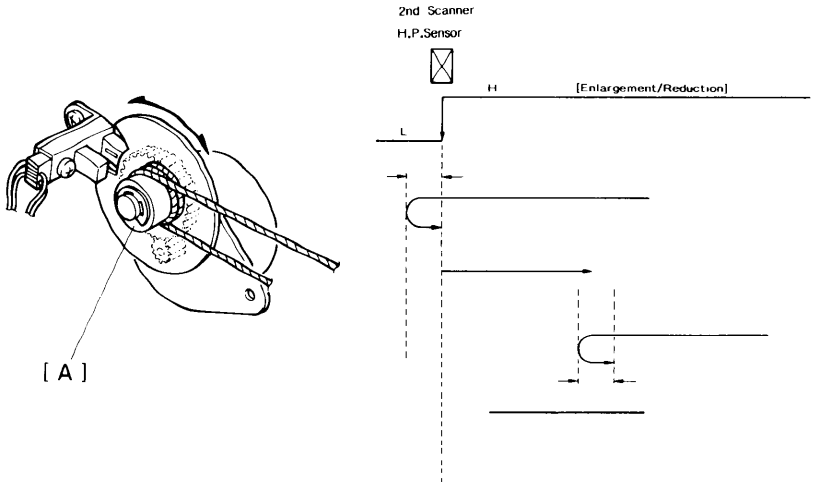

Like the lens, the second scanner is positioned by counting the number of steps from the home position. Second scanner home position is determined by a HIGH to LOW to HIGH change at CN101-B4 of the main board.

The exact home position depends on the horizontal magnification which is set using SP mode #44. After the HIGH to LOW to HIGH change mentioned above the CPU counts its steps until the second scanner reaches the home position.

When moving away from the home position, the second scanner drive pulley [A] turns clockwise and moves the second scanner directly to the selected position. However, when moving closer to the home position (pulley turning counterclockwise), the second scanner overshoots the selected position by 5 steps and then returns to the selected position. This takes out any mechanical play.

STEPPER MOTOR CONTROL

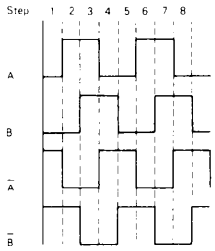

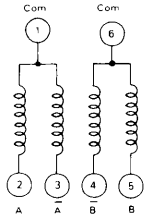

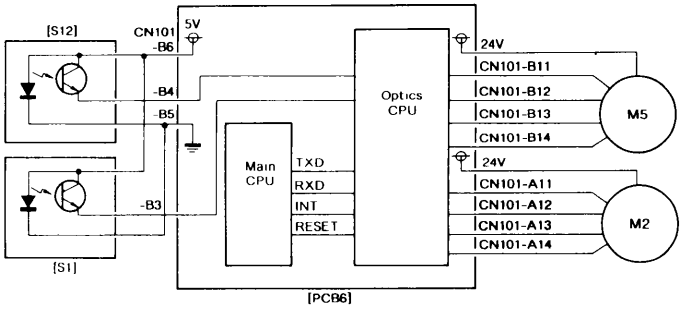

Both the lens drive motor [M2] and the second scanner drive motor [M5] are stepper motors. The stators of these stepper motors have four coils (labeled A, B, $\bar{A}$ and $\bar{B}$ above), and the rotors are permanent magnets.

Pulse signals energize the four coils as shown in the above illustration. The rotor turns in discrete steps.

AUTOMATIC IMAGE DENSITY SENSING

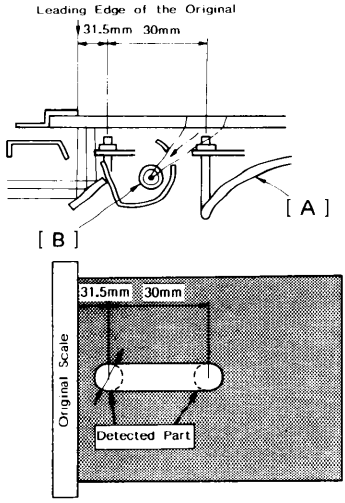

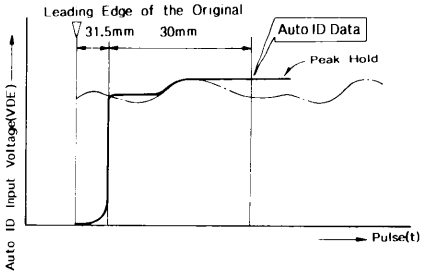

The input for the automatic image density circuit is via a fiber optic cable [A] that is mounted on the first scanner. Light from the exposure lamp [B] passes through a small hole in the reflector, reflects from the original, and is collected by the fiber optic cable. The sampled strip starts 31.5 millimeters from the leading edge of the original and is 8 millimeters wide and 30 millimeters long.

The fiber optic cable conducts the light to a sensor (photodiode) on the lamp regulator. The sensor circuit converts the light intensity to a voltage level. The detected voltage is adjustable via a variable resistor on the lamp regulator board. A peak hold circuit keeps the maximum voltage.

The lamp regulator sends the maximum voltage value to the main board. The CPU then computes the correct image density and adjusts the development bias accordingly. (See the section on image density control for more information.)

EXPOSURE LAMP CONTROL

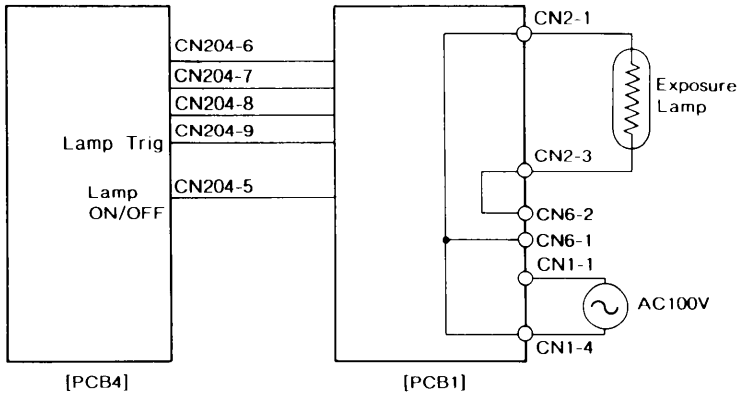

The lamp regulator board controls the exposure lamp. The voltage applied to the exposure lamp is determined by the combination of HIGH and LOW signals at CN204-6, -7, and -8.

The main CPU sends the lamp trigger signal 0.13 second after the registration clutch turns off.

The main CPU constantly monitors CN204-5 to check whether the lamp is on or off. If CN204-5 becomes HIGH when CN204-9 is LOW (lamp ON) or CN204-5 becomes LOW when CN204-9 is HIGH (lamp OFF), the CPU displays SC11. RA1-RA3 open at the same time, cutting the +24V power line.

SERVICE CALL CONDITIONS

Self Diagnostic Code 11:
Exposure Lamp Malfunction
Code 11 is displayed if the lamp monitor voltage is detected during standby (lamp ON), or if the lamp filament opens.

Self Diagnostic Code 21:
Scanner Home Position Check
Code 21 is displayed if the scanner home position sensor stays deactivated for more than 2 seconds. This code is effective only when the scanner home position is initialized.

Self Diagnostic Code 23:
No Registration Start Signal
Code 23 is displayed if the optics board does not send the registration start signal to the main board. The main board waits 4 seconds for this signal.

Self Diagnostic Code 24:
No Scanner Home Position Signal
Code 24 is displayed if the optics board does not send the scanner home position signal to the main board. The main board waits 20 seconds for this signal.

Self Diagnostic Codes 28 and 29:
Lens Home Position Check
Code 28 is displayed if the lens home position sensor stays deactivated more than 3 seconds. Code 29 is displayed if the scanner home position sensor stays activated more than 3 seconds.

Self Diagnostic Codes 2A and 2B:
Second Scanner Home Position
At certain times (power ON, clear, timer) the second scanner either moves to its home position or moves out and back. Code 2A is displayed if the second scanner home position sensor stays deactivated longer than 2.5 seconds. Code 2B is displayed if the second scanner home position sensor stays activated longer than 2.5 seconds.

Self Diagnostic Codes 2C and 2D:
Scanner Motor Encoder Frequency
Code 2C is displayed if the frequency of the signal from the scanner motor encoder is too high. Code 2D is displayed if the frequency of the scanner motor's signal is too low.

DEVELOPMENT

OVERVIEW

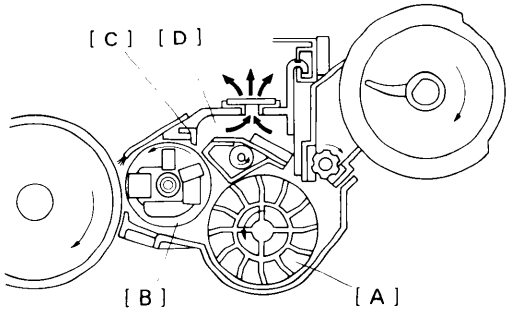

When the main motor turns on, the paddle roller [A] and development roller [B] start turning. The paddle roller picks up developer in its paddles and transports it to the development roller. Internal permanent magnets in the development roller attract the developer to the development roller sleeve.

The turning sleeve of the development roller then carries the developer past the doctor blade [C]. The doctor blade trims the developer to the desired thickness and creates backspill to the cross-mixing mechanism.

The development roller continues to turn, carrying the developer to the selenium drum. When the developer brush contacts the drum surface, the positively charged areas of the drum surface attract and hold the negatively charged toner. In this way, the latent image is developed.

Positive bias is applied to the development roller to prevent toner from being attracted to non-image areas on the drum that may have residual positive charge. The bias also controls image density.

After turning about 100 degrees more, the development roller releases the developer to the developer tank. The developer is agitated by the paddle roller and the cross-mixing mechanism.

Also, in this machine, rotation of the paddle roller [A] and development roller [B] tend to cause air pressure inside the unit at point [D] to become higher than the air pressure around the development unit. Therefore, a hole, fitted with a filter, has been added to the top of the unit to relieve air pressure and to minimize toner scattering. It also causes air flow across the face of the ID sensor, which helps dislodge any toner or paper dust which might fall on it. Also, to allow better heat transmission than earlier machines, the bottom plate of the unit is made of aluminum.

DRIVE MECHANISM

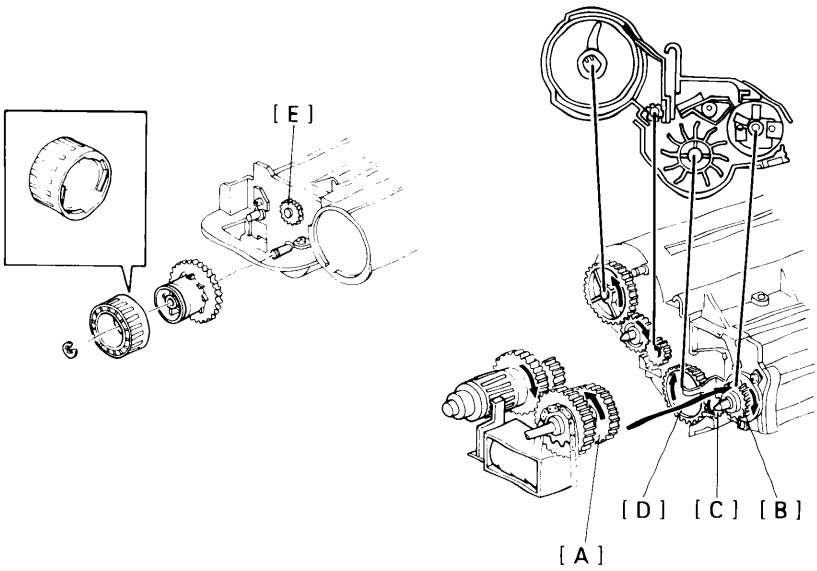

The development drive gear [A] drives the gears of the development unit when the main motor is turning. The rotation is transmitted from the development drive gear to the development roller gear [B] and then through an idle gear [C] to the paddle roller gear [D]. A gear on the front end of the paddle roller shaft drives the auger gear [E].

The paddle roller shaft has a knob on its front end to facilitate gear engagement and to turn the rollers for developer exchange. The paddle roller knob has a one-way clutch inside. The one way clutch prevents the development roller from turning in the opposite direction, which would cause the developer brush to damage the upper brush seal.

SEALS AND END MAGNETS

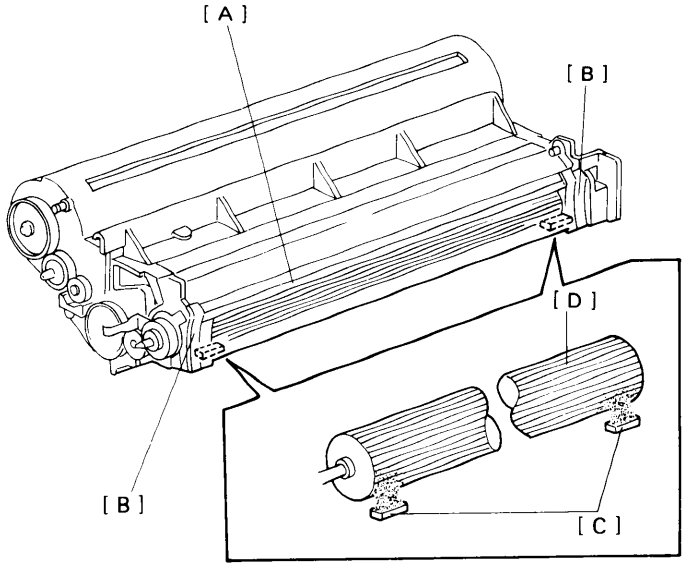

Several seals prevent toner from spilling out into the copier. The upper brush seal [A] prevents particles from scattering upward. The side seals [B] at the ends of the development unit contact the drum-ends (out of the image area); they prevent toner from scattering out of the sides.

Since the internal permanent magnets are shorter than the development roller sleeve, the toner tends to scatter from both ends. To reduce this scattering of toner, small magnets [C] are mounted under the ends of the development roller [D]. These magnets create small magnetic fields that stop developer particles from scattering.

CROSS-MIXING

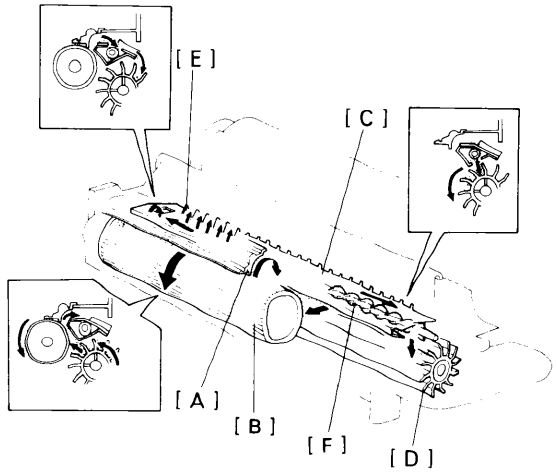

This copier uses a standard cross-mixing mechanism to keep the toner and developer evenly mixed. It also helps agitate the developer to prevent developer clumps from forming and helps create the triboelectric charge.

The developer on the turning development roller is split into two parts by the doctor blade [A]. The part that stays on the development roller [B] forms the magnetic brush and develops the latent image on the drum. The part that is trimmed off by the doctor blade goes to the backspill plate [C].

As the developer slides down the backspill plate to the paddle roller [D], the mixing vanes [E] move it slightly toward the rear of the unit. Part of the developer falls into the auger inlet and is transported to the front of the unit by the mixing auger [F].

IMAGE DENSITY CONTROL

Image density is controlled by changing two items: (1) the strength of the bias voltage applied to the development roller sleeve, and (2) the strength of the voltage applied to the exposure lamp.

Applying a bias voltage to the development sleeve reduces the potential between the development roller and the drum, thereby reducing the amount of toner transferred. As the bias voltage becomes greater, the copy image becomes lighter. Similarly, increasing the voltage to the exposure lamp causes an increase in light intensity which also results in lighter copies.

The method of control is different depending on whether the image density is manually selected or the automatic ID system is used.

1. Manual Image Density Control

Manual Image Density Control

		Image Density Level (Auto Image Density Base Level)							Lamp Voltage(V)
		1	2	3	4	5	6	7	
Manually Selected ID Level	1	230	260	290	320	380	440	500	Vo-2.5
	2	200	230	260	290	350	410	470	Vo
	3	200	200	230	260	320	380	440	Vo+2.5
	4	200	200	230	260	320	380	440	Vo+5
	5	200	200	230	260	320	380	440	Vo+7.5
	6	200	200	230	260	320	380	440	Vo+10
	7	230	260	290	320	380	440	500	Vo+10

Development Bias Voltage (V)

When the image density is set manually, the bias depends on two factors: the auto image density base level, and the manually selected ID level. (See the above table.) The exposure lamp voltage also varies as shown in the table.

NOTE: To set the auto image density base level, simultaneously press and hold the Clear/Stop key and press the Auto ID key. Then, select the base level using the manual ID keys.

2. Automatic Image Density Control

Bias Data				Bias Output(V)
SEL4	SEL3	SEL2	SEL1	
0	0	0	1	200
0	0	1	0	230
0	0	1	1	260
0	1	0	0	290
0	1	0	1	320
0	1	1	0	350
0	1	1	1	380
1	0	0	0	410
1	0	0	1	440
1	0	1	0	470
1	0	1	1	500
1	1	0	0	530
1	1	0	1	560
1	1	1	0	590
1	1	1	1	620
0	0	0	0	MAX50

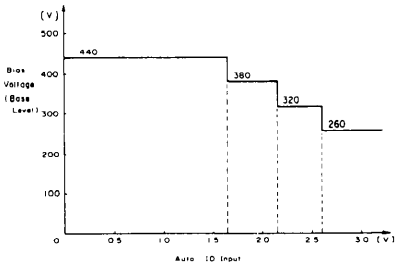

Auto Image Density Control

	Image Density Level (Auto Image Density Adjustment)							Lamp Voltage[V]
	1	2	3	4	5	6	7	
5V-2.6V	200	200	230	260	320	380	440	Vo+5
2.6V-2.16V	230	260	290	320	380	440	500	
2.16V-1.65V	290	320	350	380	440	500	560	
1.65V-0V	350	380	410	440	500	560	620	

Development Bias Voltage (V)

When automatic image density control is on, the exposure lamp voltage is set to Vo + 5 volts. A change in the bias voltage only controls the image density. The normal factory setting is the fourth column; however, this setting can be changed for troubleshooting or to satisfy customer requirements by selecting the Auto ID mode, holding down the Clear/Stop key, and pressing the image density keys.

At the start of the copy cycle, the original sensing mechanism measures the background density of the original image. It does this by measuring the strength of the light reflected from a 30 mm strip near the leading edge of the original. A fiber optic cable pipes the reflected light to a photodiode on the lamp regulator board. The photodiode is the input element of the auto ID circuit.

The CPU checks the voltage output by the auto ID circuit. This circuit has a peak hold function. The peak hold voltage corresponds to the maximum reflectivity of the original. The CPU then determines the proper bias base level, with reference to the peak hold voltage, and sends a 4-bit control signal to the power pack. The power pack then applies the proper bias to the development roller.

3. Bias Compensation Factors

As discussed previously, either the automatic image density system or the operator, through the image density keys, sets the bias base level (V1). The CPU increases the bias base level as necessary to compensate for the rest time between copy runs and the drum temperature, both of which affect drum sensitivity.

TD: 10°C-20°C

Copy# / Rest Time	1	2	3	4-5	6-10
0-10sec	One step down from previous states				
10sec-3min					
3min-50min	30	30	0	0	0
50min-2hr	30	30	30	0	0
2hr-	60	30	30	30	0

TD: 20°C-45°C

Copy # / Rest Time	1	2	3	4-5	6-10
0-10sec	One step down from previous states				
10sec-3min	30	30	30	0	0
3min-50min	60	60	30	30	0
50min-2hr	90	60	60	30	30
2hr-	120	90	90	60	30

TD: Drum Temperature

4. Rest Time Compensation (V2)

The drum sensitivity often drops slightly over the first few cycles of a copy run. This is because the light from the exposure lamp fatigues the drum slightly, and it takes a few copies for the selenium to restabilize. The amount that the sensitivity drops depends on the drum's temperature and the rest time between copy runs (the longer the rest time, the greater the change).

The copier increases the bias at the beginning of each copy run to prevent variations in the image density of the first few copies produced. The above two tables show the amount of bias increase. If the drum temperature is less than 10 degrees Celsius, no rest time compensation is applied.

When the main switch is turned on, the CPU automatically selects the "greater than two hours" rest time compensation level.

5. Drum Temperature Compensation (V3)

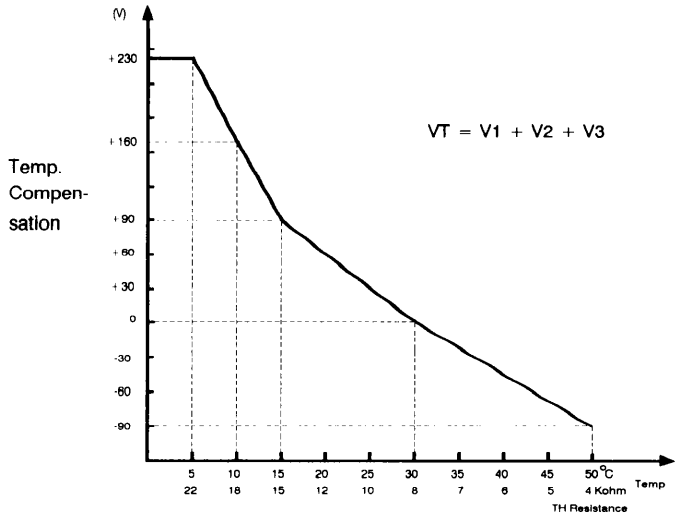

The CPU monitors drum temperature through a thermistor (TH-2), and it increases or decreases the bias voltage to compensate for variations in drum sensitivity that are induced by temperature changes in the drum cavity. The temperature compensation is effective from 5 degrees to 50 degrees (Celsius).

As shown by the "knee" in the above chart, the temperature compensation factor depends on the temperature range. Between 5°C and 15°C, the change in V3 is -14 V/°C; between 15°C and 50°C, the change in V3 is -5 to -6V/°C.

6. Total Bias (VT)

The total bias applied to the development roller sleeve is the sum of the base bias and the two compensating factors.

BIAS FOR ID SENSING

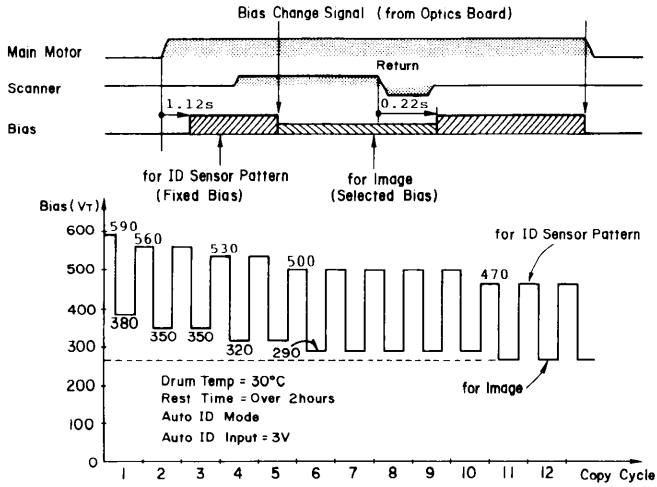

To develop the ID sensor pattern consistently, the CPU applies a fixed base bias level to the development roller at the beginning of each copy cycle. The fixed base bias is 470 volts (SP Mode data selectable) after ten copies; prior to which, it is affected by drum cavity temperature and drum rest time.

The CPU applies the ID sensor bias to the development roller about 1.12 seconds after the Start key is pressed. Just after the sensor pattern is developed, the CPU changes the bias output to the level selected by the auto ID sensor or the operator for image development. The bias output remains at this level until 0.22 second after the scanner starts returning.

The ID sensor bias can be changed to adjust the overall image density by SP Mode # 33 as follows:

ID Sensor Bias (SP Mode # 33)

Data	Base Bias
0:	470V
1:	440V
2:	500V
3:	530V

Normally the data of SP Mode # 33 is "0" (factory preset).

BIAS CONTROL CIRCUIT

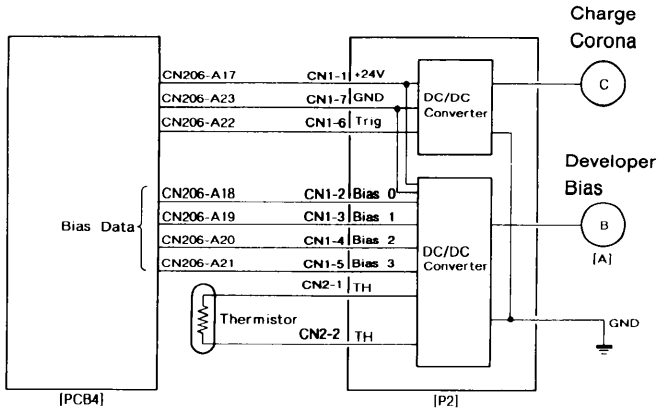

The CPU sends a bias trigger signal and a 4-bit control signal to turn on the development bias of the power pack. These signals depend on the Image Density level position and the copier's rest time.

After receiving these signals, the power pack outputs the proper bias voltage, which is further compensated for temperature (by the resistance of the bias thermistor located on the erase lamp unit).

The bias voltage can be displayed on the operation panel by using SP Mode # 59. The displayed value does not include the temperature compensation factor.

Also, to prevent toner re-attraction to the drum when using thin paper, the bias timing can be changed using SP Mode # 72. 0 volt is applied to the bias roller while the lead edge is erased according to SP Mode #41.

COLOR DEVELOPMENT

1. Overview

This copier has mono-color copying capability in red, green, and blue as well as standard black. To change colors, the development unit must be replaced.

To detect which color is used, an actuator is mounted on the development unit. Since the reflectivity varies with the color of the toner, the toner end detection system uses a mechanical detection system instead of an ID sensor detection system.

2. Bias Control

Due to the differences in the characteristics of black and color toner, the CPU changes the bias control when it detects a color development unit.

3. Base Bias for Color

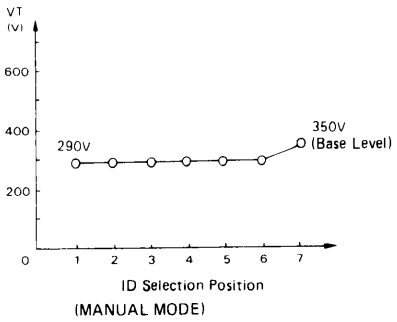

(MANUAL MODE)

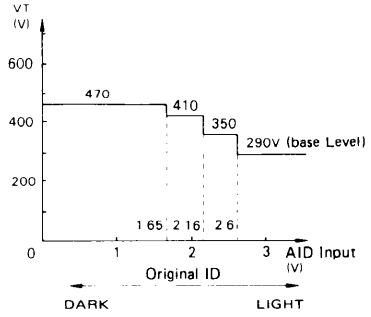

(AUTO ID MODE)

4. Bias for ID Sensing

Since the reflectivity of color toner varies with the color type, the ID sensor is used only to detect overtoning. Just as for black copies, the image density is sensed once in 10 copy cycles.

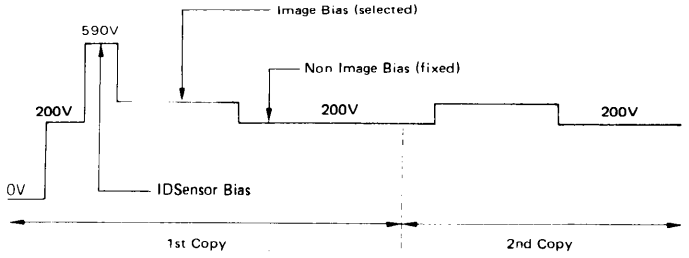

The ID sensor bias can be changed to adjust the color image density by using SP Mode # 75 as follows:

Data	ID Sensor Bias
0:	590 volts
1:	620 volts

Normally, the data of SP Mode # 75 is "0". When the data is changed to "1", the threshold level for toner supply inhibition is increased. This causes the toner density to become higher. (See the section on color toner density control.)

5. Color Detection

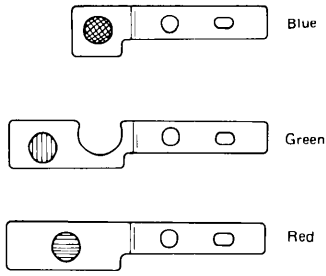

Color Toner Sensors*

S-A	S-B	Toner
OFF	OFF	Black
ON	OFF	Blue
OFF	ON	Green
ON	ON	Red

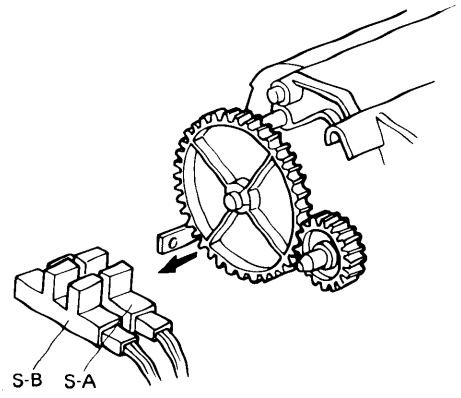

Three actuators, each having a different shape, are used to distinguish between the different toner colors. When a color development unit is installed in the copier, the actuator activates the color toner sensors. The CPU determines which color unit is installed based on the input from these two sensors. (See the preceding table.)

* ON = actuator blocking the gap of the photo-interrupter.

SERVICE CALL CONDITIONS

Self Diagnostic Code 31:
Drum Thermistor Open
Code 31 is displayed if the drum thermistor circuit becomes open.

Self Diagnostic Code 32:
PTL / ID Sensor Board Open
Code 32 is displayed if the PTL / ID sensor board circuit becomes open or it is not set properly.

TONER DENSITY DETECTION AND TONER SUPPLY

TONER DENSITY DETECTION

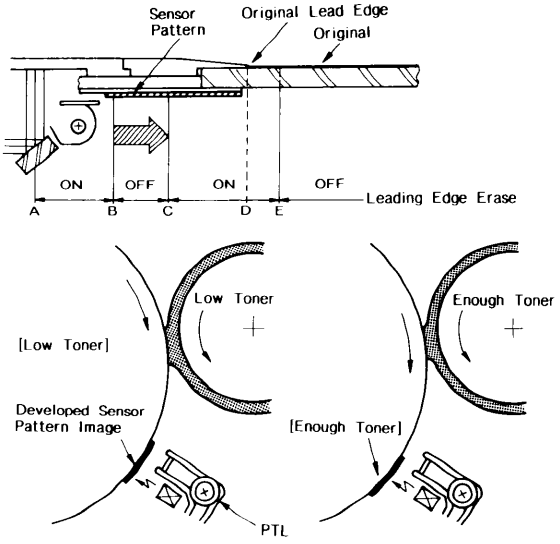

The main CPU checks toner density by directly sensing the image density at the beginning of the first copy cycle after the main switch is turned on, and at every 10th copy after that.

During the check cycles, the sensor pattern is exposed prior to exposure of the original. After the sensor pattern is developed, its reflectivity is checked by the image density sensor (which is a photosensor). The CPU notes the reflectivity. If the reflected light is too strong, indicating a too low toner density condition, it adds toner to the development unit.

The toner is not added all at once. The CPU energizes the toner supply solenoid for the proper amount of time to add a selected amount of toner over the next 10 cycles.

TONER DENSITY CONTROL

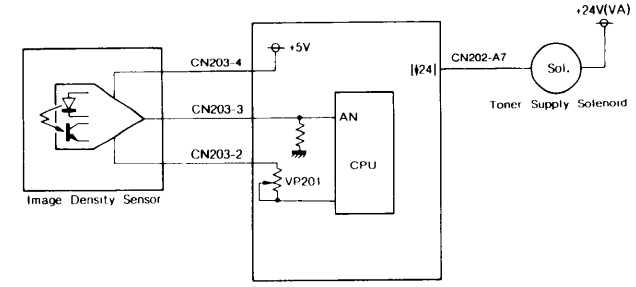

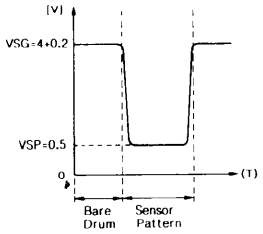

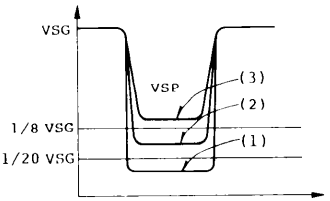

The image density sensor checks the density of the sensor pattern image once every 10 copy cycles. The CPU receives two voltage values directly from the sensor: the value for the bare drum (Vsg) and the value for the sensor pattern (Vsp). These two values are then compared to determine whether more toner should be added.

- Detect Mode B -

1. Vsp ≦ 1/20 Vsg (No toner is added)

2. 1/20 Vsg < Vsp ≦ 1/8 Vsg (The supply amount selected by SP Mode # 34 is added)

3. Vsp > 1/8 Vsg (Toner supply amount selected by SP Mode # 31 is added)

When the image density is too low, the CPU activates the toner supply solenoid to add a selected amount of toner over the next 10 copy cycles.
To maintain the image density precisely and prevent toner re-attraction to the drum, the toner supply amount is changed automatically according to the value of Vsp.
If Vsp is in condition (2), toner is added according to the supply amount selected by SP Mode # 34. If Vsp is in condition (3), toner is added according to the supply amount selected by SP Mode # 31.
When Vsp is less than 1/20 Vsg, toner is not supplied.

Detect mode A controls toner density as follows:

1. Vsp ≦ 1/8 Vsg.....High image density (no toner is added)

2. Vsp > 1/8 Vsg.....Low image density (toner is added)

SP Mode # 35 changes the toner end detection level and the timing cycle. The toner end detection level drops to 0.65 and the monitoring cycle is every 5 copy cycles.

SP Mode # 54 is used to turn on the LED of the sensor. VR201 adjusts the light intensity of the sensor LED. Therefore, the photosensor Vsg can be correctly calibrated.

Toner density control can be selected with SP Mode # 30.

If Vsg becomes less than 2.5 volts, the CPU determines that the sensed data is abnormal. It then changes from detect mode to fixed supply mode. The amount supplied is determined by the data of SP Mode # 32 (fixed mode). At the same time the Service Call indicator starts blinking. However, copies can still be made.

TONER SUPPLY

1. Roller Drive Mechanism

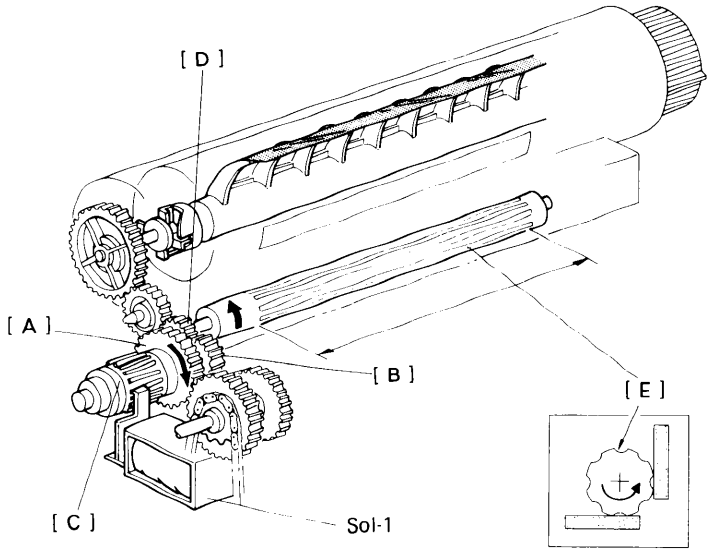

The toner supply clutch gear [A] turns when the main motor is on. The transmission of this rotation to the toner supply drive gear [B] is controlled by the toner supply clutch [C].

When the toner supply solenoid [SOL1] energizes, the toner supply clutch engages and starts turning the toner supply drive gear. The toner supply drive gear turns the toner supply roller gear [D]. Toner catches in the grooves on the toner supply roller [E]. Then, as the grooves turn past the opening, the toner drops into the development unit.

The toner supply opening is the same width as A4 lengthwise ($8_{1/2}$" x 11") and is located at the center of the developer tank. This is to reduce toner scattering from both the ends of the development roller even if small size paper is used continuously.

2. Toner Agitator Drive Mechanism

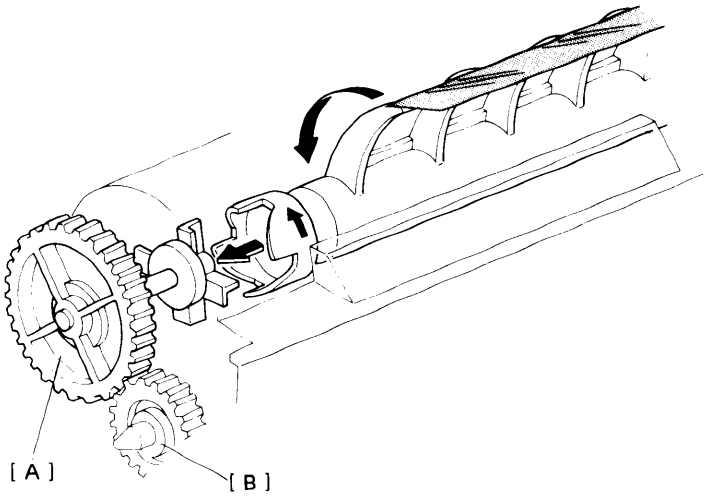

The toner agitator mechanism, contained in the toner cartridge, prevents toner from blocking.

The toner supply roller gear engages the toner agitator gear [A] through an idle gear [B]. Therefore, the toner agitator gear turns whenever the toner supply clutch is engaged.

Rotation passes through the toner cartridge casing to the agitator junction.

TONER SUPPLY AMOUNT

Detect Supply Mode				Fixed Supply Mode			
Mode B (SP # 34)		Mode A (SP # 31)		Black (SP # 32)		Color (SP # 70)	
Data	Supply Amount	Data	Supply Amount	Data	Supply Amount	Data	Supply Amount
0	2%	0	30%	0	7%	0	14%
1	4%	1	15%	1	3.5%	1	7%
		2	45%	2	10.5%	2	21%
		3	60%	3	14%	3	28%
						4	35%
						5	42%
						6	49%
						7	56%

This copier has two different ways of controlling the amount of toner supplied. Normally, the detect supply system controls toner supply; however, a fixed supply system can also be selected. When a color toner development unit is installed, the CPU automatically selects fixed supply mode.

1. Detect Supply Mode

When the data of SP Mode # 30 is "0", the standard detect supply mode B is selected. If a low image density condition is detected, a small amount of toner is supplied on each of the next 10 copy cycles as determined by the setting of the data into SP Mode # 34 and # 31.

Toner supply starts 0.52 second after the scanner motor reverses. (Toner is supplied at this time to prevent toner scattering on the copies.) The actual amount of toner added is determined by controlling the ON time of the toner supply solenoid, which activates a spring clutch.

2. Fixed Supply Mode

When the data of SP Mode # 30 is "1", or a color development unit is installed, the fixed supply mode is selected. In this case, a fixed amount of toner is added every copy cycle as determined by the setting of the SP Mode # 32. When a color development unit is installed, a fixed amount of toner is determined by the setting of SP Mode # 70. The length of time that the toner supply solenoid is energized depends on the data set into the SP Mode # 32 (Black) or # 70 (color) and the paper size.

TONER END DETECTION

The CPU uses the image density sensor to detect a toner end condition. This method is effective in both detect and fixed supply modes.
If Vsp becomes greater than 0.75 volt, the CPU determines that it is time to add toner and starts blinking the Add Toner indicator.
After the indicator starts blinking, the operator can make up to 50 copies. If a new toner cartridge is not added within that 50 copy interval, the Add Toner indicator stops blinking (stays on) and copying is inhibited. The toner end condition is reset by opening and closing the front cover.

COLOR TONER DENSITY DETECTION AND COLOR TONER SUPPLY

1. Color Toner Density Control

When a color development unit is used, the CPU automatically selects the fixed toner supply mode. SP Mode # 70 determines the supply amount.

The CPU calculates the threshold level for toner supply inhibition when the color development installation procedure is completed. This level is determined by calculating the average of Vsp and Vsg while using new developer.

Since the fixed supply system is selected when in color toner mode, it is necessary to inhibit toner supply if the toner density becomes high to prevent over-toning. The CPU checks Vsp once in 10 copy cycles. If Vsp becomes lower than the threshold level, the CPU stops supplying toner. Toner supply resumes when Vsp rises above the threshold level again.

A RAM stores the threshold level data for the three colors. The CPU selects the correct threshold level from this RAM after checking the color signal from the color toner sensors. The power supply for the RAM has battery backup so the data will not be lost if the power supply is disconnected.

The RAM stores not only the threshold level data but also the number of copies made with each color. This data can be displayed on the operation panel by using SP Mode # 73.

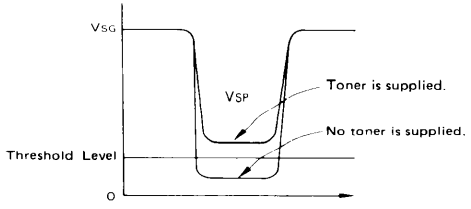

2. Color Toner End Detection

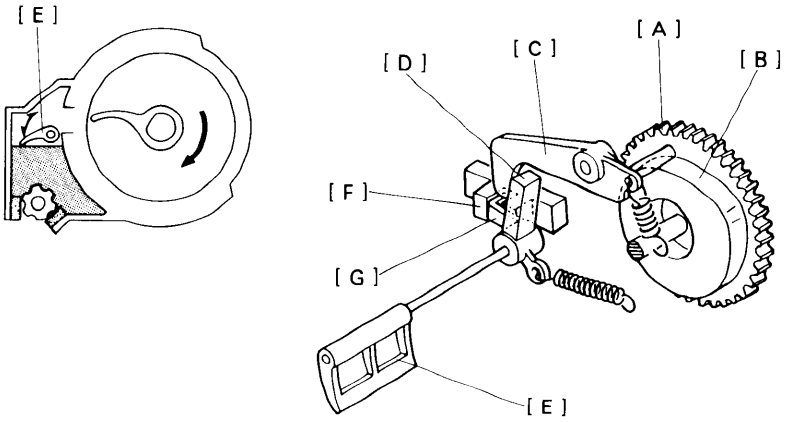

The toner agitator gear [A] has a cam [B] (the toner end cam) on its inner surface, and it rotates only when toner is supplied. The cam follower on the end of the toner end lever [C] rides on the surface of the toner end cam (spring pressure). The opposite end of the toner end lever alternately presses and releases the toner end arm [D] as the cam turns. The toner end plate [E], which is in the toner hopper, is mounted on the same shaft as the toner end arm.

When there is sufficient toner in the hopper, the toner end plate is prevented from moving by the toner. Therefore, even when the toner end lever drops to the lowest position on the cam (releasing the toner end arm), the toner end arm does not move and the toner end sensor [F] is not activated.

When there is insufficient toner in the hopper, the toner end plate can move. When the toner end lever releases the toner end arm, the toner end plate lowers and the actuator [G] on the toner end arm moves into the toner end sensor. The CPU receives a single pulse from the toner end sensor.

If this condition is detected by the CPU more than seven times consecutively, the Add Toner indicator starts blinking.

After the indicator starts blinking, 50 copies can be made. If a new toner cartridge is not added within that 50 copy interval, the Add Toner indicator stops blinking (stays on) and copying is inhibited.

3. Abnormal Condition

If Vsg becomes lower than 3.2 volts, the machine will reduce toner supply to half of the normal supply amount. (For example, the amount of toner supply will change from 14% to 7% when "0" is stored in SP Mode No. 70.) In this condition, the Service Call indicator is not displayed and the machine can be operated.

SERVICE CALL CONDITION

Service Call Indicator Blinks (no code):

ID Sensor Abnormal

The Service Call indicator starts blinking if Vsg becomes less than 2.5 volts. When this happens, the machine automatically shifts to the fixed supply mode. Operation is possible.

IMAGE TRANSFER AND PAPER SEPARATION

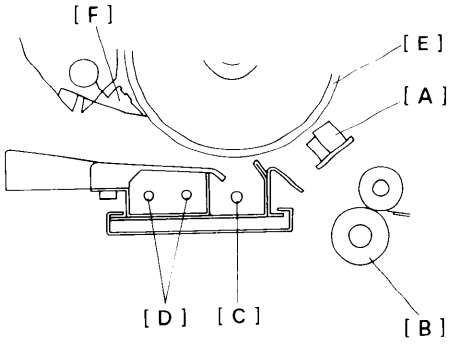

PRE-TRANSFER LAMP (PTL)

After the latent image is developed but before the image is transferred to the copy paper, the drum surface is illuminated by the pre-transfer lamp [A]. This illumination reduces the positive potential on the drum surface. This prevents the toner particles from being re-attracted to the positively charged drum during the paper separation process. It also makes image transfer and paper separation easier.

IMAGE TRANSFER

The registration rollers [B] feed the copy paper through the transfer entrance guides to the transfer section. A high positive voltage (+5.6 kilovolts) is applied to the transfer corona wire [C], and the corona wire generates positive ions. These positive ions are applied to the copy paper, and the positive charge attracts the negatively charged toner away from the drum and onto the paper. In addition, the paper is held against the drum by the negative counter charge on the drum.

PAPER SEPARATION

After image transfer the copy must be separated from the drum. To break the attraction between the paper and the drum, the separation corona wire [D] applies an ac corona (500 Hz) to the reverse side of the paper. The stiffness and weight of the paper causes it to separate from the drum [E].

The separation corona has a small dc bias but its effect is negligible. A dc bias is unnecessary because the separation corona is wide and diffuse. The positive charge on the paper (from the transfer corona) is not completely discharged until the paper is far enough from the drum that the toner will not be reattracted to the drum. The two pick-off pawls [F] ensure that thin, low-stiffness paper or upward curled paper separates completely.

PRE-TRANSFER LAMP CIRCUIT

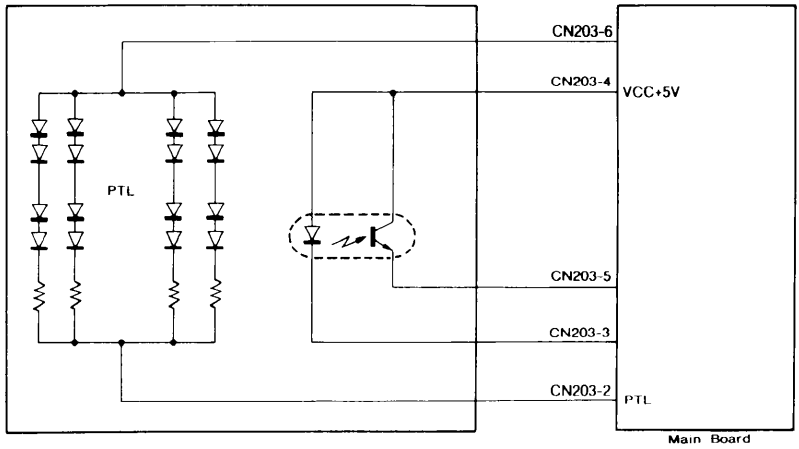

When the Start key is pressed, the main board outputs a LOW signal to activate the pre-transfer lamp. The pre-transfer lamp, like the erase lamp, is an array of LEDs. However, the CPU does not control the individual elements of the pre-transfer lamp as it does the erase lamp. Instead, all of the LEDs turn on and off simultaneously.

TRANSFER/SEPARATION CORONA CIRCUIT

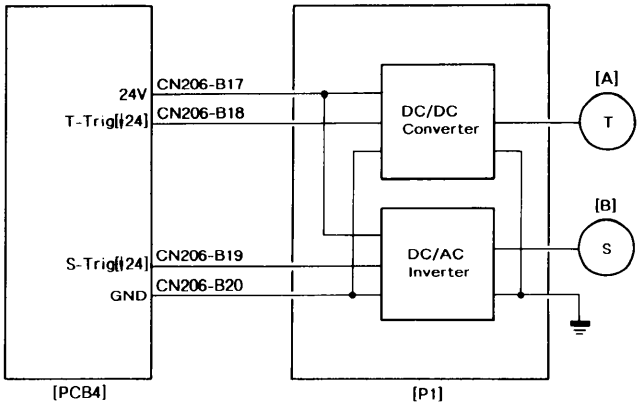

When the Start key is pressed, the main board sends LOW signals to energize the power pack for the transfer and separation coronas. The power pack has a dc to dc converter and a dc to ac inverter. The dc to dc converter changes +24 volts to +5.6 kilovolts for the transfer corona [A]. The inverter changes +24 volts to 5.0 kilovolts ac (500 Hz) with a negative dc bias (about -90 V) for the separation corona [B].

PICK-OFF MECHANISM

1. Touch and Release Mechanism

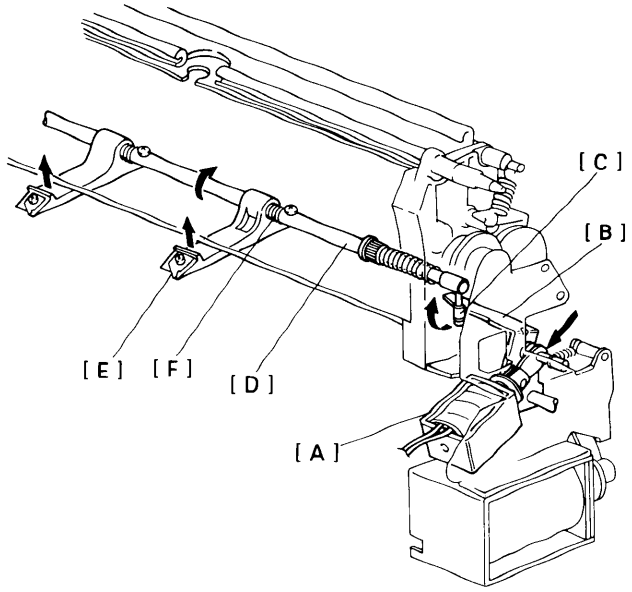

The pick-off solenoid [A] energizes 1.69 seconds after the Start key is pressed. The pick-off lever [B] rotates counterclockwise (rear view) and pushes the pawl shaft pin [C]. Then the pawl shaft [D] rotates clockwise and the pick-off pawls [E] touch the drum. The pawl springs [F] hold the pick-off pawls on the shaft and prevent them from touching the drum too strongly.

When the leading edge of the paper passes the pick-off area and just before it reaches the fusing unit, the pick-off solenoid turns off. The pick-off lever spring then rotates the pick-off lever and moves the pick-off pawls away from the drum.

2. Side to Side Movement

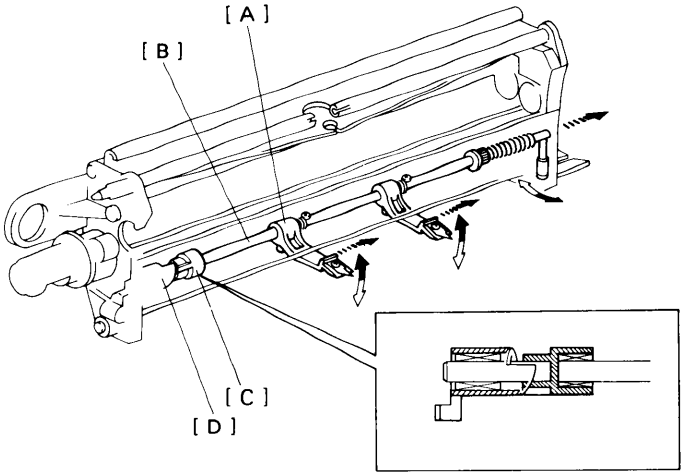

The pick-off pawls [A] do not always contact the drum in the same place but instead move slightly to the side on each copy cycle.

The pick-off pawl shaft [B] and the cam rider [C] are joined by a one-way bearing [D]. Each time the pick-off pawl solenoid turns on, the one-way bearing causes the cam rider to turn together with the pick-off pawl shaft. As the cam rider turns, it and the pawl shaft are forced to move laterally by a cam. However, when the pawl shaft rotates the pawls away from the drum the cam rider does not turn.

Pawl lateral movement is 0.1 to 0.2 millimeter per copy cycle. After the pick-off pawls move about 8 millimeters, the cam rider passes the "step" of the cam and the pawl shaft is returned to its start position by the pawl shaft spring.

PICK-OFF CIRCUIT

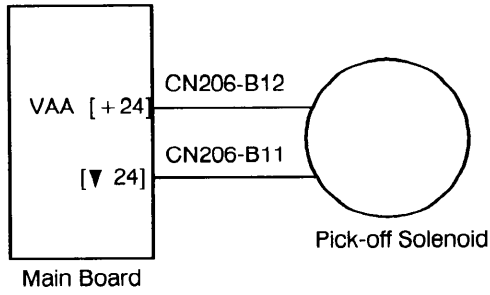

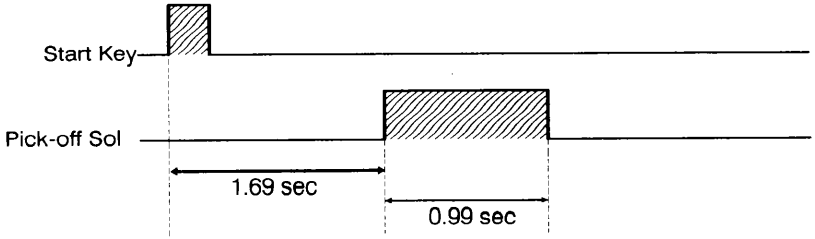

The main PCB supplies +24 volts to the pick-off solenoid at CN206-B12. The CPU supplies a LOW signal at CN206-B11 1.69 seconds after the Start key is pressed. This LOW signal energizes the pick-off solenoid.

The CPU waits 0.99 second before turning off the pick-off solenoid. The leading edge of the paper has just passed the pick-off area at this time.

DRUM CLEANING

OVERVIEW

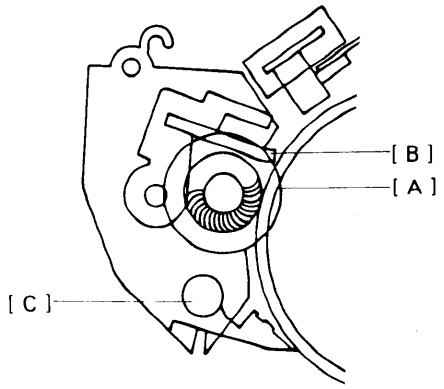

The cleaning brush [A] and cleaning blade [B] remove any toner remaining on the drum after the image is transferred to the paper.

The cleaning brush and drum move in opposite directions at their point of contact. The cleaning brush removes paper dust and nearly half of the toner from the drum surface to reduce the cleaning load placed on the blade.

Next, the cleaning blade removes the remaining toner. The falling toner catches in the fibers of the cleaning brush and is carried inside the cleaning unit. As the brush turns inside the cleaning unit, it rubs against a beater ridge, which dislodges the toner particles. The toner particles fall onto the toner collection coil [C].

The toner collection coil transports the used toner to the front of the machine where it falls into the used toner bottle.

DRIVE MECHANISM

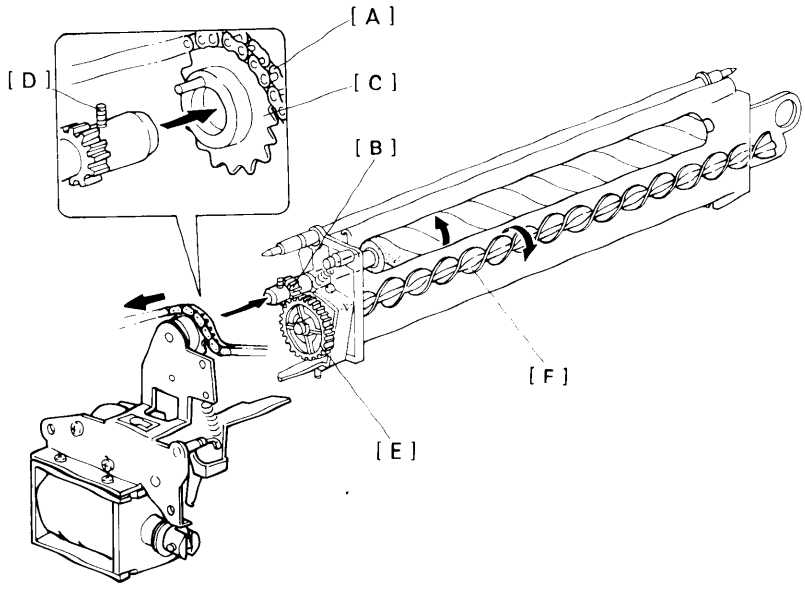

The main chain [A] drives the cleaning unit when the main motor is on. The brush gear [B] is fitted into the cleaning drive sprocket [C]. A pin on the inside of the sprocket drives an allen screw [D] on the shaft of the gear, turning the gear. The brush gear drives the coil gear [E] directly, and the toner in the unit is transported to the used toner bottle by the toner collection coil [F].

CLEANING BLADE

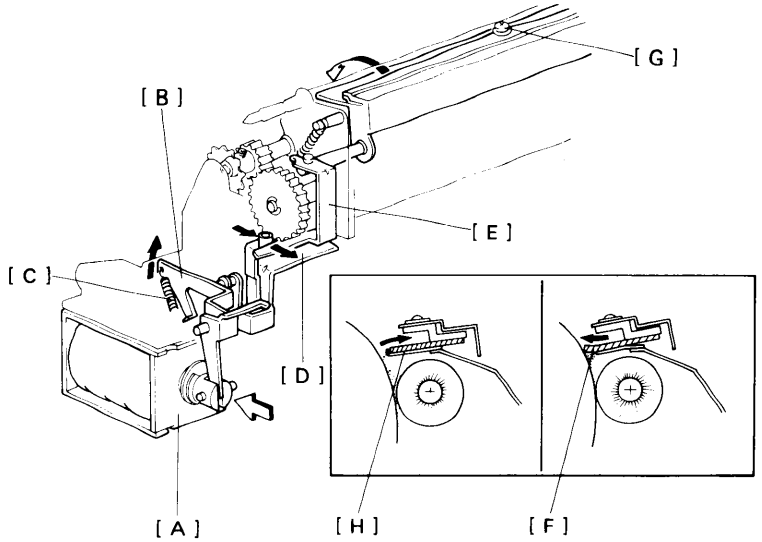

The cleaning pressure mechanism is shown above. When the cleaning solenoid [A] is energized, it turns the cleaning solenoid lever [B] clockwise (rear view). Due to the pull of the cleaning blade pressure spring [C], the pressure arm [D] also turns clockwise and pushes the cleaning blade lever [E] up. The cleaning blade holder then rotates and the cleaning blade [F] presses against the drum. The pressure spring limits the blade pressure.

The cleaning blade is mounted by a single swivel screw [G] at its exact center of gravity. With this type of mounting the blade sets parallel and applies even pressure automatically. Also since pressure is transmitted in the center, a single pressure spring is used. Side-to-side movement is applied to the cleaning blade to prevent uneven wear and ensure efficient cleaning.

The blade scraper [H] is mounted in contact with the bottom of the cleaning blade. When pressure is applied to the cleaning blade, it is forced forward and bends at its outer edge. When pressure is released from the blade, it snaps back to its original shape. At this time, the blade scraper [H] scrapes off the excess toner and paper dust from the edge of the blade. This helps to maintain efficient cleaning. The blade pressure is released when there is no key input for 15 minutes, when a paper misfeed occurs, or when the safety switches are open. The blade scraper also prevents toner from scattering inside the copier by keeping toner inside the cleaning unit.

TONER COLLECTION BOTTLE VIBRATION

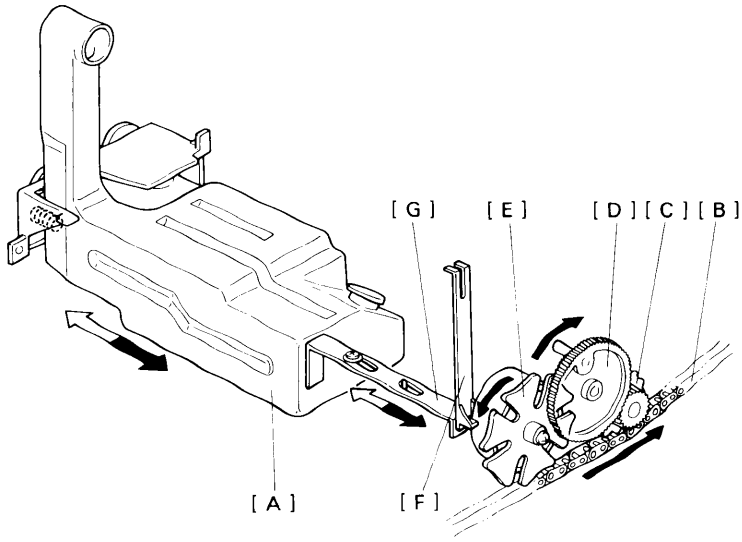

The toner collection bottle [A] is vibrated to prevent toner from building up in one place and activating the toner overflow sensor too early.

The main drive chain [B] turns the drive sprocket [C]. The drive sprocket has a gear on the reverse side which turns the cam drive gear [D]. A pin on the cam drive gear rotates the cam wheel [E]. This wheel has six slots in which the pin catches; so, the cam wheel turns 1/6 of a revolution for each full turn of the cam drive gear.

The cam part of the cam wheel pushes the cam lever [F] out as it turns. The pin on the other end of the cam lever pushes the vibration link [G] toward the front of the copier. This link pushes the toner collection bottle against the spring installed inside the bottle cover. When the cam wheel completes one turn, the cam lever is released and the spring pushes the toner collection bottle quickly toward the rear of the copier. This action keeps the toner level inside the toner collection bottle.

TONER OVERFLOW SENSOR CIRCUIT

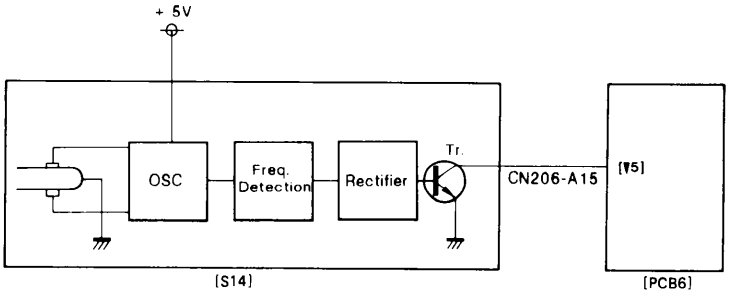

The toner overflow sensor [S14] signals the CPU when the toner collection bottle is full.

A tiny tuning fork is used as the sensing element of the toner overflow sensor. This tuning fork is a damping element in a multivibrator circuit. As long as there is nothing in contact with the tuning fork, the vibrating frequency of the circuit stays low and the transistor stays off.

When toner presses against the tuning fork, the resistance of the piezoelectric elements that are in contact with the tuning fork changes and the vibrating frequency increases. The frequency detection circuit passes the higher frequency signal to the rectifier which activates the switching transistor. The transistor sends a LOW signal to CN206-A15.

When the CPU detects this LOW signal, it stops the copier, lights the Used Toner Bottle indicator, and blinks the Service Call indicator.

CLEANING SOLENOID CIRCUIT

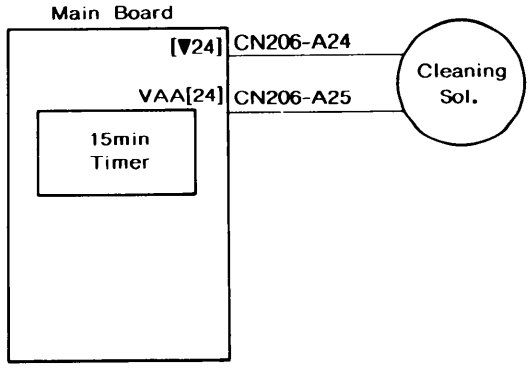

When the Start key is pressed or the main switch is turned on, the CPU sends a LOW signal to CN206-A24. This signal energizes the cleaning solenoid. Fifteen minutes after the main motor turns off, this signal becomes HIGH again, turning off the solenoid. This releases the cleaning blade from the drum. When the cleaning blade is released, the edge of the blade is cleaned.

The fifteen minute delay for the release of the cleaning blade is to avoid toner scattering. Toner scattering is increased if the cleaning blade is released too frequently.

QUENCHING LAMP

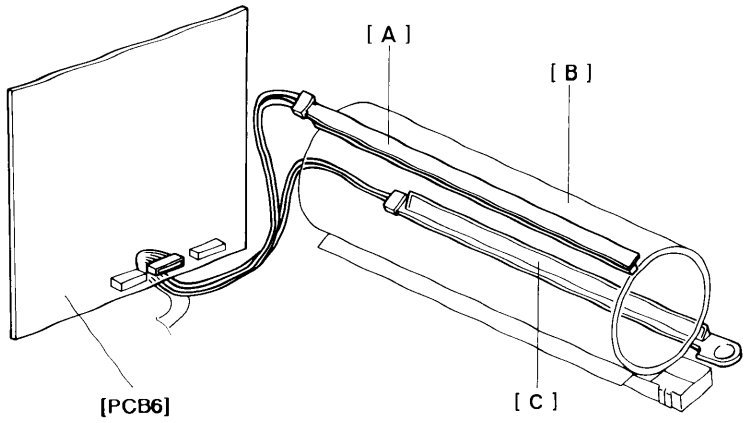

In preparation for the next copy cycle, light from the quenching lamp [A] neutralizes any charge remaining on the drum [B].

The LED array lamp used for quenching is similar to the pre-transfer lamp (PTL) [C]; however, the light intensity of the quenching lamp is less than that of the PTL.

PAPER FEED AND REGISTRATION

OVERVIEW

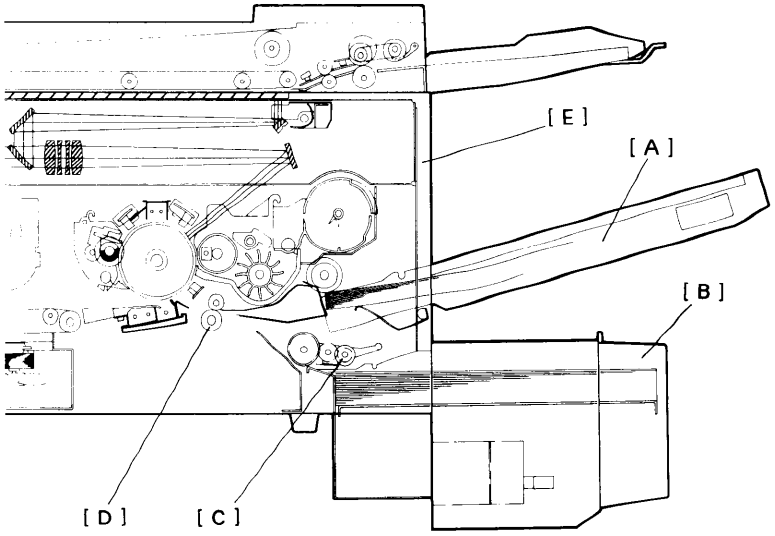

This model has two paper feed stations. The first cassette [A] and second cassette are located on the right side of the copier. The capacity of each of the cassettes is 250 sheets.

As an option the second cassette can be replaced with a 1,000 sheet large capacity tray [B]. This would increase the maximum paper capacity to 1,250 sheets.

Paper can also be fed using the manual feed table [E], which utilizes the feed mechanism of the first feed station.

Both feed stations use the feed roller and friction pad feed mechanism. The LCT also uses a pick-up roller [C]. During paper feed, the top sheet of paper separates from the stack and is fed to the registration rollers. The friction pad prevents all but the top sheet from feeding.

The feed rollers of the first feed station feed the top sheet directly to the registration rollers [D].

FRICTION PAD FEED SYSTEM

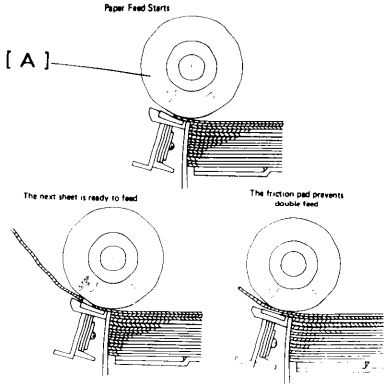

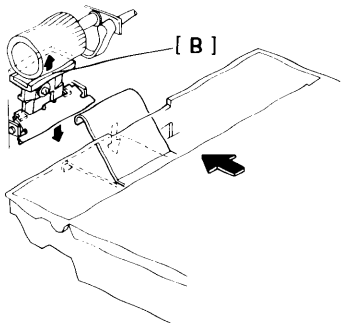

This copier uses a feed roller and friction pad paper feed system. The friction pad separates a single sheet from the top of the stack of paper.

When the feed roller [A] starts turning, it forces a single sheet of paper across the friction pad [B]. The roller stops turning when the paper reaches the registration rollers.

At that time the friction pad is pressing the paper up against the feed roller. So, when the registration rollers start turning, the friction of the moving paper as it is pulled from under the feed roller causes the feed roller to start turning again. As the trailing edge clears the leading edge of the paper stack, the feed roller catches on the next sheet and starts moving it forward. The feed roller stops turning when the trailing edge of the first sheet leaves the feed roller. The leading edge of the next sheet is then held ready for feeding between the friction pad and feed roller.

Sometimes sheets of paper tend to stick together (perhaps due to static electricity or poorly cut edges). When this happens, two sheets may feed between the feed roller and friction pad. However, the coefficient of friction between the friction pad and lower sheet is much greater than that between the two sheets of paper; so, the top sheet slips through while the pad holds the lower sheet.

The friction pad holder is mounted on one end of the swivel plate with a swivel screw; so, it automatically applies even pressure against the feed roller and the copy paper. The pad pressure spring on the other end of the swivel plate (reverse side) provides the pressure. After removing the cassette, the pad pressure is released.

PAPER LIFT MECHANISM

1. First and Second Feed Stations

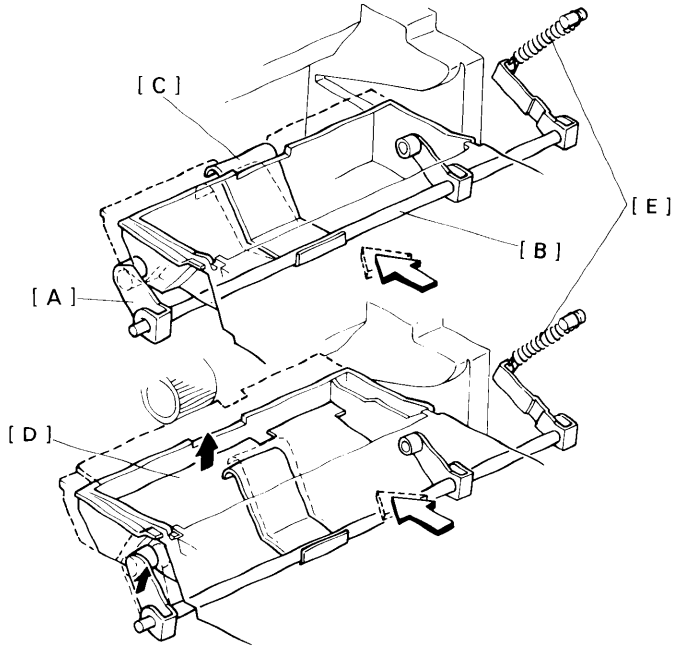

When a cassette is inserted into the copier, the curved release guides on the sides of the cassette press against the rollers on the release levers [A] and force the release levers down. The release levers rotate the cassette arm shaft [B], moving the cassette arm down and out of the way. When the cassette is fully seated, the release guides allow the release levers to move back up. The cassette arm [C] presses up the cassette bottom plate [D] until the paper contacts the paper feed roller.

To prevent copy paper from multi-feeding or jamming, the spring [E] pressure is adjustable.

2. Paper End Detection

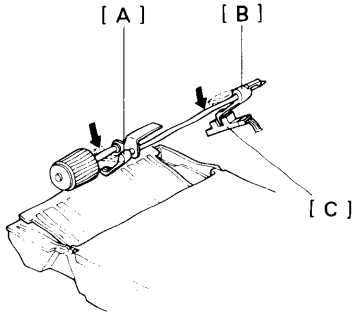

When a cassette or the LCT runs out of paper, the paper end feeler [A] drops through a slot in the cassette (or LCT) bottom plate. The paper end actuator [B], which is on the same shaft as the paper end feeler, pivots into the detector (photointerrupter). The paper end sensor [C] then sends a HIGH signal to the CPU, informing it that the cassette is empty. Then the Add Paper indicator turns on, the Print key turns red, and the machine stops after the copy is finished.

PAPER SIZE DETECTION

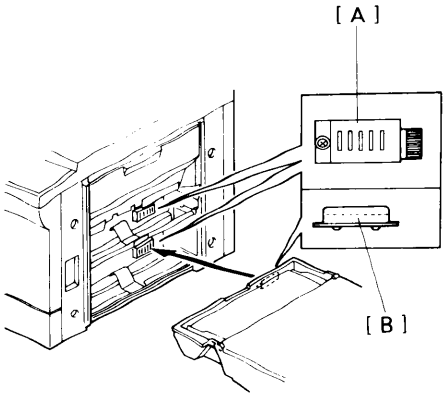

Paper Size	Sensor No. 12345	Operation Panel Indication 220V	115V
A3	10000	A3	*
B4	11000	B4	*
A4 sidewise	00100	A4	*
A4 lengthwise	10100	A4R	*
B5 sidewise	01100	*	*
B5 lengthwise	11100	*	*
A5 sidewise	00010	A5	*
A5 lengthwise	10010	A5R	*
B6 sidewise	01010	*	*
B6 lengthwise	11010	*	*
Return Post Card	10110	*	*
Post Card	00110	*	*
11" x 17"	00001	*	11" x 17"
11" x 8½"	10001	*	11" x 8½"
11" x 15"	01001	*	11" x 15"
10" x 14"	11001	*	*
8½" x 14"	00101	*	8½" x 14"
8½" x 13"	10101	F4	*
8½" x 11"	01101	*	8½" x 11"R
8½" x 5½"	11101	*	8½" x 5½"
8½" x 13" (14")	00011	*	*
8" x 13" (14")	10011	F	*
8" x 10½"	01011	*	*
8" x 10"	11011	*	*
5½" x 8½"	00111	*	5½" x 8½"
No Cassette	11111	*	*

1 Notch Low (0V) 0 No Notch High (5V)

[Actuator Plate Combination Table]

Five microswitches in the cassette entrance detect the cassette tray paper size. The paper size switches [A] are actuated by a plate on the front of the cassette. Each paper size has its own unique combination of notches in the actuator plate [B]. The CPU reads which microswitches have been deactivated (HIGH - LOW) by the actuator plate to determine which size cassette has been inserted.

PAPER FEED DRIVE

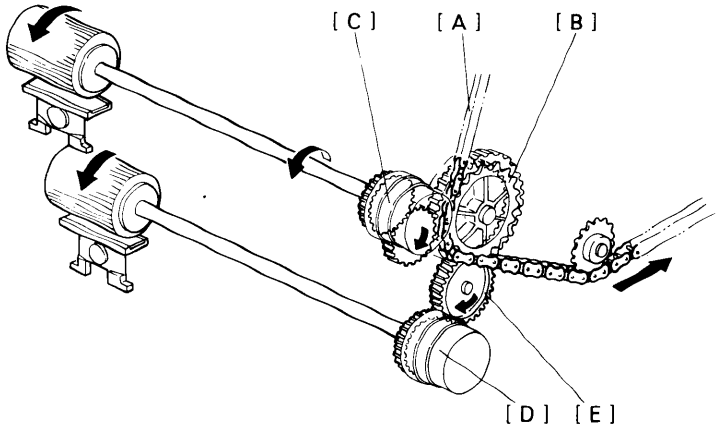

The main drive chain [A] turns the paper feed drive sprockets. The upper drive sprocket [B] turns the first magnetic clutch [C], and the second feed magnetic clutch [D] through the idle gears [E].

MANUAL FEED

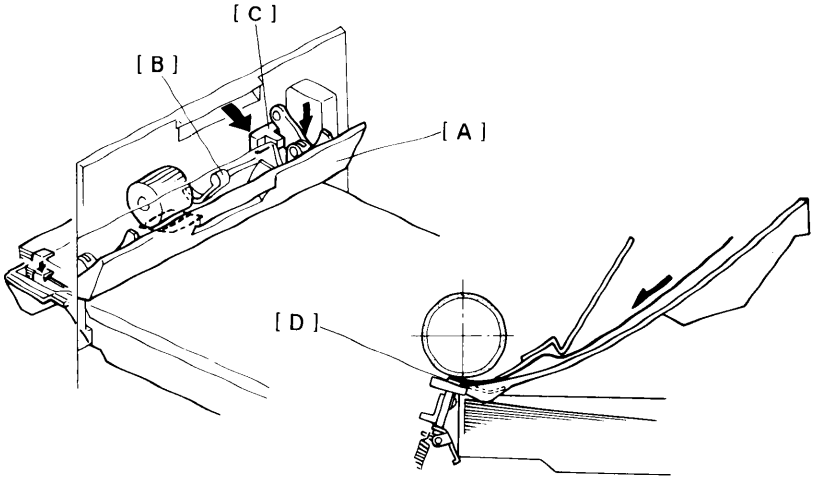

The manual feed table [A] uses the same feed mechanism as the first cassette. When the manual feed table is opened, it forces down the copy paper in the first cassette, clearing the way for manual feed. A slot in the manual feed table allows the paper end feeler [B] to drop down and the Add Paper indicator turns on. At the same time the rear arm of the tray activates the manual feed sensor [C] and the Manual Feed indicator turns on.

When the manual feed table is opened and the copy paper in the first cassette is forced down, the top sheet of paper still remains between the paper feed roller and the friction pad [D]. The spring plate installed on the manual feed table is positioned between the paper feed roller and the top sheet of paper, preventing the top sheet of paper from being fed with the manual feed paper.

The first cassette must be installed to use manual feed. If it is not, the friction pad will separate from the feed roller, making paper feed impossible. If the manual feed table is opened without the first cassette inserted, the Manual Feed indicator and the First Cassette indicator blink and the Start key turns red.

FEED AND REGISTRATION TIMING

The following table shows the timing of the rollers used with the various feed stations.

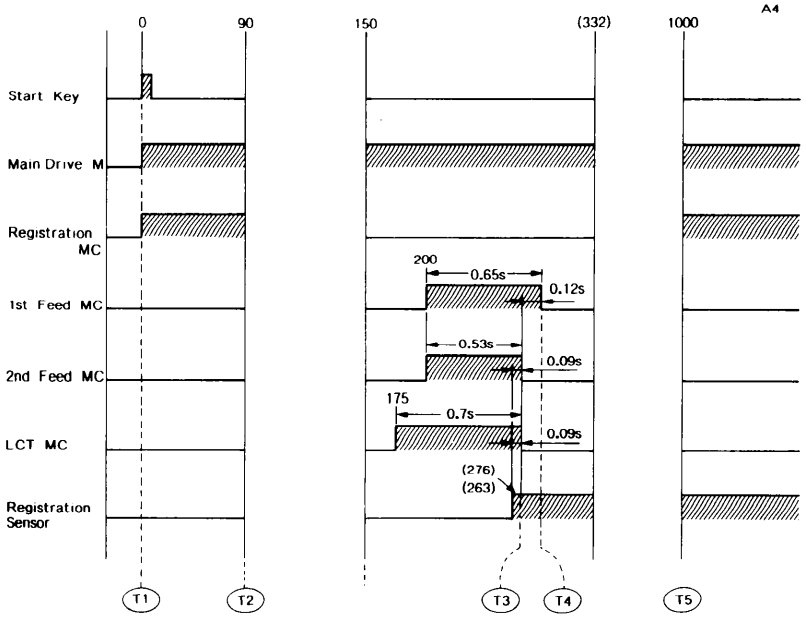

T1 ----- If the cleaning solenoid is on and the Start key is pressed, then the main motor and the registration clutch turn on.

T2 ----- The selected paper feed station's paper feed clutch turns on 0.63 second after the Start key is pressed. At the same time, the registration clutch turns off.

If the 3rd paper feed station is selected, the relay clutch turns on at the same time as the 3rd paper feed clutch.

T3 ----- If the 2nd paper feed station is selected, the 2nd paper feed clutch and the LCT clutch turn off 0.09 second after the registration sensor turns on.

T4 ----- If the 1st paper feed station is selected, the 1st paper feed clutch turns off 0.12 second after the registration clutch turns on.

T5 ----- The registration start signal appears at the 1000th pulse. This compensates for differences in the length of the paper paths for each feed station.

1. Registration

After the leading edge of the copy paper reaches the registration rollers, the optics CPU sends the registration start signal (1,000th pulse) to the main CPU. At this time, the main CPU energizes the registration clutch to feed the copy paper for image transfer.

PAPER TRANSPORT

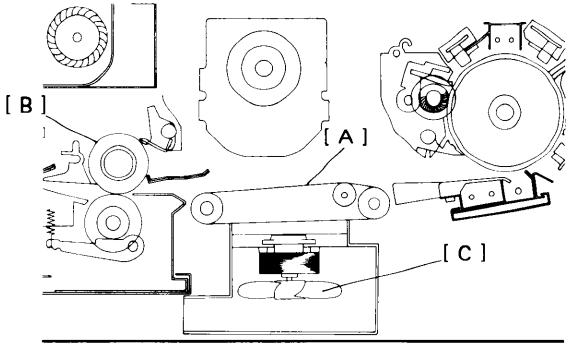

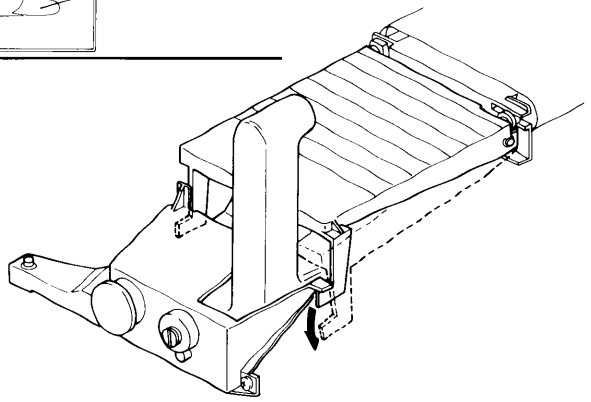

The copy paper rides on the transport belt [A] to the fusing unit [B].

A vacuum fan [C] holds the paper firmly against the belt so there is enough friction between the paper and the belt for smooth transportation. The transport belt is directly gear driven (no clutch); so, it turns constantly when the main motor is on.

The front part of the transport unit is hinged and can be pressed down for easy jam removal.

IMAGE FUSING AND PAPER EXIT

OVERVIEW

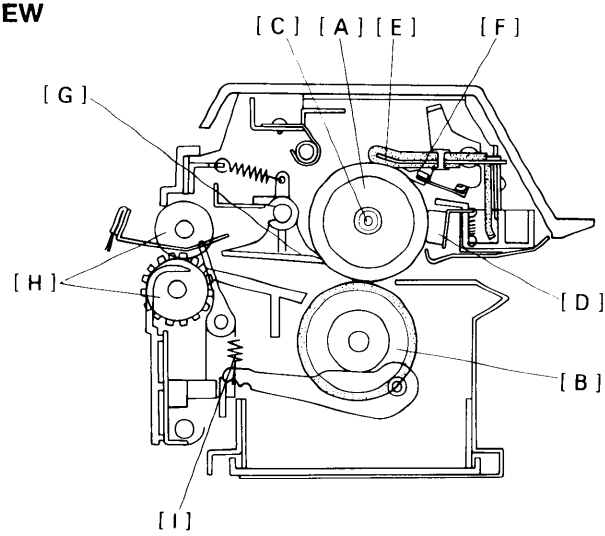

Two fusing rollers, which apply heat and pressure, fuse the image to the copy paper. The hot roller [A] is made of teflon, and the pressure roller [B] is made of silicone rubber with a teflon tube coating. Pressure is constantly applied between the rollers. There is no pressure release mechanism.

The fusing lamp [C], which is located at the hot roller axis, is turned on and off to maintain the operating temperature. The temperature control circuit monitors the hot roller surface temperature through a thermistor [D].

The oil supply pad [E] applies silicone oil to the hot roller. The oil blade [F] then spreads the oil evenly across the hot roller. The oil reduces the adhesion between paper and the hot roller (reducing misfeeds), reduces paper curl, and helps to keep the roller clean by reducing the amount of toner transferred to the hot roller surface. The oil supply pad also works as the hot roller cleaning pad.

The hot roller strippers [G] separate the copy from the hot roller and direct it to the fusing exit rollers [H].

The lock position of the pressure lever tension springs [I] adjusts the roller pressure.

FUSING DRIVE MECHANISM

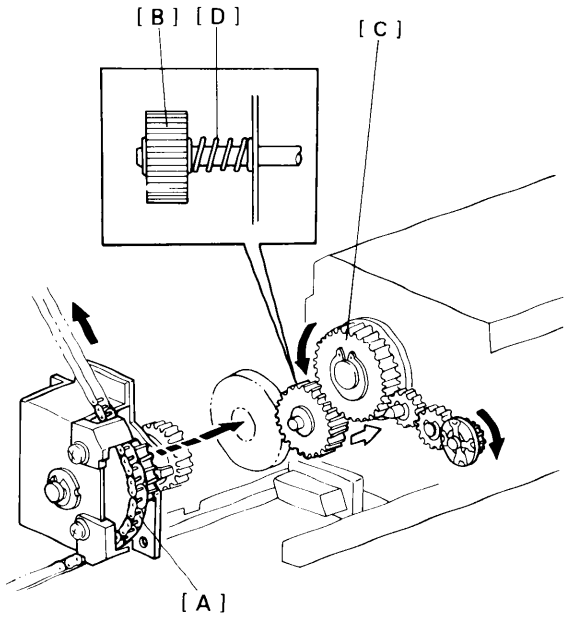

The fusing drive gear [A] turns the release gear [B] which drives the hot roller gear [C]. Rotation passes from the hot roller gear through two idle gears to the exit rollers. The friction between the hot roller and the pressure roller drives the pressure roller.

The release gear spring [D] allows the release gear to move in and out. This prevents the gears from being damaged if they should not engage correctly when the fusing unit is set. Also, by pulling the fusing knob out slightly, the operator can disengage the release gear and the fusing drive gear so that the fusing rollers can be turned easily for removing misfeeds.

OIL SUPPLY AND CLEANING

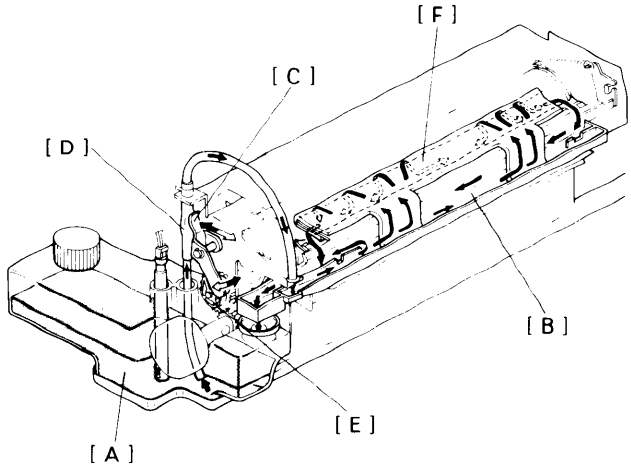

Silicone oil is applied to the hot roller to help prevent toner and paper from sticking to the hot roller, to reduce paper curl, and to assist roller cleaning.

A small one-way valve moves the oil from the oil tank [A] (capacity 580 cc) to the oil sump [B]. The oil pump lever [C] alternately presses and releases the rubber sleeve [D] between the valves as the oil cam [E] turns.

The felt wick soaks up oil and supplies it to the top of the oil supply pad [F]. The oil supply pad then applies the oil to the hot roller as it turns. The oil blade spreads and levels the oil on the hot roller. Excess oil flows along the blade toward the ends of the roller. At the ends, oil skimmers scrape off the excess oil and return it to the oil sump. Oil flows out through a hole in the bottom of the oil sump and returns to the oil tank.

The oil supply pad both distributes oil to the hot roller and removes toner and foreign matter from the hot roller surface.

OIL END SENSOR

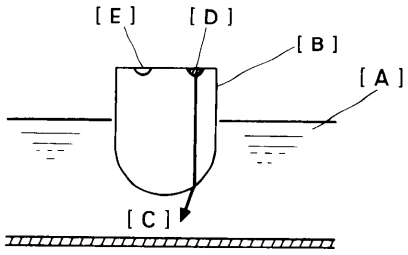

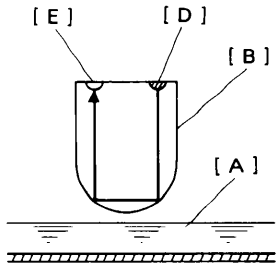

Oil end detection is based on the difference between the index of refraction of air and the index of refraction of silicone oil.

The index of refraction of silicone oil (1.40) is very near that of the sensor casing (1.49); so, the oil-casing interface has a very large critical angle. As a result, when oil [A] covers the sensor [B], light [C] from the LED [D] is only refracted slightly at the boundary between the casing and the oil. The phototransistor [E] stays off.

However, the index of refraction of air is much lower (1.00). So, the critical angle for the air-casing interface is much less than that of the oil-casing interface. Light from the LED strikes the air-casing interface at an angle greater than the critical angle. So, when oil runs out, light from the LED reflects instead of refracting and activates the phototransistor.

FUSING EXIT ASSEMBLY

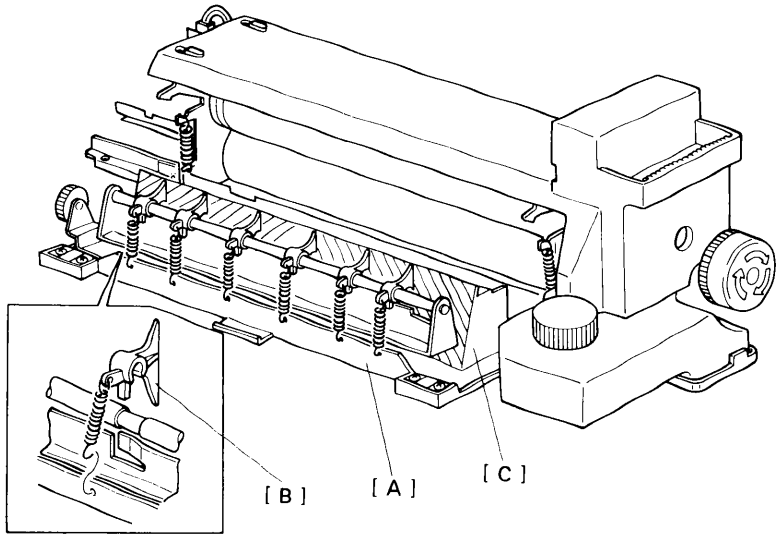

The fusing exit assembly [A] includes the fusing roller strippers [B], the lower fusing exit guide [C], the exit sensor, and the antistatic brush.

The hot roller strippers prevent copy paper from wrapping around the hot roller. They slide between the paper and the roller, and then direct the paper to the fusing exit rollers.

The lower fusing exit guide prevents the copy paper from wrapping around the pressure roller. Although the lower fusing exit guide is not touching the pressure roller, it will catch the leading edge of the copy paper due to the face curl of the paper. (The face curl is caused by the pressure between the teflon hot roller and silicone rubber teflon coated pressure roller.)

FUSING CONTROL

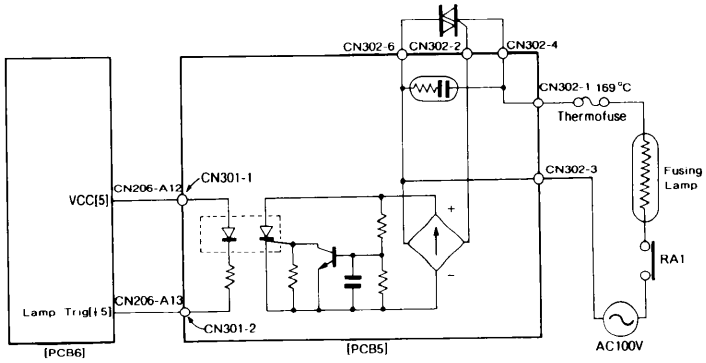

The main CPU controls the fusing lamp. The main CPU monitors the temperature of the fusing roller through a thermistor

The main CPU sends the fusing lamp trigger signal (LOW) until the temperature of the fusing roller reaches 180°C (ready temperature). The LOW trigger signal turns on a photothyristor, which turns on the triac controlling the ac voltage to the lamp.

The main CPU controls the fusing temperature within 180°C ± 3°C. This control range can be changed by SP # 49.

IMAGE FUSING

1. Entrance Guide

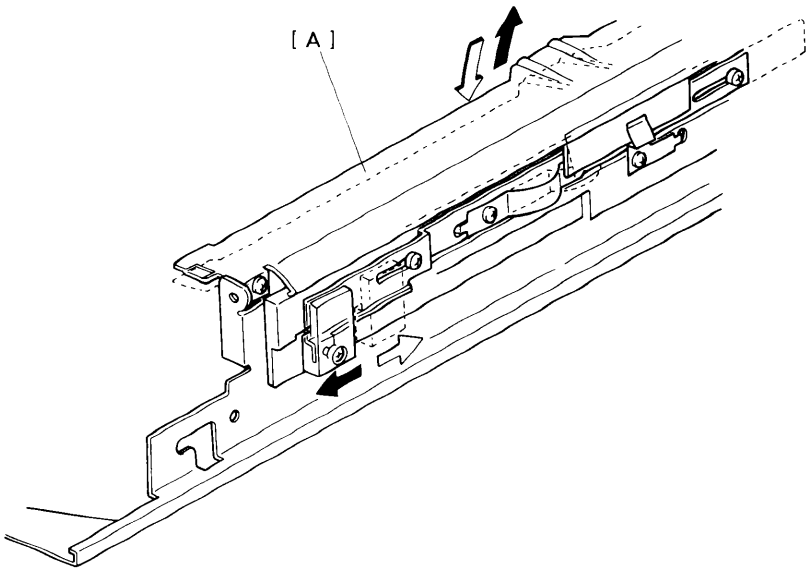

The entrance guide [A] of this machine is adjustable for thick and thin paper. When using thin paper the entrance guide should be set in the upper position. This slightly lengthens the paper path which prevents the paper from creasing in the fusing unit. When using thick paper the entrance guide should be set in the lower position, because thick paper does not bend so easily, and is therefore less prone to creasing. Also, the lower setting allows more direct access to the gap between the fusing and pressure rollers. This prevents thick paper from buckling against the fusing roller (which could cause blurring at the leading edge of the copy).

The angle of the entrance guide is adjustable (about 1 mm of play) as shown by the arrows in the illustration.

SERVICE CALL CONDITIONS

Self-diagnostic Code 53:
Thermistor Open
The main CPU checks the conductivity of the thermistor. Code 53 is displayed if the thermistor circuit is open.

Self-diagnostic Code 54:
No Warm-up Signal
Code 54 is displayed if the hot roller does not reach the ready temperature within 8 minutes after the power is turned on.

Self-diagnostic Code 55:
Overheat
The main CPU checks the conductivity of the thermistor. Code 55 is displayed if the resistance of the thermistor becomes too low. This occurs if the hot roller temperature is in the 200° - 240°C range.

Self-diagnostic Code 56:
Temperature Too Low
Code 56 is displayed if the CPU detects that the temperature of the hot roller is less than 150°C after the CPU detects the ready signal.

TABLE OF CONTENTS

1. OVERALL MACHNE INFORMATION

Specifications 1-1
Operation Panel 1-5
Section A 1-5
Section B 1-6
Section C 1-7
Copy Process 1-8
Functional Operation 1-9
Paper Path 1-10
Paper Feed 1-10
Registration 1-11
Image Transfer 1-11
Paper Separation 1-11
Fusing 1-11
Mechanical Component Layout 1-12
Drive Layout 1-13
Electrical Component Layout 1-14
Electrical Component Descriptions 1-16
AC and DC Power Distribution 1-19
Overall Machine Control 1-20
Operation Panel Control 1-21

2. DETAILED SECTION DESCRIPTIONS

Drum 2-1
1. Selenium Drum 2-1
2. Handling the Drum 2-2
Drum Charge 2-3
1. Overview 2-3
2. Corona Wire Cleaner 2-4
3. Charge Corona Power Pack 2-5
Erase 2-6
1. Overview 2-6
2. Lead Edge Erase 2-7
3. Side Erase 2-7
4. Trail Edge Erase 2-9
5. Erase Lamp Circuit 2-10
Optics 2-12
1. Overview 2-12
2. Scanner Drive 2-13

3. Lens/Mirror Positioning 2-15
4. Stepper Motor Control 2-19
5. Automatic Image Density Sensing 2-20
6. Exposure Lamp Control 2-21
7. Service Call Conditions 2-22
Development 2-23
1. Overview 2-23
2. Drive Mechanism 2-24
3. Seals and End Magnets 2-25
4. Cross Mising 2-26
5. Image Density Control 2-27
6. Bias for ID Sensing 2-31
7. Bias Control Circuit 2-32
8. Color Development 2-33
9. Service Call Conditions 2-35
Toner Density Detection and Toner Supply 2-36
1. Toner Density Detection 2-36
2. Toner Density Control 2-37
3. Toner Supply 2-38
4. Toner Supply Amount 2-40
5. Toner End Detection 2-41
6. Color Toner Density Detection and Color Toner Supply 2-41
7. Service Call Condition 2-43
Image Transfer and Separation 2-44
1. Pre-Transfer Lamp (PTL) 2-44
2. Image Transfer 2-44
3. Paper Separation 2-45
4. Pre-Transfer Lamp Circuit 2-46
5. transfer/Separation Corona Circuit 2-47
6. Pick-Off Mechanism 2-48
7. Pick-Off Circuit 2-50
Drum Cleaning 2-51
1. Overview 2-51
2. Drive Mechanism 2-52
3. Cleaning Blade 2-53
4. Toner Collection Bottle Vibration 2-54
5. Toner Overflow Sensor Circuit 2-55
6. Cleaning Solenoid Circuit 2-56
Quenching Lamp 2-57
Paper Feed and Registration 2-58
1. Overview 2-58
2. Friction Pad Feed System 2-59
3. Paper Lift Mechanism 2-60

4. Paper End Detection 2-62
5. Paper Size Detection 2-63
6. Paper Feed Drive 2-64
7. Manual Feed 2-65
8. Feed and Registration Timing 2-66
Paper Transport 2-69
Image Fusing and Paper Exit 2-70
1. Overview 2-70
2. Fusing Drive Mechanism 2-71
3. Oil Supply and Cleaning 2-72
4. Oil End Sensor 2-73
5. Fusing Exit Assembly 2-74
6. Fusing Control 2-75
7. Service Call Conditions 2-76

3. DOCUMENT FEEDER

1. Specifications 3-1
2. Mechanical Component Layout 3-2
3. Electrical Component Layout 3-3
4. Basic Operation 3-4
5. Feed-in Unit Mechanism 3-5
6. Separation Mechanism 3-6
7. Misfeed Prevention 3-7
8. Wear Prevention 3-8
9. Friction Roller Release Mechanism 3-9
10. Registration 3-10
11. Feed-out Mechanism 3-11
12. Lifting Mechanism 3-12
13. Misfeed Check 3-13

4. SORTER

1. Specifications 4-1
2. Mechanical Component Layout 4-2
3. Electrical Component Layout 4-3
4. Basic Operation 4-4
5. Bin Drive Mechanism 4-6
6. Exit Rollers 4-8
7. Electrical Control 4-9

5. LARGE CAPACITY TRAY

1. Specifications 5-1
2. Mechanical Component Layout 5-2
3. Electrical Component Layout 5-3
4. Mechanical Operation 5-4
5. Electrical Operation 5-7

SPECIFICATIONS

Configuration:	Desk top
Copying Process:	Dry electrostatic transfer system
Original:	Sheet/book
Original Size:	Maximum 11" x 17"
Copy Paper Size:	Maximum 11" x 17" Minimum $5_{1/2}$" x $8_{1/2}$"
Copy Paper Weight:	Cassette feed 52 to 128 g/m^2 (14 lb to 34 lb) Manual feed 52 to 157 g/m^2 (14 lb to 42 lb)
Reproduction Ratios:	See the following table:

Enlargement	1 : 1.55 1 : 1.29 1 : 1.21
Full Size	1 : 1
Reduction	1 : 0.93 1 : 0.77 1 : 0.74 1 : 0.65

Zoom:	From 65% to 155% in 1% steps
Reproduction Ratio Change:	Full size ⇒ Enlargement or Full size ⇒ Reduction in less than 5 seconds Enlargement ⇒ Reduction or Reduction ⇒ Enlargement in less than 6.5 seconds

Copying Speed:	The copy speed (in copies per minute) is shown in the following tables: LDG LG LT LT(R) 10 12 18 13 When used with a document feeder, LT speed is 14 cpm (sideways).
First Copy Time:	6.0 seconds ($8_{1/2}$" x 11" side ways)
Warm-up Time:	Approximately 100 seconds (23°C)
Copy Number Input:	Numeral keys, 1 to 999, (count up or count down)
Special Functions:	- 2 single copies mode - Auto paper select and auto reduce/enlarge mode (with ADF only)
Manual Image Density Selection:	7 Steps (Development bias variable)
Automatic Reset:	1 min. standard setting; can also be set to 3 min. or no auto reset. All functions canceled except cassette selection. Quantity entered returns to "1", and reproduction ratio returns to full size.
Paper Feed:	- Double universal cassette feed, 250 sheets each (auto cassette shift) - Manual feed table - Optional large capacity tray (LCT) at second feed station.
Paper Feed System:	Friction-pad system
Exposure System:	Slit exposure, moving optics
Lens:	Through lens, F8, f = 180mm
Light Source:	Halogen lamp (85 V, 290 W)
Photoconductor:	Selenium drum (F type)

Charge System:	Dual wire dc corona
Erase:	LED lamp unit (34 LEDs)
Development System:	Magnetic brush roller
Toner Density Control:	Automatic, direct density sensing
Development Bias System:	Automatic voltage change (The control board monitors the selected image density level, drum temperature, and rest time.)
Toner Replenishment:	Cartridge exchange (300 g/cartridge)
Toner Consumption:	Approx. 7,000 copies/cartridge (A4 7% original)
Cleaning System:	Blade and brush
Quenching System:	Photo-quenching
Image Transfer:	Single wire dc corona, pre-transfer lamp
Paper Separation:	Dual wire ac corona and pick-off pawls
Image Fusing:	Heat/pressure - roller type
Fusing Lamp:	Halogen lamp (840 W)
Electronic Control System:	8-bit microprocessor
Copy Tray Capacity:	250 sheets (10" x 14") 100 sheets (11" x 17")
Self-diagnostics:	19 codes, displayed in the copy counter
Power Source:	110V/60Hz....15A 115V/60Hz....15A

Power Consumption:	Warm-up:	1.0 kW
	Stand-by:	0.08 kW
	Copying:	0.42 kW
	Maximum:	1.22 kW
Dimensions: (W x D x H)	Copier only:	28.9 x 25.8 x 15.4 inches
	Full System:	52.9 x 25.8 x 18.2 inches
Weight:	65 kg (143 lb) (Copier only) 100 kg (221 lb) (Full system without table)	
Optional Equipment:	Document Feeder Sorter (20 bins) Large Capacity Tray Color Development Unit (Red, Blue, Green)	

OPERATION PANEL

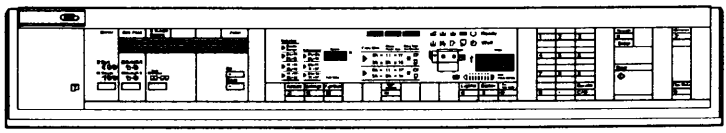

SECTION A

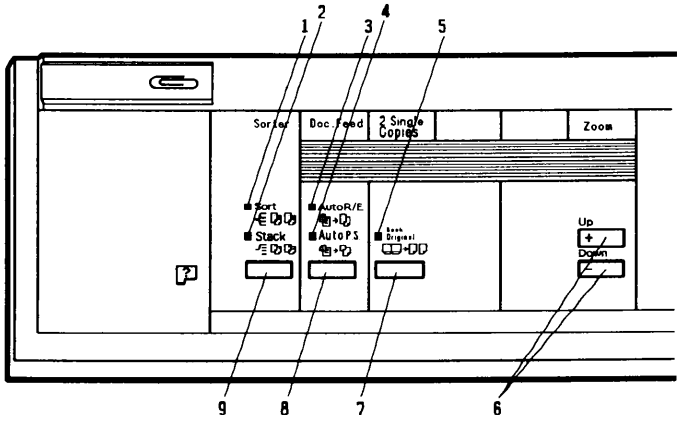

1. Sort Indicator
2. Stack Indicator
3. Auto Reduce/Enlarge Indicator
4. Auto Paper Select Indicator
5. 2 Single Copies Indicator
6. Zoom Keys
7. 2 Single Copies Key
8. Auto Selection Key
9. Sorter Key

SECTION B

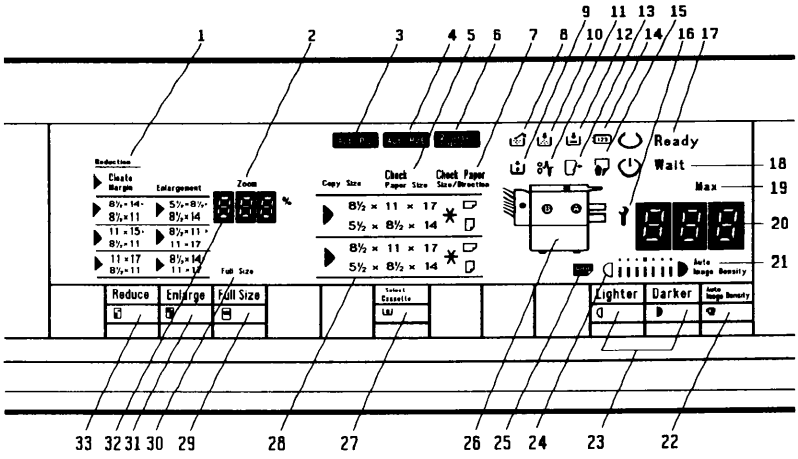

1. Magnification Indicator
2. Zoom Indicator
3. Auto Paper Select Display
4. Auto Reduce/Enlarge Display
5. Check Paper Size Indicator
6. 2 Single Copies Display
7. Check Paper Size/Direction Indicator
8. Used Toner Bottle Indicator
9. Add Oil Indicator
10. Add Toner Indicator
11. Check Paper Path Indicator
12. Load Paper Indicator
13. Close Cover Indicator
14. Set Key Counter Indicator
15. Manual Feed Indicator
16. Call Service Indicator
17. Ready Indicator
18. Wait Indicator
19. Max Indicator
20. Copy Counter
21. Auto Image Density Indicator
22. Auto Image Density Key
23. Manual Image Density Key
24. Manual Image Density Indicator
25. Color Toner Indicator
26. Misfeed Location Display
27. Select Cassette Key
28. Paper Size Indicator
29. Full Size Key
30. Full Size Indicator
31. Magnification Ratio Indicator
32. Enlarge Key
33. Reduce Key

SECTION C

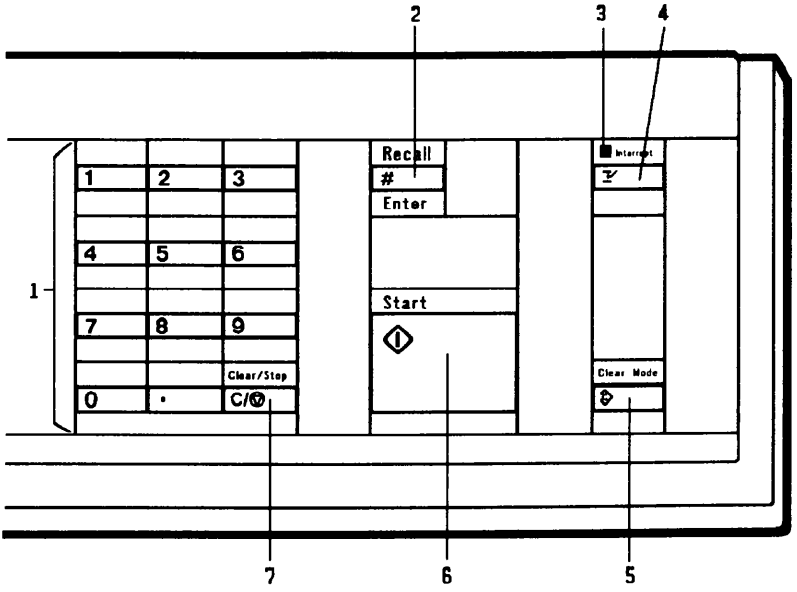

1. Number Keys
2. Recall/Enter Key
3. Interrupt Indicator
4. Interrupt Key
5. Clear Modes Key
6. Start Key
7. Clear/Stop Key

COPY PROCESS

1. Drum Charge
In the dark the charge corona unit gives a uniform positive charge to the selenium drum the charge remains on the surface of the drum because the photoconductive selenium has high electrical resistance in the dark.

2. Erase
The erase lamp illuminates the areas of the charged drum surface that will not be used for the copy image. The resistance of the drum in the illuminated areas drops and the charge on those areas dissipates.

3. Exposure
An image of the original is reflected to the drum surface via the optics. The charge on the drum surface is dissipated in direct proportion to the intensity of the reflected light, thus producing an electrical latent image on the drum surface.

4. Development
Negatively charged toner is attracted to the positively charged areas of the drum, developing the latent image. The negative triboelectric charge is caused by rubbing action between the carrier and toner particles.)

5. Pre-Transfer Lamp (PTL)
The PTL illuminates the drum to remove all positive charge from the exposed areas of the drum. This prevents the toner particles from being reattracted to the drum surface during paper separation and makes paper separation easier.

6. Image Transfer
Paper is fed to the drum surface at the proper time so as to align the copy paper and the developed image on the drum surface. Then, a strong positive charge is applied to the reverse side of the copy paper, providing the electrical force to pull the toner particles from the drum surface to the copy paper. At the same time, the copy paper is electrically attracted to the drum surface.

7. Paper Separation
A strong ac corona discharge is applied to the reverse side of the copy paper, gradually reducing the positive charge on the copy paper and breaking the electrical attraction between the paper and the drum. Then, the stiffness of the copy paper causes it to separate from the drum surface. The pick-off pawls help to separate paper which has low stiffness.

8. Cleaning
The cleaning brush removes part of the toner on the drum and loosens the remainder. The cleaning blade then scrapes off the loosened toner.

9. Quenching
The light from the LEDs of the quenching lamp electrically neutralizes the surface of the drum.

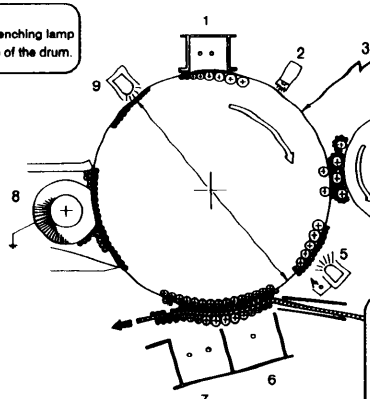

FUNCTIONAL OPERATION

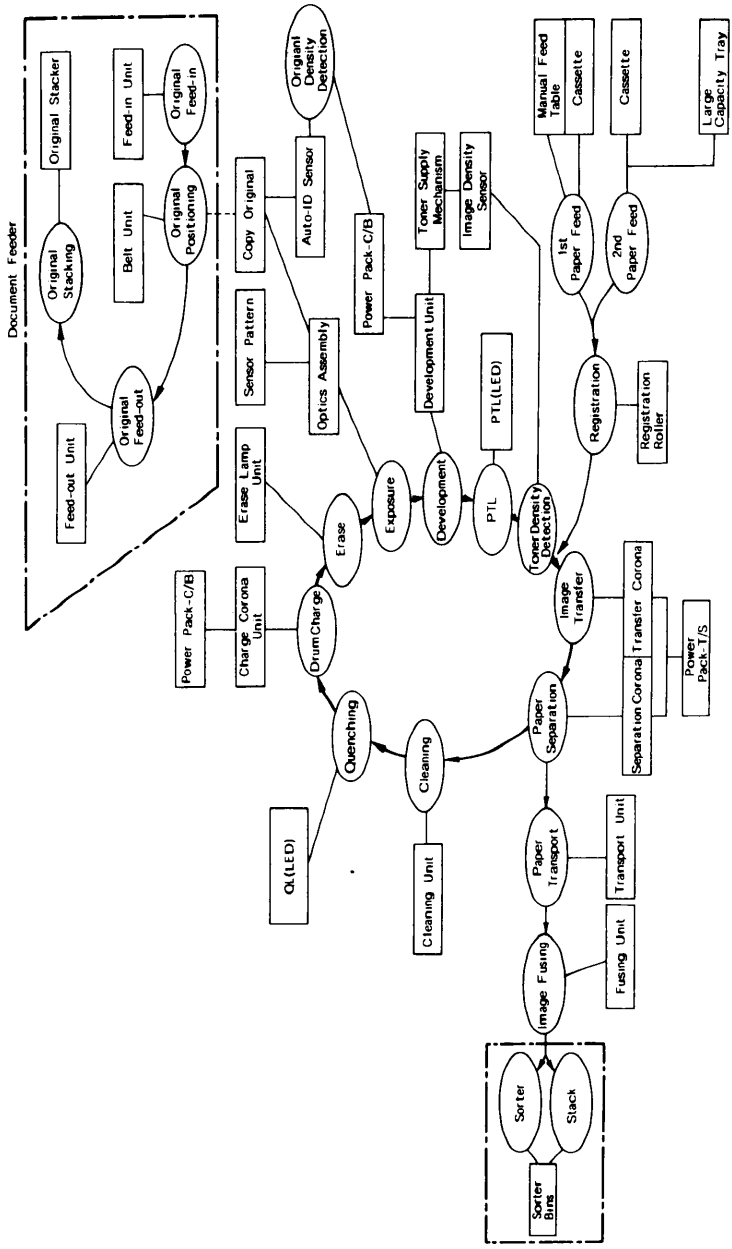

PAPER PATH

Paper feed starts from one of the two paper feed stations. The path followed depends on which cassette the operator has selected. For copy processing, all sheets follow the same path from the paper feed mechanism through the fusing unit. After that, copies are delivered to the receiving tray.

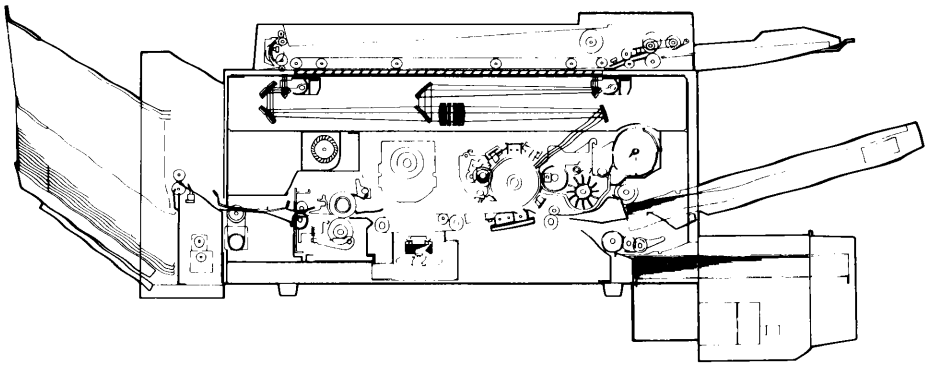

1. Paper Feed

A friction pad and feed roller mechanism separates one sheet of paper from the paper stack and feeds it to the registration rollers. The registration rollers are not turning at this time. The paper buckles slightly when the leading edge reaches the registration rollers. Buckling seats the sheet securely between the registration rollers and corrects skew.

2. Registration

At the programmed time, the registration rollers start turning to feed the paper to the drum.

3. Image Transfer

The toner image on the drum surface is pulled from the drum onto the passing paper by the transfer corona.

4. Paper Separation

The separation corona breaks the electrostatic attraction between the paper and the drum. The suction of the vacuum fan pulls the paper onto the transport belt. The transport belt moves the paper with the developed copy image to the fusing unit.

5. Fusing

The paper passes between two rollers which bond the toner image to the paper by applying heat and pressure. At this point the copy is complete.

MECHANICAL COMPONENT LAYOUT

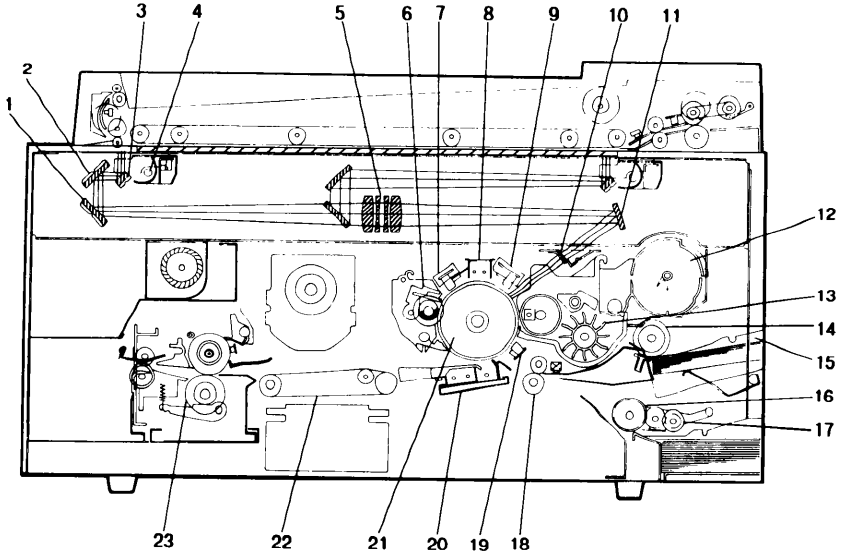

1. Third Mirror
2. Second Mirror
3. First Mirror
4. Exposure Lamp
5. Lens
6. Cleaning Unit
7. Quenching Lamp
8. Corona Unit
9. Erase Lamp Unit
10. Toner Shield Glass
11. Fourth Mirror
12. Toner Cartridge
13. Development Unit
14. First Feed Roller
15. First Cassette
16. Second Feed Roller
17. Pick-up Roller (LCT)
18. Registration Roller
19. Pre-Transfer Lamp (PTL) /Image Density Sensor Board
20. Transfer/Separation Corona Unit
21. Selenium Drum
22. Transport Belt
23. Fusing Unit

DRIVE LAYOUT

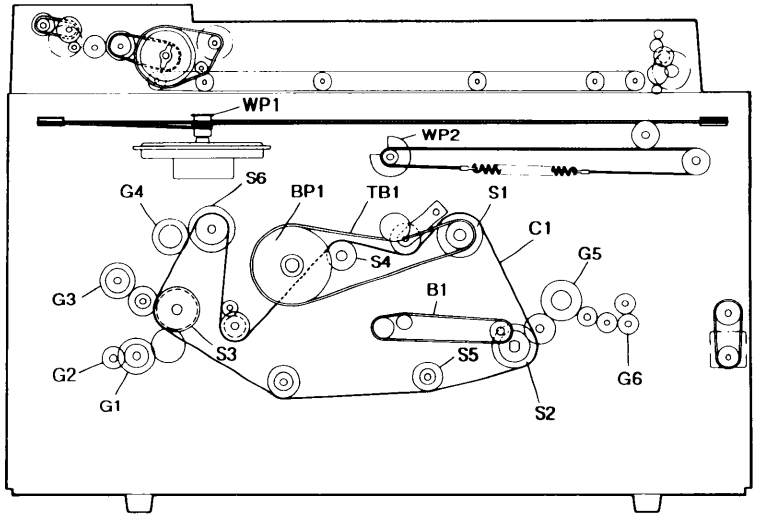

Gears

G1 Second Feed Clutch Gear
G2 Pick-up Roller Drive Gear(LCT)
G3 First Feed Clutch Gear
G4 Toner Supply Clutch Gear
G5 Hot Roller Drive Gear
G6 Exit Roller Drive Gear

Sprockets

S1 Main Motor Sprocket
S2 Fusing Drive Sprocket
S3 Feed Drive Sprocket
S4 Cleaning Drive Sprocket
S5 Toner Collection Bottle Drive Sprocket
S6 Development Drive Sprocket

Wire Pulleys

WP1 Scanner Drive Pulley
WP2 Second Scanner Drive Pulley

Timing Belt

TB1 Drum Drive Belt

Belt

B1 Transport Belt

Belt Pulley

BP1 Drum Drive Pulley

Chains

C1 Main Drive Chain

ELECTRICAL COMPONENT LAYOUT

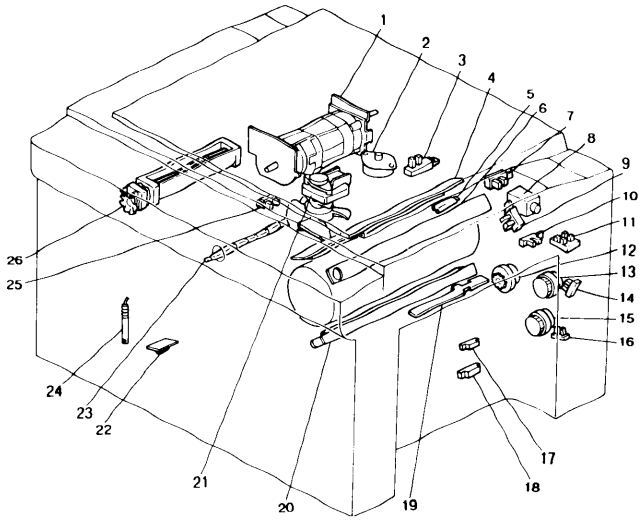

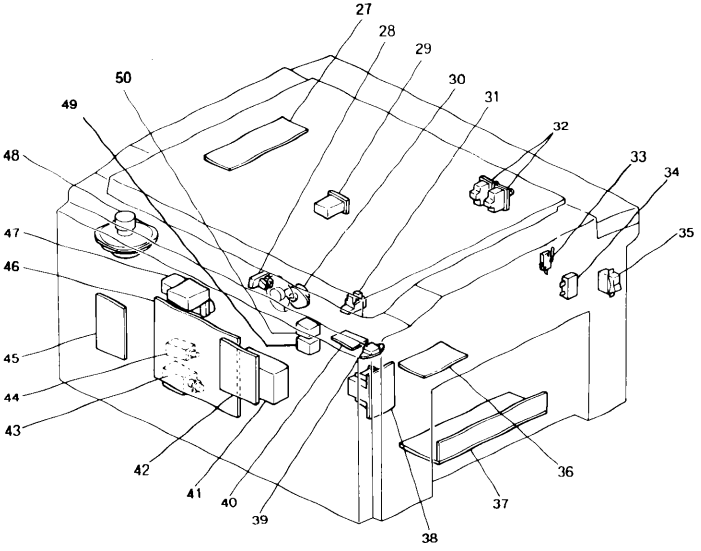

1. Main Motor - M1
2. Lens Drive Motor - M2
3. Lens HP Sensor - S1
4. Quenching Lamp - L1
5. Drum Heater

6. Erase Lamp - L2
7. Pulse Generator Sensor - S2
8. Toner Supply Solenoid - SOL1
9. Color Toner End Sensor - S3
10. Manual Feed Sensor - S4

11. Color Toner Sensors - S5
12. Registration MC - MC1
13. First Paper Feed MC - MC2
14. First Paper End Sensor - S6
15. Second Paper Feed MC - MC3

16. Second Paper End Sensor - S7
17. First Paper Size Sensor - S8
18. Second Paper Size Sensor - S9
19. Registration Sensor - S10
20. Pre Transfer Lamp - L3

21. Vacuum Fan Motor - M3
22. Toner Overflow Sensor - S14
23. Fusing Lamp - L4
24. Oil End Sensor - S15
25. Paper Exit Sensor - S11
26. Exhaust Blower Motor - M4

27. Lamp Regulator PCB - PCB1
28. Second Scanner Home Position Sensor - S12
29. Total Counter - CO1
30. Second Scanner Motor - M5

31. Scanner Home Position Sensor - S13
32. Front Cover Safety Switches - SW2 - SW3
33. Door Switch - SW4
34. Main Motor Capacitor - C

35. Main Switch - SW1
36. Relay PCB - PCB2
37. DC Power Supply Unit - PSU
38. Transformer - TR1
39. Fusing Triac - FT

40. Heater Control PCB - PCB5
41. Power Pack - T/S - P1
42. Interface Board - PCB3
43. Cleaning Solenoid - SOL2
44. Pick-off Solenoid - SOL3

45. Feed Control PCB - PCB4
46. Main PCB - PCB6
47. Power Pack - C/B - P2
48. Scanner Drive Motor - M6
49. AC Drive Relay - RA1
50. Main Motor Relay - RA2

ELECTRICAL COMPONENT DESCRIPTIONS

SYMBOL	NAME	FUNCTION	LOCATION
Motors			
M1	Main Motor	Drives all main unit components except the optics unit and fans/blowers. (100 Vac)	1
M2	Lens Drive Motor	Positions the lens. (dc servo)	2
M3	Vacuum Fan Motor	Provides suction so that paper is held firmly on the transport belt. (100 Vac)	21
M4	Exhaust Blower Motor	Removes heat from around the fusing unit. (100 Vac)	26
M5	Second Scanner Motor	Positions the second scanner.(dc stepper)	30
M6	Scanner Drive Motor	Drives the scanner. (dc servo)	48
Magnetic Clutches			
MC1	Registration MC	Drives the registration rollers.	12
MC2	First Paper Feed MC	Starts paper feed from the first paper feed station.	13
MC3	Second Paper Feed MC	Starts paper feed from the second paper feed station.	15
Solenoids			
SOL1	Toner Supply Solenoid	Energizes to supply toner.	8
SOL2	Cleaning Solenoid	Moves the cleaning blade against the drum.	43
SOL3	Pick-off Solenoid	Brings the pick-off pawls into contact with the drum.	44
Switches			
SW1	Main Switch	Supplies power to the copier.	35
SW2	Front Cover Safety Switch	Cuts ac power to fusing lamp and heater control board.	32
SW3	Front Cover Safety Switch	Cuts ac power to ac components.	32
SW4	Door Switch	Enables the Door Open indicator.	33
Thermistors			
TH1	Drum	Monitors the temperature of the drum cavity.	
TH2	Bias	Monitors the temperature and controls development bias compensation.	
TH3	Fusing	Monitors the fusing temperature and turns the fusing lamp on and off.	

SYMBOL	NAME	FUNCTION	LOCATION
Sensors			
S1	Lens Home Position Sensor	Informs the CPU when the lens is at the full size position.	3
S2	Pulse Generator Sensor	Supplies timing pulses to the main board.	7
S3	Color Toner End Sensor	Detects when it is time to add toner.	9
S4	Manual Feed Sensor	Detects when the manual feed table is open.	10
S5	Color Toner Sensors	Detects which color toner development unit is installed.	11
S6	First Paper End Sensor	Informs the CPU when the first cassette runs out of paper.	14
S7	Second Paper End Sensor	Informs the CPU when the second cassette runs out of paper.	16
S8	First Paper Size Sensor	Determines what size paper is in the first cassette.	17
S9	Second Paper Size Sensor	Determines what size paper is in the second cassette.	18
S10	Registration Sensor	Misfeed detector and ON/OFF timing.	19
S11	Paper Exit Sensor	Misfeed detector.	25
S12	Second Scanner Home Position Sensor	Informs the CPU when the second scanner is at the home position.	28
S13	Scanner Home Position Sensor	Informs the CPU when the scanner is at the home position.	31
S14	Toner Overflow Sensor	Detects when the used toner bottle is full.	22
S15	Oil End Sensor	Detects low oil condition.	24
Printed Circuit Boards			
PCB1	Lamp Regulator PCB	Regulates the exposure lamp voltage.	27
PCB2	Relay PCB	Main power relay. Provides 100 volts ac to motors and circuits.	36
PCB3	Interface PCB	Interfaces the data between the copier main board and the sorter and/or DF main boards.	42
PCB4	Feed Control PCB	Contains multiplexing circuitry to control feed components.	45
PCB5	Heater Control PCB	Controls heater switching.	40
PCB6	Main PCB	Controls all copier functions both directly and through other PCBs.	46

SYMBOL	NAME	FUNCTION	LOCATION
Lamps			
L1	Quenching Lamp	Neutralizes any charge remaining on the drum surface after cleaning.	4
L2	Erase Lamp	Discharges the drum outside the image area. Provides lead/trail edge erase and editing functions.	6
L3	Pre-Transfer Lamp	Reduces charge on the drum surface before transfer.	20
L4	Fusing Lamp	Provides heat to the fusing unit.	23
Power Packs			
P1	Power Pack - T/S	Provides dc voltage for the transfer and provides ac and dc voltage for the separation corona.	41
P2	Power Pack - C/B	Provides high voltage power for the charge corona and the development roller bias.	47
Transformer			
TR1	Transformer	Steps down the wall voltage to 100 Vac.	38
Counter			
CO1	Total Counter	Keeps track of the total number of copies made.	29
Relays			
RA1	AC Drive Relay	Main power relay to fusing lamp and heater control board.	49
RA2	AC Drive Relay	Main power relay to main motor and exposure lamp.	50
Others			
C	Main Motor Capacitor	Start capacitor	34
FT	Fusing Triac	Switches the fusing lamp on and off.	39
PSU	DC Power Supply Unit	Rectifies the 100 Vac input and outputs dc voltages.	37

AC AND DC POWER DISTRIBUTION

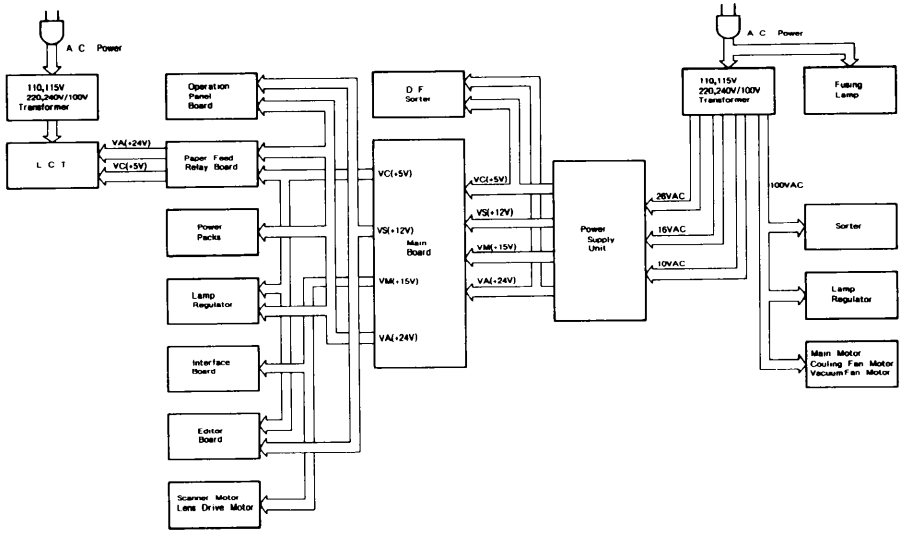

The ac power supply is filtered then distributed to the fusing lamp and the main transformer. The transformer supplies 100 volts to the cooling fan, vacuum fan, and the main motor.

The dc power supply unit receives ac 26, 16, and 10 volts, via fuses, from the main transformer. These voltages are rectified and regulated to 24, 15 and 12, and 5 volts respectively and distributed to the sorter, ADF, and the copier main board. All supplies have their own ground line.

The main board supplies voltage to all copier electrical components including: power packs, PCBs, and relays. It also supplies the editor.

The LCT has a separate power supply.

OVERALL MACHINE CONTROL

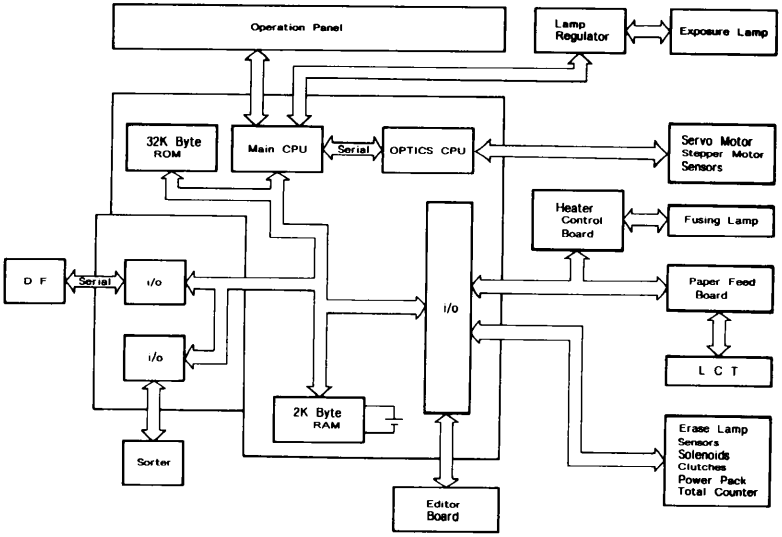

The base copier has two CPUs on the main board that control all machine operations (the main CPU and the optics CPU).

The main CPU is the main controller of this copier. It monitors the input signals from sensors and controls the electrical devices through programmable I/O devices. The main board has a RAM (2 kbyte) for the service program function. A battery backs up the power to this RAM. This CPU controls the fusing lamp, via the heater control board, the exposure lamp, via the lamp regulator, and motors directly from the main board.

The optics CPU controls the servomotor (15 volts) and the stepper motors (24 volts) for the optics section.

The interface board is connected to the copier main board when the document feeder or sorter is installed.

OPERATION PANEL CONTROL

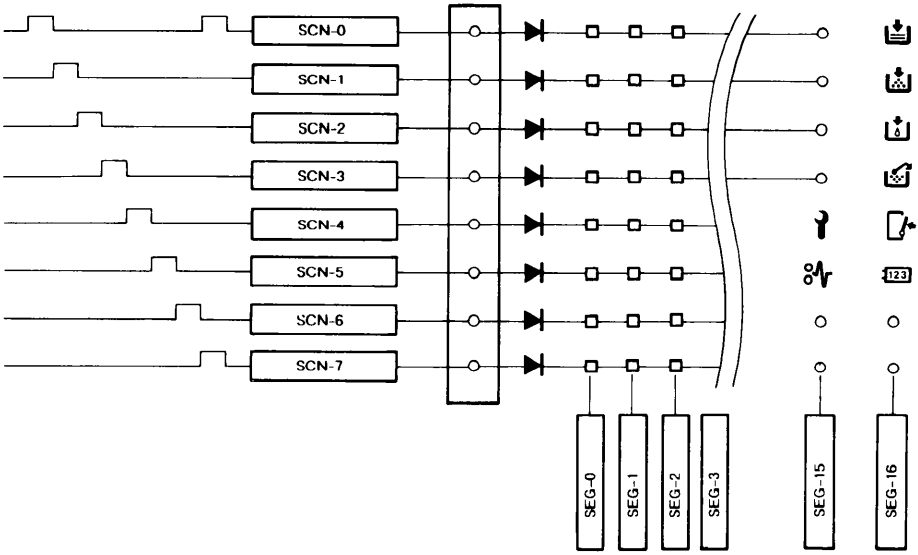

The CPU controls all functions of the operation panel. The CPU sends data to programmable I/O devices which form a multiplexing circuit consisting of 8 scan lines and 17 segment lines. Transistors drive all the scan lines at 12 volts to reduce effects from noise.

The multiplexing circuit lights all displays and monitors all keys of the operation panel. The door switch is also monitored by this circuit and acts like any other operation panel key. The counters are also controlled by the operation panel multiplexing circuit and act like the operation panel lamps.

DRUM

1. Selenium Drum

Selenium has the characteristics of:

1. Being able to accept a high positive electrical charge in the dark. (The electrical resistance of selenium is high in the absence of light.)

2. Dissipating the electrical charge when exposed to light. (The conductivity of selenium is greatly enhanced by exposure to light.)

3. Dissipating an amount of charge in direct proportion to the intensity of the light. That is, where a stronger light illuminates the selenium surface, a smaller voltage remains on the selenium.

The sensitivity of selenium changes slightly with variations in the surface temperature of the drum. (Under cool conditions, the drum may be excessively charged; this will result in background or excessive image density.) To prevent this, the CPU monitors the temperature variations around the drum and changes the development bias accordingly.

Drum sensitivity also depends on how long the drum has rested between copy runs. The copier's CPU compensates for changes in drum sensitivity due to rest time by changing the development bias. This prevents variations in image density at the beginning of copy runs

The selenium drum used in this model has high sensitivity, good color reproduction, and good reproduction of low contrast originals (pencil originals, etc.)

2. Handling the Drum

1. Never touch the drum surface with bare hands.
2. Store the drum in a cool dry place away from heat.
3. When cleaning the drum, always use a pair of gloves.
4. Prime the drum with setting powder only when installing a new drum.
5. Never expose the drum to light for long periods.
6. Drum conditioning is necessary after installing a new drum. In addition, it should be done at the following times:
   1) When image density is reduced due to over exposure of the drum
   2) After cleaning the drum
   3) When the drum is lightly scratched.
7. Always keep the drum in the protective sleeve when inserting or pulling the drum out of the copier.
8. Before inserting or pulling out the drum, pull the cleaning unit out slightly to avoid scratching the drum on the pick-off pawls.
9. Return used drums to the distributor according to standard procedure.

DRUM CHARGE

1. Overview

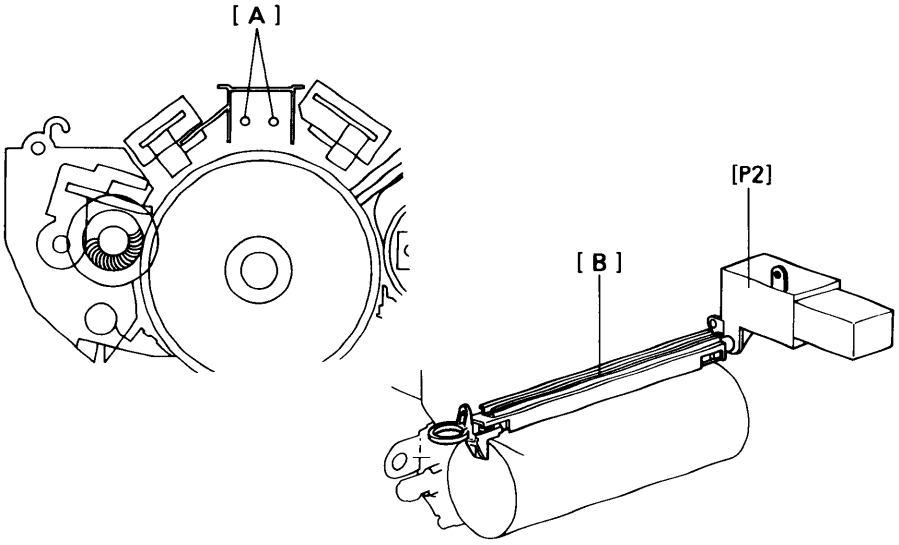

This copier uses a dual wire corotron [A] and a highly sensitive selenium drum. The corona wires generate a corona of positive ions when a the charge power pack [P2] applies a high positive voltage. The selenium coating receives a uniform positive charge (750 ± 50 volts) as it rotates past the corona unit [B].

The main motor fan [C] provides a smooth flow of air to the interior of the charge corona unit to prevent uneven build-up of positive ions. (An uneven build up of positive ions could cause uneven image density.)

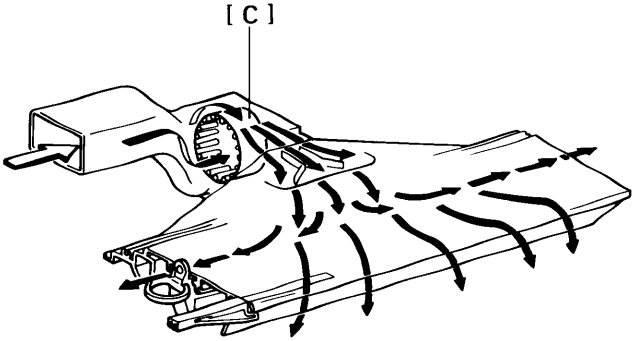

2. Corona Wire Cleaner

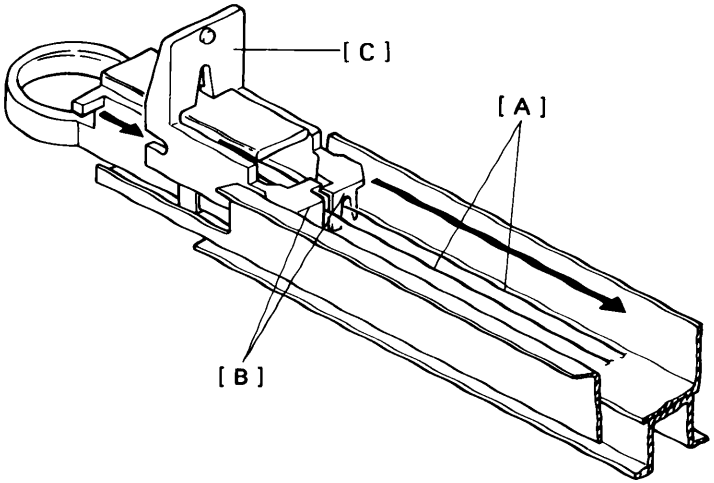

The flow of air around the charge corona wires [A] may deposit paper dust or toner particles on the corona wires. These particles may interfere with charging and cause low density bands on copies. The wire cleaner [B] allows the operator to correct this problem by simply pulling out and pushing in the corona unit.

Each corona wire is held between two pads on the wire cleaner bracket [C]. The wires ride between the pads when the unit is pulled out, and the pads clean off any particles on the wires.

3. Charge Corona Power Pack

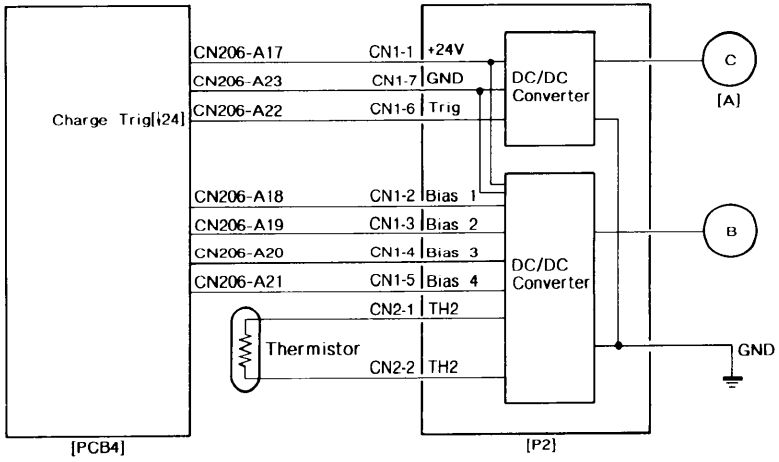

The circuit operation for the charge corona [A] begins with the input of +24 volts to the power pack at CN617-1. This power supply is used for the high voltage coronas.

The charge corona turns on 0.42 second after the Start key is pressed. A LOW signal from the main board (at CN206-A22) energizes the power pack.

The charge corona always turns on at the same time, but the off timing depends on paper size.

ERASE

1. Overview

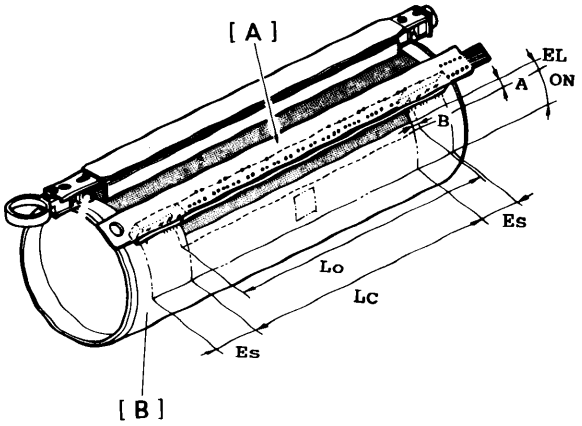

A: Lead Edge Erase Margin
B: Side Margins -- 2 ± 2 mm each (For full size copies, the total of both side margins is less than 4 mm.)
Lo: Original Image width
Lc: Charged width on the Drum
EL: Lead Edge Erase
Es: Side Erase
R: Paper Lead Edge Registration -- 0 ± 2 mm
A+R: Lead Edge Blank Margin -- 3.5 ± 2.5 mm

The erase lamp [A] consists of a line of LEDs extending across the full width of the drum [B].

The erase lamp has three functions: lead edge erase, side erase, and trail edge erase. Trail edge erase begins after the trailing edge of the copy paper; therefore, the trailing edge of the copy will not be erased.

The erase lamp unit [A] also has two thermistors: TH-1 and TH-2. Both of these thermistors detect the temperature around the drum. TH-1 selects the proper rest time compensation, and TH-2 controls the development bias voltage.

2. Lead Edge Erase

The entire line of LEDs turns on when the main motor turns on. They stay on until the erase margin slightly overlaps the lead edge of original image area on the drum (Lead Edge Erase Margin). This prevents the toner density sensor pattern from being developed on every copy cycle and prevents the edge of the original from appearing on the copy image. The width of the lead edge blank margin can be adjusted using DIP switches SW101-5, -6, -7, and -8.

Lead Edge Erase

	Narrower ← → Wider															
DIP SW101-5	0	0	0	0	0	0	0	0	1	1	1	1	1	1	1	1
DIP SW101-6	0	0	0	0	1	1	1	1	0	0	0	0	1	1	1	1
DIP SW101-7	0	0	1	1	0	0	1	1	0	0	1	1	0	0	1	1
DIP SW101-8	0	1	0	1	0	1	0	1	0	1	0	1	0	1	0	1

0:OFF
1:ON
One Step:0.8mm(0.03")

During image density detection cycles (once every ten cycles), the center block of erase lamps turns off long enough for the sensor pattern to be developed.

3. Side Erase

Based on the paper size and on the reproduction ratio, the LEDs turn on in pairs (one on either side) to discharge the drum potential on both sides. This reduces toner consumption and drum cleaning load.

The CPU adjusts the side erase margin to be as near as possible to the actual image size, even when using the zoom function. However, since the erase lamp LEDs will not work in precise one millimeter intervals, the side erase margin varies slightly depending on the reproduction ratio. The width of the side erase margin varies from 0 mm to a maximum of 6 mm (total of both sides).

- SIDE ERASE OPERATION -

The tables below show which erase lamps turn off, according to the paper size and reproduction ratio selected. Note that A3 side edge erase occurs because the charge corona end block covers stop the edges of the drum from receiving charge.

	OFF LED	Reproduction Ratio	Paper Size	Erase Width(mm)
1	1-64	98-155%	A3 A4 Sidewise	2x2
2	2-63	94-98%		6x2
3	3-62	91-94%	DLT LT Sidewise	11x2
4	4-61	87-91%		16x2
5	5-60	85-87%	B4	22x2
6	6-59	81-85%		26x2
7	7-58	78-81%		30x2
8	8-57	76-78%		34x2
9	9-56	73-76%		38x2
10	10-55	71-73%	LG,F4 LTR,HLT	42x2
11	11-54	69-71%	A4 Lengthwise A5 Sidewise	45x2
12	12-53	66-69%	F	49x2
13	13-52	65-66%		55x2
14	14-51	All Reproduction Ratio	B5 Lengthwise B6 Sidewise	60x2
15	17-48	All Reproduction Ratio	A5 Lengthwise	76x2
16	19-46	All Reproduction Ratio	B6 Lengthwise	86x2
17	22-43	All Reproduction Ratio	A6	98x2
18	30-35		ID Sensor Pattern	135x2

TRAIL EDGE ERASE

Normally, the erase lamps turn on after the trailing edge of the latent image has passed. Therefore, a trail edge erase margin cannot be observed on the copy. Trail edge erase ON timing is the same as charge corona OFF timing. During enlargement or reduction, the trail erase ON timing changes according to the paper size and the reproduction ratio.

ERASE LAMP CIRCUIT

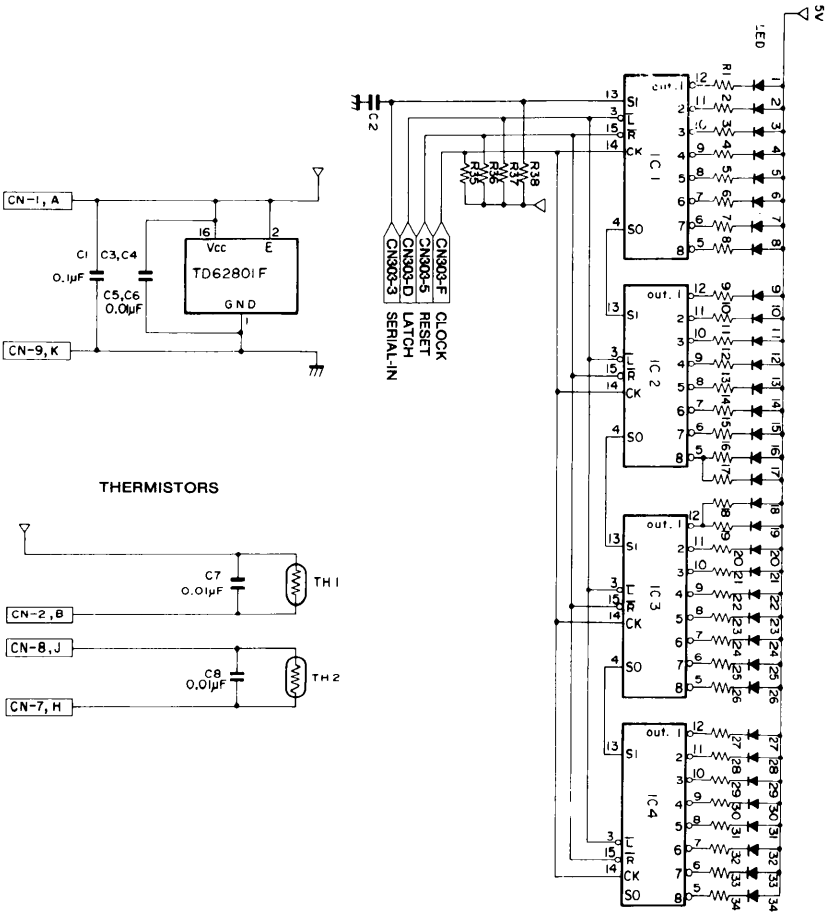

This copier uses 34 LEDs in the erase lamp unit.

Shift register drivers control the LEDs. Initially, the RESET signal (LOW active) turns off all the shift registers. Then the main board sends erase lamp data to the shift registers from CN203-13 to connect CN303-3 on the erase lamp unit.

After the RESET signal goes back to HIGH, the shift registers start accepting data. If the data line is HIGH at the time of the CLOCK pulse (rising edge), the shift register is set to turn the LED on; if it is LOW, the the shift register is set to keep the LED off. The data in the shift registers is shifted right one position at the start of each clock cycle; so, it takes 64 CLOCK pulses to set the shift registers for all the LEDs.

After all data bits have been sent, the main board sends the LATCH signal to turn on the erase lamp unit. The latch signal sets the shift registers which turn on all LEDs for which data bits have been set.

The center section of LEDs turns on and off as a block, and the outer LEDs turn on and off in pairs.

OPTICS

1. Overview

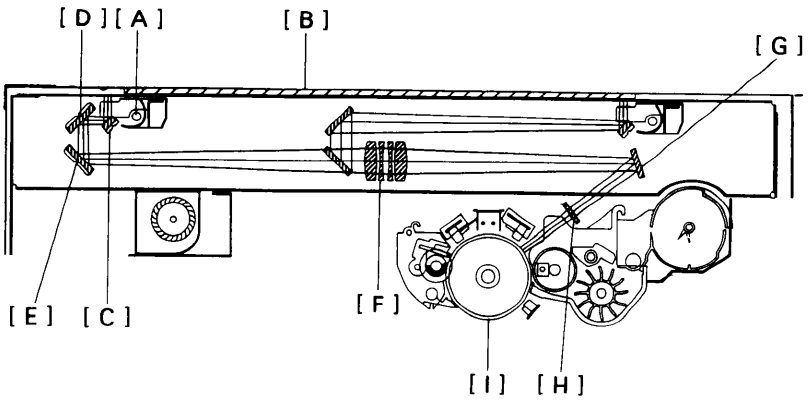

During the copy cycle, an image of the original is reflected onto the drum surface via the optics assembly as follows.

Light Path:

Exposure Lamp [A] --> Original [B] --> First Mirror [C] -->

Second Mirror [D] --> Third Mirror [E] --> Lens [F] -->

Fourth Mirror [G] --> Toner Shield Glass [H] --> Drum [I]

The cooling blower [J] circulates cool air into the optics cavity. The air flows from the right to the left in the optics cavity and exhausts through the vents in the top cover. This blower operates during every copy cycle.

This model has eight standard reproduction ratios: four reduction ratios, three enlargement ratios, and full size. In addition, it has a zoom function. The user can change the reproduction ratio in one percent steps from 65% to 155%.

Stepper motors are used to change the positions of the lens and mirrors. Separate motors are used because of the wide range of reproduction ratios. The scanner drive motor is a servomotor and is controlled by the optics CPU. The scanner drive motor changes the scanner speed depending on the reproduction ratio.

This copier has two special functions: (1) the 2 Single Copies mode, which makes two single copies from a bound document, and (2) the Image Edit mode which can save or delete sections of the image. The Edit Image functions are achieved by turning individual erase lamp LEDs ON/ OFF.

2. Scanner Drive

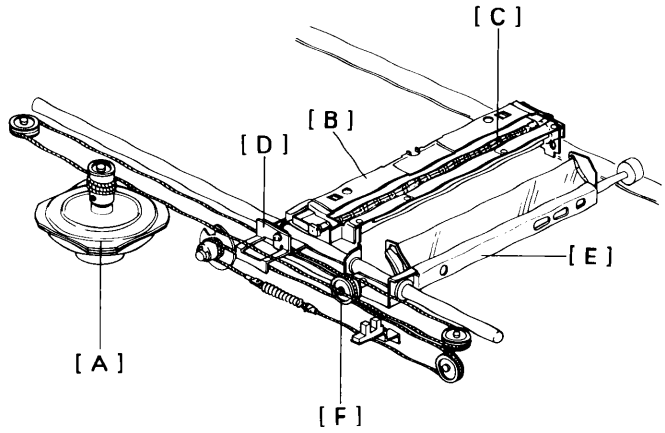

- SCANNER DRIVE MECHANISM -

This model uses a dc servomotor [A] to drive the scanners.

The first scanner [B], which consists of the exposure lamp [C] and the first mirror, is connected to the scanner drive wire by the wire clamp [D]. The second scanner [E], which consists of the second and third mirrors, is connected to the scanner drive wire by a movable pulley (the second scanner pulley [F]).

The pulley moves the second scanner at half the velocity of the first scanner. This is to maintain the focal distance between the original and the lens during scanning. This relationship can be expressed as:

$$V1r = 2(V2r) = VD/r$$

where: r = Reproduction ratio
V1r = First scanner velocity (when the reproduction ratio is "r")
V2r = Second scanner velocity (when the reproduction ratio is "r")
VD = Drum peripheral velocity (150 mm/s)

The wire clamp for the first scanner also works as the actuator of the home position sensor. The CPU controls both the Registration and return timing.

- SCANNER MOTOR CONTROL -

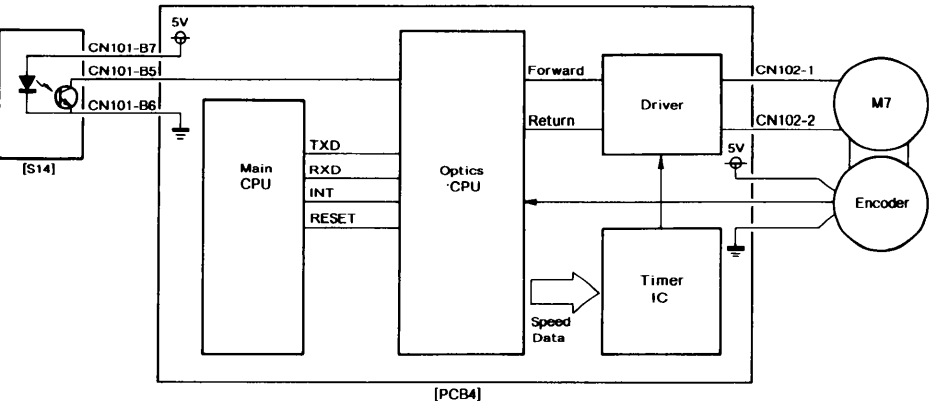

The scanner drive motor [M7] is a servomotor. The optics CPU on the main board [PCB 4] controls the speed of this servomotor. The main CPU and the optics CPU communicate through a serial interface bus.

At the programmed time, the main CPU sends a scanner start signal to the optics CPU. The optics CPU then checks the drum speed by monitoring the pulses from the pulse generator. Based on this input, the optics CPU determines the proper speed for the scanner drive motor. The optics CPU sends the speed data to the timer IC which sends the motor drive pulses.

An encoder on the servomotor has a magnetic sensors that generates pulse signals. The optics CPU monitors the scanner speed by these pulse signals and uses this data to regulate the servomotor speed.

The home position sensor [S14] informs the optics CPU whether the first scanner is in the home position.

3. Lens/Mirror Positioning

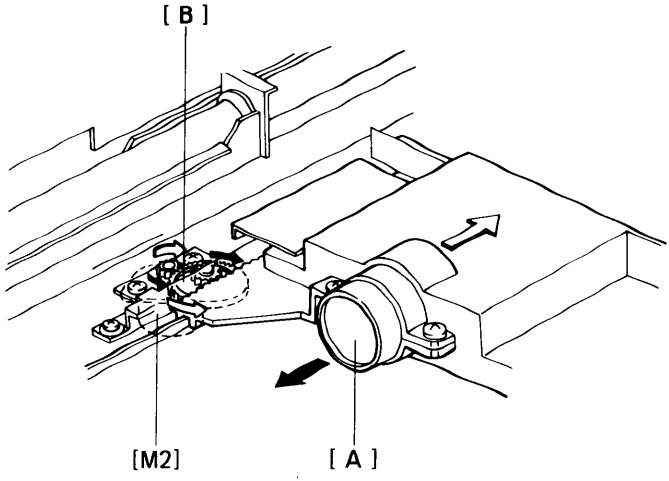

- LENS DRIVE -

The lens drive motor [M2] (stepper motor) changes the lens [A] position in accordance with the selected reproduction ratio to provide the proper optical distance between the lens and the drum surface.

The lens drive motor drives the entire lens unit through an idle gear [B]. The rotation of the lens drive pulley moves the lens back and forth in discrete steps.

- Lens Positioning -

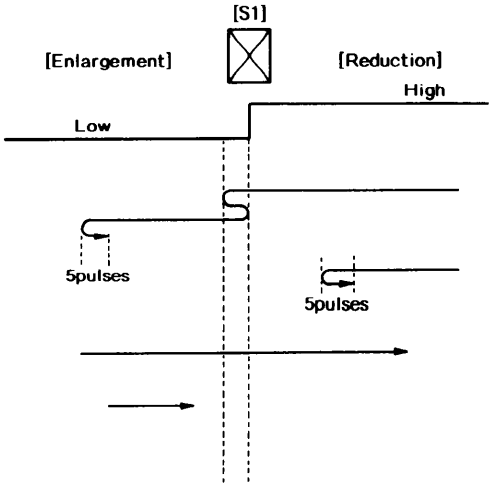

The lens home position sensor [S1] informs the optics CPU when the lens is at the full size position (home position). The optics PCB determines the lens stop position in reduction and enlarge modes by counting the number of steps the motor makes with reference to the lens home position. After changing the reproduction ratio, the lens moves directly to the selected magnification position.

Lens home position is registered each time the lens starts from or passes through the lens home position sensor. As the lens moves from the enlargement side to the reduction side, it registers the home position. At registration there is a LOW to HIGH voltage change at CN101-B1 of the main board. This occurs when the actuator blade enters the lens home position sensor.

A small vibration can be observed when the lens moves through home position from reduce to enlarge because the lens is going in the wrong direction to register. The lens overshoots the home position by only one step before going back to reference home position.

- SECOND SCANNER DRIVE -

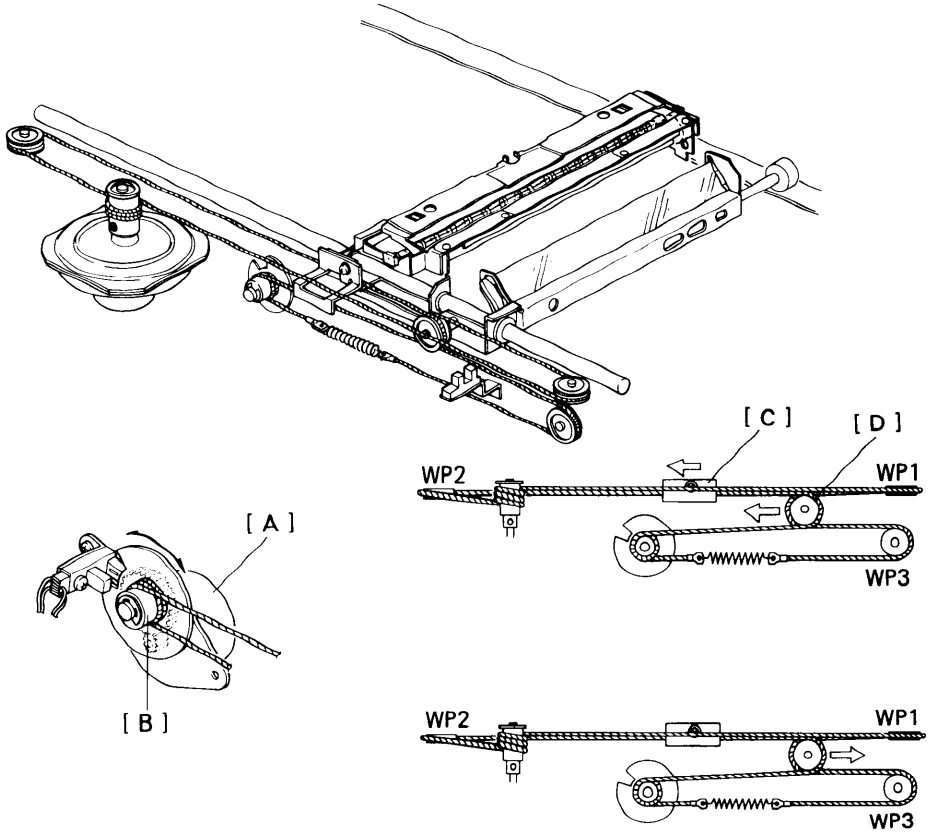

To provide the proper optical distance between the original and the lens, this model uses a stepper motor [A] to move the second scanner. A separate motor is used because the second scanner must travel a long distance to accommodate the wide range of reproduction ratios. The single scanner drive wire provides the second scanner with drive as well as correcting the second scanner position.

When the second scanner drive pulley [B] turns to change the scanner position, WP1 and WP2 do not turn. So, the wire clamp [C] stays at the home position and only the second scanner pulley [D] moves. When the scanner drive pulley turns, WP3 does not rotate; however, the second scanner pulley and the wire clamp do move.

As the second drive motor drives the second drive pulley directly, then the second scanner can be positioned manually (for maintenance etc.).

- Second Scanner Positioning -

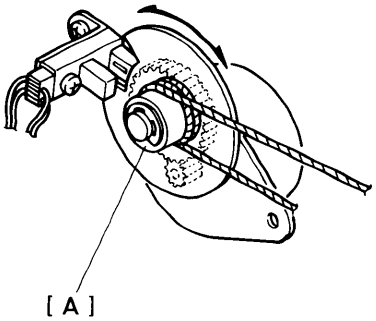

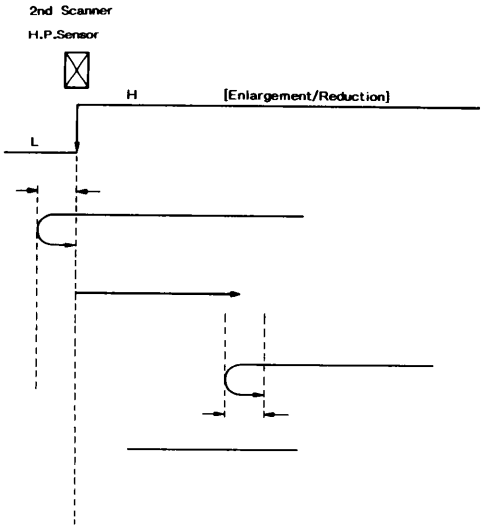

Like the lens, the second scanner is positioned by counting the number of steps from the home position. Second scanner home position is determined by a HIGH to LOW to HIGH change at CN101-B2 of the main board.

When moving away from the home position, the second scanner drive pulley [A] turns clockwise and moves the second scanner directly to the selected position. However, when moving closer to the home position (pulley turning counterclockwise), the second scanner overshoots the selected position by 5 steps and then returns to the selected position. This takes out any mechanical play.

4. Stepper Motor Control

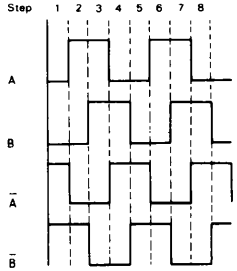

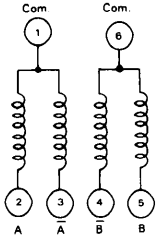

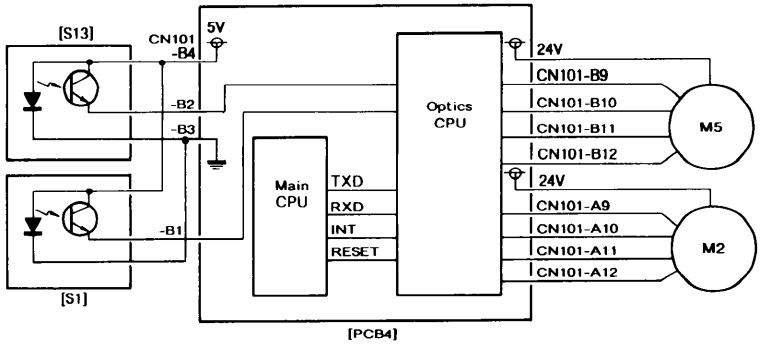

Both the lens drive motor [M2] and the second scanner drive motor [M5] are stepper motors. The stators of these stepper motors have four coils (labeled A, B, A and B above), and the rotors are permanent magnets.

Pulse signals energize the four coils as shown in the above illustration. The rotor turns in discrete steps.

5. Automatic Image Density Sensing

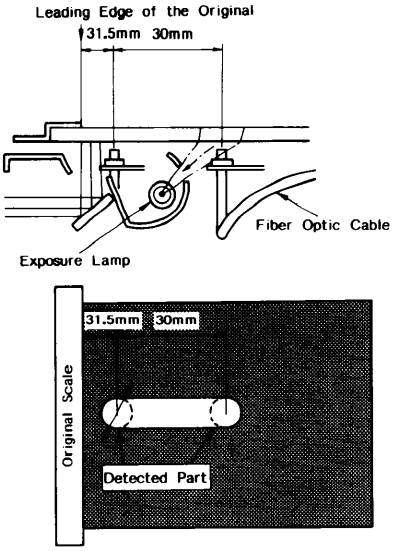

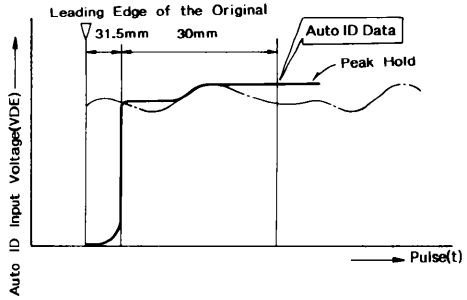

The input for the automatic image density circuit is via a fiber optic cable [A] that is mounted on the first scanner. Light from the exposure lamp [B] passes through a small hole in the reflector, reflects from the original, and is collected by the fiber optic cable. The sampled strip starts 31.5 millimeters from the leading edge of the original and is 8 millimeters wide and 30 millimeters long.

The fiber optic cable conducts the light to a sensor (photodiode) on the lamp regulator. The sensor circuit converts the light intensity to a voltage level. The detected voltage is adjustable via a variable resistor on the lamp regulator board. A peak hold circuit keeps the maximum voltage.

The lamp regulator sends the the maximum voltage value to the main board. The CPU then computes the correct image density and adjusts the development bias accordingly. (See the section on image density control for more information.)

6. Exposure Lamp Control

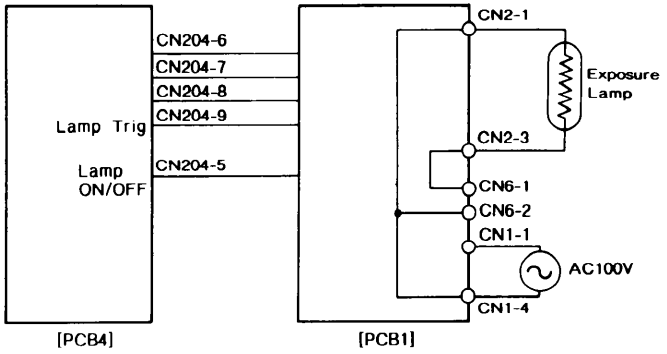

The lamp regulator board controls the exposure lamp. The voltage applied to the exposure lamp is determined by the combination of HIGH and LOW signals at CN204-6, -7, and -8.

The main CPU sends the lamp trigger signal 0.13 seconds after the registration clutch turns off.

The main CPU constantly monitors CN204-5 to check whether the lamp is on or off. If CN204-5 bocomes HIGH when CN204-9 is LOW (lamp ON) or CN204-5 bocomes LOW when CN204-9 is HIGH (lamp OFF), the CPU displays SC11. RA1-RA3 opens at the same time, cutting the +24V power line.

7. Service Call Conditions

SELF DIAGNOSTIC CODE 11:

Exposure Lamp Malfunction
Code 11 is displayed if the lamp monitor voltage is detected during standby (lamp on), or if the lamp filament opens.

SELF DIAGNOSTIC CODE 21:

Scanner Home Position Check
Code 21 is displayed if the scanner home position sensor stays deactivated for more than 2 seconds. This code is effective only when the scanner home position is initialized.

SELF DIAGNOSTIC CODE 23:

No Registration Start Signal
Code 23 is displayed if the optics CPU does not send the registration start signal to the main CPU. The main board waits 4 seconds for this signal.

SELF DIAGNOSTIC CODE 24:

No Scanner Home Position Signal
Code 24 is displayed if the optics CPU does not send the scanner home position signal to the main CPU. The main board waits 20 seconds for this signal.

SELF DIAGNOSTIC CODES 28 AND 29:

Lens Home Position Check
Code 28 is displayed if the lens home position sensor stays deactivated more then 3 seconds. Code 29 is displayed if the lens home position sensor stays activated moer than 3 seconds.

SELF DIAGNOSTIC CODES 2A AND 2B:

Second Scanner Home Position
At certain times (power ON, clear, timer) the second scanner either moves to its home position or moves out and back. Code 2A is displayed if the second scanner home position sensor stays deactivated longer than 2.5 seconds. Code 2B is displayed if the second scanner home position sensor stays activated longer than 2.5 seconds.

SELF DIAGNOSTIC CODES 2C AND 2D:

Scanner Motor Encoder Frequency
Code 2C is displayed if the frequency of the signal from the scanner motor encoder is too high. Code 2D is displayed if the frequency of the scanner motor's signal is too low.

DEVELOPMENT

1. Overview

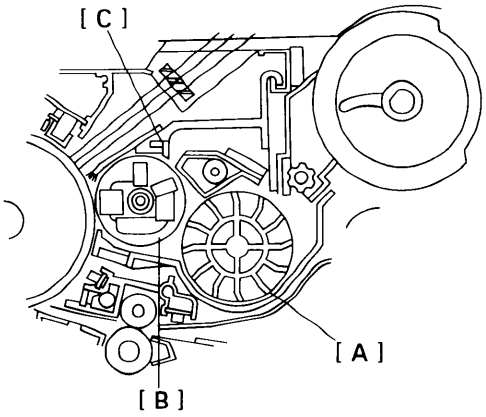

When the main motor turns on, the paddle roller [A] and development roller [B] start turning. The paddle roller picks up developer in its paddles and transports it to the development roller. Internal permanent magnets in the development roller attract the developer to the development roller sleeve.

The turning sleeve of the development roller then carries the developer past the doctor blade [C]. The doctor blade trims the developer to the desired thickness and creates backspill to the cross-mixing mechanism.

The development roller continues to turn, carrying the developer to the selenium drum. When the developer brush contacts the drum surface, the positively charged areas of the drum surface attract and hold the negatively charged toner. In this way, the latent image is developed.

Positive bias is applied to the development roller to prevent toner from being attracted to non-image areas on the drum that may have residual positive charge. The bias also controls image density.

After turning about 100 degrees more, the development roller releases the developer to the developer tank. The developer is agitated by the paddle roller and the cross-mixing mechanism.

2. Drive Mechanism

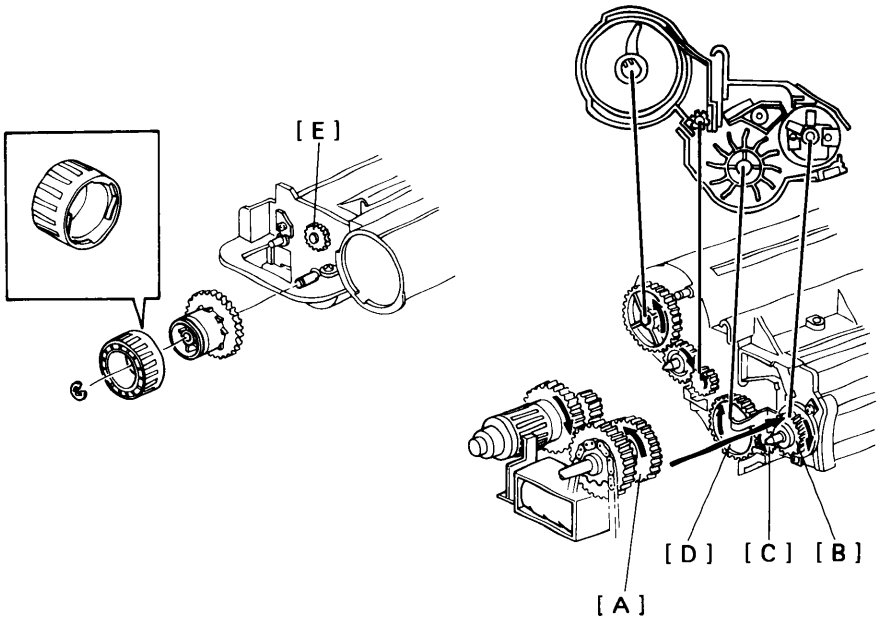

The development drive gear [A] drives the gears of the development unit when the main motor is turning. The rotation is transmitted from the development drive gear to the development roller gear [B] and then through an idle gear [C] to the paddle roller gear [D]. A gear on the front end of the paddle roller shaft drives the auger gear [E].

The paddle roller shaft has a knob on its front end to facilitate gear engagement and to turn the rollers for developer exchange. The paddle roller knob has a one-way clutch inside. The one way clutch prevents the development roller from turning in the opposite direction, which would cause the developer brush to damage the upper brush seal.

3. Seals and End Magnets

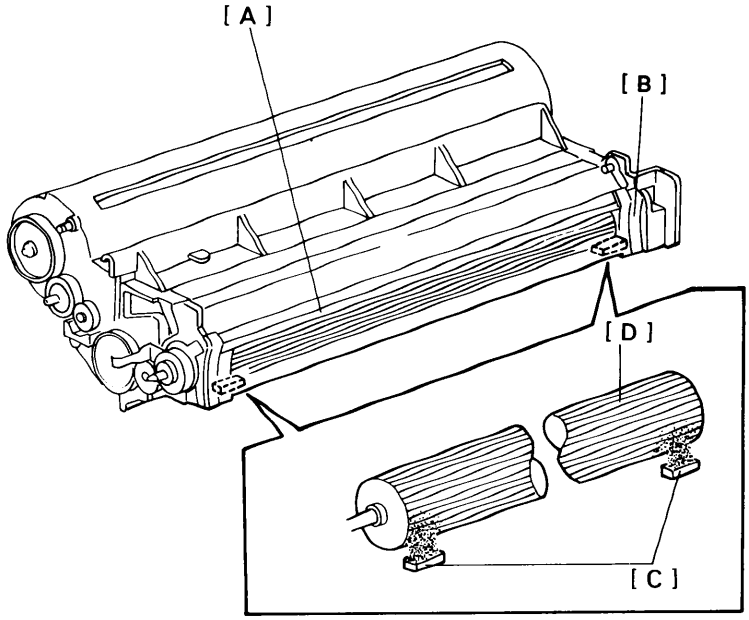

Several seals prevent toner from spilling out into the copier. The upper brush seal [A] prevents particles from scattering upward. The side seals [B] at the ends of the development unit contact the drum ends out of the image area; they prevent toner from scattering out the sides.

Since the internal permanent magnets are shorter than the development roller sleeve the toner tends to scatter from both ends. To reduce this scattering of toner, small magnets [C] are mounted under the ends of the development roller [D]. These magnets create small magnetic fields that stop developer particles from scattering.

4. Cross-mixing

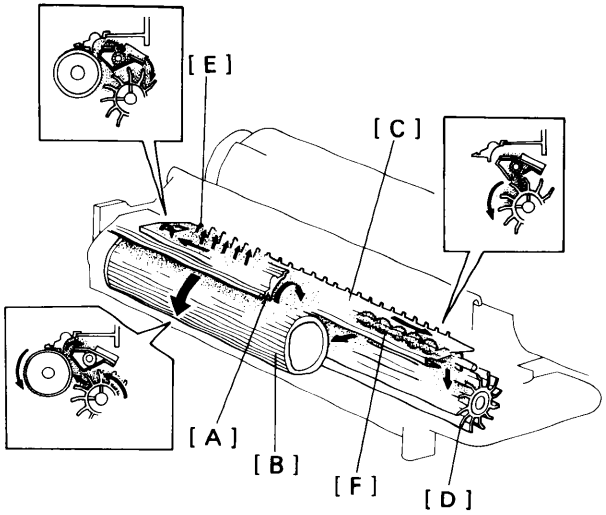

This copier uses a standard cross-mixing mechanism to keep the toner and developer evenly mixed. It also helps agitate the developer to prevent clumping and helps create the triboelectric charge.

The developer on the turning development roller is split into two parts by the doctor blade [A]. The part that stays on the development roller [B] forms the magnetic brush and develops the latent image on the drum. The part that is trimmed off by the doctor blade goes to the backspill plate [C].

As the developer slides down the backspill plate to the paddle roller [D], the mixing vanes [E] move it slightly toward the rear of the unit. Part of the developer falls into the auger inlet and is transported to the front of the unit by the mixing auger [F].

5. Image Density Control

Image density is controlled by changing two items: (1) the strength of the bias voltage applied to the development roller sleeve, and (2) the strength of the voltage applied to the exposure lamp.

Applying a bias voltage to the development sleeve reduces the potential between the development roller and the drum, thereby reducing the amount of toner transferred. As the bias voltage becomes greater, the copy image becomes lighter. Similarly, increasing the voltage to the exposure lamp causes an increase in light intensity which also results in lighter copies.

The method of control is different depending on whether the image density is manually selected or the automatic ID system is used.

- MANUAL IMAGE DENSITY CONTROL -

Manual Image Density Control

		Image Density Level (Auto Image Density Base Level)							Lamp Voltage(V)
		1	2	3	4	5	6	7	
Manually Selected ID Level	1	230	260	290	320	380	440	500	Vo-2.5
	2	200	230	260	290	350	410	470	Vo
	3	200	200	230	260	320	380	440	Vo+2.5
	4	200	200	230	260	320	380	440	Vo+5
	5	200	200	230	260	320	380	440	Vo+7.5
	6	200	200	230	260	320	380	440	Vo+10
	7	230	260	290	320	380	440	500	Vo+10

Development Bias Voltage (V)

When image density is set manually, the bias depends on two factors: the auto image density base level, and the manually selected ID level. (See the above table.) The exposure lamp voltage also varies as shown in the table.

NOTE: **To set the auto image density base level, simultaneously press and hold the Clear/Stop key and press the Auto ID key. Then, select the base level using them manual ID keys.**

- Automatic Image Density Control -

Bias Data				Bias Output(V)
SEL4	SEL3	SEL2	SEL1	
0	0	0	1	200
0	0	1	0	230
0	0	1	1	260
0	1	0	0	290
0	1	0	1	320
0	1	1	0	350
0	1	1	1	380
1	0	0	0	410
1	0	0	1	440
1	0	1	0	470
1	0	1	1	500
1	1	0	0	530
1	1	0	1	560
1	1	1	0	590
1	1	1	1	620
0	0	0	0	MAX50

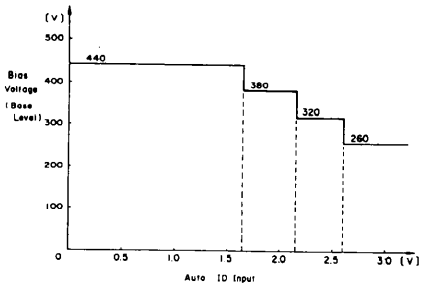

Auto Image Density Control

Auto Image Density Sensor Output Voltage	Image Density Level (Auto Image Density Adjustment) 1	2	3	4	5	6	7	Lamp Voltage[V]
5V-2.6V	200	200	230	260	320	380	440	Vo+5
2.6V-2.16V	230	260	290	320	380	440	500	
2.16V-1.65V	290	320	350	380	440	500	560	
1.65V-0V	350	380	410	440	500	560	620	

Development Bias Voltage (V)

When automatic image density control is on, the exposure lamp voltage is set to Vo+5 volts. A change in the bias voltage only controls the image density. The normal factory setting is the fourth column; however, this setting can be changed for troubleshooting or to satisfy customer requirements by selecting the Auto ID mode, holding down the Clear/Stop key, and pressing the image density keys.

At the start of the copy cycle the original sensing mechanism measures the background density of the original image. It does this by measuring the strength of the light reflected from a 30-mm strip near the leading edge of the original. A fiber optic cable pipes the reflected light to a photodiode on the lamp regulator board. The photodiode is the input element of the auto ID circuit.

The CPU checks the voltage output by the auto ID circuit. This circuit has a peak hold function. The peak hold voltage corresponds to the maximum reflectivity of the original. The CPU then determines the proper bias base level, with reference to the peak hold voltage, and sends a 4-bit control signal to the power pack. The power pack then applies the proper bias to the development roller.

- Bias Compensation Factors -

As discussed previously, either the automatic image density system or the operator, through the image density keys, sets the bias base level (V_1). The CPU increases the bias base level as necessary to compensate for the rest time between copy runs and the drum temperature, both of which affect drum sensitivity.

TD: 10°C-20°C

Copy# / Rest Time	1	2	3	4-5	6-10
0-10sec	One step down from previous states				
10sec-3min					
3min-50min	30	30	0	0	0
50min-2hr	30	30	30	0	0
2hr-	60	30	30	30	0

TD: 20°C-45°C

Copy # / Rest Time	1	2	3	4-5	6-10
0-10sec	One step down from previous states				
10sec-3min	30	30	30	0	0
3min-50min	60	60	30	30	0
50min-2hr	90	60	60	30	30
2hr-	120	90	90	60	30

TD: Drum Temperature

- Rest Time Compensation (V2) -

The drum sensitivity often drops slightly over the first few cycles of a copy run. This is because the light from the exposure lamp fatigues the drum slightly, and it takes a few copies for the selenium to restabilize. The amount that the sensitivity drops depends on the drum's temperature and the rest time between copy runs (the longer the rest time, the greater the change).

The copier increases the bias at the beginning of each copy run to prevent variations in the image density of the first few copies produced. The above two tables show the amount of bias increase. If the drum temperature is less than 10 degrees Celsius, no rest time compensation is applied.

When the main switch is turned on, the CPU automatically selects the "greater than two hours" rest time compensation level.

- Drum Temperature Compensation (V3) -

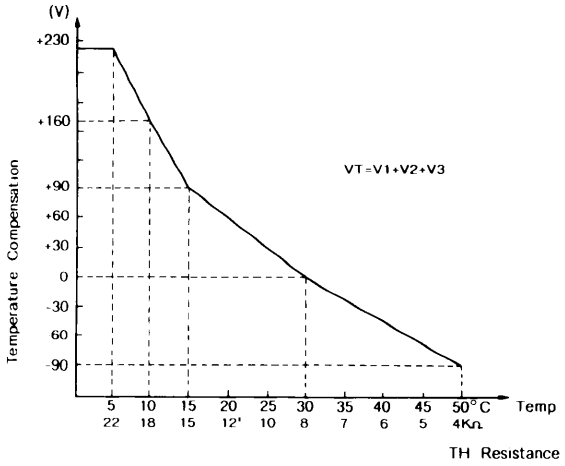

The Charge/Bias Power Pack monitors drum temperature through a thermistor (TH-2), and it increases or decreases the bias voltage to compensate for variations in drum sensitivity that are induced by temperture changes in the drum cavity. The temperature compensation is effective from 5 degrees to 45 degrees (Celsius).

As shown by the "knee" in the above chart, the temperature compensation factor depends on the temperature range. Between 5°C and 15°C, the change in V_3 is -14 V/°C; between 15°C and 50°C, the change in V_3 is -5 to -6V/°C.

Total Bias (VT) -

The total bias applied to the development roller sleeve is the sum of the base bias and the two compensating factors.

6. Bias for ID Sensing

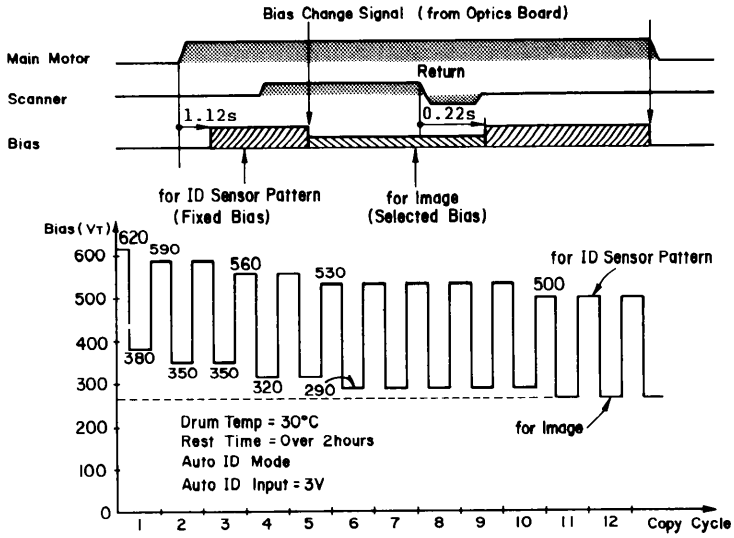

To develop the ID sensor pattern consistently, the CPU applies a fixed base bias level to the development roller at the beginning of each copy cycle. The fixed base bias is 500 volts (DIP switch selectable) after ten copies; prior to which, it is affected by drum cavity temperature and drum rest time.

The CPU applies the ID sensor bias to the development roller about 1.12 seconds after the Start key is pressed. Just after the sensor pattern is developed, the CPU changes the bias output to the level selected by auto ID sensor or the operator for image development. The bias output remains at this level until 0.22 second after the scanner starts returning.

The ID sensor bias can be changed to adjust the overall image density by DIP switch 201 (on the main board) as follows:

ID Sensor Bias (DIP SW201)

201-4	201-5	Base Bias
OFF	OFF	470V
ON	OFF	440V
OFF	ON	500V
ON	ON	530V

Normally DIP SW201-4 is off and 5 is on (factory preset).

7. Bias Control Circuit

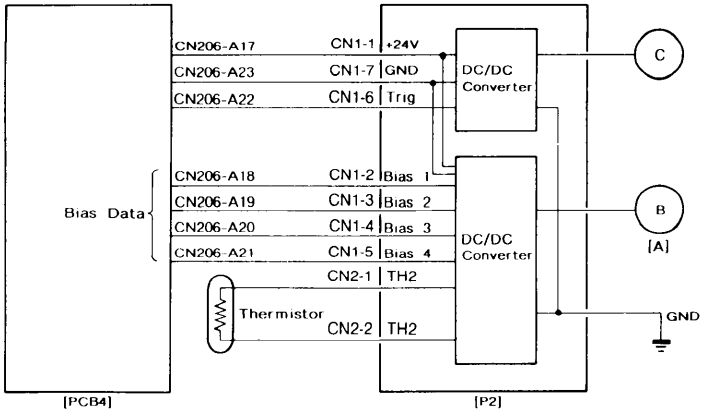

The CPU sends a bias trigger signal and a 4-bit control signal to turn on the development bias of the power pack. (See the above table.) These signals depend on the Image Density level position and the copier's rest time.

After receiving these signals, the power pack outputs the proper bias voltage, which is further compensated for temperature (the resistance of the bias thermistor located on the erase lamp unit).

The bias voltage can be displayed on the operation panel by using SP mode 59. The displayed value does not include the temperature compensation factor.

8. Color Development

- OVERVIEW -

This copier has mono-color copying capability in red, green, and blue as well as standard black. To change colors, the development unit must be replaced.

To detect which color is used, an actuator is mounted on the development unit. Since the reflectivity varies with the color of the toner, the toner end detection system uses a mechanical detection system instead of an ID sensor detection system.

- BIAS CONTROL -

Due to the differences in the characteristics of black and color toner, the CPU changes the bias control when it detects a color development unit.

- BASE BIAS FOR COLOR -

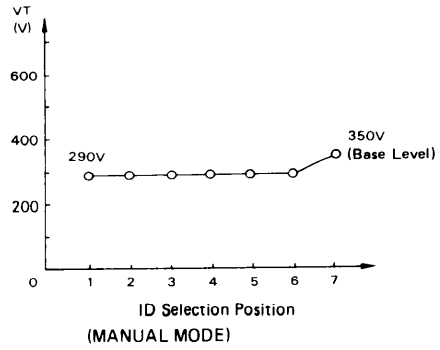

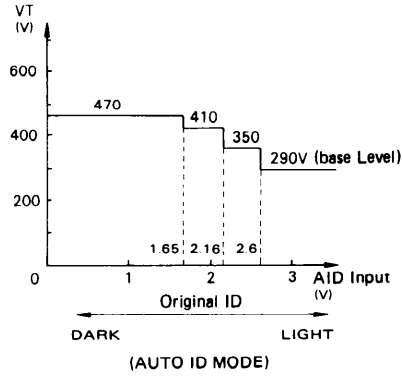

- BIAS FOR ID SENSING -

Since the reflectivity of color toner varies with the color type, the ID sensor is used only to detect overtoning. Just as for black copies, the image density is sensed once in 10 copy cycles.

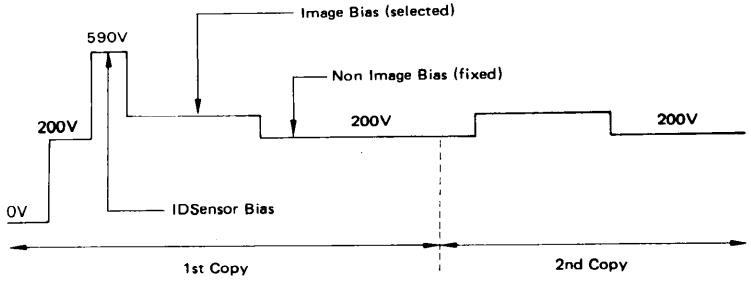

The ID sensor bias can be changed to adjust the color image density by using DIP SW201-6 (on the main board) as follows:

DIP SW201-6	ID Sensor Bias
OFF	590 volts
ON	620 volts

Normally, DIP SW201-6 is off. When it is turned on, the threshold level for toner supply inhibition is increased. This causes the toner density to become higher. (See the section on color toner density control.)

- COLOR DETECTION -

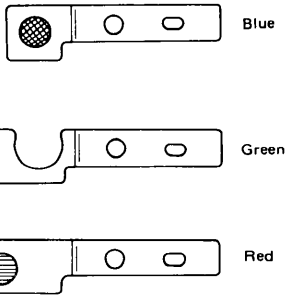

Color Toner Sensors*

S-A	S-B	Toner
OFF	OFF	Black
ON	OFF	Blue
OFF	ON	Green
ON	ON	Red

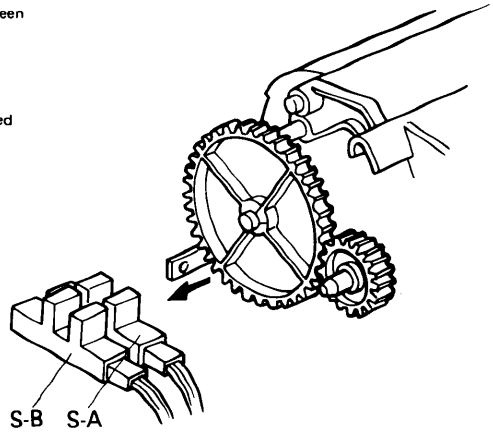

Three actuators, each having a different shape, are used to distinguish between the different toner colors. When a color development unit is installed in the copier, the actuator activates the color toner sensors. The CPU determines which color unit is installed based on the input from these two sensors. (See the preceding table.)

* ON = actuator blocking the gap of the photo-interruptor.

9. Service Call Condition

SELF DIAGNOSTIC CODE 31:

Drum Themistor Open
Code 31 is displayed if the drum thermistor circuit becomes open.

TONER DENSITY DETECTION AND TONER SUPPLY

1. Toner Density Detection

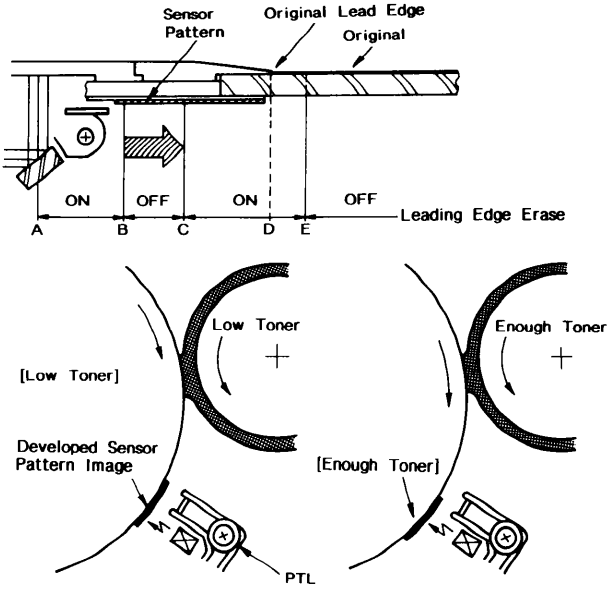

The main CPU checks toner density by directly sensing the image density at the beginning of the first copy cycle after the main switch is turned on, and at every 10th copy after that.

During the check cycles, the sensor pattern is exposed prior to exposure of the original. After the sensor pattern is developed, its reflectivity is checked by the image density sensor (which is a photosensor). The CPU notes the reflectivity. If the reflected light is too strong, indicating a too low toner density condition, it adds toner to the development unit.

The toner is not added all at once. The CPU energizes the toner supply solenoid for the proper amount of time to add a selected amount of toner over the next 10 cycles.

2. Toner Density Control

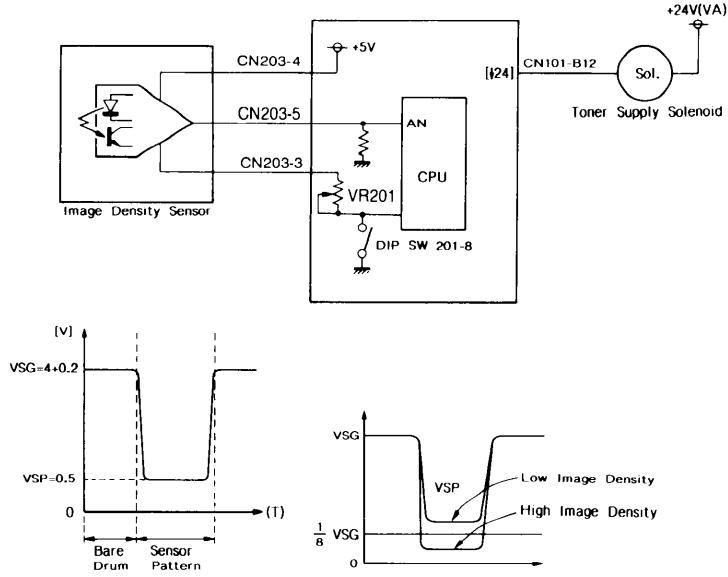

The image density sensor checks the density of the sensor pattern image once every 10 copy cycles. The CPU receives two voltage values directly from the sensor: the value for the bare drum (Vsg) and the value for the sensor pattern (Vsp). These two values are then compared to determine whether more toner should be added.

1. Vsp $\leq$ 1/8 Vsg.....High image density (no toner is added)

2. Vsp > 1/8 Vsg.....Low image density (toner is added)

When the image density is too low, the CPU activates the toner supply solenoid to add a selected amount of toner over the next 10 copy cycles.

SP Mode # 35 changes the toner end detection level and the timing cycle. The detection level drops to 0.65 and the monitoring cycle is every 5 copy cycles.

DIP SW 201-8 is used to turn on the LED of the sensor manually. VR201 adjusts the light intensity of the sensor LED. Therefore, the photosensor Vsg can be correctly calibrated.

If Vsg becomes less than 2.5 volts, the CPU determines that the sensed data is abnormal. It then changes from detect mode to fixed supply mode. The amount supplied is determined by the settings of DIP SW201-2 and -3 and -4. At the same time the Service Call indicator starts blinking. However, copies can still be made.

3. Toner Supply

- Roller Drive Mechanism -

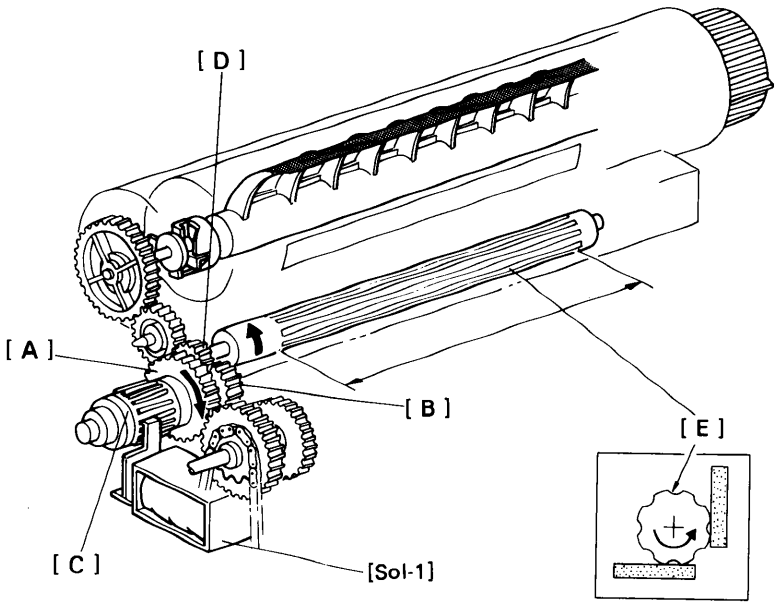

The toner supply clutch gear [A] turns when the main motor is on. The transmission of this rotation to the toner supply drive gear [B] is controlled by the toner supply clutch [C].

When the toner supply solenoid [SOL1] energizes, the toner supply clutch engages and starts turning the toner supply drive gear. The toner supply drive gear turns the toner supply roller gear [D]. Toner catches in the grooves on the toner supply roller [E]. Then, as the grooves turn past the opening, the toner drops into the development unit.

The toner supply opening is the same width as A4 lengthwise (8 1/2" X 11") and is located at the center of the developer tank. This is to reduce toner scattering from both the ends of the development roller even if small size paper is used continuously.

- Toner Agitator Drive Mechanism -

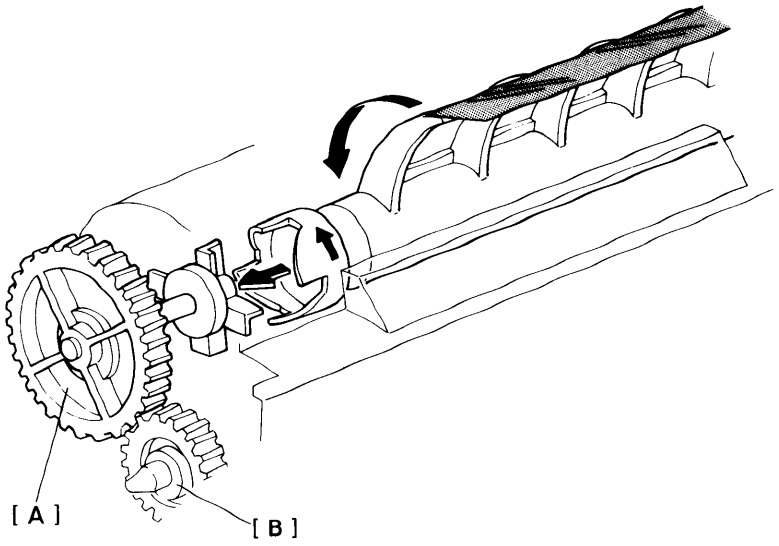

The toner agitator mechanism, contained in the toner cartridge, prevents toner from blocking.

The toner supply roller gear engages the toner agitator gear [A] through an idle gear [B]. Therefore, the toner agitator gear turns whenever the toner supply clutch is engaged.

Rotation passes through the toner cartridge casing to the agitator junction.

4. Toner Supply Amount

Dip SW	Fixed Supply Mode				Detect Supply Mode			
201 - 1	1 (ON)				0 (OFF)			
2	0	1	0	1	0	1	0	1
3	0	0	1	1	0	0	1	1
	3.5%	7%	10.5%	14%	15%	30%	45%	60%

This copier has two different ways of controlling the amount of toner supplied. Normally, the detect supply system controls toner supply; however, a fixed supply system can also be selected. When a color toner development unit is installed, the CPU automatically selects fixed supply mode.

- Detect Supply Mode -

When DIP SW 201-1 is off, the standard detect supply mode is selected. If a low image density condition is detected, a small amount of toner is supplied on each of the next 10 copy cycles as determined by the setting of DIP SW's 201-2 and -3 as shown in the above table.

Toner supply starts 0.52 second after the scanner motor reverses. (Toner is supplied at this time to prevent toner spattering on the copies.) The actual amount of toner added is determined by controlling the on time of the toner supply solenoid, which activates a spring clutch.

- Fixed Supply Mode -

When DIP SW 201-1 is on or a color development unit is installed, the fixed supply mode is selected. In this case, a fixed amount of toner is added every copy cycle as determined by the setting of the DIP SW201-2 and -3. When a color development unit is installed, a fixed amount of toner is determined by the setting of SP Mode #70. The length of time that the toner supply solenoid is energized depends on the data set into the SP mode #70 and the paper size.

5. Toner End Detection

The CPU uses the image density sensor to detect a toner end condition. This method is effective in both detect and fixed supply modes.
If Vsp becomes greater than 0.75 volt, the CPU determines that it is time to add toner and starts blinking the Add Toner indicator.
After the indicator starts blinking, the operator can make up to 50 copies. If a new toner cartridge is not added within that 50 copy interval, the Add Toner indicator stops blinking (stays on) and copying is inhibited.
The toner end condition is reset by opening and closing the front cover.

6. Color Toner Density Detection and Color Toner Supply

- COLOR TONER DENSITY CONTROL -

When a color development unit is used, the CPU automatically selects the fixed toner supply mode. SP Mode # 70 determines the supply amount.

The CPU calculates the threshold level for toner supply inhibition when the color development installation procedure is completed. This level is determined by calculating the average of Vsp and Vsg while using new developer.

Since the fixed supply system is selected when in color toner mode, it is necessary to inhibit toner supply if the toner density becomes high to prevent over-toning. The CPU checks Vsp once in 10 copy cycles. If Vsp becomes lower than the threshold level, the CPU stops supplying toner. Toner supply resumes when Vsp rises above the threshold level again.

A RAM stores the threshold level data for the three colors. The CPU selects the correct threshold level from this RAM after checking the color signal from the color toner sensors. The power supply for the RAM has battery backup so the data will not be lost if the power supply is disconnected.

The RAM keeps not only the threshold level data but also the number of copies made with each color. This data can be displayed on the operation panel by using SP Mode 73.

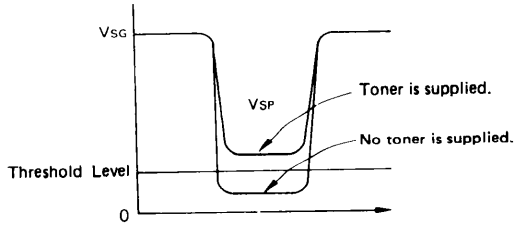

- COLOR TONER END DETECTION -

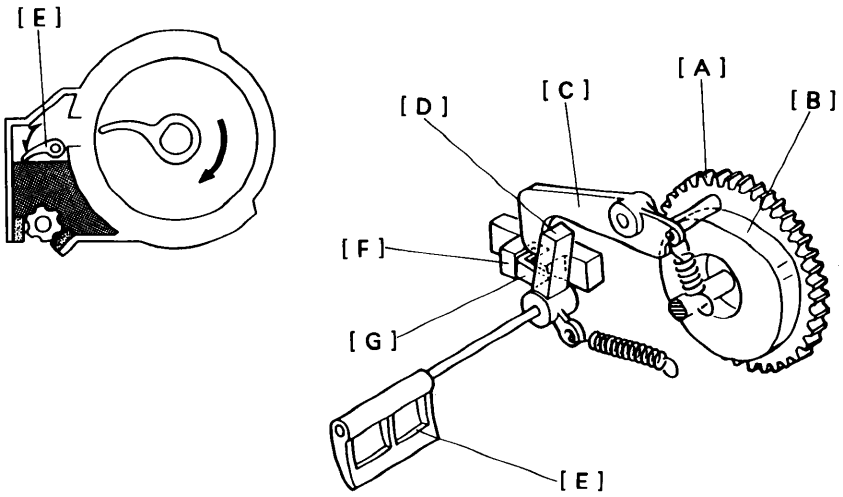

The toner agitator gear [A] has a cam [B] (the toner end cam) on its inner surface, and it rotates only when toner is supplied. The cam follower on the end of the toner end lever [C] rides on the surface of the toner end cam (spring pressure). The opposite end of the toner end lever alternately presses and releases the toner end arm [D] as the cam turns. The toner end plate [E], which is in the toner hopper, is mounted on the same shaft as the toner end arm.

When there is sufficient toner in the hopper, the toner end plate is prevented from moving by the toner. Therefore, even when the toner end lever drops to the lowest position on the cam (releasing the toner end arm), the toner end arm does not move and the toner end sensor [F] is not activated.

When there is insufficient toner in the hopper, the toner end plate can move. When the toner end lever releases the toner end arm, the toner end plate lowers and the actuator [G] on the toner end arm moves into the toner end sensor. The CPU receives a single pulse from the toner end sensor.

If this condition is detected by the CPU more than seven times consecutively, the Add Toner indicator starts blinking.

After the indicator starts blinking, 50 copies can be made. If a new toner cartridge is not added within that 50 copy interval, the Add Toner indicator stops blinking (stays on) and copying is inhibited.

- ABNORMAL CONDITION -

If Vsg becomes lower than 3.2 volts, the machine will reduce toner supply to half of the normal supply amount. (For example, the amount of toner supply will change from 14% to 7% when "0" is stored in SP Mode No. 70.) In this condition, the Service Call indicator is not displayed and the machine can be operated .

7. Service Call Condition

SERVICE CALL INDICATOR BLINKS (NO CODE):

ID Sensor Abnormal

The Service Call indicator starts blinking if Vsg becomes less than 2.5 volts. When this happens, the machine automatically shifts to the fixed supply mode. Operation is possible.

SC32

Displayed if PTL/ID sensor board circuit opens or is not set properly. Also if Vsg becomes less than 1.0VDC

IMAGE TRANSFER AND PAPER SEPARATION

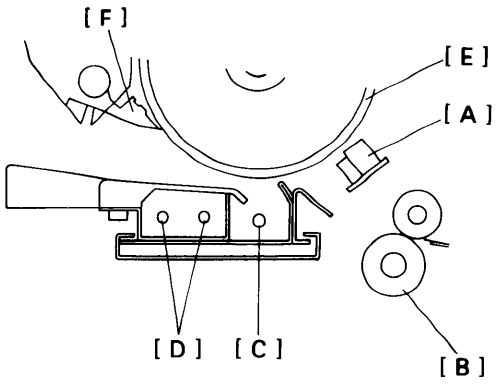

1. Pre-Transfer Lamp (PTL)

After the latent image is developed but before the image is transferred to the copy paper, the drum surface is illuminated by the pre-transfer lamp [A]. This illumination reduces the positive potential on the drum surface. This prevents the toner particles from being re-attracted to the positively charged drum during the paper separation process. It also makes image transfer and paper separation easier.

2. Image Transfer

The registration rollers [B] feed the copy paper through the transfer entrance guides to the transfer section. A high positive voltage (+5.6 kilovolts) is applied to the transfer corona wire [C], and the corona wire generates positive ions. These positive ions are applied to the copy paper, and the positive charge attracts the negatively charged toner away from the drum and onto the paper. In addition, the paper is held against the drum by the negative counter charge on the drum.

3. Paper Separation

After image transfer the copy must be separated from the drum. To break the attraction between the paper and the drum, the separation corona wire [D] applies an ac corona (500 Hz) to the reverse side of the paper. The stiffness and weight of the paper causes it to separate from the drum [E].

The separation corona has a small dc bias but its affect is negligible. A dc bias is unnecessary because the separation corona is wide and diffuse. The positive charge on the paper (from the transfer corona) is not completely discharged until the paper is far enough from the drum that the toner will not be reattracted to the drum. The two pick-off pawls [F] ensure that thin, low-stiffness paper or upward curled paper separates completely.

4. Pre-Transfer Lamp Circuit

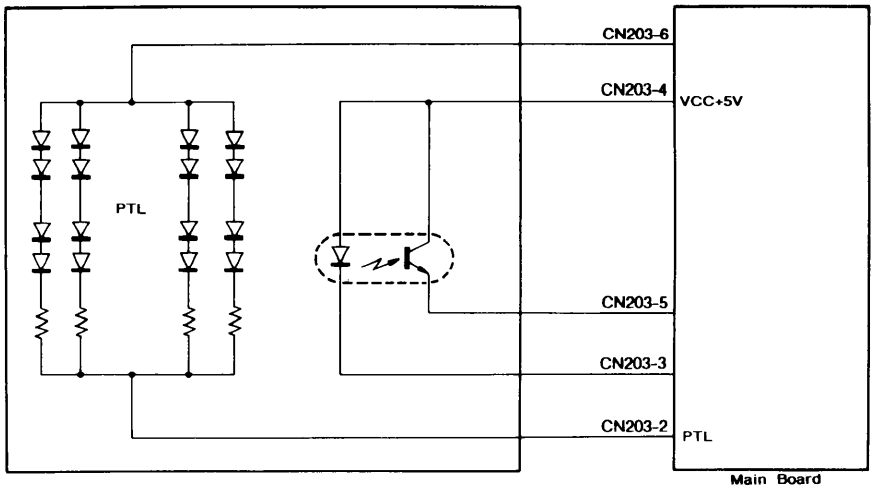

When the Start key is pressed, the main board outputs a LOW signal to activate the pre-transfer lamp. The pre-transfer lamp, like the erase lamp, is an array of LEDs. However, the CPU does not control the individual elements of the pre-transfer lamp as it does the erase lamp. Instead, all of the LEDs turn on and off simultaneously.

5. Transfer/Separation Corona Circuit

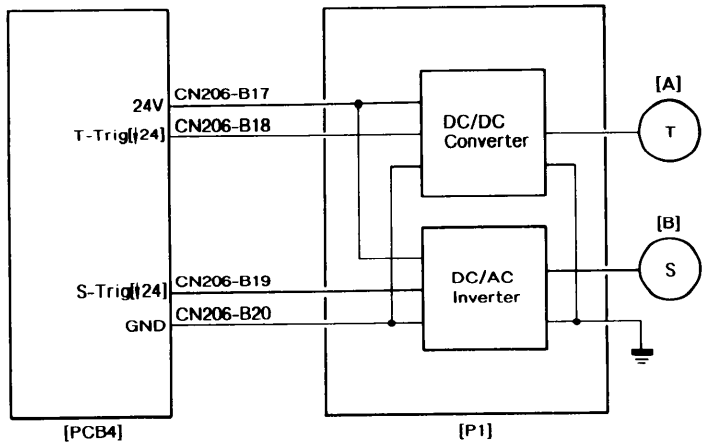

When the Start key is pressed, the main board sends LOW signals to energize the power pack for the transfer and separation coronas. The power pack has a dc to dc converter and a dc to ac inverter. The dc to dc converter changes +24 volts to +5.6 kilovolts for the transfer corona. The inverter changes +24 volts to 5.0 kilovolts ac (500 Hz) with a negative dc bias (about -60 V) for the separation corona.

6. Pick-off Mechanism

- Touch and Release Mechanism -

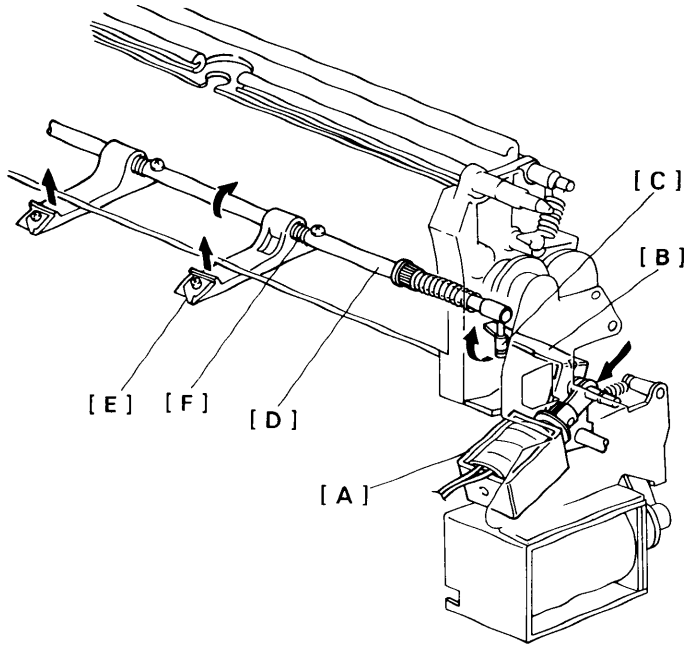

The pick-off solenoid [A] energizes 1.69 seconds after the Start key is pressed. The pick-off lever [B] rotates counterclockwise (rear view) and pushes the pawl shaft pin [C]. Then the pawl shaft [D] rotates clockwise and the pick-off pawls [E] touch the drum. The pawl springs [F] hold the pick-off pawls on the shaft and prevent them from touching the drum too strongly.

When the leading edge of the paper passes the pick-off area and just before it reaches the fusing unit, the pick-off solenoid turns off. The pick-off lever spring then rotates the pick-off lever and moves the pick-off pawls away from the drum.

- SIDE TO SIDE MOVEMENT -

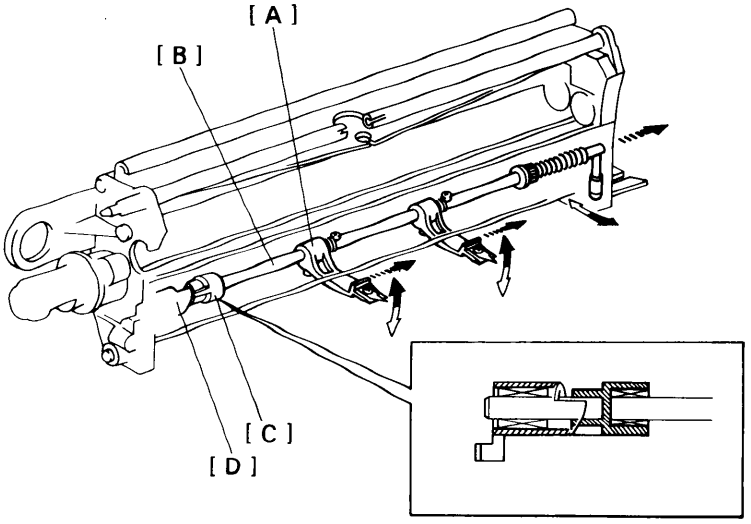

The pick-off pawls [A] do not always contact the drum in the same place but instead move slightly to the side on each copy cycle.

The pick-off pawl shaft [B] and the cam rider [C] are joined by a one-way bearing [D]. Each time the pick-off pawl solenoid turns on, the one-way bearing causes the cam rider to turn together with the pick-off pawl shaft. As the cam rider turns, it and the pawl shaft are forced to move laterally by a cam. However, when the pawl shaft rotates the pawls away from the drum the cam rider does not turn.

Pawl lateral movement is 0.1 to 0.2 millimeter per copy cycle. After the pick-off pawls move about 8 millimeters, the cam rider passes the "step" of the cam and the pawl shaft is returned to its start position by the pawl shaft spring.

7. Pick-off Circuit

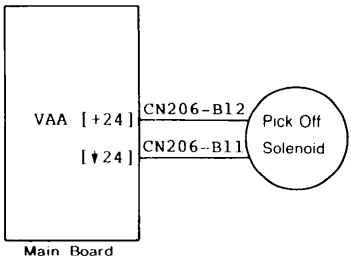

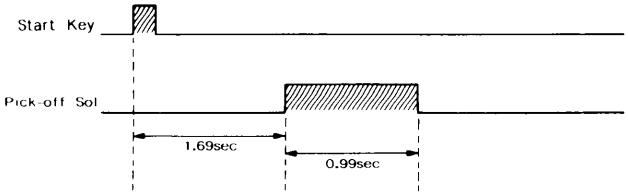

The main PCB supplies +24 volts to the pick-off solenoid at CN206-B12. The CPU supplies a LOW signal at CN206-B11 1.69 seconds after the Start key is pressed. This LOW signal energizes the pick-off solenoid.

The CPU waits 0.99 second before turning off the pick-off solenoid. The leading edge of the paper has just passed the pick-off area at this time.

DRUM CLEANING

1. Overview

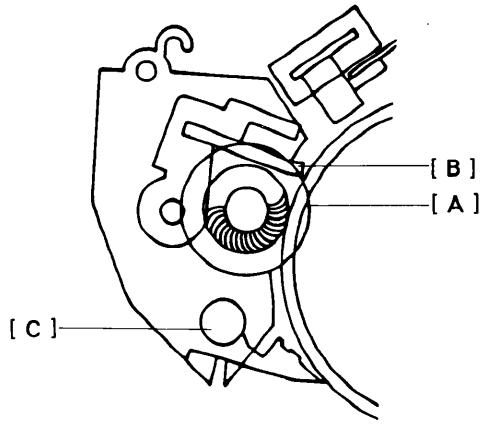

The cleaning brush [A] and cleaning blade [B] remove any toner remaining on the drum after the image is transferred to the paper.

The cleaning brush and drum move in opposite directions at their point of contact. The cleaning brush removes paper dust and nearly half of the toner from the drum surface to reduce the cleaning load placed on the blade.

Next, the cleaning blade removes the remaining toner. The falling toner catches in the fibers of the cleaning brush and is carried inside the cleaning unit. As the brush turns inside the cleaning unit, it rubs against a beater ridge, which dislodges the toner particles. The toner particles fall onto the toner collection coil [C].

The toner collection coil transports the used toner to the front of the machine where it falls into the used toner bottle.

2. Drive Mechanism

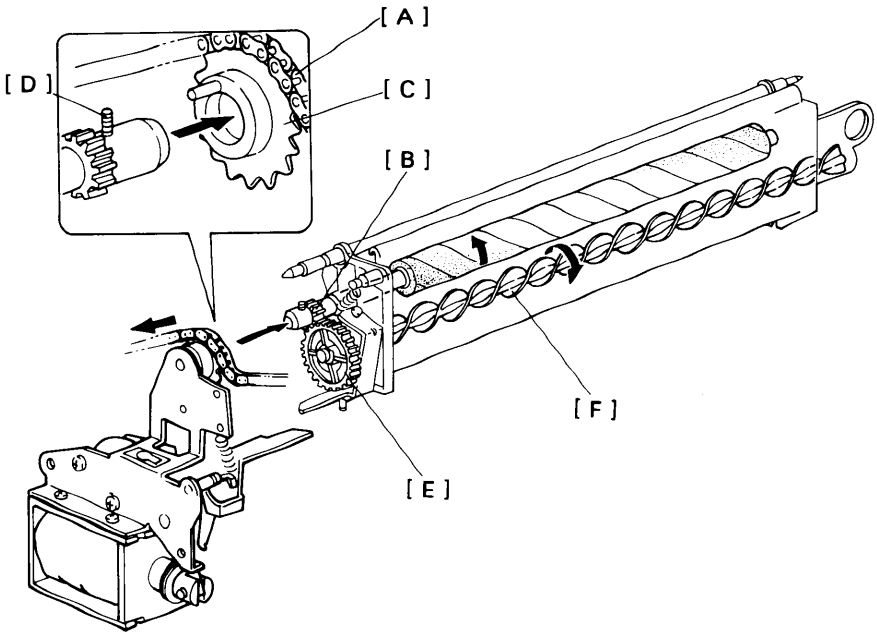

The main chain [A] drives the cleaning unit when the main motor is on. The brush gear [B] is fitted into the cleaning drive sprocket [C]. A pin on the inside of the sprocket drives an allen screw [D] on the shaft of the gear, turning the gear. The brush gear drives the coil gear [E] directly, and the toner in the unit is transported to the used toner bottle by the toner collection coil [F].

3. Cleaning Blade

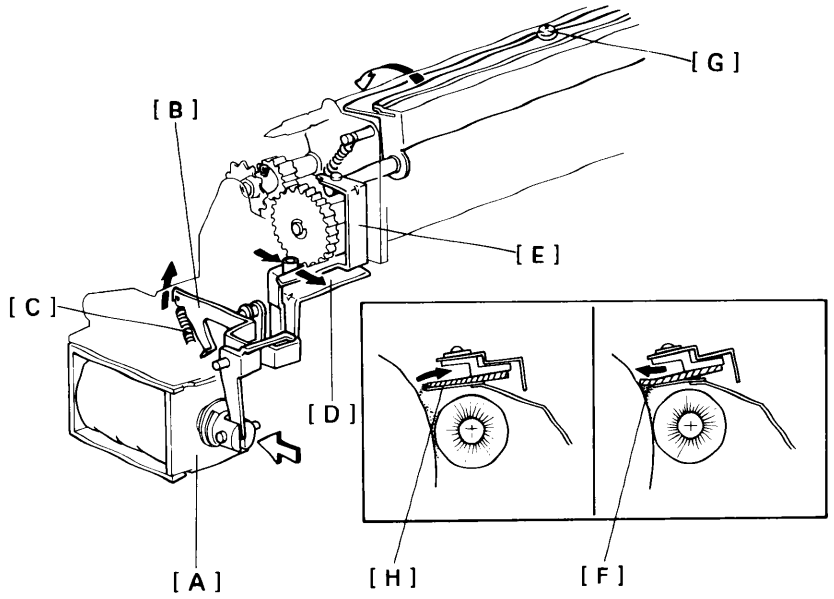

The cleaning pressure mechanism is shown above. When the cleaning solenoid [A] is energized, it turns the cleaning solenoid lever [B] clockwise (rear view). Due to the pull of the cleaning blade pressure spring [C], the pressure arm [D] also turns clockwise and pushes the cleaning blade lever [E] up. The cleaning blade holder then rotates and the cleaning blade [F] presses against the drum. The pressure spring limits the blade pressure.

The cleaning blade is mounted by a single swivel screw [G] at its exact center of gravity. With this type of mounting the blade sets parallel and applies even pressure automatically. Also since pressure is transmitted in the center, a single pressure spring is used. Side-to-side movement is applied to the cleaning blade to prevent uneven wear and ensure efficient cleaning.

The blade scraper [H] is mounted in contact with the bottom of the cleaning blade. When pressure is applied to the cleaning blade, it is forced forward and bends at its outer edge. When pressure is released from the blade, it snaps back to its original shape. At this time, the blade scraper [H] scrapes off the excess toner and paper dust from the edge of the blade. This helps to maintain efficient cleaning. The blade pressure is released when there is no key input for 15 minutes, when a paper misfeed occurs, or when the safety switches are open. The blade scraper also prevents toner from scattering inside the copier by keeping toner inside the cleaning unit.

4. Toner Collection Bottle Vibration

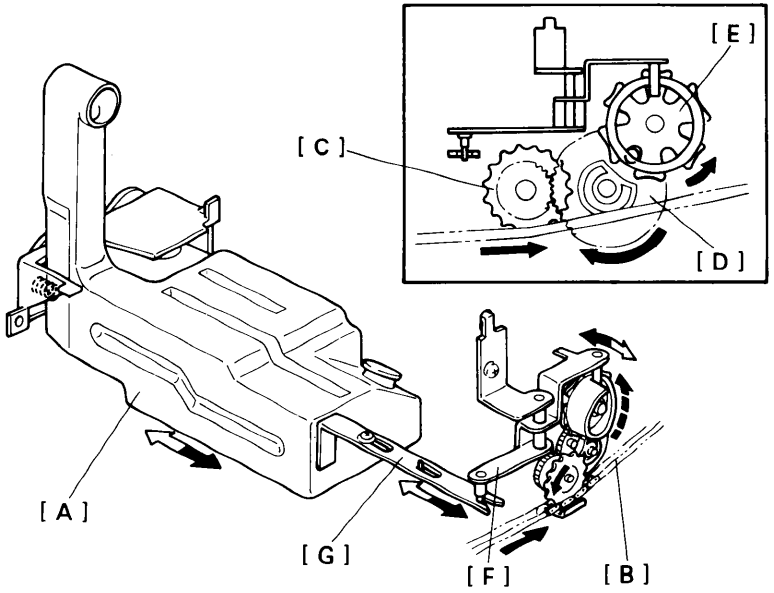

The toner collection bottle [A] is vibrated to prevent toner from building up in one place and activating the toner overflow sensor too early.

The main drive chain [B] turns the drive sprocket [C]. The drive sprocket has a gear on the reverse side which turns the cam drive gear [D]. A pin on the cam drive gear rotates the cam wheel [E]. This wheel has six slots in which the pin catches; so, the cam wheel turns 1/6 of a revolution for each full turn of the cam drive gear.

The cam part of the cam wheel pushes the cam lever [F] out as it turns. The pin on the other end of the cam lever pushes the vibration link [G] toward the front of the copier. This link pushes the toner collection bottle against the spring installed inside the bottle cover. When the cam wheel completes one turn, the cam lever is released and the spring pushes the toner collection bottle quickly toward the rear of the copier. This action keeps the toner level inside the toner collection bottle.

5. Toner Overflow Sensor Circuit

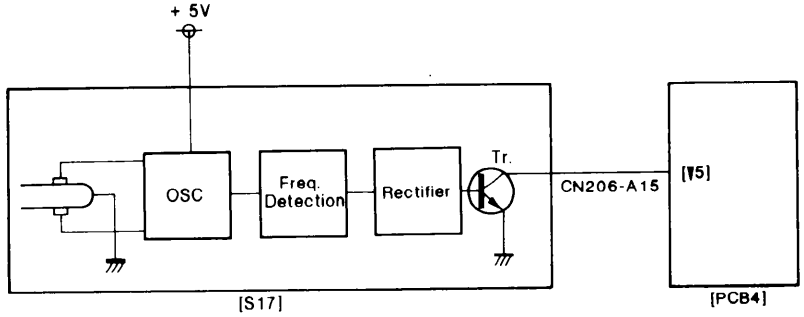

The toner overflow sensor [S17] signals the CPU when the toner collection bottle is full.

A tiny tuning fork is used as the sensing element of the toner overflow sensor. This tuning fork is a damping element in a multivibrator circuit. As long as there is nothing in contact with the tuning fork, the vibrating frequency of the circuit stays low and the transistor stays off.

When toner presses against the tuning fork, the resistance of the piezo-electric elements that are in contact with the tuning fork changes and the vibrating frequency increases. The frequency detection circuit passes the higher frequency signal to the rectifier which activates the switching transistor. The transistor sends a LOW signal to CN206-A15.

When the CPU detects this LOW signal, it stops the copier, lights the Used Toner Bottle indicator, and blinks the Service Call indicator.

6. Cleaning Solenoid Circuit

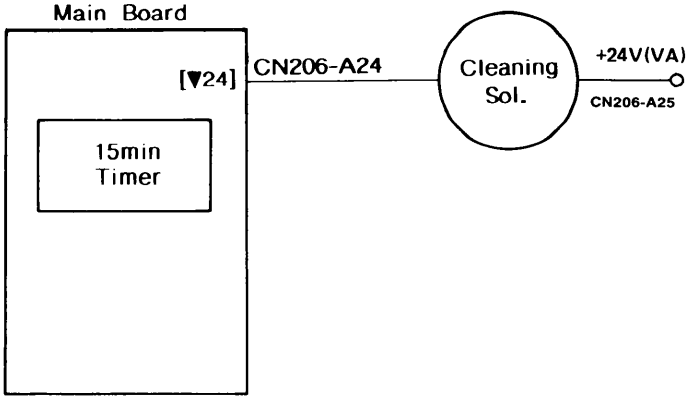

When the Start key is pressed or the main switch is turned on, the CPU sends a LOW signal to CN206-A24. This signal energizes the cleaning solenoid. Fifteen minutes after the main motor turns off, this signal becomes high again, turning off the solenoid. This releases the cleaning blade from the drum. When the cleaning blade is released, the edge of the blade is cleaned.

The fifteen minute delay for the release of the cleaning blade is to avoid toner scattering. Toner scattering is increased if the cleaning blade is released too frequently.

QUENCHING LAMP

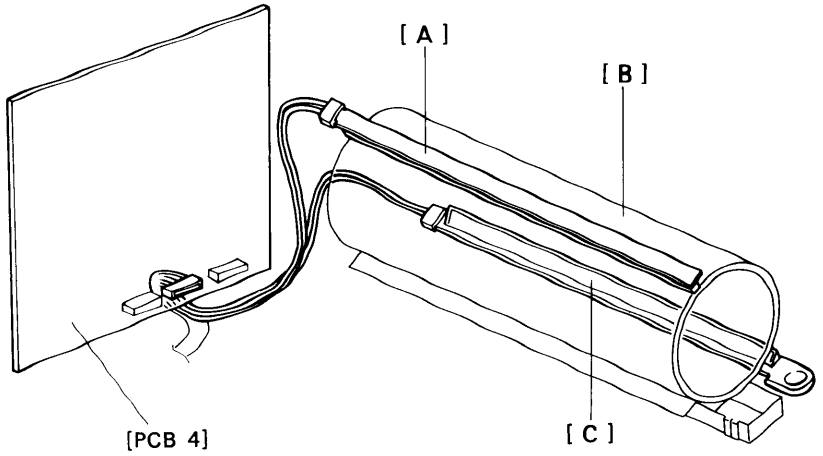

In preparation for the next copy cycle, light from the quenching lamp [A] neutralizes any charge remaining on the drum [B].

The LED array lamp used for quenching is similar to the pre-transfer lamp (PTL) [C]; however, the light intensity of the quenching lamp is less than that of the PTL.

PAPER FEED AND REGISTRATION

1. Overview

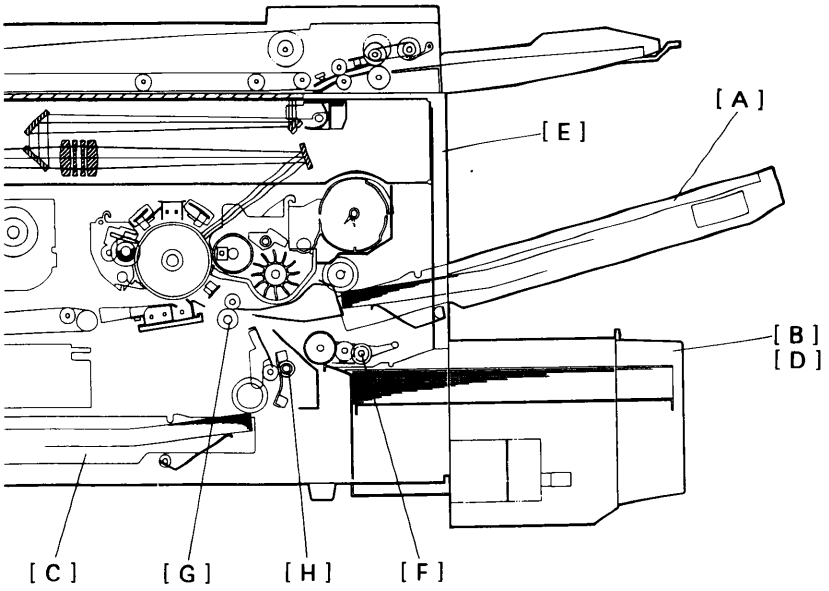

This model has three paper feed stations. The first cassette [A] and second cassette [B] are located on the right side of the copier, and the third cassette [C] is located in a tray inside the copier. The capacity of each of the cassettes is 250 sheets.

As an option the second cassette can be replaced with a 1,000 sheet large capacity tray [D]. This would increase the maximum paper capacity to 1,500 sheets.

Paper can also be fed using the manual feed table [E], which utilizes the feed mechanism of the first feed station.

All three feed stations use the feed roller and friction pad feed mechanism. The LCT also uses a pick-up roller [F]. During paper feed, the top sheet of paper separates from the stack and is fed to the registration rollers. The friction pad prevents all but the top sheet from feeding.

The feed rollers of the first feed station feed the top sheet directly to the registration rollers [G]. The third feed station (cassette tray), however, feeds the top sheet to relay rollers [H], which then feed the sheet to the registration rollers.

PAPER FEED AND REGISTRATION

OVERVIEW

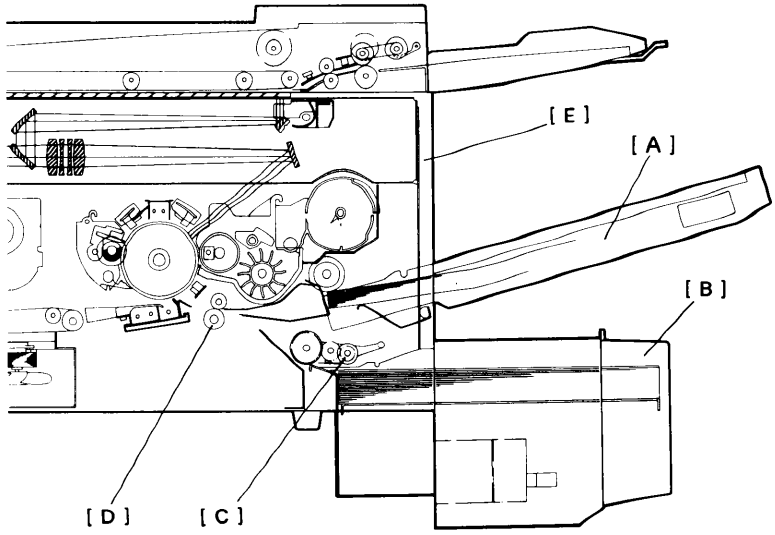

This model has two paper feed stations. The first cassette [A] and second cassette are located on the right side of the copier. The capacity of each of the cassettes is 250 sheets.

As an option the second cassette can be replaced with a 1,000 sheet large capacity tray [B]. This would increase the maximum paper capacity to 1,250 sheets.

Paper can also be fed using the manual feed table [E], which utilizes the feed mechanism of the first feed station.

Both feed stations use the feed roller and friction pad feed mechanism. The LCT also uses a pick-up roller [C]. During paper feed, the top sheet of paper separates from the stack and is fed to the registration rollers. The friction pad prevents all but the top sheet from feeding.

The feed rollers of the first feed station feed the top sheet directly to the registration rollers [D], where a buckle is created in the paper and skew is corrected.

FRICTION PAD FEED SYSTEM

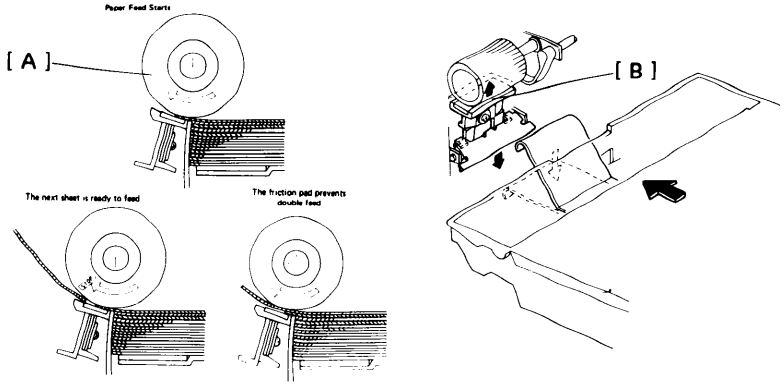

This copier uses a feed roller and friction pad paper feed system. The friction pad separates a single sheet from the top of the stack of paper.

When the feed roller [A] starts turning, it forces a single sheet of paper across the friction pad [B]. The roller stops turning when the paper reaches the registration rollers.

At that time the friction pad is pressing the paper up against the feed roller. So, when the registration rollers start turning, the friction of the moving paper as it is pulled from under the feed roller causes the feed roller to start turning again. As the trailing edge clears the leading edge of the paper stack, the feed roller catches on the next sheet and starts moving it forward. The feed roller stops turning when the trailing edge of the first sheet leaves the feed roller. The leading edge of the next sheet is then held ready for feeding between the friction pad and feed roller.

Sometimes sheets of paper tend to stick together (perhaps due to static electricity or poorly cut edges). When this happens, two sheets may feed between the feed roller and friction pad. However, the coefficient of friction between the friction pad and lower sheet is much greater than that between the two sheets of paper; so, the top sheet slips through while the pad holds the lower sheet.

The friction pad holder is mounted on one end of the swivel plate with a swivel screw; so, it automatically applies even pressure against the feed roller and the copy paper. The pad pressure spring on the other end of the swivel plate (reverse side) provides the pressure. After removing the cassette, the pad pressure is released.

- THIRD FEED STATION -

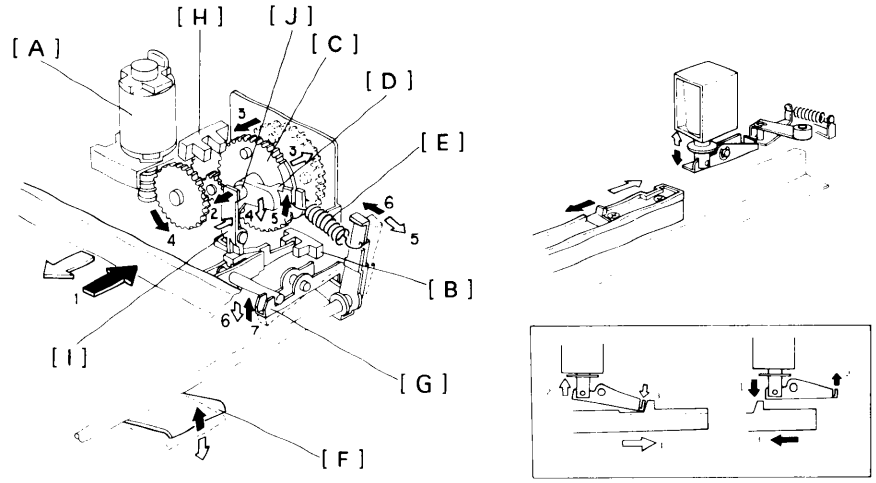

A small dc motor [A] lifts the bottom plate of the third (internal) cassette.

When the cassette tray is fully inserted, actuating the cassette tray sensor [B], the lift motor rotates to lift the cassette bottom plate. As the motor turns, a pin on the lift gear [C] rotates the actuator lever [D] counterclockwise. The actuator lever pulls the cassette arm spring [E], which raises the cassette arm [F]. Similtaneously, the lock lever [G] raises and locks the cassette tray to prevent the bottom plate from crushing the cassette arm when pulling out the cassette tray. The motor stops when the lift sensor [H] detects the actuator lever.

When the cassette tray is pulled out, the release lever [I] pushes the lift gear shaft [J], causing the lift gear to move inward against the pressure of the lift gear spring. When this happens, the actuator lever is released, the cassette arm drops, and the lock lever is released.

- LOCK MECHANISM -

The lock solenoid actuates the lock mechanism. The lock mechanism holds the third feed station in position at the following times: 1) while the third feed station is in use, 2) when the third feed lift motor is actuated. The solenoid is deactuated when another feed station is selected or when the front door is opened.

- LIFT MOTOR -

The lift motor is raised when the third feed station is first set. It is lowered completely at paper end to ensure there is no damage to the paper end sensor's feeler, and partially during a paper jam from the third feed unit to release pressure on the paper.

4. Paper End Detection

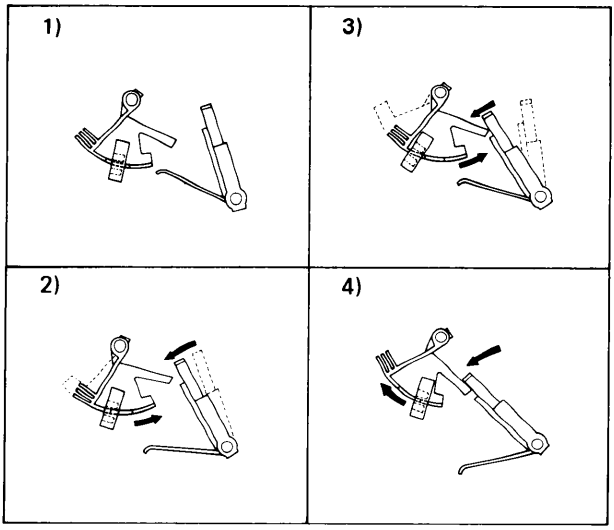

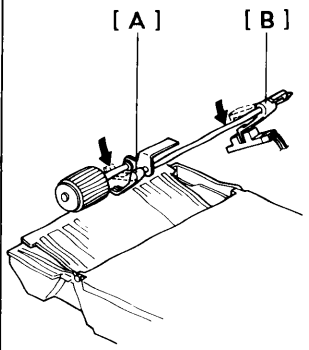

When a cassette or the LCT runs out of paper, the paper end feeler [A] drops through a slot in the cassette (or LCT) bottom plate. The paper end actuator [B], which is on the same shaft as the paper end feeler, pivots into the detector (photointerrupter). The paper end sensor [C] then sends a HIGH signal to the CPU, informing it that the cassette is empty. Then the Add Paper indicator turns on, the Print key turns red, and the machine stops after the copy is finished.

Four conditions apply for the paper end sensor in the cassette tray:

1) When paper is in the cassette tray and the motor has raised the bottom plate to the feed position, the slot of the actuator is between the photosensor elements [figure i], and the sensor output is LOW.
2) When a jam occurs, the lift motor rotates in reverse, lowering the cassette arm lever along with the bottom plate. This pivots the actuator to the right. The motor stops when the solid section of the actuator moves between the photosensor elements (LOW to HIGH) (figure iv).
3) At paper end, the actuator pivots to the right and the solid section of the actuator moves between the photosensor elements (LOW to HIGH) as shown in figure ii.
   The lift motor then begins to rotate in reverse lowering the cassette arm lever which pushes down on the actuator as shown in figure iii.
4) The motor stops rotating after the sensor goes from HIGH to LOW to HIGH as shown in figure iv.

At paper end, the tray lift motor lowers the bottom plate to prevent damage to the sensor's feeler.

5. Paper Size Detection

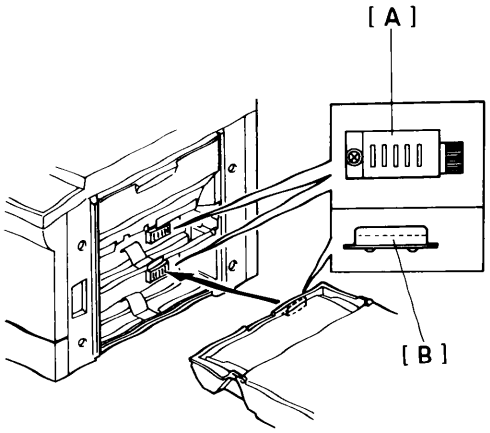

Paper Size	Sensor No	Operation Panel Indication	
	1 2 3 4 5	220V	115V
A3	1 0 0 0 0	A3	•
B4	1 1 0 0 0	B4	•
A4 sidewise	0 0 1 0 0	A4	•
A4 lengthwise	1 0 1 0 0	A4R	•
B5 sidewise	0 1 1 0 0	•	•
B5 lengthwise	1 1 1 0 0	•	•
A5 sidewise	0 0 0 1 0	A5	•
A5 lengthwise	1 0 0 1 0	A5R	•
B6 sidewise	0 1 0 1 0	•	•
B6 lengthwise	1 1 0 1 0	•	•
Return Post Card	0 0 1 1 0	•	•
Post Card	0 0 1 1 0	•	•
11" x 17"	0 0 0 0 1	•	11" x 17"
11" x 8-1/2"	1 0 0 0 1	•	11" x 8-1/2"
11" x 15"	0 1 0 0 1	•	11" x 15"
10" x 14"	1 1 0 0 1	•	•
8-1/2" x 14"	0 0 1 0 1	•	8-1/2" x 14"
8-1/2" x 13"	1 0 1 0 1	F4	•
8-1/2" x 11"	0 1 1 0 1	•	8-1/2" x 11" R
8-1/2" x 5-1/2"	1 1 1 0 1	•	8-1/2" x 5-1/2"
8-1/2" x 13" (14")	0 0 0 1 1	•	•
8" x 13" (14")	1 0 0 1 1	F	•
8" x 10-1/2"	0 1 0 1 1	•	•
8" x 10"	1 1 0 1 1	•	•
5-1/2" x 8-1/2"	0 0 1 1 1	•	5-1/2" x 8-1/2"
No Cassette	1 1 1 1 1	•	•

1 Notch Low (0V)
0 No Notch High (5V)

[Actuator Plate Combination Table]

An array of five photointerruptors in the cassette entrance detect the cassette tray paper size. The paper size sensors [A] are actuated by a plate on the front of the cassette. Each paper size has its own unique combination of notches in the actuator plate [B]. The CPU reads which photointerruptors have been deactivated (HIGH -> LOW) by the actuator plate to determine which size cassette has been inserted.

The first and second feed stations have microswitches instead of photo-interruptors.

6. Paper Feed Drive

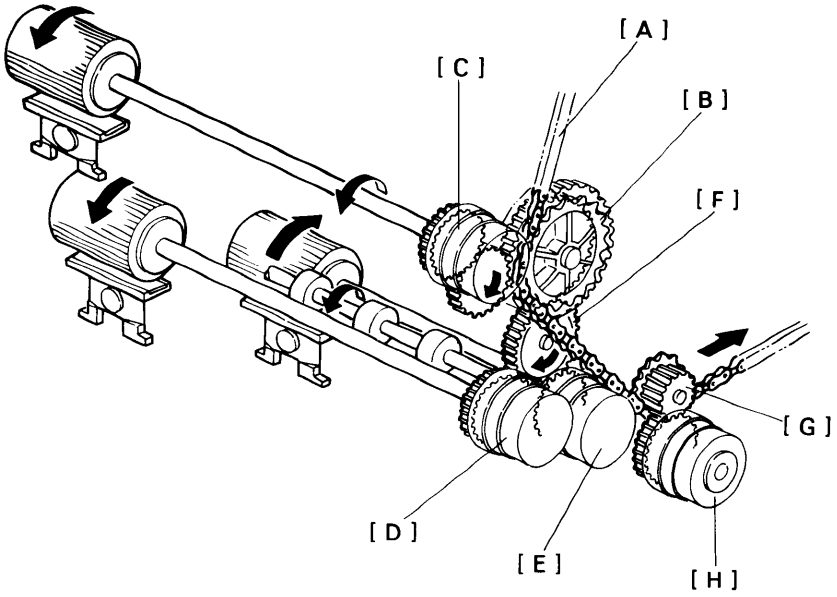

The main drive chain [A] turns the paper feed drive sprockets. The upper drive sprocket [B] turns the first magnetic clutch [C], the second feed magnetic clutch [D], and the relay roller magnetic clutch [E] through the idle gears [F].

- THIRD FEED STATION -

The lower drive sprocket [G] turns the third feed magnetic clutch [H]. The lower feed rollers and the relay rollers all rotate at the same speed. The relay rollers turn off 0.18 second after the registration sensor turns on. At the 1,000th pulse, the relay clutch and the registration clutch both turn on.

7. Manual Feed

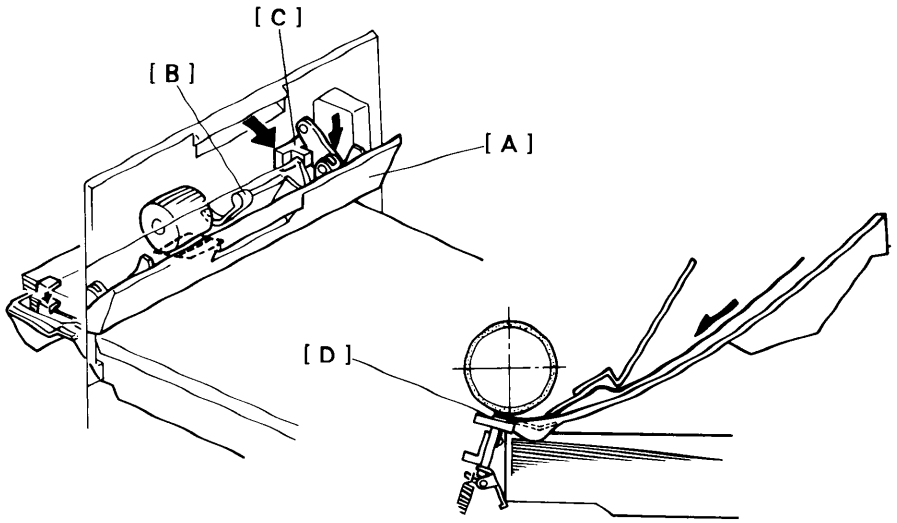

The manual feed table [A] uses the same feed mechanism as the first cassette. When the manual feed table is opened, it forces down the copy paper in the first cassette, clearing the way for manual feed. A slot in the manual feed table allows the paper end feeler [B] to drop down and the Add Paper indicator turns on. At the same time the rear arm of the tray activates the manual feed sensor [C] and the Manual Feed indicator turns on.

When the manual feed table is opened and the copy paper in the first cassette is forced down, the top sheet of paper still remains between the paper feed roller and the friction pad [D]. The spring plate installed on the manual feed table is positioned between the paper feed roller and the top sheet of paper, preventing the top sheet of paper from being fed with the manual feed paper.

The first cassette must be installed to use manual feed. If it is not, the friction pad will separate from the feed roller, making paper feed impossible. If the manual feed table is opened without the first cassette inserted, the Manual Feed indicator and the First Cassette indicator blink and the Start key turns red.

8. Feed and Registration Timing

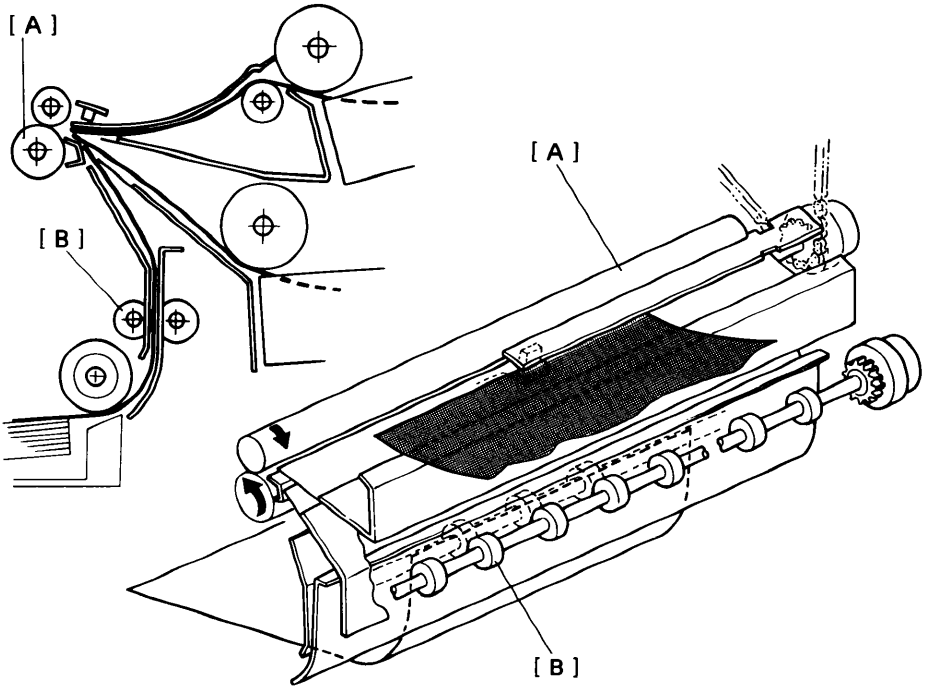

- RELAY ROLLERS -

Paper feed timing varies depending on the feed station selected. The third feed station is too far from the registration rollers [A] for the feed rollers to transport the paper to the registration rollers. A set of relay rollers [B] assists in moving the paper from the 3rd feed station to the registration rollers.

- Roller Timing -

The following table shows the timing of the rollers used with the various feed stations.

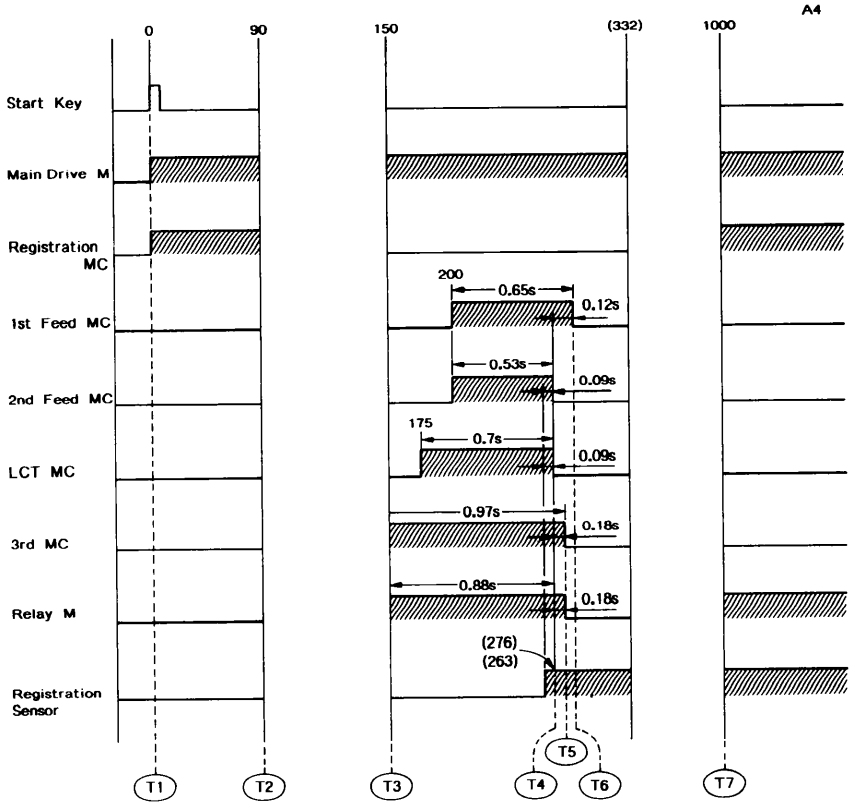

T1--- If the cleaning solenoid is on and the Start key is pressed, then the main motor and the registration clutch turn on.

T2--- The selected paper feed station's paper feed clutch turns on 0.63 second after the Start key is pressed. At the same time, the registration clutch turns off.

T3--- If the 3rd paper feed station is selected, the relay clutch turns on at the same time as the 3rd paper feed clutch.

T4--- If the 2nd paper feed station is selected, the 2nd paper feed clutch and the LCT clutch turn off 0.09 second after the registration sensor turns on.

T5--- If the 3rd paper feed station is selected, the 3rd paper feed clutch and the relay clutch turn off 0.18 (depends on the paper size) second after the registration sensor turns on.

T6--- If the 1st paper feed station is selected, the 1st paper feed clutch turns off 0.12 second after the registration clutch turns on.

T7--- The registration start signal appears at the 1000th pulse. This compensates for differences in the length of the paper paths for each feed station.

- REGISTRATION -

After the leading edge of the copy paper reaches the registration rollers, the optics CPU sends the registration start signal (1,000th pulse) to the main CPU. At this time, the main CPU energizes the registration clutch to feed the copy paper for image transfer.

PAPER TRANSPORT

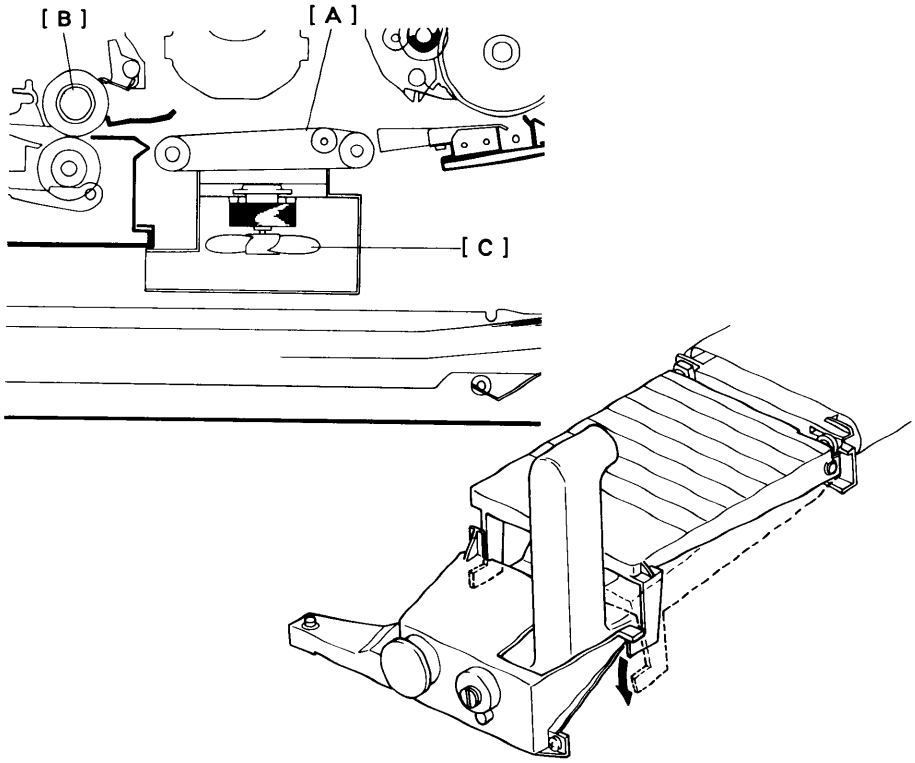

The copy paper rides on the transport belt [A] to the fusing unit [B].

A vacuum fan [C] holds the paper firmly against the belt so there is enough friction between the paper and the belt for smooth transportation. The transport belt is directly gear driven (no clutch); so, it turns constantly when the main motor is on.

The front part of the transport unit is hinged and can be pressed down for easy jam removal.

IMAGE FUSING AND PAPER EXIT

1. Overview

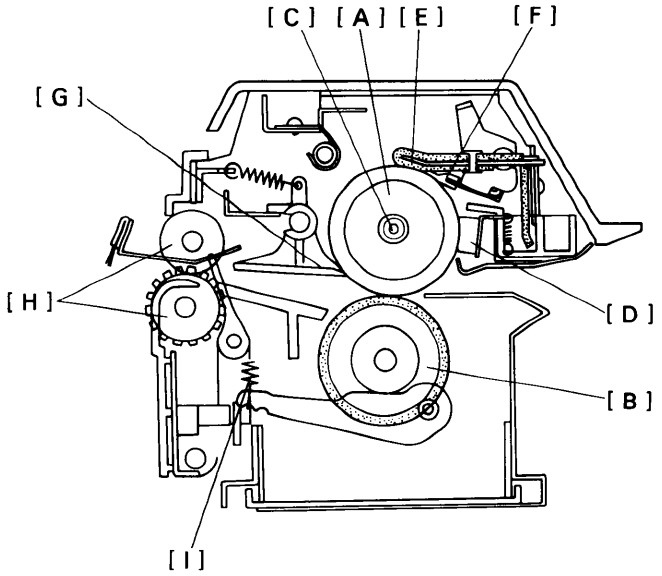

Two fusing rollers, which apply heat and pressure, fuse the image to the copy paper. The hot roller [A] is made of teflon, and the pressure roller [B] is made of silicone rubber. Pressure is constantly applied between the rollers. There is no pressure release mechanism.

The fusing lamp [C], which is located at the hot roller axis, is turned on and off to maintain the operating temperature. The temperature control circuit monitors the hot roller surface temperature through a thermistor [D].

The oil supply pad [E] applies silicone oil to the hot roller. The oil blade [F] then spreads the oil evenly across the hot roller. The oil reduces the adhesion between paper and the hot roller (reducing misfeeds), reduces paper curl, and helps to keep the roller clean by reducing the amount of toner transferred to the hot roller surface. The oil supply pad also works as the hot roller cleaning pad.

The hot roller strippers [G] separate the copy from the hot roller and direct it to the fusing exit rollers [H].

The lock position of the pressure lever tension springs [I] adjusts the roller pressure.

2. Fusing Drive Mechanism

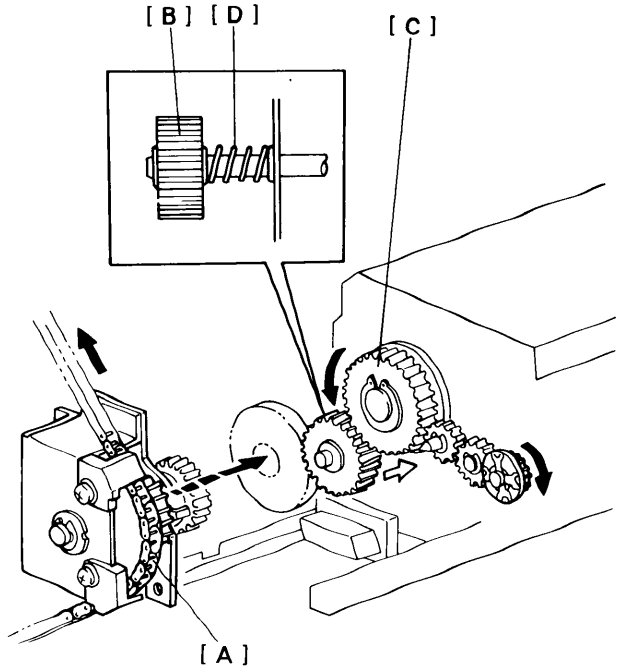

The fusing drive gear [A] turns the release gear [B] which drives the hot roller gear [C]. Rotation passes from the hot roller gear through two idle gears to the exit rollers. The friction between two fusing rollers drives the pressure roller.

The release gear spring [D] allows the release gear to move in and out. This prevents the gears from being damaged if they should not engage correctly when the fusing unit is set. Also, by pulling the fusing knob out slightly, the operator can disengage the release gear and the fusing drive gear so that the fusing rollers can be turned easily for removing misfeeds.

3. Oil Supply and Cleaning

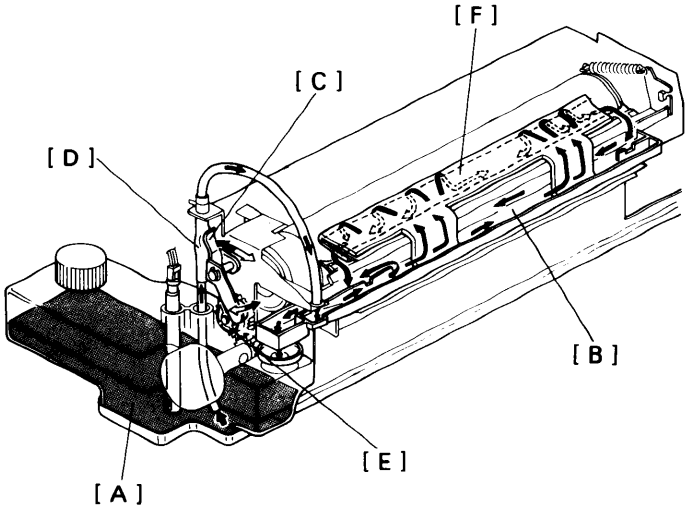

Silicone oil is applied to the hot roller to help prevent toner and paper from sticking to the hot roller, to reduce paper curl, and to help in roller cleaning.

A small one-way valve pump moves the oil from the oil tank [A] (capacity 580 cc) to the oil sump [B]. The oil pump lever [C] alternately presses and releases the rubber sleeve [D] between the valves as the oil cam [E] turns.

The felt wick soaks up oil and supplies it to the top of the oil supply pad [F]. The oil supply pad then applies the oil to the hot roller as it turns. The oil blade spreads and levels the oil on the hot roller. Excess oil flows along the blade toward the ends of the roller. At the ends, oil skimmers scrape off the excess oil and return it to the oil sump. Oil flows out through a hole in the bottom of the oil sump and returns to the oil tank.

The oil supply pad both distributes oil to the hot roller and removes toner and foreign matter from the hot roller surface.

FUSING EXIT ASSEMBLY

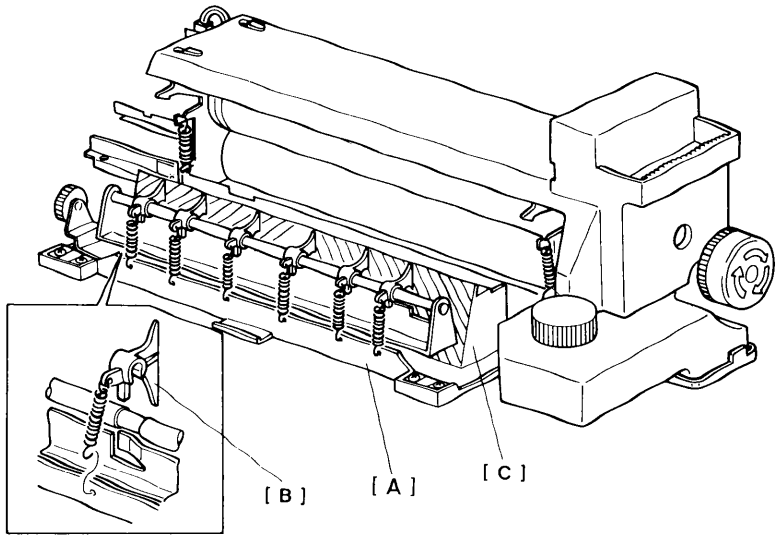

The fusing exit assembly [A] includes the fusing roller strippers [B], the lower fusing exit guide [C], the exit sensor, and the antistatic brush.

The hot roller strippers prevent copy paper from wrapping around the hot roller. They slide between the paper and the roller, and then direct the paper to the fusing exit rollers.

The lower fusing exit guide prevents the copy paper from wrapping around the pressure roller. Although the lower fusing exit guide is not touching the pressure roller, it will catch the leading edge of the copy paper due to the face curl of the paper. (The face curl is caused by the pressure between the teflon hot roller and silicone rubber teflon coated pressure roller.)

FUSING CONTROL

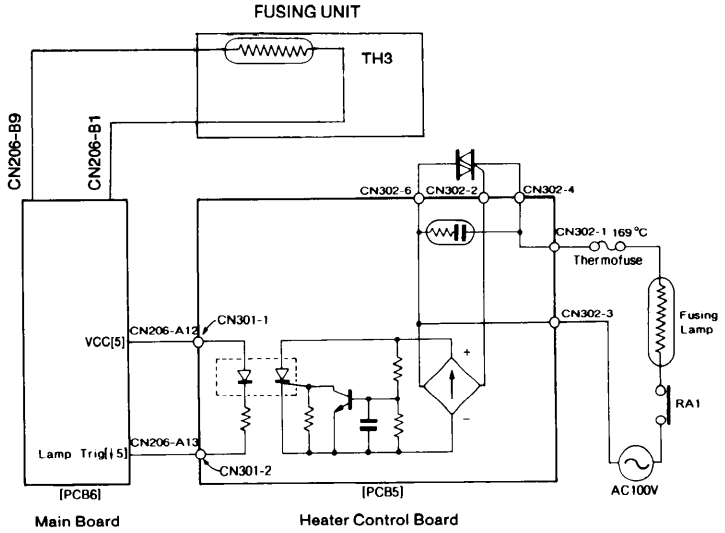

The main CPU controls the fusing lamp. The main CPU monitors the temperature of the fusing roller through thermistor TH3 mounted in the fusing unit.

The main CPU sends the fusing lamp trigger signal (LOW) until the temperature of the fusing roller reaches 180°C (ready temperature). The LOW trigger signal turns on a photothyristor, which turns on the triac controlling the ac voltage to the lamp.

The main CPU controls the fusing temperature within 180°C ± 3°C. This control range can be changed by SP # 49.

6. Fusing Control

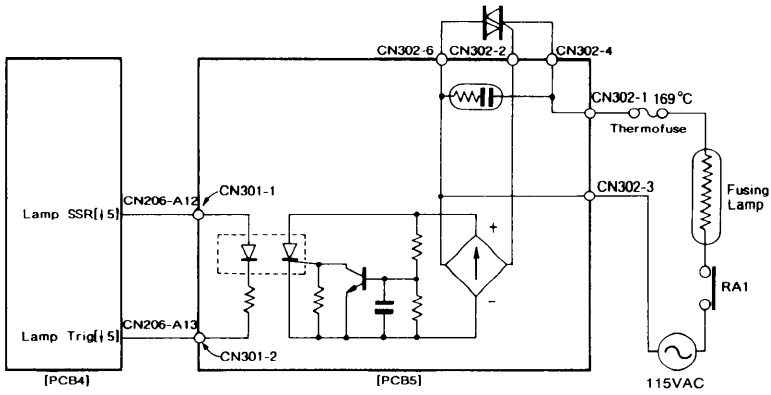

The main CPU controls the fusing lamp. The main CPU monitors the temperature of the fusing roller through a thermistor.

The main CPU sends the fusing lamp trigger signal (LOW) until the temperature of the fusing roller reaches 180°C (ready temperature). The low trigger signal turns on a photothyristor, which turns on the triac controlling the ac voltage to the lamp.

The main CPU controls the fusing temperature within 180°C ± 3°C. This control range can be changed by SP # 49.

7. Service Call Conditions

SELF-DIAGNOSTIC CODE 53:

Thermistor Open
The main CPU checks the conductivity of the thermistor. Code 53 is displayed if the thermistor is open circuit.

SELF-DIAGNOSTIC CODE 54:

No Warm-up Signal
Code 54 is displayed if the hot roller does not reach the ready temperature within 8 minutes after the power is turned on.

SELF-DIAGNOSTIC CODE 55:

Overheat
The main CPU checks the conductivity of the thermistor. Code 55 is displayed if the resistance of the thermistor becomes too low. This occurs if the hot roller temperature is in the 200° - 240°C range.

SELF-DIAGNOSTIC CODE 56:

Temperature Too Low
Code 56 is displayed if the CPU detects that the temperature of the hot roller is less than 150°C after the CPU detects the ready signal.

DOCUMENT FEEDER

1. Specifications

Original Size:	ADF mode Maximum A3 (11" x 17") Minimum A5 (5 1/2 x 8 1/2) SADF mode Max A3 (11" x 17") Minimum B6 (5 1/2 x 8 1/2) lengthwise
Original Weight:	Maximum 130 g/m^2 (34 lb) Minimum 40 g/m^2 (11 lb)
Original Feed Modes:	Automatic Feed (ADF mode) Manual Feed one by one (SADF mode)
Original Capacity:	Maximum 50 sheets (80 g/m^2, 20 lb)
Original Separation:	FFR system
Original Transportation:	Flat belt
Original Stop System:	DC servomotor control system
Original Feed Speed:	17 cpm / ADF mode
Power Source:	DC 24V / 5V (from copier)
Power Consumption:	20 W
Dimensions:	935 mm (W) x 515 mm (D) x 95 mm (H) 36.8" (W) x 20.3" (D) x 3.7" (H)
Weight:	11.5 kg (25.3 lb)
Copier Interface Equipment:	Interface PCB type E

2. Mechanical Component Layout

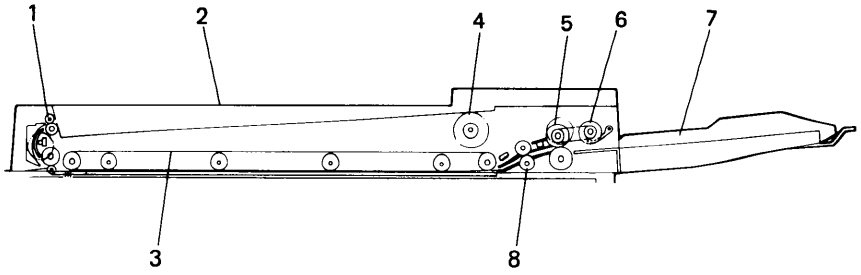

1. Exit Roller
2. DF Cover
3. Drive Belt
4. Drive Pulley
5. Feed Roller
6. Pick-up Roller
7. Original Table
8. Registration Rollers

3. Electrical Component Layout

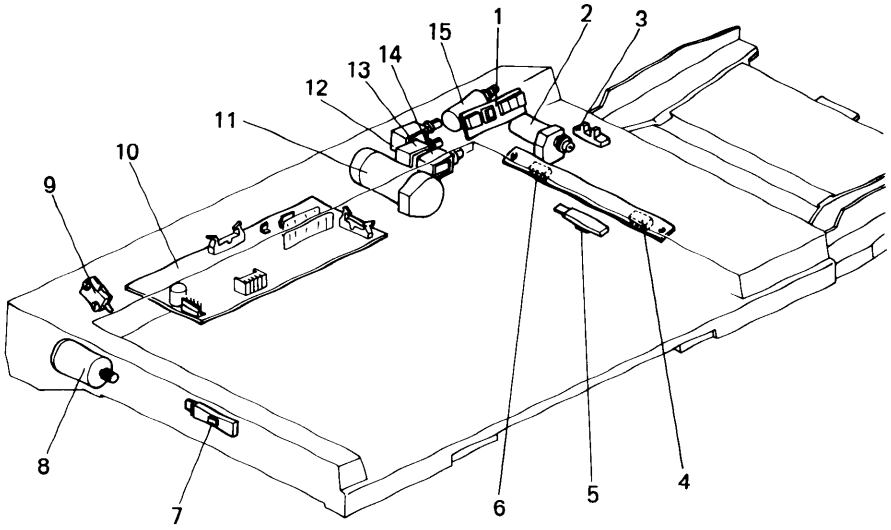

1. Indicator PCB (PCB-10)
2. Feed-in Motor (M-14)
3. Feed-in Sensor (S-34)
4. Entrance Sensor (S-35)
5. Registration Sensor (S-37)
6. Width Sensor (S-36)
7. Exit Sensor (S-38)
8. Feed-out Motor (M-15)
9. Lift Switch (SW-10)
10. DF Main PCB (PCB-11)
11. Belt Drive Motor (M-16)
12. Pick-up Solenoid (Sol-7)
13. Registration Solenoid (Sol-8)
14. Roller Release Solenoid (Sol-9)
15. Stopper Solenoid (Sol-10)

4. Basic Operation

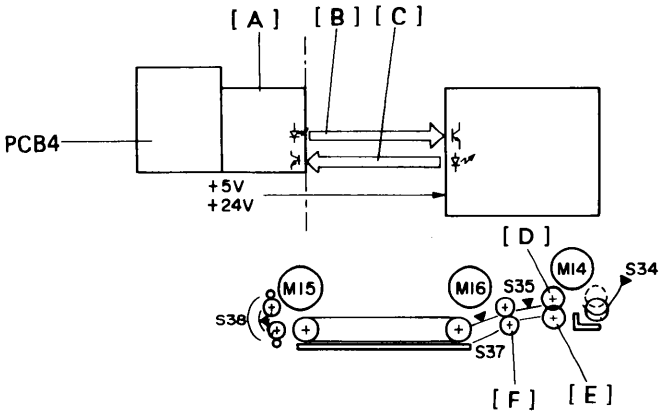

The DF has its own CPU which controls all of the DF functions. The DF CPU communicates with the copier through an interface board [A] and serial interface bus [B]. Fiber optics [C] are used for the serial interface bus because they are unaffected by electrical noise.

When an original is set on the original table, the original sensor [S34] is activated. The DF CPU then selects either the ADF or SADF mode depending on the number of originals set. If one original is set, SADF is selected. If more than one original is set at the same time, ADF is selected.

The DF CPU energizes the stopper and pick-up solenoids, and then turns on the feed-in motor [M14]. The feed [D] and friction rollers [E] separate and feed an original to the registration rollers [F].

A short time after the original reaches the registration roller the DF CPU turn on the belt drive motor [M16] and energizes the registration solenoid. The time lag enables the original skew to be corrected. The belt then feeds the original to the exposure glass, while the CPU counts the pulses of the M16 encoder. At the proper time, the CPU stops M16.

When the DF CPU receives the feed-out signal from the copier, it turns on the feed-out motor [M15] until the exit sensor [S38] is deactuated by the trailing edge of the original.

As the exit sensor is inside the exit unit, the trailing edge of the original is still in the exit unit. After 0.4 second, the CPU turns on M15 to feed the original out completely. This stacks the originals tidily.

5. Feed-in Unit Mechanism

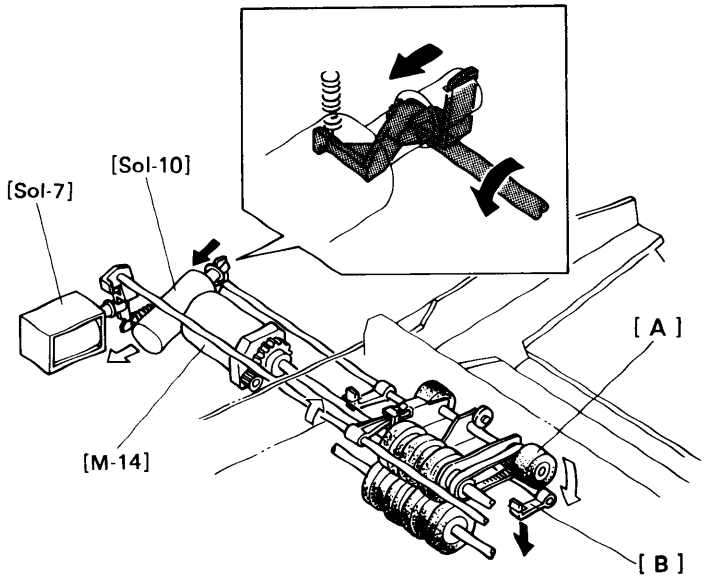

After an original is inserted into the feed-in unit and the Start key is pressed, the DF CPU energizes the pick-up solenoid [Sol-7] and the pick-up roller [A] drops onto the top of the original(s). At the same time, the DF CPU energizes the original stopper solenoid [Sol-10] to retract the stopper claws [B].

In ADF mode, the original stopper claws stay underneath the original feed table until all the originals have been fed. In SADF mode, the stopper claws rise up for each original.

200 ms after energizing the solenoids, the DF CPU turns on the feed-in motor [M-14] which rotates the feed and pick-up rollers.

6. Separation Mechanism

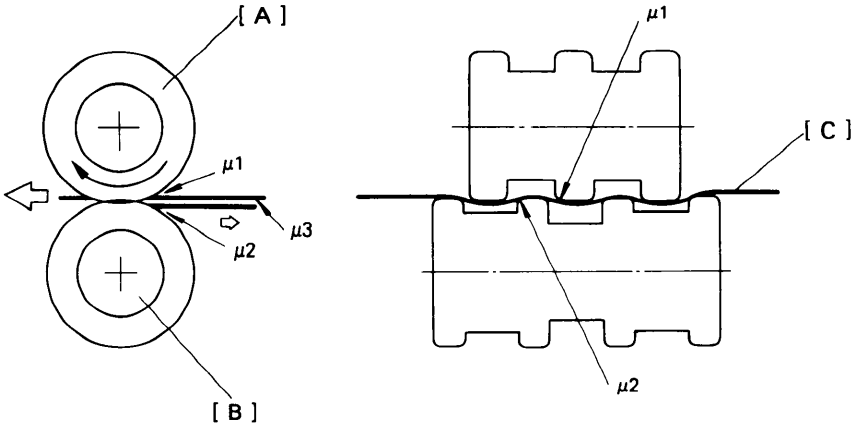

μ1 ----- Coefficient of friction between the feed rollers and the original.

μ2 ----- Coefficient of friction between the friction rollers and the original.

μ3 ----- Coefficient of friction between originals.

This model uses an FFR (Feed and Friction Roller) original feed system with three sets of rollers (feed, friction and pick-up roller). The feed [A] and friction rollers [B] have grooves in them which interlock with one another. The rollers interlock to decrease damage to the originals [C], especially pencil written originals, from direct roller-to-roller pressure.

The pick-up roller sometimes sends more than one original to the feed and friction rollers. When this happens, the friction rollers strip the extra original from the top original as follows: μ1 is greater than μ3, and because μ2 is greater than μ3, the top original will slide past the friction rollers while lower originals are stopped.

7. Misfeed Prevention

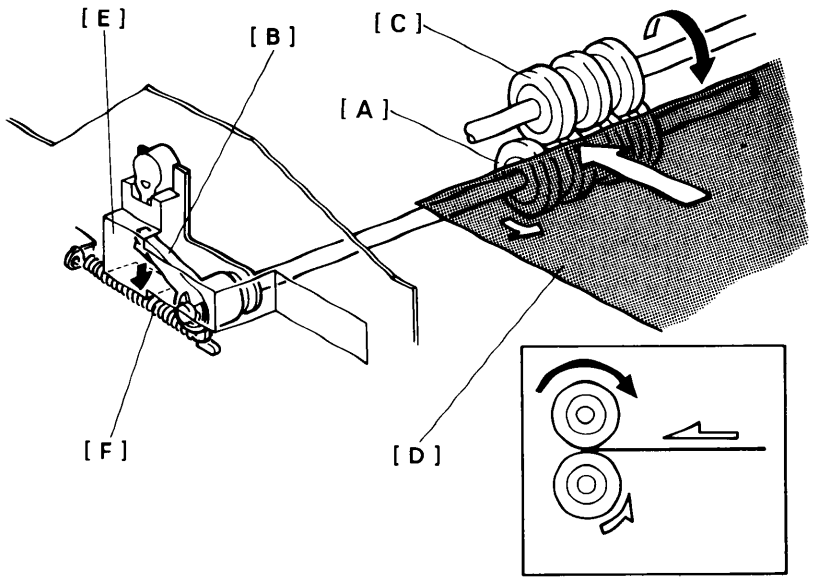

The front side of the friction roller [A] is attached to the misfeed prevention lever [B] through a one-way clutch.

When the leading edge of an original first contacts the feed [C] and friction rollers [A], the friction roller is stationary. As the leading edge is fed between these rollers, the friction roller rotates counter-clockwise a few degrees to help feed thick originals [D]. After the friction roller has rotated a few degrees, the misfeed prevention lever contacts the stopper plate [E] and the friction roller stops rotating. At this point, the separation mechanism will eliminate double feed.

When the trailing edge of the original passes the friction roller, the spring [F] returns the lever to its original position without rotating the friction roller shaft.

8. Wear Prevention

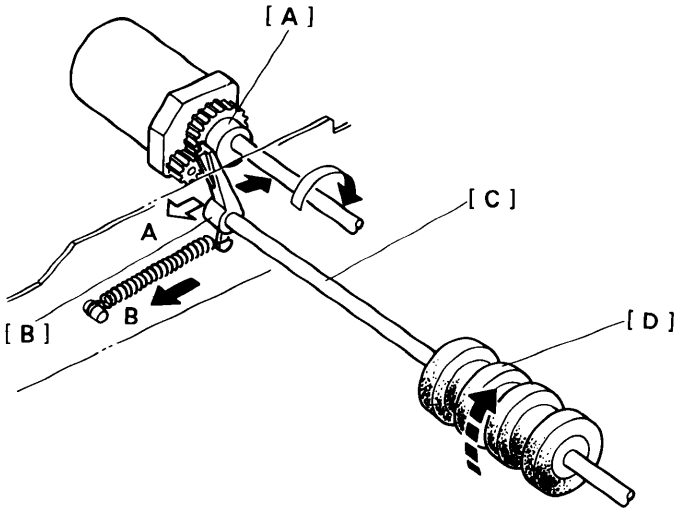

The rear side of the feed roller shaft drive gear has an eccentric cam [A]. This cam contacts the wear prevention lever [B] which is attached via a one-way clutch to the friction roller shaft [C]. This lever is free to rotate in the direction of the white arrow **A**.

As the feed roller drive gear rotates, the high point of the cam pushes back the wear prevention lever in the **A** direction. As the cam rotates to the low point, a spring returns the wear prevention lever to its original position (black arrow **B**). When the wear prevention lever returns, it rotates the friction roller shaft, through the one-way clutch.

Every time the feed roller shaft rotates once, the friction roller shaft is rotated a few degrees. This prevents the friction roller [D] from wearing unevenly or too quickly.

9. Friction Roller Release Mechanism

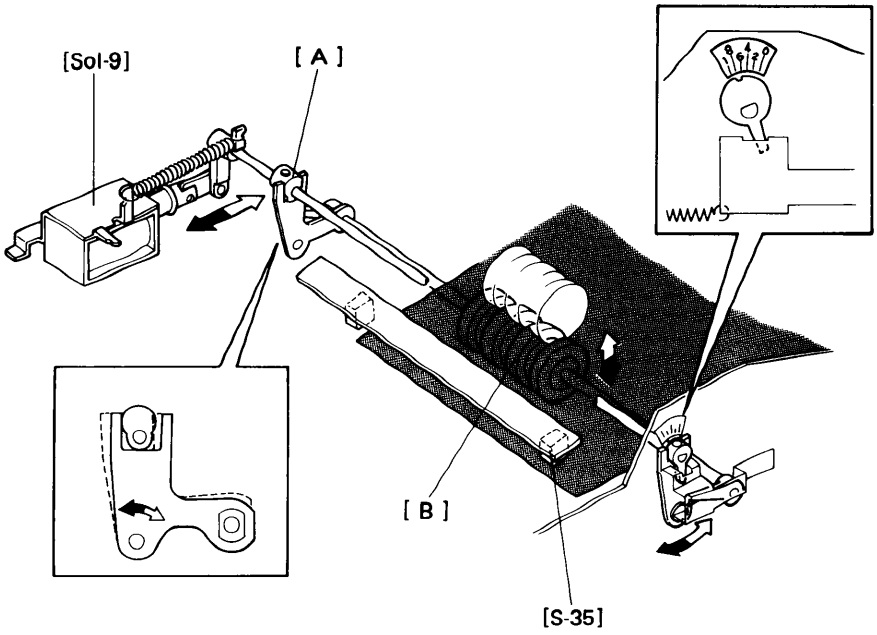

In the ADF mode, when the original activates the original entrance sensor [S-35], the DF CPU energizes the roller release solenoid [Sol-9]. This action rotates the roller release cam shaft, which has an eccentric cam [A] on each end, to decrease the overlap of the feed and friction rollers. This is to prevent the original from being smeared by the friction roller [B]. The overlap is 0.9 mm when the solenoid is off, and 0.4 mm when it is on.

In the SADF mode, it is not necessary to separate the originals, so the DF CPU energizes the roller release solenoid and releases the friction roller before feeding the original.

10. Registration

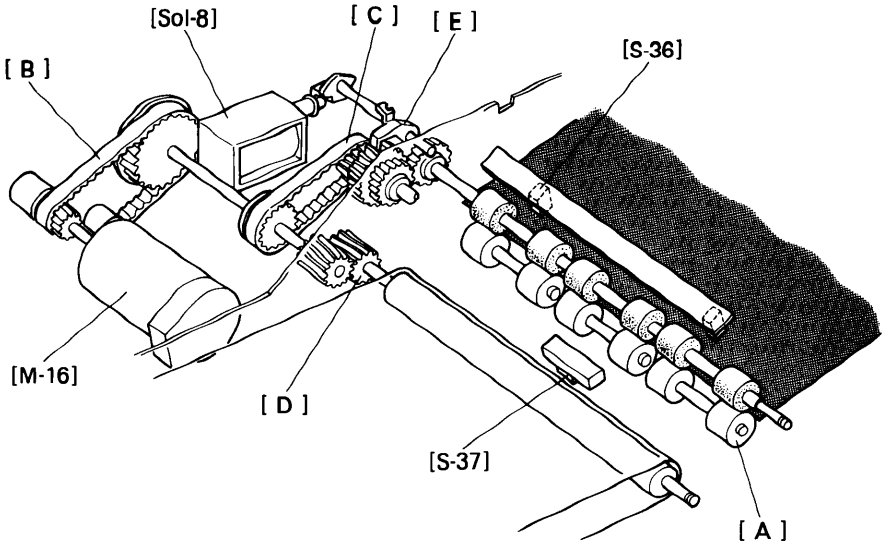

The DF CPU stops the feed-in motor [M14] 30 milliseconds after the leading edge of the original activates the original entrance sensor [S-35]. The original's own forward momentum, which causes the original to align against the registration roller [A], corrects for skew.

After a further 30 milliseconds, the DF CPU energizes the belt drive motor [M-16] and the registration solenoid [Sol-8]. Rotation of the belt drive motor is transmitted to the feed belt and registration rollers via the timing belts [B and C], belt drive gear [D], registration clutch [E], and registration roller gear.

The DF CPU starts counting the pulses from M16 when the leading edge of the original activates the registration sensor [S-37]. When the pulse count reaches 1,962 pulses (about 940 ms), the original is at the proper position, and the DF CPU stops M16.

In Auto Paper Selection or Auto R/E mode the ADF automatically determines the original size. The registration sensor and the original width sensor [S-36] measure the original size. The registration sensor measures the length of the original by counting the M16 pulses as the original passes under it. Then, if the original size cannot be determined from the length alone, the CPU checks whether the original has actuated the original width sensor. Based on the input from these two sensors, the correct original size can be determined.

The registration sensor is also a jam detector.

11. Feed-out Mechanism

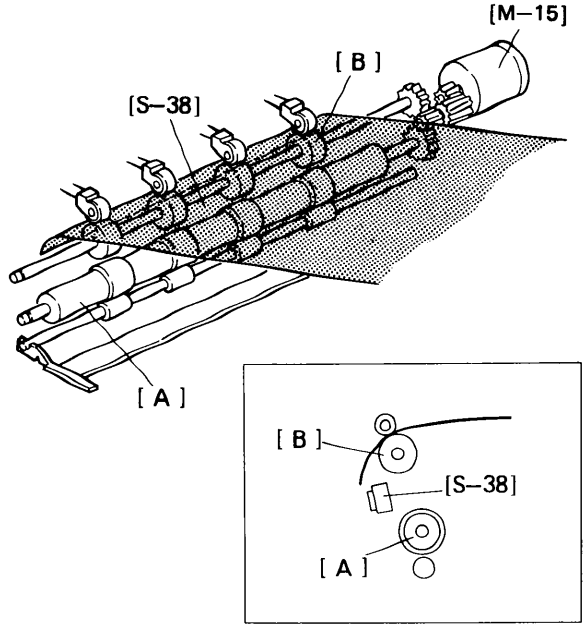

When the DF CPU receives the feed-out signal, it energizes the belt drive and feed-out motors. The feed-out motor [M-15] drives both the lower exit roller [A] and the upper exit roller [B] through an idle gear.

When the exit sensor [S-38] detects the trailing edge of the original, the CPU reduces the speed of the feed-out motor to feed the original our completely. This is done to stack the originals neatly.

12. Lifting Mechanism

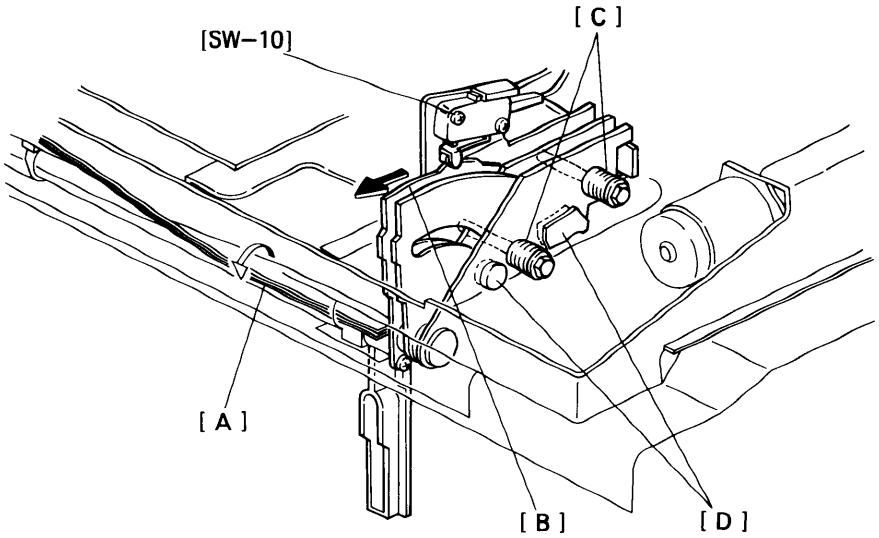

The torsion spring [A] is installed inside the torsion spring collars. A screw fixes the center of the torsion spring, and both sides of the spring are twisted when the belt unit is lowered. The spring tension makes it easier to lift up the belt unit.

The cam plates [B] are sandwiched between the brake shoes [C], which are under pressure from the brake shoe springs [D]. This causes friction between the cam plate and the brake shoes.

When the belt unit is lifted up, the lift switch [SW-10] is turned on by the detent arm as it moves along the cam plate. When the lift switch is turned on, DF modes are prohibited. At the same time, the DF CPU sends a signal to the copier CPU. This signal enables the copier to operate without the document feeder.

13. Misfeed Check

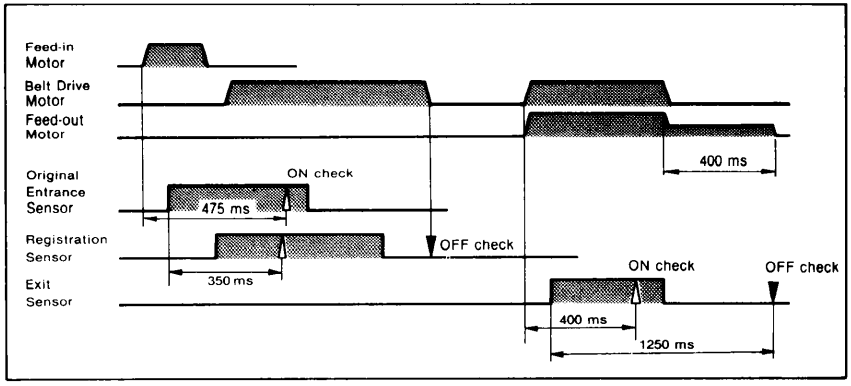

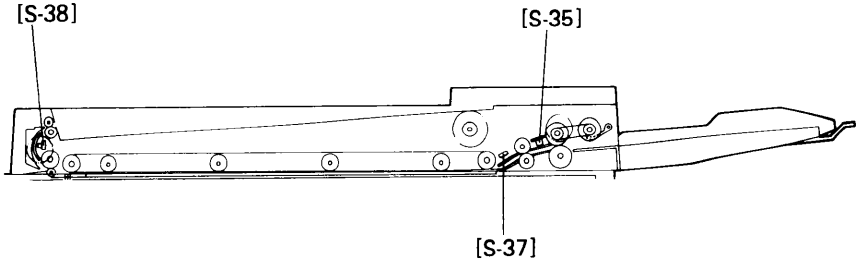

Three sensors are used for misfeed checks: the entrance sensor [S-35], registration sensor [S-37], and exit sensor [S-38]. After the feed-in motor [M-14] is energized, the original activates the entrance sensor. The DF CPU checks to see if the entrance sensor has been activated (entrance sensor ON check) 475 ms after the feed-in motor has been energized. Then, 350 ms after the entrance sensor is activated, the DF CPU checks to see if the registration sensor has been activated (registration sensor ON check).

The OFF check is carried out when the belt drive motor [M-16] is de-energized. The DF CPU checks to see if the registration sensor has been deactivated (registration sensor OFF check). There is no off check for the entrance sensor.

The ON check for the exit sensor occurs 400 ms after the feed-out and belt drive motors are re-energized. The OFF check for the exit sensor is done 1,250 ms after the exit sensor is activated. When a misfeed is detected, the DF CPU stops the DF and sends a misfeed signal to the copier. The lift switch cancels a misfeed condition.

SORTER

1. Specifications

Paper Size for Bins:	Maximum A3, 11" x 17" Minimum A5, 5 1/2" x 8 1/2"
Paper Weight:	50 to 110 grams (14 to 28 lb)
Number of Bins:	20 bins + proof tray
Bin Capacity:	Sort Mode 35 sheets/A4 (8 1/2" x 11") 10 sheets/A3 (11" x 17") Stack Mode 30 sheets/A4 (8 1/2" x 11") 10 sheets/A3 (11" x 17")
Proof Tray Capacity:	100 sheets (all sizes)
Power Source:	100 V, 50/60 Hz, 0.6 A (from copier)
Power Consumption:	60 W
Dimensions:	346 mm(W) x474 mm(D) x 388 mm(H) 13.6"(W) x 18.7"(D) x 15.3"(H)
Weight:	12.4 kg (27.3 lb)
Copier Interface Equipment:	Sorter adapter type E Interface PCB type E

2. Mechanical Component Layout

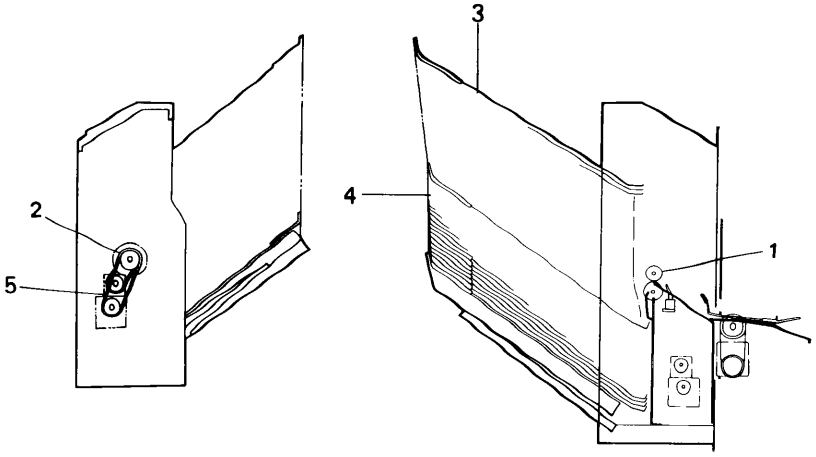

1. Exit Rollers
2. Bin drive Wheel
3. Proof Tray
4. Bins
5. Roller Drive Belt

3. Electrical Component Layout

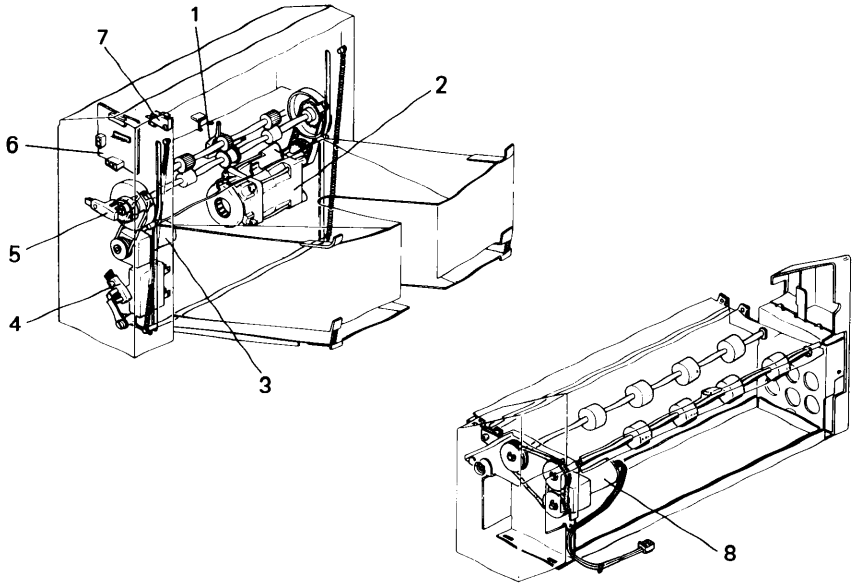

1. Paper sensor (S-31)
2. Wheel drive motor (M-11)
3. Roller drive motor (M-12)
4. Bin home position sensor (S-32)
5. Wheel sensor (S-33)
6. Sorter Control PCB (PCB-9)
7. Cover safety switch (SW-9)
8. Relay drive motor (M-13)

4. Basic Operation

- CLEAR MODE -

When the main switch of the copier is turned on, the sorter automatically assumes the clear mode. It also changes to the clear mode if the sort or stack mode is recalled or if the interrupt key is pressed. In the clear mode, all copies are stacked on the proof tray.

Sorter operation starts when a sheet of copy paper actuates the copier exit sensor. At this time the roller drive motor and relay drive motor energize. The motors de-energize when the paper exits the copier and the paper sensor is deactuated. The paper sensor signal is sent to the copier through an interface board to check for paper misfeed. The wheel drive motor does not turn on when in the clear mode.

- SORT MODE -

After the sort mode is selected by pressing the Sorter key, the wheel drive motor turns on to move the proof tray up. When the first sheet of paper activates the paper exit sensor, the roller drive motor turns on. Shortly after the paper sensor turns off (345 ms later), the wheel drive motor turns and advances the bins one step. When the wheel sensor is activated, the wheel drive motor turns off.

- STACK MODE -

As in the sort mode, the roller drive motor turns on when the first sheet of paper actuates the copier exit sensor. All copies of the copy run are then fed to the first bin. When the final copy passes the paper sensor, the wheel drive motor turns on and advances the bins one step.

There are no limits on the number of copies that can be entered up to the full 99 copy limit of the copier. However, the physical capacity of the bins is a good deal less. (See "Bin Capacity" in the specifications.)

When all 20 bins have been used, the wheel drive motor turns on until all the bins have been lowered (including the proof tray). At the same time, the Max indicator blinks.

- Example of Sort Mode Operation -

"3" copies entered/Start key pressed 3 times.

- Start key ON -

1) The first copy feeds to the first bin [A]. After the paper detector turns off, the wheel drive motor turns on and moves the first bin up.

2) The same action as #1.

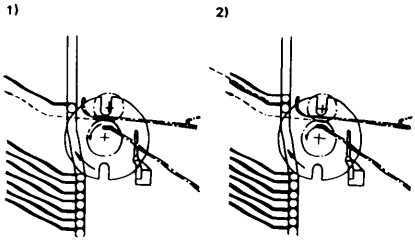

3) The third copy feeds to the third bin. The wheel drive motor does not turn on after the paper sensor turns off. (The sorter will stay at this position until auto-reset or until copying resumes.)

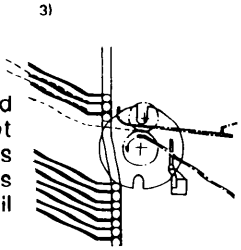

- Start Key ON -

4) The first copy is fed to the third bin. After the paper detector turns off, the wheel drive motor turns on and moves the second bin down.

5) The same as #4.

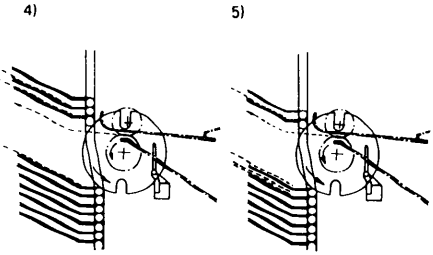

6) The third copy is fed to the first bin. The wheel drive motor does not turn on after the paper sensor turns off.

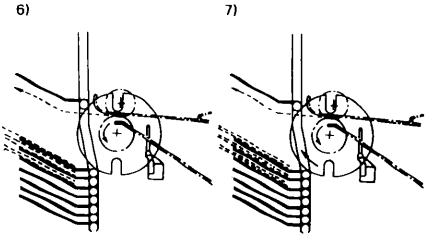

- Start Key ON -

7) The first sequence (1, 2, and 3) is repeated.

5. Bin Drive Mechanism

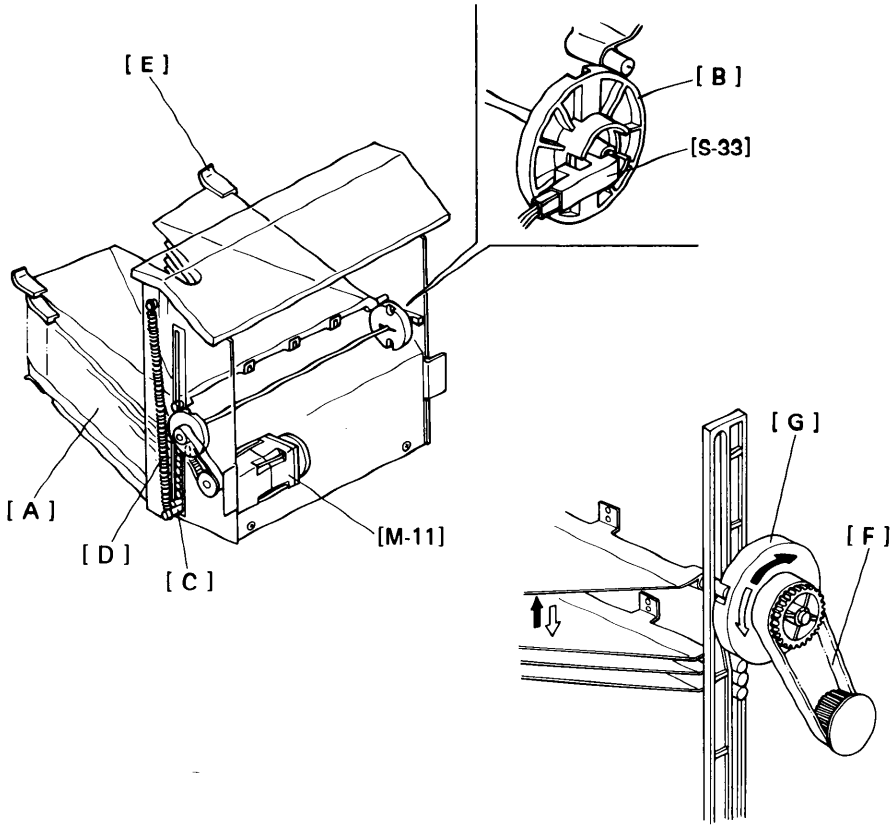

The bin drive mechanism moves the bins [A] up and down to receive copies under the direction of the copier CPU. The main components in this mechanism are the wheel drive motor [M11], the two transfer wheels [B], the wheel sensor [S33], and the bins themselves.

Pins on either side of each bin are inserted into slots in the sorter side frame. The pins slide up and down in these slots. The bins rest on each other with the lower one resting on the lift bar [C]. The springs [D], on either end of the lift bar, lift it up forcing the bin pins against the transfer wheels. Plastic spacers [E] on the left end of the bins hold them apart.

To move the bins up, the bin drive motor turns clockwise (as viewed from the front). A timing belt [F] turns the transfer wheels [G].

The transfer wheels have two slots in them 180 degrees apart. As the transfer wheels turn, these slots engage the pins of the bins and lift them up. Each time the transfer wheels turn 180 degrees, they raise one bin.

The CPU counts the bins using the wheel sensor. A cylindrical actuator [H] on the front transfer wheel turns the wheel sensor on and off. This actuator has two notches that are 180 degrees apart. The wheel sensor turns on each time one of the slots passes through the sensor.

To move the bins down, the CPU reverses the bin drive motor and the above process reverses.

The home position sensor is located at the lower rear end of the sorter. When all the bins are lowered, the lift bar presses down on the actuator [I], actuating the sensor. The CPU checks the sensor whenever the power is turned on. At this time, if the bins are not in the home position, the sensor will deactuate and inform the CPU to return the sorter to the home position.

6. Bins

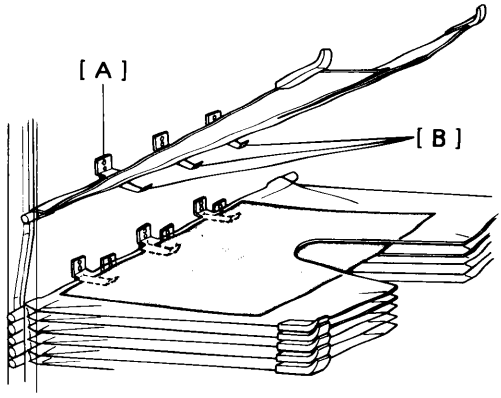

The proof tray and the twenty bins are all basically the same. Formed out of thin flexible steel plate, they have spacers on the left end to hold them apart, and pins at the front and rear of the right end, which are inserted in guide slots in the sorter frame.

On the right edge, the bins have stoppers [A] which prevent copies from sliding back into the sorter after they have been fed out. The pattern of these stoppers is different for even and odd numbered bins.

Three leaf springs [B] on the underside of each bin hold the copies flat in the underlying bin.

7. Exit Rollers

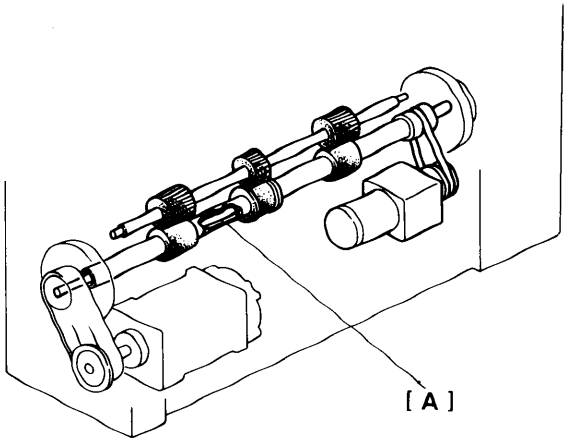

The exit roller shaft is hollow and is mounted on the transfer wheel shaft [A] (coaxial). When the copy actuates the copier's exit sensor, the CPU sends a signal to the sorter to turn on the roller drive motor. The roller drive motor turns off at the same time as the copier main motor (M-12).

8. Electrical Control

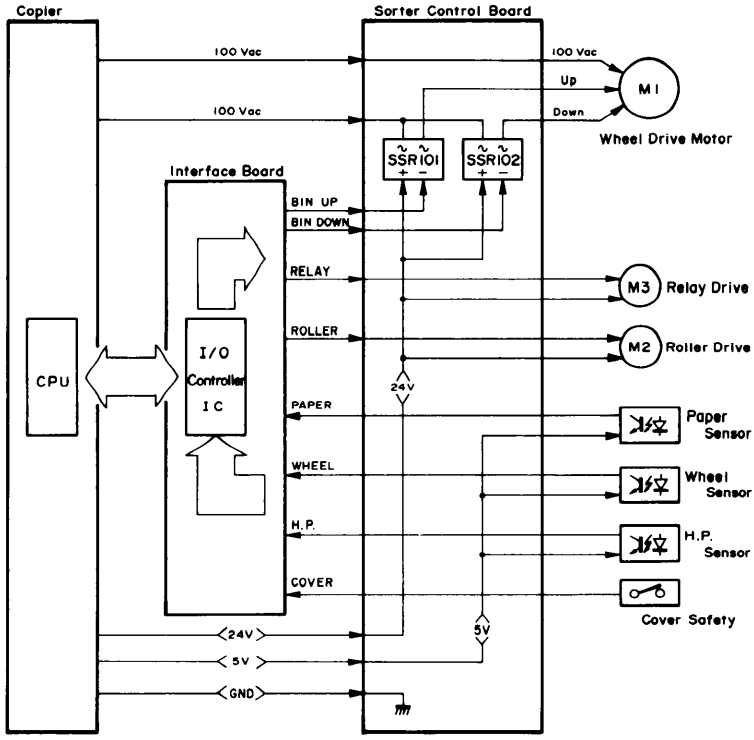

The copier CPU, through an I/O controller IC on the interface board, controls all the functions of the sorter.

The copier supplies 100 volts ac to the wheel drive motor and the SSRs. SSR 101 turns the wheel drive motor to move the bins up and SSR 102 is for the down operation.

The copier supplies two dc power levels, +5 volts and +24 volts, for the dc components.

Signals from the sensors and the safety switch are sent to the copier CPU through the interface board. The copier CPU operates motors through the interface board and SSR's.

LARGE CAPACITY TRAY

1. Specifications

Copy Paper Size:	B4 (lengthwise) A4 (lengthwise or sideways) B5 (lengthwise or sideways) 8 1/2" x 14" (lengthwise) 8 1/2" x 11" (lengthwise or sideways)
Copy Paper Weight:	50 g to 110 g (14 lb to 28 lb)
Tray Capacity:	1,000 sheets (may vary slightly depending on paper weight)
Lift Time:	Maximum: 12 seconds (50Hz) 10 seconds (60Hz)
Power Source:	220 V/50 Hz 0.15 A 240 V/50 Hz 0.15 A 115 V/60 Hz 0.3 A 110 V/60 Hz 0.3 A
Power Consumption:	Maximum 30 W
Dimensions:	410mm(W) x 545mm(D) x 220mm(H) 16.1"(W) x 21.5"(D) x 8.7"(H)
Weight:	12 kg (26.4 1b)

2. Mechanical Component Layout

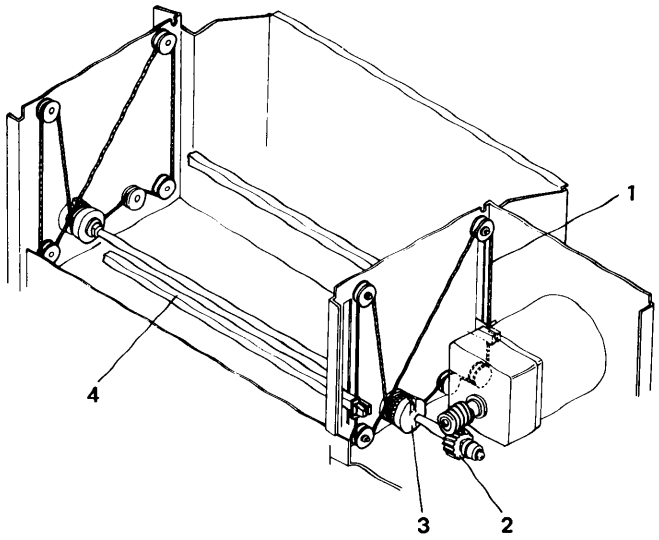

1. Drive Wire
2. Drive Gears
3. Drive Pulley
4. Tray Wire
5. Lift Rods

3. Electrical Component Layout

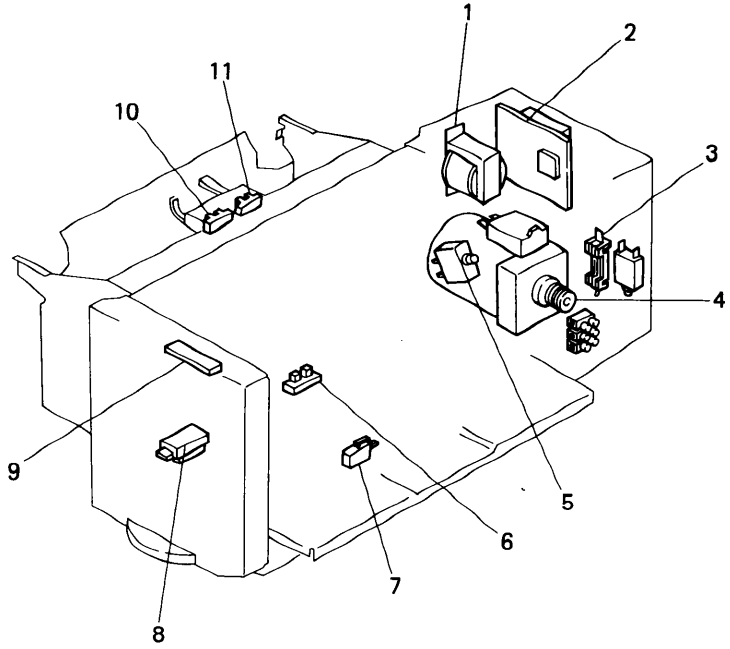

1. LCT transformer (T-2)
2. LCT PCB (PCB-12)
3. AC fuse (F-2) (220 V)
3. Circuit breaker (CB-2) (115 V)
4. LCT motor (M-17)
5. LCT safety switch (SW-11)

6. Tray down sensor (S-39)
7. Positioning switch (SW-12)
8. Paper size sensor (S-40)
9. LCT operation panel (PCB-13)
10. Paper end sensor (S-41)
11. Upper limit sensor (S-42)

4. Mechanical Operation

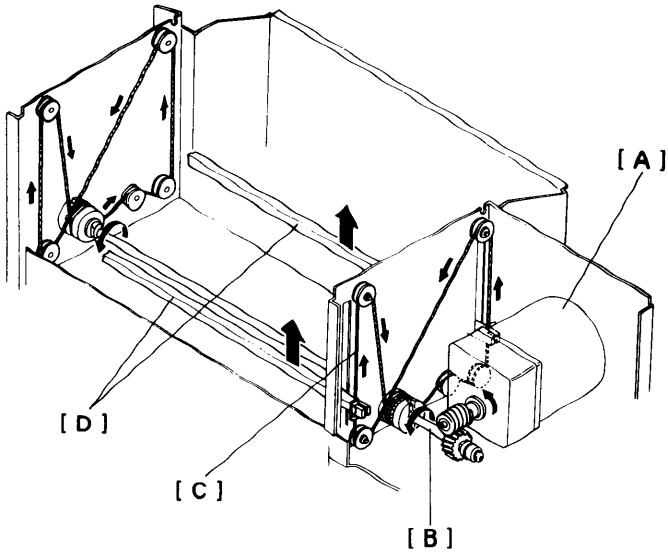

- **Drive Mechanism** -

A reversible ac motor [A] drives the LCT's bottom plate up and down.

The motor's drive is transmitted directly to the tray drive shaft [B] via a worm gear and worm wheel. The tray wires [C] have braces on them; these braces hold the ends of the two lift rods which support the tray bottom plate. The braces on the wires raise the lift rods [D] and the tray bottom plate when the pulley turns counterclockwise, and they lower them when the pulley turns clockwise.

- Pick-up Roller Mechanism -

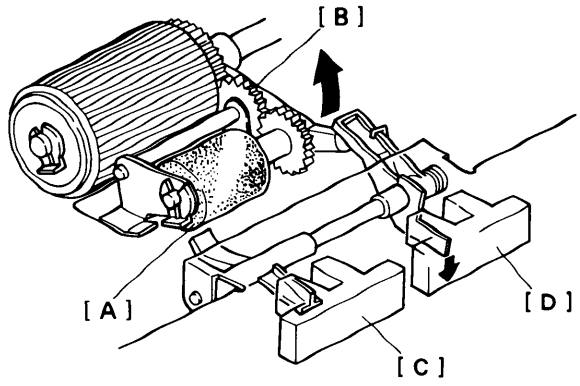

The pick-up roller [A] is driven by a drive gear [B] to initialize feed paper from the LCT.

The paper end sensor [C] and the upper limit sensor [D] are incorporated in the LCT not the copier. The paper end sensor is used to detect paper end and the upper limit sensor detects when the tray has reached its upper limit when the tray is being raised.

- Paper Size Detection -

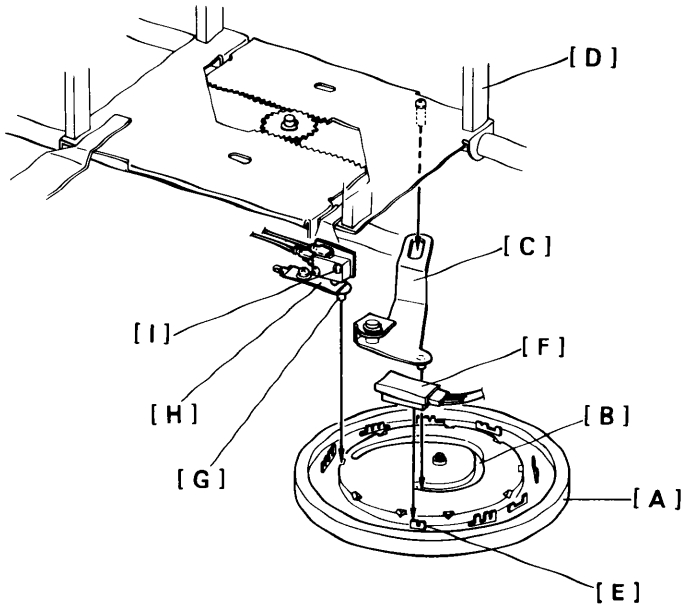

The paper size dial controls side post positioning and paper size detection.

When the paper size dial [A] is rotated, the cam groove [B] moves the size lever [C], which repositions the guide posts [D]. When the dial reaches a standard paper size, one of the actuator plates [E] enters the paper size sensor [F]. At the same time, the pin [G] on the leaf spring [H] drops into a notch on the inside rim of the dial and the positioning switch [I] deactuates.

When the positioning switch opens, the scan signal is applied to the LCT paper size sensor. The paper size sensor then reads the pattern of the actuator plate and sends paper size data to the copier's CPU.

When the paper size dial is positioned at a non-standard paper size, the positioning switch is actuated (closed). In this case, the LCT cannot be used; the Load Paper indicator lights and no paper size is displayed on the operation panel. This prevents the skewing that would occur if the guide posts were not at the correct position.

5. Electrical Operation

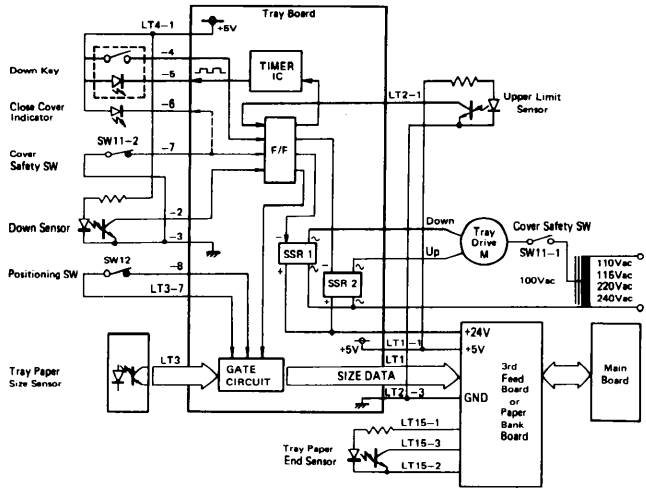

- DOWN OPERATION -

The bottom plate moves down only when the Down key is pressed or paper end occurs. When the Down key is pressed, the flip-flop changes state (all outputs change from LOW to HIGH or vice versa). Then, three things happen simultaneously: (1)The gate circuit turns off, preventing size data from being sent to the copier; (2) The timer circuit turns on, causing the LED in the down key to blink; and (3) SSR1 turns on, energizing the drive motor to move the tray down.

The down sensor is actuated when the bottom plate is fully lowered. This causes the flip-flop to change back to its original state, which turns off SSR1 and resets the timer circuit. The LED in the Down key stays continuously on.

- UP OPERATION -

Opening and closing the upper or side LCT cover while the bottom plate is in the down position starts the up operation. This causes the gate circuit to send paper size data to the copier. At the same time the cover safety switch changes the state of the flip-flop and the flip-flop energizes SSR2, which turns on the drive motor to move the tray up. The drive motor stays on until the paper pushes up the pick-up roller. The actuator on the pick-up roller bracket then moves out of the upper limit sensor; this again changes the flip-flop's state and the motor stops.

The cover safety switch prevents operation if the cover is open as this opens the ac 100 volt line.