ELECTRICAL COMPONENT LAYOUT (A173)

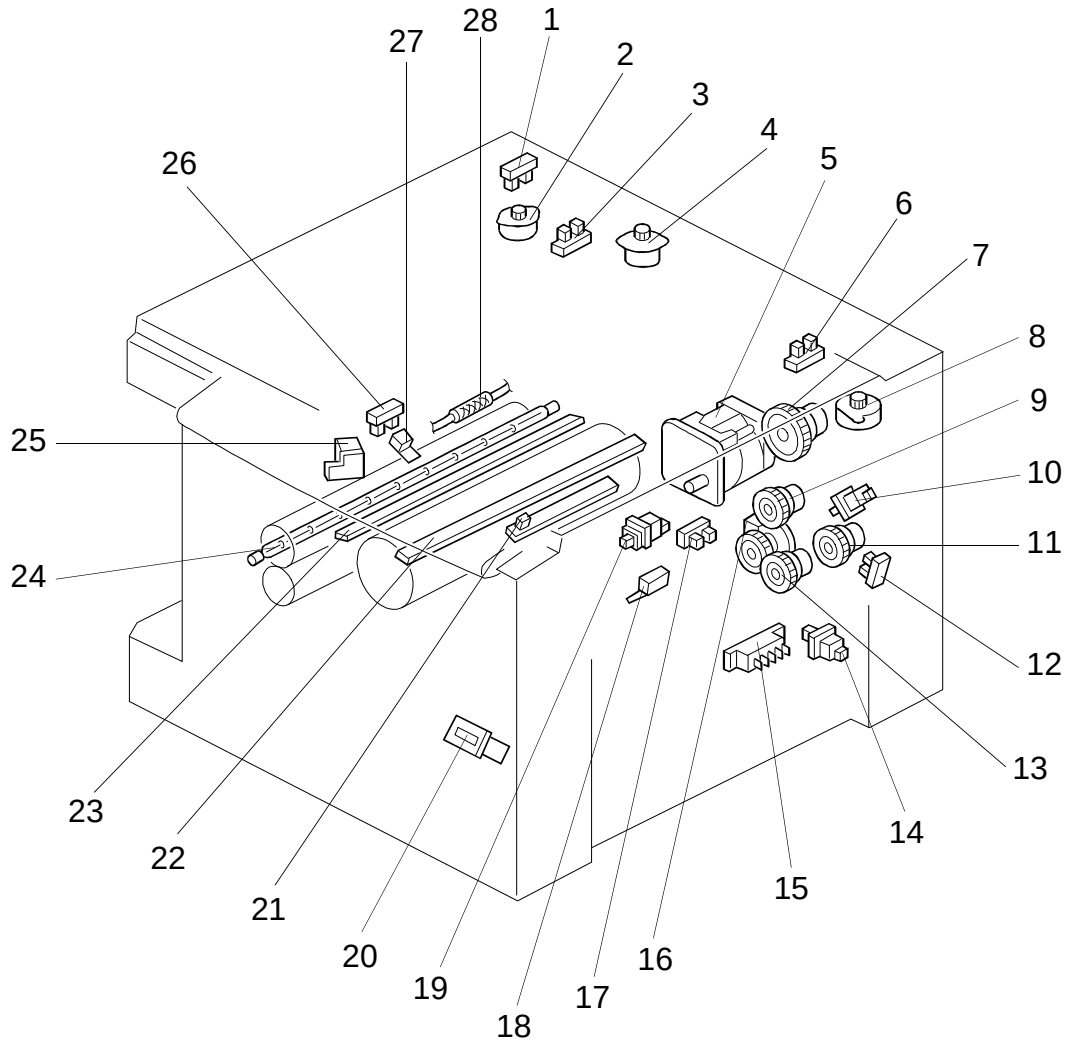

A173S500.wmf

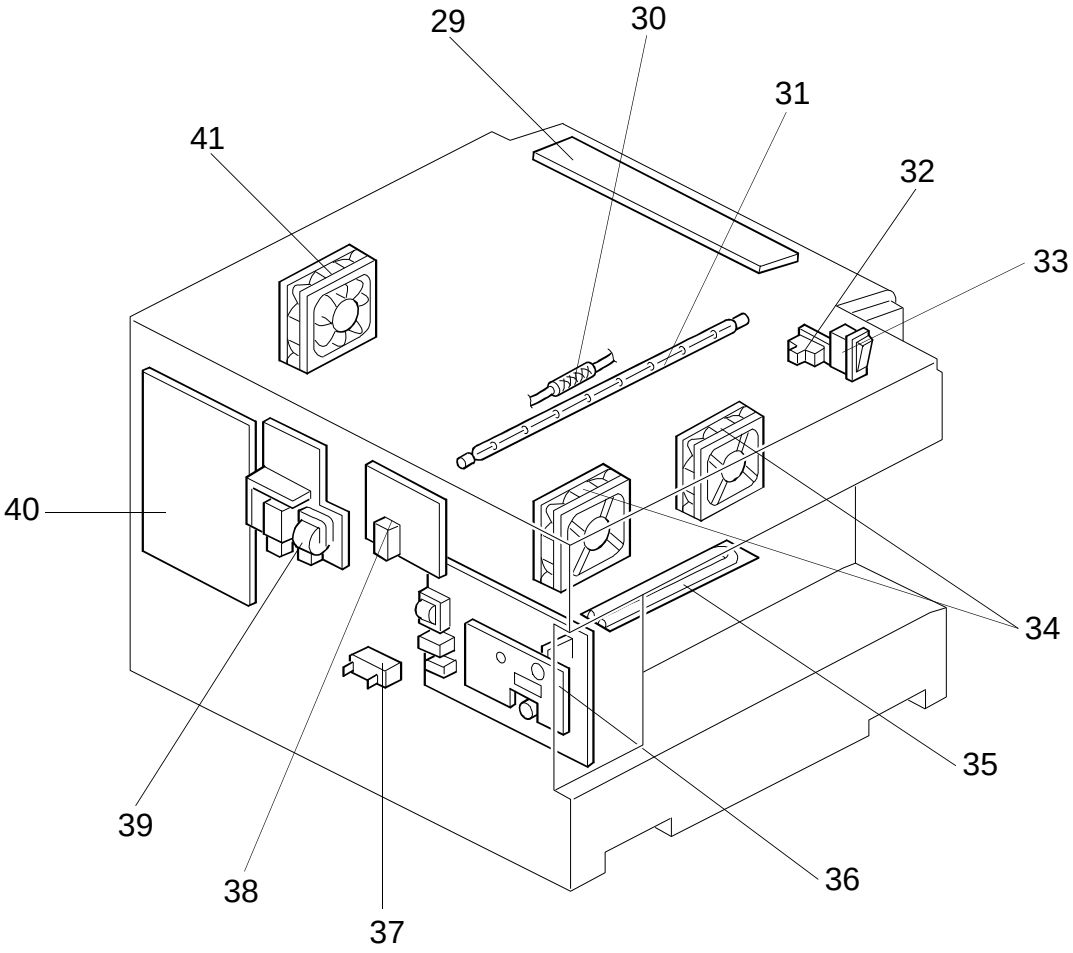

A173S501.wmf

Symbol	Name	Index No.	P to P
Motors			
M1	Main Motor	5	G-8
M2	Scanner Motor	4	A-7
M3	Lens Motor	2	H-2
M4	4th/5th Mirror Motor	8	I-2
M5	Optics Cooling Fan Motor	41	L-2
M6 M7	Exhaust Fan Motors	34	P-5 P-4
Clutches			
CL1	Registration Clutch	9	I-2
CL2	1st Paper Feed Clutch	11	I-2
CL3	2nd Paper Feed Clutch	16	J-2
CL4	Relay Roller Clutch	13	J-2
CL5	Toner Supply Clutch	7	K-2
Switches			
SW1	1st Paper Size Switch	15	P-9
SW2	Right Cover Switch	14	P-8
SW3	2nd Tray Set Switch	19	P-7
SW4	Manual Feed Table Switch	10	P-5
SW5	Cover Open Switch	32	B-11
SW6	Main Switch	33	D-12
Sensors			
S1	Scanner Home Position Sensor	1	G-2
S2	Lens Home Position Sensor	3	G-2
S3	4th/5th Mirror Home Position Sensor	6	L-2
S4	ADS Sensor	25	P-11
S5	Registration Sensor	18	P-10
S6	2nd Paper End Sensor	17	P-7
S7	Image Density (ID) Sensor	21	P-6
S8	1st Paper End Sensor	12	P-6
S9	Exit Sensor	26	P-5

Symbol	Name	Index No.	P to P
Printed Circuit Boards			
PCB1	Main Board	40	M-7
PCB2	Power Supply/ AC Drive Board	36	E-7
PCB3	Operation Panel Board	29	J-11
Lamps			
L1	Erase Lamp	22	Q-12
L2	Quenching Lamp	23	J-7
L3	Fusing Lamp	24	B-9
L4	Exposure Lamp	31	B-7
Power Packs			
P1	CC/Grid/Bias Power Pack	38	J-9
P2	TC/SC Power Pack	39	J-8
Heaters			
H1	Anti-condensation Heater	35	G-10
Counters			
CO1	Total Counter	20	Q-9
Others			
C1	Main Motor Capacitor	37	G-9
TF1	Fusing Thermofuse	28	B-9
TF2	Optics Thermofuse	30	B-7
TH1	Fusing Thermistor	27	Q-4