RICOH

RICOH FT4422

PARTS CATALOG

First Edition October 1995

RICOH COMPANY, LTD.

PARTS CATALOG

INTRODUCTION

This chapter instructs you the numbers and names of parts on this machine.

INDEX to PARTS CATALOG

FT4422 (A173)
DF57 (A318)
CS110 (A490)

FT4422 (A173)

PARTS CATALOG

INTRODUCTION

This chapter instructs you the numbers and names of parts on this machine.

INDEX to PARTS CATALOG

Location of Unit 3
1.EXTERIOR (A173) 6
2.PLATEN COVER (A173) 8
3.OPTICS 1 (A173) 10
4.OPTICS 2 (A173) 12
5.OPTICS 3 (A173) 14
6.OPTICS 4 (A173) 16
7.BY-PASS FEED SECTION (A173) 18
8.PAPER TRAY (A173) 20
9.PAPER REGISTRATION 1 (A173) 22
10.PAPER REGISTRATION 2 (A173) 24
11.PAPER FEED SECTION (A173) 26
12.TONER HOPPER UNIT (A173) 28
13.DEVELOPMEMNT UNIT (A173) 30
14.CHARGE CORONA UNIT (A173) 32
15.DRUM UNIT 8A173) 34
16.CLEANING UNIT (A173) 36
17.TRANSFER UNIT (A173) 38
18.FUSING UNIT (A173) 40
19.PAPER EXIT SECTION (A173) 42
20.DRIVE SECTION (A173) 44
21.ELECTRICAL SECTION 1 (A173) 46
22.ELECTRICAL SECTION 2 (A173) 48
23.FRAME SECTION (A173) 50
24.MAIN CONTROL BOARD (A173) 52
25.DECAL AND DDCUMENT (A173) 56
26.SPECIAL TOOLS (A173) 58
PARTS INDEX 61

October,31'95

Location of Unit

1. EXTERIOR (A173)

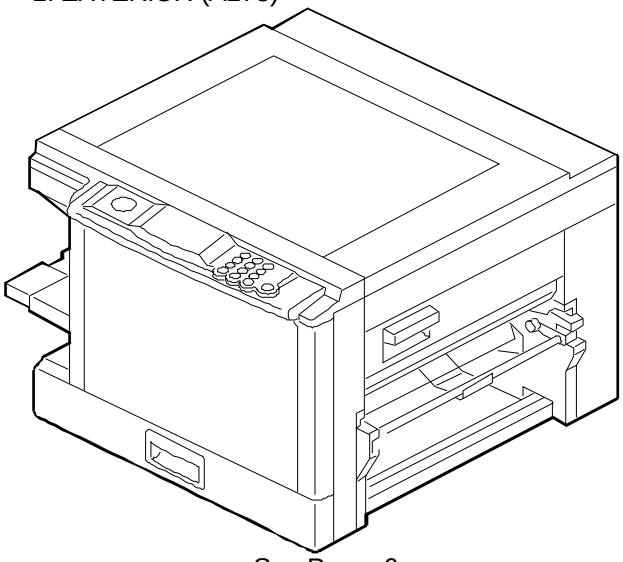

See Page 6

2. PLATEN COVER (A173)

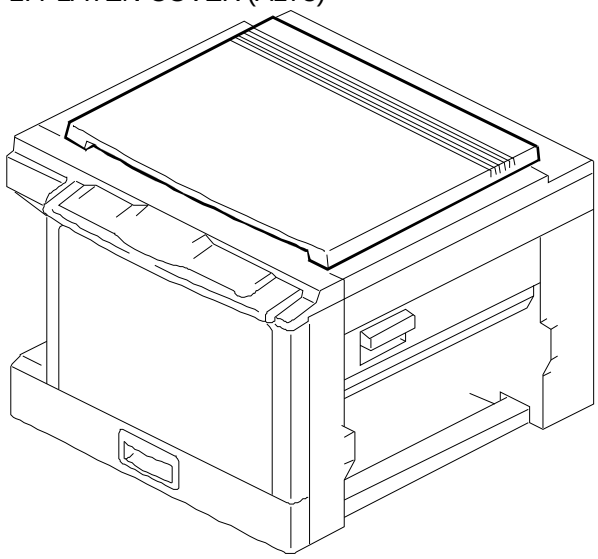

See Page 8

3. OPTICS 1 (A173)

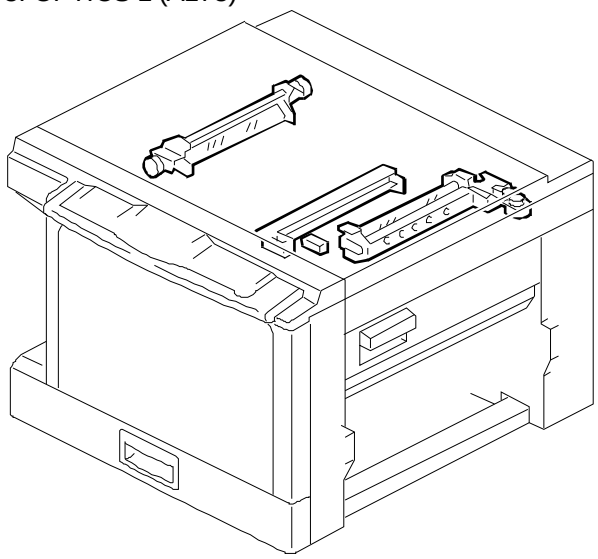

See Page 10

4. OPTICS 2 (A173)

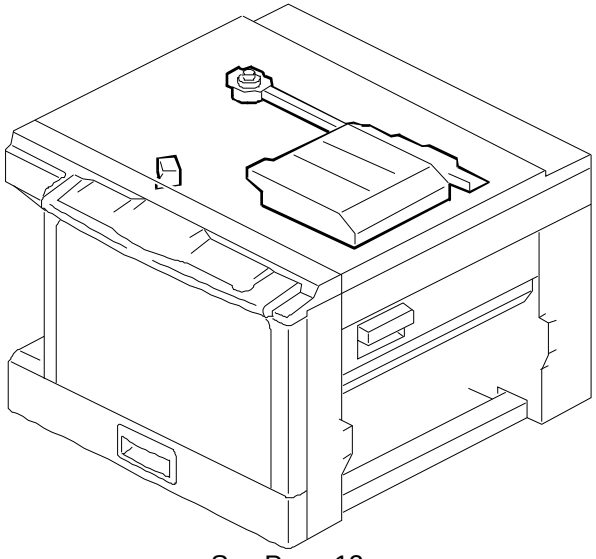

See Page 12

5. OPTICS 3 (A173)

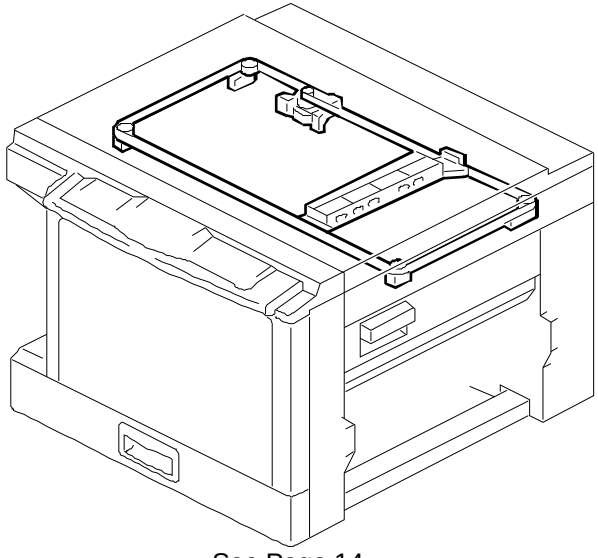

See Page 14

6. OPTICS 4 (A173)

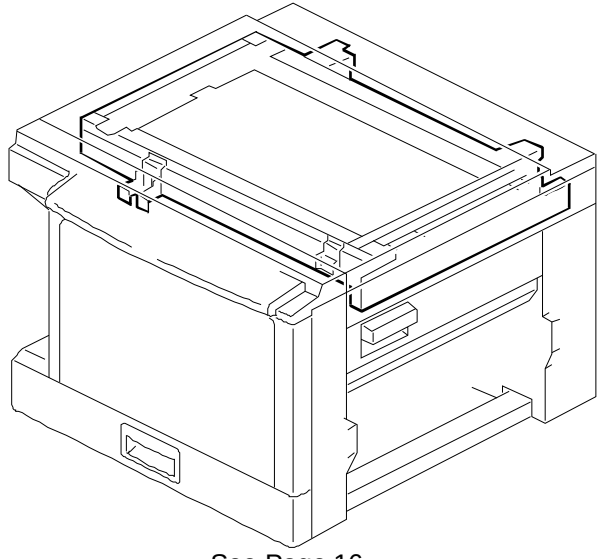

See Page 16

Location of Unit

7. BY-PASS FEED SECTION (A173)

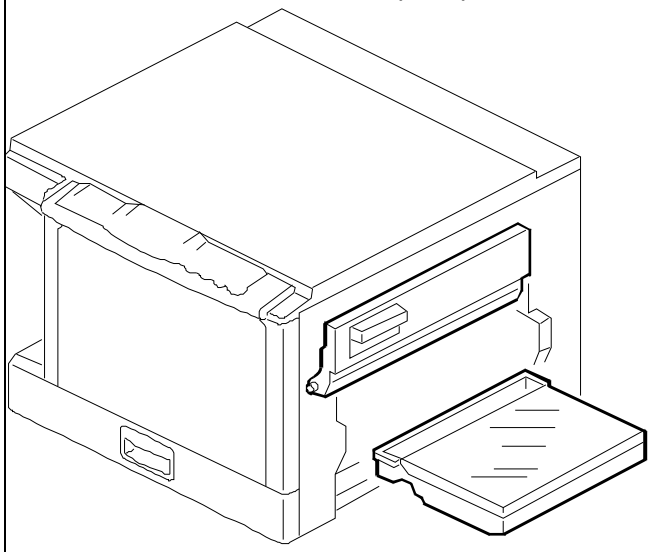

See Page 18

8. PAPER TRAY (A173)

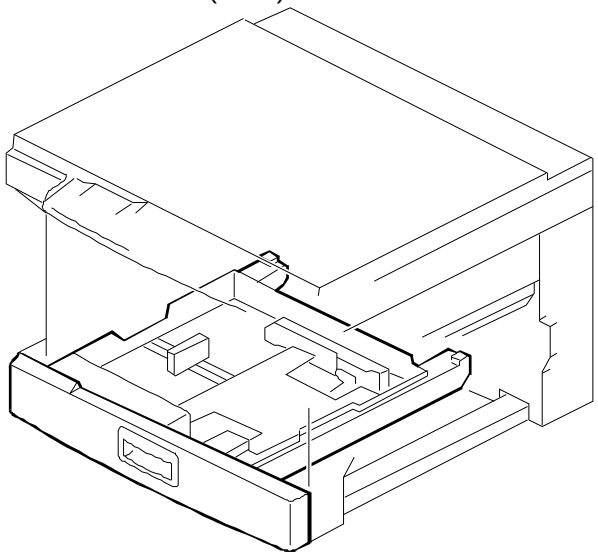

See Page 20

9. PAPER REGISTRATION 1 (A173)

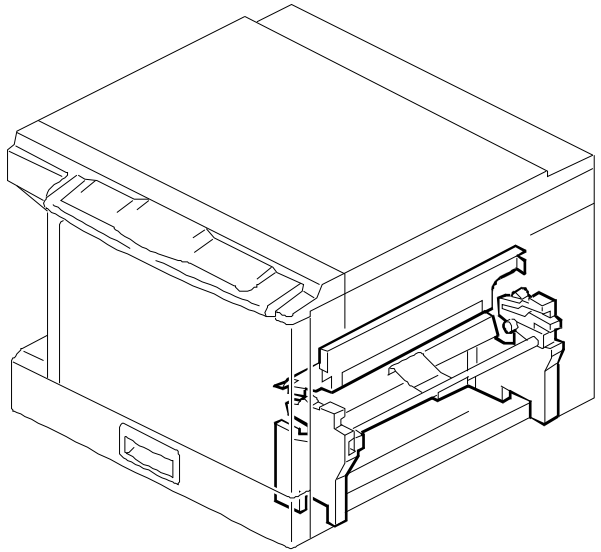

See Page 22

10. PAPER REGISTRATION 2 (A173)

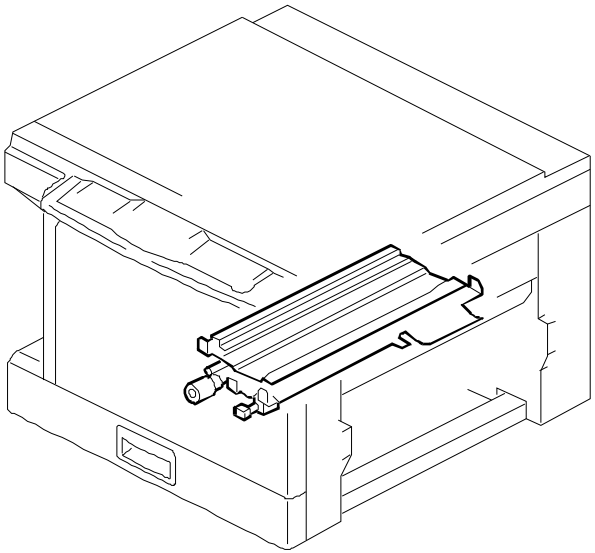

See Page 24

11. PAPER FEED SECTION (A173)

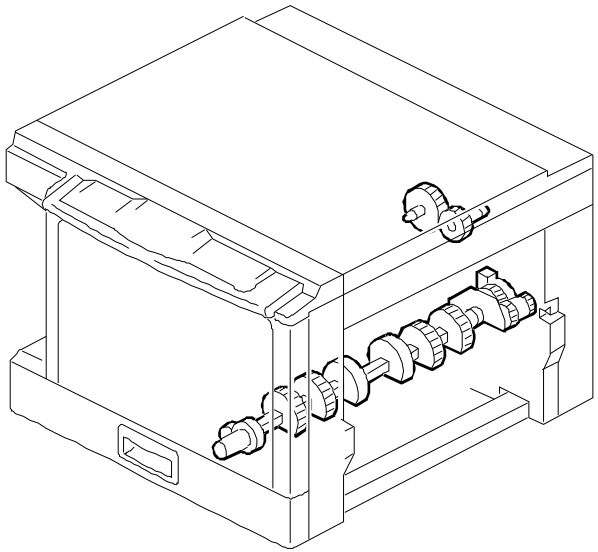

See Page 26

12. TONER HOPPER UNIT (A173)

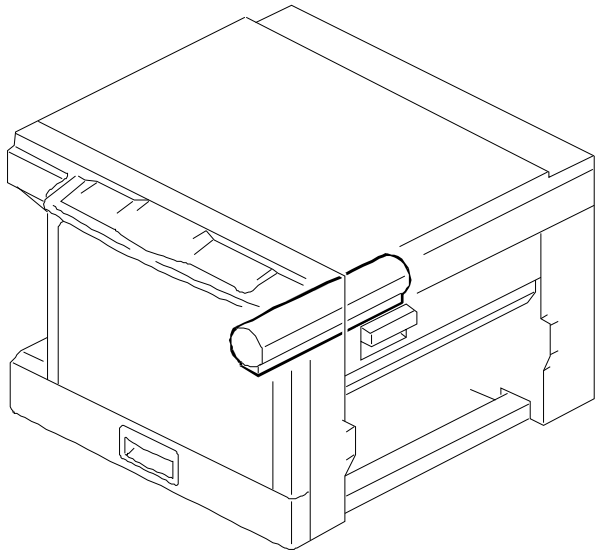

See Page 28

Location of Unit

13. DEVELOPMEMNT UNIT (A173)

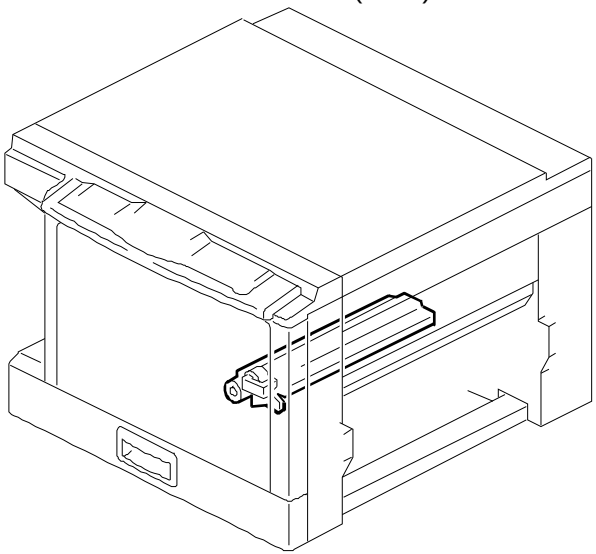

See Page 30

14. CHARGE CORONA UNIT (A173)

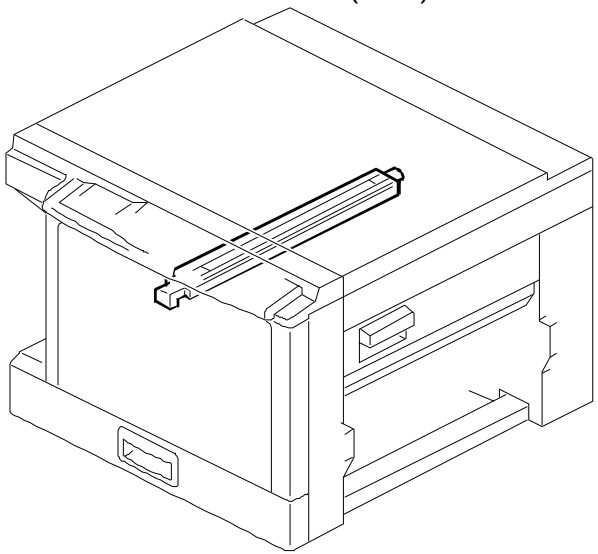

See Page 32

15. DRUM UNIT 8A173)

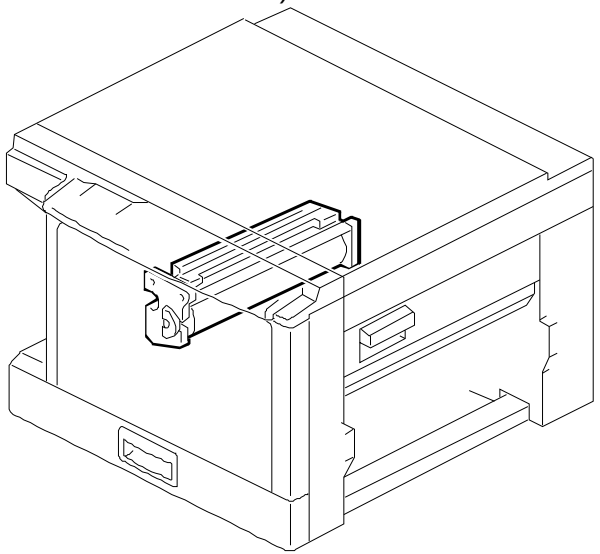

See Page 34

16. CLEANING UNIT (A173)

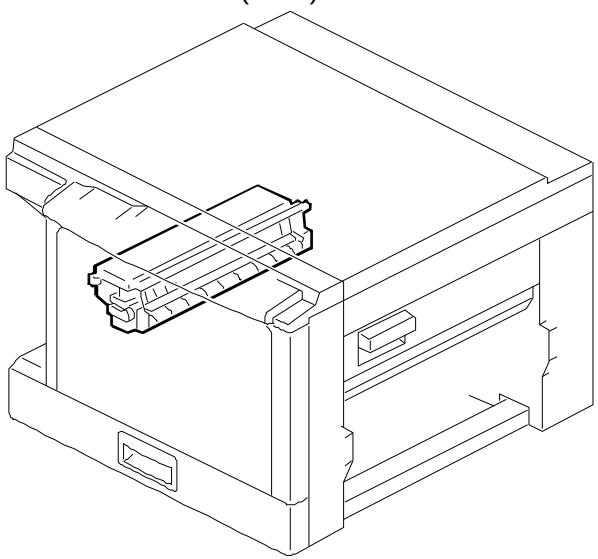

See Page 36

17. TRANSFER UNIT (A173)

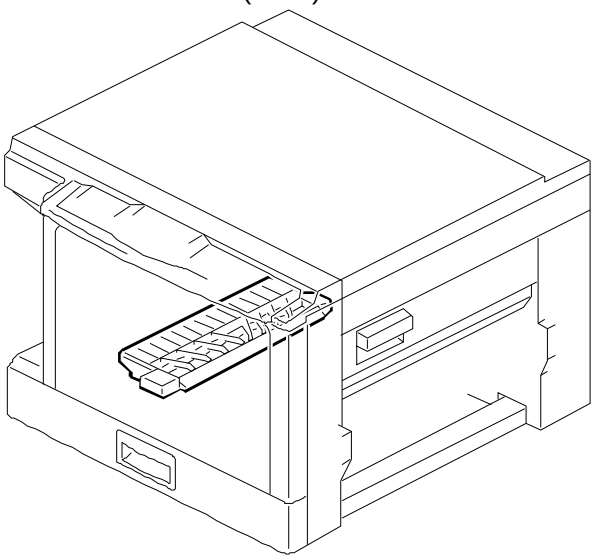

See Page 36

18. FUSING UNIT (A173)

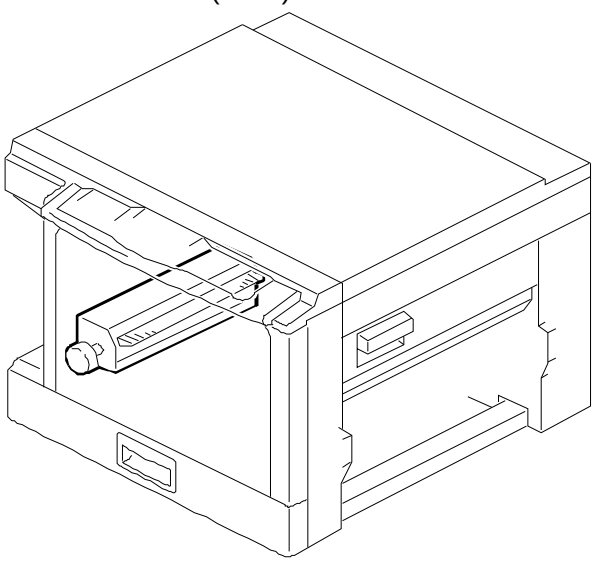

See Page 40

Location of Unit

19. PAPER EXIT SECTION (A173)

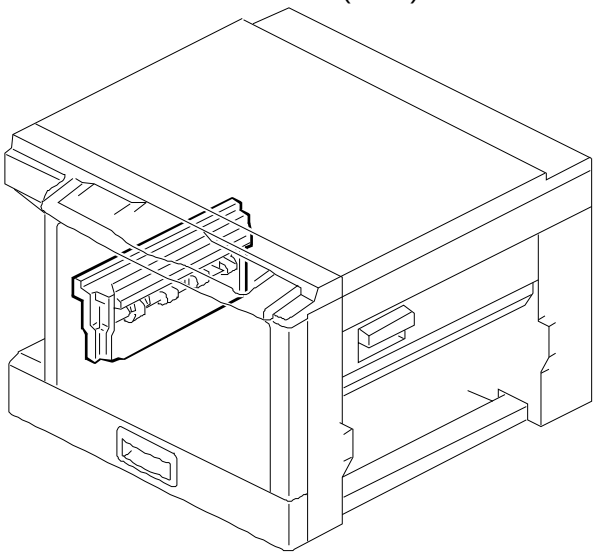

See Page 42

20. DRIVE SECTION (A173)

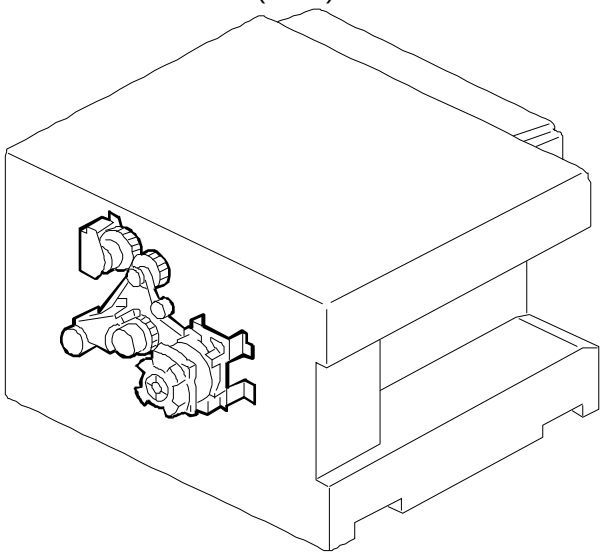

See Page 44

21. ELECTRICAL SECTION 1 (A173)

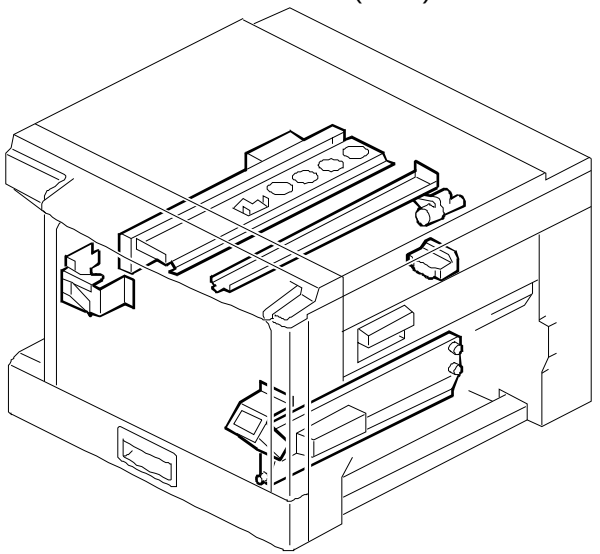

See Page 46

22. ELECTRICAL SECTION 2 (A173)

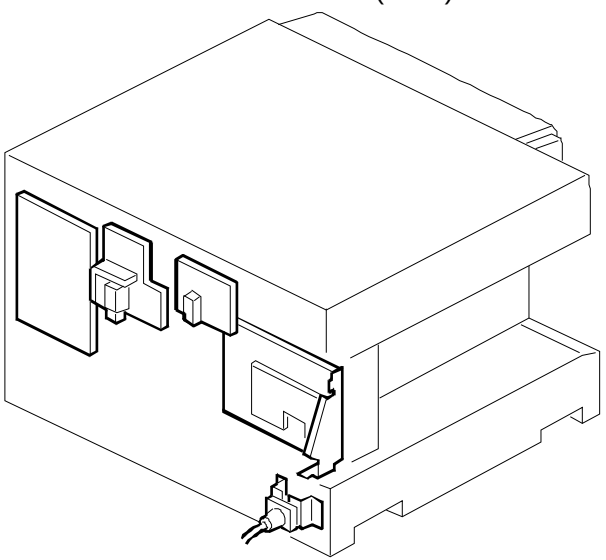

See Page 48

23. FRAME SECTION (A173)

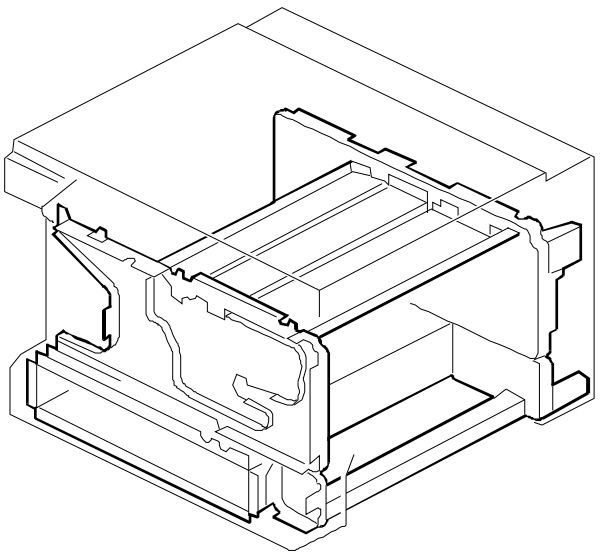

See Page 50

1. EXTERIOR (A173)

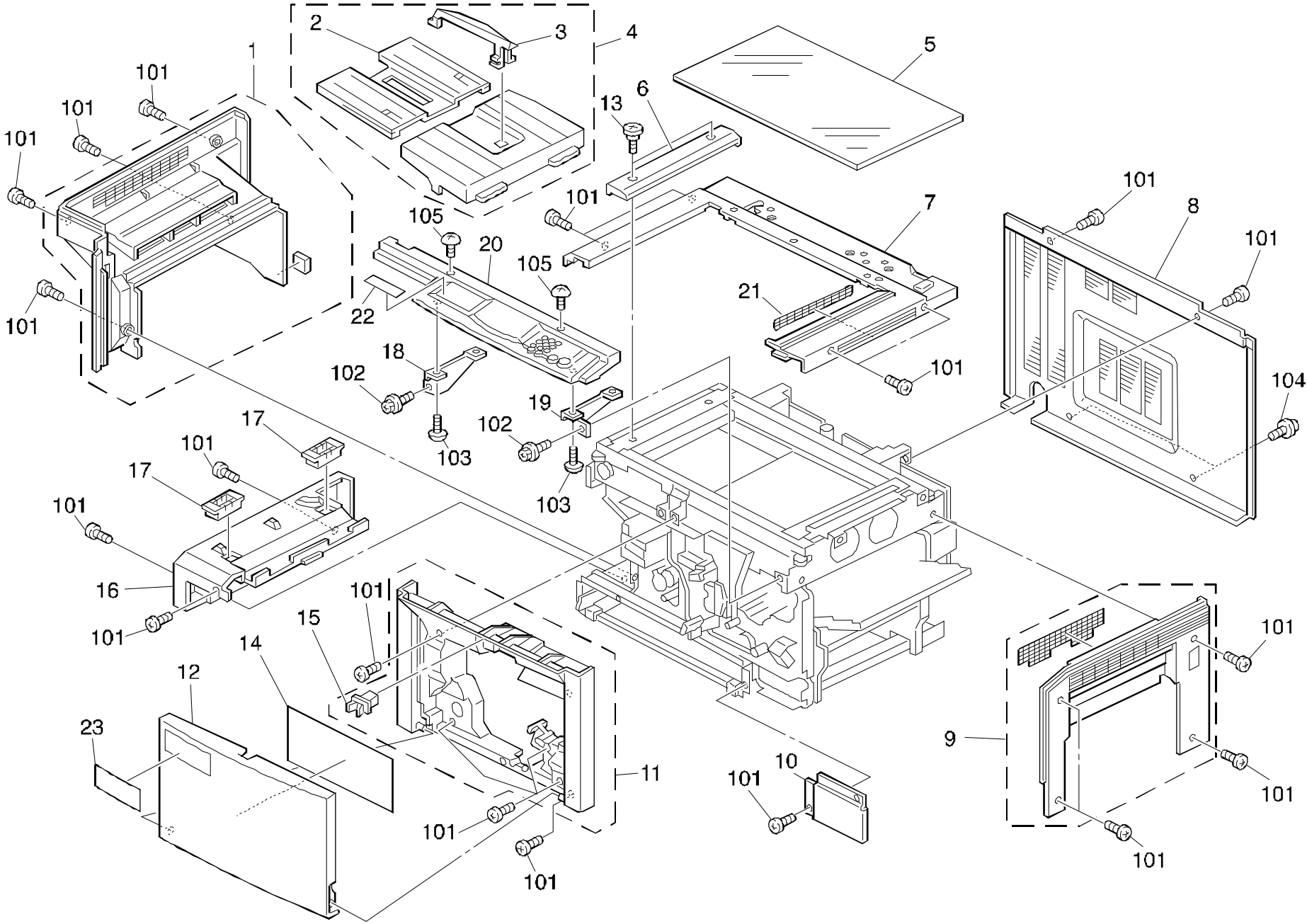

1. EXTERIOR (A173)

Index No.	Part No.	Description	Q'ty Per Assembly
1	A128 1263	Left Cover (RIC)	1
1	A128 6362	Left Cover (NRG)	1
2	A173 4465	Copy Tray Slide (RIC)	1
2	A173 6406	Copy Tray Slide (NRG)	1
3	A048 4470	Copy Tray - Guide (RIC)	1
3	A048 6407	Copy Tray - Guide (NRG)	1
4	A173 4440	Copy Tray (RIC)	1
4	A173 6237	Copy Tray (NRG)	1
5	A128 1980	Exposure Glass	1
6	A173 1616	Scale (RIC)	1
6	A173 6241	Scale (NRG)	1
7	A173 1236	Upper Cover (RIC)	1
7	A173 6231	Upper Cover (NRG)	1
8	A110 1313	Rear Cover (RIC)	1
8	A110 6313	Rear Cover (NRG)	1
9	A173 1277	Right Cover (RIC)	1
9	A173 6229	Right Cover (NRG)	1
10	A173 1320	Front Lower Cover	1
11	A173 1334	Front Cover (RIC)	1
11	A173 6247	Front Cover (NRG)	1
12	A173 1233	Front Door (RIC)	1
12	A173 6201	Front Door (NRG)	1
13	A128 1845	Stepped Screw - M5	2
14	A173 1385	Operation Sheet	1
15	AG07 1008	Door Catch - Latch	1
16	A173 1235	Left Lower Cover (RIC)	1
16	A173 6227	Left Lower Cover (NRG)	1
17	A173 1397	Cap - Left Lower Cover (RIC)	2
17	A173 6376	Cap - Left Lower Cover (NRG)	2
18	A110 5813	Left Operation Panel Bracket	1
19	A173 5812	Right Bracket - Operation Panel	1
20	A173 5651	Operation Panel Ass'y (RIC)	1
20	A173 6292	Operation Panel Ass'y (NRG)	1
21	A110 1381	Filter Cover	1
22	A054 6330	Decal - Key-top Cover (NSA)	1
22	A054 6335	Decal - Key-top Cover (GES)	1
23	A128 6350	Model Name Plate - GER	1
23	A173 6365	Model Name Plate - NSA - A4	1
23	A173 6366	Model Name Plate - GES	1
101	0353 0060F	Philips Truss Head Screw - M3x6	
102	0443 0060W	Hexagon Head Tapping Screw - M3x6	
103	0413 0082W	Tapping Screw - M3x8	
104	0951 3006Z	Philips Screw With Flat Washer - M3	
105	0344 0060F	Philips Truss Head Screw - M4x6	

2. PLATEN COVER (A173)

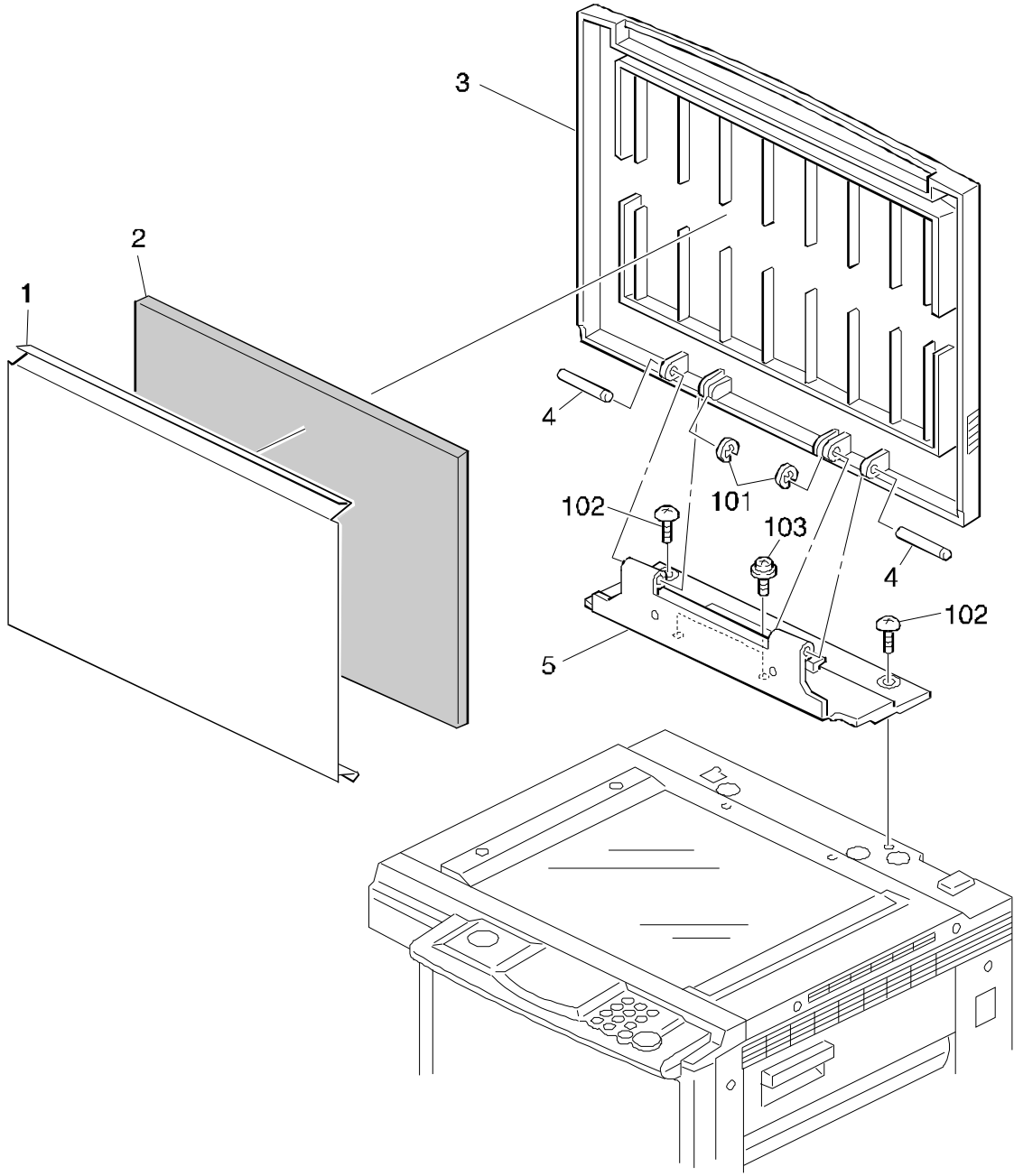

2. PLATEN COVER (A173)

Index No.	Part No.	Description	Q'ty Per Assembly
1	A077 9523	Platen Cover Sheet - 10sheets/Set	1
2	A077 1357	Platen Cover Pad	1
3	A173 1855	Original Holder (RIC)	1
3	A173 6434	Original Holder (NRG)	1
4	5216 1374	Hinge Shaft - Platen Cover	2
5	A173 1770	Platen Cover Hinge (RIC)	1
5	A173 6358	Platen Cover Hinge (NRG)	1

Index No.	Part No.	Description	Q'ty Per Assembly
101	0720 0025E	Retaining Ring - M2.5	
102	0344 0100D	Philips Truss Head Screw - M4x10	
103	0951 3012W	Philips Screw With Flat Washer-M3x1	

3. OPTICS 1 (A173)

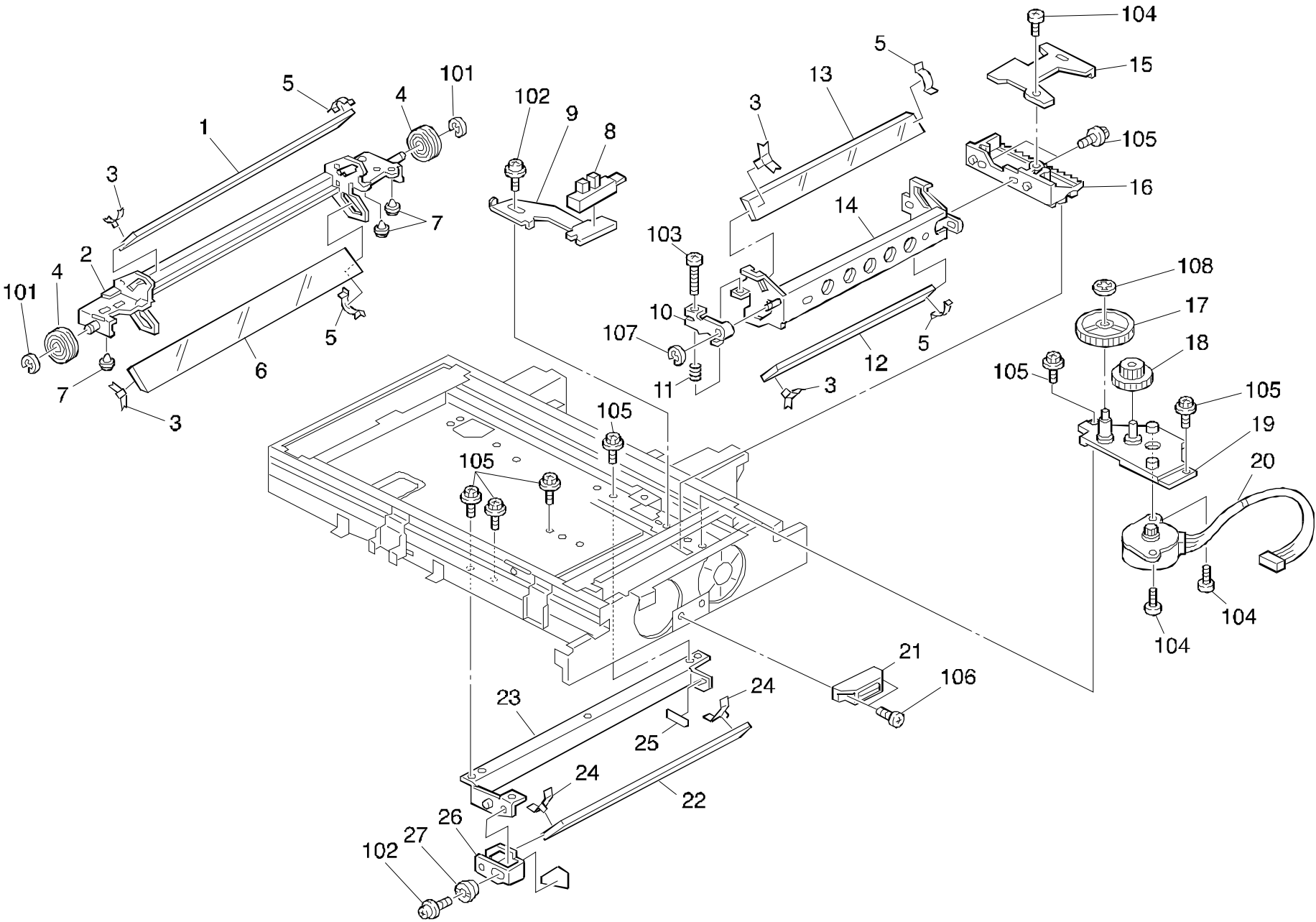

3. OPTICS 1 (A173)

Index No.	Part No.	Description	Q'ty Per Assembly
1	AC03 0019	2nd & 3rd Mirror	1
2	A128 1715	2nd Scanner Brcket	1
3	A006 1721	Front Spring Plate	4
4	AB03 2024	Pulley - Scanner Wire	2
5	A110 1724	Rear Spring Plate	4
6	A128 1729	2nd Mirror	1
7	A069 1883	Shoe - Scanner	3
8	AW02 0075	Photointerrupter	1
9	A173 1786	Sensor Bracket	1
10	A027 1705	Mirror Guide	1
11	A128 1817	Mirror Spring	1
12	A128 1815	5th Mirror	1
13	AC03 0026	Mirror - L224	1
14	A128 1761	Mirror Bracket	1
15	A048 1782	Mirror Shutter	1
16	A048 1764	Rack Gear - Mirror Drive	1
17	AB01 7129	Gear - 20z And 72z	1
18	AB01 0075	Gear - 48t	1
19	A173 1768	Motor Base	1
20	A173 5219	Mirror Drive Motor	1
21	AG07 0004	Magnetic Catch	1
22	A128 1816	6th Mirror	1
23	A128 1793	6th Mirror Bracket	1
24	A006 1722	Spring Plate	2
25	A048 1801	Mirror Seal	1
26	A128 1797	Front 6th Mirror Bracket	1
27	A075 1766	Adjusting Cam	1

Index No.	Part No.	Description	Q'ty Per Assembly
101	0720 0050E	Retaining Ring - M5	
102	0951 4008W	Philips Screw With Flat Washer-M4x8	
103	0313 0140W	Philips Pan Head Screw - M3x14	
104	0413 0082W	Tapping Screw - M3x8	
105	0443 0060W	Hexagon Head Tapping Screw - M3x6	
106	0353 0060F	Philips Truss Head Screw - M3x6	
107	0720 0040E	Retaining Ring - M4	
108	0805 0077	Retaining Ring - M3	

4. OPTICS 2 (A173)

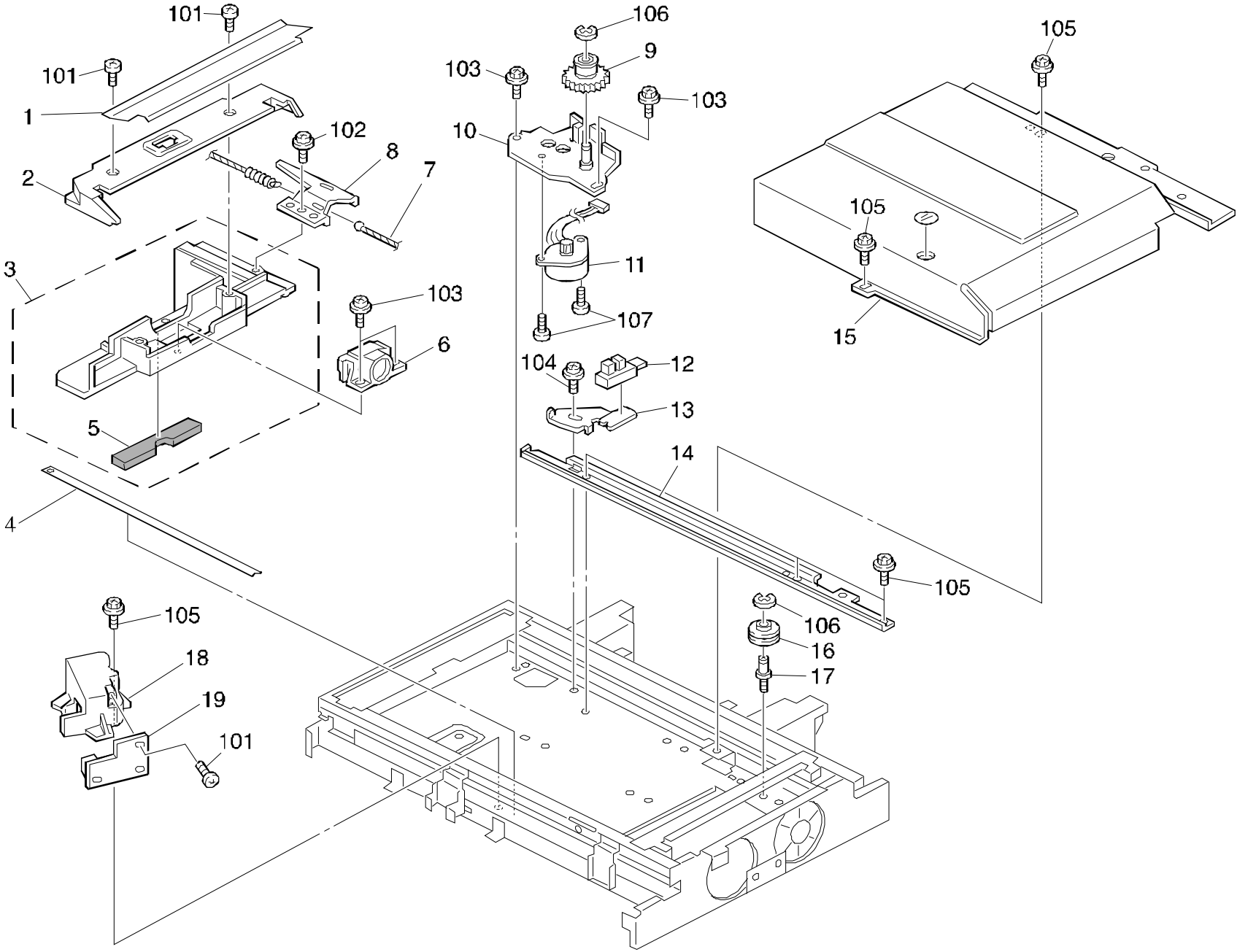

4. OPTICS 2 (A173)

Index No.	Part No.	Description	Q'ty Per Assembly
1	A173 1753	Shielding Seal	1
2	A128 1754	Shielding Plate	1
3	A173 1750	Lens Bracket	1
4	AA15 0074	Seal - 12x272	1
5	A173 1752	Shielding Sheet	1
6	AC02 0082	Lens - F8/180	1
7	AA05 0046	Lens Drive Wire	1
8	A048 1755	Lens Shutter	1
9	5215 1812	Lens Drive Pulley	1
10	A128 1757	Lens Motor Bracket	1
11	A173 5221	Lens Drive Motor	1
12	AW02 0075	Photointerrupter	1
13	A173 1784	Lens Sensor Bracket	1
14	A069 1772	Guide Plate	1
15	A048 1789	Lens Cover	1
16	5215 1806	Pulley	1
17	AA14 3264	Pulley Shaft	1
18	A173 1771	ADS Cover	1
19	A173 5120	Optical Control Board	1

Index No.	Part No.	Description	Q'ty Per Assembly
101	0413 0082W	Tapping Screw - M3x8	
102	0951 3006W	Philips Screw With Flat Washer-M3x6	
103	0951 3008W	Philips Screw With Flat Washer-M3x8	
104	0951 4008W	Philips Screw With Flat Washer-M4x8	
105	0443 0060W	Hexagon Head Tapping Screw - M3x6	
106	0720 0040E	Retaining Ring - M4	
107	0413 0060W	Tapping Screw - M3x6	

5. OPTICS 3 (A173)

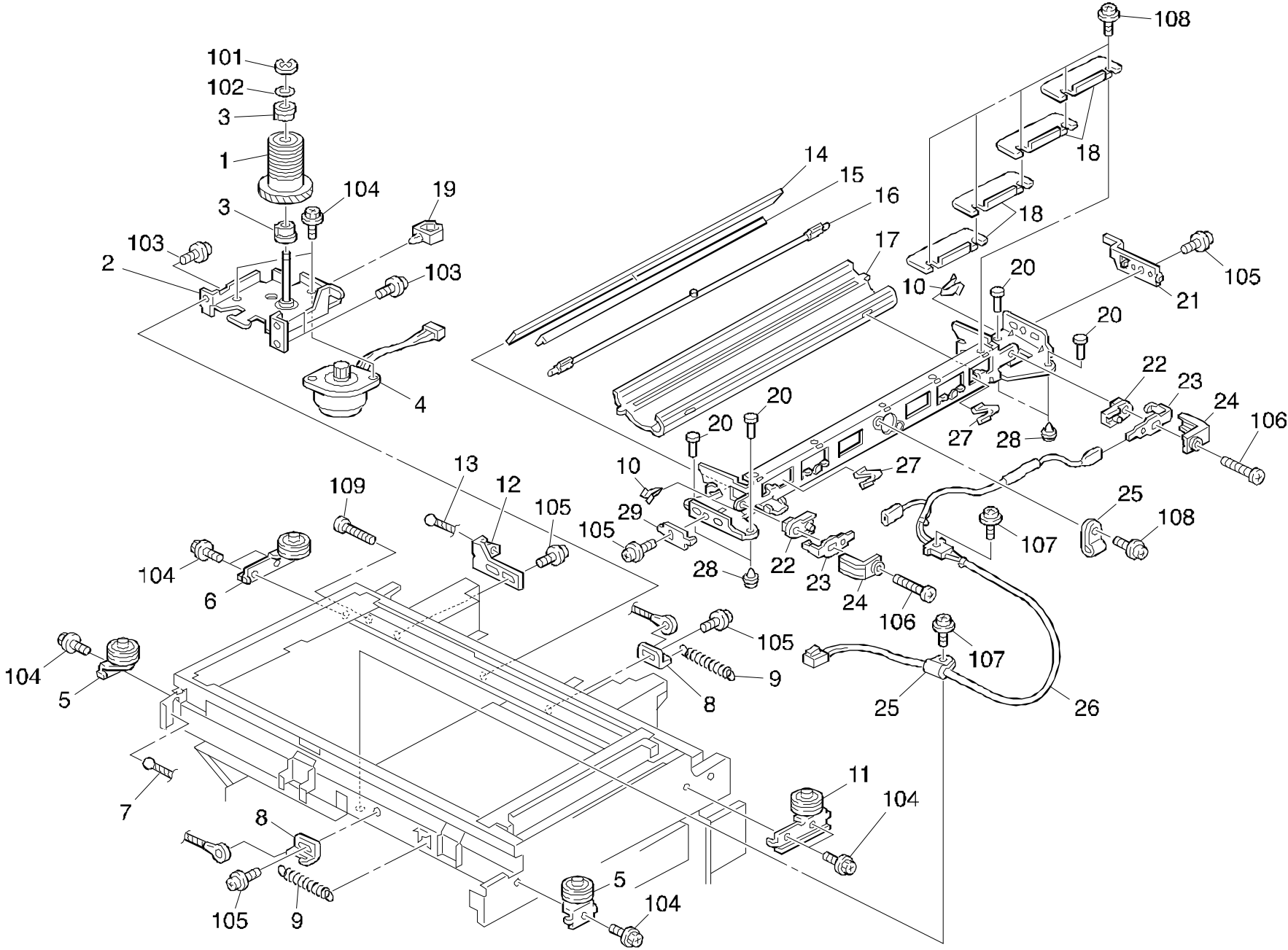

5. OPTICS 3 (A173)

Index No.	Part No.	Description	Q'ty Per Assembly
1	A075 1870	Scanner Motor Pulley	1
2	A173 1660	Scanner Motor Bracket	1
3	AA08 2029	Bushing - 6x13x5	2
4	A077 5231	Scanne Drive Motor - DC30V 60W	1
5	A048 1737	Front Wire Pulley	2
6	A173 1733	Rear Left Pulley	1
7	AA05 0044	Scanner Drive Wire - 1458mm	1
8	A006 1744	Wire Support Plate	2
9	A128 1818	Tension Spring	2
10	A048 1721	Spring Plate A	2
11	A173 1731	Front Right Pulley	1
12	A006 1745	Wire Adjusting Plate	1
13	AA05 0045	Scanner Drive Wire - 1011mm	1
14	A128 1728	1st Mirror	1
15	A110 1705	1st Mirror Support Plate	1
16	A173 5917	Exposure Lamp - 181V 310W	1
16	A173 5916	Exposure Lamp - 181V 310W	1
17	A110 1861	Reflector	1
18	A085 1670	Exposure Adjusting Plate	4
19	A128 5876	Clamp	1
20	A096 1873	Scanner Shoe Pin	4
21	A006 1707	Rear Wire Clamp	1
22	A085 1668	Terminal Supporter	2
23	A085 1672	Front Lamp Terminal	2
24	A110 1669	Lamp Holder Spring	2
25	A173 5403	Clamp	2
26	A173 5282	Exposure Lamp Harness	1
27	A048 1721	Spring Plate A	2
28	A069 1883	Shoe - Scanner	4
29	A006 1708	Front Wire Clamp	1

Index No.	Part No.	Description	Q'ty Per Assembly
101	0720 0050E	Retaining Ring - M5	
102	0807 4127	Wave Washer	
103	0951 3008W	Philips Screw With Flat Washer-M3x8	
104	0443 0060W	Hexagon Head Tapping Screw - M3x6	
105	0951 4008W	Philips Screw With Flat Washer-M4x8	
106	0313 0120W	Philips Pan Head Screw - M3x12	
107	0951 3012W	Philips Screw With Flat Washer-M3x1	
108	0951 3006W	Philips Screw With Flat Washer-M3x6	

6. OPTICS 4 (A173)

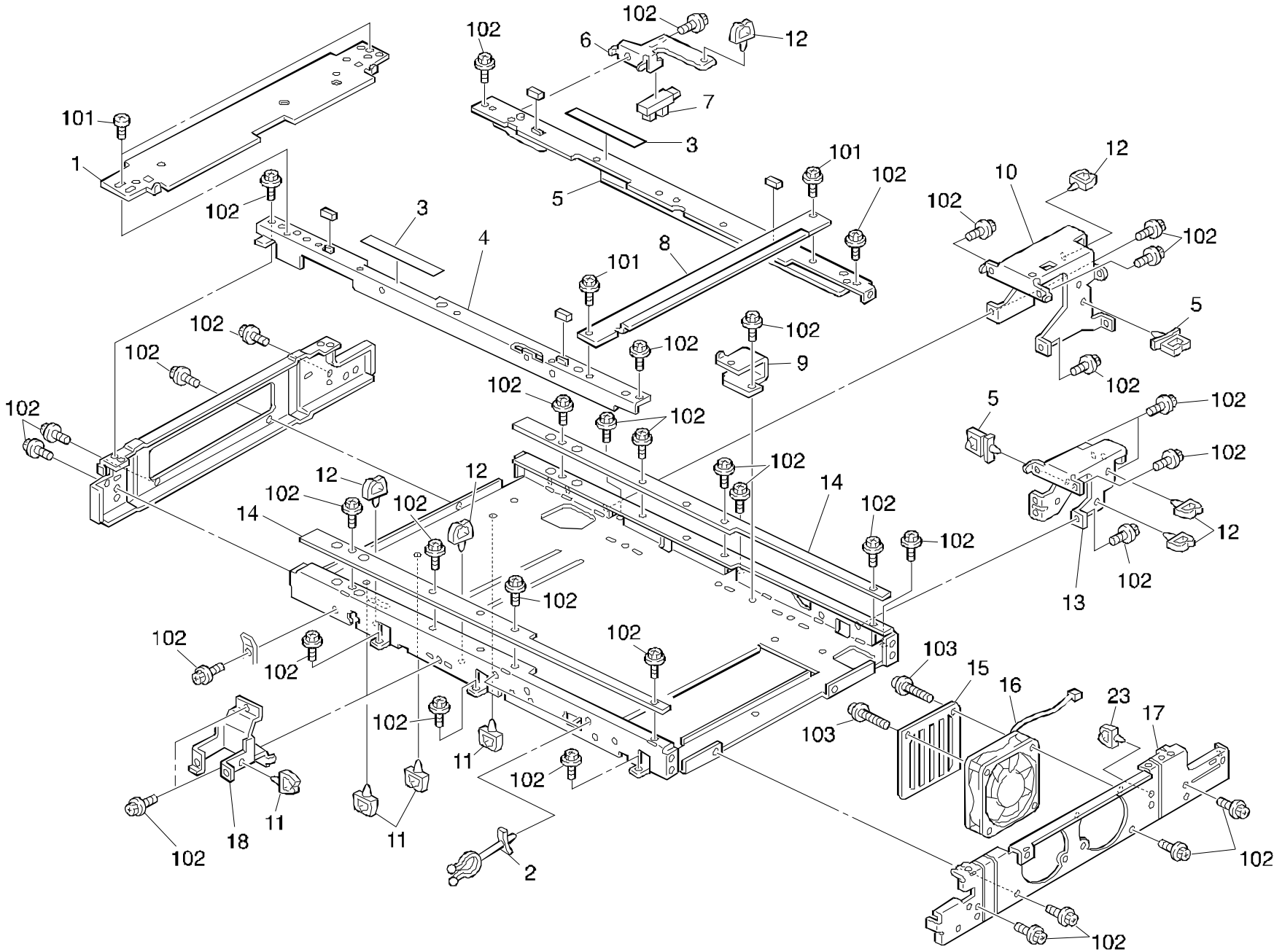

6. OPTICS 4 (A173)

Index No.	Part No.	Description	Q'ty Per Assembly
1	A173 1776	Scale Bracket	1
2	A128 5872	Wire Sadle	1
3	A128 1713	Upper Seal	2
4	A110 1829	Front Side Plate	1
5	A173 5402	Clip	2
6	A173 1788	Sensor Bracket	1
7	AW02 0075	Photointerrupter	1
8	A128 1842	Right Stay - Exposure Glass	1
9	A128 1713	Upper Seal	1
10	A128 1835	Platen Cover Left Bracket	1
11	A128 5876	Clamp	4
12	A128 5875	Clamp	3
13	A128 1834	Platen Cover Right Bracket	1
14	A110 1817	Scanner Slide Rail	2
15	A128 1719	Fan Motor Bracket	1
16	A173 5400	Fan Motor - 24V	1
17	A128 1823	Optics Right Stay	1
18	A048 1839	Left Guide Bracket	1

Index No.	Part No.	Description	Q'ty Per Assembly
101	0413 0060W	Tapping Screw - M3x6	
102	0443 0060W	Hexagon Head Tapping Screw - M3x6	
103	0960 3030W	Philips Flange Screw M3 X 30	

7. BY-PASS FEED SECTION (A173)

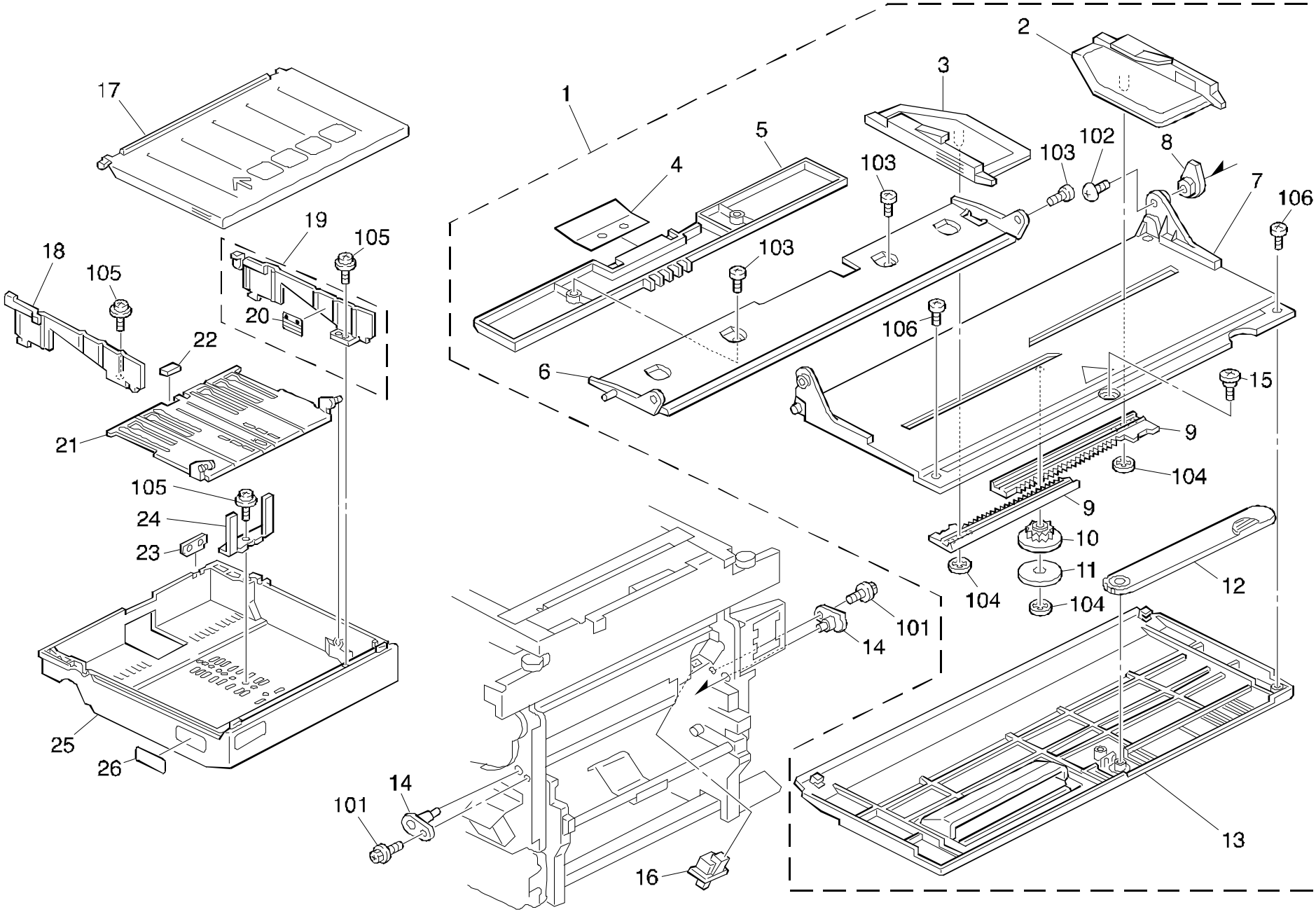

7. BY-PASS FEED SECTION (A173)

Index No.	Part No.	Description	Q'ty Per Assembly
1	A173 2852	By-pass Feed Unit	1
2	A173 2856	Rear Side Fence (RIC)	1
2	A173 6356	Rear Side Fence (NRG)	1
3	A128 2681	Front Side Fence (RIC)	1
3	A128 6351	Front Side Fence (NRG)	1
4	A173 2874	Spring Plate	1
5	A173 2876	By-Pass Feed Bottom Guide (RIC)	1
5	A173 6354	By-Pass Feed Bottom Guide (NRG)	1
6	A173 2871	By-Pass Feed Guide	1
7	A173 2946	By-Pass Feed Table (RIC)	1
7	A173 6346	By-Pass Feed Table (NRG)	1
8	A048 2928	Cam - Manual Feed Table	1
9	A128 2698	Side Fence Gear	2
10	A128 2775	Gear	1
11	A006 2699	Spacer - 5.1x20mm	1
12	A048 2938	Paper Guide - Manual Feed Table (RIC)	1
12	A048 6356	Paper Guide - Manual Feed Table (NRG)	1
13	A128 2945	Cover - Manual Feed Table - RIC	1
14	A048 2951	Front Guide Holder	2
15	AA14 3288	Stepped Screw	1
16	AW50 0012	Push Switch	1
17	A128 2956	Small Cassette Cover (RIC)	1
17	A128 6058	Small Cassette Cover (NRG)	1
18	A128 2716	Front Side Fence	1
19	A128 2727	Rear Side Fence	1
20	AA00 2010	Decal - Paper Level	1
21	A173 2911	Bottom Plate	1
22	A128 2713	Bottom Plate Pad	1
23	A128 2964	Actuator - A4	1
23	A128 2962	Actuator - A4R	1
23	A173 2798	Actuator - B5R	1
24	A128 2743	Rear Fence	1
25	A173 2791	Small Cassette (RIC)	1
25	A173 6364	Small Cassette (NRG)	1
26	AA00 2009	Decal - A4 (RIC)	1

Index No.	Part No.	Description	Q'ty Per Assembly
26	AA00 2008	Decal - A4R (RIC)	1
26	AA00 2026	Decal - B5	1
26	A048 6285	Decal - A4 (NRG)	1
26	A048 6286	Decal - A4R (NRG)	1
101	0443 0060W	Hexagon Head Tapping Screw - M3x6	
102	0344 0060F	Philips Truss Head Screw - M4x6	
103	0413 0062W	Tapping Screw - M3x6	
104	0805 0073	Retaining Ring - M5	
105	0965 4010W	Tapping Screw With Flatwasher-M4x10	
106	0414 0082F	Philips Truss Head Screw - M4x8	

8. PAPER TRAY (A173)

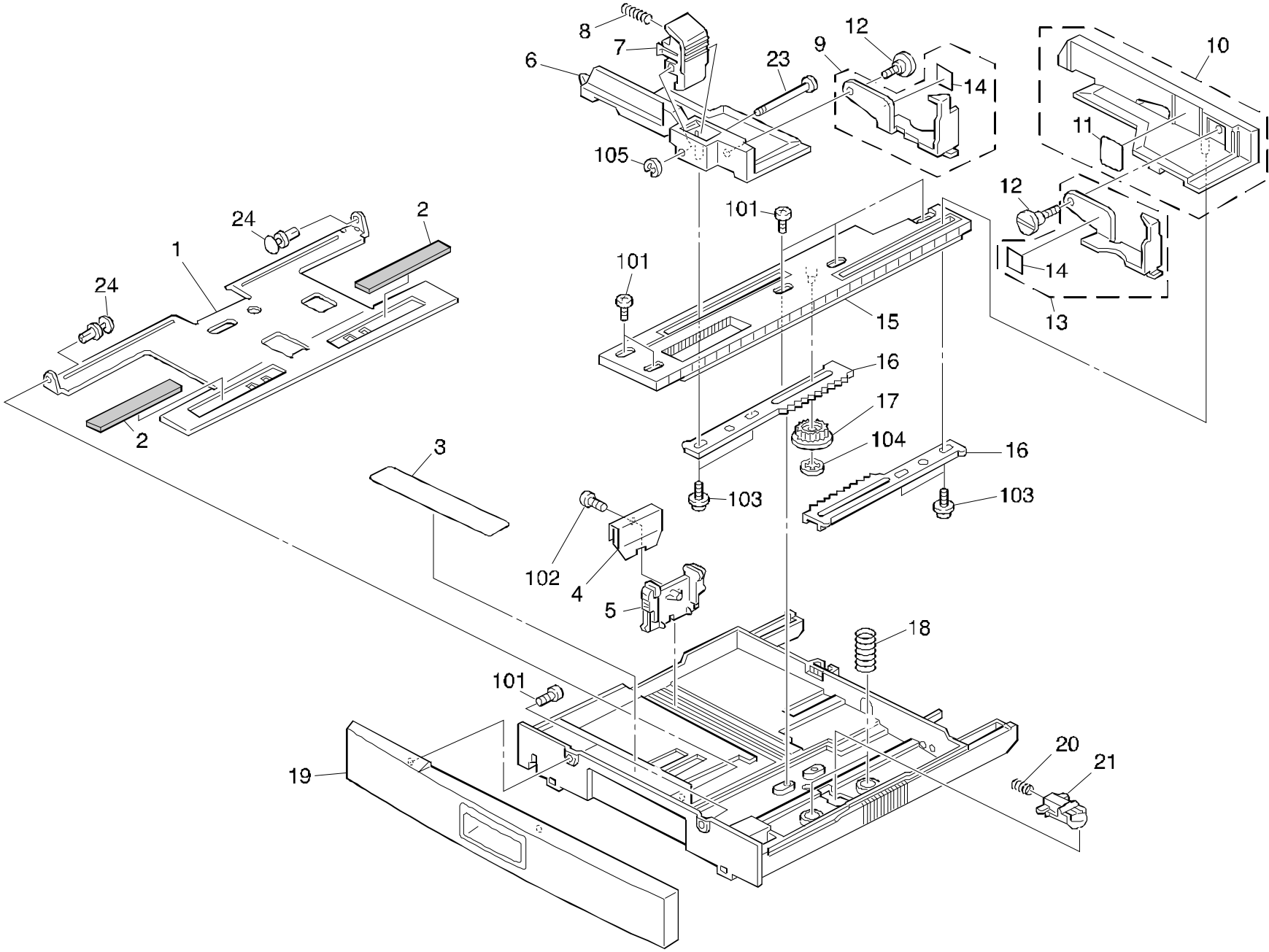

8. PAPER TRAY (A173)

Index No.	Part No.	Description	Q'ty Per Assembly
1	AF01 1030	Bottom Plate - Papper Tray	1
2	AF01 3001	Bottom Plate Pad	2
3	A173 2843	Decal - Paper Feed (RIC)	1
3	A173 2848	Decal - Paper Feed (RIC-TWN)	1
3	A173 6387	Decal - Paper Feed (NRG)	1
4	A110 2833	Leaf Spring - End Fence	1
5	A110 2832	End Fence - Paper Tray	1
6	AF01 6068	Front Side Fence - Paper Tray	1
7	A048 2817	Side Fence Stopper	1
8	AA06 3081	Spring - Side Fence Stopper	1
9	A110 2870	Front Corner Separator	1
10	A110 2789	Rear Side Fence - Paper Tray	1
11	AA00 1172	Decal - Paper Volume	1
12	AA14 3288	Stepped Screw	2
13	A110 2871	Rear Coner Separator	1
14	A110 2877	Corner Separator Seal	2
15	A110 2843	Registration Adjustment Plate	1
16	A048 2835	Side Fence Gear	2
17	AB01 3492	Gear - 16z	1
18	AA06 3497	Pressure Spring	2
19	A173 2811	Paper Tray Cover (RIC)	1
19	A173 6312	Paper Tray Cover (NRG)	1
20	AA06 3205	Spring	1
21	A077 2822	Plate Release Slider	1

Index No.	Part No.	Description	Q'ty Per Assembly
101	0414 0102F	Tapping Screw - M4x10	
102	0413 0082F	Bind Tapping Screw - M3x8	
103	0965 3008W	Tapping Screw With Flat Washer-M3x8	
104	0805 0073	Retaining Ring - M5	
105	0720 0030E	Retaining Ring - M3	

9. PAPER REGISTRATION 1 (A173)

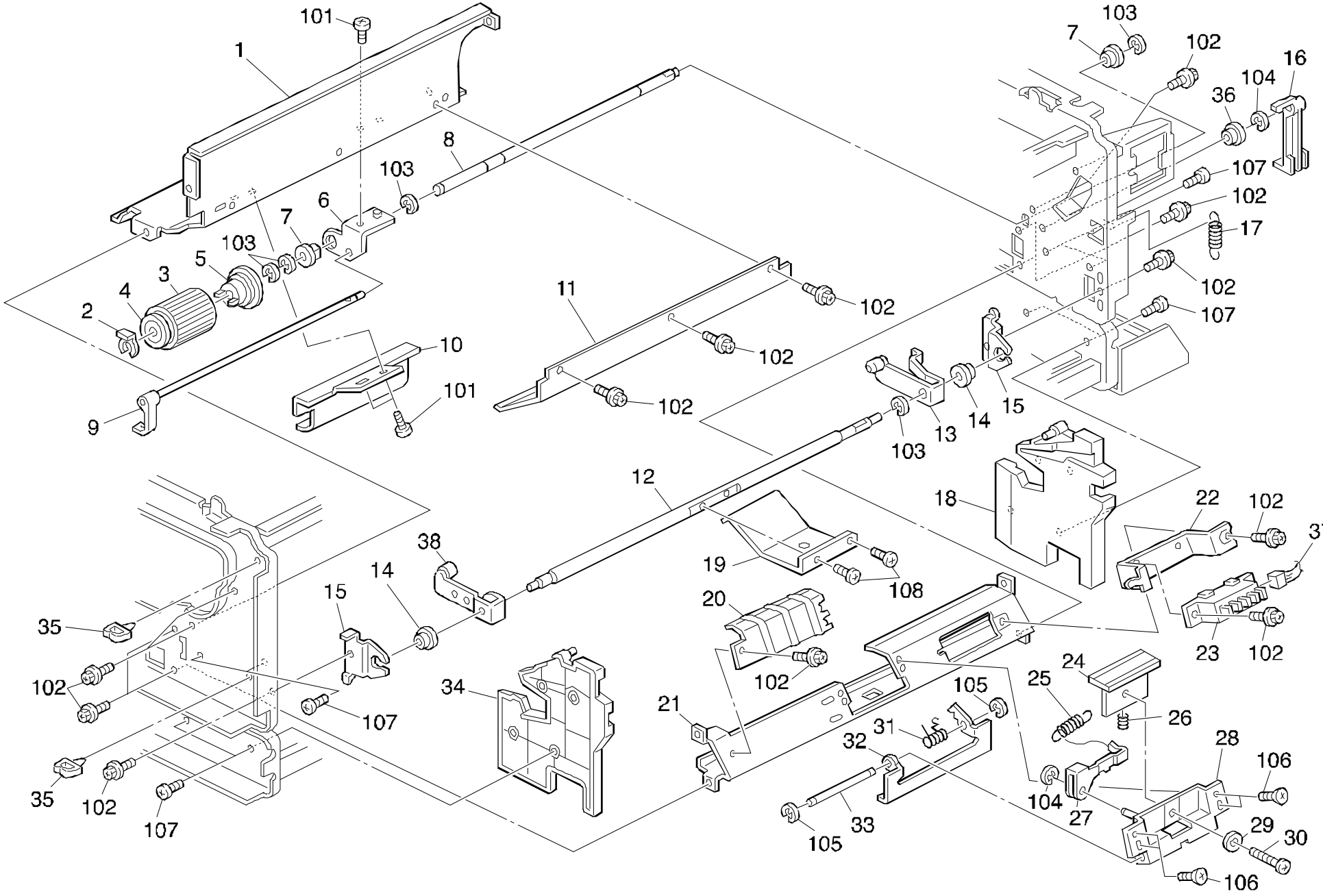

9. PAPER REGISTRATION 1 (A173)

Index No.	Part No.	Description	Q'ty Per Assembly
1	A173 2745	Upper Paper Feed Guide	1
2	5215 2621	Snap Ring - M6	1
3	A173 2777	Paper Feed Roller	1
4	5215 2620	Feed Roller	1
5	5215 2618	Feed Roller Hub	1
6	5215 2622	Upper Feed Shaft Bracket	1
7	5053 0223	Bushing - 8mm	2
8	A173 2774	1st Paper Feed Shaft	1
9	A173 2741	Paper End Actuator	1
10	5215 2600	Upper Feed Guide Plate	1
11	A173 2746	By-Pass Feed Guide	1
12	A173 2753	Release Shaft	1
13	A173 2758	Rear Release Arm	1
14	5205 3103	Bushing - 6mm	2
15	A173 2756	Shaft Bracket	2
16	A173 2725	Sensor Actuattor	1
17	A173 2718	Bottom Plate Spring	1
18	A173 2737	Rear Cassette Holder (RIC)	1
18	A173 6340	Rear Cassette Holder (NRG)	1
19	A024 2653	Upper Lift Arm	1
20	A173 2735	1st Entrance Guide	1
21	A173 2734	Upper Bracket - Paper Feed	1
22	A173 2761	Paper Size Sensor Bracket	1
23	AW50 0010	Push Switch	1
24	A069 2820	Friction Pad Ass'y	1
25	A173 2720	Release Spring	1
26	A173 2740	Pressure Spring	1
27	A173 2715	Pad Lever	1
28	A173 2743	Friction Pad Bracket	1
29	A173 2771	Spacer	1
30	AA14 3064	Philips Pan Head Screw - M3x10	1
31	A173 2716	Release Lever Spring	1
32	A173 2714	Release Lever	1
33	A173 2713	Release Shaft	1
34	A173 2736	Front Cassette Holder (RIC)	1



Index No.	Part No.	Description	Q'ty Per Assembly
34	A173 6339	Front Cassette Holder (NRG)	1
35	A128 5876	Clamp	1
36	5443 2668	Bushing - 4x6x7mm	1
37	A173 5257	Right Harness	1
38	A173 2757	Front Release Arm	1
101	0434 0060W	Tapping Screw - M4x6	
102	0443 0060W	Hexagon Head Tapping Screw - M3x6	
103	0720 0060E	Retaining Ring - M6	
104	0720 0030E	Retaining Ring - M3	
105	0720 0025E	Retaining Ring - M2.5	
106	0323 0060W	Philips Sunken Head Screw - M3x6	
107	0413 0082W	Tapping Screw - M3x8	
108	0434 0080W	Tapping Screw - M4x8	

10. PAPER REGISTRATION 2 (A173)

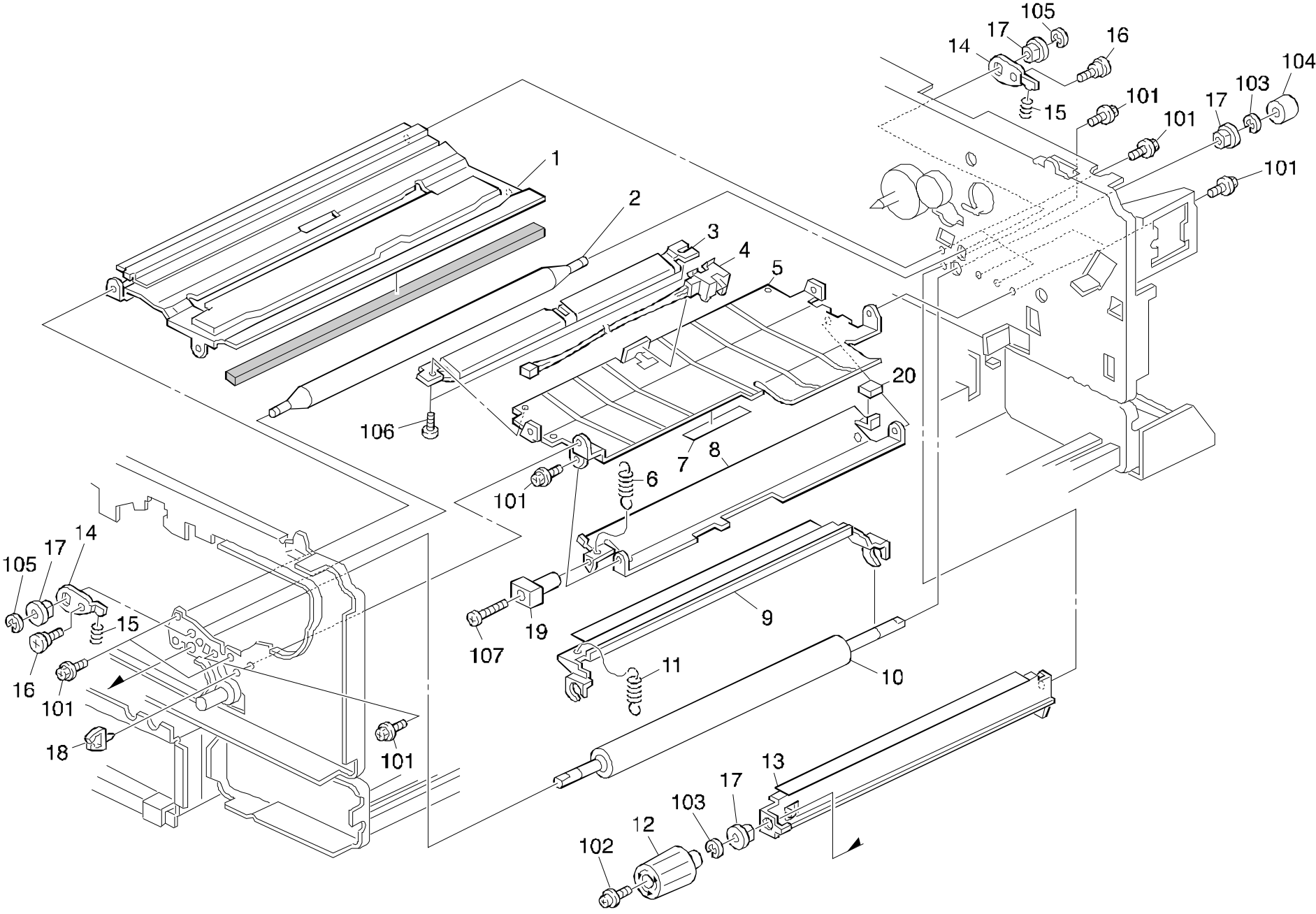

10. PAPER REGISTRATION 2 (A173)

Index No.	Part No.	Description	Q'ty Per Assembly
1	A173 3025	Development Rail	1
2	AF02 1039	Upper Registration Roller	1
3	A048 2573	Registration Lower Guide	1
4	AW02 0024	Photointerruptor	1
5	5215 2600	Upper Feed Guide Plate	1
6	A128 2658	Pressure Spring	1
7	A173 2668	Seal - 9.5x75	1
8	A173 2662	Middle Guide Plate - Registration	1
9	A048 3913	Upper Transfer Guide	1
10	A173 2611	Lower Registration Roller	1
11	AA06 0254	Spring - Upper Transfer Guide	1
12	A128 2751	Registration Roller Knob	1
13	A048 3898	Lower Transfer Guide	1
14	AA08 0094	Front Registration Roller Bushing	2
15	A128 2663	Front Spring - Registration Roller	2
16	A128 2768	Stepped Screw - M3x5	2
17	5053 0223	Bushing - 8mm	2
18	A128 5876	Clamp	1
19	AG05 1071	Knob - Registration Guide Plate	1
20	AA02 0001	Drawer Tray Magnet	1

Index No.	Part No.	Description	Q'ty Per Assembly
101	0443 0060W	Hexagon Head Tapping Screw - M3x6	
102	0951 4006W	Philips Screw With Flat Washer-M4x6	
103	0720 0060E	Retaining Ring - M6	
104	0705 0050Z	Toothed Washer - M5	
105	0720 0040E	Retaining Ring - M4	
106	0313 0040W	Philips Pan Head Screw - M3x4	
107	0131 0300E	Philips Pan Head Screw - M3x30	

11. PAPER FEED SECTION (A173)

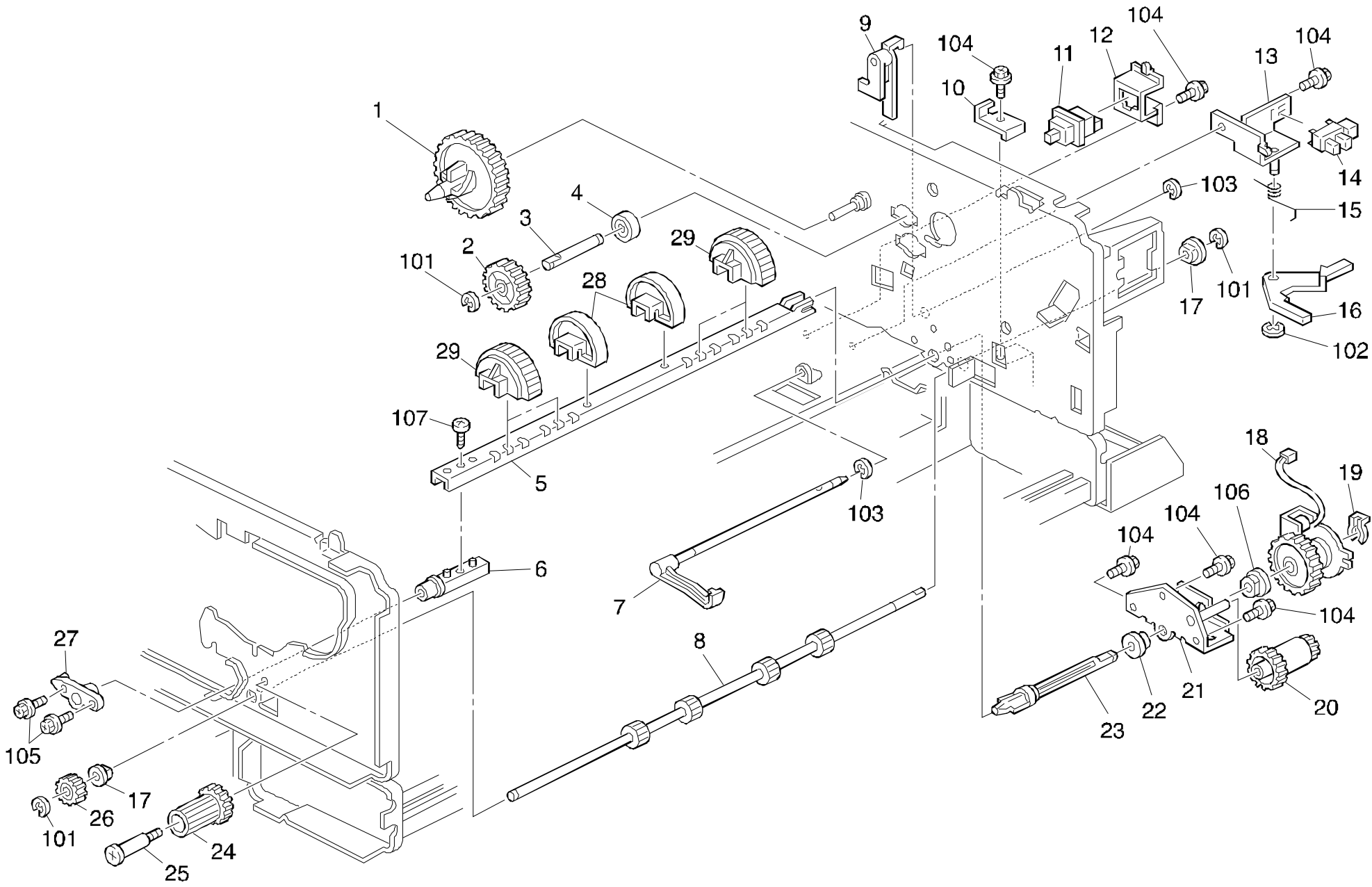

11. PAPER FEED SECTION (A173)

Index No.	Part No.	Description	Q'ty Per Assembly
1	AB01 1067	Gear - 100z	1
2	AB01 3428	Gear - 35z	1
3	A173 1124	Development Drive Shaft	1
5	A157 2772	Paper Stripper Shaft	1
6	A157 2773	Feed Roller Holder	1
7	A173 1155	Paper End Actuator	1
8	A173 2623	2nd Drive Roller	1
9	A173 2725	Sensor Actuattor	1
10	A173 2633	Clutch Stopper	1
11	AW50 0012	Push Switch	1
12	A173 2816	Paper Sensor Bracket	1
13	A048 2861	Paper End Sensor Bracket	1
14	AW02 0075	Photointerrupter	1
15	A173 1195	Release Spring	1
16	A048 2862	Paper End Sensor Bracket	1
17	5053 0223	Bushing - 8mm	2
18	A173 5055	Magnetic Clutch	1
19	5447 2681	Snap Ring	1
20	A173 2632	Idle Gear - 28/14Z	1
21	A173 2622	Clutch Stopper Bracket	1
22	A173 2919	Bushing - 8mm	1
23	A173 2607	Paper Drive Shaft	1
24	A173 2635	Idle Gear	1
25	AA14 5209	Shaft - Drive Gear	1
26	AB01 3421	Gear - 18z	1
27	A173 2621	Feed Roller Bushing	1
28	A157 2774	Feed Roller	2
29	AF03 1027	Paper Feed Roller	2

Index No.	Part No.	Description	Q'ty Per Assembly
101	0720 0060E	Retaining Ring - M6	
102	0720 0025E	Retaining Ring - M2.5	
103	0720 0030E	Retaining Ring - M3	
104	0443 0060W	Hexagon Head Tapping Screw - M3x6	
105	0443 0080W	Hexagon Head Tapping Screw - M3x8	
106	0805 3386	Bushing - 8mm	
107	0413 0082B	Tapping Screw - M3x8	

12. TONER HOPPER UNIT (A173)

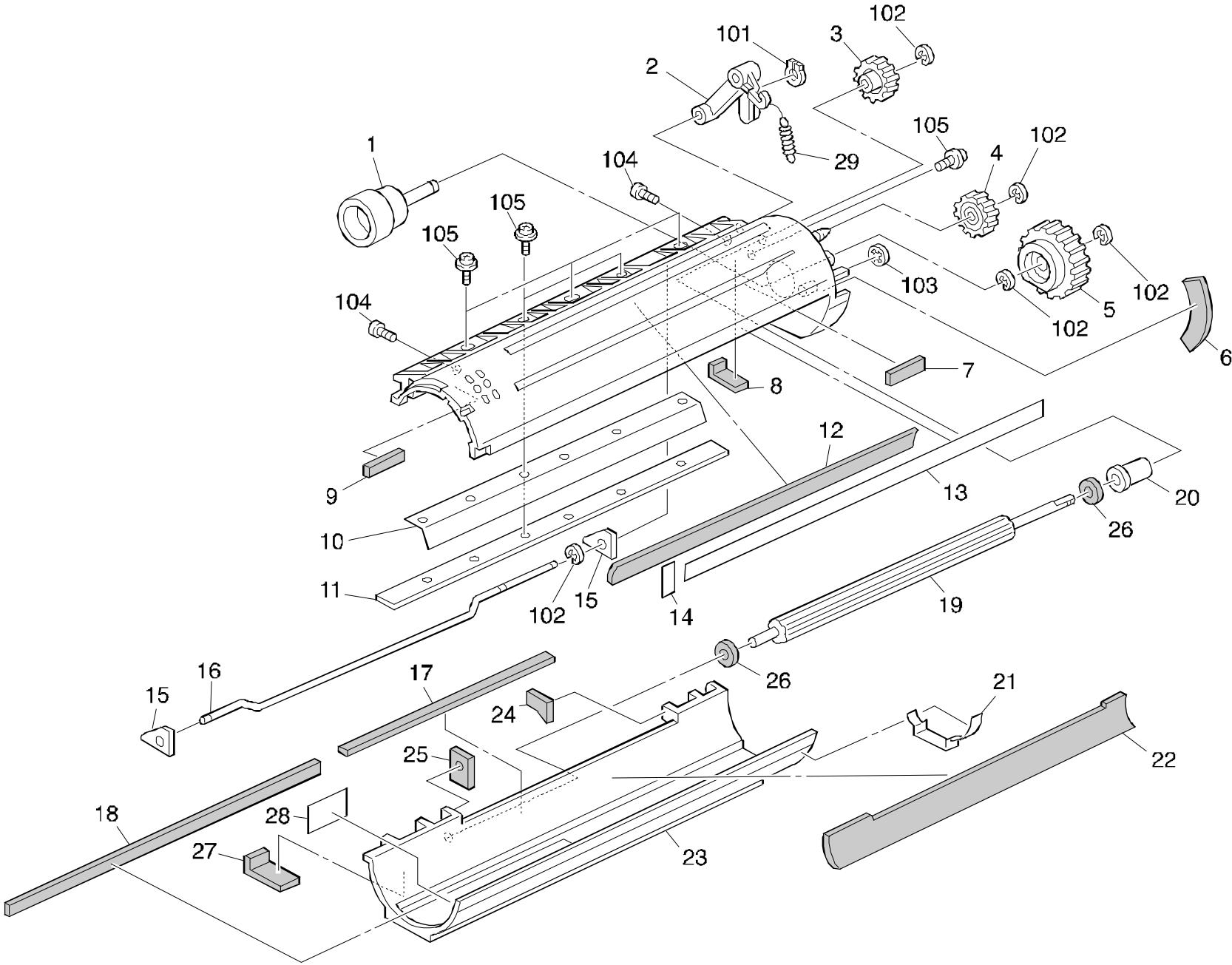

12. TONER HOPPER UNIT (A173)

Index No.	Part No.	Description	Q'ty Per Assembly
1	A152 7662	Joint	1
2	A110 3336	Agitator Lever	1
3	AB01 3442	Gear - Toner Supply	1
4	AB01 3443	Gear - Idler - Toner Supply	1
5	AB01 3444	Gear - Agitator	1
6	5215 3295	Hopper Filter	1
7	AA15 1481	Shield - Toner Hopper - Rear Upper	1
8	AA15 1606	Seal -44x14x3	1
9	AA15 1480	Shield - Toner Hopper - Front Upper	1
10	A048 7670	Slitter	1
11	A110 3340	Plate Nut	1
12	AA15 1482	Shield - Toner Hopper - Upper	1
13	AA15 0197	Shield - Toner Hopper - Right	1
14	AA15 0198	Shield - Toner Hopper - Lower	1
15	AA15 1485	Shield - Rear Upper - Toner Hopper	1
16	A173 3403	Auger Shaft	1
17	AA15 1476	Sponge - Toner Supply	1
18	AA15 1489	Seal - 2x5x37.5	1
19	A128 3014	Tonner Supply Roller	1
20	A048 7669	Plate - Toner Supply Roller	1
21	AA15 0331	Seal - Toner Supply Unit	1
22	AA15 1483	Shield - Toner Hopper - Lower	1
23	A048 7654	Lower Casing - Toner Supply Unit	1
24	AA15 1487	Shield - Rear Lower - Toner Hopper	1
25	AA15 1486	Shield - Front Lower - Toner Hopper	1
26	5215 3303	Seal - Toner Supply Roller	2
27	AA15 1479	Shield - Case - Toner Hopper - Rear	1
28	AA15 0196	Shield - Toner Hopper - Left	1
29	AA06 0267	Spring - Toner End Adtuator Lever	1
30	AA15 1484	Shield - Front Upper - Toner Hopper	1



Index No.	Part No.	Description	Q'ty Per Assembly
101	0728 0040E	Grip Ring - 4mm	
102	0720 0030E	Retaining Ring - M3	
103	0805 0077	Retaining Ring - M3	
104	0413 0082W	Tapping Screw - M3x8	
105	0951 3006W	Philips Screw With Flat Washer-M3x6	

13. DEVELOPMEMNT UNIT (A173)

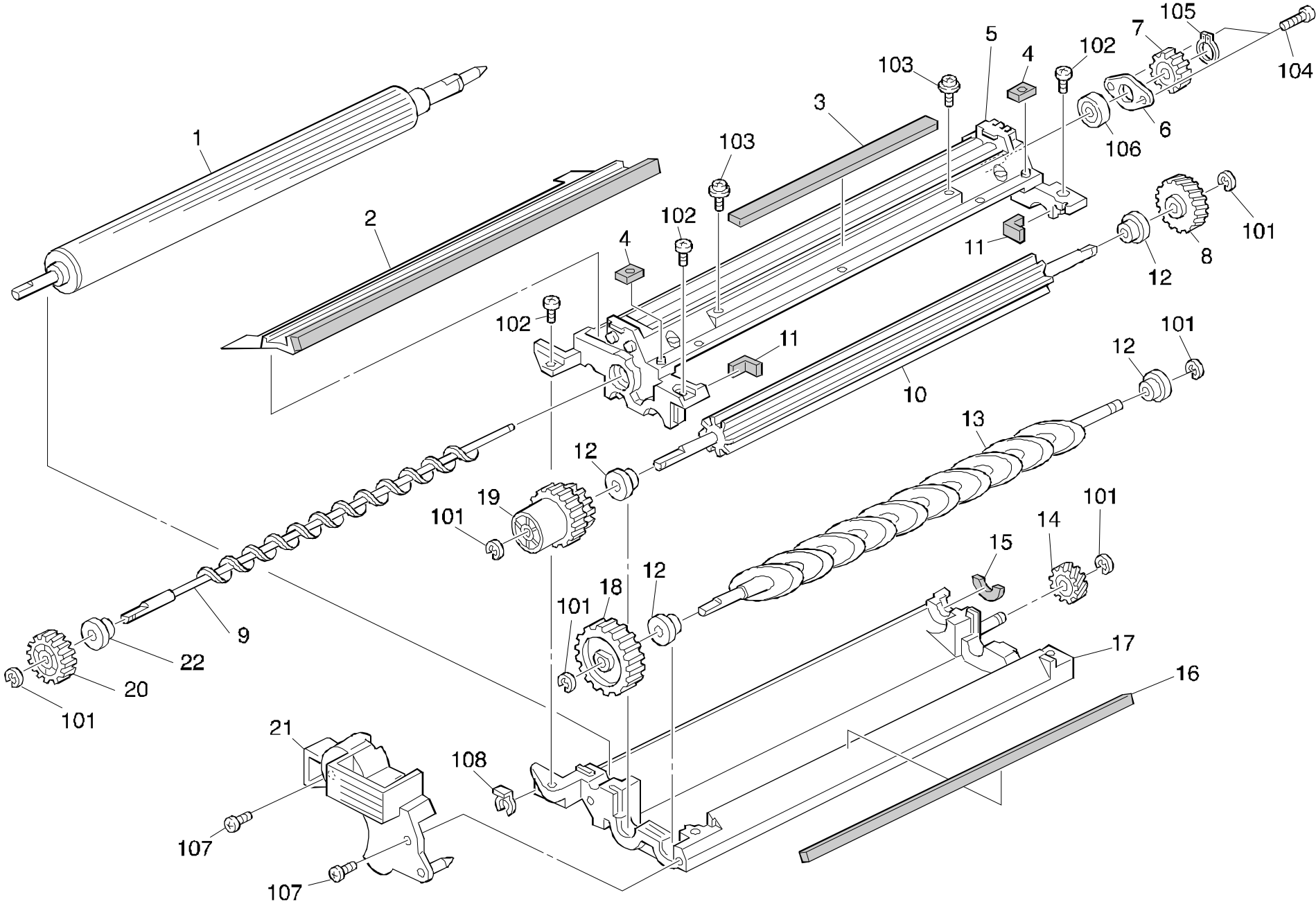

13. DEVELOPMEMNT UNIT (A173)

Index No.	Part No.	Description	Q'ty Per Assembly
1	AD03 1266	Development Roller	1
2	AD03 6021	Mixing Vanes	1
3	AA15 2231	Development Filter	1
4	AA15 1604	Seal - 16x9x3	1
5	A048 7600	Case - Upper - Development	1
6	A048 7631	Retainer - Ball Bearing	1
7	AB01 3437	Gear - 19t	1
8	AB01 3439	Gear - 23z	1
9	AD03 7023	Mixing Auger	1
10	A173 3402	Paddle Roller	1
11	AA15 1186	Front Side Plate Seal	1
12	5205 3103	Bushing - 6mm	1
13	A173 3401	Mixing Auger	1
14	AB01 3858	Gear - 15z	1
15	AA15 2136	Shield - Development Roller	1
16	AA15 1605	Seal - 323x4x3	1
17	A128 3310	Lower Casing	1
18	AB01 3440	Gear - Roller - Agitate,Mix	1
19	A048 7612	Development Roller Knob	1
20	AB01 3441	Gear - 20z	1
21	A048 7632	Cover - Gear	1
22	5205 3103	Bushing - 6mm	1



Index No.	Part No.	Description	Q'ty Per Assembly
101	0720 0040E	Retaining Ring - M4	
102	0414 0102F	Tapping Screw - M4x10	
103	0951 3008W	Philips Screw With Flat Washer-M3x8	
104	0313 0050W	Philips Pan Head Screw - M3x5	
105	0727 0090E	Retaining Ring C - M9	
106	0805 3415	Ball Bearing - 9x20x6	
107	0434 0060W	Tapping Screw - M4x6	
108	0805 0073	Retaining Ring - M5	

14. CHARGE CORONA UNIT (A173)

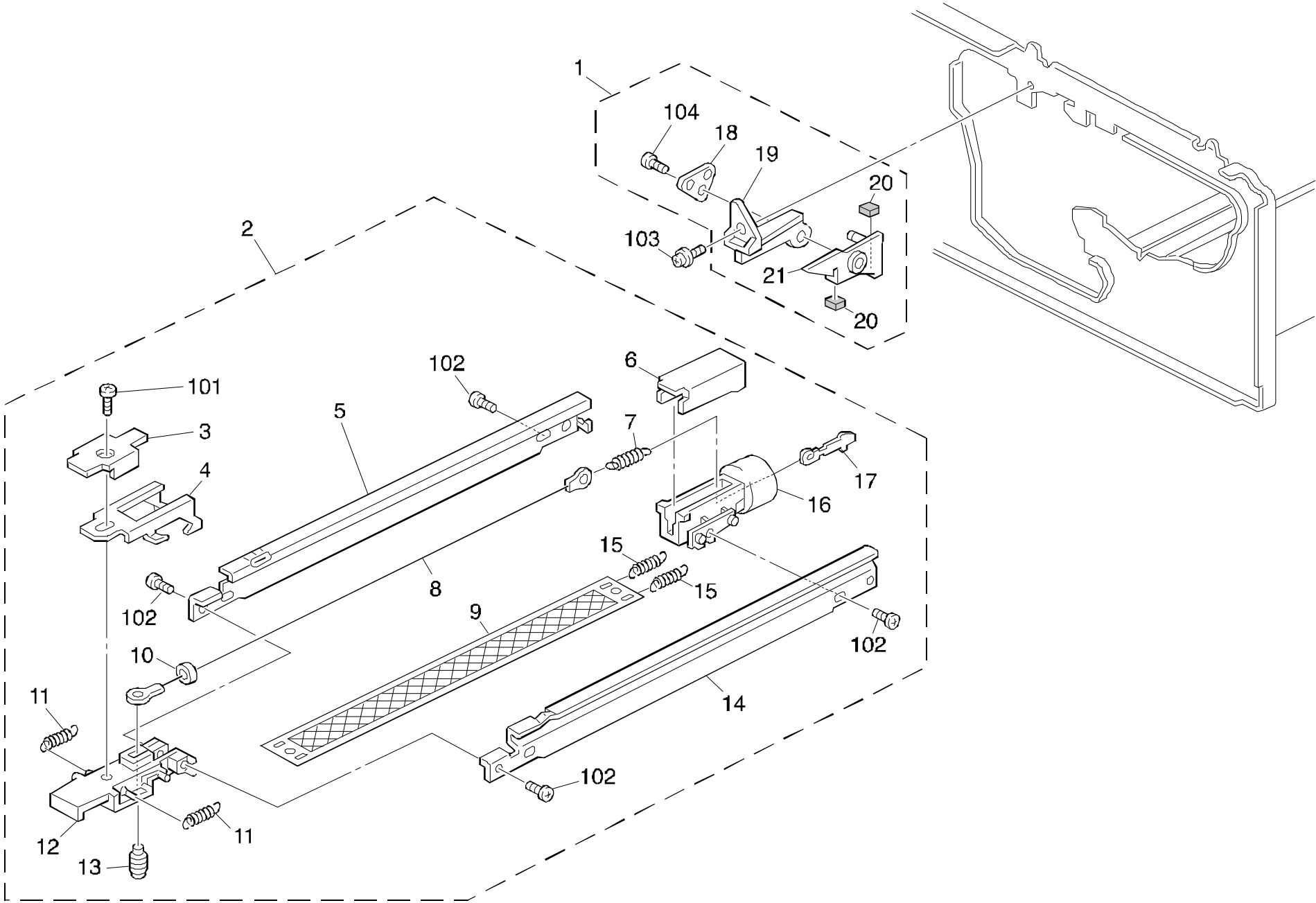

14. CHARGE CORONA UNIT (A173)

Index No.	Part No.	Description	Q'ty Per Assembly
1	A006 2055	Charge Corona Cleaner	1
2	A048 2008	Charge Corona Unit	1
3	A006 2117	Front Cover - Charge Corona	1
4	A006 2114	Grid Anchor	1
5	AD02 3059	Left Main Corona Unit Casing	1
6	A006 2118	Rear Cover - Charge Corona	1
7	5442 2108	Corona Wire Spring	1
8	A048 9001	Charge Corona Wire - 10pcs/Set	1
9	A006 2111	Charge Corona Grid	1
10	A030 6231	Corona Wire Ring	1
11	AA06 0141	Spring - Charge Corona Grid	2
12	A048 2091	Front End Block	1
13	5442 2069	Plastic Screw - Main Corona	1
14	AD02 3060	Right Main Corona Unit Casing	1
15	AA06 0255	Spring - Rear Charge Corona Grid	2
16	A006 2118	Rear Cover - Charge Corona	1
17	5442 2110	Plug - Corona Unit	1
18	A006 2123	Cleaner Stay	1
19	A006 2122	Cleaner Stopper	1
20	A008 2087	Corona Cleaner Pad	2
21	A006 2121	Cleaner Holder	1

Index No.	Part No.	Description	Q'ty Per Assembly
101	0413 0082W	Tapping Screw - M3x8	
102	0413 0062W	Tapping Screw - M3x6	
103	0951 4006W	Philips Screw With Flat Washer-M4x6	
104	0971 3006a	Philips Polycarbonate Screw - M3x6	

15. DRUM UNIT 8A173)

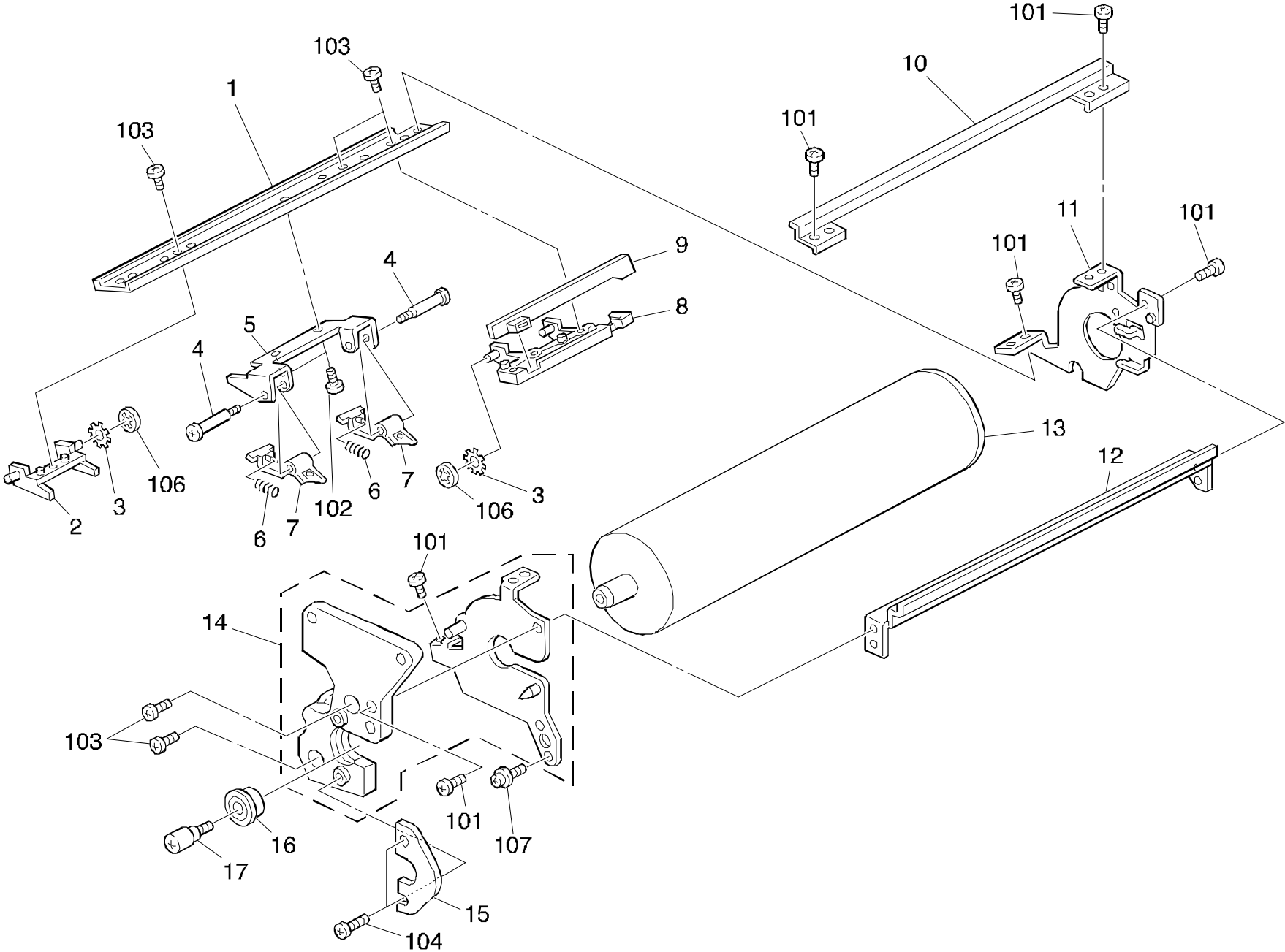

15. DRUM UNIT 8A173)

Index No.	Part No.	Description	Q'ty Per Assembly
1	A128 2271	Left Drum Stay	1
2	A128 2275	Front Transport Guide	1
3	A048 2276	Ring - Transport Bracket	1
4	A075 2258	Pick-Up Pawl Shaft	2
5	A048 2273	Pick-Off Pawl Bracket	1
6	AA06 3106	Spring - Pick-Up Pawl	2
7	A006 2270	Pick-Off Pawl	2
8	A128 2278	Sensor Holder	1
9	A128 5222	Id Sensor Board	1
10	A075 2268	Upper Left Drum Stay	1
11	A128 2281	Rear Drum Side Plate	1
12	A075 2269	Right Drum Stay	1
13	A069 9510	Drum	1
14	A128 2262	Drum Support Plate	1
15	A128 2258	Drum Holder	1
16	A173 2103	Stepped Screw	1
17	A173 2101	Bushing - 8x22x7	1

Index No.	Part No.	Description	Q'ty Per Assembly
101	0413 0060W	Tapping Screw - M3x6	
102	0313 0040W	Philips Pan Head Screw - M3x4	
103	0314 0100W	Philips Pan Head Screw - M4x10	
104	0314 0200B	Philips Pan Head Screw - M4x20	
106	0805 3104	Bushing - 8x22x7	
107	0951 3004B	Philps Screw With Flat Washer -M3x4	

16. CLEANING UNIT (A173)

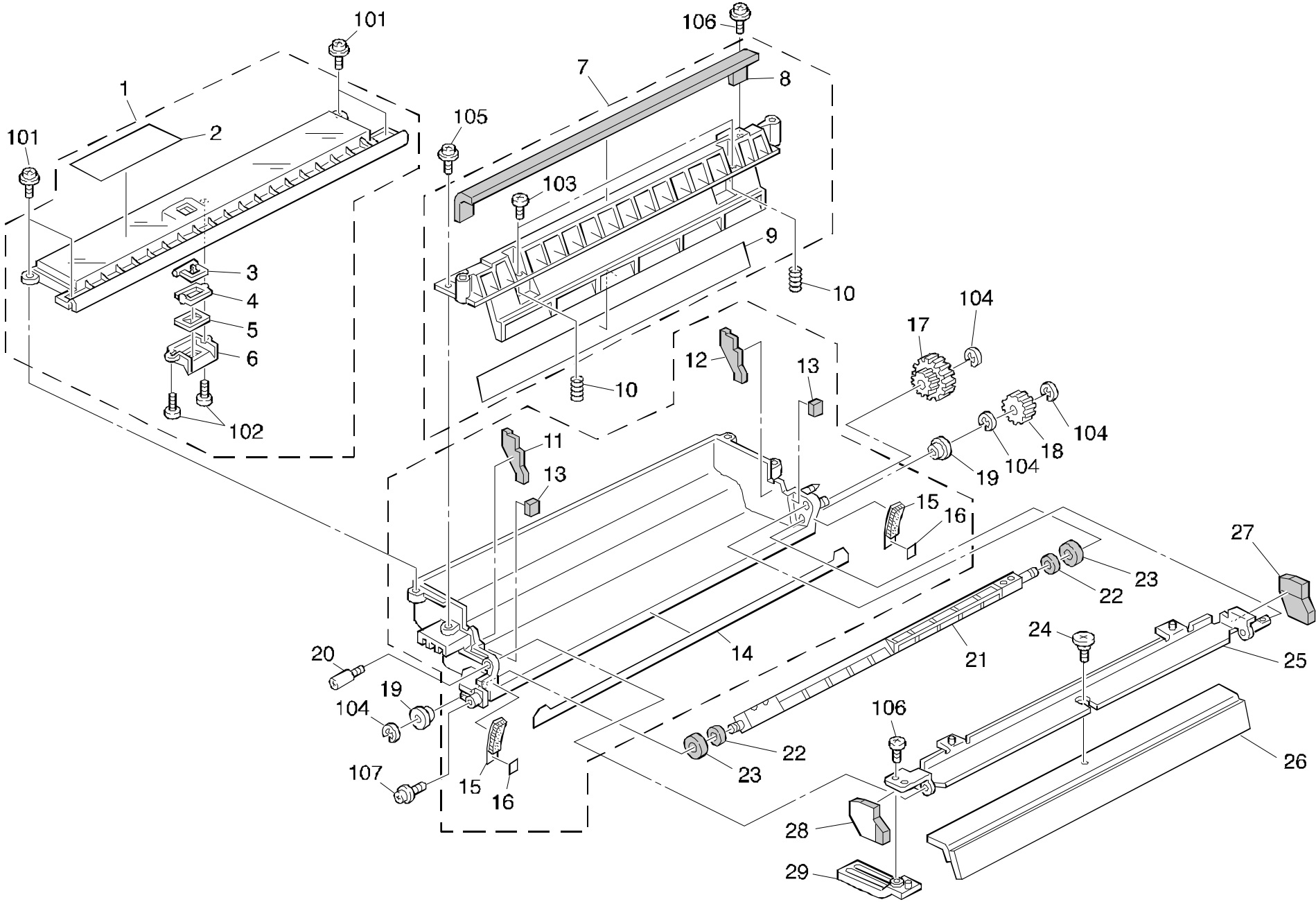

16. CLEANING UNIT (A173)

Index No.	Part No.	Description	Q'ty Per Assembly
1	A128 3558	Upper Cleaning Case	1
2	AA00 0059	Caution Decal - English	1
3	A005 3585	Sensor Feeler - Toner Over Flow	1
4	A005 3587	Feeler Supporter	1
5	A005 3586	Rubber Seal - Toner Collection	1
6	A006 3584	Toner Collection Hosing	1
7	A128 3581	Front Case Cleaning	1
8	A128 3569	Pressuer Seal	1
9	A128 3582	Upper Lower Seal	1
10	A128 3568	Pressure Spring	2
11	A128 3583	Front Seal-Cleaning	1
12	A128 3589	Rear Seal-Cleaning	1
13	A128 3572	Cleaning Lower Seal	2
14	A006 3589	Cleaning Entrance Seal	1
15	A128 3588	Shield - Drum	2
16	A128 3591	Seal - 5x5	2
17	AB01 7160	Gear - 17z And 35z	1
18	AB01 1084	Gear - 17z	1
19	AA08 0030	Bushing - 5x13x7	2
20	A128 3715	Lens Fixing Pin	1
21	A128 3580	Toner Collection Shaft	1
22	AA15 1109	Seal - 5x16x5	2
23	A128 3590	Seal - 9.5	2
24	5446 3648	Stepped Screw - M4	1
25	A128 3571	Blade Holder	1
26	A128 3552	Cleaning Blade	1
27	A128 3578	Rear Holder Seal	1
28	A128 3573	Front Holder Seal	1
29	A128 3563	Blade Release Lever	1
30	A173 3185	Lower Cleaning Case	1



Index No.	Part No.	Description	Q'ty Per Assembly
101	0951 3008B	Philips Screw With Flat Washer-M3x8	
102	0413 0062W	Tapping Screw - M3x6	
103	0313 0060W	Philips Pan Head Screw - M3x6	
104	0720 0040E	Retaining Ring - M4	
105	0951 3006W	Philips Screw With Flat Washer-M3x6	
106	0413 0082W	Tapping Screw - M3x8	
107	0951 3004B	Philps Screw With Flat Washer -M3x4	

17. TRANSFER UNIT (A173)

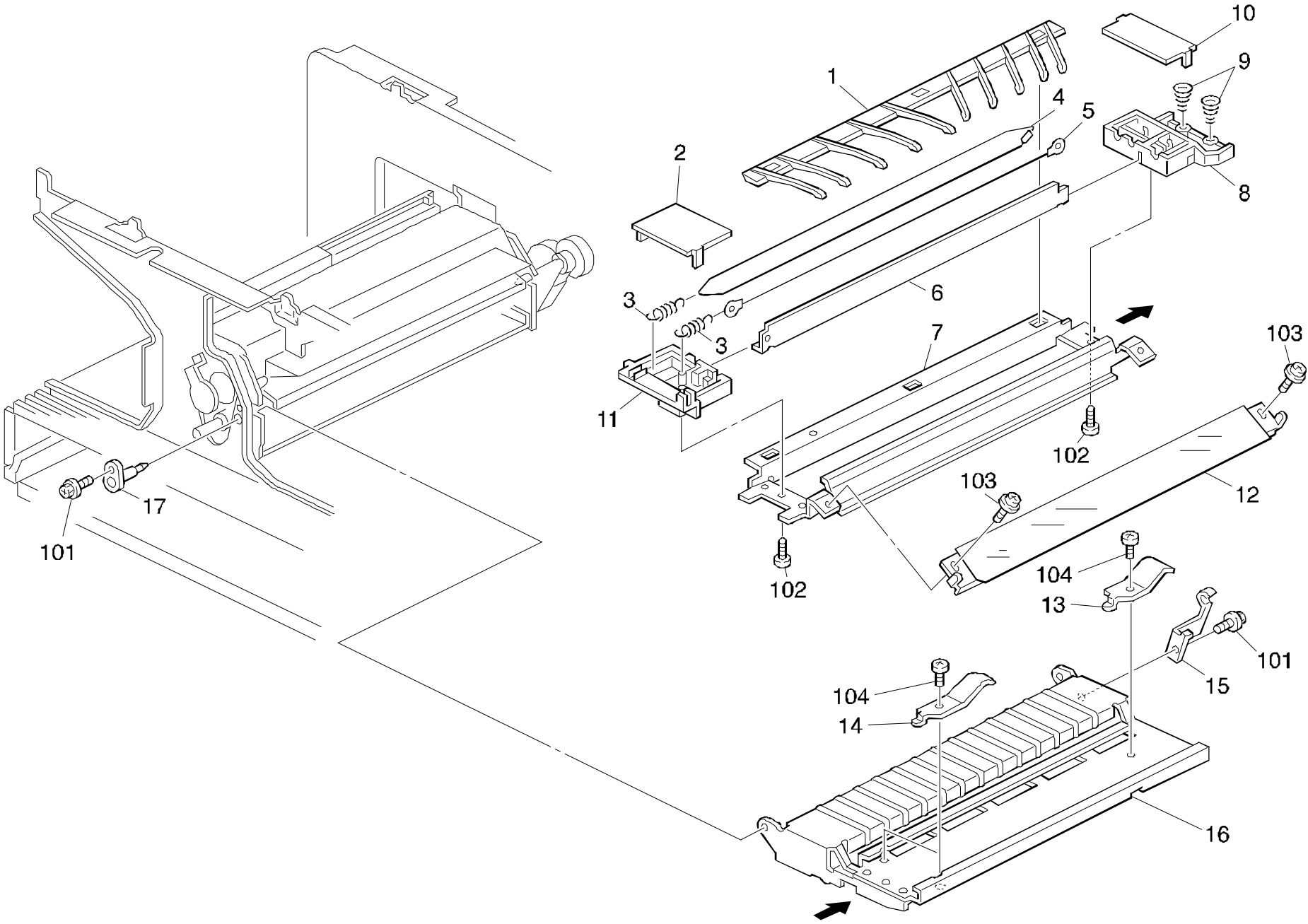

17. TRANSFER UNIT (A173)

Index No.	Part No.	Description	Q'ty Per Assembly
1	A048 3881	T&S Corona Guide	1
2	A048 3883	Cover - T/S Corona - Front	1
3	5442 2108	Corona Wire Spring	2
4	A048 9003	Separation Corona Wire - 10pcs/Set	1
5	A048 9002	Transfer Corona Wire - 10pcs/Set	1
6	A173 3082	Guide Plate	1
7	A173 3081	T/S Corona Unit Casing	1
8	AD02 2180	Rear End Block - T&S Corona	1
9	AA06 3036	Terminal Spring	2
10	A048 3887	Cover - T/S Corona - Rear	1
11	AD02 2179	Front End Block - T&S Corona	1
12	A048 3888	T&S Corona Guide Plate	1
13	A173 3859	Spring Plate	1
14	A048 3857	Spring Plate	2
15	A173 3880	Spring Plate	1
16	A173 3901	Transfer Guide Plate	1
17	A048 3860	Transport Bracket Holder	1

Index No.	Part No.	Description	Q'ty Per Assembly
101	0443 0060W	Hexagon Head Tapping Screw - M3x6	
102	0413 0082W	Tapping Screw - M3x8	
103	0951 3005W	Philips Screw With Flat Washer-M3x5	
104	0413 0060W	Tapping Screw - M3x6	

18. FUSING UNIT (A173)

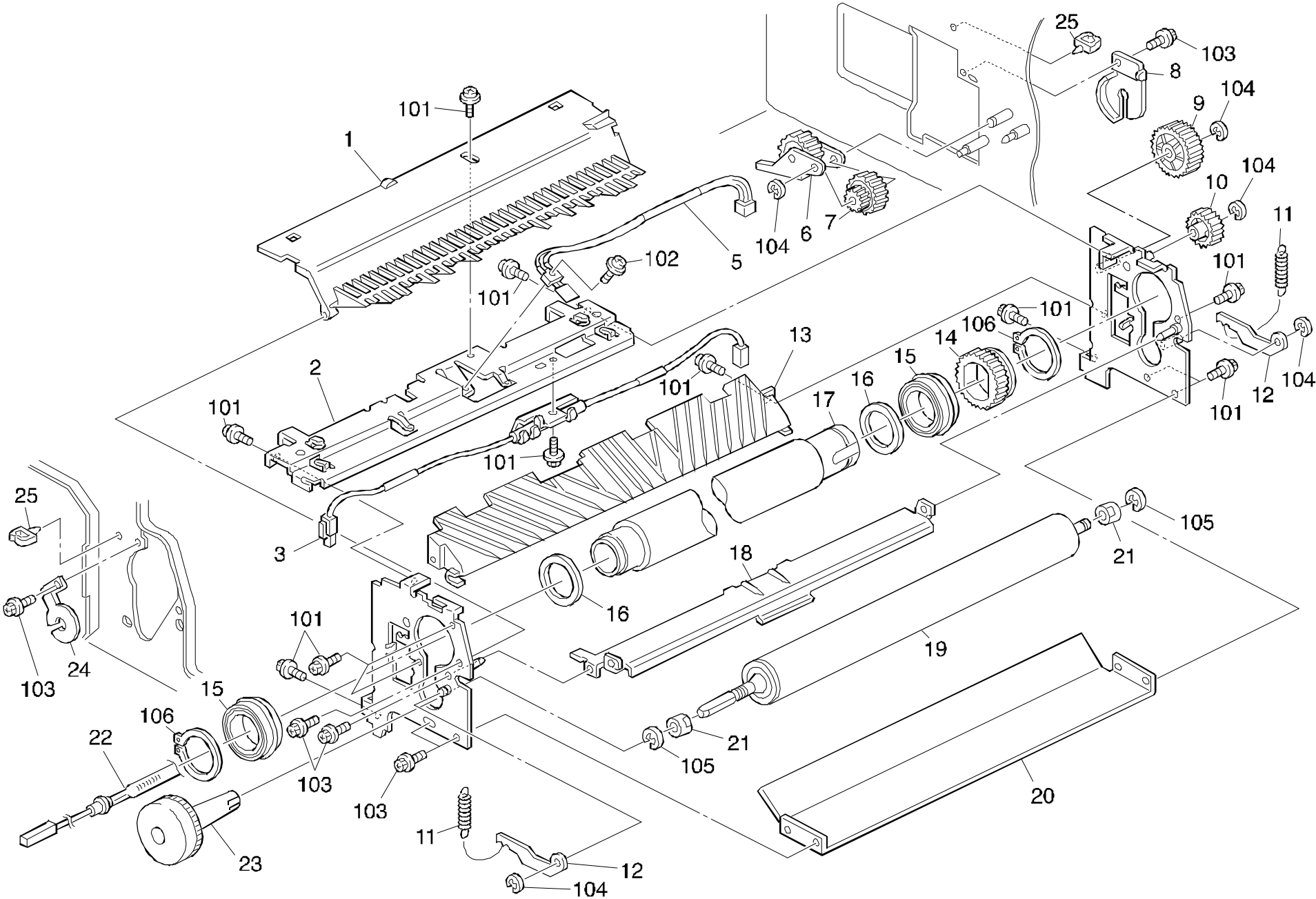

18. FUSING UNIT (A173)

Index No.	Part No.	Description	Q'ty Per Assembly
1	A128 4155	Fusing Cover	1
2	A173 4224	Upper Fusing Stay	1
3	A128 5435	Thermofuse	1
5	A173 5052	Thermistor	1
6	A173 1081	Drive Release Bracket	1
7	A173 1085	Cleaning Drive Gear	1
8	A048 4105	Rear Heater Holder	1
9	AB01 3417	Gear - 30z	1
10	AB01 3418	Gear - 24z	1
11	A128 4314	Pressure Spring	1
12	A017 4085	Pressure Lever	1
13	A173 4223	Lower Guide Plate	1
14	AB01 3201	Gear - 40t	1
15	AE03 0003	Ball Bearing - 30x42x7	1
16	A048 4084	Collar - Hot Roller	1
17	AE01 1035	Hot Roller	1
18	A173 4079	Lower Entrance Guide	1
19	AE02 0016	Pressure Roller	1
20	A173 4081	Lower Guide Plate	1
21	AE03 1002	Bushing - 8x14x7	1
22	AX44 0067	Fusing Lamp - 220V 780W	1
22	AX44 0066	Fusing Lamp - 115V 780W 115%	1
23	AG05 0046	Fusing Knob	1
24	A075 4100	Front Heater Holder	1
25	A128 5875	Clamp	1

Index No.	Part No.	Description	Q'ty Per Assembly
101	0951 3006W	Philips Screw With Flat Washer-M3x6	
102	0951 3008W	Philips Screw With Flat Washer-M3x8	
103	0443 0060W	Hexagon Head Tapping Screw - M3x6	
104	0720 0040E	Retaining Ring - M4	
105	0720 0060E	Retaining Ring - M6	

19. PAPER EXIT SECTION (A173)

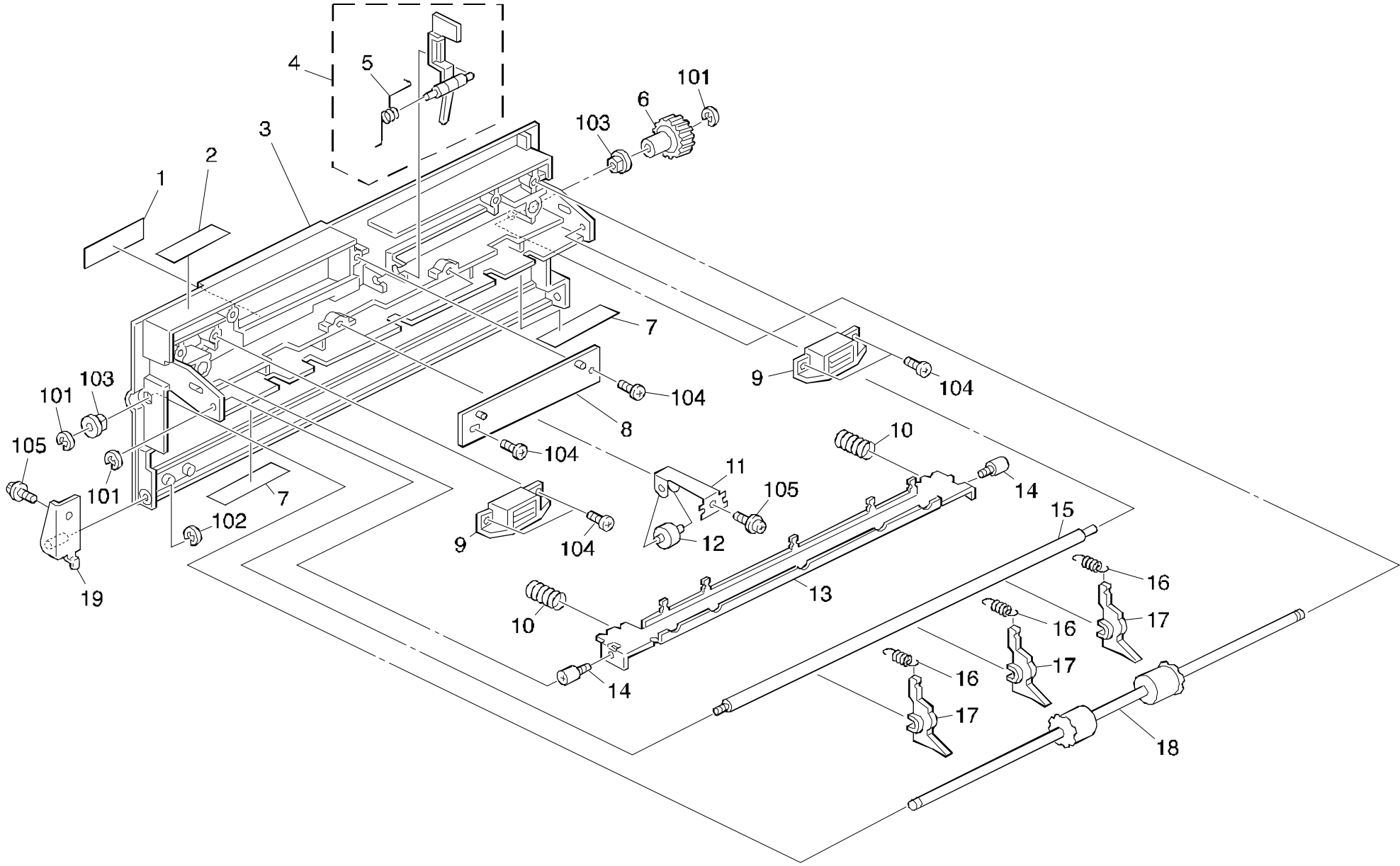

19. PAPER EXIT SECTION (A173)

Index No.	Part No.	Description	Q'ty Per Assembly
1	A173 4475	Decal - Exit	1
2	5203 4179	Caution Decal - High Temperature	1
3	A173 4415	Exit Cover (RIC)	1
3	A173 6372	Exit Cover (NRG)	1
4	A173 4470	Feeler	1
5	AA06 6210	Spring - Feeler	1
6	A173 4215	Gear - 16z	1
7	A173 4231	Upper Exit Guide	2
8	A173 4425	Grip Cover (RIC)	1
8	A173 6375	Grip Cover (NRG)	1
9	AG07 0004	Magnetic Catch	2
10	A173 4028	Release Spring	2
11	A173 4467	Exit Roller Holder	2
12	AF04 0031	Upper Exit Roller	2
13	A173 4213	Release Plate	1
14	AA14 3423	Shaft - Release Plate	2
15	AA14 0485	Shaft - Hot Roller Stripper	1
16	AA06 0513	Spring - Hot Roller Stripper	2
17	A006 9002	Hot Roller Stripper (5pcs/Set)	2
18	A173 4225	Lower Exit Roller	1
19	A173 4227	Front Exit Holder	1

Index No.	Part No.	Description	Q'ty Per Assembly
101	0720 0040E	Retaining Ring - M4	
102	0720 0030E	Retaining Ring - M3	
103	0805 3385	Bushing - 6mm	
104	0413 0082W	Tapping Screw - M3x8	
105	0965 3008W	Tapping Screw With Flat Washer-M3x8	

20. DRIVE SECTION (A173)

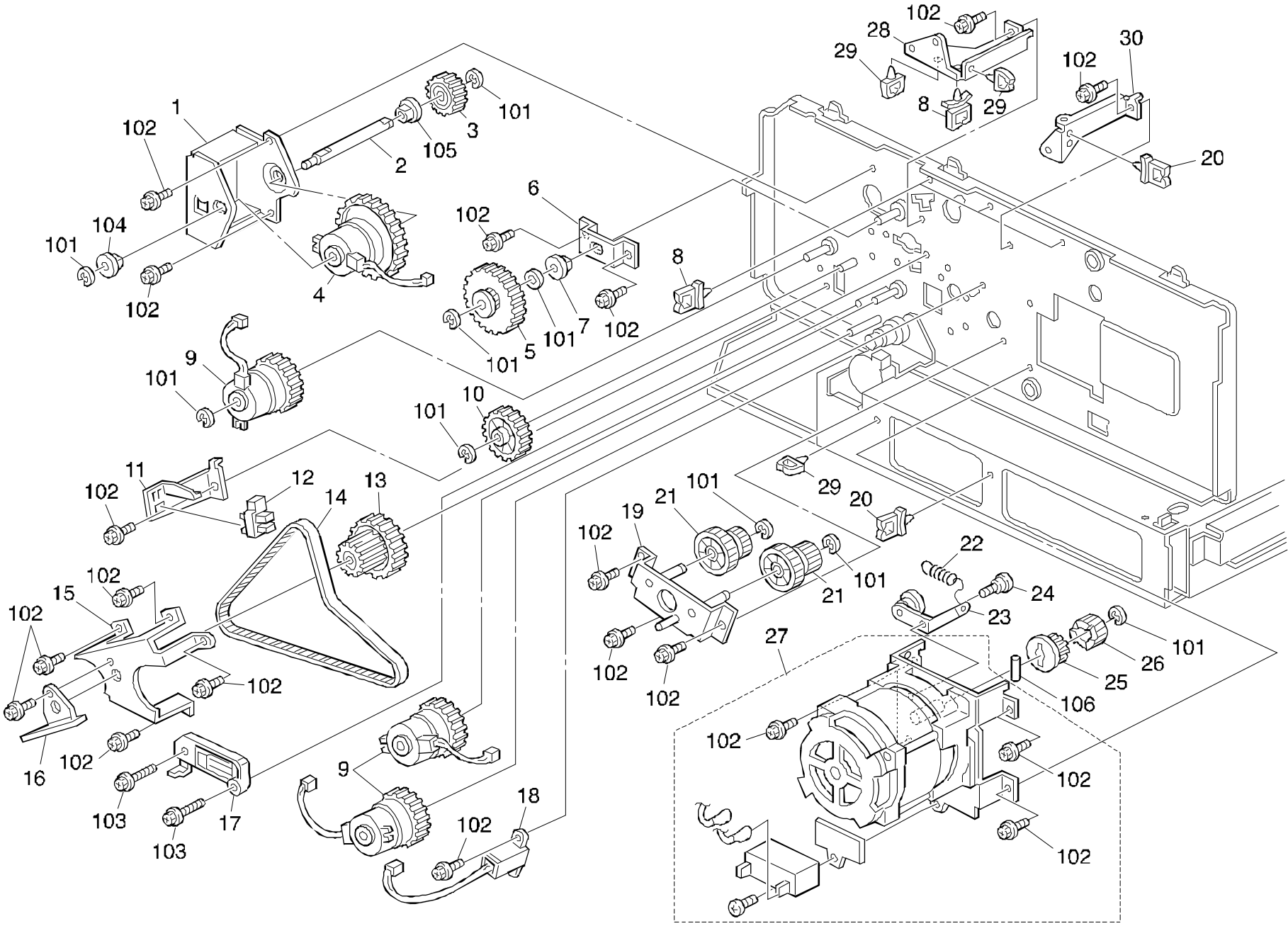

20. DRIVE SECTION (A173)

Index No.	Part No.	Description	Q'ty Per Assembly
1	A173 1112	Toner Supply Bracket	1
2	A173 1113	Toner Supply Shaft	1
3	AB01 3429	Gear - 26z	1
4	A173 5057	Magnetic Clutch	1
5	A173 1122	Development Drive Bracket	1
6	A173 1121	Development Doctor Bracket	1
7	5053 0223	Bushing - 8mm	1
8	A128 5875	Clamp	2
9	A173 5055	Magnetic Clutch	3
10	A173 2616	Idle Gear - 40z	1
11	A173 2747	Paper End Sensor Bracket	1
12	AW02 0075	Photointerrupter	1
13	A173 2615	Gear - 33/44z	1
14	A173 1138	Timing Belt	1
15	A173 2627	Support Plate	1
16	A173 2622	Clutch Stopper Bracket	1
17	A110 3350	Development Connector	1
18	A128 5306	P. Sensor Harness	1
19	A173 1093	Drum Drive Bracket	1
20	A128 5872	Wire Sadle	1
21	A173 1097	Idle Gear - 30z	2
22	A173 1188	Tightener Spring	1
23	A173 1068	Tightener	1
24	A173 1139	Stepped Screw - M5	1
25	A173 1132	Pulley - 18z	1
26	A173 1133	Gear - 24z	1
27	A173 5035	Main Motor - DC220V 25W	1
27	A173 5037	Main Motor - DC115V 25W	1
28	A173 5856	Transformer Bracket	1
29	A128 5875	Clamp	1
30	A048 5856	Power Pack Bracket	1
31	A173 1098	Idle Gear - 36Z	1

Index No.	Part No.	Description	Q'ty Per Assembly
101	0720 0060E	Retaining Ring - M6	
102	0443 0060W	Hexagon Head Tapping Screw - M3x6	
103	0951 3010W	Philipsscrew With Flat Washer-M3x10	
104	0805 3384	Bushing - 5mm	
105	0805 3386	Bushing - 8mm	
106	0633 0120E	Spring Pin - M3x12	

21. ELECTRICAL SECTION 1 (A173)

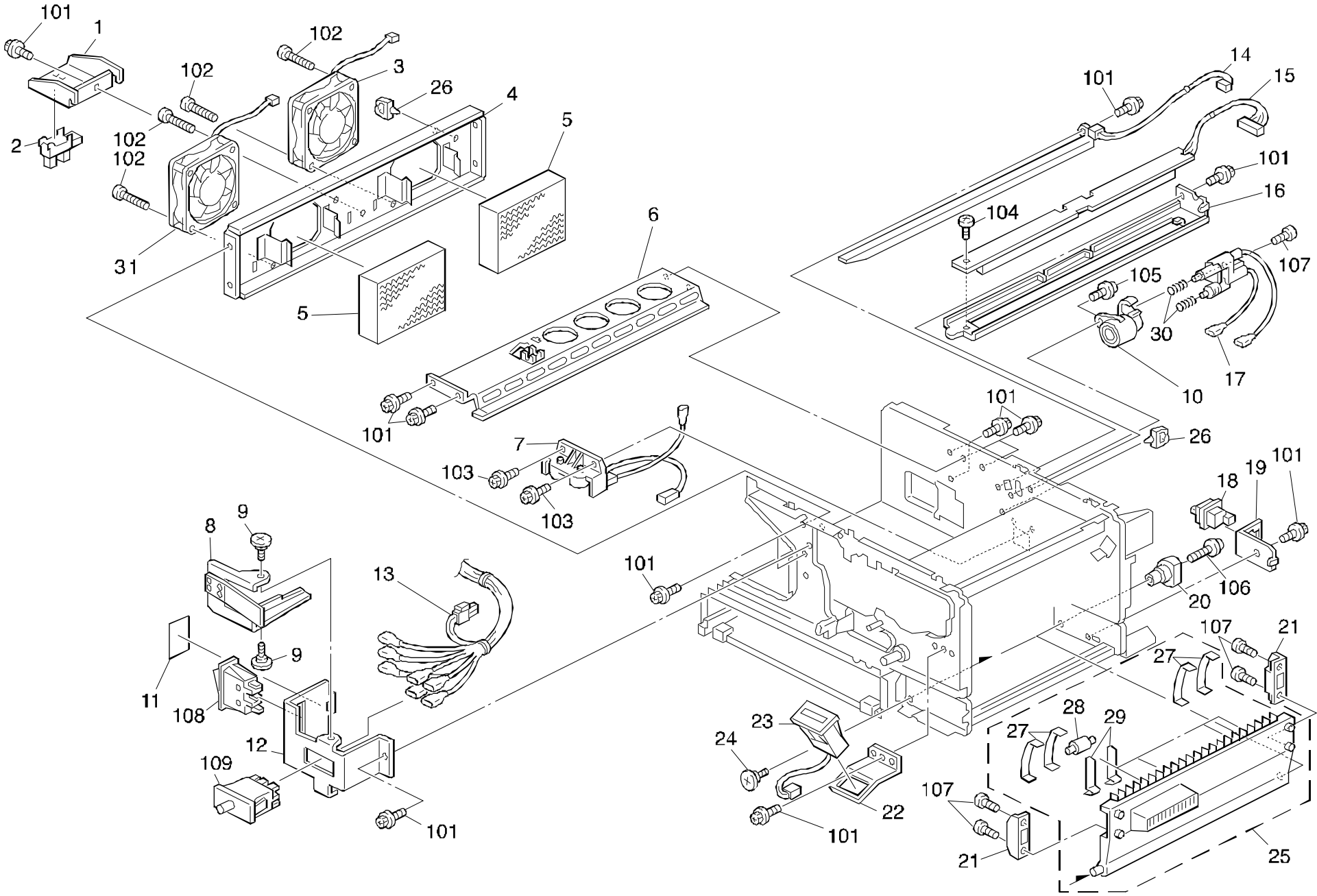

21. ELECTRICAL SECTION 1 (A173)

Index No.	Part No.	Description	Q'ty Per Assembly
1	A173 1146	Exit Sensor Bracket	1
2	AW02 0075	Photointerrupter	1
3	AX64 0054	Fan Motor - DC 2.4W (Large)	1
4	A173 1141	Duct Bracket	1
5	A173 1185	Ozone Filter - 78x88	2
6	A173 3595	Upper Cleaning Stay	1
7	AD02 1108	T/S Corona Receptacle	1
8	A173 5814	Safety Switch Lever	1
9	5203 1686	Screw - Slid Rail	2
10	AD02 1015	Receptacle Housing	1
11	A128 5830	Decal - Left Cover	1
12	A173 5813	Safety Switch Bracket	1
13	A173 5316	AC Harness	1
14	A173 5036	Erase Lamp	1
15	A173 5235	Eraser	1
16	A048 5820	Eraser bracket	1
17	AD02 1013	Chage Corona Receptacle	1
18	AW50 0012	Push Switch	1
19	A054 1182	Bracket - Sensor Cover	1
20	A048 2675	Cam - Lower Right Cover	1
21	AG07 0004	Magnetic Catch	2
22	A173 5801	Total Counter Bracket	1
23	AX31 0024	Total Counter	1
24	A173 2637	Stepped Screw - M6	1
25	A173 2636	Right Lower Cover (RIC)	1
25	A173 2638	Right Lower Cover (NRG)	1
26	A128 5875	Clamp	1
27	A048 2674	Guide - Auxiliary	4
28	AF02 2042	Middle Pressure Roller	4
29	A048 2679	Spring Plate	8
30	5442 2107	Spring	2
31	A173 5406	Fan Motor - DC 2.4W (Small)	1

Index No.	Part No.	Description	Q'ty Per Assembly
101	0443 0060W	Hexagon Head Tapping Screw - M3x6	
102	0313 0300W	Philips Pan Head Screw - M3x30	
103	0443 0080W	Hexagon Head Tapping Screw - M3x8	
104	0313 0050W	Philips Pan Head Screw - M3x5	
105	0951 4008W	Philips Screw With Flat Washer-M4x8	
106	0951 3020W	Philips Screw With Flatwasher-M3x20	
107	0802 5085	Tapping Screw - M4x8	
108	1204 1576	Main Switch	
109	1204 2334	Safety Switch - FA1L-AA20	
110	0951 3006W	Philips Screw With Flat Washer-M3x6	

22. ELECTRICAL SECTION 2 (A173)

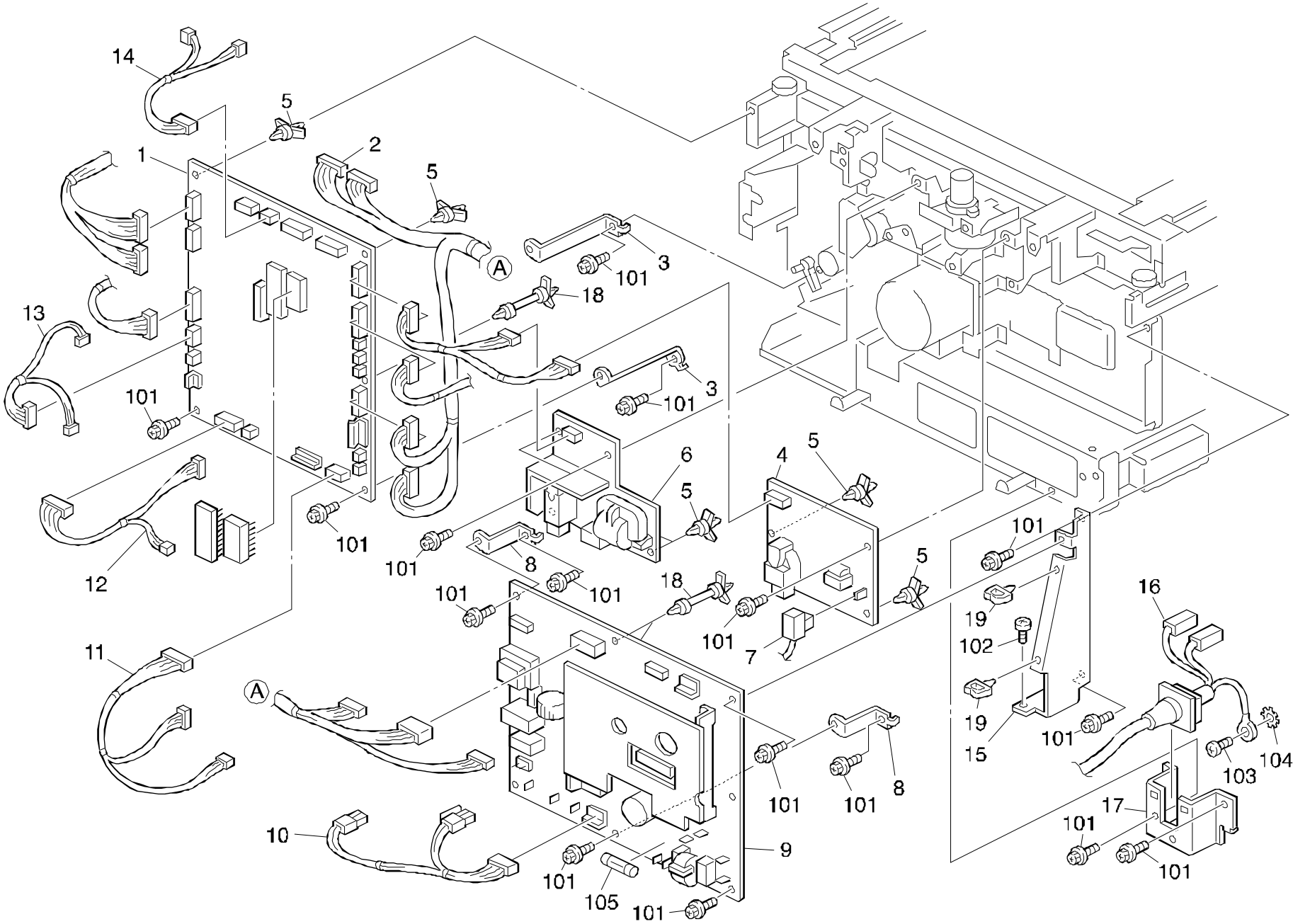

22. ELECTRICAL SECTION 2 (A173)

Index No.	Part No.	Description	Q'ty Per Assembly
1	A173 5161	Main Control Board	1
2	A173 5262	Left Harness	1
3	A173 5857	Main Control Board Bracket	2
4	AZ32 0069	Power Pack - CBG	1
5	A128 5873	Clamp	6
6	A173 5039	Power Pack - TD	1
7	A128 5340	Power Pack Harness	1
8	A173 5821	AC Control Board Bracket	1
9	A173 5620	AC/DC Power Unit - 230V	1
9	A173 5621	AC/DC Power Unit - 115V	1
10	A173 5313	Heater Harness	1
11	A173 5260	Paper Tray Harness	1
12	A173 5258	Right Harness	1
13	A173 5275	Scanner Right Harness	1
14	A173 5276	Optics Harness	1
15	A173 1148	Suppor Plate Bracket	1
16	A173 5026	Power Supply Cord - 230V	1
16	A173 5471	Power Supply Cord - 230V	1
17	A111 5850	Power Supply Cord Bracket	1
18	A173 5404	Clamp	3
19	A128 5876	Clamp	2

Index No.	Part No.	Description	Q'ty Per Assembly
101	0443 0060W	Hexagon Head Tapping Screw - M3x6	
102	0951 4006W	Philips Screw With Flat Washer-M4x6	
103	0315 0080M	Philips Pan Head Screw - M5x8	
104	0705 0050Z	Toothed Washer - M5	
105	1107 0797	Fuse - 16A 250V (115V)	
105	1107 0784	Fuse - 6.3A 250V (230V)	

23. FRAME SECTION (A173)

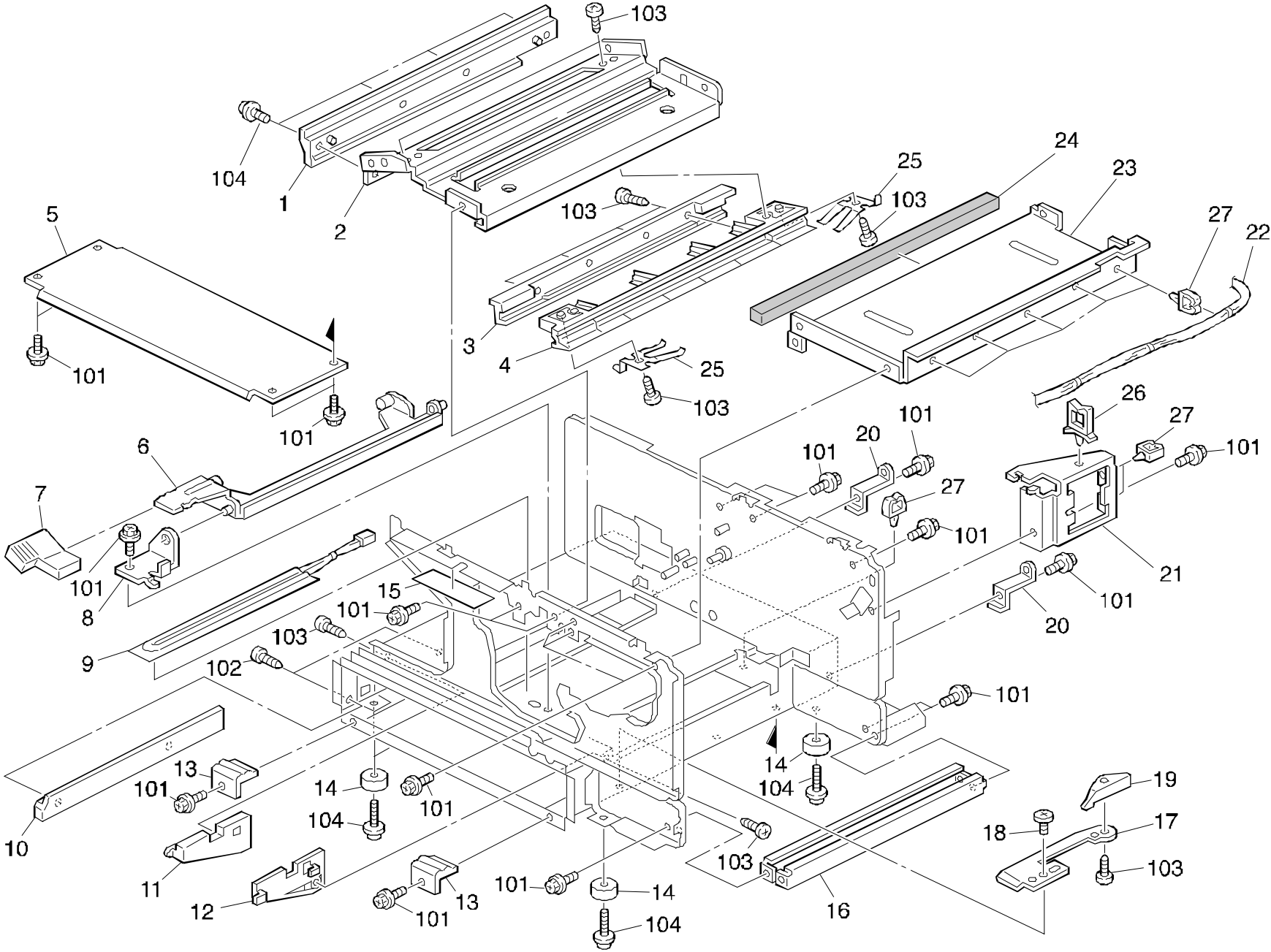

23. FRAME SECTION (A173)

Index No.	Part No.	Description	Q'ty Per Assembly
1	A048 2056	Cleaning Rail	1
2	A110 2052	Charge Corona Guide	1
3	A048 2053	Left Charge Corona Rail	1
4	A110 2054	Right Charge Corona Rail	1
5	A128 5876	Clamp	1
6	A173 3832	Support Plate	1
7	A173 3960	Transfer Lever	1
8	A173 3955	Transfer Release Bracket	1
9	A173 5050	Anti-Condensation Heater - 230V 18W	1
9	A173 5051	Anti-Condensation Heater - 230V18W	1
10	A173 1179	Copy Tray Rail	1
11	A173 1177	Right Paper Guide	1
12	A173 1183	Left Guide Plate	1
13	A173 1181	Tray Positioning Plate	2
14	5216 1186	Rubber Foot	4
15	AA15 0364	Seal - 110 X 25	1
16	A173 2617	Lower Paper Feed Stay	1
17	A110 1195	Release Spring	1
18	5442 1702	Small Screw - M3	1
19	A110 1191	Release Plate Bracket	1
20	A110 1312	Rear Cover Bracket	2
21	A048 1301	Key Counter Bracket	1
22	A173 5250	Front Harness	1
23	A128 1130	Sealding Seal - 5th Mirror	1
24	AA15 1526	Seal - 5th Mirror	1
25	A006 2130	Spring Plate - Charge Corona	2
26	A128 5872	Wire Sadle	1

Index No.	Part No.	Description	Q'ty Per Assembly
101	0443 0060W	Hexagon Head Tapping Screw - M3x6	
102	0414 0102F	Tapping Screw - M4x10	
103	0413 0082W	Tapping Screw - M3x8	
104	0951 3010W	Philipsscrew With Flat Washer-M3x10	

24.MAIN CONTROL BOARD (A173)

CAPACITOR

SYMBOL NO.	INDEX NO.
C101	173
C102	174
C103	177
C104	174
C105	173
C106	175
C107	175
C108	171
C109	171
C110	175

SYMBOL NO.	INDEX NO.
C111	173
C112	175
C113	174
C114	173
C115	176
C116	
C117	174
C118	173
C119	176
C120	175

SYMBOL NO.	INDEX NO.
C121	173
C122	176
C123	175
C124	173
C125	173
C126	173
C127	179
C128	175
C129	175
C130	174

SYMBOL NO.	INDEX NO.
C131	172
C132	173
C133	174
C134	173
C135	174
C136	174
C137	174
C138	173
C139	174
C140	174

SYMBOL NO.	INDEX NO.
C141	173
C142	173
C143	174
C144	174
C145	174
C146	174
C147	174
C148	173
C149	173
C150	173

SYMBOL NO.	INDEX NO.
C151	173
C152	174
C153	177
C154	175
C155	174
C156	178
C157	173
C158	
C159	175

CONNECTOR

SYMBOL NO.	INDEX NO.
CN101	108
CN102	107
CN103	108
CN104	104
CN105	114
CN106	106
CN107	111
CN108	111
CN109	115
CN110	104

SYMBOL NO.	INDEX NO.
CN111	109
CN112	111
CN113	142
CN114	112
CN115	102
CN116	109
CN117	103
CN118	110
CN119	108
CN120	180

SYMBOL NO.	INDEX NO.
CN121	107
CN122	104
CN123	105
CN140	101

DIODE

SYMBOL NO.	INDEX NO.
D101	137
D102	181
D103	181
D104	137
D105	137
D106	137
D107	137
D108	137
D109	137
D110	137

SYMBOL NO.	INDEX NO.
D111	137
D112	137

DPS

SYMBOL NO.	INDEX NO.
DPS101	140

24.MAIN CONTROL BOARD (A173)

FIB

SYMBOL NO.	INDEX NO.
FIB101	139
FIB102	139
FIB103	139
FIB104	139
FIB105	139
FIB106	139
FIB107	139
FIB108	139
FIB109	139
FIB110	139

SYMBOL NO.	INDEX NO.
FIB111	139

IC

SYMBOL NO.	INDEX NO.
IC101	118
IC102	117
IC103	118
IC104	120
IC105	120
IC106	124
IC107	122
IC108	128
IC109	123
IC110	129

SYMBOL NO.	INDEX NO.
IC111	120
IC112	117
IC113	134
IC114	131
IC115	120
IC116	130
IC117	120
IC118	119
IC119	119
IC120	181

SYMBOL NO.	INDEX NO.
(SOCKET)	141
IC121	127
(SOCKET)	182
IC122	132
IC123	116
IC124	133
IC125	121
IC126	116
IC127	117
IC128	117

JP

SYMBOL NO.	INDEX NO.
JP101	141

NF

SYMBOL NO.	INDEX NO.
NF101	138

OSC

SYMBOL NO.	INDEX NO.
OSC101	125

Q

SYMBOL NO.	INDEX NO.
Q101	135
Q102	135
Q103	135
Q104	135
Q105	135
Q106	135
Q107	135
Q108	135
Q109	135

RESISTOR

SYMBOL NO.	INDEX NO.
R101	160
R102	146
R103	151
R104	166
R105	159
R106	154
R107	154
R108	162
R109	156
R110	160

SYMBOL NO.	INDEX NO.
R111	170
R112	168
R113	145
R114	145
R115	145
R116	145
R117	145
R118	145
R119	145
R120	160

SYMBOL NO.	INDEX NO.
R121	145
R122	144
R123	144
R124	160
R125	152
R126	143
R127	160
R128	160
R129	160
R130	160

24.MAIN CONTROL BOARD (A173)

RESISTOR

SYMBOL NO.	INDEX NO.
R131	153
R132	145
R133	167
R134	169
R135	167
R136	160
R137	160
R138	145
R139	145
R140	144

SYMBOL NO.	INDEX NO.
R141	143
R142	160
R143	145
R144	145
R145	145
R146	145
R147	145
R148	155
R149	155
R150	155

SYMBOL NO.	INDEX NO.
R151	155
R152	155
R153	155
R154	145
R155	152
R156	
R157	160
R158	160
R159	160
R160	144

SYMBOL NO.	INDEX NO.
R161	147
R162	144
R163	
R164	147
R165	144
R166	158
R167	164
R168	154
R169	148
R170	163

SYMBOL NO.	INDEX NO.
R171	157
R172	149
R173	165
R174	161
R175	160
R176	160
R177	160
R178	160
R179	160
R180	160

SYMBOL NO.	INDEX NO.
R181	160
R182	160
R183	165
R184	163
R185	165
R186	163
R187	165
R188	163
R189	165
R190	163

RESISTOR

SYMBOL NO.	INDEX NO.
R191	165
R192	163
R193	165
R194	163
R195	165
R196	163
R197	165
R198	163
R199	155
R200	155

SYMBOL NO.	INDEX NO.
R201	155
R202	155
R203	155
R204	155
R205	155
R206	155
R207	155
R208	155
R209	155
R210	155

SYMBOL NO.	INDEX NO.
R211	155
R212	155
R213	155
R214	155
R215	160
R216	150
R217	160
R218	
R219	160
R220	160

SYMBOL NO.	INDEX NO.
R221	152

ZD

SYMBOL NO.	INDEX NO.
ZD101	136
ZD102	136

24.MAIN CONTROL BOARD (A173)

Index No.	Part No.	Description	Q'ty Per Assembly
*	A173 5161	Main Control Board	1
1	A173 5107	IC - UVEPROM 1M 8X 150NS	1

Index No.	Part No.	Description	Q'ty Per Assembly
101	1102 2179	Connector - PIC - FS4 - T	
102	1102 4201	ConneCtor - 2P	
103	1102 4202	Connector - 3P	
104	1102 4204	CT Header - 5P	
105	1102 4205	CT Header - 6P	
106	1102 4207	Connector - 8P	
107	1102 4210	Connector - 11P	
108	1102 4211	CT Header - 12P	
109	1102 4619	Connector - 2P	
110	1102 4628	Connector - 11P	
111	1102 4631	CTConnector - 2P	
112	1102 5007	CT Header - 14P	
113	1103 1169	Connector - 6P	
114	1103 1770	Connector - 4P	
115	1103 1776	Pin Header - 1OP	
116	1401 0869	Transistor - Array - TD62003F	
117	1407 1535	lC - TD62308AP	
118	1407 2055	lC - T062304F	
119	1407 2230	IC - T06F62303F	
120	1407 3381	IC - 74HC4066A	
121	1407 3533	IC - 74HC241A	
122	1407 4136	IC - UPD7831	
123	1407 4315	IC - TE7751	
124	1408 0598	IC - MB3773PF	
125	1503 0071	0sicillator - 12Mhz	
126	1905 0009	IC - 1M X8 150NS	
127	1407 4286	IC - MK48Z52B - 15	
128	1408 0398	IC - NJ2903M	
129	1407 2187	IC - SN74LS07NS	
130	1407 2080	IC - SN74LS21NS	
131	1407 2412	IC - SN74LS32M	
132	1407 2413	IC - SN74LSI38M	
133	1407 4234	IC - SN74LS373M	
134	1407 3322	IC - MC74HC04AF	
135	1400 0369	Transistor - 2SA1213Y	

Index No.	Part No.	Description	Q'ty Per Assembly
136	1402 0277	Zener Diode - 1Z12	
137	1402 0476	Diode - ISS184	
138	1602 0987	Capacitor&Coil - 270PF 100V	
139	1607 0491	Capacitor - BL03RN2 - R6	
140	1204 1372	Locking Support	
141	1104 0598	IC - Socket	
142	1102 5305	Connector - 6P	
143	1630 2101	Resistor - 100 Ω 1/8W	
144	1630 2102	Resistor - 1K Ω 1/8W ±5%	
145	1630 2103	Resistor - 10K Ω 1/8W	
146	1630 2104	Resistor - 100K Ω 1/8W ±5%	
147	1630 2106	Resistor - 10M Ω 1/8W	
148	1630 2123	Resistor - 12K Ω 1/8W ±5%	
149	1630 2152	Resistor - 1.5K Ω 1/8W ±5%	
150	1630 2154	Resistor - 150K Ω ±5%1/8W	
151	1630 2204	Resistor - 200K Ω ±5%1/8W	
152	1630 2222	Resistor - 2.2K Ω I/8W	
153	1630 2223	Resistor - 22K Ω 1/8W ±5%	
154	1630 2243	Resistor - 24K Ω 1/8W ±5%	
155	1630 2272	Resistor - 2.7 Ω ±5%1/8W	
156	1630 2273	Resistor - 27K Ω 1/8W 5%	
157	1630 2301	Resistor - 300 Ω 1/8W 5%	
158	1630 2302	Resistor - 3K Ω I/8W 5%	
159	1630 2394	Resistor - 390K Ω 1/8W ±5%	
160	1630 2472	Resistor - 4.7K Ω 1/8W ±5%	
161	1630 2473	Resistor - 47K Ω 1/8W ±5%	
162	1630 2513	Resistor - 151 Ω 1/8W ±5%	
163	1630 2561	Resistor - 560 Ω ±5%1/8W	
164	1630 2622	Resistor - 6.2K Ω 1/8W 5%	
165	1630 2681	Resistor - 680 Ω 1/8W ±5%	
166	1630 2824	Resistor - 820 Ω 1/8W ±5%	
167	1632 1001	Resistor - IK Ω ±1% 1/8W	
168	1632 1002	Resistor - 10.OK Ω 1/8W ±1%	

Index No.	Part No.	Description	Q'ty Per Assembly
169	1632 1301	Resistor - 1.3K Ω ±1% 1/8W	
170	1632 3901	Resistor - 3.9K Ω 1/8W ±1%	
171	1605 0343	Capacitor - 30PF ±5% 50V	
172	1605 0596	Capacitor - 100PF	
173	1605 0636	Capacitor - 0.1μF	
174	1606 1139	Capacitor - 0.01μF ±20%	
175	1606 1455	Capacitor - 470PF 25V	
176	1640 2101	Capacitor - 100μF ±20% 25V	
177	1640 2470	Capacitor - 47μF ±20% 25V	
178	1640 5109	Capacitor - 1μF ±20% 50V	
179	1604 5478	Capacitor - 0.47μF ±20% 50V	
180	1102 4629	Connector - 12P	
181	1402 0478	Diode - 1SS226TE85L	
182	1104 0239	LSI Socket - 24P	

25. DECAL AND DDCUMENT (A173)

2

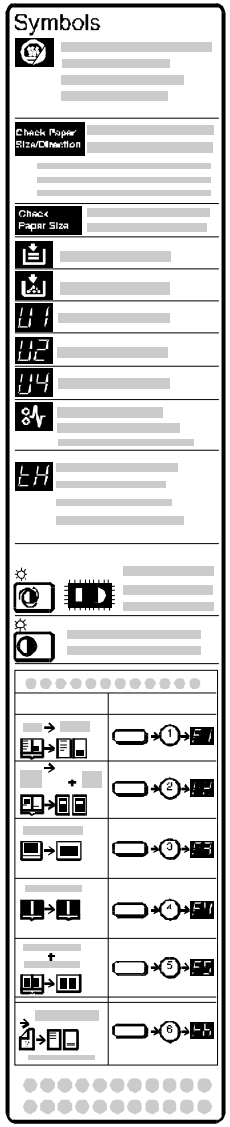

1



9

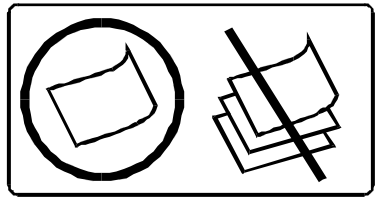

10

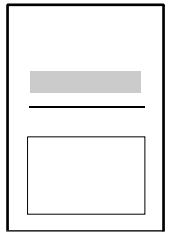

3

CHANGING PAPER SIZE/DIRECTION

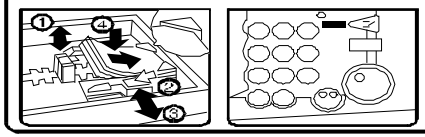

A3 = R/ 1 0 R/

A3	10	A5	16	8x10½	22
B4	11	11x17	17	10x14	23
A4	12	8½x14	18	11x15	24
A4	13	11x8½	19	BK	25
B5	14	8½x11	20	16K	26
B5	15	8x13 8½x13 8½x13	12	16K	27

4



5

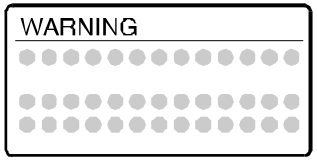

6

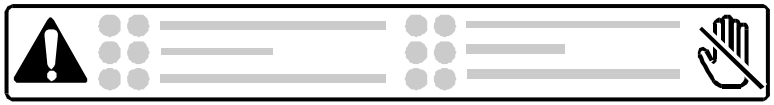

7

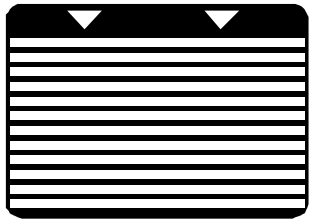

8

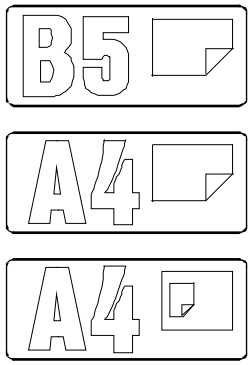

25. DECAL AND DDCUMENT (A173)

Index No.	Part No.	Description	Q'ty Per Assembly
1	5203 4179	Caution Decal - High Temperature	
2	A173 1388	Decal - Symbol (RIC)	1
2	A173 6386	Decal - Symbol (NRG)	1
3	A173 2843	Decal - Paper Feed (RIC)	1
3	A173 2848	Decal - Paper Feed (RIC-TWN)	1
3	A173 6387	Decal - Paper Feed (NRG)	1
4	A173 4475	Decal - Exit	1
5	AA00 0059	Caution Decal - English	1
6	AA00 0401	Decal - High Temperature	1
7	AA00 1172	Decal - Paper Volume	1
7	AA00 1172	Decal - Paper Volume	1
8	AA00 2008	Decal - A4R (RIC)	1
8	AA00 2009	Decal - A4 (RIC)	1
8	AA00 2026	Decal - B5 (RIC)	1
8	A048 6285	Decal - A4R (NRG)	1
8	A048 6286	Decal - A4 (NRG)	1
8	A121 6832	Decal - B5 (NRG)	1
9	A173 2822	Decal - By-Pass Feed	1
10	A173 8608	Operating Instructions - English (RIC)	1
10	A173 8698	Operating Instructions - English (NRG)	1
10	A173 8609	Operating Instructions - TWN	1

Index No.	Part No.	Description	Q'ty Per Assembly

26. SPECIAL TOOLS (A173)

1

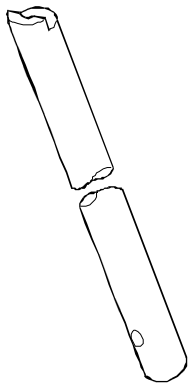

2

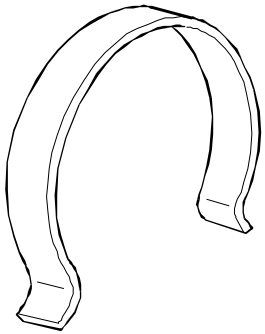

3

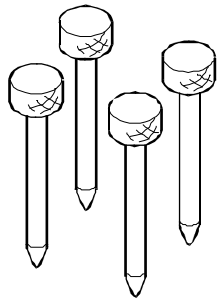

4

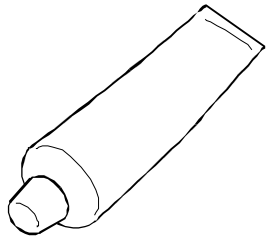

5

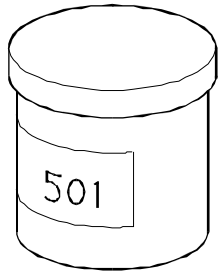

6

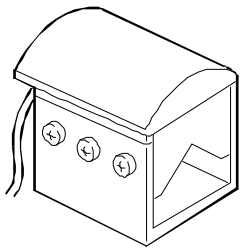

7

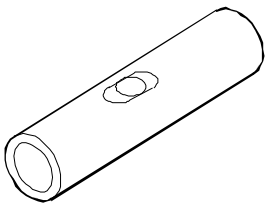

8

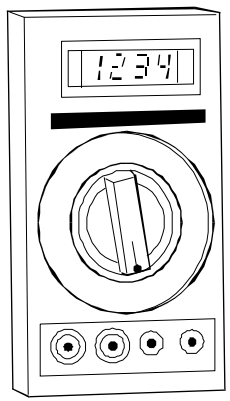

9

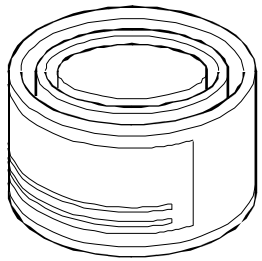

10

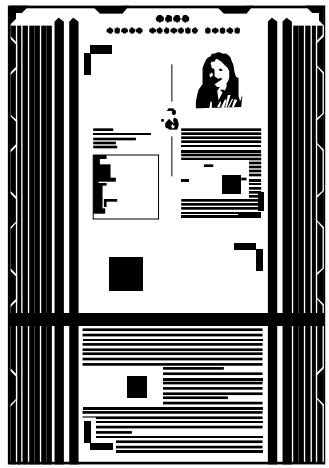

26. SPECIAL TOOLS (A173)

Index No.	Part No.	Description	Q'ty Per Assembly
1	A006 9105	Drum Shoe Shaft	1
2	A006 9103	Omega Clamp	1
3	A006 9104	Asjusting Scanner Pin (4pcs/set)	1
4	A008 9502	Silicone Grease - G40M	1
5	5203 9501	Grease 501	1
6	5442 9106	Drum Shoe	1
7	5447 9104	Shoe Adaptor	1
8	5420 9507	Digital Multimeter - Brckman	1
9	5447 9078	Heat Resisting Grease MT-78	1
10	5420 9516	Test Chart - OS - A3 (10pcs/set)	1
11	5420 9502	Test Chart - OS - A3 (100pcs/set)	1

Index No.	Part No.	Description	Q'ty Per Assembly

PARTS INDEX

Part No.	Description	Page and Index No.
A173 1068	Tightener	45- 23
A173 1081	Drive Release Bracket	41- 6
A173 1085	Cleaning Drive Gear	41- 7
A173 1093	Drum Drive Bracket	45- 19
A173 1097	Idle Gear - 30z	45- 21
A173 1098	Idle Gear - 36Z	45- 31
A173 1112	Toner Supply Bracket	45- 1
A173 1113	Toner Supply Shaft	45- 2
A173 1121	Development Doctor Bracket	45- 6
A173 1122	Development Drive Bracket	45- 5
A173 1124	Development Drive Shaft	27- 3
A173 1132	Pulley - 18z	45- 25
A173 1133	Gear - 24z	45- 26
A173 1138	Timing Belt	45- 14
A173 1139	Stepped Screw - M5	45- 24
A173 1141	Duct Bracket	47- 4
A173 1146	Exit Sensor Bracket	47- 1
A173 1148	Suppor Plate Bracket	49- 15
A173 1155	Paper End Actuator	27- 7
A173 1177	Right Paper Guide	51- 11
A173 1179	Copy Tray Rail	51- 10
A173 1181	Tray Positioning Plate	51- 13
A173 1183	Left Guide Plate	51- 12
A173 1185	Ozone Filter - 78x88	47- 5
A173 1188	Tightener Spring	45- 22
A173 1195	Release Spring	27- 15
A173 1233	Front Door (RIC)	7- 12
A173 1235	Left Lower Cover (RIC)	7- 16
A173 1236	Upper Cover (RIC)	7- 7
A173 1277	Right Cover (RIC)	7- 9
A173 1320	Front Lower Cover	7- 10
A173 1334	Front Cover (RIC)	7- 11
A173 1385	Operation Sheet	7- 14
A173 1388	Decal - Symbol (RIC)	57- 2
A173 1397	Cap - Left Lower Cover (RIC)	7- 17

Part No.	Description	Page and Index No
A173 1616	Scale (RIC)	7- 6
A173 1660	Scanner Motor Bracket	15- 2
A173 1731	Front Right Pulley	15- 11
A173 1733	Rear Left Pulley	15- 6
A173 1750	Lens Bracket	13- 3
A173 1752	Shielding Sheet	13- 5
A173 1753	Shielding Seal	13- 1
A173 1768	Motor Base	11- 19
A173 1770	Platen Cover Hinge (RIC)	9- 5
A173 1771	ADS Cover	13- 18
A173 1776	Scale Bracket	17- 1
A173 1784	Lens Sensor Bracket	13- 13
A173 1786	Sensor Bracket	11- 9
A173 1788	Sensor Bracket	17- 6
A173 1855	Original Holder (RIC)	9- 3
A173 2101	Bushing - 8x22x7	35- 17
A173 2103	Stepped Screw	35- 16
A173 2607	Paper Drive Shaft	27- 23
A173 2611	Lower Registration Roller	25- 10
A173 2615	Gear - 33/44z	45- 13
A173 2616	Idle Gear - 40z	45- 10
A173 2617	Lower Paper Feed Stay	51- 16
A173 2621	Feed Roller Bushing	27- 27
A173 2622	Clutch Stopper Bracket	27- 21
A173 2622	Clutch Stopper Bracket	45- 16
A173 2623	2nd Drive Roller	27- 8
A173 2627	Support Plate	45- 15
A173 2632	Idle Gear - 28/14Z	27- 20
A173 2633	Clutch Stopper	27- 10
A173 2635	Idle Gear	27- 24
A173 2636	Right Lower Cover (RIC)	47- 25
A173 2637	Stepped Screw - M6	47- 24
A173 2638	Right Lower Cover (NRG)	47- 25
A173 2662	Middle Guide Plate - Registration	25- 8
A173 2668	Seal - 9.5x75	25- 7

Part No.	Description	Page and Index No.
A173 2713	Release Shaft	23- 33
A173 2714	Release Lever	23- 32
A173 2715	Pad Lever	23- 27
A173 2716	Release Lever Spring	23- 31
A173 2718	Bottom Plate Spring	23- 17
A173 2720	Release Spring	23- 25
A173 2725	Sensor Actuattor	23- 16
A173 2725	Sensor Actuattor	27- 9
A173 2734	Upper Bracket - Paper Feed	23- 21
A173 2735	1st Entrance Guide	23- 20
A173 2736	Front Cassette Holder (RIC)	23- 34
A173 2737	Rear Cassette Holder (RIC)	23- 18
A173 2740	Pressure Spring	23- 26
A173 2741	Paper End Actuator	23- 9
A173 2743	Friction Pad Bracket	23- 28
A173 2745	Upper Paper Feed Guide	23- 1
A173 2746	By-Pass Feed Guide	23- 11
A173 2747	Paper End Sensor Bracket	45- 11
A173 2753	Release Shaft	23- 12
A173 2756	Shaft Bracket	23- 15
A173 2757	Front Release Arm	23- 38
A173 2758	Rear Release Arm	23- 13
A173 2761	Paper Size Sensor Bracket	23- 22
A173 2771	Spacer	23- 29
A173 2774	1st Paper Feed Shaft	23- 8
A173 2777	Paper Feed Roller	23- 3
A173 2791	Small Cassette (RIC)	19- 25
A173 2798	Actuator - B5R	19- 23
A173 2811	Paper Tray Cover (RIC)	21- 19
A173 2816	Paper Sensor Bracket	27- 12
A173 2822	Decal - By-Pass Feed	57- 9
A173 2843	Decal - Paper Feed (RIC)	21- 3
A173 2843	Decal - Paper Feed (RIC)	57- 3
A173 2848	Decal - Paper Feed (RIC-TWN)	21- 3
A173 2848	Decal - Paper Feed (RIC-TWN)	57- 3

Part No.	Description	Page and Index No
A173 2852	By-pass Feed Unit	19- 1
A173 2856	Rear Side Fence (RIC)	19- 2
A173 2871	By-Pass Feed Guide	19- 6
A173 2874	Spring Plate	19- 4
A173 2876	By-Pass Feed Bottom Guide (RIC)	19- 5
A173 2911	Bottom Plate	19- 21
A173 2919	Bushing - 8mm	27- 22
A173 2946	By-Pass Feed Table (RIC)	19- 7
A173 3025	Development Rail	25- 1
A173 3081	T/S Corona Unit Casing	39- 7
A173 3082	Guide Plate	39- 6
A173 3185	Lower Cleaning Case	37- 30
A173 3401	Mixing Auger	31- 13
A173 3402	Paddle Roller	31- 10
A173 3403	Auger Shaft	29- 16
A173 3595	Upper Cleaning Stay	47- 6
A173 3832	Support Plate	51- 6
A173 3859	Spring Plate	39- 13
A173 3880	Spring Plate	39- 15
A173 3901	Transfer Guide Plate	39- 16
A173 3955	Transfer Release Bracket	51- 8
A173 3960	Transfer Lever	51- 7
A173 4028	Release Spring	43- 10
A173 4079	Lower Entrance Guide	41- 18
A173 4081	Lower Guide Plate	41- 20
A173 4213	Release Plate	43- 13
A173 4215	Gear - 16z	43- 6
A173 4223	Lower Guide Plate	41- 13
A173 4224	Upper Fusing Stay	41- 2
A173 4225	Lower Exit Roller	43- 18
A173 4227	Front Exit Holder	43- 19
A173 4231	Upper Exit Guide	43- 7
A173 4415	Exit Cover (RIC)	43- 3
A173 4425	Grip Cover (RIC)	43- 8
A173 4440	Copy Tray (RIC)	7- 4

Part No.	Description	Page and Index No.
A173 4465	Copy Tray Slide (RIC)	7- 2
A173 4467	Exit Roller Holder	43- 11
A173 4470	Feeler	43- 4
A173 4475	Decal - Exit	43- 1
A173 4475	Decal - Exit	57- 4
A173 5026	Power Supply Cord - 230V	49- 16
A173 5035	Main Motor - DC220V 25W	45- 27
A173 5036	Erase Lamp	47- 14
A173 5037	Main Motor - DC115V 25W	45- 27
A173 5039	Power Pack - TD	49- 6
A173 5050	Anti-Condensation Heater - 230V 18W	51- 9
A173 5051	Anti-Condensation Heater - 230V18W	51- 9
A173 5052	Thermistor	41- 5
A173 5055	Magnetic Clutch	27- 18
A173 5055	Magnetic Clutch	45- 9
A173 5057	Magnetic Clutch	45- 4
A173 5107	IC - UVEPROM 1M 8X 150NS	55- 1
A173 5120	Optical Control Board	13- 19
A173 5161	Main Control Board	49- 1
A173 5161	Main Control Board	55- *
A173 5219	Mirror Drive Motor	11- 20
A173 5221	Lens Drive Motor	13- 11
A173 5235	Eraser	47- 15
A173 5250	Front Harness	51- 22
A173 5257	Right Harness	23- 37
A173 5258	Right Harness	49- 12
A173 5260	Paper Tray Harness	49- 11
A173 5262	Left Harness	49- 2
A173 5275	Scanner Right Harness	49- 13
A173 5276	Optics Harness	49- 14
A173 5282	Exposure Lamp Harness	15- 26
A173 5313	Heater Harness	49- 10
A173 5316	AC Harness	47- 13
A173 5400	Fan Motor - 24V	17- 16
A173 5402	Clip	17- 5

Part No.	Description	Page and Index No
A173 5403	Clamp	15- 25
A173 5404	Clamp	49- 18
A173 5406	Fan Motor - DC 2.4W (Small)	47- 31
A173 5471	Power Supply Cord - 230V	49- 16
A173 5620	AC/DC Power Unit - 230V	49- 9
A173 5621	AC/DC Power Unit - 115V	49- 9
A173 5651	Operation Panel Ass'y (RIC)	7- 20
A173 5801	Total Counter Bracket	47- 22
A173 5812	Right Bracket - Operation Panel	7- 19
A173 5813	Safety Switch Bracket	47- 12
A173 5814	Safety Switch Lever	47- 8
A173 5821	AC Control Board Bracket	49- 8
A173 5856	Transformer Bracket	45- 28
A173 5857	Main Control Board Bracket	49- 3
A173 5916	Exposure Lamp - 181V 310W	15- 16
A173 5917	Exposure Lamp - 181V 310W	15- 16
A173 6201	Front Door (NRG)	7- 12
A173 6227	Left Lower Cover (NRG)	7- 16
A173 6229	Right Cover (NRG)	7- 9
A173 6231	Upper Cover (NRG)	7- 7
A173 6237	Copy Tray (NRG)	7- 4
A173 6241	Scale (NRG)	7- 6
A173 6247	Front Cover (NRG)	7- 11
A173 6292	Operation Panel Ass'y (NRG)	7- 20
A173 6312	Paper Tray Cover (NRG)	21- 19
A173 6339	Front Cassette Holder (NRG)	23- 34
A173 6340	Rear Cassette Holder (NRG)	23- 18
A173 6346	By-Pass Feed Table (NRG)	19- 7
A173 6354	By-Pass Feed Bottom Guide (NRG)	19- 5
A173 6356	Rear Side Fence (NRG)	19- 2
A173 6358	Platen Cover Hinge (NRG)	9- 5
A173 6364	Small Cassette (NRG)	19- 25
A173 6365	Model Name Plate - NSA - A4	7- 23
A173 6366	Model Name Plate - GES	7- 23
A173 6372	Exit Cover (NRG)	43- 3

Part No.	Description	Page and Index No.
A173 6375	Grip Cover (NRG)	43- 8
A173 6376	Cap - Left Lower Cover (NRG)	7- 17
A173 6386	Decal - Symbol (NRG)	57- 2
A173 6387	Decal - Paper Feed (NRG)	21- 3
A173 6387	Decal - Paper Feed (NRG)	57- 3
A173 6406	Copy Tray Slide (NRG)	7- 2
A173 6434	Original Holder (NRG)	9- 3
A173 8608	Operating Instructions - English (RIC)	57- 10
A173 8609	Operating Instructions - TWN	57- 10
A173 8698	Operating Instructions - English (NRG)	57- 10

Part No.	Description	Page and Index No
AA00 0059	Caution Decal - English	37- 2
AA00 0059	Caution Decal - English	57- 5
AA00 0401	Decal - High Temperature	57- 6
AA00 1172	Decal - Paper Volume	21- 11
AA00 1172	Decal - Paper Volume	57- 7
AA00 1172	Decal - Paper Volume	57- 7
AA00 2008	Decal - A4R (RIC)	19- 26
AA00 2008	Decal - A4R (RIC)	57- 8
AA00 2009	Decal - A4 (RIC)	19- 26
AA00 2009	Decal - A4 (RIC)	57- 8
AA00 2010	Decal - Paper Level	19- 20
AA00 2026	Decal - B5	19- 26
AA00 2026	Decal - B5 (RIC)	57- 8
AA02 0001	Drawer Tray Magnet	25- 20
AA05 0044	Scanner Drive Wire - 1458mm	15- 7
AA05 0045	Scanner Drive Wire - 1011mm	15- 13
AA05 0046	Lens Drive Wire	13- 7
AA06 0141	Spring - Charge Corona Grid	33- 11
AA06 0254	Spring - Upper Transfer Guide	25- 11
AA06 0255	Spring - Rear Charge Corona Grid	33- 15
AA06 0267	Spring - Toner End Adtuator Lever	29- 29
AA06 0513	Spring - Hot Roller Stripper	43- 16
AA06 3036	Terminal Spring	39- 9
AA06 3081	Spring - Side Fence Stopper	21- 8
AA06 3106	Spring - Pick-Up Pawl	35- 6
AA06 3205	Spring	21- 20
AA06 3497	Pressure Spring	21- 18
AA06 6210	Spring - Feeler	43- 5
AA08 0030	Bushing - 5x13x7	37- 19
AA08 0094	Front Registration Roller Bushing	25- 14
AA08 2029	Bushing - 6x13x5	15- 3
AA14 0485	Shaft - Hot Roller Stripper	43- 15
AA14 3064	Philips Pan Head Screw - M3x10	23- 30
AA14 3264	Pulley Shaft	13- 17
AA14 3288	Stepped Screw	19- 15

Part No.	Description	Page and Index No.
AA14 3288	Stepped Screw	21- 12
AA14 3423	Shaft - Release Plate	43- 14
AA14 5209	Shaft - Drive Gear	27- 25
AA15 0074	Seal - 12x272	13- 4
AA15 0196	Shield - Toner Hopper - Left	29- 28
AA15 0197	Shield - Toner Hopper - Right	29- 13
AA15 0198	Shield - Toner Hopper - Lower	29- 14
AA15 0331	Seal - Toner Supply Unit	29- 21
AA15 0364	Seal - 110 X 25	51- 15
AA15 1109	Seal - 5x16x5	37- 22
AA15 1186	Front Side Plate Seal	31- 11
AA15 1476	Sponge - Toner Supply	29- 17
AA15 1479	Shield - Case - Toner Hopper - Rear	29- 27
AA15 1480	Shield - Toner Hopper - Front Upper	29- 9
AA15 1481	Shield - Toner Hopper - Rear Upper	29- 7
AA15 1482	Shield - Toner Hopper - Upper	29- 12
AA15 1483	Shield - Toner Hopper - Lower	29- 22
AA15 1484	Shield - Front Upper - Toner Hopper	29- 30
AA15 1485	Shield - Rear Upper - Toner Hopper	29- 15
AA15 1486	Shield - Front Lower - Toner Hopper	29- 25
AA15 1487	Shield - Rear Lower - Toner Hopper	29- 24
AA15 1489	Seal - 2x5x37.5	29- 18
AA15 1526	Seal - 5th Mirror	51- 24
AA15 1604	Seal - 16x9x3	31- 4
AA15 1605	Seal - 323x4x3	31- 16
AA15 1606	Seal -44x14x3	29- 8
AA15 2136	Shield - Development Roller	31- 15
AA15 2231	Development Filter	31- 3
AB01 0075	Gear - 48t	11- 18
AB01 1067	Gear - 100z	27- 1
AB01 1084	Gear - 17z	37- 18
AB01 3201	Gear - 40t	41- 14
AB01 3417	Gear - 30z	41- 9
AB01 3418	Gear - 24z	41- 10
AB01 3421	Gear - 18z	27- 26

Part No.	Description	Page and Index No
AB01 3428	Gear - 35z	27- 2
AB01 3429	Gear - 26z	45- 3
AB01 3437	Gear - 19t	31- 7
AB01 3439	Gear - 23z	31- 8
AB01 3440	Gear - Roller - Agitate,Mix	31- 18
AB01 3441	Gear - 20z	31- 20
AB01 3442	Gear - Toner Supply	29- 3
AB01 3443	Gear - Idler - Toner Supply	29- 4
AB01 3444	Gear - Agitator	29- 5
AB01 3492	Gear - 16z	21- 17
AB01 3858	Gear - 15z	31- 14
AB01 7129	Gear - 20z And 72z	11- 17
AB01 7160	Gear - 17z And 35z	37- 17
AB03 2024	Pulley - Scanner Wire	11- 4
AC02 0082	Lens - F8/180	13- 6
AC03 0019	2nd & 3rd Mirror	11- 1
AC03 0026	Mirror - L224	11- 13
AD02 1013	Chage Corona Receptacle	47- 17
AD02 1015	Receptacle Housing	47- 10
AD02 1108	T/S Corona Receptacle	47- 7
AD02 2179	Front End Block - T&S Corona	39- 11
AD02 2180	Rear End Block - T&S Corona	39- 8
AD02 3059	Left Main Corona Unit Casing	33- 5
AD02 3060	Right Main Corona Unit Casing	33- 14
AD03 1266	Development Roller	31- 1
AD03 6021	Mixing Vanes	31- 2
AD03 7023	Mixing Auger	31- 9
AE01 1035	Hot Roller	41- 17
AE02 0016	Pressure Roller	41- 19
AE03 0003	Ball Bearing - 30x42x7	41- 15
AE03 1002	Bushing - 8x14x7	41- 21
AF01 1030	Bottom Plate - Papper Tray	21- 1
AF01 3001	Bottom Plate Pad	21- 2
AF01 6068	Front Side Fence - Paper Tray	21- 6
AF02 1039	Upper Registration Roller	25- 2

Part No.	Description	Page and Index No.
AF02 2042	Middle Pressure Roller	47- 28
AF03 1027	Paper Feed Roller	27- 29
AF04 0031	Upper Exit Roller	43- 12
AG05 0046	Fusing Knob	41- 23
AG05 1071	Knob - Registration Guide Plate	25- 19
AG07 0004	Magnetic Catch	11- 21
AG07 0004	Magnetic Catch	43- 9
AG07 0004	Magnetic Catch	47- 21
AG07 1008	Door Catch - Latch	7- 15
AW02 0024	Photointerruptor	25- 4
AW02 0075	Photointerrupter	11- 8
AW02 0075	Photointerrupter	13- 12
AW02 0075	Photointerrupter	17- 7
AW02 0075	Photointerrupter	27- 14
AW02 0075	Photointerrupter	45- 12
AW02 0075	Photointerrupter	47- 2
AW50 0010	Push Switch	23- 23
AW50 0012	Push Switch	19- 16
AW50 0012	Push Switch	27- 11
AW50 0012	Push Switch	47- 18
AX31 0024	Total Counter	47- 23
AX44 0066	Fusing Lamp - 115V 780W 115%	41- 22
AX44 0067	Fusing Lamp - 220V 780W	41- 22
AX64 0054	Fan Motor - DC 2.4W (Large)	47- 3
AZ32 0069	Power Pack - CBG	49- 4

Part No.	Description	Page and Index No
A005 3585	Sensor Feeler - Toner Over Flow	37- 3
A005 3586	Rubber Seal - Toner Collection	37- 5
A005 3587	Feeler Supporter	37- 4
A006 1707	Rear Wire Clamp	15- 21
A006 1708	Front Wire Clamp	15- 29
A006 1721	Front Spring Plate	11- 3
A006 1722	Spring Plate	11- 24
A006 1744	Wire Support Plate	15- 8
A006 1745	Wire Adjusting Plate	15- 12
A006 2055	Charge Corona Cleaner	33- 1
A006 2111	Charge Corona Grid	33- 9
A006 2114	Grid Anchor	33- 4
A006 2117	Front Cover - Charge Corona	33- 3
A006 2118	Rear Cover - Charge Corona	33- 6
A006 2118	Rear Cover - Charge Corona	33- 16
A006 2121	Cleaner Holder	33- 21
A006 2122	Cleaner Stopper	33- 19
A006 2123	Cleaner Stay	33- 18
A006 2130	Spring Plate - Charge Corona	51- 25
A006 2270	Pick-Off Pawl	35- 7
A006 2699	Spacer - 5.1x20mm	19- 11
A006 3584	Toner Collection Hosing	37- 6
A006 3589	Cleaning Entrance Seal	37- 14
A006 9002	Hot Roller Stripper (5pcs/Set)	43- 17
A006 9103	Omega Clamp	59- 2
A006 9104	Asjusting Scanner Pin (4pcs/set)	59- 3
A006 9105	Drum Shoe Shaft	59- 1
A008 2087	Corona Cleaner Pad	33- 20
A008 9502	Silicone Grease - G40M	59- 4
A017 4085	Pressure Lever	41- 12
A024 2653	Upper Lift Arm	23- 19
A027 1705	Mirror Guide	11- 10
A030 6231	Corona Wire Ring	33- 10
A048 1301	Key Counter Bracket	51- 21
A048 1721	Spring Plate A	15- 10

Part No.	Description	Page and Index No.
A048 1721	Spring Plate A	15- 27
A048 1737	Front Wire Pulley	15- 5
A048 1755	Lens Shutter	13- 8
A048 1764	Rack Gear - Mirror Drive	11- 16
A048 1782	Mirror Shutter	11- 15
A048 1789	Lens Cover	13- 15
A048 1801	Mirror Seal	11- 25
A048 1839	Left Guide Bracket	17- 18
A048 2008	Charge Corona Unit	33- 2
A048 2053	Left Charge Corona Rail	51- 3
A048 2056	Cleaning Rail	51- 1
A048 2091	Front End Block	33- 12
A048 2273	Pick-Off Pawl Bracket	35- 5
A048 2276	Ring - Transport Bracket	35- 3
A048 2573	Registration Lower Guide	25- 3
A048 2674	Guide - Auxiliary	47- 27
A048 2675	Cam - Lower Right Cover	47- 20
A048 2679	Spring Plate	47- 29
A048 2817	Side Fence Stopper	21- 7
A048 2835	Side Fence Gear	21- 16
A048 2861	Paper End Sensor Bracket	27- 13
A048 2862	Paper End Sensor Bracket	27- 16
A048 2928	Cam - Manual Feed Table	19- 8
A048 2938	Paper Guide - Manual Feed Table (RIC)	19- 12
A048 2951	Front Guide Holder	19- 14
A048 3857	Spring Plate	39- 14
A048 3860	Transport Bracket Holder	39- 17
A048 3881	T&S Corona Guide	39- 1
A048 3883	Cover - T/S Corona - Front	39- 2
A048 3887	Cover - T/S Corona - Rear	39- 10
A048 3888	T&S Corona Guide Plate	39- 12
A048 3898	Lower Transfer Guide	25- 13
A048 3913	Upper Transfer Guide	25- 9
A048 4084	Collar - Hot Roller	41- 16
A048 4105	Rear Heater Holder	41- 8

Part No.	Description	Page and Index No
A048 4470	Copy Tray - Guide (RIC)	7- 3
A048 5820	Eraser bracket	47- 16
A048 5856	Power Pack Bracket	45- 30
A048 6285	Decal - A4 (NRG)	19- 26
A048 6285	Decal - A4R (NRG)	57- 8
A048 6286	Decal - A4R (NRG)	19- 26
A048 6286	Decal - A4 (NRG)	57- 8
A048 6356	Paper Guide - Manual Feed Table (NRG)	19- 12
A048 6407	Copy Tray - Guide (NRG)	7- 3
A048 7600	Case - Upper - Development	31- 5
A048 7612	Development Roller Knob	31- 19
A048 7631	Retainer - Ball Bearing	31- 6
A048 7632	Cover - Gear	31- 21
A048 7654	Lower Casing - Toner Supply Unit	29- 23
A048 7669	Plate - Toner Supply Roller	29- 20
A048 7670	Slitter	29- 10
A048 9001	Charge Corona Wire - 10pcs/Set	33- 8
A048 9002	Transfer Corona Wire - 10pcs/Set	39- 5
A048 9003	Separation Corona Wire - 10pcs/Set	39- 4
A054 1182	Bracket - Sensor Cover	47- 19
A054 6330	Decal - Key-top Cover (NSA)	7- 22
A054 6335	Decal - Key-top Cover (GES)	7- 22
A069 1772	Guide Plate	13- 14
A069 1883	Shoe - Scanner	11- 7
A069 1883	Shoe - Scanner	15- 28
A069 2820	Friction Pad Ass'y	23- 24
A069 9510	Drum	35- 13
A075 1766	Adjusting Cam	11- 27
A075 1870	Scanner Motor Pulley	15- 1
A075 2258	Pick-Up Pawl Shaft	35- 4
A075 2268	Upper Left Drum Stay	35- 10
A075 2269	Right Drum Stay	35- 12
A075 4100	Front Heater Holder	41- 24
A077 1357	Platen Cover Pad	9- 2
A077 2822	Plate Release Slider	21- 21

Part No.	Description	Page and Index No.
A077 5231	Scanne Drive Motor - DC30V 60W	15- 4
A077 9523	Platen Cover Sheet - 10sheets/Set	9- 1
A085 1668	Terminal Supporter	15- 22
A085 1670	Exposure Adjusting Plate	15- 18
A085 1672	Front Lamp Terminal	15- 23
A096 1873	Scanner Shoe Pin	15- 20
A110 1191	Release Plate Bracket	51- 19
A110 1195	Release Spring	51- 17
A110 1312	Rear Cover Bracket	51- 20
A110 1313	Rear Cover (RIC)	7- 8
A110 1381	Filter Cover	7- 21
A110 1669	Lamp Holder Spring	15- 24
A110 1705	1st Mirror Support Plate	15- 15
A110 1724	Rear Spring Plate	11- 5
A110 1817	Scanner Slide Rail	17- 14
A110 1829	Front Side Plate	17- 4
A110 1861	Reflector	15- 17
A110 2052	Charge Corona Guide	51- 2
A110 2054	Right Charge Corona Rail	51- 4
A110 2789	Rear Side Fence - Paper Tray	21- 10
A110 2832	End Fence - Paper Tray	21- 5
A110 2833	Leaf Spring - End Fence	21- 4
A110 2843	Registration Adjustment Plate	21- 15
A110 2870	Front Corner Separator	21- 9
A110 2871	Rear Coner Separator	21- 13
A110 2877	Corner Separator Seal	21- 14
A110 3336	Agitator Lever	29- 2
A110 3340	Plate Nut	29- 11
A110 3350	Development Connector	45- 17
A110 5813	Left Operation Panel Bracket	7- 18
A110 6313	Rear Cover (NRG)	7- 8
A111 5850	Power Supply Cord Bracket	49- 17
A121 6832	Decal - B5 (NRG)	57- 8
A128 1130	Sealding Seal - 5th Mirror	51- 23
A128 1263	Left Cover (RIC)	7- 1

Part No.	Description	Page and Index No
A128 1713	Upper Seal	17- 3
A128 1713	Upper Seal	17- 9
A128 1715	2nd Scanner Brcket	11- 2
A128 1719	Fan Motor Bracket	17- 15
A128 1728	1st Mirror	15- 14
A128 1729	2nd Mirror	11- 6
A128 1754	Shielding Plate	13- 2
A128 1757	Lens Motor Bracket	13- 10
A128 1761	Mirror Bracket	11- 14
A128 1793	6th Mirror Bracket	11- 23
A128 1797	Front 6th Mirror Bracket	11- 26
A128 1815	5th Mirror	11- 12
A128 1816	6th Mirror	11- 22
A128 1817	Mirror Spring	11- 11
A128 1818	Tension Spring	15- 9
A128 1823	Optics Right Stay	17- 17
A128 1834	Platen Cover Right Bracket	17- 13
A128 1835	Platen Cover Left Bracket	17- 10
A128 1842	Right Stay - Exposure Glass	17- 8
A128 1845	Stepped Screw - M5	7- 13
A128 1980	Exposure Glass	7- 5
A128 2258	Drum Holder	35- 15
A128 2262	Drum Support Plate	35- 14
A128 2271	Left Drum Stay	35- 1
A128 2275	Front Transport Guide	35- 2
A128 2278	Sensor Holder	35- 8
A128 2281	Rear Drum Side Plate	35- 11
A128 2658	Pressure Spring	25- 6
A128 2663	Front Spring - Registration Roller	25- 15
A128 2681	Front Side Fence (RIC)	19- 3
A128 2698	Side Fence Gear	19- 9
A128 2713	Bottom Plate Pad	19- 22
A128 2716	Front Side Fence	19- 18
A128 2727	Rear Side Fence	19- 19
A128 2743	Rear Fence	19- 24

Part No.	Description	Page and Index No.
A128 2751	Registration Roller Knob	25- 12
A128 2768	Stepped Screw - M3x5	25- 16
A128 2775	Gear	19- 10
A128 2945	Cover - Manual Feed Table - RIC	19- 13
A128 2956	Small Cassette Cover (RIC)	19- 17
A128 2962	Actuator - A4R	19- 23
A128 2964	Actuator - A4	19- 23
A128 3014	Tonner Supply Roller	29- 19
A128 3310	Lower Casing	31- 17
A128 3552	Cleaning Blade	37- 26
A128 3558	Upper Cleaning Case	37- 1
A128 3563	Blade Release Lever	37- 29
A128 3568	Pressure Spring	37- 10
A128 3569	Pressuer Seal	37- 8
A128 3571	Blade Holder	37- 25
A128 3572	Cleaning Lower Seal	37- 13
A128 3573	Front Holder Seal	37- 28
A128 3578	Rear Holder Seal	37- 27
A128 3580	Toner Collection Shaft	37- 21
A128 3581	Front Case Cleaning	37- 7
A128 3582	Upper Lower Seal	37- 9
A128 3583	Front Seal-Cleaning	37- 11
A128 3588	Shield - Drum	37- 15
A128 3589	Rear Seal-Cleaning	37- 12
A128 3590	Seal - 9.5	37- 23
A128 3591	Seal - 5x5	37- 16
A128 3715	Lens Fixing Pin	37- 20
A128 4155	Fusing Cover	41- 1
A128 4314	Pressure Spring	41- 11
A128 5222	Id Sensor Board	35- 9
A128 5306	P. Sensor Harness	45- 18
A128 5340	Power Pack Harness	49- 7
A128 5435	Thermofuse	41- 3
A128 5830	Decal - Left Cover	47- 11
A128 5872	Wire Sadle	17- 2

Part No.	Description	Page and Index No
A128 5872	Wire Sadle	45- 20
A128 5872	Wire Sadle	51- 26
A128 5873	Clamp	49- 5
A128 5875	Clamp	17- 12
A128 5875	Clamp	41- 25
A128 5875	Clamp	45- 8
A128 5875	Clamp	45- 29
A128 5875	Clamp	47- 26
A128 5876	Clamp	15- 19
A128 5876	Clamp	17- 11
A128 5876	Clamp	23- 35
A128 5876	Clamp	25- 18
A128 5876	Clamp	49- 19
A128 5876	Clamp	51- 5
A128 6058	Small Cassette Cover (NRG)	19- 17
A128 6350	Model Name Plate - GER	7- 23
A128 6351	Front Side Fence (NRG)	19- 3
A128 6362	Left Cover (NRG)	7- 1
A152 7662	Joint	29- 1
A157 2772	Paper Stripper Shaft	27- 5
A157 2773	Feed Roller Holder	27- 6
A157 2774	Feed Roller	27- 28
5053 0223	Bushing - 8mm	23- 7
5053 0223	Bushing - 8mm	25- 17
5053 0223	Bushing - 8mm	27- 17
5053 0223	Bushing - 8mm	45- 7
5203 1686	Screw - Slid Rail	47- 9
5203 4179	Caution Decal - High Temperature	43- 2
5203 4179	Caution Decal - High Temperature	57- 1
5203 9501	Grease 501	59- 5
5205 3103	Bushing - 6mm	23- 14
5205 3103	Bushing - 6mm	31- 12
5205 3103	Bushing - 6mm	31- 22
5215 1806	Pulley	13- 16
5215 1812	Lens Drive Pulley	13- 9

Part No.	Description	Page and Index No.
5215 2600	Upper Feed Guide Plate	23- 10
5215 2600	Upper Feed Guide Plate	25- 5
5215 2618	Feed Roller Hub	23- 5
5215 2620	Feed Roller	23- 4
5215 2621	Snap Ring - M6	23- 2
5215 2622	Upper Feed Shaft Bracket	23- 6
5215 3295	Hopper Filter	29- 6
5215 3303	Seal - Toner Supply Roller	29- 26
5216 1186	Rubber Foot	51- 14
5216 1374	Hinge Shaft - Platen Cover	9- 4
5420 9502	Test Chart - OS - A3 (100pcs/set)	59- 11
5420 9507	Digital Multimeter - Brckman	59- 8
5420 9516	Test Chart - OS - A3 (10pcs/set)	59- 10
5442 1702	Small Screw - M3	51- 18
5442 2069	Plastic Screw - Main Corona	33- 13
5442 2107	Spring	47- 30
5442 2108	Corona Wire Spring	33- 7
5442 2108	Corona Wire Spring	39- 3
5442 2110	Plug - Corona Unit	33- 17
5442 9106	Drum Shoe	59- 6
5443 2668	Bushing - 4x6x7mm	23- 36
5446 3648	Stepped Screw - M4	37- 24
5447 2681	Snap Ring	27- 19
5447 9078	Heat Resisting Grease MT-78	59- 9
5447 9104	Shoe Adaptor	59- 7

Part No.	Description	Page and Index No
0131 0300E	Philips Pan Head Screw - M3x30	25-107
0313 0040W	Philips Pan Head Screw - M3x4	25-106
0313 0040W	Philips Pan Head Screw - M3x4	35-102
0313 0050W	Philips Pan Head Screw - M3x5	31-104
0313 0050W	Philips Pan Head Screw - M3x5	47-104
0313 0060W	Philips Pan Head Screw - M3x6	37-103
0313 0120W	Philips Pan Head Screw - M3x12	15-106
0313 0140W	Philips Pan Head Screw - M3x14	11-103
0313 0300W	Philips Pan Head Screw - M3x30	47-102
0314 0100W	Philips Pan Head Screw - M4x10	35-103
0314 0200B	Philips Pan Head Screw - M4x20	35-104
0315 0080M	Philips Pan Head Screw - M5x8	49-103
0323 0060W	Philips Sunken Head Screw - M3x6	23-106
0344 0060F	Philips Truss Head Screw - M4x6	7-105
0344 0060F	Philips Truss Head Screw - M4x6	19-102
0344 0100D	Philips Truss Head Screw - M4x10	9-102
0353 0060F	Philips Truss Head Screw - M3x6	7-101
0353 0060F	Philips Truss Head Screw - M3x6	11-106
0413 0060W	Tapping Screw - M3x6	13-107
0413 0060W	Tapping Screw - M3x6	17-101
0413 0060W	Tapping Screw - M3x6	35-101
0413 0060W	Tapping Screw - M3x6	39-104
0413 0062W	Tapping Screw - M3x6	19-103
0413 0062W	Tapping Screw - M3x6	33-102
0413 0062W	Tapping Screw - M3x6	37-102
0413 0082B	Tapping Screw - M3x8	27-107
0413 0082F	Bind Tapping Screw - M3x8	21-102
0413 0082W	Tapping Screw - M3x8	7-103
0413 0082W	Tapping Screw - M3x8	11-104
0413 0082W	Tapping Screw - M3x8	13-101
0413 0082W	Tapping Screw - M3x8	23-107
0413 0082W	Tapping Screw - M3x8	29-104
0413 0082W	Tapping Screw - M3x8	33-101
0413 0082W	Tapping Screw - M3x8	37-106
0413 0082W	Tapping Screw - M3x8	39-102

Part No.	Description	Page and Index No.
0413 0082W	Tapping Screw - M3x8	43-104
0413 0082W	Tapping Screw - M3x8	51-103
0414 0082F	Philips Truss Head Screw - M4x8	19-106
0414 0102F	Tapping Screw - M4x10	21-101
0414 0102F	Tapping Screw - M4x10	31-102
0414 0102F	Tapping Screw - M4x10	51-102
0434 0060W	Tapping Screw - M4x6	23-101
0434 0060W	Tapping Screw - M4x6	31-107
0434 0080W	Tapping Screw - M4x8	23-108
0443 0060W	Hexagon Head Tapping Screw - M3x6	7-102
0443 0060W	Hexagon Head Tapping Screw - M3x6	11-105
0443 0060W	Hexagon Head Tapping Screw - M3x6	13-105
0443 0060W	Hexagon Head Tapping Screw - M3x6	15-104
0443 0060W	Hexagon Head Tapping Screw - M3x6	17-102
0443 0060W	Hexagon Head Tapping Screw - M3x6	19-101
0443 0060W	Hexagon Head Tapping Screw - M3x6	23-102
0443 0060W	Hexagon Head Tapping Screw - M3x6	25-101
0443 0060W	Hexagon Head Tapping Screw - M3x6	27-104
0443 0060W	Hexagon Head Tapping Screw - M3x6	39-101
0443 0060W	Hexagon Head Tapping Screw - M3x6	41-103
0443 0060W	Hexagon Head Tapping Screw - M3x6	45-102
0443 0060W	Hexagon Head Tapping Screw - M3x6	47-101
0443 0060W	Hexagon Head Tapping Screw - M3x6	49-101
0443 0060W	Hexagon Head Tapping Screw - M3x6	51-101
0443 0080W	Hexagon Head Tapping Screw - M3x8	27-105
0443 0080W	Hexagon Head Tapping Screw - M3x8	47-103
0633 0120E	Spring Pin - M3x12	45-106
0705 0050Z	Toothed Washer - M5	25-104
0705 0050Z	Toothed Washer - M5	49-104
0720 0025E	Retaining Ring - M2.5	9-101
0720 0025E	Retaining Ring - M2.5	23-105
0720 0025E	Retaining Ring - M2.5	27-102
0720 0030E	Retaining Ring - M3	21-105
0720 0030E	Retaining Ring - M3	23-104
0720 0030E	Retaining Ring - M3	27-103

Part No.	Description	Page and Index No
0720 0030E	Retaining Ring - M3	29-102
0720 0030E	Retaining Ring - M3	43-102
0720 0040E	Retaining Ring - M4	11-107
0720 0040E	Retaining Ring - M4	13-106
0720 0040E	Retaining Ring - M4	25-105
0720 0040E	Retaining Ring - M4	31-101
0720 0040E	Retaining Ring - M4	37-104
0720 0040E	Retaining Ring - M4	41-104
0720 0040E	Retaining Ring - M4	43-101
0720 0050E	Retaining Ring - M5	11-101
0720 0050E	Retaining Ring - M5	15-101
0720 0060E	Retaining Ring - M6	23-103
0720 0060E	Retaining Ring - M6	25-103
0720 0060E	Retaining Ring - M6	27-101
0720 0060E	Retaining Ring - M6	41-105
0720 0060E	Retaining Ring - M6	45-101
0727 0090E	Retaining Ring C - M9	31-105
0728 0040E	Grip Ring - 4mm	29-101
0802 5085	Tapping Screw - M4x8	47-107
0805 0073	Retaining Ring - M5	19-104
0805 0073	Retaining Ring - M5	21-104
0805 0073	Retaining Ring - M5	31-108
0805 0077	Retaining Ring - M3	11-108
0805 0077	Retaining Ring - M3	29-103
0805 3104	Bushing - 8x22x7	35-106
0805 3384	Bushing - 5mm	45-104
0805 3385	Bushing - 6mm	43-103
0805 3386	Bushing - 8mm	27-106
0805 3386	Bushing - 8mm	45-105
0805 3415	Ball Bearing - 9x20x6	31-106
0807 4127	Wave Washer	15-102
0951 3004B	Philps Screw With Flat Washer -M3x4	35-107
0951 3004B	Philps Screw With Flat Washer -M3x4	37-107
0951 3005W	Philips Screw With Flat Washer-M3x5	39-103
0951 3006W	Philips Screw With Flat Washer-M3x6	13-102

Part No.	Description	Page and Index No.
0951 3006W	Philips Screw With Flat Washer-M3x6	15-108
0951 3006W	Philips Screw With Flat Washer-M3x6	29-105
0951 3006W	Philips Screw With Flat Washer-M3x6	37-105
0951 3006W	Philips Screw With Flat Washer-M3x6	41-101
0951 3006W	Philips Screw With Flat Washer-M3x6	47-110
0951 3006Z	Philips Screw With Flat Washer - M3	7-104
0951 3008B	Philips Screw With Flat Washer-M3x8	37-101
0951 3008W	Philips Screw With Flat Washer-M3x8	13-103
0951 3008W	Philips Screw With Flat Washer-M3x8	15-103
0951 3008W	Philips Screw With Flat Washer-M3x8	31-103
0951 3008W	Philips Screw With Flat Washer-M3x8	41-102
0951 3010W	Philipsscrew With Flat Washer-M3x10	45-103
0951 3010W	Philipsscrew With Flat Washer-M3x10	51-104
0951 3012W	Philips Screw With Flat Washer-M3x1	9-103
0951 3012W	Philips Screw With Flat Washer-M3x1	15-107
0951 3020W	Philips Screw With Flatwasher-M3x20	47-106
0951 4006W	Philips Screw With Flat Washer-M4x6	25-102
0951 4006W	Philips Screw With Flat Washer-M4x6	33-103
0951 4006W	Philips Screw With Flat Washer-M4x6	49-102
0951 4008W	Philips Screw With Flat Washer-M4x8	11-102
0951 4008W	Philips Screw With Flat Washer-M4x8	13-104
0951 4008W	Philips Screw With Flat Washer-M4x8	15-105
0951 4008W	Philips Screw With Flat Washer-M4x8	47-105
0960 3030W	Philips Flange Screw M3 X 30	17-103
0965 3008W	Tapping Screw With Flat Washer-M3x8	21-103
0965 3008W	Tapping Screw With Flat Washer-M3x8	43-105
0965 4010W	Tapping Screw With Flatwasher-M4x10	19-105
0971 3006a	Philips Polycarbonate Screw - M3x6	33-104
1102 2179	Connector - PIC - FS4 - T	55-101
1102 4201	ConneCtor - 2P	55-102
1102 4202	Connector - 3P	55-103
1102 4204	CT Header - 5P	55-104
1102 4205	CT Header - 6P	55-105
1102 4207	Connector - 8P	55-106
1102 4210	Connector - 11P	55-107

Part No.	Description	Page and Index No
1102 4211	CT Header - 12P	55-108
1102 4619	Connector - 2P	55-109
1102 4628	Connector - 11P	55-110
1102 4629	Connector - 12P	55-180
1102 4631	CTConnector - 2P	55-111
1102 5007	CT Header - 14P	55-112
1102 5305	Connector - 6P	55-142
1103 1169	Connector - 6P	55-113
1103 1770	Connector - 4P	55-114
1103 1776	Pin Header - 1OP	55-115
1104 0239	LSI Socket - 24P	55-182
1104 0598	IC - Socket	55-141
1107 0784	Fuse - 6.3A 250V (230V)	49-105
1107 0797	Fuse - 16A 250V (115V)	49-105
1204 1372	Locking Support	55-140
1204 1576	Main Switch	47-108
1204 2334	Safety Switch - FA1L-AA20	47-109
1400 0369	Transistor - 2SA1213Y	55-135
1401 0869	Transistor - Array - TD62003F	55-116
1402 0277	Zener Diode - 1Z12	55-136
1402 0476	Diode - ISS184	55-137
1402 0478	Diode - 1SS226TE85L	55-181
1407 1535	IC - TD62308AP	55-117
1407 2055	IC - T062304F	55-118
1407 2080	IC - SN74LS21NS	55-130
1407 2187	IC - SN74LS07NS	55-129
1407 2230	IC - T06F62303F	55-119
1407 2412	IC - SN74LS32M	55-131
1407 2413	IC - SN74LSI38M	55-132
1407 3322	IC - MC74HC04AF	55-134
1407 3381	IC - 74HC4066A	55-120
1407 3533	IC - 74HC241A	55-121
1407 4136	IC - UPD7831	55-122
1407 4234	IC - SN74LS373M	55-133
1407 4286	IC - MK48Z52B - 15	55-127

Part No.	Description	Page and Index No.
1407 4315	IC - TE7751	55-123
1408 0398	IC - NJ2903M	55-128
1408 0598	IC - MB3773PF	55-124
1503 0071	0sicillator - 12Mhz	55-125
1602 0987	Capacitor&Coil - 270PF 100V	55-138
1604 5478	Capacitor - 0.47µF ±20% 50V	55-179
1605 0343	Capacitor - 30PF ±5% 50V	55-171
1605 0596	Capacitor - 100PF	55-172
1605 0636	Capacitor - 0.1µF	55-173
1606 1139	Capacitor - 0.01µF ±20%	55-174
1606 1455	Capacitor - 470PF 25V	55-175
1607 0491	Capacitor - BL03RN2 - R6	55-139
1630 2101	Resistor - 100 Ω 1/8W	55-143
1630 2102	Resistor - 1K Ω 1/8W ±5%	55-144
1630 2103	Resistor - 10K Ω 1/8W	55-145
1630 2104	Resistor - 100K Ω 1/8W ±5%	55-146
1630 2106	Resistor - 10M Ω 1/8W	55-147
1630 2123	Resistor - 12K Ω 1/8W ±5%	55-148
1630 2152	Resistor - 1.5K Ω 1/8W ±5%	55-149
1630 2154	Resistor - 150K Ω ±5%1/8W	55-150
1630 2204	Resistor - 200K Ω ±5%1/8W	55-151
1630 2222	Resistor - 2.2K Ω I/8W	55-152
1630 2223	Resistor - 22K Ω 1/8W ±5%	55-153
1630 2243	Resistor - 24K Ω 1/8W ±5%	55-154
1630 2272	Resistor - 2.7 Ω ±5%1/8W	55-155
1630 2273	Resistor - 27K Ω 1/8W 5%	55-156
1630 2301	Resistor - 300 Ω 1/8W 5%	55-157
1630 2302	Resistor - 3K Ω I/8W 5%	55-158
1630 2394	Resistor - 390K Ω 1/8W ±5%	55-159
1630 2472	Resistor - 4.7K Ω 1/8W ±5%	55-160
1630 2473	Resistor - 47K Ω 1/8W ±5%	55-161
1630 2513	Resistor - 151 Ω 1/8W ±5%	55-162
1630 2561	Resistor - 560 Ω ±5%1/8W	55-163

Part No.	Description	Page and Index No
1630 2622	Resistor - 6.2K Ω 1/8W 5%	55-164
1630 2681	Resistor - 680 Ω 1/8W ±5%	55-165
1630 2824	Resistor - 820 Ω 1/8W ±5%	55-166
1632 1001	Resistor - IK Ω ±1% 1/8W	55-167
1632 1002	Resistor - 10.OK Ω 1/8W ±1%	55-168
1632 1301	Resistor - 1.3K Ω ±1% 1/8W	55-169
1632 3901	Resistor - 3.9K Ω 1/8W ±1%	55-170
1640 2101	Capacitor - 100µF ±20% 25V	55-176
1640 2470	Capacitor - 47µF ±20% 25V	55-177
1640 5109	Capacitor - 1µF ±20% 50V	55-178
1905 0009	IC - 1M X8 150NS	55-126