ISSUED ON: July 31, '96

Model	Condor	**Volt/Hz**	**Date of Modification**	**Serial Number**
Modified Article	Parts Catalog			
Reason for Modification	Parts Catalog Correction			

Please correct your parts catalog as follows.

Part Number Correction

Incorrect Part Number	Correct Part Number	Description	Page	Index
A1735219	A0485237	Mirror Drive Motor - dc 24V 9.6W	11	20
A1735221	A1285239	Lens Drive Motor - dc 24V 14.4W	13	11
A1102832	A1102830	Front Side Fence - Paper Guide	21	5
A1731124	A1231127	Development Drive Shaft	27	3
A1732101	08053471	Bushing - 8x22x7	35	16
A1732103	A1282259	Stepped Screw	35	17
AX440067	AX440093	Fusing Lamp - 220V 780W	41	22
52034179	A1734431	Caution Decal - High Temperature	43	2
A1734415	A1734418	Exit Cover (RIC)	43	3
A1736372	A1736377	Exit Cover (NRG)	43	3
A1731122	A1731126	Development Drive Pulley	45	5

Description Correction

Part Number	Incorrect Description	Correct Description	Page	Index No.
A1735035	Main Motor - dc 220V 25W	Main Motor - dc 220V 25W - 50Hz	45	27

Not Listed

Part Number	Description	Q'ty	Page	Index No.
A1735034	Main Motor - dc 220V 25W - 60Hz	1	45	27
06316140G	Parallel Pin - 1.6 x 14	1	45	*107

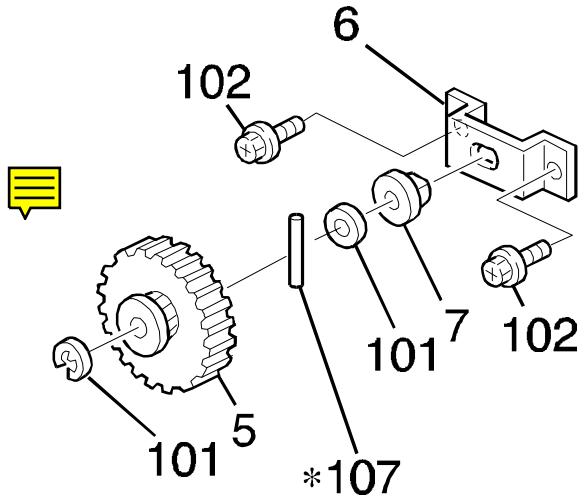

* New Index

T. Inoue, General Manager
1st Field Information Dept. QAC

MODEL NAME	MODEL CODE	V/Hz	DESTINATION	SERIAL NUMBER
Ges 2622S, Rex 8522S, Nashuatec 3322S	A173-12	115/60	South America	
RICOH FT4422	A173-19	110/60	Taiwan	
Ges 2622S, Rex 8522S, Nashuatec 3322S	A173-20	220, 230, 240/50	Asia/Europe	
Ges 2622S, Rex 8522S, Nashuatec 3322S	A173-21	220/50	Middle East	
RICOH FT4422	A173-28	220/50	Middle East	
Ges 2622S	A173-50	110/60	Taiwan	
RICOH FT4422	A173-79	220, 230, 240/50	Asia/Europe	

ISSUED ON: September 30, '96

Model	Condor	**Volt/Hz**	**Date of Modification**	**Serial Number**
Modified Article	Parts Catalog	No serial number cut-in information.		
Reason for Modification	Parts Catalog Correction			

Please correct your parts catalog as follows.

Incorrect P/N	Correct P/N	Description	Q'ty Used	Inter-change-ability	Parts Catalog	
					Index No.	Page
A173 3185	A173 3585	Lower Cleaning Case	1 → 1	-------	30	37

T. Inoue

T. Inoue, General Manager
1st Field Information Dept. QAC

Reissued on: December 31, '96
ISSUED ON: November 30, '96

Model	Condor	Volt/Hz	Date of Modification	Serial Number
Modified Article	Cleaning Blade			
Reason for Modification	To improve cleaning			

Old P/N	New P/N	Description	Q'ty Used	Inter-change-ability	Parts Catalog	
					Index No.	Page
A128 3552	A128 3562	Cleaning Blade	1	X/O	26	37

To improve cleaning, the cleaning blade has been modified as follows.

1) The length "a" in the drawing has been changed from 10 +0, -0.3mm to 9.5 ±0.3mm.

2) The angle "b" in the drawing has been changed from 70° ±2° to 67.5° +2° -1°.

3) The material of the blade has been changed. This modification is the countermeasure for the vertical and horizontal black line problem.

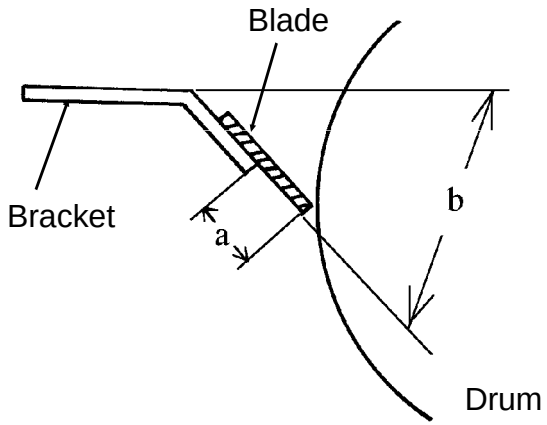

T. Inoue

T. Inoue, General Manager
1st Field Information Dept. QAC

Reissued on: December 31, '96
ISSUED ON: November 30, '96

MODEL NAME	V/Hz	DESTINATION	SINDO PRODUCTION	
			CODE	SERIAL NUMBER
Ges 2622S, Rex 8522S, Nashuatec 3322S	115V/60	South America	A173 -12	9696120001~
RICOH FT4422	110V/60	Taiwan	A173 -19	A3936120001~
Ges 2622S, Rex 8522S, Nashuatec 3322S	220, 230, 240/50	Asia, Europe	A173 - 20	9706110001~
Ges 2622S, Rex 8522S, Nashuatec 3322S	220/50	Middle East	A173 - 21	No production
RICOH FT4422	220/50	Middle East	A173 - 28	A3936110826~
Ges 2622S	110/60	Taiwan	A173 - 50	9726120001~
RICOH FT4422	220, 230, 240/50	Asia, Europe	A173 -79	A3936110466~

Reissued on: January 15, '97.

Model	Condor	Volt/Hz	Date of Modification	Serial Number
Modified Article	Toner Hopper Ass'y			
Reason for Modification	To meet field requirements			

To meet field requirements, the following parts are registered as service parts.

Old P/N	New P/N	Description	Q'ty Used	Inter-change-ability	Parts Catalog	
					Index No.	Page
-----	A173 3061	Toner Hopper Ass'y - Ricoh	1	-----		29
-----	A173 6380	Toner Hopper Ass'y - NRG	1	-----		29

T. Inoue

T. Inoue, General Manager
1st Field Information Dept. QAC

MODEL NAME	V/Hz	DESTINATION	JAPAN PRODUCTION	
			CODE	SERIAL NUMBER
Ges 2622S, Rex 8522S, Nashuatec 3322S	115V/60	South America	A173 -12	
RICOH FT4422	110V/60	Taiwan	A173 -19	
Ges 2622S, Rex 8522S, Nashuatec 3322S	220, 230, 240/50	Asia, Europe	A173 - 20	
Ges 2622S, Rex 8522S, Nashuatec 3322S	220/50	Middle East	A173 - 21	
RICOH FT4422	220/50	Middle East	A173 - 28	
Ges 2622S	110/60	Taiwan	A173 - 50	
RICOH FT4422	220, 230, 240/50	Asia, Europe	A173 -79	

ISSUED ON: December 31, '96

Model	Condor	**Volt/Hz**	**Date of Modification**	**Serial Number**
Modified Article	Mylar - Cleaning Blade Holder			
Reason for Modification	To prevent vibrating noise			

To prevent vibrating noise from the cleaning blade, mylar - cleaning blade holder has been attached on the cleaning blade holder.

New P/N	Description	Q'ty Used	Inter-change-ability	Parts Catalog	
				Index No.	Page
A1283559	Mylar - Cleaning Blade Holder	0 → 2			37

DETAILS OF MODIFICATION

The two mylars are attached to the bottom side of the cleaning blade holder as shown below.

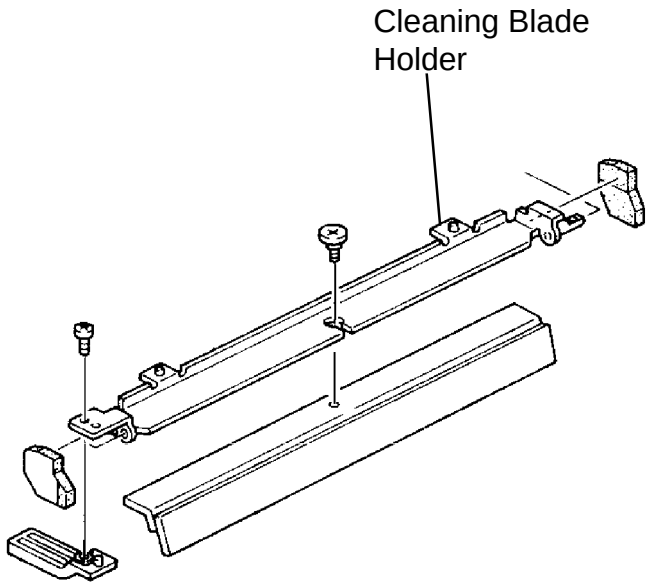

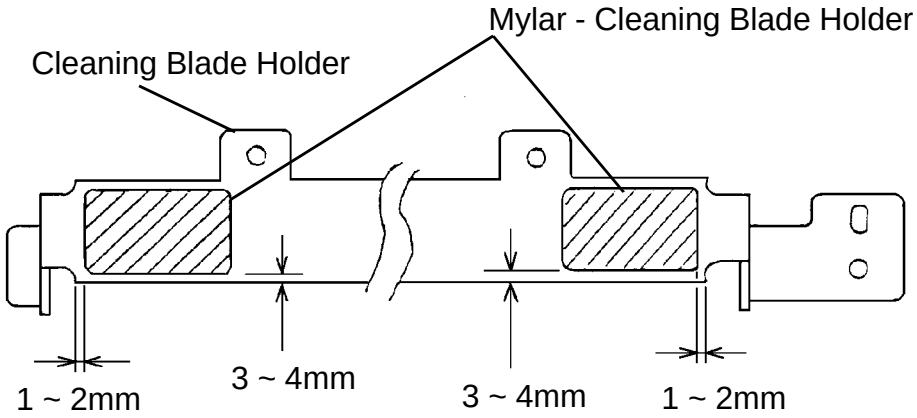

T. Inoue

T. Inoue, General Manager
1st Field Information Dept. QAC

MODEL NAME	V/Hz	DESTINATION	SINDO PRODUCTION	
			CODE	SERIAL NUMBER
Ges 2622S, Rex 8522S, Nashuatec 3322S	115V/60	South America	A173 -12	9696010001~
RICOH FT4422	110V/60	Taiwan	A173 -19	A3935120989~
Ges 2622S, Rex 8522S, Nashuatec 3322S	220, 230, 240/50	Asia, Europe	A173 - 20	9705120001~
Ges 2622S, Rex 8522S, Nashuatec 3322S	220/50	Middle East	A173 - 21	9716030001~
RICOH FT4422	220/50	Middle East	A173 - 28	A3936010951
Ges 2622S	110/60	Taiwan	A173 - 50	9726010001~
RICOH FT4422	220, 230, 240/50	Asia, Europe	A173 -79	A3935120583~

ISSUED ON: January 15, '97

Model	Condor	Volt/Hz	Date of Modification	Serial Number
Modified Article	Rear Release Arm			
Reason for Modification	To fix the rear release arm to the shaft			

To fix the rear release arm to the shaft firmly, the arm has been fixed by a screw.

Old P/N	New P/N	Description	Q'ty Used	Inter-change-ability	Parts Catalog	
					Index No.	Page
A173 2758	A173 2759	Rear Release Arm	1	X/O	13	23
A173 2753	A173 2763	Release Shaft	1	X/O	12	23
0720 0060E	-----	Retaining Ring - M6	1 → 0		103	23
-----	0313 0120W	Philips Pan Head Screw - M3 x 12	0 → 1			

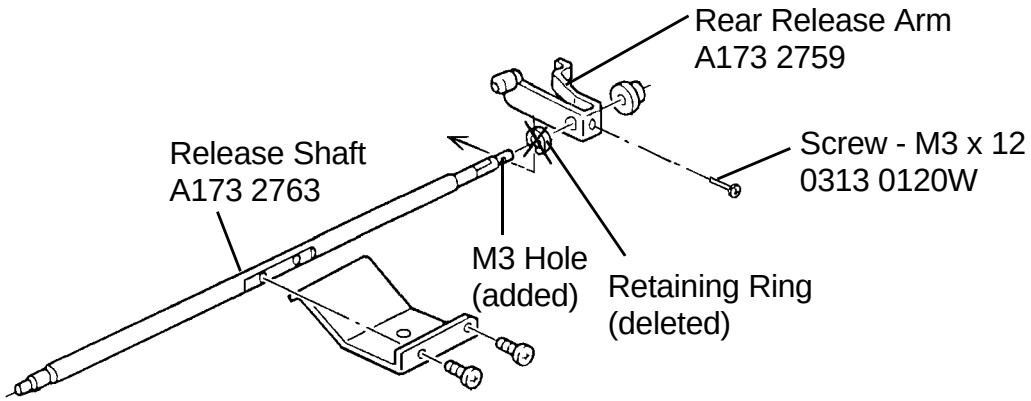

T. Inoue

T. Inoue, General Manager
1st Field Information Dept. QAC

MODEL NAME	V/Hz	DESTINATION	SINDO RICOH PRODUCTION	
			CODE	SERIAL NUMBER
Ges 2622S, Rex 8522S, Nashuatec 3322S	115V/60	South America	A173 -12	9696090001~
RICOH FT4422	110V/60	Taiwan	A173 -19	A3936090001~
Ges 2622S, Rex 8522S, Nashuatec 3322S	220, 230, 240/50	Asia, Europe	A173 - 20	A9706090001~
Ges 2622S, Rex 8522S, Nashuatec 3322S	220/50	Middle East	A173 - 21	9716090001~
RICOH FT4422	220/50	Middle East	A173 - 28	A3936110826~
Ges 2622S	110/60	Taiwan	A173 - 50	9726090001~
RICOH FT4422	220, 230, 240/50	Asia, Europe	A173 -79	A3936090141~

RICOH

Modification **B**ulletin

Model: Condor	Date: 28-Feb-97	No: 007	1/1
Modified Article: Parts Catalog		Prepared by: M. Ishihara	
From: QAC 1st Field Information Dept.		Checked by: T. Inoue T. Inoue	

Reason for Modification:			
☒ Parts catalog correction	☐ Vendor change	☐ To meet standards ( )
☐ To facilitate assembly	☐ To improve reliability	
☐ Part Standardization	☐ Other	

Old part number	New part number	Description	Qty	Page	Index
A173 5917	-	Exposure Lamp - 97V 280W	1	15	16
A173 5916	-	Exposure Lamp - 181V 310W	1	15	16

The descriptions for the part numbers A173 5917 and A173 5916 were wrong (exchanged) in the parts catalog. The above descriptions are correct. Machine cut-in serial numbers will not be attached with this MB No.7 due to parts catalog correction.

RICOH **M**odification **B**ulletin

Model: Condor	Date: 15-May-97	No: 8
Modified Article: Development Unit	Prepared by: M.Ishihara	
From: QAC 1st Field Information Dept.		

Reason for Modification:

- ☐ Parts catalog correction
- ☐ Vendor change
- ☐ To meet standards ( )
- ☐ To facilitate assembly
- ☐ To improve reliability
- ☐ Part standardization
- ☒ Other

Old part number	New part number	Description	Qty	Int	Page	Index	Note
	A1733001	Development Unit - Ricoh	0→1		31	*	
	A1736228	Development Unit - NRG	0→1		31	*	

The above parts have been registered as service parts.

MB Correction

Reissue date: 31-Jul -97

The items in bold italic have been corrected or added.

Model: Condor	Date: 15-Jul-97	No: ***9***
Modified Article: Parts Catalog	Prepared by: T.Matsuno	
From: QAC 1st Field Information Dept.		

Reason for Modification:	☒ Parts catalog correction	☐ Vendor change	☐ To meet standards ( )
	☐ To facilitate assembly	☐ To improve reliability	
	☐ Part standardization	☐ Other	

The part number for the Magnetic Clutch on page 27 of the Parts Catalog was incorrect.

Please correct the part number in your Parts Catalog as shown below.

Old part number	New part number	Description	Qty	Int	Page	Index	Note
A1735055	AX200124	Magnetic Clutch	1	X/O	27	18	—

Illustration

Page 26

11.PAPER FEED SECTION (A173)

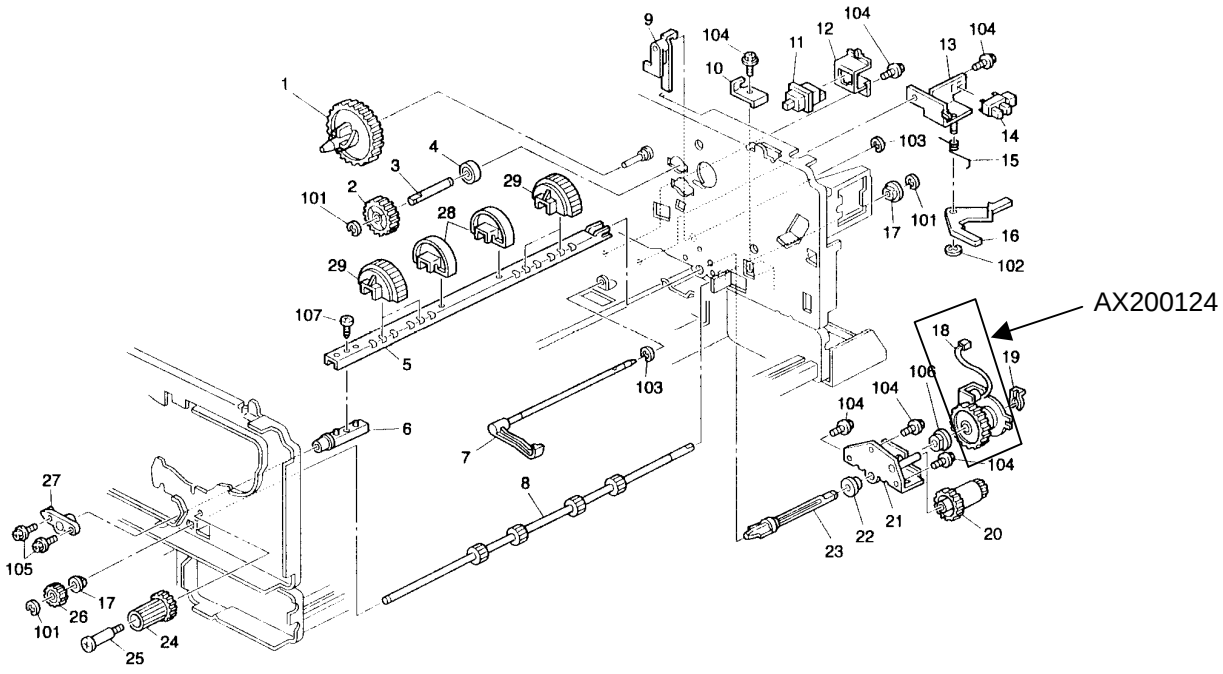

Model: Condor	Date: 15-Jul-97	No: 9

			SINDO RICOH PRODUCTION	
MODEL NAME	V/ Hz	DESTINATION	CODE	SERIAL NUMBER
Ges 2622S, Rex 8522S, Nashuatec 3322S	115V/ 60	South America	A173 -12	
RICOH FT4422	110V/ 60	Taiwan	A173 -19	
Ges 2622S, Rex 8522S, Nashuatec 3322S	220, 230, 240/ 50	Asia, Europe	A173 - 20	
Ges 2622S, Rex 8522S, Nashuatec 3322S	220/ 50	Middle East	A173 - 21	
RICOH FT4422	220/ 50	Middle East	A173 - 28	
Ges 2622S	110/ 60	Taiwan	A173 - 50	
RICOH FT4422	220, 230, 240/ 50	Asia, Europe	A173 -79	

RICOH **M**odification **B**ulletin

Model: Condor	Date: 31-Jul-97	No: 10
Modified Article: Parts Catalog	Prepared by: T.Matsuno	
From: QAC 1st Field Information Dept.		

Reason for Modification:

- ☒ Parts catalog correction
- ☐ Vendor change
- ☐ To meet standards ( )
- ☐ To facilitate assembly
- ☐ To improve reliability
- ☐ Part standardization
- ☐ Other

Old part number	New part number	Description	Qty	Int	Page	Index	Note
A1286350	A1736367	Model Name Plate – REX	1	X/O	7	23	–

The old part above had been registered in the Parts Catalog for the Condor with both a wrong part number and a wrong part description.

Please correct your Parts Catalog in the manner shown above.

Illustration

Page 6

1.EXTERIOR (A173)

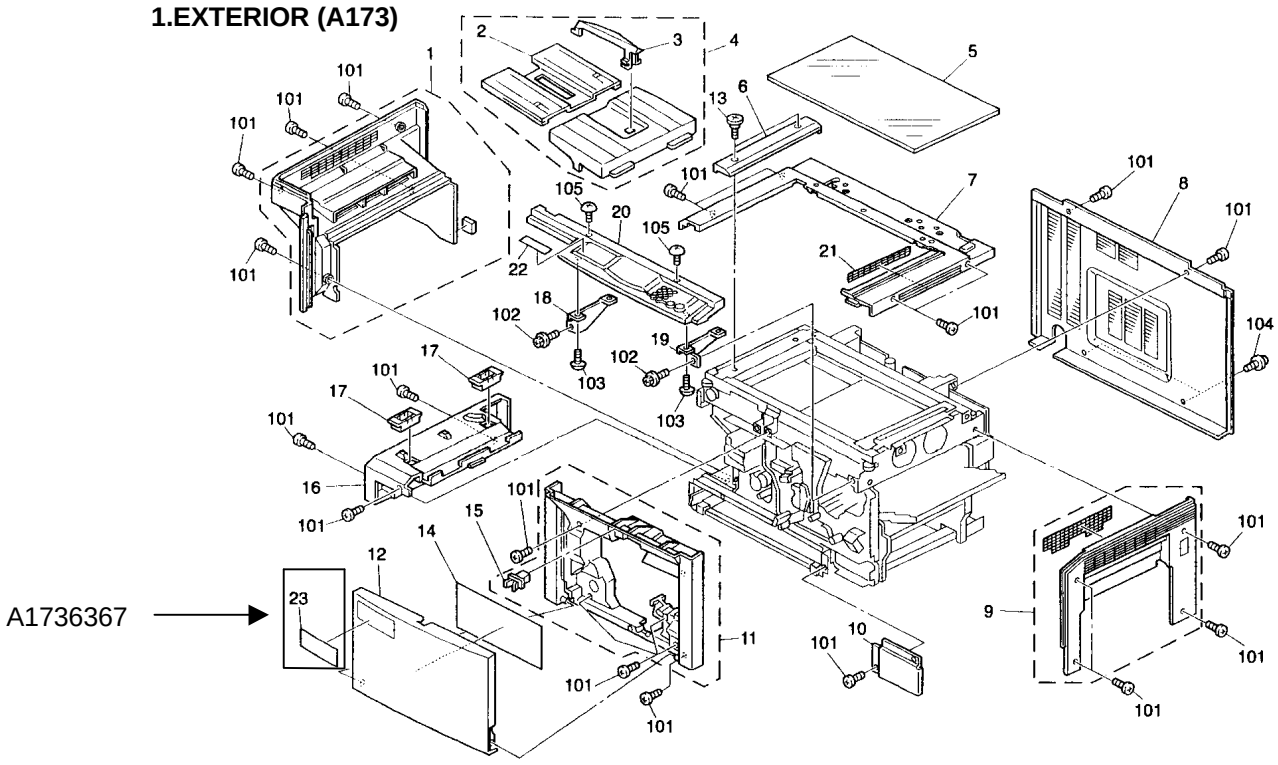

			SINDO RICOH PRODUCTION	
MODEL NAME	V/ Hz	DESTINATION	CODE	SERIAL NUMBER
Ges 2622S, Rex 8522S, Nashuatec 3322S	115V/ 60	South America	A173 -12	
RICOH FT4422	110V/ 60	Taiwan	A173 -19	
Ges 2622S, Rex 8522S, Nashuatec 3322S	220, 230, 240/ 50	Asia, Europe	A173 - 20	
Ges 2622S, Rex 8522S, Nashuatec 3322S	220/ 50	Middle East	A173 - 21	
RICOH FT4422	220/ 50	Middle East	A173 - 28	
Ges 2622S	110/ 60	Taiwan	A173 - 50	
RICOH FT4422	220, 230, 240/ 50	Asia, Europe	A173 -79	

RICOH **M**odification **B**ulletin

Model: Condor	Date: 31-Jul-97	No: 11
Modified Article: Parts Catalog	Prepared by: T.Matsuno	
From: QAC 1st Field Information Dept.		

Reason for Modification:

- ☒ Parts catalog correction
- ☐ Vendor change
- ☐ To meet standards ( )
- ☐ To facilitate assembly
- ☐ To improve reliability
- ☐ Part standardization
- ☐ Other

Old part number	New part number	Description	Qty	Int	Page	Index	Note
A0069002	AE044011	Hot Roller Stripper	3	X/O	43	17	—

Please correct your parts catalog in the manner shown above.
Please note the necessary number of pieces for the new part. The present description is " Hot Roller Stripper (5 pcs/set) ", but the new part is not a set unit and requires three pieces.

			SINDO RICOH PRODUCTION	
MODEL NAME	V/ Hz	DESTINATION	CODE	SERIAL NUMBER
Ges 2622S, Rex 8522S, Nashuatec 3322S	115V/ 60	South America	A173 -12	
RICOH FT4422	110V/ 60	Taiwan	A173 -19	
Ges 2622S, Rex 8522S, Nashuatec 3322S	220, 230, 240/ 50	Asia, Europe	A173 - 20	
Ges 2622S, Rex 8522S, Nashuatec 3322S	220/ 50	Middle East	A173 - 21	
RICOH FT4422	220/ 50	Middle East	A173 - 28	
Ges 2622S	110/ 60	Taiwan	A173 - 50	
RICOH FT4422	220, 230, 240/ 50	Asia, Europe	A173 -79	

RICOH

Modification Bulletin

Model: Condor (TAIWAN ONLY)	Date: 31-Oct-97	No: 12
Modified Article: Parts Catalog	Prepared by: M.Ishihara	
From: QAC Field Information Dept.		

Reason for Modification:

- ☒ Parts catalog correction
- ☐ Vendor change
- ☐ To meet standards ( )
- ☐ To facilitate assembly
- ☐ To improve reliability
- ☐ Part standardization
- ☐ Other

Old part number	New part number	Description	Qty	Int	Page	Index	Note
-	A1735622	AC/DC Power Unit – 15V (TWN)	1	-	49	9	

Part number #A1735622 for the AC/DC Power Unit for Taiwan has been registered.

RICOH

Modification Bulletin

Model: Condor	Date: 31-Oct-97	No: 13
Modified Article: Lens Shutter	Prepared by: M.Ishihara	
From: QAC Field Information Dept.		

Reason for Modification:

- ☐ Parts catalog correction
- ☐ Vendor change
- ☐ To meet standards ( )
- ☐ To facilitate assembly
- ☒ To improve reliability
- ☐ Part standardization
- ☐ Other

Old part number	New part number	Description	Qty	Int	Page	Index	Note
A0481755	A1731755	Lens Shutter	1	O/O	13	8	

A few machines are noisy when the lens moves. To prevent this, the shape of the lens shutter has been changed. The part Ⓐ (spring hooker) shown below has been added.

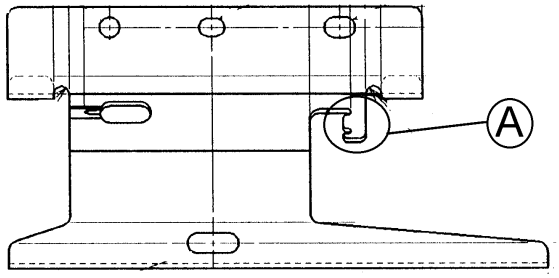

Lens Shutter (#A1731755)

RICOH

Modification Bulletin

Model: Condor	Date: 31-Dec-97	No: 14
Modified Article: Exit Sensor	Prepared by: M.Ishihara	
From: QAC Field Information Dept.		

Reason for Modification:

- ☐ Parts catalog correction
- ☐ Vendor change
- ☐ To meet standards ( )
- ☐ To facilitate assembly
- ☒ To improve reliability
- ☐ Part standardization
- ☐ Other

Old part number	New part number	Description	Qty	Int	Page	Index	Note
AW020075	AW020086	Photinterrupter	1	O/O	47	2	

The previous photointerrupter may be damaged by high temperature.
So a new photointerrupter with a higher heat tolerance is now used as an exit sensor.

The previous sensors (AW020075) remain unchanged and are used in the other devices, such as in the options.

RICOH

Modification Bulletin

Model: Condor	Date: 31-Dec-97	No: 15
Modified Article: Magnetic Catch	Prepared by: M.Ishihara	
From: QAC Field Information Dept.		

Reason for Modification:

- ☐ Parts catalog correction
- ☒ Vendor change
- ☐ To meet standards ( )
- ☐ To facilitate assembly
- ☐ To improve reliability
- ☒ Part standardization
- ☐ Other

Old part number	New part number	Description	Qty	Int	Page	Index	Note
AG070004	AG070009	Magnetic Catch	5	O/O	11,43, 47	21,9,21	

The previous type of magnetic catch (AG070004) is no longer available in Japan. The new one can be used instead.

RICOH

Modification Bulletin

Model: Condor	Date: 31-Dec-97	No: 16
Modified Article: By-pass Feed Unit	Prepared by: M.Ishihara	
From: QAC Field Information Dept.		

Reason for Modification:

- ☒ Parts catalog correction
- ☐ Vendor change
- ☐ To meet standards ( )
- ☐ To facilitate assembly
- ☐ To improve reliability
- ☐ Part standardization
- ☐ Other

Old part number	New part number	Description	Qty	Int	Page	Index	Note
A1732852	A1732854	By-pass Feed Unit (RIC)	1	X/O	19	1	
-	A1732853	By-pass Feed Unit (NRG)	1		19	1	

The part number #A1732852 in the parts catalog is wrong. #A1732854 is the correct part number for the By-pass Feed Unit for Ricoh. #A1732853 is for NRG.