IMPORTANT SAFETY NOTICES

PREVENTION OF PHYSICAL INJURY

1. Before disassembling or assembling parts of the copier and peripherals, make sure that the copier power cord is unplugged.
2. The wall outlet should be near the copier and easily accessible.
3. Note that some components of the copier and the paper tray unit are supplied with electrical voltage even if the main switch is turned off.
4. If any adjustment or operation check has to be made with exterior covers off or open while the main switch is turned on, keep hands away from electrified or mechanically driven components.
5. The inside and the metal parts of the fusing unit become extremely hot while the copier is operating. Be careful to avoid touching those components with your bare hands.

HEALTH SAFETY CONDITIONS

1. Never operate the copier without the ozone filter installed.
2. Always replace the ozone filter with the specified one at the specified interval.
3. Toner and developer are non-toxic, but if you get either of them in your eyes by accident, it may cause temporary eye discomfort. Try to remove with eye drops or flush with water as first aid. If unsuccessful, get medical attention.

OBSERVANCE OF ELECTRICAL SAFETY STANDARDS

1. The copier and its peripheral must be installed and maintained by a customer service representative who has completed the training course on those models.

⚠ CAUTION

The RAM pack has a lithium battery which can explode if handled incorrectly, replace only with same RAM pack. Do not recharge, or burn this battery. Used RAM pack must be handled in accordance with local regulations.

SAFETY AND ECOLOGICAL NOTES FOR DISPOSAL

1. Do not incinerate the toner cartridge or the used toner. Toner dust may ignite suddenly when exposed to open flame.
2. Dispose of used toner, developer, and organic photoconductors according to local regulations. (These are non-toxic supplies.)
3. Dispose of replaced parts in accordance with local regulations.

Table of Contents

1. OVERALL MACHINE INFORMATION

1. SPECIFICATIONS 1-1

2. COPY PROCESSES AROUND THE DRUM 1-4

3. COPY PROCESS CONTROL. 1-6

4. MECHANICAL COMPONENT LAYOUT 1-7

5. DRIVE LAYOUT 1-8

6. ELECTRICAL COMPONENT DESCRIPTIONS. 1-9

7. MAJOR DIFFERENCES BETWEEN THE A110 AND A173 MODELS. 1-12

2. DETAILED SECTION DESCRIPTIONS

1. DRUM 2-1

1.1 OPC DRUM CHARACTERISTICS 2-1

1.2 DRUM UNIT 2-2

2. DRUM CHARGE 2-3

2.1 OVERVIEW. 2-3

2.2 CHARGE CORONA WIRE CLEANER MECHANISM 2-4

2.3 CHARGE CORONA CIRCUIT 2-5

2.4 GRID VOLTAGE CORRECTION (VR CORRECTION) 2-6

2.5 GRID VOLTAGE CONTROL 2-7

2.5.1 Image Density Control. 2-7

2.5.2 Vr Detection 2-7

2.5.3 Toner Density Detection 2-7

3. OPTICS 2-8

3.1 OVERVIEW. 2-8

3.2 SCANNER DRIVE 2-9

3.3 LENS DRIVE. 2-10

3.3.1 Lens Drive 2-10

3.3.2 Lens Positioning 2-11
3.4 4TH AND 5TH MIRROR DRIVE 2-12
3.4.1 Drive 2-12
3.4.2 Positioning 2-12
3.5 AUTOMATIC IMAGE DENSITY DETECTION 2-13
3.6 EXPOSURE LAMP VOLTAGE CORRECTION 2-14
3.6.1 VL Correction 2-14
3.6.2 Reproduction Ratio Correction 2-14
3.7 EXPOSURE LAMP VOLTAGE CONTROL 2-15
3.7.1 Base Lamp Voltage 2-15
3.7.2 Image Density Setting Factor (Manual ID Mode Only) 2-15
3.7.3 VL Correction Factor 2-16
3.7.4 Reproduction Ratio Correction Factor 2-16
3.8 EXPOSURE LAMP CONTROL 2-17
4. ERASE 2-18
4.1 OVERVIEW 2-18
4.1.1 Lead Edge Erase 2-19
4.1.2 Side Erase 2-19
4.1.3 Trail Edge Erase 2-20
4.1.4 Editing Mode Erase 2-20
4.1.5 Erase During Detection Cycles 2-21
5. DEVELOPMENT 2-22
5.1 OVERVIEW 2-22
5.2 CROSS-MIXING 2-23
5.3 DEVELOPMENT BIAS FOR IMAGE DENSITY CONTROL 2-24
5.3.1 Base Bias Voltage Factor in Manual Image Density Control 2-24
5.3.2 Base Bias Voltage Factor in Automatic Image Density Control 2-25
5.3.3 Base Bias Voltage Adjustment Factor 2-26
5.3.4 Vr Correction Factor 2-26
5.4 TONER SAVER MODE 2-27
5.5 DEVELOPMENT BIAS CIRCUIT 2-28

3. INSTALLATION

1. INSTALLATION REQUIREMENTS 3-1

1.1 ENVIRONMENT 3-1

1.2 MACHINE LEVEL 3-1

1.3 MINIMUM SPACE REQUIREMENTS 3-2

1.4 POWER REQUIREMENTS 3-2

2. INSTALLATION PROCEDURE 3-3

2.1 ACCESSORY CHECK 3-3

2.2 COPIER INSTALLATION 3-4

2.3 CASSETTE MODIFICATION 3-10

2.4 KEY COUNTER HOLDER INSTALLATION (Option) 3-11

2.5 TONER OVERFLOW SENSOR INSTALLATION (Option) 3-12

2.6 PRE-TRANSFER LAMP (PTL) INSTALLATION (Option) 3-13

2.7 OPTICS ANTI-CONDENSATION HEATER INSTALLATION (Option) 3-14

4. SERVICE TABLES

1. SERVICE REMARKS 4-1

1.1 GENERAL CAUTION 4-1

1.2 DRUM AND DRUM UNIT 4-1

1.3 CHARGE CORONA 4-2

1.4 OPTICS 4-2

1.5 DEVELOPMENT UNIT 4-3

1.6 TONER SUPPLY 4-4

1.7 TRANSFER AND SEPARATION 4-4

1.8 CLEANING UNIT 4-4

1.9 FUSING UNIT 4-5

1.10 PAPER FEED 4-5

1.11 DOCUMENT FEEDER 4-5

1.12 SORTER 4-5

1.13 OTHERS 4-6

2. SERVICE PROGRAM MODE 4-7

2.1 SERVICE PROGRAM MODE OPERATION 4-7

2.1.1 Service Program Access Procedure 4-7

2.1.2 Change Adjustment Values or Modes. 4-9

2.1.3 Memory Reset Procedures 4-9

2.2 SERVICE PROGRAM MODE TABLE 4-12

2.3 SP-8 SENSOR/SWITCH DATA CHECK 4-24

2.4 SP-9 ELECTRICAL COMPONENT CHECK. 4-25

2.5 MISFEED LOCATION INDICATOR 4-26

2.5.1 Misfeed Indication 4-26

2.5.2 Misfeed Recovery 4-27

3. SERVICE TABLES 4-28

3.1 DIP SWITCHES 4-28

3.2 VARIABLE RESISTORS. 4-29

4. SPECIAL TOOLS AND LUBRICANTS 4-30

5. PREVENTIVE MAINTENANCE SCHEDULE 4-31

5.1 PM TABLE 4-31

5.2 EXPLANATION OF REGULAR PM 4-33

5.3 REGULAR PM PROCEDURE 4-35

5. REPLACEMENT AND ADJUSTMENT

1. EXTERIOR AND INNER COVERS. 5-1

1.1 EXTERIOR COVER REMOVAL 5-1

1.1.1 Front Door 5-1

1.1.2 Inner Cover 5-2

1.1.3 Right Cover 5-3

1.1.4 Rear Cover 5-3

1.1.5 Left Covers 5-3

1.1.6 Upper Cover 5-3

1.1.7 Operation Panel 5-3

2. OPTICS 5-4

2.1 EXPOSURE GLASS REMOVAL 5-4

2.2 1ST MIRROR REMOVAL 5-5

2.3 2ND AND 3RD MIRROR REMOVAL 5-7

2.4 4TH AND 5TH MIRROR REPLACEMENT 5-9

2.5 EXPOSURE LAMP REPLACEMENT 5-10

2.6 OPTICS THERMOFUSE REMOVAL 5-12

2.7 SCANNER DRIVE WIRE REPLACEMENT 5-13

2.7.1 Wire Removal 5-13

2.7.2 Wire Installation 5-14

2.8 SCANNER MOTOR REPLACEMENT 5-20

2.9 LENS MOTOR REPLACEMENT 5-21

2.10 LENS DRIVE WIRE INSTALLATION 5-22

2.11 4TH/5TH MIRROR MOTOR REPLACEMENT 5-23

3. DEVELOPMENT AND TONER SUPPLY 5-24

3.1 TONER SUPPLY UNIT REMOVAL 5-24

3.2 DEVELOPER REPLACEMENT 5-25

3.3 INLET SEAL REMOVAL 5-26

3.4 TONER SUPPLY CLUTCH REPLACEMENT 5-27

3.5 CLUTCH REMOVAL 5-28

3.5.1 1st Paper Feed Clutch 5-28

3.5.2 2nd Paper Feed Clutch 5-28

3.5.3 Relay Roller Clutch/Registration Clutch 5-28

3.6 DEVELOPMENT BIAS VOLTAGE ADJUSTMENT (SP9-57) 5-29

4. CLEANING 5-30

4.1 CLEANING UNIT REMOVAL 5-30

4.2 CLEANING BLADE REPLACEMENT 5-31

4.3 USED TONER COLLECTION 5-32

4.4 ENTRANCE SEAL REPLACEMENT 5-33

5. PAPER FEED 5-34

5.1 1ST PAPER SIZE SWITCH REPLACEMENT 5-34

5.2 1ST PAPER END SENSOR REPLACEMENT 5-35
5.3 PAPER FEED ROLLER REPLACEMENT 5-36
5.4 FRICTION PAD REPLACEMENT. 5-37
5.5 2ND PAPER FEED ROLLER REPLACEMENT 5-38
5.6 2ND PAPER END SENSOR REPLACEMENT. 5-39
5.7 REGISTRATION SENSOR/REGISTRATION ROLLER REMOVAL. 5-40
5.8 1ST PAPER FEED PRESSURE ADJUSTMENT 5-44
6. AROUND THE DRUM. 5-45
6.1 DRUM REPLACEMENT 5-45
6.2 ID SENSOR REPLACEMENT 5-48
6.3 PICK-OFF PAWL REPLACEMENT 5-49
6.4 QUENCHING LAMP REMOVAL. 5-50
6.5 ERASE LAMP REMOVAL 5-51
6.6 CHARGE CORONA WIRE REPLACEMENT 5-52
6.7 CHARGE CORONA GRID REPLACEMENT 5-53
6.8 TRANSFER/SEPARATION CORONA WIRE REPLACEMENT. 5-54
6.9 CORONA CURRENT ADJUSTMENT 5-55
6.9.1 CHARGE CORONA CURRENT ADJUSTMENT (SP9-2). 5-57
6.9.2 GRID VOLTAGE ADJUSTMENT (SP9-2) 5-59
6.9.3 TRANSFER CORONA CURRENT ADJUSTMENT (SP9-5). 5-60
6.9.4 SEPARATION CORONA CURRENT ADJUSTMENT (SP9-8). 5-61
7. FUSING 5-62
7.1 EXIT UNIT REMOVAL 5-62
7.2 FUSING LAMP REPLACEMENT 5-63
7.3 PRESSURE ROLLER REPLACEMENT. 5-64
7.4 HOT ROLLER REPLACEMENT 5-66
7.5 FUSING THERMISTOR AND THERMOFUSE. 5-68
7.6 FUSING PRESSURE ADJUSTMENT 5-69
7.7 EXHAUST BLOWER MOTORS/EXIT SENSOR REPLACEMENT 5-70
8. OTHERS 5-71
8.1 OZONE FILTER REPLACEMENT 5-71

9. COPY QUALITY ADJUSTMENT 5-72

9.1 LIGHT INTENSITY ADJUSTMENT 5-73
9.2 UNEVEN EXPOSURE ADJUSTMENT. 5-74
9.3 BIAS VOLTAGE ADJUSTMENT. 5-75
9.4 TONER DENSITY ADJUSTMENT 5-76
9.5 FIXED TONER SUPPLY MODE SELECTION 5-76
9.6 TONER SUPPLY RATIO SELECTION. 5-76
9.7 VERTICAL MAGNIFICATION ADJUSTMENT 5-77
9.8 HORIZONTAL MAGNIFICATION ADJUSTMENT 5-77
9.9 FOCUS ADJUSTMENT 5-78
9.10 LEADING EDGE ERASE MARGIN ADJUSTMENT 5-79
9.11 REGISTRATION ADJUSTMENT 5-79
9.12 SIDE-TO-SIDE REGISTRATION ADJUSTMENT 5-80
9.13 4TH/5TH MIRROR HEIGHT ADJUSTMENT 5-82

6. TROUBLESHOOTING

1. COPY QUALITY 6-1

1.1 BLANK COPY (WHITE COPY). 6-1
1.2 DIRTY BACKGROUND 6-4
1.3 UNEVEN IMAGE DENSITY 6-7
1.4 VERTICAL BLACK BANDS 6-8
1.5 VERTICAL BLACK LINES 6-9
1.6 VERTICAL WHITE LINES OR BANDS–1 (DULL OR BLURRED) 6-10
1.7 VERTICAL WHITE LINES OR BANDS–2 (THIN, DISTINCT) 6-11
1.8 HORIZONTAL BLACK/WHITE LINES 6-12
1.9 JITTER 6-13
1.10 BLACK SPOTS ON THE COPY IMAGE 6-14
1.11 SKEWED (OPTICAL) COPY IMAGE 6-15
1.12 TONER DENSITY TOO HIGH 6-16
1.13 TONER DENSITY TOO LOW. 6-18
1.14 TONER SCATTERING 6-20

1.15 UNFUSED COPY IMAGE. 6-21
1.16 PAPER MISFEED. 6-22
1.17 DF ORIGINAL MISFEED OR SKEW 6-23
2. U-CODE CONDITIONS. 6-24
2.1 U1 - RIGHT COVER OPEN 6-24
2.2 U2 - KEY COUNTER NOT SET 6-24
2.3 U4 - SORTER OPEN 6-24
2.4 U6 - DRUM PROTECTION SHEET REMAINING 6-24
3. SERVICE CALL CONDITIONS 6-25
3.1 CODE #11 – EXPOSURE LAMP ERROR 6-25
3.2 CODE #12 – EXPOSURE LAMP ERROR 6-25
3.3 CODE #13 – ZERO CROSS SIGNAL ERROR 6-26
3.4 CODE #21 – SCANNER HOME POSITION ERROR. 6-26
3.5 CODE #22 – SCANNER HOME POSITION ERROR. 6-26
3.6 CODE #28 – LENS HOME POSITION ERROR 6-27
3.7 CODE #29 – LENS HOME POSITION ERROR 6-27
3.8 CODE #2A – 4TH/5TH MIRROR HOME POSITION ERROR 6-27
3.9 CODE #2B – 4TH/5TH MIRROR HOME POSITION ERROR 6-28
3.10 CODE #52 – FUSING LAMP WARM-UP ERROR 6-28
3.11 CODE #53 – FUSING LAMP OVERHEAT 6-28
3.12 CODE #55 – FUSING THERMISTOR OPEN. 6-29
3.13 E70 (IN THE MAGNIFICATION INDICATOR) – TONER OVERFLOW 6-29
4. ELECTRICAL COMPONENT DEFECTS 6-30
4.1 SENSORS 6-30
4.2 SWITCHES AND OTHER ELECTRICAL COMPONENTS. 6-31
4.3 BLOWN FUSE CONDITION. 6-32

DOCUMENT FEEDER

1. SPECIFICATIONS 1
2. COMPONENT LAYOUT 2

3. ELECTRICAL COMPONENT DESCRIPTIONS 3

4. OVERALL MACHINE CONTROL. 4

5. BASIC OPERATION 6

6. ORIGINAL FEED 8

6.1 ORIGINAL PICK-UP 8

6.2 ORIGINAL SEPARATION. 9

6.3 ORIGINAL FEED-IN MECHANISM 10

6.4 ORIGINAL SIZE DETECTION 12

6.5 ORIGINAL INVERSION MECHANISM. 13

6.6 ORIGINAL FEED-OUT MECHANISM 15

6.7 BELT DRIVE MOTOR CIRCUIT. 16

6.8 FEED-OUT MOTOR CIRCUIT 17

6.9 INPUT AND OUTPUT CIRCUITS. 18

7. LIFT MECHANISM 19

8. ORIGINAL MISFEED DETECTION 20

9. INSTALLATION PROCEDURE 22

9.1 ACCESSORY CHECK 22

9.2 INSTALLATION PROCEDURE 25

10. PREPARATION FOR TRANSPORTATION. 31

11. REPLACEMENT AND ADJUSTMENT 32

11.1 FEED-IN UNIT 32

11.1.1 Transport Belt Replacement 32

11.1.2 Feed-in Unit Removal 34

11.1.3 Pick-up Roller Replacement 35

11.1.4 Feed-in Clutch Lubrication 36

11.1.5 Pick-up Solenoid Adjustment 37

11.1.6 Feed Roller Replacement 39

11.1.7 Feed-in Solenoid Adjustment 40

11.1.8 Friction Belt Replacement. 41

11.2 FEED-OUT UNIT 42

11.2.1 Feed-out Unit Removal 42
11.2.2 Inverter Solenoid Adjustment 43
11.2.3 DF Leading Edge Registration Adjustment 44
11.3 BELT DRIVE MOTOR SPEED ADJUSTMENT 45

SORTER

1. SPECIFICATIONS 1
2. COMPONENT LAYOUT 2
3. ELECTRICAL COMPONENT DESCRIPTIONS 3
4. OVERALL MACHINE CONTROL 4
5. BASIC OPERATION 5
6. EXIT ROLLER DRIVE 6
6.1 ROLLER DRIVE MECHANISM 6
6.2 ROLLER DRIVE CIRCUIT 7
7. BIN DRIVE 8
7.1 BIN DRIVE MECHANISM 8
7.2 BIN DRIVE CIRCUIT 10
8. MISFEED DETECTION 11
9. INSTALLATION PROCEDURE 12
9.1 ACCESSORY CHECK 12
9.2 INSTALLATION PROCEDURE 13
10. PREPARATION FOR TRANSPORTATION 16
11. ROLLER DRIVE BELT REPLACEMENT 17
12. BIN GUIDE LUBRICATION 18

SECTION 1

OVERALL MACHINE INFORMATION

1. SPECIFICATIONS

Configuration:	Desk top	
Copy Process:	Dry electrostatic transfer system	
Originals:	Sheet/Book	
Original Size:	Maximum:	A3/11" x 17"
Copy Paper Size:	Maximum:	A3/11" x 17"
	Minimum:	A6/5 1/2" x 8 1/2" (lengthwise)
		..... Manual and cassette feeds
		A5/11" x 8 1/2" (sideways)
		..... Paper tray feed
(Duplex Copying)	A4/11" x 8 1/2" (sideways)	
Copy Paper Weight:	Cassette feed:	58 to 128 g/m^2 (16 to 34 lb)
	Paper tray feed:	64 to 81 g/m^2 (17 to 22 lb)
	Manual feed:	52 to 157 g/m^2 (14 to 42 lb)
Reproduction Ratios:	5 Enlargement and 7 Reduction	

Enlargement	115% 122% 129% 141% 155%
Full size	100%
Reduction	65% 71% 74% 77% 82% 87% 93%

Zoom:	From 61% to 156% in 1% steps
Copying Speed:	22 copies/minute (A4/11" x 8 1/2" sideways) 11 copies/minute (A3/11" x 17")
Warm-Up Time:	Less than 60 seconds (at 20°C)
First Copy Time:	5.9 seconds (A4/11" x 8 1/2" sideways for cassette feed)
Copy Number Input:	Ten-key pad, 1 to 99 (count up)

Manual Image Density Selection: 7 steps

Automatic Reset: All input modes are reset 1 minute after the copier is not in use; can also be set to 3 minutes or no auto reset.

Energy Saver Function: Reducing electricity consumption (Manual or manual/auto)

Toner Saver Function: Reducing toner consumption

Paper Capacity: Cassettes: 250 sheets
Paper tray: 250 sheets
Manual feed table: 1 sheet

Toner Replenishment: Black: Cartridge exchange (380 g/cartridge)

Copy Tray Capacity: 250 sheets (B4/8 1/2" x 14" and smaller)
100 sheets (A3/11" x 17")

Power Source: 110 V/ 60 Hz/ 15 A (for Taiwan)
220-240 V/ 50 Hz/ 6 A (for Europe/Asia)
220 V/ 60 Hz/ 6 A (for Middle East)

(Refer to the serial number plate (rating plate) to determine the power source required by the machine.)

Power Consumption:

	Copier only	Full system*
Maximum	1.2 kVA	1.5 kVA
Warm-up	730 VA (average)	740 VA
Copy cycle	830 VA (average)	840 VA
Stand-by (without energy saver function)	200 VA (average)	210 VA

* Full system = Copier with document feeder and 10-bin sorter.

Dimensions:

	Width	Depth	Height
Copier only (without platen cover)	672 mm, 26.5"	608 mm, 24.0"	410 mm, 16.2"
With the cassette, platen cover, and the copy tray extended	1130 mm, 44.5"	608 mm, 24.0"	464 mm, 18.3"
Full system (with the cassette, document feeder, and 10-bin sorter)	1149 mm, 45.3"	608 mm, 24.0"	513 mm, 20.2"

Noise Emissions:

Sound pressure level (the measurements are made according to ISO 7779 at the operator position).

	Copier only	Full system*
Copying	Less than 62 dB (A)	Less than 66 dB (A)

*Full system: Copier with document feeder and 10-bin sorter

Sound power level (The measurements are made according to ISO 7779.)

	Copier only	Full system*
Stand-by	Less than 40 dB (A)	Less than 40 dB (A)
Copying	Less than 68 dB (A)	Less than 72 dB (A)

*Full system: Copier with document feeder and 10-bin sorter

Weight:

Copier only	47 kg (103.7 lb)
Full system	70 kg (154.4 lb)

Optional Equipment and Machine Configuration:

- Document feeder (A318)
- 10-bin sorter (A490)
- Key counter
- Optics anti-condensation heater
- Toner overflow sensor
- Pre-transfer lamp

Specifications are subject to change without notice.

2. COPY PROCESSES AROUND THE DRUM

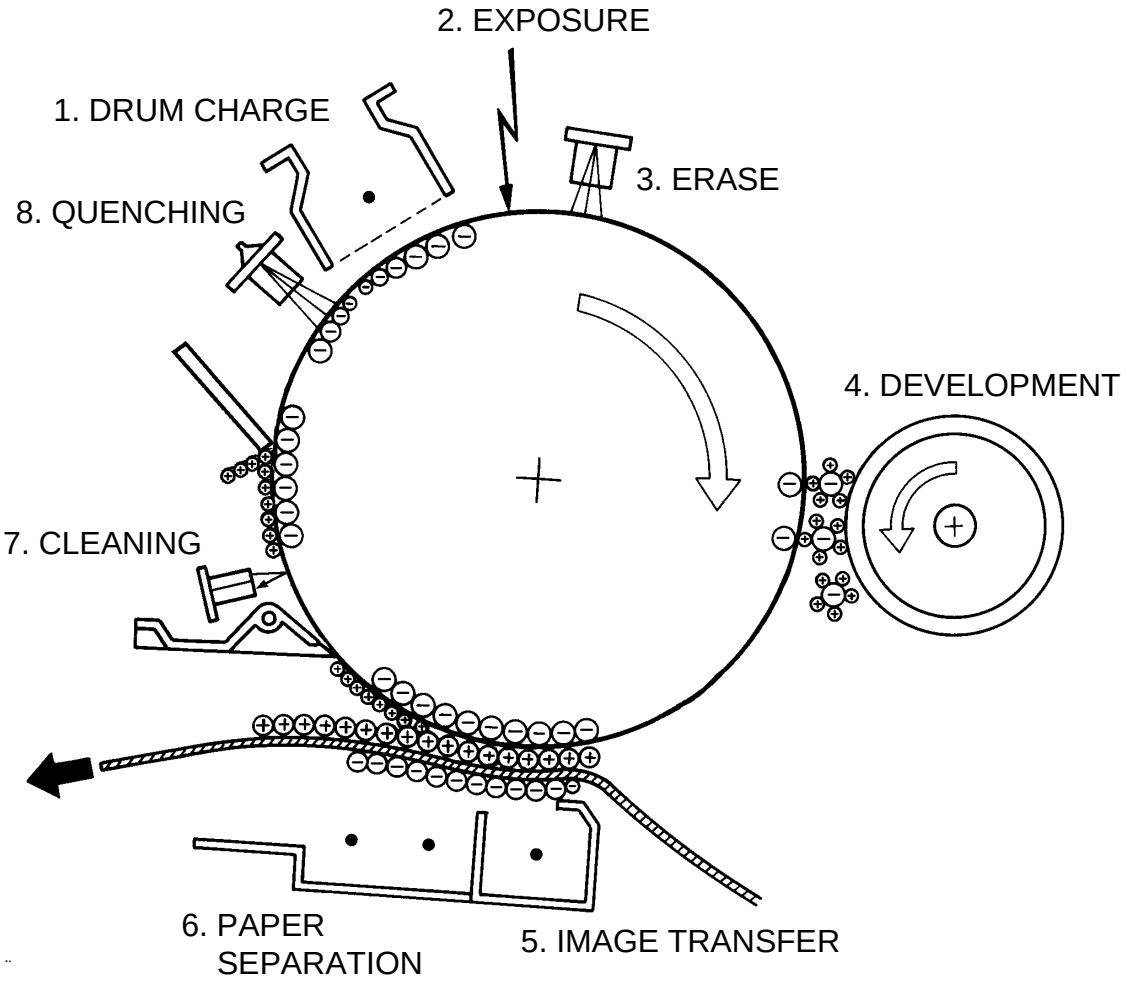

A173V500.img

1. DRUM CHARGE
In the dark, the charge corona unit gives a uniform negative charge to the organic photoconductive (OPC) drum. The charge remains on the surface of the drum because the OPC drum has a high electrical resistance in the dark.

2. EXPOSURE
An image of the original is reflected to the drum surface via the optics assembly. The charge on the drum surface is dissipated in direct proportion to the intensity of the reflected light, thus producing an electrical latent image on the drum surface.

3. ERASE
The erase lamp illuminates the areas of the charged drum surface that will not be used for the latent image. The resistance of the drum in the illuminated areas drops and the charge on those areas dissipates.

4. DEVELOPMENT
Positively charged toner is attracted to the negatively charged areas of the drum, thus developing the latent image. (The positive triboelectric charge is caused by friction between the carrier and toner particles.)

5. IMAGE TRANSFER
Paper is fed to the drum surface at the proper time so as to align the copy paper and the developed image on the drum surface. Then, a strong negative charge is applied to the back side of the copy paper, producing an electrical force which pulls the toner particles from the drum surface to the copy paper. At the same time, the copy paper is electrically attracted to the drum surface.

6. PAPER SEPARATION
A strong ac corona discharge is applied to the back side of the copy paper, reducing the negative charge on the copy paper and breaking the electrical attraction between the paper and the drum. Then, the stiffness of the copy paper causes it to separate from the drum surface. The pick-off pawls help to separate paper.

7. CLEANING
The cleaning blade scrapes the loosened toner off the drum.

8. QUENCHING
Light from the quenching lamp electrically neutralizes the surface of the drum.

3. COPY PROCESS CONTROL

	Grid Voltage	Exposure Lamp Voltage	Development Bias Voltage	Erase Lamp
Image Density Control	Standard image density grid voltage (–760V) + Drum residual voltage (Vr) correction factor (SP67)	[Base exposure lamp voltage [SP48]] + [V_L correction factor [SP61]] + Image Density Factor (Manual ID mode only) + Reproduction ratio correction factor	Base bias voltage 1. Manual mode [2. ADS mode [SP34]] + [Base bias voltage adjustment factor] + Drum residual voltage (Vr) correction factor (SP67)	Depending on paper size and reproduction ratio
Toner Density Detection	Standard ID Sensor grid voltage (–560V) + Vp correction factor (SP69)	Same as image density control	[Toner density adjustment factor] + Vd correction factor (SP64) + ID sensor bias setting (SP33)	ID sensor pattern erase (Vsg detection: Full erase)
Residual Voltage (Vr) Detection	–500 volts (Fixed)	Same as image density control	0 volt (Fixed)	Full erase (All LEDs ON)
Between Copies (Non-image area)	0 volt (Fixed)	Exposure lamp turns off	–160 volts (Fixed) + [Base bias voltage adjustment factor] + Drum residual voltage (Vr) correction factor (SP67)	Full erase (All LEDs ON)

NOTE: a) Boxed items can be adjusted by SP modes surrounded by square brackets [ ].

b) The setting which determines the correction factor can be observed by SP modes surrounded by parenthesis ( ).

4. MECHANICAL COMPONENT LAYOUT

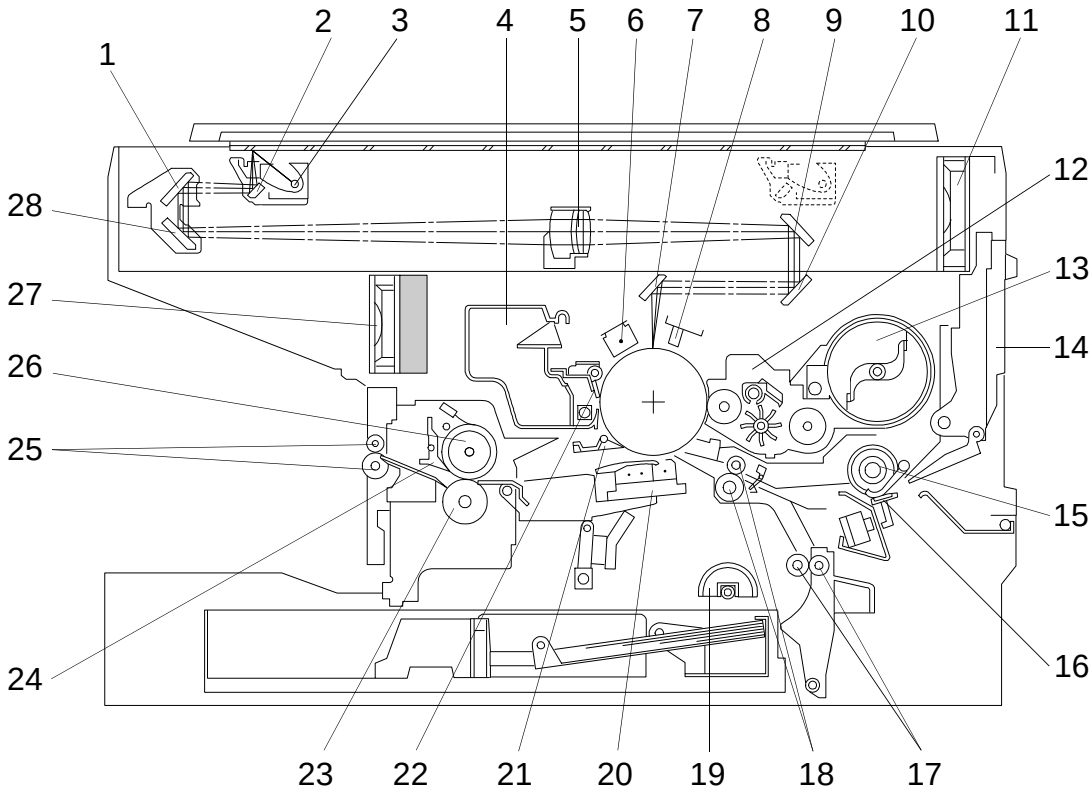

A173V501.wmf

1. 2nd Mirror
2. 1st Mirror
3. Exposure Lamp
4. Cleaning Unit
5. Lens
6. Charge Corona Unit
7. 6th Mirror
8. Erase Lamp
9. 4th Mirror
10. 5th Mirror
11. Optics Cooling Fan
12. Development Unit
13. Toner Supply Unit
14. Manual Feed Table
15. Paper Feed Roller
16. Friction Pad
17. Relay Rollers
18. Registration Rollers
19. 2nd Feed Rollers
20. T &S Corona Unit
21. Pick-off Pawl
22. Cleaning Blade
23. Pressure Roller
24. Hot Roller Strippers
25. Exit Rollers
26. Hot Roller
27. Exhaust Fan
28. 3rd Mirror

5. DRIVE LAYOUT

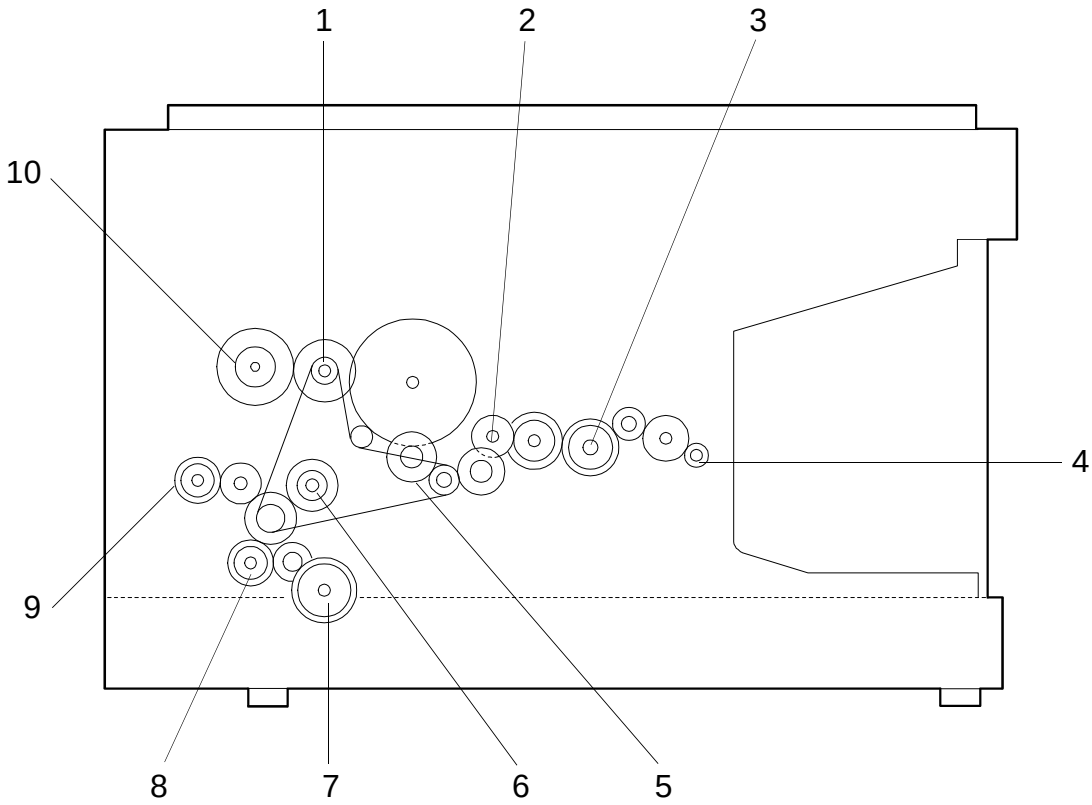

A173V502.wmf

1. Development Drive Gear
2. Cleaning Drive Gear
3. Hot Roller Drive Gear
4. Exit Roller Drive Gear
5. Drum Drive Gear
6. Registration Roller Clutch Gear
7. 2nd Feed Clutch Gear
8. Relay Roller Clutch Gear
9. 1st Feed Clutch Gear
10. Toner Supply Clutch Gear

6. ELECTRICAL COMPONENT DESCRIPTIONS

Symbol	Name	Function	Index No.
Motors			
M1	Main Motor	Drives all the main unit components except for the optics unit and fans (115/220/230/240 Vac).	5
M2	Scanner Motor	Drives the scanners (1st and 2nd) (dc stepper).	4
M3	Lens Motor	Moves the lens position in accordance with the selected magnification (dc stepper).	2
M4	4th/5th Mirror Motor	Moves the 4th/5th mirror position in accordance with the selected magnification (dc stepper).	8
M5	Optics Cooling Fan Motor	Prevents build-up of hot air in the optics cavity (24 Vdc).	41
M6 M7	Exhaust Fan Motors	Removes heat from around the fusing unit and blows the ozone built up around the charge corona unit to the ozone filter (24 Vdc).	34
Clutches			
CL1	Registration Clutch	Transfers drive to the registration rollers.	9
CL2	1st Paper Feed Clutch	Transfers drive to the 1st paper feed roller.	11
CL3	2nd Paper Feed Clutch	Starts paper feed from the 2nd paper feed station.	16
CL4	Relay Roller Clutch	Drives the relay rollers for the 2nd paper feed station.	13
CL5	Toner Supply Clutch	Transfers drive to the toner supply roller.	7
Switches			
SW1	1st Paper Size Switch	Determines what size paper is in the cassette.	15
SW2	Right Cover Switch	Detects when the right cover is open.	14
SW3	2nd Tray Set Switch	Detects when the 2nd tray is slid out.	19
SW4	Manual Feed Table Switch	Detects when the manual feed table is open.	10
SW5	Cover Open Switch	Cuts the ac power line when the front cover is open.	32
SW6	Main Switch	Supplies power to the copier.	33
Sensors			
S1	Scanner Home Position Sensor	Informs the CPU when the 1st scanner is at the home position.	1

Symbol	Name	Function	Index No.
S2	Lens Home Position Sensor	Informs the CPU when the lens is at the home position (full size position).	3
S3	4th/5th Mirror Home Position Sensor	Informs the CPU when the 4th/5th mirrors assembly is at the home position (full size position).	6
S4	ADS Sensor	Sensor the background density of the original.	25
S5	Registration Sensor	Detects misfeeds.	18
S6	2nd Paper End Sensor	Informs the CPU when the upper paper tray runs out of paper.	17
S7	Image Density (ID) Sensor	Detects the density of the image on the drum to control the toner density.	21
S8	1st Paper End Sensor	Informs the CPU when the cassette runs out of paper.	12
S9	Exit Sensor	Detects misfeeds. Detects when the exit cover is open.	26
Printed Circuit Boards			
PCB1	Main Board	Controls all copier functions.	40
PCB2	Power Supply/ AC Drive Board	Drives all ac motors, the exposure lamp, fusing lamp, quenching lamp, and exhaust fan motor.	36
PCB3	Operation Panel Board	Informs the CPU of the selected modes and displays the situation on the panel.	29
Lamps			
L1	Erase Lamp	Discharges the drum outside of the image area. Provides leading/trailing edge, side, and editing erases.	22
L2	Quenching Lamp	Neutralizes any charge remaining on the drum surface after cleaning.	23
L3	Fusing Lamp	Provides heat to the hot roller.	24
L4	Exposure Lamp	Applies high intensity light to the original for exposure.	31
Power Packs			
P1	CC/Grid/Bias Power Pack	Provides high voltage for the charge corona, grid, and the development roller bias.	38
P2	TC/SC Power Pack	Provides high voltage for the transfer and separation corona.	39
Heaters			
H1	Anti-condensation Heater	Prevents moisture around the drum.	35

Symbol	Name	Function	Index No.
Counters			
CO1	Total Counter	Keeps track of the total number of copies made.	20
Others			
C1	Main Motor Capacitor	Protects the power supply/ac drive PCB from induced current.	37
TF1	Fusing Thermofuse	Provides back-up overheat protection in the fusing unit.	28
TF2	Optics Thermofuse	Provides back-up overheat protection around the exposure lamp.	30
TH1	Fusing Thermistor	Monitors the fusing temperature.	27

7. MAJOR DIFFERENCES BETWEEN THE A110 AND A173 MODELS

The A173 model was developed based on the A110 model.

The following table lists the major differences between the A173 model and the A110 model.

No.	Item	A173 model (Condor)	A110 model (Pigeon)
Overall			
1	Duplex Unit	Not available	Option
2	Color Toner	Color toner cannot be used with this machine.	Color toner can be used with the optional color development unit.
3	Zoom Range	61% to 156% (NOTE 1)	50% to 200%
4	Toner Saver Mode	Available (Refer to 5.4 of section 2.)	Not available
5	Drum Anti-condensation Heater	Standard	Option
6	SP Mode Access Procedure (Refer to 2.1 of section 4.)		
7	PCBs	There is one board which applies both ac and dc power.	There are separate ac drive and dc power supply boards.
8	Operation Panel	There is only one type of operation panel which covers both inch and mm versions.	There are separate inch and mm versions.
9	Transformer Connector	No connector change is needed.	The transformer connector position must be changed when the machine is installed in 230V or 240V areas.
Around the Drum			
10	Pre-transfer Lamp (PTL)	The PTL is not installed. (NOTE 2)	The PTL is installed.
11	Erase Lamp	10 blocks (Refer to 4.1.1 of section 2.)	16 blocks
Process Control			
12	V_L Correction	The lamp voltage is compensated using the ADS sensor. (Refer to 3.7.3 of section 2.)	The lamp voltage increases at the specified period.
13	Vp Correction	Vp correction is not done. (NOTE 3)	Vp correction is done.
14	Drum Wear Correction	Drum wear correction is not done. (NOTE 3)	Drum wear correction is done.

No.	Item	A173 model (Condor)	A110 model (Pigeon)
15	VSG Adjustment	VSG can automatically be adjusted using SP54.	There is a variable resistor on the main board to adjust VSG.
16	ADS Adjustment	ADS standard voltage can automatically be adjusted using SP56.	There is a variable resistor on the main board to adjust ADS standard voltage.
Development			
17	Development Clutch	There is no development clutch. The development roller, agitator, and paddle roller always rotate while the main motor rotates.	There is a development clutch which stops development unit drive while the machine is not in the copy cycle.
18	Developer and Toner	Same as the A7 (A069) and N440 (A085). The toner bottle is unique.	Same as the N220 (A048).
19	Toner End Recovery	The toner end condition is reset when the front door is opened and closed. (NOTE 4)	The machine checks toner end recovery after the toner the toner end condition using the ID sensor.
Cleaning			
20	Cleaning System	Counter blade system	Trailing blade with brush
21	Toner Overflow Detection	The machine counts the copy number and informs the operator when the specified numbers of copies has been made. (Refer to 8.3 of section 2.) (NOTE 5)	A photosensor is used to detect the toner overflow condition.
Paper Feed			
22	Separation Mechanism for the 1st Feed Station	Friction pad separation system	FRR system
23	Manual Feed Table Capacity	1 sheet	50 sheets
24	Tray Paper Size Identification	Customers should input the paper size at the operation panel.	Paper size switches are used to detect paper size in the 2nd paper feed tray.
Options			
25	ADF Interface Board	DF Interface Type B (A625) is needed to install a DF57 (A318).	The function of the board (A625) is included in the main board.

No.	Item	A173 model (Condor)	A110 model (Pigeon)
26	SP Mode Setting for ADF	If inch version paper is used, the SP1 setting should be changed from "0" to "1" when the DF57 is installed.	The operation panel informs the DF which type of paper is used.
27	Optional DC Power Supply Unit	An optional dc power supply unit is not needed.	An optional dc power supply unit is needed to install a DF.
28	Key Counter	To install the key counter, the following parts are required: Key Counter Bracket Key Counter Harness Two M3x6 Sunken Head Screws (Refer to 2.4 of section 3.)	Those parts are included in the main body.

NOTE: 1. The scanner motor stabilizer and the lens shading plates have been removed. If the zoom range has been enlarged using SP12, low image resolution may occur in the range between 157 and 200%, and uneven image density may occur in the range between 50 and 60%.

2. In normal conditions, this does not affect the copy image. However, if the machine is used in extremely high temperature and high humidity conditions, image density in halftone areas will be lighter, or the trailing edge of the copy might not be printed completely. If this problem occurs, install the optional PTL. (Refer to 2.6 of section 3.)

3. Due to the cleaning system change, Vp correction (grid voltage correction) and drum wear correction (lamp voltage correction) are not necessary for this model, because the drum wear is much less than with the previous cleaning system.

4. To avoid toner recovery misdetection, the machine does not monitor the toner recovery. To prevent the customers from resetting the toner end condition without replacing the toner cartridge, toner end recovery detection (same as the method for the A110 model) can be enabled by changing the SP38 setting.

5. The number of possible copies before "E70" blinks can be changed using SP116. (With the 6% chart, the toner tank can store used toner for more than 60K copies.)
   An optional toner overflow sensor (service parts) can be installed to detect the toner overflow condition. (Refer to 2.5 of section 3.)

SECTION 2

DETAILED SECTION DESCRIPTIONS

1. DRUM

1.1 OPC DRUM CHARACTERISTICS

An OPC has the characteristics of:

1. Being able to accept a high negative electrical charge in the dark. (The electrical resistance of a photoconductor is high in the absence of light.)
2. Dissipating the electrical charge when exposed to light. (Exposure to light greatly increases the conductivity of a photoconductor.)
3. Dissipating an amount of charge in direct proportion to the intensity of the light. That is, where stronger light is directed to the photoconductor surface, a smaller voltage remains on the OPC.
4. Being less sensitive to changes in temperature (when compared to selenium F type drums).
5. During the drum's life, drum residual voltage gradually increases and the photoconductive surface becomes worn. Therefore, some compensation for these characteristics is required.

1.2 DRUM UNIT

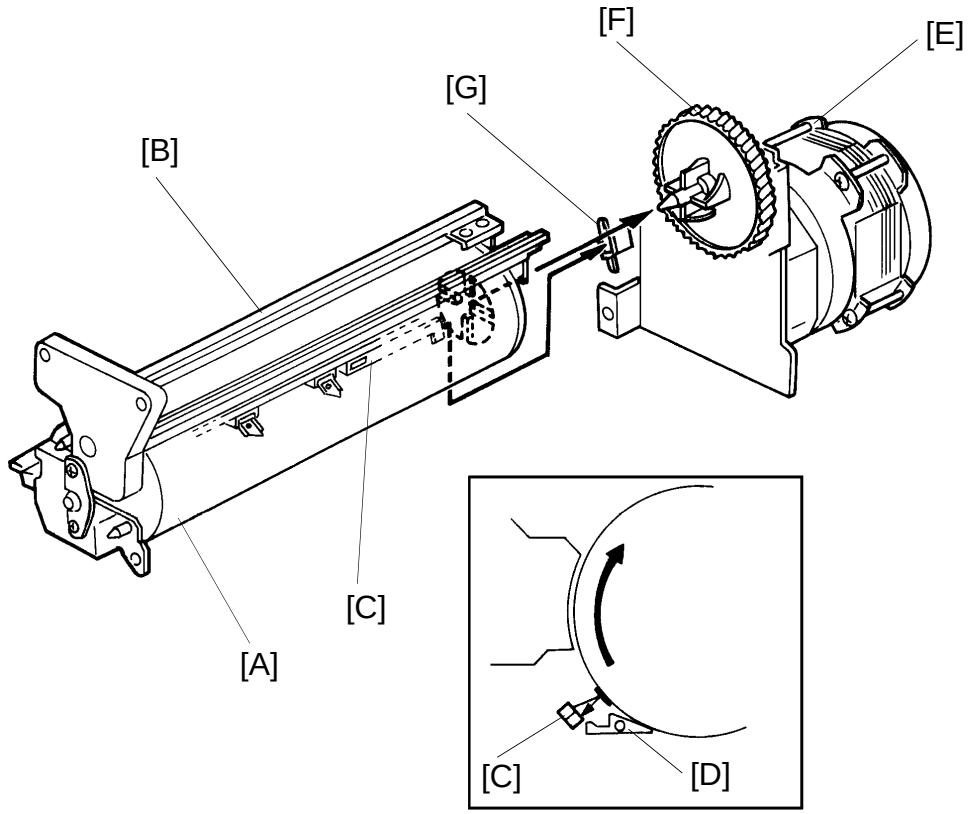

A173D500.img

An organic photoconductor drum [A] is used in this model.

A drum unit [B] is used to hold the drum to prevent stress on the drum. The drum unit consists of an OPC drum, ID sensor [C] and pick-off pawls [D]. When the drum is replaced, and/or the pick-off pawls and/or the ID sensor are cleaned, the drum unit must be removed from the copier as a unit.

The drum is driven by the main motor [E] through the main motor gear, a relay gear and the drum drive gear [F]. The pick-off pawls are always in contact with the drum surface. The ID sensor is electrically connected to the ID sensor connector [G].

2. DRUM CHARGE

2.1 OVERVIEW

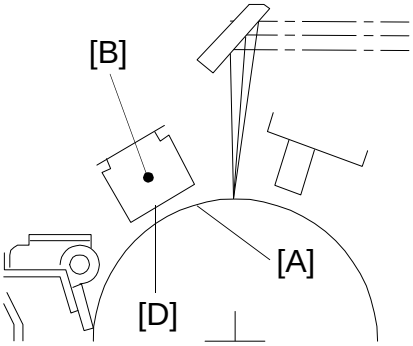

A173D501.wmf

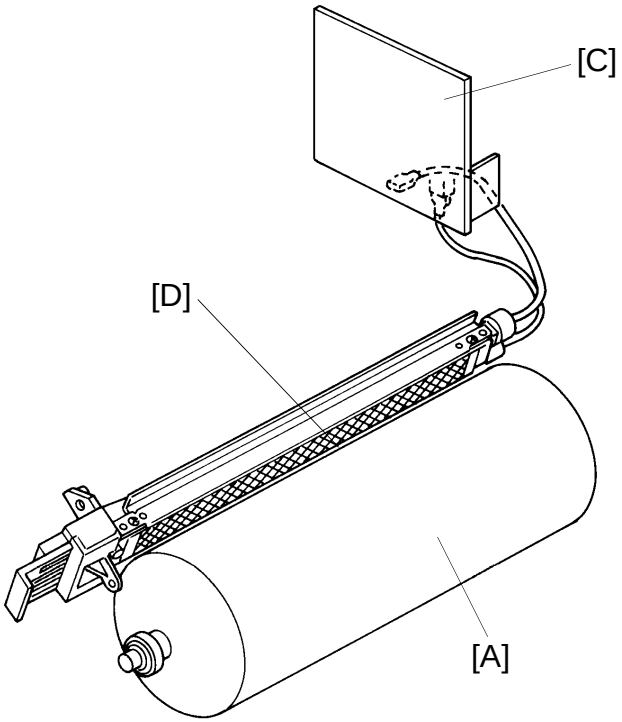

A173D502.img

This copier uses a single wire scorotron and a highly sensitive OPC drum [A]. The corona wire [B] generates a corona of negative ions when the CC/Grid/Bias power pack [C] applies a high voltage. The CC/Grid/Bias power pack also applies a negative high voltage to a stainless steel grid plate [D]. This insures that the drum coating receives a uniform negative charge as it rotates past the corona unit.

The exhaust blower, located above the copy exit, causes a flow of air from the upper area of the development unit through the charge corona unit. This prevents uneven build-up of negative ions that can cause uneven image density. The exhaust blower runs at half speed when in the stand-by condition and runs at full speed while copying.

The exhaust blower has an ozone filter (active carbon) which absorbs ozone (O_3) generated by the corona charge. The ozone filter decreases in efficiency over time as it adsorbs ozone. The ozone filter should be replaced every 60,000 copies.

The flow of air around the charge corona wire may deposit paper dust or toner particles on the corona wire. These particles may interfere with charging and cause low density bands on copies. The wire cleaner cleans the corona wire when the operator slides the corona unit in and out.

2.2 CHARGE CORONA WIRE CLEANER MECHANISM

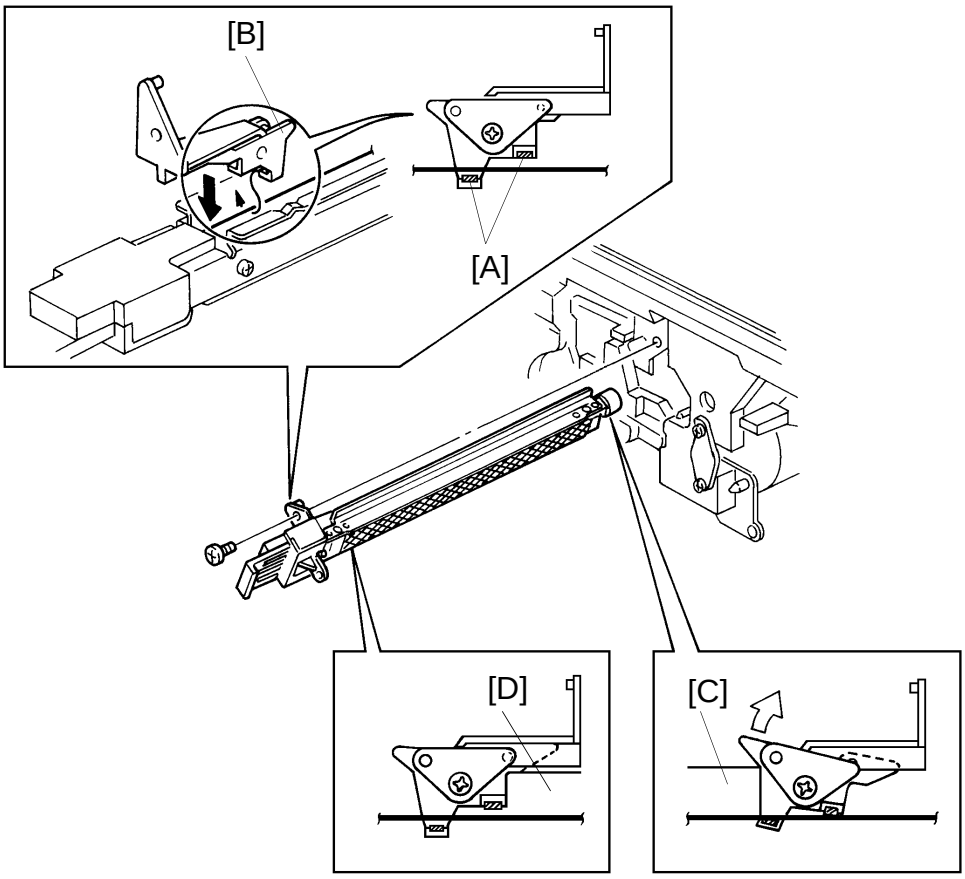

A173D503.img

Pads [A] above and below the charge corona wire clean the wire as the charge unit is manually slid in after it has been pulled out.

The cleaner pad bracket [B] rotates when the charge unit is fully extended and the bracket is pulled up against the rear block [C]. This moves the pads against the corona wire (see illustration). If the charge unit is not fully extended, the pads do not touch the corona wire.

The pads move away from the wire when the charge unit is fully inserted and the cleaning bracket is pushed against the front block [D].

After copier installation, the key operator should be instructed how to use this mechanism when copies have white streaks.

2.3 CHARGE CORONA CIRCUIT

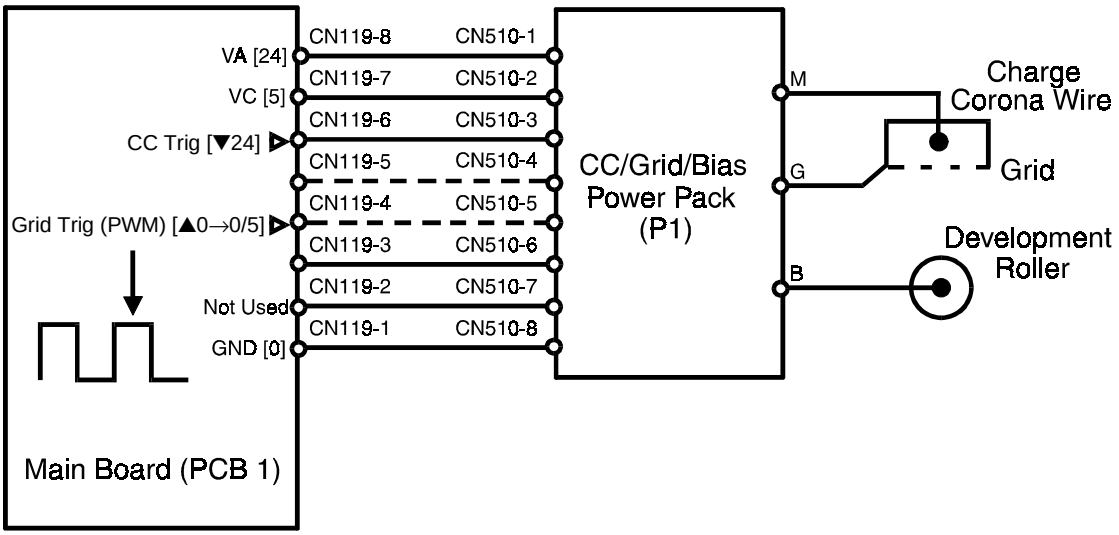

A173D504.wmf

The main board supplies +24 volts to the CC/Grid/Bias power pack at CN510-1 as the power supply source. After the Start key is pressed, the CPU drops CN119-6 from +24 volts to 0 volts. This energizes the charge corona circuit within the CC/Grid/Bias power pack, which applies a high negative voltage of approximately –5.6 kV to the charge corona wire. The corona wire then generates a negative corona charge.

The grid limits the charge voltage to ensure that the charge does not fluctuate and an even charge is applied to the drum surface.

The grid trigger pulse applied to CN510-5 is a pulse width modulated signal (PWM signal). This signal is not only a trigger signal; it also changes the voltage level of the grid. As the width of the pulse applied increases, the voltage of the grid also increases.

2.4 GRID VOLTAGE CORRECTION (VR CORRECTION)

During the drum's life, the drum may fatigue electrically and residual voltage (Vr) on the drum may gradually increase. When this happens, the corona charged voltage on the drum is not discharged enough in the quenching and exposure processes. As a result, after the development bias is applied in the development process, the background area of the original on the drum may attract some toner. This may cause dirty background on copies. The Vr correction prevents this problem as follows.

A pattern (Vr pattern) is developed on the drum every 1000 copies and its reflectivity is detected by the ID sensor to measure the residual voltage. This is called residual voltage detection. If the reflectivity is low, the residual voltage will be high. When the Vr pattern is developed, all blocks of the erase lamp turn on, the grid voltage is –500 volts, and the development bias voltage is 0 volt.

The CPU determines what level of Vr correction is necessary depending on the output (Vr ratio [L]) from the ID sensor.

$$L = \frac{Vrp}{Vsg} \times 100(\%)$$

Vrp: ID sensor output for the Vr pattern
Vsg: ID sensor output for the bare drum

The CPU increases the development bias voltage depending on the Vr ratio to prevent dirty background on copies. (See section 5-3: "Development Bias for Image Density Control" for more information.) The CPU also increases the grid voltage to ensure proper image density depending on the Vr ratio. (See section 2-5, "Grid Voltage Control".)

The current Vr ratio is displayed with SP67.

2.5 GRID VOLTAGE CONTROL

The main board controls the grid voltage for copying and for toner density detection through the CC/Grid/Bias power pack. As the grid voltage for the image density control becomes less, the copy image becomes lighter and vice versa.

As the grid voltage for the toner density detection becomes less, the toner concentration in the developer becomes higher and vice versa.

The grid voltage is based on the standard grid voltage and the correction factor as follows.

2.5.1 Image Density Control

Grid Voltage = Standard image density grid voltage (–760 volts [SP60 = 9])
+
Vr correction factor

Vr Correction Factor

L	Change of grid voltage
100 to 89 (%)	±0 (volt)
88 to 76 (%)	–40 (volts)
75 to 62 (%)	–80 (volts)
61 to 45 (%)	–120 (volts)
44 to 0 (%)	–160 (volts)

L = Vrp/Vsg x 100 (Vr correction ratio)
Vrp: ID sensor output for the Vr correction pattern
Vsg: ID sensor output for the bare drum

NOTE: The grid voltage for areas between copies (non-image area) is 0 volt (fixed).

2.5.2 Vr Detection

Grid Voltage = –500 volts (fixed)

2.5.3 Toner Density Detection

Grid Voltage = –560 volts + Vp correction factor
+
ID sensor bias setting (SP33)

3. OPTICS

3.1 OVERVIEW

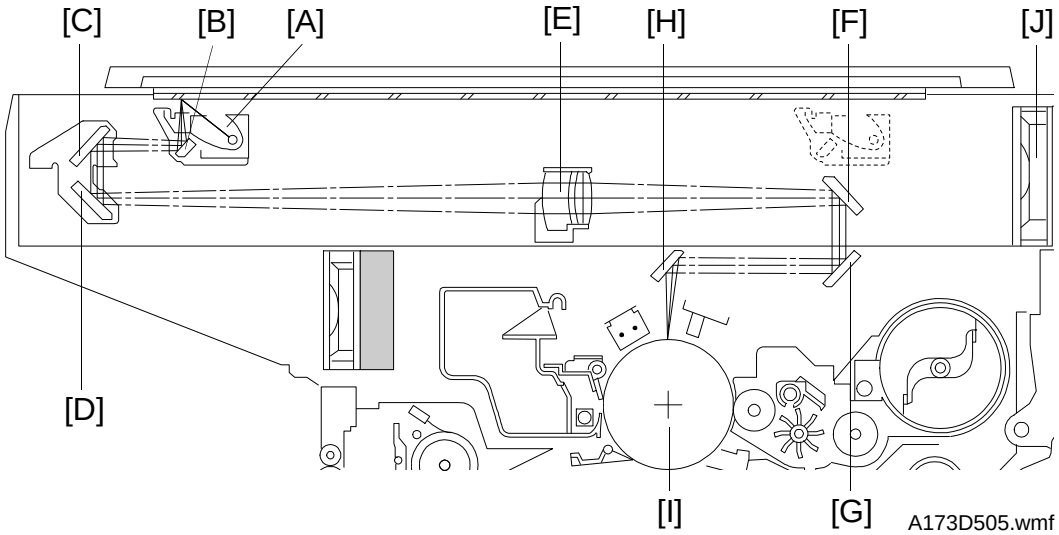

During the copy cycle, an image of the original is reflected onto the drum surface through the optics assembly as follows.

Light Path:

Exposure Lamp [A] → Original → First Mirror [B] → Second Mirror [C] → Third Mirror [D] → Lens [E] → Fourth Mirror [F] → Fifth Mirror [G] → Sixth Mirror [H] → Drum [I]

The optics cooling fan [J] draws cool air into the optics cavity. The air flows from the right to the left in the optics cavity and exhausts through the vents in the left cover. These fans operate during the copy cycle.

This copier has thirteen standard reproduction ratios: Seven reduction ratios, five enlargement ratios, and full size. It also has a zoom function. The operator can change the reproduction ratio in one percent steps from 61% to 156%.

Stepper motors are used to change the positions of the lens and mirrors. Separate motors are used because the wide range of reproduction ratios makes it mechanically difficult for one motor to position both the lens and mirrors. A stepper motor is also used to drive the scanner. This motor changes the scanner speed depending on the reproduction ratio.

The thermofuse opens at 104°C and removes ac power to the exposure lamp to prevent overheating.

3.2 SCANNER DRIVE

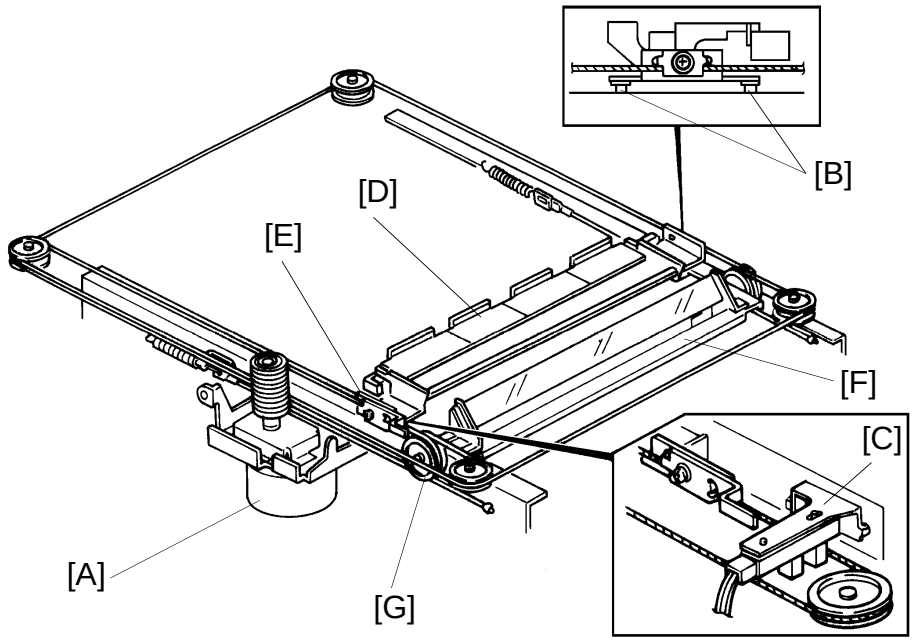

A173D506.img

This model uses a stepper motor [A] to drive the scanners. Both ends of each scanner are driven to prevent skewing. The scanners have sliders [B], which ride on guide rails.

The scanner home position is detected by the home position sensor [C]. The scanner return position is determined by counting the scanner motor drive pulses.

The first scanner [D], which consists of the exposure lamp and the first mirror, is connected to the scanner drive wire by the wire clamps [E]. The second scanner [F], which consists of the second and third mirrors, is connected to the scanner drive wire by movable pulleys (the second scanner pulley [G]).

The pulley moves the second scanner at half the velocity of the first scanner. This is to maintain the focal distance between the original and the lens during scanning. This relationship can be expressed as:

V1r	= 2 (V2r) = VD/r
where r	= Reproduction ratio
V1r	= First scanner velocity (when the reproduction ratio is "r")
V2r	= Second scanner velocity (when the reproduction ratio is "r")
VD	= Drum peripheral velocity (120 mm/s)

3.3 LENS DRIVE

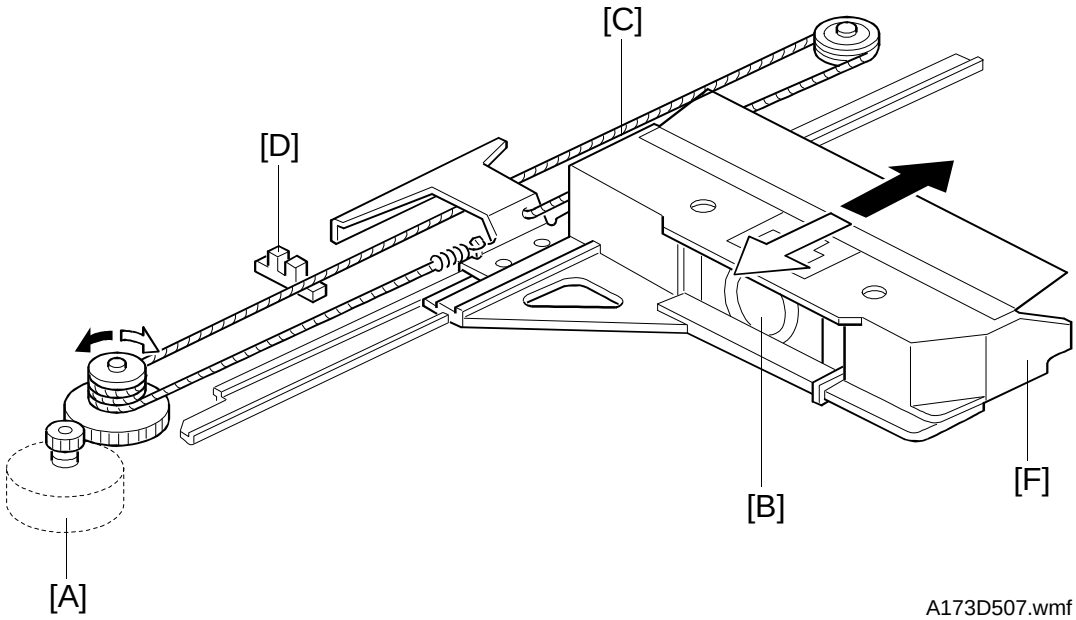

: Reduction

: Enlargement

3.3.1 Lens Drive

The lens motor [A] (a stepper motor) changes the lens [B] position through the lens drive wire [C] depending on the selected reproduction ratio to provide the proper optical distance between the lens and the drum surface.

The rotation of the lens drive pulley moves the lens back and forth in discrete steps. The home position of the lens is detected by the home position sensor [D]. The main board keeps track of the lens position based on the number of pulses sent to the lens motor.

3.3.2 Lens Positioning

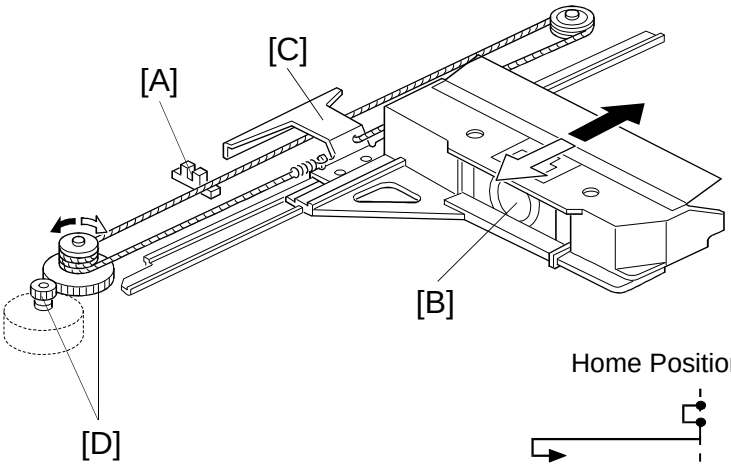

A173D507.wmf

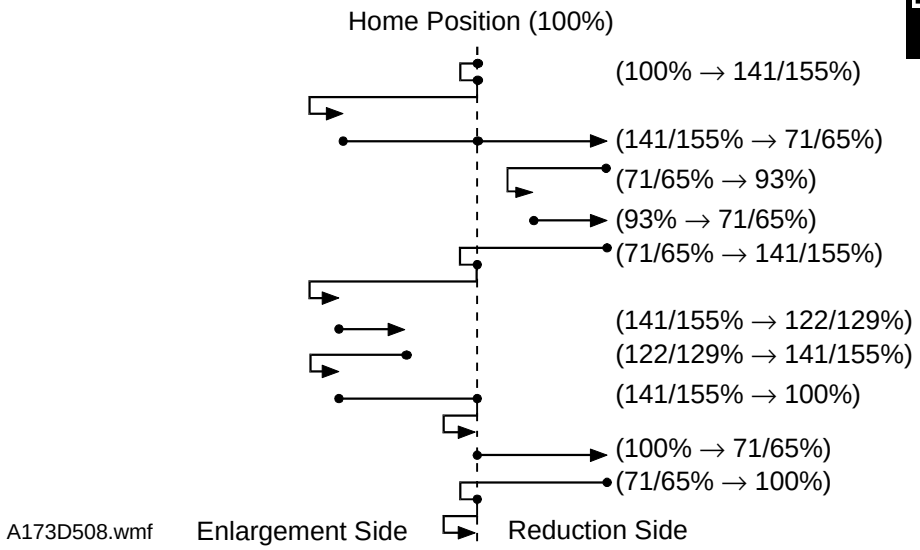

A173D508.wmf

The lens home position sensor [A] informs the main board when the lens is at full size position (home position). The main board determines the lens stop position in reduction and enlargement modes by counting the number of pulses the motor makes with reference to the lens home position. When a new reproduction ratio is selected, the lens [B] moves directly to the required position.

The lens home position is registered each time the lens starts from or passes through the lens home position sensor. As the lens moves from the enlargement side to the reduction side, the sensor registers the home position. This occurs when the actuator plate [C] enters the lens home position sensor.

To ensure correct lens positioning, the home position is registered only when the actuator passes the sensor from left to right (enlargement side to reduction side). When the lens moves from the reduction side to the enlargement side, the actuator overshoots the home position once, then moves back to register the home position.

The lens always stops while moving from left to right (as viewed from the front) to minimize the error caused by mechanical play in the drive gears [D].

3.4 4TH AND 5TH MIRROR DRIVE

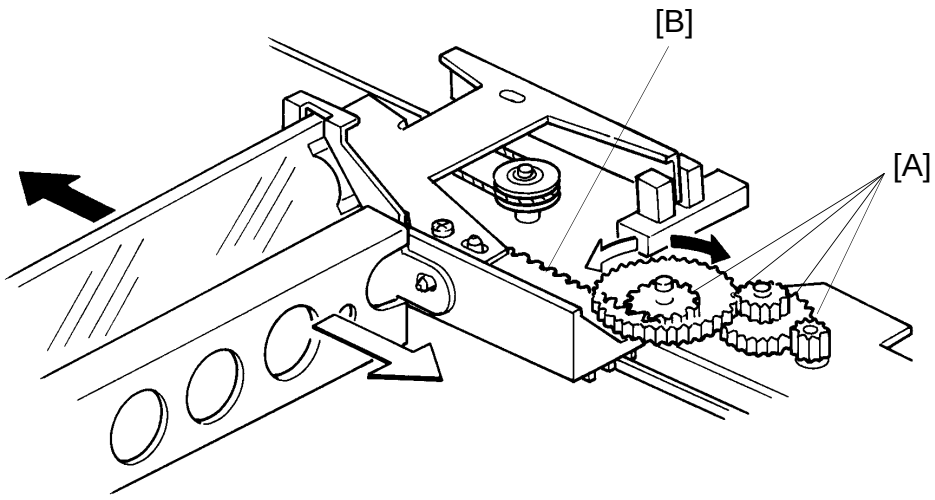

A173D509.img

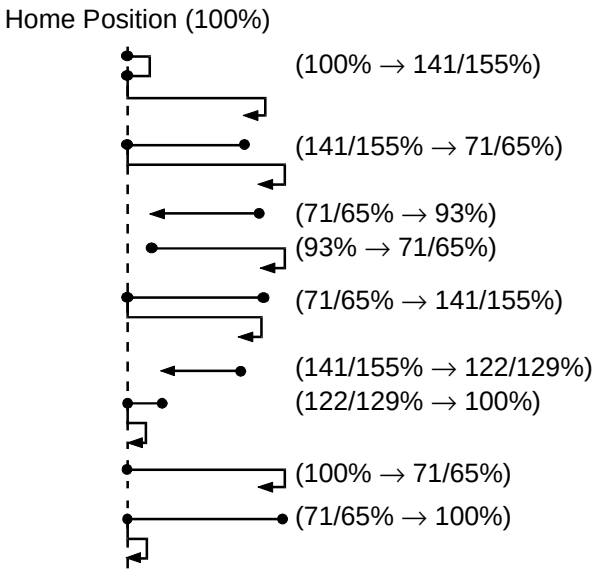

A173D510.wmf

3.4.1 Drive

The 4th/5th mirror drive motor (a stepper motor) changes the 4th/5th mirror assembly position through the pinion gears [A] and the rack gear [B] depending on the selected reproduction ratio to provide the proper optical distance between the lens and drum surface.

3.4.2 Positioning

The positioning mechanism is similar to that of lens positioning, as shown in the above positioning chart. The scanner always stops while moving from right to left (as viewed from the front).

3.5 AUTOMATIC IMAGE DENSITY DETECTION

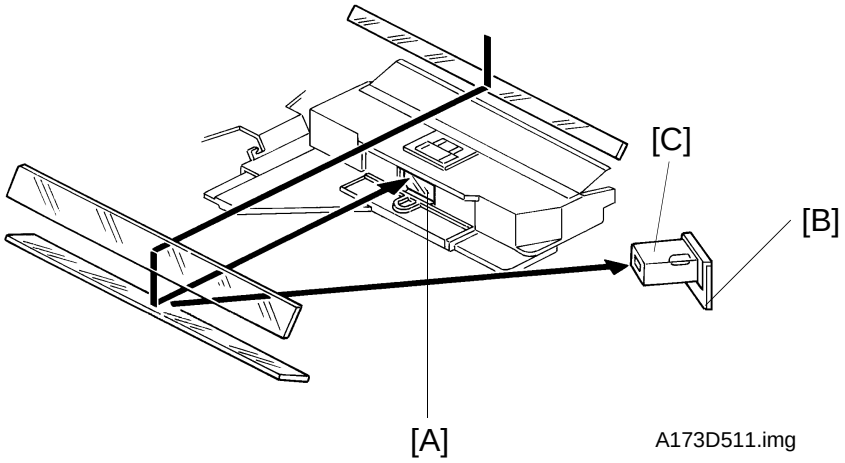

A173D511.img

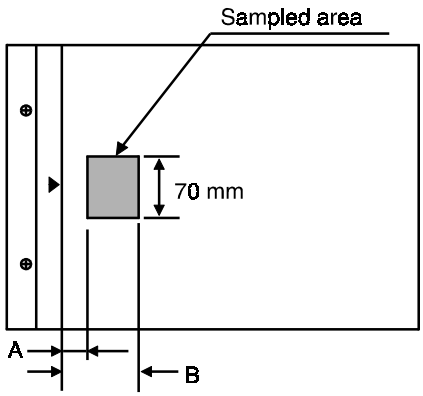

A173D512.wmf

Light from the exposure lamp is reflected from the original and travels to the lens [A] via the mirrors. The auto ID sensor [B], a photodiode, is mounted on the upper front frame. The sensor cover [C] has a hole in it to allow light to fall directly onto the sensor. Sampling starts 10 millimeters (A) from the leading edge of the original and continues to 50 millimeters (B) from the leading edge of original in full size mode. These lengths will vary depending on the selected reproduction ratio.

The lengths "A" and "B" for each reproduction ratio are calculated as follows:

$$A = \frac{10\ mm}{\text{Reproduction Ratio (\%)}} \times 100 \qquad B = \frac{50\ mm}{\text{Reproduction Ratio (\%)}} \times 100$$

The photosensor circuit converts the light intensity to a voltage. The detected voltage is amplified and sent to the main PCB. The CPU stores the voltage of each sampled point in RAM. It then computes the image density of the original from the maximum sample voltage and changes the development bias accordingly. (See "Development Bias for Image Density Control" for details.) The exposure lamp voltage is affected by the image density of the original.

3.6 EXPOSURE LAMP VOLTAGE CORRECTION

To maintain good copy quality, the exposure lamp voltage is changed by the following:

- V_L correction
- Reproduction ratio correction

3.6.1 V_L Correction

The light intensity may decrease because of dust accumulated on the optics parts. This may cause dirty background on copies. To compensate for this sympton, V_L correction is done.

3.6.2 Reproduction Ratio Correction

To compensate for the change in the concentration of light on the drum, the exposure lamp voltage increases depending on the selected reproduction ratio (see section 3-7, "Exposure Lamp Voltage Control").

3.7 EXPOSURE LAMP VOLTAGE CONTROL

The main board controls the exposure lamp voltage through the ac drive board. The exposure lamp voltage is based on the base lamp voltage and various correction factors.

The exposure lamp voltage is determined with the following formula.

Exposure lamp voltage = Base exposure lamp voltage factor
+
Image Density Setting Factor (Manual ID Mode Only)
+
V_L correction factor
+
Reproduction ratio correction factor

3.7.1 Base Lamp Voltage

- 220 V Machines = 126 V (Default)
  The voltage can be changed to any value between 101 V and 150 V in 1 V steps using SP48.
- 115 V Machines = 63 V (Default)
  The voltage can be changed to any value between 50.5 V and 75 V in 0.5 V steps using SP48.

3.7.2 Image Density Setting Factor (Manual ID Mode Only)

Manual ID Level	1	2	3	4	5	6	7
Lamp Voltage Change Value (220 V Machines)	–6 V	–6 V	–3 V	±0 V	+3 V	+3 V	+6 V
Lamp Voltage Change Value (115 V Machines)	–3 V	–3 V	–1.5 V	±0 V	+1.5 V	+1.5 V	+3 V

The above table shows changes in the exposure lamp voltage in manual image density mode.

3.7.3 V_L Correction Factor

When the main switch is turned on, if the fusing temperature is lower than 80°C, the machine checks the voltage from the auto image density sensor which receives the light reflected from the white plate located under the left scale. Depending on the voltage, the exposure lamp voltage is changed (Auto V_L Correction). The lamp voltage correction value can be calculated with the following formula:

$$V_L \text{ Correction Voltage} = \alpha \times \frac{\text{ADS Sensor Standard Voltage (2.5 V)} - \text{ADS Sensor Output}}{0.08}$$

α = 0.5 (110 V machines)
α = 1.0 (220 V machines)

If a setting of 1 to 7 is selected with SP61, the exposure lamp data increases by +0.5V at the selected interval with the machine on time.

3.7.4 Reproduction Ratio Correction Factor

Reproduction ratio	Change of exposure lamp voltage	
	(220 V machines)	(110 V machines)
50 to 61%	+2 V	+1 V
62 to 139%	±0 V	+0 V
140 to 159%	+2 V	+1 V
160 to 179%	+6 V	+3 V
180 to 200%	+10 V	+5 V

The exposure lamp data increases depending on the selected reproduction ratio as shown in the above table.

3.8 EXPOSURE LAMP CONTROL

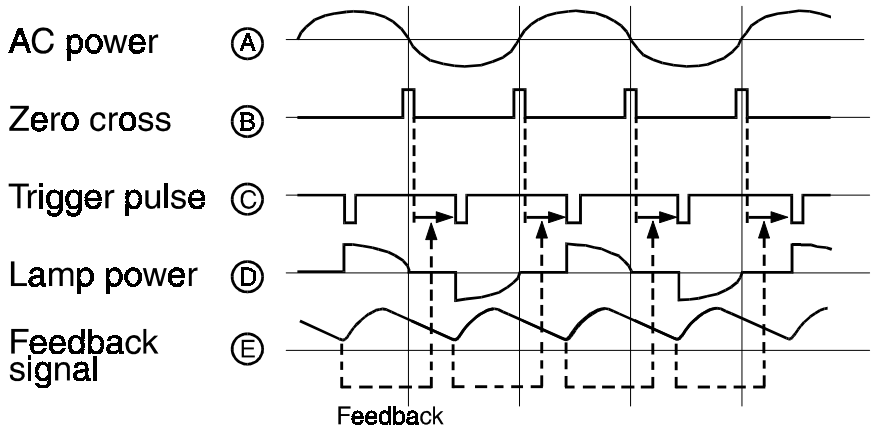

A173D513.wmf

The main board sends lamp trigger pulses to the power supply/ac drive board. Then this board provides ac power to the exposure lamp at the trailing edge of each trigger pulse.

The CPU changes the timing of the trigger pulses depending on the VL correction factor, reproduction ratio, and so on. To increase the lamp voltage the CPU sends the trigger pulses earlier so that more ac power is applied to the exposure lamp. This feedback control is performed instantly; so, the lamp voltage is always stable even under fluctuating ac power conditions.

The voltage applied to the exposure lamp can be changed with SP48 (Light Intensity Adjustment). The ADS voltage adjustment (SP56) must be done immediately after the light intensity adjustment is done.

4. ERASE

4.1 OVERVIEW

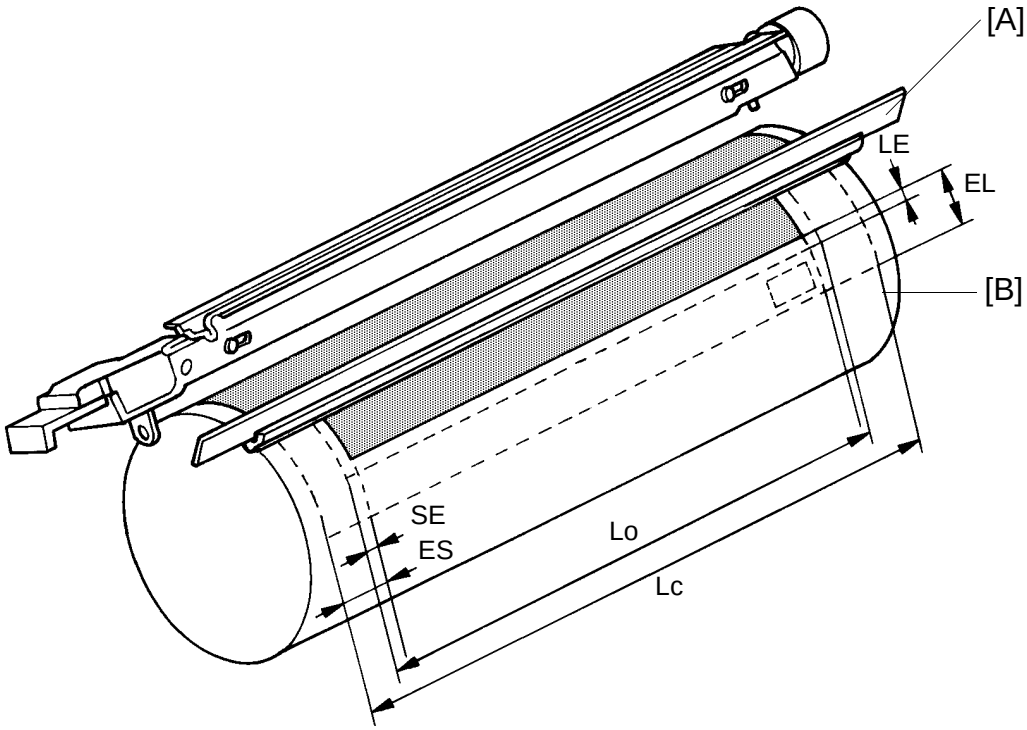

A173D514.img

LE:	Lead edge erase margin	3.5 ±1.5 mm
SE:	Side erase margin	2.0 ±2.0 mm on each side; total of both sides 4 mm or less
LO:	Original width	
LC:	Charged width of drum	
EL:	Lead edge erase	
ES:	Side erase	

The erase lamp [A] consists of a line of LEDs (10 blocks) extending across the full width of the drum [B].

The erase lamp has three functions: lead edge erase, side erase, and trail edge erase. Trail edge erase begins after the trailing edge of the copy paper; therefore, the trailing edge of the copy will not be erased.

4.1.1 Lead Edge Erase

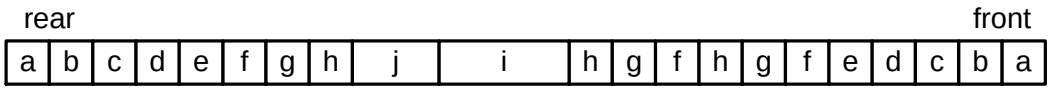

The entire line of LEDs turns on when the main motor turns on. They stay on until the erase margin slightly overlaps the lead edge of the original image area on the drum (the amount of overlap depends on the lead edge erase margin). This prevents the toner density sensor pattern from being developed every copy cycle and the shadow of the original edge from being developed on the paper. At this point, side erase starts. The width of the lead edge erase margin can be adjusted using SP41.

4.1.2 Side Erase

Based on the combination of copy paper size and reproduction ratio, the LEDs turn on in blocks (labeled "a" – "j" above). This reduces toner consumption and drum cleaning load.

The following table shows which blocks of erase lamp LEDs turn on depending on the paper size and the reproduction ratio:

Blocks on	Paper size	Reproduction ratio (%)
None	A3, A4T	97%~200%
a	11 x 17, 11 x 15, 11 x 8 1/2, 8K, 16KT	89%~96%
a~b	B4, B5T	81%~88%
a~c		75%~80%
a~d	A4, A5T, 8 1/2 X 11, 81/2 X 14, 8 1/2 X13, 5 1/2 X 8 1/2T, 8 1/4 X14, 8 1/4 X13, 8 X13, 8 X 10, 8 X11	63%~74%
a~e	16K	57%~62%
a~f	B5	55%~56%
a~g		50%~54%
a~h	A5, 5 1/2 X 8 1/2	
a~i	For Toner Density Detection	
a~j (all)	Lead Edge Erase, Vr Detection	

4.1.3 Trail Edge Erase

The entire line of LEDs turns on after the trailing edge of the latent image has passed. Therefore, a trailing erase margin cannot be observed on the copy. The LEDs stay on to erase the leading edge of the latent image in the next copy cycle. After the final copy, the erase lamps turn off at the same time as the main motor.

4.1.4 Editing Mode Erase

When copying a thick book original, the binding margin at the center and the edges may appear dirty on copies. To prevent this, the erase center mode, erase edge mode, or erase center and edge mode can be selected as follows:

1. Press the Function key.
2. Press one of the following numbers:

Erase center.....	Press "4"
Erase edge.....	Press "3"
Erase center and edge.....	Press "5"

a) Center Erase

The erase margin is made all the time when the entire line of LEDs is on. The margin can be changed with SP26 as shown.

SP setting (SP26)	Margin of the center
0	20 mm
1	10 mm
2	15 mm
3	25 mm

(Factory setting: SP26 = 0)

b) Lead and Trail Edge Erase

The lead and trail edge erase margin is made all the time when the entire line of LEDs is on. The margin can be changed with SP18 as shown.

SP setting (SP18)	Margin of the lead and trail edges
0	10 mm
1	5 mm
2	15 mm
3	20 mm

(Factory setting: SP18 = 0)

c) Side Edge Erase

The side edge erase margin is made when certain blocks of LEDs turn on (depending on the paper size). The margin can be changed with SP13. The margin of the side edges depends on the paper size and reproduction ratio.

The table on the right shows the margin of the side edges for the various paper sizes in the full size copy mode.

Paper Size	Margin of side edges	
	SP13 = 0	SP13 = 1
A3, A4, Non-standard	13 mm	5.5 mm
11" x 17", 11" x 8.5", 11" x 15"	11 mm	3.5 mm
B4, B5, 10" x 14"	13.5 mm	7.5 mm
8.5" x 14", 8.5" x 13", 8.5" x 11", 8.5" x 5.5"	12 mm	6 mm
A4R, A5, 8" x 13", 8" x 10.5", 8" x 10"	11 mm	6 mm
B5R, B6	10 mm	5 mm

(Factory setting: SP13 = 0)

4.1.5 Erase During Detection Cycles

During the toner density detection cycle (once every ten copy cycles), a block of erase lamps (labeled "j" above) turns off long enough for the sensor pattern to be developed.
The entire line of LEDs turns on when the residual voltage on the OPC drum is being detected (Vr detection).

5. DEVELOPMENT

5.1 OVERVIEW

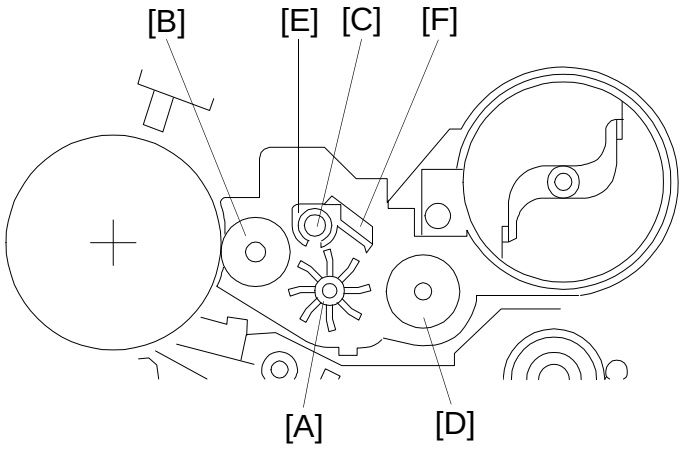

A173D515.wmf

When the main motor turns on, the paddle roller [A] development roller [B] the auger [C], and the agitator [D] start turning. The paddle roller picks up developer in its paddles and transports it to the development roller. Internal permanent magnets in the development roller attract the developer to the development roller sleeve.

The turning sleeve of the development roller then carries the developer past the doctor blade [E]. The doctor blade trims the developer to the desired thickness and creates backspill to the cross-mixing mechanism.

The development roller continues to turn, carrying the developer to the drum. When the developer brush contacts the drum surface, the negatively charged areas of the drum surface attract and hold the positively charged toner. In this way, the latent image is developed.

The development roller is given a negative bias to prevent toner from being attracted to non-image areas on the drum that may have residual negative charge. The bias also controls image density.

After turning about 100 degrees more, the development roller releases the developer to the developer tank. The developer is agitated by the paddle roller, agitator [D], and the cross-mixing mechanism.

Rotation of the paddle roller and development roller tend to cause air pressure inside the unit to become higher than the air pressure around the development unit. A hole, fitted with a filter [F], has been added to the top of the unit to relieve air pressure and to minimize toner scattering.

5.2 CROSS-MIXING

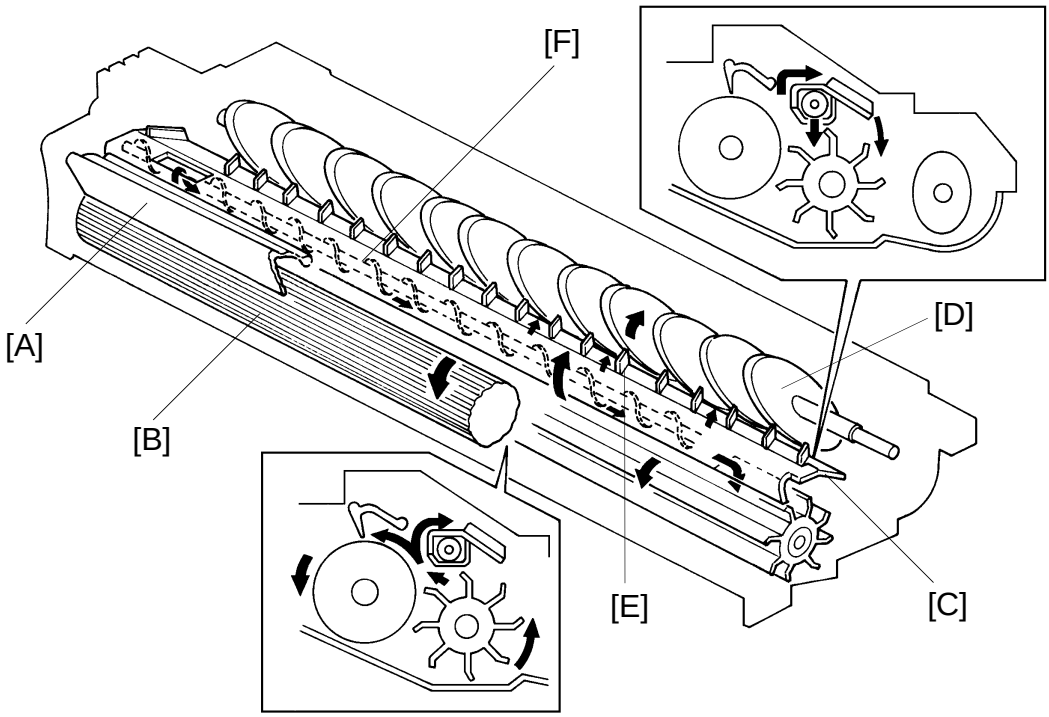

A173D516.img

This copier uses a standard cross-mixing mechanism to keep the toner and developer evenly mixed. It also helps agitate the developer to prevent developer clumps from forming and helps create the triboelectric charge.

The developer on the turning development roller is split into two parts by the doctor blade [A]. The part that stays on the development roller [B] forms the magnetic brush and develops the latent image on the drum. The part that is trimmed off by the doctor blade goes to the backspill plate [C].

As the developer slides down the backspill plate to the agitator [D], the mixing vanes [E] move it slightly toward the rear of the unit. Part of the developer falls into the auger inlet and is transported to the front of the unit by the auger [F].

The agitator moves the developer slightly to the front as it turns. The effect of this movement is that the developer stays level in the development unit.

5.3 DEVELOPMENT BIAS FOR IMAGE DENSITY CONTROL

Image density is controlled by changing two items: (1) the strength of the bias voltage applied to the development roller sleeve, and (2) the strength of the voltage applied to the exposure lamp.

Applying a bias voltage to the development sleeve reduces the potential between the development roller and the drum, thereby reducing the amount of toner transferred. As the bias voltage becomes greater, the copy image becomes lighter. Similarly, increasing the voltage to the exposure lamp causes an increase in light intensity which also results in lighter copies.

The method of control is different depending on whether the image density is manually selected or the automatic ID mode is used.

The development bias applied to the development roller sleeve has the following three factors:

Development bias voltage = Base bias voltage factor
(Manual or automatic image density control)
+
Base bias voltage adjustment factor
+
Vr correction factor

The base bias voltage for non-image areas (between copies) is –160 volts. The above correction factors are also applied.

5.3.1 Base Bias Voltage Factor in Manual Image Density Control

Darker ⟷ Lighter

Manual ID level	1	2	3	4	5	6	7
Base bias voltage	–120	–160	–160	–160	–160	–200	–240

In manual ID control mode, the base bias voltage depends on the manually selected ID level. The voltage applied at each ID level is shown in the above table. The base exposure lamp voltage also varies depending on the manual ID level. (See "Exposure Lamp Voltage Control" for more information.)

5.3.2 Base Bias Voltage Factor in Automatic Image Density Control

In automatic image density control mode, the base exposure lamp voltage is fixed to level 4 of the manual ID setting. (See "Exposure Lamp Voltage Control" for more information.) Image density is controlled by changing only the base bias voltage.

The base bias voltage depends on the background image density of the original, which is measured using the auto ID sensor. (See "Automatic Image Density Detection" for more information.)

The CPU checks the voltage output from the automatic ID circuit. This circuit has a peak hold function. The peak hold voltage corresponds to the maximum reflectivity of the original. The CPU then determines the proper base bias level with reference to the peak hold voltage.

The following table gives the base bias voltages at each ADS output level.

The base bias voltage depends on the setting of SP34 as shown in the following table.

K	Base bias voltage	
	lighter (SP34 = 2)	Normal or Darker (SP34 = 0 or 1)
$K \geq TL1$	–200 volts	–160 volts
$0.80 > K \geq 0.75$	–240 volts	–200 volts
$0.75 > K \geq 0.70$	–280 volts	–240 volts
$0.70 > K \geq 0.60$	–320 volts	–280 volts
$0.60 > K \geq 0.29$	–360 volts	–320 volts
$0.29 > K$	–380 volts	–340 volts

$$K = \frac{\text{ADS Output Voltage (Peak Hold Voltage)}}{\text{ADS Reference Voltage (SP56)}}$$

5.3.3 Base Bias Voltage Adjustment Factor

Base Bias Adjustment (SP37)

Image density	SP setting (SP37)	Change of base bias voltage
Normal	0	±0 volts
Darkest	1	+40 volts
Darker	2	+20 volts
Lighter	3	–20 volts
Lightest	4	–40 volts

The base bias voltage can be changed with SP37 to adjust the image density level. The above table gives the base bias voltage for each SP mode setting. This adjustment should be done only when the exposure lamp voltage adjustment (SP48) fails to achieve the desired image density.

5.3.4 Vr Correction Factor

As the OPC drum is used, drum residual voltage (Vr) gradually increases. Vr correction compensates for residual voltage on the drum. Vr correction is done every 1,000 copies based on the data in the drum counter (SP69) and the Vr correction ratio (L) (SP67). The following chart shows how the bias voltage changes depending on the Vr correction ratio (L).

Vr Correction Factor

L	Change of bias voltage
100 to 89 (%)	±0 (volts)
88 to 76 (%)	–40 (volts)
75 to 62 (%)	–80 (volts)
61 to 45 (%)	–120 (volts)
44 to 0 (%)	–160 (volts)

NOTE: L = Vrp/Vsg x 100 (Vr correction ratio)

Vrp: ID sensor output for the Vr correction pattern
Vsg: ID sensor output for the bare drum

When the Vr correction is made every 1,000 copies, all blocks of the erase lamp turn on and the development bias becomes 0 volt to develop the Vr correction pattern.

5.4 TONER SAVER MODE

If toner saver mode is selected on the operation panel, the bias voltage, grid voltage, and lamp voltage are charged as follows:

Bias voltage = Normal –40 V (This can be changed using SP 36.)
Grid voltage = Normal +160 V
Lamp voltage = Normal –3 V (115 V machines), –6 V (220 V machines)

As a result, the toner consumption of high original density areas is reduced. (The image will slightly be lighter than normal mode.)

The toner saving ratio can be selected by SP36 as shown in the following table.

SP36	Bias	Toner Save (Design Target)
0 (Default)	Normal –40	▲ 30%
1	Normal	▲ 20%
2	Normal –80	▲ 40%

NOTE: The toner saving ratio in the above table are standard values using A4 6% original measured in laboratory tests under controlled conditions. The actual ratios will vary depending on environmental conditions, copy modes, original, and paper.

5.5 DEVELOPMENT BIAS CIRCUIT

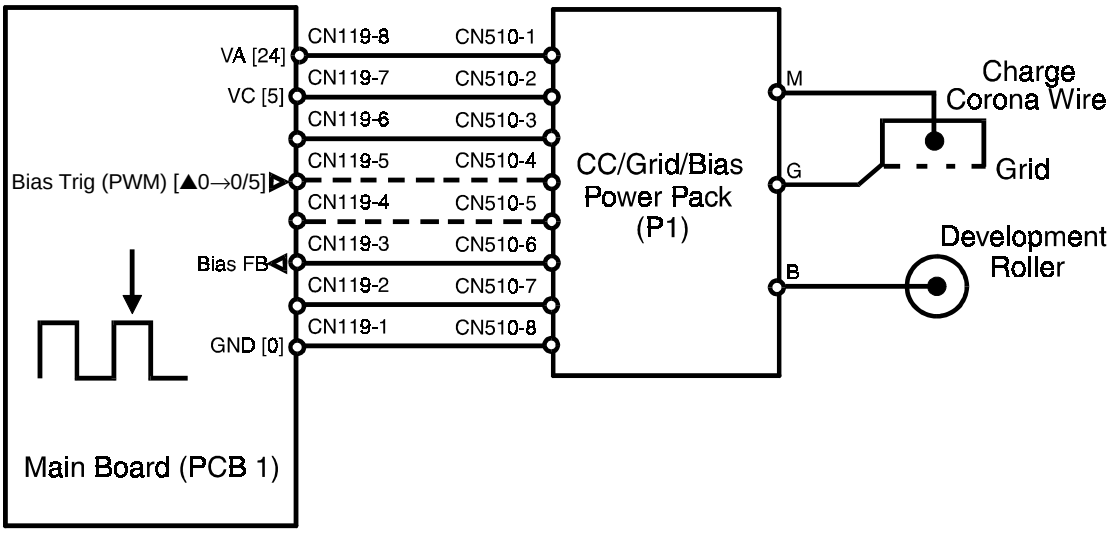

A173D517.wmf

The main board supplies +24 volts to the CC/Grid/Bias power pack at CN510-1 as the power supply source. When the Start key is pressed, the CPU starts sending the bias trigger pulse to CN510-4. This energizes the development bias circuit within the CC/Grid/Bias power pack, which applies a high negative voltage to the development roller. The development bias is applied whenever the drum is rotating except when the Vr pattern is developed.

The bias trigger pulse applied to CN510-4 is a pulse width modulated signal (PWM signal). This signal is also used to change the voltage level of the development roller. As the width of the trigger pulses increases, the voltage of the development roller also increases. The CPU monitors the development bias voltage at CN510-6 and controls the width of the bias trigger pulses based on this feedback.

6. TONER DENSITY DETECTION AND TONER SUPPLY

6.1 DETECT SUPPLY MODE

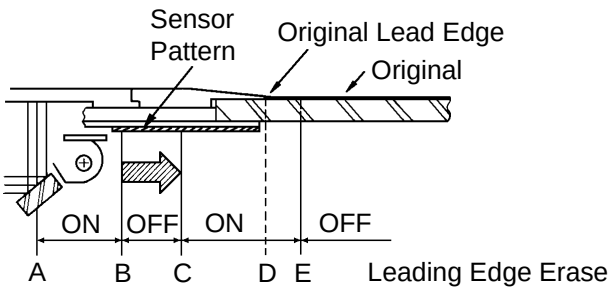

A173D518.img

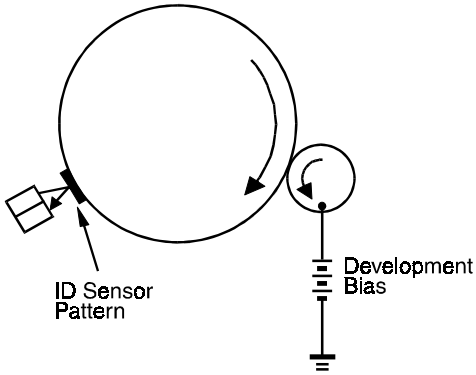

A173D519.wmf

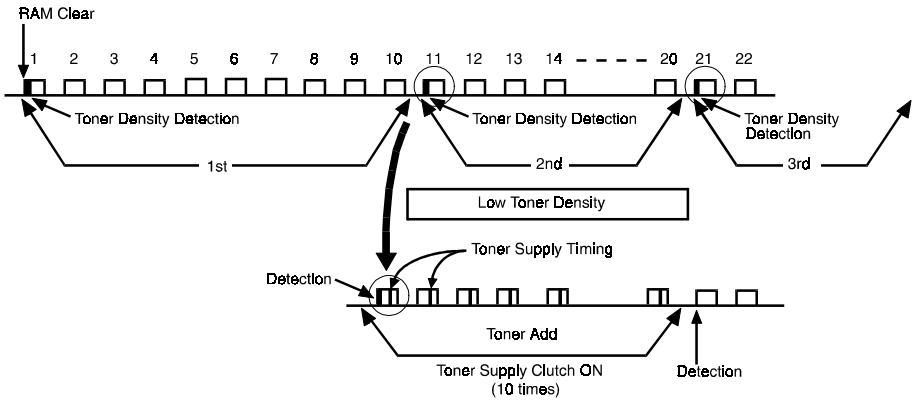

A173D520.wmf

The CPU checks toner density by directly detecting the image density every 10 copy cycles. If the RAM is cleared (SP99), or a new RAM is installed, the CPU checks the image density at the beginning of the first copy cycle.

During the check cycles, the sensor pattern is exposed prior to exposure of the original. After the sensor pattern is developed, its reflectivity is checked by the image density sensor (a photosensor). The CPU notes the reflectivity. If the reflected light is too strong, indicating a too low toner density condition, toner is added to the development unit.

The toner is not added all at once. The CPU energizes the toner supply clutch for the proper amount of time to add a selected amount of toner over the next 10 cycles.

6.2 ID SENSOR OPERATION IN DETECT SUPPLY MODE

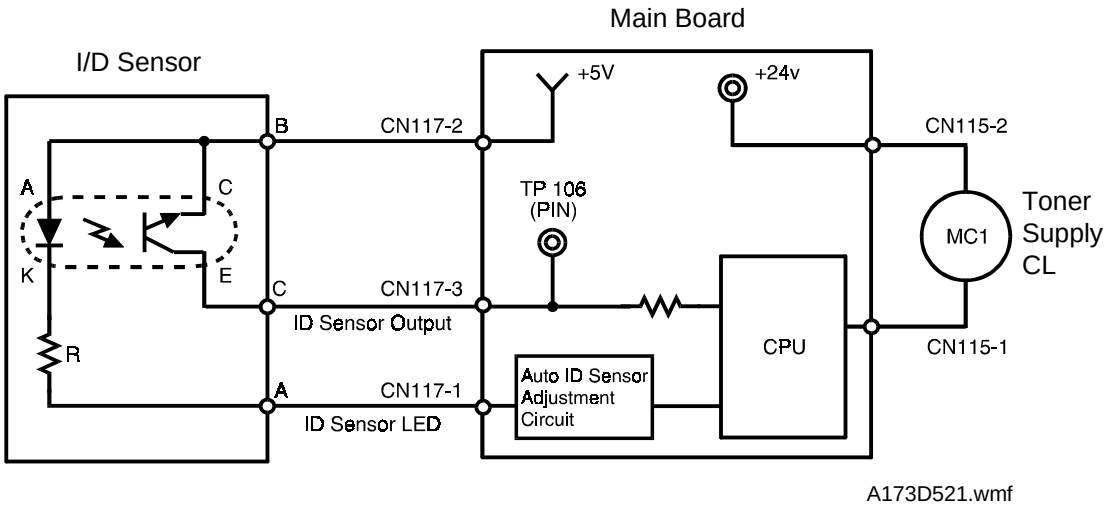

A173D521.wmf

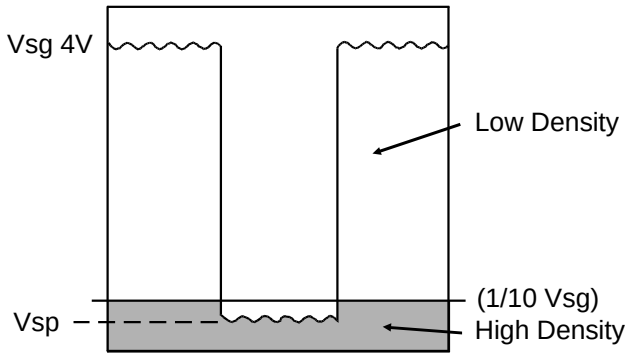

A173D522.wmf

The image density sensor checks the density of the sensor pattern image once every 10 copy cycles. The CPU receives two voltage values directly from the sensor: the value for the bare drum (Vsg) and the value for the sensor pattern (Vsp). These two values are then compared to determine whether more toner should be added.

1. Vsp ≤ 1/10 Vsg .....No toner is added (high density).
2. Vsp > 1/10 Vsg .....Toner is added (low density).

When the image density is too low, the CPU activates the toner supply clutch to add toner over the next 10 copy cycles. The amount of toner added depends on the value of Vsp, the selected toner supply ratio (SP31), ID sensor data, and the paper size in use. (See ‘Toner Supply Amount’ for more information.)

When SP35 is set to "1" (factory setting = "0"), the CPU changes the interval of the ID check from every 10 copies to every 5 copies.

6.3 FIXED SUPPLY MODE

When the setting of SP30 is "1" (factory setting = "0"), the fixed supply mode is selected. In this case, a fixed amount of toner is added every copy cycle depending on the selected toner supply ratio (SP32) and the paper size in use.

6.4 ID SENSOR OPERATION IN FIXED SUPPLY MODE

In fixed supply mode, toner is supplied every copy cycle depending on the fixed toner supply ratio data (SP32) and the paper size. However, the toner supply clutch is de-energized to prevent over-toning when Vsp is lower than 1/10 Vsg.

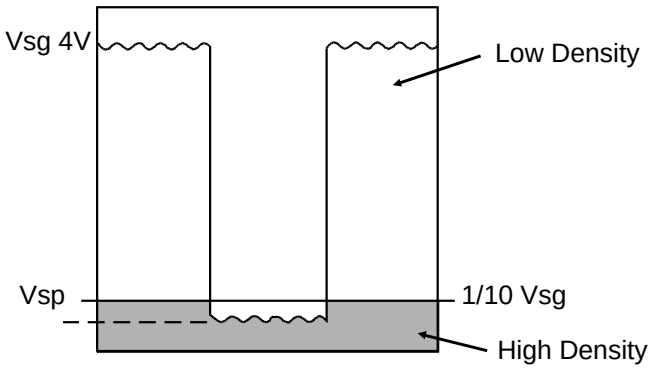

A173D522.wmf

6.5 ABNORMAL CONDITION IN TONER DENSITY DETECTION

If the Vsg goes below 2.5 volts (Vsg abnormal) or if Vsp goes above 2.5 volts (Vsp abnormal) 5 times in a row, the CPU determines that toner density detection is abnormal. The CPU changes from the detect supply mode to the fixed supply mode. At the same time either the Auto ID indicator or the selected manual ID level starts blinking, and the machine can be operated.

Abnormal Condition In Toner Density Detection

SP55 display		Conditions
Vsp	**Vsg**	
varies	0.00	Vsg ≤ 2.5 (Vsg abnormal)
varies	5.00	Vsp ≥ 2.5 (Vsp abnormal)

6.6 DEVELOPMENT BIAS FOR TONER DENSITY DETECTION

The development bias for the toner density detection consists of the following two factors:

Development bias voltage = Toner density adjustment factor
+
Vd correction factor
+
ID sensor bias setting (SP33)

The development voltage for the Vr correction is 0 volt.

6.6.1 Toner Density Adjustment Factor

Toner density	SP33 setting	Development bias voltage
Normal	0	–260 volts
Low	1	–240 volts
High	2	–280 volts
Higher	3	–300 volts
Lower	4	–220 volts
Highest	5	–320 volts
Lowest	6	–200 volts
Developer initial setting		–300 volts

The development bias can be changed with SP33 to adjust the toner density level. The above chart shows the development bias voltage corresponding to setting of SP33. This adjustment should be used only when the exposure lamp voltage adjustment (SP48) and the base bias adjustment (SP37) for copy image cannot achieve the desired image density.

6.6.2 Vd Correction Factor

The development bias for toner density detection is changed automatically to compensate for variations of the triboelectric charge of the developer.

The CPU monitors Vsp and Vsg and calculates the average of Vsp/Vsg x 100(%) during the developer initial setting (SP65). The result of the calculation can be monitored with SP64.

The CPU has a software counter (no SP mode display) to count the number of copies made with the developer. The counter resets to "0" when SP65 is performed.

Vd correction is made based on the results of the calculation and the data in the software counter as shown in the following table:

SP setting (SP64)	Vsp/Vsg x 100 (%)	Change of development bias voltage		
		0 to 500 copies	501 ~ 30000 copies	30001 ~
0	0 ~ 8	–20	±0	–20
1	9 ~ 22	±0	±0	–20
2	23 ~	±0	+20	±0

6.7 TONER SUPPLY AND AGITATOR DRIVE MECHANISM

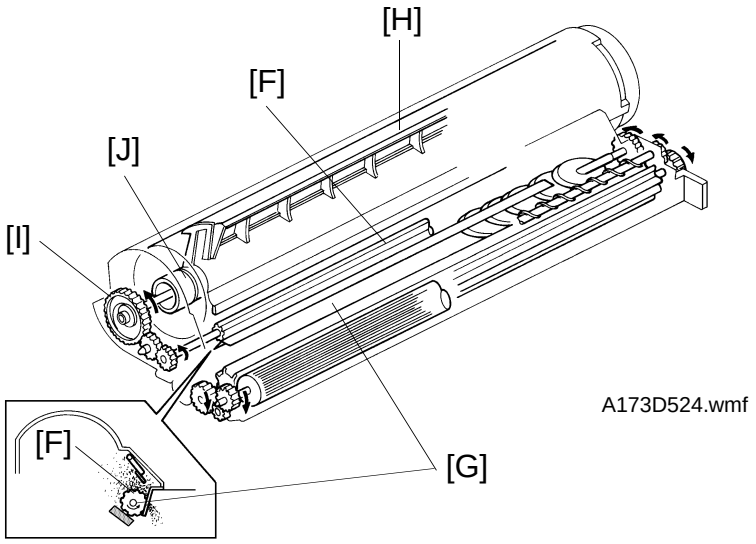

A173D524.wmf

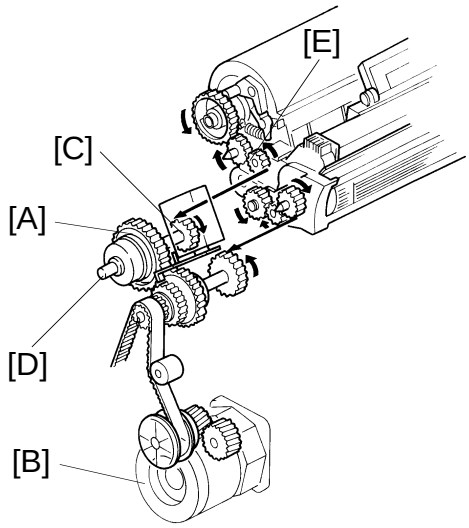

A173D524.img

The toner supply clutch gear [A] turns when the main motor [B] is on and the toner supply clutch is energized. The transmission of this rotation to the toner supply drive gear [C] is controlled by the toner supply clutch [D].

When the toner supply clutch energizes, the toner supply clutch engages and starts turning the toner supply drive gear. The toner supply drive gear turns the toner supply roller gear [E]. Toner catches in the grooves on the toner supply roller [F]. Then, as the grooves turn past the pin hole plate [G], the toner drops into the development unit through the pin holes.

The toner agitator [H] mechanism, which is contained in the toner cartridge, prevents toner from blocking the pin holes. The toner agitator gear [I] turns whenever the toner supply clutch is engaged. Rotation passes through the toner cartridge casing to the agitator junction [J].

6.8 TONER SUPPLY AMOUNT

This copier has two different ways of controlling the amount of toner supplied. Normally, detect supply mode controls toner supply for the development unit; however, fixed supply mode also can be selected with SP30.

6.8.1 Detect Supply Mode (SP30 = 0)

The amount of toner supplied depends on the ID sensor data, the detect toner supply ratio setting, and the paper size. The toner supply clutch on time in each copy cycle is calculated as follows:

Toner Supply Clutch On Time = I x T x P (pulses)

Where: I = ID Sensor Data
T = Detect Toner Supply Ratio Factor
P = Paper Size Factor

I, T, and P are obtained from the Vsp data, the setting of SP31, and the paper size respectively, as shown in the following table.

ID Sensor Data

Vsp (Vsg = 4.0 V)	Toner supply level (Toner supply ratio, if SP31 = 0)	ID sensor data
0 to 0.41 V	No toner supply (0 %)	0
0.41 to 0.43 V	1 (3.75 %)	14
0.43 to 0.47 V	2 (7.5 %)	27
0.47 to 0.61 V	3 (15 %)	54

Detect Toner Supply Ratio Data (SP31)

SP data (SP31)	Toner supply ratio	Toner supply ratio data
0	15%	2
1	7%	1
2	30%	4
3	60%	8

Paper Size Data

Paper size	Paper size data
Paper size ≤ A4 or LT	1
Paper size > A4 or LT	2

For example:	Vsp = 0.45 volts, which means the toner supply level is "2" and the ID sensor data = 27.
	SP31 is set to "0". The toner supply ratio is 15 % and the toner supply factor = 2.
	Paper size is A4 or LT. The paper size factor = 1.
Toner Supply Clutch On Time	= I x T x P = 27 x 2 x 1 = 54 (pulses) = 216 (ms.) (1 pulse = 4.0 ms.)

6.8.2 Fixed Supply Mode (SP30 = 1)

The amount of toner supplied depends on the fixed toner supply ratio data and the paper size data. The toner supply clutch on time in each copy cycle is calculated as follows:

Toner Supply Clutch On Time = T x P x 2 (pulses)

Where: T = Fixed Toner Supply Ratio Factor
P = Paper Size Factor

T and P are obtained from the setting of SP32 and the paper size respectivity, as shown below.

Fixed Toner Supply Ratio Factor

SP data (SP32)	Toner supply ratio	Toner supply ratio factor (T)
0	7.0%	2
1	3.5%	1
2	10.5%	3
3	14.0%	4

Paper Size Factor

Paper size	Paper size factor (P)
A3	40
B4	30
A4	20
B5	16
A5	10
B6	11
11" x 17"	38
8 1/2" x 14"	26
8 1/2" x 11"	19
5 1/2" x 8 1/2"	10
Paper size not detected	0

For example: The data of SP32 is set to "0".
The toner supply ratio is 7.0% and the toner supply data = 2.

Paper size is A4. The paper size data = 20.

Toner Supply Clutch On Time = T x P x 2
= 2 x 20 x 2
= 80 (pulses)
= 320 (ms.) (1 pulse = 4.0 ms.)

6.9 TONER END DETECTION

The image density sensor is used to detect a toner end condition in both detect and fixed supply modes.

6.9.1 Toner Near End Condition

When (Vsp/Vsg x 100) becomes greater than 15.2, the toner density detection cycle changes from every 10 copies to 5 copies.

When this condition is detected three times consecutively, the toner supply ratio becomes two times the amount of toner supply level 3. The resulting toner supply ratio is 60%.

Then, when this condition is detected five times consecutively, the CPU determines that there is a near end condition and starts blinking the Add Toner indicators.

6.9.2 Toner End Condition

After the Add Toner indicator starts blinking (Toner Near End Condition), the operator can make 50 copies. If the toner cartridge is not replaced within 50 copies, copying is disabled and a toner end condition is determined. In this condition, the Add Toner indicator lights.

Example:

Copy number	Toner density detection cycle	Vsp/Vsg x 100	Toner supply ratio (If SP31 = 0)	Indicator
1st ~ 5th copies	1st copy	15.3	30%	
6th ~ 10th copies	6th copy	15.3	30%	
11th ~ 15th copies	11th copy	15.3	60%	
16th ~ 20th copies	16th copy	15.3	60%	
21st copy	21st copy	15.3	60%	Add Toner indicator starts blinking (toner near end condition)
I I I	I I I	I I I	I I I	Add Toner indicator blinks (toner near end condition)
71st copy	—	—	—	Add Toner indicator lights (toner end condition)

When (Vsp/Vsg x 100) becomes greater than 28.0 two times consecutively, the CPU determines immediately that there is a toner end condition and copying is disabled. This causes the Add Toner indicator to light.

Example:

Copy number	Toner density detection cycle	Vsp/Vsg x 100	Toner supply ratio (If SP31 = 0)	Indicator
1st~ 5th copies	1st copy	30.5	30%	
6th~10th copies	6th copy	28.5	30%	
16th copy	16th copy	28.5	—	Add Toner indicator lights (toner end condition)

6.9.3 Toner End Recovery

After the toner cartridge is replaced and the front cover is closed, the CPU turns on the main motor, and turns on the toner supply clutch for 10 seconds to supply toner to the empty toner supply unit from the toner cartridge.

Normally, the toner end condition is cleared when the front door is opened and closed. However, when SP38 is changed to 1, this does not happen. Instead, the machine does the following:

- The CPU checks Vsg and Vsp four times at the end of the above toner supply operation to clear the toner end condition.
- When the average of (Vsp/Vsg x 100) becomes less than 15.2 or less than 95% of the last detection before replacing the toner cartridge, the toner end or near end condition is cleared.
- If the toner end or near end condition is not cleared, copying is disabled. This prevents the customer from clearing the near end or toner end condition by simply opening and closing the front cover or turning the main switch off and on.

7. IMAGE TRANSFER AND PAPER SEPARATION

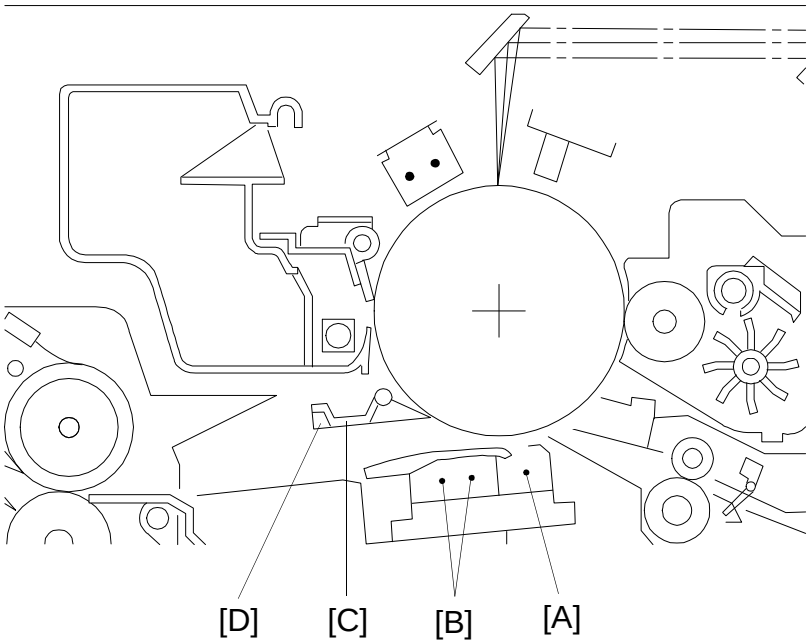

A173D525.wmf

7.1 IMAGE TRANSFER

A high negative voltage (–4.5 kilovolts) is applied to the transfer corona wire [A]. A negative charge is applied to the copy paper, and it attracts the positively charged toner away from the drum and onto the paper. However, the paper is held against the drum by the positive counter charge on the drum.

7.2 PAPER SEPARATION

After image transfer the copy must be separated from the drum. To break the attraction between the paper and the drum, the separation corona wire [B] applies an ac corona to the reverse side of the paper. The stiffness and weight of the paper causes it to separate from the drum.

The negative charge on the paper (from the transfer corona) is not completely discharged until the paper is far enough from the drum that the toner will not be reattracted to the drum. The two pick-off pawls [C] ensure that thin, low stiffness paper and upwardly curled paper separate completely. The spurs [D] prevent the unfused toner on the paper from being smeared by the pick-off pawls.

7.3 TRANSFER/SEPARATION CORONA CIRCUIT

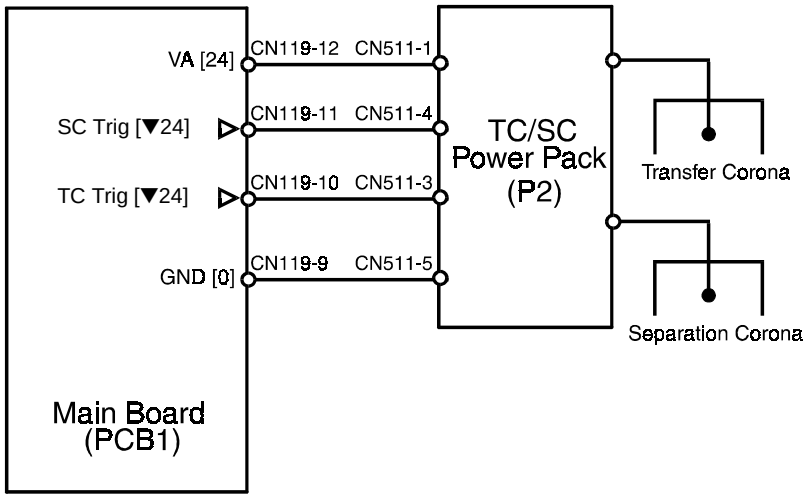

A173D526.wmf

The TC/SC power pack has a dc to dc converter and a dc to ac inverter. The dc to dc converter changes +24 volts to –4.5 kilovolts for the transfer corona. The inverter changes +24 volts to the 3.0 kilovolts ac (500 Hz) for the separation corona.

The separation corona circuit in the TC/SC power pack has a current leak detection circuit for safety. When this circuit detects that more than 2 milliamperes is supplied to the separation corona, the separation corona turns off immediately. When the main switch is turned off and on, or the front cover or the exit cover is opened and closed, this condition is cleared.

8. CLEANING

8.1 OVERVIEW

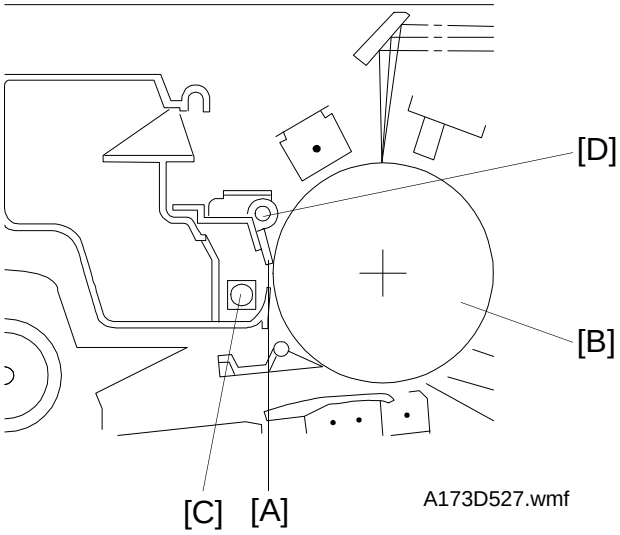

A173D527.wmf

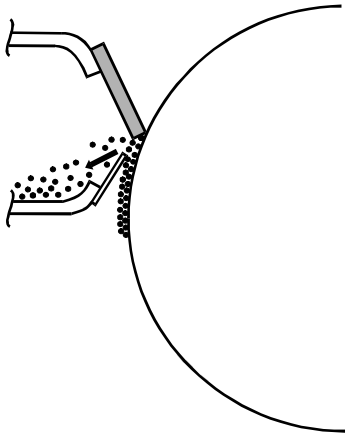

A173D528.wmf

The cleaning blade [A] removes any toner remaining on the drum [B] after the image is transferred to the paper.

The removed toner falls into the cleaning unit. The toner collection roller [C] carries the used toner to the used toner tank. The light from the quenching lamp [D] neutralizes any charge remaining on the drum in preparation for the next copy cycle.

The cleaning blade releases when the release knob is pressed. This prevents the drum from being damaged when the cleaning unit is removed or installed.

8.2 DRIVE MECHANISM

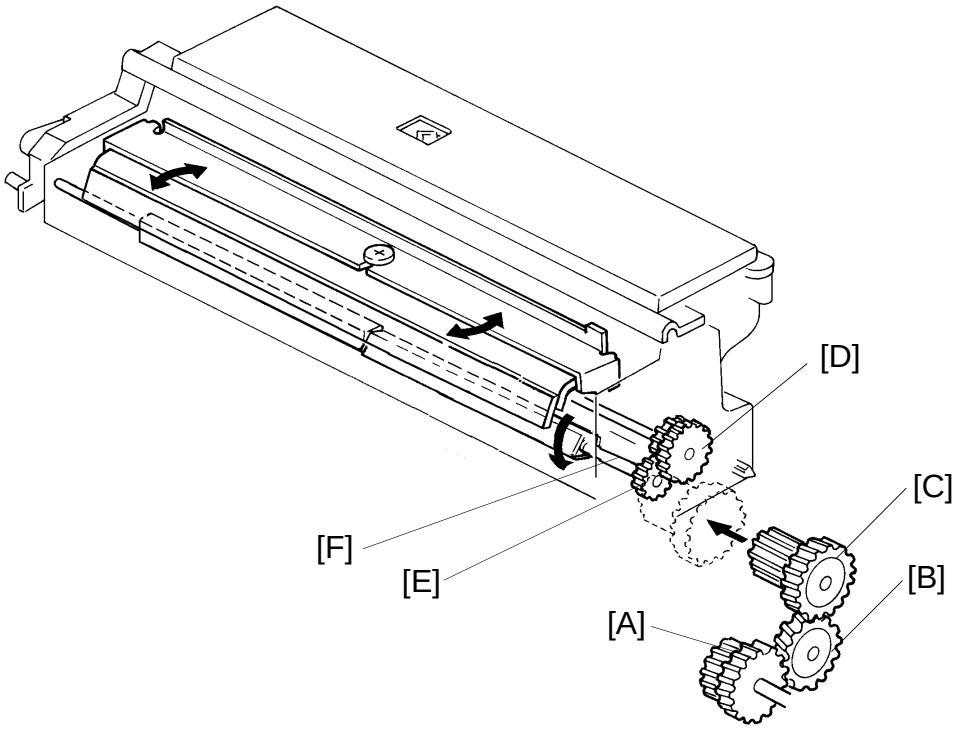

A173D529.img

The rotation of the main motor is transmitted to the cleaning unit through the main motor gear [A], the relay gear [B], and the cleaning drive gear [C].

The gear [D] driven by the cleaning drive gear passes the rotation to the toner collection roller gear [E].

The cleaning blade [F] is mounted in the center of the blade and is tilted to apply even pressure.

8.3 USED TONER OVERFLOW DETECTION

The CPU uses an overflow counter to detect used toner overflow.

The overflow counter counts the total number of copies since the last time the toner end counter was cleared. When the overflow counter reaches 60K copies, the CPU starts to blink "E70" on the operation panel. An additional 250 copies can be made before the Start indicator turns red and copying is disabled.

After disposing of the toner in the used toner tank, use SP83 to clear the overflow counter.

Toner end counter clear (SP83)

Setting (SP83)	Memory counter
0	Not cleared
1	Cleared

NOTE: If SP115 is set to 1, the machine uses the optional toner overflow sensor to detect toner overflow. "E70" blinks when the toner overflow sensor is actuated, and copying is disabled when an additional 250 copies have been mode.

9. QUENCHING

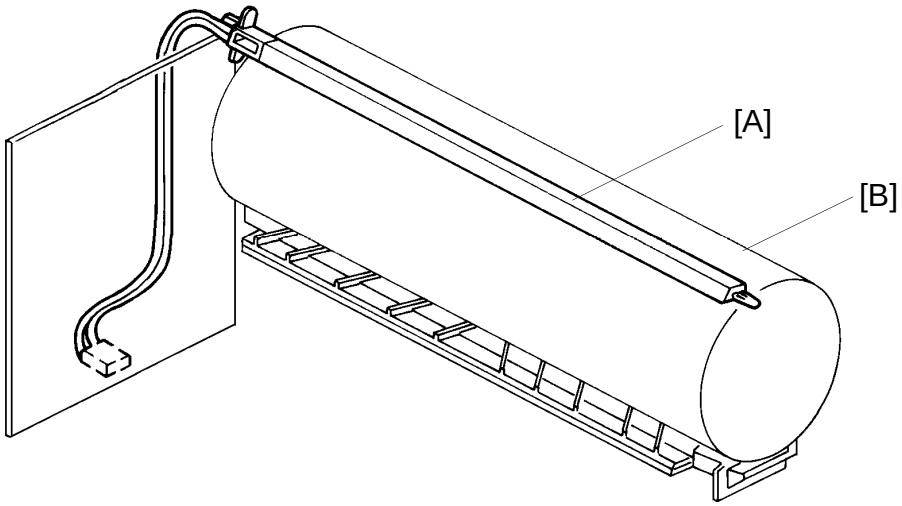

A173D530.img

In preparation for the next copy cycle, light from the quenching lamp (QL) [A] neutralizes any charge remaining on the drum [B].

LEDs are used for quenching and the lamp is turned on whenever the main motor rotates.

10. PAPER FEED AND REGISTRATION

10.1 OVERVIEW

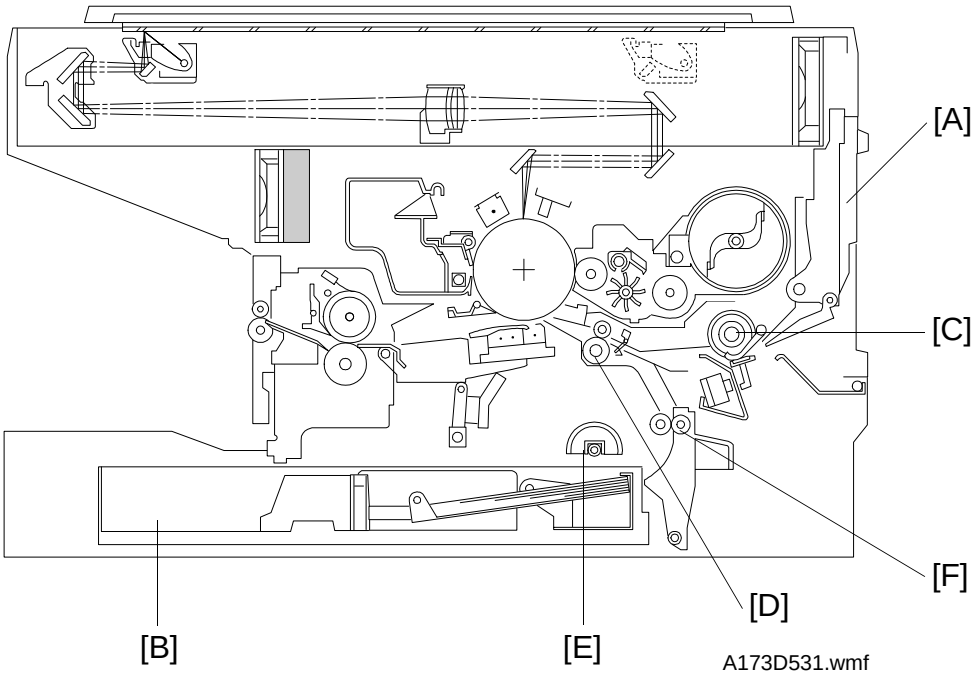

This model has two paper feed stations (1 cassette + 1 paper tray) and a manual feed table [A].

The first feed station uses a cassette which can hold 250 sheets, and the second feed stations use a paper tray [B] which can also hold 250 sheets. The manual feed table utilizes the feed mechanism of the first feed station.

The first feed station uses a friction pad separation system. Rotation of the feed roller [C] drives the top sheet of paper from the cassette to the registration roller [D].

The second feed station uses a semicircular feed roller [F] and corner separator system. The semicircular feed roller makes one rotation to drive the top sheet of paper to the relay rollers [F], which then feed the sheet to the registration rollers. The corner separator allows only one sheet to feed.

10.2 1ST FEED STATION PAPER FEED MECHANISM

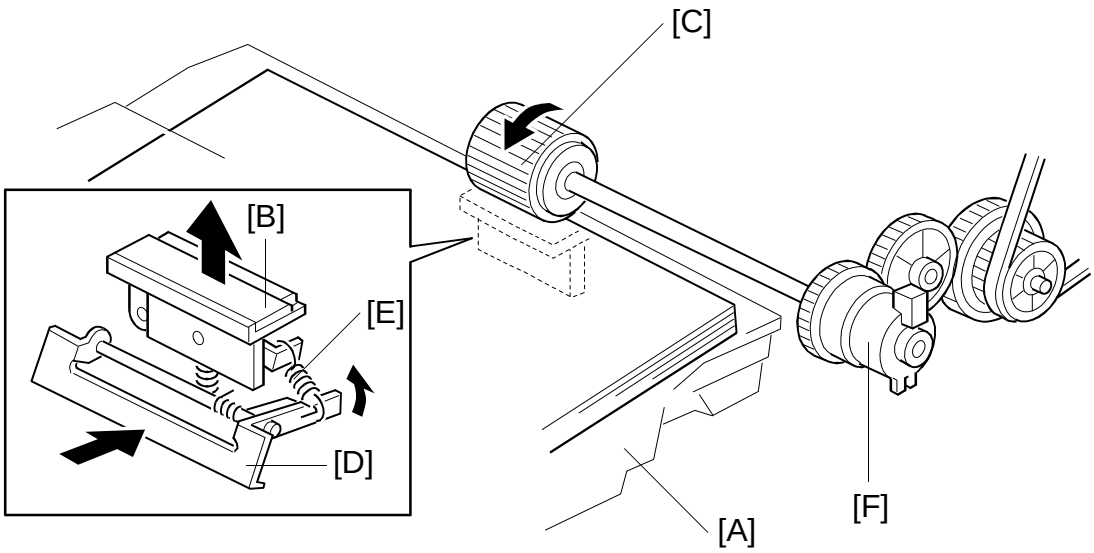

A173D532.wmf

When the cassette [A] is not set at the 1st feed station, the friction pad [B] is not in contact with the paper feed roller [C].

When the cassette is inserted into the copier, the lever [D] is pushed in the direction of the arrow. The friction pad moves up as a result of the spring [E] tension.

The main motor drive is transmitted to the paper feed roller when the 1st paper feed clutch [F] is energized. The top sheet of the paper stack is separated and transported to the registration roller.

10.3 2ND FEED STATION PAPER LIFT MECHANISM AND PAPER END DETECTION

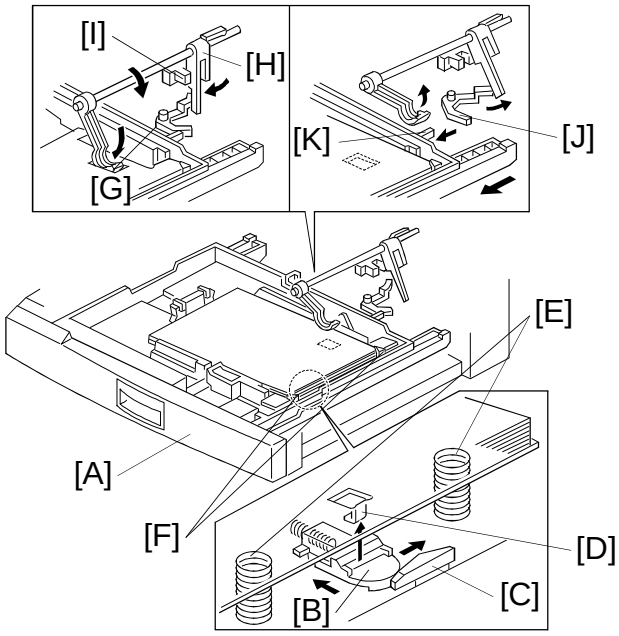

A173D533.wmf

10.3.1 Paper Lift Mechanism

When the paper tray [A] is closed after paper is loaded, the plate release slider [B], which is mounted on the bottom part of the paper tray, is pushed by the projection [C] on the copier frame and the release slider comes off the bottom plate hook [D].

Once the release slider comes off, the bottom plate is raised by the pressure springs [E] and the top sheet pushes up the corner separators [F]. This keeps the stack of paper at the correct height.

10.3.2 Paper End Detection

When the paper tray runs out of paper, the paper end feeler [G] drops through a slot in the tray bottom plate. The paper end actuator [H], which is on the same shaft as the paper end feeler, pivots into the paper end sensor [I]. The paper end sensor sends a HIGH signal to the main board and then the Add Paper indicator turns on. The Wait indicator stays on and the machine stops after the copy cycle is finished.

When the paper tray is pulled out, the release arm [J], which is spring loaded, rotates clockwise and raises the paper end actuator and the paper end feeler. This prevents the paper end feeler from being damaged by the paper tray. When the paper tray is closed, the projection [K] on the paper tray pushes the release arm to release the paper end actuator and the paper end feeler.

10.4 2ND FEED STATION PAPER MECHANISM

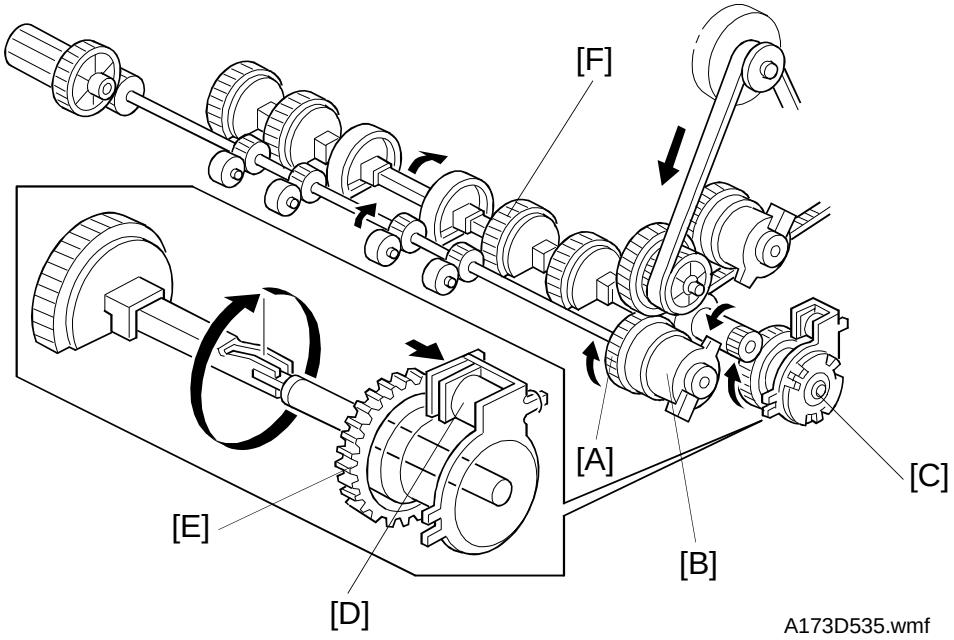

Main motor rotation is transmitted to the relay roller clutch gear [A] through gears and a timing belt. The paper feed timing is controlled by the relay roller clutch [B] and the 2nd feed clutch [C].

Both the relay roller clutch and the 2nd paper feed clutch turn on at the same time to start paper feed. When the 2nd feed clutch is energized, the solenoid [D] releases the stopper of the gear [E] to allow the 2nd feed rollers [F] to turn. The 2nd feed rollers stop turning when they complete one rotation. The relay roller clutch stays energized until the leading edge of the paper reaches the registration rollers.

10.5 PAPER SIZE DETECTION

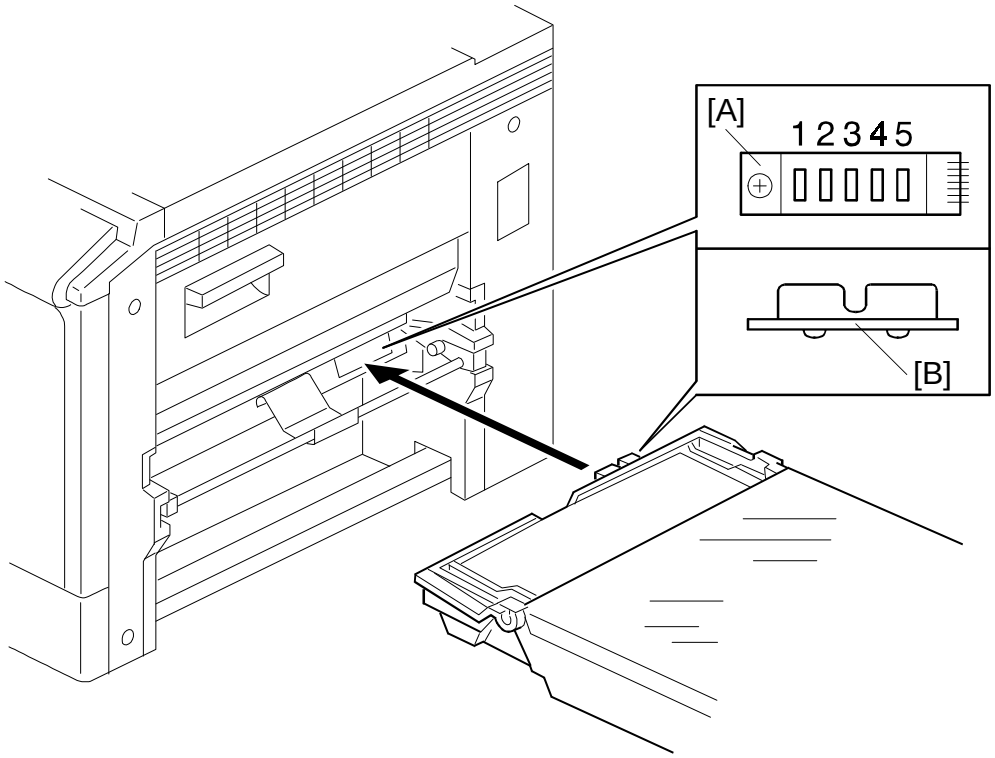

A173D534.wmf

The 2nd feed station does not have paper size detection. The user must input the paper size. The following description is for the 1st feed station only.

The paper size switch (SW3) [A] in the cassette entrance detects the paper size. The paper size switch has five microswitches (SW3-1 through 3-5) inside. The paper size switch is actuated by an actuator plate [B] on the rear of the cassette. Each paper size has its own unique combination of notches in the plate. The CPU receives a LOW signal from the microswitches activated by the actuator and determines which cassette was inserted.

Paper Size Detection Table (1st Feed Station)

Paper Size	Switch 3					Size Indication
	1	2	3	4	5	
Universal	0	0	0	0	0	✻
A3	1	0	0	0	0	A3
B4	1	1	0	0	0	B4
A4 (sideways)	0	0	1	0	0	A4
A4 (lengthwise)	1	0	1	0	0	A4
B5 (sideways)	0	1	1	0	0	✻
B5 (lengthwise)	1	1	1	0	0	✻
A5 (sideways)	0	0	0	1	0	A5
A5 (lengthwise)	1	0	0	1	0	A5
B6 (sideways)	0	1	0	1	0	✻
B6 (lengthwise)	1	1	0	1	0	✻
F (8" x 13")	1	0	0	1	1	F
Return Post Card	0	0	1	1	0	✻
Post Card	1	0	1	1	0	✻
11" x 17"	0	0	0	0	1	11 x 17
11" x 8 1/2"	1	0	0	0	1	8 1/2 x 11
11" x 15"	0	1	0	0	1	✻
10" x 14"	1	1	0	0	1	✻
8 1/2" x 14"	0	0	1	0	1	8 1/2 x 14
8 1/2" x 13"	1	0	1	0	1	✻
8 1/2" x 11"	0	1	1	0	1	8 1/2 x 11
8 1/2" x 5 1/2"	1	1	1	0	1	5 1/2 x 8 1/2
8 1/4" x 13" (14")	0	0	0	1	1	✻
8" x 10 1/2"	0	1	0	1	1	✻
8" x 10"	1	1	0	1	1	✻
5 1/2" x 8 1/2"	0	0	1	1	1	5 1/2 x 8 1/2
No Cassette	1	1	1	1	1	—

0: Actuated (Low)
1: Not Actuated (High)

10.6 MANUAL FEED TABLE

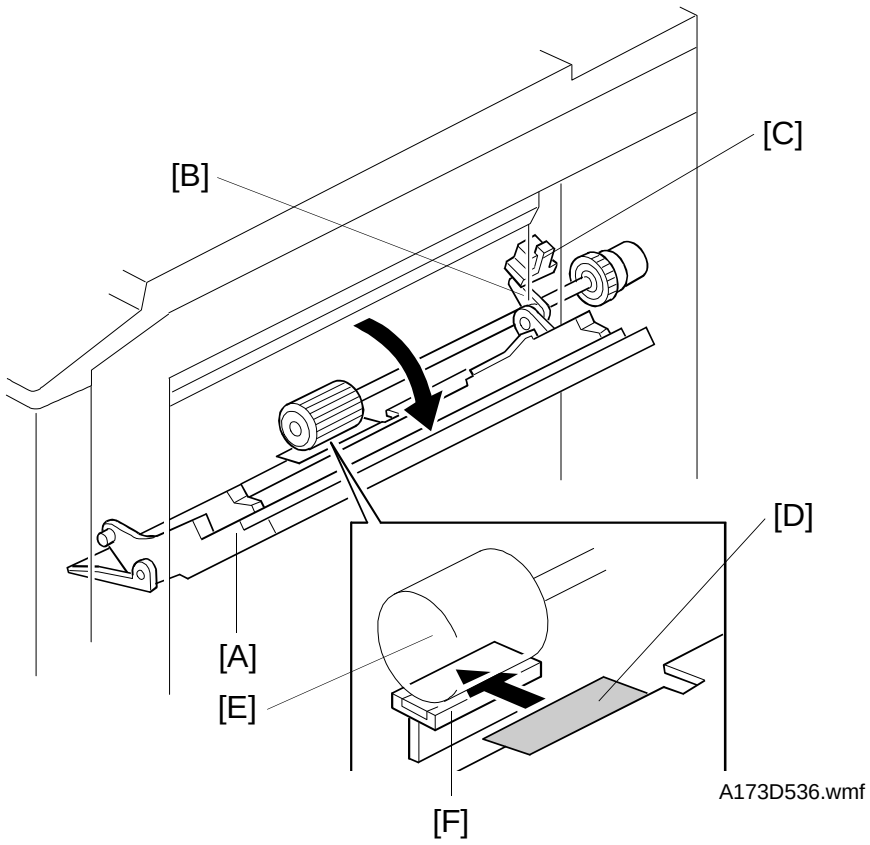

The manual feed table [A] uses the same feed mechanism as the 1st feed station. When the manual feed table is opened, the lever [B] actuates the manual feed table switch [C] and the Manual Feed indicator on the operation panel turns on. At the same time, a metal plate [D] is inserted between the paper feed roller [E] and the friction pad [F]. This prevents paper feed from the 1st feed station.

The paper separation mechanism does not function for manual feed, so sheets of paper must be placed one by one on the manual feed table.

10.7 PAPER REGISTRATION

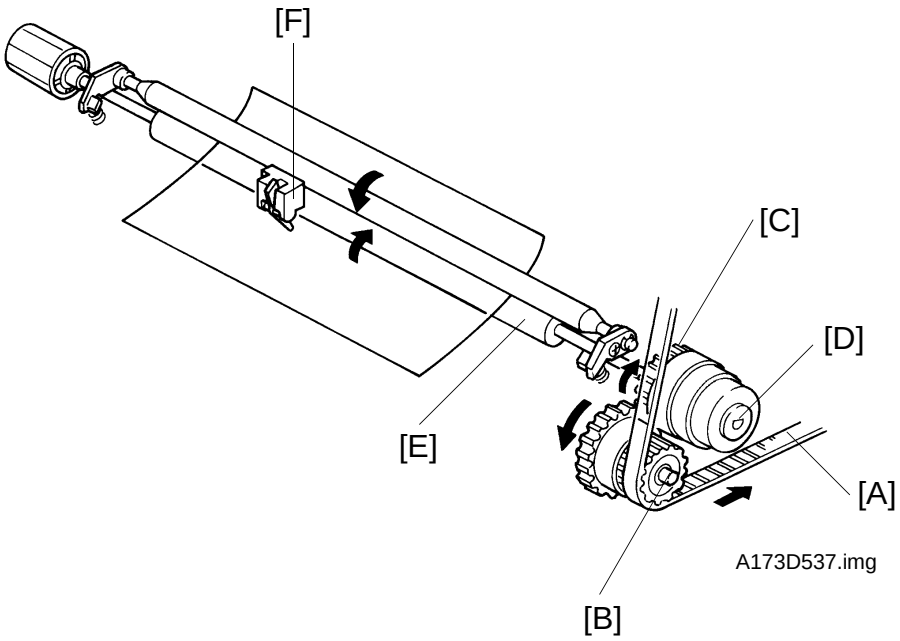

Main motor rotation is transmitted to the timing belt [A] through a series of gears. The timing belt rotates the relay gear [B] and then the registration roller clutch gear [C]. When the registration clutch [D] is energized, the rotation of the clutch gear is transmitted to the lower registration roller [E].

The registration rollers can be rotated by a knob in the front to ease misfed paper removal.

The registration sensor [F], which is positioned just before the registration rollers, controls the paper feed stop timing. The 1st paper feed clutch stays on for 164 milliseconds after the leading edge of the paper actuates the registration sensor. At the end of this period, the CPU turns off the 1st paper feed clutch. This delay allows time for the paper to press against the registration rollers and buckle slightly to correct skew.

11. IMAGE FUSING

11.1 OVERVIEW

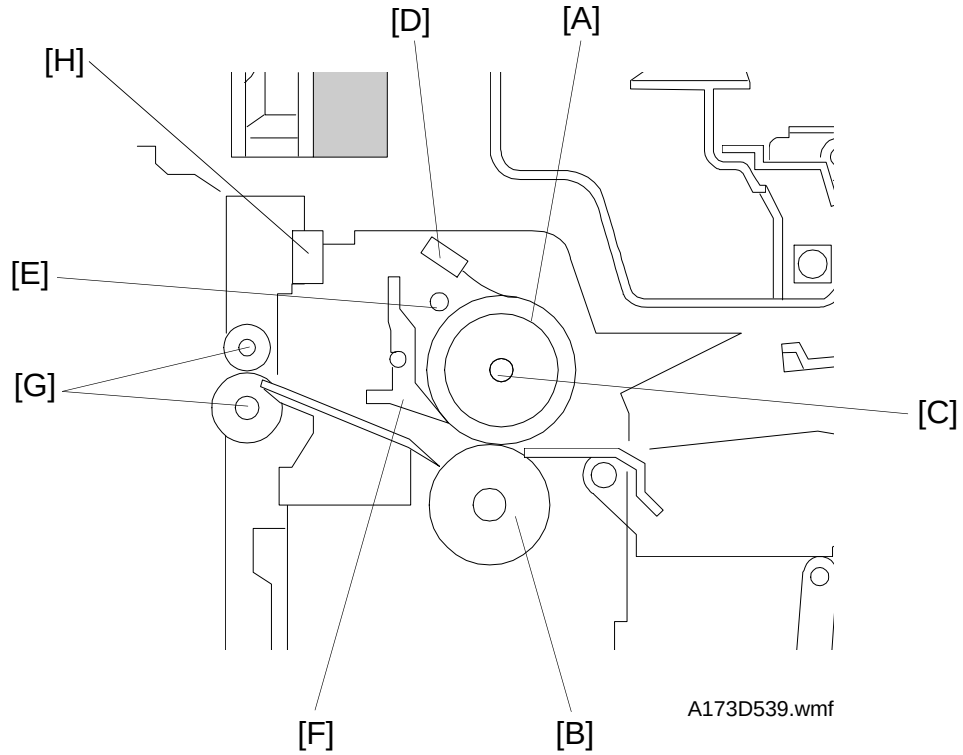

After the image is transferred, the copy paper enters the fusing unit. The image is fused to the copy paper by the process of heat and pressure through the use of a hot roller [A] and pressure roller [B].

The fusing lamp [C] (780W) located inside the hot roller is turned on and off to maintain the operating temperature of 190°C. The CPU monitors the hot roller surface temperature through a thermistor [D] which is in contact with the hot roller's surface. A thermofuse [E] protects the fusing unit from overheating.

The hot roller strippers [F] separate the copy paper from the hot roller and direct it to the exit rollers [G]. The exit sensor [H] monitors the progress of the copy paper through the fusing unit and acts as a misfeed detector while the exit rollers drive the copy paper to the copy tray. When a sorter is installed, the paper sensor on the sorter also functions as a misfeed detector.

11.2 FUSING LAMP CONTROL

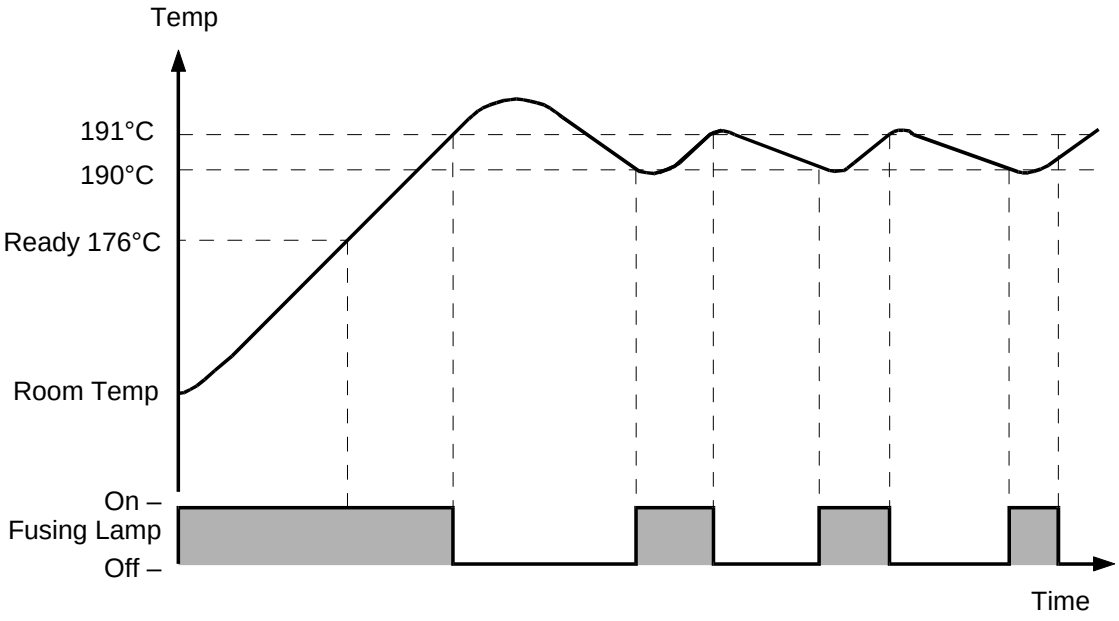

A173D540.wmf

When the main switch is turned on, the CPU starts sending a trigger pulse to the fusing control circuit. The fusing control circuit then applies power to the fusing lamp. The power is applied until the CPU detects the ready temperature (176°C) through the fusing thermistor. This should take less than 60 seconds. Once the CPU detects the ready temperature, the CPU changes the timing of the fusing lamp on/off check (checks whether the fusing lamp should be turned on or off) from every 1 second to every 5 seconds.

During warm-up, the thermistor's temperature lags behind the real hot roller's temperature. As a result, when the thermistor senses the ready temperature, the hot roller is already at or near the operating temperature. At this time the Ready indicator turns on.

After that, the trigger pulse is turned on constantly when thermistor detects a temperature less than 190°C and is turned off when the thermistor detects 191°C.

If the fusing lamp is turned on or off when the exposure lamp is on, the power supplied to the exposure lamp will fluctuate, possibly degrading the copy image. To prevent this, the fusing lamp does not switch on/off during scanning; it stays either on or off.

11.3 ENERGY SAVER MODE

When the copier is not in use, the energy saver function reduces the power consumption by decreasing the fusing temperature.

When the Energy Saver/Clear Modes key is pressed for over 1 second, the copier goes into the energy saver mode. The Energy Saver indicator turns on and all the other indicators turn off.

The energy saving ratio can be selected using SP86 as shown in the following table.

SP data (SP86)	Energy saving ratio without save energy mode	Fusing temperature	Warm-up time
0	Δ 63%	Approx. 70°C	Approx. 30 s
1	Δ 37%	Approx. 130°C	Approx. 20 s
2	Δ 28%	Approx. 145°C	Approx. 10 s
3	Δ 12%	Approx. 175°C	Approx. 0 s

Factory Setting: SP86 = 2

NOTE: The energy saving ratios in the above table are standard values measured in laboratory tests under controlled conditions. The actual ratios will vary depending on environmental conditions, copy modes, power supply conditions, and measurement instruments.

The greater the energy saving ratio is, the longer the waiting time until the copier returns to the ready condition.

The copier is returned to the ready condition (after a warm-up time) by the following actions:

1. Pressing any key except the Start key.
2. Opening the manual feed table or setting copy paper on it.

When the auto energy saver mode (SP78) is selected, the copier automatically goes into the energy saver mode after the auto reset time selected with SP15.

11.4 FUSING LAMP CONTROL CIRCUIT

11.4.1 Overview

The main board monitors the fusing temperature through a thermistor. It also uses the zero cross signal generated by the power supply/ac drive board to accurately control the applied power.

Normally, the voltage applied to the lamp is a full ac waveform. However, through SP29, fusing power can be set to phase control. (Normally, phase control is used only if the customer has a problem with electrical noise or interference.)

11.4.2 On/Off Control

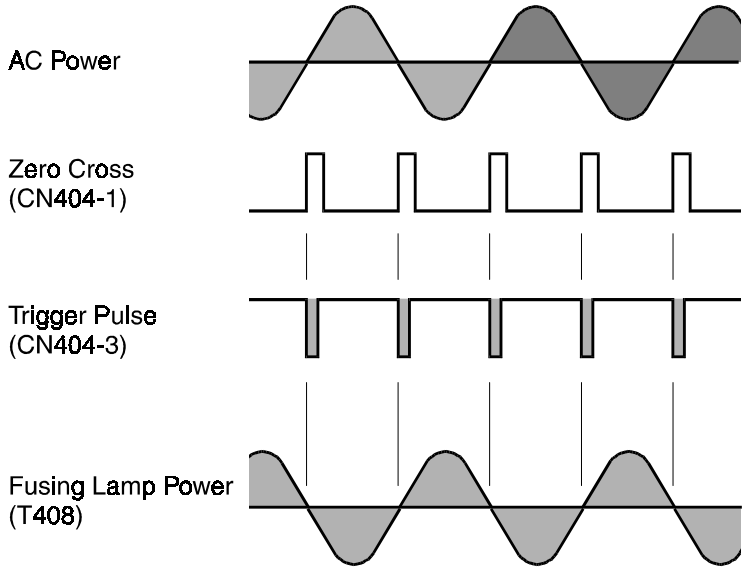

A173D541.wmf

When the main switch is turned on, the main board starts to output a trigger pulse, which has the same timing as the zero cross signal, to the ac drive board. This trigger pulse allows maximum ac power to be applied to the fusing lamp. When the operating temperature is reached, the CPU stops outputting the trigger pulse (the trigger stays HIGH) and the fusing lamp turns off.

11.4.3 Phase Control Mode

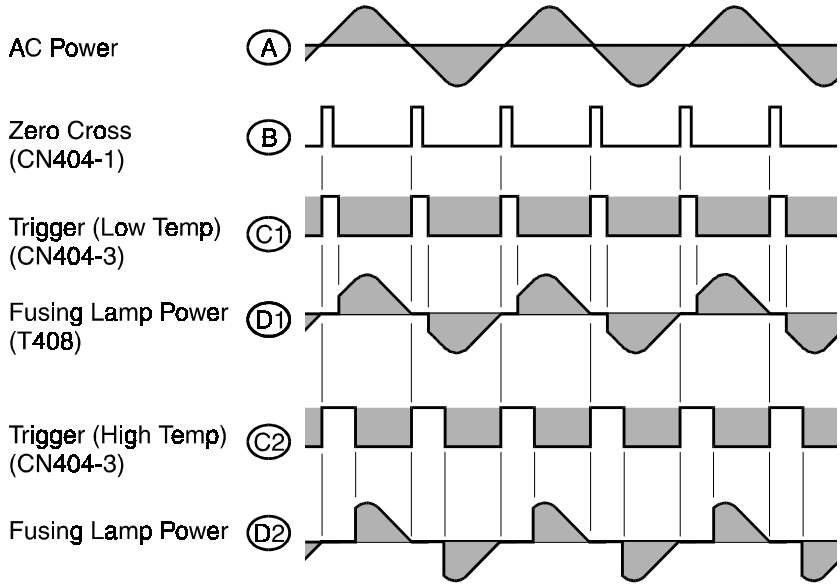

A173D542.wmf

The main board sends the fusing lamp trigger pulse (LOW active) to the ac drive board, which provides ac power to the fusing lamp at the falling edge of each trigger pulse. The trigger pulse goes HIGH when the main board receives the zero cross signal.

The amount of time that power is applied to the fusing lamp depends on the temperature of the hot roller.

The trigger pulse (LOW part) is wider [C1] and power is supplied for longer [D1] when the hot roller temperature is lower. It is narrower [C2] and power is supplied for a shorter time [D2] when the hot roller is near the operating temperature.

11.4.4 Overheat Protection

There is an overheat protection circuit in the main board. If the hot roller temperature reaches 240°C, the resistance of the thermistor (between CN121-7 and CN121-87 becomes too low. If the main board detects this condition, "E-53" lights on the operation panel and the power to the fusing lamp is cut.
Even if the thermistor overheat protection fails, the thermofuse opens when it reaches 167°C, removing power from the fusing lamp.



SECTION 3

INSTALLATION

1. INSTALLATION REQUIREMENTS

1.1 ENVIRONMENT

1. Temperature Range: 10°C to 30°C (50°F to 86°F)
2. Humidity Range: 15% to 90% RH
3. Ambient Illumination: Less than 1,500 lux. (Do not expose to direct sunlight.)
4. Ventilation: Room of more than 30 m^3. Room air should turn over at least 30 m^3/hr/person.
5. Ambient Dust: Less than 0.15 mg/m^3 (4×10^{-3} oz/yd^3)
6. The machine must not be subjected to sudden temperature changes. Do not install the machine where it will be directly exposed to cool air from an air conditioner or hot air from a heater.
7. Avoid placing the machine in an area filled with corrosive gas.
8. Do not install at any location over 2,000 meters (6,500 feet) above sea level.
9. Place the machine on a strong and level base.
10. Avoid any area where the machine may be subjected to frequent strong vibrations.

1.2 MACHINE LEVEL

1. Front to back: Within 5 mm (0.2") of level
2. Right to left: Within 5 mm (0.2") of level

Make sure that the machine is level using a carpenter's level.

1.3 MINIMUM SPACE REQUIREMENTS

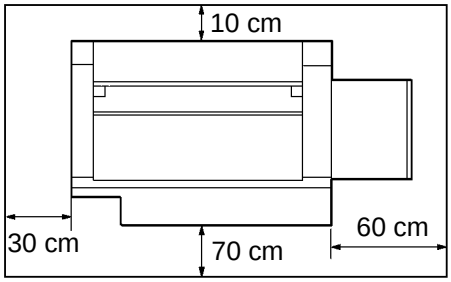

A173I500.img

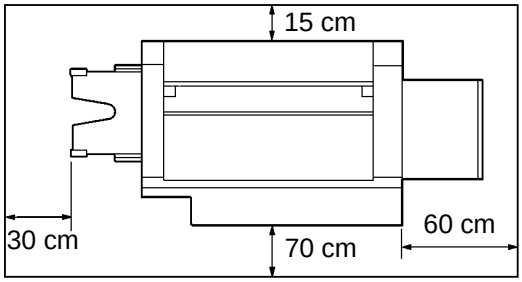

A173I501.img

1. Front : 70 cm (27.6")
2. Back : 10 cm (3.9")
   : 15 cm (6.0") (when the sorter is installed.)
3. Right : 60 cm (31.5")
4. Left : 30 cm (11.8")

NOTE: Make sure there is at least 15 cm (6.0") clearance behind the copier so that the sorter will not be damaged when it is opened.

1.4 POWER REQUIREMENTS

1. Input voltage level:

   110 V/60 Hz: More than 15 A (for Taiwan)
   220, 230, 240 V/50 Hz: More than 6 A (for Asia/Europe)
   220 V/60Hz/6 A (for Middle East)

2. Permissible voltage fluctuation: ±10%
3. Do not set anything on the power cord.

NOTE: a) Be sure to ground the machine. (Do not connect the grounding wire to a gas pipe.)
b) Make sure the plug is firmly inserted in the outlet.
c) Avoid multiwiring.

2. INSTALLATION PROCEDURE

2.1 ACCESSORY CHECK

Check the quantity and condition of the accessories in the box according to the following list:

1. Receiving Tray ..... 1 pc
2. Cassette - Small ..... 1 pc
3. Paper Size Decal ..... 1 pc
4. Paper Size Actuator ..... 1 set
5. Decal - Symbol Explanation ..... 1 pc
6. Operating Instructions (Except Europe) ..... 1 pc
7. New Equipment Condition Report (Ricoh only) ..... 1 pc
8. Model Name Plate (OEM only) ..... 1 set
9. Decal - Key Top Cover (OEM only) ..... 1 set
10. Operation Panel Sheet (Taiwan version only) ..... 3 pcs
11. Decal - Changing Paper Size (Taiwan version only) ..... 1 pc

2.2 COPIER INSTALLATION

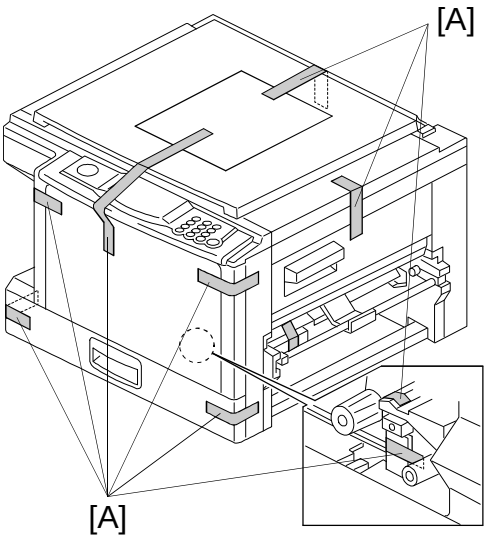

A173I502.wmf

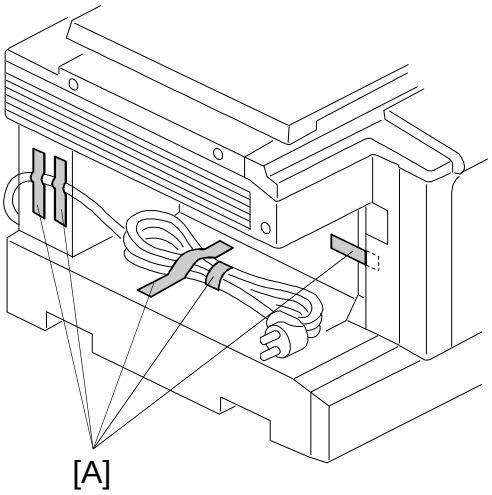

A173I504.wmf

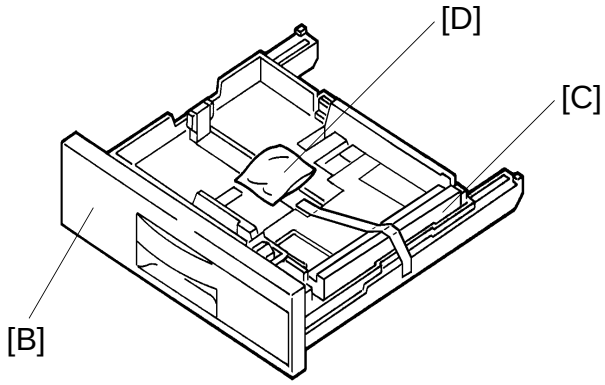

A173I503.img

1. Remove the strips of tape [A] from the copier at the locations shown.
2. Pull out the paper tray [B] and remove the foam block [C], tape, and silica gel [D].

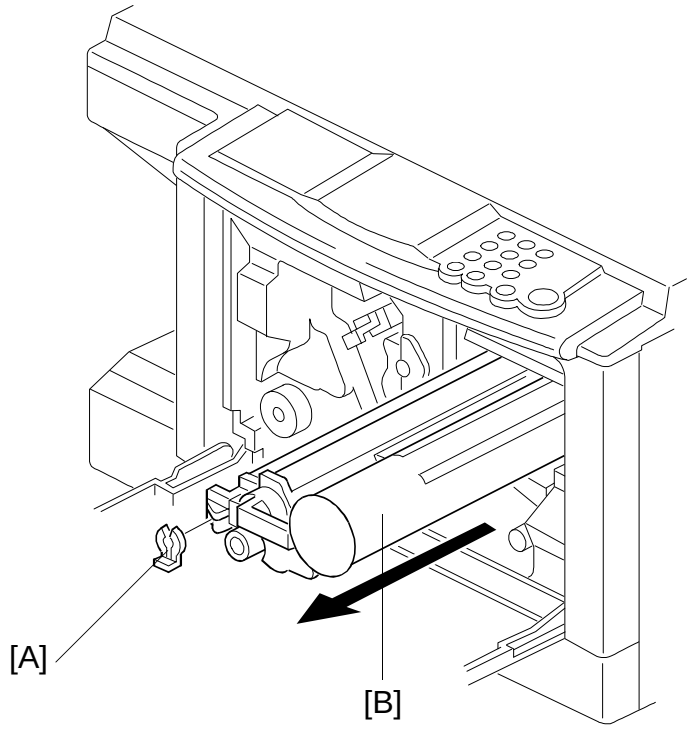

A173I505.wmf

3. Remove the snap ring [A] and pull out the development unit [B]. Place it on a clean sheet of paper.

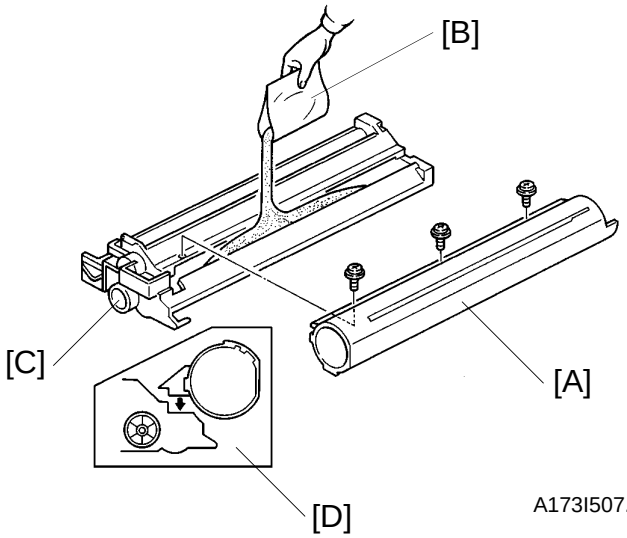

A173I507.img

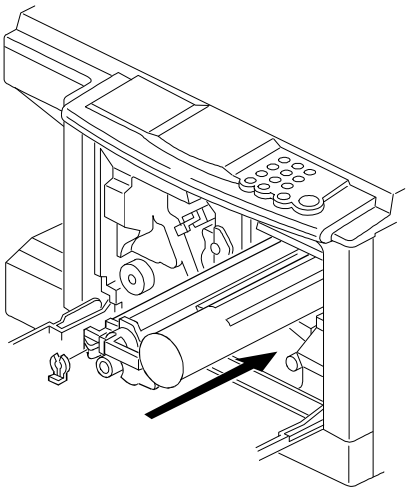

A173I506.wmf

4. Remove the toner supply unit [A] from the development unit (3 screws).
5. Pour one pack of developer [B] into the development unit while turning the development roller knob [C] counterclockwise to distribute the developer.
6. Reinstall the toner supply unit on the development unit.

   NOTE: Make sure that there is no gap [D] between the toner supply unit and the development unit.
7. Reinstall the development unit and the snap ring.

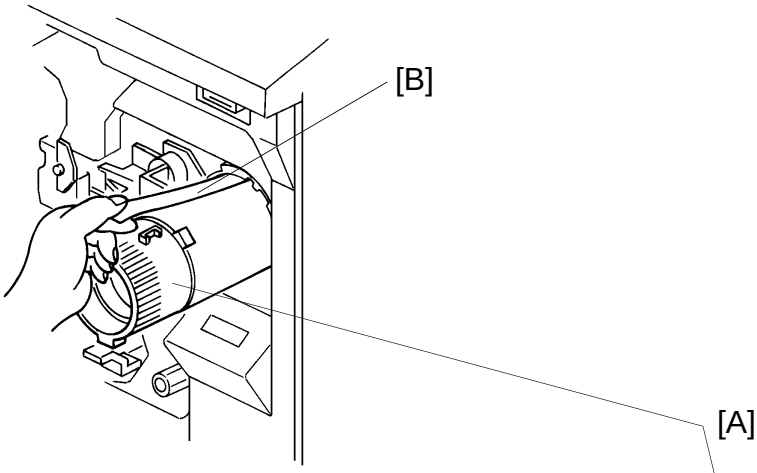

A173I509.img

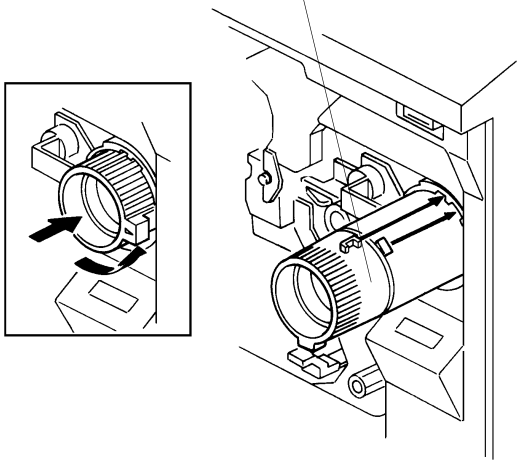

A173I510.img

8. Shake a toner cartridge [A] well and insert the cartridge while pulling off the seal [B]. Then, install the cartridge as shown.
9. Close the front cover.

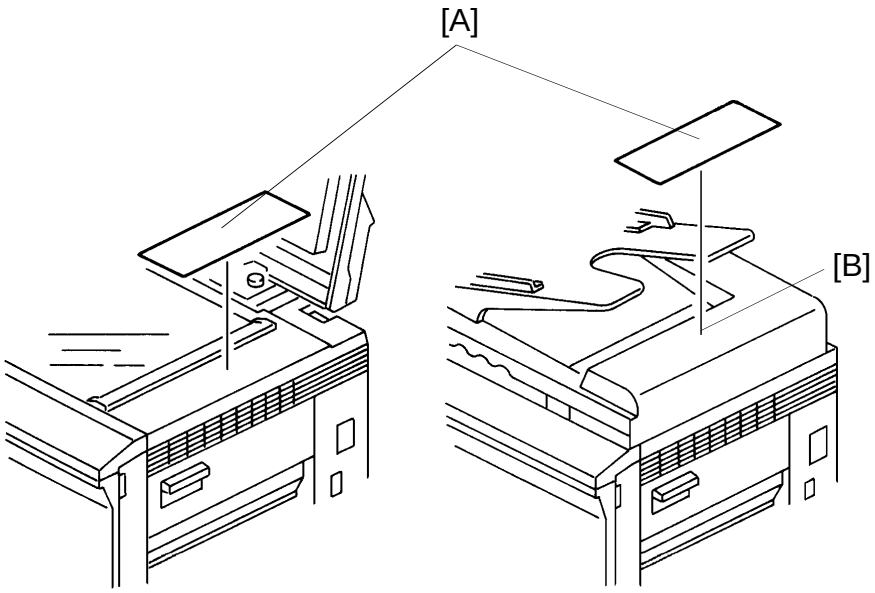

A173I511.img

10. Perform the developer initial setting procedure.
    1) Access SP mode.
        1. Press the [key]
        2. Press the Number key in the following order:
           [1] → [0] → [7]
        3. Press the [C/] key and hold it for more than 3 seconds.
    2) Perform SP65 in the following sequence.

SP Mode Number		Procedure
65	Developer Initial Setting	Enter "65" using the numeral keys and press the Enter key. "50" will be displayed in the copy counter. Press the Start key to start initial setting procedure.

11. Place the outer decal (symbol explanation) [A] on the upper cover and install the receiving tray.

    NOTE: If a DF is installed on the machine, place the outer decal [A] on the DF [B] as shown.

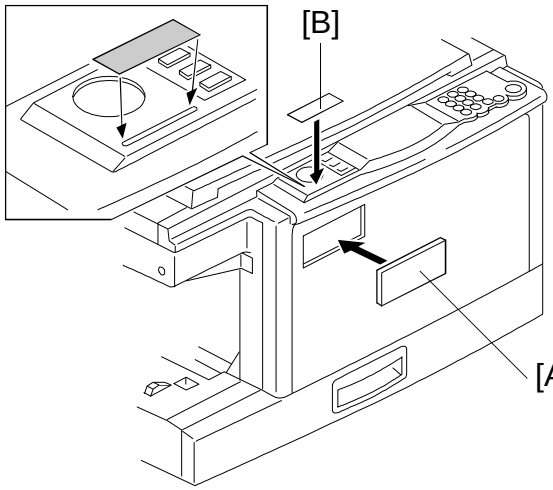

A173I512.wmf

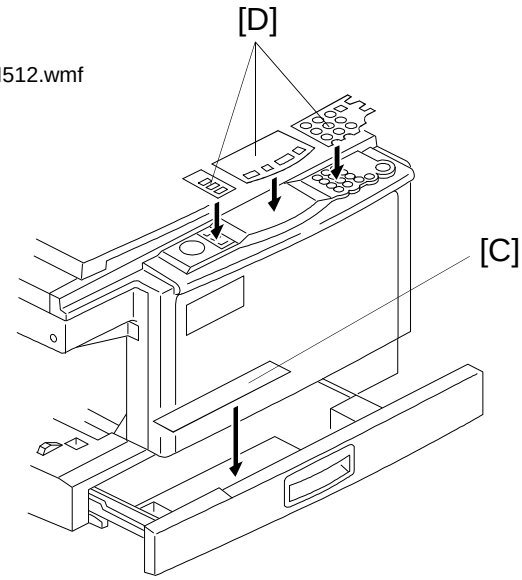

A173I513.wmf

12. Attach the model name plate [A] and key top cover decal [B] as shown in the illustration (OEM machines only).
13. Attach the changing paper size decal [C], and install the operation panel sheets [D] (Taiwan version machines only).
14. Load paper into the cassette and/or paper trays.
15. Input the paper size setting as described on the instruction decal [C].
16. Check the machine operation and copy quality.

2.3 CASSETTE MODIFICATION

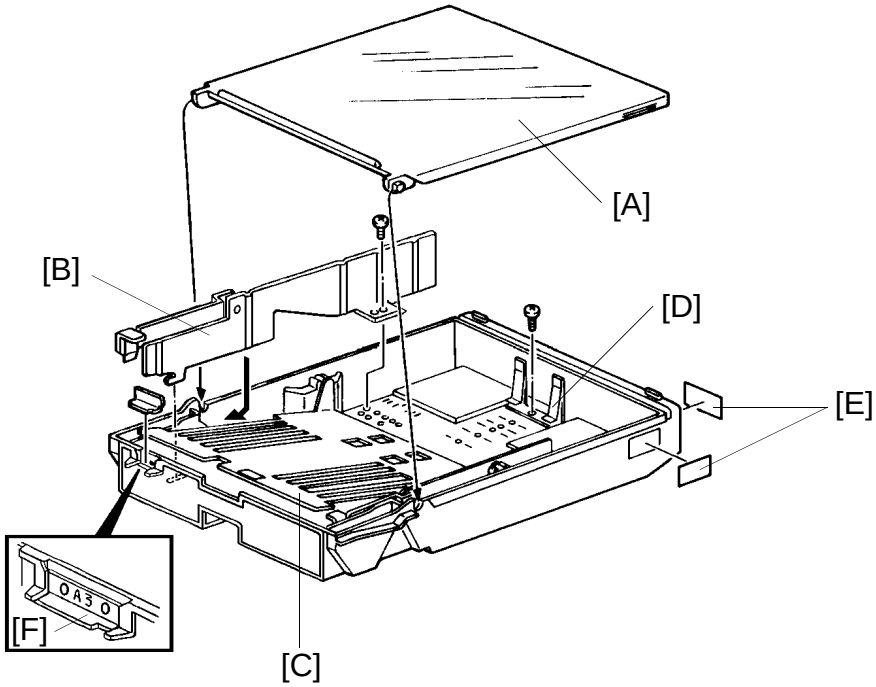

A173I514.img

1. Take off the cassette cover [A].
2. Remove the side fences [B] (1 screw each) and the bottom plate [C].
3. Reposition the rear fence [D] in the desired paper size position (1 screw).

   NOTE: Paper size positions are shown on the inside of the cassette.
4. Reinstall the bottom plate.
5. Reinstall the side fences in the desired size positions.
6. Attach the proper paper size decals [E] on the cassette at the positions shown.
7. Insert the actuator plate [F] in the slot on the front of the cassette as shown.

2.4 KEY COUNTER HOLDER INSTALLATION (Option)

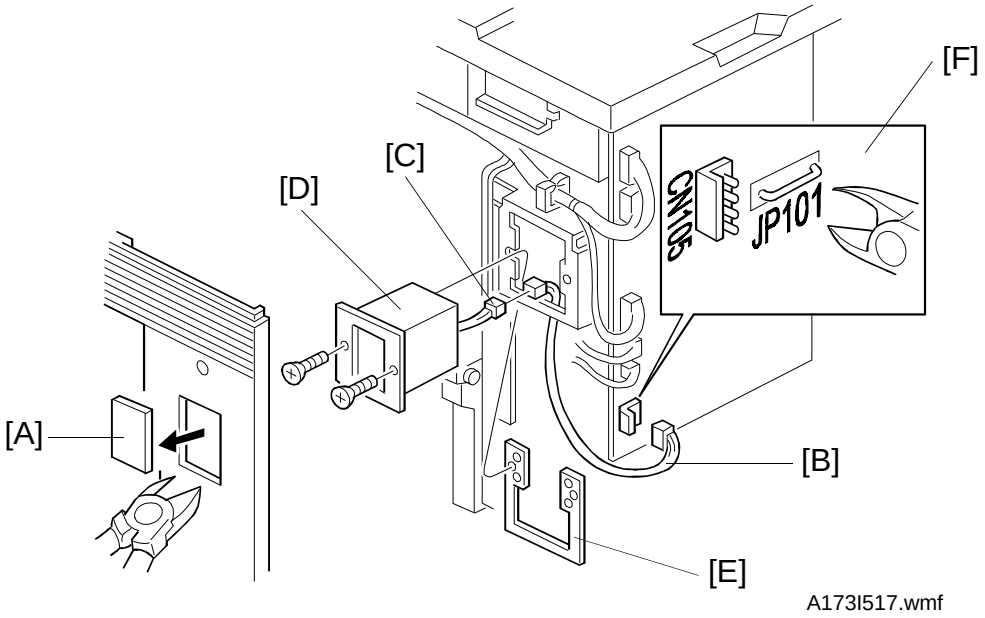

A173I517.wmf

NOTE: To install the key counter holder, the following parts are required:

Key Counter Bracket (54261515)
Key Counter Harness (A0775312)
Two M3x6 Sunken Head Screws (03230060W)

1. Unplug the power cord.
2. Remove the right cover (4 screws) and rear cover (4 screws).
3. Cut off the key counter cover [A] on the right cover with a pair of pliers.
4. Connect the key counter harness [B] to CN105 on the main board.
5. Connect the 4 pin connector [C] of the key counter holder [D] to the key counter harness through the cutout in the frame.
6. Position the key counter bracket [E] as shown in the illustration and insert the key counter holder.
7. Align the holes in the key counter bracket with the mounting holes in the key counter holder. Secure the key counter holder (2 screws).

   NOTE: The key counter bracket has three different hole sizes. Use the holes which match those on the counter.
8. Cut the jumper wire (JP101) using a pair of pliers [F].
9. Reinstall all the covers.

2.5 TONER OVERFLOW SENSOR INSTALLATION (Option)

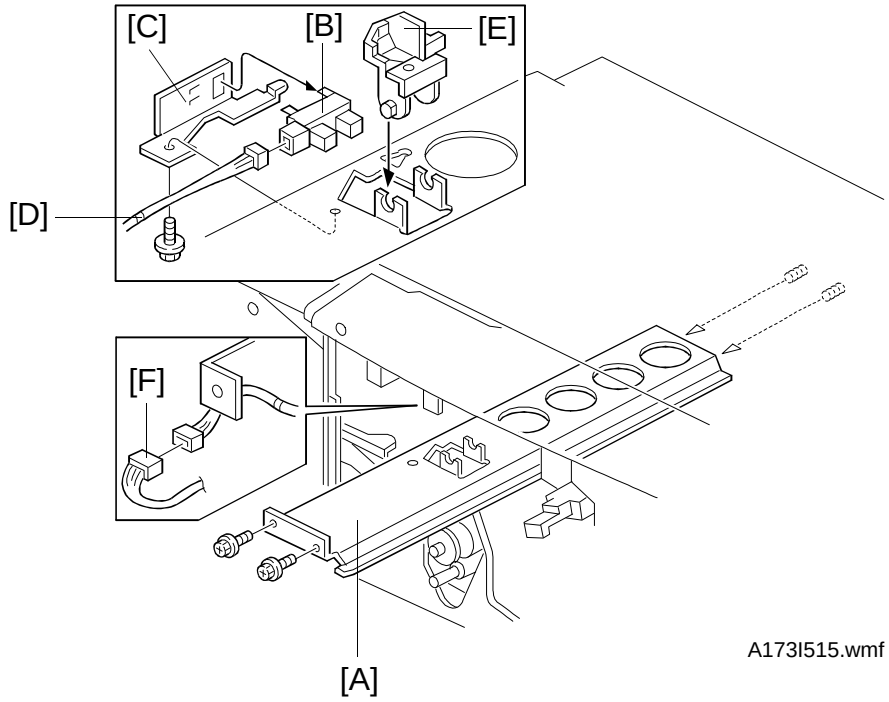

The following parts are necessary to install the toner overflow sensor:

AW020075: Photointerrupter
A0063676: Sensor Shutter
A0483596: Sensor Bracket
A0485310: Harness - Overflow
03130060W: Philips Pan Head Screw - M3x6

1. Unplug the power cord.
2. Remove the front door and the inner cover (seven screws).
3. Remove the guide plate [A] (2 screws).
4. Set the photointerrupter [B] on the bracket [C]. Connect the overflow harness [D] to the photointerrupter.
5. Install the bracket [C] (1 screw) on the guide plate [A]. Then set the sensor shutter [E].
6. Reinstall the guide plate (2 screws).
7. Connect the harness to the connector [F] of the copier.
8. Reinstall the inner cover and the front door.
9. Change the SP115 setting from 0 to 1.

2.6 PRE-TRANSFER LAMP (PTL) INSTALLATION (Option)

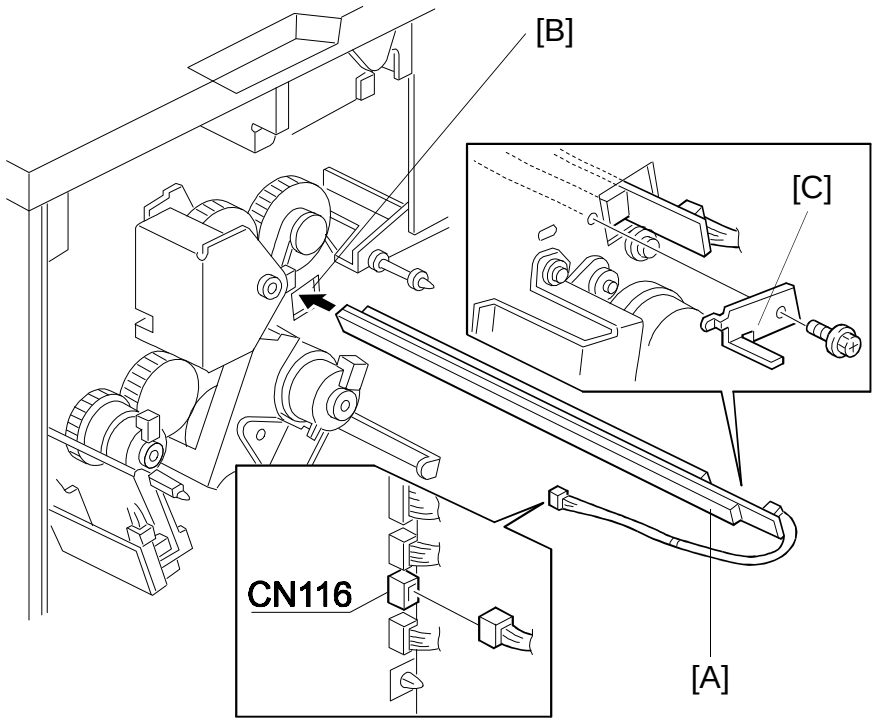

A173I516.wmf

NOTE: If the machine is used in extremely high temperature and high humidity conditions, the image density of halftone areas will be lighter, or the trailing edge of the copy might not be printed completely. If this problem occurs, install the optional PTL.

The following parts are necessary to install the pre-transfer lamp:

A0485226: Pre-transfer Lamp
A0482065: PTL Support Plate
04430060W: Hexagon Head Tapping Screw - M3x6

1. Remove the rear cover (4 screws).
2. Slide the pre-transfer lamp [A] through the cutout [B] in the rear frame.
3. Install the PTL support plate [C] (1 screw) to hold the pre-transfer lamp.
4. Connect the PTL connector to CN116 of the main board.
5. Reinstall the rear cover.

2.7 OPTICS ANTI-CONDENSATION HEATER INSTALLATION (Option)

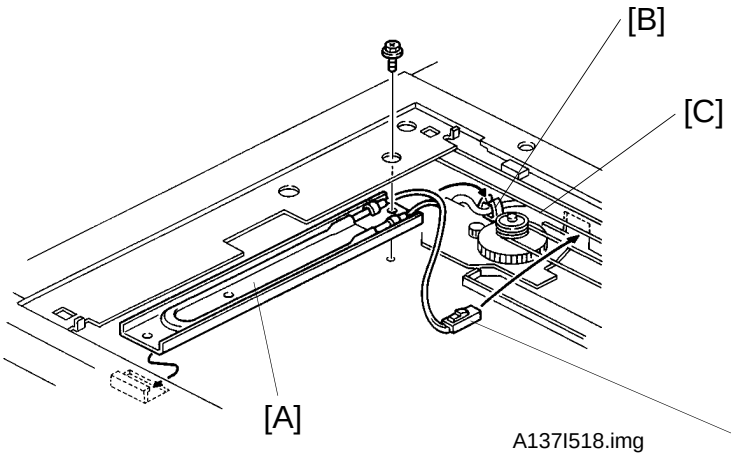

A137I518.img

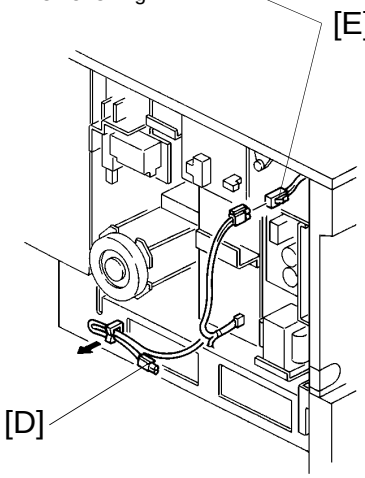

A173I519.img

1. Make sure that the main switch is turned off.
2. Remove the rear cover.
3. Remove the exposure glass. (See Exposure Glass Removal.)
4. Move the 1st and 2nd scanner unit all the way to the right.
5. Install the optics heater [A] in the optics cavity as shown (1 screw: 04430060W).
   - Anti-condensation Heater - 115 V: AX400052
   - Anti-condensation Heater - 230 V: AX400053
6. Mount the anti-condensation heater harness in the following way.
   - Harness clamp [B].
   - Rear frame cutout hole [C].
7. Rewire the heater harness [D] as shown in the illustration and connect it to the anti-condensation heater connector [E].

SECTION 4

SERVICE TABLES

1. SERVICE REMARKS

1.1 GENERAL CAUTION

1. If the Start key is pressed before the copier finishes the warm-up cycle, the Ready indicator starts blinking and the copier starts making copies as soon as the warm-up cycle is completed.
2. Even if the main switch is turned off, ac power is applied to the power supply/ac drive board to drive the anti-condensation heater. Unplug the power cord before accessing this board.

1.2 DRUM AND DRUM UNIT

The organic photoconductor drum is comparatively more sensitive to light and ammonia gas than a selenium drum.

1. Never expose the drum to direct sunlight.
2. Never expose the drum to direct light of more than 1,000 Lux for more than a minute.
3. Never touch the drum surface with bare hands. When the drum surface is touched with a finger or becomes dirty, wipe with a dry cloth or clean with wet cotton. Wipe with a dry cloth after cleaning with wet cotton.
4. Never use alcohol to clean the drum; alcohol dissolves the drum surface.
5. Store the drum in a cool, dry place away from heat.
6. Take care not to scratch the drum as the drum layer is thin and is easily damaged.
7. Never expose the drum to corrosive gases such as ammonia gas.
8. Always keep the drum in the protective sheet when inserting or pulling the drum unit out of the copier to avoid exposing it to bright light or direct sunlight. This will protect the drum from light fatigue.
9. Before pulling out the drum unit, place a sheet of paper under the drum to catch any spilled toner.
10. Drum initial setting (SP66) must be performed when a new drum is installed.

    NOTE: This is not necessary at installation of a new machine as the drum initial setting is performed at the factory.
11. Dispose of used drums in accordance with local regulations.

12. Never loosen the two screws securing the drum support plate. The position of the drum support plate is set with a special tool at the factory to ensure the proper gap between the drum and the development roller.

1.3 CHARGE CORONA

1. Clean the corona wire by sliding the corona unit in and out. (The cleaner pads come into contact with the corona wire when the corona unit has been slid all the way out.) The wire and casing can also be cleaned with water or dry cloth. Do not use sandpaper or solvent.
2. Do not touch the corona wire with oily hands. Oil stains may cause white bands on copies.
3. Make sure that the corona wire is correctly positioned between the cleaner pads and that there is no foreign material (iron filings, etc.) on the casing.
4. When installing a new corona wire, be sure to place the damper ring in the front end block. (See Charge Corona Wire Replacement.)
5. When adjusting the charge corona current, always make sure that the center of the drum shoe is aligned with the corona wire.
6. Clean the charge grid with a blower brush (not with a cloth).
7. The corona height should only be adjusted in the following two cases:
   a) When the front end block is replaced
   b) When the drum charge current is uneven

1.4 OPTICS

1. The positions of the following parts are very difficult to adjust, so do not adjust them.
   a) 4th/5th Mirror Home Position Sensor
   b) Lens Home Position Sensor
   c) Lens and 4th/5th Mirror Guide Rails

   NOTE: Before removing a sensor bracket to replace a sensor, mark the position of the bracket. Check the copy image (magnification and focus) to determine the exact location of the sensor.

2. When installing the exposure glass, make sure that the red mark on the edge of the glass faces up. This side has received a special treatment to make it smoother and to generate less static electricity. This is especially important when the DF is installed.
3. Clean the following parts with a dry cloth:
   a) Lens and 4th/5th Mirror Guide Rails
   b) Scanner Guide Plates
4. Clean the exposure glass with glass cleaner and a dry cloth to reduce the amount of static electricity on the glass surface.
5. Only use a clean soft cloth damped with alcohol or water to clean the mirrors and lens.
6. Do not touch the following parts with bare hands:
   a) Reflectors
   b) Exposure Lamp
   c) Mirrors and Lens
7. After adjusting the light intensity (SP48), adjust the ADS reference voltage (SP56).

1.5 DEVELOPMENT UNIT

1. Be careful not to nick or scratch the development roller sleeve.
2. Place the development unit on a sheet of paper after removing it from the copier. This prevents any small metal objects (staples, clips, E-rings, etc.) from being attracted to the development roller and getting inside the unit.
3. Be careful not to bend the bias terminals.
4. Never loosen the two screws securing the bias terminal block. The position of the terminal block is set with a special tool at the factory to ensure the proper gap between the drum and the development roller.
5. Never loosen the four screws securing the doctor plate. The position of the doctor plate is set with a special tool at the factory to ensure the proper gap between the doctor blade and the development roller.
6. Clean the drive gears after removing used developer.
7. Developer initial setting is necessary when the developer is replaced (SP65).
8. Dispose of used developer in accordance with local regulations.

1.6 TONER SUPPLY

1. Clean the image density sensor with a blower brush.
2. The ID sensor adjustment (Vsg Adjustment [SP54]) is required in the following cases:
   a) When the ID sensor is replaced
   b) When the main board is replaced
   c) When the drum has been replaced and Vsg is out of specification
   d) When there have been problems with toner supply and Vsg is out of specification

1.7 TRANSFER AND SEPARATION

1. Clean the corona wires and casing with water or a dry cloth.
2. When adjusting the corona current, always make sure that the center of the drum shoe is aligned with the corona wire.

1.8 CLEANING UNIT

1. When servicing the cleaning unit, be careful not to damage the edge of the cleaning blade.
2. Before pulling out the cleaning unit, place a sheet of paper under it to catch any spilled toner.
3. When inserting the cleaning unit into the copier, be sure the cleaning unit rail is properly engaged with the unit guide rail on the copier.
4. Empty the used toner tank every service call.
5. Dispose of used toner in accordance with local regulations.
6. After disposing of used toner, reset the used toner counter (SP83).

1.9 FUSING UNIT

1. Be careful not to damage the edges of the hot roller strippers or their tension springs.
2. Do not touch the fusing lamp with bare hands.
3. Make sure that the fusing lamp does not touch the inner surface of the hot roller.

1.10 PAPER FEED

1. Do not touch the paper feed rollers with oily hands.
2. Non-standard size copy paper may stick to the cassette side or back fences and misfeed. Reposition the fences.
   Example:
   With an A4/11" x 8 1/2" (sideways) cassette, the proper paper width is 296 mm. 297.5 mm width paper sticks to the cassette fences and does not feed correctly.
3. The side fences and the end fence of the paper tray should be positioned correctly so that they securely hold the paper. Otherwise, paper misfeeds may occur.
4. A worn out registration roller causes paper to crease. It should be replaced.

1.11 DOCUMENT FEEDER

1. Do not bend the DF interface harness at a sharp angle. This damages the fiber optics cables.
2. When installing or reinstalling the document feeder, make sure that the document feeder is in the open position.
3. A build-up of static electricity on the exposure glass can cause originals to misfeed. Apply silicone oil to the glass to reduce the amount of friction.

1.12 SORTER

1. The sorter has two types of bins, odd numbered and even numbered, which are installed in an alternating sequence. Be sure to install them in the correct order.
2. If the bins do not operate smoothly, lubricate the slot liners and transfer wheels using grease 501 or an equivalent type.

1.13 OTHERS

1. When replacing the main board, remove the RAM pack from the old main board and place it on the new main board. Then, install the new main board in the copier.
2. After installing the new main board with the new RAM pack, the "Clear All Memory (SP99)" procedure (see pages 4-10 and 11) must be performed. (Do not perform SP99 if you have placed the old RAM on the new main board.)
3. Never perform SP99 (Clear All Memory) except for the following two cases:
   a) When the copier malfunctions due to a damaged RAM pack
   b) After replacing the RAM pack
4. Whenever SP99 (Clear All Memory) is performed, all the steps of the "Clear All Memory (SP99)" procedure must be followed. Otherwise, copy quality might be seriously affected.
5. When replacing a sensor, do not overtighten the screws. This may damage the sensor.
6. If a customer claims that red image areas on the original do not appear on the copy, instruct the customer to select a different image density with the Manual Image Density key.
7. Tighten securely the screws used for grounding the following PCBs when reinstalling them.

   - Main Board
   - TC/SC Power Pack
   - CC/Grid/Bias Power Pack
   - AC/DC Power Supply Board

2. SERVICE PROGRAM MODE

2.1 SERVICE PROGRAM MODE OPERATION

The service program (SP) mode is used to check electrical data and change modes or adjustment values.

2.1.1 Service Program Access Procedure

There are two ways to access an SP mode.

1) Access Procedure 1 (for customers and sales representatives)
2) Access Procedure 2 (for service representatives)

Access Procedure 1 (for customers and sales representatives)

Accessible SP modes: SP2, SP3, SP4, SP13, SP14, SP15, SP16, SP17, SP18, SP19, SP21, SP22, SP23, SP26, SP33, SP53, SP78, SP86, SP91, SP92, SP93
(Refer to the service program mode table for details.)

1. Turn on the main switch.
2. Press the [C/⊘].
3. Press the [C/⊘] key and hold it for more than 3 seconds.
4. Enter the desired SP mode number using the number keys.

   NOTE: To cancel an SP mode number after entering it, press the [C/⊘] key.
5. Press the [R/#] key.

   NOTE: To enter a different SP mode number, press the [C/⊘] key and follow steps 4 and 5.
6. To leave SP mode, press the [C/⊘] key twice.

Service Tables

Access Procedure 2 for service representatives

Accessible SP modes: All SP modes except for SP98 and SP99

1. Turn on the main switch.
2. Press the [Interrupt/Stop] key.
3. Press the following keys:
   [1] → [0] → [7]
4. Press the [C/Clear] key and hold it for more than 3 seconds.
5. Enter the desired SP mode number using the number keys.

   NOTE: a) To cancel an SP mode number after entering it, press the [C/Clear] key.
   b) "." is displayed instead of "1" in the Copy Counter when SP mode numbers over "100" are entered. The maximum number is "131".

6. Press the [R/#] key while holding down the "0" key to view the current value.

   NOTE: To enter a different SP mode number, press the [C/Clear] key and follow steps 5 and 6.

7. To leave SP mode, press the [Interrupt/Stop] key three times.

2.1.2 Change Adjustment Values or Modes

1. Follow Access Procedure 1 or 2.
2. The current value/mode setting will be displayed in the Magnification indicator.
3. Enter the desired value or mode using the number keys and then press the R/# key.
4. To leave SP mode, press the key three times.

2.1.3 Memory Reset Procedures

– Clear Counters (SP98) –

NOTE: This SP mode clears the following counters:
- SP88: PM Counter Display
- SP91: User Code Counter Display
- SP100: 1st Feed Station Copies
- SP101: 2nd Feed Station Copies
- SP106: DF Originals
- SP120: Total Service Calls
- SP121: Optics Section Service Calls
- SP122: Exposure Lamp Service Calls
- SP124: Fusing Section Service Calls
- SP125: Duplex Unit Service Calls
- SP130: Total Misfeeds
- SP131: Number of Misfeeds by Location
- User Programs

1. Turn off the main switch.
2. Turn on DPS101-3 and 4 on the main board and turn on the main switch.
3. Enter "98" using the number keys and press the R/# key.
4. Enter "1" using the number keys and press the R/# key.

   NOTE: "1" blinks 4 times when the above procedure is completed.
5. Turn off the main switch.
6. Turn off DPS101-3 and 4.
7. Turn on the main switch to resume normal copier operation.

Service Tables

– Clear All Memory (SP99) –

⚠ CAUTION

Memory all clear mode (SP99) clears all the correction data for copy process control and software counters, and returns all the modes and adjustments to the default settings.
Normally, this SP mode should not be performed. This procedure is required only when the copier malfunctions due to a damaged RAM pack or after replacing the RAM pack.

1. Turn off the main switch.
2. Turn on DPS101-3 and 4 on the main board and turn on the main switch.
3. Enter "99" using the number keys and then press the R/# key.
4. Enter "1" using the number keys and press the R/# key.
   NOTE: "1" blinks 5 times when the above procedure is completed.
5. Turn off the main switch and DPS101-3 and 4.
6. Replace the developer .

⚠ CAUTION

Since the toner density level data (SP64) and the developer counter (no SP mode display) for the Vd correction have been cleared, the old developer cannot be used. If the old developer is used after all the memory is cleared, dirty background, toner scattering, or light copies may occur.

7. Clean the optics, sensors, and the inside of the copier.
8. Turn on the main switch.

9. Refer to the "SP MODE FACTORY SETTING DATA" sheet located in the front door and enter the data into the following SP modes:
   (1) SP40: Trailing Edge Erase Margin Adjustment
   (2) SP41: Lead Edge Erase Margin Adjustment
   (3) SP42: Registration Adjustment
   (4) SP43: Vertical Magnification Adjustment
   (5) SP44: Horizontal Magnification Adjustment
   (6) SP47: Focus Adjustment
   (7) SP48: Lamp Voltage Adjustment
   (8) SP60: Standard Image Density Grid Voltage
   (9) SP62: Standard ID Sensor Grid Voltage
10. Perform the following SP modes in sequence:
   (1) SP66: Drum Initial Setting
   (2) SP65: Developer Initial Setting
   (3) SP54: Vsg Adjustment
   (4) SP48: Light Intensity Adjustment
   (5) SP56: ADS Reference Voltage Adjustment
11. Check the copy quality and perform any necessary adjustments.

2.2 SERVICE PROGRAM MODE TABLE

1. A "❒" after the mode name means that copies can be made in SP mode.
   1) After the following SP mode numbers are entered, the copier goes automatically into copy mode when the R/# key is pressed while holding down the "0" key.
      SP mode numbers: SP5, SP6, SP52, SP55, and SP59
   2) After the following SP mode numbers are entered and the R/# key is pressed while holding down the "0" key, enter the desired value with the number keys. The copier goes automatically into copy mode when the R/# key is pressed.
      SP mode numbers: SP8, SP37, SP40, SP41, SP42, SP43, SP44, SP45, SP46, SP47, and SP48

   To make copies, enter the desired copy quantity, select the ID level and paper feed station, and then press the Start key.
2. A "°" before the mode number means that the mode can be accessed by customers and sales representatives.
3. In the *Function* column, comments (extra information) are in italics.
4. In the *Settings* column, the default value is printed in bold letters.

Mode No.		Function	Settings
1	Paper Type Setting (for DF)	Informs the DF of the type of paper used.	**0: mm** 1: inch
°2	Fixed Magnification Setting	Specifies the magnification ratios selected when the enlarge/reduce key is pressed. 0: 65%, 71%, 77%, 82%, 87%, 93%, 115%, 122%, 129%, 141%, 155% 1: 71%, 82%, 87%, 93%, 115%, 122%, 141% 2: 65%, 74%, 93%, 122%, 129%, 155%	**0: mm and inch** 1: mm version 2: inch version
°3	User Reproduction Ratio (Reduction)	Sets an optional reproduction ratio that can be selected by the Reduce key. ***61 to 99 can be selected. If "1 is selected with SP12, 50 to 99 can be selected. To cancel the setting, input "0" and press the R/# key.***	

Mode No.		Function	Settings
°4	User Reproduction Ratio (Enlargement)	Sets an optional reproduction ratio that can be selected by the Enlarge key	
		101 to 156 can be selected. If "1 is selected with SP12, 101 to 200 can be selected. ***To cancel the setting, input "0" and press the R/# key.***	
5	Exposure Lamp OFF ❒	Executes a free run with exposure lamp off.	
		Press the R/# key after selecting "5". Then, press the Start key to start free run. The free run stops when the C/⊗ key is pressed. To cancel this mode, press the R/# key when the machine is the stand-by condition. To save toner, remove the development unit.	
6	Misfeed Detection Off ❒	Copies are made without misfeed detection.	
		Press the R/# key after selecting "6" to enter this mode. Copies are made without misfeed detection. To cancel this mode, press the Recall/Enter key when the machine is the stand-by condition.	
8	Input Check ❒	Displays the input data from sensors and switches.	For details, see page 4-24 and 25.
9	Output Check	Electrical components turn on.	For details, see page 4-26 and 27.
11	All Indicators ON	Turns on all the indicators on the operation panel.	
		To turn off the indicators, press the R/# key.	
12	Zoom Range	Select the range of enlargement and reduction. If 1 is selected with this mode, low image density or uneven copy density might occur outside the range of 61 ~ 156%.	**0: 61 ~ 156%** 1: 50 ~ 200%

Mode No.		Function	Settings
°13	Side Edge Erase in Erase Edge Mode	Selects the width of the side erase margin in Erase Edge mode (Program key + "7" + R/# key) or Erase Center and Edge mode (Program key + "8" + R/# key). *0: 13.5 mm (B4, B5, 10" x 14")* *13 mm (A3, A4, *)* *12 mm (8 1/2" x 14", 8 1/2" x 13", 8 1/2" x 11", 8 1/2" x 5 1/2")* *11 mm (A4R, A5, 8" x 13", 8" x 10 1/2", 8" x 10", 11" x 17", 11" x 8 1/2", 11" x 15")* *10 mm (B5R, B6)* *1: 7.5 mm (B4, B5, 10" x 14")* *6 mm (8 1/2" x 14", 8 1/2" x 13", 8 1/2" x 11", 8 1/2" x 5 1/2", A4R, A5, 8" x 13", 8" x 10 1/2", 8" x 10")* *5.5 mm (A3, A4, *)* *5 mm (B5R, B6)* *3.5 mm (11" x 17", 11" x 8 1/2", 11" x 15")*	**0: Normal** 1: Narrower
°14	Toner Saver Priority	Specifies whether the Toner Saver mode is selected when the main switch is turned on.	**0: No** 1: Toner Saver
°15	Auto Reset Time	Selects auto reset time of 1 or 3 minutes, or cancels this mode.	**0: 1 min.** 1: 3 min. 2: None
°16	Count Up/Down for Copy Count Display	Selects count up or count down.	**0: Up** 1: Down
°17	Auto Feed Station Shift	Selects or deselect auto feed station shift mode. *The copier automatically shifts to the paper feed station holding same size paper when paper runs out. If "manual" is selected, copying stops if the other station does not have the same paper size.*	**0: Auto Shift** 1: Manual
°18	Lead and Trail Edge Erase in Erase Edge Mode	Selects the width of the lead and trail edge erase margins in Erase Edge mode (Program key + "7" + R/# key) or Erase Center and Edge mode (Program key + "8" + R/# key).	**0: 10 mm** 1: 5 mm 2: 15 mm 3: 20 mm
°19	ADS Priority	Specifies whether the copier defaults to ADS or manual mode when the main switch is turned on.	**0: ADS** 1: Manual
°21	APS Priority (ADF)	Specifies whether the copier defaults to APS or manual mode when an original is set on the DF. *A DF must be installed on the machine.*	**0: APS** 1: Manual

Mode No.		Function	Settings
°22	SADF Shut-off Time	Selects shut-off time for SADF mode. *A DF must be installed on the machine.*	**0: 5 s.** 1: 60 s.
°23	ADF Free Size	Enables originals of various sizes to be fed from the same stack. *A DF must be installed on the machine.*	**0: No** 1: Yes
°26	Center Erase	Selects the width of the center erase margin in Erase Center mode (Program key + "6" + R/# key) or Erase Center and Edge mode (Program key + "8" + R/# key).	**0: 20 mm** 1: 10 mm 2: 15 mm 3: 25 mm
27	A3/11" x 17" Double Count	Selects single or double count for the total counter in A3/11" x 17" copies.	**0: Single** 1: Double
28	Auto Sort Select	Sort mode is automatically selected when more than one original is set on the DF table and the entered copy quantity is greater than 1 and less than 11. *The sorter and DF must be installed on the machine.*	**0: Manual** 1: Auto Sort
29	Fusing Temperature Control	Selects the fusing temperature control mode. *After selecting the control mode and turning the main switch off/on, the fusing temperature control mode is changed.*	**0: ON/OFF control** 1: Phase control
30	Toner Supply Mode	Selects the toner supply system. *See SP31/SP32 for the toner supply ratio.*	**0: Detect Mode** 1: Fixed Supply Mode
31	Toner Supply Ratio (Detect Supply Mode)	Selects the toner supply ratio for detect supply mode.	**0: 15%** 1: 7% 2: 30% 3: 60%
32	Toner Supply Ratio (Fixed Mode)	Selects toner supply ratio in fixed mode.	**0: 7.0%** 1: 3.5% 2: 10.5% 3: 14.0%
°33	ID Sensor Bias	Sets the development bias voltage applied to the development roller for the ID Sensor Pattern. This should only be adjusted if SP37 and SP48 cannot achieve the required image density. *0: Vo* *1: Vo+20V* *2: Vo–20V* *3: Vo–40V* *4: Vo+40V* *5: Vo–60V* *6: Vo+60V*	Toner Density **0: Normal (Vo)** 1: Low 2: High 3: Higher 4: Lower 5: Highest 6: Lowest

Mode No.		Function	Settings
34	ADS Level	Selects the image density level in ADS mode. *Data: 1* *Increases the grid voltage (–40 V). Exposure lamp voltage is not changed.* *Data: 2* *Increases the development bias voltage (–40V). Exposure lamp voltage is not changed.*	**0: Normal** 1: Darker 2: Lighter
35	ID Detection Interval	Toner density detection is performed every 5 copies or 10 copies.	**0: 10 copies** 1: 5 copies
36	Toner Saver Bias Voltage	Selects the bias voltage for the Toner Saver mode. (Refer to 6.5.4 Toner Saver Mode of section 2.) 0: Normal 1: Darker 2: Lighter	**0: –200 V** 1: –160 V 2: –240 V
37	Image Bias Adjustment ❒	Adjusts the development bias voltage for copying. *Use this SP mode, if the image density at level 4 cannot be adjusted to the required level by the Light Intensity Adjustment (SP48).* *0: Vo* *3: Vo–20V* *1: Vo+40V* *4: Vo–40V* *2: Vo+20V*	**0: Normal (Vo)** 1: Darkest 2: Darker 3: Lighter 4: Lightest
38	Toner End Recovery Check	Selects if the toner recovery check is done or not. (Refer to "6.9.3 Toner End Recovery" of section 2.)	**1: No** 2. Yes
40	Trailing Edge Erase Margin ❒	Adjust the trailing edge erase margin. *0.5 mm per step (max. –3.5 mm to +3.5 mm).*	1–15 **Default = 8 (0 mm)**
41	Lead Edge Erase Margin Adjustment ❒	Adjusts the lead edge erase margin. *0.5 mm per step (max. –3.5 mm to 3.5 mm).*	1–15 **Default = 8 (0 mm)**
42	Registration Adjustment ❒	Adjusts registration. *0.5 mm per step (max. +3.5 mm to –3.5 mm).*	1–15 **Default = 8 (0 mm)**
43	Vertical Magnification Adjustment ❒	Adjusts magnification in the paper feed direction. *0.2% per step (max. –1.4% to +1.4%). Do SP47 after this.*	1–15 **Default = 8**
44	Horizontal Magnification Adjustment ❒	Adjusts magnification perpendicular to the direction of paper feed. *0.2% per step (max. –3.0% to +3.0%). Do SP47 after this.*	1–31 **Default = 16**

Mode No.		Function	Settings
45	Registration Buckle-Cassette Feed ❒	Adjust the amount of paper buckle in the registration area. *0.5 mm per step (max. –3.5 mm to +3.5 mm).*	1–15 **Default = 8**
46	Registration Buckle-Tray Feed ❒		
47	Focus Adjustment ❒	Adjusts the 4th/5th mirror position to correct focus. *This mode must be done after vertical and horizontal magnification adjustments (SP43 and SP44).*	1–80 **Default = 40**
48	Light Intensity Adjustment ❒	Adjusts the exposure lamp voltage. 110 V machine: 1 step = 0.5 V 220 V machine: 1 step = 1.0 V ***The exposure lamp voltage is adjusted on the production line. If this value is changed, perform ADS reference voltage adjustment (SP56). The V_L correction is cleared when this adjustment is performed.***	1–50 **Default = 26** (220 V machines = 126 V) (115 V machines = 63 V)
49	Fusing Temperature Adjustment	Adjusts the fusing temperature.	175–195°C **Default = 190°C**
51	Exposure Lamp Data Display	Displays the exposure lamp voltage. *The exposure lamp and optics cooling fans turn on for 10 seconds. Press the C/S key to turn this mode off. Do not repeat more than 5 times to avoid overheating the optics cavity.*	
52	Fusing Temperature Display ❒	Displays the fusing temperature.	
°53	Key Counter Count Timing	Determines the key counter count timing	0: At Paper Feed 1: At Paper Exit
54	Vsg Adjustment	Adjusts Vsg. *The machine automatically adjusts Vsg to 4.0 ± 0.1V while the "0" key is held down. (The voltage is displayed on the magnification indicator.) The main motor and the ID sensor LED turn on.*	
55	Vsg & Vsp Display ❒	Displays the Vsg and Vsp readings. The Vsg reading is displayed while the "0" key is held down. *When making copies, the Vsp and Vsg voltage readings are updated every 10 or 5 copies depending on SP35 (ID Detection Interval).*	

Mode No.		Function	Settings
56	ADS Reference Voltage Adjustment	Adjusts ADS. *After adjusting the light intensity, place 6 or more sheets of A3 or 11" x 17" white paper on the exposure glass and select this mode. The machine automatically adjust the ADS reference voltage to 2.5 V after the Start key is pressed. (The voltage is displayed.) The V_L correction is cleared when this adjustment is performed.*	
57	Machine On Time	Displays the total hours that the main switch has been on. *The first three digits are displayed in the Magnification indicator. Hold down the "0" key to display the last three digits.* *This counter is reset when Machine On Time Reset (SP94) is performed.*	
58	Drum Rotation Time	Displays the total hours that the drum has rotated. *The first three digits are displayed in the Magnification indicator. Hold down the "0" key to display the last three digits.*	
59	Bias/Grid Voltage Display ❒	Displays the development bias voltage. *Press the Start key to display the bias voltage. While the "0" key is held down, the grid voltage is displayed.*	
60	Standard Image Density Grid Voltage	Factory use only ***Do not change setting.*** *The factory setting differs from machine to machine. Refer to "SP MODE FACTORY SETTING DATA" sheet located inside the front door.*	1: –600 volts 2: –620 volts 3: –640 volts 4: –660 volts 5: –680 volts 6: –700 volts 7: –720 volts 8: –740 volts **9: –760 volts** 10: –780 volts 11: –800 volts 12: –820 volts 13: –840 volts 14: –860 volts 15: –880 volts 16: –900 volts 17: –920 volts

Mode No.		Function	Settings
61	V_L Correction Interval	Sets the interval of V_L correction. *The exposure lamp data increases by +0.5 V at the set machine on time interval.*	**0: Auto V_L Correction** 1: 0.5 V/70 h 2: 0.5 V/20 h 3: 0.5 V/40 h 4: 0.5 V/140 h 5: 0.5 V/10 h 6: 0.5 V/5 h 7: No correction
62	Standard ID Sensor Grid Voltage	Factory use only ***Do not change data.*** *The factory setting differs from machine to machine. Refer to the "SP MODE FACTORY SETTING DATA" sheet located inside the front door.*	1: –480 volts 2: –500 volts 3: –520 volts 4: –540 volts **5: –560 volts** 6: –580 volts 7: –600 volts 8: –620 volts 9: –640 volts 10: –660 volts 11: –680 volts 12: –700 volts 13: –720 volts 14: –740 volts
°63	Toner Forced Supply	Used to recover from low toner concentration. *The main motor starts turning and the development bias voltage is applied to the development roller.* *Hold down or release the "0" key to turn the toner supply clutch on or off .* *Press the R/# key or the C/S key to stop and return to normal mode.*	
64	Toner Density Level Display	Displays the toner density level detected during initial setting (SP65). *Value Vsp/Vsg (%)* *0: 0–8* *1: 9–22* *2: 23–*	**0**–2
°65	Developer Initial Setting	Used to condition the new developer. *"50" is displayed on the copy counter when the R/# key is pressed. Press the Start key to start the initial setting.* ***Initial setting must be done when new developer is installed.*** *The copier automatically returns to normal mode after developer conditioning (50 cycles) is completed.*	

Service Tables

Mode No.		Function	Settings
66	Drum Initial Setting	Used to set up the machine for a new drum. Detects Vrp and performs Vr correction. ***Initial setting must be done when a new drum is installed.*** *The drum rotation time (SP58) and the drum counter (SP69) are cleared when the R/# key is pressed after "66" is entered.*	
67	Vr Ratio Display	Displays the present Vr ratio. *L = Vrp/Vsg x 100* *L(%) Grid voltage* *100 to 89 Vo* *88 to 76 Vo–40V* *75 to 62 Vo–80V* *61 to 45 Vo–120V* *44 to 0 Vo–160V*	
68	Vr Forced Detection	Detects Vrp and performs Vr correction. *The copier returns to normal mode after the R/# key is pressed.* *The detection is performed in the first 5 copy cycles after this SP mode is performed.*	
69	Drum Counter	Shows the total number of copies made with the drum now installed in the machine. *The first three digits are displayed in the magnification indicator. Hold down the "0" key to display the last three digits.*	
70	VL Correction Level Display	Displays the VL correction level.	
71	Sorter Identification	Enables sorter operation. *Sorter Mode 1: U4 is displayed when the sorter is opened.* *Sorter Mode 2: U4 is displayed when Sort/Stack mode is selected and the sorter is opened.*	**0: No sorter** 1: Sorter Mode 1 2: Sorter Mode 2
76	Sorter Bin Capacity	Sets the stock quantity limits.	0: No limits **1: Limits**
°78	Auto Energy Saver Mode	Selects the "Automatic Energy Saver" mode. *The copier automatically goes to Energy Saver mode after the selected auto reset time (SP15).*	**0: No** 1: Yes
83	Used Toner Counter Reset	Clears the used toner counter. Input "1" and then press the " R/# " key. This setting is only effective if SP115 is set to "0".	**0: No** 1: Yes
84	Factory Use	Do not change this setting.	Should be "0"

Mode No.		Function	Settings
°86	Energy Saving Temperature Setting	Selects the energy saving ratio. *The greater the saving ratio, the longer the waiting time until the copier returns to the ready condition.* *Saving Ratio Waiting Time* *0: 63% 30 s.* *1: 37% 20 s.* *2: 28% 10 s.* *3: 12% 0 s.*	0: 63% 1: 37% **2: 28%** 3: 12%
87	PM Interval Setting	Sets the PM interval. *When the PM counter exceeds the set interval, the Magnification indicator blinks.*	**0: No PM** 1: 40K 2: 60K 3: 80K 4: 100K
88	PM Counter Display	Displays the contents of the PM counter. *The first three digits are displayed in the Magnification indicator. Hold down the "0" key to display the last three digits.*	
89	PM Counter Reset	Resets the PM counter. *Enter "1" with the number keys and then press the "R/# " key to clear the counter.*	**0: No** 1: Yes
90	User Code Mode	Enables user code mode. ***JP101 on the main board must be cut.*** *If this mode is set, operators must enter a code to make copies. The user codes are the following 20 numbers:* *1101, 1202, 1303, 1404, 1505, 1606, 1707, 1808, 1909, 2010, 2111, 2212, 2313, 2414, 2515, 2616, 2717, 2818, 2919, 3020*	**0: No** 1: Yes
°91	User Code Counter Display	Displays the contents of each user code counter. *Use the Zoom keys ("+" or "–") to select a user code. The last two digits of the user code are displayed in the copy counter. User code counters count from 0 to 999999.* *The first three digits are displayed in the Magnification indicator. Hold down the "." key to display the last three digits.*	
°92	User Code Counter Clear	Resets all the user codes counters (SP91). *To reset, press "1" then the "Enter" key.*	**0: No** 1: Yes
°93	Copy Limit	Limits the maximum copy quantity that can be entered.	1–99 **99=default**
94	Machine On Time Reset	Resets the machine on time (SP57).	**0: No** 1: Yes
95	VL Correction Reset	Resets the VL correction.	**0: No** 1: Yes

Service Tables

Mode No.		Function	Settings
98	Clear Counters	Clears the following counters and the User Program:s • SP88: PM Counter Display • SP91: User Code Counter Display • SP100: 1st Feed Station Copies • SP101: 2nd Feed Station Copies • SP106: DF Originals • SP120: Total Service Calls • SP121: Optics Section Service Calls • SP122: Exposure Lamp Service Calls • SP124: Fusing Section Service Calls • SP125: Duplex Unit Service Calls • SP130: Total Misfeeds • SP131: Number of Misfeeds by Location • User Programs	**0: No** 1: Yes
		DPS101-3 and 4 on the main board must be on to perform this SP mode. To clear, press "1" then the "R/#" key. See section 2.1.2, "Memory Reset Procedures" for details.	
99	Clear All Memory	Clears all the correction data for copy process control and software counters, and returns all modes and adjustments to the default settings.	**0: No** 1: Yes
		Normally, this SP mode should not be performed. *DPS101-3 and 4 on the main board must be on to perform this SP mode.* *To clear, press "1" then the "R/#" key. See section 2.1.2, "Memory Reset Procedures" for details.*	
100	1st Feed Station Copies	Displays the total number of copies fed from the 1st feed station (cassette and manual feed table).	
		The first three digits are displayed in the Magnification indicator. Hold down the "." key to display the last three digits.	
101	2nd Feed Station Copies	Displays the total number of copies fed from the 2nd feed station.	
		The first three digits are displayed in the Magnification indicator. Hold down the "." key to display the last three digits.	
106	DF Originals Counter	Displays the total number of originals fed from the DF.	
		The first three digits are displayed in the Magnification indicator. Hold down the "." key to display the last three digits.	
112	Toner Overflow Counter Display	Displays the total number of copies after the toner overflow counter is reset (SP83).	

Mode No.		Function	Settings
115	Used Toner Overflow Detection	Determines the method of toner overflow detection. 0: The CPU counts the copy number to detect toner overflow. 1: The toner overflow sensor detects toner overflow condition. *An optional toner overflow sensor must be installed to use method 1.*	**0: Toner overflow counter** 1: Toner overflow sensor
116	Toner Overflow Setting	Determines the number of copies when "E70" is displayed after the toner overflow counter is cleared.	**0: 60 K** 1: 40 K 2: 80 K 3: 100 K
120	Total Service Calls	Displays the total number of service call conditions.	
121	Optics Section Service Calls	Displays the total number of "optics section" service call conditions.	
122	Exposure Lamp Service Calls	Displays the total number of "exposure lamp" service call conditions.	
124	Fusing Section Service Calls	Displays the total number of "fusing section" service call conditions.	
130	Total Misfeeds	Displays the total number of paper misfeeds excluding original misfeeds in the DF. *The first three digits are displayed in the Magnification indicator. Hold down the "." key to display the last three digits.*	
131	Number of Misfeeds by Location	Displays the total number of paper misfeeds in each area. *Use the Zoom key ("+" or "–") to select the desired number.* *1: Paper Feed* *2: Exit* *3: Sorter* *4: DF* *The first three digits are displayed in the Magnification indicator. Hold down the "." key to display the last three digits.*	

2.3 SP-8 SENSOR/SWITCH DATA CHECK

– How to check sensor/switch inputs –

1. Press "8", then press the R/# key.
2. Enter the desired input number with the number keys. The input numbers are given in the following table.
3. Press the R/# key again.
4. Enter the number of copies and press the Start key.

   NOTE: The ON/OFF status can also be checked manually.
5. The input (0 or 1) will be displayed in the magnification indicator.

Input No.	Sensor/Switch/Signal	Input Value	
		0	1
1	Registration Sensor	Paper not detected (HIGH)	Paper detected (LOW)
2	Exit Sensor		
4	1st Paper End Sensor	Sensor feeler down (Paper end) (HIGH)	Sensor feeler up (LOW)
5	2nd Paper End Sensor		
9	Manual Feed Table Switch	Table closed (HIGH)	Table open (LOW)
10	Right Cover Switch	Cover closed (HIGH)	Cover open (LOW)
17	Scanner HP Sensor	Not home position (HIGH)	Home position (LOW)
18	Lens HP Sensor		
19	4th/5th Mirror HP Sensor		
21	Toner Overflow Sensor	Not Overflow (HIGH)	Overflow (LOW)
28	Sorter Paper Sensor	Paper not detected (High)	Paper detected (Low)
29	Sorter Wheel Switch	Paper feed position	No paper feed position
30	Sorter HP Switch	Not home position	Home position
31	Sorter Switch	Sorter opened	Sorter closed
32	ADF ON Line	ADF not installed	ADF installed
33	ADF Lift Sensor	ADF closed	ADF opened
35	Cassette Size	See note 1.	

NOTE 1: Paper size switch status is displayed on notches 1 to 5 of the image density indicator.

2.4 SP-9 ELECTRICAL COMPONENT CHECK

– How to turn electrical components on/off –

1. Enter "9", then press the R/# key.
2. Enter the desired output number with the number keys. The output numbers are given in the following table.
3. Press the Start key to turn on the electrical component.
4. Press the C/⊘ key to turn off the electrical component.

Output No.	Electrical Component
1	Main Motor
2	Charge Corona + Standard Grid
3	Charge Corona + ID Sensor Grid (Grid Voltage = Standard ID sensor grid + Vp Correction Factor)
4	Charge Corona + Vrp Grid (Grid Voltage = –500 volts)
5	Transfer Corona
8	Separation Corona
9	ID Sensor LED
11	Toner Supply Clutch
12	Total Counter
14	Sorter Roller Drive Motor
15	Sorter Wheel Motor (Bin up)
16	Sorter Wheel Motor (Bin down)
17	Registration Clutch
18	1st Paper Feed Clutch
19	2nd Paper Feed Clutch
23	Relay Roller Clutch
37	Erase Lamp
39	Optics Cooling Fans
40	Exposure Lamp + Optics Cooling Fans
42	Charge Corona + Standard Grid + Transfer Corona + Separation Corona
43	Charge Corona + ID Sensor Grid + Transfer Corona + Separation Corona
44	Charge Corona + Vrp Grid + Transfer Corona + Separation Corona
50 - 58	Applies bias voltage in 40 V steps starting at –120 V
60 - 68	Applies grid voltage in 60 V steps starting at –560 V

2.5 MISFEED LOCATION INDICATOR

2.5.1 Misfeed Indication

The following table shows the correspondence between the indicators and the sensors detecting the misfed paper:

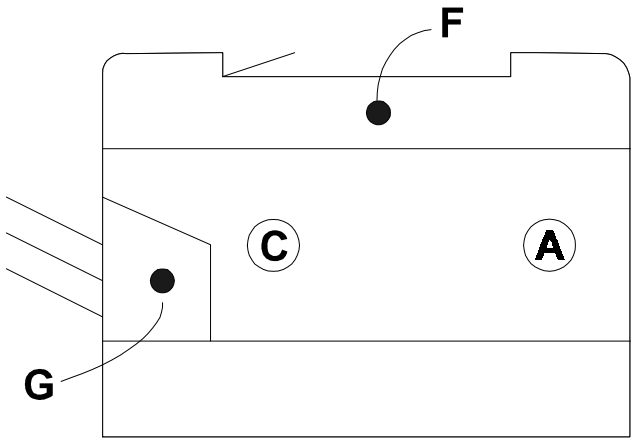

A173M500.wmf

Misdeed Location	Misfeed location indicator
1st feed station (cassette or manual feed)	A blinks
2nd feed station	A blinks
Paper exit section	C blinks
Document feeder	F blinks
Sorter paper sensor	G blinks

NOTE: If a misfeed is detected at power on, the indicator of the misfeed location lights.

2.5.2 Misfeed Recovery

1) Copier
   The misfeed condition is cleared when the front door is closed after the misfed paper is removed.

2) DF
   The misfeed condition is cleared when the DF is closed after the misfed paper is removed.

3) Sorter
   The misfeed condition is cleared when the sorter is closed after the misfed paper is removed.

3. SERVICE TABLES

3.1 DIP SWITCHES

Copier Main Board

DPS	Normal	Function
101-1	OFF	Free run
101-2	OFF	Forced start (Ready temperature ignored) **Factory use only**
101-3 101-4	OFF OFF	To clear memory counters with SP98 or to clear all memory with SP99

NOTE: a) Free run starts when the Start key is pressed. To stop the free run, press the C/S key.

b) The copy quality cannot be guaranteed if the fusing unit has not yet reached standard operating temperature.
To cancel this mode, turn off DPS101-2, then turn the main switch off and on.
This mode must not be used in the field. The fusing and pressure rollers may be damaged when toner remaining on the rollers melts.

DF Main Board

DPS101				Function
1	2	3	4	
ON	OFF	OFF	OFF	Normal mode for this copier
ON	OFF	OFF	ON	One-sided free run
OFF	ON	OFF	ON	Two-sided free run
OFF	OFF	ON	ON	Solenoid test: Switch 101 - solenoids ON Switch 102 - solenoids OFF
ON	ON	OFF	ON	Motor test
ON	ON	ON	ON	All indicators ON

NOTE: a) To use all functions, DPS101 must be set to the normal mode when the main switch is turned on. At this time, the initial sequence between the copier and the DF will take place.

b) To use all functions except for the solenoid test mode, the lift switch must be turned on.

c) To use the one and two-sided free run modes, all sensors must be activated in the normal manner. Therefore, place the DF in the normal working position (down) and place paper on the original table. Then, turn on SW101 at the rear side of the DF.

3.2 VARIABLE RESISTORS

CC/Grid/Bias Power Pack

Number	Function
VRC	Adjusts charge corona current
VRG	Adjusts grid voltage
VRB	Adjusts development bias voltage

TC/SC Power Pack

Number	Function
VRT	Adjusts transfer corona current
VRD	Adjusts separation corona current

DF Main Board

Number	Function
VR101	Factory use only
VR102	Original leading edge registration adjustment (One-sided original mode)
VR103	Original leading edge registration adjustment (Two-sided original mode)
VR106	Factory use only

4. SPECIAL TOOLS AND LUBRICANTS

Part Number	Description	Q'ty
A0069105	Drum Shoe Shaft	1
A0069103	Scanner Wire Clamper (Omega Clamp)	1
A0069104	Scanner Positioning Pin (4 pcs)	1 set
A0089502	Grease G-40M	1
52039501	Grease (Shinetsu Silicone G-501)	1
54429106	Drum Shoe	1
54479104	Shoe Adapter	1
54209507	Digital Multimeter	1
54479078	Heat Resistant Grease (MT-78)	1
54209516	Test Chart OS-A3 (10 pcs/set)	
54209502	Test Chart OS-A3 (100 pcs/set)	

5. PREVENTIVE MAINTENANCE SCHEDULE

5.1 PM TABLE

L = Lubricate R = Replace C = Clean I = Inspect

	EM	60K	120K	180K	240K	Notes
Optics						
Mirrors, Lens, Reflectors	C	C	C	C	C	Cotton pad with water, or blower brush
Exposure Glass	C	C	C	C	C	Alcohol or glass cleaner
Platen Cover Sheet	C	R	R	R	R	Alcohol or water (replace if necessary)
Scanner Guide Plate		C	C	C	C	Dry cloth
Lens and 4th/5th Mirror Guide Rails		C	C	C	C	Dry cloth
Paper Feed (for each paper feed station)						
Paper Feed Rollers	C		R		R	Water
Registration Roller		C	C	C	C	Water (replace if necessary)
Relay Roller		C	C	C	C	Water
Paper Feed Guide Plate		C	C	C	C	Alcohol
Cassette Bottom Plate Pad		C	R	C	R	Water
Paper Tray Bottom Plate Pad		C	R	C	R	Water
Friction Pad		C	R	C	R	Water
Registration Sensor		I	I	I	I	
Around Drum						
Corona Wires	C	R	R	R	R	Dry cloth or water
Wire Cleaner		R	R	R	R	
Charge Grid		C	R	C	R	Blower brush
End Blocks and Casing	C	C	C	C	C	Alcohol or water
Transfer Guide Plate		C	C	C	C	Dry cloth
Quenching Lamp	C	C	C	C	C	Dry cloth
ID Sensor	C	C	C	C	C	Blower brush
Erase Lamp	C	C	C	C	C	Dry cloth
Pick-off Pawls	C	C	C	C	C	Suitable solvent (replace if necessary)
Cleaning Unit						
Cleaning Blade			R		R	

Service Tables

	EM	60K	120K	180K	240K	Notes
Cleaning Seal		I	I	I	I	Replace if necessary
Used Toner Tank	C	C	C	C	C	Empty used toner
Development Unit						
Developer		R	R	R	R	Replace if necessary
Inlet Seal		I	I	I	I	Replace if necessary
Fusing Unit						
Hot Roller				R		
Pressure Roller				R		
Stripper Pawls		C	C	C	C	Suitable solvent, replace if necessary
Fusing Entrance and Exit Guides		C	C	C	C	Suitable solvent
Fusing Thermistor		I	I	I	I	Suitable solvent, clean if necessary
Others						
Ozone Filters		R	R	R	R	
Drive Belt		I	I	I	I	Replace if necessary
Bushings		I	I	I	I	Lubricate if necessary (Spindle oil)
Exit Sensor		I	I	I	I	
Document Feeder PM interval: number of original fed (SP106)						
Transport Belt	C	C	R	C	R	Belt cleaner
Friction Belt	C	R	R	R	R	
Pick-up Roller		C	C	C	C	Water, replace if necessary
Feed Roller		C	C	C	C	Water, replace if necessary
Feed-in Clutch		L	L	L	L	Mobil Temp. 78
Sorter						
Bin Guide/Wheel		L	L	L	L	Grease G501 (if necessary)
Round Belt		C	C	C	C	Alcohol
Guide Plate		C	C	C	C	Dry cloth

5.2 EXPLANATION OF REGULAR PM

Item		Explanation
Optics Unit	Mirrors, Lens, Reflector, Exposure Glass, Platen Cover	Stains on any part of the optics unit result in a dirty background, black lines, black spots, or areas of decreased sharpness on the copy. Periodic cleaning is required. The exposure glass and the platen cover must also be cleaned. If stains on the platen cover cannot be removed, it must be replaced.
	Exposure Lamp	Deterioration of the exposure lamp affects the copy image. Inspect the lamp at regular intervals and replace if discolored.
Paper Feed, and Registration	Paper Feed Roller	If paper powder or dust adheres to the paper feed rollers and/or rollers are worn out, paper may not feed correctly and/or skewing may result. Cleaning or replacement is required at regular intervals.
	Registration Roller	A dirty registration roller can cause paper to register incorrectly, skew, or misfeed. Cleaning is required at regular intervals.
Transport	Transfer Guide Plate	If the transfer guide plate is dirty, the back sides of the copy may become dirty. Clean the plate at regular intervals.
Around the Drum	Charge Wires	Dirty charge wires may cause uneven image density. They should be cleaned or replaced at regular intervals.
	End Blocks	Toner tends to accumulate on the corona end blocks, and this can result in poor copy quality or even a high voltage leak. Clean end blocks at regular intervals.
	Quenching Lamp (QL)	If toner accumulates on the QL, dirty background or a repeating negative image may result. Clean the QL at regular intervals.
	ID Sensor	If paper dust or toner accumulates on the ID sensor, the toner density cannot be controlled correctly. This results in light copies or overtoning. Clean this sensor at regular intervals.
	Erase Lamp	If toner accumulates on the erase lamp, dirty background may occur that becomes progressively worse during long copy runs. Clean this lamp at regular intervals.
Cleaning Unit	Cleaning Blade	A dirty or worn out cleaning blade will cause black lines on copies and/or scratches on the drum. The blade must be replaced or cleaned at regular intervals.
	Used Toner Tank	If the used toner tank becomes full, "E70" lights in the copy counter and copying becomes disabled. To prevent unnecessary EM calls, the used toner tank should be emptied at regular intervals. Reset the toner overflow counter (SP83) after disposing of used toner.

Item		Explanation
Fusing Unit	Thermistor	If toner accumulates on the thermistor, fusing temperature control may not be accurate. Inspect the thermistor at regular intervals.
	Stripper Pawls	Toner or dust adhering to the stripper pawls can cause a paper misfeed. Clean or replace the pawls at regular intervals.
	Fusing Entrance and Exit Guides	Toner piling up on the guide plate will cause dirty background on the copy. Clean the guide plate at regular intervals.
DF	Transport Belt	A dirty transport belt can leave stains on copies. Clean or replace the belt at regular intervals.
	Pick-up Roller, Feed Roller, Separation Belt	When dirty, these rollers and this belt can leave stains on the copy paper. Clean or replace these parts at regular intervals.
Sorter	Bin Drive Wheel, Bin Guide	Dust adhering to the bin drive wheel or bin guide may interfere with bin movement and result in uneven bin positioning. Clean and lubricate if necessary.

5.3 REGULAR PM PROCEDURE

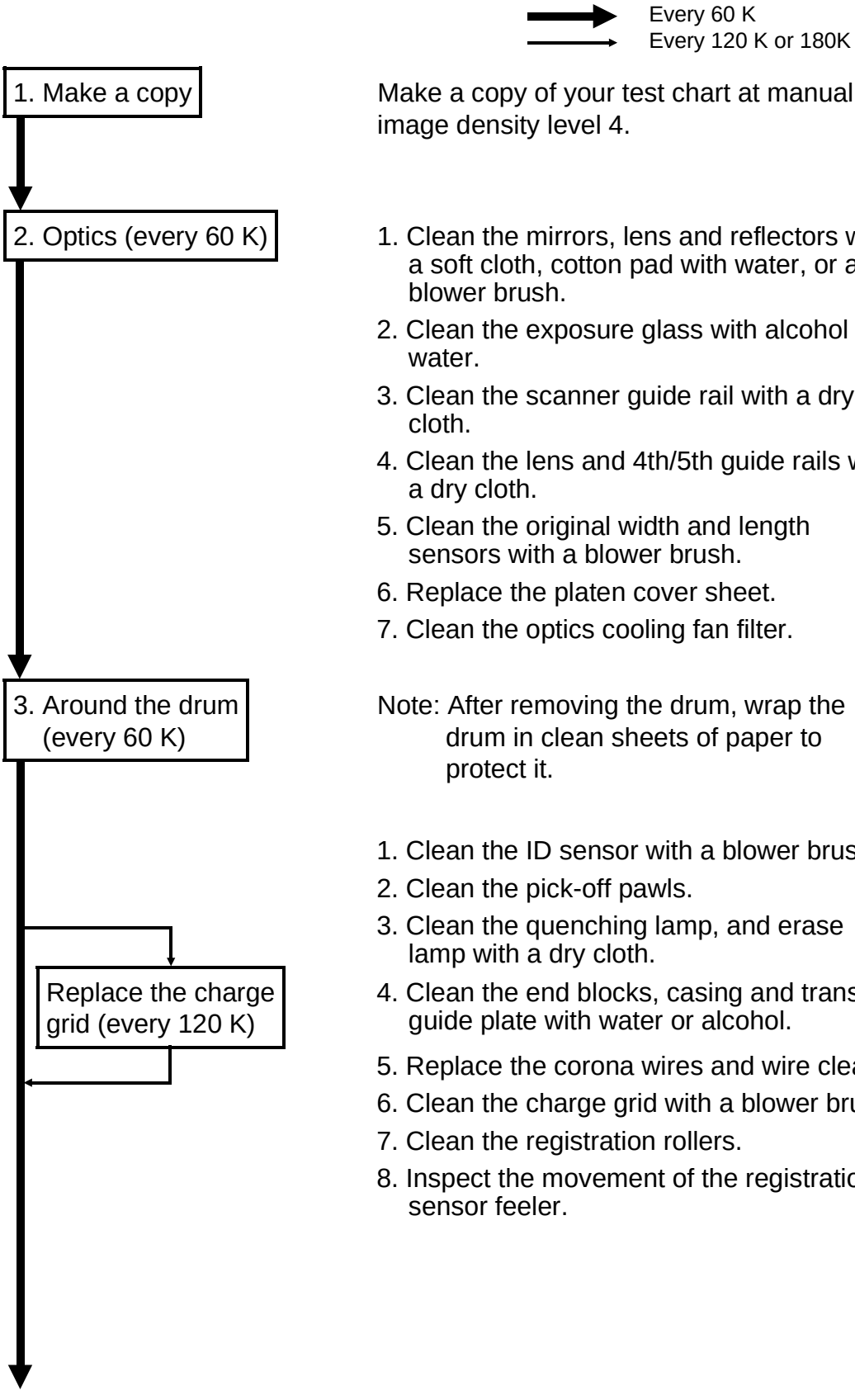

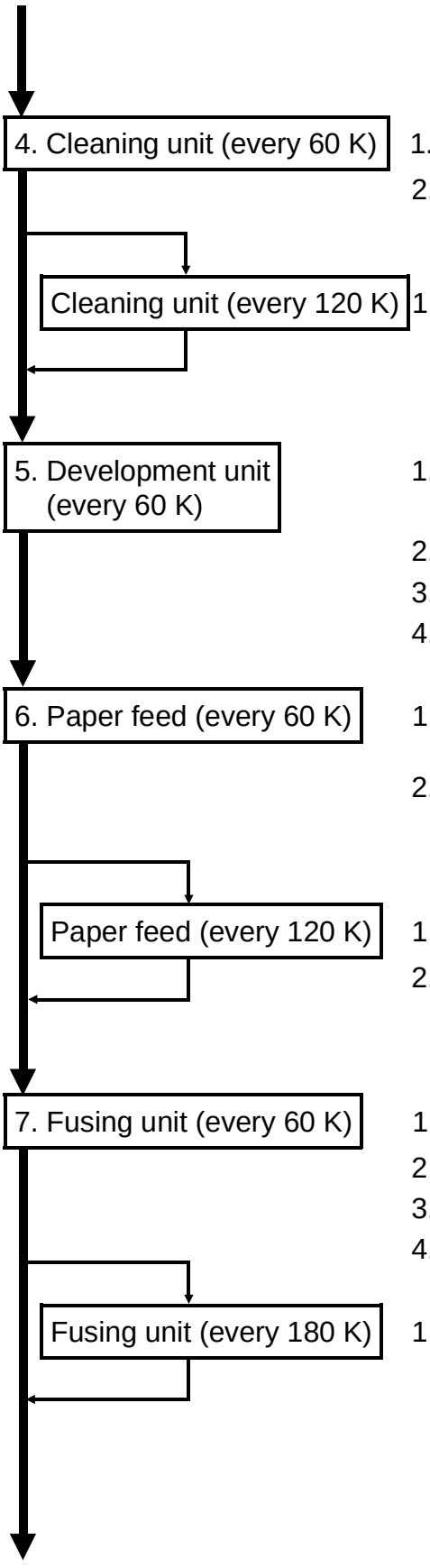

4. Cleaning unit (every 60 K)
   1. Empty the used toner tank.
   2. Clean the inside of the cleaning unit and the seals.

Cleaning unit (every 120 K)
   1. Replace the cleaning blade.

5. Development unit (every 60 K)
   1. Clean the development unit guide plate in the copier with a damp cloth.
   2. Remove the old developer.
   3. Clean the development unit and gears.
   4. Install the new developer.

6. Paper feed (every 60 K)
   1. Clean the relay roller, registration roller, and paper feed guide plates.
   2. Clean the bottom plate pads on the manual feed table, cassette and paper tray.

Paper feed (every 120 K)
   1. Replace the paper feed roller.
   2. Replace the bottom plate pads on the manual feed table, cassette, and paper tray.

7. Fusing unit (every 60 K)
   1. Clean the entrance guide plate.
   2. Inspect the thermistor.
   3. Clean the stripper pawls.
   4. Replace the ozone filters.

Fusing unit (every 180 K)
   1. Replace the hot roller and pressure roller.

8. Copy quality

1. Perform the developer initial setting (SP65), if the developer has been replaced.
2. Reset the toner overflow counter (SP83) if the used toner has been disposed of.
3. Perform the drum initial setting (SP66), if the drum has been replaced.
4. Perform the V_L correction reset (SP94).
5. Adjust the exposure lamp intensity (SP48).
6. Adjust the ADS reference voltage (SP56).
7. Adjust the Vsg voltage (SP54).
8. Make a copy of the OS-A3 test chart at manual image density level 4 and perform copy quality adjustments if necessary.

SECTION 5

REPLACEMENT AND ADJUSTMENT

1. EXTERIOR AND INNER COVERS

1.1 EXTERIOR COVER REMOVAL

1.1.1 Front Door

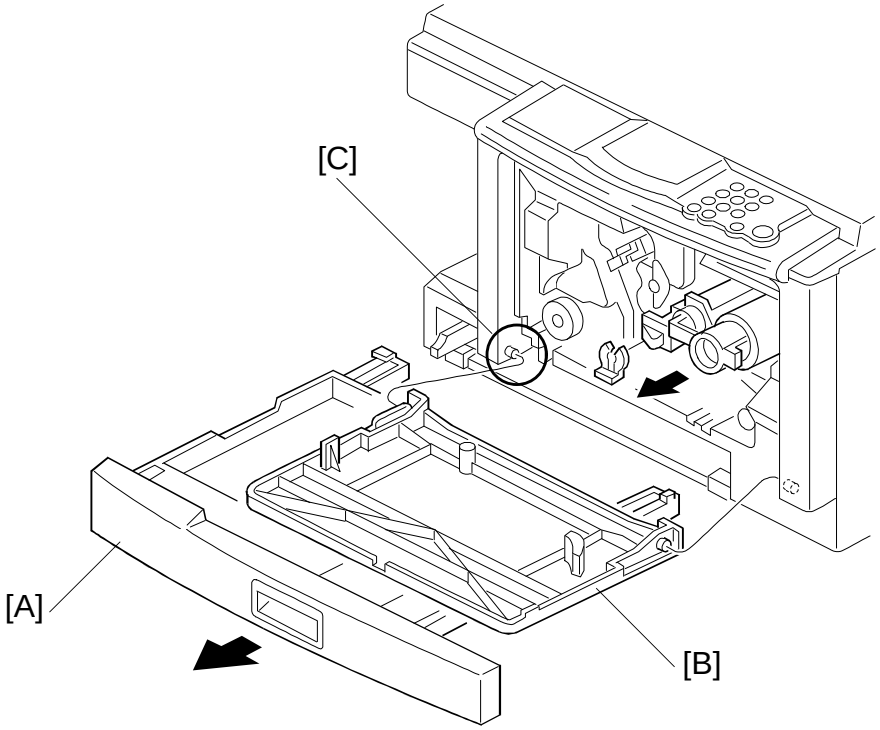

A173R500.wmf

1. Pull out the paper feed tray [A].
2. Open the front door [B].
3. Disengage the pin [C] from from its hole in the front door. Then remove the front door.

1.1.2 Inner Cover

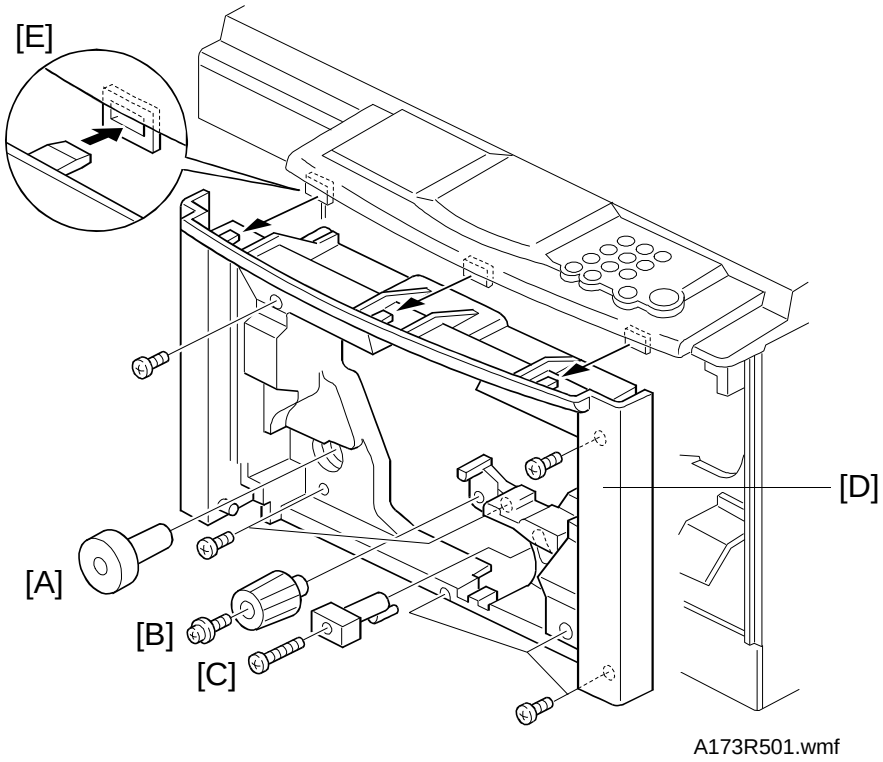

A173R501.wmf

1. Pull out the paper feed tray.
2. Remove the front door.
3. Remove the development unit (1 snap ring).
4. Remove the fusing roller knob [A].
5. Remove the registration knob [B] and the paper guide lever [C] (1 screw each).
6. Remove the seven screws holding the inner cover [D].
7. Disengage the three hooks [E] of the inner cover from the main body.

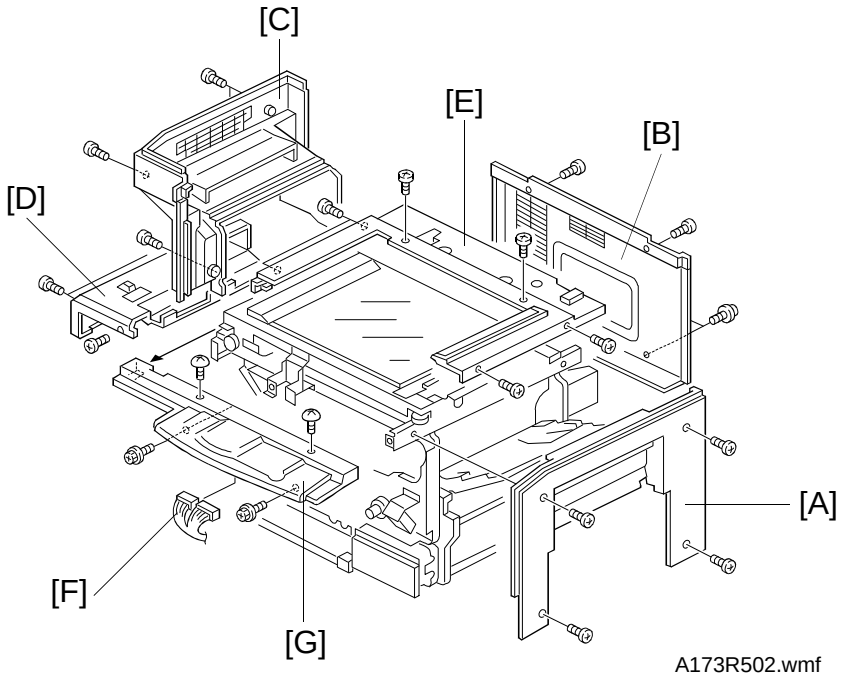

A173R502.wmf

1.1.3 Right Cover

1. Open the manual feed table.
2. Remove the right cover [A] (4 screws).

1.1.4 Rear Cover

1. Remove the rear cover [B] (4 screws).

1.1.5 Left Covers

1. Pull out the paper tray.
2. Remove the left cover [C] (4 screws) and lower left cover [D] (3 screws).

1.1.6 Upper Cover

1. Remove the platen cover (4 screws).
2. Remove the upper cover [E] (6 screws).

1.1.7 Operation Panel

1. Remove the front door and the inner cover.
2. Disconnect the two connectors [F].
3. Remove the operation panel [G]. (4 screws).

2. OPTICS

2.1 EXPOSURE GLASS REMOVAL

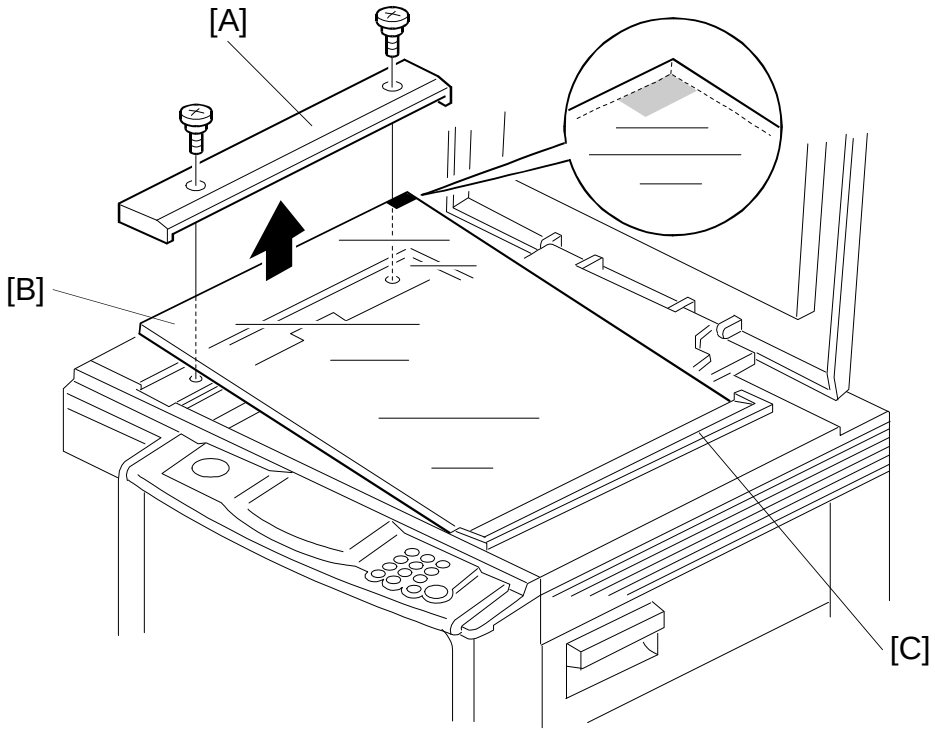

A173R503.wmf

1. Unplug the power cord.
2. Take off the left scale [A] (2 short screws).
3. Grasp the left edge of the exposure glass [B] and lift it up slightly. Slide the other edge out from under the right glass holder [C]. Remove the exposure glass.

NOTE: When reinstalling the exposure glass, make sure of the following:

a) The left edge of the glass is flush with the tab to the left of the scale plate, and the right glass holder firmly secures the exposure glass.

b) The red mark on the edge of the glass faces up. This side is smoother and it generates less static electricity when the DF is used.

2.2 1ST MIRROR REMOVAL

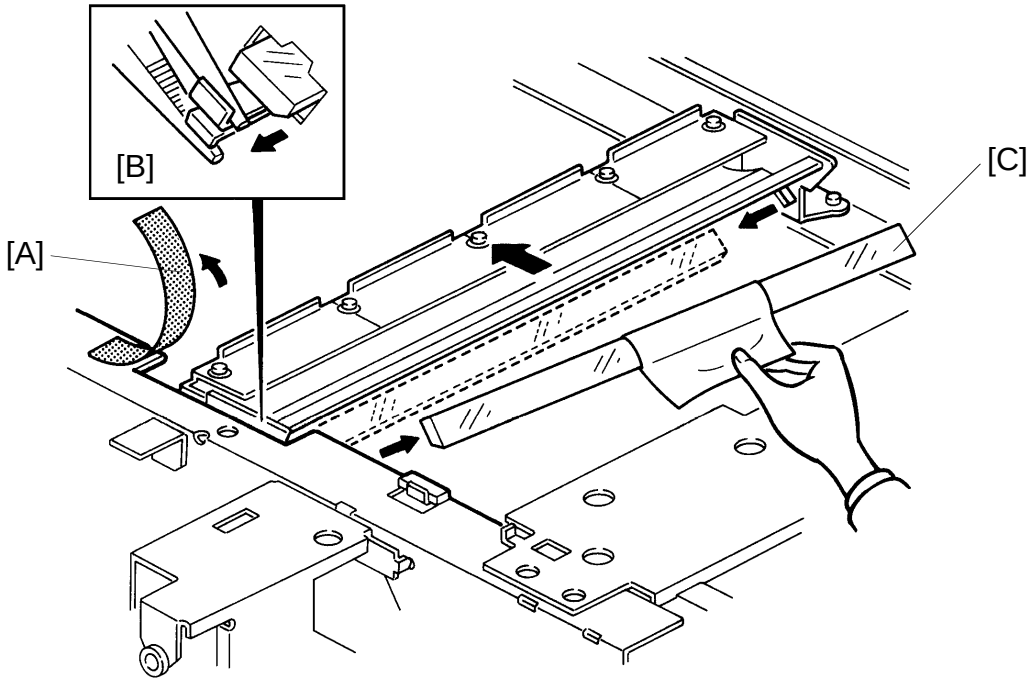

A173R504.img

1. Unplug the power cord.
2. Remove the exposure glass. (See Exposure Glass Removal.)
3. Move the first scanner to the cutout position (150 mm from the left scale).
4. Remove the upper cover.
5. Peel off the rear cutout cover seal [A].
6. With a pair of pliers, remove the rear spring plate [B].
7. Carefully slide the 1st mirror [C] towards the rear of the machine and lift the mirror out of the machine front side first.

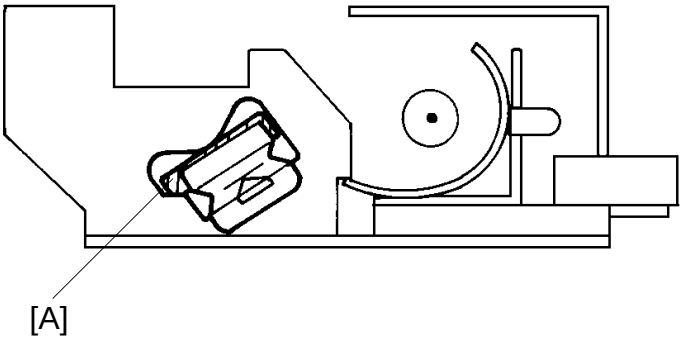

A173R505.img

– Reinstallation –

1. Insert the 1st mirror into the rear side plate cutout. Then insert the front side of the mirror into the front spring plate.

   NOTE: Make sure when installing the mirror that the reflecting surface is on the upper side and the beveled edge [A] of the mirror is on the lower side.

2. Insert the rear spring plate between the mirror and the rear side plate cutout.

2.3 2ND AND 3RD MIRROR REMOVAL

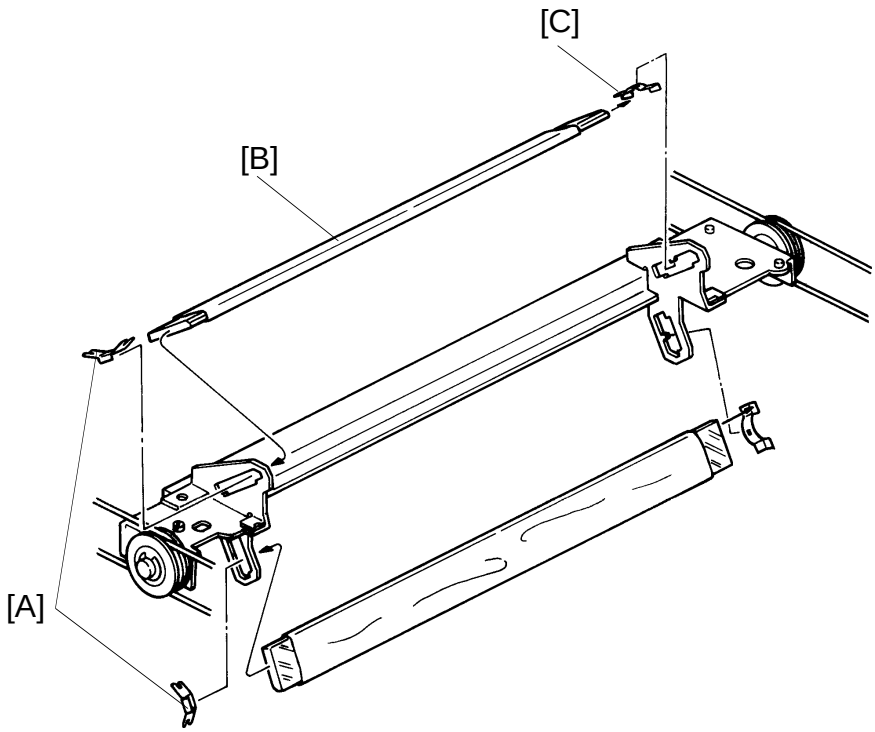

A173R506.img

1. Unplug the power cord.
2. Remove the exposure glass. (See Exposure Glass Removal.)
3. Slide the 1st scanner two-thirds of the way to the right.
4. Press down on one side of the front spring plate [A] and pull it off the end of the mirror.
5. Carefully shift the 2nd mirror [B] towards the front of the machine to remove the rear spring plate [C].
6. Lift the mirror out of the machine rear side first.

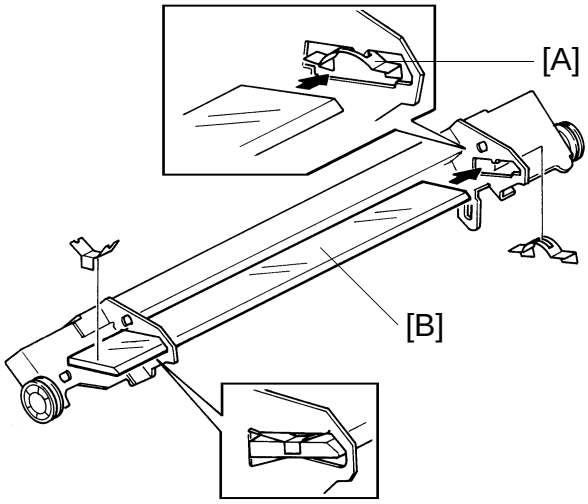

A173R507.img

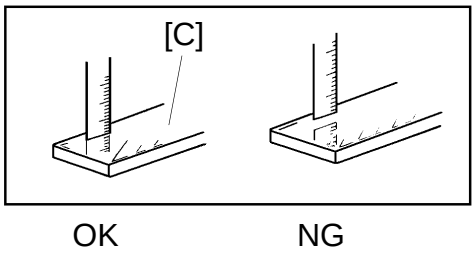

A173R508.img

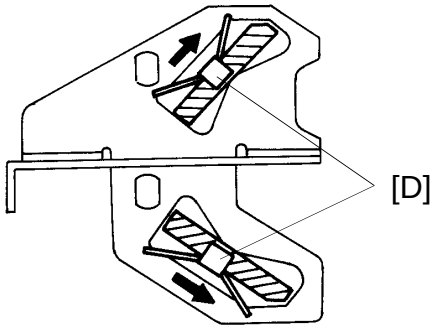

A173R509.img

– Reinstallation –

1. Hold the rear spring plate [A] in position as shown.
2. Insert the 2nd mirror [B] into the front side plate cutout.
3. Position the rear end of the mirror under the rear spring plate in the rear side plate cutout.
4. Fit the front spring plate over the front end of the mirror. Make sure that the slot on each arm of the spring plate fits over the edge of the cutout as shown.

NOTE: a) Make sure when installing the mirrors that the reflecting surfaces [C] face the lens.
b) The front and rear spring plates are different. Make sure that each plate is placed in the correct position.
c) Position the spring plate [D] by moving it in the direction of the arrow.

2.4 4TH AND 5TH MIRROR REPLACEMENT

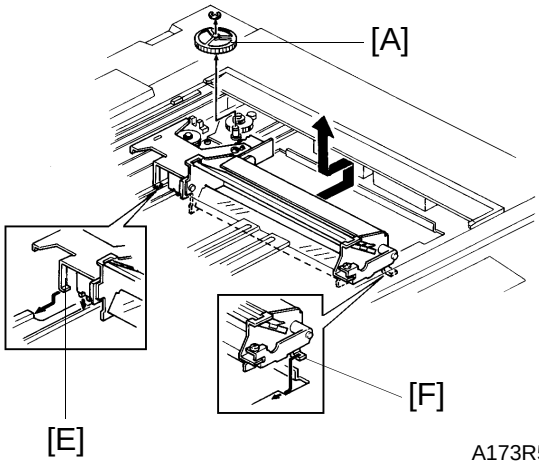

A173R510.img

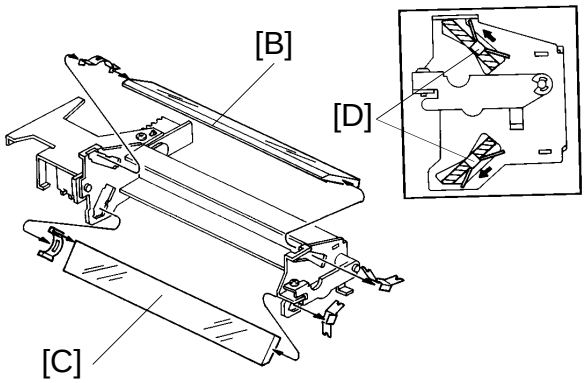

A173R511.img

1. Unplug the power cord.
2. Remove the exposure glass. (See Exposure Glass Removal.)
3. Remove the lens cover (2 screws).
4. Remove the 4th and 5th mirror assembly drive gear [A] (1 E-ring).
5. Slide the mirror assembly all the way to the right and remove it.
6. Replace the fourth [B] and fifth [C] mirrors. (The procedure for removing the mirrors from their brackets is the same as for the second and third mirrors.)

NOTE: a) Make sure that the mirrors are installed in their original positions. (The fourth mirror is larger than the fifth mirror.)
b) The front and rear spring plates are different. Be sure to mount them in the correct positions.
c) Position the spring plates [D] as shown. Move them in the direction of the arrow.
d) When reinstalling the 4th and 5th mirror assembly, make sure that the hooks [E and F] are properly positioned as shown.

2.5 EXPOSURE LAMP REPLACEMENT

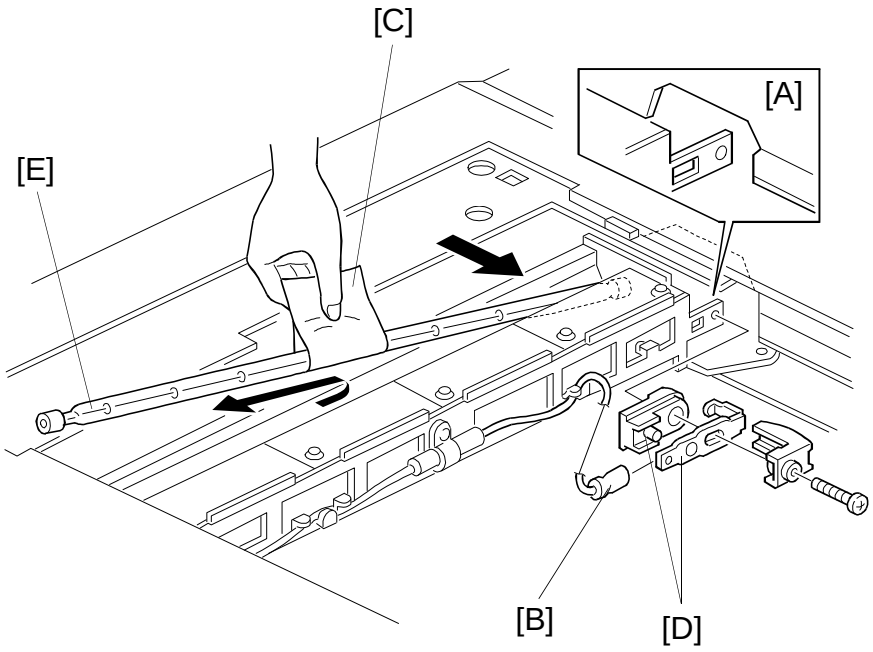

A173R512.wmf

NOTE: Do not touch the reflector or the new exposure lamp with your bare hands. Use a strip of paper as shown. (Oil marks from fingers on the lamp or reflectors will be affected by heat from the lamp and will cause discoloration.)

– Removal –

1. Unplug the power cord.
2. Remove the exposure glass. (See Exposure Glass Removal.)
3. Move the first scanner to the cutout position in the rear frame [A] as illustrated (about 50 mm).
4. Disconnect the exposure lamp wire [B].
5. Wrap a strip of paper [C] around the exposure lamp.
6. Remove the rear terminal [D] (1 screw).
7. Remove the exposure lamp [E] from the front terminal by moving the lamp into the rear frame cutout.

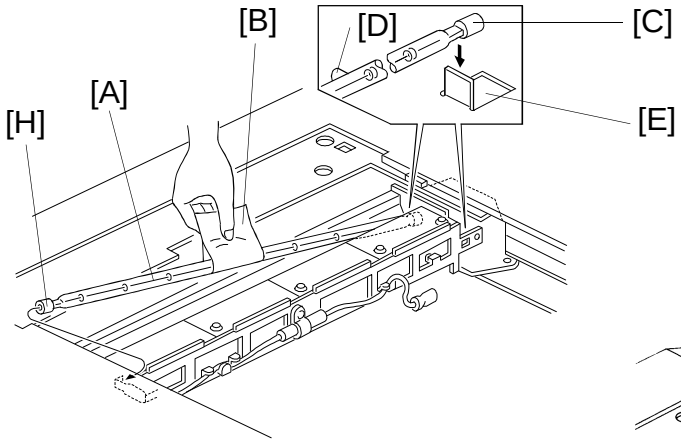

A173R513.wmf

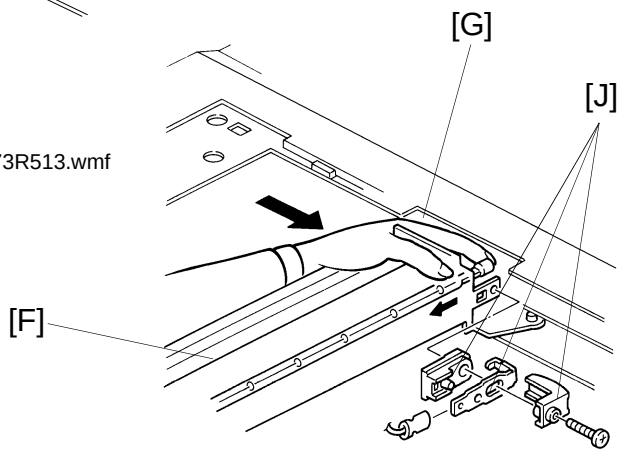

A173R514.img

– Reinstallation –

8. Hold the lamp [A] with a strip of paper [B].
9. Before sliding in the lamp, position it so that the flat ends [C] are horizontal and the blister [D] is pointing towards the reflector opening.
10. Carefully slide in the lamp [A] and place it on the plate [E].
11. Move the first scanner [F] to the right (about 50 mm) to the frame's cutout position [G].
12. Set the front insulator [H] in the front terminal [I], and while holding the lamp with your left hand, lightly push it towards the front.
13. With your right hand, screw in the rear terminal [J].

    NOTE: Make sure that both front and rear insulators are properly supported with the terminals.
14. Clean the optics parts.
15. Perform the light intensity adjustment using SP48. (See the Light Intensity Adjustment section.)
16. Perform the ADS adjustment using SP56.

2.6 OPTICS THERMOFUSE REMOVAL

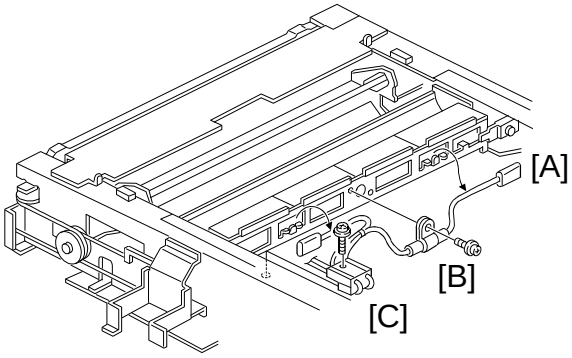

A173R515.wmf

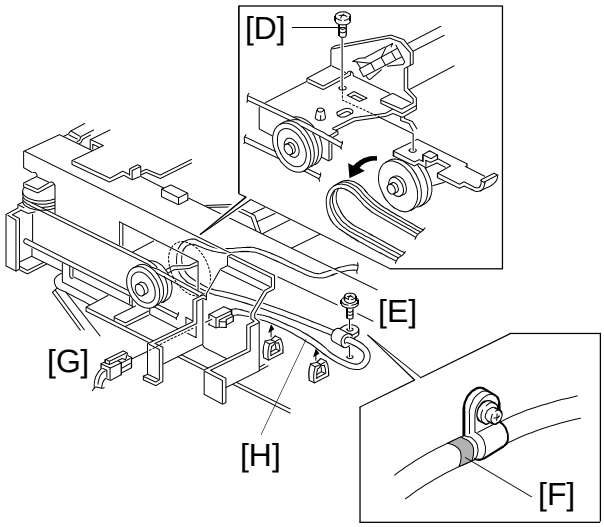

A173R516.wmf

1. Unplug the power cord.
2. Remove the front door, development unit, paper tray, and inner cover.
3. Remove the exposure glass.
4. Move the first scanner to the right (about 50 mm) to the frame's cutout position.
5. Disconnect the lamp connector [A].
6. Remove the harness clamper [B] (1 screw).
7. Remove the screw [C] securing the harness holder.
8. Remove the lamp harness pulley [D].
9. Remove the harness clamper [E] (1 screw).

   NOTE: When reinstalling the harness clamper, align the white mark [F] on the harness with the left edge of the clamper as shown.
10. Disconnect the lamp connector [G].
11. Replace the thermofuse [H].

2.7 SCANNER DRIVE WIRE REPLACEMENT

2.7.1 Wire Removal

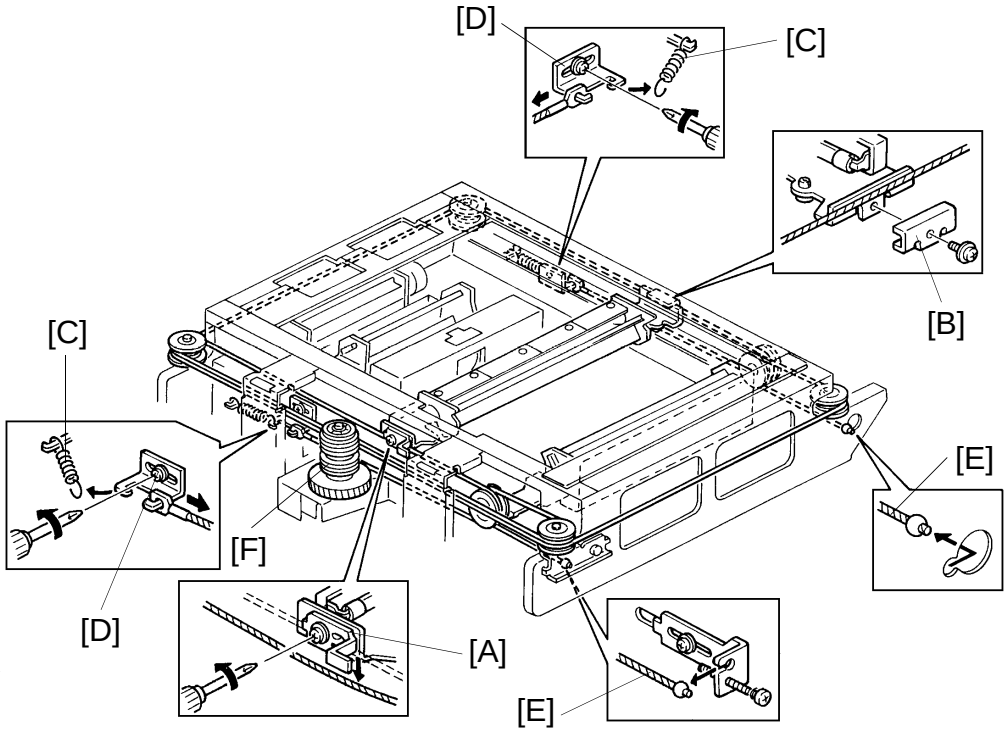

A173R517.img

1. Remove the following covers and parts.

Sorter (if installed)	Document feeder (if installed)
Front door	Development unit
Inner cover	Left cover
Left upper cover	Rear cover
Right cover	Upper cover
Operation panel	Exposure glass
TC/SC power pack	Charge/grid/bias power pack

2. Loosen the screws securing the front [A] and rear [B] first scanner wire clamps.
3. Remove the front and rear wire tightening springs [C].
4. Loosen the screws securing the front and rear wire securing plates [D].
5. Remove the scanner wires [E] from the left side plate.
6. Remove the scanner wires from the drive pulley [F].
8. Remove the drive pulley (1 E-ring).

2.7.2 Wire Installation

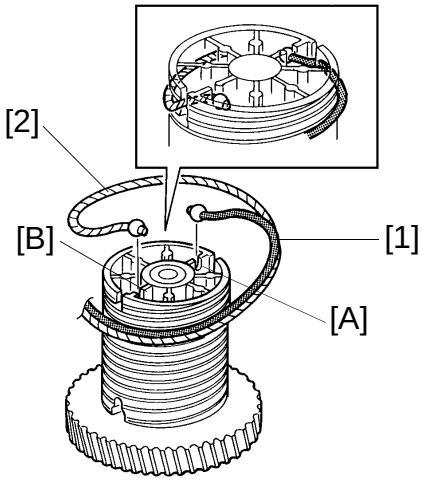

A173R518.img

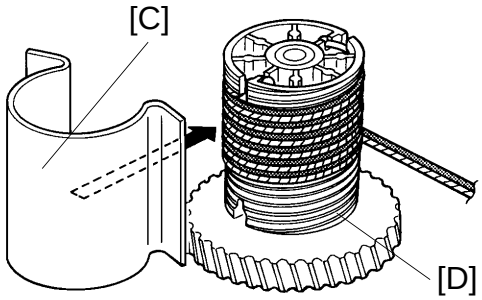

A173R519.img



A173R520.img

1. Put the bead at the end of the blue wire [1] in slot [A].
2. Put the bead of the silver wire [2] in slot [B].
3. Wind the blue wire [1] clockwise halfway around the pulley. Wind the silver wire [2] clockwise one complete turn around the pulley.
4. Wind the blue and silver wires together five and a half times around the pulley. Make sure that the blue wire is wound six times and the silver wire is wound six and a half times in total.
5. Set an omega clamp [C] over the wires on the drive pulley [D] as shown.

   NOTE: Leave enough space at the bottom for winding the other two wires (see the next page).

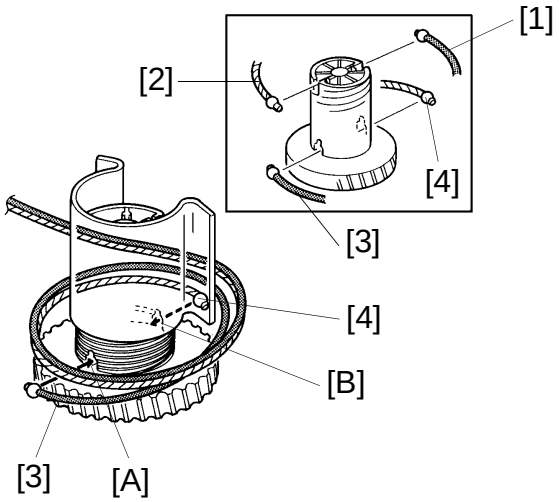

A173R521.img

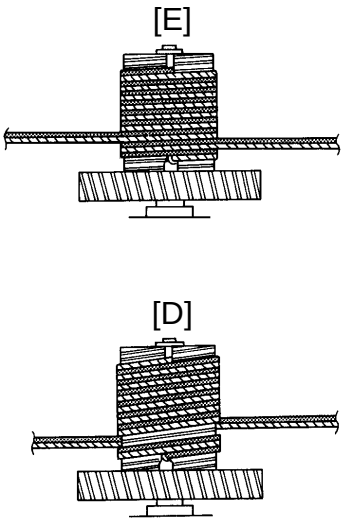

A173R522.img

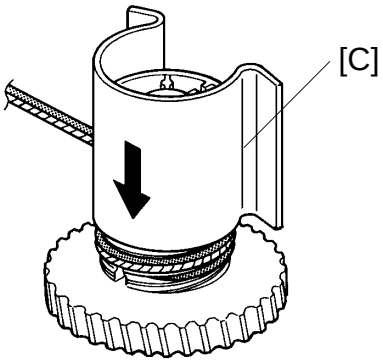

A173R523.img

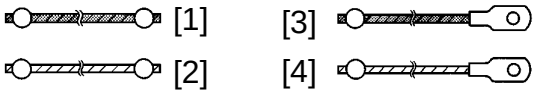

A173R520.img

6. Put the bead of the blue wire [3] in slot [A] on the silver wire [2] side.
7. Put the bead of the silver wire [4] in slot [B] on the blue wire [1] side.
8. Wind the blue wire [3] clockwise one and a half times around the pulley. Wind the silver wire [4] once clockwise around the pulley.

   NOTE: a) The blue and silver wires must alternate on the pulley with the blue wire uppermost.
   b) Rear view [D]: Wires must not be wound around the two grooves shown in the illustration.
   c) Front view [E]: Wires must be wound around all the grooves shown in the illustration.

9. Slide the omega clamp [C] down to secure all the wires as shown.
10. Set the pulley on the drive shaft (1 E-ring).

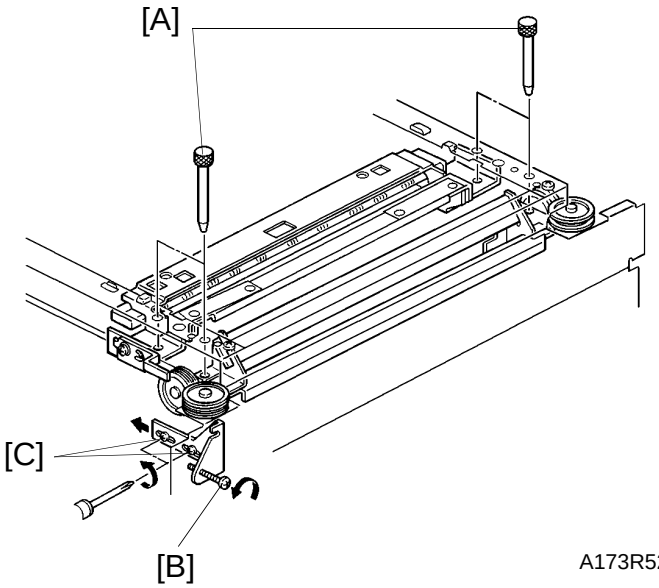

A173R524.img

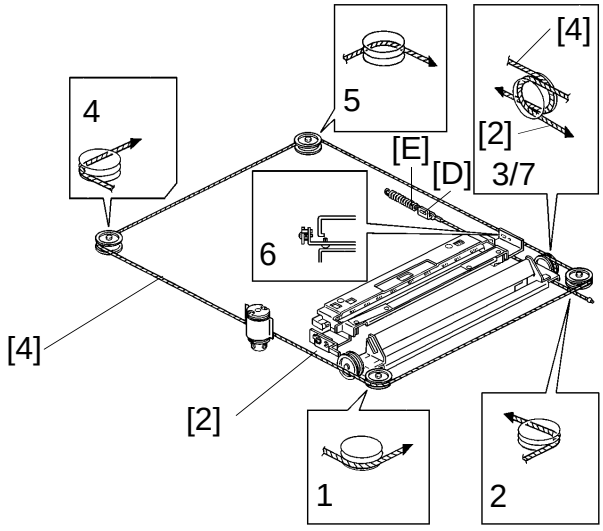

A173R525.img

11. Manually move the first and second scanners to home position.
12. Insert the four positioning pins [A] in the holes in the scanner guide rails to secure the first and second scanners.
13. Loosen the wire tension bracket securing screw [B] and the wire tension adjusting screws [C].
14. Loosen the screw that holds the front securing plate [D]. Route wires [2] and [4] around the pulleys as shown.
15. Hook the silver wire [4] onto the securing plate and hook the wire tension spring [E] onto the securing plate and the frame projection (see wire removal).

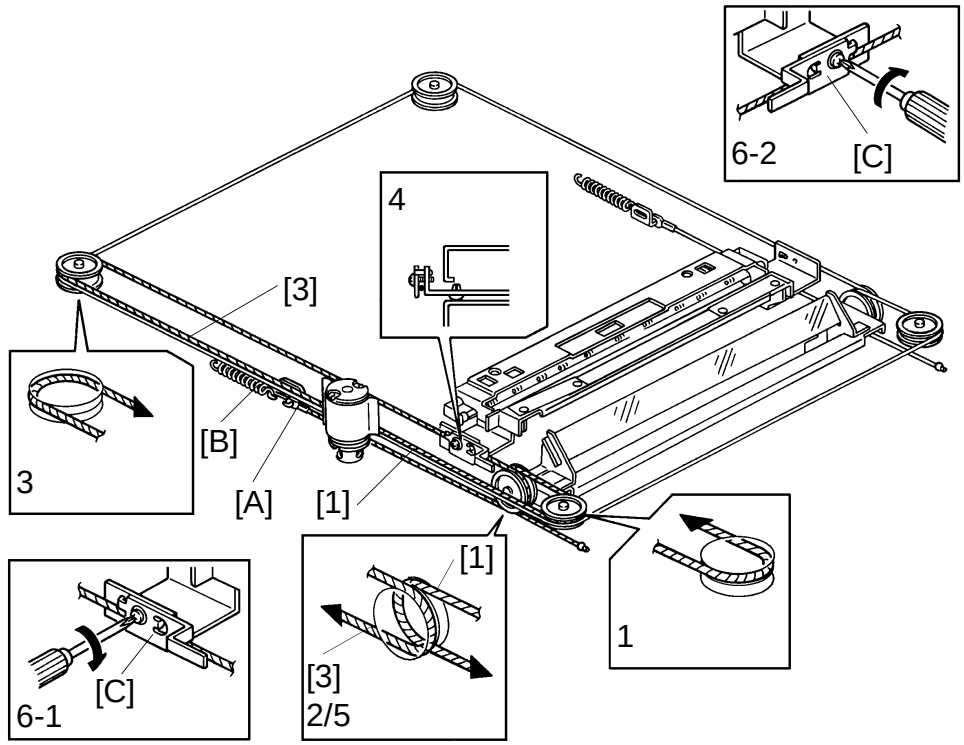

A173R526.img

16. Route blue wires [1 and 3] around the pulleys as shown.
17. Attach wire [3] to the wire securing plate [A], then hook one end of tension spring [B] to the plate and the other end to the frame projection.
18. Tighten the first scanner clamps [C] and remove the four positioning pins and the omega clamp.
19. Perform a free run (turn DIP switch 101-1 ON and press the Print key) for 10 minutes and make sure that the scanners operate smoothly.

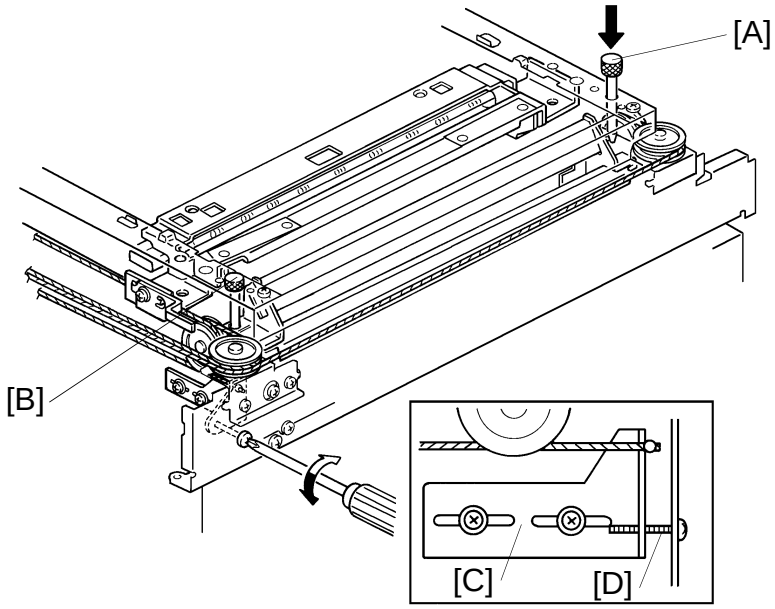

A173R527.img

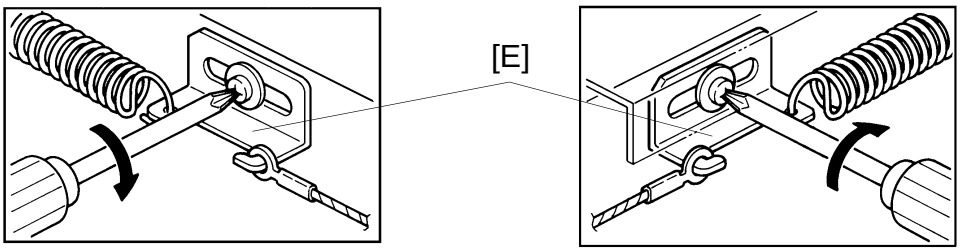

A173R528.img A173R529.img

20. Adjust the tension in the second scanner wire.
    1) Insert positioning pin [A] in the hole at the front end of the second scanner.
    2) Loosely insert positioning pin [B] in the hole at the rear end of the second scanner.
    3) Loosen the two screws securing the wire tension bracket [C], then turn the 2nd scanner positioning screw [D] clockwise until the rear positioning pin drops and locks in position.
    4) Tighten the two screws securing the wire tension bracket [C].
    5) Make sure the positioning pin [B] slides in and out smoothly. If not, repeat step 3).
    6) Tighten the screws that hold the front and rear wire securing plates [E].

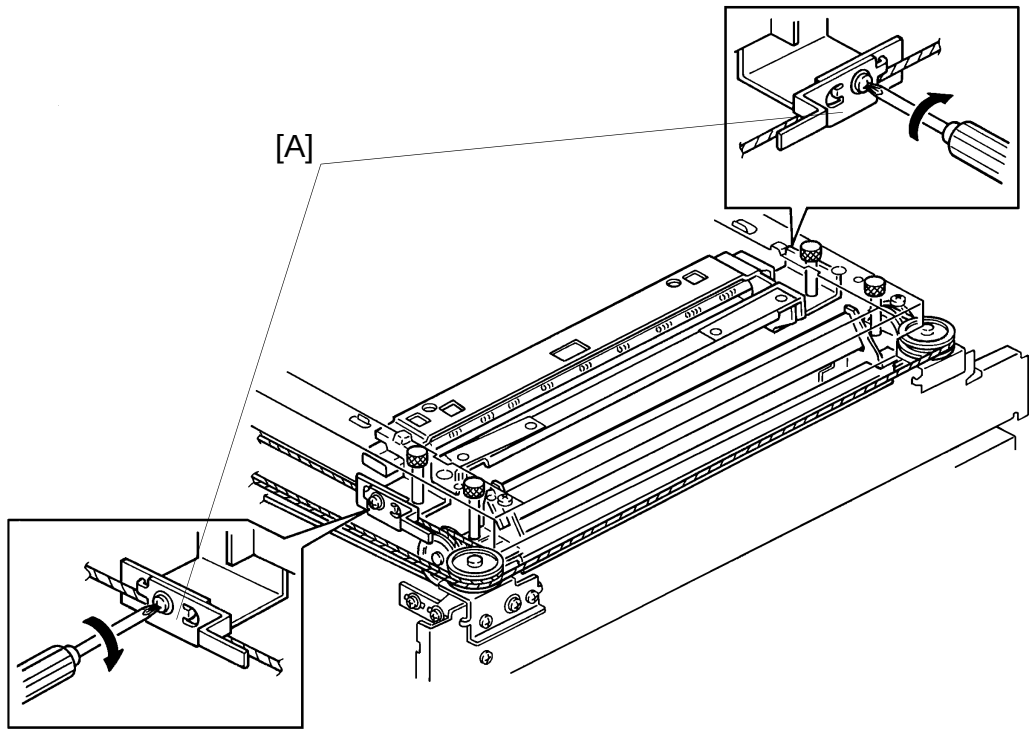

A173R530.img

21. Adjust the first scanner wire clamps.
    1) Loosen the front and rear first scanner wire clamps [A]
    2) Insert the front and rear positioning pins.
    3) Tighten the wire clamps.

22. Reassemble.

NOTE: Always adjust the first scanner wire clamps after adjusting the tension in the second scanner wire.

2.8 SCANNER MOTOR REPLACEMENT

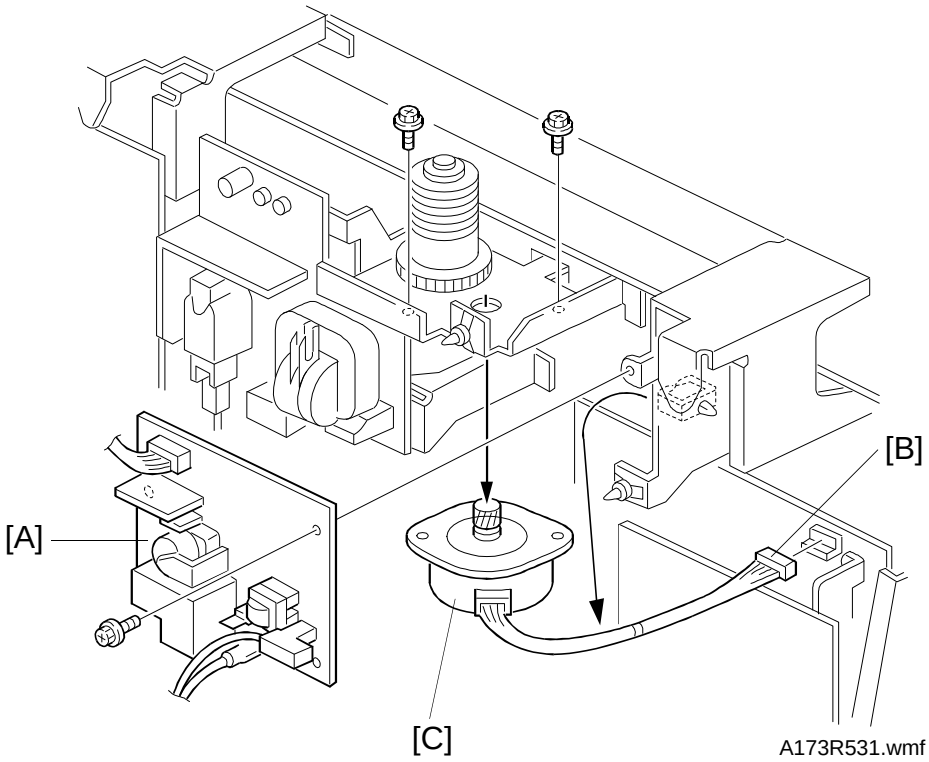

1. Unplug the power cord.
2. Remove the rear cover and the upper cover.
3. Remove the CC/G/B power pack [A] (2 locking supports, 1 screw, and 4 connectors).
4. Disconnect the connector [B].
5. Remove the scanner motor [C] (2 screws).

2.9 LENS MOTOR REPLACEMENT

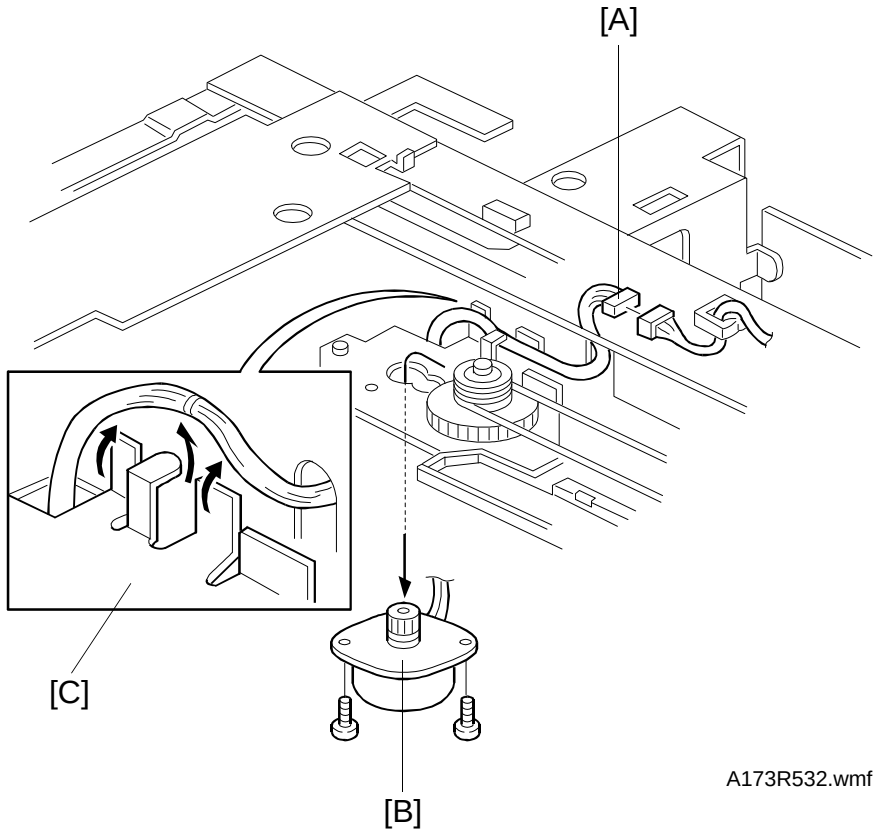

1. Unplug the power cord.
2. Remove the rear cover and the left cover.
3. Remove the exposure glass.
4. Disconnect the lens motor 6P connector [A].
5. Remove the lens motor [B] (2 screws).

NOTE: When reinstalling the motor, route the harness as shown in the illustration [C].

2.10 LENS DRIVE WIRE INSTALLATION

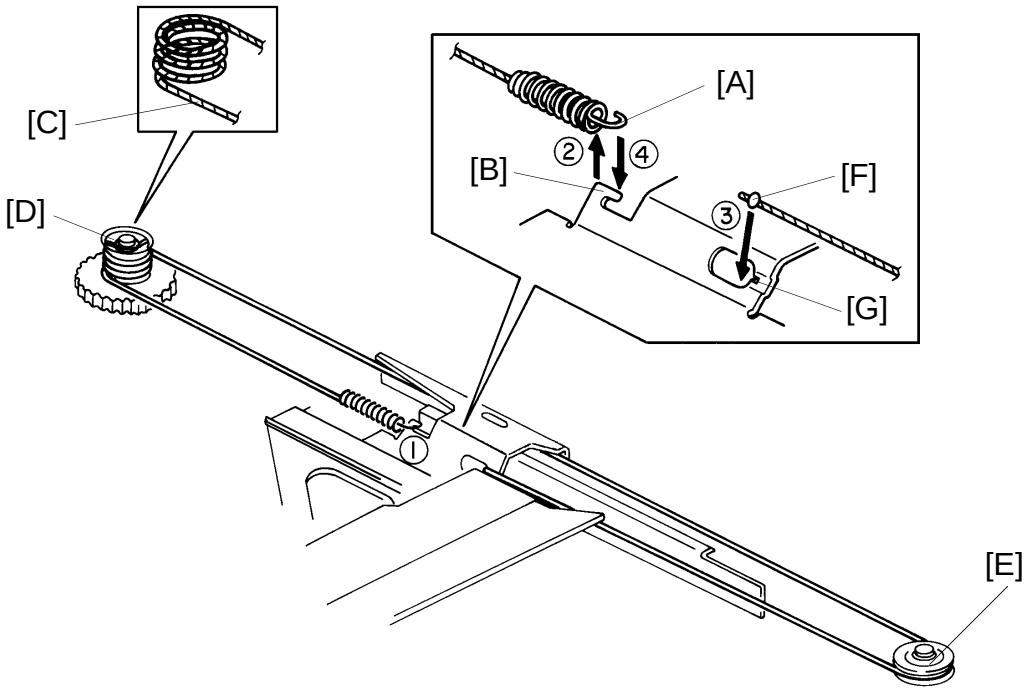

A173R533.img

1. Remove the exposure glass and the lens cover.
2. Remove the lens drive wire.
3. Hook the spring [A] onto the sensor actuator bracket [B].
4. Wind the lens drive wire [C] three and a half times around the pulley [D].
5. Wind the other end of the wire over the pulley [E].
6. Unhook the spring [A] (do not let go) and place the bead [F] at the other end of the wire in slot [G] on the sensor actuator bracket.
7. Reattach the spring to the bracket.

NOTE: Rotate the lens drive pulley and make sure that the lens drive wire moves smoothly.

2.11 4TH/5TH MIRROR MOTOR REPLACEMENT

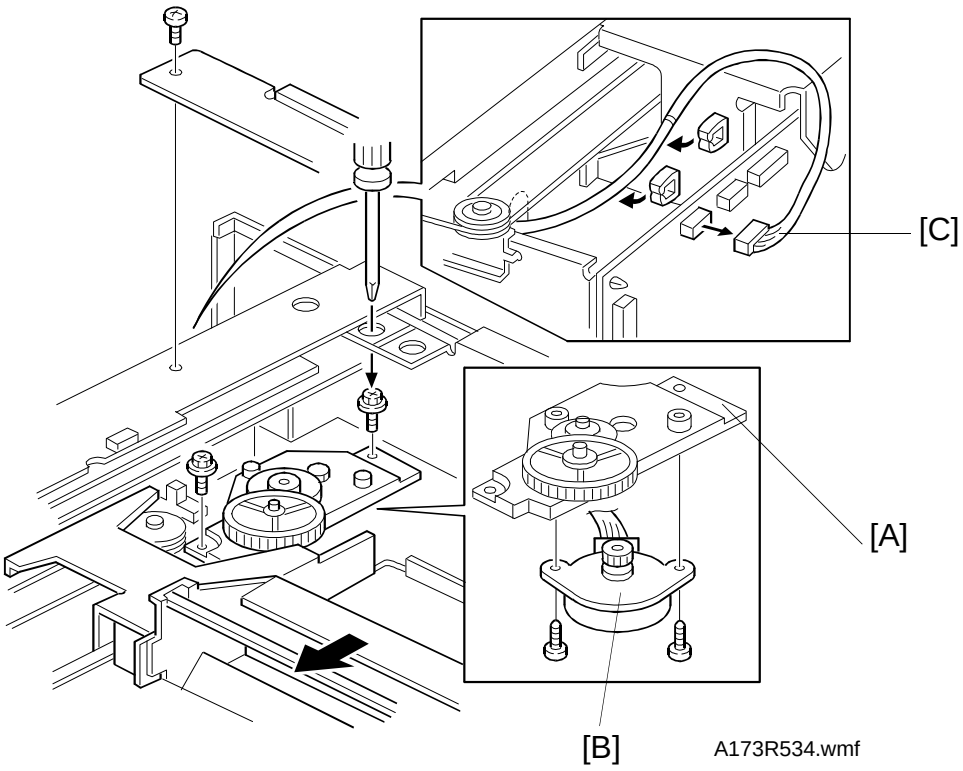

1. Unplug the power cord.
2. Remove the exposure glass, upper cover, lens cover, and rear cover.
3. Remove the main board.
4. Move the 4th/5th mirror assembly to the left (viewed from the front).
5. Remove the motor bracket [A] (2 screws).
6. Separate the 4th/5th mirror motor [B] from the bracket (2 screws) and replace it.

NOTE: Position the motor harness [C] as shown when installing a new motor.

3. DEVELOPMENT AND TONER SUPPLY

3.1 TONER SUPPLY UNIT REMOVAL

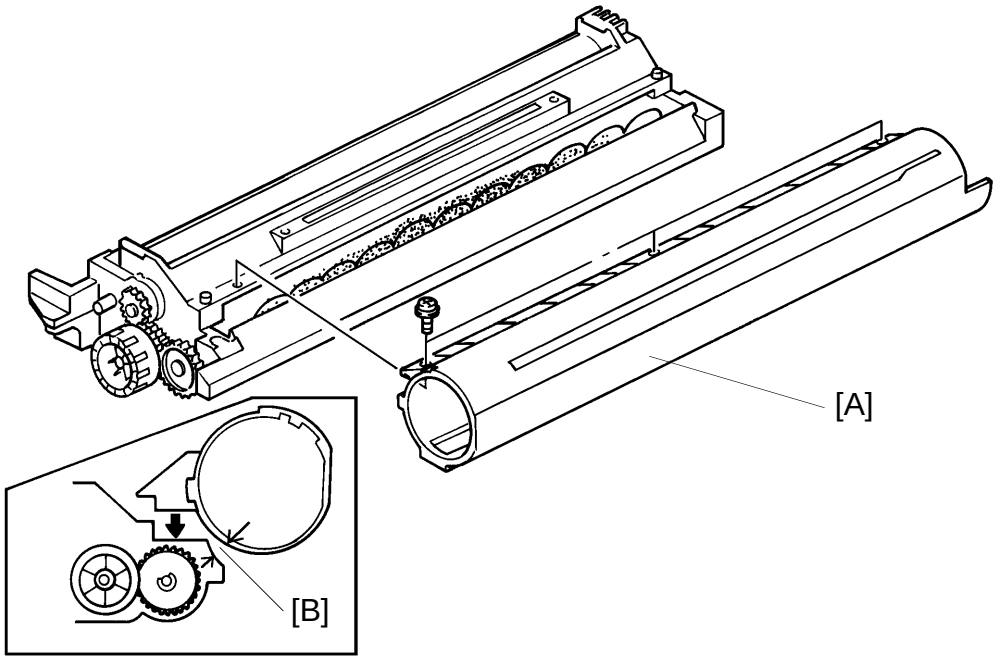

A173R535.img

1. Take out the development unit (1 snap ring).
2. Remove the toner supply unit [A] (3 screws).

NOTE: Make sure that there is no gap [B] between the toner supply unit and the development unit. (See the illustration.)

3.2 DEVELOPER REPLACEMENT

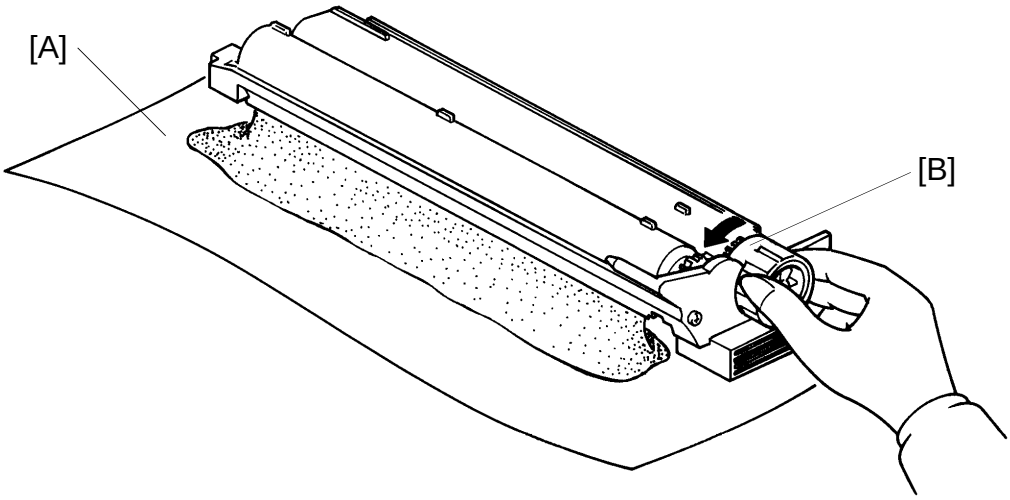

A173R536.img

1. Take out the development unit (1 snap ring).
2. Set the development unit on a large sheet of paper [A].
3. Remove the toner supply unit (3 screws). (See Toner Supply Unit Removal.)
4. Turn the paddle roller knob [B] counterclockwise to empty the old developer onto the paper.

   NOTE: Dispose of the used developer in accordance with local regulations.
5. Make sure that no developer remains on the development roller or in the development unit.
6. Pour one pack of developer into the development unit while turning the paddle roller knob.
7. Reinstall the toner tank and install the development unit in the machine.
8. Adjust Vsg using SP54.
9. Perform the initial setting procedure for new developer using SP65.

3.3 INLET SEAL REMOVAL

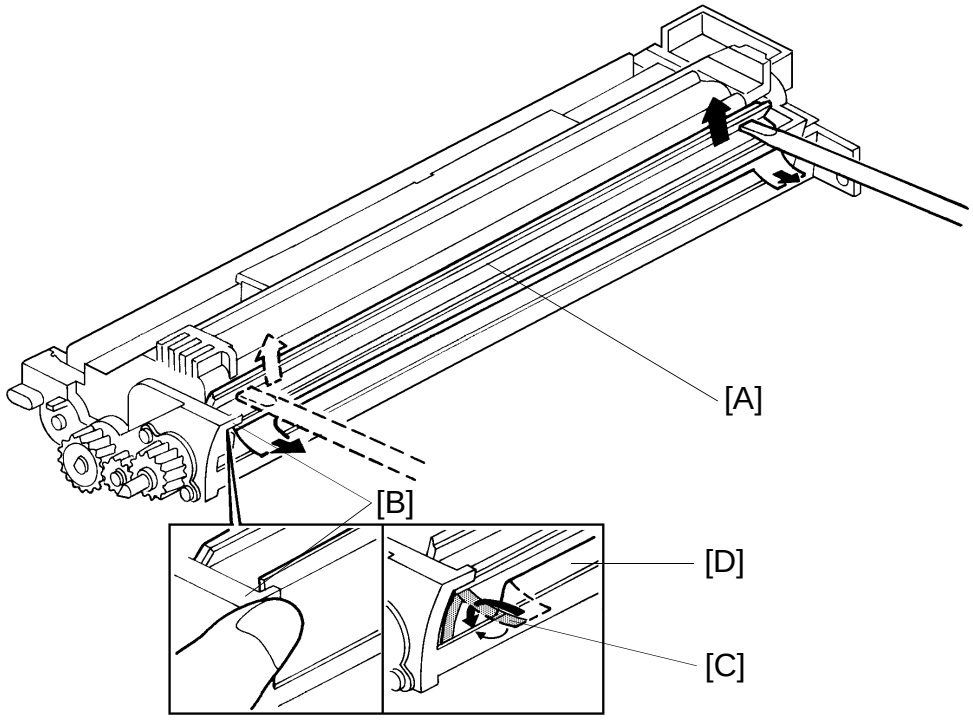

A173R537.img

1. Take out the development unit.
2. Remove the inlet seal plate [A] by working a small blade screwdriver along the edge of the plate while pressing the stoppers [B] with one finger as shown.

NOTE: a) Be careful not to damage the stoppers [B] when removing the inlet seal plate.

b) To install a new inlet seal plate, remove the covering from the two-sided tape [C] and attach the inlet seal [D] to the development unit lower casing. Tuck both ends of the seal inside the lower casing as shown.

3.4 TONER SUPPLY CLUTCH REPLACEMENT

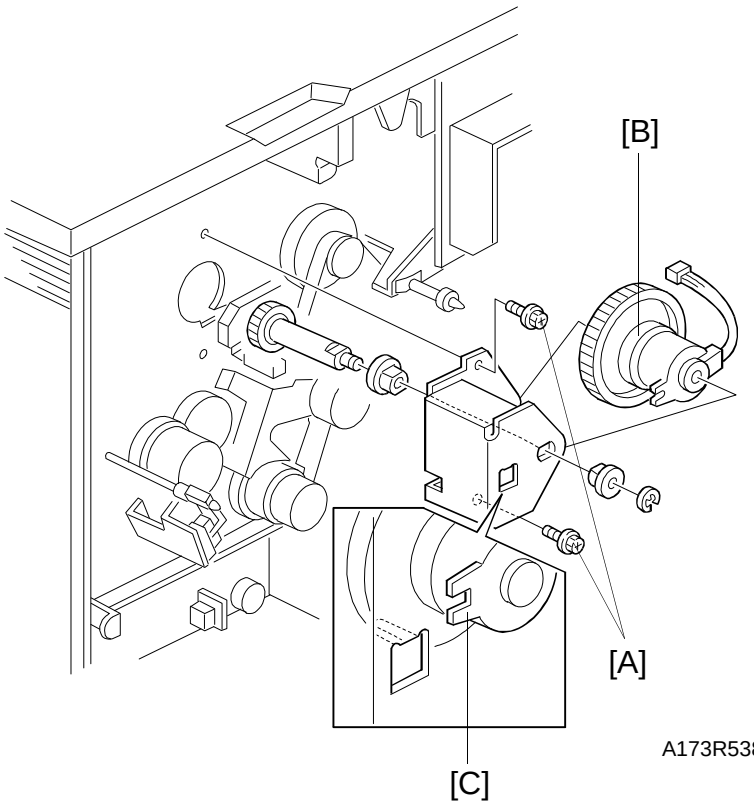

1. Unplug the power cord.
2. Remove the rear cover (4 screws) and main board (2 screws, 3 locking support, and all connectors).
3. Remove the toner supply clutch bracket [A] (2 screws).
4. Replace the clutch [B] (1 E-ring and bushing).

NOTE: Make sure that the notch on the clutch engages with the stopper.

3.5 CLUTCH REMOVAL

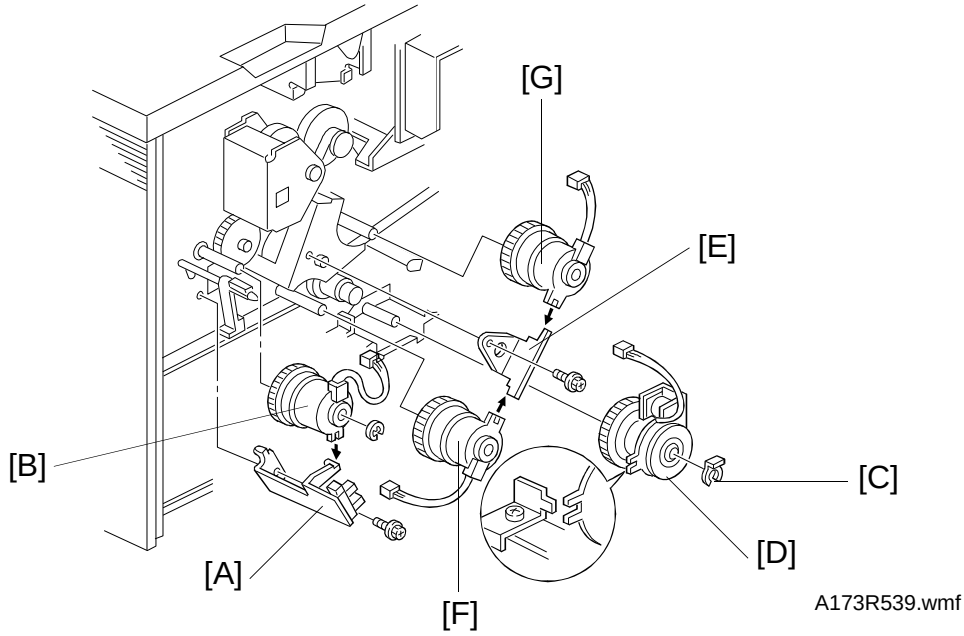

Common Steps:

1. Unplug the power cord.
2. Remove the rear cover.
3. Remove the main board.

3.5.1 1st Paper Feed Clutch

4. Remove the paper end sensor bracket [A] (1 screw).
5. Remove the 1st paper feed clutch [B] (1 E-ring).

3.5.2 2nd Paper Feed Clutch

4. Remove the snap ring [C].
5. Remove the 2nd feed clutch [D].

3.5.3 Relay Roller Clutch/Registration Clutch

4. Remove the stopper bracket [E] (1 screw).
5. Remove the relay roller clutch [F] and the registration clutch [G].

NOTE: When reinstalling the clutches, make sure that the notch [H] is engaged with the stopper.

3.6 DEVELOPMENT BIAS VOLTAGE ADJUSTMENT (SP9-57)

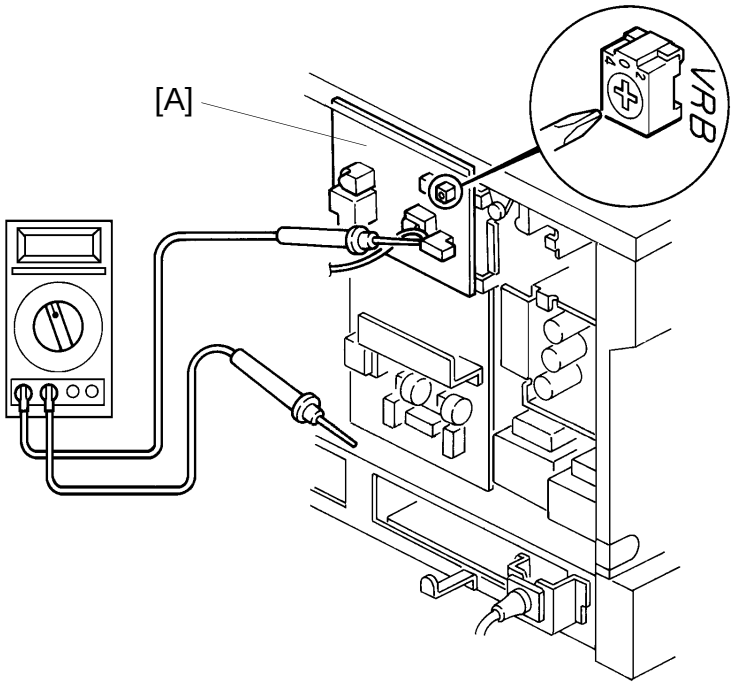

A173R540.img

ADJUSTMENT STANDARD	Adjusting VR	
DC –400 ± 10 V	VRB	SP9-57

NOTE: VRB on the CC/Grid/Bias power pack spare parts is pre-adjusted. Usually it is not necessary to adjust VRB when the CC/Grid/Bias power pack is replaced.

1. Unplug the power cord and remove the rear cover (4 screws). Set the multimeter range to dc 1500 V and connect the multimeter leads as shown.

   NOTE: Keep the multimeter leads away from the main board.

2. Plug the power cord in, turn on the main switch and apply development bias using SP9-57.

3. Adjust the development bias voltage to –400 ± 10 V by turning VRB on the CC/Grid/Bias power pack [A].

4. Press the C/⊘ key and turn off the main switch.

4. CLEANING

4.1 CLEANING UNIT REMOVAL

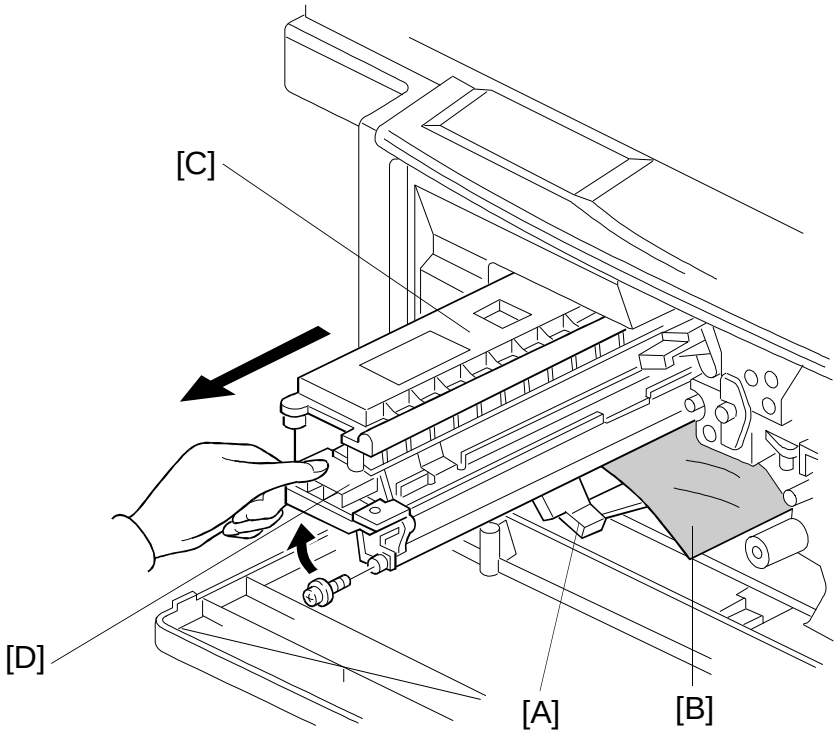

A173R541.wmf

1. Open the front cover.
2. Lower the transport unit [A].
3. Place a sheet of paper [B] underneath the cleaning unit [C].
4. While holding down the cleaning blade release lever [D], remove the cleaning unit (1 screw).

4.2 CLEANING BLADE REPLACEMENT

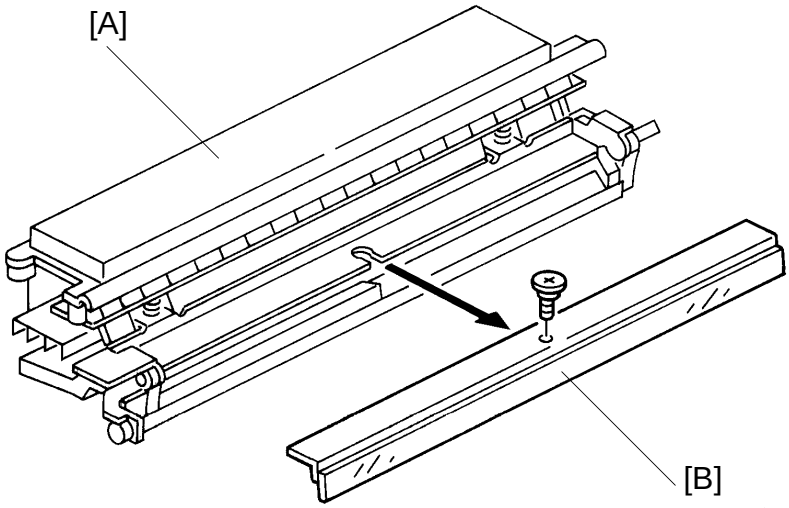

A173R542.img

1. Remove the cleaning unit [A]. (See Cleaning Unit Removal.)
2. Remove the cleaning blade [B] (1 screw).

NOTE: a) Do not touch the edge of a new cleaning blade, as it is damaged easily.
b) After installing a new cleaning blade, be sure to apply setting powder evenly on the surface of the blade.
c) Make sure the new blade swivels correctly.
d) Apply setting powder on the edge of the cleaning blade.

4.3 USED TONER COLLECTION

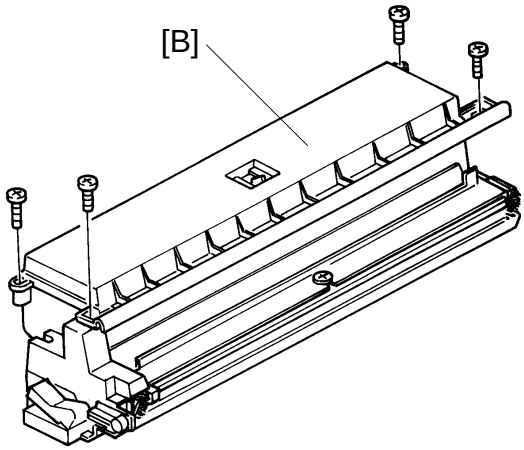

A173R543.img

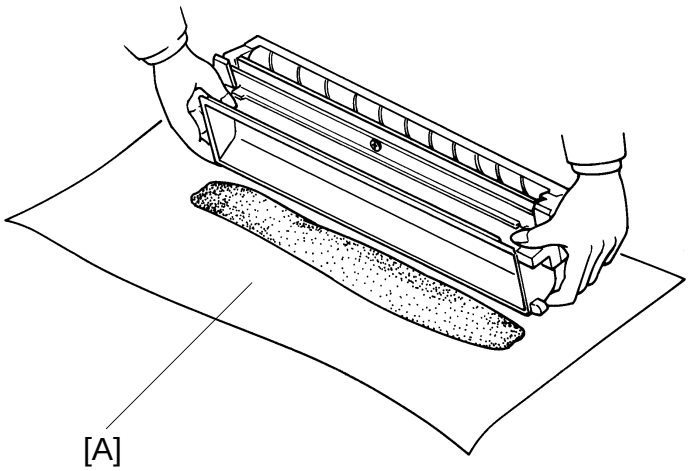

A173R544.img

1. Remove the cleaning unit. (See Cleaning Unit Removal.)
2. Set the cleaning unit on a large sheet of paper [A].
3. Remove the toner collection cover [B] (4 screws).
4. Pour the used toner slowly onto the paper sheet so that the toner does not scatter.
5. Place the paper sheet with the toner into a vinyl bag.

   NOTE: Dispose of the toner in accordance with local regulations.

4.4 ENTRANCE SEAL REPLACEMENT

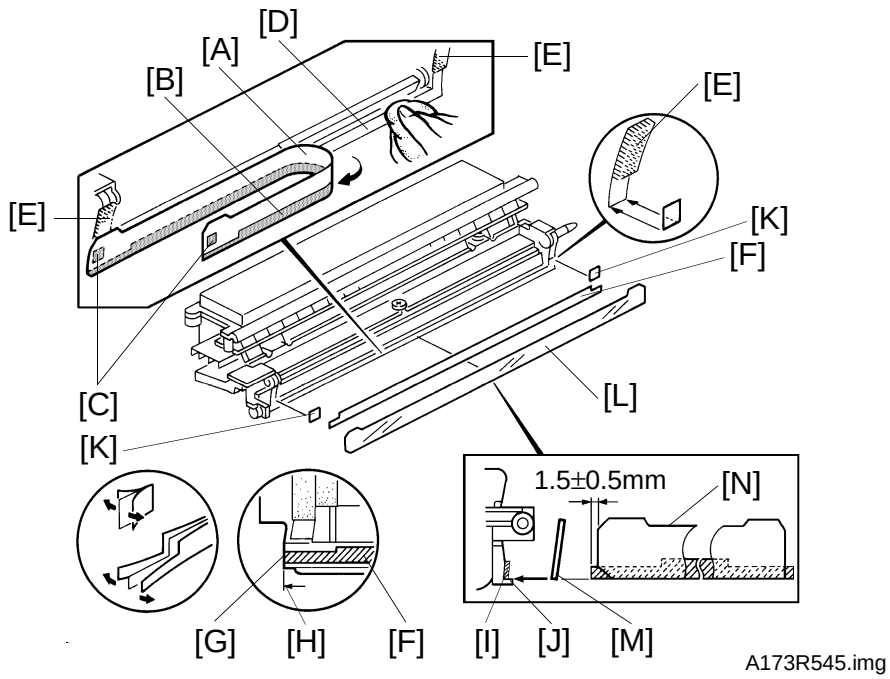

1. Remove the cleaning unit and cleaning blade. (See Cleaning Blade Removal.)
2. Remove the used toner.
3. Clean the cleaning unit with a vacuum cleaner.
4. Remove the entrance seal [A] together with the strip of two-sided tape [B] and both of the two-sided seals [C] which secure the entrance seal [A] to the lower casing [D] and the side seals [E].
5. Clean the lower casing [D] with alcohol. Make sure that no tape remains on the casing surface and the side seals.
6. Place a new strip of two-sided tape [F] on the lower casing surface as shown in the illustration.
   The side edge [G] of the tape must be flush with the edge [H] of the lower casing and the lower edge [I] of the tape must be flush with the top of the projection [J] of the lower casing as shown in the illustration.
7. Place new strips of two-sided seals [K] on the side seals [E] at both sides.
8. Place the new entrance seal [L] on the two-sided tape [F] and the two-sided seals [K] as shown in the illustration.

   NOTE: a) The lower edge [M] of the entrance seal must be aligned with the edge [J] of the projection of the lower casing.
   b) Make sure that there are no waves in the upper edge [N] of the entrance seal.

5. PAPER FEED

5.1 1ST PAPER SIZE SWITCH REPLACEMENT

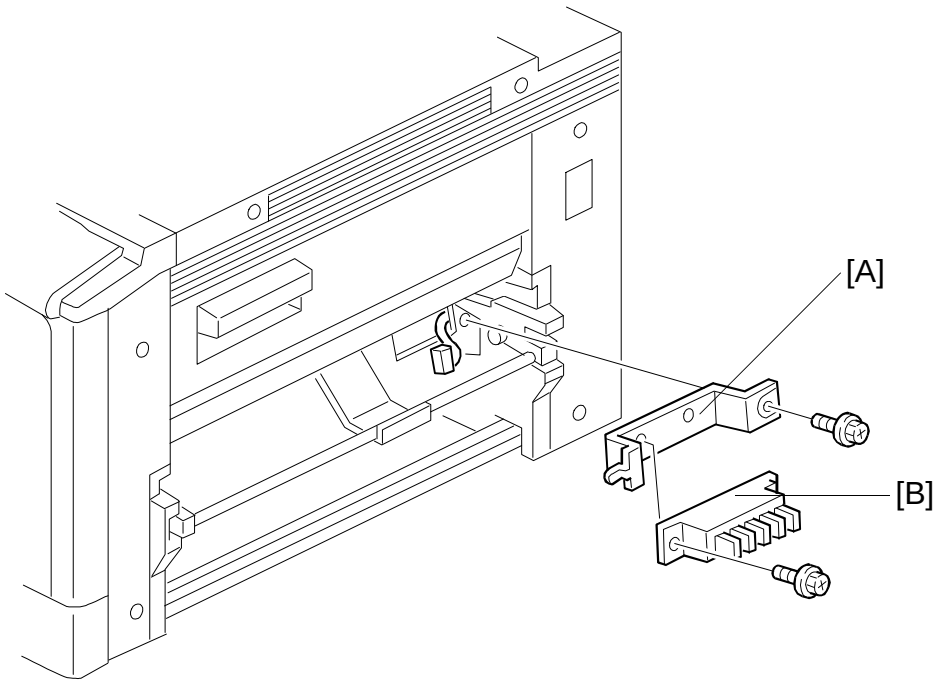

A173R546.wmf

1. Unplug the power cord.
2. Remove the paper size switch bracket [A] (1 screw).
3. Remove the paper size switch [B] (1 screw).
4. Pull the paper size switch out slightly and unhook the connector. Remove the paper size switch.

NOTE: After connecting the new switch to the connector, remove the slack in the switch harness by pulling on it from the rear side of the copier.

5.2 1ST PAPER END SENSOR REPLACEMENT

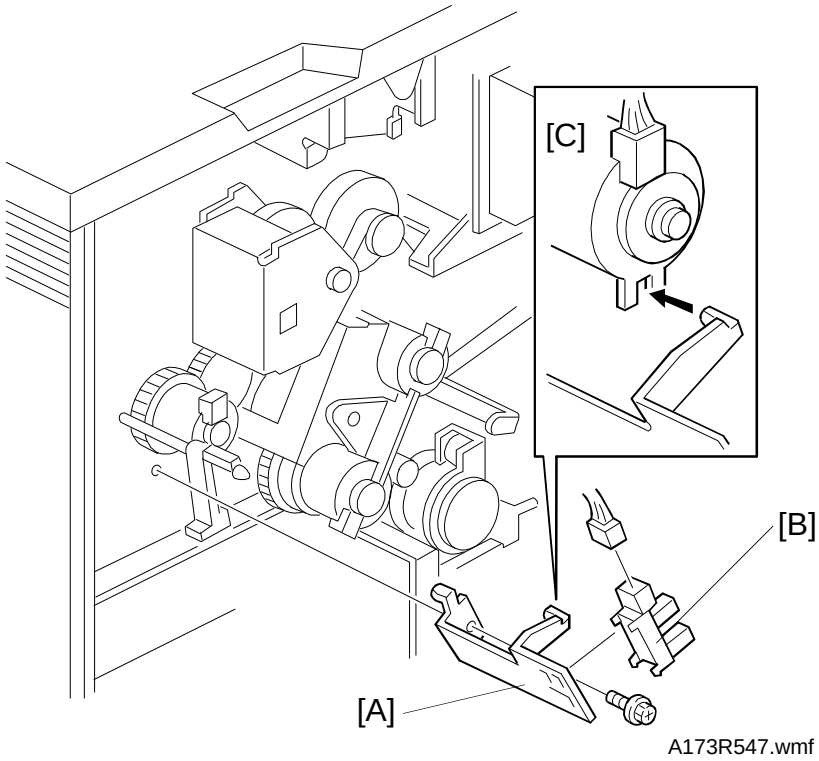

A173R547.wmf

1. Unplug the power cord.
2. Remove the rear cover.
3. Remove the main board (2 screws and three locking supports).
4. Remove the sensor bracket [A] (1 screw) and remove the sensor [B] (1 connector).

NOTE: When reinstalling the sensor, make sure that the stopper on the bracket engages with the notch in the clutch [C].

5.3 PAPER FEED ROLLER REPLACEMENT

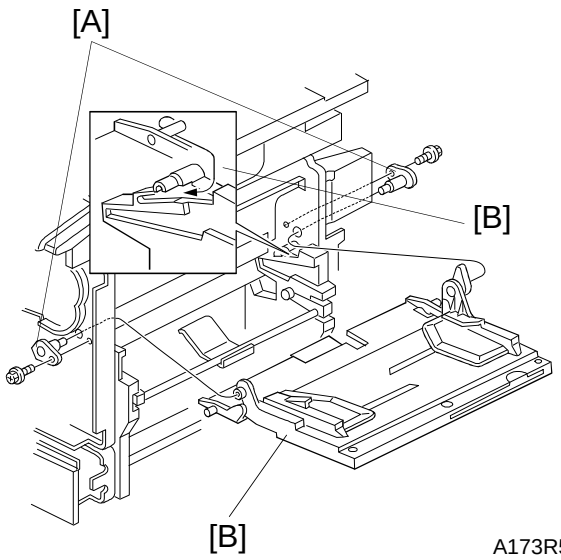

A173R548.wmf

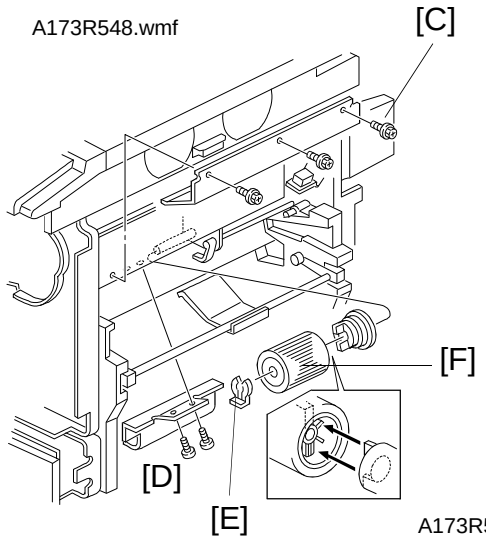

A173R549.wmf

1. Unplug the power cord.
2. Remove the right cover, front door, and rear cover.
3. Remove the main board.
4. Remove the front and rear brackets [A] holding the manual feed table [B].
5. Remove the manual feed table.
6. Remove the guide plate [C] (3 screws) and the bracket [D] (2 screws).
7. Replace the paper feed roller [F] (1 snap ring [E]).

5.4 FRICTION PAD REPLACEMENT

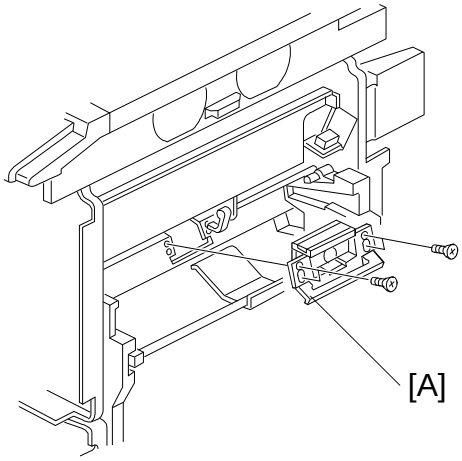

A173R550.wmf

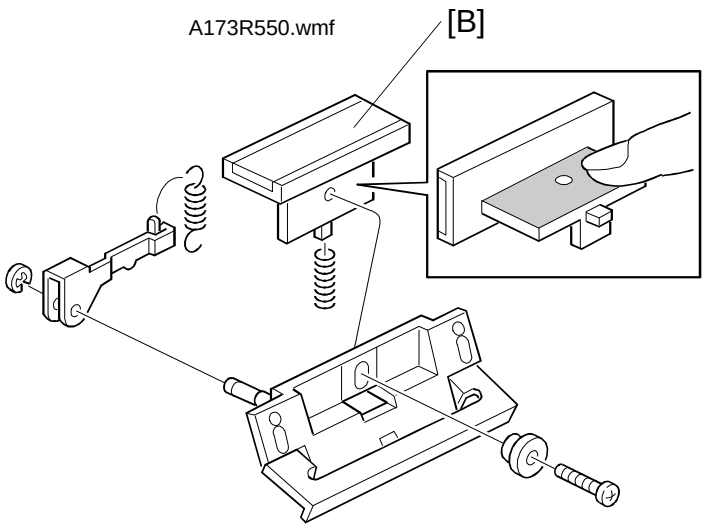

A173R551.wmf

1. Remove the cassette.
2. Remove the friction pad assembly [A] (4 screws).
3. Remove the friction pad [B] (1 screw).

NOTE: After reinstalling the friction pad, confirm that it moves up and down smoothly.

5.5 2ND PAPER FEED ROLLER REPLACEMENT

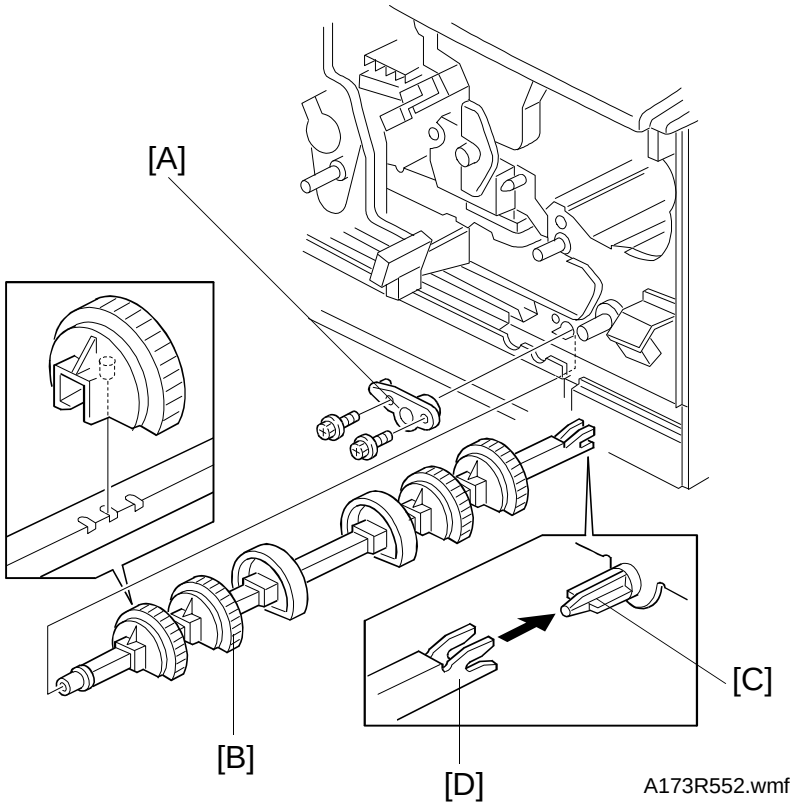

1. Unplug the power cord.
2. Remove the front door.
3. Pull out the paper tray.
4. Remove the bracket [A] (2 screws).
5. Replace the feed rollers [B] (1 screw each).

NOTE: When reinstalling the feed roller assembly, make sure of the following:

a) The feed rollers face up as shown.
b) The pins [C] on the end of the drive shaft fit into the slots [D] on the end of the feed roller shaft.

5.6 2ND PAPER END SENSOR REPLACEMENT

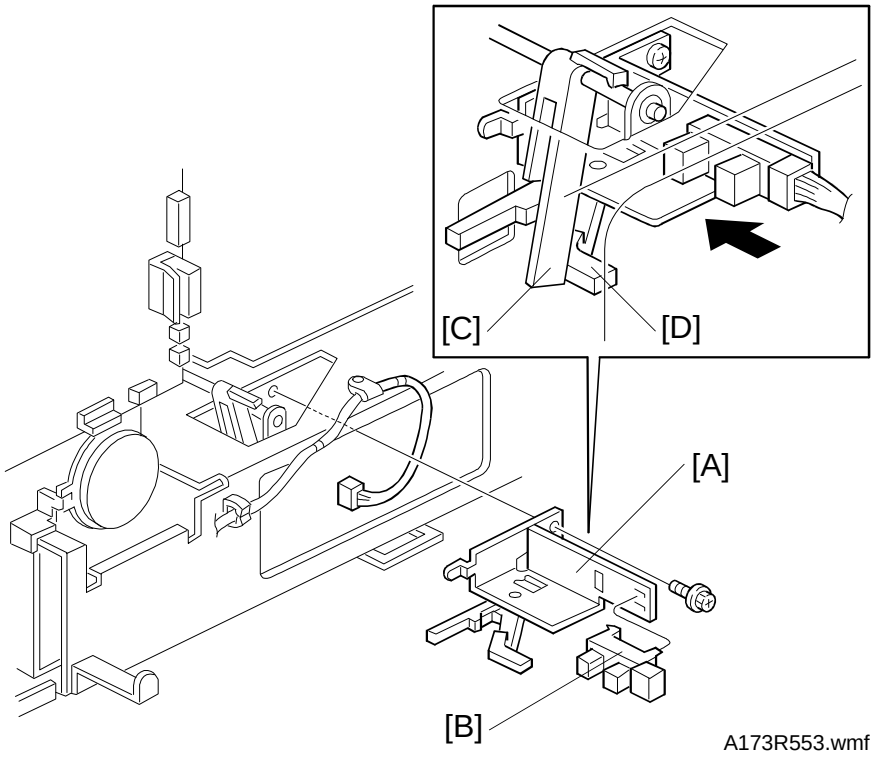

1. Unplug the power cord.
2. Pull out the paper tray.
3. Remove the rear cover.
4. Remove the sensor bracket [A] (1 screw).
5. Replace the sensor [B] (1 connector).

NOTE: When reinstalling the sensor bracket, make sure that the paper end actuator [C] and paper end feeler release lever [D] are properly positioned as shown. If not, the feeler may be damaged when the paper tray is inserted.

5.7 REGISTRATION SENSOR/REGISTRATION ROLLER REMOVAL

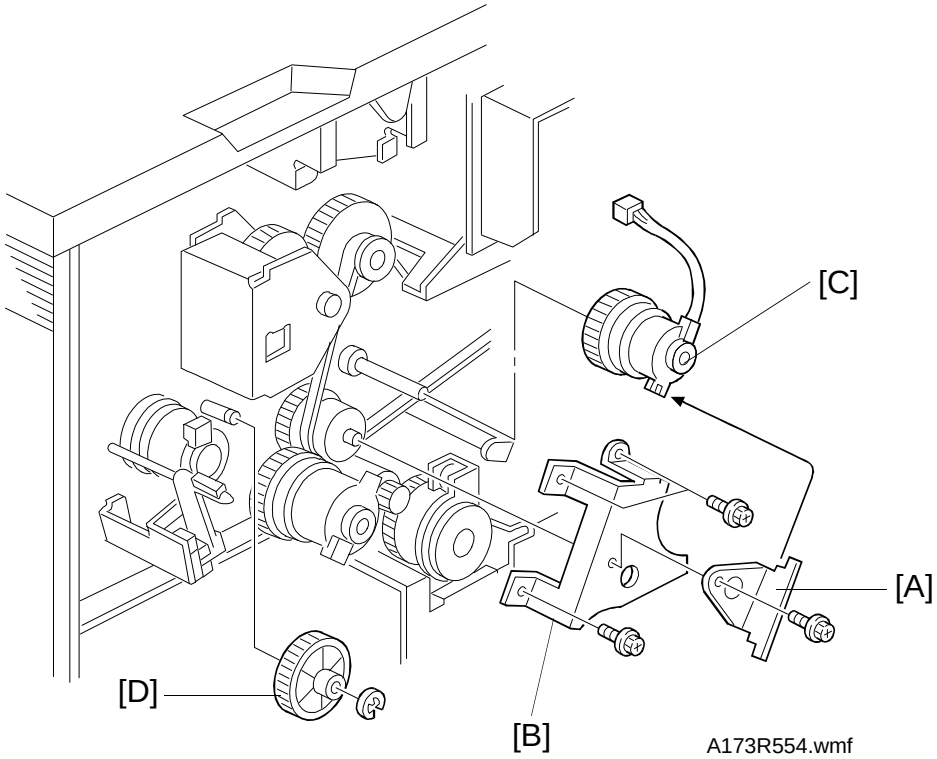

1. Unplug the power cord.
2. Remove the following parts:

Front door	Rear cover
Development unit	Inner cover
CC/G/G power pack	Cleaning unit
Main board	

3. Remove the stopper [A] (1 screw) and the clutch cover [B] (3 screws).
4. Remove the registration clutch [C].
5. Remove the idle gear [D] (1 E-ring).

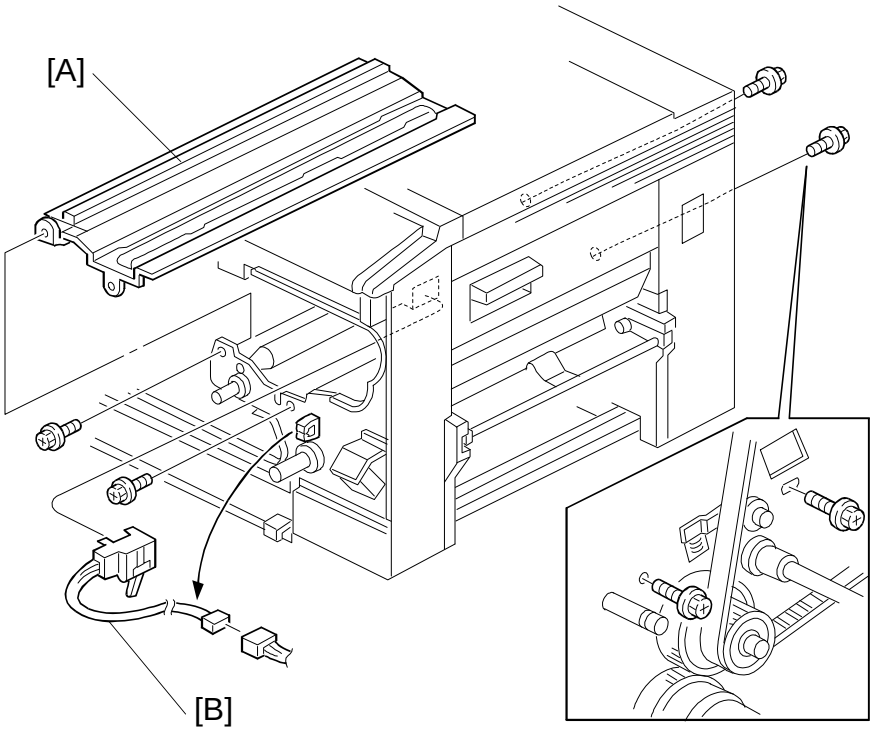

A173R555.wmf

6. Remove the guide plate [A] (4 screws).
7. Remove the registration sensor [B] (1 connector).

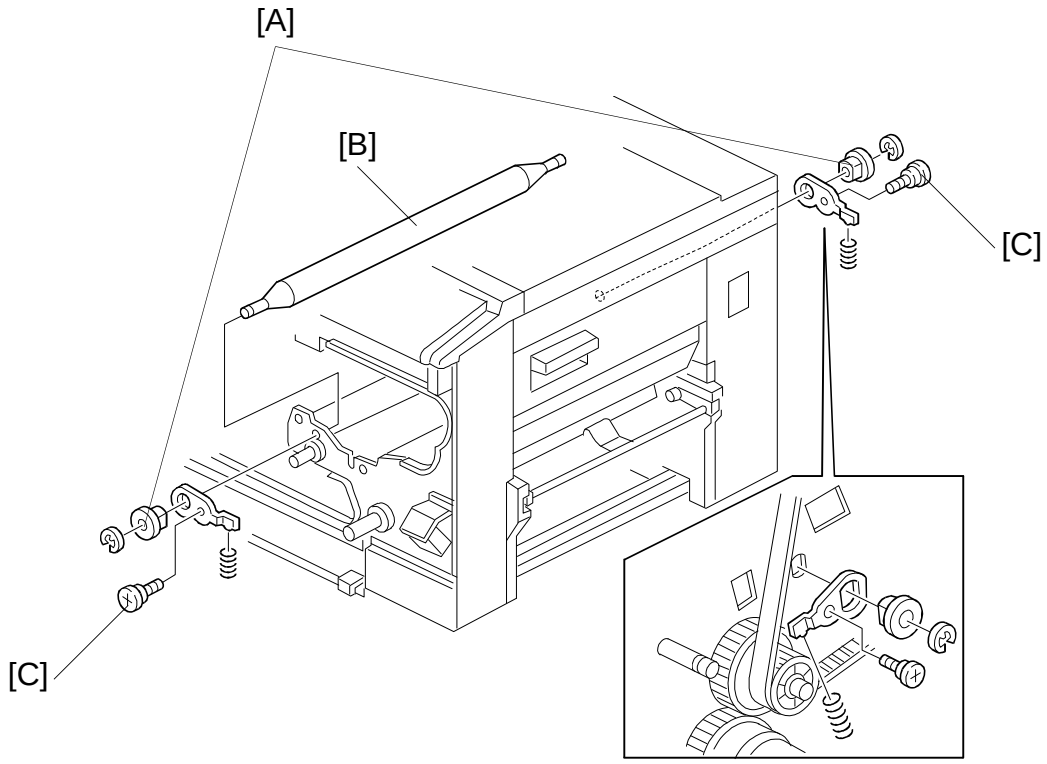

A173R556.wmf

8. Remove the front and rear bushings [A] (1 E-ring each).
9. Remove the upper registration roller [B] (2 stepped screws [C]).

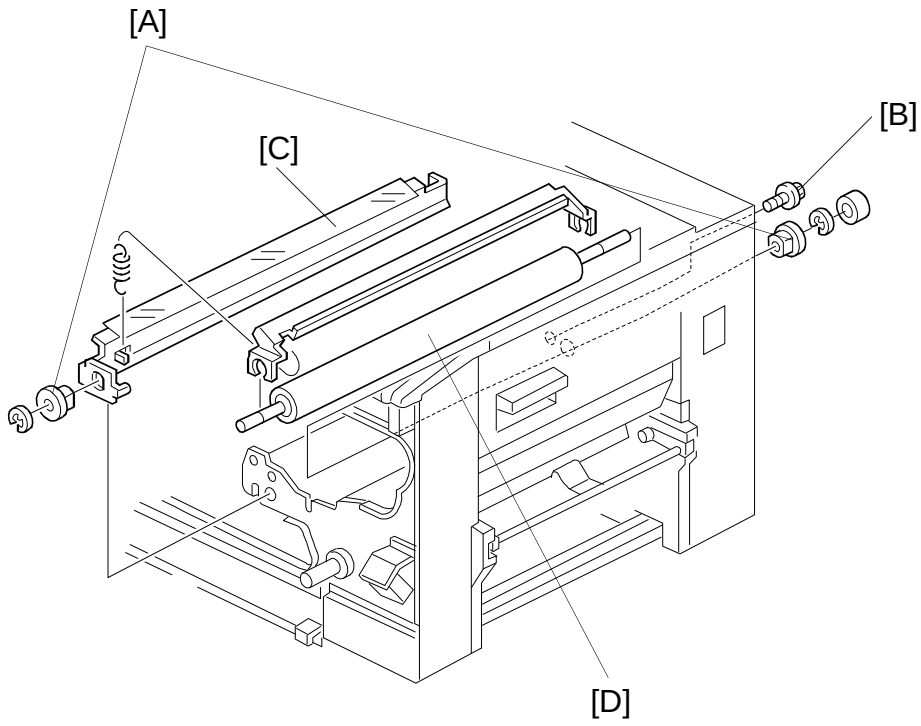

A173R557.wmf

10. Remove the front and rear bushings [A] of the lower registration roller (2 E-rings).
11. Remove the screw [B] securing the registration mylar bracket [C].
12. Remove the lower registration roller [D].

5.8 1ST PAPER FEED PRESSURE ADJUSTMENT

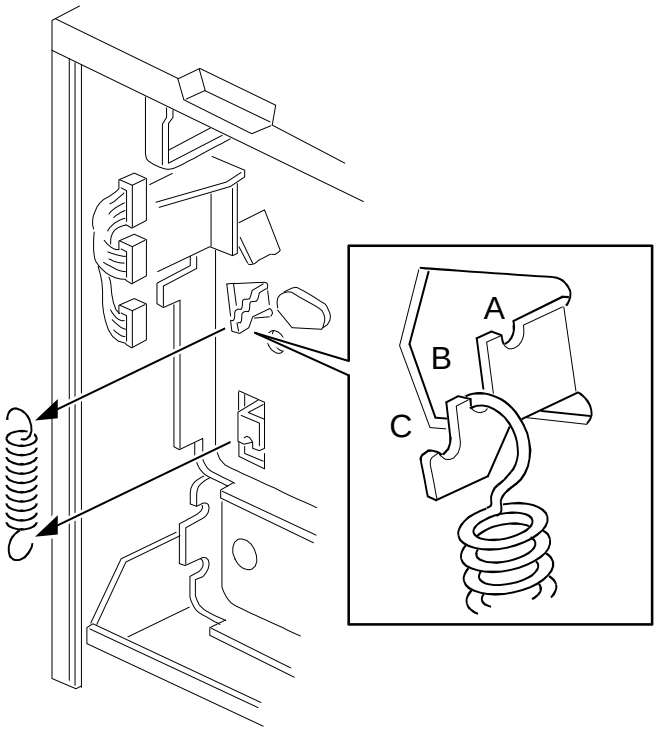

A173R558.wmf

NOTE: This adjustment should be done if paper multi-feed or no paper feeding frequently occurs.

1. Unplug the power cord.
2. Remove the rear cover (4 screws).
3. Remove the main board (2 screws and three locking supports).
4. Change the position of the spring hook depending on the type of misfeed.

A: To counter no paper feeding (strong tension)

B: Normal position

C: To counter paper multi-feeding (weak tension)

6. AROUND THE DRUM

6.1 DRUM REPLACEMENT

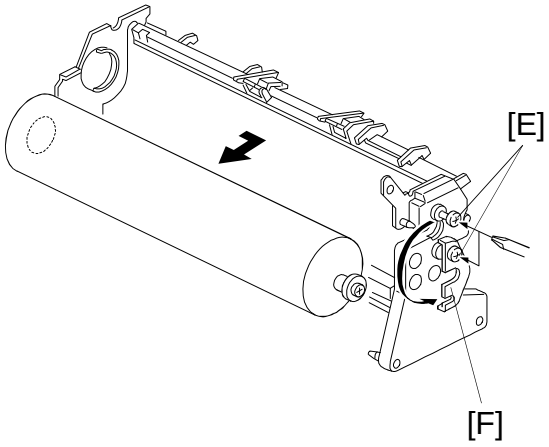

A173R559.wmf

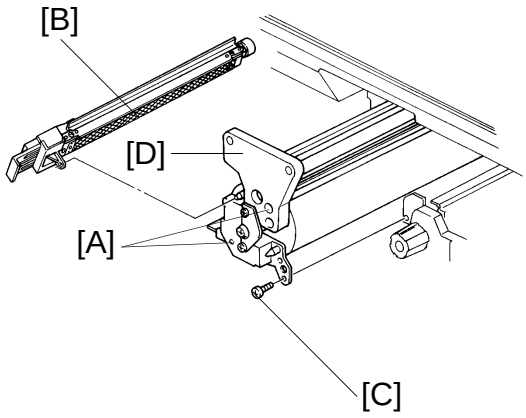

A173R560.img

IMPORTANT

When replacing the drum, do not loosen the paint locked screws [A]. The drum position is set with a special tool and instruments at the factory to ensure the proper gap between the drum and the development unit.

1. Unplug the power cord, open the front door, and lower the transport unit.
2. Remove the following units:
   - Development unit
   - Cleaning unit
   - Charge corona unit [B] and wire cleaner
3. Remove the screw [C] securing the drum stay and pull out the drum unit [D] gently along the rail.
4. Place the drum unit on a sheet of paper. Loosen the two screws [E] securing the bearing holder [F] and rotate the holder as shown.
5. Remove the drum by holding the drum unit rail and pulling out and up on the drum knob.

NOTE: a) When removing the drum, take care not to strike it against any objects.
b) Be careful not to bend the bearing holder [F].

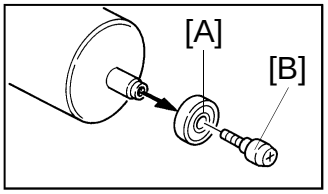

A173R561.img

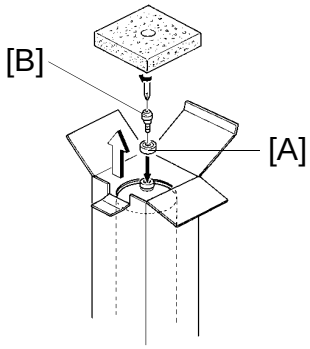

A173R562.img

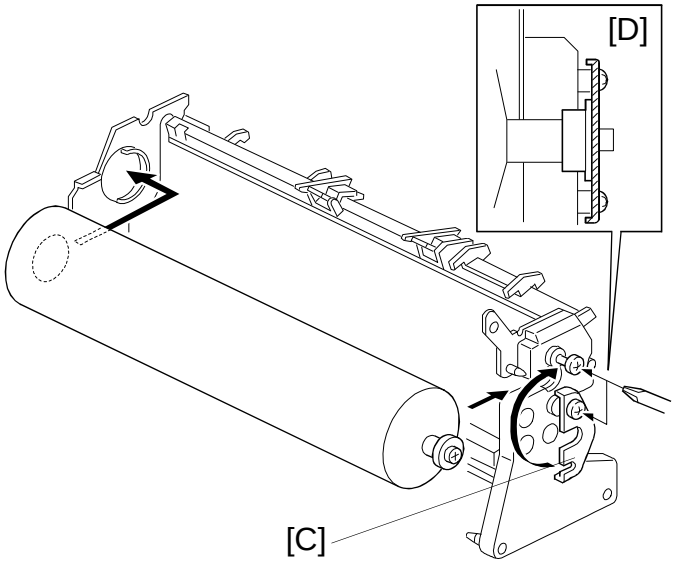

A173R563.wmf

6. Remove the bearing [A] (1 screw [B]) from the old drum and install it on the the new drum. Do not remove the protective sheet from the new drum yet.
7. Set the new drum in the unit and put the bearing holder [C] back in place. Tighten the screws.

   NOTE: a) When setting the drum in the unit, be careful not to strike it against the rail.
   b) Do not bend the bearing holder. Make sure the bearing holder is in contact with the bearing [D], as they are both used to ground the unit. If they are not in contact, solid black copies may occur.
   c) Do not touch the drum surface.

8. Set the drum unit in the machine and remove the drum protective sheet.
9. Reinstall the other units around the drum unit.
10. Reset the drum counter using SP66.
11. Perform the ID sensor (Vsg) adjustment using SP54.
12. Perform the light intensity adjustment using SP48. (See Light Intensity Adjustment.)
13. Perform the ADS adjustment using SP56.

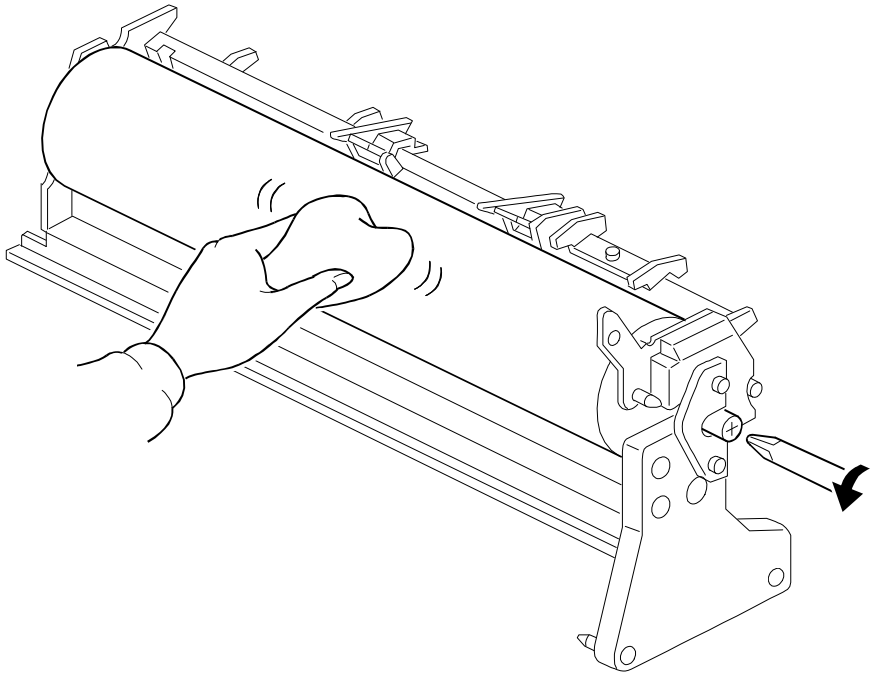

A173R564.wmf

14. Apply setting powder all over the drum surface. (Turn the drum using a screwdriver.)

6.2 ID SENSOR REPLACEMENT

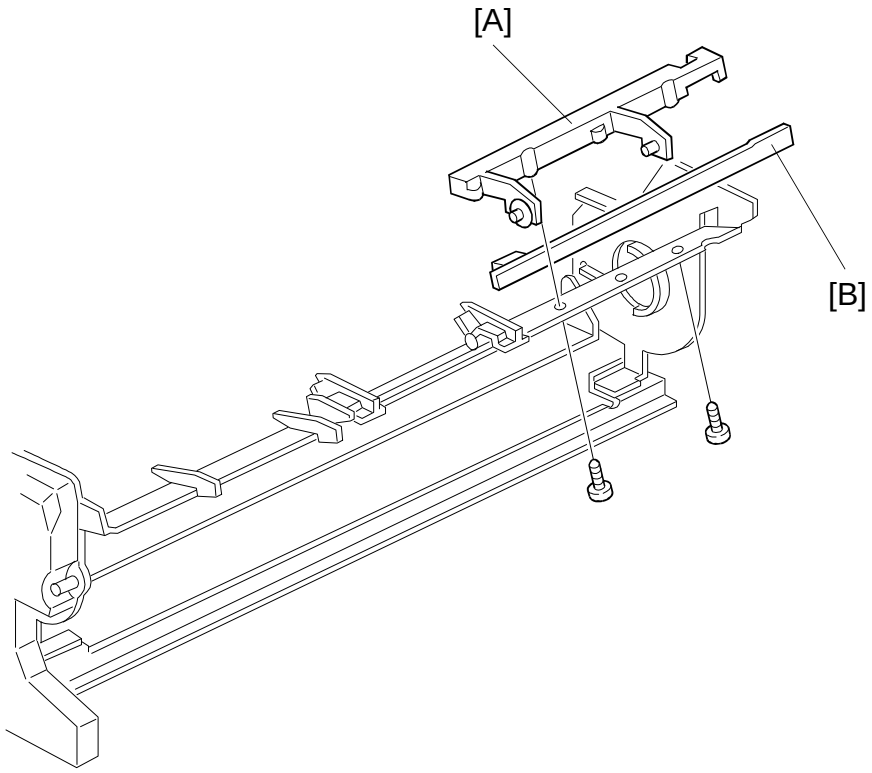

A173R565.wmf

1. Remove the drum unit, then remove the drum from the unit. (See Drum Replacement.)

   NOTE: Cover the drum with a sheet of paper to prevent the drum from being exposed to light.

2. Remove the ID sensor holder [A] (2 screws).
3. Replace the ID sensor board [B].
4. Perform the ID sensor (Vsg) adjustment (SP54).

6.3 PICK-OFF PAWL REPLACEMENT

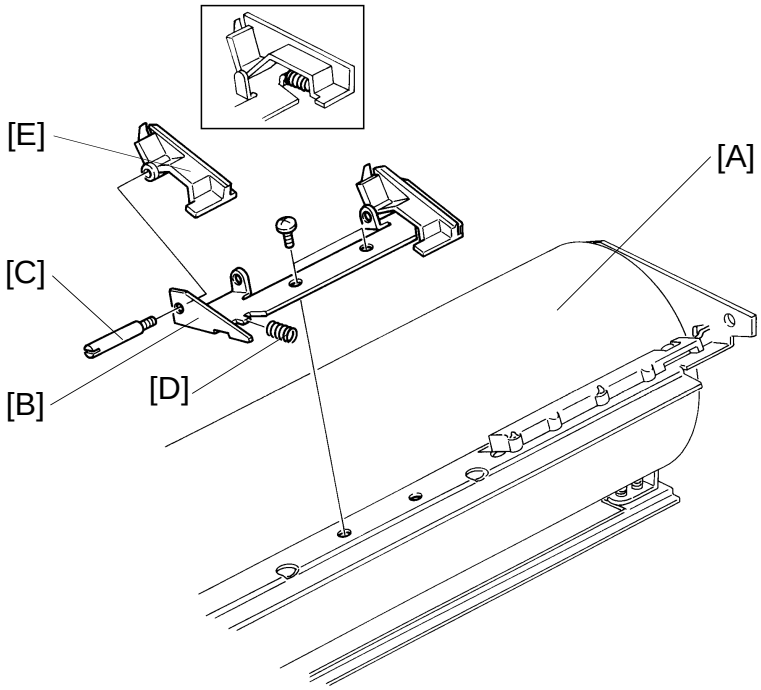

A173R566.img

NOTE: Cover the drum with a sheet of paper after removing it from the drum unit. This prevents the drum from being exposed to light.

1. Remove the drum unit, then separate the drum [A] from the unit. (See the Drum Replacement section.)
2. Remove the pick-off pawl bracket [B] (2 screws).
3. Remove the screws [C] and the springs [D], then replace the pick-off pawls [E].

NOTE: When replacing the new pick-off pawls, make sure that the springs are positioned correctly as shown in the illustration.

6.4 QUENCHING LAMP REMOVAL

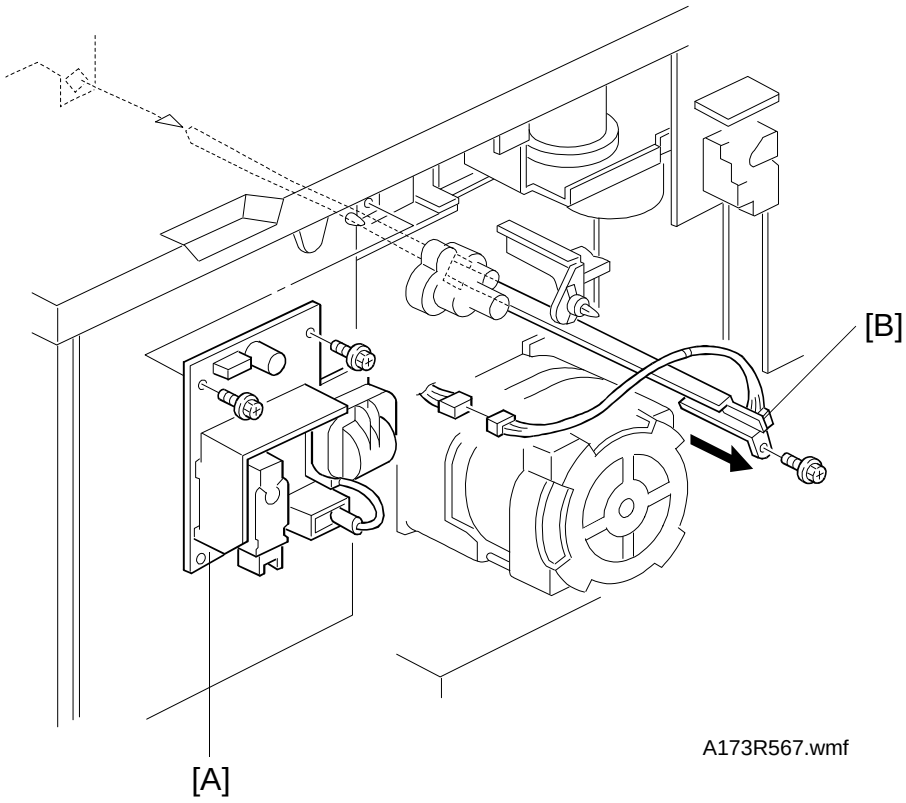

1. Remove the drum unit. (See Drum Replacement.)
2. Remove the rear cover.
3. Remove the TC/SC power pack [A] (2 screws and 2 locking supports).
4. Remove the quenching lamp [B] (1 screw).

6.5 ERASE LAMP REMOVAL

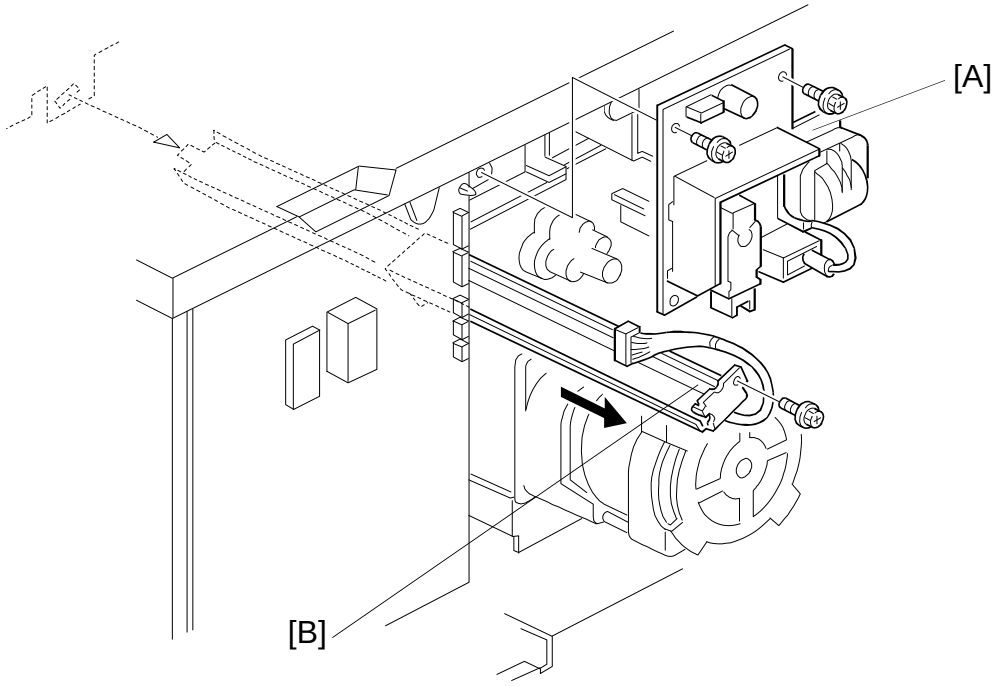

A173R568.wmf

1. Unplug the power cord.
2. Open the front door.
3. Remove the drum unit. (See Drum Unit Removal.)
4. Remove the rear cover (4 screws).
5. Remove the TC/SC power pack [A] (2 screws).
6. Remove the erase lamp [B] (1 screw).

6.6 CHARGE CORONA WIRE REPLACEMENT

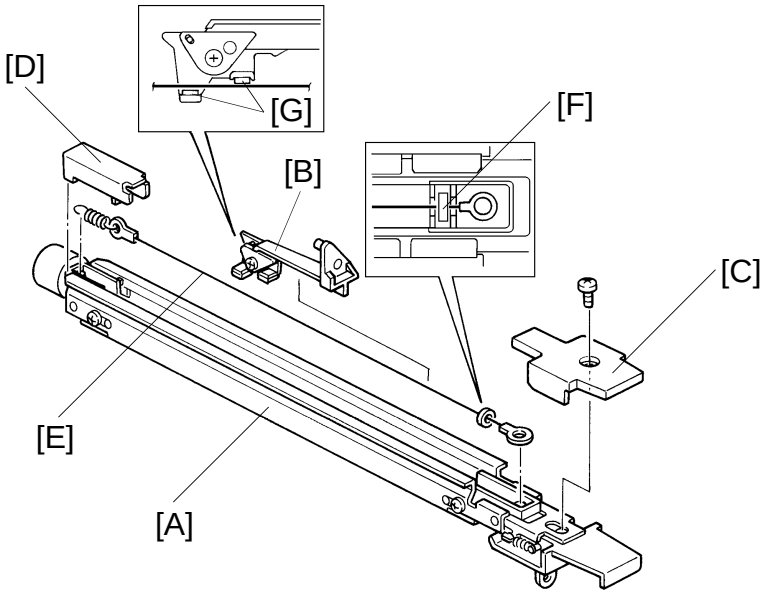

A173R569.img

1. Remove the charge corona unit [A] together with the wire cleaner [B] (1 screw).
2. Remove the wire cleaner from the charge corona unit.
3. Remove the front end block cover [C] (1 screw) and the rear end block cover [D].
4. Unhook the spring from the corona wire [E] and replace the wire.

NOTE: a) Make sure that the damper ring [F] is properly positioned as shown.
b) Do not handle the new corona wire with bare hands. Oil on the wire may cause uneven charge on the drum.
c) Do not rub the corona wires with rough material (sandpaper, etc.) as this will damage the corona wires.
d) When removing the end block covers, be careful not to break off the side hooks.
e) Do not use any solvents to clean the wires as this will cause uneven charge on the drum.
f) Do not damage the grid when replacing the charge wire.
g) When installing the charge corona unit, make sure that the wire is positioned between the cleaner pads [G].

6.7 CHARGE CORONA GRID REPLACEMENT

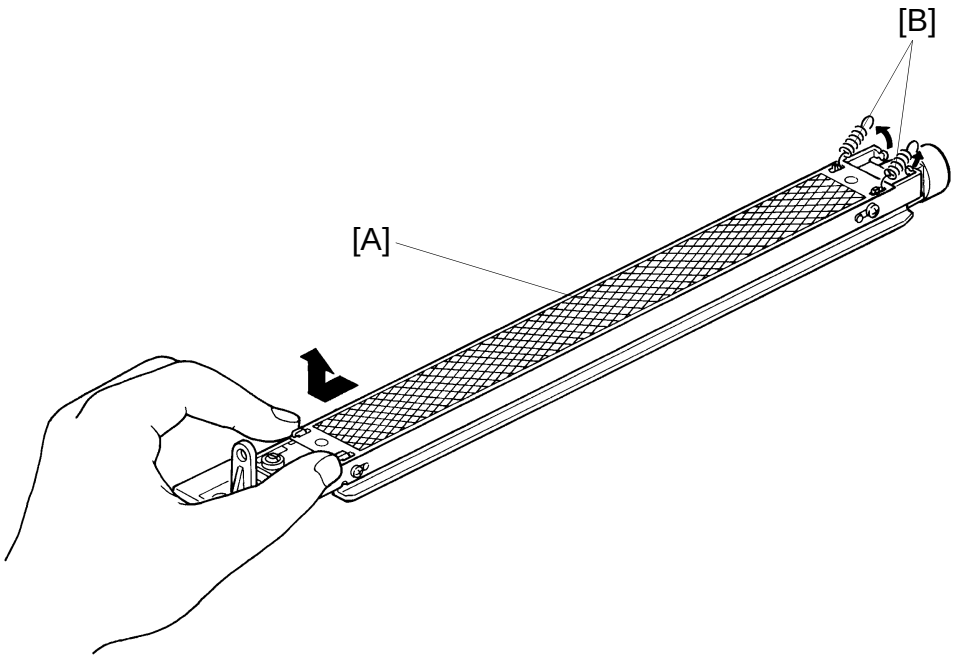

A173R570.img

1. Remove the charge corona unit.
2. Remove the grid plate [A] (2 springs [B]).

NOTE: a) Oils and chemicals from your hands will deteriorate the grid.
b) Do not bend the grid plate. This can result in an uneven charge.

6.8 TRANSFER/SEPARATION CORONA WIRE REPLACEMENT

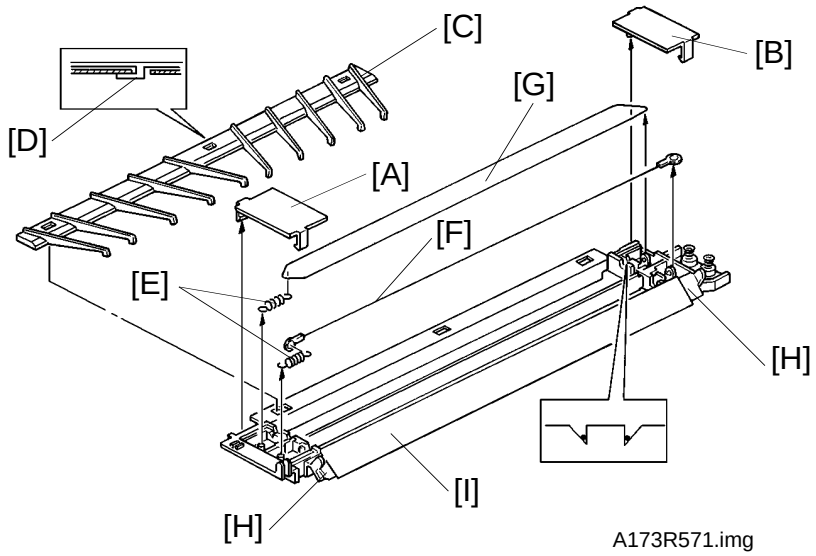

1. Remove the transfer/separation (TC/SC) corona unit.

2. Remove the following parts:
   - TC/SC unit front end block cover [A]
   - TC/SC unit rear end block cover [B]
   - TC/SC unit paper guide [C].

   NOTE: When reinstalling the TC/SC unit paper guide, verify that all three tabs [D] are properly latched in place.

3. Unhook the springs [E] from the wires.

4. Replace the transfer corona wire [F] and the separation corona wire [G].

NOTE: a) When installing the separation corona wire, make sure that the wire junction is positioned inside the rear endblock.
b) The transfer and separation corona wires must be in the grooves of the front and rear endblocks.
c) Do not handle new corona wire with bare hands. Oil on the wire may cause an uneven charge on the drum.
d) Rubbing the corona wires with a rough material (sandpaper, etc.) will damage the corona wires.
e) When removing the end block covers, be careful not to break off the side hooks.
f) Do not use any solvents to clean the wires as this will cause uneven charge on the drum.
g) Do not loosen the two screws [H] for the transfer entrance guide [I]. This is because that the transfer entrance guide is positioned with a special tool at the factory.

6.9 CORONA CURRENT ADJUSTMENT

NOTE: The corona current varies with environmental conditions such as humidity and atmospheric pressure. The corona current is adjusted at the factory and is suitable for a wide range of environmental conditions. Corona current adjustment is necessary whenever the power packs are replaced; adjustment may also be necessary to correct problems with paper separation, toner transfer, or image density.

⚠ CAUTION

1. Make sure that SP9 is cleared before you change the range on the digital multimeter. If not, the multimeter may be damaged.

2. High voltage is applied to the corona wires. Be careful.

– Preparation –

1. Unplug the power cord and remove the following parts:
   - Development Unit
   - Cleaning Unit
   - Charge Corona Unit
   - TC/SC Corona Unit
   - Drum Unit

2. Clean or replace each corona wire and clean the corona units with water or alcohol.

3. Remove the rear cover (4 screws).

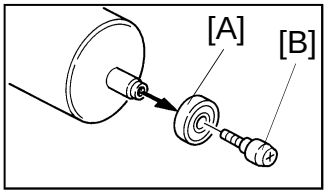

A173R572.img

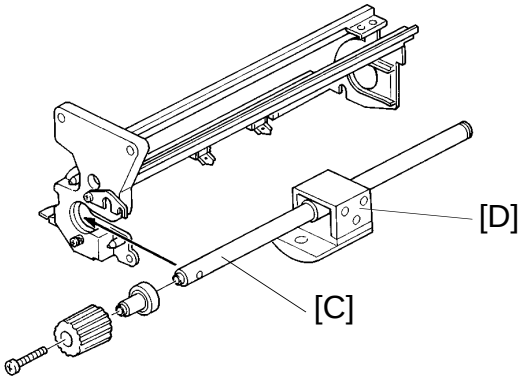

A173R573.img

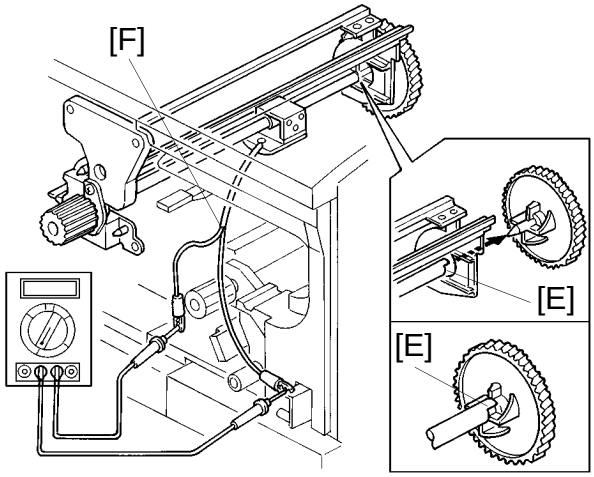

A173R574.img

NOTE: Do steps 5 – 9 before adjusting the transfer corona current, separation corona current or charge wire height:

4. Remove the drum from the drum unit. Cover the drum with a shielding sleeve. (See Drum Replacement.)
5. Remove the bearing [A] (1 screw [B]) from the drum, then install it on the drum shaft [C] (special tool: P/N A0069105).
6. Set the drum shaft and drum shoe [D] on the drum unit as shown.

   NOTE: Be careful not to injure your hand on the edge of the pick-off pawls.
7. Reinstall the drum unit with the shaft rear end [E] positioned as shown in the illustration. Pass the harness [F] down into the development unit.
8. Connect the negative harness lead to the copier frame, then connect both multimeter leads as shown to the harness leads.

6.9.1 CHARGE CORONA CURRENT ADJUSTMENT (SP9-2)

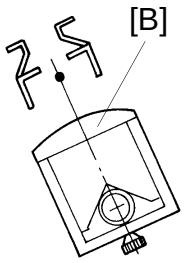

A173R575.img

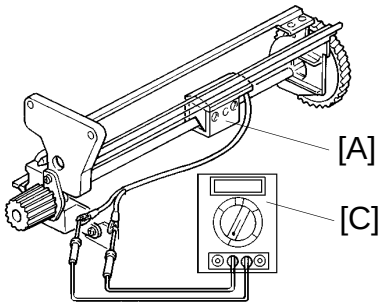

A173R576.img

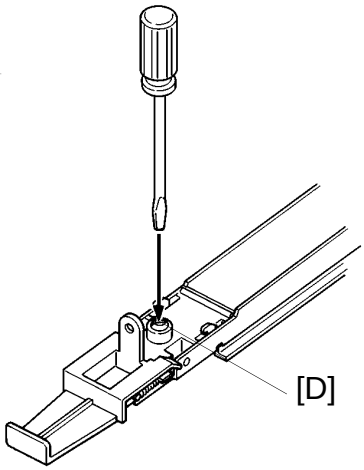

A173R577.img

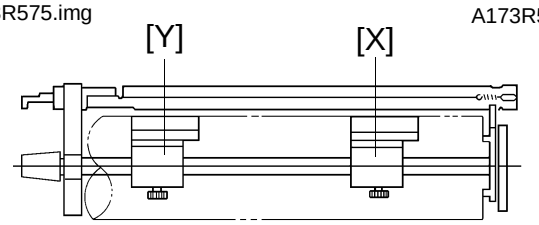

A173R578.img

– Wire Height Adjustment –

NOTE: If the OS-A3 test chart gray scale shows an uneven image, first do the Uneven Exposure Adjustment. If this fails, then check and adjust the wire height as follows:

1. Set the drum shaft and drum shoe on the drum unit and install the drum unit in the machine. (See Corona Current Adjustment Preparation.)
2. Slide the the drum shoe [A] to the rear limit [X] as shown.
3. Reinstall the charge corona unit on the drum unit.
4. Position the drum shoe so that the axis of the current detection plate [B] is aligned with the charge corona wire as shown.
5. Select the dc 200 μA range on the digital multimeter [C].
6. Using SP9–2, turn on the main switch, front door safety switch, and the charge corona .
7. Note the reading. (Wait at least 30 seconds for the current to stabilize.)
8. Press the C/⊘ key to turn off the charge corona, then move the drum shoe to the front limit [Y] as shown and repeat steps 3 to 7.
9. Adjust the front corona wire height by turning the adjusting screw [D] if the two readings are different.
10. Repeat steps 2 to 9 until the difference between the front and rear readings is no more than 5%.

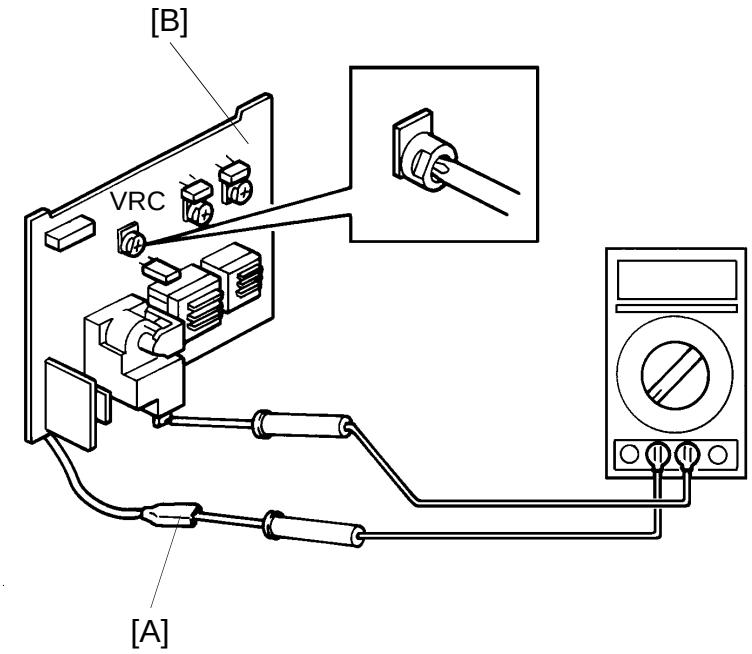

A173R579.img

– Charge Corona Current Adjustment –

ADJUSTMENT STANDARD	Adjusting VR	
DC –370 ± 2 μA	VRC	SP9-2

NOTE: Keep the high voltage wire terminal [A] away from the copier frame. Otherwise, electrical leakage may interfere with current measurement.

1. Unplug the power cord.
2. Disconnect the charge corona terminal [A] from the CC/G/B power pack [B].
3. Select the dc 2mA range on the digital multimeter.
4. Connect the multimeter leads as shown, then measure the charge corona current.
5. Plug the power cord in, turn on the main switch, front door safety switch and the charge corona using SP9-2.
6. Adjust the charge corona current to –370 ± 2 μA by turning VRC on the CC/G/B power pack [B].
7. Press the C/⊘ key and turn the main switch off.

6.9.2 GRID VOLTAGE ADJUSTMENT (SP9-2)

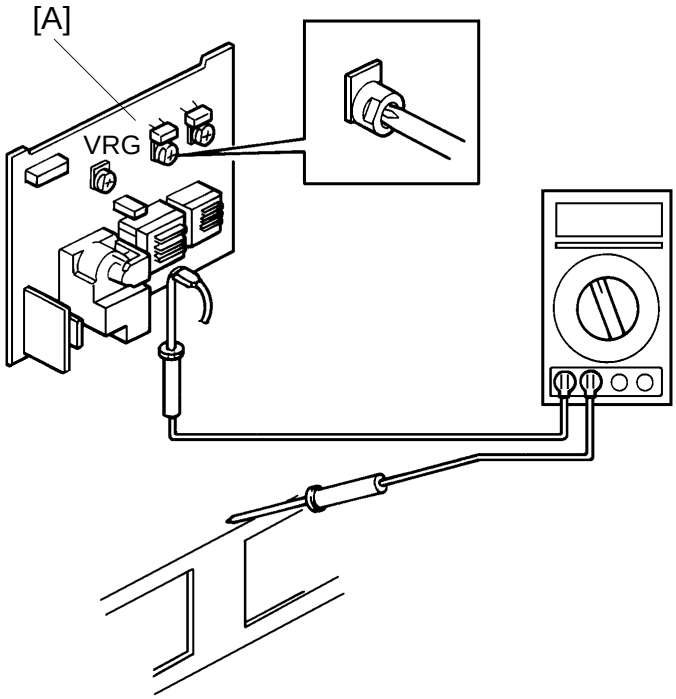

A173R580.img

ADJUSTMENT STANDARD	Adjusting VR	
DC –760 ± 10 V	VRG	SP9-2

1. Unplug the power cord and set the multimeter range to dc 1500V and connect the multimeter leads as shown.
2. Plug the power cord in, turn on the main switch, front door safety switch, and grid using SP9-2.
3. Adjust VRG of the CC/G/B power pack to –760 ± 10 V by turning VRG on the CC/G/B power pack [A].
4. Press the C/⊘ key and turn the main switch off.

6.9.3 TRANSFER CORONA CURRENT ADJUSTMENT (SP9-5)

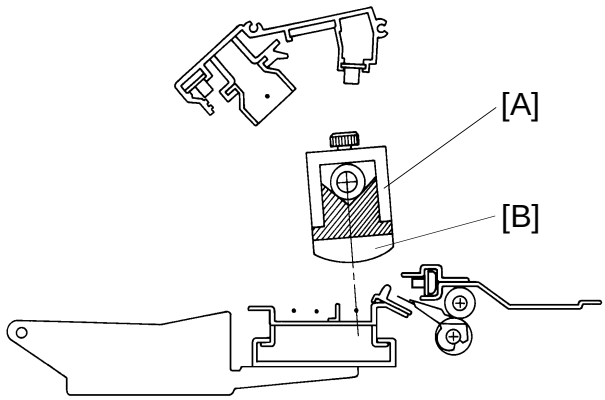

A173R581.img

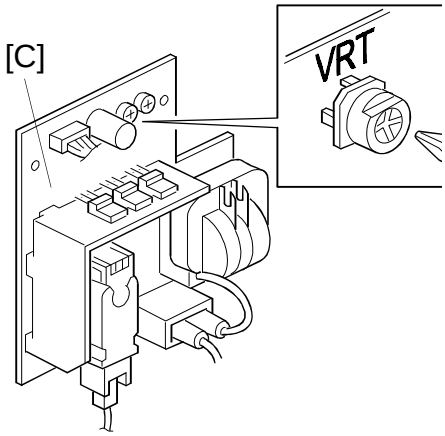

A173R582.wmf

ADJUSTMENT STANDARD	Adjusting VR	
DC –24.8 ± 0.5 μA	VRT	SP9-5

1. Unplug the power cord, reinstall the TC/SC corona unit, and position the drum shoe [A] on the center of the shaft so that the axis of the current detection plate [B] is aligned with the transfer corona wire as shown.
2. Select the dc 200 μA range on the digital multimeter.
3. Turn on the main switch, front door safety switch, and transfer corona using SP9-5.
4. Adjust the transfer corona current to dc –24.8 ± 0.5 μA using VRT on the TC/SC power pack [C].
5. Press the C/⊘ key and turn the main switch off.

6.9.4 SEPARATION CORONA CURRENT ADJUSTMENT (SP9-8)

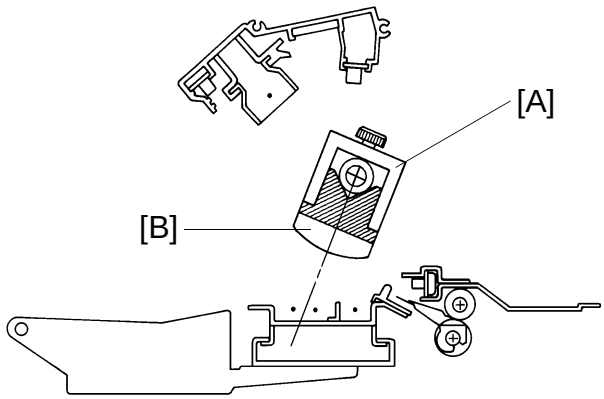

A173R583.img

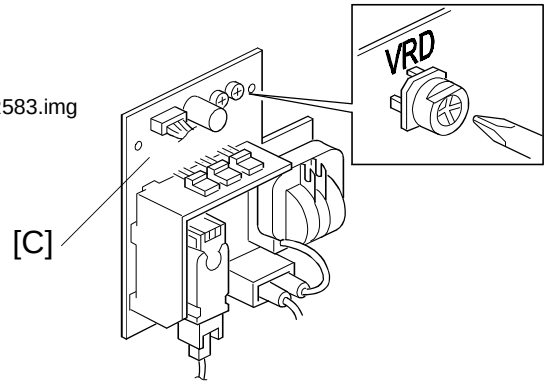

A173R584.wmf

ADJUSTMENT STANDARD	Adjusting VR	
AC 41.6 ± 1.3 μA	VRD	SP9-8

1. Unplug the power cord, reinstall the TC/SC corona unit, and position the drum shoe [A] on the center of the shaft so that the axis of the current detection plate [B] is aligned with the separation corona wire as shown.

   NOTE: Make sure that the drum shoe does not touch the pick-off pawls.

2 Select the ac 200 μA range on the digital multimeter.

3. Turn on the main switch, the front safety switch, and the separation corona using SP9-8.

4. Adjust the separation corona current to ac 41.6 ± 1.3 μA using VRD on the TC/SC power pack [C].

5. Press the C/⊘ key and turn the main switch off.

7. FUSING

7.1 EXIT UNIT REMOVAL

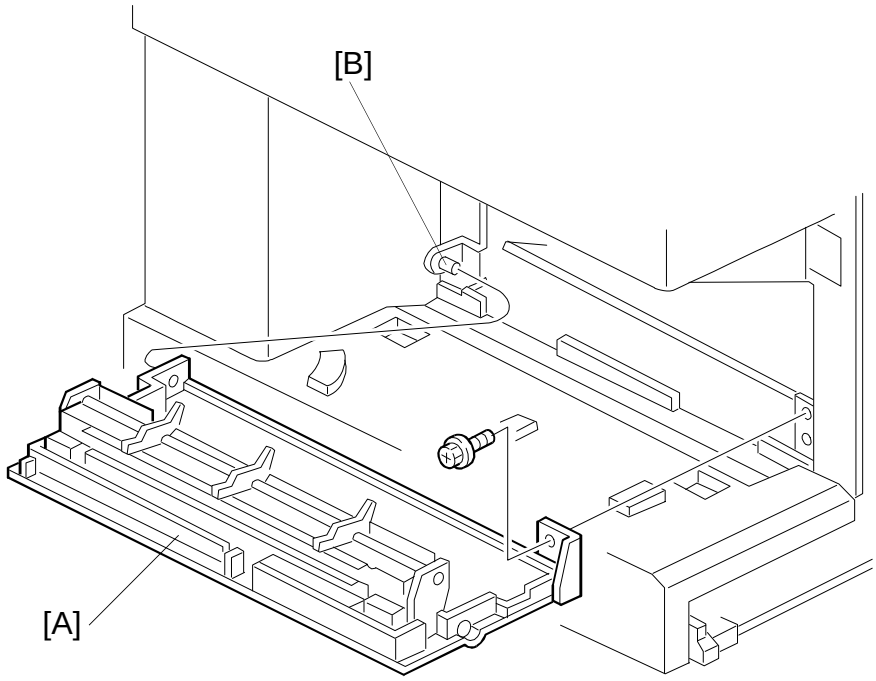

A173R585.wmf

1. Unplug the power cord.
2. Remove the copy receiving tray or slide the sorter to the left side if it is installed.
3. Open the exit unit [A].
4. Remove the exit unit (1 screw and the rear hinge pin[B]).

7.2 FUSING LAMP REPLACEMENT

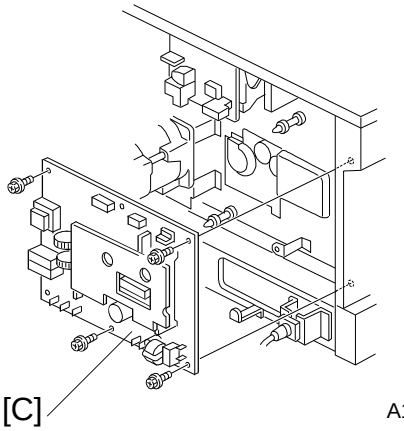

A173R586.wmf

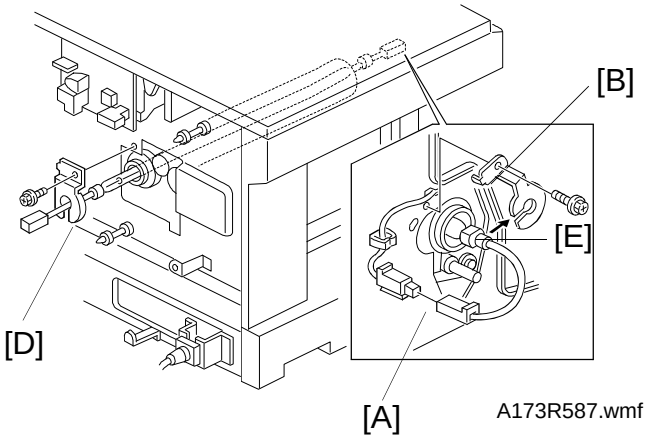

A173R587.wmf

1. Unplug the power cord.
2. Remove the rear cover (4 screws).
3. Remove the front door.
4. Remove the inner cover (7 screws).
5. Disconnect the connector [A] at the front side.
6. Remove the front support bracket [B].
7. Remove the power supply/ac drive board [C] (all the connectors, 4 screws, and 2 locking supports).
8. Remove the rear support bracket [D] (1 screw).
9. Pull out the fusing lamp [E] out of the front end of the fusing roller.

NOTE: a) Do not touch the fusing lamp with bare hands.
b) The connector housings used at the front and rear sides are different. (The rear harness is longer.)

7.3 PRESSURE ROLLER REPLACEMENT

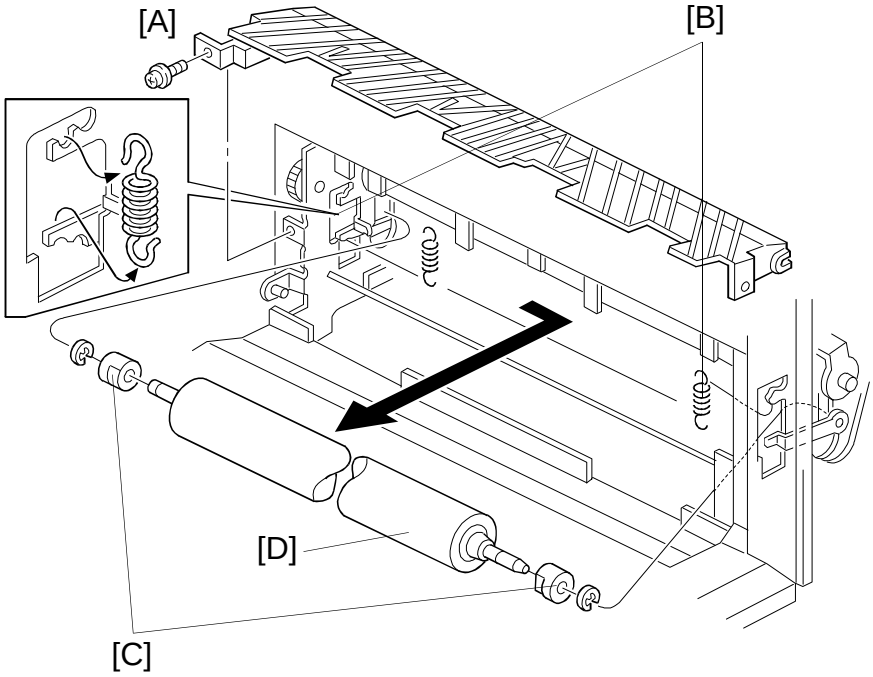

A173R588.wmf

1. Remove the exit unit. (See Exit Unit Removal.)
2. Remove the rear cover and the power supply/ac drive board.
3. Remove the exit paper guide [A] (1 screw).
4. Remove the front and rear pressure springs [B].
5. Remove the front and rear bearings [C] (1 screw each).
6. Remove the pressure roller [D].

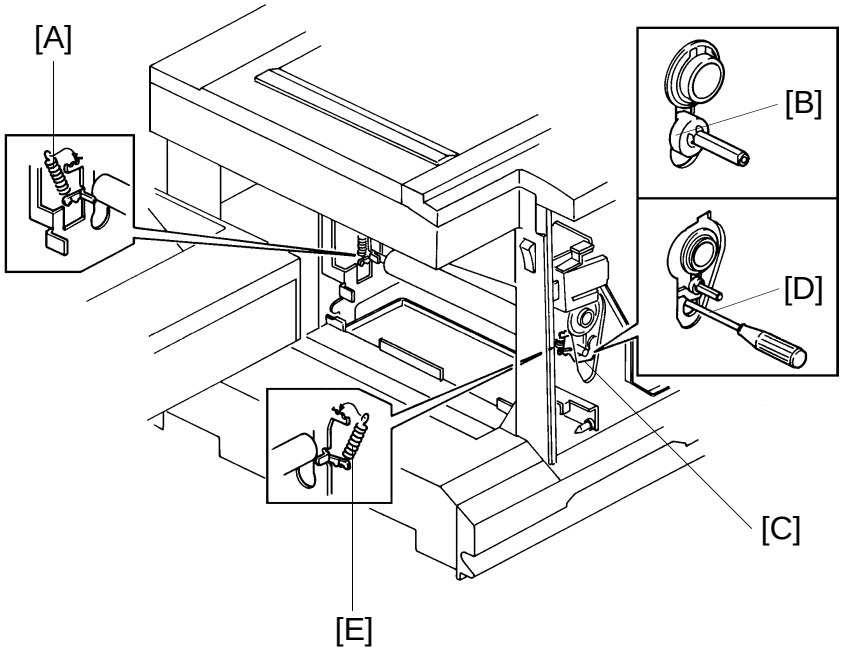

A173R589.img

– Reinstallation –

1. Install the bushings on both the front and rear roller shafts (1 E-ring each).
2. After setting the pressure roller, install the rear pressure spring [A] while sliding the bushing [B] up along the cutout in the rear frame as shown.
3. Slide the bushing up along the cutout in the front frame and pull the lower spring bracket [C] up as shown.
4. To hold the spring bracket, insert a screwdriver into the cutout [D] in the front frame as shown.
5. Install the front pressure spring [E].

7.4 HOT ROLLER REPLACEMENT

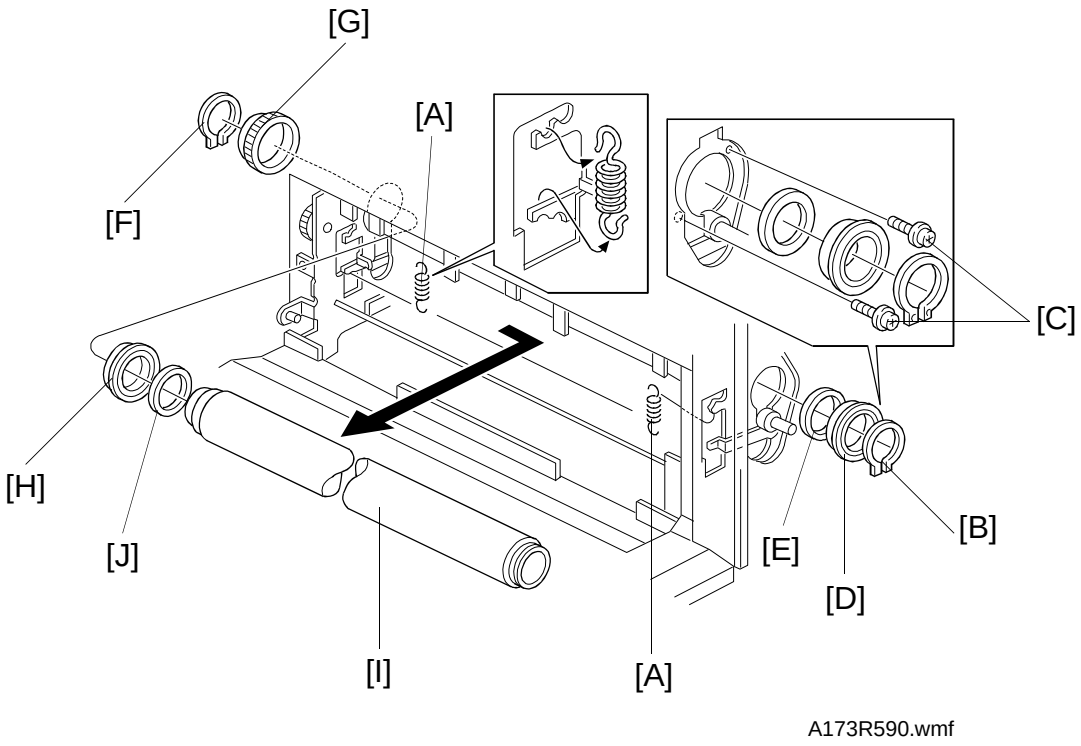

A173R590.wmf

1. Remove the exit unit. (See Exit Unit Removal.)
2. Remove the fusing lamp. (See Fusing Lamp Replacement.)
3. Remove the exit paper guide (1 screw).
4. Remove the front and rear pressure springs [A].
5. Remove the C-ring [B] (front side).
6. Remove the 2 screws [C] securing the bearing to the fusing unit front frame, then remove the bearing [D] and spacer [E].
7. Remove the rear C-ring [F].
8. Slide the hot roller out. The gear [G] and spacer [H] will drop off the hot roller shaft.
9. Remove the hot roller [I] (1 bearing [J]).

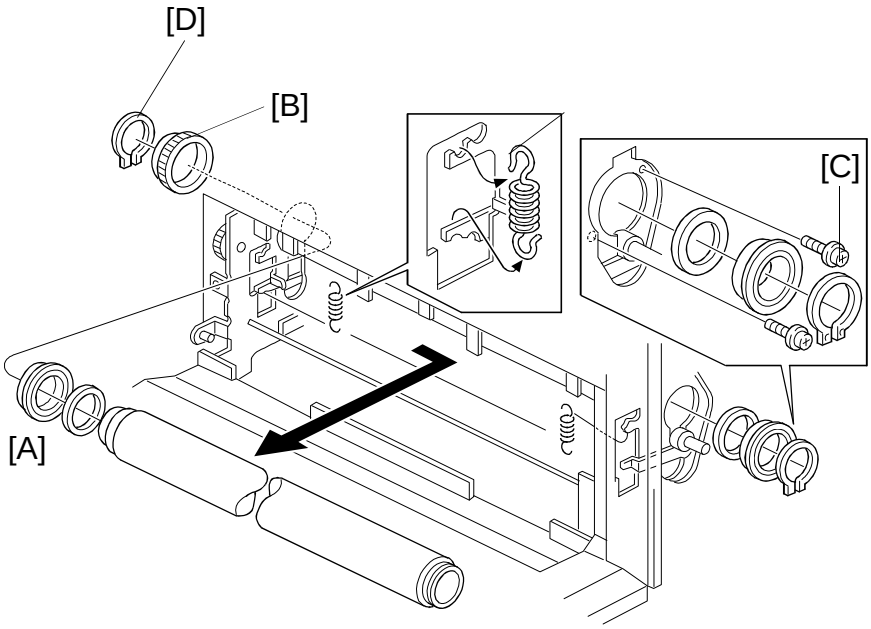

A173R590.wmf

– Reinstallation –

1. Set the rear bearing [A] on the rear frame.
2. Insert the rear end of the hot roller shaft through the rear bearing.
3. Place the gear [B] on the rear end of the shaft.
4. Install the front bearing and spacer, then secure them with two screws [C].
5. Set the rear side C-ring [D] on the rear shaft.

NOTE: a) Peel off 3 cm (1 inch) from both ends of the protective sheet before installing a new hot roller.
b) Before reinstalling the pressure springs, remove the rest of the protective sheet.
c) Before reinstalling the pressure springs, refer to the installation procedure in the Pressure Roller Replacement Section.

7.5 FUSING THERMISTOR AND THERMOFUSE

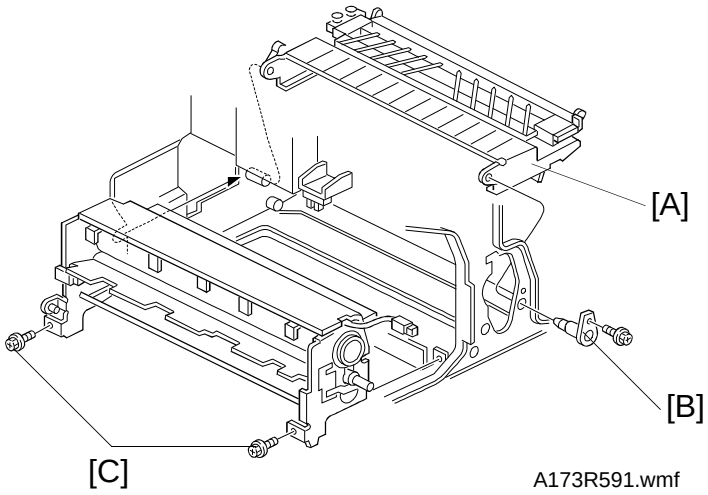

A173R591.wmf

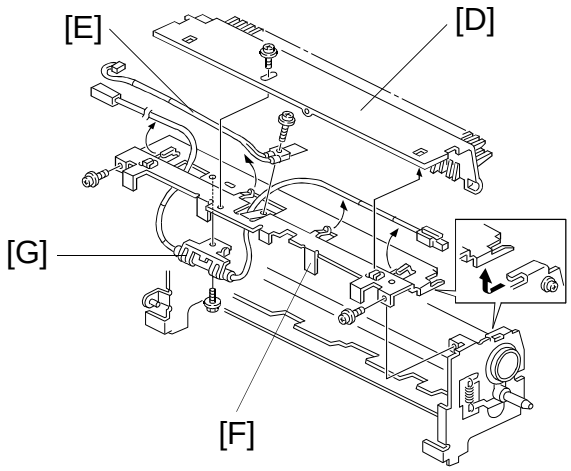

A173R592.wmf

1. Unplug the power cord. Remove the front door, left cover, left lower cover, and rear cover.
2. Remove the power supply/ac drive board (all the connectors, 4 screws, and 2 locking supports).
3. Remove the exit unit. (See Exit Unit Removal.)
4. Remove the transport unit [A] (1 screw and holder [B]).
5. Remove the fusing unit [C] (2 screws).
6. Remove the fusing unit cover [D] (1 screw).
7. Replace the fusing thermistor [E].
8. Remove the bracket [F] (2 screws).
9. Replace the fusing thermofuse [G] (1 screw).

7.6 FUSING PRESSURE ADJUSTMENT

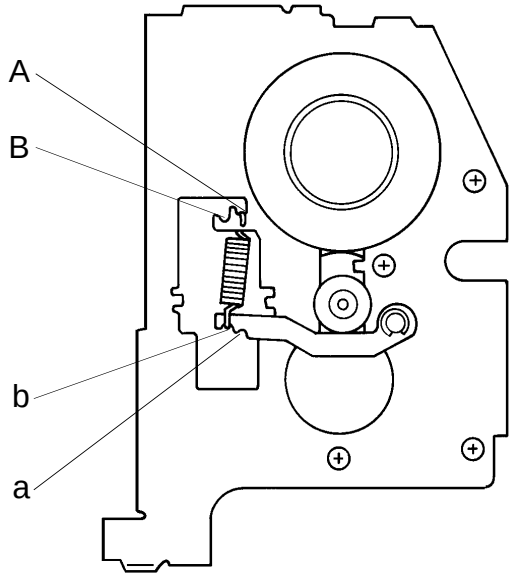

A173R593.img

– Fusing pressure adjustment combinations –

Combination	Pressure Level
A–a	Stronger
A–b	Factory Setting
B–b	Weaker

The fusing pressure can be set at three different levels. Adjust the pressure spring position to A–a if poor fusing occurs or to B–b if copy paper becomes creased. For removal and installation, see the Pressure Roller Replacement section.

7.7 EXHAUST BLOWER MOTORS/EXIT SENSOR REPLACEMENT

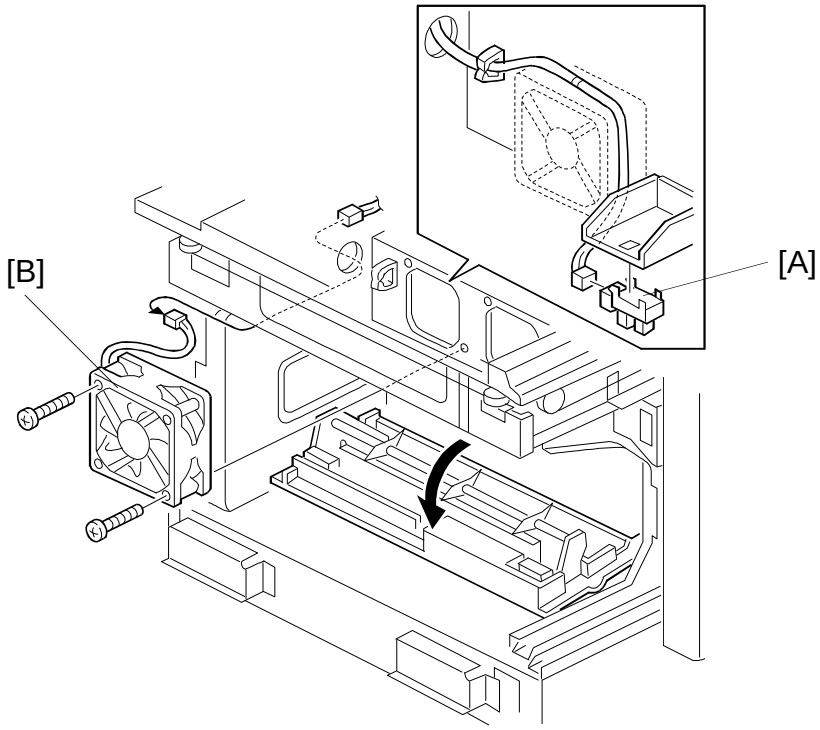

A173R594.wmf

1. Unplug the power cord.
2. Remove the rear cover (4 screws), and the left cover (4 screws).
3. Replace the exit sensor [A].
4. Replace the exhaust blower motors [B] (2 screws and 1 connector each).

8. OTHERS

8.1 OZONE FILTER REPLACEMENT

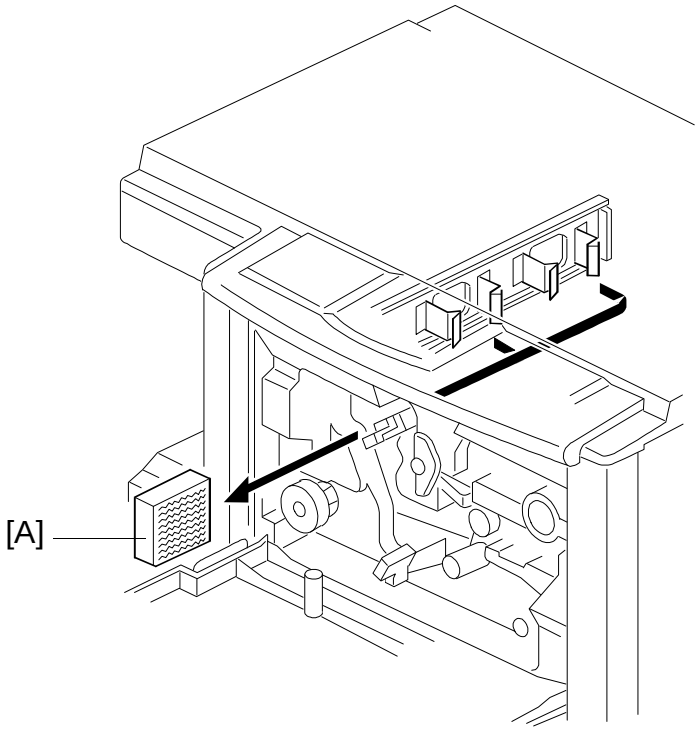

A173R595.wmf

1. Open the front door.
2. Remove the cleaning unit.
3. Replace the ozone filters [A].

9. COPY QUALITY ADJUSTMENT

– General Information –

Image density is affected by the following factors:

(1) Light Intensity
(2) Bias Voltage
(3) Toner Density
(4) Grid Voltage
(5) Charge Corona Current

The items listed above must be kept in balance to maintain correct image density.

In the field, image density should be adjusted first by changing the exposure lamp voltage. If results are unsatisfactory, the bias voltage can be changed. Also, if requested by the customer, the overall image density can be changed by changing the toner density. Normally, this should be kept at the normal position (that is, at the factory setting).

The grid voltage and charge corona current are carefully adjusted at the factory. Any adjustment out of the adjustment standard will result in overtoning, toner scattering, dirty background, or light image density problems. The grid voltage and charge corona current adjustment should be done only when replacing the CC/G/B power pack or to correct certain problems with image density after checking the other possible causes.

9.1 LIGHT INTENSITY ADJUSTMENT

When:	Every call
Purpose:	To maintain the correct light intensity.
Adjustment Standard:	Level 2 of the gray scale on the OS-A3 chart should be just visible on the copy when the 4th manual image density level is selected.
Method:	SP48
How it works:	Changes the ac drive board output voltage.

1. Unplug the power cord.
2. Clean the following parts:

Item No.	Section	Method
(1)	Optics (mirrors, lens, reflectors, shield glass, exposure glass)	Damp cotton, silicone cloth, and blower brush
(2)	ID sensor	Blower brush
(3)	Corona wires (charge, transfer, and separation) and casing.	Water
(4)	Quenching Lamp, erase lamp	Dry cloth

3. Place the OS-A3 chart on the exposure glass and make a full size copy at manual image density level #4 (center).
4. Confirm that level 2 of the gray scale is just visible on the copy. If the image density is not correct, proceed to the following steps.
5. Enter the lamp voltage adjustment mode (SP48).
6. Change the setting with the numeral keys as follows:

   If the image density is too dark: Increase the value
   If the image density is too light: Decrease the value

7. Confirm that the image density is within the adjustment standard.
8. Perform the ADS adjustment (SP56).

9.2 UNEVEN EXPOSURE ADJUSTMENT

When:	The exposure is uneven from side to side.
Purpose:	To maintain even exposure.
Adjustment Standard:	The side-to-side variation of the gray scales on the test chart should be less than one level.
Method:	Move the exposure adjustment plates.
How it works:	Changes the position of the adjustment plates to make the light intensity from the exposure lamp even across its length.

[A]

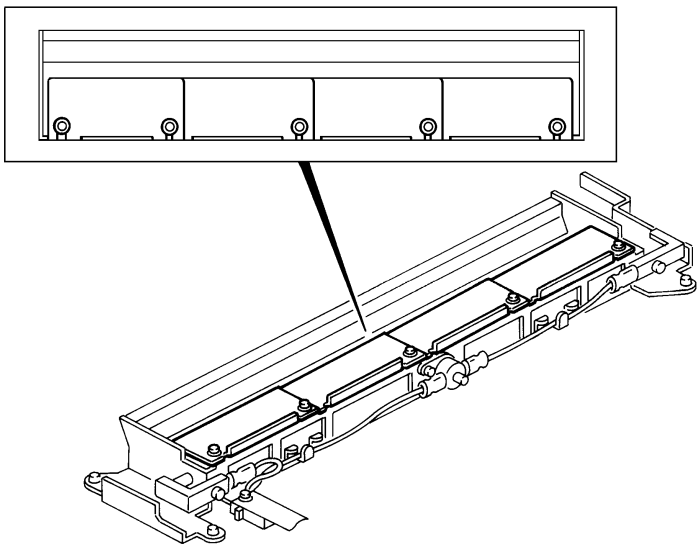

A173R596.img

NOTE: If this adjustment fails to solve the problem, adjust the wire height using the drum shoe. (See Charge Corona Current Adjustment.)

1. Clean the optics components and the charge corona wire.
2. Place a test chart on the exposure glass and make an A3/LDG copy.
3. If the side-to-side variations of the gray scales is not within the adjustment standard, turn off the main switch and remove the exposure glass. (See Exposure Glass Removal.)
4. Position the adjusting plates [A] so that the copy image meets the adjustment standard.

9.3 BIAS VOLTAGE ADJUSTMENT

When:	1. The image is blurred even though the image density in black solid areas is acceptable. 2. Dirty background. The problem is not caused by excess toner and cannot be solved by adjusting the light intensity.
Purpose:	To improve the copy image.
Method:	SP37
How it works:	Changes the bias voltage while the image area on the drum is being developed.

SP37

Data	0	1	2	3	4
Bias Voltage [V]	V_0	V_0 + 40	V_0 + 20	V_0 – 20	V_0 – 40
Image Density	Normal	Darkest	Darker	Lighter	Lightest

NOTE: V_0 is the standard voltage applied to the development roller.

1. Make a copy after adjusting the light intensity.
2. If the image is blurred:
   Decrease the bias voltage by one step and readjust the light intensity.

   If the background is dirty:
   Increase the bias voltage by one step and readjust the light intensity.

9.4 TONER DENSITY ADJUSTMENT

When:	The customer wants to change the overall image density of the copies.
Purpose:	To change the toner concentration inside development unit.
Method:	SP33
How it works:	Changes the ID pattern bias voltage and either raises or lowers the toner supply threshold.

9.5 FIXED TONER SUPPLY MODE SELECTION

When:	A problem with the ID detection system cannot be corrected during a service call. (Detect supply mode does not function.)
Purpose:	To leave detect supply mode and manually turn on the toner supply system.
Method:	SP30
How it works:	Turns on the toner supply clutch every copy cycle.

9.6 TONER SUPPLY RATIO SELECTION

When:	The factory setting for the toner supply amount is not appropriate for the type of original in use.
Purpose:	To adjust the toner supply amount.
Adjustment Standard:	Detect Mode: 15% (Factory Setting) Fixed Mode: 7% (Factory Setting)
Method:	Detect Mode: SP31 Fixed Mode: SP32
How it works:	Changes the toner supply clutch on period.

9.7 VERTICAL MAGNIFICATION ADJUSTMENT

When:	The vertical magnification is not within the adjustment standard.
Purpose:	To maintain proper vertical magnification.
Adjustment Standard:	Less than ± 0.5% difference between original and copy.
Method:	SP43 (0.2 %/step, 15 steps)
How it works:	Changes the scanner speed compensation.

1. Place a 150 mm scale perpendicular to the left scale on the exposure glass.
2. Adjust the vertical magnification using SP43. Make three copies to check the magnification.

9.8 HORIZONTAL MAGNIFICATION ADJUSTMENT

When:	The horizontal magnification is not within the adjustment standard. After loosening the first scanner wire clamps.
Purpose:	To maintain proper horizontal magnification.
Adjustment Standard:	Less than ± 0.5% difference between original and copy.
Method:	1. Rough adjustment: Adjust the position of the first scanner wire clamps. 2. Fine adjustment: SP44 (0.2 %/step, 31 steps)
How it works:	1. Changes the distance between the original and the drum. 2. Changes the lens home position.

– Rough Adjustment –

1. Change the setting of SP44 to 16 (default value).
2. Position the scanner wire clamps using the scanner positioning pins. (See Scanner Wire Installation.)

– Fine Adjustment –

3. Place a 150 mm scale parallel to the left scale on the exposure glass.
4. Adjust the horizontal magnification using SP44. Make three copies to check the magnification.

9.9 FOCUS ADJUSTMENT

When:	The copy image is out of focus. After adjusting the horizontal magnification.
Purpose:	To maintain proper focus.
Adjustment Standard:	Copy image in focus.
Method:	SP47 (80 steps)
How it works:	Adjusts the 4th/5th mirror assembly home position, changing the the distance between the original and the drum surface.

1. Make three A3/LDG copies with the test chart.
2. Adjust the focus using SP47. Check the text on the copies.

9.10 LEADING EDGE ERASE MARGIN ADJUSTMENT

When:	The leading edge erase margin is not within the adjustment standard.
Purpose:	To maintain the correct leading erase margin.
Adjustment Standard:	2.5 ± 1.5 mm (0.1 ± 0.06")
Method:	SP41 (0.5 mm/step, 15 steps)
How it works:	Changes the erase lamp on period.

1. Place a 150 mm scale perpendicular to the left scale on the exposure glass.
2. Adjust the leading edge erase margin using SP41. Make three copies and check the erase margin.

9.11 REGISTRATION ADJUSTMENT

When:	Registration is not within the adjustment standard.
Purpose:	To maintain proper registration.
Adjustment Standard:	0 ± 2 mm (0 ± 0.08")
Method:	SP42 (0.5 mm/step, 15 steps)
How it works:	Changes the registration roller start timing.

1. Place a 150 mm scale perpendicular to the left scale on the exposure glass.
2. Adjust the registration using SP42. Make three copies and check the registration.

9.12 SIDE-TO-SIDE REGISTRATION ADJUSTMENT

When:	Side-to-side registration is not within the adjustment standard.
Purpose:	To maintain the proper side-to-side registration.
Adjustment Standard:	0 ± 2 mm (0 ± 0.08")
Method:	1. Change the lens position. 2. Change the sIde fence position in the paper tray.
How it works:	Shifts the copy image.

NOTE: a) When side-to-side registration is incorrect and only the paper tray is being used, adjust the side fence position.

b) When side-to-side registration is incorrect for both the first paper feed station and the second paper feed station, adjust the lens position. Check the adjustment by making a copy from the first paper feed station. Then, make a copy from the paper tray feed station and adjust the paper tray side fences if necessary.

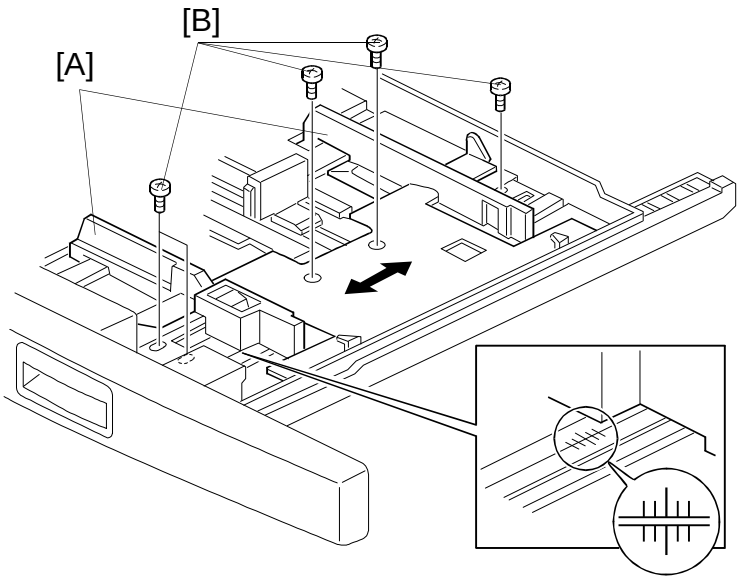

A173R597.wmf

– Side Fence Adjustment (Paper Tray) –

1. Pull the paper tray out.
2. Move the side fences [A] to the A4 lengthwise position.
3. Loosen the five screws [B].
4. Set the side fences in the desired position.

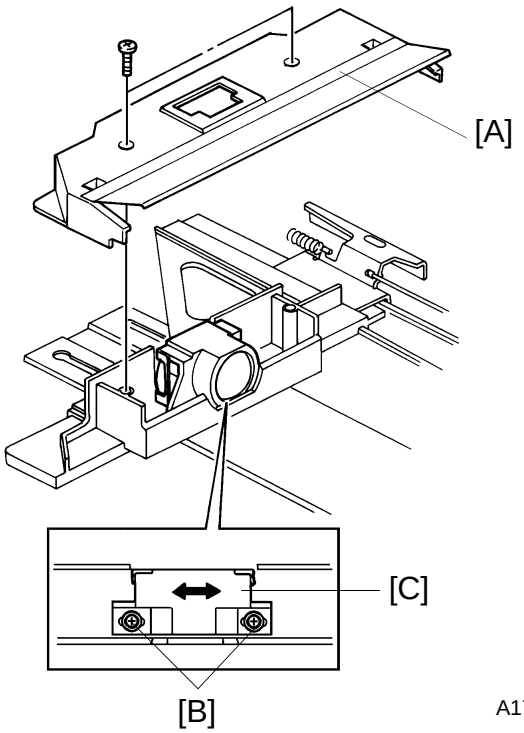

A173R598.img

– Lens Position Adjustment –

1. Unplug the power cord and remove the exposure glass. (See Exposure Glass Removal.)
2. Remove the lens housing cover (2 screws) and the lens cover [A] (2 screws).
3. Loosen two screws [B] and shift the lens [C] from side to side to adjust the registration.

   NOTE: Do not move the lens more than 2 mm (from the center position) in either direction (front/rear). Otherwise, the lens may contact the lens unit rail while moving from home position to the selected reduction or enlargement position.
4. Make sure the lens moves smoothly when changing the magnification ratio.

9.13 4TH/5TH MIRROR HEIGHT ADJUSTMENT

When:	Parallelogram (skewed) image appears.
Purpose:	To maintain the proper copy image.
Method:	Turn the 4th/5th mirror height adjustment screw.
How it works:	Changes the 4th/5th mirror height.

IMPORTANT

Never perform this adjustment until you have positively verified that the source of the skewing is optical and not in the paper path.

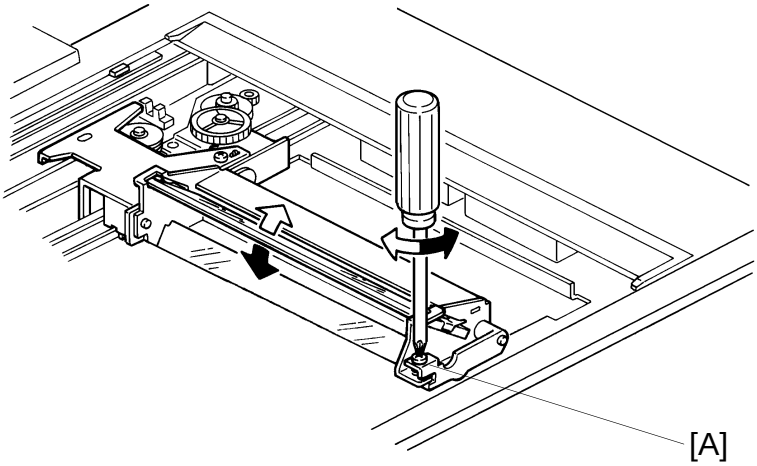

A173R599.img

1. Unplug the power cord and remove the exposure glass. (See Exposure Glass Removal.)
2. Remove the lens housing cover (2 screws).
3. Adjust the 4th/5th mirror height by turning the screw [A]. Refer to the arrows in the illustration.

SECTION 6

TROUBLESHOOTING

1. COPY QUALITY

1.1 BLANK COPY (WHITE COPY)

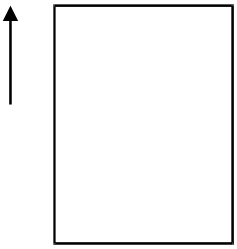

A173T500.wmf

– Symptom –

White or almost white copy

– Possible Causes –

1. Charge is not applied.
   - CC/G/B bias power pack (charge or grid) failure
   - Poor power pack lead wire contact
   - Broken charge corona wire
   - Leak in an insulator or endblock

2. The copy image is not transferred to the paper.
   - TC/SC power pack (transfer) failure
   - Poor power pack lead wire contact
   - Poor transfer corona wire contact
   - Leak in an insulator or the endblocks

3. The development roller does not rotate.
   - Broken drive gear

4. Poor drum sensitivity
   - Drum exposed to fluorescent light or direct sunlight for long period of time.
   - Drum exposed to ammonia gas or fumes for long period of time.

5. The drum does not rotate.

– Action –

Is the charge and/or TC/SC corona unit correctly installed?

Yes

No → Install the charge and/or TC/SC corona unit correctly.

Do the charge corona unit terminal and the springs of the TC/SC corona unit properly contact the receptacle terminals?

Yes

No → Replace the defective parts.

Are the charge and transfer corona wires broken?

No

Yes → Replace the corona wires.

Does leakage occur in the endblocks and/or receptacles?

No

Yes → Replace the detective parts.

Are the development drive gears worn or broken?

No

Yes → Replace the drive gears.

Does the drum rotate properly?

Yes

No → Check drum drive mechanisms such as the drum drive belt and the drum pulleys.

Check the following points:

- CN119-6 (charge trigger line) and CN119-4 (Grid trigger line)
  (1) If the signal stays HIGH after the Start key is pressed, replace the main board.
  (2) If the charge corona does not turn on even if the signal changes to LOW, replace the CC/Grid/Bias power pack.

- CN119-10 (Transfer trigger line)
  (1) If the signal stays HIGH after the Start key is pressed, replace the main board.
  (2) If the transfer corona does not turn on even if the signal changes to LOW, replace the TC/SC power pack.

If there is no problem with the signal lines, replace the drum if the sensitivity does not recover even when the drum is not exposed to light.

1.2 DIRTY BACKGROUND

– Symptom –

1. Dirty background at image density level 4 (manual setting).
2. ADS copies have a dirty background.

– Possible Causes –

1. V_L correction failure
   - Very dirty optics (V_L correction cannot compensate)
   - Deteriorated exposure lamp (maximum output cannot give sufficient light intensity)
   - Dirty erase lamp unit
2. V_R correction failure
   - CC/Grid/Bias Power Pack (development bias) failure
   - Poor development bias contact
   - The development bias is grounded
3. The drum is not grounded properly.
4. ADS mode
   - Incorrect ADS Density setting (SP34)
   - ADS Sensor board failure
   - CC/Grid/Bias Power Pack failure
5. High toner density
   - Incorrect ID Sensor bias setting (SP33)
   - Dirty erase lamp unit
   - Toner scattering occurs

– Action –

Make a copy in reduction mode at manual image density level 4.

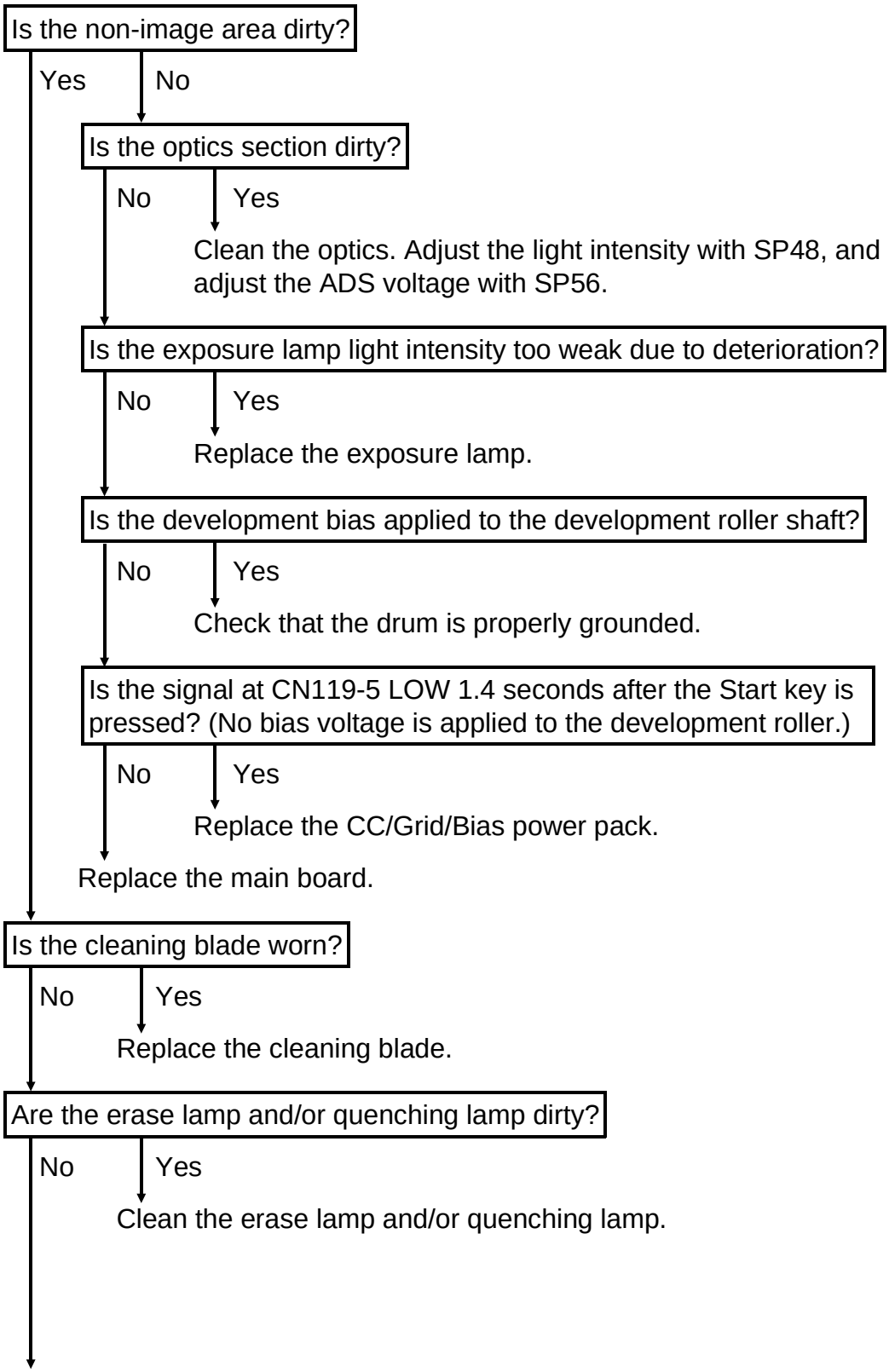

No

If toner scattering occurs, see the toner scattering chapter of this section.

If the dirty background occurs only in ADS mode, do the following:

- If the ADS voltage is not within 2.5 ±0.1 volts (this is the standard voltage), readjust the ADS voltage.
- If the signal at CN103-11 stays HIGH, check the harness and/or sensor, and replace any defective parts.
- If the signal at CN103-10 stays LOW, replace the main board.

1.3 UNEVEN IMAGE DENSITY

– Symptom –

Uneven image density appears on the copies.

– Possible Cause –

1. Dirty optics
2. Uneven exposure lamp horizontal position.
3. Dirty corona wires or grid
4. Uneven charge corona wire height.

– Action –

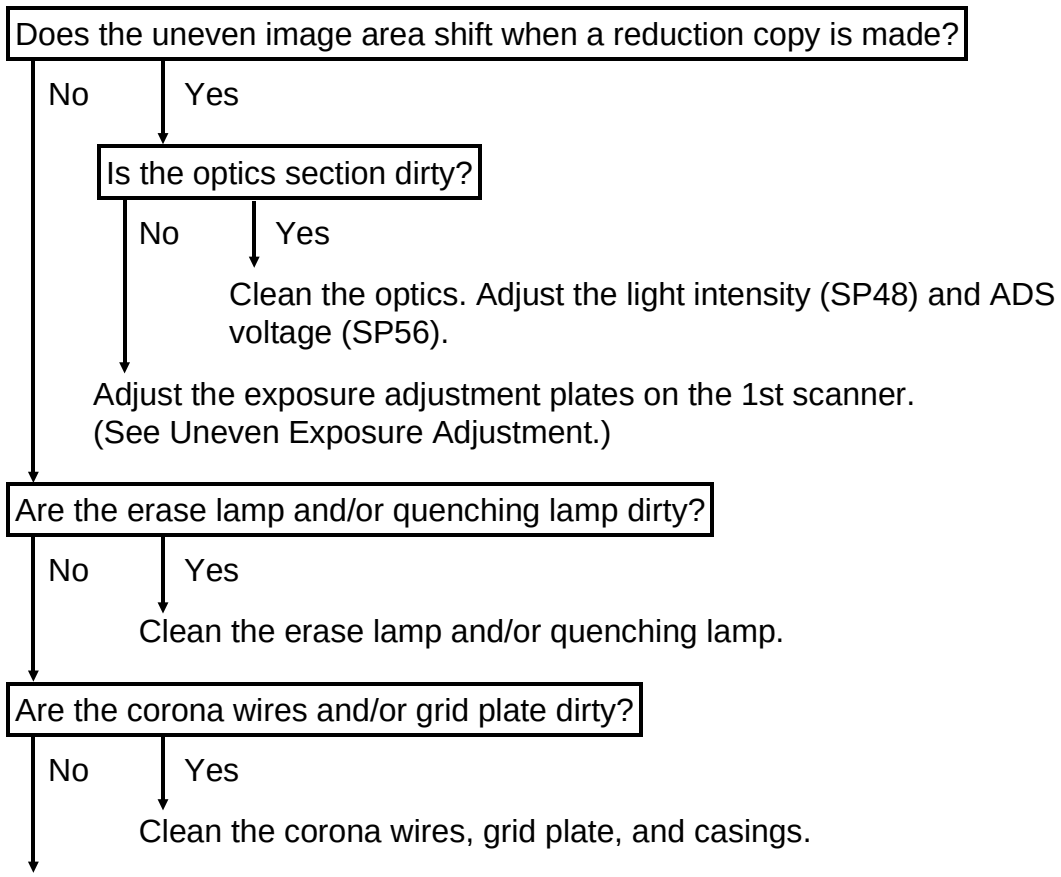

Adjust the charge corona wire height using a drum shoe. (See Charge Corona Current Adjustment.)

1.4 VERTICAL BLACK BANDS

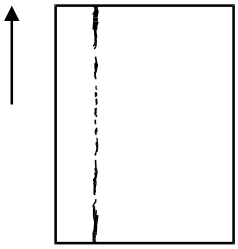

A173T501.wmf

– Symptom –

Vertical black bands appear on the copy paper.

– Possible Causes –

1. Dirty optics
2. Dust between the cleaning blade and drum
3. Deformed edge of the cleaning blade
4. Deformed cleaning brush
5. Deformed inlet seal on the development unit

– Action –

Do the black bands shift when a reduction copy is made?

No

Yes → Check and clean the optics section. Reset the V_L correction with SP94 and adjust the light intensity (SP48) and ADS voltage (SP56).

Press the blade release lever down two or three times to clean the edge of the cleaning blade. If the black bands still appear, go to the next step.

Is the edge of the cleaning blade deformed?

No

Yes → Replace the cleaning blade.

If the inlet seal on the development unit is deformed, replace the inlet seal plate and the seal as a set.

1.5 VERTICAL BLACK LINES

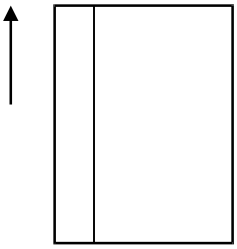

A173T502.wmf

– Symptom –

Thin black lines appear on the copy.

– Possible Causes –

1. Scratched cleaning blade
2. Dirty or scratched exposure glass and/or dirty or scratched mirrors
3. Scratched or dirty drum
4. Scratched hot roller

– Action –

Do the black lines shift when a reduction copy is made?

No

Yes

Clean or replace the exposure glass or mirrors. Reset the VL correction with SP94 and adjust the light intensity (SP48) and ADS voltage (SP56).

Is the edge of the cleaning blade scratched?

No

Yes

Replace the cleaning blade.

Is the hot roller scratched?

No

Yes

Check whether black lines appear on the copy by stopping the copy paper in the transport section. If no black lines appear, replace the hot roller.

Check whether the drum is scratched or toner is built-up on the drum.

- If toner is built-up on the drum, clean the drum with a damp cloth.
- If the drum is scratched, replace the drum.

NOTE: After replacing the drum, perform the following SP modes.

- SP66 (Drum Initial Setting)
- SP48 (Light Intensity Adjustment)
- SP56 (ADS Voltage Adjustment)
- SP54 (Vsg Adjustment)

1.6 VERTICAL WHITE LINES OR BANDS–1 (DULL OR BLURRED)

– Symptom –

Dull or blurred white lines appear on the copy.

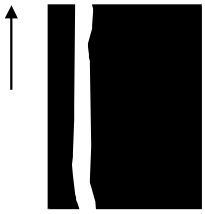

A173T503.wmf

– Possible Causes –

1. Dirty or deteriorated charge corona wire.
2. Dirty or deformed grid plate.
3. Damp or deformed inlet seal on the development unit.

– Action –

Are the charge corona wire and/or grid plate dirty?

No

Yes

Clean the charge corona wire and/or grid plate.

Is the inlet seal damp or deformed?

No

Yes

Clean the inlet seal with a dry cloth. If the problem is not corrected, replace the inlet seal plate and the seal as a set.

Is the grid plate deformed?

No

Yes

Replace the grid plate.

Replace the charge corona wire.

1.7 VERTICAL WHITE LINES OR BANDS–2 (THIN, DISTINCT)

– Symptom –

Vertical white lines appear on the copy.

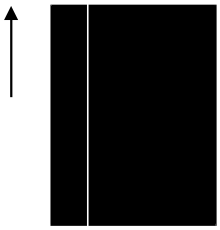

A173T504.wmf

– Possible Causes –

1. Paper dust on the edge of the cleaning blade
2. Scratched drum
3. Scratched hot roller

– Action –

Press the cleaning blade release lever down several times. Make a copy and if the white lines still occur, go to the next step.

Make a copy and stop the machine when the paper reaches the transport section. Do white lines appear on the copy?

No

Replace the hot roller if it is scratched.

Yes

Replace the drum if it is scratched.

NOTE: If the drum is scratched, find out what caused the scratches on the drum and correct the problem.

- Paper Jam
- Incorrect positioning of the pick-off pawls
- Foreign substances on the cleaning brush and/or blade
- Carrier leakage

After replacing the drum, perform the following SP modes:

- SP66 (Drum Initial Setting)
- SP48 (Light Intensity Adjustment)
- SP56 (ADS Voltage Adjustment)
- SP54 (Vsg Adjustment)

1.8 HORIZONTAL BLACK/WHITE LINES

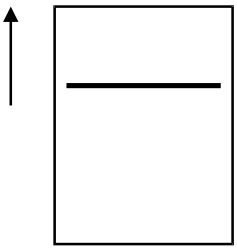

A173T505.wmf

– Symptom –

Black/white lines perpendicular to the paper feed direction appear on the copy.

– Possible Causes –

1. The drum is scratched.
   If black lines appear at 251 mm intervals, the cause is a scratched drum or toner build-up.
2. The hot roller is scratched.
   If black lines appear at 125 mm intervals, the cause is a scratched hot roller.
3. Toner is adhered to the drum surface.
   Due to insufficient cleaning, foreign matter may accumulate on the blade, causing toner to stick to the drum surface when the drum stops.

– Action –

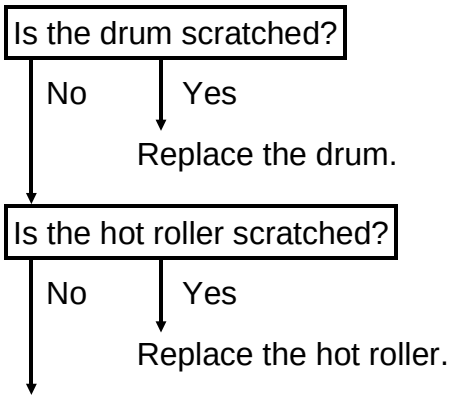

If toner adheres to the drum surface, clean the drum with water. Also clean or replace the cleaning blade and/or cleaning brush.

NOTE: After replacing the drum, perform the following SP modes.
- SP66 (Drum Initial Setting)
- SP48 (Light Intensity Adjustment)
- SP56 (ADS Voltage Adjustment)
- SP54 (Vsg Adjustment)

1.9 JITTER

– Symptom –

Jitter appears on the copy.

– Possible Causes –

1. Vibration in the drive mechanism.
2. The scanner is not moving smoothly.

– Action –

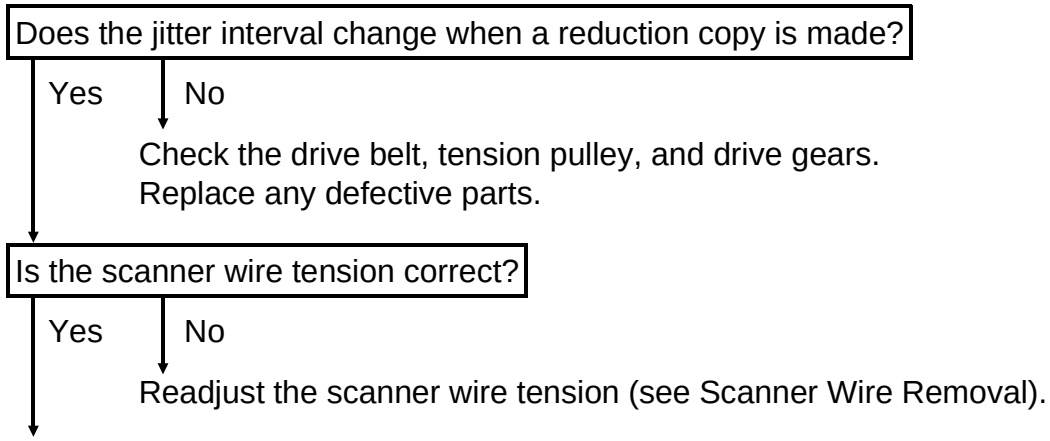

Clean the scanner guide rails and check the scanner drive.

1.10 BLACK SPOTS ON THE COPY IMAGE

– Symptom –

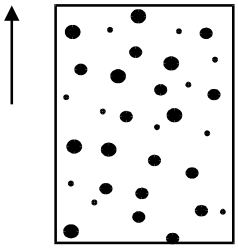

A173T506.wmf

The grid voltage is not applied correctly.

- Poor contact between the charge corona casing and grid spring
- CC/Grid/Bias power pack defective
- Main board defective

– Action –

Is there a good electrical contact between the charge corona casing and the grid spring?

Yes

No

Repair the poor contact and/or replace any parts if needed.

Check the voltage at CN119-1 on the main board.

0V

Not 0V

Replace the main board.

Replace the CC/Grid/Bias power pack.

1.11 SKEWED (OPTICAL) COPY IMAGE

– Symptom –

The copy image is skewed into a parallelogram shape.
The sides of the copy image are straight, but the leading and trailing edges are skewed.
(This differs from the paper path type of skewing.)

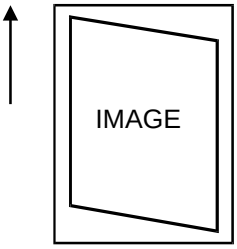

A173T507.wmf

– Possible Causes –

1. The 4th/5th mirror assembly is not parallel with the 1st and 2nd scanners.
2. The mirrors are in the wrong position
3. The stubs of the 4th/5th mirror assembly are off the rails.

– Action –

Is each mirror positioned correctly on its scanner and on the 4th/5th mirror assembly?

Yes

No → Reposition the mirror correctly. If the spring plates are defective, replace them.

Are the stubs of the 4th/5th mirror assembly off the rails?

No

Yes → Put the mirror assembly stubs back on the rails.

Readjust the height of 4th/5th mirror assembly by turning the adjusting screw.

1.12 TONER DENSITY TOO HIGH

– Symptom –

1. Dirty background appears on the copy.
2. The image density of black solid areas is too high.
3. Toner has built up on the endblock cover of the TC/SC corona unit and also on the upper cover of the development unit.

– Possible Causes –

1. The light intensity of the exposure lamp is too high.
2. The toner supply clutch remains on continuously.
3. The copier is in fixed toner supply mode.
4. The defective main board.
5. The ID sensor bias voltage (modules) is too low.
6. The charge corona current is too low.
7. The ID sensor grid voltage is too low.

– Action –

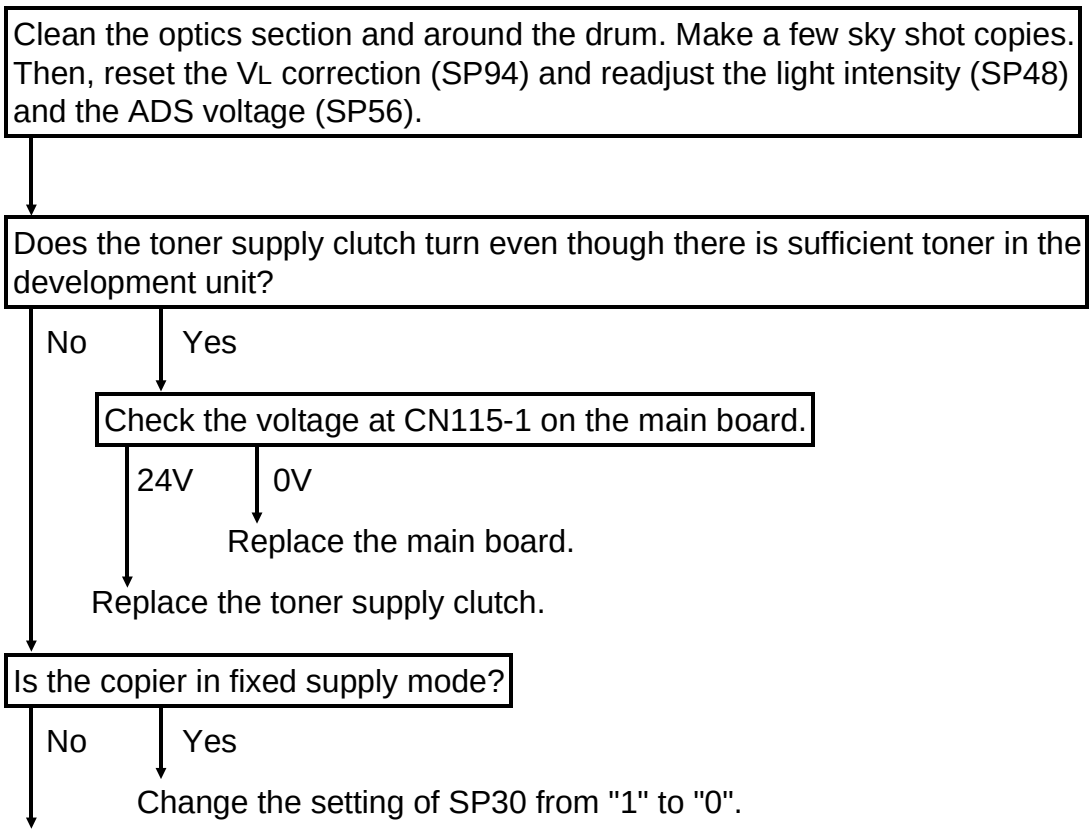

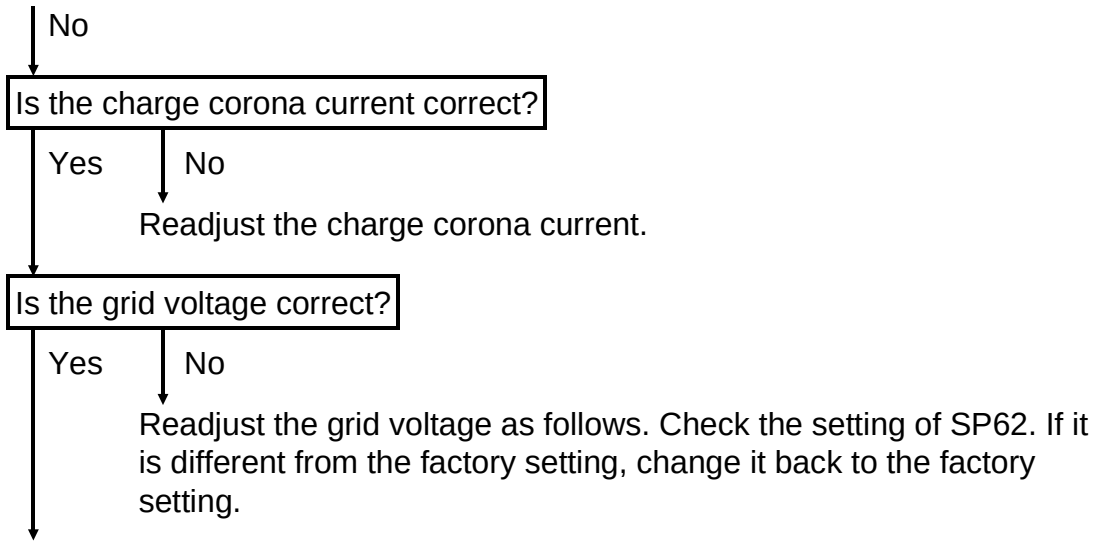

Check the setting of SP33. If it is "2", "3" or "5", readjust it to "0".

1.13 TONER DENSITY TOO LOW

– Symptom –

1. Light copy
2. Carrier on the copy.
3. Light spots appear in black solid areas.

– Possible Causes –

1. The light intensity of the exposure lamp is too low.
2. The toner supply clutch does not rotate.
3. The copier is in the fixed toner supply mode.
4. The main board is defective.
5. The ID sensor voltage is too high.
6. The charge corona current is too high.
7. The ID sensor grid voltage is too high.

– Action –

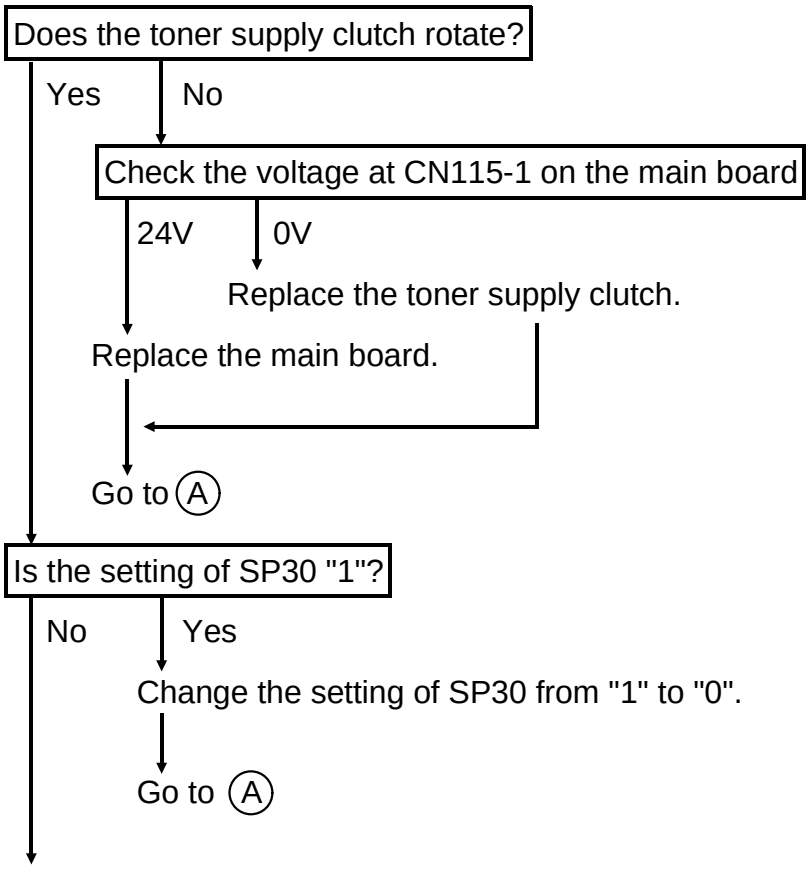

No

Is the setting of SP33 "1", "4" or "6"?

No

Yes

Change the setting of SP33 from "1", "4" or "6" to "0".

Go to (A)

Is the charge corona current correct?

No

Yes

Readjust the charge corona current.

Go to (A)

Is the grid voltage correct?

Yes

No

Readjust the grid voltage as follows. Check the setting of SP62. If it is different from the factory setting, change it back to the factory setting.

(A)

Clean the optics section and around the drum.
Turn on DIP switch 101-1 on the main board. Place a few sheets of white paper on the exposure glass. Enter "99" using the number keys and press the Start key to start a free run. Continue the free run until Vsp becomes lower than 1/10 Vsg when viewed with SP55.

Adjust the light intensity (SP48), ADS voltage (SP56), and/or Vsg (SP54).

1.14 TONER SCATTERING

– Symptom –

Toner scatters from the development unit.

– Possible Causes –

1. The toner density is too high.
2. The inlet seal on the development unit is out of position.
3. The filter on the top of the development unit is dirty.
4. The developer deterioration

– Action –

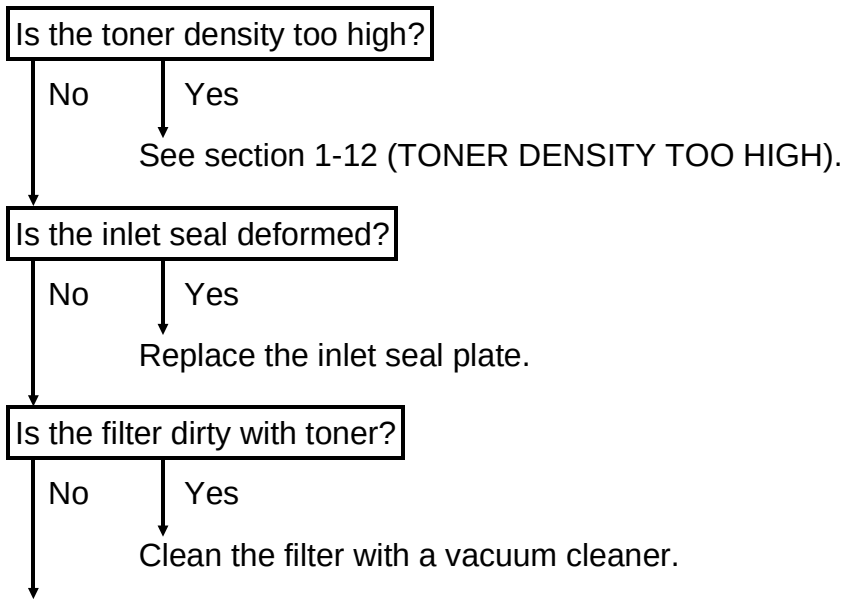

1.15 UNFUSED COPY IMAGE

– Symptom –

Solid images rub off easily.

– Possible Causes –

1. Fusing pressure is too weak.
2. Fusing temperature is too low.
3. Thermistor malfunction

– Action –

Adjust the position of the pressure springs to increase the fusing pressure.

↓ No good

Increase the fusing temperature using SP49.

↓ No good

Check the thermistor. If the thermistor is malfunctioning, replace it.

1.16 PAPER MISFEED

– Symptom –

1. The misfeed location indicator turns on when the main switch is turned on even if there is no paper in the copier.
2. The misfeed location indicator always turns on at the same location when copies are made.

– Possible Causes –

1. A sensor is defective.
2. Mechanical and/or electrical malfunction

– Action 1 (Initial Misfeed) –

Check which sensor is defective using the Input Check mode (SP8). Replace the defective sensor. If no sensors are defective, replace the main board.

– Action 2 (Misfeed during a copy cycle) –

Set jam detection mode (SP6) to on and make a copy to see whether a misfeed occurs.

Misfeed

No misfeed

Use SP6 to switch misfeed detection on again. Then check which sensor is defective; replace that sensor.
If no sensors are defective, replace the main board.

Check whether a mechanical or electrical malfunction occurs. Replace any defective parts.

1.17 DF ORIGINAL MISFEED OR SKEW

– Symptom –

When the DF is in use, the original stops on the exposure glass or is skewed even if the electrical components are functioning normally.

– Possible Causes –

1. The exposure glass is upside-down.
2. Friction between the exposure glass and the feed belt

– Action –

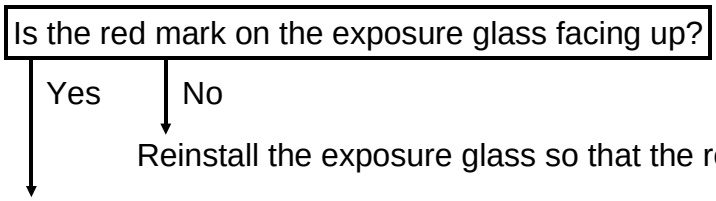

Clean the exposure glass surface with alcohol or water. Pour a small amount of silicone oil on the exposure glass and wipe the exposure glass with a dry cloth to reduce the friction between the exposure glass and the feed belt.

2. U-CODE CONDITIONS

2.1 U1 - RIGHT COVER OPEN

– Possible Cause –

- The right cover stays open
- Right cover switch failure
- Main board defective

2.2 U2 - KEY COUNTER NOT SET

– Possible Cause –

- The key counter is not set properly
- Key counter connector defective
- Main board defective

2.3 U4 - SORTER OPEN

– Possible Cause –

- The sorter stays open
- Sorter switch failure
- Main board defective

2.4 U6 - DRUM PROTECTION SHEET REMAINING

– Possible Cause –

- The drum protection sheet remains on the drum.
- ID sensor failure
- Main board defective

3. SERVICE CALL CONDITIONS

NOTE: a) E-codes (E1 to E7) are displayed in the copy counter. To display both digits of the E-code, press the Enter key.

Example:
When the machine detects the E11 condition, E1 is displayed in the copy counter. Hold down the Enter key, and "11" is displayed in the copy counter.

b) When service call (E5) conditions occur, they cannot be cleared by turning off/on the main switch, for safety reasons. The following procedure must be performed to clear these service call conditions:

1. Turn on the main switch.
2. Turn DIP switch 101-1 on and off.
3. Turn the main switch off and on.

3.1 CODE #11 – EXPOSURE LAMP ERROR

– Definition –

- The feedback signal becomes higher than 4.2 volts (r.m.s.) for 1.0 second when the exposure lamp is on.
- The feedback signal becomes lower than 0.5 volt (r.m.s.) for 1.0 second when the exposure lamp is off.

– Possible Causes –

- Exposure lamp open
- Thermofuse open
- Power Supply/AC Drive Board Defective
- Main board defective
- DC harness defective

3.2 CODE #12 – EXPOSURE LAMP ERROR

– Definition –

- The feedback signal falls below 0.5 volts (r.m.s.) for 1.0 second when the exposure lamp is on.
- The exposure stays on for longer than 15 seconds.

– Possible Causes –

- AC drive board defective
- Main board defective

3.3 CODE #13 – ZERO CROSS SIGNAL ERROR

– Definition –

The CPU does not receive the zero cross signal within 3.0 seconds.

– Possible Causes –

- Main board defective
- Power supply/ac drive board defective
- Zero cross line open
- CN404 on power the supply/ac drive board, or CN114 on the main board is not correctly connected.

3.4 CODE #21 – SCANNER HOME POSITION ERROR

– Definition –

The scanner home position sensor's output remains LOW (de-actuated) for 12 seconds after the main switch is turned on.

– Possible Causes –

- Scanner home position sensor failure
- Scanner motor defective
- Main board defective
- Power supply/ac drive board defective
- Incorrect scanner drive wire position
- CN402 or CN403 on the power supply/ac drive board, or CN114 on the main board is not correctly connected.

3.5 CODE #22 – SCANNER HOME POSITION ERROR

– Definition –

The scanner home position sensor's output remains HIGH (actuated) for 1.0 second after the scanner starts.

– Possible Causes –

- Scanner home position sensor failure
- Scanner motor defective
- Main board defective
- Power supply/ac drive board defective
- Defective dc harness
- Incorrect scanner drive wire position
- CN402 or CN403 on the power supply/ac drive board, or CN120 or CN114 on the main board is not correctly connected.

3.6 CODE #28 – LENS HOME POSITION ERROR

– Definition –

The lens home position sensor's output remains LOW (de-actuated) for 3.5 seconds after the lens moves to the home position.

– Possible Causes –

- Lens home position sensor failure
- Lens drive motor defective
- Main board defective
- Lens drive mechanism defective
- CN120 on the main board is not correctly connected.

3.7 CODE #29 – LENS HOME POSITION ERROR

– Definition –

The lens home position sensor's output remains HIGH (actuated) for 3.5 seconds after the lens leaves the home position.

– Possible Causes –

- Lens home position sensor failure
- Lens drive motor defective
- Main board defective
- Defective dc harness
- Lens drive mechanism defective
- CN120 on the main board is not correctly connected.

3.8 CODE #2A – 4TH/5TH MIRROR HOME POSITION ERROR

– Definition –

The 4th/5th mirror home position sensor's output remains HIGH (actuated) for 2.5 seconds after the 4th/5th mirror assembly leaves the home position.

– Possible Causes –

- 4th/5th mirror home position sensor failure
- 4th/5th mirror motor defective
- Main board defective
- 4th/5th mirror drive mechanism defective
- Defective dc harness
- CN123 on the main board is not correctly connected.

3.9 CODE #2B – 4TH/5TH MIRROR HOME POSITION ERROR

– Definition –

The 4th/5th mirror home position sensor's output remains LOW (de-actuated) for 2.5 seconds after the 4th/5th mirror assembly moves to the home position.

– Possible Causes –

- 4th/5th mirror home position sensor failure
- 4th/5th mirror motor defective
- Main board defective
- 4th/5th mirror drive mechanism defective
- CN123 on the main board is not correctly connected.

3.10 CODE #52 – FUSING LAMP WARM-UP ERROR

– Definition –

The temperature detected by the thermistor does not reach 175°C within 100 seconds after the main switch is turned on.

– Possible Causes –

- Thermistor position error
- Fusing lamp open
- Thermofuse open
- Power supply/ac drive board defective
- Main board defective
- Defective ac harness
- T407 or T408 on the ac drive board is not correctly connected.

3.11 CODE #53 – FUSING LAMP OVERHEAT

– Definition –

The thermistor detects a temperature higher than 230°C for 3 seconds.

– Possible Causes –

- Thermistor short
- Power supply/ac drive board defective
- Main board defective
- Fusing harness shorted

3.12 CODE #55 – FUSING THERMISTOR OPEN

– Definition –

The temperature detected by the thermistor does not detect 2°C within 30 seconds after the main switch is turned on.

– Possible Causes –

- Thermistor open
- Main board defective
- Power supply/ac drive board defective
- Fusing lamp open
- Thermofuse open
- Defective ac harness
- T407 or T408 on the ac drive board is not correctly connected.

3.13 E70 (IN THE MAGNIFICATION INDICATOR) – TONER OVERFLOW

– Definition –

The toner overflow counter has reached the number specified by SP116. The toner overflow sensor turns on (if the optional toner overflow sensor is installed).

– Possible Causes –

- Toner overflow
- Main board defective
- Defective toner overflow sensor (if installed)

4. ELECTRICAL COMPONENT DEFECTS

4.1 SENSORS

Component	Condition	Symptom
Scanner Home Position Sensor	Stays HIGH (CN120-2)	SC code (E22) is displayed.
	Stays LOW (CN120-2)	SC code (E21) is displayed.
Lens Home Position Sensor	Stays HIGH (CN120-5)	SC code (E29) is displayed.
	Stays LOW (CN120-5)	SC code (E28) is displayed.
4th/5th Mirror Home Position Sensor	Stays HIGH (CN122-5)	SC code (E2B) is displayed.
	Stays LOW (CN122-5)	SC code (E2A) is displayed.
Registration Sensor	Stays HIGH (CN103-5)	The "Check Paper Path" indicator (location "A") blinks when a copy is made.
	Stays LOW (CN103-5)	The "Check Paper Path" indicator (location "A") lights when the main switch is turned on.
Exit Sensor	Stays HIGH (CN121-5)	The "Check Paper Path" indicator (location "C") blinks when a copy is made.
	Stays LOW (CN121-5)	The "Check Paper Path" indicator (location "C") lights when the main switch is turned on.
1st or 2nd Paper End Sensor	Stays HIGH (1st: CN104-4) (2nd: CN110-4)	The "Load Paper" indicator lights even when there is paper in the cassette or tray.
	Stays LOW (1st: CN104-4) (2nd: CN110-4)	The "Load Paper" indicator does not light even when the cassette or tray is empty.
Image Density (ID Sensor)	Stays HIGH (CN117-3)	The CPU detects an abnormal ID sensor condition. The ADS or Manual Image Density indicator starts blinking.
	Stays LOW (CN117-3)	

4.2 SWITCHES AND OTHER ELECTRICAL COMPONENTS

Component	Condition	Symptom
Main Switch	OPEN	The copier does not turn on.
	SHORTED	The copier does not turn off.
Cover Safety Switch	OPEN	The copier does not turn on.
	SHORTED	The copier does not turn off when the front or exit cover is opened.
1st Paper Size Switch	OPEN (CN106-4 to 8)	The CPU cannot detect the proper paper size, and misfeeds may occur when a copy is made.
	SHORTED (CN106-4 to 8)	
Manual Feed Table Switch	OPEN (CN104-1 stays HIGH)	The CPU does not detect manual feed mode even when the manual feed table is opened.
	SHORTED (CN104-1 stays LOW)	The "Manual Feed" indicator stays on even when the manual feed table is closed.
2nd Tray Set Switch	OPEN (CN110-1 stays HIGM)	The 2nd tray cannot be selected.
	SHORTED (CN110-1 stays LOW)	The 2nd tray open condition cannot be detected.
Right Cover Switch	OPEN (CN106-1 stays HIGH)	The CPU does not display "U1" even when the right cover is opened.
	SHORTED (CN106-1 stays LOW)	"U1" is displayed even when the right cover is closed.
Exposure Lamp	OPEN	SC Code E11 is displayed.
Fusing Lamp	OPEN	SC Code E52 or E55 is displayed.
Fusing Thermistor	OPEN	SC Code E55 is displayed.
	SHORTED	SC Code E53 is displayed.
Fusing Thermofuse	OPEN	SC Code E52 or E55 is displayed.
Optics Thermofuse	OPEN	SC Code E11 is displayed.

4.3 BLOWN FUSE CONDITION

1) 110 V machine

Component	Location	Symptom
F151 (125V/15A)	Power Supply/AC Drive Board	The copier does not turn on even when the main switch is turned on.

2) 220 V machine

Component	Location	Symptom
F151 (250V/6.3A)	Power Supply/AC Drive Board	The copier does not turn on even when the main switch is turned on.

⚠ CAUTION

Before replacing the fuse on the power supply/ac drive board, make sure that the power cord is unplugged.

ELECTRICAL COMPONENT LAYOUT (A173)

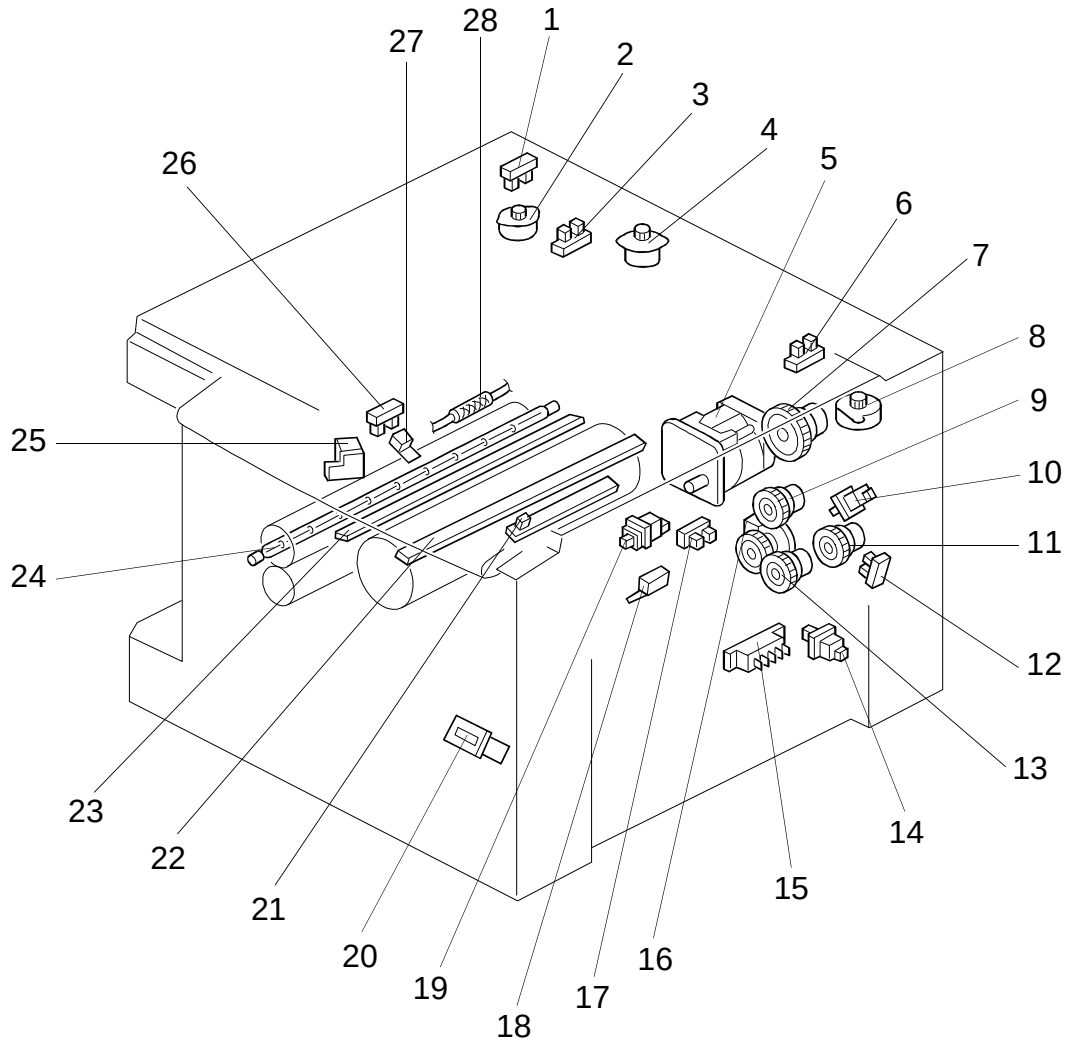

A173S500.wmf

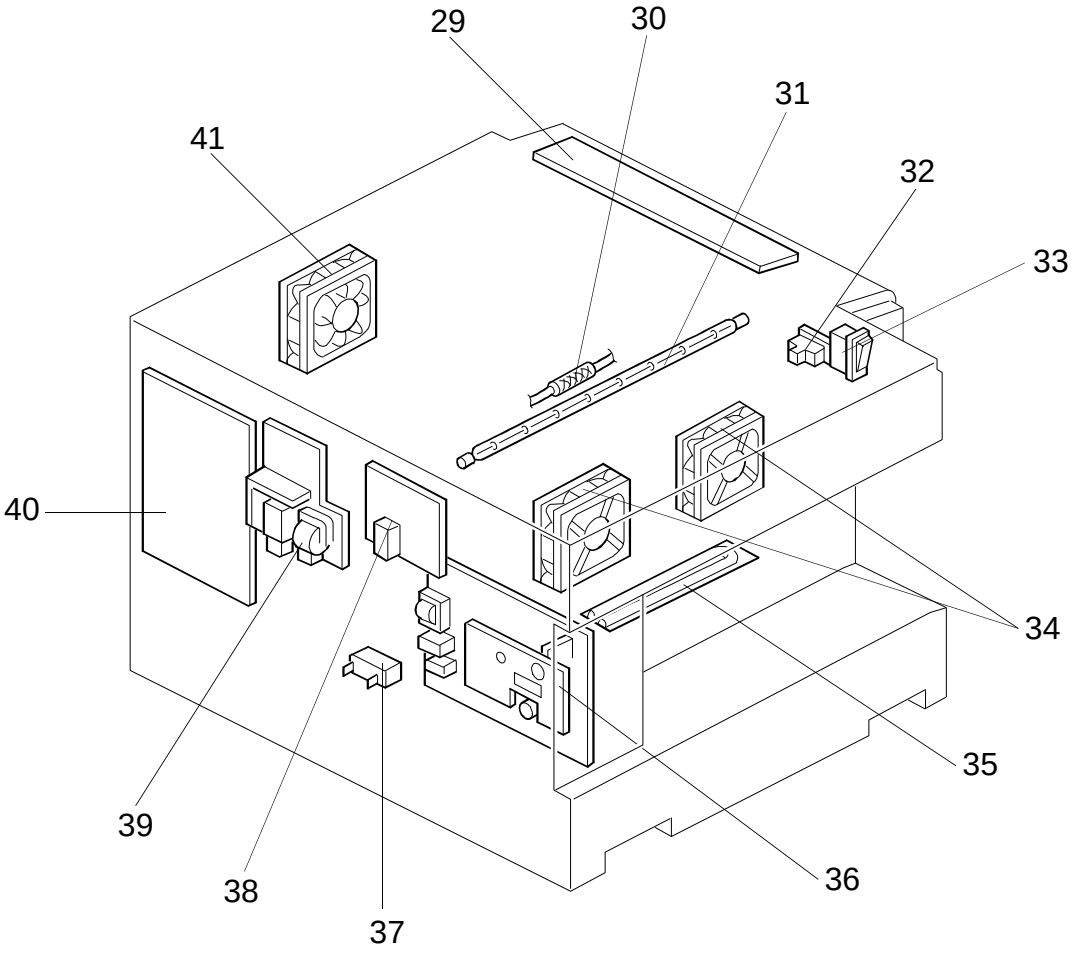

A173S501.wmf

Symbol	Name	Index No.	P to P
Motors			
M1	Main Motor	5	G-8
M2	Scanner Motor	4	A-7
M3	Lens Motor	2	H-2
M4	4th/5th Mirror Motor	8	I-2
M5	Optics Cooling Fan Motor	41	L-2
M6 M7	Exhaust Fan Motors	34	P-5 P-4
Clutches			
CL1	Registration Clutch	9	I-2
CL2	1st Paper Feed Clutch	11	I-2
CL3	2nd Paper Feed Clutch	16	J-2
CL4	Relay Roller Clutch	13	J-2
CL5	Toner Supply Clutch	7	K-2
Switches			
SW1	1st Paper Size Switch	15	P-9
SW2	Right Cover Switch	14	P-8
SW3	2nd Tray Set Switch	19	P-7
SW4	Manual Feed Table Switch	10	P-5
SW5	Cover Open Switch	32	B-11
SW6	Main Switch	33	D-12
Sensors			
S1	Scanner Home Position Sensor	1	G-2
S2	Lens Home Position Sensor	3	G-2
S3	4th/5th Mirror Home Position Sensor	6	L-2
S4	ADS Sensor	25	P-11
S5	Registration Sensor	18	P-10
S6	2nd Paper End Sensor	17	P-7
S7	Image Density (ID) Sensor	21	P-6
S8	1st Paper End Sensor	12	P-6
S9	Exit Sensor	26	P-5

Symbol	Name	Index No.	P to P
Printed Circuit Boards			
PCB1	Main Board	40	M-7
PCB2	Power Supply/ AC Drive Board	36	E-7
PCB3	Operation Panel Board	29	J-11
Lamps			
L1	Erase Lamp	22	Q-12
L2	Quenching Lamp	23	J-7
L3	Fusing Lamp	24	B-9
L4	Exposure Lamp	31	B-7
Power Packs			
P1	CC/Grid/Bias Power Pack	38	J-9
P2	TC/SC Power Pack	39	J-8
Heaters			
H1	Anti-condensation Heater	35	G-10
Counters			
CO1	Total Counter	20	Q-9
Others			
C1	Main Motor Capacitor	37	G-9
TF1	Fusing Thermofuse	28	B-9
TF2	Optics Thermofuse	30	B-7
TH1	Fusing Thermistor	27	Q-4

Point To Point Diagram (A173)

