RICOH

Technical Bulletin No. RTB-001

SUBJECT: Condor Manual Correction	DATE: May 31, '96 PAGE: 1 of 2
PREPARED BY: M. Ishihara CHECKED BY: T. Inoue	FROM: 1st Field Information Dept. QAC

CLASSIFICATION:

- ☐ Action Required
- ☐ Troubleshooting
- ☐ Retrofit Information
- ■ Revision of service manual
- ☐ Information only
- ☐ Other

MODEL: Condor

1. Please correct your service manual as follows:

Incorrect Description	Correct Description	Location
(Duplex Copying) A4/11" x 8**1/2"**	None (This machine does not have duplex mode.)	Page 1-1, 10th row
between CN121-7 and **CN121-87** becomes too low	between CN121-7 and **CN121-8** becomes too low	Page 2-59, 3rd row
Erase Edge mode (**Program** key + "**7**" + R/# key) or Erase Center and Edge mode (**Program** key + "**8**" + R/# key)	Erase Edge mode (**Function** key + "**3**" + R/# key) or Erase Center and Edge mode (**Function** key + "**5**" + R/# key)	Page 4-14, "Function" column of SP13 and SP18
If "manual" is selected, copying stops if the other station does not have the same paper size.	If "manual" is selected, copying stops, even if the other station has the same paper size.	Page 4-14, "Function" column of SP17
Erase Center mode (**Program** key + "**6**" + R/# key) or Erase Center and Edge mode (**Program** key + "**8**" + R/# key)	Erase Center mode (**Function** key + "**4**" + R/# key) or Erase Center and Edge mode (**Function** key + "**5**" + R/# key)	Page 4-15, "Function" column of SP26
Refer to **6.5.4** Toner Saver Mode	Refer to **5.4 of section 2**, Toner Saver Mode	Page 4-16, "Function" column of SP36
1: No 2: Yes	**0: No** 1: Yes	Page 4-16, "Settings" column of SP38
(**115 V** machines = 63 V)	(**110 V** machines = 63 V)	Page 4-17, "Settings" column of SP48
See section **2.1.2**	See section **2.1.3**	Page 4-22, "Function" column of SP98 and SP99

2. Please add the following step between steps 2 and 3 of the installation procedure (page 3-5).

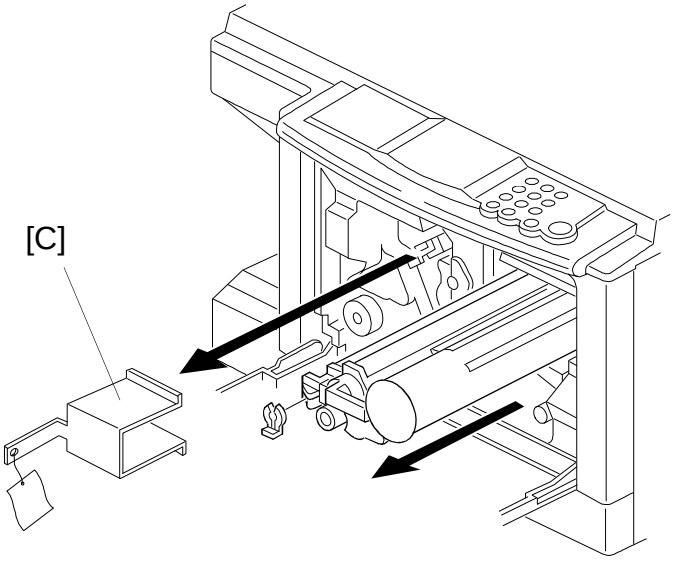

Remove the cleaning blade clamp [C].