Swallow 2 (A212/A214)

PARTS CATALOG

First Edition October 1997

RICOH COMPANY,LTD

PARTS CATALOG

INTRODUCTION

This chapter instructs you the numbers and names of parts on this machine.

INDEX to PARTS CATALOG

Swallow 2 (A212/A214)

Swallow 2 (A212/A214)

PARTS CATALOG

INTRODUCTION

This chapter instructs you the numbers and names of parts on this machine.

INDEX to PARTS CATALOG

LOCATION OF UNIT 2
1.EXTERIOR (A212/A214) 8
2.PLATEN COVER ASS'Y (A212/A214) 10
3.OPERATION PANEL UNIT (A212/A214) 12
4.BY-PASS FEED SECTION (A212/A214) 14
5.PAPER TRAY SECTION (A212/A214) 16
6.LCT UNIT 1 (A214) 18
7.LCT UNIT 2 (A214) 20
8.PAPER FEED SECTION 1 (A212/A214) 22
9.PAPER FEED SECTION 2 (A212/A214) 24
10.PAPER REGISTRATION (A212/A214) 26
11.OPTICAL SECTION 1 (A212/A214) 28
12.OPTICAL SECTION 2 (A212/A214) 30
13.OPTICAL SECTION 3 (A212/A214) 32
14.OPTICAL SECTION 4 (A212/A214) 34
15.TONER SUPPLY UNIT (A212/A214) 36
16.DEVELOPMENT UNIT (A212/A214) 38
17.DRUM UNIT 1 (A212/A214) 40
18.DRUM UNIT 2 (A212/A214) 42
19.TRANSFER UNIT (A212/A214) 44
20.FUSING UNIT 1 (A212/A214) 46
21.FUSING UNIT 2 (A212/A214) 48
22.DUPLEX TRAY 1 (A214) 50
23.DUPLEX TRAY 2 (A214) 52
24.DUPLEX TRAY 3 (A214) 54
25.DUPLEX TRAY 4 (A214) 56
26.PAPER EXIT SECTION (A214) 58
27.PAPER EXIT SECTION (A212) 60
28.DRIVE SECTION 1 (A212/A214) 62
29.DRIVE SECTION 2 (A212/A214) 64
30.DRIVE SECTION 3 (A212/A214) 66
31.ELECTRICAL SECTION 1 (A212/A214) 68
32.ELECTRICAL SECTION 2 (A212/A214) 70
33.ELECTRICAL SECTION 3 (A212/A214) 72
34.FRAME SECTION 1 (A212/A214) 74
35.FRAME SECTION 2 (A212/A214) 76
36.MAIN CONTROL BOARD (A212/A214) 78
37.DECAL AND DOCUMENT (A212/A214) 84

38.SPECIAL TOOLS (A212/A214) 86
PARTS INDEX 89

LOCATION OF UNIT

1.EXTERIOR (A212/A214)

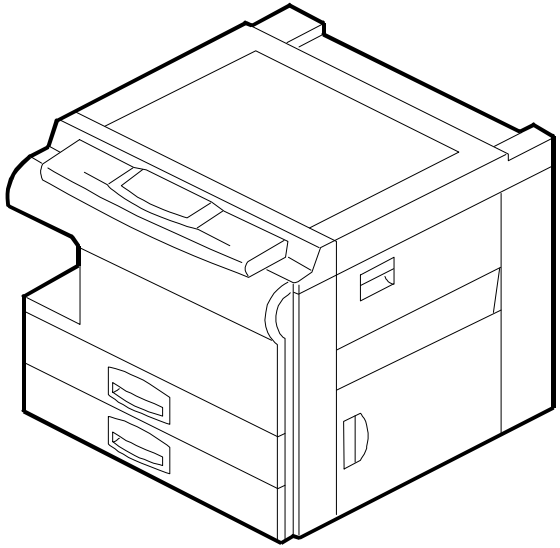

See Page 9

2.PLATEN COVER ASS'Y (A212/A214)

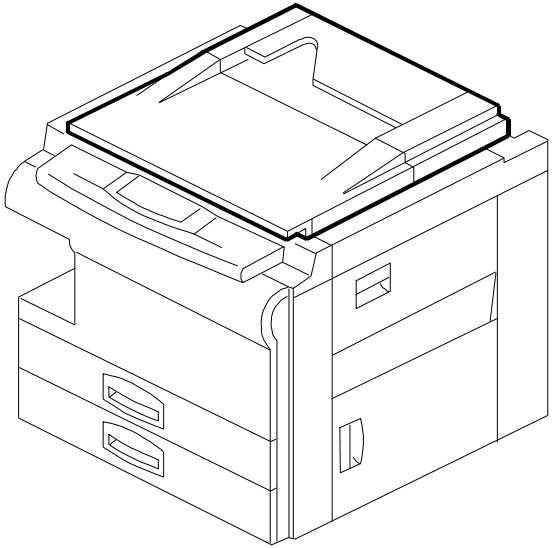

See Page 11

3.OPERATION PANEL UNIT (A212/A214)

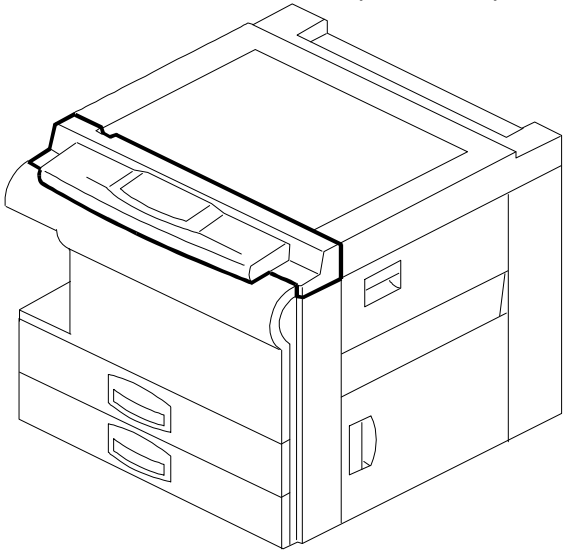

See Page 13

4.BY-PASS FEED SECTION (A212/A214)

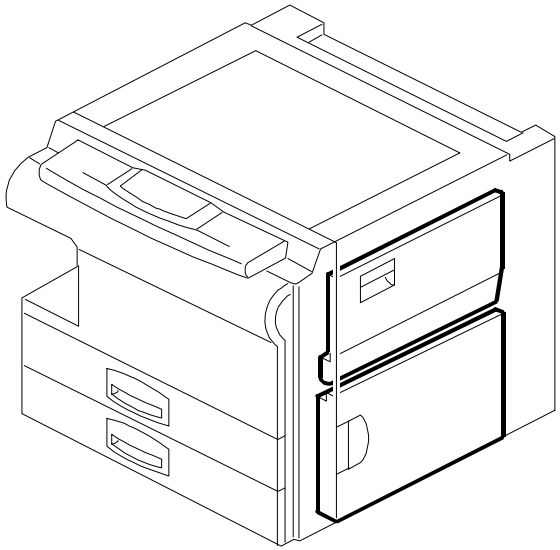

See Page 15

5.PAPER TRAY SECTION (A212/A214)

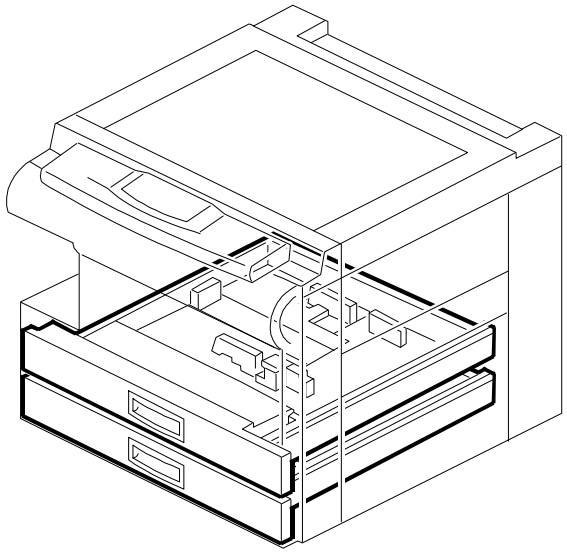

See Page 17

6.LCT UNIT 1 (A214)

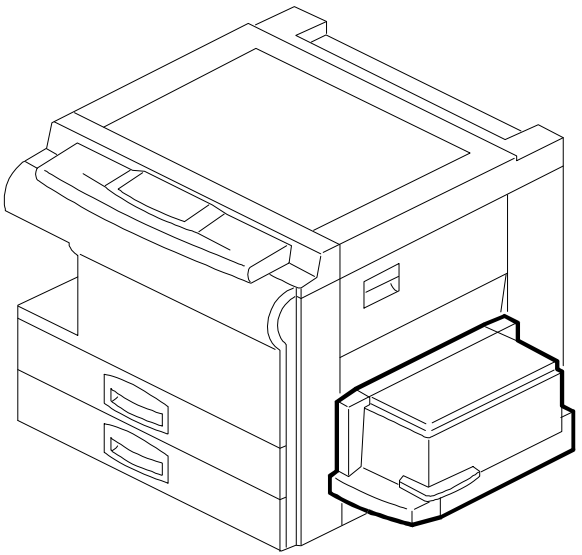

See Page 19

LOCATION OF UNIT

7.LCT UNIT 2 (A214)

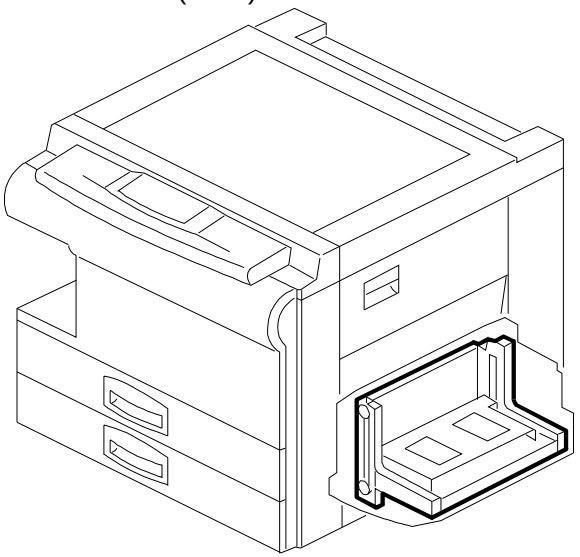

See Page 21

8.PAPER FEED SECTION 1 (A212/A214)

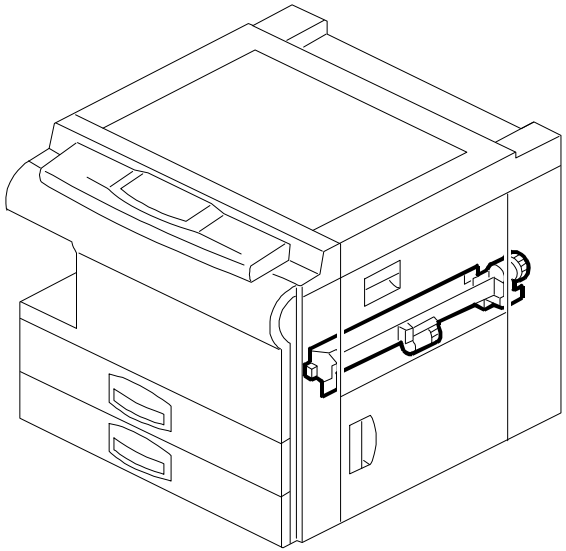

See Page 23

9.PAPER FEED SECTION 2 (A212/A214)

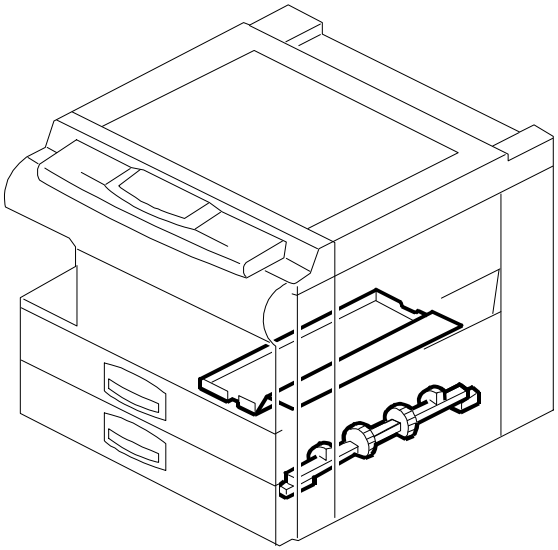

See Page 25

10.PAPER REGISTRATION (A212/A214)

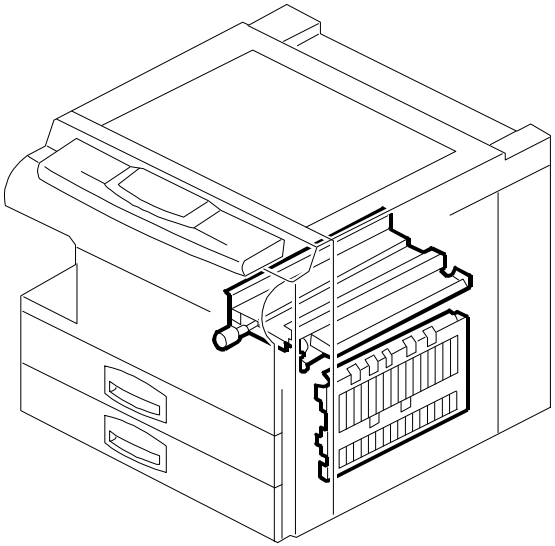

See Page 27

11.OPTICAL SECTION 1 (A212/A214)

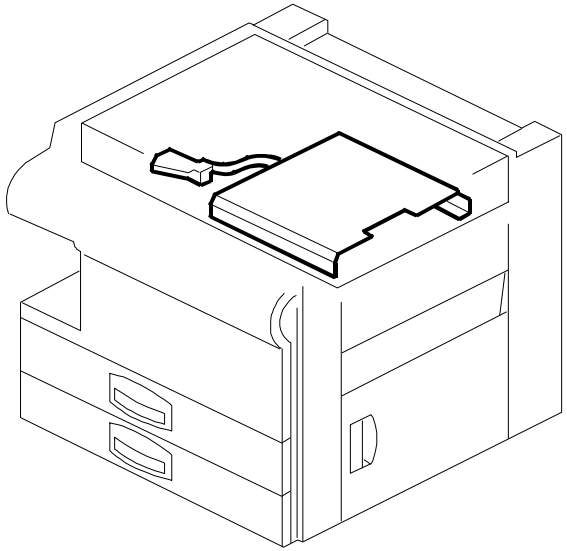

See Page 29

12.OPTICAL SECTION 2 (A212/A214)

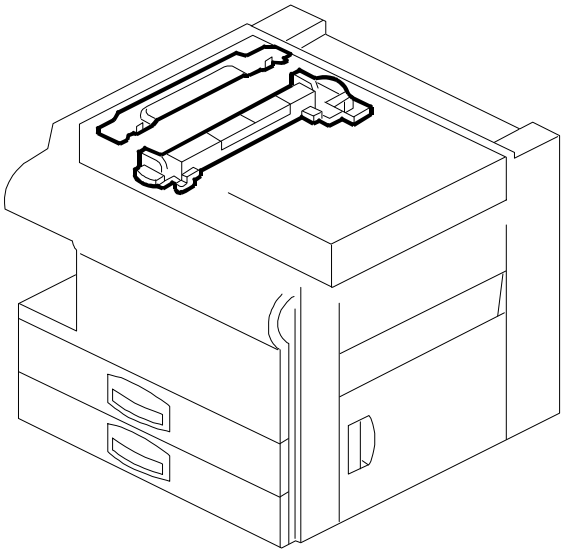

See Page 31

LOCATION OF UNIT

13.OPTICAL SECTION 3 (A212/A214)

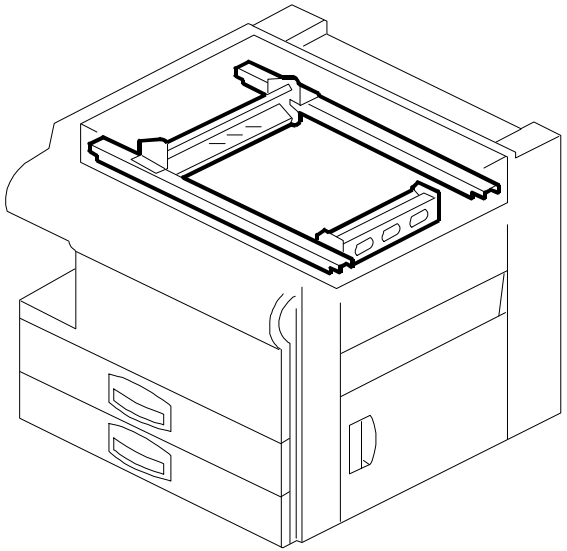

See Page 33

14.OPTICAL SECTION 4 (A212/A214)

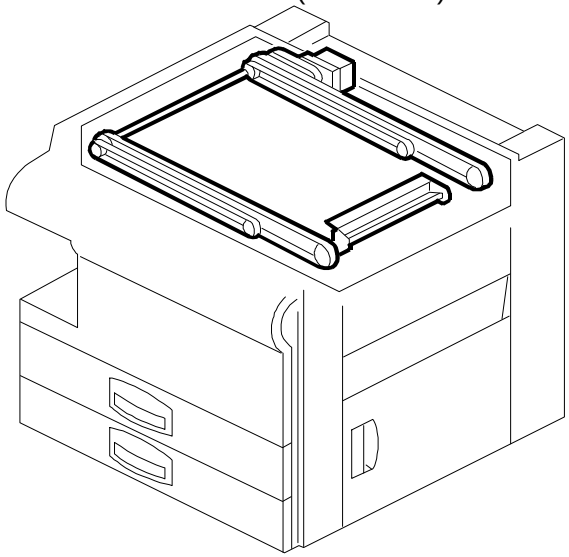

See Page 35

15.TONER SUPPLY UNIT (A212/A214)

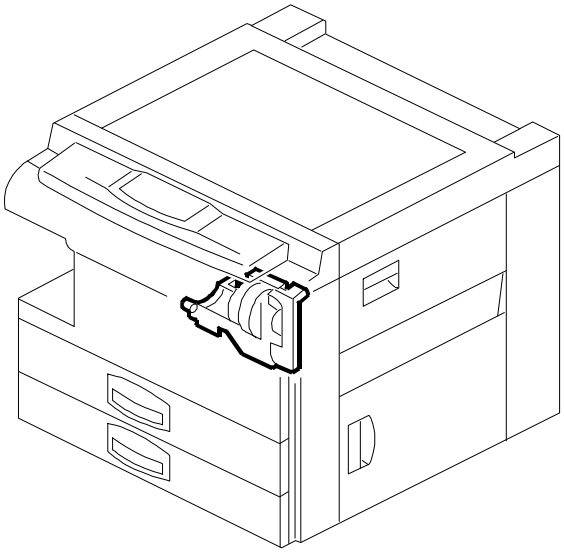

See Page 37

16.DEVELOPMENT UNIT (A212/A214)

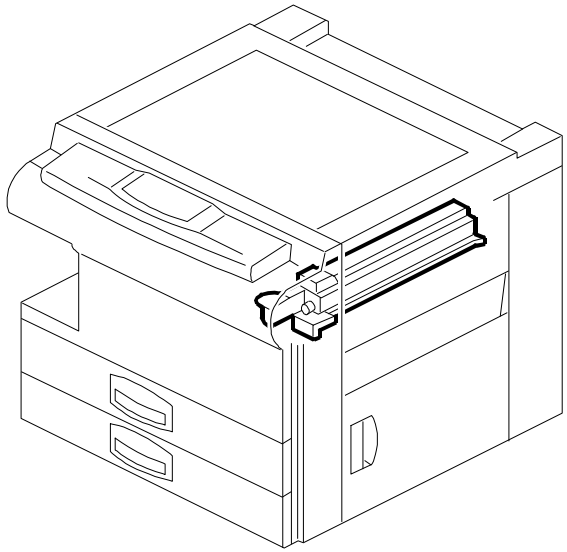

See Page 39

17.DRUM UNIT 1 (A212/A214)

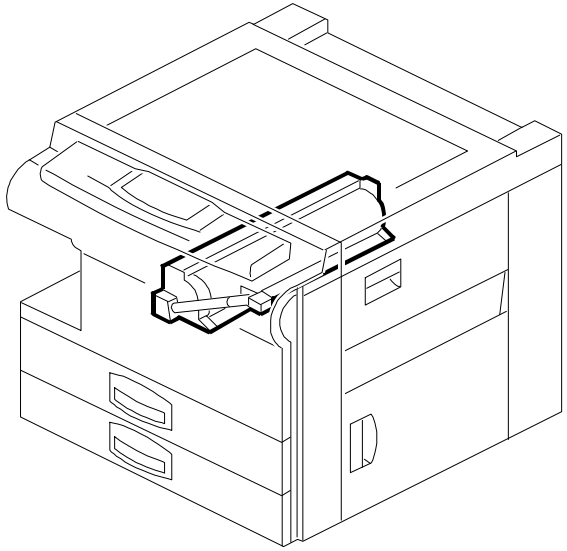

See Page 41

18.DRUM UNIT 2 (A212/A214)

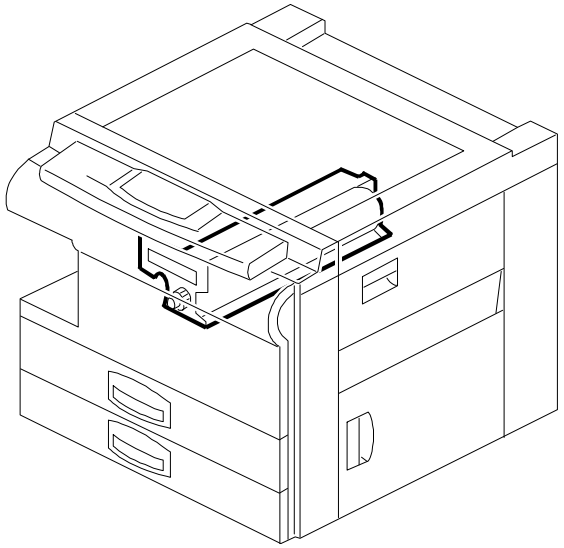

See Page 43

LOCATION OF UNIT

19.TRANSFER UNIT (A212/A214)

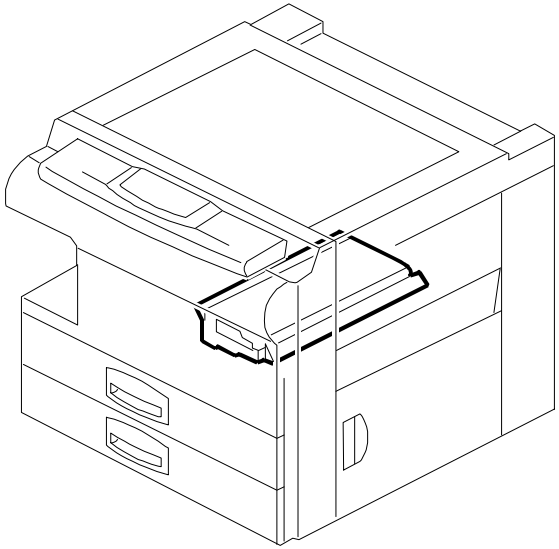

See Page 45

20.FUSING UNIT 1 (A212/A214)

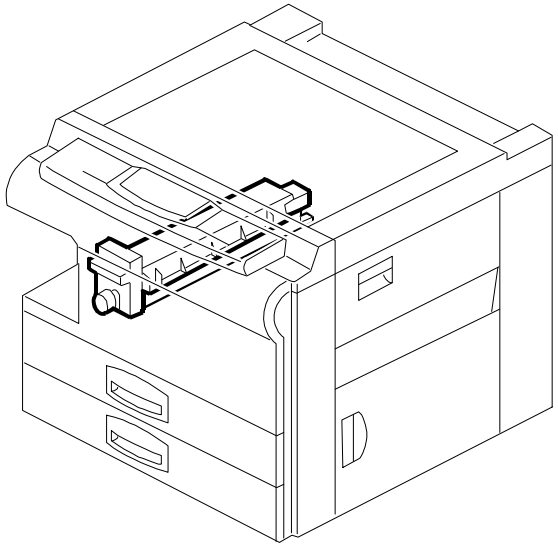

See Page 47

21.FUSING UNIT 2 (A212/A214)

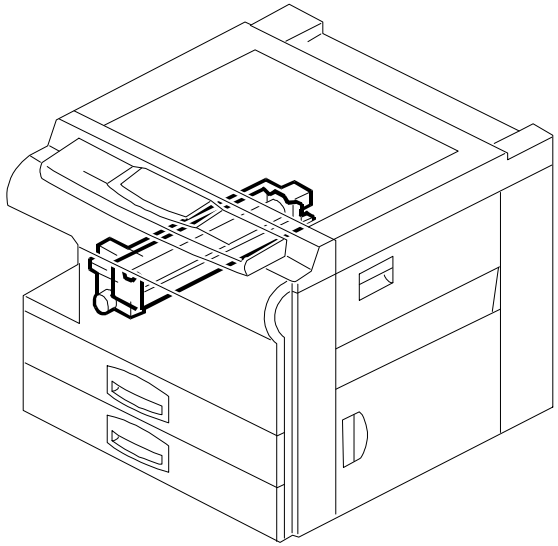

See Page 49

22.DUPLEX TRAY 1 (A214)

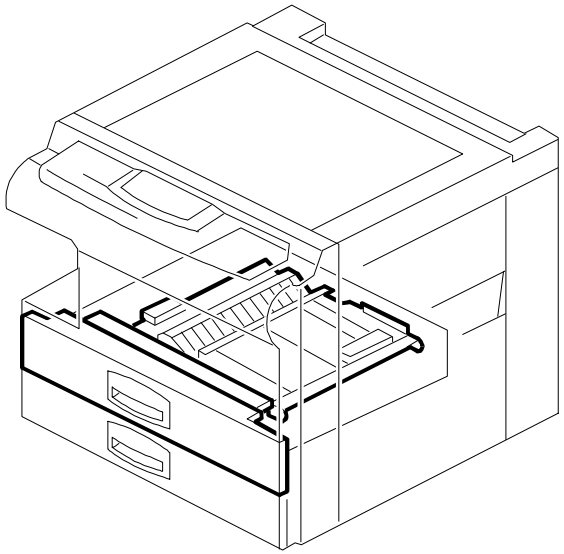

See Page 51

23.DUPLEX TRAY 2 (A214)

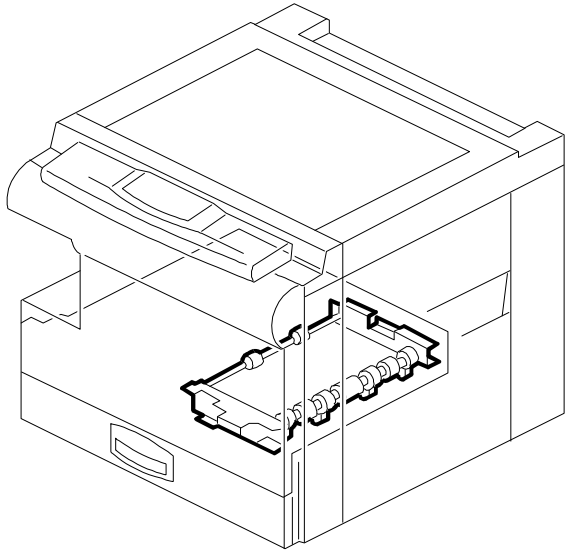

See Page 53

24.DUPLEX TRAY 3 (A214)

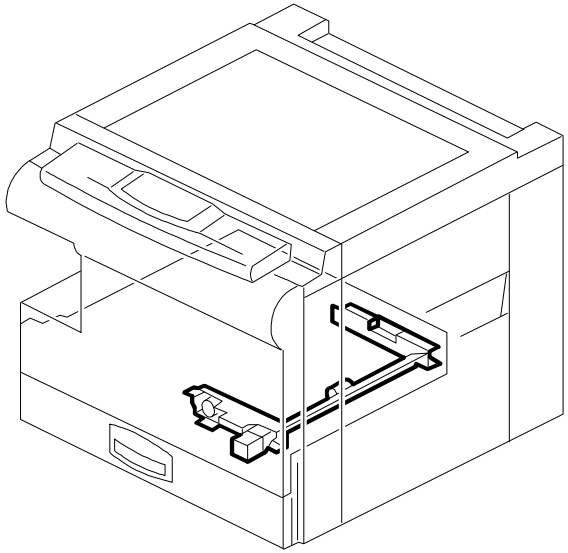

See Page 55

LOCATION OF UNIT

25.DUPLEX TRAY 4 (A214)

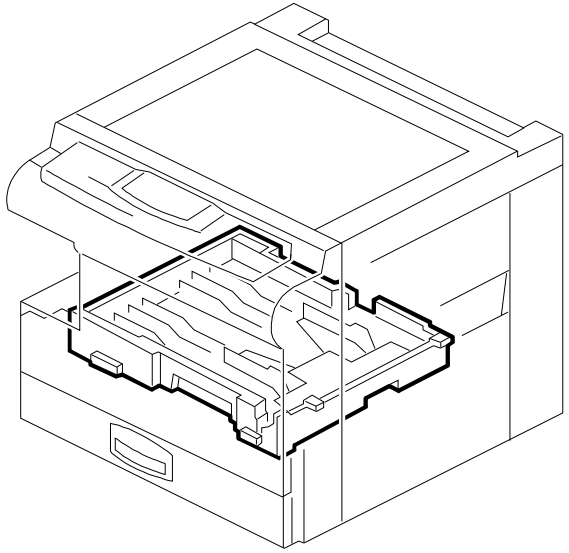

See Page 57

26.PAPER EXIT SECTION (A214)

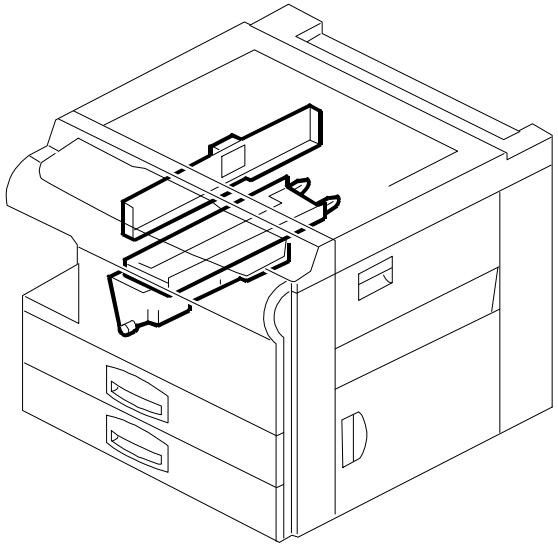

See Page 59

27.PAPER EXIT SECTION (A212)

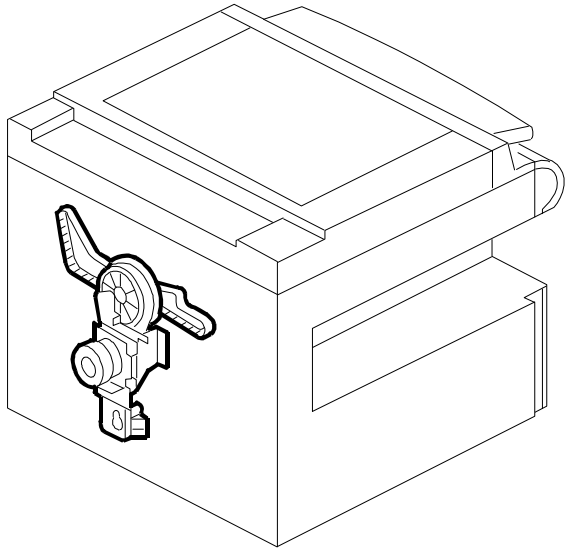

See Page 61

28.DRIVE SECTION 1 (A212/A214)

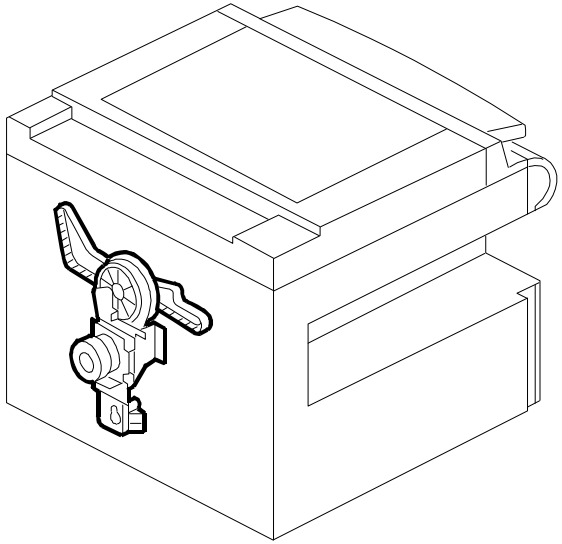

See Page 63

29.DRIVE SECTION 2 (A212/A214)

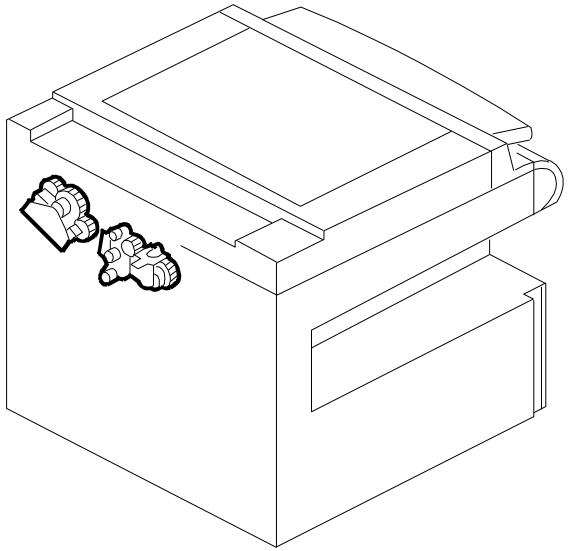

See Page 65

30.DRIVE SECTION 3 (A212/A214)

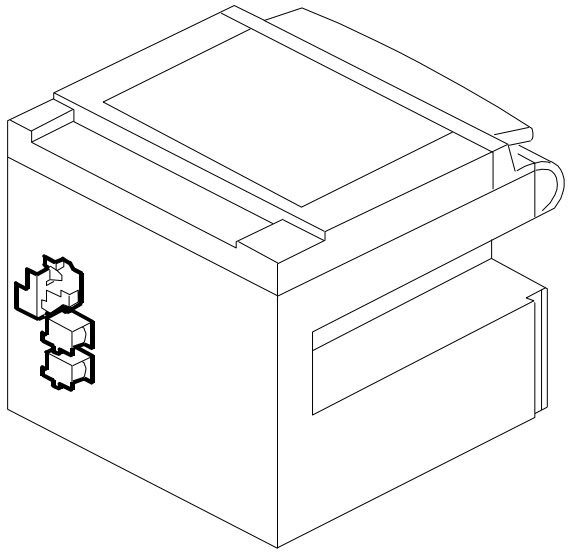

See Page 67

LOCATION OF UNIT

31.ELECTRICAL SECTION 1 (A212/A214)

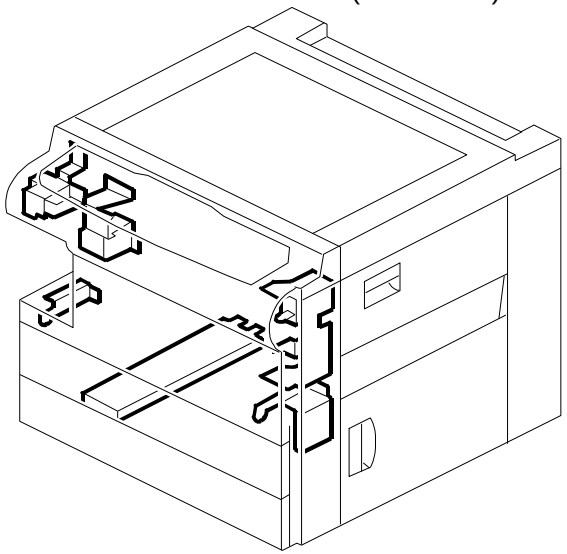

See Page 69

32.ELECTRICAL SECTION 2 (A212/A214)

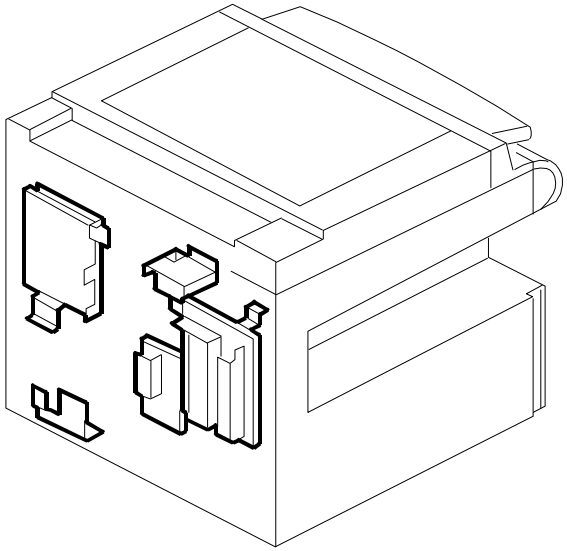

See Page 71

33.ELECTRICAL SECTION 3 (A212/A214)

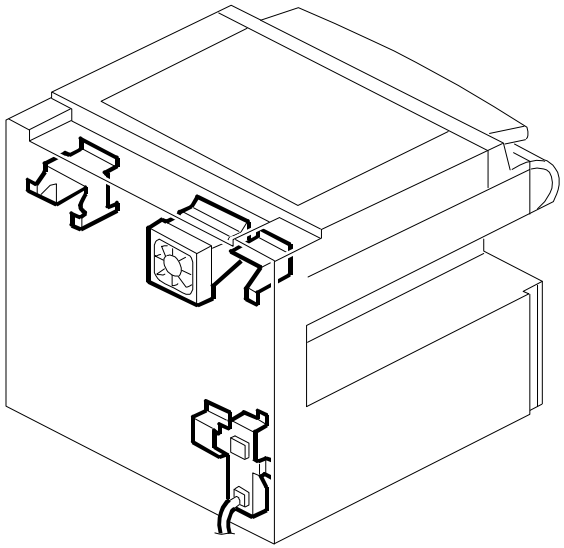

See Page 73

34.FRAME SECTION 1 (A212/A214)

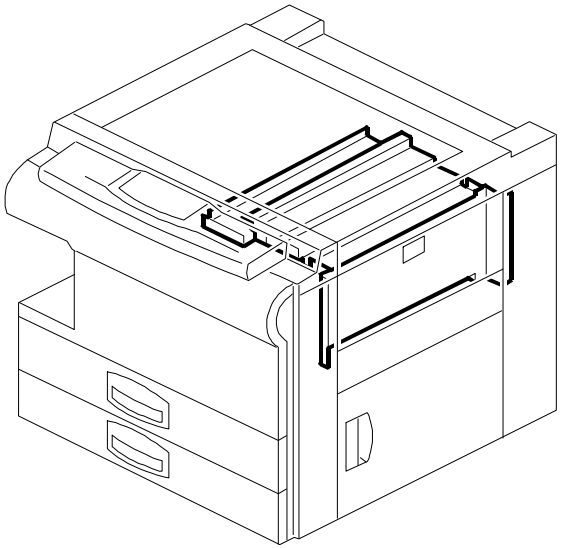

See Page 75

35.FRAME SECTION 2 (A212/A214)

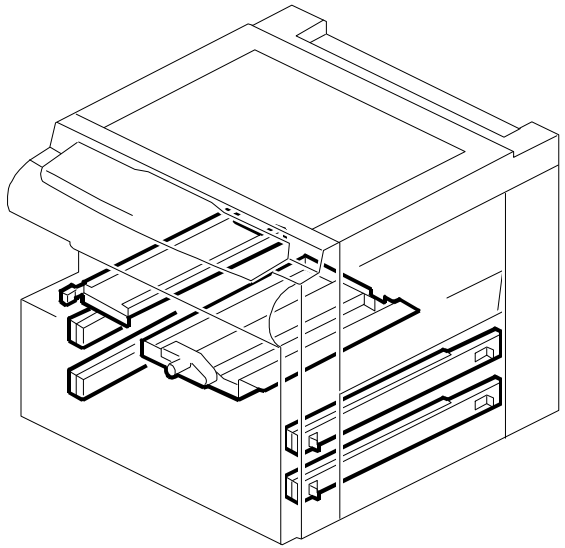

See Page 77

1.EXTERIOR (A212/A214)

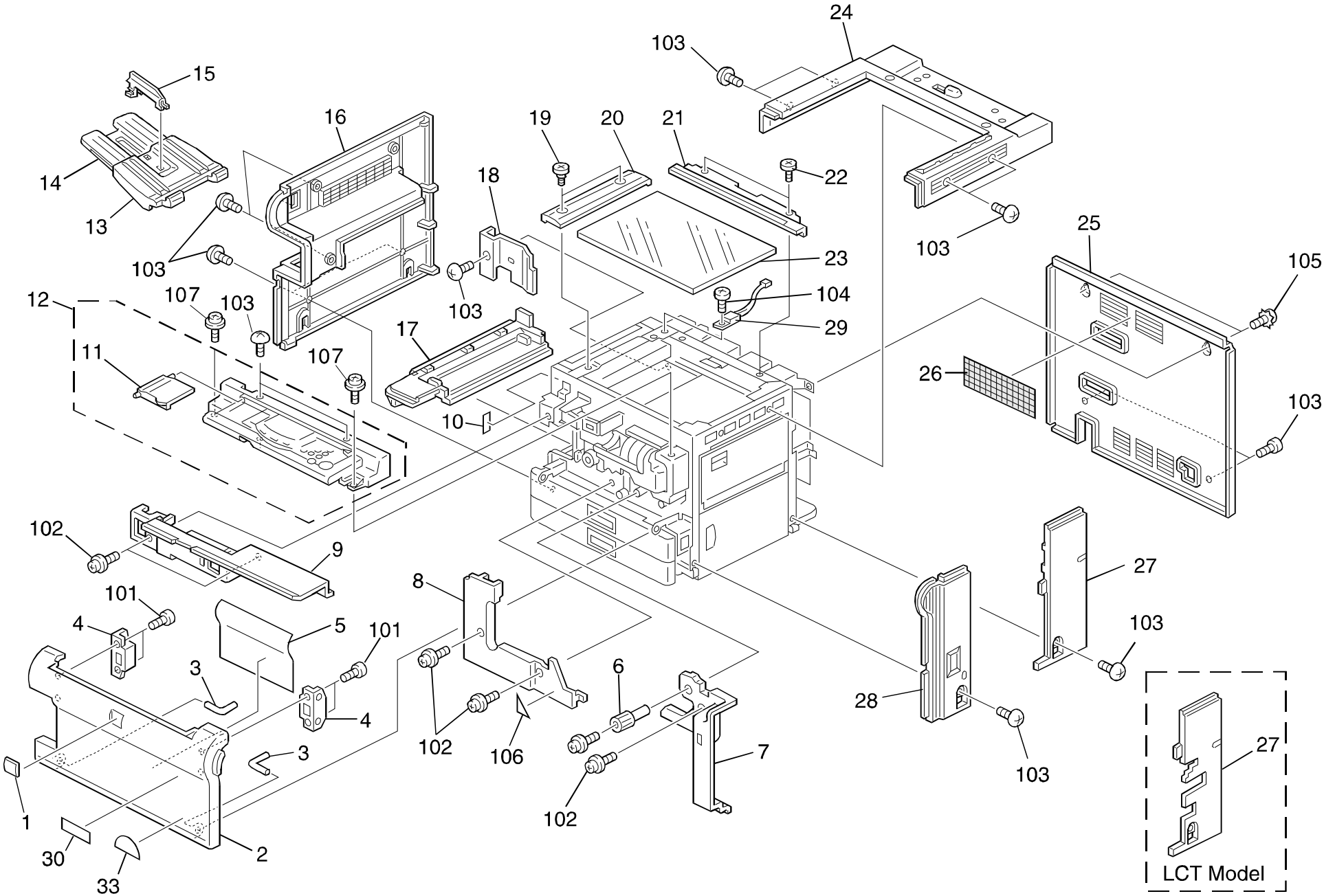

1.EXTERIOR (A212/A214)

Index No.	Part No.	Description	Q'ty Per Assembly
1	A153 1285	Emblem (RIC)	1
1	A156 6413	Emblem (SVN)	1
1	A153 6423	Support Cover (INF)	1
2	A212 1282	Front Cover (A212)(RIC)	1
2	A212 6412	Front Cover (A212)(SVN)	1
2	A212 6422	Front Cover (A212)(INF)	1
2	A214 1277	Front Cover (A214)(RIC)	1
2	A214 6412	Front Cover (A214)(SVN)	1
2	A214 6422	Front Cover (A214)(INF)	1
2	A157 6403	Front Cover (NRG)	1
3	A153 1354	Hinge Pin	2
4	AG07 0004	Magnetic Catch	6
5	A157 1360	Operation Sheet (A212)	1
5	A158 1360	Operation Sheet (A214)	1
6	AG05 0074	Registration Knob	1
7	A212 1352	Inner Cover - Right Lower	1
8	A157 1339	Lower Inner Cover	1
9	A157 1351	Upper Inner Cover	1
10	A212 5829	Decal - Main Switch Cover (EU/ASIA/TWN)	1
11	A153 1469	Panel Cover	1
12	A212 1323	Operation Panel Ass'y - LT (A212)	1
12	A214 1325	Operation Panel Ass'y - LT (A214)	1
12	A212 1324	Operation Panel Ass'y - A4 (A212)	1
12	A214 1326	Operation Panel Ass'y - A4 (A214)	1
12	A212 1328	Operation Panel Ass'y (A212)(SVN)	1
12	A214 1328	Operation Panel Ass'y (A214)(SVN)	1
13	AF04 3083	Copy Tray	1
14	AF04 3076	Copy Tray Slide	1
15	AF04 3077	Copy Tray Guide	1
16	A212 1302	Left Cover	1
17	A157 1311	Left Innner Cover	1
18	A157 1321	Left Inner Cover - Small	1
19	AA14 3416	Stepped Screw - M4x3	2
20	AC04 2113	Left Original Scale - A4	1
20	AC04 2117	Left Original Scale - LT	1

Index No.	Part No.	Description	Q'ty Per Assembly
21	AC04 2120	Rear Original Scale (A4)	1
21	AC04 2124	Rear Original Scale - LT	1
22	AA14 3417	Shoulder Screw - M4x4	2
23	AC01 2060	Exposure Glass - A3T-3.2	1
24	A153 1251	Upper Cover	1
25	A212 1291	Rear Cover	1
26	AA01 2080	Dust Filter	1
27	A212 1271	Rear Right Cover (A212)	1
27	A214 1331	Rear Right Cover (A214)	1
28	A212 1261	Front Right Cover	1
29	AW10 0027	Thermister	1
30	A212 6404	Decal - Model Name - GES (A212)	1
30	A212 6407	Decal - Model Name - NSA (A212)	1
30	A212 6414	Decal - Model Name - REX (A212)	1
30	A214 6404	Decal - Model Name - GES (A214)	1
30	A214 6407	Decal - Model Name - NSA (A214)	1
30	A214 6414	Decal - Model Name - REX (A214)	1
31	A212 8834	Operation panel Sheet - LT	1
31	A212 1485	Operation panel Sheet - A4	1
32	A212 5830	Decal - Main Switch (EU/ASIA/TWN)	1
33	AA00 1389	Large Decal - Energy Star (NA)	1
34	C225 5867	Decal - Cover - Panel - Nashua	1
34	C225 5866	Decal - Key Top Cover	1
34	A153 6409	Decal - Keytop Cover	1
101	0434 0082B	Tapping Screw - M4x8	
102	0964 4008B	Tapping Screw With Flat Washer - M4x8	
103	0802 5094	Tapping Truss Head Screw - M4x8	
104	0313 0040B	Philips Pan Head Screw - M3x4	
105	0953 4008M	Screw - M4X8	
106	1005 0890	Decal - TUV	
107	0964 4006B	Tapping Screw With Flat Washer - M4X6	

2.PLATEN COVER ASS'Y (A212/A214)

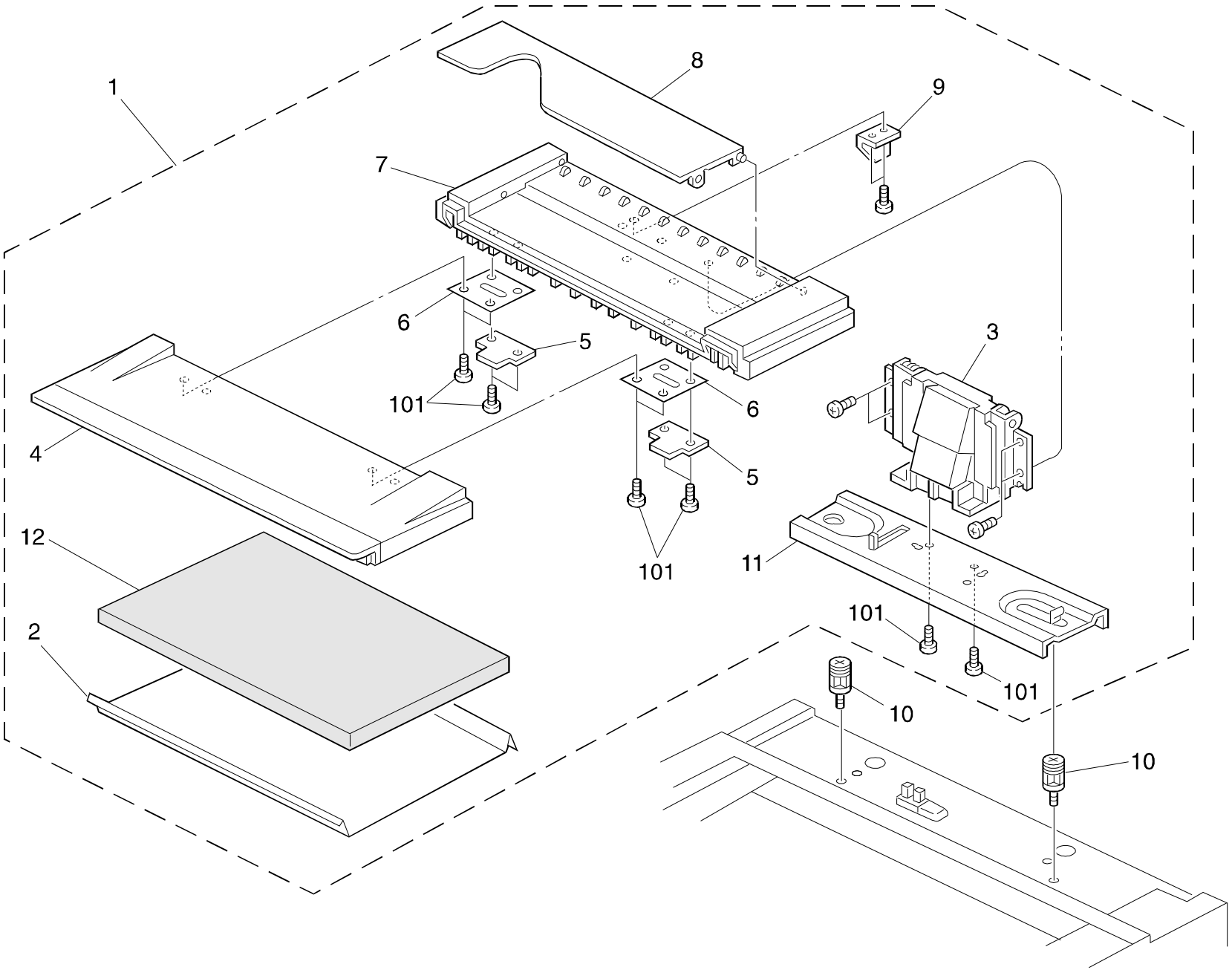

2.PLATEN COVER ASS'Y (A212/A214)

Index No.	Part No.	Description	Q'ty Per Assembly
1	A153 1369	Platen Cover Ass'y	1
2	5448 2804	Platen Cover Sheet	1
3	A153 1370	Platen Cover Hinge	1
4	A134 1394	Front Platen Cover	1
5	A053 1957	Flex Hinge - Platen Cover	2
6	AA16 2067	Platen Cover Pad	1
7	A134 1395	Rear Platen Cover	1
8	A134 1396	Original Holder	1
9	A153 1383	Platen Cover Feeler	1
10	AA14 8447	Platen Cover Stud	1
11	A153 1380	Platen Cover Bracket	1

Index No.	Part No.	Description	Q'ty Per Assembly
101	0414 0142B	Binding Self Tapping Screw - M4x14	

3.OPERATION PANEL UNIT (A212/A214)

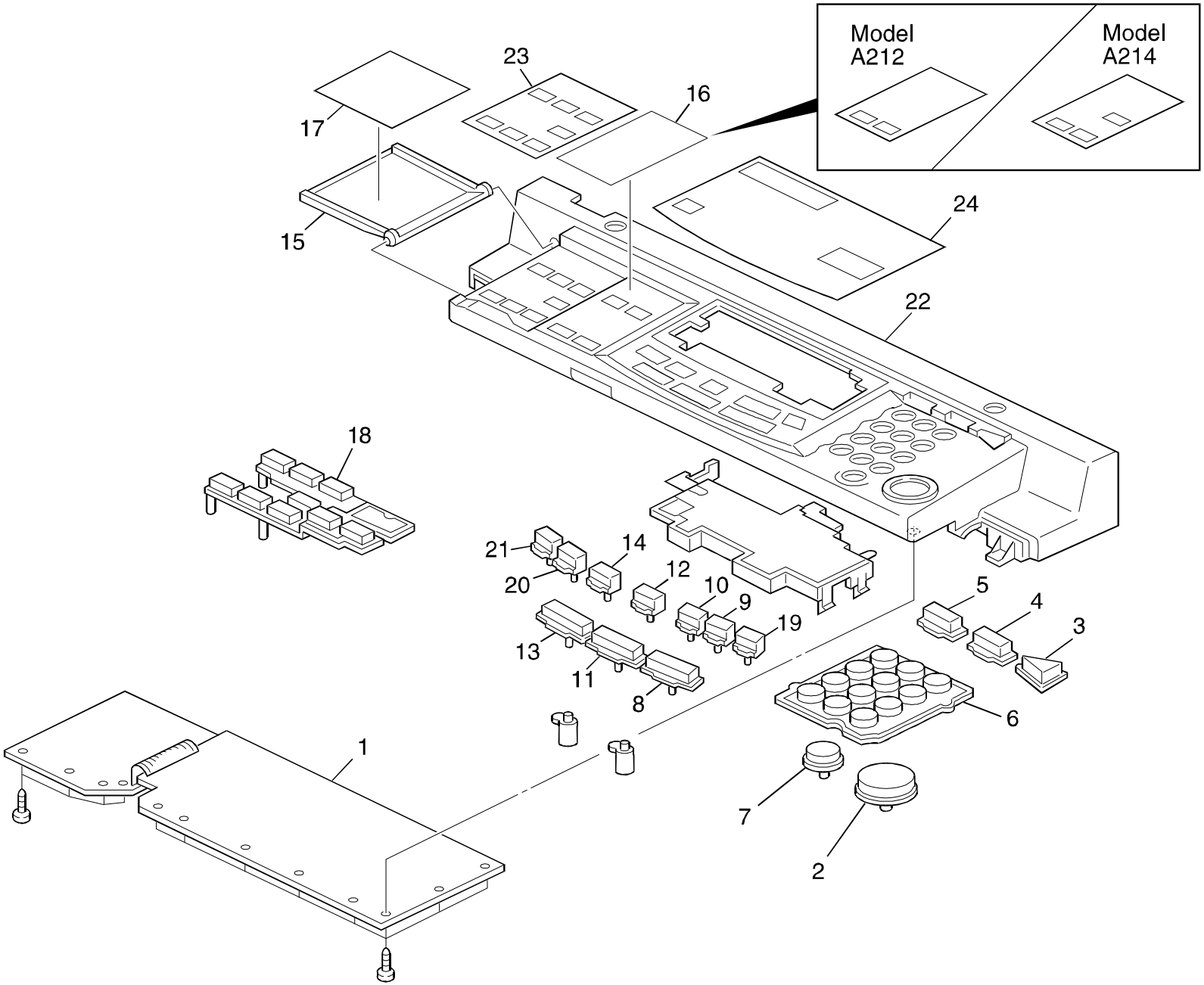

3.OPERATION PANEL UNIT (A212/A214)

Index No.	Part No.	Description	Q'ty Per Assembly
*	A212 1323	Operation Panel Ass'y - LT (A212)	1
*	A214 1325	Operation Panel Ass'y - LT (A214)	1
*	A212 1324	Operation Panel Ass'y - A4 (A212)	1
*	A214 1326	Operation Panel Ass'y - A4 (A214)	1
*	A212 1328	Operation Panel Ass'y - LT (A212)(SVN)	1
*	A214 1328	Operation Panel Ass'y - LT (A214)(SVN)	1
1	A212 5460	Operation Panel Board - LT (A212)	1
1	A212 5465	Operation Panel Board - A4 (A212)	1
1	A214 5460	Operation Panel Board - LT (A214)	1
1	A214 5465	Operation Panel Board - A4 (A214)	1
2	A153 1452	Key-top Start	1
2	A156 1452	Key-top Start (SVN)	1
3	A153 1453	Key-top Interrupt	1
3	A156 1453	Key-top Interrupt (SVN)	1
4	A153 1454	Key-top Mode Clear	1
4	A156 1454	Key-top Mode Clear (SVN)	1
5	A153 1455	Key-top Program	1
5	A156 1455	Key-top Program (SVN)	1
6	A153 1456	Key-top 10 Key	1
6	A156 1456	Key-top 10 Key (SVN)	1
7	A153 1457	Key-top Cler/Stop	1
7	A156 1457	Key-top Cler/Stop (SVN)	1
8	A153 1458	Key-top Auto Density	1
8	A156 1458	Key-top Auto Densty (SVN)	1
9	A153 1459	Key-top Derker	1
9	A156 1459	Key-top Derker (SVN)	1
10	A153 1460	Key-top Lighter	1
10	A156 1460	Key-top Lighter (SVN)	1
11	A153 1461	Key-top Auto Paper Select	1
11	A156 1461	Key-top Auto Paper Select (SVN)	1
12	A153 1462	Key-top Paper Select	1
12	A156 1462	Key-top Paper Select (SVN)	1
13	A153 1463	Key-top Full Size	1
13	A156 1463	Key-top Full Size (SVN)	1
14	A153 1464	Key-top Auto Reduce/Enlarge	1
14	A156 1464	Key-top Auto Reduce/Enlarge (SVN)	1
15	A153 1469	Panel Cover	1
16	A214 1493	Paper Exit Sheet - LT (A214)	1
16	A214 1483	Paper Exit Sheet - A4 (A214)	1
16	A212 1493	Sheet Sorter - LT (A212)	1
16	A212 1483	Sorter Sheet - A4 (A212)	1
16	A212 1487	Sorter Sheet (A212)(SVN)	1
16	A214 1487	Sorter Sheet (A214)(SVN)	1
17	A212 1495	Operation Panes Sheet - LT	1
17	A214 1485	Operation Panes Sheet - A4	1
18	A153 1465	Key-top - Sorter	1
18	A212 1465	Key-top - Sorter (SVN)	1
19	A204 1471	Keytop - Halftone	1
19	A207 1471	Keytop - Halftone (SVN)	1
20	A204 1472	Keytop - Enlarge	1
20	A207 1472	Keytop - Enlarge (SVN)	1
21	A204 1473	Keytop - Reduce	1
21	A207 1473	Keytop - Reduce (SVN)	1
22	A212 1491	Operation Panel Case - LT	1
22	A212 1481	Operation Panel Case - A4	1
23	A212 1494	Operation Panel Sheet	1
24	A212 1492	Display Panel - LT (A212)	1
24	A212 1482	Display Panel - A4 (A212)	1
24	A214 1492	Display Panel - LT (A214)	1
24	A214 1482	Display Panel - A4 (A214)	1

4.BY-PASS FEED SECTION (A212/A214)

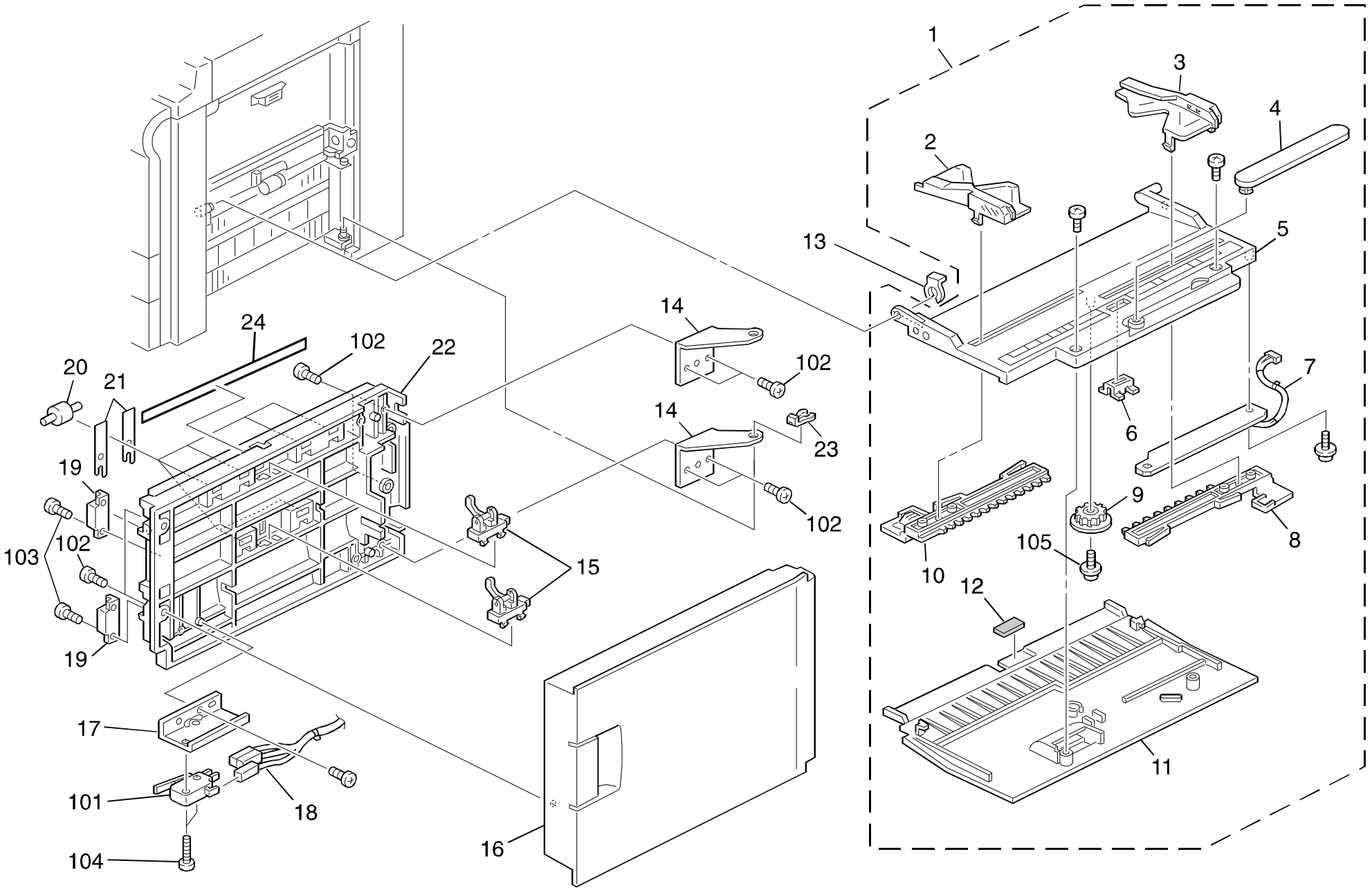

4.BY-PASS FEED SECTION (A212/A214)

Index No.	Part No.	Description	Q'ty Per Assembly
1	A212 2692	By-pass Feed Table Ass'y	1
2	A212 2711	Front Side Fence	1
3	A212 2716	Rear Side Fence	1
4	A134 2701	By-pass Feed Guide	1
5	A212 2697	By-pass Feed Table	1
6	A212 2705	Magnet Catch Plate	1
7	A212 2534	Paper Size Sensor Board	1
8	A212 2706	Rear Fence Rack	1
9	G011 3305	Gear - 16T	2
10	A212 2707	Front Fence Rack	2
11	A212 2746	By-pass Feed Cover	1
12	**5447 2927**	**Friction Pad - B**	**1**
13	5215 2621	Snap Ring - M6	3
14	A212 2586	Hinge Bracket (A212)	1
15	AW02 0069	Photointerruptor	2
16	A212 2591	Vertical Transfer (A212)	1
17	A212 2559	Switch Bracket	1
18	A157 5336	Vertical Transport Harness	1
19	AG07 0004	Magnetic Catch	6
20	AF02 2079	Vertical Driven Roller	6
21	A157 2557	Spring Plate	12
22	A212 2571	Vertical Transport Guide (A212)	1
23	5447 2681	Snap Ring (A212)	7
24	A214 2878	Mylar - Paper Guide (EU)	1

Index No.	Part No.	Description	Q'ty Per Assembly
101	1204 2356	Micro Switch - AM51612A531	
102	0414 0082W	Tapping Screw With Flat Washer - M4x8	
103	0802 5085	Tapping Screw - M4x8	
104	0313 0140B	Philips Pan Head Screw - M3x14	
105	0965 3006B	Tapping Screw With Flat Washer M3x6	

5.PAPER TRAY SECTION (A212/A214)

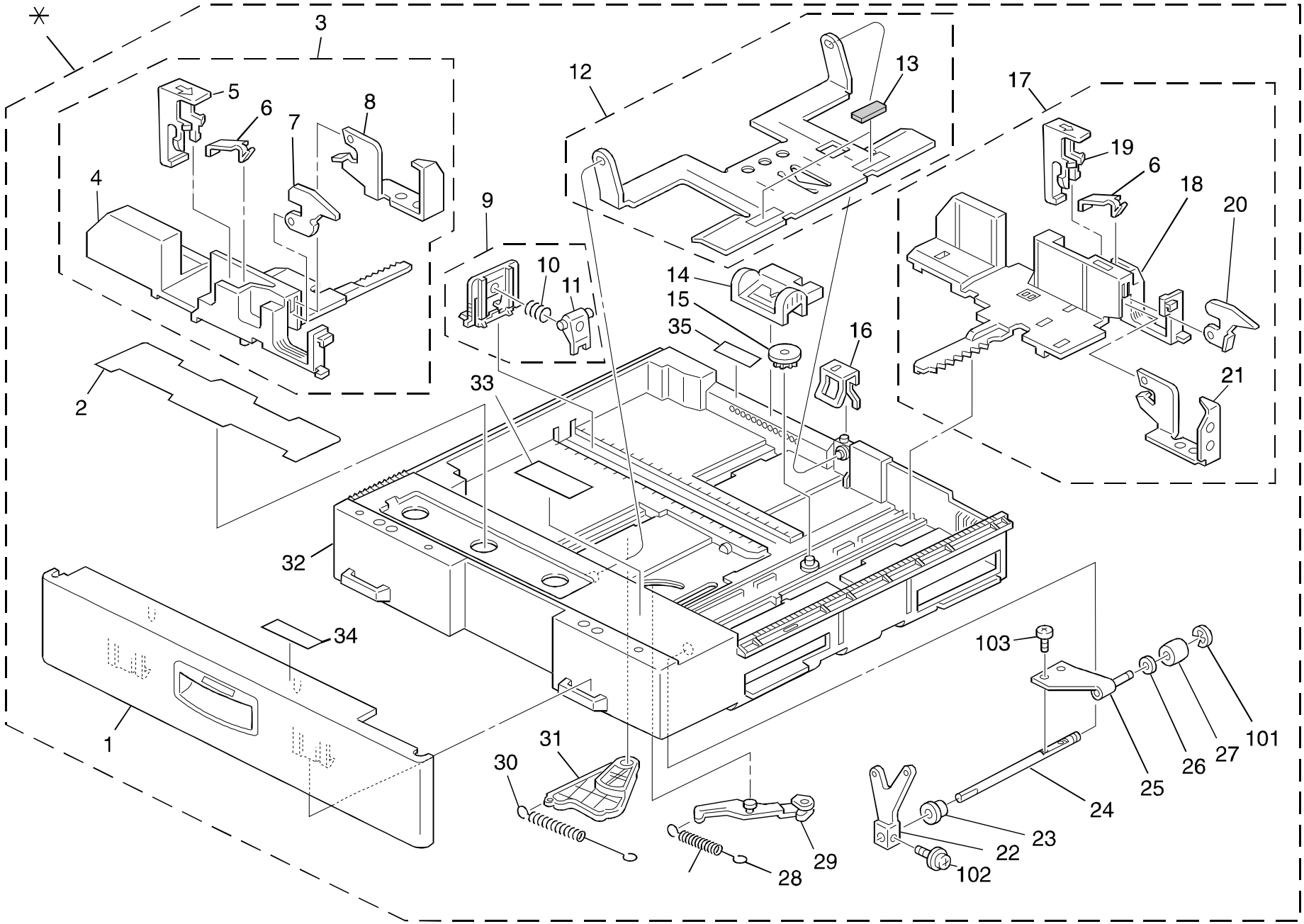

5.PAPER TRAY SECTION (A212/A214)

Index No.	Part No.	Description	Q'ty Per Assembly
*	A212 2533	Paper Tray Ass'y (LT)	1
*	A212 2757	Paper Tray Ass'y (A4)	1
1	A212 2956	Paper Feed Front Cover	1
2	A212 2758	Decal - Paper Set Ditection	1
3	A212 2581	Front Side Fence Ass'y	1
4	A212 2661	Adjusting Plate - Front	1
5	A219 2664	Front Stopper Lever	1
6	A212 2769	Rear Stopper Spring	1
7	A212 2871	Adjusting Plate Front	1
8	A212 2582	Front Corner Separator	1
9	A212 2844	End Fence Ass'y	1
10	A219 2656	End Fence Spring	1
11	A219 2558	End Fence Guide	1
12	A212 2542	Bottom Plate Ass'y	1
13	**G020 2645**	**Friction Pad**	**1**
14	AF01 5027	Paper Size Slider	1
15	AB01 3868	Gear - 16Z	1
16	A212 2765	Spring Plate - Gear Side Fence	1
17	A212 2547	Rear Side Fence Ass'y	1
18	A212 2567	Rear Side Fence	1
19	A219 2642	Rear Lever Stopper	1
20	A212 2870	Adjusting Plate Rear	1
21	A212 2583	Rear Corner Separator	1
22	A219 2597	Bottom Plate Lever	1
23	AA08 0111	Bushing - 8x12x7	1
24	A219 2591	Paper Lift Shaft	1
25	A219 2574	Paper Lift Arm Ass'y	1
26	A096 3863	Spacer - 4x6x1	1
27	A219 2577	Paper Lift Roller	1
28	A219 2541	Spring	1
29	A219 2585	Lever	1
30	A219 2543	Spring	1
31	A212 2982	Paper Lift Shutter	1
32	A212 2590	Paper Tray	1
33	A212 2805	Tray Bottom Plate Sheet	1
34	A219 2692	Decal - Operating	1
35	A153 2996	Decal Paper Size - A4/A3	1
35	A153 2995	Decal Paper Size - LT/DLT	1
101	0720 0030E	Retaining Ring - M3	
102	0960 4012W	Philips Flange Screw - M4x12	
103	0453 4006B	Tapping Screw - 4x6	

6.LCT UNIT 1 (A214)

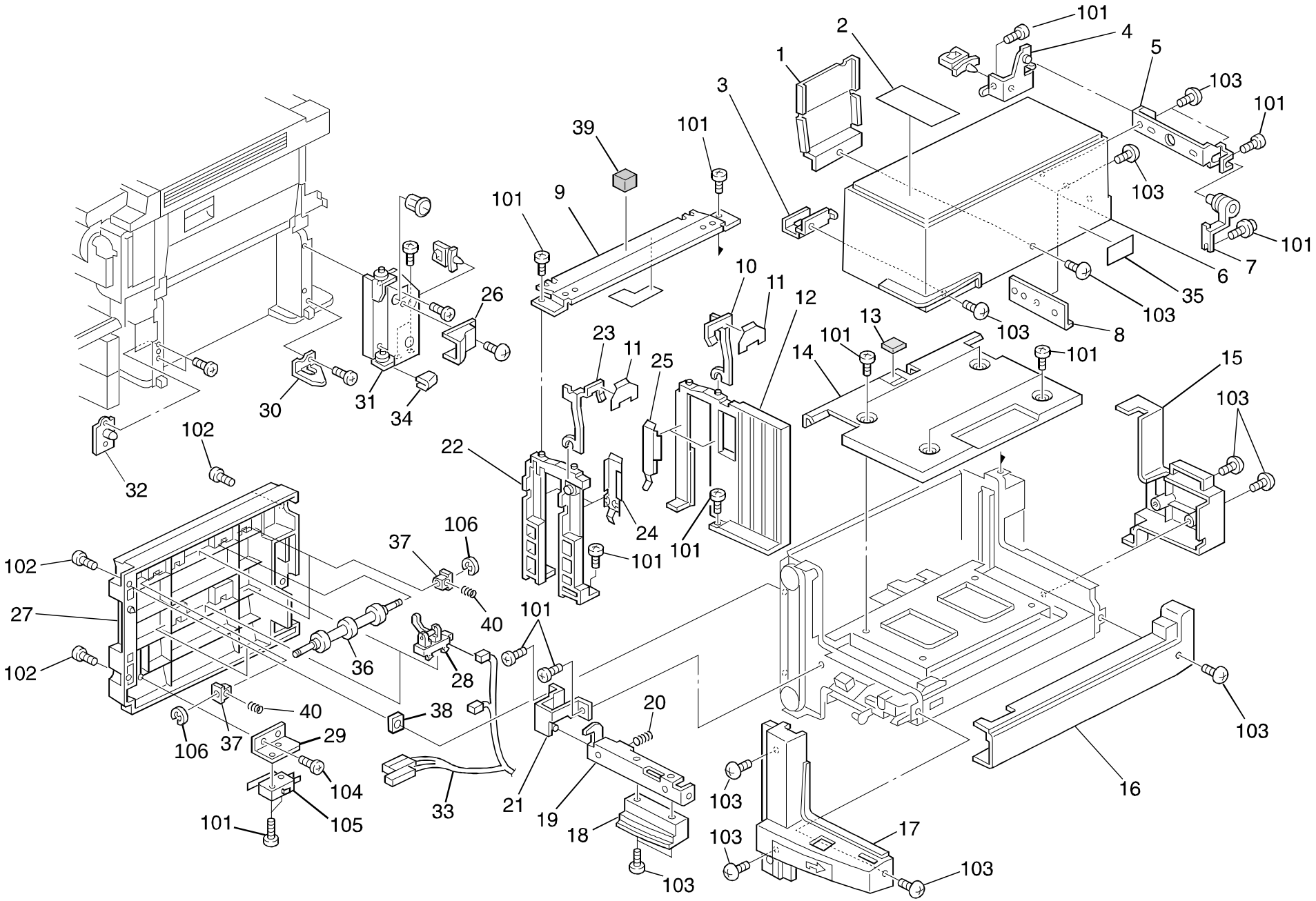

6.LCT UNIT 1 (A214)

Index No.	Part No.	Description	Q'ty Per Assembly
1	A155 6324	End Fence	1
2	A155 6113	Decal - Paper Set	1
3	A155 6207	Cover Bracket	1
4	A155 6303	Fix Hinge	1
5	A155 6302	Hinge Angle	1
6	A155 6101	LCT Upper Cover	1
7	A335 3251	Top Cover Hinge	1
8	A155 6201	LCT Hinge Bracket	1
9	A155 6251	Upper Stay	1
10	A155 6312	Rear Paper Holder	1
11	A155 6313	Support Guide	2
12	A155 6307	Rear Side Fence	1
13	**A421 2543**	**Friction Pad**	**1**
14	A155 6142	LCT Paper Tray	1
15	A155 6221	LCT Rear Cover	1
16	A155 6231	LCT Right Cover	1
17	A155 6191	LCT Front Cover	1
18	A155 6181	Knob	1
19	A155 6171	Grip Bracket	1
20	AA06 3239	Spring - Handle	1
21	A155 6170	Hinge Bracket	1
22	A155 6306	Front Side Fence	1
23	A155 6311	Front Paper Holder	1
24	A155 6321	Front Spring Plate	2
25	A155 6322	Rear Sprig Plate	2
26	A155 6241	LCT Harness Cover	1
27	A214 2571	Vertical Transport Guide	1
28	AW02 0069	Photointerruptor	2
29	A212 2559	Switch Bracket	1
30	A155 6169	Hinge Holder	1
31	A214 6460	Lower Hinge	1
32	A214 6175	LCT Positioning Plate	1
33	A155 5349	LCT Vertical Harness	1
34	A155 6162	Cushion	1
35	A155 6114	Caution Decal - LCT	1

Index No.	Part No.	Description	Q'ty Per Assembly
36	AF02 0330	Vertical Driven Roller	2
37	AA08 0034	Bushing - 4x5x7	4
38	A155 6112	Spacer - LCT	1
39	A155 6270	Cushion 20x30	1
40	AA06 3538	Spring - 10mm	4
101	0434 0060B	Philips Tapping Screw - M4x6	
102	0414 0080B	Tapping Screw - M4x8	
103	0802 5094	Tapping Truss Head Screw - M4x8	
104	1204 2356	Micro Switch - AM51612A531	
106	0720 0030E	Retaining Ring - M3	

7.LCT UNIT 2 (A214)

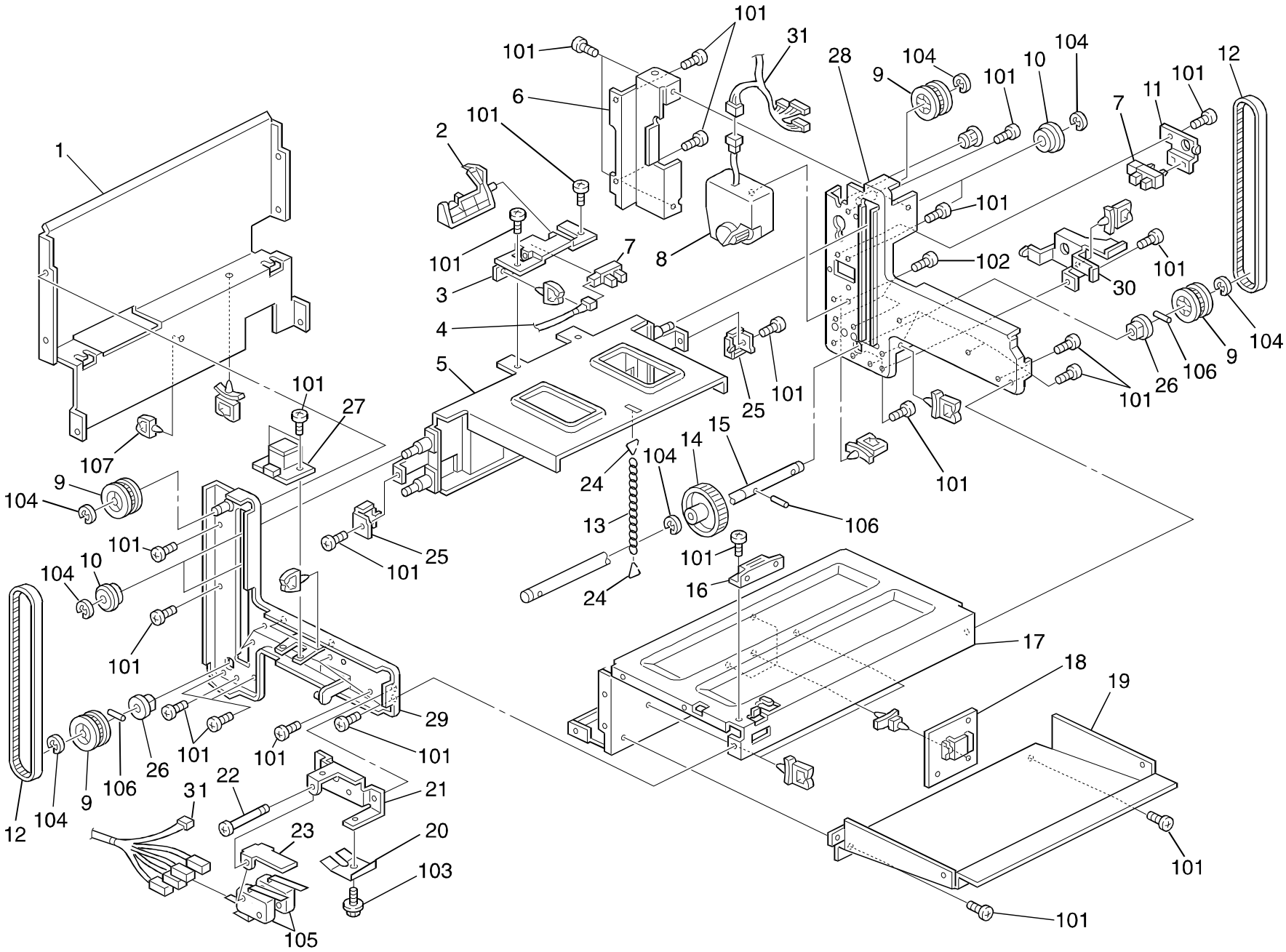

7.LCT UNIT 2 (A214)

Index No.	Part No.	Description	Q'ty Per Assembly
1	A155 6143	Left Bracket	1
2	A155 6148	Paper End Sensor Feeler	1
3	A155 6147	Paper End Sensor Bracket	1
4	A155 5348	Paper End Sensor Harness	1
5	A155 6203	Paper Tray Stay	1
6	A155 6153	Upper Hinge	1
7	AW02 0075	Photointerrupter	2
8	AX05 0090	Motor - DC 24V 36W	1
9	AB03 0281	Timing Pulley - 28Z	4
10	A335 4351	Guide Roller	4
11	A155 6136	Lift Sensor Bracket	1
12	AA04 3456	Timing Belt - S3M167	2
13	5925 2258	Stopper Chain	1
14	AB01 1133	Gear - 49Z	1
15	AA14 0576	LCT Drive Shaft	1
16	AG07 0004	Magnetic Catch	1
17	A155 6141	Tray Bottom Plate	1
18	A155 5165	LCT Main Board	1
19	A155 6145	Tray Cover	1
20	A155 6118	Spring Plate	1
21	A155 6116	Safety Switch Bracket	1
22	A300 3155	Stepped Screw - M25x32	1
23	A155 6117	Safety Switch Lever	1
24	A355 1341	Chain Hook	2
25	A335 4352	Timing Belt Clamp	2
26	5053 0223	Bushing - 8mm	2
27	A155 5170	Push Switch	1
28	A155 6125	Rear Side Bracket	1
29	A155 6110	Front Side Plate	1
30	A155 6215	Harness Guide	1
31	A155 5342	LCT Harness	1

Index No.	Part No.	Description	Q'ty Per Assembly
101	0434 0060B	Philips Tapping Screw - M4x6	
102	0802 5236	Tapping Screw - M4x8	
103	0443 0060B	Hexagon Tapping Screw - M3x6	
104	0720 0060E	Retaining Ring - M6	
105	1204 2355	Micro Switch - AM51632A531	
106	0623 0160E	Spring Pin - 3x16mm	
107	1105 0199	Clamp	

8.PAPER FEED SECTION 1 (A212/A214)

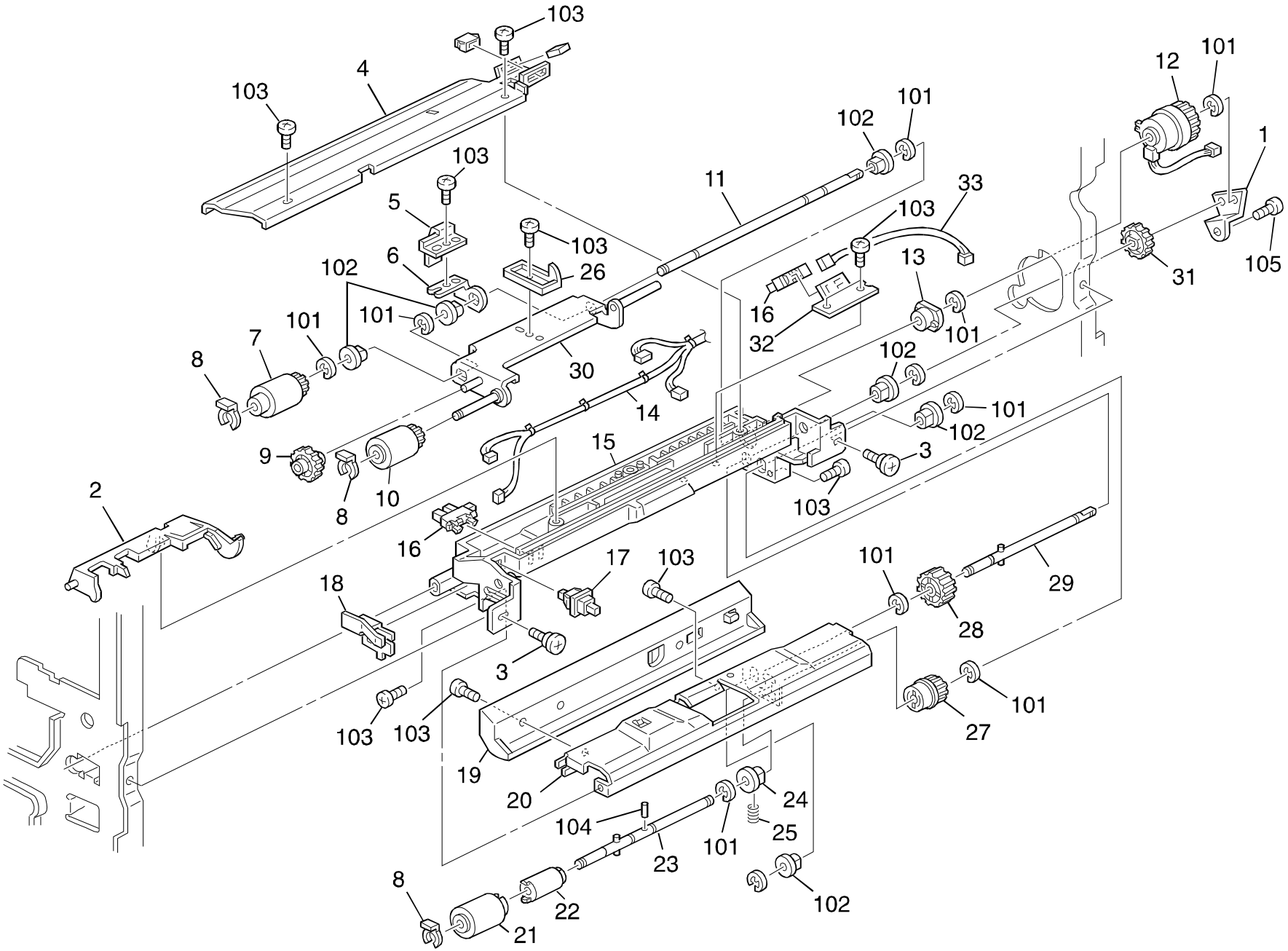

8.PAPER FEED SECTION 1 (A212/A214)

Index No.	Part No.	Description	Q'ty Per Assembly
1	A134 2688	Positioning Plate	1
2	A212 2660	Paper End Feeler	1
3	AA14 3219	Stepped Screw	2
4	A212 2671	By-pass Feed Cover	1
5	A134 2658	Grounding Plate	1
6	A134 2656	Stopper Plate	2
7	**AF03 1025**	**Feed Roller**	**1**
8	5447 2681	Snap Ring	7
9	AB01 1343	Idle Gear - 23Z	1
10	**AF03 0024**	**Pick-up Roller**	**1**
11	AA14 0534	Feed Shaft	1
12	AX20 0101	Magnetic Clutch - 2.5kgf 35Z	1
13	AA08 3010	Clutch Roller - 6x14x10	1
14	A134 5311	By-pass Feed Harness	1
15	A212 2659	By-pass Feed Housing	1
16	AW02 0075	Photointerrupter	15
17	AW50 0012	Push Switch	2
18	A134 2662	Grounding Plate	1
19	A212 2670	Rear Guide Plate	1
20	A212 2663	Separation Guide	1
21	**AF03 2025**	**Separation Roller**	**1**
22	A134 2674	Torque Limitter - 400fg	1
23	A134 2668	Separation Driven Shaft	1
24	A155 2667	Lift Sensor Feeler (A214)	1
24	AA08 0037	Bushing - 6 mm	1
25	AA06 3499	Pressure Spring	1
27	AB01 1344	Gear - 16Z	1
28	AB01 1345	Gear - 20Z	1
29	A134 2667	Separation Drive Shaft	1
30	A212 2658	Pick-up Arm	1
31	AB01 1346	Gear - 27Z	1
32	A155 2682	Lift Sensor Bracket (A214)	1
33	A155 5345	CT Harness (A214)	1

Index No.	Part No.	Description	Q'ty Per Assembly
101	0720 0040E	Retaining Ring - M4	
102	0805 3480	Bushing - 6mm	
103	0414 0080B	Tapping Screw - M4x8	
104	0622 0100E	Spring Pin - 2x10mm	

9.PAPER FEED SECTION 2 (A212/A214)

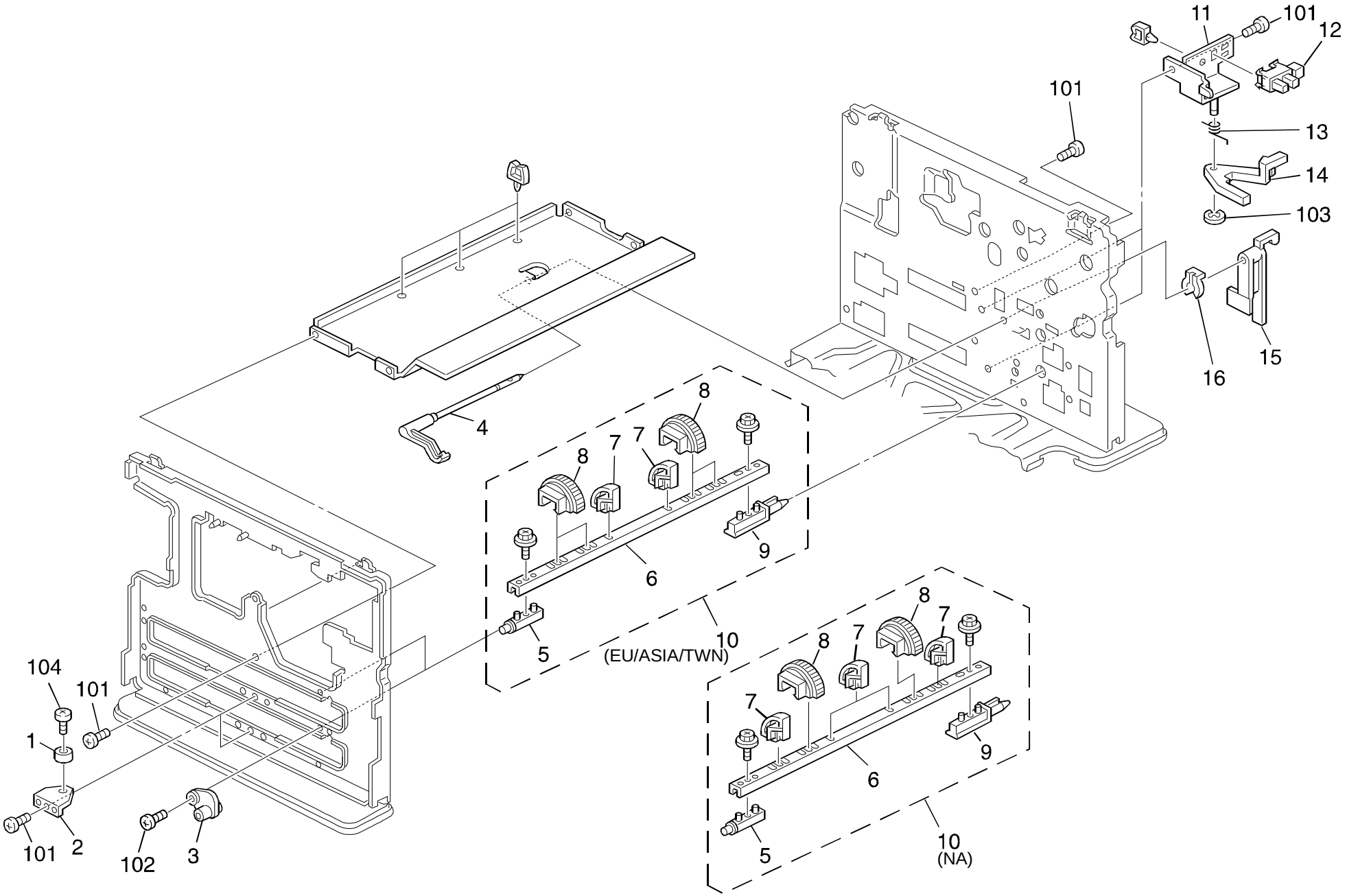

9.PAPER FEED SECTION 2 (A212/A214)

Index No.	Part No.	Description	Q'ty Per Assembly
1	A212 1099	Stopper	1
2	A212 1073	Stopper Bracket	2
3	A212 2587	Feed Roller Bushing - Front	1
4	A212 2802	Feeler Paper End Sensor	1
5	G020 2585	Front Pin - Paper Feed Roller	1
6	A212 2575	Shaft - Paper Feed Roller (EU/ASIA/TWN)	1
6	G020 2570	Shaft - Paper Feed Roller (NA)	1
7	G020 2565	Paper Guide	2
8	**G020 2555**	**Paper Feed Roller**	**4**
9	G020 2586	Rear Pin - Paper Feed Roller	1
10	A212 2570	Paper Feed Roller Ass'y (EU/ASIA/TWN)	1
10	G020 2554	Paper Feed Roller Ass'y (NA)	1
11	A157 2800	Paper End Sensor Bracket	1
12	AW02 0086	Photointerruptor	1
13	A212 2524	Spring	1
14	A212 2905	Release Arm - Paper End	1
15	A157 2804	Shield Plate - Paper End Sensor	1
16	5447 2681	Snap Ring	1
17	A212 1087	Middle Upper Stay	1

Index No.	Part No.	Description	Q'ty Per Assembly
101	0434 0060B	Philips Tapping Screw - M4x6	
102	0414 0080B	Tapping Screw - M4x8	
103	0720 0040E	Retaining Ring - M4	
104	0443 0060W	Hexagon Head Tapping Screw - M3x6	

10.PAPER REGISTRATION (A212/A214)

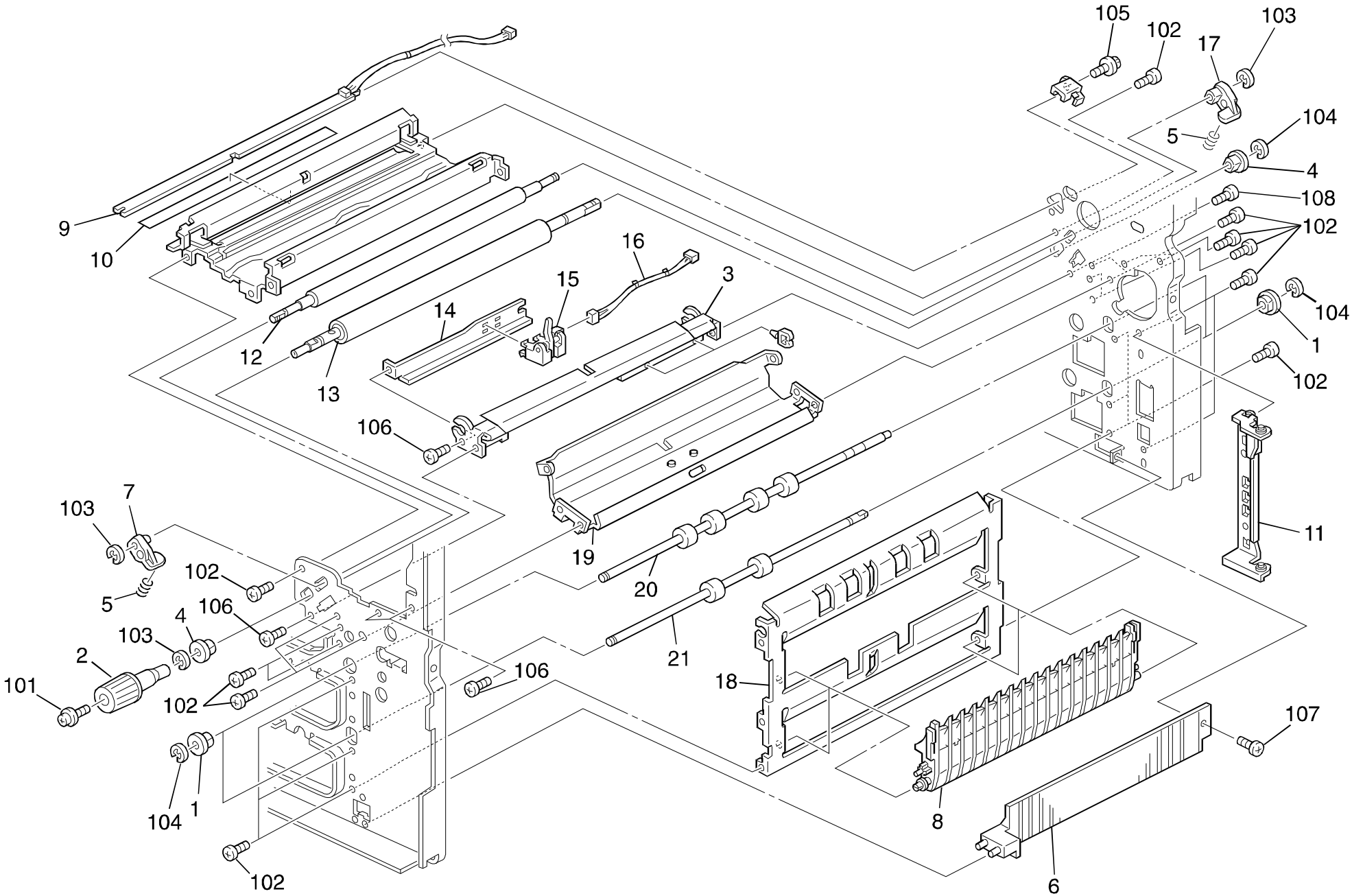

10.PAPER REGISTRATION (A212/A214)

Index No.	Part No.	Description	Q'ty Per Assembly
1	AA08 2047	Bushing - 8x16x7	9
2	AG05 0074	Registration Knob	1
3	A212 2563	Lower Registration Guide	1
4	5474 2152	Bushing - 8x12x12mm	2
5	A212 2539	Spring - Registration Roller	2
6	A212 2552	Vertical Relay Guide Plate	1
7	A212 2537	Bushing	1
8	A212 2551	Lower Guide Plate	2
9	A204 2101	P.T.L. Lamp Ass'y	1
10	A153 3114	Transfer Entrance Guide	1
11	A212 2580	Vertical Transfer Hinge (A212)	1
12	AF02 1052	Upper Registration Roller	1
13	AF02 0316	Lower Registration Roller	1
14	A134 2557	Regist Sensor Bracket	1
15	AW02 0068	Photointerruptor	1
16	A212 5333	CT Harness	1
17	A212 2538	Bushing	1
18	A212 2550	Vertical Guide Plate	1
19	A212 2558	Upper Resistration Guide	1
20	AF02 0337	Upper Relay Roller	1
21	AF02 0338	Lower Relay Roller	1

Index No.	Part No.	Description	Q'ty Per Assembly
101	0951 3006B	Philips Screw With Flat Washer - M3x6	
102	0434 0060B	Philips Tapping Screw - M4x6	
103	0720 0040E	Retaining Ring - M4	
104	0720 0060E	Retaining Ring - M6	
105	0443 0050B	Philips Pan Head Screw - M3x6	
106	0313 0040B	Philips Pan Head Screw - M3x4	
107	0414 0080B	Binding Self-tapping Screw - M4x8	
108	0434 0080B	Pan Head Self-tapping Screw - M4x8	

11.OPTICAL SECTION 1 (A212/A214)

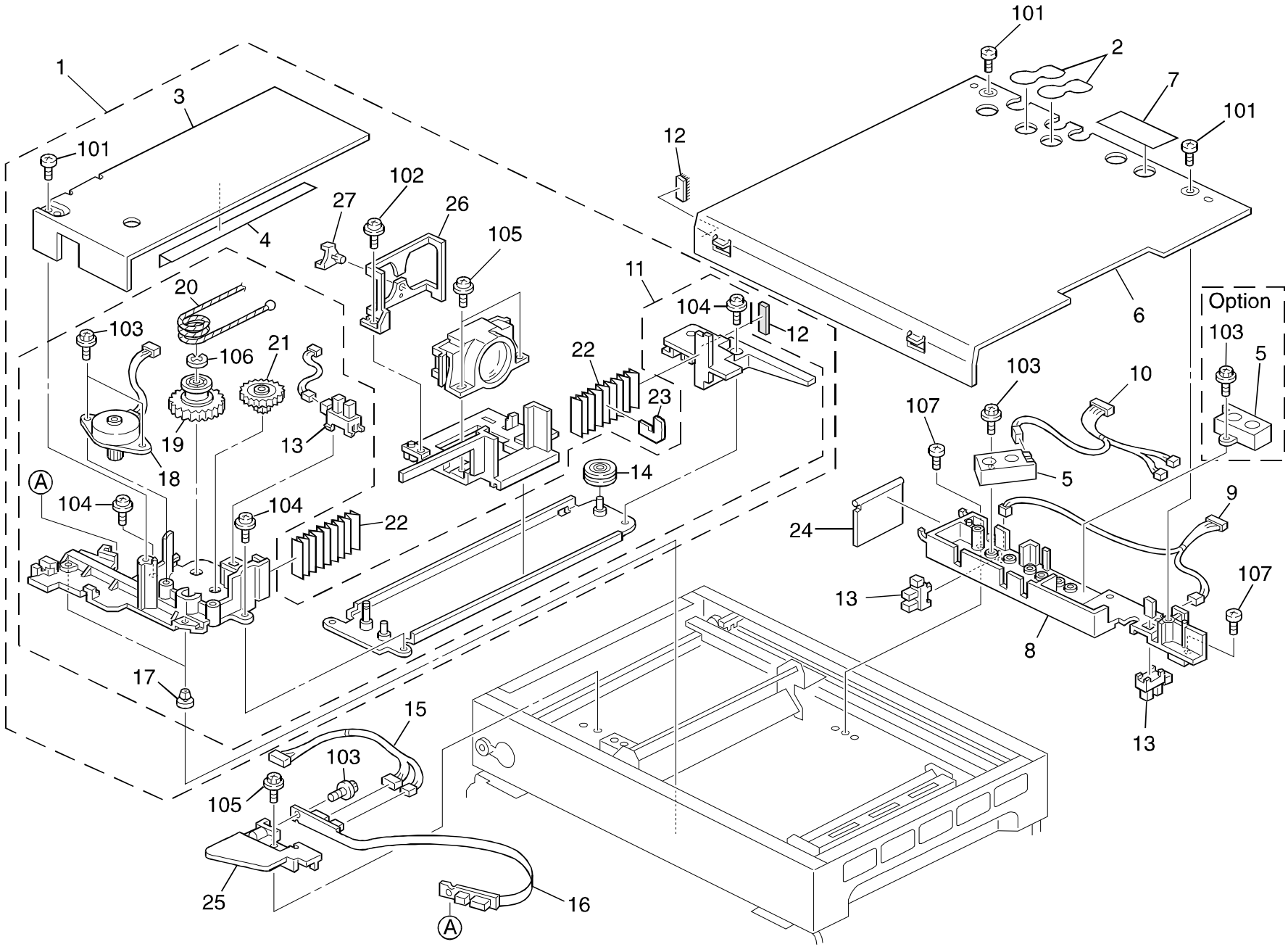

11.OPTICAL SECTION 1 (A212/A214)

Index No.	Part No.	Description	Q'ty Per Assembly
1	A212 1840	Lens Magnification Unit	1
2	AA15 0369	Original Sensor Seal	1
3	A153 1851	Lens Cover	3
4	AA15 0368	Shielding Plate - Cover - Lens	1
5	AW01 0068	Original Length Sensor	2
6	A153 1961	Lens Cover	1
7	A111 1753	Seal - 0.1x18x49	1
8	A153 1971	Original Sensor Bracket	1
9	A153 5391	Optical Harness - 1	1
10	A153 5392	Optical Harness - 2	1
11	A212 1841	Lens Drive Unit	1
12	AA15 2330	Magnification Seal	2
13	AW02 0086	Photointerruptor	15
14	AB03 2059	Driven Pulley	2
15	A153 5395	Optical Harness - 5	1
16	A153 5141	Lens Drive Harness	1
17	A069 1883	Shoe - Scanner	10
18	A153 5212	Lens Drive Motor - Horizontal	1
19	AB01 7360	Gear Pulley	2
20	AA05 0086	Lens Drive Wire - Horizontal	1
21	AB01 7361	Gear - 24Z/56Z	2
22	AA15 0367	Shielding Mylar	2
23	A153 1859	Shielding Sheet Guide	1
24	A153 1974	Original Sensor Bracket	1
25	A153 1861	Bracket - Flexible Board	1
26	A153 1855	Shading Plate	1
27	A153 1854	Wire Guide	1
28	AZ48 0021	Relay Harness - 3P	1

Index No.	Part No.	Description	Q'ty Per Assembly
101	0802 5237	Tapping Screw - M4x10	
102	0413 0062B	Tapping Screw - M3x6	
103	0802 5232	Tapping Screw - M3x8	
104	0951 4006B	Philips Screw With Washer - M4x6	
105	0965 3008W	Tapping Screw With Flat Washer - M3x8	
106	0720 0040E	Retaining Ring - M4	
107	0414 0080B	Tapping Screw - M4x8	



12.OPTICAL SECTION 2 (A212/A214)

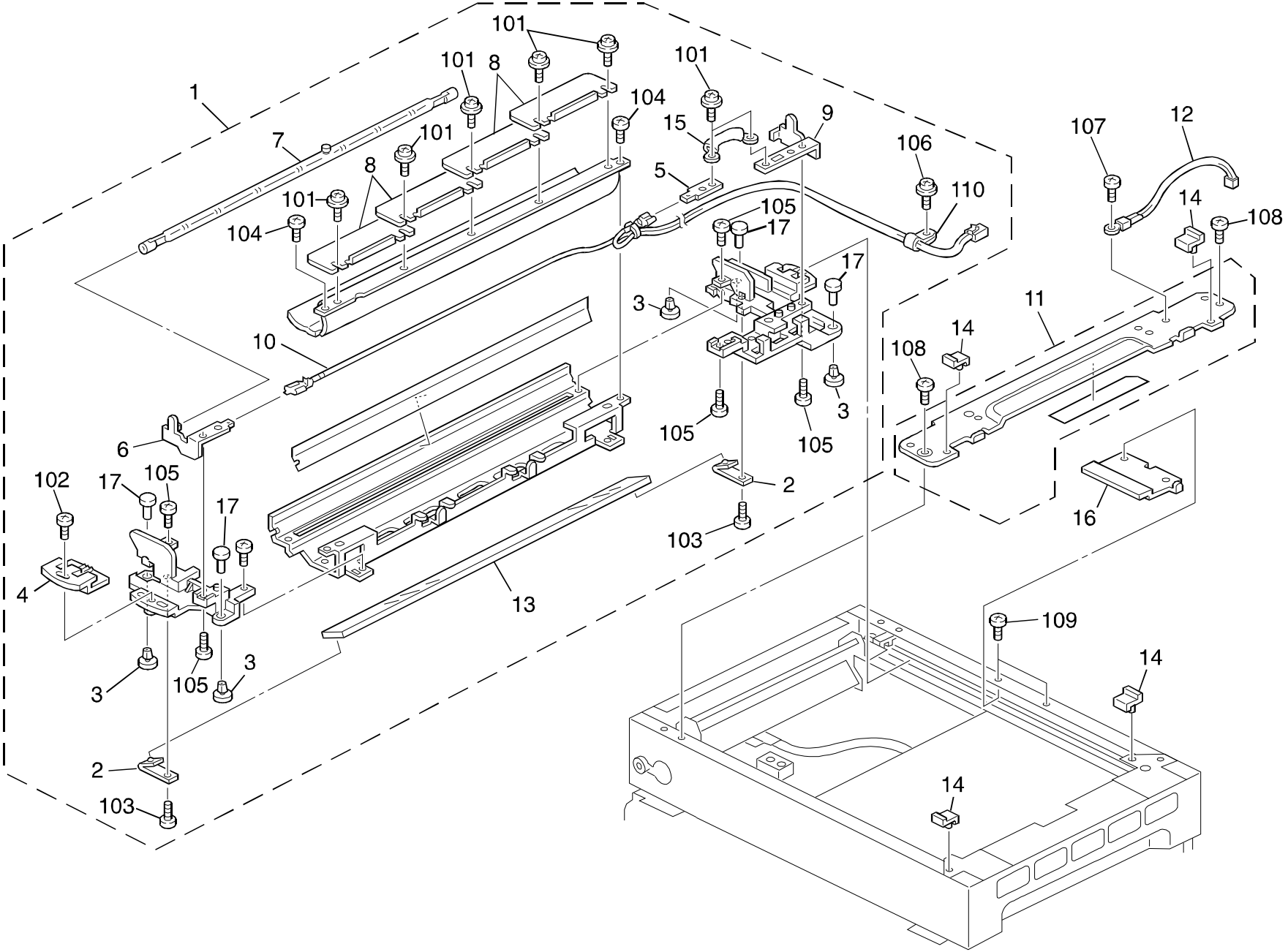

12.OPTICAL SECTION 2 (A212/A214)

Index No.	Part No.	Description	Q'ty Per Assembly
1	A157 1790	1st Scanner Ass'y (NA)	1
1	A157 1770	1st Scanner Ass'y (EU/ASIA/TWN)	1
2	AC03 5022	Rear Mirror Clamp - 1st Mirror	2
3	A069 1883	Shoe - Scanner	10
4	A153 1776	Front Mirror Clamp - 1st Mirror	1
5	A077 1673	Thermofuse Terminal	1
6	A153 1777	Front Terminal	1
7	AX52 0028	Exposure Lamp - 97V 200W (NA)	1
7	AX52 0026	Exposure Lamp - 85V 200W (EU/ASIA/TWN)	1
8	A085 1670	Exposure Adjusting Plate	4
9	A153 1778	Rear Terminal	1
10	A153 1780	Exposure Lamp Harness	1
11	A153 1749	Scale Bracket	1
12	AW10 0027	Thermister	1
13	AC03 0103	1st Mirror	1
14	A153 1754	Exposure Stay	4
15	A153 1779	Thermostat - 121°C 250V 10A	1
16	A153 1757	Contact Grass Holder	2
17	A096 1873	Scanner Shoe Pin	4
18	A085 1861	Main Refretor	1

Index No.	Part No.	Description	Q'ty Per Assembly
101	0951 3006B	Philips Screw With Flat Washer - M3x6	
102	0414 0082W	Tapping Screw With Flat Washer - M4x8	
103	0413 0062W	Tapping Screw - M3x6	
104	0413 0050Z	Tapping Screw - M3x5	
105	0413 0060W	Tapping Screw - M3x6	
106	0964 4008W	Tapping Screw With Flat Washer - M4x8	
107	0313 0040B	Philips Pan Head Screw - M3x4	
108	0313 0060B	Philips Pan Head Screw - M3x6	
109	0314 0060B	Philips Pan Head Screw - M4x6	
110	1105 0008	Nylon Clamp - 2n	

13.OPTICAL SECTION 3 (A212/A214)

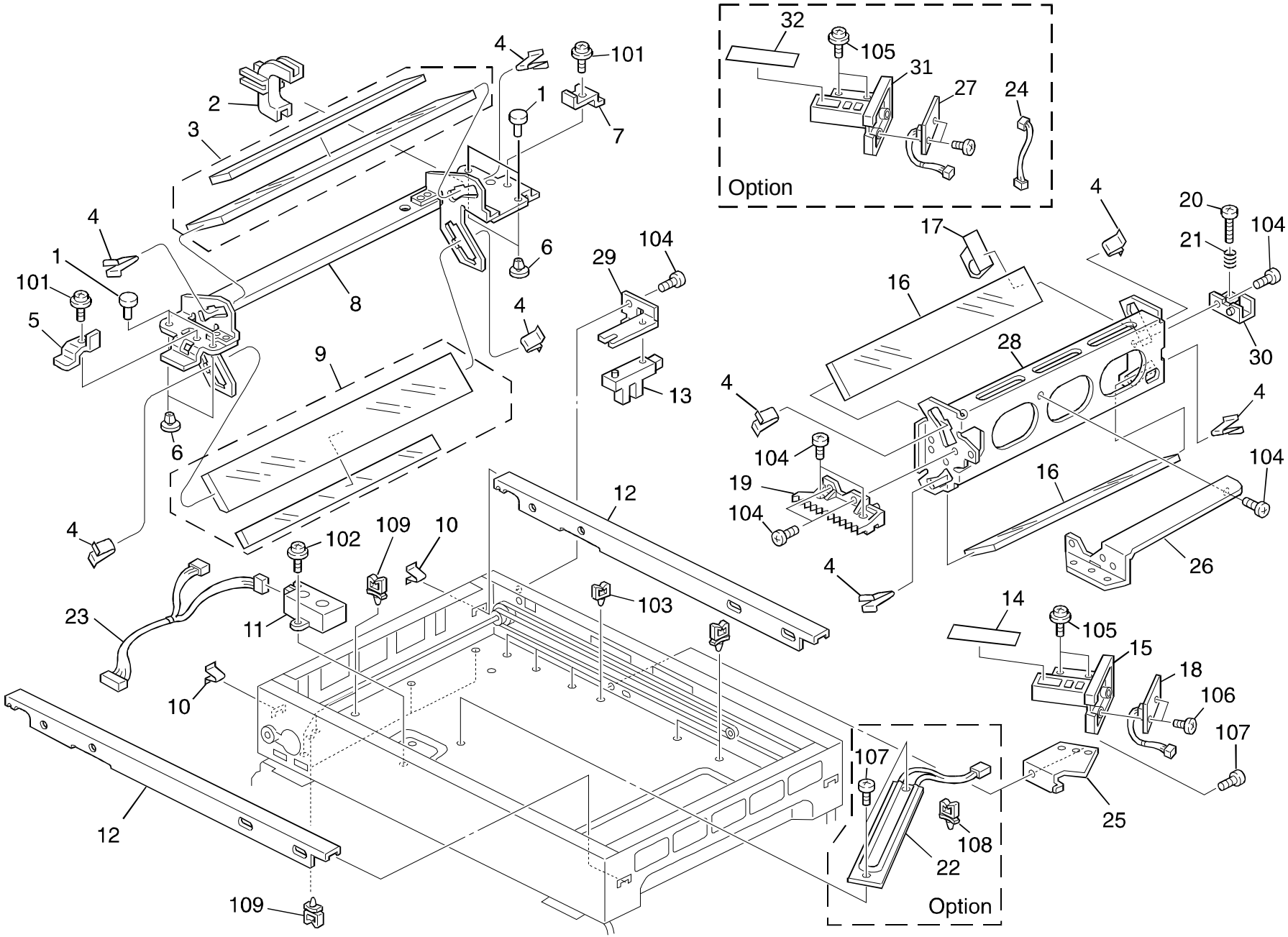

13.OPTICAL SECTION 3 (A212/A214)

Index No.	Part No.	Description	Q'ty Per Assembly
1	A096 1873	Scanner Shoe Pin	8
2	A212 1807	Harness Guide	1
3	A153 1808	2nd Mirror	1
4	A077 1690	Spring Plate - Mirror	10
5	A153 1805	Front Mirror Holder	1
6	A069 1883	Shoe - Scanner	10
7	A153 1806	Rear Mirror Holder	1
8	A153 1801	2nd Scanner Ass'y	1
9	A153 1809	3rd Mirror	1
10	A153 1721	Spring Plate	2
11	AW01 0040	Original Sensor	1
12	A153 1720	Scanner Rail	2
13	AW02 0022	Photointerruptor	2
14	A096 1693	ADS Cover	1
15	A096 1692	ADS Case	1
16	AC03 0106	4/5 Mirror	2
17	A153 1908	Shielding Plate	1
18	A212 5160	ADS Board	1
19	A212 1914	3rd Scanner Rack	1
20	A153 1906	Adjust Shoe	1
21	AA06 3523	Adjust Spring	1
22	AX40 0047	Anticondensation Heater - 115V 15W (Option)	1
22	AX40 0048	Anticondensation Heater - 240V 15W (Option)	1
23	A212 5393	Optical Harness 3	1
24	A153 9513	Harness - ADS (Option)	1
25	A153 1976	ADS Sensor Bracket	1
26	A153 1912	3rd Scanner Stay	1
27	A096 5230	ADS Board (Option)	1
28	A212 1903	3rd Scanner Bracket	1
29	A212 1981	Scaner Home Sensor Bracket	1
30	A153 1905	3rd Scanner Filler	1
31	A096 1692	ADS Case (Option)	1
32	A096 1693	ADS Cover (Option)	1

Index No.	Part No.	Description	Q'ty Per Assembly
101	0960 4005B	Philips Flange Screw - M4 X 5	
102	0443 0080W	Hexagon Head Tapping Screw - M3x8	
103	1105 0230	Clamp	
104	0414 0080B	Tapping Screw - M4x8	
105	0951 3005B	Philips Screw With Flat Washer M3x5	
106	0802 5231	Tapping Screw - M3x6	
107	0434 0060B	Philips Tapping Screw - M4x6	
108	1105 0231	Clamp	
109	1105 0229	Clamp	

14.OPTICAL SECTION 4 (A212/A214)

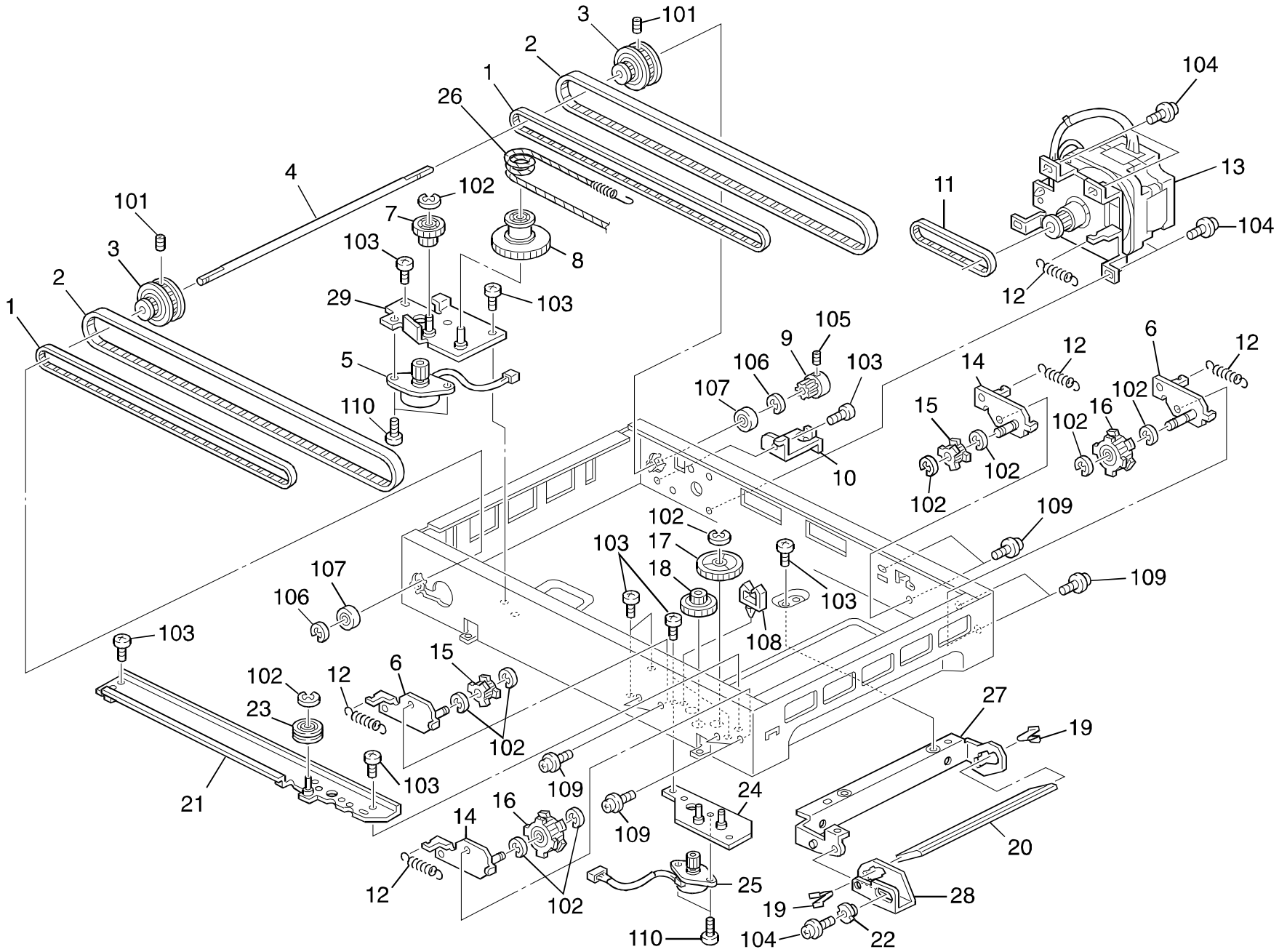

14.OPTICAL SECTION 4 (A212/A214)

Index No.	Part No.	Description	Q'ty Per Assembly
1	AA04 3387	Timing Belt - 40S2M984	2
2	AA04 3386	Timing Belt - 40S2M1224	2
3	AB03 3069	Timing Pulley - 22Z/24Z	2
4	AA14 0599	Scanner Drive Shaft	1
5	A153 5213	Lens Drive Motor - DC24V 8.6W	1
6	A212 1708	Tension Bracket - Short	2
7	AB01 7362	Gear - 25Z/32Z	1
8	AB01 7360	Gear Pulley	2
9	AB03 0486	Timing Pulley - 24Z	1
10	A153 5803	Upper Bracket - DC Drive Board	1
11	AA04 3388	Timing Belt - 60S2M180	1
12	A212 1695	Tension Spring	5
13	A153 1700	Scanner Drive Motor - DC2.3V 13.5W	1
14	A212 1707	Tension Bracket - Long	2
15	AB03 0489	Timing Pulley - 22Z	2
16	A212 1710	Timing Pulley - 44Z	2
17	AB01 7129	Gear - 20Z And 72Z	1
18	AB01 7361	Gear - 24Z/56Z	2
19	A077 1690	Spring Plate - Mirror	10
20	AC03 0107	6th Mirror	1
21	A153 1952	Magnification Rail	1
22	A075 1766	Adjusting Cam	1
23	AB03 2059	Driven Pulley	2
24	A153 1947	Magnification Drive Unit Barcket	1
25	A153 5211	Mirror Drive Motor - DC24V 8.6V	1
26	AA05 0087	Lens Drive Wire - Vertical	1
27	A153 1923	6th Mirror Bracket	1
28	A153 1924	6th Mirror Plate	1
29	A153 1935	Lens Drive Bracket	1

Index No.	Part No.	Description	Q'ty Per Assembly
101	0573 0040E	Hexagon Headless Set Screw - M3x4	
102	0720 0040E	Retaining Ring - M4	
103	0434 0060B	Philips Tapping Screw - M4x6	
104	0951 4008B	Philips Screw With Washer - M4x8	
105	0574 0050E	Hexagon Headless Set Screw - M4x5	
106	0720 0060E	Retaining Ring - M6	
107	0740 3008	Ball Bearing - 8x22x7	
108	1105 0230	Clamp	
109	0951 4006B	Philips Screw With Washer - M4x6	
110	0433 0060W	Tapping Screw - M3x6	
111	0573 0100E	Hexagon Headless Set Screw - M3x10	

15.TONER SUPPLY UNIT (A212/A214)

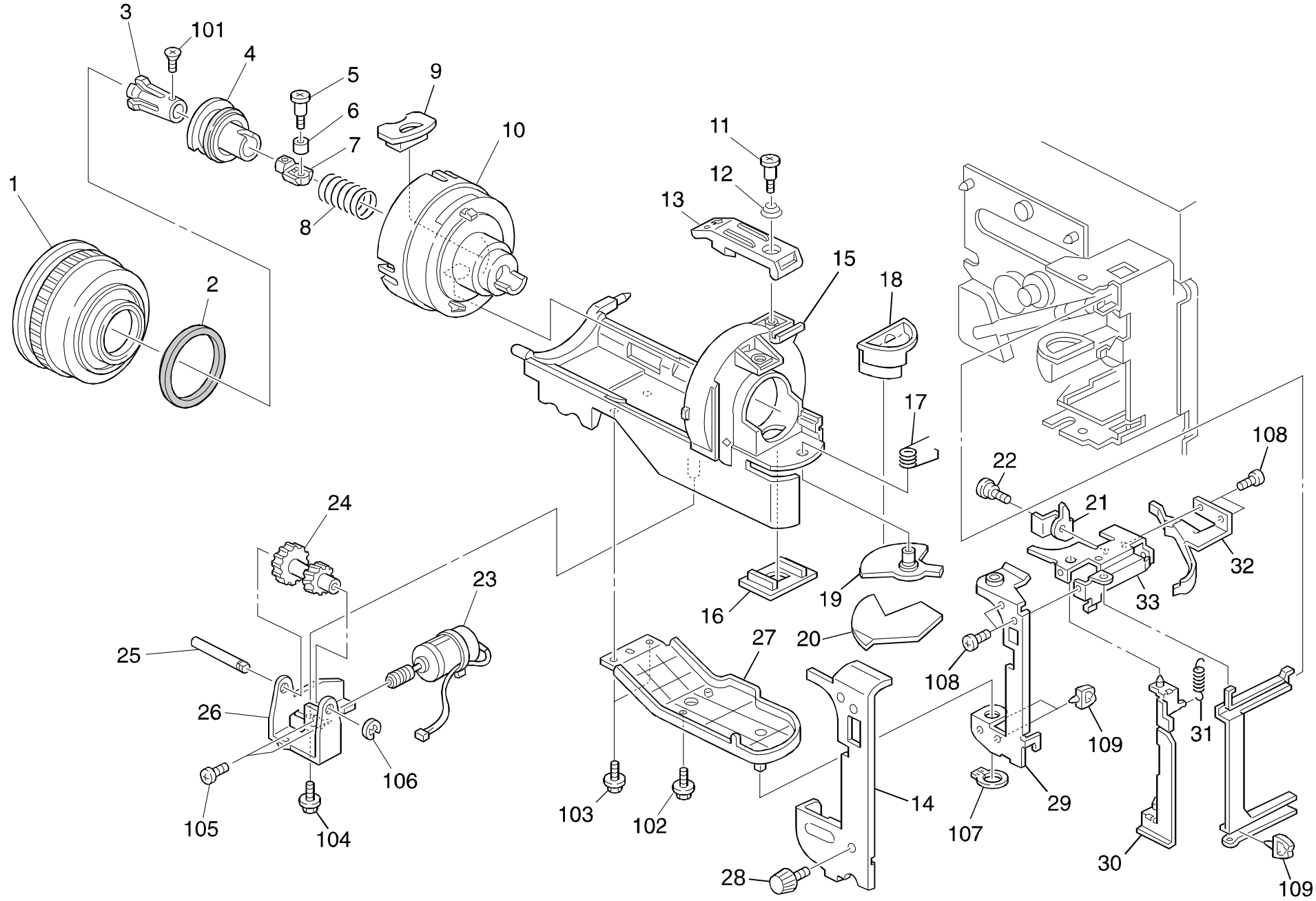

15.TONER SUPPLY UNIT (A212/A214)

Index No.	Part No.	Description	Q'ty Per Assembly
*	A212 3151	Toner Supply Unit (RIC-NA)	1
*	A212 3150	Toner Supply Unit (RIC-EU)	1
*	A212 3153	Toner Supply Unit (OEM/RIC-AA)	1
1	A212 3187	Toner Supply Gear (RIC-NA)	1
1	A212 3185	Toner Supply Gear (RIC-EU)	1
1	A212 3189	Toner Supply Gear (OEM/RIC-AA)	1
2	AA15 1894	Seal - 67x53x2	1
3	A134 3180	Bottle Chuck	1
4	A212 3177	Toner Slider	1
5	AA14 3712	Chuck Shaft	1
6	A134 3181	Chuck Roller	1
7	A212 3179	Chuck Shaft	1
8	A212 3073	Chuck Spring	1
9	A134 3215	Ruber Cap	1
10	A212 3190	Toner Bottle Stopper	1
11	AA14 3410	Stepped Screw - M4	1
12	AA06 3367	Pressure Spring	1
13	A212 3197	Bottle Holder	1
14	A212 3281	Bottle Bracket Cover	1
15	A212 3068	Toner Bottle Holder	1
16	A212 3173	Shutter Guide	1
17	A212 3078	Shutter Spring	1
18	A212 3174	Shutter Holder	1
19	A212 3172	Shutter	1
20	AA15 0377	Shutter Seal	1
21	A153 3265	Bottle Unit Lock Plate	1
22	AA14 3025	Stepped Screw - M3	1
23	A134 3162	Bottle Drive Motor	1
24	AB01 7347	Idle Gear	1
25	AA14 8413	Idle Gear Shaft	1
26	A134 3161	Bottle Drive Bracket	1
27	A212 3157	Bottole Holder Bracket	1
28	AA14 3459	Knob Serew	1
29	A153 3262	Bottle Unit Hinge	1
30	A153 3266	Bottle Unit Link Plate	1



Index No.	Part No.	Description	Q'ty Per Assembly
31	A212 3072	Relay Adjusting Spring	2
32	A134 3201	Cam - Toner Bottle	1
33	A153 3264	Bottle Unit Upper Hinge	1
101	0323 0060B	Philips Sunk Screw - M3x6	
102	0433 0050B	Tapping Screw - M3x5	
103	0802 5231	Tapping Screw - M3x6	
104	0802 5233	Tapping Screw - M3x10	
105	0800 0072	Philips Pan Head Screw - M2.6x4	
106	0720 0040E	Retaining Ring - M4	
107	0725 0100E	Retaining Ring C - M10	
108	0434 0060B	Philips Tapping Screw - M4x6	
109	1105 0199	Clamp	

16.DEVELOPMENT UNIT (A212/A214)

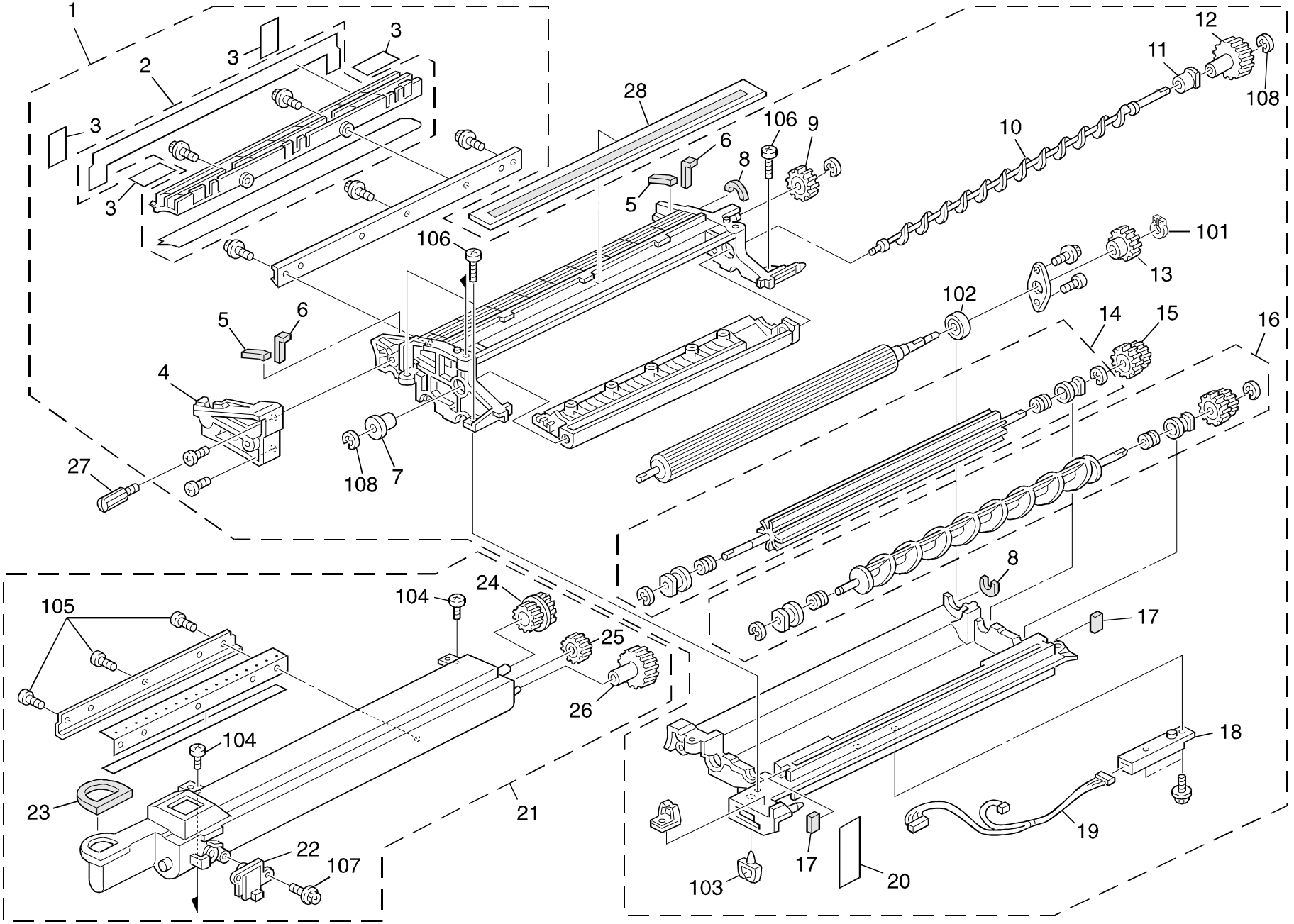

16.DEVELOPMENT UNIT (A212/A214)

Index No.	Part No.	Description	Q'ty Per Assembly
1	A212 3051	Development Unit	1
2	A153 3075	Entrance Seal	1
3	AA15 0382	Entrance Seal	1
4	A212 3090	Development Position Plate	1
5	AA15 1940	Left Upper Seal	1
6	AA15 1144	Shield - Guide Plate	1
7	AA08 0188	Bushing - 5mm	1
8	AA15 2136	Shield - Development Roller	1
9	AB01 3909	Idle Gear	1
10	A212 3079	Toner Collection Coil	1
11	AA08 0186	Bushing - 6mm	1
12	AB01 3911	Gear	1
13	AB01 3343	Gear - 22Z	1
14	A212 3063	Paddle Roller	1
15	AB01 7366	Paddle Gear	1
16	A153 3065	Right Paddle Roller	1
17	AA15 1941	Right Shield - Development Case	1
18	AW23 0008	ID Sensor	1
19	A153 5330	CT Harness - 7p	1
20	G012 3897	Relay Harness - Toner End Sensor	1
21	A212 3200	Toner Hopper Ass'y	1
22	AW23 0009	Toner End Sensor	1
23	AA15 1935	Seal - 38x32x2.5	1
24	A212 3057	Gear - 17Z	1
25	A212 3056	Coupled Gear - 15z/22z	1
26	A212 3058	Gear - 26Z	1
27	A153 3149	Knob Screw - M4x12	1
28	A204 3080	Development Filter	1

Index No.	Part No.	Description	Q'ty Per Assembly
101	0727 0090E	Retaining Ring C - M9	
102	0805 3415	Ball Bearing - 9x20x6	
103	1105 0199	Clamp	
104	0314 0060B	Philips Pan Head Screw - M4x6	
105	0802 5231	Binding Self-tapping Screw - M3x6	
106	0802 5238	Tapping Screw - M4x12	
107	0452 3010B	Tapping Bind Screw - M3x10	
108	0720 0040E	Retaining Ring - M4	

17.DRUM UNIT 1 (A212/A214)

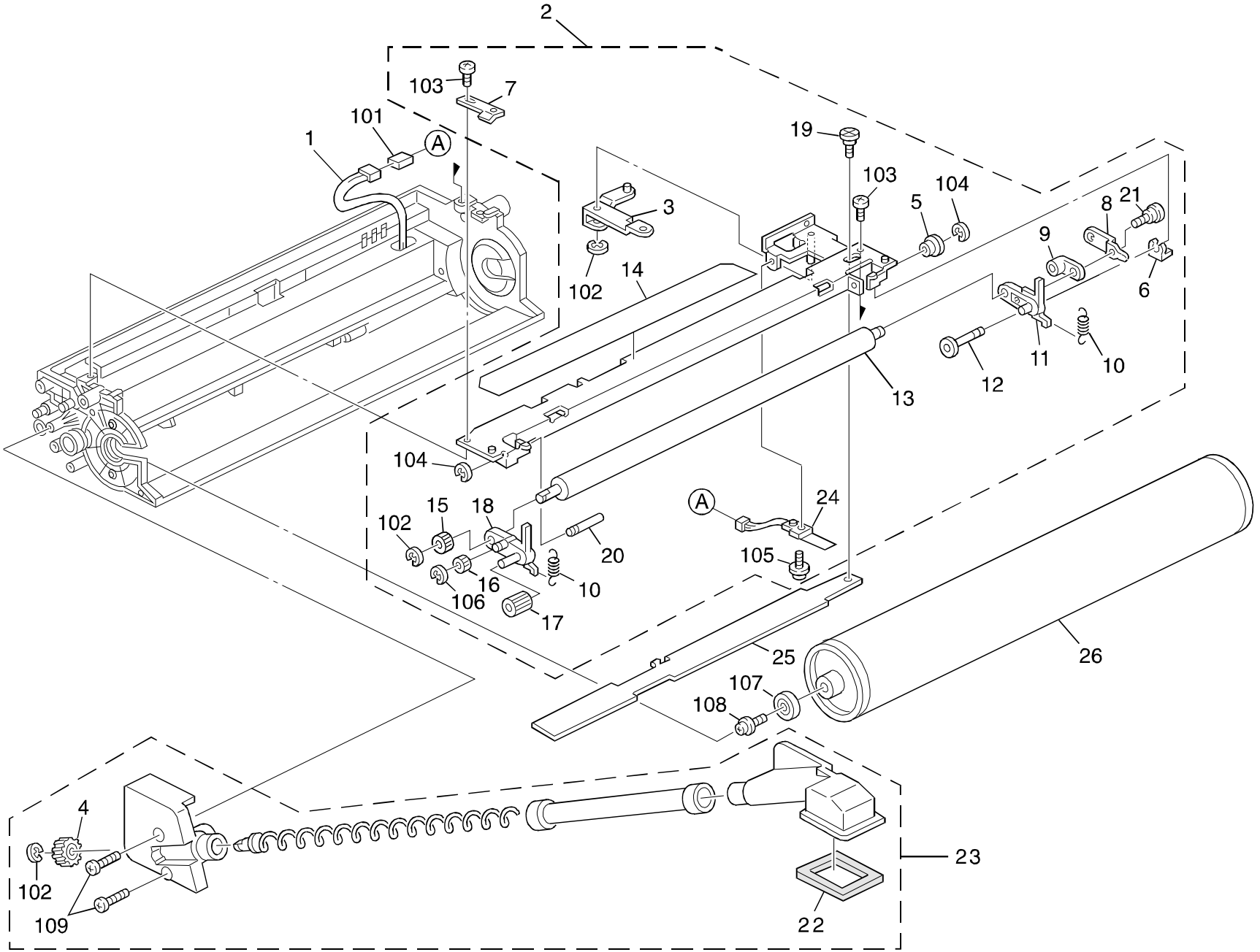

17.DRUM UNIT 1 (A212/A214)

Index No.	Part No.	Description	Q'ty Per Assembly
1	AZ48 0029	CT Harness	1
2	A212 2110	Charge Roller Ass'y	1
3	A153 2126	Swing Arm	1
4	AB01 1358	Driven Gear	1
5	A212 2351	Rear Roller Bushing	1
6	A077 1310	Snap Ring - M2	1
7	A153 2116	Grounding Plate	1
8	**A153 2135**	**Charge Roller Terminal Ass'y**	**1**
9	AA08 0197	Rear Roller Bushing	1
10	A212 2252	Pressure Roller Spring	2
11	A212 2352	Rear Roller Housing	1
12	AA14 5808	Rear Support Shaft	1
13	**AD02 7004**	**Charge Roller**	**1**
14	A153 2143	Shielding Plate	1
15	AB01 0348	Gear - 20Z	1
16	A212 2131	Idle Gear 14z	1
17	A212 2132	Idle Gear 20z	1
18	A212 2353	Gront Roller Bushint	1
19	AA14 3744	Stepped Screw	1
20	AA14 5794	Front Support Shaft	1
21	AA14 3730	Stepped Screw	1
22	AA15 1945	Joint Seal	1
23	A212 3580	Toner Collection Unit	1
24	AW10 0032	Thermistor - 25°C 10k Ω	1
25	**A204 2120**	**Drum Charge Roller Cleaner**	**1**
26	A153 9510	OPC Drum	1

Index No.	Part No.	Description	Q'ty Per Assembly
101	1102 6613	Relay Terminal - 2P	
102	0720 0040E	Retaining Ring - M4	
103	0313 0060B	Philips Pan Head Screw - M3x6	
104	0720 0015E	Retaining Ring - 1.5	
105	0951 3008B	Philips Screw With Flat Washer - M3x8	
106	0720 0020E	Retaining Ring - M2	
107	0805 3471	Bushing - M8x22x7	
108	0951 5010B	Philips Screw With Washer - M5x10	
109	0802 5233	Tapping Screw - M3x10	

18.DRUM UNIT 2 (A212/A214)

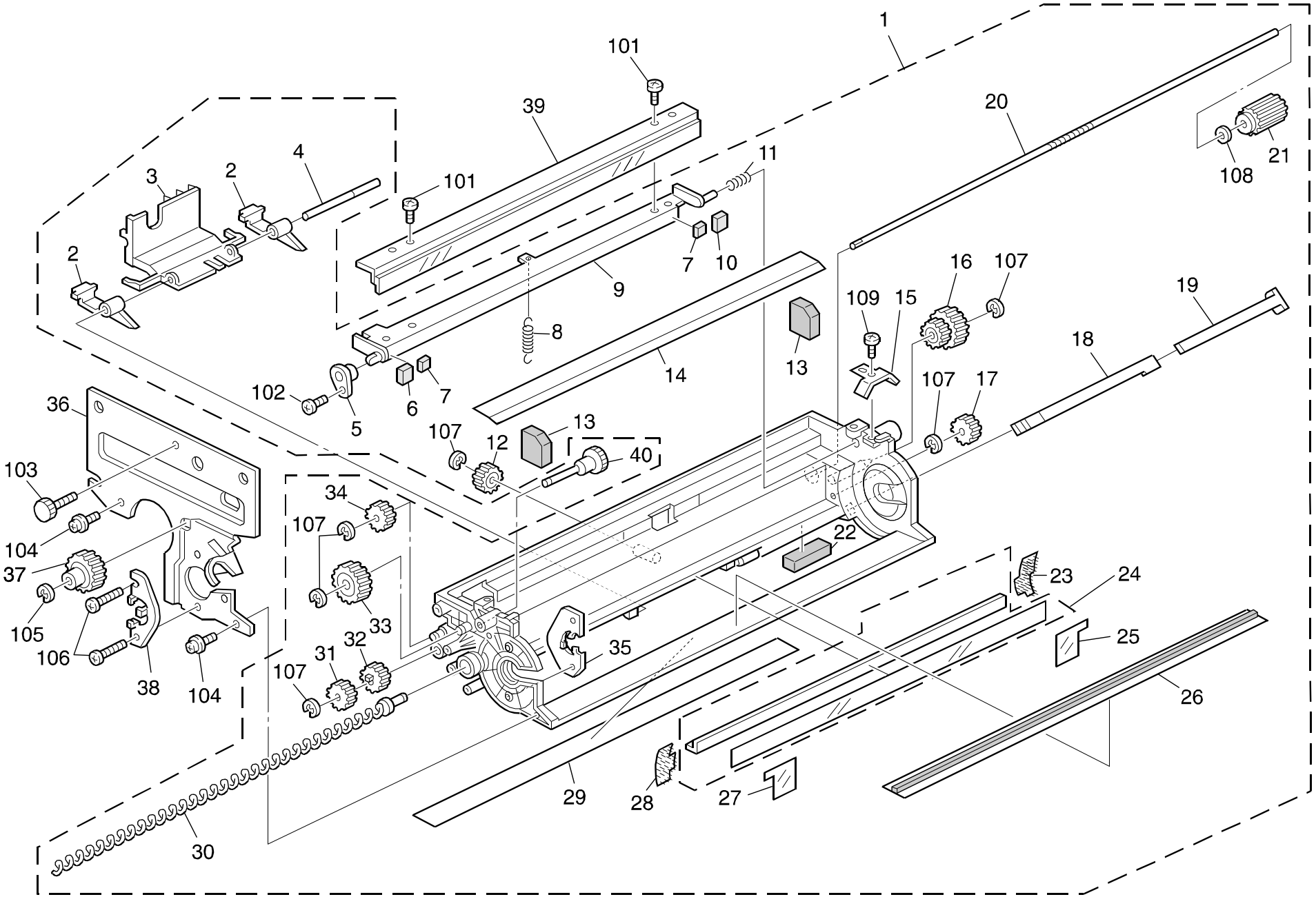

18.DRUM UNIT 2 (A212/A214)

Index No.	Part No.	Description	Q'ty Per Assembly
1	A212 2255	Drum Unit	1
2	**AD02 5019**	**Drum Pick-off Pawl**	**1**
3	A212 3595	Pick-off Pawl Retainer	1
4	AA14 0321	Pick-off Pawl Shaft	1
5	A204 3568	Rear Bushing	1
6	AA15 1943	Front Seal	1
7	AA15 1809	Rear Seal	1
8	A212 2251	Pressure Blade Spring	1
9	A153 3561	Cleaning Blade Bracket	1
10	AA15 1944	Rear Seal	1
11	A212 2354	Pad Pressure Spring	1
12	AB01 7376	Separation Pawl Cam	1
13	AA15 1942	Side Seal	1
14	A153 3558	Blade Seal	1
15	A153 3570	Spring Plate	1
16	AB01 7373	Idle Cam	1
17	AB01 1357	Collection Coil Gear	1
18	A212 5132	Density Sensor	1
19	A212 3590	ADS Plate	1
20	AA14 0560	Joint Shaft	1
21	AB01 1359	Joint Drive Gear	1
22	AA16 1107	Cushion	1
23	AA15 2246	Rear Drum Seal	1
24	A153 3555	Cleaning Entrance Seal	1
25	AA15 0381	Seal Rear Holder	1
26	AA15 0389	Drum Guide Seal	1
27	AA15 0380	Seal Front Holder	1
28	AA15 2245	Front Drum Seal	1
29	A153 3591	Mylar - 17x335	1
30	AD04 3035	Toner Collection Coil	1
31	AB01 7375	Drive Gear	1
32	AB01 7374	Drive Gear	1
33	AB01 7388	Blade Cam	1
34	AB01 1360	Idle Gear	1
35	A153 2303	Grounding Plate	1

Index No.	Part No.	Description	Q'ty Per Assembly
36	A153 2301	Front Stay	1
37	AB01 1361	Drive Gear	1
38	A153 2302	Drum Bearing Holder	1
39	**A153 2277**	**Cleaning Blade**	**1**
40	AB01 0341	Gear - 18Z	1
101	0314 0060B	Philips Pan Head Screw - M4x6	
102	0802 5233	Binding Self-tapping Screw - M3x10	
103	0803 0017	Knob Screw - M4x6.5	
104	0965 3010B	Tapping Screw - M3X10	
105	0720 0030E	Retaining Ring - M3	
106	0313 0080B	Philips Pan Head Screw - M3x8	
107	0720 0040E	Retaining Ring - M4	
108	0805 3384	Bushing - 5mm	
109	0971 3006A	Philips Polycarbonate Screw - M3x6	

19.TRANSFER UNIT (A212/A214)

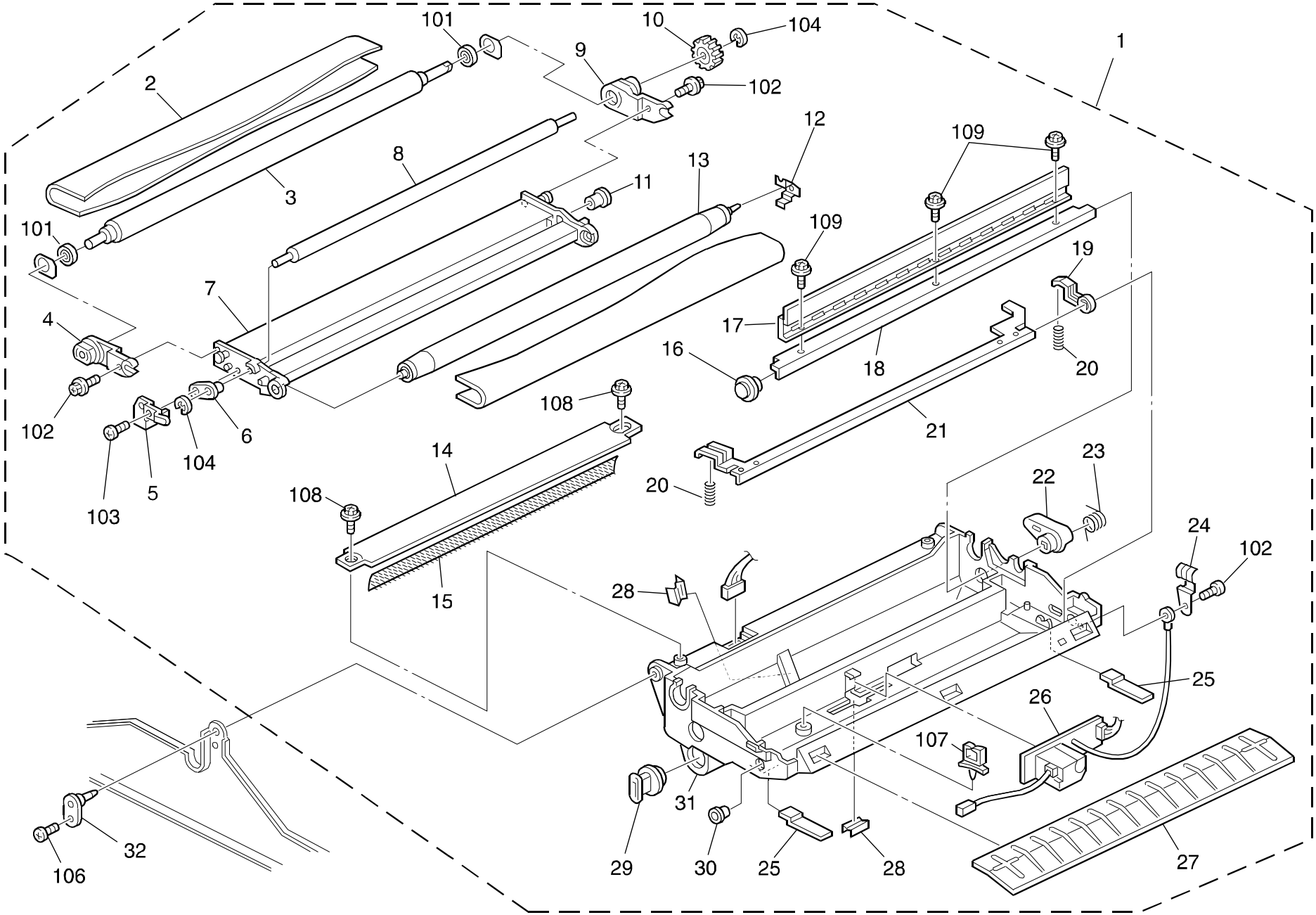

19.TRANSFER UNIT (A212/A214)

Index No.	Part No.	Description	Q'ty Per Assembly
1	A212 3850	Transfer Unit	1
2	**A157 3861**	**Transfer Belt**	**1**
3	A153 3866	Belt Drive Roller	1
4	A212 3863	Front Side Plate	1
5	A153 3873	Bias Roller Terminal	1
6	AA08 2061	Bias Roller Bushing - Front	1
7	A212 3862	Transfer Belt Frame	1
8	A153 3870	Transfer Bias Roller	1
9	A212 3876	Rear Side Plate	1
10	A212 3865	Belt Drive Gear - 25z	1
11	A212 3853	Bias Roller Bushing - Rear	1
12	A153 3874	Earth Terminal	1
13	A153 3865	Belt Drive Roller	1
14	A212 3884	Belt Guide Plate	1
15	AA15 2332	Seal - 9x351	1
16	A212 3894	Bushing	1
17	**A153 3892**	**Belt Cleaning Blade**	**1**
18	A153 3893	Belt Cleaning Stay	1
19	A212 3886	Belt Pressure Lever	1
20	A212 3851	Spring - T/S Unit	1
21	A212 3887	Belt Release Stay	1
22	A212 3895	Bushing	1
23	AA06 6247	Spring	1
24	A153 3888	Earth Plate	1
25	A153 3877	Spring Plate	1
26	AZ30 0041	Power Pack - Transfer Unit	1
27	A212 3901	Entrance Guide Plate	1
28	A153 3897	Harness Clamp	1
29	A212 3883	Toner Collection Cap	1
30	A212 3888	Earth Plate	1
31	A212 3882	Transfer Belt Casing	1
32	A157 3900	Support Plate	1

Index No.	Part No.	Description	Q'ty Per Assembly
101	0805 3485	Bushing - 8x12x3.5mm	
102	0443 0080B	Tapping Screw - M3x8	
103	0802 5232	Binding Self-tapping Screw - M3x8	
104	0720 0030E	Retaining Ring - M3	
105	0805 3490	Bushing - 5x10x4 mm	
106	0414 0080B	Binding Self-tapping Screw - M4x8	
107	1105 0196	Wire Clamp	
108	0965 3008B	Tapping Screw With Washer - M3x8	
109	0443 0060B	Hexagon Tapping Screw - M3x6	

20.FUSING UNIT 1 (A212/A214)

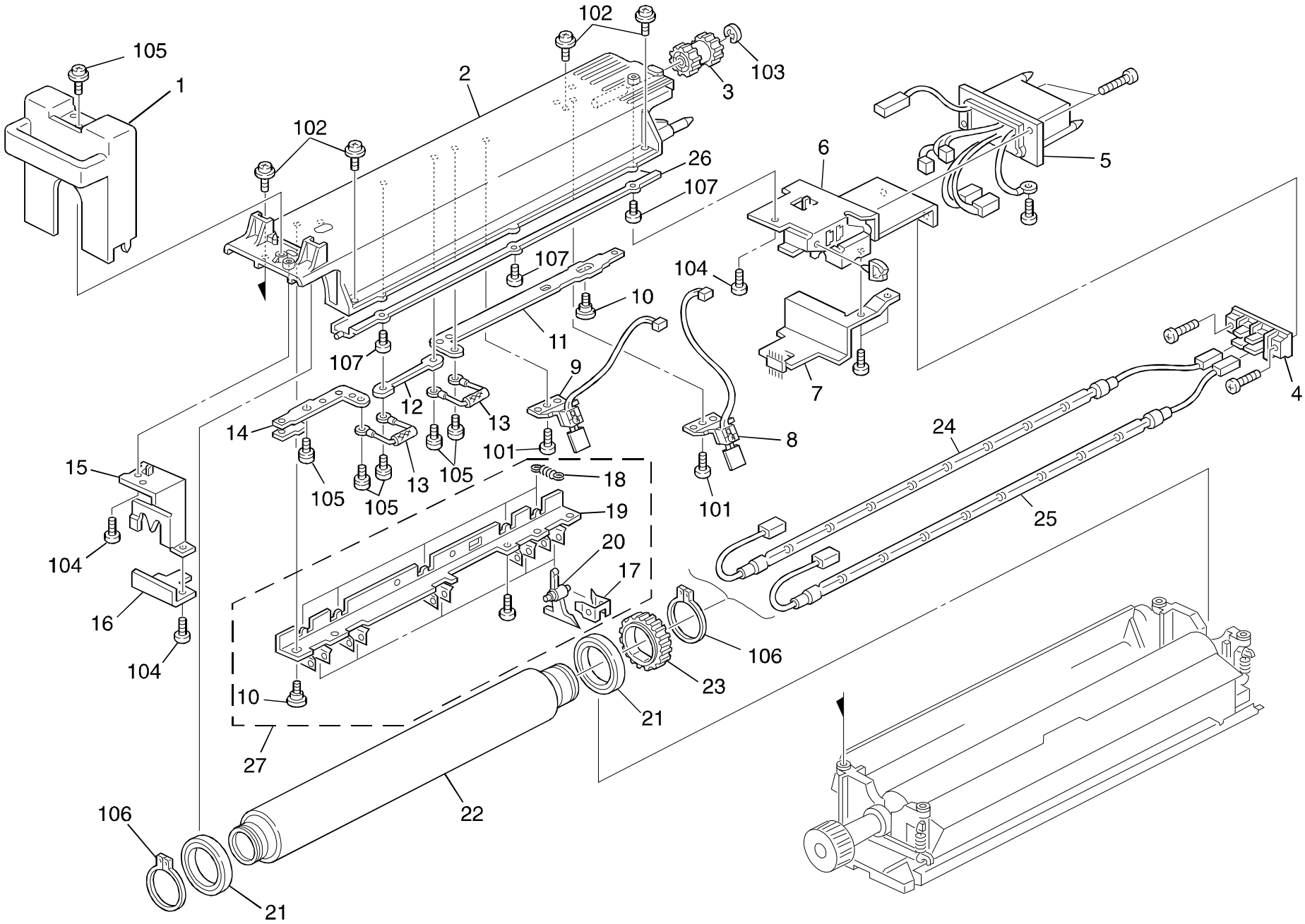

20.FUSING UNIT 1 (A212/A214)

Index No.	Part No.	Description	Q'ty Per Assembly
*	A212 4005	Fusing Unit (NA)	1
*	A212 4007	Fusing Unit (EU/ASIA/TWN)	1
1	A212 4130	Fusing Front Cover	1
2	A212 4053	Fusing Upper Stay	1
3	AB01 3883	Idle Gear - 25Z	1
4	A153 4074	Terminal Connector - 2p	1
5	A204 5300	Fusing Unit Connector - 115V	1
5	A204 5665	Fusing Unit Connector - 230V	1
6	A208 4084	Fusing Connector Bracket	1
7	A208 4102	Rear Lamp Terminal Holder	1
8	A153 4089	Thermister - 2	1
9	A153 4088	Thermister	1
10	AA14 3715	Stepped Screw - M5	2
11	A134 4061	Rear Terminal Plate	1
12	A153 4062	Electrode Plate - Middle	1
13	A153 5266	Thermofuse - 169°c	2
14	A153 4063	Front Terminal Plate	1
15	A153 4075	Front Holder	1
16	A153 4102	Front Lamp Terminal Holder	1
17	A153 4114	Stripper Stopper	5
18	A212 4103	Solenoid Spring	5
19	A153 4112	Stripper Bracket	1
20	**AE04 4019**	**Hot Roller Stripper**	**5**
21	AE03 0023	Bearing - 30x42x7mm	2
22	**AE01 1024**	**Hot Roller**	**1**
23	AB01 3882	Gear - 40Z	1
24	AX43 0023	Fusing Lamp - 120V 350W	1
24	AX43 0025	Fusing Lamp - 230V 350W	1
25	AX43 0030	Main Fusing Lamp - 120V 550W	1
25	AX43 0031	Main Fusing Lamp - 230V 550W	1
26	A153 4055	Upper Fusing Guide	1
27	A212 4110	Fuser Stripper Ass'y	1

Index No.	Part No.	Description	Q'ty Per Assembly
101	0954 3010B	Philips Screw - M3x10	
102	0954 4012B	Double Sems Screw - M4 X 12	
103	0720 0060E	Retaining Ring - M6	
104	0314 0060B	Philips Pan Head Screw - M4x6	
105	0950 4006M	Philips Screw With Flat Washer - M4x6	
106	0725 0300E	Retaining Ring C - M30	
107	0313 0050B	Philips Pan Head Screw - M3X5	

21.FUSING UNIT 2 (A212/A214)

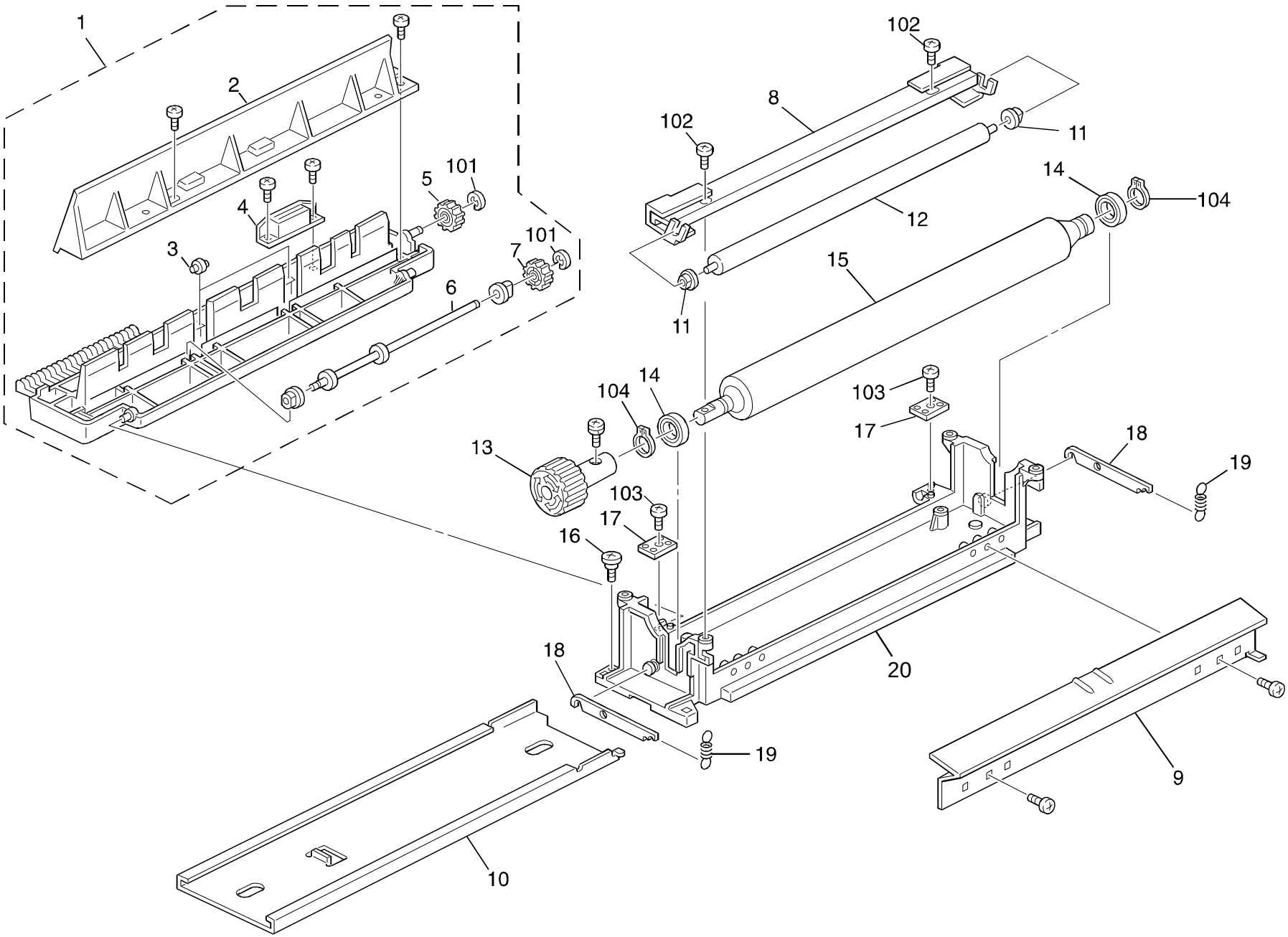

21.FUSING UNIT 2 (A212/A214)

Index No.	Part No.	Description	Q'ty Per Assembly
1	A212 4006	Fusing Exit Unit	1
2	A134 4280	Fusing Exit Guide - Lower	1
3	AF04 0548	Exit Driven Roller	1
4	AG07 0009	Magnetic Catch	1
5	AB01 3885	Idle Gear - 20z	1
6	A212 4326	Exit Roller Ass'y	1
7	AB01 3884	Exit Gear - 17z	1
8	A212 4205	Cleaning Roller Bracket	1
9	A153 4197	Lower Fusing Guide	1
10	A134 4153	Slide Rail - Fusing	1
11	AE03 1028	Bushing - 4mm	1
12	**AE04 2030**	**Cleaning Roller**	**1**
13	AG05 0076	Fusing Knob	1
14	AE03 0022	Bearing - 12x24x64m	1
15	**AE02 0050**	**Pressure Roller**	**1**
16	A077 4162	Shoulder Screw - M3	1
17	A212 4301	Exit Plate	1
18	A134 4161	Pressure Lever	1
19	A212 4459	Pressure Spring	1
20	A212 4151	Fusing Unit Frame	1

Index No.	Part No.	Description	Q'ty Per Assembly
101	0720 0040E	Retaining Ring - M4	
102	0414 0122B	Philips Tapping Screw - M4x12	
103	0434 0082B	Tapping Screw - M4x8	
104	0725 0120E	Retaining Ring C - M12	

22.DUPLEX TRAY 1 (A214)

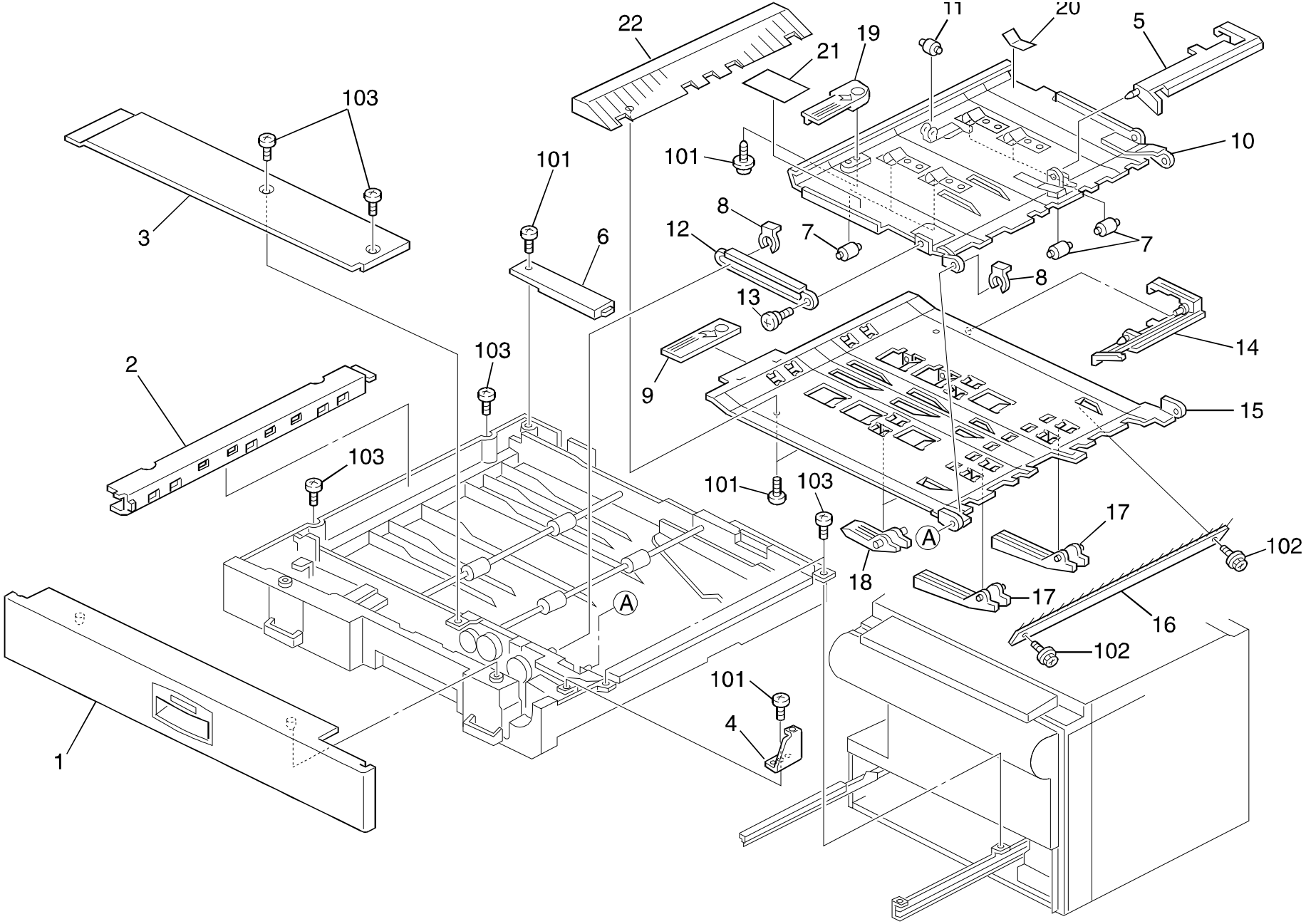

22.DUPLEX TRAY 1 (A214)

Index No.	Part No.	Description	Q'ty Per Assembly
1	A134 2956	Paper Feed Front Cover	2
2	A134 4720	End Fence Upper Cover	1
3	A134 4701	Front Upper Cover	1
4	A134 4712	Right Cover Bracket	1
5	A134 4728	Inverter Feeler	1
6	A134 4721	Connector Cover	1
7	AF02 2077	Driven Roller	7
8	5206 2686	Snap Ring	2
9	A134 4739	Lower Guide Plate Knob	1
10	A158 4607	Upper Guide Plate	1
11	AF04 0031	Upper Exit Roller	7
12	A134 4619	Guide Plate Link	1
13	5447 2768	Stepped Screw - M3	1
14	A134 4730	Entrance Feeler	1
15	A134 4740	Lower Guide Plate	1
16	AA12 0067	Anti Static Brush	1
17	A154 4616	Paper Holder	6
18	A158 4603	Paper Holder	2
19	A134 4726	Guide Plate Knob	1
20	AA16 2068	Guide Plate Pad	1
21	A134 4884	Decal - Duplex Misfeed Removal	1
22	A158 4604	Duplex Lower Guide	1

Index No.	Part No.	Description	Q'ty Per Assembly
101	0802 5236	Tapping Screw - M4x8	
102	0443 0060W	Hexagon Head Tapping Screw - M3x6	
103	0344 0080F	Philips Truss Head Screw - M4x8	

23.DUPLEX TRAY 2 (A214)

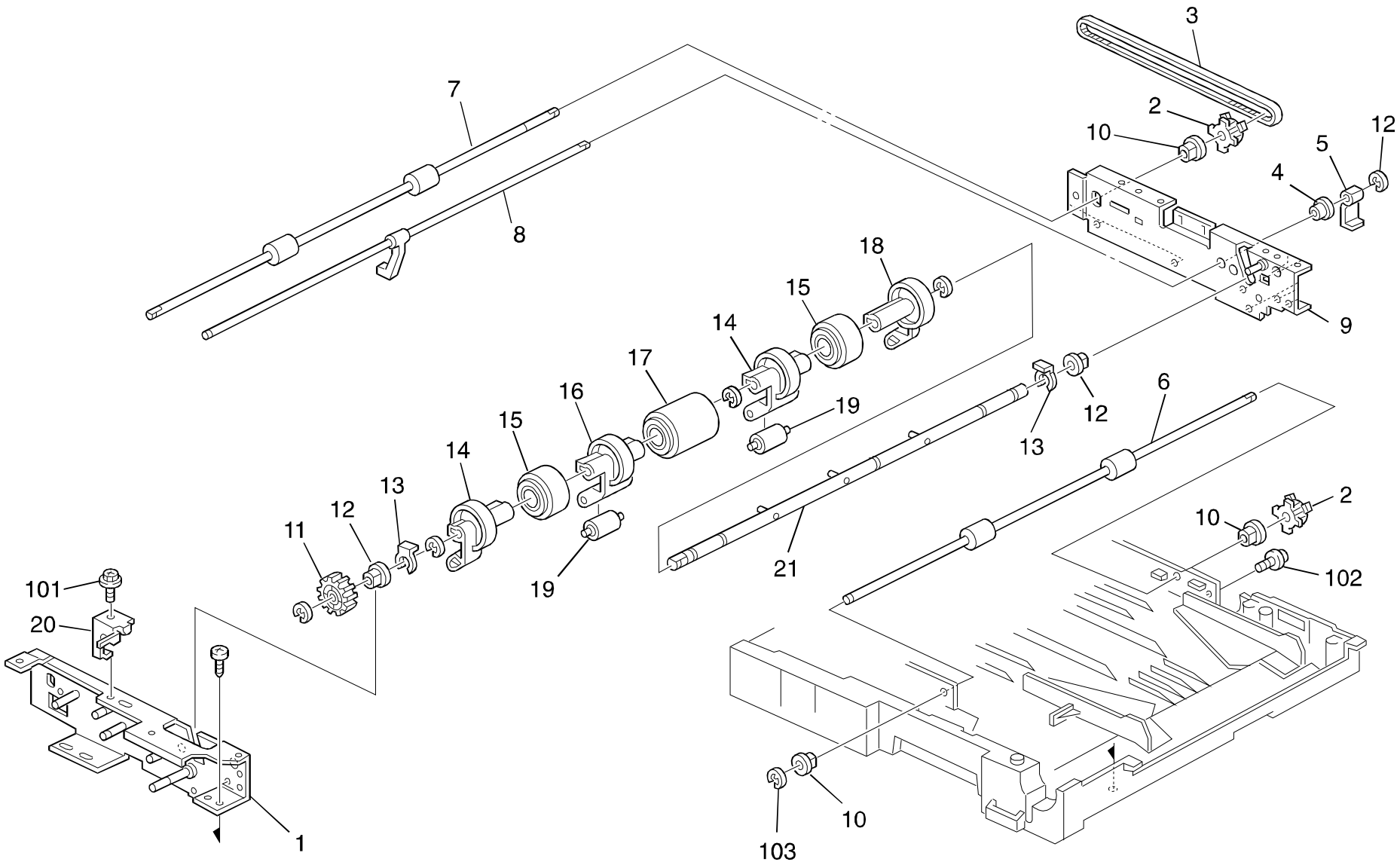

23.DUPLEX TRAY 2 (A214)

Index No.	Part No.	Description	Q'ty Per Assembly
1	A134 4751	Front Side Plate	1
2	AB03 0474	Pulley - 24Z	2
3	AA04 3390	Timing Belt - 40S2M192	1
4	5443 2668	Bushing - 4x6x7mm	2
5	AA11 1208	Paper End Sensor Feeler	1
6	AF02 0319	Transport Roller	1
7	AF02 0320	Right Transport Roller	1
8	A134 4676	Paper End Feeler	1
9	A134 4781	Rear Side Plate	1
10	5053 0447	Bushing - 6mm	4
11	AB01 1166	Gear - 33Z	1
12	5304 1639	Bushing - 8mm	2
13	5215 2621	Snap Ring - M6	3
14	A134 4809	Front Guide Holder	1
15	AF02 0317	Stack Roller	2
16	A134 4649	Paper Guide Holder	2
17	**AF03 1024**	**Feed Roller**	**1**
18	A134 4808	Rear Guide Holder	1
19	AF02 2077	Driven Roller	7
20	A134 4690	Clutch Stopper	1
21	A134 4512	Feed Roller Shaft	1

Index No.	Part No.	Description	Q'ty Per Assembly
101	0443 0060B	Hexagon Tapping Screw - M3x6	
102	0951 4008B	Philips Screw With Washer - M4x8	
103	0720 0040E	Retaining Ring - M4	

24.DUPLEX TRAY 3 (A214)

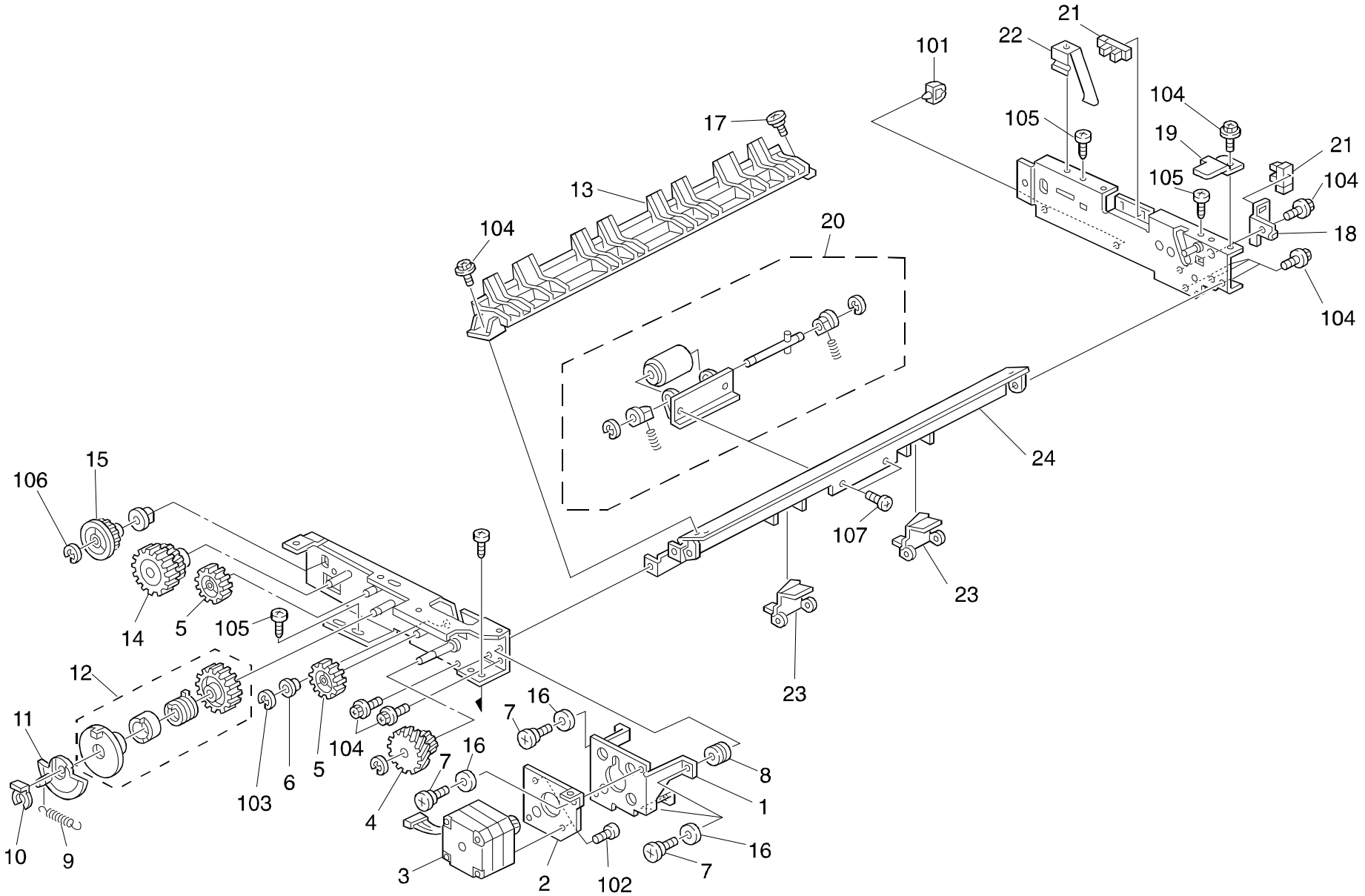

24.DUPLEX TRAY 3 (A214)

Index No.	Part No.	Description	Q'ty Per Assembly
1	A134 4799	Motor Bracket	1
2	A134 4800	Motor Bracket	1
3	A134 5290	Transport Drive Motor	1
4	AB01 7337	Gear - 15Z/55Z	1
5	AB01 1165	Gear - 32Z	2
6	5443 2668	Bushing - 4x6x7mm	2
7	A079 3626	Stepped Screw - Swing Cleaning	3
8	AA16 1067	Cushion - Motor	3
9	AA06 0593	Spring	1
10	5447 2681	Snap Ring	7
11	A334 4706	Disk - Bottom Plate Clutch	1
12	AB04 0015	Spring Clutch - Tray Bottom Plate	1
13	A134 4508	Inverter Guide Plate	1
14	AB01 7332	Gear - 24Z/41Z	1
15	AB01 1167	Gear - 25Z	1
16	AA13 2184	Motor Cushion	3
17	AA14 3307	Stepped Screw - M3x4	1
18	A134 4790	Paper End Sensor	1
19	A134 4804	Guide Plate Stopper	1
20	A134 4527	Separation Roller	1
21	AW02 0075	Photointerrupter	15
22	A134 4765	Grounding Plate	1
23	A134 4658	Vibrating Plate	2
24	A134 4662	Duplex Guide Plate	1

Index No.	Part No.	Description	Q'ty Per Assembly
101	1105 0199	Clamp	
102	0313 0050B	Philips Pan Head Screw - M3x5	
103	0720 0030E	Retaining Ring - M3	
104	0443 0060B	Hexagon Tapping Screw - M3x6	
105	0802 5236	Tapping Screw - M4x8	
106	0720 0040E	Retaining Ring - M4	
107	0434 0060B	Philips Tapping Screw - M4x6	

25.DUPLEX TRAY 4 (A214)

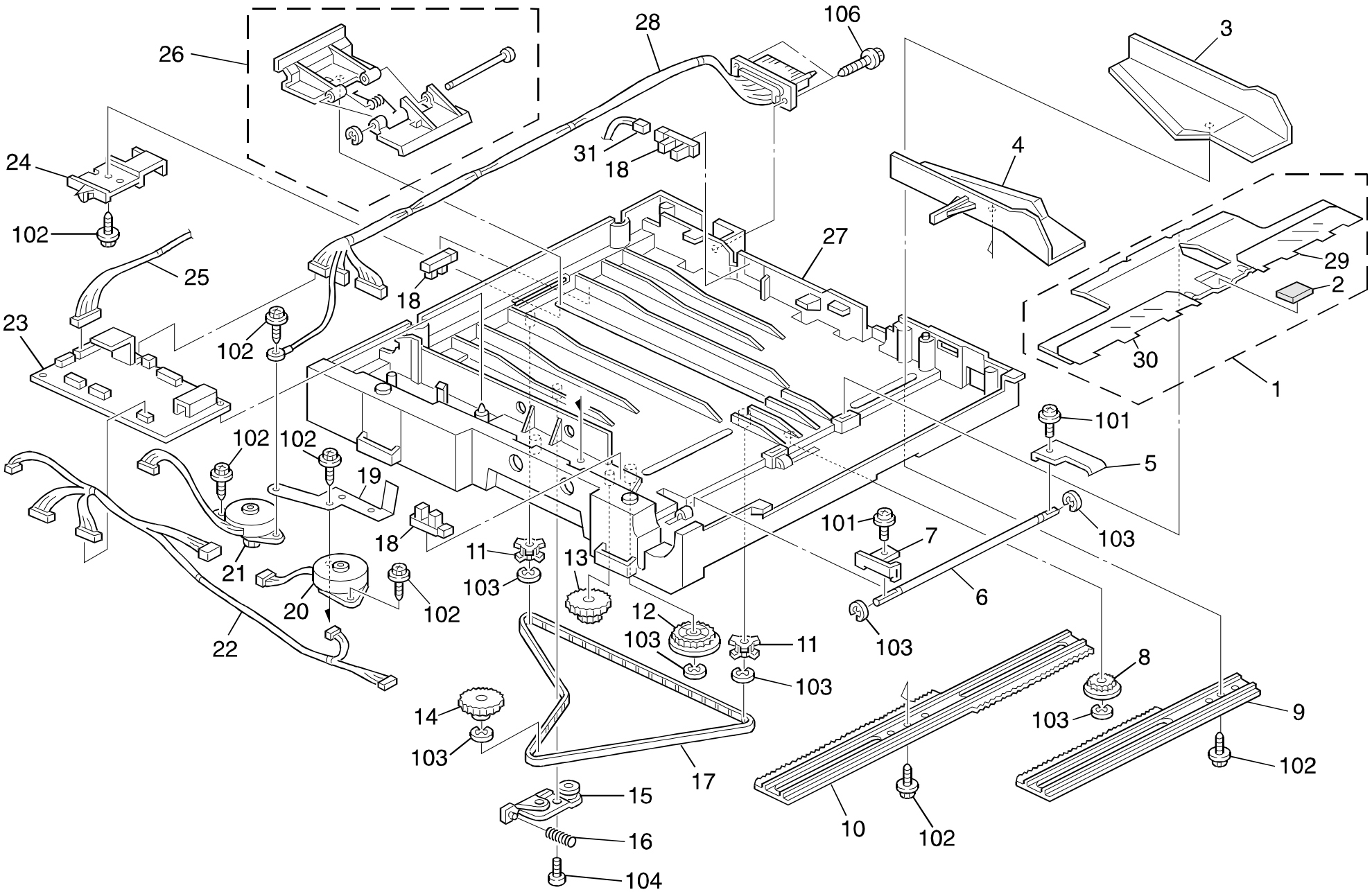

25.DUPLEX TRAY 4 (A214)

Index No.	Part No.	Description	Q'ty Per Assembly
1	A154 4620	Bottom Plate	1
2	**AF01 3003**	**Bottom Plate Pad - Duplex**	**1**
3	AF01 6160	Rear Side Fence	1
4	AF01 6161	Front Side Fence	1
5	A204 4651	Bottom Pressure Plate	1
6	AA14 0291	Bottom Plate Shaft	1
7	A491 4690	Bottom Plate Hook	1
8	G011 3305	Gear - 16T	2
9	A134 4689	Rear Side Fence Rack	1
10	A134 4688	Front Side Fence Rack	1
11	AB03 0473	End Fence Pulley - 22Z	2
12	AB01 3881	Gear - 31Z	1
13	AB01 7400	Gear- 18Z/68Z	1
14	AB01 7339	End Fence Gear - 22Z/58Z	1
15	A134 4714	Tightener	1
16	AA06 3370	Spring	1
17	AA04 3374	Timing Belt - S2M800	1
18	AW02 0075	Photointerrupter	15
19	A134 4620	Grounding Plate	1
20	A134 5291	Jogger Drive Motor - Side Fence	1
21	A134 5292	Jogger Drive Motor - End Fence	1
22	A134 5323	Motor Harness	1
23	A134 5254	Duplex Control Board	1
24	A134 4710	End Fence Actuator	1
25	A134 5321	Sensor Relay Harness	1
26	A134 4525	End Fence	1
27	AF01 0018	Duplex Tray	1
28	A134 5320	Toner Bottle Cam	1
29	A154 4622	Rear Guide Plate	1
30	A154 4621	Front Guide Plate	1
31	A134 5322	End Fence Harness	1

Index No.	Part No.	Description	Q'ty Per Assembly
101	0951 3006B	Philips Screw With Flat Washer - M3x6	
102	0802 5232	Tapping Screw - M3x8	
103	0720 0040E	Retaining Ring - M4	
104	0802 5236	Tapping Screw - M4x8	
105	0802 5234	Tapping Screw - M3x12	

26.PAPER EXIT SECTION (A214)

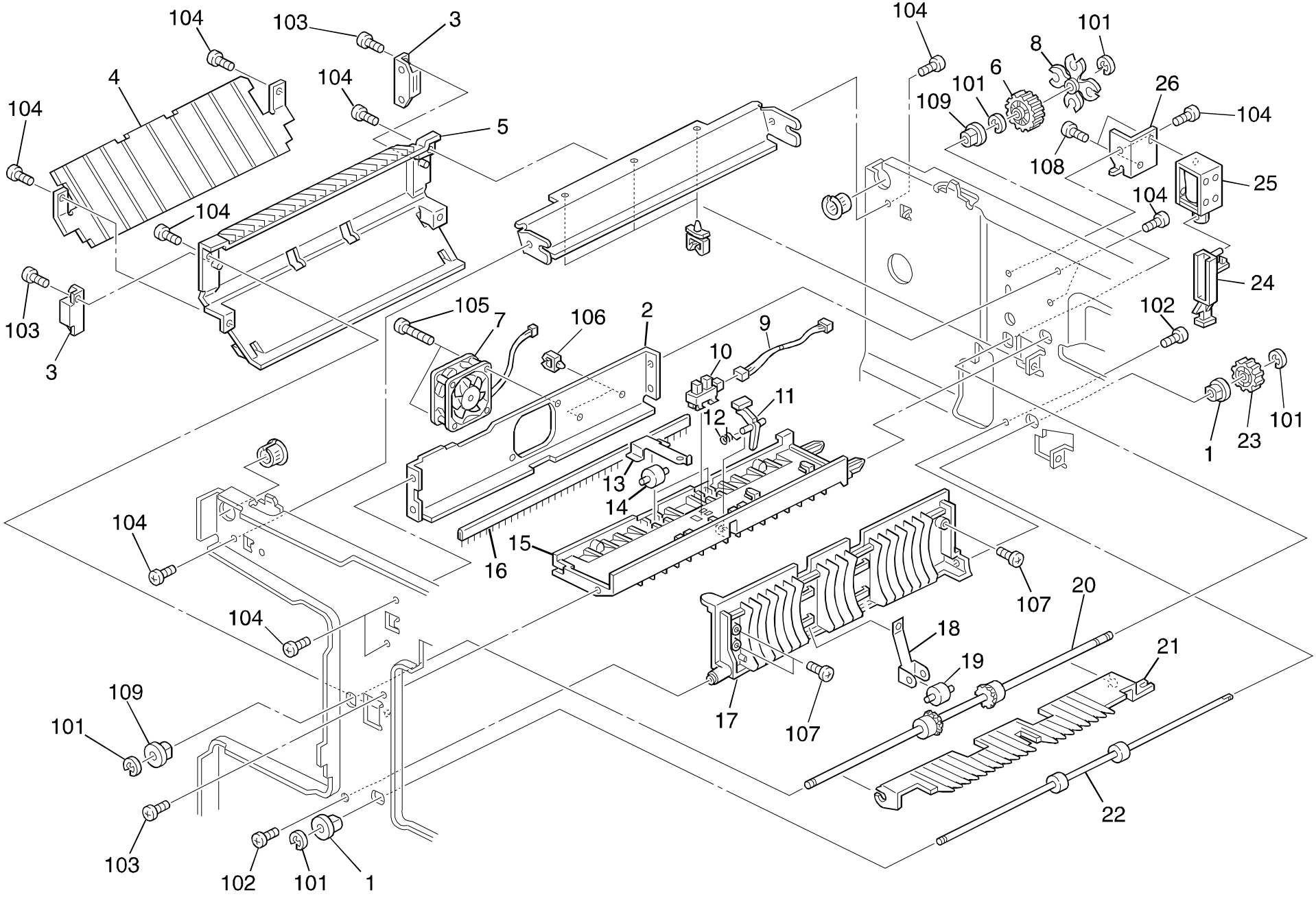

26.PAPER EXIT SECTION (A214)

Index No.	Part No.	Description	Q'ty Per Assembly
1	5053 0447	Bushing - 6mm	4
2	A157 1084	Morter Stay	1
3	AG07 0004	Magnetic Catch	6
4	A158 4452	Lower Reverse Guide Plate	1
5	A158 4451	Reverse Guide Plate	1
6	A212 4496	Gear - 24Z	1
7	AX64 0059	Fan Motor - DC24V 3.12W	2
8	A212 4495	Shift Clutch	1
9	A153 5328	CT Harness	1
10	AW02 0086	Photointerruptor	15
11	A157 4459	Paper Exit Feeler	1
12	AA06 6274	Spring	1
13	A157 4456	Spring Plate	2
14	AF02 2042	Middle Pressure Roller	2
15	A212 4450	Upper Guide Plate	1
16	AA12 0071	Exit Antistatic Brush	1
17	A158 4453	Exit Cover	1
18	A158 4459	Spring Plate	2
19	AF04 0031	Upper Exit Roller	7
20	AF02 0327	Exit Roller	1
21	AF02 5024	Pick-off Pawl	1
22	AF02 0336	Inverter Drive Roller	1
23	AB01 3106	Gear - Drive - Third - Z18	1
24	A158 4463	Pick-off Pawl Arm	1
25	AX12 0039	DC SOL 24V 400GF	1
26	A158 4467	Solenoid Bracket	1

Index No.	Part No.	Description	Q'ty Per Assembly
101	0720 0040E	Retaining Ring - M4	
102	0434 0080B	Philips Tapping Screw - M4x8	
103	0434 0082B	Tapping Screw - M4x8	
104	0434 0060B	Philips Tapping Screw - M4x6	
105	0353 0300B	Bind Screw - M3x30	
106	1105 0199	Clamp	
107	0802 5236	Tapping Screw - M4x8	
108	0313 0040B	Philips Pan Head Screw - M3x4	
109	0805 3480	Bushing - 6mm	

27.PAPER EXIT SECTION (A212)

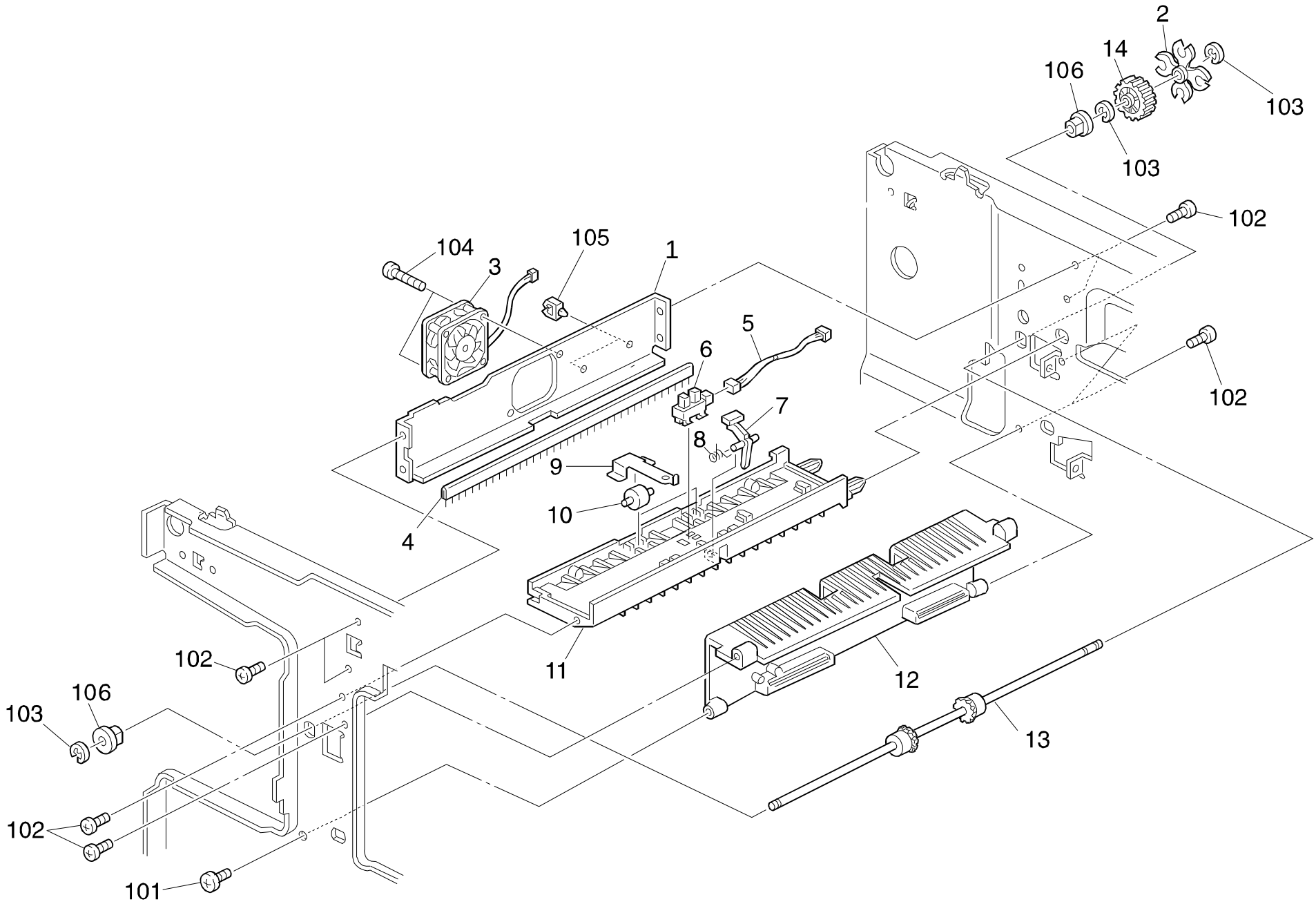

27.PAPER EXIT SECTION (A212)

Index No.	Part No.	Description	Q'ty Per Assembly
1	A157 1084	Moter Stay	1
2	A212 4495	Shift Clutch	1
3	AX64 0059	Fan Motor - DC24V 3.12W	2
4	AA12 0071	Exit Antistatic Brush	1
5	A153 5328	CT Harness	1
6	AW02 0075	Photointerrupter	15
7	A157 4459	Paper Exit Feeler	1
8	AA06 6274	Spring	1
9	A157 4456	Spring Plate	2
10	AF02 2042	Middle Pressure Roller	2
11	A212 4450	Upper Guide Plate	1
12	A212 4460	Exit Cover	1
13	AF02 0327	Exit Roller	1
14	A212 4496	Gear - 24Z	1
15	A470 1703	Shift Clutch	1

Index No.	Part No.	Description	Q'ty Per Assembly
101	0802 5236	Tapping Screw - M4x8	
102	0434 0060B	Philips Tapping Screw - M4x6	
103	0720 0040E	Retaining Ring - M4	
104	0353 0300B	Bind Screw - M3x30	
105	1105 0199	Clamp	
106	0805 3480	Bushing - 6mm	

28.DRIVE SECTION 1 (A212/A214)

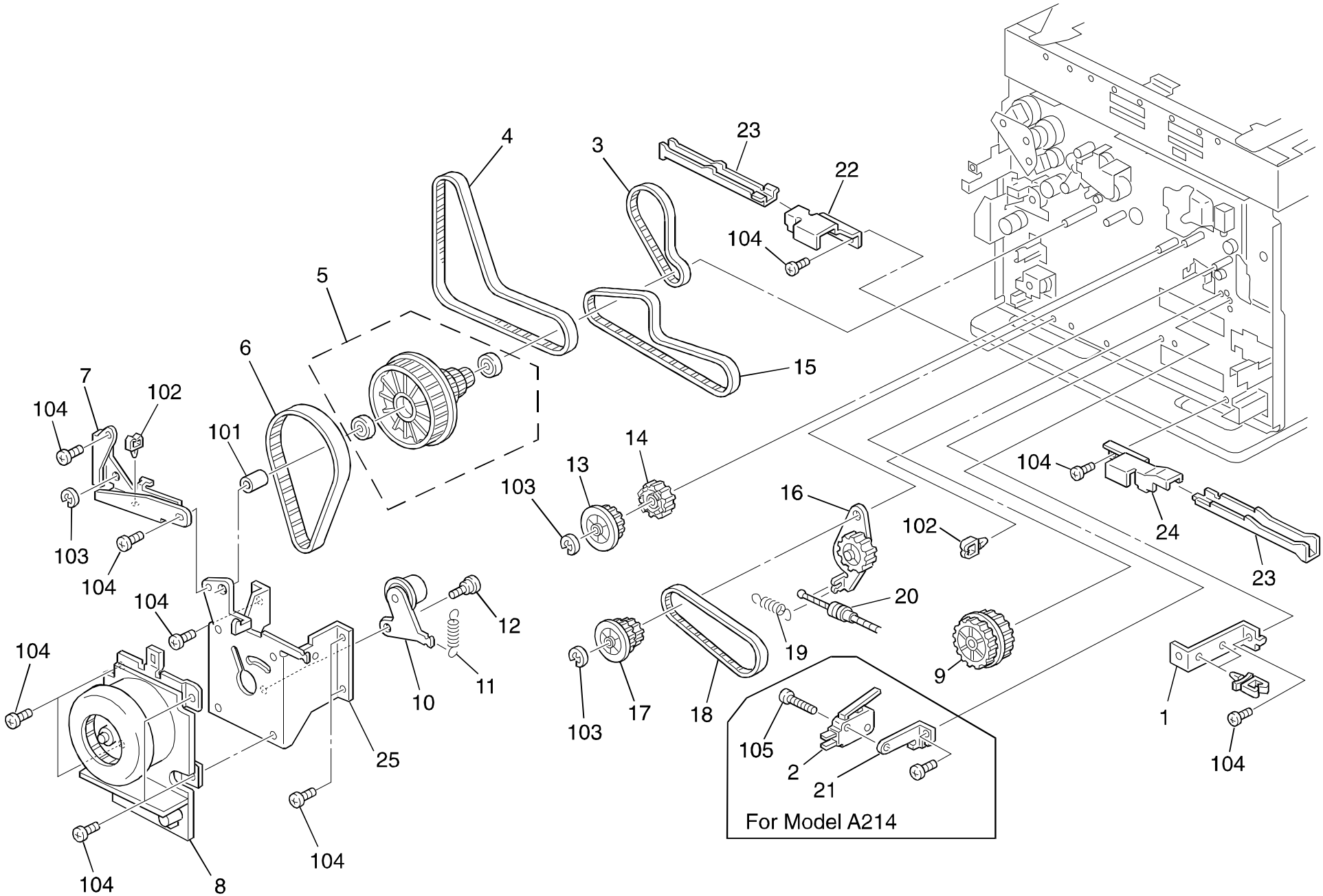

28.DRIVE SECTION 1 (A212/A214)

Index No.	Part No.	Description	Q'ty Per Assembly
1	A153 5802	Lower Bracket - DC Drive Board	1
2	1204 2356	Micro Switch - AM51612A531	1
3	AA04 3392	Drum Timing Belt	1
4	AA04 3420	Timing Belt - 80S3M519	1
5	AB03 0492	Pulley - 25/25/34/125Z	1
6	AA04 3391	Timing Belt - 160S2M328	1
7	A153 1131	Development Support Plate	1
8	AX06 0108	Motor - Dc24v 45w	1
9	AB01 7371	Exit Pulley	1
10	A153 1128	Tightener	1
11	AA06 0228	Spring - Transfer Drum Cleaning Sol	1
12	C105 2352	Stepped Screw - M6x1.7	1
13	AB03 0463	Fusing Cam Pulley	1
14	AB01 3872	Fusing Cam Gear - 28Z	1
15	AA04 3396	Timing Belt - 60S3M366	1
16	A134 1121	Joint Gear	1
17	AB01 7345	Timing Pulley - 35Z	1
18	AA04 3397	Timing Belt - 30S3M300	1
19	A212 1151	Tension Spring	2
20	AA05 1024	Release Wire	1
21	A158 4466	Switch Bracket	1
22	A134 1072	Right Bracket - Grip Plate	1
23	A134 1071	Left Grip Plate	2
24	A134 1073	Left Bracket - Grip Plate	1
25	A153 1107	Motor Bracket	1

Index No.	Part No.	Description	Q'ty Per Assembly
101	0707 8140B	Bushing - 8x14mm	
102	1105 0199	Clamp	
103	0720 0060E	Retaining Ring - M6	
104	0434 0060B	Philips Tapping Screw - M4x6	
105	0313 0140B	Philips Pan Head Screw - M3x14	

29.DRIVE SECTION 2 (A212/A214)

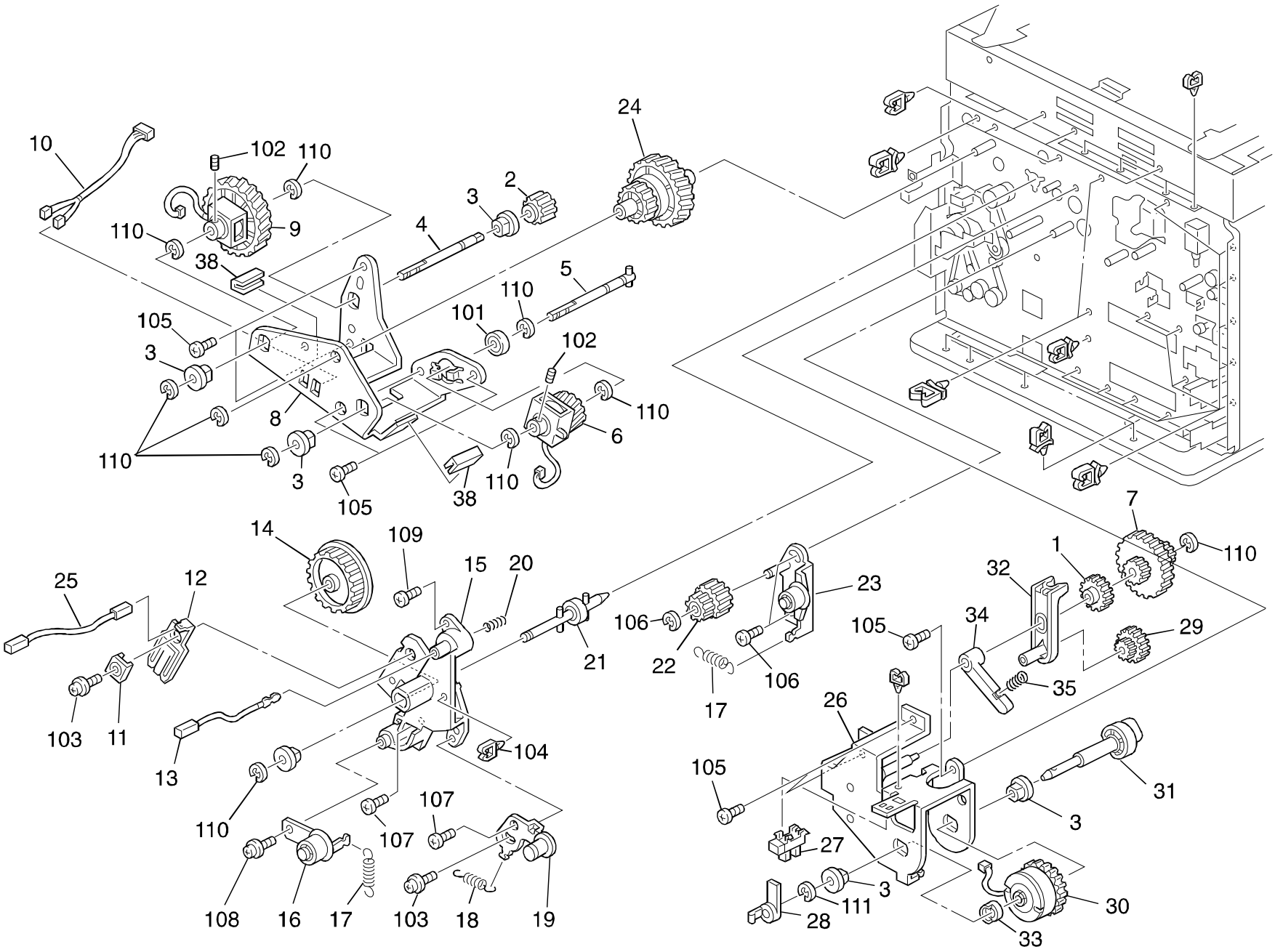

29.DRIVE SECTION 2 (A212/A214)

Index No.	Part No.	Description	Q'ty Per Assembly
1	AB01 7386	Cleaning Cam	1
2	AB01 3917	Toner Supply Gear	1
3	AA08 2047	Bushing - 8x16x7	9
4	AA14 5539	Solenoid Shaft	1
5	A153 1127	Clutch Shaft	1
6	AX20 0105	Magnetic Clutch - 15kgf 24Z	1
7	AB01 7368	Cleaning Drive Gear	1
8	A153 1125	Development Drive Bracket	1
9	AX20 0106	Magnetic Clutch - 15kgf 52Z	1
10	A153 5340	CT Harness	1
11	A212 3087	Terminal Cap	1
12	A153 3086	Bias Terminal	1
13	A153 2130	Receptacle Housing	1
14	AB03 0494	Drum Pulley	1
15	A153 1112	Drive Gear Holder	1
16	A153 1132	Development Tightener	1
17	A212 1151	Tension Spring	3
18	A212 1111	Spring Cover	2
19	A153 1135	Drum Drive Tightener	1
20	AA06 3552	Pressure Spring	1
21	A153 1117	Drum Drive Shaft	1
22	AB01 7369	Transfer Belt Pulley	1
23	A157 1111	Belt Tightener	1
24	AB01 7370	Development Pulley	1
25	AZ43 0020	High Voltage Supply Coard	1
26	A204 3915	Magnet Clutch Bracket	1
27	AW02 0086	Photointerrupter	15
28	A212 3914	Magnetic Clutch Feeler	1
29	AB01 7385	Gear - 17Z/24Z	1
30	AX21 0059	Spring Clutch	1
31	A204 3911	Cam Shaft	1
32	A212 2142	Cam Lever	1
33	A204 3922	Brake Cam	1
34	A204 3921	Clutch Arm	1
35	A212 3851	Spring - T/S Unit	1

Index No.	Part No.	Description	Q'ty Per Assembly
101	0740 3008	Ball Bearing - 8x22x7	
102	0573 0040E	Hexagon Headless Set Screw - M3x4	
103	0951 4012B	Philips Screw With Flat Washer	
104	1105 0199	Clamp	
105	0434 0060B	Philips Tapping Screw - M4x6	
106	0414 0080B	Tapping Screw - M4x8	
107	0802 5236	Tapping Screw - M4x8	
108	0802 5221	Tapping Screw - M3x10	
109	0952 4008B	Sem's Screw - M4x8	
110	0720 0060E	Retaining Ring - M6	
111	0720 0060	Retaining Ring - M6	

30.DRIVE SECTION 3 (A212/A214)

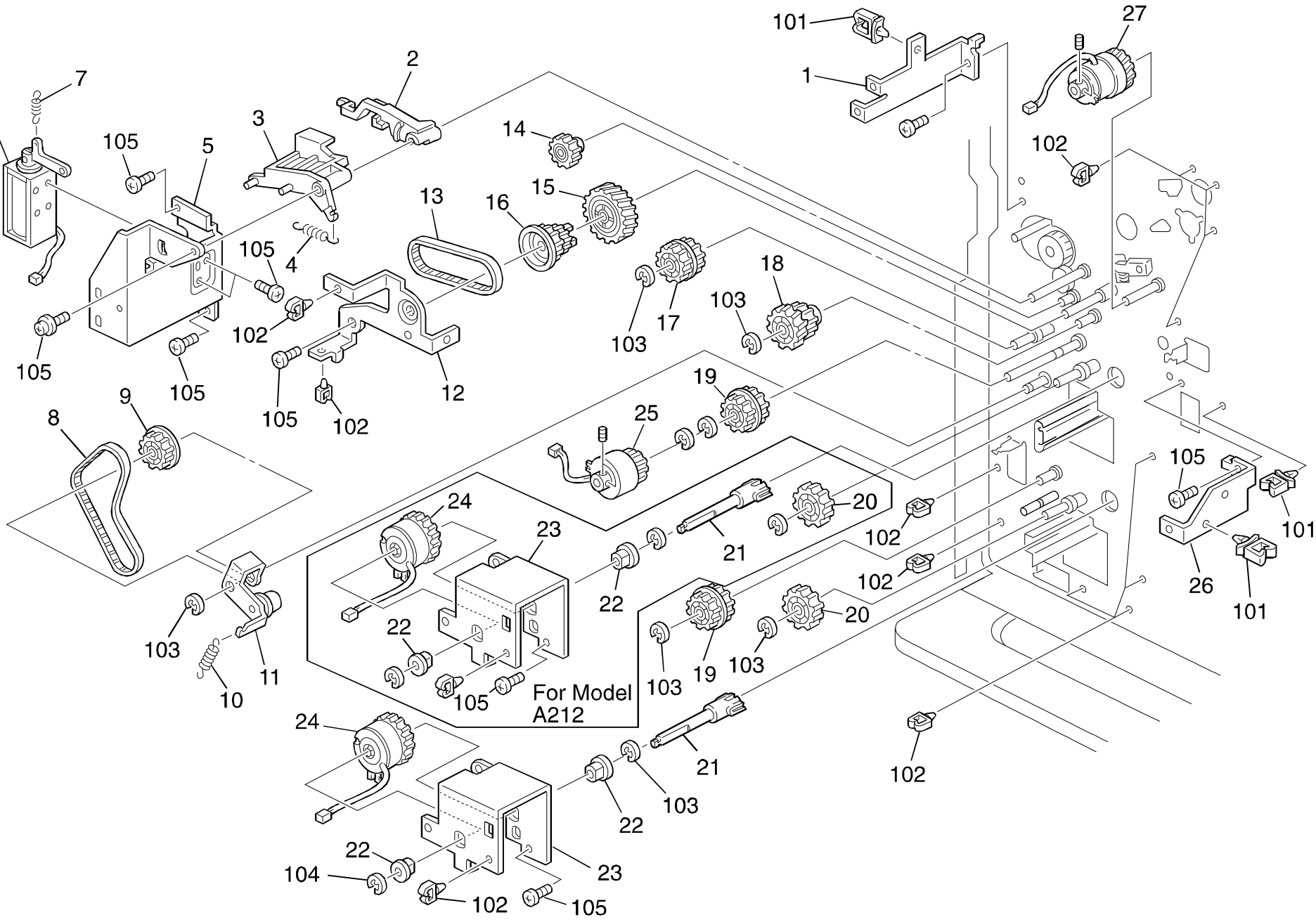

30.DRIVE SECTION 3 (A212/A214)

Index No.	Part No.	Description	Q'ty Per Assembly
1	A153 5813	Main Control Board Bracket	1
2	A134 2679	Pick-up Lever	1
3	A134 2678	Solenoid Link (A212)	1
3	A155 2677	Pick-up Link (A214)	1
4	A212 2673	Release Spring	1
5	A134 2676	Solenoid Bracket (A212)	1
5	A155 2675	Pick-up Bracket (A214)	1
6	A134 2680	DC Solenoid	1
7	A212 2672	Pressure Spring	1
8	A212 2531	Timing Belt - S3M 300	1
9	AB03 0491	Timing Pulley - 25Z	1
10	A212 3072	Relay Adjusting Spring	2
11	A212 2564	Tightener	1
12	A157 2560	Paper Feed Support Plate	1
13	AA04 3389	Timing Belt - 60S3M201	1
14	AB01 1153	Idle Gear - 25Z	1
15	AB01 3918	Drive Gear - 35Z	1
16	AB03 3064	Drive Pulley	1
17	AB01 7395	Timing Pulley	1
18	AB01 7377	Gear - 25Z	1
19	AB01 7394	Timing Pulley - 24T/20Z	2
20	AB01 3908	Gear - 27Z	1
21	A212 2584	Paper Feed Drive Shaft	1
22	AA08 2047	Bushing - 8x16x7	9
23	A212 2562	Solenoid Bracket	1
24	AX21 0058	Magnetic Clutch - 42z	1
25	AX20 0107	Magnetic Clutch - 10kgf 25Z	1
26	A153 5812	Left Lower Bracket	1
27	AX20 0109	Magnetic Clutch - 10kgf.cm 35Z	1

Index No.	Part No.	Description	Q'ty Per Assembly
101	1105 0192	Locking Support	
102	1105 0199	Clamp	
103	0720 0060E	Retaining Ring - M6	
104	0720 0040E	Retaining Ring - M4	
105	0434 0060B	Pan Head Self-tapping Screw - M4x6	

31.ELECTRICAL SECTION 1 (A212/A214)

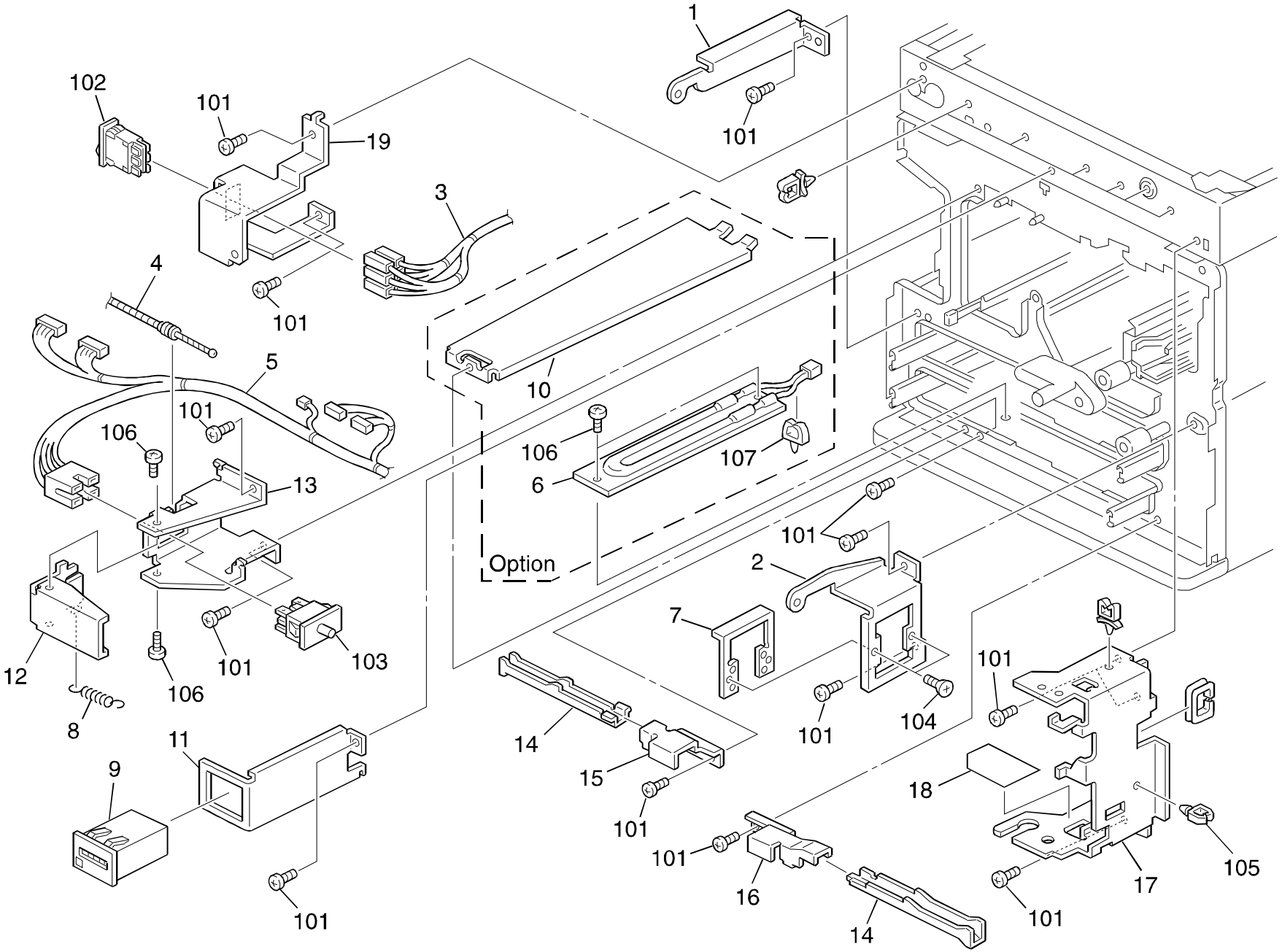

31.ELECTRICAL SECTION 1 (A212/A214)

Index No.	Part No.	Description	Q'ty Per Assembly
1	A153 1353	Front Cover Hinge	1
2	A153 1355	Key Counter Bracket	1
3	A212 5661	AC Main Harness	1
4	AA05 1024	Release Wire	1
5	A212 5520	Front Right Harness (NA)	1
5	A212 5320	Front Right Harness (EU/ASIA/TWN)	1
6	AX40 0021	Tray Anticondensation Heater - 115V 18W (Option)	1
6	AX40 0022	Tray Anticondensation Heater - 240V 18W (Option)	1
7	5446 1239	Plate Nut - Key Counter	1
8	A212 4467	Spring - Stripper Pawl Release	2
9	AX31 0024	Total Counter	1
10	A134 2947	Heater Cover (Option)	1
11	A212 5820	Total Counter Bracket	1
12	A153 5809	Arm Interlock SW	1
13	A153 5808	Bracket - Safety Switch	1
14	A134 1071	Left Grip Plate	2
15	A134 1072	Right Bracket - Grip Plate	1
16	A134 1073	Left Bracket - Grip Plate	1
17	A212 3270	Stay - Toner Supply	1
18	A212 3071	Deveropper Rail Seal	1
19	A212 5814	Main Switch Bracket (NA)	1
19	A212 5804	Main Switch Bracket (EU/ASIA/TWN)	1



Index No.	Part No.	Description	Q'ty Per Assembly
101	0434 0060B	Philips Tapping Screw - M4x6	
102	1204 2444	Main Switch (NA)	
102	1204 1545	Main Switch (EU/ASIA/TWN)	
103	1204 2397	Safety Switch	
104	0323 0080B	Philips Sunk Screw - M3x8	
105	1105 0229	Clamp	
106	0314 0060B	Philips Pan Head Screw - M4x6	
107	1105 0231	Clamp	

32.ELECTRICAL SECTION 2 (A212/A214)

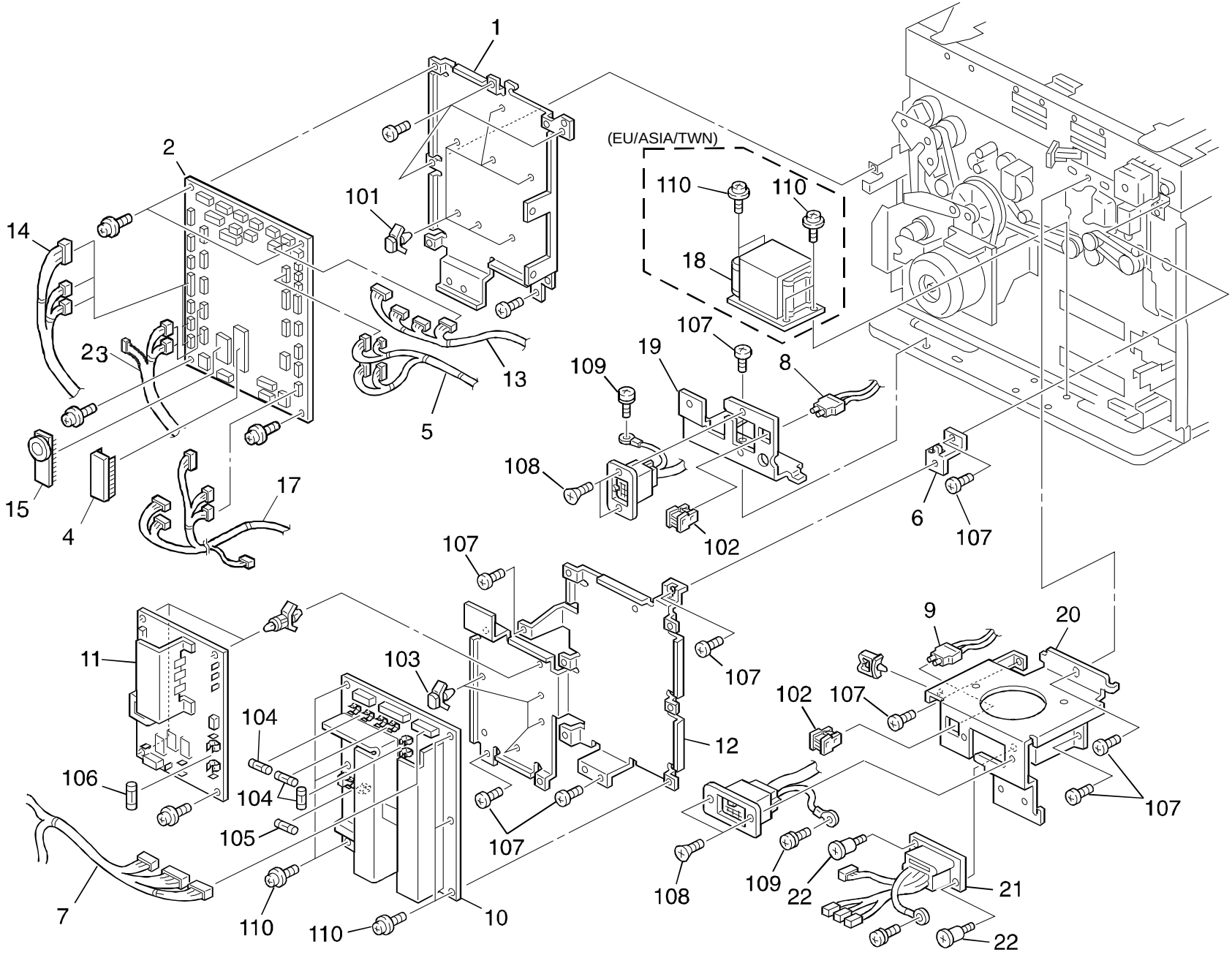

32.ELECTRICAL SECTION 2 (A212/A214)

Index No.	Part No.	Description	Q'ty Per Assembly
1	A212 5811	Main Control Board Bracket	1
2	A212 5101	Main Control Board (NA)	1
2	A212 5201	Main Control Board (EU/ASIA/TWN)	1
4	A212 5103	IC - 4MX16 - 120NS	1
5	A212 5319	Rear Upper Harness	1
6	A153 5803	Upper Bracket - DC Drive Board	1
7	A153 5344	Power Supply Harness - 2trays (A212)(NA)	1
7	A153 5644	Power Supply Harness - 2trays (A212) (EU/ASIA/TWN)	1
7	A158 5343	Duplex Power Supply Harness (A214)(NA)	1
7	A160 5643	Duplex Power Supply Harness (A214) (EU/ASIA/TWN)	1
8	AW03 0055	Optical Fiber - 420mm	1
9	AW03 0054	Optical Fiber - 250mm	1
10	AZ23 0055	DC Drive Board - 100/120V (NA)	1
10	AZ23 0060	DC Drive Board - 220V/240V (EU/ASIA/TWN)	1
11	A153 5545	AC Drive Board - 120V (NA)	1
11	A153 5645	AC Drive Board (230V)(EU/AISA/TWN)	1
12	A153 5801	DC Drive Board Bracket	1
13	A212 5312	Optical Harness	1
14	A212 5316	Paper Feed Harness -2trays (A212)	1
14	A158 5310	Duplex Paper Feed Harness (A214)	1
15	A153 5114	RAM Board	1
17	A157 5311	Rear Lower Harness - 2tray (A212)	1
17	A214 5309	Rear Lower Harness - Duplex (A214)	1
18	AZ13 0023	Transformer - 230V	1
19	A153 5806	Bracket Paper Tray Unit	1
20	A212 5807	Bracket Ardf	1
21	A204 5326	Fusing Relay Harness	1
22	AA14 3301	Stepped Screw - M3x4	2
23	A155 5314	LCT Relay Harness	1

Index No.	Part No.	Description	Q'ty Per Assembly
101	1105 0367	Spacer	
102	1102 4052	Optional Connector	
103	1105 0409	Spacer	
104	1107 0392	Fuse (Glass Case) - 6.3A - 125V (NA)	
104	1107 0752	Fuse (Glass Case) - 5A - 250V (EU/AISA/TWN)	
105	1107 0393	Fuse (Glass Case) - 8A - 125V (NA)	
105	1107 0753	Fuse (Glass Case) - 6.3A - 250V (EU/AISA/TWN)	
106	1107 0753	Fuse (Glass Case) - 6.3A - 250V (EU/AISA/TWN)	
106	1107 0554	Fuse (Glass Case) - 17A - 125V (NA)	
107	0434 0060B	Philips Tapping Screw - M4x6	
108	0323 0060B	Philips Sunk Screw - M3x6	
109	0801 0137	Philips Pan Head Screw With Spring	
110	0951 3006B	Philips Screw With Flat Washer - M3x6	

33.ELECTRICAL SECTION 3 (A212/A214)

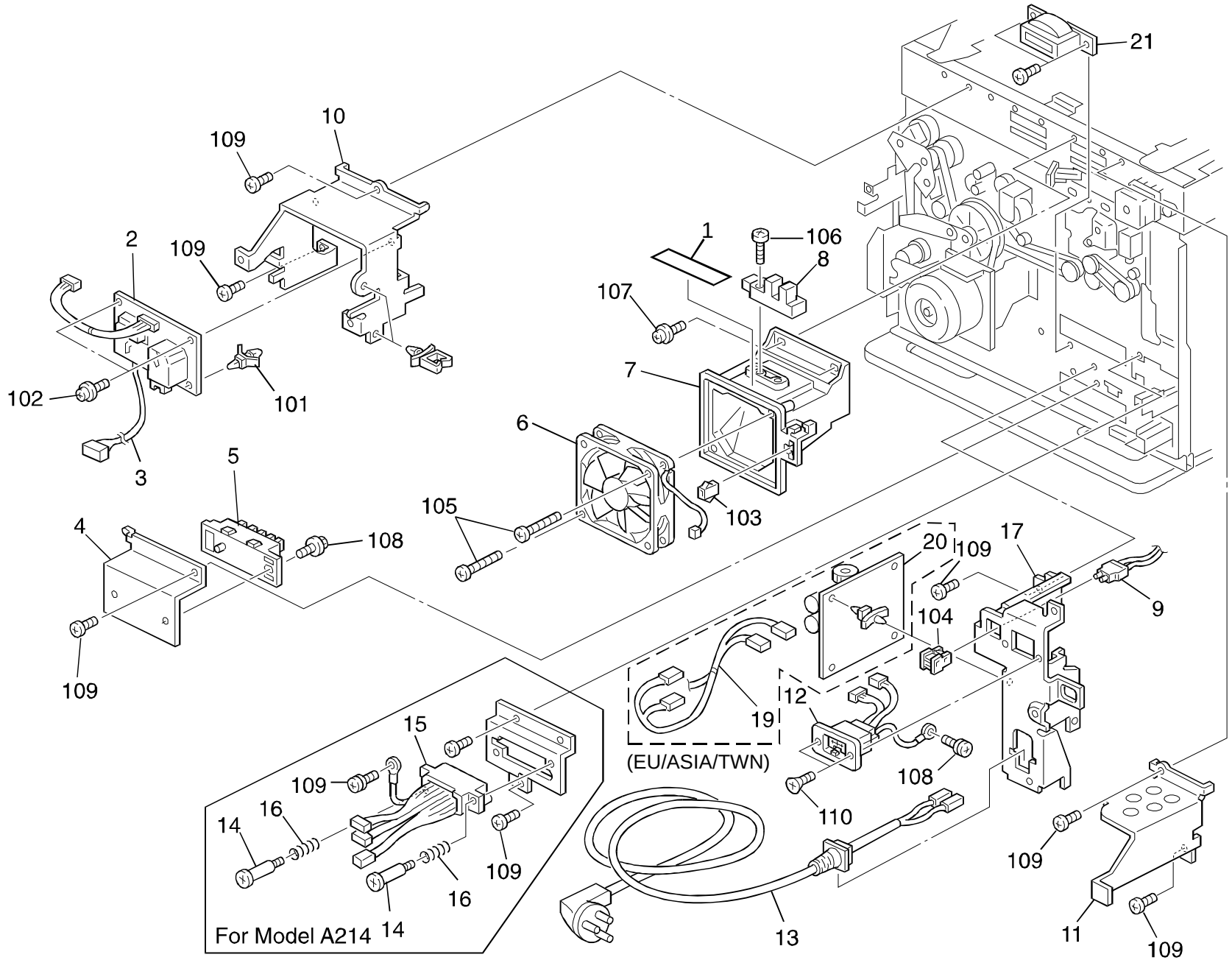

33.ELECTRICAL SECTION 3 (A212/A214)

Index No.	Part No.	Description	Q'ty Per Assembly
1	AA15 1177	Seal - 5x82x4	1
2	AZ32 0078	DC Power Pack	1
3	AZ43 0020	High Voltage Supply Coard	1
4	A134 2941	Tray Sensor Bracket	1
5	AW50 0010	Push Switch	2
6	AX64 0058	Fan Motor - DC 24V 4.32W	2
7	A153 1986	Cooling Fan Duct	2
8	AW02 0022	Photointerruptor	2
9	AW03 0056	Optical Fiber - 550mm	1
10	A212 1258	Right Bracket - Platen Ccover	1
11	A153 1259	Platen Cover Bracket - Left	1
12	A212 5324	Sorter Relay Harness	1
13	A153 5571	Power Supply Cord - 120V (NA)	1
13	A153 5671	Power Supply Cord (EU/ASIA/TWN)	1
14	AA14 3452	Stepped Screw	2
15	A154 5325	Duplex Unit Relay Harness	1
16	AA06 3532	Spring	2
17	A212 5810	Power Supply Cord Bracket	1
19	A153 5601	AC Relay Harness	1
20	A153 5621	Noise Filter Board	1
21	AZ02 0008	Coil - 1 0mh 2A	1

Index No.	Part No.	Description	Q'ty Per Assembly
101	1105 0192	Locking Support	
102	0951 3006B	Philips Screw With Flat Washer - M3x6	
103	1102 4473	CT Connector - 2p	
104	1102 4052	Optional Connector	
105	0434 0352W	Pan Head Self-tapping Screw - M4x35	
106	0414 0142B	Binding Self Tapping Screw - M4x14	
107	0964 4008B	Tapping Screw With Flat Washer - M4x8	
108	0443 0060B	Hexagon Tapping Screw - M3x6	
109	0443 0080B	Tapping Screw - M3x8	
110	0323 0060B	Philips Sunk Screw - M3x6	

34.FRAME SECTION 1 (A212/A214)

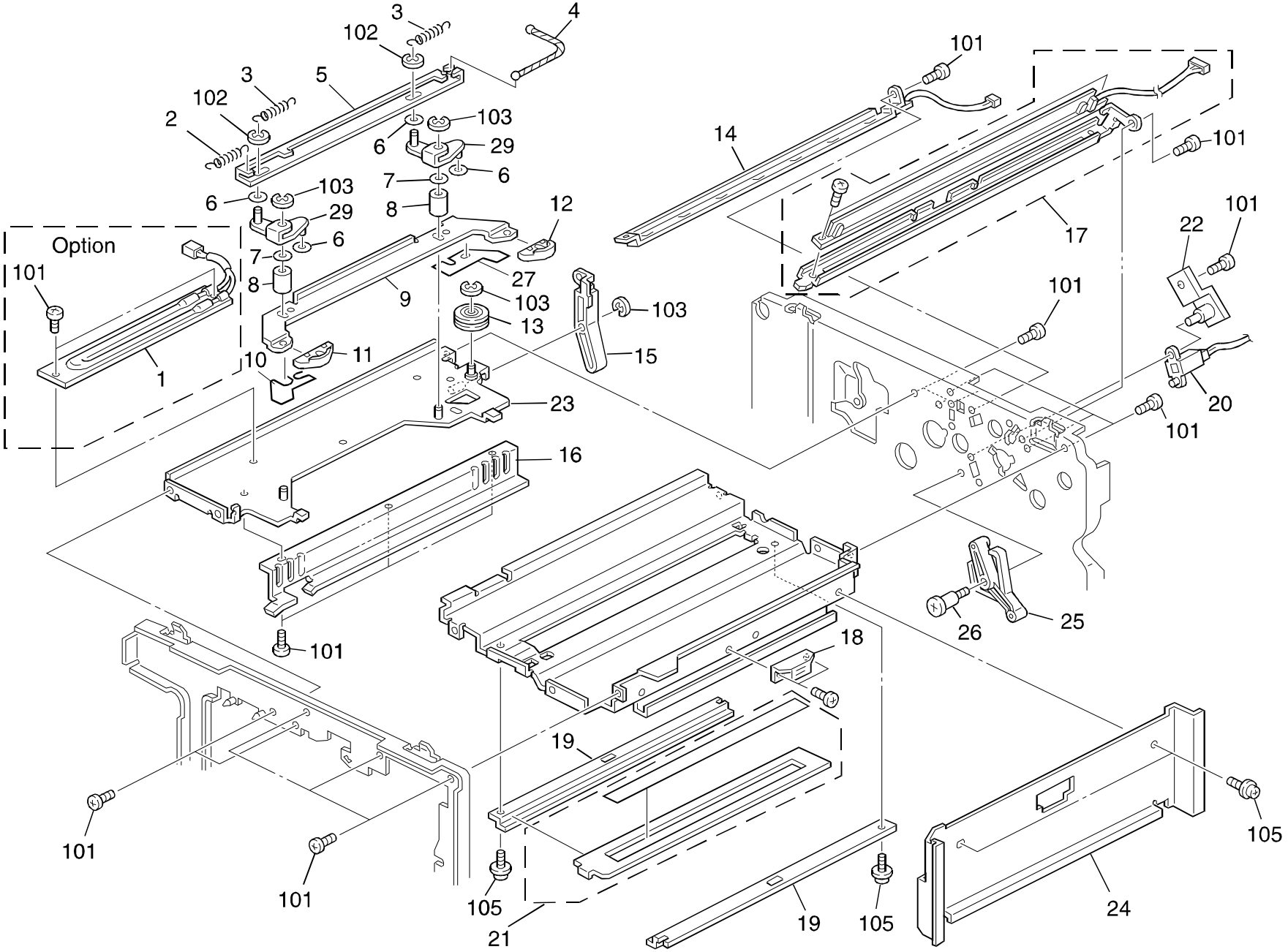

34.FRAME SECTION 1 (A212/A214)

Index No.	Part No.	Description	Q'ty Per Assembly
1	AX40 0094	Anticondensation Heater - 120V 9W (Option)	1
1	AX40 0095	Anticondensation Heater - 230V 9W (Option)	1
2	A212 2102	Pressure Spring	1
3	A212 2101	Release Spring	2
4	AA05 1025	Release Wire	1
5	A153 2072	Release Link Lever	1
6	A204 2187	Spacer-11mm	4
7	A204 2188	Spacer-15mm	2
8	AA13 2186	Collar	2
9	A153 2073	Guide Rail	1
10	A153 2084	Spacer	2
11	A153 2075	Front Roller Cam	1
12	A153 2076	Rear Roller Cam	1
13	A212 2060	Wire Pulley	1
14	A153 2090	Quenching Lamp	1
15	A212 2071	Cam Lever	1
16	A153 2083	Left Drum Rail	1
17	A153 2080	Eraser Lamp	1
18	AG07 0004	Magnetic Catch	6
19	A212 1674	Shield Glass Guide	2
20	A153 5339	Density Sensor Harness	1
21	A204 1677	Optical Filter	1
22	A153 3598	Pin Bracket	1
23	A153 2052	Release Bracket	1
24	A212 1350	Right Middle Cover	1
25	A153 3920	Belt Release Arm	1
26	AA14 3444	Stepped Screw	1
27	A153 2085	Spacer	1
28	A153 1675	Harness Guard Seal	1
29	A153 2061	Release Lever	1

Index No.	Part No.	Description	Q'ty Per Assembly
101	0434 0060B	Philips Tapping Screw - M4x6	
102	0720 0030E	Retaining Ring - M3	
103	0720 0040E	Retaining Ring - M4	
104	0964 4006B	Tapping Screw With Flat Washer - M4x6	
105	0313 0040B	Philips Pan Head Screw - M3x4	

35.FRAME SECTION 2 (A212/A214)

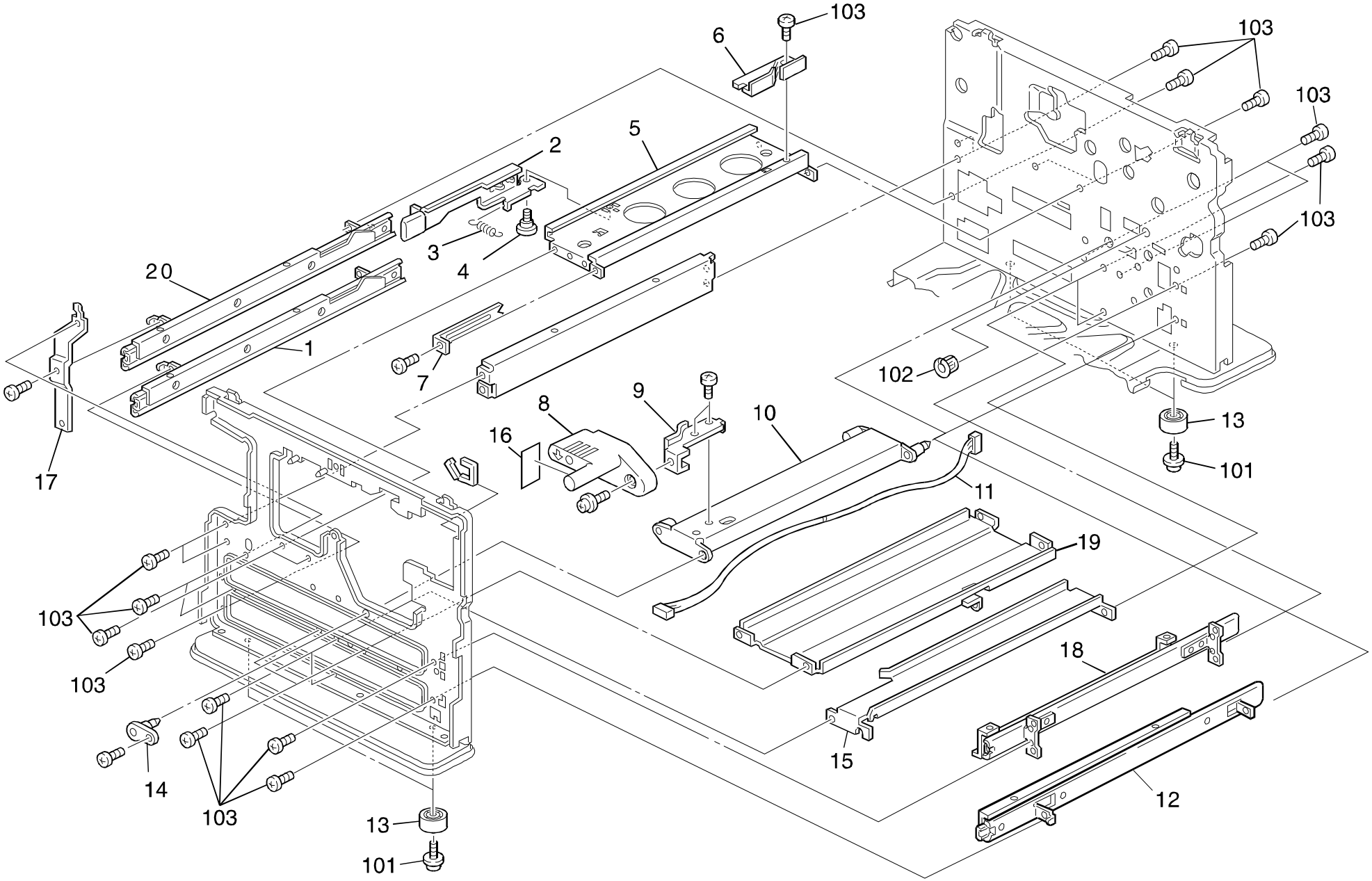

35.FRAME SECTION 2 (A212/A214)

Index No.	Part No.	Description	Q'ty Per Assembly
1	A212 2822	Left Slide Rail Ass'y	1
2	A212 4352	Fusing Lock Lever	1
3	A212 4467	Spring - Stripper Pawl Release	1
4	5203 1686	Screw - SLID RAIL	1
5	A134 4351	Stay - Fusing Rail	1
6	A208 4355	Grounding Brush - Fusing Entrance	1
7	A134 4355	Fusing Unit Stopper	1
8	A212 3930	Belt Unit Handle	1
9	A153 3933	Stopper Stay	1
10	A153 3931	Transport Unit Stay	1
11	A212 5334	CT Harness - 7p	1
12	A212 2823	Right Slide Rail Ass'y	1
13	AH01 0007	Rubber Foot	1
14	A157 3900	Support Plate	1
15	A212 2652	Middle Guide Rail	1
16	A153 3929	Decal - Caution Lever	1
17	A212 2929	Right Rail - Feed Tray	1
18	A134 4901	Right Slide Rail Ass'y	1
19	A212 1088	Middle Lower Stay	1
20	A134 2927	Tray Lock Bracket	1

Index No.	Part No.	Description	Q'ty Per Assembly
101	0960 4010B	Philips Flange Screw - M4x10	
102	1106 0193	Bushing - 7.9mm	
103	0434 0060B	Pan Head Self-tapping Screw - M4x6	

36.MAIN CONTROL BOARD (A212/A214)

CAPACITOR

SYMBOL NO.	INDEX NO.
C 1	190
C 2	190
C 3	191
C 4	182
C 5	190
C 6	182
C 7	191
C 8	191
C 9	191
C 10	190

SYMBOL NO.	INDEX NO.
C 11	190
C 12	182
C 13	192
C 14	182
C 15	189
C 16	190
C 17	190
C 18	182
C 19	190
C 20	192

SYMBOL NO.	INDEX NO.
C 21	191
C 22	182
C 23	190
C 24	190
C 25	182
C 26	191
C 27	191
C 28	191
C 29	190
C 30	182

SYMBOL NO.	INDEX NO.
C 31	190
C 32	191
C 33	190
C 34	190
C 35	190
C 36	190
C 37	191
C 38	191
C 39	190
C 40	191

SYMBOL NO.	INDEX NO.
C 41	191
C 42	182
C 43	190
C 44	190
C 45	190
C 46	190
C 47	190
C 48	190
C 49	190
C 50	190

SYMBOL NO.	INDEX NO.
C 51	190
C 52	190
C 53	190
C 54	190
C 55	191
C 56	188
C 57	188
C 58	190
C 59	182
C 60	189

SYMBOL NO.	INDEX NO.
C 61	191
C 62	190
C 63	191
C 64	190
C 65	190
C 66	191
C 67	182
C 68	182
C 69	190
C 70	190

CAPACITOR

SYMBOL NO.	INDEX NO.
C 71	190
C 72	182
----	----
C 107	185
C 108	----
C 109	185
----	----
C 149	185
----	----
C 159	153
----	----

SYMBOL NO.	INDEX NO.
C 208	185
----	----
C 217	187
C 218	187
C 219	----
C 220	187
C 221	185
C 222	186
----	----
----	----
----	----

SYMBOL NO.	INDEX NO.
C 300	190
C 301	190
C 302	190
C 303	190
C 304	190
C 305	190

CNNECTOR

SYMBOL NO.	INDEX NO.
CN 101	126
CN 102	115
CN 103	197
CN 104	9
CN 105	123
CN 106	114
CN 107	3
CN 108	102
CN 109	130
CN 110	128

SYMBOL NO.	INDEX NO.
CN 111	131
CN 112	4
CN 113	121
CN 114	115
CN 115	5
CN 116	3
CN 117	113
CN 118	7
CN 119	117
CN 120	6

SYMBOL NO.	INDEX NO.
CN 121	132
CN 122	110
CN 123	122
CN 124	118
CN 125	----
CN 126	125
CN 127	119
CN 128	6
CN 129	120
CN 130	128

SYMBOL NO.	INDEX NO.
CN 131	112
CN 132	127
CN 133	----
CN 134	102
CN 135	128
CN 136	129
CN 137	5
CN 138	----
CN 139	120
CN 140	8

36.MAIN CONTROL BOARD (A212/A214)

CNNECTOR

SYMBOL NO.	INDEX NO.
CN 141	102
CN 142	111
CN 143	124
CN 144	----
CN 145	195

DIODE

SYMBOL NO.	INDEX NO.
D 1	138
----	----
D 20	198
D 21	198
D 22	198
D 23	138
D 24	138
D 25	138
D 26	138
D 27	138

SYMBOL NO.	INDEX NO.
D 28	138
D 29	137
D 30	137
D 31	137

FILTER

SYMBOL NO.	INDEX NO.
FIL 1	152

IC

SYMBOL NO.	INDEX NO.
IC 1	143
(IC 1)	1
IC 2	149
IC 3	140
IC 4	147
IC 5	----
IC 6	140
IC 7	140
IC 8	146
IC 9	201
IC10	140

SYMBOL NO.	INDEX NO.
IC 11	202
IC 12	3
IC 13	203
(Socket)	196
IC 14	142
IC 15	140
IC 16	144
IC 17	----
IC 18	147
IC 19	----
IC 20	----

SYMBOL NO.	INDEX NO.
IC 100	141
IC 101	148
IC 102	141
IC 103	145
IC 104	145
IC 105	145
IC 106	141
IC 107	141
----	----
IC 145	2

JP

SYMBOL NO.	INDEX NO.
JP 1	184
JP 2-1	205
JP 2-2	205

OSC

SYMBOL NO.	INDEX NO.
OSC 1	183

Q

SYMBOL NO.	INDEX NO.
Q 1	135
Q 2	135
Q 3	135
-----	----
Q 102	134
Q 103	----
Q 104	134

REG

SYMBOL NO.	INDEX NO.
REG 101	204

RESISTOR

SYMBOL NO.	INDEX NO.
R 1	160
R 2	193
R 3	165
R 4	157
R 5	166
R 6	156
R 7	178
R 8	166
R 9	166
R 10	166

SYMBOL NO.	INDEX NO.
R 11	166
R 12	166
R 13	160
R 14	193
R 15	167
R 16	161
R 17	176
R 18	177
R 19	156
R 20	178

SYMBOL NO.	INDEX NO.
R 21	163
R 22	163
R 23	----
R 24	----
R 25	----
R 26	----
R 27	157
R 28	157
R 29	157
R 30	157

36.MAIN CONTROL BOARD (A212/A214)

RESISTOR

SYMBOL NO.	INDEX NO.	SYMBOL NO.	INDEX NO.	SYMBOL NO.	INDEX NO.	SYMBOL NO.	INDEX NO.	SYMBOL NO.	INDEX NO.	SYMBOL NO.	INDEX NO.	SYMBOL NO.	INDEX NO.
R 31	157	R 41	162	R 51	161	R 61	166	R 71	166	R 81	162	R 91	157
R 32	157	R 42	180	R 52	157	R 62	166	R 72	166	R 82	167	R 92	156
R 33	157	R 43	177	R 53	163	R 63	166	R 73	166	R 83	166	R 93	155
R 34	157	R 44	166	R 54	163	R 64	166	R 74	166	R 84	157	R 94	156
R 35	157	R 45	179	R 55	194	R 65	166	R 75	166	R 85	166	R 95	156
R 36	157	R 46	177	R 56	165	R 66	166	R 76	166	R 86	166	R 96	175
R 37	157	R 47	173	R 57	----	R 67	166	R 77	166	R 87	166	R 97	156
R 38	157	R 48	155	R 58	----	R 68	166	R 78	166	R 88	166	R 98	166
R 39	157	R 49	165	R 59	----	R 69	166	R 79	166	R 89	166	R 99	157
R 40	163	R 50	157	R 60	----	R 70	166	R 80	166	R 90	165	R 100	166

RESISTOR

SYMBOL NO.	INDEX NO.	SYMBOL NO.	INDEX NO.	SYMBOL NO.	INDEX NO.	SYMBOL NO.	INDEX NO.	SYMBOL NO.	INDEX NO.	SYMBOL NO.	INDEX NO.	SYMBOL NO.	INDEX NO.
R 101	157	R 111	166	R 121	163	R 131	157	R 141	157	R 151	166	R 161	194
R 102	157	R 112	166	R 122	174	R 132	157	R 142	157	R 152	157	R 162	157
R 103	166	R 113	157	R 123	181	R 133	157	R 143	157	R 153	194	R 163	165
R 104	166	R 114	157	R 124	172	R 134	157	R 144	157	R 154	194	R 164	156
R 105	157	R 115	166	R 125	157	R 135	157	R 145	157	R 155	194	R 165	156
R 106	166	R 116	166	R 126	157	R 136	157	R 146	157	R 156	194	R 166	156
R 107	157	R 117	157	R 127	156	R 137	157	R 147	157	R 157	194	R 167	156
R 108	166	R 118	166	R 128	166	R 138	157	R 148	157	R 158	194	R 168	157
R 109	157	R 119	157	R 129	166	R 139	157	R 149	157	R 159	194	R 169	157
R 110	157	R 120	163	R 130	176	R 140	157	R 150	166	R 160	194	R 170	157

36.MAIN CONTROL BOARD (A212/A214)

RESISTOR

SYMBOL NO.	INDEX NO.	SYMBOL NO.	INDEX NO.	SYMBOL NO.	INDEX NO.	SYMBOL NO.	INDEX NO.	SYMBOL NO.	INDEX NO.	SYMBOL NO.	INDEX NO.	SYMBOL NO.	INDEX NO.
R 171	158	R 181	166	R 191	157	R 201	157	R 211	166	R 221	166	R 231	166
R 172	166	R 182	156	R 192	157	R 202	157	R 212	166	R 222	166	R 232	160
R 173	166	R 183	157	R 193	157	R 203	166	R 213	166	R 223	166	R 233	166
R 174	166	R 184	156	R 194	157	R 204	166	R 214	166	R 224	166	R 234	160
R 175	157	R 185	157	R 195	157	R 205	165	R 215	166	R 225	166	R 235	157
R 176	157	R 186	157	R 196	157	R 206	166	R 216	166	R 226	166	R 236	166
R 177	157	R 187	157	R 197	157	R 207	157	R 217	166	R 227	160	R 237	166
R 178	155	R 188	157	R 198	157	R 208	166	R 218	166	R 228	166	R 238	157
R 179	157	R 189	157	R 199	157	R 209	166	R 219	166	R 229	160	R 239	166
R 180	156	R 190	157	R 200	157	R 210	166	R 220	166	R 230	166	R 240	166

RESISTOR

SYMBOL NO.	INDEX NO.	SYMBOL NO.	INDEX NO.	SYMBOL NO.	INDEX NO.	SYMBOL NO.	INDEX NO.	SYMBOL NO.	INDEX NO.	SYMBOL NO.	INDEX NO.	SYMBOL NO.	INDEX NO.
R 241	157	R 251	166	R 261	157	R 271	168	R 281	157	R 291	157	R 301	166
R 242	157	R 252	157	R 262	166	R 272	168	R 282	157	R 292	157	R 302	166
R 243	157	R 253	166	R 263	157	R 273	157	R 283	157	R 293	157	R 303	157
R 244	157	R 254	157	R 264	166	R 274	156	R 284	157	R 294	157	R 304	157
R 245	166	R 255	166	R 265	166	R 275	168	R 285	157	R 295	157	R 305	166
R 246	159	R 256	157	R 266	157	R 276	168	R 286	157	R 296	157	R 306	166
R 247	166	R 257	166	R 267	157	R 277	157	R 287	157	R 297	157	R 307	----
R 248	157	R 258	157	R 268	166	R 278	157	R 288	157	R 298	164	R 308	157
R 249	157	R 259	166	R 269	157	R 279	157	R 289	157	R 299	----	R 309	157
R 250	166	R 260	157	R 270	156	R 280	163	R 290	157	R 300	----	R 310	157

36.MAIN CONTROL BOARD (A212/A214)

RESISTOR

SYMBOL NO.	INDEX NO.
R 311	157
R 312	157
R 313	157
R 314	157
R 315	----
R 316	157
R 317	157
R 318	157
R 319	157
R 320	157

SYMBOL NO.	INDEX NO.
R 321	157
R 322	157
R 323	157
R 324	166
R 325	157
R 326	157
R 327	----
R 328	166
R 329	166
R 330	----

SYMBOL NO.	INDEX NO.
R 331	166
R 332	166
R 333	166
R 334	166
R 335	166
R 336	166
R 337	166
R 338	---
R 339	166
R 340	166

SYMBOL NO.	INDEX NO.
R 341	166
R 342	166
R 343	166
R 344	166
R 345	166
R 346	157
R 347	166
R 348	166
R 349	169
R 350	165

SYMBOL NO.	INDEX NO.
R 351	166
R 352	157
R 353	193
R 354	160
R 355	----
R 356	166
R 357	----
R 358	----
R 359	----
R 360	----

SYMBOL NO.	INDEX NO.
R 361	174
R 362	172
----	----
R 405	150
----	----
R 579	150
----	----
R 600	151

ZD

SYMBOL NO.	INDEX NO.
ZD 1	200
ZD 2	199
ZD 3	199
ZD 4	199

36.MAIN CONTROL BOARD (A212/A214)

Index No.	Part No.	Description	Q'ty Per Assembly
*	A212 5101	Main Control Board (115V)	1
*	A212 5201	Main Control Board (230V)	1
1	A069 5168	Heat Sink - Motor Board	1
2	A153 5114	Ram Board	1
3	A204 5117	IC - RF5A230	1

Index No.	Part No.	Description	Q'ty Per Assembly
102	1102 4202	Connector - 3p	
103	1102 4205	CT Header- 6p	
104	1102 4206	Connector - 7p	
105	1102 4207	Connector - 8p	
106	1102 4208	Connector - 9p	
107	1102 4210	Connector - 11p	
108	1102 4211	CT Header - 12p	
109	1102 4212	CT Header - 15p	
110	1102 4497	Connector - 13p	
111	1102 4619	Connector - 2p	
112	1102 4620	CT Header - 3p	
113	1102 4621	CT Header - 4p	
114	1102 4623	CT Connector - 6p	
115	1102 4624	CT Connector - 7P	
116	1102 4625	CT Connector 8p	
117	1102 4628	Connector - 11p	
118	1102 4629	Connector - 12P	
119	1102 4630	CT Connector	
120	1102 4637	CT Connector - 8P	
121	1102 4639	CT Connector - 10P	
122	1102 4640	Connector - 11p	
123	1102 4642	CT Connector - 15p	
124	1102 4643	CT Connector - 2p	
125	1102 5007	CT Header - 14p	
126	1102 5305	Connector - 6P	
127	1102 5605	Connector - 13P	
128	1102 5718	Optical Fiber Connector	
129	1102 6408	Connector - 30P	
130	1102 6762	CT Connector - 13p	
131	1103 1772	Pin Header - 6p	
132	1103 1774	Pin Header - 8p	
134	1400 0369	Transistor - 2sa1213y	
135	1400 0558	Transistor - 2sd780	
138	1402 1030	Diode - 1SS250	
140	1407 2187	TTLIC - SN74LS07NS	

Index No.	Part No.	Description	Q'ty Per Assembly
141	1407 2231	IC - TD62308AF	
142	1407 3173	Driver - 16bit - M66311fp	
143	1407 3708	IC - SLA7026M	
144	1407 4164	IC - MMID75XF	
145	1407 4316	IC - TD52308BF	
146	1407 4686	IC - M54992FP	
147	1408 0595	IC - NJM2904M	
148	1408 0874	Transistor Array - M54587fp	
149	1408 0877	Comparator - LM339NS	
150	1600 1499	Resistor - 0.33 OME ±2% 2W	
151	1600 1660	Resistor - ERG2SJ101	
152	1602 7032	Filter - Emi - 2200pF	
153	1604 4511	Capacitor - 0.15µF±10% 50V	
155	1630 3101	Resistor - 100Ω - 1/10W	
156	1630 3102	Resistor - 1KΩ 1/10W ±5%	
157	1630 3103	Resistor - 10KΩ 1/10W ±5%	
158	1630 3104	Resistor - 100K Ω 1/10W ±5	
159	1630 3105	Resistor - 1M Ω ±5% 1/10W	
160	1630 3222	Resistor - 2.2KΩ 1/10W ±5%	
161	1630 3223	Resistor - 22kΩ - 1/10W	
162	1630 3242	Resistor - 2.4K Ω ±5% 1/10W	
163	1630 3330	Resistor - 33 Ω ±5% 1/10W	
164	1630 3334	Resistor - 330K Ω ±5% 1/10	
165	1630 3393	Resistor - 39K Ω 1/10W	
166	1630 3472	Resistor - 4.7KΩ 1/10W ±5%	
167	1630 3473	Resistor - 47KΩ 1/10W ±5%	
168	1630 3680	Resistor - 68 Ω ±5% 1/10W	
169	1630 3682	Resistor - 6.8KΩ - 1/10W	
170	1630 3824	Resistor - 820KΩ ±5% 1/10W	
172	1633 1000	Resistor - 100Ω±1% 1/10W	
173	1633 1002	Resistor - 10K Ω ±1% 1/10W	
174	1633 2150	Resistor - 215Ω ±1% 1/10W	
175	1633 4701	Resistor - 4.7K Ω ±1% 1/10W	

Index No.	Part No.	Description	Q'ty Per Assembly
176	1633 4702	Resistor - 47K Ω ± 1/10W	
177	1633 4871	Resistor - 4.87K Ω±1%:1/10W	
178	1633 5231	Resistor - 5.23K Ω ±1% 1/1	
179	1633 6340	Resistor - 634K Ω ±1% 1/10W	
180	1633 6490	Resistor - :649Ω:±1%:1/10W	
181	1633 8209	Resistor - 820Ω ±1% 1/10W	
182	1660 7104	Capacitor - 100000pF 50V	
183	1503 0585	Osillator - TQC-254A-6R(32MHZ)	
184	1002 0307	Jumper Wire	
185	1642 5100	Capacitor - 10µF±20% 50V	
186	1640 5470	Capacitor - 47µF±20% 50V	
187	1640 5101	Capacitor - 100µF±20% 50V	
188	1660 1100	Capacitor - 10pF 50V	
189	1660 3101	Capacitor - 100pF 50V	
190	1606 1139	Capacitor - 0.01µF±20%	
191	1660 3471	Capacitor - 470pF 50V	
192	1660 5222	Capacitor - 2200pF ±10% 50V	
193	1630 1101	Resistor - 100 Ω 1/4W ±5%	
194	1630 1161	Resistor - 160Ω ±5% 1/8W	
195	1104 0271	IC SOCKET - 28P	
196	1104 0612	Connector - 40P	
197	1102 3822	Connector - 20P	
199	1402 0478	Diode - 1SS226TE85L	
200	1402 0277	Zener Diode - 1Z12	
201	1402 0688	Diode	
202	1407 3257	CMOSIC - TC74HC14AF	
203	1408 1135	IC - X9C104S	
204	1905 0024	IC - WEPROM 4M X 16 100NS	
205	1408 0629	IC - 78M12A	

37.DECAL AND DOCUMENT (A212/A214)

1

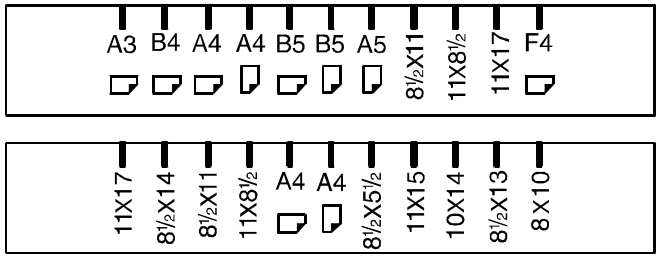

3

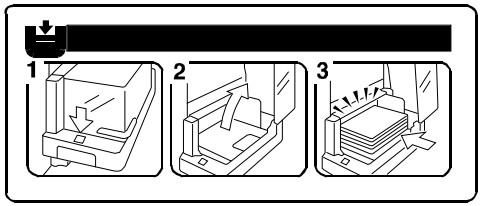

4



6

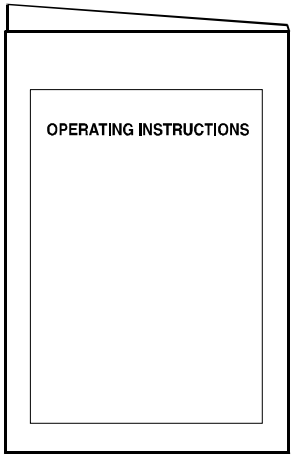

20

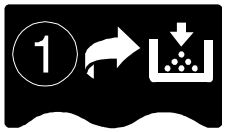

21

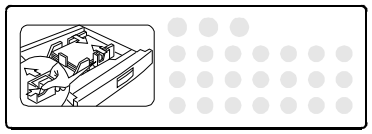

22

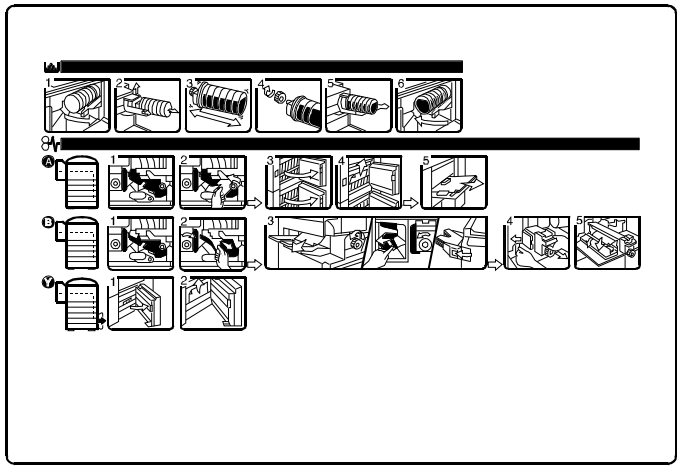

23

- Push the paper tray in gently.
- Refermer la cassette papier avec precaution.
- Die Papierkassette vorsichtig hinein schieben.
- Inserire il cassetto carta con delicatezza.
- Empujar el cassette de papel con suavidad. >PS<

24

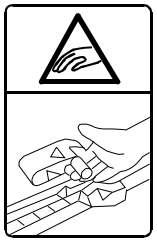

25

This device complies with Part 15 of the FCC Rules.
Operation is subject to the following two conditions:
(1)this device may not cause harmful interference,and
(2)this device must accept any interference received,
including interference that may cause undesired operation.

7

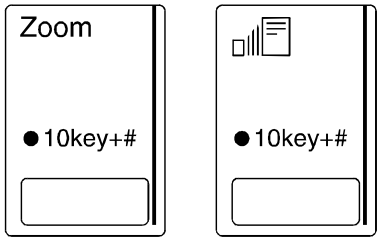

8

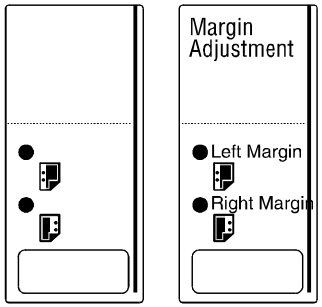

9

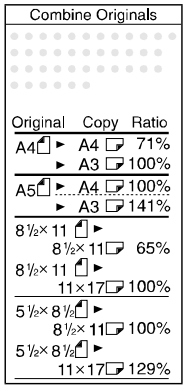

10

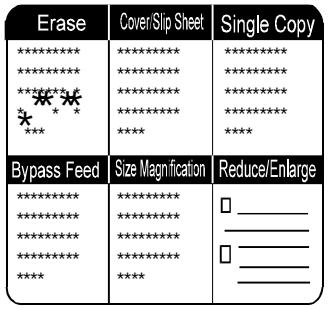

11

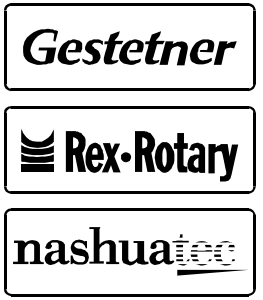

12

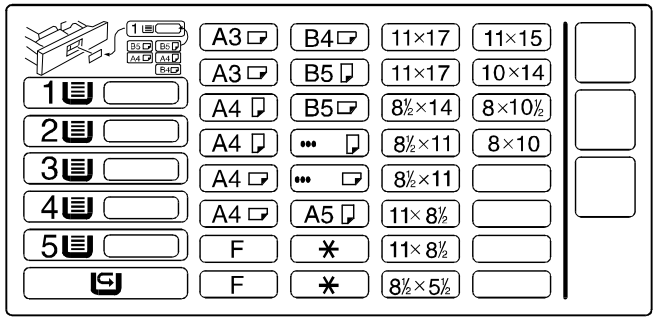

14

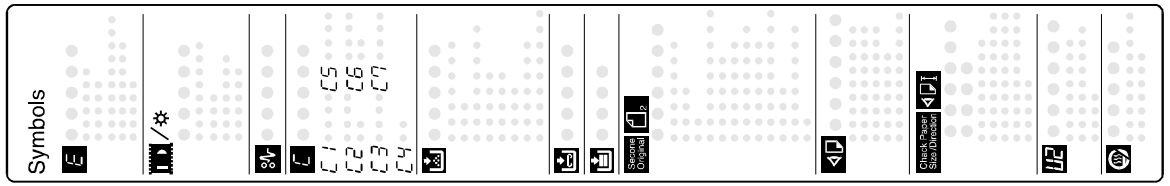

15

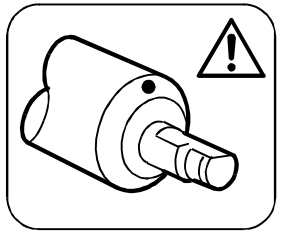

16



17

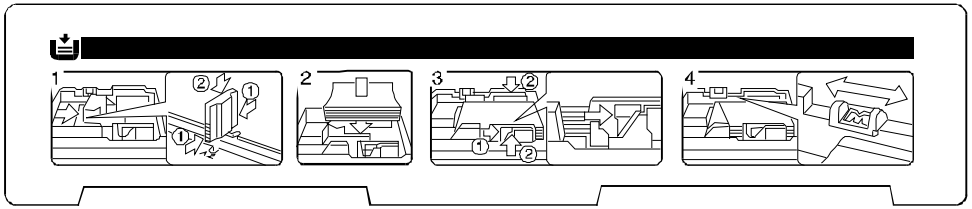

18

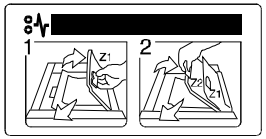

19

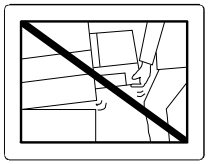

37.DECAL AND DOCUMENT (A212/A214)

Index No.	Part No.	Description	Q'ty Per Assembly
1	A153 2995	Decal Paper Size - LT/DLT	1
1	A153 2996	Decal Paper Size - A4/A3	1
3	A155 6113	Decal - Paper Set	1
4	A153 1285	Emblem (RIC)	1
4	A156 6413	Emblem (SVN)	1
4	A153 6423	Support Cover (INF)	1
6	A212 8607	Operating Instructions - English LT (RIC)	1
6	A212 8650	Operating Instructions - English LT (SVN)	1
6	A212 8661	Operating Instructions - German (INF)	1
6	A212 8662	Operating Instructions - French (INF)	1
6	A212 8663	Operating Instructions - Italian(INF)	1
6	A212 8664	Operating Instructions - Spanish(INF)	1
6	A212 8660	Operating Instructions - English A4 (INF)	1
6	A212 8690	Operating Instructions - English A4 (NRG)	1
6	A212 8697	Operating Instructions - English LT (NRG)	1
6	A212 8608	Operating Instructions - English A4 (RIC)	1
7	A153 1475	Decal - 10key Zoom -LT/DLT	1
7	A153 1478	Decal - 10key Zoom - A4/A3	1
8	A153 1476	Decal - Margin Adjustment - LT/DLT	1
8	A153 1479	Decal - Margin Adjustment - A4/A3	1
9	A156 1495	Decal Copy Ratio	1
10	A212 1495	Operation Sheet (LT)	1
10	A212 1485	Operation Sheet (A4)	1
11	C225 2867	Decal - Cover - Panel - Nashua	1
11	C225 2866	Decal - Key Top Cover	1
11	A153 6409	Decal - Keytop Cover	1
12	AA00 2209	Decal - Paper Size	1
13	A212 6404	Decal - Model Name - GES (A212)	1
13	A212 6407	Decal - Model Name - NST (A212)	1
13	A212 6414	Decal - Model Name - REX (A212)	1
13	A214 6404	Decal - Model Name - GES (A214)	1
13	A212 6407	Decal - Model Name - NST (A214)	1
13	A212 6414	Decal - Model Name - REX (A214)	1
14	A153 1365	Symbol Explanation Decal	1
15	A204 2155	Decal - Caution	1

Index No.	Part No.	Description	Q'ty Per Assembly
16	AA00 1389	Large Decal - Energy Star	1
17	A212 2758	Decal - Paper Setting	1
18	A134 4884	Decal - Duplex Misfeed Removal	1
19	A155 6114	Caution Decal - LCT	1
20	A212 3081	Decal - Toner Supply	1
21	A212 2805	Tray Bottom Plate Sheet	1
22	A157 1360	Operation Sheet (A212)	1
22	A158 1360	Operation Sheet (A214)	1
23	A219 2692	Decal - Operation Instructions	1
24	A153 3929	Decal - Caution Lever	1
25	AA00 1381	Decal - FCC/15-B CSA CLASS-A	1

38.SPECIAL TOOLS (A212/A214)

1 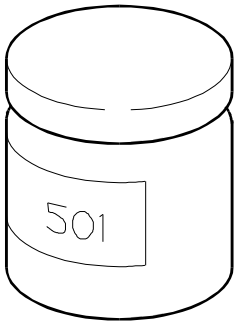	2 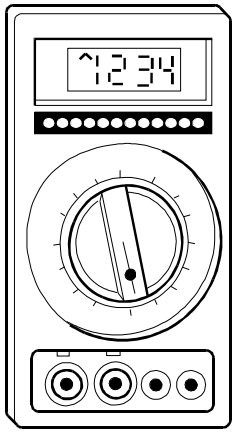	3 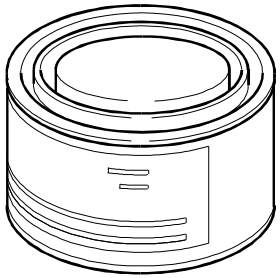	4 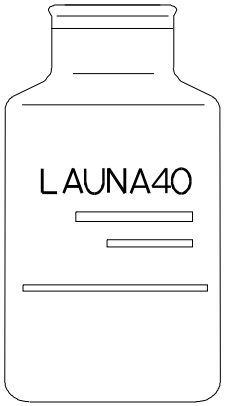
5 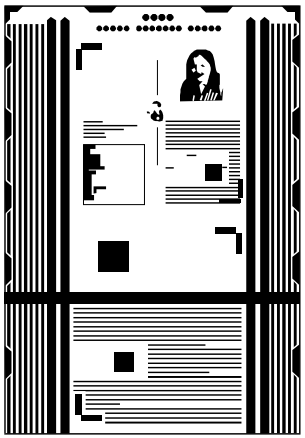	6 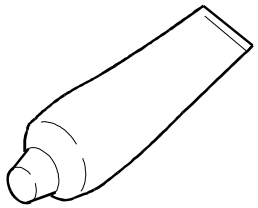	7 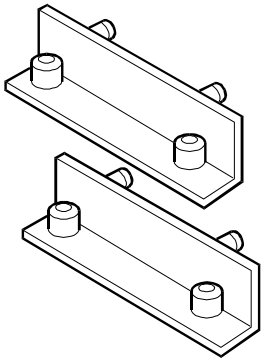	8 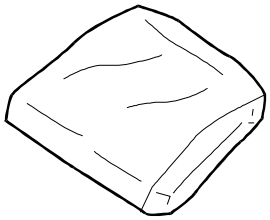

38.SPECIAL TOOLS (A212/A214)

Index No.	Part No.	Description	Q'ty Per Assembly
1	5203 9501	Grease 501	1
2	5420 9507	Digital Multimeter - Beckman	1
3	5447 9078	Heat Resisting Grease MT-78	1
3	A028 9300	Grease Nok Barrierta - JFE 5 5/2	1
4	5442 9103	Launa Oil	1
5	5420 9516	Test Chart - OS -A3 (10PCS/SET)	1
6	A008 9502	Silicone Grease - G40M.	1
7	A153 9001	Scanner Adjustment Tool	2
8	A153 9004	Wiping Cloth	1

Index No.	Part No.	Description	Q'ty Per Assembly

PARTS INDEX

PM Parts Index

Section Name	Part No.	Description in Service Manual	Description in Parts Catalog	Q'ty Per Assembly	Page and Index No
BY-PASS FEED SECTION (A212/A214)	5447 2927	Friction Pad - B	Friction Pad - B	1	15- 12
PAPER TRAY SECTION (A212/A214)	G020 2645	Friction Pad	Friction Pad	1	17- 13
LCT UNIT 1 (A214)	A421 2543	Friction Pad	Friction Pad	1	19- 13
PAPER FEED SECTION 1 (A212/A214)	AF03 1025	Feed Roller	Feed Roller	1	23- 7
	AF03 0024	Pick-up Roller	Pick-up Roller	1	23- 10
	AF03 2025	Separation Roller	Separation Roller	1	23- 21
PAPER FEED SECTION 2 (A212/A214)	G020 2555	Paper Feed Roller	Paper Feed Roller	4	25- 8
DRUM UNIT 1 (A212/A214)	A153 2135	Charge Roller Terminal Ass'y	Charge Roller Terminal Ass'y	1	41- 8
	AD02 7004	Charge Roller	Charge Roller	1	41- 13
	A204 2120	Drum Charge Roller Cleaner	Drum Charge Roller Cleaner	1	41- 25
DRUM UNIT 2 (A212/A214)	AD02 5019	Drum Pick-off Pawl	Drum Pick-off Pawl	1	43- 2
	A153 2277	Cleaning Blade	Cleaning Blade	1	43- 39
TRANSFER UNIT (A212/A214)	A157 3861	Transfer Belt	Transfer Belt	1	45- 2
	A153 3892	Belt Cleaning Blade	Belt Cleaning Blade	1	45- 17
FUSING UNIT 1 (A212/A214)	AE04 4019	Hot Roller Stripper	Hot Roller Stripper	5	47- 20
	AE01 1024	Hot Roller	Hot Roller	1	47- 22
FUSING UNIT 2 (A212/A214)	AE04 2030	Cleaning Roller	Cleaning Roller	1	49- 12
	AE02 0050	Pressure Roller	Pressure Roller	1	49- 15
DUPLEX TRAY 2 (A214)	AF03 1024	Feed Roller	Feed Roller	1	53- 17
DUPLEX TRAY 4 (A214)	AF01 3003	Bottom Plate Pad - Duplex	Bottom Plate Pad - Duplex	1	57- 2

Part No.	Description	Page and Index No.
A212 1073	Stopper Bracket	25- 2
A212 1087	Middle Upper Stay	25- 17
A212 1088	Middle Lower Stay	77- 19
A212 1099	Stopper	25- 1
A212 1111	Spring Cover	65- 18
A212 1151	Tension Spring	63- 19
A212 1151	Tension Spring	65- 17
A212 1258	Right Bracket - Platen Ccover	73- 10
A212 1261	Front Right Cover	9- 28
A212 1271	Rear Right Cover (A212)	9- 27
A212 1282	Front Cover (A212)(RIC)	9- 2
A212 1291	Rear Cover	9- 25
A212 1302	Left Cover	9- 16
A212 1323	Operation Panel Ass'y - LT (A212)	9- 12
A212 1323	Operation Panel Ass'y - LT (A212)	13- *
A212 1324	Operation Panel Ass'y - A4 (A212)	9- 12
A212 1324	Operation Panel Ass'y - A4 (A212)	13- *
A212 1328	Operation Panel Ass'y (A212)(SVN)	9- 12
A212 1328	Operation Panel Ass'y - LT (A212)(SVN)	13- *
A212 1350	Right Middle Cover	75- 24
A212 1352	Inner Cover - Right Lower	9- 7
A212 1465	Key-top - Sorter (SVN)	13- 18
A212 1481	Operation Panel Case - A4	13- 22
A212 1482	Display Panel - A4 (A212)	13- 24
A212 1483	Sorter Sheet - A4 (A212)	13- 16
A212 1485	Operation panel Sheet - A4	9- 31
A212 1485	Operation Sheet (A4)	83- 10
A212 1487	Sorter Sheet (A212)(SVN)	13- 16
A212 1491	Operation Panel Case - LT	13- 22
A212 1492	Display Panel - LT (A212)	13- 24
A212 1493	Sheet Sorter - LT (A212)	13- 16
A212 1494	Operation Panel Sheet	13- 23
A212 1495	Operation Panes Sheet - LT	13- 17
A212 1495	Operation Sheet (LT)	83- 10

Part No.	Description	Page and Index No
A212 1674	Shield Glass Guide	75- 19
A212 1695	Tension Spring	35- 12
A212 1707	Tension Bracket - Long	35- 14
A212 1708	Tension Bracket - Short	35- 6
A212 1710	Timing Pulley - 44Z	35- 16
A212 1807	Harness Guide	33- 2
A212 1840	Lens Magnification Unit	29- 1
A212 1841	Lens Drive Unit	29- 11
A212 1903	3rd Scanner Bracket	33- 28
A212 1914	3rd Scanner Rack	33- 19
A212 1981	Scaner Home Sensor Bracket	33- 29
A212 2060	Wire Pulley	75- 13
A212 2071	Cam Lever	75- 15
A212 2101	Release Spring	75- 3
A212 2102	Pressure Spring	75- 2
A212 2110	Charge Roller Ass'y	41- 2
A212 2131	Idle Gear 14z	41- 16
A212 2132	Idle Gear 20z	41- 17
A212 2142	Cam Lever	65- 32
A212 2251	Pressure Blade Spring	43- 8
A212 2252	Pressure Roller Spring	41- 10
A212 2255	Drum Unit	43- 1
A212 2351	Rear Roller Bushing	41- 5
A212 2352	Rear Roller Housing	41- 11
A212 2353	Gront Roller Bushint	41- 18
A212 2354	Pad Pressure Spring	43- 11
A212 2524	Spring	25- 13
A212 2531	Timing Belt - S3M 300	67- 8
A212 2533	Paper Tray Ass'y (LT)	17- *
A212 2534	Paper Size Sensor Board	15- 7
A212 2537	Bushing	27- 7
A212 2538	Bushing	27- 17
A212 2539	Spring - Registration Roller	27- 5
A212 2542	Bottom Plate Ass'y	17- 12

Part No.	Description	Page and Index No.
A212 2547	Rear Side Fence Ass'y	17- 17
A212 2550	Vertical Guide Plate	27- 18
A212 2551	Lower Guide Plate	27- 8
A212 2552	Vertical Relay Guide Plate	27- 6
A212 2558	Upper Resistration Guide	27- 19
A212 2559	Switch Bracket	19- 29
A212 2559	Switch Bracket	15- 17
A212 2562	Solenoid Bracket	67- 23
A212 2563	Lower Registration Guide	27- 3
A212 2564	Tightener	67- 11
A212 2567	Rear Side Fence	17- 18
A212 2570	Paper Feed Roller Ass'y (EU/ASIA/TWN)	25- 10
A212 2571	Vertical Transport Guide (A212)	15- 22
A212 2575	Shaft - Paper Feed Roller (EU/ASIA/TWN)	25- 6
A212 2580	Vertical Transfer Hinge (A212)	27- 11
A212 2581	Front Side Fence Ass'y	17- 3
A212 2582	Front Corner Separator	17- 8
A212 2583	Rear Corner Separator	17- 21
A212 2584	Paper Feed Drive Shaft	67- 21
A212 2586	Hinge Bracket (A212)	15- 14
A212 2587	Feed Roller Bushing - Front	25- 3
A212 2590	Paper Tray	17- 32
A212 2591	Vertical Transfer (A212)	15- 16
A212 2652	Middle Guide Rail	77- 15
A212 2658	Pick-up Arm	23- 30
A212 2659	By-pass Feed Housing	23- 15
A212 2660	Paper End Feeler	23- 2
A212 2661	Adjusting Plate - Front	17- 4
A212 2663	Separation Guide	23- 20
A212 2670	Rear Guide Plate	23- 19
A212 2671	By-pass Feed Cover	23- 4
A212 2672	Pressure Spring	67- 7
A212 2673	Release Spring	67- 4
A212 2692	By-pass Feed Table Ass'y	15- 1

Part No.	Description	Page and Index No
A212 2697	By-pass Feed Table	15- 5
A212 2705	Magnet Catch Plate	15- 6
A212 2706	Rear Fence Rack	15- 8
A212 2707	Front Fence Rack	15- 10
A212 2711	Front Side Fence	15- 2
A212 2716	Rear Side Fence	15- 3
A212 2746	By-pass Feed Cover	15- 11
A212 2757	Paper Tray Ass'y (A4)	17- *
A212 2758	Decal - Paper Setting	83- 17
A212 2758	Decal - Paper Set Ditection	17- 2
A212 2765	Spring Plate - Gear Side Fence	17- 16
A212 2769	Rear Stopper Spring	17- 6
A212 2802	Feeler Paper End Sensor	25- 4
A212 2805	Tray Bottom Plate Sheet	83- 21
A212 2805	Tray Bottom Plate Sheet	17- 33
A212 2822	Left Slide Rail Ass'y	77- 1
A212 2823	Right Slide Rail Ass'y	77- 12
A212 2844	End Fence Ass'y	17- 9
A212 2870	Adjusting Plate Rear	17- 20
A212 2871	Adjusting Plate Front	17- 7
A212 2905	Release Arm - Paper End	25- 14
A212 2929	Right Rail - Feed Tray	77- 17
A212 2956	Paper Feed Front Cover	17- 1
A212 2982	Paper Lift Shutter	17- 31
A212 3051	Development Unit	39- 1
A212 3056	Coupled Gear - 15z/22z	39- 25
A212 3057	Gear - 17Z	39- 24
A212 3058	Gear - 26Z	39- 26
A212 3063	Paddle Roller	39- 14
A212 3068	Toner Bottle Holder	37- 15
A212 3071	Deveropper Rail Seal	69- 18
A212 3072	Relay Adjusting Spring	37- 31
A212 3072	Relay Adjusting Spring	67- 10
A212 3073	Chuck Spring	37- 8

Part No.	Description	Page and Index No.
A212 3078	Shutter Spring	37- 17
A212 3079	Toner Collection Coil	39- 10
A212 3081	Decal - Toner Supply	83- 20
A212 3087	Terminal Cap	65- 11
A212 3090	Development Position Plate	39- 4
A212 3150	Toner Supply Unit (RIC-EU)	37- *
A212 3151	Toner Supply Unit (RIC-NA)	37- *
A212 3153	Toner Supply Unit (OEM/RIC-AA)	37- *
A212 3157	Bottole Holder Bracket	37- 27
A212 3172	Shutter	37- 19
A212 3173	Shutter Guide	37- 16
A212 3174	Shutter Holder	37- 18
A212 3177	Toner Slider	37- 4
A212 3179	Chuck Shaft	37- 7
A212 3185	Toner Supply Gear (RIC-EU)	37- 1
A212 3187	Toner Supply Gear (RIC-NA)	37- 1
A212 3189	Toner Supply Gear (OEM/RIC-AA)	37- 1
A212 3190	Toner Bottle Stopper	37- 10
A212 3197	Bottle Holder	37- 13
A212 3200	Toner Hopper Ass'y	39- 21
A212 3270	Stay - Toner Supply	69- 17
A212 3281	Bottle Bracket Cover	37- 14
A212 3580	Toner Collection Unit	41- 23
A212 3590	ADS Plate	43- 19
A212 3595	Pick-off Pawl Retainer	43- 3
A212 3850	Transfer Unit	45- 1
A212 3851	Spring - T/S Unit	45- 20
A212 3851	Spring - T/S Unit	65- 35
A212 3853	Bias Roller Bushing - Rear	45- 11
A212 3862	Transfer Belt Frame	45- 7
A212 3863	Front Side Plate	45- 4
A212 3865	Belt Drive Gear - 25z	45- 10
A212 3876	Rear Side Plate	45- 9
A212 3882	Transfer Belt Casing	45- 31

Part No.	Description	Page and Index No
A212 3883	Toner Collection Cap	45- 29
A212 3884	Belt Guide Plate	45- 14
A212 3886	Belt Pressure Lever	45- 19
A212 3887	Belt Release Stay	45- 21
A212 3888	Earth Plate	45- 30
A212 3894	Bushing	45- 16
A212 3895	Bushing	45- 22
A212 3901	Entrance Guide Plate	45- 27
A212 3914	Magnetic Clutch Feeler	65- 28
A212 3930	Belt Unit Handle	77- 8
A212 4005	Fusing Unit (NA)	47- *
A212 4006	Fusing Exit Unit	49- 1
A212 4007	Fusing Unit (EU/ASIA/TWN)	47- *
A212 4053	Fusing Upper Stay	47- 2
A212 4103	Solenoid Spring	47- 18
A212 4110	Fuser Stripper Ass'y	47- 27
A212 4130	Fusing Front Cover	47- 1
A212 4151	Fusing Unit Frame	49- 20
A212 4205	Cleaning Roller Bracket	49- 8
A212 4301	Exit Plate	49- 17
A212 4326	Exit Roller Ass'y	49- 6
A212 4352	Fusing Lock Lever	77- 2
A212 4450	Upper Guide Plate	59- 15
A212 4450	Upper Guide Plate	61- 11
A212 4459	Pressure Spring	49- 19
A212 4460	Exit Cover	61- 12
A212 4467	Spring - Stripper Pawl Release	69- 8
A212 4467	Spring - Stripper Pawl Release	77- 3
A212 4495	Shift Clutch	59- 8
A212 4495	Shift Clutch	61- 2
A212 4496	Gear - 24Z	61- 14
A212 4496	Gear - 24Z	59- 6
A212 5101	Main Control Board (115V)	81- *
A212 5101	Main Control Board (NA)	71- 2

Part No.	Description	Page and Index No.
A212 5103	IC - 4MX16 - 120NS	71- 4
A212 5132	Density Sensor	43- 18
A212 5160	ADS Board	33- 18
A212 5201	Main Control Board (230V)	81- *
A212 5201	Main Control Board (EU/ASIA/TWN)	71- 2
A212 5312	Optical Harness	71- 13
A212 5316	Paper Feed Harness -2trays (A212)	71- 14
A212 5319	Rear Upper Harness	71- 5
A212 5320	Front Right Harness (EU/ASIA/TWN)	69- 5
A212 5324	Sorter Relay Harness	73- 12
A212 5333	CT Harness	27- 16
A212 5334	CT Harness - 7p	77- 11
A212 5393	Optical Harness 3	33- 23
A212 5460	Operation Panel Board - LT (A212)	13- 1
A212 5465	Operation Panel Board - A4 (A212)	13- 1
A212 5520	Front Right Harness (NA)	69- 5
A212 5661	AC Main Harness	69- 3
A212 5804	Main Switch Bracket (EU/ASIA/TWN)	69- 19
A212 5807	Bracket Ardf	71- 20
A212 5810	Power Supply Cord Bracket	73- 17
A212 5811	Main Control Board Bracket	71- 1
A212 5814	Main Switch Bracket (NA)	69- 19
A212 5820	Total Counter Bracket	69- 11
A212 5829	Decal - Main Switch Cover (EU/ASIA/TWN)	9- 10
A212 5830	Decal - Main Switch (EU/ASIA/TWN)	9- 32
A212 6404	Decal - Model Name - GES (A212)	9- 30
A212 6404	Decal - Model Name - GES (A212)	83- 13
A212 6407	Decal - Model Name - NST (A212)	83- 13
A212 6407	Decal - Model Name - NST (A214)	83- 13
A212 6407	Decal - Model Name - NSA (A212)	9- 30
A212 6412	Front Cover (A212)(SVN)	9- 2
A212 6414	Decal - Model Name - REX (A214)	83- 13
A212 6414	Decal - Model Name - REX (A212)	83- 13
A212 6414	Decal - Model Name - REX (A212)	9- 30

Part No.	Description	Page and Index No
A212 6422	Front Cover (A212)(INF)	9- 2
A212 8607	Operating Instructions - English LT (RIC)	83- 6
A212 8608	Operating Instructions - English A4 (RIC)	83- 6
A212 8650	Operating Instructions - English LT (SVN)	83- 6
A212 8660	Operating Instructions - English A4 (INF)	83- 6
A212 8661	Operating Instructions - German (INF)	83- 6
A212 8662	Operating Instructions - French (INF)	83- 6
A212 8663	Operating Instructions - Italian(INF)	83- 6
A212 8664	Operating Instructions - Spanish(INF)	83- 6
A212 8690	Operating Instructions - English A4 (NRG)	83- 6
A212 8697	Operating Instructions - English LT (NRG)	83- 6
A212 8834	Operation panel Sheet - LT	9- 31

Part No.	Description	Page and Index No.
AA00 1381	Decal - FCC/15-B CSA CLASS-A	83- 25
AA00 1389	Large Decal - Energy Star	83- 16
AA00 1389	Large Decal - Energy Star (NA)	9- 33
AA00 2209	Decal - Paper Size	83- 12
AA01 2080	Dust Filter	9- 26
AA04 3374	Timing Belt - S2M800	57- 17
AA04 3386	Timing Belt - 40S2M1224	35- 2
AA04 3387	Timing Belt - 40S2M984	35- 1
AA04 3388	Timing Belt - 60S2M180	35- 11
AA04 3389	Timing Belt - 60S3M201	67- 13
AA04 3390	Timing Belt - 40S2M192	53- 3
AA04 3391	Timing Belt - 160S2M328	63- 6
AA04 3392	Drum Timing Belt	63- 3
AA04 3396	Timing Belt - 60S3M366	63- 15
AA04 3397	Timing Belt - 30S3M300	63- 18
AA04 3420	Timing Belt - 80S3M519	63- 4
AA04 3456	Timing Belt - S3M167	21- 12
AA05 0086	Lens Drive Wire - Horizontal	29- 20
AA05 0087	Lens Drive Wire - Vertical	35- 26
AA05 1024	Release Wire	69- 4
AA05 1024	Release Wire	63- 20
AA05 1025	Release Wire	75- 4
AA06 0228	Spring - Transfer Drum Cleaning Sol	63- 11
AA06 0593	Spring	55- 9
AA06 3239	Spring - Handle	19- 20
AA06 3367	Pressure Spring	37- 12
AA06 3370	Spring	57- 16
AA06 3499	Pressure Spring	23- 25
AA06 3523	Adjust Spring	33- 21
AA06 3532	Spring	73- 16
AA06 3538	Spring - 10mm	19- 40
AA06 3552	Pressure Spring	65- 20
AA06 6247	Spring	45- 23
AA06 6274	Spring	59- 12

Part No.	Description	Page and Index No
AA06 6274	Spring	61- 8
AA08 0034	Bushing - 4x5x7	19- 37
AA08 0037	Bushing - 6 mm	23- 24
AA08 0111	Bushing - 8x12x7	17- 23
AA08 0186	Bushing - 6mm	39- 11
AA08 0188	Bushing - 5mm	39- 7
AA08 0197	Rear Roller Bushing	41- 9
AA08 2047	Bushing - 8x16x7	27- 1
AA08 2047	Bushing - 8x16x7	65- 3
AA08 2047	Bushing - 8x16x7	67- 22
AA08 2061	Bias Roller Bushing - Front	45- 6
AA08 3010	Clutch Roller - 6x14x10	23- 13
AA11 1208	Paper End Sensor Feeler	53- 5
AA12 0067	Anti Static Brush	51- 16
AA12 0071	Exit Antistatic Brush	61- 4
AA12 0071	Exit Antistatic Brush	59- 16
AA13 2184	Motor Cushion	55- 16
AA13 2186	Collar	75- 8
AA14 0291	Bottom Plate Shaft	57- 6
AA14 0321	Pick-off Pawl Shaft	43- 4
AA14 0534	Feed Shaft	23- 11
AA14 0560	Joint Shaft	43- 20
AA14 0576	LCT Drive Shaft	21- 15
AA14 0599	Scanner Drive Shaft	35- 4
AA14 3025	Stepped Screw - M3	37- 22
AA14 3219	Stepped Screw	23- 3
AA14 3301	Stepped Screw - M3x4	71- 22
AA14 3307	Stepped Screw - M3x4	55- 17
AA14 3410	Stepped Screw - M4	37- 11
AA14 3416	Stepped Screw - M4x3	9- 19
AA14 3417	Shoulder Screw - M4x4	9- 22
AA14 3444	Stepped Screw	75- 26
AA14 3452	Stepped Screw	73- 14
AA14 3459	Knob Serew	37- 28

Part No.	Description	Page and Index No.
AA14 3712	Chuck Shaft	37- 5
AA14 3715	Stepped Screw - M5	47- 10
AA14 3730	Stepped Screw	41- 21
AA14 3744	Stepped Screw	41- 19
AA14 5539	Solenoid Shaft	65- 4
AA14 5794	Front Support Shaft	41- 20
AA14 5808	Rear Support Shaft	41- 12
AA14 8413	Idle Gear Shaft	37- 25
AA14 8447	Platen Cover Stud	11- 10
AA15 0367	Shielding Mylar	29- 22
AA15 0368	Shielding Plate - Cover - Lens	29- 4
AA15 0369	Original Sensor Seal	29- 2
AA15 0377	Shutter Seal	37- 20
AA15 0380	Seal Front Holder	43- 27
AA15 0381	Seal Rear Holder	43- 25
AA15 0382	Entrance Seal	39- 3
AA15 0389	Drum Guide Seal	43- 26
AA15 1144	Shield - Guide Plate	39- 6
AA15 1177	Seal - 5x82x4	73- 1
AA15 1809	Rear Seal	43- 7
AA15 1894	Seal - 67x53x2	37- 2
AA15 1935	Seal - 38x32x2.5	39- 23
AA15 1940	Left Upper Seal	39- 5
AA15 1941	Right Shield - Development Case	39- 17
AA15 1942	Side Seal	43- 13
AA15 1943	Front Seal	43- 6
AA15 1944	Rear Seal	43- 10
AA15 1945	Joint Seal	41- 22
AA15 2136	Shield - Development Roller	39- 8
AA15 2245	Front Drum Seal	43- 28
AA15 2246	Rear Drum Seal	43- 23
AA15 2330	Magnification Seal	29- 12
AA15 2332	Seal - 9x351	45- 15
AA16 1067	Cushion - Motor	55- 8

Part No.	Description	Page and Index No
AA16 1107	Cushion	43- 22
AA16 2067	Platen Cover Pad	11- 6
AA16 2068	Guide Plate Pad	51- 20
AB01 0341	Gear - 18Z	43- 40
AB01 0348	Gear - 20Z	41- 15
AB01 1133	Gear - 49Z	21- 14
AB01 1153	Idle Gear - 25Z	67- 14
AB01 1165	Gear - 32Z	55- 5
AB01 1166	Gear - 33Z	53- 11
AB01 1167	Gear - 25Z	55- 15
AB01 1343	Idle Gear - 23Z	23- 9
AB01 1344	Gear - 16Z	23- 27
AB01 1345	Gear - 20Z	23- 28
AB01 1346	Gear - 27Z	23- 31
AB01 1357	Collection Coil Gear	43- 17
AB01 1358	Driven Gear	41- 4
AB01 1359	Joint Drive Gear	43- 21
AB01 1360	Idle Gear	43- 34
AB01 1361	Drive Gear	43- 37
AB01 3106	Gear - Drive - Third - Z18	59- 23
AB01 3343	Gear - 22Z	39- 13
AB01 3868	Gear - 16Z	17- 15
AB01 3872	Fusing Cam Gear - 28Z	63- 14
AB01 3881	Gear - 31Z	57- 12
AB01 3882	Gear - 40Z	47- 23
AB01 3883	Idle Gear - 25Z	47- 3
AB01 3884	Exit Gear - 17z	49- 7
AB01 3885	Idle Gear - 20z	49- 5
AB01 3908	Gear - 27Z	67- 20
AB01 3909	Idle Gear	39- 9
AB01 3911	Gear	39- 12
AB01 3917	Toner Supply Gear	65- 2
AB01 3918	Drive Gear - 35Z	67- 15
AB01 7129	Gear - 20Z And 72Z	35- 17

Part No.	Description	Page and Index No.
AB01 7332	Gear - 24Z/41Z	55- 14
AB01 7337	Gear - 15Z/55Z	55- 4
AB01 7339	End Fence Gear - 22Z/58Z	57- 14
AB01 7345	Timing Pulley - 35Z	63- 17
AB01 7347	Idle Gear	37- 24
AB01 7360	Gear Pulley	29- 19
AB01 7360	Gear Pulley	35- 8
AB01 7361	Gear - 24Z/56Z	35- 18
AB01 7361	Gear - 24Z/56Z	29- 21
AB01 7362	Gear - 25Z/32Z	35- 7
AB01 7366	Paddle Gear	39- 15
AB01 7368	Cleaning Drive Gear	65- 7
AB01 7369	Transfer Belt Pulley	65- 22
AB01 7370	Development Pulley	65- 24
AB01 7371	Exit Pulley	63- 9
AB01 7373	Idle Cam	43- 16
AB01 7374	Drive Gear	43- 32
AB01 7375	Drive Gear	43- 31
AB01 7376	Separation Pawl Cam	43- 12
AB01 7377	Gear - 25Z	67- 18
AB01 7385	Gear - 17Z/24Z	65- 29
AB01 7386	Cleaning Cam	65- 1
AB01 7388	Blade Cam	43- 33
AB01 7394	Timing Pulley - 24T/20Z	67- 19
AB01 7395	Timing Pulley	67- 17
AB01 7400	Gear- 18Z/68Z	57- 13
AB03 0281	Timing Pulley - 28Z	21- 9
AB03 0463	Fusing Cam Pulley	63- 13
AB03 0473	End Fence Pulley - 22Z	57- 11
AB03 0474	Pulley - 24Z	53- 2
AB03 0486	Timing Pulley - 24Z	35- 9
AB03 0489	Timing Pulley - 22Z	35- 15
AB03 0491	Timing Pulley - 25Z	67- 9
AB03 0492	Pulley - 25/25/34/125Z	63- 5

Part No.	Description	Page and Index No
AB03 0494	Drum Pulley	65- 14
AB03 2059	Driven Pulley	35- 23
AB03 2059	Driven Pulley	29- 14
AB03 3064	Drive Pulley	67- 16
AB03 3069	Timing Pulley - 22Z/24Z	35- 3
AB04 0015	Spring Clutch - Tray Bottom Plate	55- 12
AC01 2060	Exposure Glass - A3T-3.2	9- 23
AC03 0103	1st Mirror	31- 13
AC03 0106	4/5 Mirror	33- 16
AC03 0107	6th Mirror	35- 20
AC03 5022	Rear Mirror Clamp - 1st Mirror	31- 2
AC04 2113	Left Original Scale - A4	9- 20
AC04 2117	Left Original Scale - LT	9- 20
AC04 2120	Rear Original Scale (A4)	9- 21
AC04 2124	Rear Original Scale - LT	9- 21
AD02 5019	Drum Pick-off Pawl	43- 2
AD02 7004	Charge Roller	41- 13
AD04 3035	Toner Collection Coil	43- 30
AE01 1024	Hot Roller	47- 22
AE02 0050	Pressure Roller	49- 15
AE03 0022	Bearing - 12x24x64m	49- 14
AE03 0023	Bearing - 30x42x7mm	47- 21
AE03 1028	Bushing - 4mm	49- 11
AE04 2030	Cleaning Roller	49- 12
AE04 4019	Hot Roller Stripper	47- 20
AF01 0018	Duplex Tray	57- 27
AF01 3003	Bottom Plate Pad - Duplex	57- 2
AF01 5027	Paper Size Slider	17- 14
AF01 6160	Rear Side Fence	57- 3
AF01 6161	Front Side Fence	57- 4
AF02 0316	Lower Registration Roller	27- 13
AF02 0317	Stack Roller	53- 15
AF02 0319	Transport Roller	53- 6
AF02 0320	Right Transport Roller	53- 7

Part No.	Description	Page and Index No.
AF02 0327	Exit Roller	59- 20
AF02 0327	Exit Roller	61- 13
AF02 0330	Vertical Driven Roller	19- 36
AF02 0336	Inverter Drive Roller	59- 22
AF02 0337	Upper Relay Roller	27- 20
AF02 0338	Lower Relay Roller	27- 21
AF02 1052	Upper Registration Roller	27- 12
AF02 2042	Middle Pressure Roller	61- 10
AF02 2042	Middle Pressure Roller	59- 14
AF02 2077	Driven Roller	53- 19
AF02 2077	Driven Roller	51- 7
AF02 2079	Vertical Driven Roller	15- 20
AF02 5024	Pick-off Pawl	59- 21
AF03 0024	Pick-up Roller	23- 10
AF03 1024	Feed Roller	53- 17
AF03 1025	Feed Roller	23- 7
AF03 2025	Separation Roller	23- 21
AF04 0031	Upper Exit Roller	59- 19
AF04 0031	Upper Exit Roller	51- 11
AF04 0548	Exit Driven Roller	49- 3
AF04 3076	Copy Tray Slide	9- 14
AF04 3077	Copy Tray Guide	9- 15
AF04 3083	Copy Tray	9- 13
AG05 0074	Registration Knob	9- 6
AG05 0074	Registration Knob	27- 2
AG05 0076	Fusing Knob	49- 13
AG07 0004	Magnetic Catch	75- 18
AG07 0004	Magnetic Catch	9- 4
AG07 0004	Magnetic Catch	59- 3
AG07 0004	Magnetic Catch	15- 19
AG07 0004	Magnetic Catch	21- 16
AG07 0009	Magnetic Catch	49- 4
AH01 0007	Rubber Foot	77- 13
AW01 0040	Original Sensor	33- 11

Part No.	Description	Page and Index No
AW01 0068	Original Length Sensor	29- 5
AW02 0022	Photointerruptor	33- 13
AW02 0022	Photointerruptor	73- 8
AW02 0068	Photointerruptor	27- 15
AW02 0069	Photointerruptor	19- 28
AW02 0069	Photointerruptor	15- 15
AW02 0075	Photointerrupter	23- 16
AW02 0075	Photointerrupter	57- 18
AW02 0075	Photointerrupter	55- 21
AW02 0075	Photointerrupter	61- 6
AW02 0075	Photointerrupter	21- 7
AW02 0086	Photointerruptor	29- 13
AW02 0086	Photointerruptor	25- 12
AW02 0086	Photointerruptor	59- 10
AW02 0086	Photointerrupter	65- 27
AW03 0054	Optical Fiber - 250mm	71- 9
AW03 0055	Optical Fiber - 420mm	71- 8
AW03 0056	Optical Fiber - 550mm	73- 9
AW10 0027	Thermister	31- 12
AW10 0027	Thermister	9- 29
AW10 0032	Thermistor - 25°C 10k Ω	41- 24
AW23 0008	ID Sensor	39- 18
AW23 0009	Toner End Sensor	39- 22
AW50 0010	Push Switch	73- 5
AW50 0012	Push Switch	23- 17
AX05 0090	Motor - DC 24V 36W	21- 8
AX06 0108	Motor - Dc24v 45w	63- 8
AX12 0039	DC SOL 24V 400GF	59- 25
AX20 0101	Magnetic Clutch - 2.5kgf 35Z	23- 12
AX20 0105	Magnetic Clutch - 15kgf 24Z	65- 6
AX20 0106	Magnetic Clutch - 15kgf 52Z	65- 9
AX20 0107	Magnetic Clutch - 10kgf 25Z	67- 25
AX20 0109	Magnetic Clutch - 10kgf.cm 35Z	67- 27
AX21 0058	Magnetic Clutch - 42z	67- 24

Part No.	Description	Page and Index No.
AX21 0059	Spring Clutch	65- 30
AX31 0024	Total Counter	69- 9
AX40 0021	Tray Anticondensation Heater - 115V 18W	69- 6
AX40 0022	Tray Anticondensation Heater - 240V 18W	69- 6
AX40 0047	Anticondensation Heater - 115V 15W	33- 22
AX40 0048	Anticondensation Heater - 240V 15W	33- 22
AX40 0094	Anticondensation Heater - 120V 9W	75- 1
AX40 0095	Anticondensation Heater - 230V 9W	75- 1
AX43 0023	Fusing Lamp - 120V 350W	47- 24
AX43 0025	Fusing Lamp - 230V 350W	47- 24
AX43 0030	Main Fusing Lamp - 120V 550W	47- 25
AX43 0031	Main Fusing Lamp - 230V 550W	47- 25
AX52 0026	Exposure Lamp - 85V 200W (EU/ASIA/TWN)	31- 7
AX52 0028	Exposure Lamp - 97V 200W (NA)	31- 7
AX64 0058	Fan Motor - DC 24V 4.32W	73- 6
AX64 0059	Fan Motor - DC24V 3.12W	61- 3
AX64 0059	Fan Motor - DC24V 3.12W	59- 7
AZ02 0008	Coil - 1 0mh 2A	73- 21
AZ13 0023	Transformer - 230V	71- 18
AZ23 0055	DC Drive Board - 100/120V (NA)	71- 10
AZ23 0060	DC Drive Board - 220V/240V (EU/ASIA/TWN)	71- 10
AZ30 0041	Power Pack - Transfer Unit	45- 26
AZ32 0078	DC Power Pack	73- 2
AZ43 0020	High Voltage Supply Coard	73- 3
AZ43 0020	High Voltage Supply Coard	65- 25
AZ48 0021	Relay Harness - 3P	29- 28
AZ48 0029	CT Harness	41- 1
C105 2352	Stepped Screw - M6x1.7	63- 12
C225 2866	Decal - Key Top Cover	83- 11
C225 2867	Decal - Cover - Panel - Nashua	83- 11
C225 5866	Decal - Key Top Cover	9- 34
C225 5867	Decal - Cover - Panel - Nashua	9- 34
G011 3305	Gear - 16T	15- 9
G011 3305	Gear - 16T	57- 8

Part No.	Description	Page and Index No
G012 3897	Relay Harness - Toner End Sensor	39- 20
G020 2554	Paper Feed Roller Ass'y (NA)	25- 10
G020 2555	Paper Feed Roller	25- 8
G020 2565	Paper Guide	25- 7
G020 2570	Shaft - Paper Feed Roller (NA)	25- 6
G020 2585	Front Pin - Paper Feed Roller	25- 5
G020 2586	Rear Pin - Paper Feed Roller	25- 9
G020 2645	Friction Pad	17- 13

Part No.	Description	Page and Index No.
A008 9502	Silicone Grease - G40M.	85- 6
A028 9300	Grease Nok Barrierta - JFE 5 5/2	85- 3
A053 1957	Flex Hinge - Platen Cover	11- 5
A069 1883	Shoe - Scanner	33- 6
A069 1883	Shoe - Scanner	29- 17
A069 1883	Shoe - Scanner	31- 3
A069 5168	Heat Sink - Motor Board	81- 1
A075 1766	Adjusting Cam	35- 22
A077 1310	Snap Ring - M2	41- 6
A077 1673	Thermofuse Terminal	31- 5
A077 1690	Spring Plate - Mirror	33- 4
A077 1690	Spring Plate - Mirror	35- 19
A077 4162	Shoulder Screw - M3	49- 16
A079 3626	Stepped Screw - Swing Cleaning	55- 7
A085 1670	Exposure Adjusting Plate	31- 8
A085 1861	Main Refretor	31- 18
A096 1692	ADS Case	33- 15
A096 1692	ADS Case (Option)	33- 31
A096 1693	ADS Cover	33- 14
A096 1693	ADS Cover (Option)	33- 32
A096 1873	Scanner Shoe Pin	31- 17
A096 1873	Scanner Shoe Pin	33- 1
A096 3863	Spacer - 4x6x1	17- 26
A096 5230	ADS Board (Option)	33- 27
A111 1753	Seal - 0.1x18x49	29- 7
A134 1071	Left Grip Plate	69- 14
A134 1071	Left Grip Plate	63- 23
A134 1072	Right Bracket - Grip Plate	69- 15
A134 1072	Right Bracket - Grip Plate	63- 22
A134 1073	Left Bracket - Grip Plate	69- 16
A134 1073	Left Bracket - Grip Plate	63- 24
A134 1121	Joint Gear	63- 16
A134 1394	Front Platen Cover	11- 4
A134 1395	Rear Platen Cover	11- 7

Part No.	Description	Page and Index No
A134 1396	Original Holder	11- 8
A134 2557	Regist Sensor Bracket	27- 14
A134 2656	Stopper Plate	23- 6
A134 2658	Grounding Plate	23- 5
A134 2662	Grounding Plate	23- 18
A134 2667	Separation Drive Shaft	23- 29
A134 2668	Separation Driven Shaft	23- 23
A134 2674	Torque Limitter - 400fg	23- 22
A134 2676	Solenoid Bracket (A212)	67- 5
A134 2678	Solenoid Link (A212)	67- 3
A134 2679	Pick-up Lever	67- 2
A134 2680	DC Solenoid	67- 6
A134 2688	Positioning Plate	23- 1
A134 2701	By-pass Feed Guide	15- 4
A134 2927	Tray Lock Bracket	77- 20
A134 2941	Tray Sensor Bracket	73- 4
A134 2947	Heater Cover (Option)	69- 10
A134 2956	Paper Feed Front Cover	51- 1
A134 3161	Bottle Drive Bracket	37- 26
A134 3162	Bottle Drive Motor	37- 23
A134 3180	Bottle Chuck	37- 3
A134 3181	Chuck Roller	37- 6
A134 3201	Cam - Toner Bottle	37- 32
A134 3215	Ruber Cap	37- 9
A134 4061	Rear Terminal Plate	47- 11
A134 4153	Slide Rail - Fusing	49- 10
A134 4161	Pressure Lever	49- 18
A134 4280	Fusing Exit Guide - Lower	49- 2
A134 4351	Stay - Fusing Rail	77- 5
A134 4355	Fusing Unit Stopper	77- 7
A134 4508	Inverter Guide Plate	55- 13
A134 4512	Feed Roller Shaft	53- 21
A134 4525	End Fence	57- 26
A134 4527	Separation Roller	55- 20

Part No.	Description	Page and Index No.
A134 4619	Guide Plate Link	51- 12
A134 4620	Grounding Plate	57- 19
A134 4649	Paper Guide Holder	53- 16
A134 4658	Vibrating Plate	55- 23
A134 4662	Duplex Guide Plate	55- 24
A134 4676	Paper End Feeler	53- 8
A134 4688	Front Side Fence Rack	57- 10
A134 4689	Rear Side Fence Rack	57- 9
A134 4690	Clutch Stopper	53- 20
A134 4701	Front Upper Cover	51- 3
A134 4710	End Fence Actuator	57- 24
A134 4712	Right Cover Bracket	51- 4
A134 4714	Tightener	57- 15
A134 4720	End Fence Upper Cover	51- 2
A134 4721	Connector Cover	51- 6
A134 4726	Guide Plate Knob	51- 19
A134 4728	Inverter Feeler	51- 5
A134 4730	Entrance Feeler	51- 14
A134 4739	Lower Guide Plate Knob	51- 9
A134 4740	Lower Guide Plate	51- 15
A134 4751	Front Side Plate	53- 1
A134 4765	Grounding Plate	55- 22
A134 4781	Rear Side Plate	53- 9
A134 4790	Paper End Sensor	55- 18
A134 4799	Motor Bracket	55- 1
A134 4800	Motor Bracket	55- 2
A134 4804	Guide Plate Stopper	55- 19
A134 4808	Rear Guide Holder	53- 18
A134 4809	Front Guide Holder	53- 14
A134 4884	Decal - Duplex Misfeed Removal	83- 18
A134 4884	Decal - Duplex Misfeed Removal	51- 21
A134 4901	Right Slide Rail Ass'y	77- 18
A134 5254	Duplex Control Board	57- 23
A134 5290	Transport Drive Motor	55- 3

Part No.	Description	Page and Index No
A134 5291	Jogger Drive Motor - Side Fence	57- 20
A134 5292	Jogger Drive Motor - End Fence	57- 21
A134 5311	By-pass Feed Harness	23- 14
A134 5320	Toner Bottle Cam	57- 28
A134 5321	Sensor Relay Harness	57- 25
A134 5322	End Fence Harness	57- 31
A134 5323	Motor Harness	57- 22
A153 1107	Motor Bracket	63- 25
A153 1112	Drive Gear Holder	65- 15
A153 1117	Drum Drive Shaft	65- 21
A153 1125	Development Drive Bracket	65- 8
A153 1127	Clutch Shaft	65- 5
A153 1128	Tightener	63- 10
A153 1131	Development Support Plate	63- 7
A153 1132	Development Tightener	65- 16
A153 1135	Drum Drive Tightener	65- 19
A153 1251	Upper Cover	9- 24
A153 1259	Platen Cover Bracket - Left	73- 11
A153 1285	Emblem (RIC)	9- 1
A153 1285	Emblem (RIC)	83- 4
A153 1353	Front Cover Hinge	69- 1
A153 1354	Hinge Pin	9- 3
A153 1355	Key Counter Bracket	69- 2
A153 1365	Symbol Explanation Decal	83- 14
A153 1369	Platen Cover Ass'y	11- 1
A153 1370	Platen Cover Hinge	11- 3
A153 1380	Platen Cover Bracket	11- 11
A153 1383	Platen Cover Feeler	11- 9
A153 1452	Key-top Start	13- 2
A153 1453	Key-top Interrupt	13- 3
A153 1454	Key-top Mode Clear	13- 4
A153 1455	Key-top Program	13- 5
A153 1456	Key-top 10 Key	13- 6
A153 1457	Key-top Cler/Stop	13- 7

Part No.	Description	Page and Index No.
A153 1458	Key-top Auto Density	13- 8
A153 1459	Key-top Derker	13- 9
A153 1460	Key-top Lighter	13- 10
A153 1461	Key-top Auto Paper Select	13- 11
A153 1462	Key-top Paper Select	13- 12
A153 1463	Key-top Full Size	13- 13
A153 1464	Key-top Auto Reduce/Enlarge	13- 14
A153 1465	Key-top - Sorter	13- 18
A153 1469	Panel Cover	9- 11
A153 1469	Panel Cover	13- 15
A153 1475	Decal - 10key Zoom -LT/DLT	83- 7
A153 1476	Decal - Margin Adjustment - LT/DLT	83- 8
A153 1478	Decal - 10key Zoom - A4/A3	83- 7
A153 1479	Decal - Margin Adjustment - A4/A3	83- 8
A153 1675	Harness Guard Seal	75- 28
A153 1700	Scanner Drive Motor - DC2.3V 13.5W	35- 13
A153 1720	Scanner Rail	33- 12
A153 1721	Spring Plate	33- 10
A153 1749	Scale Bracket	31- 11
A153 1754	Exposure Stay	31- 14
A153 1757	Contact Grass Holder	31- 16
A153 1776	Front Mirror Clamp - 1st Mirror	31- 4
A153 1777	Front Terminal	31- 6
A153 1778	Rear Terminal	31- 9
A153 1779	Thermostat - 121°C 250V 10A	31- 15
A153 1780	Exposure Lamp Harness	31- 10
A153 1801	2nd Scanner Ass'y	33- 8
A153 1805	Front Mirror Holder	33- 5
A153 1806	Rear Mirror Holder	33- 7
A153 1808	2nd Mirror	33- 3
A153 1809	3rd Mirror	33- 9
A153 1851	Lens Cover	29- 3
A153 1854	Wire Guide	29- 27
A153 1855	Shading Plate	29- 26

Part No.	Description	Page and Index No
A153 1859	Shielding Sheet Guide	29- 23
A153 1861	Bracket - Flexible Board	29- 25
A153 1905	3rd Scanner Filler	33- 30
A153 1906	Adjust Shoe	33- 20
A153 1908	Shielding Plate	33- 17
A153 1912	3rd Scanner Stay	33- 26
A153 1923	6th Mirror Bracket	35- 27
A153 1924	6th Mirror Plate	35- 28
A153 1935	Lens Drive Bracket	35- 29
A153 1947	Magnification Drive Unit Barcket	35- 24
A153 1952	Magnification Rail	35- 21
A153 1961	Lens Cover	29- 6
A153 1971	Original Sensor Bracket	29- 8
A153 1974	Original Sensor Bracket	29- 24
A153 1976	ADS Sensor Bracket	33- 25
A153 1986	Cooling Fan Duct	73- 7
A153 2052	Release Bracket	75- 23
A153 2061	Release Lever	75- 29
A153 2072	Release Link Lever	75- 5
A153 2073	Guide Rail	75- 9
A153 2075	Front Roller Cam	75- 11
A153 2076	Rear Roller Cam	75- 12
A153 2080	Eraser Lamp	75- 17
A153 2083	Left Drum Rail	75- 16
A153 2084	Spacer	75- 10
A153 2085	Spacer	75- 27
A153 2090	Quenching Lamp	75- 14
A153 2116	Grounding Plate	41- 7
A153 2126	Swing Arm	41- 3
A153 2130	Receptacle Housing	65- 13
A153 2135	Charge Roller Terminal Ass'y	41- 8
A153 2143	Shielding Plate	41- 14
A153 2277	Cleaning Blade	43- 39
A153 2301	Front Stay	43- 36

Part No.	Description	Page and Index No.
A153 2302	Drum Bearing Holder	43- 38
A153 2303	Grounding Plate	43- 35
A153 2995	Decal Paper Size - LT/DLT	83- 1
A153 2995	Decal Paper Size - LT/DLT	17- 35
A153 2996	Decal Paper Size - A4/A3	17- 35
A153 2996	Decal Paper Size - A4/A3	83- 1
A153 3065	Right Paddle Roller	39- 16
A153 3075	Entrance Seal	39- 2
A153 3086	Bias Terminal	65- 12
A153 3114	Transfer Entrance Guide	27- 10
A153 3149	Knob Screw - M4x12	39- 27
A153 3262	Bottle Unit Hinge	37- 29
A153 3264	Bottle Unit Upper Hinge	37- 33
A153 3265	Bottle Unit Lock Plate	37- 21
A153 3266	Bottle Unit Link Plate	37- 30
A153 3555	Cleaning Entrance Seal	43- 24
A153 3558	Blade Seal	43- 14
A153 3561	Cleaning Blade Bracket	43- 9
A153 3570	Spring Plate	43- 15
A153 3591	Mylar - 17x335	43- 29
A153 3598	Pin Bracket	75- 22
A153 3865	Belt Drive Roller	45- 13
A153 3866	Belt Drive Roller	45- 3
A153 3870	Transfer Bias Roller	45- 8
A153 3873	Bias Roller Terminal	45- 5
A153 3874	Earth Terminal	45- 12
A153 3877	Spring Plate	45- 25
A153 3888	Earth Plate	45- 24
A153 3892	Belt Cleaning Blade	45- 17
A153 3893	Belt Cleaning Stay	45- 18
A153 3897	Harness Clamp	45- 28
A153 3920	Belt Release Arm	75- 25
A153 3929	Decal - Caution Lever	77- 16
A153 3929	Decal - Caution Lever	83- 24

Part No.	Description	Page and Index No
A153 3931	Transport Unit Stay	77- 10
A153 3933	Stopper Stay	77- 9
A153 4055	Upper Fusing Guide	47- 26
A153 4062	Electrode Plate - Middle	47- 12
A153 4063	Front Terminal Plate	47- 14
A153 4074	Terminal Connector - 2p	47- 4
A153 4075	Front Holder	47- 15
A153 4088	Thermister	47- 9
A153 4089	Thermister - 2	47- 8
A153 4102	Front Lamp Terminal Holder	47- 16
A153 4112	Stripper Bracket	47- 19
A153 4114	Stripper Stopper	47- 17
A153 4197	Lower Fusing Guide	49- 9
A153 5114	RAM Board	71- 15
A153 5114	Ram Board	81- 2
A153 5141	Lens Drive Harness	29- 16
A153 5211	Mirror Drive Motor - DC24V 8.6V	35- 25
A153 5212	Lens Drive Motor - Horizontal	29- 18
A153 5213	Lens Drive Motor - DC24V 8.6W	35- 5
A153 5266	Thermofuse - 169°c	47- 13
A153 5328	CT Harness	59- 9
A153 5328	CT Harness	61- 5
A153 5330	CT Harness - 7p	39- 19
A153 5339	Density Sensor Harness	75- 20
A153 5340	CT Harness	65- 10
A153 5344	Power Supply Harness - 2trays (A212)(NA)	71- 7
A153 5391	Optical Harness - 1	29- 9
A153 5392	Optical Harness - 2	29- 10
A153 5395	Optical Harness - 5	29- 15
A153 5545	AC Drive Board - 120V (NA)	71- 11
A153 5571	Power Supply Cord - 120V (NA)	73- 13
A153 5601	AC Relay Harness	73- 19
A153 5621	Noise Filter Board	73- 20
A153 5644	Power Supply Harness - 2trays (A212)	71- 7

Part No.	Description	Page and Index No.
A153 5645	AC Drive Board (230V)(EU/AISA/TWN)	71- 11
A153 5671	Power Supply Cord (EU/ASIA/TWN)	73- 13
A153 5801	DC Drive Board Bracket	71- 12
A153 5802	Lower Bracket - DC Drive Board	63- 1
A153 5803	Upper Bracket - DC Drive Board	71- 6
A153 5803	Upper Bracket - DC Drive Board	35- 10
A153 5806	Bracket Paper Tray Unit	71- 19
A153 5808	Bracket - Safety Switch	69- 13
A153 5809	Arm Interlock SW	69- 12
A153 5812	Left Lower Bracket	67- 26
A153 5813	Main Control Board Bracket	67- 1
A153 6409	Decal - Keytop Cover	9- 34
A153 6409	Decal - Keytop Cover	83- 11
A153 6423	Support Cover (INF)	9- 1
A153 6423	Support Cover (INF)	83- 4
A153 9001	Scanner Adjustment Tool	85- 7
A153 9004	Wiping Cloth	85- 8
A153 9510	OPC Drum	41- 26
A153 9513	Harness - ADS (Option)	33- 24
A154 4616	Paper Holder	51- 17
A154 4620	Bottom Plate	57- 1
A154 4621	Front Guide Plate	57- 30
A154 4622	Rear Guide Plate	57- 29
A154 5325	Duplex Unit Relay Harness	73- 15
A155 2667	Lift Sensor Feeler (A214)	23- 24
A155 2675	Pick-up Bracket (A214)	67- 5
A155 2677	Pick-up Link (A214)	67- 3
A155 2682	Lift Sensor Bracket (A214)	23- 32
A155 5165	LCT Main Board	21- 18
A155 5170	Push Switch	21- 27
A155 5314	LCT Relay Harness	71- 23
A155 5342	LCT Harness	21- 31
A155 5345	CT Harness (A214)	23- 33
A155 5348	Paper End Sensor Harness	21- 4

Part No.	Description	Page and Index No
A155 5349	LCT Vertical Harness	19- 33
A155 6101	LCT Upper Cover	19- 6
A155 6110	Front Side Plate	21- 29
A155 6112	Spacer - LCT	19- 38
A155 6113	Decal - Paper Set	19- 2
A155 6113	Decal - Paper Set	83- 3
A155 6114	Caution Decal - LCT	19- 35
A155 6114	Caution Decal - LCT	83- 19
A155 6116	Safety Switch Bracket	21- 21
A155 6117	Safety Switch Lever	21- 23
A155 6118	Spring Plate	21- 20
A155 6125	Rear Side Bracket	21- 28
A155 6136	Lift Sensor Bracket	21- 11
A155 6141	Tray Bottom Plate	21- 17
A155 6142	LCT Paper Tray	19- 14
A155 6143	Left Bracket	21- 1
A155 6145	Tray Cover	21- 19
A155 6147	Paper End Sensor Bracket	21- 3
A155 6148	Paper End Sensor Feeler	21- 2
A155 6153	Upper Hinge	21- 6
A155 6162	Cushion	19- 34
A155 6169	Hinge Holder	19- 30
A155 6170	Hinge Bracket	19- 21
A155 6171	Grip Bracket	19- 19
A155 6181	Knob	19- 18
A155 6191	LCT Front Cover	19- 17
A155 6201	LCT Hinge Bracket	19- 8
A155 6203	Paper Tray Stay	21- 5
A155 6207	Cover Bracket	19- 3
A155 6215	Harness Guide	21- 30
A155 6221	LCT Rear Cover	19- 15
A155 6231	LCT Right Cover	19- 16
A155 6241	LCT Harness Cover	19- 26
A155 6251	Upper Stay	19- 9

Part No.	Description	Page and Index No.
A155 6270	Cushion 20x30	19- 39
A155 6302	Hinge Angle	19- 5
A155 6303	Fix Hinge	19- 4
A155 6306	Front Side Fence	19- 22
A155 6307	Rear Side Fence	19- 12
A155 6311	Front Paper Holder	19- 23
A155 6312	Rear Paper Holder	19- 10
A155 6313	Support Guide	19- 11
A155 6321	Front Spring Plate	19- 24
A155 6322	Rear Sprig Plate	19- 25
A155 6324	End Fence	19- 1
A156 1452	Key-top Start (SVN)	13- 2
A156 1453	Key-top Interrupt (SVN)	13- 3
A156 1454	Key-top Mode Clear (SVN)	13- 4
A156 1455	Key-top Program (SVN)	13- 5
A156 1456	Key-top 10 Key (SVN)	13- 6
A156 1457	Key-top Cler/Stop (SVN)	13- 7
A156 1458	Key-top Auto Densty (SVN)	13- 8
A156 1459	Key-top Derker (SVN)	13- 9
A156 1460	Key-top Lighter (SVN)	13- 10
A156 1461	Key-top Auto Paper Select (SVN)	13- 11
A156 1462	Key-top Paper Select (SVN)	13- 12
A156 1463	Key-top Full Size (SVN)	13- 13
A156 1464	Key-top Auto Reduce/Enlarge (SVN)	13- 14
A156 1495	Decal Copy Ratio	83- 9
A156 6413	Emblem (SVN)	83- 4
A156 6413	Emblem (SVN)	9- 1
A157 1084	Moter Stay	61- 1
A157 1084	Morter Stay	59- 2
A157 1111	Belt Tightener	65- 23
A157 1311	Left Innner Cover	9- 17
A157 1321	Left Inner Cover - Small	9- 18
A157 1339	Lower Inner Cover	9- 8
A157 1351	Upper Inner Cover	9- 9

Part No.	Description	Page and Index No
A157 1360	Operation Sheet (A212)	83- 22
A157 1360	Operation Sheet (A212)	9- 5
A157 1770	1st Scanner Ass'y (EU/ASIA/TWN)	31- 1
A157 1790	1st Scanner Ass'y (NA)	31- 1
A157 2557	Spring Plate	15- 21
A157 2560	Paper Feed Support Plate	67- 12
A157 2800	Paper End Sensor Bracket	25- 11
A157 2804	Shield Plate - Paper End Sensor	25- 15
A157 3861	Transfer Belt	45- 2
A157 3900	Support Plate	77- 14
A157 3900	Support Plate	45- 32
A157 4456	Spring Plate	59- 13
A157 4456	Spring Plate	61- 9
A157 4459	Paper Exit Feeler	61- 7
A157 4459	Paper Exit Feeler	59- 11
A157 5311	Rear Lower Harness - 2tray (A212)	71- 17
A157 5336	Vertical Transport Harness	15- 18
A157 6403	Front Cover (NRG)	9- 2
A158 1360	Operation Sheet (A214)	83- 22
A158 1360	Operation Sheet (A214)	9- 5
A158 4451	Reverse Guide Plate	59- 5
A158 4452	Lower Reverse Guide Plate	59- 4
A158 4453	Exit Cover	59- 17
A158 4459	Spring Plate	59- 18
A158 4463	Pick-off Pawl Arm	59- 24
A158 4466	Switch Bracket	63- 21
A158 4467	Solenoid Bracket	59- 26
A158 4603	Paper Holder	51- 18
A158 4604	Duplex Lower Guide	51- 22
A158 4607	Upper Guide Plate	51- 10
A158 5310	Duplex Paper Feed Harness (A214)	71- 14
A158 5343	Duplex Power Supply Harness (A214)(NA)	71- 7
A160 5643	Duplex Power Supply Harness (A214)	71- 7
A204 1471	Keytop - Halftone	13- 19

Part No.	Description	Page and Index No.
A204 1472	Keytop - Enlarge	13- 20
A204 1473	Keytop - Reduce	13- 21
A204 1677	Optical Filter	75- 21
A204 2101	P.T.L. Lamp Ass'y	27- 9
A204 2120	Drum Charge Roller Cleaner	41- 25
A204 2155	Decal - Caution	83- 15
A204 2187	Spacer-11mm	75- 6
A204 2188	Spacer-15mm	75- 7
A204 3080	Development Filter	39- 28
A204 3568	Rear Bushing	43- 5
A204 3911	Cam Shaft	65- 31
A204 3915	Magnet Clutch Bracket	65- 26
A204 3921	Clutch Arm	65- 34
A204 3922	Brake Cam	65- 33
A204 4651	Bottom Pressure Plate	57- 5
A204 5117	IC - RF5A230	81- 3
A204 5300	Fusing Unit Connector - 115V	47- 5
A204 5326	Fusing Relay Harness	71- 21
A204 5665	Fusing Unit Connector - 230V	47- 5
A207 1471	Keytop - Halftone (SVN)	13- 19
A207 1472	Keytop - Enlarge (SVN)	13- 20
A207 1473	Keytop - Reduce (SVN)	13- 21
A208 4084	Fusing Connector Bracket	47- 6
A208 4102	Rear Lamp Terminal Holder	47- 7
A208 4355	Grounding Brush - Fusing Entrance	77- 6
A212 1073	Stopper Bracket	25- 2
A212 1087	Middle Upper Stay	25- 17
A212 1088	Middle Lower Stay	77- 19
A212 1099	Stopper	25- 1
A212 1111	Spring Cover	65- 18
A212 1151	Tension Spring	63- 19
A212 1151	Tension Spring	65- 17
A212 1258	Right Bracket - Platen Ccover	73- 10
A212 1261	Front Right Cover	9- 28

Part No.	Description	Page and Index No
A212 1271	Rear Right Cover (A212)	9- 27
A212 1282	Front Cover (A212)(RIC)	9- 2
A212 1291	Rear Cover	9- 25
A212 1302	Left Cover	9- 16
A212 1323	Operation Panel Ass'y - LT (A212)	9- 12
A212 1323	Operation Panel Ass'y - LT (A212)	13- *
A212 1324	Operation Panel Ass'y - A4 (A212)	9- 12
A212 1324	Operation Panel Ass'y - A4 (A212)	13- *
A212 1328	Operation Panel Ass'y (A212)(SVN)	9- 12
A212 1328	Operation Panel Ass'y - LT (A212)(SVN)	13- *
A212 1350	Right Middle Cover	75- 24
A212 1352	Inner Cover - Right Lower	9- 7
A212 1465	Key-top - Sorter (SVN)	13- 18
A212 1481	Operation Panel Case - A4	13- 22
A212 1482	Display Panel - A4 (A212)	13- 24
A212 1483	Sorter Sheet - A4 (A212)	13- 16
A212 1485	Operation Sheet (A4)	83- 10
A212 1485	Operation panel Sheet - A4	9- 31
A212 1487	Sorter Sheet (A212)(SVN)	13- 16
A212 1491	Operation Panel Case - LT	13- 22
A212 1492	Display Panel - LT (A212)	13- 24
A212 1493	Sheet Sorter - LT (A212)	13- 16
A212 1494	Operation Panel Sheet	13- 23
A212 1495	Operation Sheet (LT)	83- 10
A212 1495	Operation Panes Sheet - LT	13- 17
A212 1674	Shield Glass Guide	75- 19
A212 1695	Tension Spring	35- 12
A212 1707	Tension Bracket - Long	35- 14
A212 1708	Tension Bracket - Short	35- 6
A212 1710	Timing Pulley - 44Z	35- 16
A212 1807	Harness Guide	33- 2
A212 1840	Lens Magnification Unit	29- 1
A212 1841	Lens Drive Unit	29- 11
A212 1903	3rd Scanner Bracket	33- 28

Part No.	Description	Page and Index No.
A212 1914	3rd Scanner Rack	33- 19
A212 1981	Scaner Home Sensor Bracket	33- 29
A212 2060	Wire Pulley	75- 13
A212 2071	Cam Lever	75- 15
A212 2101	Release Spring	75- 3
A212 2102	Pressure Spring	75- 2
A212 2110	Charge Roller Ass'y	41- 2
A212 2131	Idle Gear 14z	41- 16
A212 2132	Idle Gear 20z	41- 17
A212 2142	Cam Lever	65- 32
A212 2251	Pressure Blade Spring	43- 8
A212 2252	Pressure Roller Spring	41- 10
A212 2255	Drum Unit	43- 1
A212 2351	Rear Roller Bushing	41- 5
A212 2352	Rear Roller Housing	41- 11
A212 2353	Gront Roller Bushint	41- 18
A212 2354	Pad Pressure Spring	43- 11
A212 2524	Spring	25- 13
A212 2531	Timing Belt - S3M 300	67- 8
A212 2533	Paper Tray Ass'y (LT)	17- *
A212 2534	Paper Size Sensor Board	15- 7
A212 2537	Bushing	27- 7
A212 2538	Bushing	27- 17
A212 2539	Spring - Registration Roller	27- 5
A212 2542	Bottom Plate Ass'y	17- 12
A212 2547	Rear Side Fence Ass'y	17- 17
A212 2550	Vertical Guide Plate	27- 18
A212 2551	Lower Guide Plate	27- 8
A212 2552	Vertical Relay Guide Plate	27- 6
A212 2558	Upper Resistration Guide	27- 19
A212 2559	Switch Bracket	19- 29
A212 2559	Switch Bracket	15- 17
A212 2562	Solenoid Bracket	67- 23
A212 2563	Lower Registration Guide	27- 3

Part No.	Description	Page and Index No
A212 2564	Tightener	67- 11
A212 2567	Rear Side Fence	17- 18
A212 2570	Paper Feed Roller Ass'y (EU/ASIA/TWN)	25- 10
A212 2571	Vertical Transport Guide (A212)	15- 22
A212 2575	Shaft - Paper Feed Roller (EU/ASIA/TWN)	25- 6
A212 2580	Vertical Transfer Hinge (A212)	27- 11
A212 2581	Front Side Fence Ass'y	17- 3
A212 2582	Front Corner Separator	17- 8
A212 2583	Rear Corner Separator	17- 21
A212 2584	Paper Feed Drive Shaft	67- 21
A212 2586	Hinge Bracket (A212)	15- 14
A212 2587	Feed Roller Bushing - Front	25- 3
A212 2590	Paper Tray	17- 32
A212 2591	Vertical Transfer (A212)	15- 16
A212 2652	Middle Guide Rail	77- 15
A212 2658	Pick-up Arm	23- 30
A212 2659	By-pass Feed Housing	23- 15
A212 2660	Paper End Feeler	23- 2
A212 2661	Adjusting Plate - Front	17- 4
A212 2663	Separation Guide	23- 20
A212 2670	Rear Guide Plate	23- 19
A212 2671	By-pass Feed Cover	23- 4
A212 2672	Pressure Spring	67- 7
A212 2673	Release Spring	67- 4
A212 2692	By-pass Feed Table Ass'y	15- 1
A212 2697	By-pass Feed Table	15- 5
A212 2705	Magnet Catch Plate	15- 6
A212 2706	Rear Fence Rack	15- 8
A212 2707	Front Fence Rack	15- 10
A212 2711	Front Side Fence	15- 2
A212 2716	Rear Side Fence	15- 3
A212 2746	By-pass Feed Cover	15- 11
A212 2757	Paper Tray Ass'y (A4)	17- *
A212 2758	Decal - Paper Setting	83- 17

Part No.	Description	Page and Index No.
A212 2758	Decal - Paper Set Ditection	17- 2
A212 2765	Spring Plate - Gear Side Fence	17- 16
A212 2769	Rear Stopper Spring	17- 6
A212 2802	Feeler Paper End Sensor	25- 4
A212 2805	Tray Bottom Plate Sheet	17- 33
A212 2805	Tray Bottom Plate Sheet	83- 21
A212 2822	Left Slide Rail Ass'y	77- 1
A212 2823	Right Slide Rail Ass'y	77- 12
A212 2844	End Fence Ass'y	17- 9
A212 2870	Adjusting Plate Rear	17- 20
A212 2871	Adjusting Plate Front	17- 7
A212 2905	Release Arm - Paper End	25- 14
A212 2929	Right Rail - Feed Tray	77- 17
A212 2956	Paper Feed Front Cover	17- 1
A212 2982	Paper Lift Shutter	17- 31
A212 3051	Development Unit	39- 1
A212 3056	Coupled Gear - 15z/22z	39- 25
A212 3057	Gear - 17Z	39- 24
A212 3058	Gear - 26Z	39- 26
A212 3063	Paddle Roller	39- 14
A212 3068	Toner Bottle Holder	37- 15
A212 3071	Deveropper Rail Seal	69- 18
A212 3072	Relay Adjusting Spring	67- 10
A212 3072	Relay Adjusting Spring	37- 31
A212 3073	Chuck Spring	37- 8
A212 3078	Shutter Spring	37- 17
A212 3079	Toner Collection Coil	39- 10
A212 3081	Decal - Toner Supply	83- 20
A212 3087	Terminal Cap	65- 11
A212 3090	Development Position Plate	39- 4
A212 3150	Toner Supply Unit (RIC-EU)	37- *
A212 3151	Toner Supply Unit (RIC-NA)	37- *
A212 3153	Toner Supply Unit (OEM/RIC-AA)	37- *
A212 3157	Bottole Holder Bracket	37- 27

Part No.	Description	Page and Index No
A212 3172	Shutter	37- 19
A212 3173	Shutter Guide	37- 16
A212 3174	Shutter Holder	37- 18
A212 3177	Toner Slider	37- 4
A212 3179	Chuck Shaft	37- 7
A212 3185	Toner Supply Gear (RIC-EU)	37- 1
A212 3187	Toner Supply Gear (RIC-NA)	37- 1
A212 3189	Toner Supply Gear (OEM/RIC-AA)	37- 1
A212 3190	Toner Bottle Stopper	37- 10
A212 3197	Bottle Holder	37- 13
A212 3200	Toner Hopper Ass'y	39- 21
A212 3270	Stay - Toner Supply	69- 17
A212 3281	Bottle Bracket Cover	37- 14
A212 3580	Toner Collection Unit	41- 23
A212 3590	ADS Plate	43- 19
A212 3595	Pick-off Pawl Retainer	43- 3
A212 3850	Transfer Unit	45- 1
A212 3851	Spring - T/S Unit	45- 20
A212 3851	Spring - T/S Unit	65- 35
A212 3853	Bias Roller Bushing - Rear	45- 11
A212 3862	Transfer Belt Frame	45- 7
A212 3863	Front Side Plate	45- 4
A212 3865	Belt Drive Gear - 25z	45- 10
A212 3876	Rear Side Plate	45- 9
A212 3882	Transfer Belt Casing	45- 31
A212 3883	Toner Collection Cap	45- 29
A212 3884	Belt Guide Plate	45- 14
A212 3886	Belt Pressure Lever	45- 19
A212 3887	Belt Release Stay	45- 21
A212 3888	Earth Plate	45- 30
A212 3894	Bushing	45- 16
A212 3895	Bushing	45- 22
A212 3901	Entrance Guide Plate	45- 27
A212 3914	Magnetic Clutch Feeler	65- 28

Part No.	Description	Page and Index No.
A212 3930	Belt Unit Handle	77- 8
A212 4005	Fusing Unit (NA)	47- *
A212 4006	Fusing Exit Unit	49- 1
A212 4007	Fusing Unit (EU/ASIA/TWN)	47- *
A212 4053	Fusing Upper Stay	47- 2
A212 4103	Solenoid Spring	47- 18
A212 4110	Fuser Stripper Ass'y	47- 27
A212 4130	Fusing Front Cover	47- 1
A212 4151	Fusing Unit Frame	49- 20
A212 4205	Cleaning Roller Bracket	49- 8
A212 4301	Exit Plate	49- 17
A212 4326	Exit Roller Ass'y	49- 6
A212 4352	Fusing Lock Lever	77- 2
A212 4450	Upper Guide Plate	59- 15
A212 4450	Upper Guide Plate	61- 11
A212 4459	Pressure Spring	49- 19
A212 4460	Exit Cover	61- 12
A212 4467	Spring - Stripper Pawl Release	77- 3
A212 4467	Spring - Stripper Pawl Release	69- 8
A212 4495	Shift Clutch	59- 8
A212 4495	Shift Clutch	61- 2
A212 4496	Gear - 24Z	59- 6
A212 4496	Gear - 24Z	61- 14
A212 5101	Main Control Board (NA)	71- 2
A212 5101	Main Control Board (115V)	81- *
A212 5103	IC - 4MX16 - 120NS	71- 4
A212 5132	Density Sensor	43- 18
A212 5160	ADS Board	33- 18
A212 5201	Main Control Board (230V)	81- *
A212 5201	Main Control Board (EU/ASIA/TWN)	71- 2
A212 5312	Optical Harness	71- 13
A212 5316	Paper Feed Harness -2trays (A212)	71- 14
A212 5319	Rear Upper Harness	71- 5
A212 5320	Front Right Harness (EU/ASIA/TWN)	69- 5

Part No.	Description	Page and Index No
A212 5324	Sorter Relay Harness	73- 12
A212 5333	CT Harness	27- 16
A212 5334	CT Harness - 7p	77- 11
A212 5393	Optical Harness 3	33- 23
A212 5460	Operation Panel Board - LT (A212)	13- 1
A212 5465	Operation Panel Board - A4 (A212)	13- 1
A212 5520	Front Right Harness (NA)	69- 5
A212 5661	AC Main Harness	69- 3
A212 5804	Main Switch Bracket (EU/ASIA/TWN)	69- 19
A212 5807	Bracket Ardf	71- 20
A212 5810	Power Supply Cord Bracket	73- 17
A212 5811	Main Control Board Bracket	71- 1
A212 5814	Main Switch Bracket (NA)	69- 19
A212 5820	Total Counter Bracket	69- 11
A212 5829	Decal - Main Switch Cover (EU/ASIA/TWN)	9- 10
A212 5830	Decal - Main Switch (EU/ASIA/TWN)	9- 32
A212 6404	Decal - Model Name - GES (A212)	9- 30
A212 6404	Decal - Model Name - GES (A212)	83- 13
A212 6407	Decal - Model Name - NSA (A212)	9- 30
A212 6407	Decal - Model Name - NST (A212)	83- 13
A212 6407	Decal - Model Name - NST (A214)	83- 13
A212 6412	Front Cover (A212)(SVN)	9- 2
A212 6414	Decal - Model Name - REX (A212)	9- 30
A212 6414	Decal - Model Name - REX (A212)	83- 13
A212 6414	Decal - Model Name - REX (A214)	83- 13
A212 6422	Front Cover (A212)(INF)	9- 2
A212 8607	Operating Instructions - English LT (RIC)	83- 6
A212 8608	Operating Instructions - English A4 (RIC)	83- 6
A212 8650	Operating Instructions - English LT (SVN)	83- 6
A212 8660	Operating Instructions - English A4 (INF)	83- 6
A212 8661	Operating Instructions - German (INF)	83- 6
A212 8662	Operating Instructions - French (INF)	83- 6
A212 8663	Operating Instructions - Italian(INF)	83- 6
A212 8664	Operating Instructions - Spanish(INF)	83- 6

Part No.	Description	Page and Index No.
A212 8690	Operating Instructions - English A4 (NRG)	83- 6
A212 8697	Operating Instructions - English LT (NRG)	83- 6
A212 8834	Operation panel Sheet - LT	9- 31
A214 1277	Front Cover (A214)(RIC)	9- 2
A214 1325	Operation Panel Ass'y - LT (A214)	13- *
A214 1325	Operation Panel Ass'y - LT (A214)	9- 12
A214 1326	Operation Panel Ass'y - A4 (A214)	13- *
A214 1326	Operation Panel Ass'y - A4 (A214)	9- 12
A214 1328	Operation Panel Ass'y - LT (A214)(SVN)	13- *
A214 1328	Operation Panel Ass'y (A214)(SVN)	9- 12
A214 1331	Rear Right Cover (A214)	9- 27
A214 1482	Display Panel - A4 (A214)	13- 24
A214 1483	Paper Exit Sheet - A4 (A214)	13- 16
A214 1485	Operation Panes Sheet - A4	13- 17
A214 1487	Sorter Sheet (A214)(SVN)	13- 16
A214 1492	Display Panel - LT (A214)	13- 24
A214 1493	Paper Exit Sheet - LT (A214)	13- 16
A214 2571	Vertical Transport Guide	19- 27
A214 2878	Mylar - Paper Guide (EU)	15- 24
A214 5309	Rear Lower Harness - Duplex (A214)	71- 17
A214 5460	Operation Panel Board - LT (A214)	13- 1
A214 5465	Operation Panel Board - A4 (A214)	13- 1
A214 6175	LCT Positioning Plate	19- 32
A214 6404	Decal - Model Name - GES (A214)	83- 13
A214 6404	Decal - Model Name - GES (A214)	9- 30
A214 6407	Decal - Model Name - NSA (A214)	9- 30
A214 6412	Front Cover (A214)(SVN)	9- 2
A214 6414	Decal - Model Name - REX (A214)	9- 30
A214 6422	Front Cover (A214)(INF)	9- 2
A214 6460	Lower Hinge	19- 31
A219 2541	Spring	17- 28
A219 2543	Spring	17- 30
A219 2558	End Fence Guide	17- 11
A219 2574	Paper Lift Arm Ass'y	17- 25

Part No.	Description	Page and Index No
A219 2577	Paper Lift Roller	17- 27
A219 2585	Lever	17- 29
A219 2591	Paper Lift Shaft	17- 24
A219 2597	Bottom Plate Lever	17- 22
A219 2642	Rear Lever Stopper	17- 19
A219 2656	End Fence Spring	17- 10
A219 2664	Front Stopper Lever	17- 5
A219 2692	Decal - Operating	17- 34
A219 2692	Decal - Operation Instructions	83- 23
A300 3155	Stepped Screw - M25x32	21- 22
A334 4706	Disk - Bottom Plate Clutch	55- 11
A335 3251	Top Cover Hinge	19- 7
A335 4351	Guide Roller	21- 10
A335 4352	Timing Belt Clamp	21- 25
A355 1341	Chain Hook	21- 24
A421 2543	Friction Pad	19- 13
A470 1703	Shift Clutch	61- 15
A491 4690	Bottom Plate Hook	57- 7

Part No.	Description	Page and Index No.
5053 0223	Bushing - 8mm	21- 26
5053 0447	Bushing - 6mm	53- 10
5053 0447	Bushing - 6mm	59- 1
5203 1686	Screw - SLID RAIL	77- 4
5203 9501	Grease 501	85- 1
5206 2686	Snap Ring	51- 8
5215 2621	Snap Ring - M6	15- 13
5215 2621	Snap Ring - M6	53- 13
5304 1639	Bushing - 8mm	53- 12
5420 9507	Digital Multimeter - Beckman	85- 2
5420 9516	Test Chart - OS -A3 (10PCS/SET)	85- 5
5442 9103	Launa Oil	85- 4
5443 2668	Bushing - 4x6x7mm	53- 4
5443 2668	Bushing - 4x6x7mm	55- 6
5446 1239	Plate Nut - Key Counter	69- 7
5447 2681	Snap Ring	25- 16
5447 2681	Snap Ring	55- 10
5447 2681	Snap Ring	23- 8
5447 2681	Snap Ring (A212)	15- 23
5447 2768	Stepped Screw - M3	51- 13
5447 2927	Friction Pad - B	15- 12
5447 9078	Heat Resisting Grease MT-78	85- 3
5448 2804	Platen Cover Sheet	11- 2
5474 2152	Bushing - 8x12x12mm	27- 4
5925 2258	Stopper Chain	21- 13

Part No.	Description	Page and Index No
0313 0040B	Philips Pan Head Screw - M3x4	31-107
0313 0040B	Philips Pan Head Screw - M3x4	27-106
0313 0040B	Philips Pan Head Screw - M3x4	59-108
0313 0040B	Philips Pan Head Screw - M3x4	9-104
0313 0040B	Philips Pan Head Screw - M3x4	75-105
0313 0050B	Philips Pan Head Screw - M3X5	47-107
0313 0050B	Philips Pan Head Screw - M3x5	55-102
0313 0060B	Philips Pan Head Screw - M3x6	31-108
0313 0060B	Philips Pan Head Screw - M3x6	41-103
0313 0080B	Philips Pan Head Screw - M3x8	43-106
0313 0140B	Philips Pan Head Screw - M3x14	63-105
0313 0140B	Philips Pan Head Screw - M3x14	15-104
0314 0060B	Philips Pan Head Screw - M4x6	69-106
0314 0060B	Philips Pan Head Screw - M4x6	31-109
0314 0060B	Philips Pan Head Screw - M4x6	43-101
0314 0060B	Philips Pan Head Screw - M4x6	47-104
0314 0060B	Philips Pan Head Screw - M4x6	39-104
0323 0060B	Philips Sunk Screw - M3x6	37-101
0323 0060B	Philips Sunk Screw - M3x6	73-110
0323 0060B	Philips Sunk Screw - M3x6	71-108
0323 0080B	Philips Sunk Screw - M3x8	69-104
0344 0080F	Philips Truss Head Screw - M4x8	51-103
0353 0300B	Bind Screw - M3x30	61-104
0353 0300B	Bind Screw - M3x30	59-105
0413 0050Z	Tapping Screw - M3x5	31-104
0413 0060W	Tapping Screw - M3x6	31-105
0413 0062B	Tapping Screw - M3x6	29-102
0413 0062W	Tapping Screw - M3x6	31-103
0414 0080B	Binding Self-tapping Screw - M4x8	27-107
0414 0080B	Tapping Screw - M4x8	33-104
0414 0080B	Tapping Screw - M4x8	29-107
0414 0080B	Tapping Screw - M4x8	25-102
0414 0080B	Tapping Screw - M4x8	65-106
0414 0080B	Tapping Screw - M4x8	23-103

Part No.	Description	Page and Index No.
0414 0080B	Tapping Screw - M4x8	19-102
0414 0080B	Binding Self-tapping Screw - M4x8	45-106
0414 0082W	Tapping Screw With Flat Washer - M4x8	31-102
0414 0082W	Tapping Screw With Flat Washer - M4x8	15-102
0414 0122B	Philips Tapping Screw - M4x12	49-102
0414 0142B	Binding Self Tapping Screw - M4x14	73-106
0414 0142B	Binding Self Tapping Screw - M4x14	11-101
0433 0050B	Tapping Screw - M3x5	37-102
0433 0060W	Tapping Screw - M3x6	35-110
0434 0060B	Philips Tapping Screw - M4x6	37-108
0434 0060B	Philips Tapping Screw - M4x6	75-101
0434 0060B	Pan Head Self-tapping Screw - M4x6	77-103
0434 0060B	Philips Tapping Screw - M4x6	55-107
0434 0060B	Philips Tapping Screw - M4x6	65-105
0434 0060B	Philips Tapping Screw - M4x6	63-104
0434 0060B	Philips Tapping Screw - M4x6	33-107
0434 0060B	Philips Tapping Screw - M4x6	35-103
0434 0060B	Philips Tapping Screw - M4x6	19-101
0434 0060B	Philips Tapping Screw - M4x6	25-101
0434 0060B	Pan Head Self-tapping Screw - M4x6	67-105
0434 0060B	Philips Tapping Screw - M4x6	69-101
0434 0060B	Philips Tapping Screw - M4x6	21-101
0434 0060B	Philips Tapping Screw - M4x6	59-104
0434 0060B	Philips Tapping Screw - M4x6	61-102
0434 0060B	Philips Tapping Screw - M4x6	27-102
0434 0060B	Philips Tapping Screw - M4x6	71-107
0434 0080B	Philips Tapping Screw - M4x8	59-102
0434 0080B	Pan Head Self-tapping Screw - M4x8	27-108
0434 0082B	Tapping Screw - M4x8	49-103
0434 0082B	Tapping Screw - M4x8	59-103
0434 0082B	Tapping Screw - M4x8	9-101
0434 0352W	Pan Head Self-tapping Screw - M4x35	73-105
0443 0050B	Philips Pan Head Screw - M3x6	27-105
0443 0060B	Hexagon Tapping Screw - M3x6	45-109

Part No.	Description	Page and Index No
0443 0060B	Hexagon Tapping Screw - M3x6	53-101
0443 0060B	Hexagon Tapping Screw - M3x6	55-104
0443 0060B	Hexagon Tapping Screw - M3x6	73-108
0443 0060B	Hexagon Tapping Screw - M3x6	21-103
0443 0060W	Hexagon Head Tapping Screw - M3x6	25-104
0443 0060W	Hexagon Head Tapping Screw - M3x6	51-102
0443 0080B	Tapping Screw - M3x8	45-102
0443 0080B	Tapping Screw - M3x8	73-109
0443 0080W	Hexagon Head Tapping Screw - M3x8	33-102
0452 3010B	Tapping Bind Screw - M3x10	39-107
0453 4006B	Tapping Screw - 4x6	17-103
0573 0040E	Hexagon Headless Set Screw - M3x4	65-102
0573 0040E	Hexagon Headless Set Screw - M3x4	35-101
0573 0100E	Hexagon Headless Set Screw - M3x10	35-111
0574 0050E	Hexagon Headless Set Screw - M4x5	35-105
0622 0100E	Spring Pin - 2x10mm	23-104
0623 0160E	Spring Pin - 3x16mm	21-106
0707 8140B	Bushing - 8x14mm	63-101
0720 0015E	Retaining Ring - 1.5	41-104
0720 0020E	Retaining Ring - M2	41-106
0720 0030E	Retaining Ring - M3	19-106
0720 0030E	Retaining Ring - M3	45-104
0720 0030E	Retaining Ring - M3	17-101
0720 0030E	Retaining Ring - M3	43-105
0720 0030E	Retaining Ring - M3	75-102
0720 0030E	Retaining Ring - M3	55-103
0720 0040E	Retaining Ring - M4	53-103
0720 0040E	Retaining Ring - M4	57-103
0720 0040E	Retaining Ring - M4	59-101
0720 0040E	Retaining Ring - M4	25-103
0720 0040E	Retaining Ring - M4	35-102
0720 0040E	Retaining Ring - M4	75-103
0720 0040E	Retaining Ring - M4	43-107
0720 0040E	Retaining Ring - M4	23-101

Part No.	Description	Page and Index No.
0720 0040E	Retaining Ring - M4	37-106
0720 0040E	Retaining Ring - M4	55-106
0720 0040E	Retaining Ring - M4	49-101
0720 0040E	Retaining Ring - M4	41-102
0720 0040E	Retaining Ring - M4	27-103
0720 0040E	Retaining Ring - M4	29-106
0720 0040E	Retaining Ring - M4	61-103
0720 0040E	Retaining Ring - M4	67-104
0720 0040E	Retaining Ring - M4	39-108
0720 0060	Retaining Ring - M6	65-111
0720 0060E	Retaining Ring - M6	47-103
0720 0060E	Retaining Ring - M6	63-103
0720 0060E	Retaining Ring - M6	65-110
0720 0060E	Retaining Ring - M6	67-103
0720 0060E	Retaining Ring - M6	35-106
0720 0060E	Retaining Ring - M6	21-104
0720 0060E	Retaining Ring - M6	27-104
0725 0100E	Retaining Ring C - M10	37-107
0725 0120E	Retaining Ring C - M12	49-104
0725 0300E	Retaining Ring C - M30	47-106
0727 0090E	Retaining Ring C - M9	39-101
0740 3008	Ball Bearing - 8x22x7	65-101
0740 3008	Ball Bearing - 8x22x7	35-107
0800 0072	Philips Pan Head Screw - M2.6x4	37-105
0801 0137	Philips Pan Head Screw With Spring	71-109
0802 5085	Tapping Screw - M4x8	15-103
0802 5094	Tapping Truss Head Screw - M4x8	9-103
0802 5094	Tapping Truss Head Screw - M4x8	19-103
0802 5221	Tapping Screw - M3x10	65-108
0802 5231	Tapping Screw - M3x6	33-106
0802 5231	Binding Self-tapping Screw - M3x6	39-105
0802 5231	Tapping Screw - M3x6	37-103
0802 5232	Tapping Screw - M3x8	57-102
0802 5232	Binding Self-tapping Screw - M3x8	45-103

Part No.	Description	Page and Index No
0802 5232	Tapping Screw - M3x8	29-103
0802 5233	Tapping Screw - M3x10	37-104
0802 5233	Binding Self-tapping Screw - M3x10	43-102
0802 5233	Tapping Screw - M3x10	41-109
0802 5234	Tapping Screw - M3x12	57-105
0802 5236	Tapping Screw - M4x8	57-104
0802 5236	Tapping Screw - M4x8	65-107
0802 5236	Tapping Screw - M4x8	59-107
0802 5236	Tapping Screw - M4x8	55-105
0802 5236	Tapping Screw - M4x8	61-101
0802 5236	Tapping Screw - M4x8	21-102
0802 5236	Tapping Screw - M4x8	51-101
0802 5237	Tapping Screw - M4x10	29-101
0802 5238	Tapping Screw - M4x12	39-106
0803 0017	Knob Screw - M4x6.5	43-103
0805 3384	Bushing - 5mm	43-108
0805 3415	Ball Bearing - 9x20x6	39-102
0805 3471	Bushing - M8x22x7	41-107
0805 3480	Bushing - 6mm	61-106
0805 3480	Bushing - 6mm	23-102
0805 3480	Bushing - 6mm	59-109
0805 3485	Bushing - 8x12x3.5mm	45-101
0805 3490	Bushing - 5x10x4 mm	45-105
0950 4006M	Philips Screw With Flat Washer - M4x6	47-105
0951 3005B	Philips Screw With Flat Washer M3x5	33-105
0951 3006B	Philips Screw With Flat Washer - M3x6	73-102
0951 3006B	Philips Screw With Flat Washer - M3x6	71-110
0951 3006B	Philips Screw With Flat Washer - M3x6	31-101
0951 3006B	Philips Screw With Flat Washer - M3x6	57-101
0951 3006B	Philips Screw With Flat Washer - M3x6	27-101
0951 3008B	Philips Screw With Flat Washer - M3x8	41-105
0951 4006B	Philips Screw With Washer - M4x6	29-104
0951 4006B	Philips Screw With Washer - M4x6	35-109
0951 4008B	Philips Screw With Washer - M4x8	53-102

Part No.	Description	Page and Index No.
0951 4008B	Philips Screw With Washer - M4x8	35-104
0951 4012B	Philips Screw With Flat Washer	65-103
0951 5010B	Philips Screw With Washer - M5x10	41-108
0952 4008B	Sem's Screw - M4x8	65-109
0953 4008M	Screw - M4X8	9-105
0954 3010B	Philips Screw - M3x10	47-101
0954 4012B	Double Sems Screw - M4 X 12	47-102
0960 4005B	Philips Flange Screw - M4 X 5	33-101
0960 4010B	Philips Flange Screw - M4x10	77-101
0960 4012W	Philips Flange Screw - M4x12	17-102
0964 4006B	Tapping Screw With Flat Washer - M4x6	75-104
0964 4006B	Tapping Screw With Flat Washer - M4X6	9-107
0964 4008B	Tapping Screw With Flat Washer - M4x8	9-102
0964 4008B	Tapping Screw With Flat Washer - M4x8	73-107
0964 4008W	Tapping Screw With Flat Washer - M4x8	31-106
0965 3006B	Tapping Screw With Flat Washer M3x6	15-105
0965 3008B	Tapping Screw With Washer - M3x8	45-108
0965 3008W	Tapping Screw With Flat Washer - M3x8	29-105
0965 3010B	Tapping Screw - M3X10	43-104
0971 3006A	Philips Polycarbonate Screw - M3x6	43-109
1002 0307	Jumper Wire	81-184
1005 0890	Decal - TUV	9-106
1102 3822	Connector - 20P	81-197
1102 4052	Optional Connector	73-104
1102 4052	Optional Connector	71-102
1102 4202	Connector - 3p	81-102
1102 4205	CT Header- 6p	81-103
1102 4206	Connector - 7p	81-104
1102 4207	Connector - 8p	81-105
1102 4208	Connector - 9p	81-106
1102 4210	Connector - 11p	81-107
1102 4211	CT Header - 12p	81-108
1102 4212	CT Header - 15p	81-109
1102 4473	CT Connector - 2p	73-103

Part No.	Description	Page and Index No
1102 4497	Connector - 13p	81-110
1102 4619	Connector - 2p	81-111
1102 4620	CT Header - 3p	81-112
1102 4621	CT Header - 4p	81-113
1102 4623	CT Connector - 6p	81-114
1102 4624	CT Connector - 7P	81-115
1102 4625	CT Connector 8p	81-116
1102 4628	Connector - 11p	81-117
1102 4629	Connector - 12P	81-118
1102 4630	CT Connector	81-119
1102 4637	CT Connector - 8P	81-120
1102 4639	CT Connector - 10P	81-121
1102 4640	Connector - 11p	81-122
1102 4642	CT Connector - 15p	81-123
1102 4643	CT Connector - 2p	81-124
1102 5007	CT Header - 14p	81-125
1102 5305	Connector - 6P	81-126
1102 5605	Connector - 13P	81-127
1102 5718	Optical Fiber Connector	81-128
1102 6408	Connector - 30P	81-129
1102 6613	Relay Terminal - 2P	41-101
1102 6762	CT Connector - 13p	81-130
1103 1772	Pin Header - 6p	81-131
1103 1774	Pin Header - 8p	81-132
1104 0271	IC SOCKET - 28P	81-195
1104 0612	Connector - 40P	81-196
1105 0008	Nylon Clamp - 2n	31-110
1105 0192	Locking Support	67-101
1105 0192	Locking Support	73-101
1105 0196	Wire Clamp	45-107
1105 0199	Clamp	55-101
1105 0199	Clamp	67-102
1105 0199	Clamp	61-105
1105 0199	Clamp	59-106