⚠ IMPORTANT SAFETY NOTICES

PREVENTION OF PHYSICAL INJURY

1. Before disassembling or assembling parts of the copier and peripherals, make sure that the copier power cord is unplugged.
2. The wall outlet should be near the copier and easily accessible.
3. Note that some components of the copier and the paper tray unit are supplied with electrical voltage even if the main switch is turned off.
4. If any adjustment or operation check has to be made with exterior covers off or open while the main switch is turned on, keep hands away from electrified or mechanically driven components.
5. If the start key is pressed before the copier completes the warm-up period, keep hands away from the mechanical and the electrical components as the copier starts making copies as soon as the warm-up period is completed.
6. The inside and the metal parts of the fusing unit become extremely hot while the copier is operating. Be careful to avoid touching those components with your bare hands.

HEALTH SAFETY CONDITIONS

1. Toner and developer are non-toxic, but if you get either of them in your eyes by accident, it may cause temporary eye discomfort. Try to remove with eye drops or flush with water as first aid. If unsuccessful, get medical attention.

OBSERVANCE OF ELECTRICAL SAFETY STANDARDS

1. The copier and its peripherals must be installed and maintained by a customer service representative who has completed the training course on those models.
2. The RAM board on the main control board has a lithium battery which can explode if replaced incorrectly. Replace the battery only with an identical one. The manufacturer recommends replacing the entire RAM board. Do not recharge or burn this battery. Used batteries must be handled in accordance with local regulations.

SAFETY AND ECOLOGICAL NOTES FOR DISPOSAL

1. Do not incinerate the toner bottle or the used toner. Toner dust may ignite suddenly when exposed to open flame.
2. Dispose of used toner, developer, and organic photoconductor according to local regulations. (These are non-toxic supplies.)
3. Dispose of replaced parts in accordance with local regulations.
4. When keeping used lithium batteries in order to dispose of them later, do not put more than 100 batteries per sealed box. Storing larger numbers or not sealing them apart may lead to chemical reactions and heat build-up.

SWALLOW 2

(Machine Code: A212/A214)

Service Manual

– *Insert Version* –

The A212 copier is based on the A161 copier.
The A214 copier is based on the A162 copier.

Only the differences from the A161/A162 copier are described in the following pages. Refer to the A161/A162 copier service manual for more information.

1. SPECIFICATIONS

NOTE: Only items marked with ✻ are different from A161 and A162 copiers.

Configuration: Desktop

Copy Process: Dry electrostatic transfer system

Originals: Sheet/Book

Original Size: Maximum: A3/11" x 17"

Copy Paper Size: Maximum: A3/11" x 17" (Paper trays)
Minimum: A5/8 1/2" x 5 1/2" sideways (Paper trays)
A4/11" x 8 1/2" sideways (LCT)
A6/5 1/2" x 8 1/2" lengthwise (By-pass)

Duplex Copying: Maximum: A3/11" x 17"
Minimum: A5/8 1/2" x 5 1/2" (sideways)

Copy Paper Weight: Paper tray: 64 ~ 90 g/m^2, 17 ~ 24 lb
By-pass: 52 ~ 157 g/m^2, 14 ~42 lb
LCT: 52 ~ 128 g/m^2, 14 ~ 34 lb
Duplex copying: 64 ~ 90 g/m^2, 17 ~ 24 lb
(feeding from the Paper tray)
64 ~ 105 g/m^2, 17 ~ 24 lb
(feeding from the LCT)

Reproduction Ratios: 4 Enlargement and 6 Reduction

	A4/A3 Version	LT/DLT Version
Enlargement	200% 141% 122% 115%	200% 155% 129% 121%
Full size	100%	100%
Reduction	93% 82% 75% 71% 65% 50%	93% 85% 77% 74% 65% 50%

Power Source:

120 V/60 Hz:
More than 12 A (for North America)
220 V ~ 240 V/50 Hz:
More than 7 A (for Europe)
220 V/50 Hz:
More than 7 A (for Asia)
110 V/60 Hz:
More than 14 A (for Taiwan)
220 V/60 Hz:
More than 7 A (for Saudi Arabia, Philippines)

✻ Power Consumption:

		Copier Only	Full System
Maximum		1.45 kW	1.50 kW
Copying		0.64 kW	0.72 kW
Warm-up		0.95 kW	0.97 kW
Stand-by		0.15 kW	0.17 kW
Energy Saver	1	0.14 kW	0.16 kW
	2	0.12 kW	0.13 kW
	3	0.09 kW	0.10 kW
	4	0.07 kW	0.08 kW
	5	0.05 kW	0.06 kW
Auto Off		0.02 kW	0.04 kW

NOTE: 1) Full System: Copier + ADF + Paper Tray Unit + 10 Bin S/S
2) Energy Saver: See SP1-105-002
3) Auto Off: See SP5-305

✻ Noise Emission:

	Copier Only	Full System*
1. Sound Power Level		
Copying	65 dB(A)	70 dB(A)
Stand-by	40 dB(A)	40 dB(A)
2. Sound Pressure Level at the operator position		
Copying	60 dB(A)	64 dB(A)
Stand-by	40 dB(A)	40 dB(A)

NOTE: The above measurements were made in accordance with ISO 7779.
* : Full System: Copier + ADF + Paper Tray Unit +10 Bin S/S.

✻ Dimensions:

	Width	Depth	Height
A212 copier	900 mm (35.5")	655 mm (25.8")	626 mm (24.7")
A214 copier	1,128 mm (44.5")	655 mm (25.8")	626 mm (24.7")

Measurement Conditions

1) With by-pass feed table closed
2) With platen cover and copy tray attached
3) With LCT cover closed

Weight:

	Weight
A212 copier	About 67 kg (147.7 lb)
A214 copier	About 80 kg (176.4 lb)

Zoom: From 50% to 200% in 1% steps

Copying Speed (copies/minute): 22 copies/minute (A4/11" x 8 1/2" sideways)
12 copies/minute (A3/11" x 17")

Warm-Up Time: Less than 60 seconds (at 20°C/68°F)

First Copy Time:

Paper Feed Station	A4/11" x 8 1/2" (sideways)
1st Tray	5.9 s (except for A214)
2nd Tray	6.6 s
By-pass	5.6 s
LCT	5.9 s

NOTE: In the A214 copier, the 2nd tray in the above table is called the 1st tray (see Installation - Paper Feed Station Definition of the base copier service manual).

Copy Number Input: Ten-key pad, 1 to 999 (count up or count down)

Manual Image Density Selection: 7 steps

Automatic Reset: 1 minute is the standard setting; it can be changed to a maximum of 999 seconds or no auto reset by SP mode.

✻ Copy Paper Capacity:

	Paper Tray	By-pass Feed	LCT
A212 copier	About 500 sheets x 2	About 40 sheets	—
A214 copier	About 500 sheets x 1	About 40 sheets	About 1,000 sheets

Duplex Tray Capacity [A214]:	50 sheets (30 sheets for A3/11"x17" 81 ~ 105 g/m^2, 21.5 ~ 27.9 lb paper)
Toner Replenishment:	Cartridge exchange (415 g/cartridge)
✻ Optional Equipment (Sales items):	• Platen cover (except for A212 machines with destination code 29) • Document feeder • 10-bin sorter stapler • 20-bin sorter stapler • 20-bin mini sorter • 10-bin micro sorter • Sorter adapter (required when installing a 10-bin sorter stapler or 20-bin mini sorter) • 1,500-sheet tray unit (three 500-sheet trays) • 1,000-sheet tray unit (two 500-sheet trays) • 500-sheet tray unit (two 250-sheet trays)
Optional Equipment (Service items):	• Original length sensor for 11" x 15" size paper (only for LT/DLT version) • Tray heater • Optical anti-condensation heater • ADS sensor for particular types of red original
Optional Equipment (To be procured locally):	• Key counter

2. MACHINE CONFIGURATION

2.1 COPIER

– A212 copier –

Two 500-sheet trays

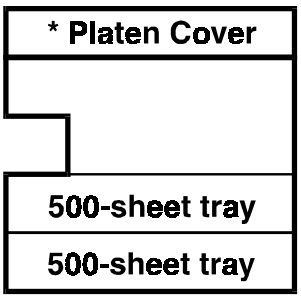

A212V500.wmf

*: Only for machines with destination code 29.

– A214 copier –

A 500-sheet tray
A duplex tray
A 1000-sheet large capacity tray

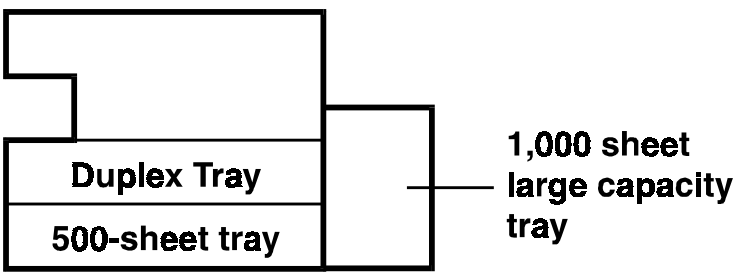

A212V501.wmf

2.2 OPTIONAL EQUIPMENT

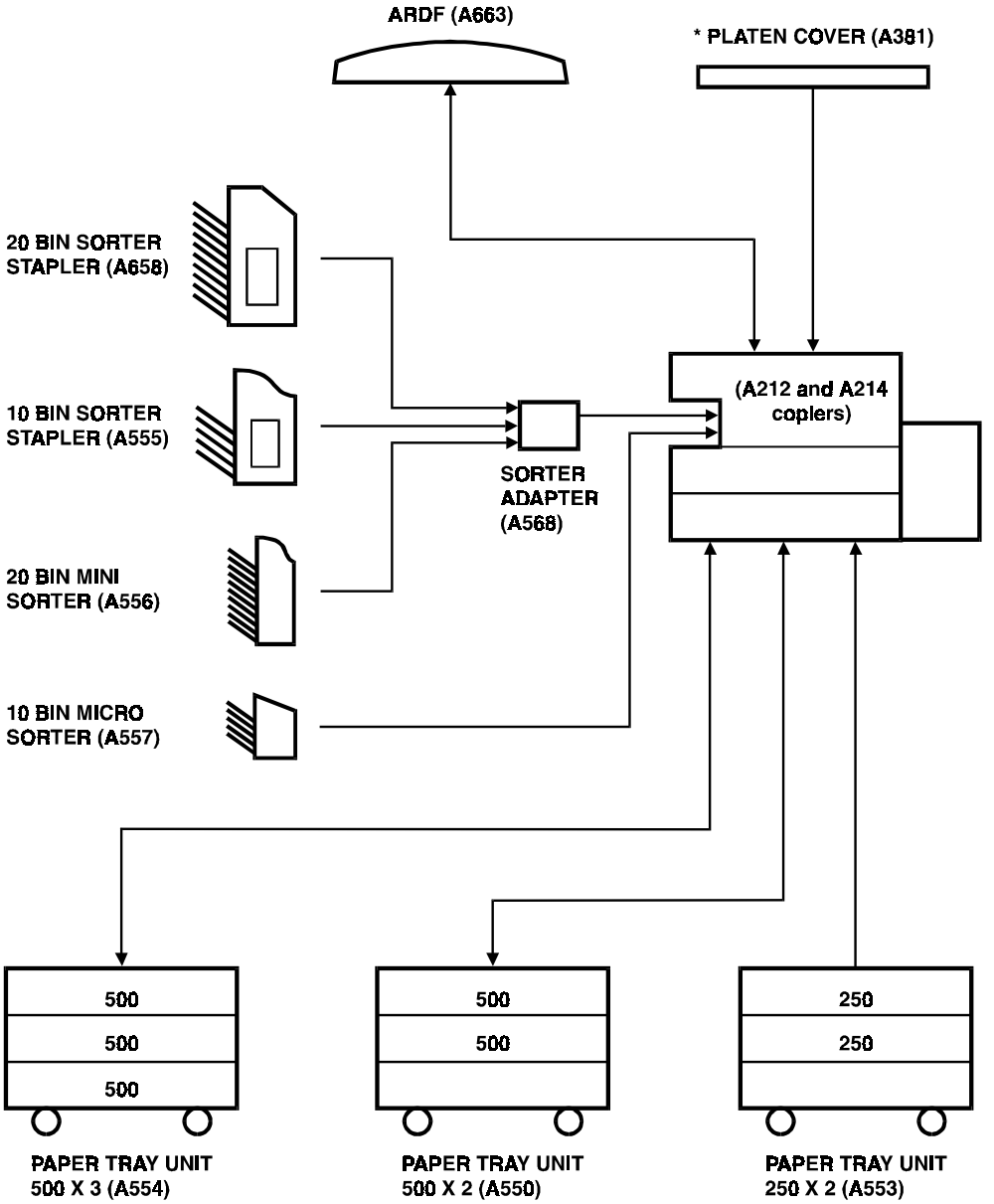

A212V502.wmf

*: Except for machines with A212 destination code 29.

MEMO

3. MECHANICAL COMPONENT LAYOUT

– A214 copier –

NOTE: The paper feed area has been changed.

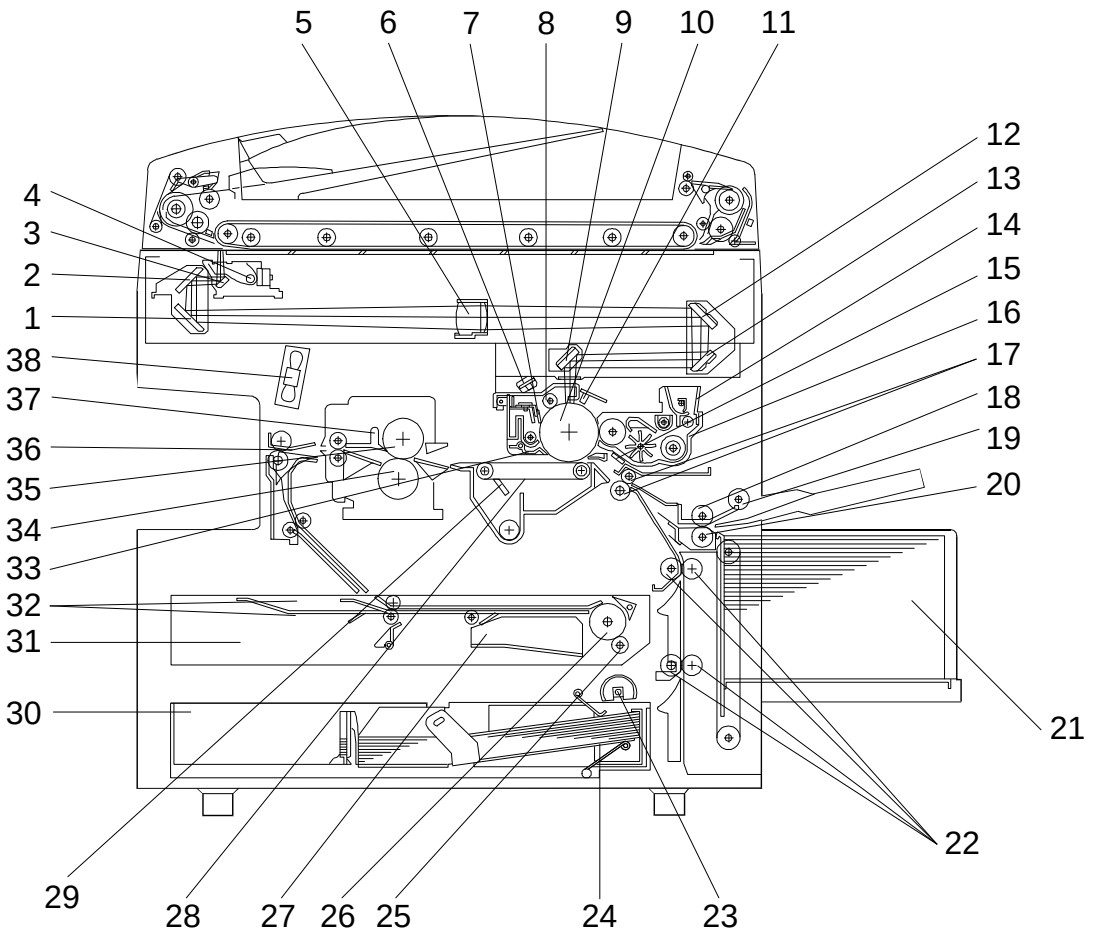

A212V503.wmf

NOTE: The A212 copier is the same as the A214 copier except that the A212 does not have a duplex tray or an LCT.

1. 3rd Mirror
2. 2nd Mirror
3. 1st Mirror
4. Exposure Lamp
5. Lens
6. Quenching Lamp
7. Drum Cleaning Blade
8. Drum Charge Roller
9. 6th Mirror
10. OPC Drum
11. Erase Lamp
12. 4th Mirror
13. 5th Mirror
14. Toner Supply Unit
15. Pre-transfer Lamp
16. Development Unit
17. Registration Rollers
18. Feed Roller
19. Pick-up Roller
20. Separation Roller
21. Large Capacity Tray
22. Vertical Transport Rollers
23. Paper Feed Roller
24. Friction Pad
25. Duplex Friction Roller
26. Duplex Feed Roller
27. Jogger Fence
28. Transfer Belt
29. Transfer Belt Cleaning Blade
30. Lower Paper Tray
31. End Fence
32. Entrance Rollers
33. Pick-off Pawls
34. Pressure Roller
35. Hot Roller
36. Junction Gate
37. Hot Roller Strippers
38. Exhaust Fan

4. ELECTRICAL COMPONENT DESCRIPTIONS

Refer to the electrical component layout and the point to point diagram on the waterproof paper in the pocket for symbols and index numbers.

Symbol	Name	Function	Index No.
Printed Circuit Boards			
PCB1	Main Control	Controls all copier functions both directly or through other control boards.	13
PCB2	AC Drive	Provides ac power to the exposure lamp and fusing lamps.	11
PCB3	DC Power Supply	Provides dc power.	10
PCB4	Main Motor Control	Controls the rotation of the main motor.	83
PCB5	CB High Voltage Supply	Supplies high voltage to the drum charge roller and development roller.	1
PCB6	T High Voltage Supply	Supplies high voltage to the transfer belt.	49
PCB7	Operation Panel	Controls the LED matrix, and monitors the key matrix.	3
PCB8	Noise Filter (220 ~ 240 V machines only)	Removes electrical noise.	7
PCB9	Duplex Control (A214 machine only)	Controls the operation of the duplex tray.	57
PCB10	LCT Interface (A214 machine only)	Interfaces the LCT control signal between the main board and the LCT.	88
Motors			
M1	Main	Drives the main unit components.	77
M2	Toner Bottle Drive	Rotates the toner bottle to supply toner to the toner supply unit.	73
M3	LCT Lift (A214 machine only)	Lifts up and lowers the LCT bottom plate.	85
M4	Optics Cooling Fan 1	Removes heat from the optics unit.	81
M5	Exhaust Fan 1	Removes the heat from around the fusing unit.	78
M6	Scanner Drive	Drives the 1st and 2nd scanners (dc stepper motor).	80
M7	3rd Scanner Drive	Drives the 3rd scanner (dc stepper motor).	72
M8	Lens Vertical Drive	Shifts the lens vertical position.	76
M9	Lens Horizontal Drive	Shifts the lens horizontal position.	71
M10	Duplex Feed (A214 machine only)	Drives the feed roller and moves the bottom plate up and down.	52
M11	End Fence Jogger (A214 machine only)	Drives the end fence jogger to square the paper stack.	55
M12	Side Fence Jogger (A214 machine only)	Drives the side fence jogger to square the paper stack.	54

Symbol	Name	Function	Index No.
Sensors			
S1	By-pass Feed Paper Width	Informs the CPU what width paper is in the by-pass feed table.	25
S2	By-pass Feed Paper End	Informs the CPU that there is no paper in the by-pass tray.	28
S3	Upper Tray Paper End (A212 machine only)	Informs the CPU when the upper paper tray runs out of paper.	45
S4	Upper Relay	Detects the leading edge of paper from the upper tray to determine the stop timing of the upper paper feed clutch, and detects misfeeds.	93
S5	Lower Tray Paper End	Informs the CPU when the lower paper tray runs out of paper.	46
S6	Lower Relay	Detects the leading edge of paper from the lower paper tray to determine the stop timing of the lower paper feed clutch, and detects misfeeds.	92
S7	LCT Lower Limit (A214 machine only)	Sends a signal to the CPU to stop lowering the LCT bottom plate.	86
S8	LCT Paper End (A214 machine only)	Informs the CPU when the LCT runs out of paper.	87
S9	LCT Upper Limit (A214 machine only)	Sends a signal to the CPU to stop lifting the LCT bottom plate.	26
S10	Registration	Detects the leading edge of the copy paper to determine the stop timing of the paper feed clutch, and detects misfeeds.	27
S11	Image Density (ID)	Detects the density of various patterns on the drum during process control.	44
S12	Toner Density (TD)	Detects the toner concentration inside the development unit.	47
S13	Lens Horizontal HP	Informs the CPU that the lens is at the horizontal home position.	34
S14	Lens Vertical HP	Informs the CPU that the lens is at the full-size position.	19
S15	Scanner HP	Informs the CPU when the 1st and 2nd scanners are at the home position.	14
S16	3rd Scanner HP	Informs the CPU when the 3rd scanner is at the home position.	23
S17	Original Length-2	Detects the length of the original. This is one of the APS (Auto Paper Select) sensors.	20
S18	Fusing Exit	Detects misfeeds.	39
S19	Platen Cover	Informs the CPU whether the platen cover is up or down (related to APS/ARE functions). ARE: Auto Reduce and Enlarge	15

Symbol	Name	Function	Index No.
S20	Toner End	Instructs the CPU to add toner to the toner supply unit, and detects toner end conditions.	48
S21	Transfer Belt Contact HP	Informs the CPU of the current position of both the transfer belt unit and the drum charge roller unit.	22
S22	Auto Image Density (ADS Sensor)	Detects the background density of each original in ADS mode.	12
S23	Original Width	Detects the width of the original. This is one of the APS (Auto Paper Select) sensors.	38
S24	Original Length-1	Detects the length of the original. This is one of the APS (Auto Paper Select) sensors.	18
S25	Duplex Paper End (A214 machine only)	Detects paper in the duplex tray.	50
S26	Duplex Turn (A214 machine only)	Detects the trailing edge of the copy paper to determine the jogging timing, and detects misfeeds.	51
S27	Duplex Entrance (A214 machine only)	Detects misfeeds.	56
S28	Side Fence Jogger HP (A214 machine only)	Detects the home position of the duplex side fence jogger.	53
S29	End Fence Jogger HP (A214 machine only)	Detects the home position of the duplex end fence jogger.	58
S30	Original Length (Option for N. American models)	Detects original length for 11" x 15" paper.	21
Switches			
SW1	By-pass Feed Table	Detects whether the by-pass feed table is open or closed.	30
SW2	Tray Down (A214 machine only)	Sends a signal to the CPU to lower the LCT bottom plate.	90
SW3	Upper Tray Paper Size (A212 machine only)	Determines what size of paper is in the upper paper tray, and detects when the tray has been closed. ✻ The upper tray switch has been eliminated.	24
SW4	Lower Tray Paper Size	Determines what size of paper is in the lower paper tray, and detects when the tray has been closed. ✻ The lower tray switch has been eliminated.	31
SW5	Vertical Guide Set (A212 machine only)	Detects whether the vertical guide is open or not.	29

Symbol	Name	Function	Index No.
SW6	LCT Cover-1 (A214 machine only)	Detects whether the LCT cover is open or not.	91
SW7	LCT Cover-2 (A214 machine only)	Cuts the dc power line of the LCT lift motor.	89
SW8	Main	Supplies power to the copier.	37
SW9	Front Cover Safety	Cuts the ac power line and detects whether the front door is open or not.	36
SW10	Exit Cover Safety (A214 machine only)	Cuts the ac power line and detects whether the exit cover is open or not.	42
Magnetic Clutches			
CL1	Toner Supply	Turns the toner supply roller to supply toner to the development unit.	66
CL2	Development	Drives the development roller.	65
CL3	Transfer Belt Contact	Controls the touch and release movement of both the transfer belt unit and the drum charge roller unit.	82
CL4	Registration	Drives the registration rollers.	67
CL5	By-pass Feed	Starts paper feed from the by-pass feed table or LCT.	68
CL6	Relay	Drives the relay rollers.	70
CL7	Upper Paper Feed (A212 machine only)	Starts paper feed from the upper paper tray.	74
CL8	Lower Paper Feed	Starts paper feed from the lower paper tray.	75
Solenoids			
SOL1	A214 machine: LCT/By-Pass Pick-up Solenoid A212 machine: By-pass Pick-up Solenoid	Picks paper up from the by-pass feed table. When paper is fed from the LCT, this solenoid assists SOL3.	69
SOL2	Junction Gate (A214 machine only)	Moves the junction gate to direct copies to the duplex tray or to the paper exit.	79
SOL3	LCT Pick-up (A214 machine only)	Picks up paper from the LCT.	84
Lamps			
L1	Exposure	Applies high intensity light to the original for exposure. ✻ Modified - see the "Optics" section for details.	16
L2	Main Fusing	Provides heat to the central area of the hot roller. ✻ Modified - see the "Fusing" section for details.	59

Symbol	Name	Function	Index No.
L3	Secondary Fusing	Provides heat to both ends of the hot roller. ✻ Modified - see the "Fusing" section for details.	60
L4	Pre-transfer	Reduces the charge remaining on the drum surface before transfer.	4
L5	Quenching	Neutralizes any charge remaining on the drum surface after cleaning.	5
L6	Erase	After exposure, this eliminates the charge on areas of the drum that will not be used for the image.	2
Heaters			
H1	Drum	Turns on when the main switch is off to keep the temperature around the drum charge roller at a certain level. Also prevents moisture from forming around the drum.	33
H2	Optics Anti-condensation (option)	Turns on when the main switch is off to prevent moisture from forming on the optics.	40
H3	Lower Tray (option)	Turns on when the main switch is off to keep paper dry in the lower paper tray.	32
Thermistors			
TH1	Main Fusing	Monitors the temperature at the central area of the hot roller.	63
TH2	Secondary Fusing	Monitors the temperature at the ends of the hot roller.	64
TH3	Optics	Monitors the temperature of the optics cavity.	41
TH4	Drum Charge	Monitors the temperature of the drum charge roller.	43
Thermofuses			
TF1	Main Fusing	Provides back-up overheat protection in the fusing unit.	62
TF2	Secondary Fusing	Provides back-up overheat protection in the fusing unit.	61
TF3	Exposure Lamp	Opens the exposure lamp circuit if the 1st scanner overheats.	17
Counters			
CO1	Total	Keeps track of the total number of copies made.	35

Symbol	Name	Function	Index No.
CO2	Key (option)	Used for control of authorized use. The copier will not operate until it is installed.	N/A
Others			
CB1	Circuit Breaker (220 ~ 240 V machines only)	Provides back-up high current protection for electrical components.	8
TR1	Transformer (220 ~ 240 V machines only)	Steps down the wall voltage to 100 Vac.	6
CC1	Choke Coil	Removes high frequency current.	9

5. PROCESS CONTROL

✻ Refer to the A204/A206/A207/A208/A210/A211 service manual for detailed information.

5.1 TEMPERATURE CORRECTION

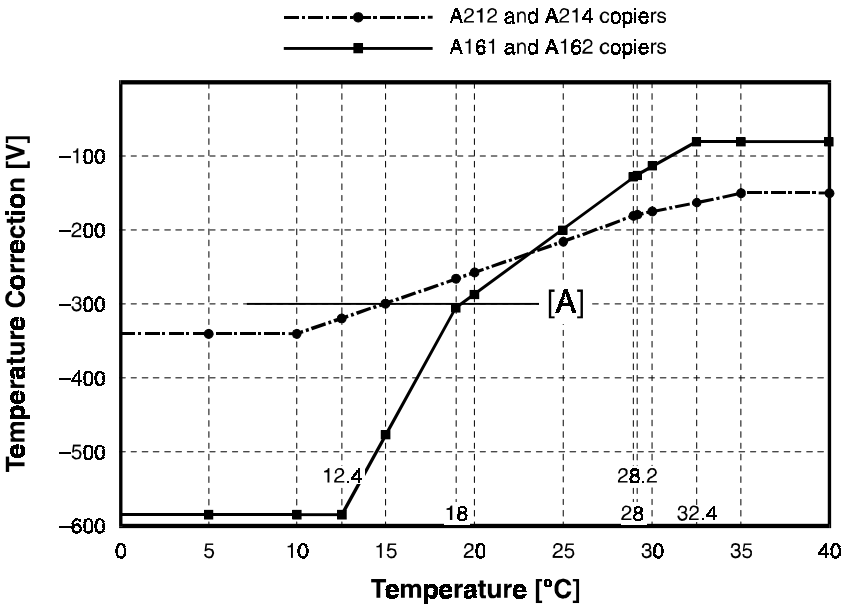

A212D500.wmf

✻ Temperature correction has changed, as explained below. Also, the machine no longer performs drum rotation time correction.

The new drum charge roller needs only about half the correction voltage that was needed in the base copier. Further, the level of correction needed for the lowest temperature point (5°C) is about the same as the normal room temperature point for the base copier [A].

In the base machine, rotation time correction was only needed for low temperatures where the temperature correction was large. In the new machines, the temperature correction is never greater than –300 V, so the rotation time correction has been eliminated.

- Temperature Correction (Copying) - Base drum charge voltage = –1,500 V
- Temperature Correction (VSP Pattern) - Base drum charge = –1,370 V

Drum Charge Roller Temperature (°C)	Temperature Correction	
	VSP Pattern	Copying
35.0 ≤ T	0	–150.0
28.0 ≤ T < 35.0	–200.0 + 5.7T	–300.0 + 4.3T
10.0 ≤ T < 28.0	–320 + 10.0T	–428.9 + 8.9T
T < 10.0	–220.0	–340.0

6. DRUM

NOTE: The drum in this machine is the same as the A204/A206/A207/A208/A210/A211 copiers. Please refer to the A204/A206/A207/A208/A210/A211 manual for details.

7. OPTICS

7.1 OVERVIEW

7.1.1 Toner Shield Glass

✻ The shield glass by the green filter above the drum has been removed (it is no longer needed).

7.2 SCANNER DRIVE

✻ The returning speed of the first scanner has changed to 1,000 (mm/s).

8. DEVELOPMENT CLUTCH ON/OFF TIMING

The development clutch ON/OFF timing has been changed to prolong the life of the developer. The life of the developer has been increased from 100 k to 120 k.

	Development Clutch ON Time (s)		Reducation
	A161/A162 copiers	A212/A214 copiers	
1 to 1	2.77	2.30	83%
1 to 2	5.54	4.60	83%

8.1 Development Clutch On-Off Timing

- A161/A162 -

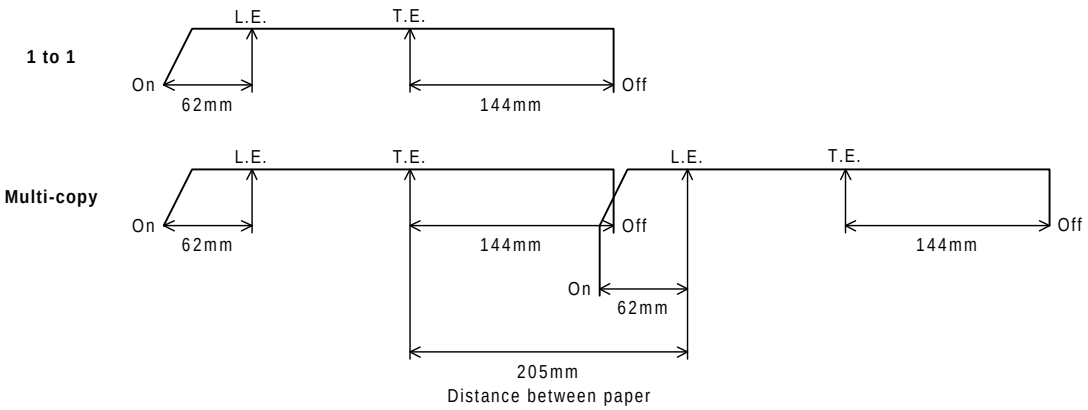

- A212/A214 -

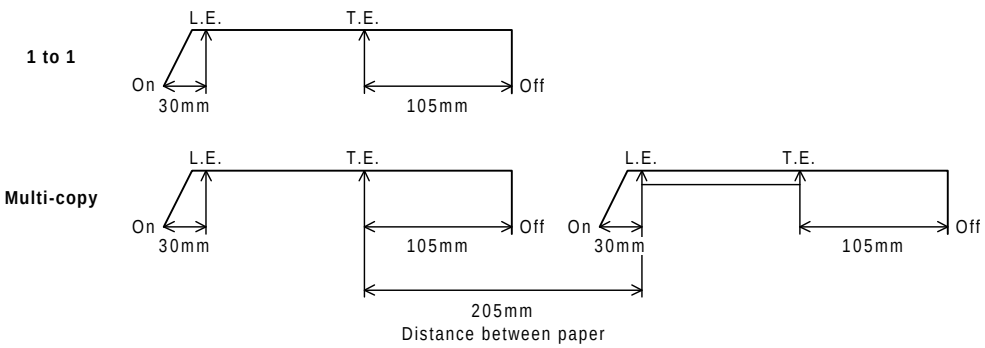

A212D507.wmf

9. PAPER FEED AND REGISTRATION

9.1 OVERVIEW

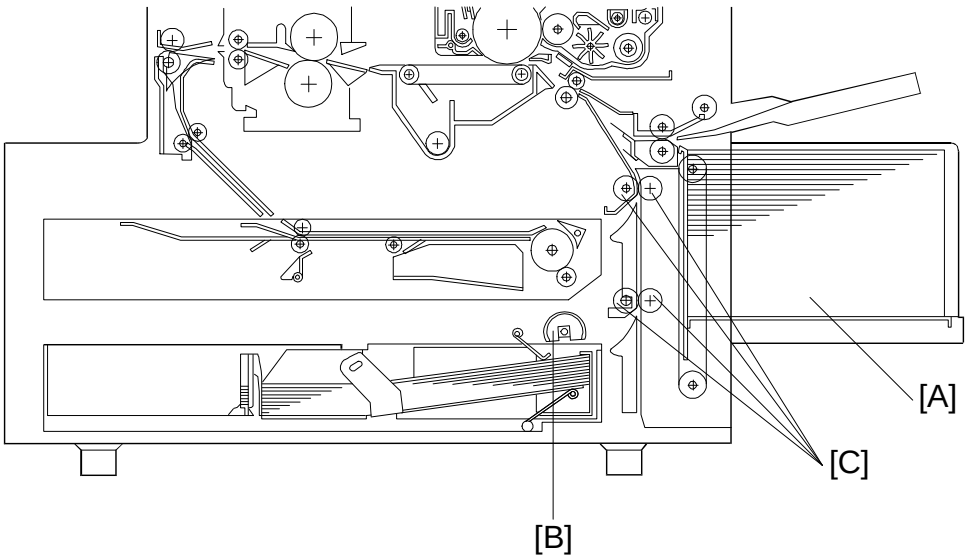

A212D503.wmf

The paper feed station uses a paper tray [A] which can hold 500 sheets.

The paper tray uses semicircular feed rollers [B] and a corner separator. The semicircular feed rollers make one rotation to drive the top sheet of the paper stack to the relay rollers [C]. The paper tray has two corner separators, which allow only one sheet to feed. They also hold the paper stack. When the paper tray is drawn out of the machine, the spring pressure is released, and the tray bottom plate drops. In addition, there is no need to press the bottom plate down when putting the tray back in.

9.2 PAPER TRAY FEED

9.2.1 Paper Lift Mechanism

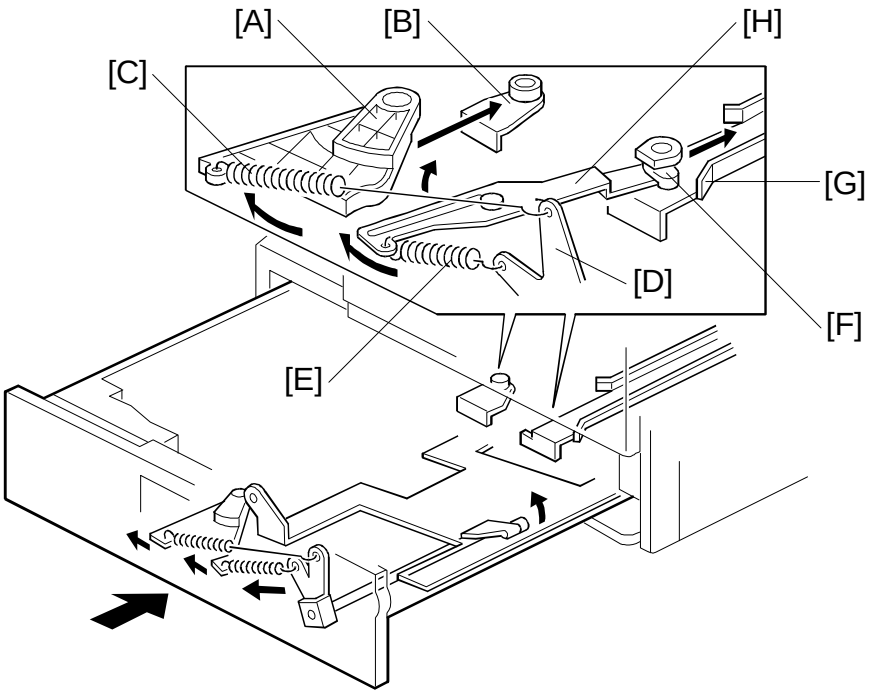

A212D501.wmf

The capacity of this tray is greater than usual for a corner separator type. Because of this, there are two springs to lift the bottom plate.

As the tray is pushed into the machine, shutter [A] under the tray pushes against projection [B]. As the shutter slides past the projection, the shutter rotates, which forces the main lift spring [C] to pull the bottom plate lever [D]. The secondary lift spring [E] also pulls the bottom plate lever (this is described below).

To apply spring tension for wider paper, projection [F] stops against the end of rail [G]. When this occurs, lever [H] swings out in the direction shown above, which stretches the spring as the tray is pushed in. The side fence position affects the orientation of [F]; wider paper causes [F] to contact [G] earlier, leading to greater spring tension when the tray has been pushed all the way in.

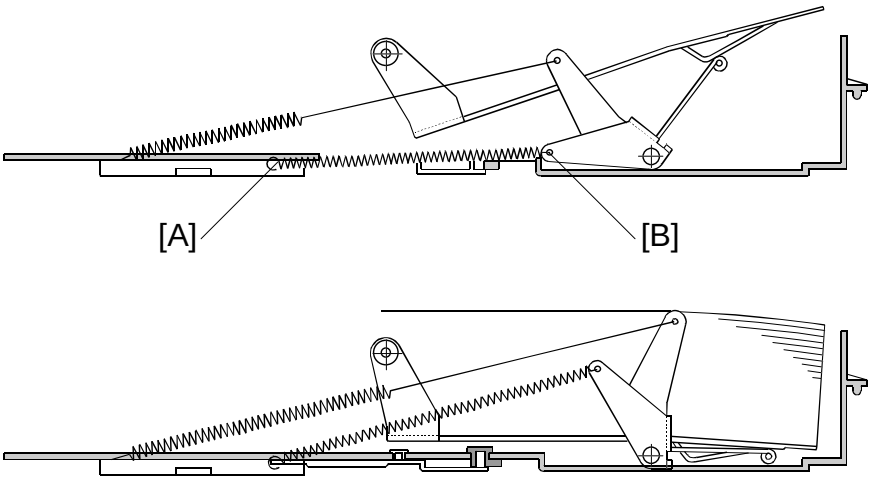

A212D504.wmf

The paper tray capacity has been increased from 250 to 500 sheets and the paper lift mechanism differs from former one.
Force is applied to the bottom plate by the main lift spring and the secondary lift spring, depending on the amount of paper remaining in the tray.
When one sheet remains in the tray, the bottom plate is supported only by the main lift spring. In this case, the secondary lift spring does not affect the bottom plate, because both ends [A], [B] of the secondary lift spring and the fulcrum of bottom plate lever line up in a straight line. As the amount of paper increases, the bottom plate lever inclines right, and tension for the both main lift spring and secondary lift spring increase.

9.3 Corner Separator Over Rising Prevention Mechanism

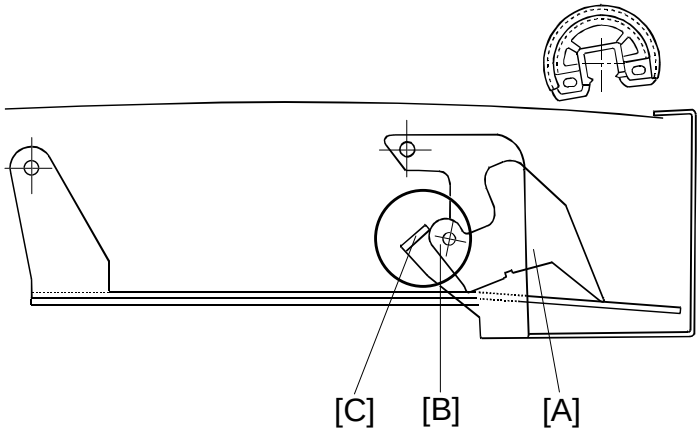

A212D505.wmf

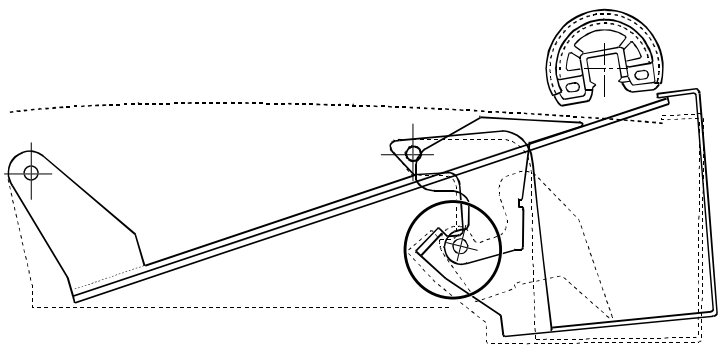

A212D506.wmf

The bottom plate stopper [A] prevents the corner separator from rising too high.
When the tip of bottom plate stopper touches the bottom plate by the weight of stopper itself, point [B] on the bottom plate stopper contacts [C] on the corner separator. This prevents the corner separator from over-rising.
The shape of contact point [B] adjusts the distance between the corner separator and bottom plate according to the amount of paper.

9.4 Corner Separator Stopper Mechanism

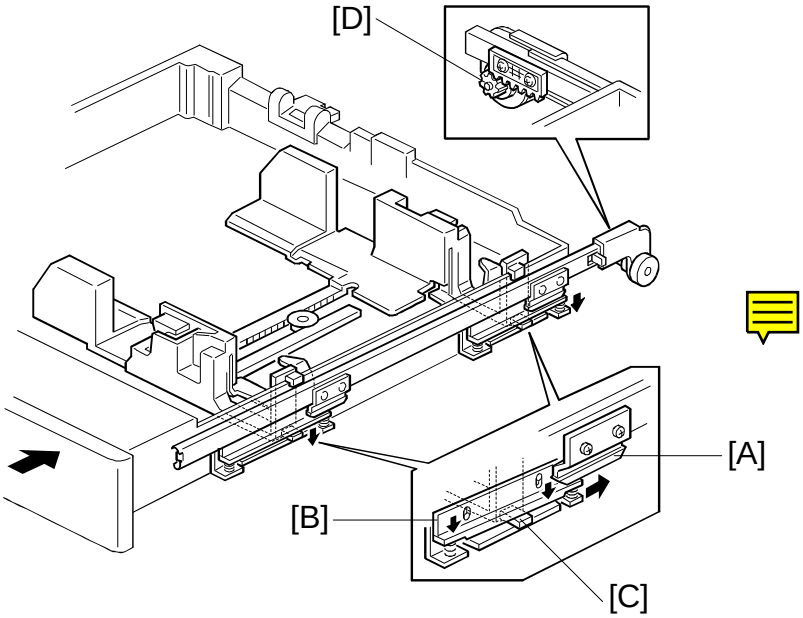

A212D502.wmf

The corner separator stopper prevents the corner separator from dislocation when the tray holds a lot of paper.
When the paper tray is pushed into the machine, the stopper holder [A] slides to press the corner separator stopper [B] down. The corner stopper holds down portion [C], immobilizing the corner separator.
Damper [D] at the end of the right guide rail absorbs shock, when the tray is pushed in.

10. INSTALLATION

10.1 COPIER ACCESSORY CHECK

Check the accessories against the following list:

Description	Q'ty
1. Paper Size Decal	1
2. Symbol Explanation Decal	1
3. Optional Margin Adjustment Function Decal	1
4. Combine Originals Explanation Decal	1
5. Receiving Tray	1
6. Operating Instructions (except for -27 machines)	1
7. User Survey Card (-17 machines only)	1
8. New Equipment Condition Report	1
9. Cushion	1

10.2 COPIER INSTALLATION PROCEDURE

⚠CAUTION

Rating Voltage for Peripherals

Make sure to plug the cables into the correct sockets.

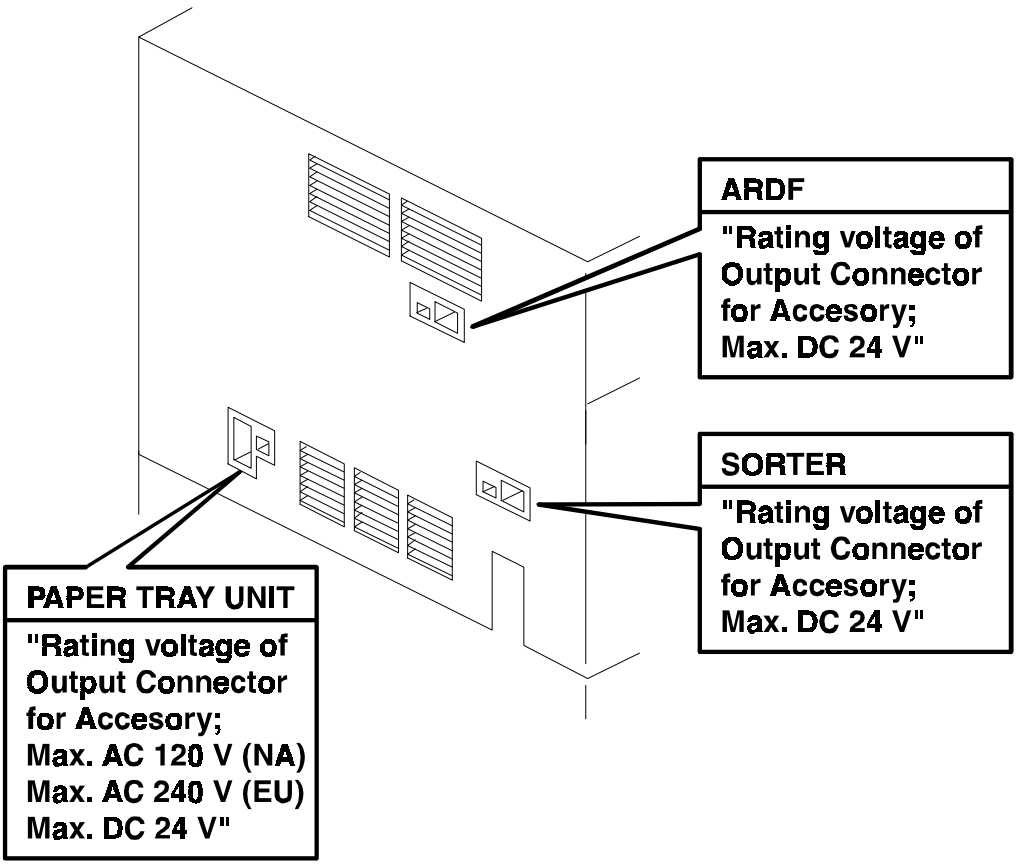

A212I500.wmf

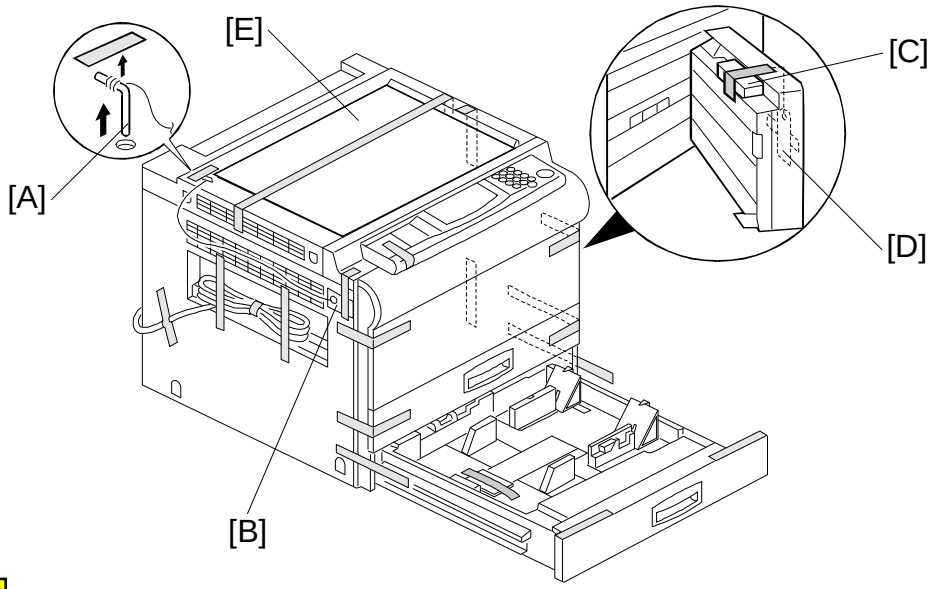

A212I514.wmf

- A214 copier -

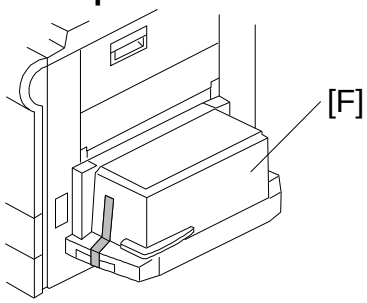

A212I501.wmf

NOTE: 1) Never lift the machine by holding the LCT, or the LCT will break.

2) Keep the shipping retainers after installation. They will be reused if the machine is moved to another location.

3) Proper reinstallation of the shipping retainers is required in order to avoid any transport damage. It is most important to put back the scanner lock pin when transporting this copier. If not, skewed image may result.

1. Remove the scanner lock pin [A] and red tag [B], as shown.
2. Remove the cushion [C] and red tag [D], as shown.
3. Remove the strips of tape and the sheet of paper [E]. Also, for A214 copier remove the strip of tape on the LCT [F].
4. Pull out the paper tray [G], and remove the strips of tape and the bottom plate stoppers [H]. Then install the paper tray in the copier (1 tray for duplex machines and 2 trays for non-duplex machines).

- A214 copier -

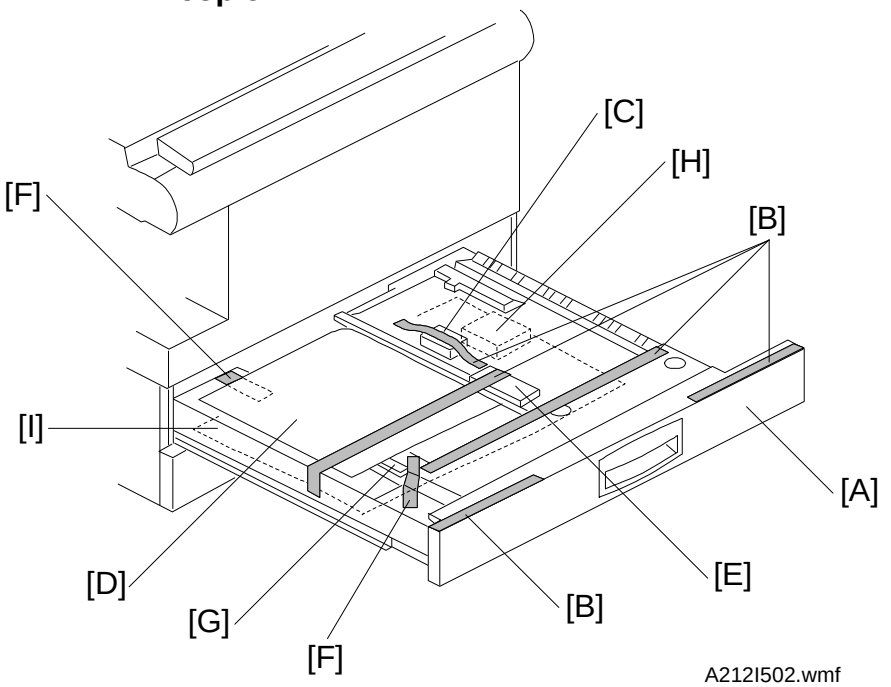

5. **A214 copier only:**
   1) Pull out the duplex tray [A] and remove the strips of tape [B].
   2) Remove the guide roller stopper [C] and a sheet of paper [D].
   3) Open the upper duplex guide plate [E] and remove the strips of tape [F].
   4) Open the lower duplex guide plate [G], and remove the styrofoam support [H] and the sheet of paper [I].
   5) Install the duplex tray in the copier.

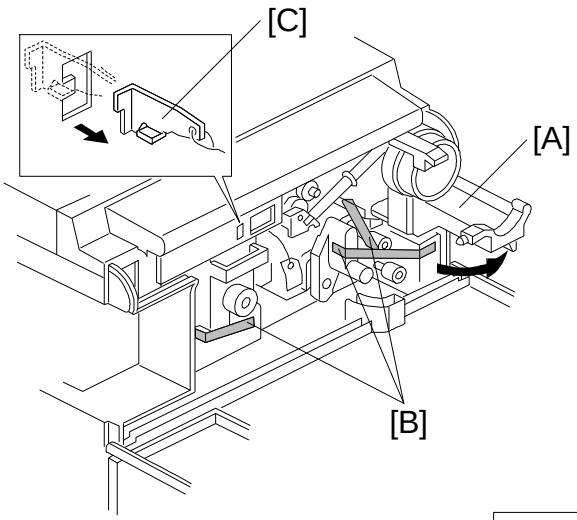

A212I515.wmf

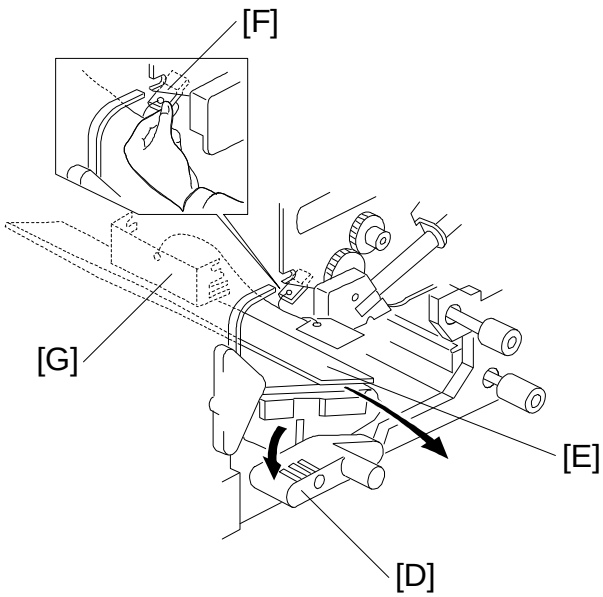

A212I503.wmf

6. Open the front cover and swing out the toner bottle holder [A].
7. Remove the strips of tape [B].
8. Remove the switch actuator lock bracket [C] as shown.
9. Turn the "A1" lever [D] counterclockwise to lower the transfer belt unit. Then remove the cushion sheet [E].
10. Remove the blade release wedge [F] together with the pick off pawl release mylar [G].
11. Return the "A1" lever to the set position.

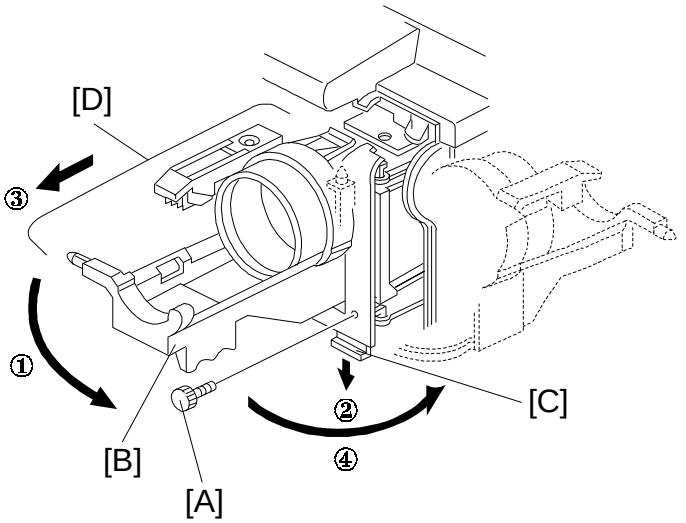

A212I504.wmf

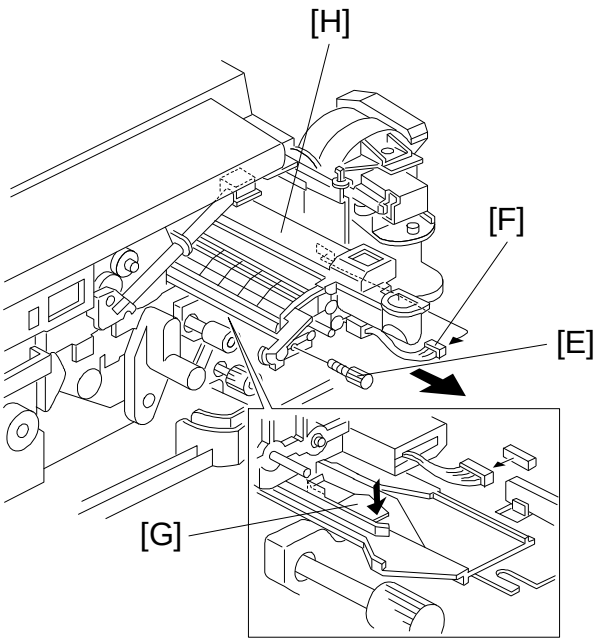

A212I505.wmf

12. Remove the knob screw [A].
13. ① Swing out the bottle holder [B] and ② pull down the lock lever [C]. ③ Then slide out the bottle holder assembly [D] and ④ swing out the bottle holder assembly [D].
14. Remove the knob screw [E] and disconnect the white connector [F].
15. Pull down the development unit lock lever [G] from under the plate and pull out the development unit [H]. Then place it on a clean sheet of paper.

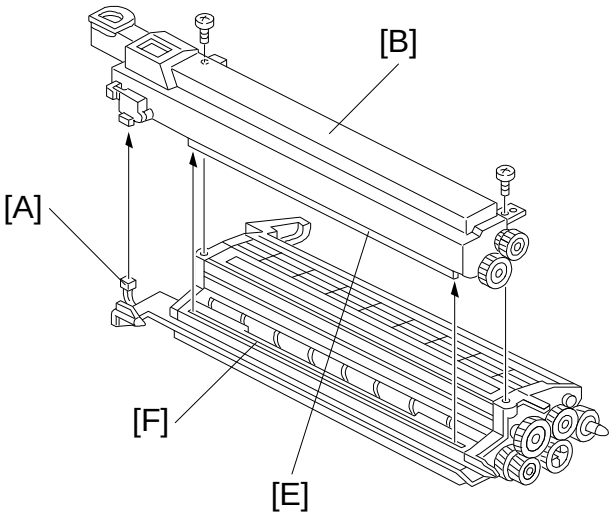

A212I506.wmf

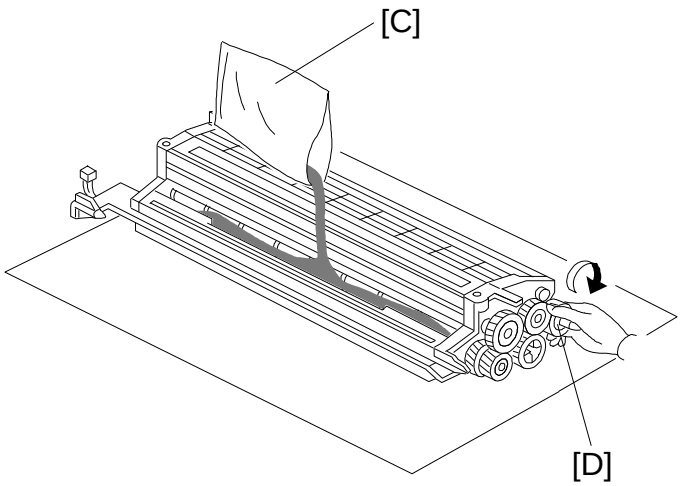

A212I507.wmf

16. Disconnect the connector [A] and separate the toner supply unit [B] from the development unit (2 screws).
17. Pour about half a pack of developer [C] into the development unit. Then rotate the outer gear [D] as shown to distribute the developer evenly. Then pour in all the remaining developer and rotate the gear again.

    NOTE: To prevent the developer from spilling, do not rotate the gears in the other direction.
18. Remount the toner supply unit on the development unit (2 screws) and connect the white connector.

    NOTE: Make sure that the positioning rib [E] sits in the groove [F].
19. Install the development unit in the copier (1 knob screw and 1 connector).

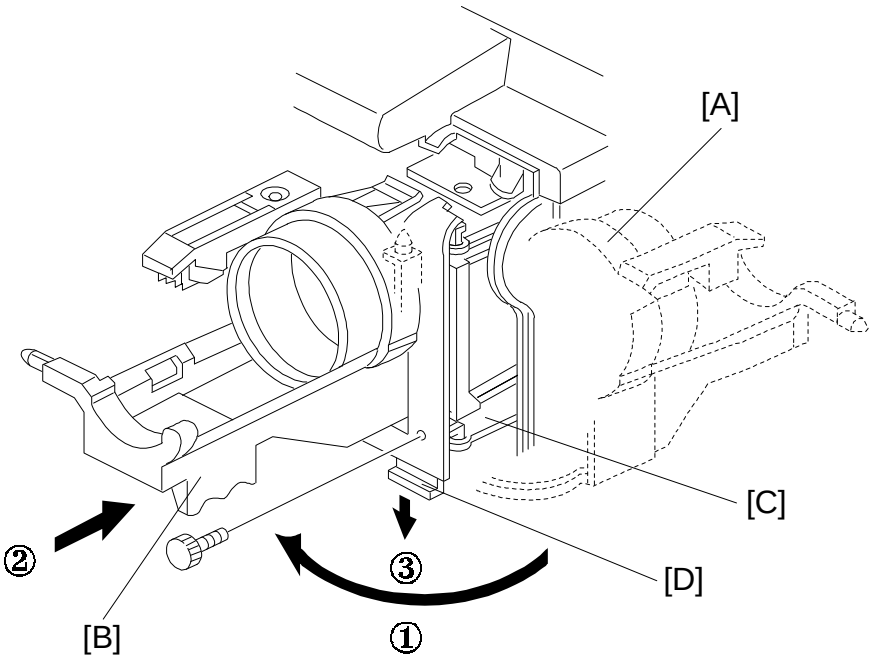

A212I508.wmf

IMPORTANT: Do not swing the bottle holder fully into the machine before step 20.

20. Swing in the bottle holder assembly [A] so that the toner bottle holder [B] and the slide rail [C] are aligned properly.

21. Slide the bottle holder assembly in as described below:
    1) Slide the bottle holder assembly into its locked position while pressing down the bottle holder lock lever [D].
    2) When the bottle holder assembly reaches its locked position, push up the bottle holder lock lever so that the knob screw holes are aligned.
    3) Secure the bottle holder lock lever with the knob screw.

    NOTE: Do not swing the bottle holder assembly all the way into its original position in the machine without sliding and locking it into position exactly as described above. Otherwise, the assembly will be damaged.

22. Install a toner bottle by following the instructions placed on the reverse side of the front cover.

23. Swing in the toner bottle holder to its original position and close the front cover.

24. Plug in the copier and turn on the main switch.

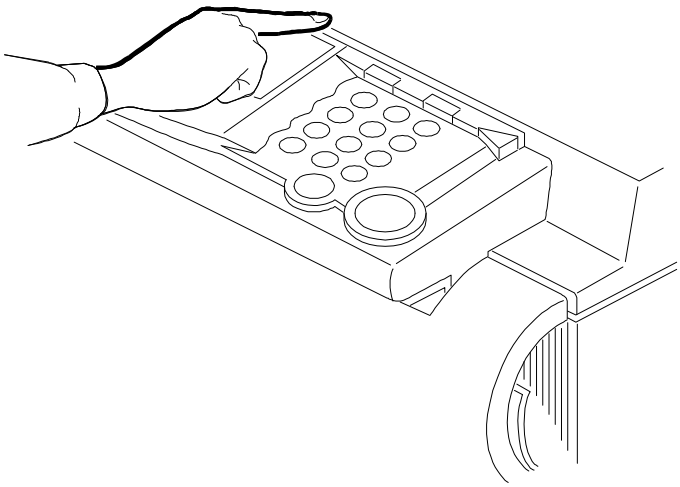

A212I509.wmf

25. Enter SP mode as follows:
    1) Press the [◈/▽] key.
    2) Enter "107" using the numeric keys.
    3) Hold down the [C/▽] key for more than 3 seconds.

    NOTE: When SP mode is selected, "1" blinks in the 3rd digit of the copy counter, the Auto Image Density indicator starts blinking, and the reduce/enlarge indicator turns off.

26. Perform the "TD sensor initial setting" SP mode as follows:
    1) Enter "2" and press the [R/#] key.
    2) Enter "214" and press the [R/#] key.
    3) Press the [◇] key.

    NOTE: The machine will automatically stop when TD sensor initial setting is completed. (It takes about 2.5 minutes.)

    Then perform the "Compulsory toner supply" SP mode as follows:
    1) Press the [◈/▽] key twice.
    2) Enter "2" and press the [R/#] key.
    3) Enter "207" and press the [R/#] key.
    4) Press the [◇] key.

    NOTE: The machine will automatically stop when compulsory toner supply is completed. (It takes about 30 seconds.)

    5) Compulsory toner supply must be performed twice in order to supply enough toner to the toner hopper, so press the [◇] key again.

27. Press the [◈/▽] key three times to exit SP mode.

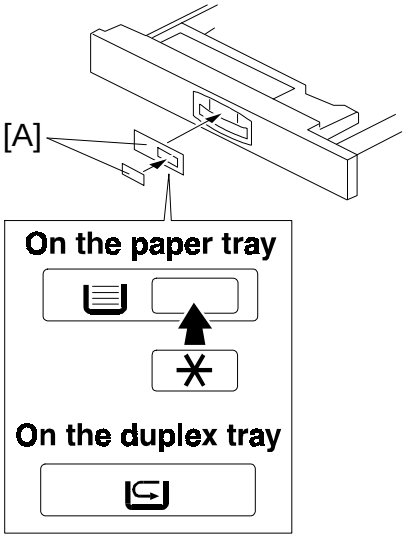

A212I510.wmf

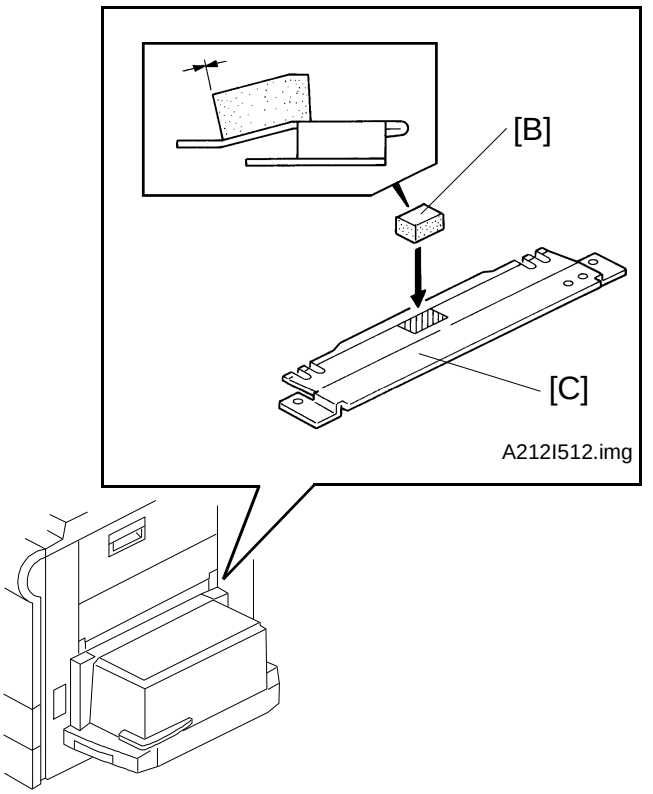

A212I512.img

A212I511.wmf

28. Pull out the paper tray and load paper into it. (The paper size and direction for each tray should be as specified by the customer.)

    NOTE: The side and rear fences should be properly positioned.

29. Select the appropriate paper size for the paper trays in the main body by sliding the paper size slider into the correct position (see section 2.3.2 in the base copier manual, "Paper size selection for the copier paper trays" for details).

30. **When a paper tray unit is installed:** Enter the proper paper size for each paper tray by following the procedure shown in section 2.3 in the base copier manual, "Paper Size Selection" and in "Service Tables - SP5-019: Paper Size Setting".

31. Load paper into the paper trays and the copy tray.

32. Attach the appropriate paper size decals [A] to the paper trays.
    For the A214 copier, attach the duplex decal to the duplex tray.

    NOTE: Paper size decals are used also for the paper tray unit. Save the remaining decals for use with the paper tray unit.

33. Attach the cushion [B] at the center of the LCT upper stay [C] as shown.

    NOTE: Make sure that the edge of the cushion is aligned with the line where the stay is bent at a slight angle.

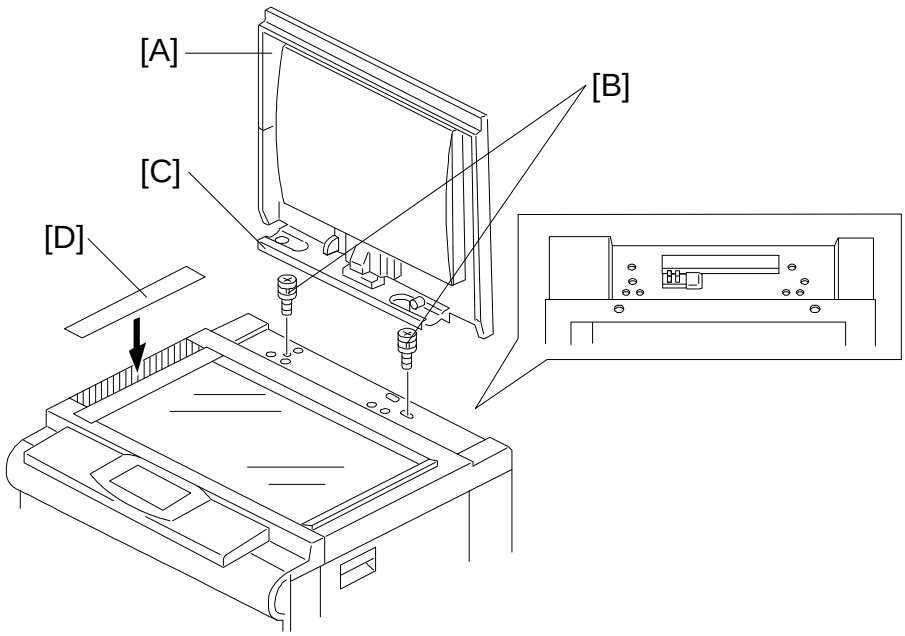

A212I513.wmf

34. Install the optional platen cover [A] if necessary:
    1) Install 2 stud screws [B] on the top cover as shown.
    2) Position the platen cover bracket [C] on the stud screws and slide it to the left.
35. Attach the symbol explanation decal [D] to the top cover as shown. (If the ARDF will be installed, stick the decal on the ARDF exit cover. Refer to the ARDF installation procedure.)
36. Check the copy quality and machine operation.

10.3 AUTO REVERSE DOCUMENT FEEDER (A663)

✻ Refer to the A204/A206/A207/A208/A210/A211 service manual for detailed information.

10.4 20-BIN SORTER STAPLER (A658)

✻ Refer to the A204/A206/A207/A208/A210/A211 service manual for detailed information.

11. SERVICE REMARKS

11.1 PAPER FEED

✻ Only the following item is new.

Always push the paper tray in gently. If the tray is slammed shut, the paper stack might go over the side fence or the corner separators, causing double feed or image skewing problems.

12. SERVICE PROGRAM MODE

12.1 SERVICE PROGRAM MODE TABLE

1. Items written in ***bold italic letters*** are newly added service programs.
2. Items written in **bold** are modified service programs from the A161/A162 copiers.
3. A "†" after the mode name means that copies can be made while in this SP mode.
4. A "‡" after the setting in the "Settings" column means that the actual factory setting for this is written on the data sheet in the front cover.
5. A "°" before the mode number means that this mode can be accessed by sales representatives (▲/▼ → C/▼ → ▲/▼ → ▲/▼).
6. A "•" before the mode number means that this mode can be accessed by users using a UP mode (▲/▼ → C/▼). See "UP Mode/SP Mode Cross Reference Table".
7. In the Function column, comments (extra information) are in italics.
8. In the Settings column, the default values are printed in bold letters.
9. "RDS" means Remote Diagnostic System (not available in these models) "CSS" means Customer Support System (only available in Japan)

12.1.1 Quick Reference

The following is a quick reference list of the SP Modes.

Mode No.	Function
Paper Feed/Paper Transport/Fusing	
1-001	Registration †
1-003-xxx	**Paper Feed Timing †**
1-008	Misfeed Detection †
1-103	**Fusing Idling †**
°1-104	Fusing Temperature Control †
1-105-xxx	**Fusing Temperature Adjustments †**
1-106-xxx	**Fusing Temperature Display †**
1-108	Forced Start †
1-801	Not used
1-902	Jogger Span Adjustment (Side Fence) †
1-905	Jogger Span Adjustment (End Fence) †
Around the Drum	
2-001	Drum Charge Voltage Adjustment (for copying)

Mode No.	Function
2-002-xxx	Drum Charge Voltage Display †
2-003	Drum Charge Voltage Adjustment (for making VSP patterns)
2-101-xxx	**Leading/Trailing Edge Erase Margin Adjustment †**
2-201-xxx	Development Bias Adjustments †
2-203	**Development Bias Adjustment (for making VSP patterns)**
2-206-xxx	Development Bias Display †
2-207	Forced Toner Supply (shown as "Compulsory Toner Supply" on the display)
2-208-001	Toner Supply Mode Selection †
2-208-002	Toner Supply Ratio (TD Sensor Supply Mode) †
2-208-003	**Toner Supply Ratio (Fixed Supply Mode) †**
2-214	TD Sensor Initial Setting
2-215-xxx	TD Sensor Output Display †
2-220	TD Sensor Initial Output Display †
2-222	Toner Supply Ratio (Detect Supply Mode) †
2-301-xxx	**Transfer Current Adjustments †** **Factory Use Only: Do not change the settings.**
2-801	Developer Agitation
2-802	Drum Charge Roller Temperature †
2-812	Drum Reverse Rotation Adjustment †
2-901	**Drum Charge Roller Cleaning Interval †**
2-902	Not used
Process Control	
3-001	ID Sensor Initial Setting
3-002	ID Sensor Initial Setting Display †
3-103-xxx	ID Sensor Output Display †
3-105	Forced VL Detection
3-106	Initial VLP/VLG Display †
3-107	Current VLP/VLG Display †
3-111	**Current VRP/VRG Display †**
3-112	Forced VR Detection
3-123	Drum Initialize
3-801	**Auto Process Control Mode Selection †**
3-901	Free Run (Exposure Lamp Off)
3-902	Forced Process Control
Optics	
4-001	Exposure Lamp Voltage Adjustment †
°4-002	Exposure Lamp Voltage Display †
4-008	Vertical Magnification Adjustment †
4-011-xxx	Lens Horizontal HP Adjustments †
4-013	Scanner Free Run
4-101	**Horizontal Magnification Adjustment †**

Mode No.	Function
4-102	Lens Error Correction †
4-103	Focus Adjustment †
4-201	Auto ADS Gain Adjustment
4-202	ADS Initial Gain Display †
4-203	ADS Actual Gain Display †
4-301	APS Sensor Function Check †
4-302	Optional APS Sensor **(LT version only)** †
4-303	APS A5/HLT Detection †
4-901	APS Size Priority (for F4 size) †
•°4-902	APS 8 k/16 k Detection **(A4 versions only)** †
Operation	
•°5-001	**All Indicators ON †**
•°5-002	Feed Station Priority Selection †
•°5-003	APS Priority Selection †
•°5-004	ADS Priority Selection †
•°5-013	Counter Up/Down Selection †
•°5-017	Maximum Copy Quantity (Copy Limit) †
•°5-019-xxx	Paper Size Set †
•°5-021-xxx	***Duplex Priority Selection (Energy Star) †***
•°5-022-xxx	***Energy Star Selection †***
•°5-101	Auto Reset Time Setting †
•°5-102	**Auto Energy Saver Time Setting †**
•°5-103	Auto Tray Shift †
°5-104	A3/DLT Double Count †
•°5-106	**Image Density Level Correction (ADS Correction) †**
•°5-107-xxx	**Image Shift Margin Adjustment †**
•°5-108	Edge Erase Margin Adjustment †
•°5-110	Center Erase Margin Adjustment †
°5-113	Coin Lock Installation †
5-115	Duplex Image Shift (Back Side Margin) †
°5-121	T/C (Total Counter) Count Up Timing †
•°5-122	**OHP Slip Sheet Mode Selection †**
5-127	APS Detection †
•°5-305-001	**Auto Shut Off Time Setting †**
°5-305-002	**Auto Shut Off Selection †**
°5-401	User Code Mode †
•°5-402	User Code Counter Check †
•°5-404-xxx	User Code Counter Clear †
•°5-405	User Code Number Setting †
•°5-407-xxx	User Code Number Clear †
°5-408	Number of Registered User Codes Display †
•°5-410	**User Code Reset Time Setting †**

Mode No.	Function
°5-501-001	PM Interval Setting †
°5-501-002	PM Interval Setting (PM Alarm Mode Setting) †
5-504	Used in Japan only. Do not change the factory setting.
5-505	Used in Japan only. Do not change the factory setting.
°5-507	Used in Japan only. Do not change the factory setting.
5-801	Memory All Clear †
5-802-xxx	Free Run Mode
5-803-xxx	Input Check Mode †
5-804-xxx	Output Check Mode
°5-810	SC Reset †
5-811	Used in Japan only. Do not change the factory setting.
°5-812	Not used
°5-816	Used in Japan only. Do not change the factory setting.
5-817	Used in Japan only. Do not change the factory setting.
°5-905	APS A4/LT Sideways Priority †
•°5-906	Manual Staple Reset Time Setting †
•°5-907	**Cover Mode Selection †**
•°5-908	Image Shift/Erase Selection †
•°5-909	10 key Zoom/Size Magnification †
•°5-910	Not used
Peripherals	
•°6-001	SADF Auto Reset Time Setting †
°6-003	Auto Sort Selection †
°6-005	Blank Copy for Last Odd Originals in Duplex †
6-006-xxx	DF Registration Adjustment †
6-009	DF Free Run with Paper
•°6-010	Auto APS Select (DF) †
•°6-011	Thick/Thin Original Mode Selection †
°6-101	**Sorter Installation †**
°6-102	**Sorter Stack Limit †**
°6-104	**Staple Sheet Limit †**
6-107	Sorter Free Run Mode
Counters	
°7-001	Total Operation Time Display †
°7-002	Total Original Counter Display †
°7-003	Copy Charge Counter for RDS/CSS Display † This is for use with features that are available only in Japan. However, it does show how many originals have been copied (total of DF mode + platen mode).

Mode No.	Function
°7-004	Initial Copy Counter Setting for RDS/CSS Display † This is for use with features that are available only in Japan. However, it does show the total number of copies that have been made.
°7-101-xxx	Total Copies by Paper Size †
°7-203	Drum Counter †
°7-204-xxx	Feed Unit Counter †
°7-205	DF Counter †
°7-206	Stapler Counter †
°7-301-xxx	Total Copies by Magnification †
°7-401	Total Service Call Counter †
°7-402	SC Counter by Service Call †
°7-501	Total Jam Counter (Copies + Originals) †
°7-502	Total Jams by Paper Size † (**Note:** This is actually the Total Copy Paper Jam Counter. The counter is not divided up by Paper Size.)
°7-503	Total Original Jam Counter
°7-504-xxx	Total Jams by Location †
°7-505-xxx	Total Original Jams by Location †
°7-801-xxx	Main ROM Version Display †
°7-803	PM Counter Check †
°7-804	PM Counter Clear
°7-807-001	SC Counter Clear †
°7-807-002	Copy Jam Counter Reset †
°7-807-003	Original Jam Counter Reset †
°7-808	Counter All Clear
°7-810	Copy Counter Clear
°7-811	DF Counter Clear
°7-816-xxx	Feed Unit Counter Clear †

12.1.2 SP Mode Table

<table>
<tr><th colspan="2">Mode No.</th><th>Function</th><th>Settings</th></tr>
<tr><td rowspan="2">1-001</td><td rowspan="2">Registration †</td><td>Adjusts leading edge registration.</td><td rowspan="2">0 ~ 32
Default = 16 ‡</td></tr>
<tr><td>(0.5 mm per step [Range: –8.0 mm to +8.0 mm])</td></tr>
<tr><td rowspan="3">1-003-001
to
1-003-008</td><td rowspan="3">Paper Feed Timing †</td><td>Adjusts the paper feed timing at registration for each paper feed station. Paper feed timing is in proportion to the amount of paper bending [mm] at registration.</td><td rowspan="3">0 ~ 32
Default = 16

SP1-003-008: Do not adjust this setting.</td></tr>
<tr><td>(0.5 mm per step [Range: –8 mm to + 8 mm])</td></tr>
<tr><td>
<table>
<tr><th>SP Number</th><th>Without Duplex</th><th>With Duplex</th></tr>
<tr><td>SP1-003-001</td><td>1st tray</td><td>Duplex</td></tr>
<tr><td>SP1-003-002</td><td>2nd tray</td><td>1st tray</td></tr>
<tr><td>SP1-003-003</td><td>3rd tray</td><td>2nd tray</td></tr>
<tr><td>SP1-003-004</td><td>4th tray</td><td>3rd tray</td></tr>
<tr><td>SP1-003-005</td><td>5th tray</td><td>4th tray</td></tr>
<tr><td>SP1-003-006</td><td>By-pass</td><td>By-pass</td></tr>
<tr><td>SP1-003-007</td><td>LCT</td><td>LCT</td></tr>
<tr><td>SP1-003-008</td><td colspan="2">Japan only</td></tr>
</table>
</td></tr>
<tr><td>1-008</td><td>Misfeed Detection †</td><td>Switches misfeed detection on or off for test purposes (sensor signals are ignored). Only one copy can be made at a time, to prevent damage to the machine.</td><td>0: OFF
1: ON</td></tr>
<tr><td rowspan="2">1-103</td><td rowspan="2">Fusing Idling †</td><td>Selects the total time for the fusing idling during machine warm-up. For type 2, fusing idling starts when the detected temperature reaches the operating temperature –15°C. For type 1, fusing idling starts when the detected temperature reaches the operating temperature.</td><td rowspan="2">0: OFF
1: 60 s
2: 100 s
3: 180 s
4: 300 s</td></tr>
<tr><td>The longer the selected fusing idling, the longer time the machine takes to reach the ready condition. After changing the setting, turn the main switch off and on.</td></tr>
<tr><td rowspan="2">°1-104</td><td rowspan="2">Fusing Temperature Control †</td><td>Selects the fusing lamp temperature control mode.</td><td rowspan="2">0: On/Off Control
1: Phase Control</td></tr>
<tr><td>After selecting the control mode, turn the main switch off and on.</td></tr>
</table>

<table>
<tr><th colspan="2">Mode No.</th><th>Function</th><th>Settings</th></tr>
<tr><td rowspan="2">1-105-001</td><td rowspan="2">Fusing Temperature Adjustment (Main Fusing Lamp) †</td><td>Adjusts the temperature of the main fusing lamp, which heats the central area of the hot roller.
The selected temperature is displayed in the reduce/enlarge indicator.</td><td rowspan="2">170 ~ 190
Default = 175</td></tr>
<tr><td>(1°C per step [Range: 170°C to 190°C])</td></tr>
<tr><td>1-105-002</td><td>Fusing Temperature Adjustment for Energy Saver Mode †</td><td>Adjusts the temperature of the fusing unit in energy saver mode.
(SP5-102 and SP5-305 are also related to Energy Saver Mode.)
<table><tr><th>SP Setting</th><th>Type 1</th><th>Type 2</th></tr><tr><td>0</td><td>185°C</td><td>175°C</td></tr><tr><td>1</td><td>170°C</td><td>145°C</td></tr></table>The lower the fusing temperature is, the greater the energy saving ratio is and the longer the waiting time until the copier returns to the ready condition.</td><td>Default = 1
(NA)
Default = 0
(Others)</td></tr>
<tr><td rowspan="2">1-105-003 (Type 2 only)</td><td rowspan="2">Fusing Temperature Adjustment (Secondary Fusing Lamp) †</td><td>Adjusts the temperature of the secondary fusing lamp, which heats both ends of the hot roller.</td><td rowspan="2">170 ~ 190
Default = 175</td></tr>
<tr><td>(1°C per step [Range: 170°C to 190°C])</td></tr>
<tr><td rowspan="2">1-106-001</td><td rowspan="2">Fusing Temperature Display (Main Fusing Lamp) †</td><td>Displays the temperature (°C) at the surface of the central area of the hot roller, as measured by the thermistor.</td><td rowspan="2"></td></tr>
<tr><td>The temperature in energy saving mode cannot be displayed, as entering SP mode takes the machine out of this mode.</td></tr>
<tr><td rowspan="2">1-106-002</td><td rowspan="2">Fusing Temperature Display (Secondary Fusing Lamp) †</td><td>Displays the temperature (°C) at the surface of the ends of the hot roller, as measured by the thermistor.</td><td rowspan="2"></td></tr>
<tr><td>The temperature in energy saving mode cannot be displayed, as entering SP mode takes the machine out of this mode.</td></tr>
<tr><td rowspan="2">1-108</td><td rowspan="2">Forced Start †</td><td>Selects whether forced start is on or off.</td><td rowspan="2">0: OFF
1: ON</td></tr>
<tr><td>If forced start is switched on, the copier enters the ready condition even if the fusing temperature has not reached the required value yet. Use this for tests if the room temperature is low and you do not wish to wait for the lamps to warm up.</td></tr>
<tr><td>1-801</td><td>Do not use</td><td>—</td><td></td></tr>
</table>

Mode No.		Function	Settings
1-902	Jogger Span Adjustment (Side Fence) †	Adjusts the stop position of the jogger side fence span of the duplex unit. *(0.5 mm per step [Range: –8.0 mm to +8.0 mm])* ***A214 copier only***	0 ~ 32 **Default = 16**
1-905	Jogger Span Adjustment (End Fence) †	Adjusts the stop position of the jogger end fence span of the duplex unit. *(0.5 mm per step [Range: –8.0 mm to +8.0 mm])* ***A214 copier only***	0 ~ 32 **Default = 16**
2-001	Drum Charge Voltage Adjustment (for copying) †	Adjusts the voltage applied to the drum charge roller during copying. *The adjustment factor set with this SP mode is added to the base voltage. (30 V per step [Range: Base voltage –480 V to Base voltage + 480 V])*	0 - 32 **Default = 16** **(0 V) ‡**
2-002-001 to 2-002-002	Drum Charge Voltage Display †	Displays the voltage applied to the drum charge roller. SP2-002-001: For copying SP2-002-002: For making VSP patterns *The first three digits are displayed in the reduce/enlarge indicator. The actual value is the displayed value x (–10) V. Just after the main switch is turned on, the initial setting voltage is displayed. After one or more copies, the actual applied voltage (including the process control corrections) is displayed.*	
2-003	Drum Charge Voltage Adjustment (for making VSP patterns) †	Adjusts the voltage applied to the drum charge roller when making VSP patterns. *The adjustment factor set with this SP mode is added to the base voltage. (10 V per step [Range: Base voltage –160 V to Base voltage + 160 V])*	0 - 32 **Default = 16** **(0 V) ‡**
2-101-001 to 2-101-002	Leading/Trailing Edge Erase Margin Adjustment †	Adjusts the leading and trailing edge erase margins. SP2-101-001: Leading edge erase margin SP2-101-002: Trailing edge erase margin *(0.5 mm per step [Range: 0.0 mm to +16.0 mm])*	0 - 32 Default = 16 ‡ (only 2-101-001 is on the data sheet)
2-201-001	Development Bias Adjustment (for copying) †	Adjusts the development bias for copying to make copies lighter or darker in general. *The adjustment factor set with this SP mode is applied to the base voltage. (20 V per step [Range: Base voltage –80 V to Base voltage +80 V])*	1 - 9 **Default = 5** **(0 V)** 1: Darkest 9: Lightest

Mode No.		Function	Settings
2-201-002	Lightest ID Level Development Bias Adjustment †	Adjusts the development bias for manual ID level 7. *The adjustment factor set with this SP mode is applied to the base voltage when ID level 7 is selected.*	**1: –40 V** 2: ±0 V 3: –80 V 4: –120 V
2-203	**Development Bias Adjustment (for making VSP patterns)** †	Adjusts the development bias for making VSP patterns *The adjustment factor set with this SP mode is added to the base voltage. (20 V per step [Range: Base voltage –80 V to Base voltage + 100 V])*	1 - 10 **Default = 6 (0 V)**
2-206-001 to 2-206-002	Development Bias Display †	Displays the development bias. SP2-206-001: Development bias used for copying. SP2-206-002: Development bias used for making VSP sensor patterns. *The first two digits are displayed in the reduce/enlarge indicator. The actual value is: displayed value x (–10) V. All process control corrections are included in the displayed value.*	
2-207	Forced Toner Supply (shown as "Compulsory Toner Supply" on the display)	Forces the toner bottle to supply toner to the toner supply unit for 30 seconds. *This mode is started by pressing the ◇ key and stops automatically after about 30 seconds. Press the ◇/⏻ key to interrupt if necessary. This SP mode must be performed twice when installing the machine and when installing a new toner supply unit.*	
2-208-001	Toner Supply Mode Selection †	Selects the toner supply mode. In many cases, the machine will change the toner supply mode automatically if either the TD or ID sensor become unreliable. However, sometimes it does not. If the TD sensor fails, you can select fixed supply mode as a temporary measure. If the ID sensor fails, you can select TD sensor supply mode. After repairing the machine, check whether the toner supply mode has gone back to the detect supply mode.	1: TD sensor supply mode 2: Fixed supply mode **3: Detect supply mode**

Mode No.		Function	Settings
2-208-002	Toner Supply Ratio (TD Sensor Supply Mode) †	Selects the toner supply ratio for TD sensor supply mode. For example, if the user normally makes copies of originals that are about 7% black, select the 7% setting for best results.	1: 7% **2: 15%** 3: 30% 4: 60%
2-208-003	**Toner Supply Ratio (Fixed Supply Mode) †**	Selects the toner supply ratio for Fixed Supply Mode. For example, if the user normally makes copies of originals that are about 6% black, select the 6% setting for best results.	1: 3% **2: 6%** 3: 10% 4: 15%
2-214	TD Sensor Initial Setting	Performs the TD sensor initial setting. This SP mode controls the voltage applied to the TD sensor to make the TD sensor output 2.5 ± 0.1 V. After using SP2-214, check SP2-220 to see if the sensor is working correctly. *This mode is started by pressing the [◈] key and stops automatically after about 2.5 minutes. Use this mode only after adding new developer.*	
2-215-001 to 2-215-002	TD Sensor Output Display †	Displays the TD sensor output voltage. SP2-215-001: V_T = Current TD sensor output SP2-215-002: V_{TREF} = Reference TD sensor output	
2-220	TD Sensor Initial Output Display †	Displays the TD sensor initial setting output (after doing SP2-214). *Normally, 2.5 ± 0.1 V is displayed. [Range: 0 V to 5.0 V]* *If it is not, the sensor may be defective.*	
2-222	Toner Supply Ratio (Detect Supply Mode) †	Selects the toner supply ratio for detect supply mode. For example, if the user normally makes copies of originals that are about 7% black, select the 7% setting for best results.	1: 7% **2: 15%** 3: 30% 4: 60%
2-301-001 to 2-301-002	**Transfer Current Adjustments †** **Factory Use Only: Do not change the settings.**		0 ~ 32 **12 (–20 μA)**
2-801	Developer Agitation	After the [◈] key is pressed, the developer is agitated. To stop, press the [C/⊘] key. *Use this SP mode if the machine has not been used for a long time.*	
2-802	Drum Charge Roller Temperature †	Displays the drum charge roller temperature [0 ~ 60°C].	

Mode No.		Function	Settings
2-812	Drum Reverse Rotation Adjustment †	Adjusts the amount of the time for the drum reverse rotation after each copy job. *If paper dust remains on the drum, it may get into the recycled toner. If this is happening, increase the reverse rotation by increasing the value of the setting.*	0 ~ 32 **Default = 16 (about 3 mm)**
2-901	**Drum Charge Roller Cleaning Interval †**	Selects the drum charge roller cleaning interval. Turn the copier main switch off and on after changing the setting. *The drum charge roller is cleaned briefly at the end of each copy job. The drum charge roller is also cleaned for 5 seconds after the interval selected with this SP mode.*	0: Every 1,000 copies **1: Every 500 copies** 2: Every 200 copies 3: Every 100 copies
2-902	Do not use	—	
3-001	ID Sensor Initial Setting	Performs the ID sensor initial setting. ID sensor output for the bare area of the drum (V_{SG}) is adjusted to 4.0 ± 0.2 V. *To start this SP mode, press the [◇] key.*	
3-002	ID Sensor Initial Setting Display †	Displays the initial setting value of the ID sensor. *Normally 4.0 ± 0.2 V is displayed. If the ID sensor cannot be adjusted to 4.0 ± 0.2 V, the ID sensor or the OPC drum should be cleaned.*	
3-103-001 to 3-103-002	ID Sensor Output Display †	Displays the ID sensor outputs. SP3-103-001: V_{SP} SP3-103-002: V_{SG} *Normally, V_{SP} = 0.01 ~ 2.50 V, V_{SG} = 4.0 ± 0.2 V ($V_{SP}/V_{SG} \approx 0.1$)*	
3-105	Forced V_L Detection	After the [◇] key is pressed, the initial V_{LP}/V_{LG} (= V_{REF}) is determined. *For when to use this SP mode, see "Practical SP Mode Use Table".*	
3-106	Initial V_{LP}/V_{LG} Display †	Displays the initial V_{LP}/V_{LG} value determined by SP3-105.	
3-107	Current V_{LP}/V_{LG} Display †	Displays the current V_{LP}/V_{LG} value [%]. *This is the value currently being used for V_L correction.*	

<table>
<tr><th colspan="2">Mode No.</th><th>Function</th><th>Settings</th></tr>
<tr><td rowspan="3">3-111</td><td rowspan="3">Current V_{RP}/V_{RG} Display †</td><td>Displays the current V_{RP}/V_{RG} value [%]</td><td rowspan="3"></td></tr>
<tr><td>This is the value currently being used for V_R correction.</td></tr>
<tr><td>
<table>
<tr><th rowspan="2">V_{RP}/V_{RG} x 100 (%)</th><th colspan="3">ID Correction</th><th rowspan="2">Drum Charge Roller Correction Voltage</th><th rowspan="2">Development Bias Correction Voltage</th></tr>
<tr><th>±0 V</th><th>–40 V</th><th>–80 V</th></tr>
<tr><td>74 ~ 100</td><td>68 ~ 100</td><td>62 ~ 100</td><td>±0 V</td><td>±0 V</td></tr>
<tr><td>53 ~ 73</td><td>50 ~ 67</td><td>43 ~ 61</td><td>–40 V</td><td>–40 V</td></tr>
<tr><td>41 ~ 52</td><td>37 ~ 49</td><td>26 ~ 42</td><td>–80 V</td><td>–80 V</td></tr>
<tr><td>31 ~ 40</td><td>26 ~ 36</td><td>19 ~ 25</td><td>–120 V</td><td>–120 V</td></tr>
<tr><td>0 ~ 30</td><td>0 ~ 25</td><td>0 ~ 18</td><td>–160 V</td><td>–160 V</td></tr>
</table>
</td></tr>
<tr><td rowspan="2">3-112</td><td rowspan="2">Forced V_R Detection</td><td>After the ◈ key is pressed, forced V_R detection is done.</td><td rowspan="2"></td></tr>
<tr><td>For when to use this SP mode, see "Practical SP Mode Use Table".</td></tr>
<tr><td rowspan="2">3-123</td><td rowspan="2">Drum Initialize</td><td>This resets the following data regarding the OPC drum:
1. V_R correction level
2. V_L correction level
3. OPC counter
4. T/H correction level</td><td rowspan="2"></td></tr>
<tr><td>This SP mode must be used only when a new drum is installed. Refer to "Practical SP Mode Use Table" for the exact timing for using this SP mode.</td></tr>
<tr><td rowspan="2">3-801</td><td rowspan="2">Auto Process Control Mode Selection †</td><td>Selects whether auto process control mode is off or performed at the interval shown.
If the auto process control mode is switched off, V_R correction, V_L correction, and the 1,000-copy process control cycle will not be performed.</td><td rowspan="2">0: OFF
1: 1,000 copies
2: 500 copies
3: 200 copies</td></tr>
<tr><td>This SP mode can be used to help determine whether a copy quality problem is caused by process control or by the machine itself.</td></tr>
<tr><td rowspan="2">3-901</td><td rowspan="2">Free Run (Exposure Lamp Off)</td><td>Performs a free run with the exposure lamp off.</td><td rowspan="2"></td></tr>
<tr><td>Start the free run by pressing the ◈ key and stop it by pressing the C/⊘ key. Be sure to perform this mode without a development unit, or too much toner will be consumed from the developer, causing low image density.</td></tr>
</table>

Mode No.		Function	Settings
3-902	Forced Process Control	Performs the 1,000-copy process control cycles forcibly. V_{SG} initial adjustment → V_R detection → V_L detection → V_{ADS} (pattern) adjustment *This mode starts after the ◇ key is pressed.*	
4-001	Exposure Lamp Voltage Adjustment †	Adjusts the exposure lamp voltage (0.5 V per step [Range: 50.0 V to 75.0 V]) *For 115 V machines, the actual applied voltage = displayed value x 1.1412.* ***After doing this SP mode, ADS initial setting (SP4-201) and forced V_L detection (SP3-105) must also be done.*** *See "Replacement and Adjustment - Copy Quality Adjustments" for how to adjust.*	50.0 ~ 75.0 V **Default = 63 V ‡**
°4-002	Exposure Lamp Voltage Display †	Displays the current exposure lamp voltage. (0.5 V per step [Range: 50.0 V to 85.0 V]) *For 115 V machines, the actual applied voltage = displayed value x 1.1412.*	50.0 ~ 85.0 V
4-008	Vertical Magnification Adjustment †	Adjusts the magnification in the paper travel direction. (0.1% per step [Range: –1.6% to +1.6%]) See "Replacement and Adjustment - Copy Quality Adjustments" for how to adjust.	0 ~ 32 V **Default = 16 ‡**

<table>
<tr><th colspan="2">Mode No.</th><th>Function</th><th>Settings</th></tr>
<tr><td rowspan="2">4-011-001
to
4-011-009</td><td rowspan="2">Lens Horizontal HP Adjustment †</td><td>Adjusts the lens horizontal home position for each paper feed station.
(0.2 mm per step [Range: –3.2 mm to +3.2 mm])

<table><tr><th>SP Number</th><th>Without Duplex</th><th>With Duplex</th></tr><tr><td>4-011-001</td><td>1st tray</td><td>Duplex</td></tr><tr><td>4-011-002</td><td>2nd tray</td><td>1st tray</td></tr><tr><td>4-011-003</td><td>3rd tray</td><td>2nd tray</td></tr><tr><td>4-011-004</td><td>4th tray</td><td>3rd tray</td></tr><tr><td>4-011-005</td><td>5th tray</td><td>4th tray</td></tr><tr><td>4-011-006</td><td>By-pass</td><td>By-pass</td></tr><tr><td>4-011-007</td><td>LCT</td><td>LCT</td></tr><tr><td>4-011-008</td><td colspan="2">Base Adjustment</td></tr><tr><td>4-011-009</td><td>ADF</td><td>ADF</td></tr></table></td><td rowspan="2">0 ~ 32 V
Default = 16 ‡ (only 4-011-008 is on the data sheet)</td></tr>
<tr><td>SP4-011-008 changes the home position for all paper feed stations at the same time. It is mainly used for making factory adjustments. If it is shifted by a certain amount, all other SP4-011 adjustments move by the same amount.
See "Replacement and Adjustment - Copy Quality Adjustments" , and "Side-to-side Registration" in the ARDF manual for details on how to adjust.</td></tr>
<tr><td rowspan="2">4-013</td><td rowspan="2">Scanner Free Run</td><td>Starts the scanner free run.</td><td rowspan="2"></td></tr>
<tr><td>Start the scanner free run by pressing the ◇ key, and stop it by pressing the C/◇ key.</td></tr>
<tr><td>4-101</td><td>Horizontal Magnification Adjustment †</td><td>Adjusts the magnification perpendicular to the direction of paper travel.
(0.1% per step [Range: –1.6% to +1.6%])
See "Replacement and Adjustment - Copy Quality Adjustments" for how to adjust.</td><td>0 ~ 32
Default =16 ‡</td></tr>
<tr><td>4-102</td><td>Lens Error Correction †</td><td>Adjusts the lens position to correct for magnification in enlarge/reduce mode.
(0.1% per step [Range: –0.8% to +0.8%])</td><td>0 ~ 16
Default = 8 (0%) ‡</td></tr>
<tr><td>4-103</td><td>Focus Adjustment †</td><td>Adjusts the 3rd mirror position to correct the fine focus.
(0.05 mm per step [Range: left 3.75 mm to right 3.75 mm])
See "Replacement and Adjustment - Copy Quality Adjustments" for how to adjust.</td><td>30 ~ 150
Default = 75 ‡</td></tr>
</table>

<table>
<tr><th colspan="2">Mode No.</th><th>Function</th><th>Settings</th></tr>
<tr><td rowspan="2">4-201</td><td rowspan="2">Auto ADS Gain Adjustment</td><td>Adjusts the ADS gain automatically to make the sensor output 2.7 ± 0.1 V.</td><td rowspan="2"></td></tr>
<tr><td>Close the platen cover to prevent external light from reaching the ADS sensor. Then press the [◈] key to make the adjustment.</td></tr>
<tr><td>4-202</td><td>ADS Initial Gain Display †</td><td>Displays the ADS sensor output adjusted by SP4-201.</td><td></td></tr>
<tr><td>4-203</td><td>ADS Actual Gain Display †</td><td>Displays the current ADS sensor output.</td><td></td></tr>
<tr><td>4-301</td><td>APS Sensor Function Check †</td><td>Check the APS sensors.
If they are working correctly, the following value is displayed in the reduce/enlarge indicator.
<table><tr><th rowspan="2"></th><th colspan="2">LT Version</th><th rowspan="2">A4 Version</th></tr><tr><th>Without optional APS</th><th>With optional APS</th></tr><tr><td>ADF/Platen Open</td><td>0</td><td>0</td><td>0</td></tr><tr><td>ADF/Platen Closed</td><td>95</td><td>127</td><td>95</td></tr></table></td><td>LT version:
0 or 95 (without optional APS)
0 or 127 (with optional APS)
A4 version:
0 or 95</td></tr>
<tr><td rowspan="2">4-302</td><td rowspan="2">Optional APS Sensor † (LT version only)</td><td>Set this to 1 when installing the optional APS sensor.</td><td rowspan="2">0: Not installed
1: Installed</td></tr>
<tr><td>This SP mode is effective only for the LT version. In the A4 version, even if "1" is selected, the setting is ignored.</td></tr>
<tr><td rowspan="2">4-303</td><td rowspan="2">APS A5/HLT Detection †</td><td>Selects whether A5/HLT forced detection is done or not.</td><td rowspan="2">0: NO
1: YES</td></tr>
<tr><td>If "YES" is selected, paper sizes that cannot be detected by the APS sensors are regarded as A5 lengthwise (for A4 models) or 5 1/2" x 8 1/2" (for LT models). If "NO" is selected, "Check Paper Size" will be displayed.</td></tr>
<tr><td>4-901</td><td>APS Size Priority (for F4 size) †</td><td>Selects which copy paper size the machine selects when the APS sensors detect F4 lengthwise (8 1/2" x 13").</td><td>0: 8 1/2" x 13"
1: 8" x 13"
2: 8 1/4" x 13"</td></tr>
</table>

<table>
<tr><th colspan="2">Mode No.</th><th>Function</th><th>Settings</th></tr>
<tr><td>•°4-902</td><td>APS 8 k/16 k Detection †
(A4 versions only)</td><td>Selects whether the machine can select 8 k/16 k copy paper based on APS sensor readings.
If "YES" is selected, 8 k/16 k copy paper is selected under the following conditions:

<table><tr><th>Size detected by APS</th><th>Selected copy paper size</th></tr><tr><td>B4 lengthwise</td><td>8 k lengthwise
(267 mm x 390 mm)</td></tr><tr><td>A4 lengthwise</td><td>16 k lengthwise
(267 mm x 195 mm)</td></tr><tr><td>B5 sideways</td><td>16 k sideways
(115 mm x 267 mm)</td></tr></table>
If "YES" is selected, the duplex end fence must be removed to allow the 8 k/ 16 k movement of the jogger fences.</td><td>0: NO
1: YES</td></tr>
<tr><td>•°5-001</td><td>All Indicators ON †</td><td>Turns on all indicators on the operation panel for 10 seconds. It can be manually turned off by pressing the ⊘/⊘ key.</td><td></td></tr>
<tr><td>•°5-002</td><td>Feed Station Priority Selection †</td><td>Selects the paper feed station priority.

<table><tr><th>Setting</th><th>Non duplex machines</th><th>Duplex machines</th></tr><tr><td>1</td><td>1st Tray</td><td>1st Tray</td></tr><tr><td>2</td><td>2nd Tray</td><td>2nd Tray</td></tr><tr><td>3</td><td>3rd Tray</td><td>3rd Tray</td></tr><tr><td>4</td><td>4th Tray</td><td>4th Tray</td></tr><tr><td>5</td><td>5th Tray</td><td>LCT</td></tr><tr><td>6</td><td>LCT</td><td>—</td></tr></table></td><td>1 ~ 6: Non duplex machines
1 ~ 5: Duplex machines
Default = 1
(without LCT)
Default = LCT (5 or 6)
(with LCT)</td></tr>
<tr><td>•°5-003</td><td>APS Priority Selection †</td><td>Specifies whether the copier defaults to APS or manual mode when the main switch is turned on, auto reset, or mode cleared.</td><td>1: APS
2: Manual

Also see SP6-010.</td></tr>
<tr><td>•°5-004</td><td>ADS Priority Selection †</td><td>Specifies whether the copier defaults to ADS or manual ID mode when the main switch is turned on, auto reset, or mode cleared.</td><td>1: ADS
2: Manual</td></tr>
<tr><td>•°5-013</td><td>Counter Up/Down Selection †</td><td>Selects whether the counter counts up or down.</td><td>1: Up
2: Down</td></tr>
<tr><td>•°5-017</td><td>Maximum Copy Quantity (Copy Limit) †</td><td>Limits the maximum copy quantity that can be entered.</td><td>1 ~ 999
Default = 999</td></tr>
</table>

Mode No.		Function	Settings
•°5-019-001 to 5-019-008	Paper Size Set †	Sets the paper size for each paper tray and feed station.	For how to input the settings, see section 2.7.
•°5-021	***Duplex Priority Selection (Energy Star) †***	Specifies whether the copier defaults to duplex or single sided copies mode.	1: Duplex 2: Single side **Default = 1** (NA) **Default = 2** (Others)
°5-022	***Energy Star Selection †***	Specifies whether the copier performs the modes which are related to the Energy Star Standardization. The following SP modes are changed automatically when this setting is changed. • SP1-105-002 • SP5-021 • SP5-102 • SP5-305-001 • SP5-305-002	0: NO 1: YES **Default = 1** (NA) **Default = 0** (Others)
•°5-101	Auto Reset Time Setting †	Inputs the auto reset time after the copier enters standby, or disables auto reset. *(1 second per step [Range: 1 ~ 999])* *If "0" is selected, auto reset is disabled.*	0 ~ 999 **Default = 60**
•°5-102	**Auto Energy Saver Time Setting †**	Sets the time that the machine enters energy saver mode after entering the ready condition. *(1 minute per step)* *If "0" is selected, the energy saver mode is disabled (except for NA version).*	**NA version** 1 ~ 120 **Default = 15** **Other versions** 0 ~ 120 **Default = 1**
•°5-103	Auto Tray Shift †	Selects whether auto tray shift is on or off.	0: OFF **1: ON**
°5-104	A3/DLT Double Count †	Specifies whether the counter is doubled for A3/DLT paper. *If "ON" is selected, the total counter and the current user code counter counts up twice when A3/DLT copy paper is used.*	**0: OFF** 1: ON
•°5-106	**Image Density Level Correction (ADS Correction) †**	Selects the image density level correction. *The development bias voltage correction in ADS mode depends on this setting (see "ADS Correction" in the Process Control section for details).*	0: Darkest 1: Darker **2: Normal** 3: Lighter 4: Lightest

Mode No.		Function	Settings
•°5-107-001 to 5-107-004	**Image Shift Margin Adjustment †**	This controls the left and right margin width adjustment for both 1st and 2nd side copies. SP5-107-001: Left Margin (1st side) SP5-107-002: Right Margin (1st side) SP5-107-003: Left Margin (2nd side) SP5-107-004: Right Margin (2nd side) *SP5-908 must be at 2 for this to have any effect; this changes the function of the Erase key to a Margin Adjustment key.* *A4 version: 1 mm per step* *[Range: 0 mm to 15 mm]* *LT version: 0.01" per step* *[Range: 0" to 0.60"]*	**A4 version** 0 ~ 15 **Default = 5** **LT version** 0 ~ 0.60 **Default = 0.20**
•°5-108	Edge Erase Margin Adjustment †	Adjusts the edge erase margin width in erase edge mode. *SP5-908 must be at 1 for this to have any effect. A strip of the selected width will be erased around the edges of the copy image.*	**A4 version** 1: 5 mm **2: 10 mm** **LT version** 1: 0.20" **2: 0.40"**
•°5-110	Center Erase Margin Adjustment †	Adjusts the center erase margin width in erase center mode. *SP5-908 must be at 1 for this to have any effect.* *A4 version: 1 mm per step* *Range: 8 mm to 25 mm]* *LT version: 0.01" per step* *[Range: 0.32" ~ 1.00"]*	**A4 version** 8 ~ 25 **Default = 20** **LT version** 0.32 ~ 1.00 **Default = 0.80**
°5-113	Coin Lock Installation †	Specifies whether coin lock is installed or not (only for Japanese versions).	**0: Not installed** 1: Installed
5-115	Duplex Image Shift † (Back Side Margin)	Specifies whether duplex image shift (back side margin) is used or not. *If "YES" is selected, a 5 mm margin is made on the right of the reverse side of copies when making two-sided copies from one-sided originals.* *If the image shift mode has been selected with SP5-908 and if the user uses image shift mode, this SP mode has no effect.*	0: NO **1: YES**
°5-121	T/C (Total Counter) Count Up Timing †	Determines whether the total counter counts up at paper feed or at paper exit.	**0: Feed** 1: Exit
•°5-122	***OHP Slip Sheet Mode Selection †***	Selects whether to have a image on the OHP slip sheet or not.	0: Blank **1: Image**
5-127	***APS Detection †***	Selects whether APS detection is done or not.	0: NO **1: YES**

Mode No.		Function	Settings
•°***5-305-001***	***Auto Shut Off Time Setting †***	Selects the auto shut off time in one-minute steps. *The copier main switch is shut off automatically after the selected auto shut off time if SP5-305-002 is set to 0.*	**NA version** 1 ~ 120 **Default = 60** **Other versions** 1 ~ 999 **Default = 60**
•°***5-305-002***	***Auto Shut Off Selection †***	Selects the "Automatic Shut Off" mode. *The copier automatically shuts itself off at the auto shut off time selected (SP5-305-001).*	0: YES 1: NO **Default = 0** (NA) **Default = 1** (Others)
°5-401	**User Code Mode †**	After JP101 on the main board is cut, either key counter mode or user code mode can be selected with this SP mode.	**0: Key Counter** 1: User Code
•°5-402	User Code Counter Check †	Displays the user code counters. *The current user code is displayed in copy counter, and the copy count for that user code is displayed in the reduce/enlarge indicator. Hold down the "•" key to display the last three digits. Use the ⊞ and ⊟ keys to check each user code counter.*	
•°5-404-001 to 5-404-002	User Code Counter Clear †	Resets the user code counters. SP5-404-001: Resets the counter for the user code that is now displayed in the reduce/enlarge indicator. SP5-404-002: Resets all the UC counters. To reset the counter(s), press the R/# key. *SP5-404-001: The user code must be input at the numeric keys before it can be displayed and the counter reset, so you must know what user codes are in use. Take a look with SP5-405.*	
•°5-405	User Code Number Setting †	Use this mode to input the user code numbers (max. 3 digits). *Up to 50 user codes can be set. To input a code, enter it at the numeric keys then press the R/# key. Then you can input another. To check the user codes input so far, use the ⊞ and ⊟ keys. The user codes input will be displayed in reduce/enlarge counter.*	1 ~ 999 (max. 50 codes)

Mode No.		Function	Settings
•°5-407-001 to 5-407-002	User Code Number Clear †	Deletes user code numbers. SP5-404-001: Deletes individual user code numbers. Enter the required user code at the numeric keys, then press the R/# key. (To see which user codes are being used, use SP5-405.) SP5-404-002: Deletes all the user code numbers.	
°5-408	Number of Registered User Codes Display †	Displays the number of registered user codes in the reduce/enlarge indicator.	
•°5-410	***User Code Reset Time Setting †***	Selects the user code reset time in one-second steps. This is the time that the current user code remains active after the end of the copy job.	1 ~ 999 **Default = 60**
°5-501-001	PM Interval Setting †	Sets the PM interval. (1,000 copies per step [Range: 1 to 999])	1 ~ 999 **Default = 100**
°5-501-002	PM Interval Setting (PM Alarm Mode Setting) †	Specifies whether PM alarm mode is on or off. *If PM alarm mode is on, the manual ID level/ADS indicator and copy counter blink when the PM counter reaches the PM interval.*	**0: OFF** 1: ON
5-504	RDS/CSS Alarm Level for Paper Jam (Paper Jam Alarm Level Setting) † Used in Japan only. Do not change the factory setting.		
5-505	RDS/CSS Alarm Level for SC (Service Call Alarm Level Setting) † Used in Japan only. Do not change the factory setting.		
°5-507	RDS/CSS Alarm Level for Supplies (Supply Alarm Mode Setting) † Used in Japan only. Do not change the factory setting.		
5-801	Memory All Clear †	Resets all the correction data for process control and all software counters, and returns all modes and adjustments to the default settings. See Service Tables - section 2.2.4 for how to perform this SP mode. ***Normally, this SP mode should not be performed.*** *This SP mode is required only when replacing the RAM board, or when the copier malfunctions due to a damaged RAM board.*	

Mode No.		Function	Settings
5-802-001 to 5-802-002	Free Run Mode	Performs the free run SP5-802-001: Continuous free run SP5-802-002: One time free run	
		Before starting, close the platen or ARDF. Press the [◇] key to start the free run. Press the [C/⊘] key to stop the free run.	
5-803	Input Check Mode †	Displays the data received from sensors and switches.	For details, see Service Tables section 2-5.
5-804	Output Check Mode	Turns on the electrical components individually for test purposes.	For details, see Service Tables - section 2-6.
°5-810	SC Reset †	Resets any service call condition that was caused by a level A error (see the Troubleshooting section). After doing SP5-810, turn the copier main switch off and on.	
5-811	Machine Serial No. Input † For use with features that are available in Japan only		
°5-812	Do not use	—	
°5-816	RDS/CSS Function Setting † For use in Japan only. Do not change the factory setting.		
5-817	Repair Time Transmission † For use in Japan only. Do not change the factory setting.		
°5-905	APS A4/LT Sideways Priority †	Specifies whether the machine selects LT sideways paper if the original is A4. If "ON" is selected, LT sideways copy paper is selected automatically when the APS sensors detect an A4 sideways original. This feature does not work in reverse (A4 sideways paper is not selected for an LT sideways original).	**0: OFF** 1: ON
•°5-906	Manual Staple Reset Time Setting †	Sets the manual staple reset time. (1 second per step [Range: 1 to 999])	1 ~ 999 **Default = 20 s**
		After the end of a copy job in sort mode, manual staple mode is reset automatically when the manual staple reset time has passed.	
•°5-907	**Cover Mode Selection †**	Used to select whether to have front cover, front and back covers, or front cover with image and back cover blank image added to copies in cover mode. Copy paper for the cover pages should be placed on the by-pass feed table.	1: Front/Back **2: Front** 3: Front with Image/Back is blank
•°5-908	Image Shift/Erase Selection †	Selects whether to have an image shift mode or an image erase mode.	**1: Erase mode** 2: Shift mode

Mode No.		Function	Settings
•°5-909	10 key Zoom/Size Magnification †	Selects whether to have a 10 key zoom function or a size magnification function.	**1: Size magnification** 2: 10 key zoom function
•°5-910	Do not use	—	
•°6-001	SADF Auto Reset Time Setting †	Sets the auto reset time for SADF mode. (1 second per step [Range: 1 to 99 seconds])	1 ~ 99 **Default = 5**
°6-003	Auto Sort Selection †	Specifies whether auto sort mode is on or off. In auto sort mode, when two or more originals are placed on the ADF, sort mode is selected if the copy quantity is between 2 and 20.	**0: OFF** 1: ON
°6-005	Blank Copy for Last Odd Originals in Duplex †	Specifies whether a blank copy is added after the last page for an odd number of originals in duplex mode. *In SADF or platen mode, the last page always stays in the duplex unit, regardless of this setting.*	0: Not added (the last page stays in the duplex unit) **1: Added**
6-006-001 to 6-006-002	DF Registration Adjustment †	Adjusts the registration of the document feeder. SP6-006-001: One-sided original SP6-006-002: Two-sided original *(0.3 mm per step [Range: –4.8 mm to +4.8 mm])* *See "Vertical Registration" in the ARDF manual for details on how to use these adjustments.*	0 ~ 32 **Default = 16**
6-009	DF Free Run with Paper	To start the DF free run, put some sheets of paper on the ARDF then press the ◇ key. Stop the free run by pressing C/◇ key. *This is a general free run controlled from the copier. For more detailed free run modes, see the manual for the DF.*	
•°6-010	Auto APS Select (DF) †	Selects whether auto APS mode is used with the DF or not. *If "ON" is selected, APS mode is selected automatically when an original is placed on the DF. This SP mode is in effect only when the APS priority (SP5-003) is set to Manual.*	0: OFF **1: ON**
•°6-011	Thick/Thin Original Mode Selection †	Selects the original feed type for the DF. In thin mode, originals will not be pushed back against the left scale.	**0: Thick mode** 1: Thin mode

Mode No.		Function	Settings
°6-101	**Sorter Installation †**	Use this to specify which sorter is installed. *After setting this SP mode, the copier main switch must be turned off and on. For the A555 and A658 sorter stapler, the setting does not have to be changed (keep it at 0).*	**0: No sorter** 1: A557 sorter 2: A556 sorter 3: Not used 4: A568 sorter adapter only
°6-102	**Sorter Stack Limit †**	Select which sorter stack limit to use. *OFF: Sorting and stacking can be done until the sorter tray cannot take any more paper. Then copying stops and the R indicator lights.* *ON: Sorting and stacking can be done until the following limit is reached. Then copying stops and the R indicator lights.* **A658 Sorter/Stapler** Sort Mode: 30 (A4/LT), 25 (B4/LG, A3/DLT) Stack Mode: 25 (A4/LT, 20 (B4/LG, A3/DLT) **A555 Sorter/Stapler** Sort Mode: 30 (A4/LT), 25 (B4/LG, A3/DLT) Stack Mode: 25 (A4/LT), 20 (B4/LG, A3/DLT) **A556 Sorter** Sort Mode: 30 (A4/LT), 15 (B4/LG), 10 (A3/DLT) Stack Mode: 30 (A4/LT), 10 (B4/LG, A3/DLT) **A557 Sorter** Sort or Stack Mode: 20 (A4/LT), 15 (B4/LG), 10 (A3/DLT)	0: OFF **1: ON**
°6-104	**Staple Sheet Limit †**	Select whether there is a stapling limit for the sorter stapler. *OFF: Copies of up to 25 pages can be stapled for all paper sizes.* *ON: The staple indicator will go out after the following limit number of pages has been stacked and stapling will not be done even if the user selects stapling mode.* **A658 Sorter/Stapler:** 20 (A4 - B5/LT, A3 - B4 / DLT - LG) **A555 Sorter/Stapler:** 20 (A4 - B5/LT, A3 - B4 / DLT - LG)	0: OFF **1: ON**
6-107	Sorter Free Run Mode	Start the sorter free run by pressing the ◇ key. Stop it by pressing the C/⊘ key. *This is a general free run controlled from the copier. For more detailed free run modes, see the sorter manuals.*	
°7-001	Total Operation Time Display †	Displays the total operation time (hours). *The first three digits are displayed in the reduce/enlarge indicator. Hold down the "•" key to display the last three digits.*	

<table>
<tr><th colspan="2">Mode No.</th><th>Function</th><th>Settings</th></tr>
<tr><td rowspan="2">°7-002</td><td rowspan="2">Total Original Counter Display †</td><td>Displays the total number of scanned originals (DF + platen).</td><td rowspan="2"></td></tr>
<tr><td>The first three digits are displayed in the reduce/enlarge indicator. Hold down the "." key to display the last three digits.</td></tr>
<tr><td>°7-003</td><td colspan="3">Copy Charge Counter for RDS/CSS Display †
This is for use with features that are available only in Japan. However, it does show how many originals have been copied (total of DF mode + platen mode).
The 4th ~ 6th digits are displayed in the reduce/enlarge indicator. Hold down the "0" key to display the 7th digit, and hold down the "." key to display the 3rd ~ 1st digits.</td></tr>
<tr><td>°7-004</td><td colspan="3">Initial Copy Counter Setting for RDS/CSS Display †
This is for use with features that are available only in Japan. However, it does show the total number of copies that have been made.
The 4th ~ 6th digits are displayed in the reduce/enlarge indicator. Hold down the "0" key to display the 7th digit, and hold down the "." key to display the 3rd ~ 1st digits.</td></tr>
<tr><td>°7-101-001 to 7-101-005</td><td>Total Copies by Paper Size †</td><td>Displays the total number of copies by paper size.
<table><tr><th>SP Number</th><th>A4 Version</th><th>LT Version</th></tr><tr><td>SP7-101-001</td><td>A3</td><td>DLT</td></tr><tr><td>SP7-101-002</td><td>B4</td><td>LG</td></tr><tr><td>SP7-101-003</td><td>A4</td><td>LT</td></tr><tr><td>SP7-101-004</td><td>B5</td><td>HLT</td></tr><tr><td>SP7-101-005</td><td>Others</td><td>Others</td></tr></table>The first three digits are displayed in the reduce/enlarge indicator. Hold down the "." key to display the last three digits.</td><td></td></tr>
<tr><td rowspan="2">°7-203</td><td rowspan="2">Drum Counter †</td><td>Displays the drum rotation time (hours).</td><td rowspan="2"></td></tr>
<tr><td>The first three digits are displayed in the reduce/enlarge indicator. Hold down the "." key to display the last three digits.</td></tr>
</table>

<table>
<tr><th colspan="2">Mode No.</th><th>Function</th><th>Settings</th></tr>
<tr><td rowspan="2">°7-204-001
to
7-204-008</td><td rowspan="2">Feed Unit Counter †</td><td>Displays the total number of copies fed from each feed unit.

<table><tr><th>SP Number</th><th>Without Duplex</th><th>With Duplex</th></tr><tr><td>SP7-204-001</td><td>1st tray</td><td>—</td></tr><tr><td>SP7-204-002</td><td>2nd tray</td><td>1st tray</td></tr><tr><td>SP7-204-003</td><td>3rd tray</td><td>2nd tray</td></tr><tr><td>SP7-204-004</td><td>4th tray</td><td>3rd tray</td></tr><tr><td>SP7-204-005</td><td>5th tray</td><td>4th tray</td></tr><tr><td>SP7-204-006</td><td>LCT</td><td>LCT</td></tr><tr><td>SP7-204-007</td><td>By-pass</td><td>By-pass</td></tr><tr><td>SP7-204-008</td><td>—</td><td>Duplex</td></tr></table></td><td rowspan="2"></td></tr>
<tr><td>The first three digits are displayed in the reduce/enlarge indicator. Hold down the "•" key to display the last three digits.</td></tr>
<tr><td rowspan="2">°7-205</td><td rowspan="2">DF Counter †</td><td>Displays the total number of originals fed by the DF.</td><td rowspan="2"></td></tr>
<tr><td>The first three digits are displayed in the reduce/enlarge indicator. Hold down the "•" key to display the last three digits.</td></tr>
<tr><td rowspan="2">°7-206</td><td rowspan="2">Stapler Counter †</td><td>Displays the total number of stapling runs.</td><td rowspan="2"></td></tr>
<tr><td>The first three digits are displayed in the reduce/enlarge indicator. Hold down the "•" key to display the last three digits.</td></tr>
<tr><td rowspan="2">°7-301-001
to
7-301-003</td><td rowspan="2">Total Copies by Magnification †</td><td>Displays the following counters:
7-301-001: Copies made in full size mode
7-301-002: Copies made with reduction
7-301-003: Copies made with enlargement</td><td rowspan="2"></td></tr>
<tr><td>The first three digits are displayed in the reduce/enlarge indicator. Hold down the "•" key to display the last three digits.</td></tr>
<tr><td>°7-401</td><td>Total Service Call Counter †</td><td>Displays the total number of service calls that have occurred.</td><td></td></tr>
<tr><td rowspan="2">°7-402</td><td rowspan="2">SC Counter by Service Call †</td><td>Displays the service call counters for each service call code.</td><td rowspan="2"></td></tr>
<tr><td>The service call code is displayed in the copy counter indicator, and the number of times this SC code has occurred is displayed in reduce/enlarge indicator.
By pressing the ⊞ and ⊟ keys, another service call number and its counter can be displayed.</td></tr>
</table>

<table>
<tr><th colspan="2">Mode No.</th><th>Function</th><th>Settings</th></tr>
<tr><td rowspan="2">°7-501</td><td rowspan="2">Total Jam Counter † (Copies + Originals)</td><td>Displays the total number of copy jams plus original jams (max. 4 digits).</td><td rowspan="2"></td></tr>
<tr><td>The first digit is displayed in the reduce/enlarge indicator. Hold down the "." key to display the last three digits.</td></tr>
<tr><td rowspan="2">°7-502</td><td rowspan="2">Total Jams by Paper Size † (Note: This is actually the Total Copy Paper Jam Counter. The counter is not divided up by Paper Size)</td><td>Displays the total copy paper jam counter (max. 4 digits).</td><td rowspan="2"></td></tr>
<tr><td>The first digit is displayed in the reduce/enlarge indicator. Hold down the "." key to display the last three digits.</td></tr>
<tr><td rowspan="2">°7-503</td><td rowspan="2">Total Original Jam Counter</td><td>Displays the total original jam counter (max. 4 digits).</td><td rowspan="2"></td></tr>
<tr><td>The first digit is displayed in the reduce/enlarge indicator. Hold down the "." key to display the last three digits.</td></tr>
<tr><td rowspan="2">°7-504-001
to
7-504-006</td><td rowspan="2">Total Jams by Location †</td><td>Displays the total copy paper jam counts by location (max. 4 digits).

<table><tr><th>SP Number</th><th>Paper Jam Location Symbol</th></tr><tr><td>SP7-504-001</td><td>Y</td></tr><tr><td>SP7-504-002</td><td>A</td></tr><tr><td>SP7-504-003</td><td>B</td></tr><tr><td>SP7-504-004</td><td>C</td></tr><tr><td>SP7-504-005</td><td>Z</td></tr><tr><td>SP7-504-006</td><td>R</td></tr></table></td><td rowspan="2"></td></tr>
<tr><td>The first one digit is displayed in the reduce/enlarge indicator. Hold down the "." key to display the last three digits.</td></tr>
<tr><td rowspan="2">°7-505-001
to
7-505-002</td><td rowspan="2">Total Original Jams by Location †</td><td>Displays the total original jams in the DF by location (max. 4 digits).
SP7-505-001: Feed-in section
SP7-505-002: Feed-out section</td><td rowspan="2"></td></tr>
<tr><td>The first digit is displayed in the reduce/enlarge indicator. Hold down the "." key to display the last three digits.</td></tr>
</table>

<table>
<tr><th colspan="2">Mode No.</th><th>Function</th><th>Settings</th></tr>
<tr><td rowspan="2">°7-801-001
to
7-801-004</td><td rowspan="2">Main ROM Version Display †</td><td>Displays the main ROM version.
SP7-801-001: Copier main ROM version
SP7-801-002: Paper tray unit main ROM version
SP7-801-003: DF main ROM version
SP7-801-004: Sorter stapler main ROM version</td><td rowspan="2"></td></tr>
<tr><td>The ROM version is displayed by a six-digit number. The first three digits are displayed in the reduce/enlarge indicator. Hold down the "." key to display the last three digits. The six-digit number shows the ROM version as follows.

Last four digits of ROM P/No. Suffix of ROM P/No.
<table><tr><th>Last two digits</th><th>Suffix</th><th>Last two digits</th><th>Suffix</th></tr><tr><td>00</td><td>No suffix</td><td>13</td><td>M</td></tr><tr><td>01</td><td>A</td><td>14</td><td>N</td></tr><tr><td>02</td><td>B</td><td>16</td><td>P</td></tr><tr><td>03</td><td>C</td><td>17</td><td>Q</td></tr><tr><td>04</td><td>D</td><td>18</td><td>R</td></tr><tr><td>05</td><td>E</td><td>19</td><td>S</td></tr><tr><td>06</td><td>F</td><td>20</td><td>T</td></tr><tr><td>07</td><td>G</td><td>22</td><td>V</td></tr><tr><td>08</td><td>H</td><td>23</td><td>W</td></tr><tr><td>10</td><td>J</td><td>24</td><td>X</td></tr><tr><td>11</td><td>K</td><td>25</td><td>Y</td></tr><tr><td>12</td><td>L</td><td>26</td><td>Z</td></tr></table>
Note: 09, 15, 21 do not exist because suffixes I, O, and U are not used.</td></tr>
<tr><td rowspan="2">°7-803</td><td rowspan="2">PM Counter Check †</td><td>Displays the PM counter after the last PM (max. 6 digits).</td><td rowspan="2"></td></tr>
<tr><td>The first three digits are displayed in the reduce/enlarge indicator; hold down the "." key to display the last three digits.</td></tr>
<tr><td rowspan="2">°7-804</td><td rowspan="2">PM Counter Clear</td><td>Resets the PM counter.</td><td rowspan="2"></td></tr>
<tr><td>The counter will be reset when you press the final R/# key when entering this SP mode.</td></tr>
<tr><td rowspan="2">°7-807-001</td><td rowspan="2">SC Counter Clear †</td><td>Resets the total SC counter (SP7-401) and the individual counters for each type of Service Call (SP7-402).</td><td rowspan="2"></td></tr>
<tr><td>To reset the counters, press the R/# key.</td></tr>
</table>

<table>
<tr><th colspan="2">Mode No.</th><th>Function</th><th>Settings</th></tr>
<tr><td rowspan="2">°7-807-002</td><td rowspan="2">Copy Jam Counter Reset †
(displayed as "SC Counter Clear")</td><td>Resets the total copy jam counter (SP7-502) and the copy jam counters for individual locations (SP7-504).</td><td rowspan="2"></td></tr>
<tr><td>To reset the counters, press the R/# key.</td></tr>
<tr><td rowspan="2">°7-807-003</td><td rowspan="2">Original Jam Counter Reset †
(displayed as "SC Counter Clear")</td><td>Resets the total original jam counter (SP7-503) and the original jam counters for individual locations (SP7-505).</td><td rowspan="2"></td></tr>
<tr><td>To reset the counters, press the R/# key.</td></tr>
<tr><td rowspan="2">°7-808</td><td rowspan="2">Counter All Clear</td><td>Resets the following counters.
<table><tr><th>Counters that are reset</th><th>Counter check</th></tr><tr><td>Operation Time</td><td>SP7-001</td></tr><tr><td>Scanning Counter</td><td>SP7-002</td></tr><tr><td>Copy Counter</td><td>SP7-101</td></tr><tr><td>Total Sheets of Paper Fed from the Paper Tray</td><td>SP7-204</td></tr><tr><td>DF Originals Counter</td><td>SP7-205</td></tr><tr><td>Stapler Counter</td><td>SP7-206</td></tr><tr><td>Reduction/Enlargement Counter</td><td>SP7-301</td></tr><tr><td>Total Service Call Counter</td><td>SP7-401</td></tr><tr><td>Each Service Call Counter</td><td>SP7-402</td></tr><tr><td>Jam Total Counter</td><td>SP7-501</td></tr><tr><td>Copy Paper Jam Total Counter</td><td>SP7-502</td></tr><tr><td>Original Jam Total Counter</td><td>SP7-503</td></tr><tr><td>Total Counter of Copy Paper Jams for Each location</td><td>SP7-504</td></tr><tr><td>Total Counter of Original Paper Jams for Each location</td><td>SP7-505</td></tr><tr><td>PM Counter</td><td>SP7-803</td></tr></table></td><td rowspan="2"></td></tr>
<tr><td>After pressing the final R/# key when entering this SP mode, the counters will be reset.</td></tr>
<tr><td rowspan="2">°7-810</td><td rowspan="2">Copy Counter Clear</td><td>Resets the following counters.
• Total Original Counter (SP7-002)
• Total Copies by Paper Size (SP7-101)
• Total Copies by Magnification (SP7-301)</td><td rowspan="2"></td></tr>
<tr><td>After pressing the final R/# key when entering this SP mode, the counters will be reset.</td></tr>
<tr><td rowspan="2">°7-811</td><td rowspan="2">DF Counter Clear</td><td>Resets the DF counter (SP7-205).</td><td rowspan="2"></td></tr>
<tr><td>After pressing the final R/# key when entering this SP mode, the counter will be reset.</td></tr>
</table>

<table>
<tr><th colspan="2">Mode No.</th><th>Function</th><th>Settings</th></tr>
<tr><td>°7-816-001
to
7-816-008</td><td>Feed Unit
Counter Clear †</td><td>Reset one of the following counters by pressing the R/# key.

<table><tr><th>SP Number</th><th>Without Duplex</th><th>With Duplex</th></tr><tr><td>SP7-816-001</td><td>1st tray</td><td>—</td></tr><tr><td>SP7-816-002</td><td>2nd tray</td><td>1st tray</td></tr><tr><td>SP7-816-003</td><td>3rd tray</td><td>2nd tray</td></tr><tr><td>SP7-816-004</td><td>4th tray</td><td>3rd tray</td></tr><tr><td>SP7-816-005</td><td>5th tray</td><td>4th tray</td></tr><tr><td>SP7-816-006</td><td>LCT</td><td>LCT</td></tr><tr><td>SP7-816-007</td><td>By-pass</td><td>By-pass</td></tr><tr><td>SP7-816-008</td><td>—</td><td>Duplex</td></tr></table></td><td></td></tr>
</table>

12.2 UP MODE AND SP MODE CROSS REFERENCE TABLE

UP Mode	SP Mode	Function
1	5-019	Paper Size Set
2	5-002	Feed Station Priority Selection
3	5-003	APS Priority Selection
4	6-010	Auto APS Select (DF)
5	5-103	Auto Tray Shift
6	5-013	Counter Up/Down Selection
7	5-017	Maximum Copy Quantity
8	5-101	Auto Reset Time Setting
9	5-102	Auto Energy Saver Time Setting
10	5-305-001	Auto Off Time Setting
11	5-004	ADS Priority Selection
12	5-106	Image Density Level Correction
13	5-907	Cover Mode Selection
14	5-908	Image Shift/Erase Selection
15	5-909	10 Key Zoom/Size Magnification
16	5-107	Image Shift Margin Adjustment
17	5-108	Edge Erase Margin Adjustment
18	5-110	Center Erase Margin Adjustment
19	5-906	Manual Staple Reset Time Setting
20	6-001	SADF Auto Reset Time Setting
21	6-002	Not used
22	6-011	Thick/Thin Original Mode Selection
23	5-402	User Code Counter Check
24	5-404	User Code Counter Clear
25	5-405	User Code Number Setting
26	5-407	User Code Number Clear
27	5-001	All Indicators On
28	4-902	Not used
29	5-122	OHP Slip Sheet Mode Selection
30	5-910	Guidance Language Set
31	5-410	User Code Reset Time Setting
32	5-021	Duplex Priority Selection (Energy Star)

13. PREVENTIVE MAINTENANCE SCHEDULE

13.1 PM TABLE

NOTE: The amounts mentioned as the PM interval indicate the number of copies.

Symbol key: C: Clean R: Replace L: Lubricate I: Inspect

	EM	120 k	240 k	360 k	NOTE
OPTICS					
Mirrors, Lens, Reflector		C	C	C	Cotton pad with water, or blower brush
Exposure Glass	C	C	C	C	Alcohol or glass cleaner
Exposure Lamp	I	I	I	I	Replace if necessary
Green Filter		C	C	C	Dry cloth
Scanner Guide Rails		C	C	C	Dry cloth
ADS, APS sensors		C	C	C	Blower brush. Do SP4-201 after cleaning the ADS sensor.
Lens Block Guide Rail	C	C	C	C	Dry cloth
Dust Filter		C	C	C	Replace if necessary
NOTE: After cleaning the exposure lamp and/or optics, do SP4-001, then 4-201, then 3-105. The toner shield glass has been eliminated. ✻					
AROUND THE DRUM					
Drum Charge Roller		R	R	R	Clean with the special cloth if necessary (the cloth must be dry)
Drum Charge Roller Cleaner		R	R	R	Replace with the drum charge roller as a set.
Drum Charge Roller Terminal		R	R	R	Replace with the drum charge roller as a set.
ID Sensor		C	C	C	Blower brush. After cleaning, do SP3-001 then SP3-112.
Erase Lamp		C	C	C	Dry cloth
Quenching Lamp		C	C	C	Dry cloth
Pick-off Pawls		C	R	C	Dry cloth
Pre-Transfer Lamp		C	C	C	Dry cloth and blower brush
DEVELOPMENT UNIT					
Developer		R	R	R	Do SP2-214 after replacement.
Side Seal		I	I	I	
Development Filter		R	R	R	
Entrance Seal	C	C	C	C	Replace if necessary
Toner Supply Unit	C	C	C	C	Blower brush

	EM	120 k	240 k	360 k	NOTE
PAPER FEED (for each paper feed station)					
Feed Rollers (Paper tray) ✻	C	R	R	R	Water
Pick-up, Feed, Separation Rollers (LCT, By-pass feed)	C	C	R	C	Clean with water. Replace these rollers and the torque limiter as a set.
Separation Torque Limiter (By-pass feed) (A212 only)			R		Clean with water. Replace these rollers and the torque limiter as a set.
Paper Feed Guide Plate		C	C	C	Alcohol or water
Relay rollers		C	C	C	Alcohol or water
Registration roller		C	C	C	Alcohol or water
Bottom Plate Pad (Paper tray, By-pass feed, LCT)	C	R	R	R	Water
CLEANING UNIT					
Drum Cleaning Blade		R	R	R	Spread setting powder. See "Drum Cleaning Blade Replacement".
Side Seal		C	C	C	Replace if necessary
Cleaning Entrance Seal		C	C	C	Replace if necessary
TRANSFER BELT UNIT					
Transfer Belt	C	C	R	C	Spread setting powder. "See Transfer Belt Cleaning Blade Replacement" Wipe with a dry cloth.
Transfer Belt Cleaning Blade	C	R	R	R	
Used Toner Tank		C	C	C	Blower brush or vacuum cleaner
FUSING UNIT					
Fusing Entrance and Exit Guide Plates		C	C	C	Suitable solvent
Fusing Lamps		I	I	I	Replace if necessary
Hot Roller		R	R	R	
Pressure Roller		C	R	C	Suitable solvent
Fusing Thermistors	C	I	I	I	Suitable solvent
Hot and Pressure Roller Bearings		I	I	I	Replace if necessary
Fusing Antistatic Brush		I	I	I	Replace if necessary
Cleaning Roller		R	R	R	Suitable solvent
Cleaning Roller Bushings		I	I	I	Replace if necessary
Fusing Exit Rollers			C		
Turn Guide Transport Rollers			C		

	EM	120 k	240 k	360 k	NOTE
Hot Roller Strippers	C	R	R	R	
DUPLEX TRAY					
Clutch Spring		L	L	L	Mobil Temp 78. See Note 1.
Feed Roller		R	R	R	
Bottom Plate Pad		R	R	R	
Mylars		I	I	I	Replace if necessary
OTHERS					
Drive Belts		I	I	I	Replace if necessary

	EM	120 k	240 k	360 k	NOTE
SORTER ADAPTER (A568)					
Exit Drive Roller			C		Alcohol or Water
Upper Roller			C		Alcohol or Water

	EM	120 k	240 k	360 k	NOTE
PAPER TRAY UNIT (A549/A550)					
Pick-up, Feed, Separation Rollers	C	C	R	C	Water, Replace these rollers as a set.
Relay rollers		C	C	C	Alcohol or water
Bottom Plate Pad	C	R	R	R	Water
Relay Clutch		I	I	I	Replace every 1,500 k copies.
Feed Clutch		I	I	I	Replace if necessary
Drive Belts		I	I	I	Replace if necessary

	EM	80 k	160 k	240 k	NOTE
AUTO DOCUMENT FEEDER (A663) (for originals)					
Transport Belt	C	R	R	R	Belt cleaner
Friction Belt	C	R	R	R	Water
Separation Roller	C	R	R	R	Water

	EM	PM	NOTE
20-BIN SORTER STAPLER (A658)			
Transport and Exit Rollers	C	C	Alcohol or water
Bins	C	C	Alcohol or water
Bin and Paper Sensors	C	C	Blower brush

	EM	PM	NOTE
Bushings	L	L	Launa oil; if bushings generate noise.
Helicam Wheels	L	L	Grease G501; if worm gears generate noise.
Bin Cam Tracks	L	L	Grease G501; if bin cam tracks generate noise.
10-BIN SORTER STAPLER (A555)			
Transport Roller	C	C	Alcohol or water
Bins	C	C	Alcohol or water
Bin and Paper Sensors	C	C	Blower brush
Bushings	L	L	Launa oil; if bushings generate noise.
Helicam Wheels	L	L	Grease G501; if helicam wheels generate noise.
SORTER (A556/A557)			
Bin Guide/Wheel	L	L	Grease G501; if those generate noise.
Bushings	L	L	Grease G501; if bushings generate noise.
Exit Roller	C	C	Alcohol or water

13.2 REGULAR PM PROCEDURE

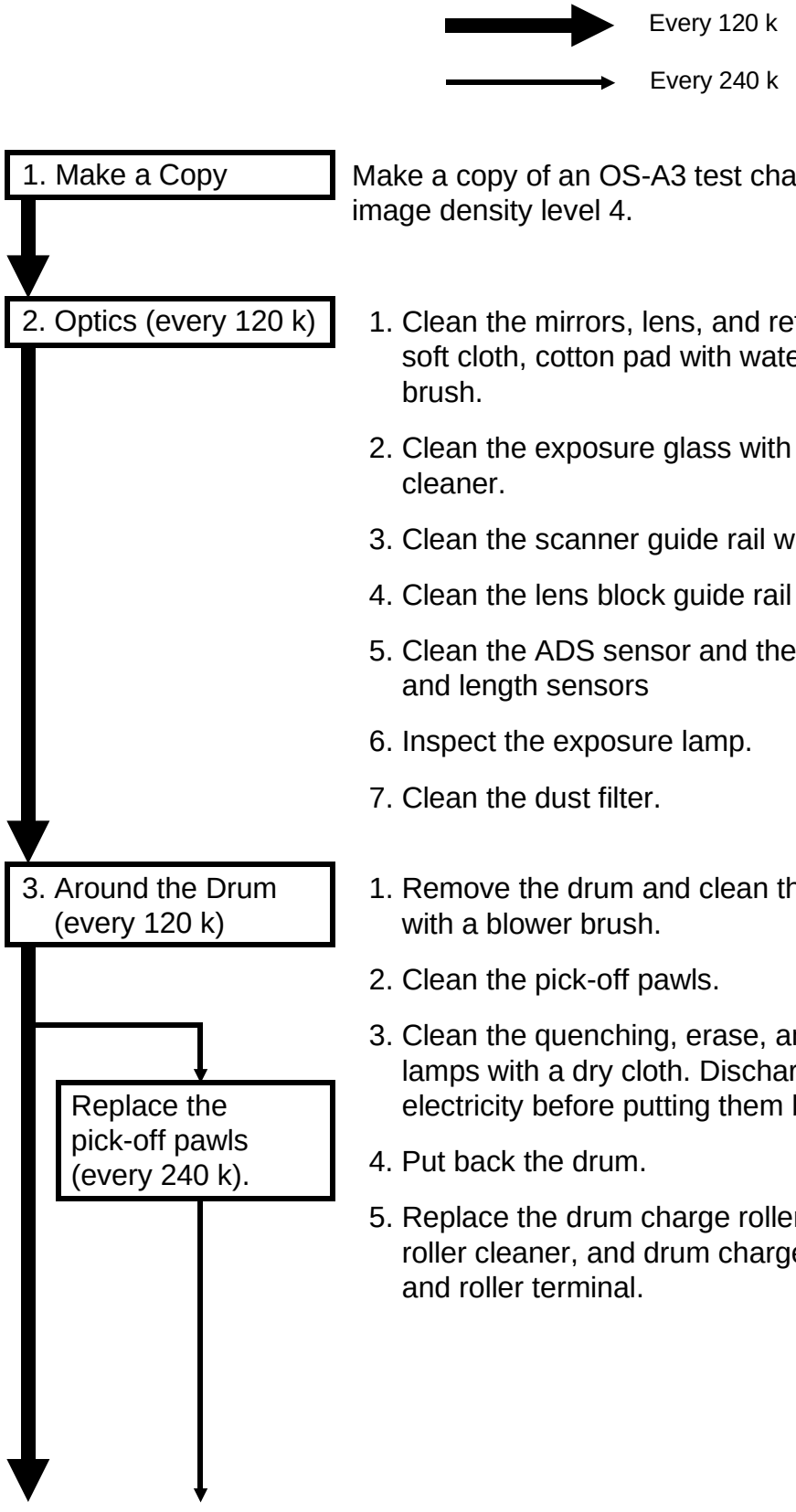

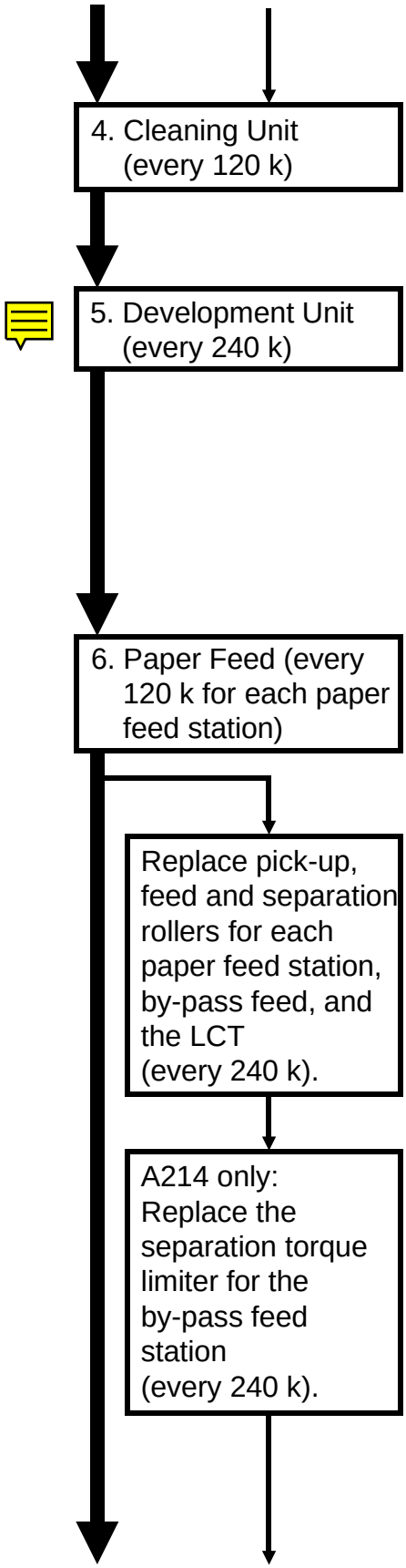

4. Cleaning Unit (every 120 k)

1. Clean the inside of the cleaning unit and the seals.
2. Replace the cleaning blade.

5. Development Unit (every 240 k)

1. Remove the old developer.
2. Clean the development unit and seals.
3. Clean around the openings of the toner supply unit with a blower brush.
4. Pour in a pack of new developer.
5. Replace the development filter.

6. Paper Feed (every 120 k for each paper feed station)

1. Clean the paper guide plate.
2. Clean the paper feed, pick-up, separation, and relay rollers for each paper feed station, by-pass feed, and the LCT.
3. Replace the bottom plate pad for each paper feed station, by-pass feed, and the LCT.
4. Clean the registration rollers.

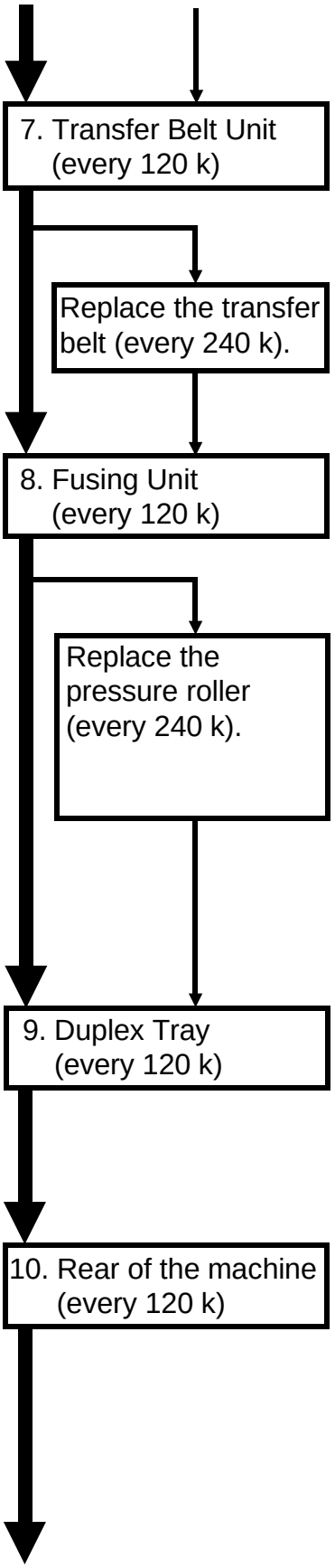

1. Remove the transfer belt and clean the used toner tank with a blower brush or vacuum cleaner.
2. Clean the transfer belt.
3. Replace the transfer belt cleaning blade.

1. Clean the entrance and exit guide plates
2. Inspect the thermistor, fusing lamps, hot and pressure roller bearings, antistatic brush, and cleaning roller bushings and oil supply roller one-way bushing.
3. Clean the pressure roller, cleaning roller, exit roller, and turn gate transport rollers.
4. Replace the hot roller strippers.
5. Replace the hot roller. Lubricate the flange with Grease Barrierta JFE 55/2.
6. Replace the cleaning roller.

1. Inspect the mylars.
2. Replace the feed roller and the bottom plate pad.
3. Lubricate the clutch spring with Mobil Temp 78.

1. Inspect the timing belts.

11. Exterior (every 120 k)

1. Clean the covers.

12. Development Unit (every 120 k)

Perform the following SP Modes in the following order.

1. SP2-214 TD Sensor Initial Setting
2. SP3-001 ID Sensor Initial Setting
3. SP3-112 Forced V_R Detection
4. * SP4-001 Exposure Lamp Voltage Adj.
5. SP4-201 Auto ADS Gain Adj.
6. * SP3-105 Forced V_L Detection

*: Perform these SP modes only if the exposure lamp has been replaced.

13. Make a Copy

Make a copy of an OS-A3 test chart at manual image density level 4.

14. SPECIAL TOOLS AND LUBRICANTS

✻ : New or modified items

Part Number	Description	Q'ty
A153 9001	Scanner Adjustment Tool	1
A153 9004	WIPING CLOTH (Drum Charge Roller Cloth)	1
5420 9516	Test Chart - OS-A3 (10 pcs/set)	1
5420 9507	Digital Multimeter	1
A008 9502	Silicone Grease - G40M	1
5442 9103	Launa Oil	1
5447 9078	Heat Resistant Grease - MT-78	1
5203 9501	Grease - 501	1
✻ 5442 9101	Setting Powder	1
✻ A028 9300	Grease Barrierta JFE 55/2	1

15. SC CODE DESCRIPTIONS

✻ Only the following SC codes have been changed or added from the base copier.

E720 - Timing Sensor (Roller Drive) Output Error (A555/A658)

- Definition - [B]
  When the roller drive/transport motor is turning, the timing sensor takes over 500 ms to change.

- Possible Causes -
  - The timing sensor is defective.
  - The roller drive/transport motor is defective.
  - The main control board is defective.

E721 - Timing Sensor (Bin Lift) Output Error (All sorters)

- Definition - [C]
  When the bin lift/bin drive motor is turning, the timing sensor takes over 250 ms to change.

- Possible Causes -
  - The timing sensor is defective.
  - The bin lift/bin drive motor is defective.
  - The main control board is defective.

E722 - Jogger Home Position Sensor Output Error (A555/A658)

- Definition- [C]
  - When the jogger bar moves forward, the home position sensor takes over 100 ms to be deactivated.
  - When the jogger bar moves backward, the home position sensor takes over 800 ms to be activated.

- Possible Causes -
  - The jogger home position sensor is defective.
  - The jogger motor is defective.
  - The main control board is defective.

E723 - Grip Home Position Sensor Output Error (A555/A658)

- Definition- [C]

  - When the grip motor rotates forwards, the grip home position sensor takes over 0.2 s to be deactivated.
  - When the grip motor rotates in reverse, the grip home position sensor takes over 2.5 s to be deactivated.

- Possible Causes -

  - The grip home position sensor is defective.
  - The grip motor is defective.
  - The main control board is defective.

E724 - Stapler Error (A555/A658)

- Definition- [C]

  The stapler motor takes more than 800 ms for one staple operation (from home position to home position).

- Possible Causes -

  - The stapler is defective.
  - The main control board is defective.

E940 - Main Switch Error

- Definition - [A]

  The detection mechanism is as follows:

  - The machine reaches the auto-off time.
  - The solenoid mounted inside the main switch turns on for 3 seconds.
  - If the main switch does not turn off, the solenoid is turned off for 1 seconds.
  - The solenoid is once again turned on for 3 seconds.
  - If the main switch does not turn off at this point, the solenoid turns off and E940 lights.

- Possible Causes -

  - The main switch is defective.
  - The main control board is defective.

COPIER ELECTRICAL COMPONENT LAYOUT

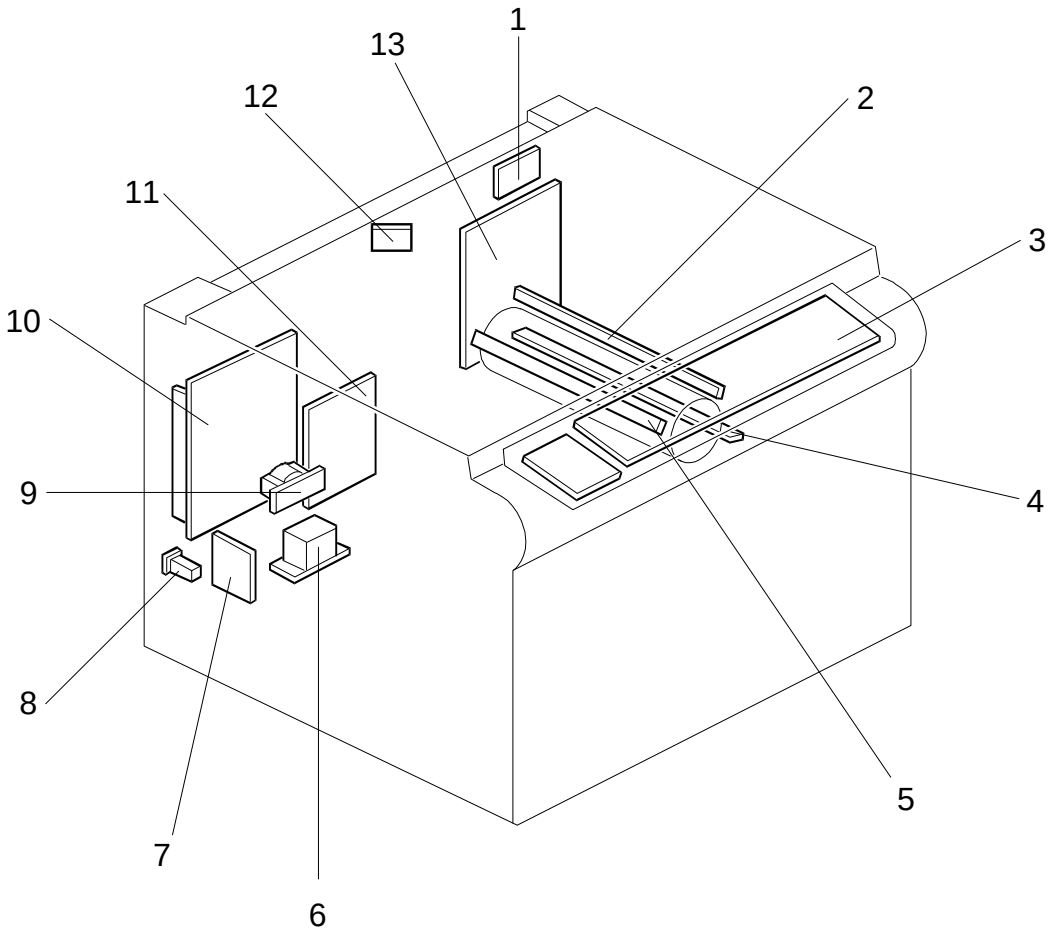

A212S500.wmf

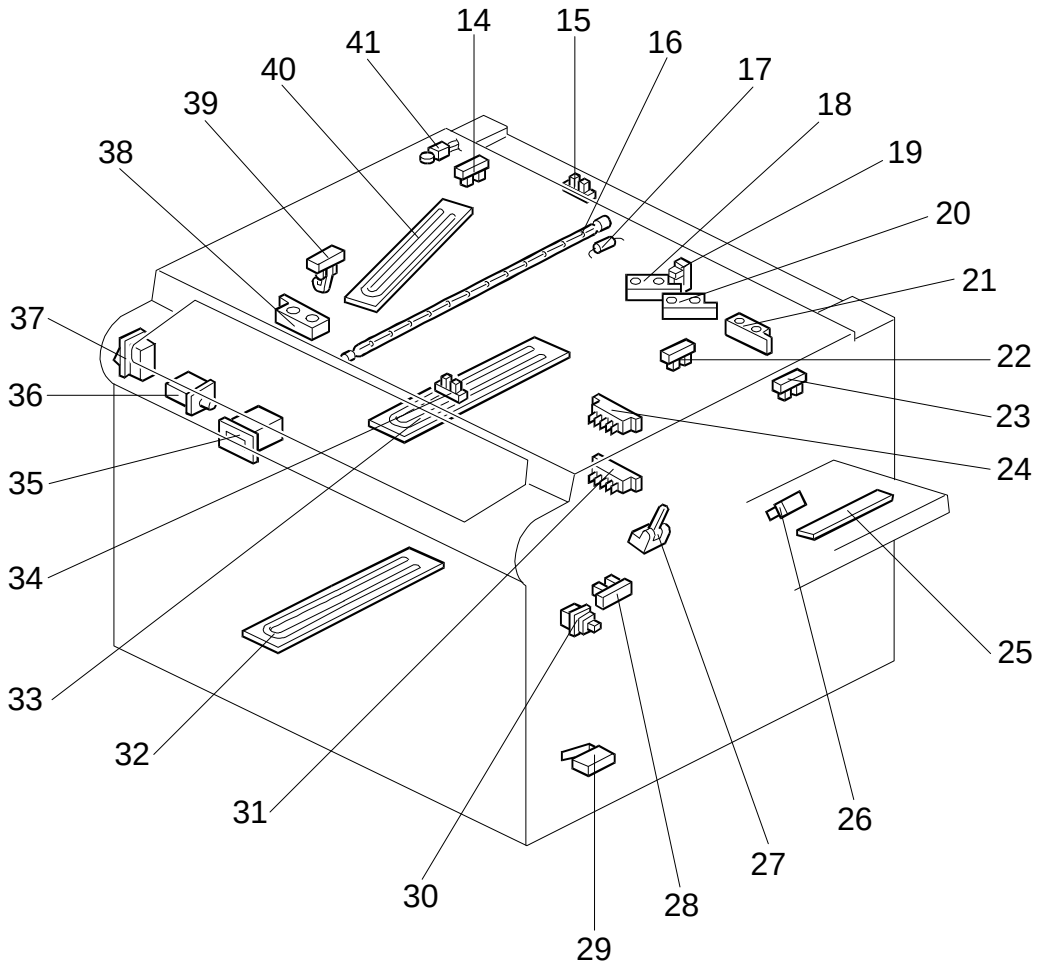

A212S501.wmf

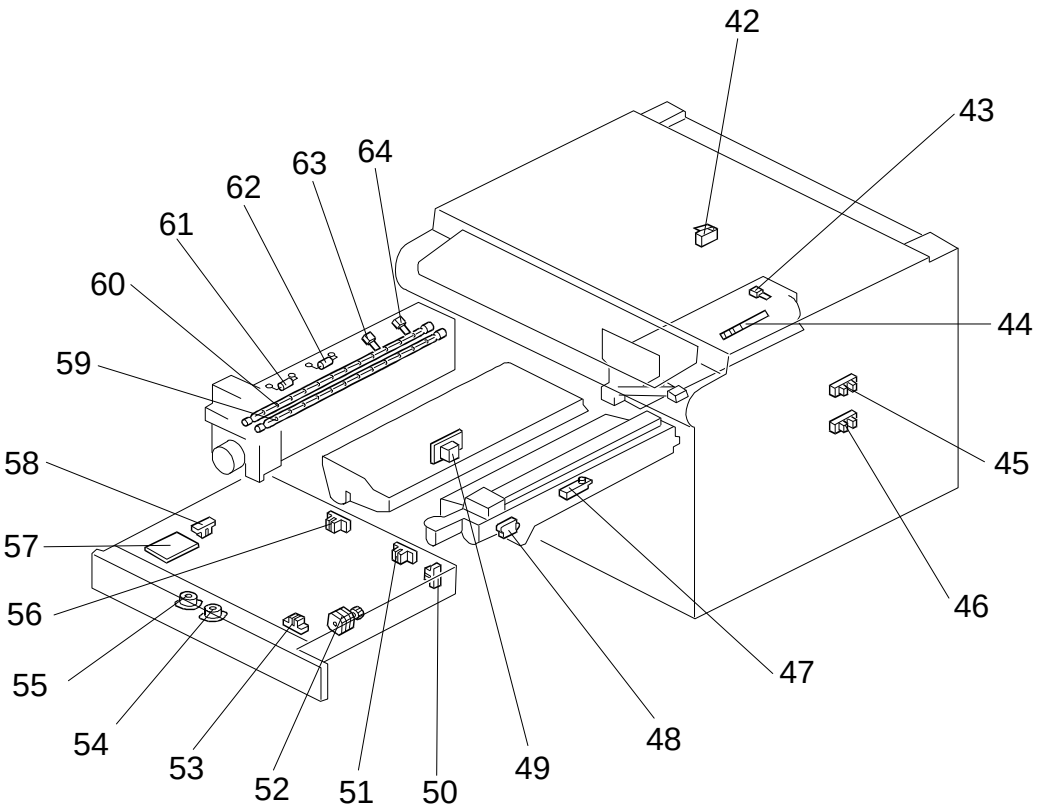

A212S502.wmf

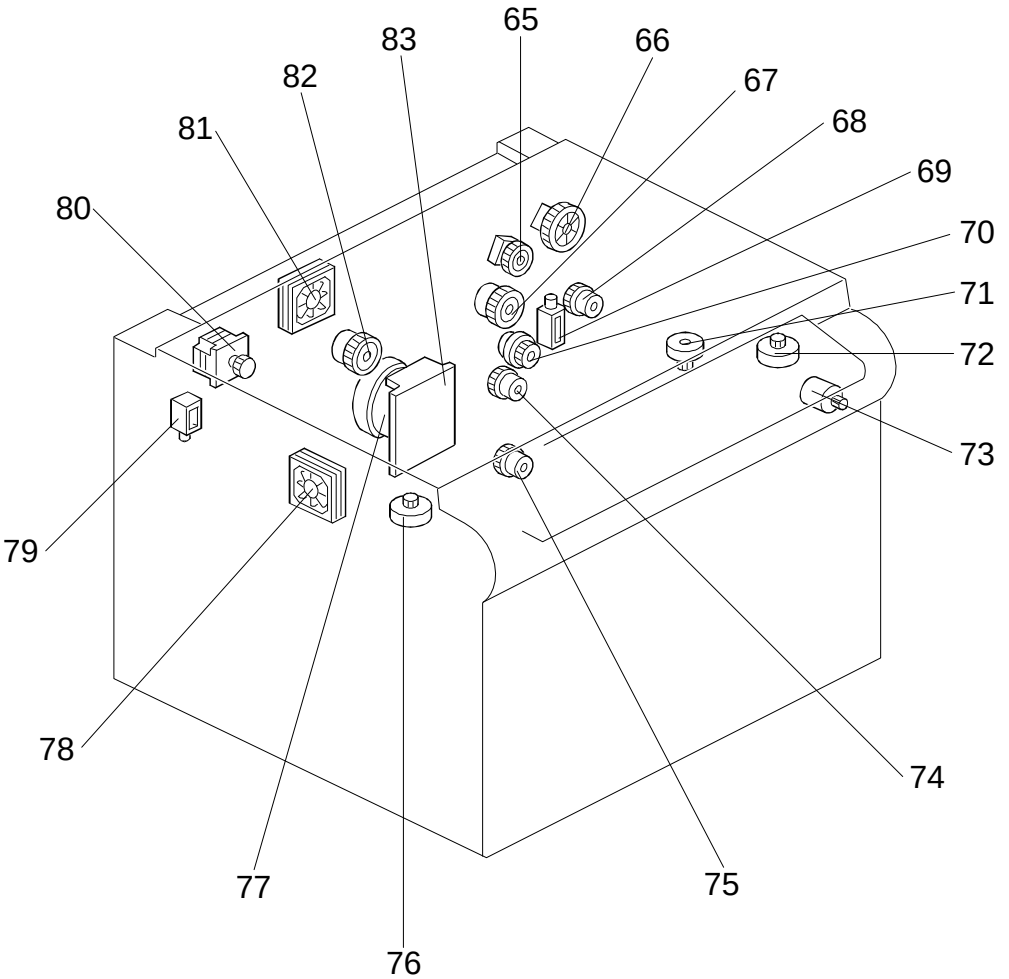

A212S503.wmf

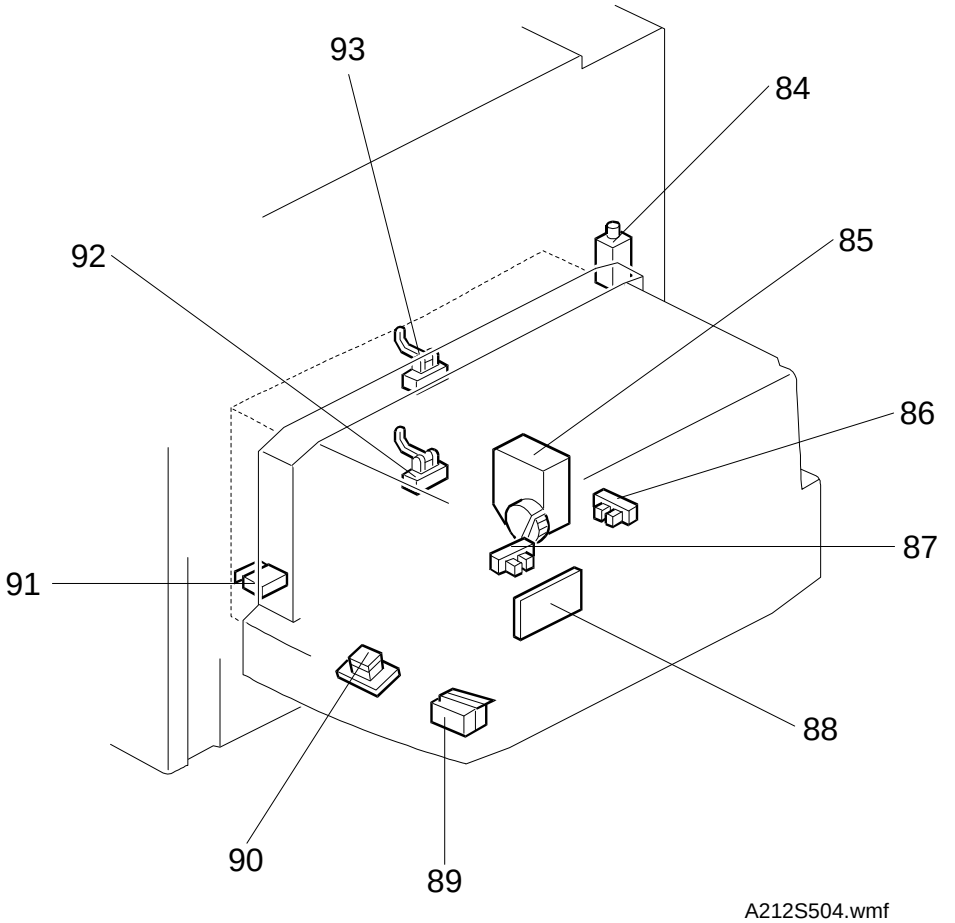
93
84
92
85
86
87
91
88
90
89
A212S504.wmf

Description	Index No.	P to P Location
CB High Voltage Supply Board (PCB5)	1	K12
Erase Lamp (L6)	2	A4
Operation Panel Board (PCB7)	3	A6
Pre-transfer Lamp (L4)	4	Q9
Quenching Lamp (L5)	5	Q8
Transformer (220 ~ 240 V machines only) (TR1)	6	C10
Nose Filter Board (220 ~ 240 V machines only) (PCB8)	7	B9
Circuit Breaker (220 ~ 240 V machines only) (CB1)	8	A9
Choke Coil (CC1)	9	H12
DC Power Supply Board (PCB3)	10	I10
AC Drive Board (PCB2)	11	E11
Auto Image Density Sensor (ADS Sensor) (S22)	12	G9
Main Control Board (PCB1)	13	K7

Description	Index No.	P to P Location
Scanner HP Sensor (S15)	14	K6
Platen Cover Sensor (S19)	15	Q10
Exposure Lamp (L1)	16	A11
Exposure Lamp Thermofuse (TF3)	17	C11
Original Length Sensor-1 (S24)	18	F9
Lens Vertical HP Sensor (S14)	19	K6
Original Length Sensor-2 (S17)	20	Q9
Original Length Sensor (Option for N. American models) (S30)	21	Q12
Transfer Belt Contact HP Sensor (S21)	22	Q11
3rd Scanner HP Sensor (S16)	23	J6
Upper Tray Paper Size Switch (A212 machine only) (SW3)	24	Q7
By-pass Feed Paper Width Sensor (S1)	25	Q5
LCT Upper Limit Sensor (A214 machine only) (S9)	26	N2
Registration Sensor (S10)	27	K5
By-pass Feed Paper End Sensor (S2)	28	K5
Vertical Guide Set Switch (A212 machine only) (SW5)	29	O2
By-pass Feed Table Switch (SW1)	30	K5
Lower Tray Paper Size Switch (SW4)	31	Q7
Lower Tray Heater (option) (H3)	32	B10
Drum Heater (H1)	33	B11
Lens Horizontal HP Sensor (S13)	34	K6
Total Counter (CO1)	35	L10
Front Cover Safety Switch (SW9)	36	J10
Main Switch (SW8)	37	G10
Original Width Sensor (S23)	38	F9
Fusing Exit Sensor (S18)	39	Q9
Optics Anti-condensation Heater (option) (H2)	40	B11
Optics Thermistor (TH3)	41	B7

Description	Index No.	P to P Location
Exit Cover Safety Switch (A214 machine only) (SW10)	42	K9
Drum Charge Thermistor (TH4)	43	B3
Image Density Sensor (ID) (S11)	44	Q5
Upper Tray Paper End Sensor (A212 machine only) (S3)	45	Q6
Lower Tray Paper End Sensor (S5)	46	Q5
Toner Density Sensor (TD) (S12)	47	B3
Toner End Sensor (S20)	48	Q10
T High Voltage Supply Board (PCB6)	49	K11
Duplex Paper End Sensor (A214 machine only) (S25)	50	I3
Duplex Turn Sensor (A214 machine only) (S26)	51	I2
Duplex Feed Motor (A214 machine only) (M10)	52	I5
Side Fence Jogger HP Sensor (A214 machine only) (S28)	53	I2
Side Fence Jogger Motor (A214 machine only) (M12)	54	I3
End Fence Jogger Motor (A214 machine only) (M11)	55	I4
Duplex Entrance Sensor (A214 machine only) (S27)	56	I2
Duplex Control Board (A214 machine only) (PCB9)	57	H4
End Fence Jogger HP Sensor (A214 machine only) (S29)	58	I1
Main Fusing Lamp (L2)	59	B11
Secondary Fusing Lamp (L3)	60	A12
Secondary Fusing Thermofuse (TF2)	61	C12
Main Fusing Thermofuse (TF1)	62	B12
Main Fusing Thermistor (TH1)	63	Q11
Secondary Fusing Thermistor (TH2)	64	Q11

Description	Index No.	P to P Location
Development Clutch (CL2)	65	L9
Toner Supply Clutch (CL1)	66	L9
Registration Clutch (CL4)	67	K4
By-pass Feed Clutch (CL5)	68	K3
A214 machine: LCT/By-Pass Pick up Solenoid A212 machine: By-Pass Pick up Solenoid (SOL1)	69	K4
Relay Clutch (CL6)	70	O2
Lens Horizontal Drive Motor (M9)	71	I6
3rd Scanner Drive Motor (M7)	72	H6
Toner Bottle Drive Motor (M2)	73	L9
Upper- Paper Feed Clutch (A212 machine only) (CL7)	74	Q8
Lower Paper Feed Clutch (CL8)	75	Q8
Lens Vertical Drive Motor (M8)	76	I6
Main Motor (M1)	77	J9
Exhaust Fan Motor 1 (M5)	78	B8
Junction Gate Solenoid (A214 machine only) (SOL2)	79	B1
Scanner Drive Motor (M6)	80	G6
Optics Cooling Fan Motor 1 (M4)	81	B7
Transfer Belt Contact Clutch (CL3)	82	Q12
Main Motor Control Board (PCB4)	83	I9

Description	Index No.	P to P Location
LCT Pick-up Solenoid (A214 machine only) (SOL3)	84	O2
LCT Lift Motor (A214 machine only) (M3)	85	K1
LCT Lower Limit Sensor (A214 machine only) (S7)	86	M2
LCT Paper End Sensor (A214 machine only) (S8)	87	N2
LCT Interface Board (A214 machine only) (PCB10)	88	L1
LCT Cover Switch-2 (A214 machine only) (SW7)	89	K1
Tray Down Switch (A214 machine only) (SW2)	90	N2
LCT Cover Switch-1 (A214 machine only) (SW6)	91	M2
Lower Relay Sensor (S6)	92	Q5
Upper Relay Sensor (S4)	93	Q6

Point To Point Diagram (A212/A214)

