RICOH®
CUSTOMER SERVICE GROUP

FT5000/5010
PARTS CATALOG

REV. NO.	DATE	COMMENTS
*	10/85	Original Printing
1	10/95	Revised pages

FT5000/5010 PART CATALOG
SECTION INDEX

Rev. 10/95

SECTION 1 FT5000(A004) PARTS LOCATION AND LIST

1. **Exterior (A004)** **1-2**
2. Operation Panel (A004) 1-4
3. Platen Cover and Cassette(A004) 1-6
4. 1st and 2nd Paper Feed (A004) 1-8
5. Registration (A004) 1-10
6. Drum Section (A004) 1-12
7. Transport Section (A004) 1-14
8. Fusing Section I (A004) 1-16
9. Fusing Section II (A004) 1-18
10. Development Unit (A004) 1-20
11. Cleaning Unit (A004) 1-22
12. Optics Section I (A004) 1-24
13. Optics Section II (A004) 1-26
14. Frame (A004) 1-28
15. Drive Section (A004) 1-30
16. Electrical Component I (A004) 1-32
17. Electrical Component II (A004) 1-34
18. Main Board (A004) 1-36
19. Optics Board (A004) 1-38
20. AC Drive Board (A004) 1-40
21. Paper Feed Board (A004) 1-42
22. DC Harness (A004) 1-44
23. AC Harness (A004) 1-46
24. Decal and Document (A004) 1-48
25. Special Tool (A004) 1-50

SECTION 2 FT5000(A004) PARTS INDEX

Parts Index 2-2

SECTION 1 FT5010(5215) PARTS LOCATION AND LIST

1. Exterior (5215) 1-2
2. Operation Panel (5215) 1-4
3. Platen Cover and Cassette (5215) 1-6
4. 1st and 2nd Paper Feed (5215) 1-8
5. Registration (5215) 1-10
6. Drum Section (5215) 1-12
7. Transport Section (5215) 1-14
8. Fusing Section I (5215) 1-16
9. Fusing Section II (5215) 1-18
10. Development Unit (5215) 1-20
11. Cleaning Unit (5215) 1-22
12. Optics Section I (5215) 1-24

13. Optics Section II (5215) 1-26
14. Frame (5215) 1-28
15. Drive Section (5215) 1-30
16. Electrical Component I (5215) 1-32
17. Electrical Component II (5215) 1-34
18. Expansion Unit (5922) 1-36
19. Copier Relay Unit (5922) 1-38
20. Expansion Relay Unit (5922) 1-40
21. Paper Bank I (5920) 1-42
22. Paper Bank II (5920) 1-44
23. Sorter (6803) 1-46
24. Sorter Adapter (6803) 1-48
25. Document Feeder I (5918) 1-50
26. Document Feeder II (5918) 1-52
27. Document Feeder III (5918) 1-54
28. Duplex I (5918) 1-56
29. Duplex II (5919) 1-58
30. Duplex III (5919) 1-60
31. LCT I (5925) 1-62
32. LCT II (5925) 1-64
33. LCT III (5925) 1-66
34. Main Board 1-68
35. Optics Board 1-70
36. AC Drive Board 1-72
37. Paper Feed Board 1-74
38. 3rd Paper Feed Board (5922) 1-76
39. Paper Bank Board (5922) 1-78
40. Bin Motor Board (6803) 1-80
41. DF Main Board (5918) 1-82
42. LCT Board (5925) 1-84
43. Interface Board (5924) 1-86
44. DC Harness 1-88
45. AC Harness 1-90
46. Expansion Harness (5922) 1-92
47. Paper Bank Harness (5922) 1-94
48. Sorter Harness (6803) 1-96
49. DF Harness (5918) 1-98
50. Duplex Harness (5919) 1-100
51. LCT Harness (5925) 1-102
52. Decal and Document 1-104
53. Special Tool 1-106

SECTION 2 FT5010(5215) PARTS INDEX

Parts Index 2-2

SECTION 3 PS100 (5922) PARTS LOCATION AND LIST

1. Expansion Unit 3-3
2. Copier Relay Unit 3-4
3. 3rd Paper Feed Board 3-6
4. Expansion Harness 3-8

SECTION 4 PS100 (5922) PARTS INDEX

Parts Index 4-2

SECTION 5 DF34 (5918) PARTS LOCATION AND LIST

1. Document Feeder I 5-2
2. Document Feeder II 5-4
3. Document Feeder III 5-6
4. DF Main Board 5-8
5. DF Harness 5-10

SECTION 6 DF34 (5918) PARTS INDEX

Parts Index 6-2

SECTION 7 CS2050 (6803)PARTS LOCATION AND LIST

1. Sorter 7-2
2. Bin Motor Board 7-4
3. Sorter Harness 7-6

SECTION 8 CS2050 (6803) PARTS INDEX

Parts Index 8-2

SECTION 9 SORTER ADAPTER (6805) PARTS LOCATION AND LIST

1. Sorter Adapter 9-2

SECTION 10 SORTER ADAPTER (6805) PARTS INDEX

Parts Index 10-2

SECTION 11 RT14 (5925) PARTS LOCATION AND LIST

1. LCT I 11-2
2. LCT II 11-4
3. LCT III 11-6
4. LCT Board 11-8
5. LCT Harness 11-10

SECTION 12 RT14 (5925) PARTS INDEX

Parts Index 12-2

SECTION 13 INTERFACE BOARD (5924)

1. Interface Board 2

SECTION 14 INTERFACE BOARD (5924)

Parts Index 2

MODIFIED PARTS REFERENCE LIST

Modified Parts Reference List 2

PARTS CATALOG

INTRODUCTION

This chapter instructs you to the names and numbers of the parts of this machine

INDEX TO PARTS CATALOG

FT5000	**(A004)**
FT5010	**(5215)**
PS100	**(5922)**
DF34	**(5918)**
CS2050	**(6803)**
SORTER ADAPTER	**(6805)**
RT14	**(5925)**
INTERFACE BOARD	**(5924)**

FT5000 (A004)
PARTS LOCATION AND LIST

1. EXTERIOR [A004]

June 30, '86

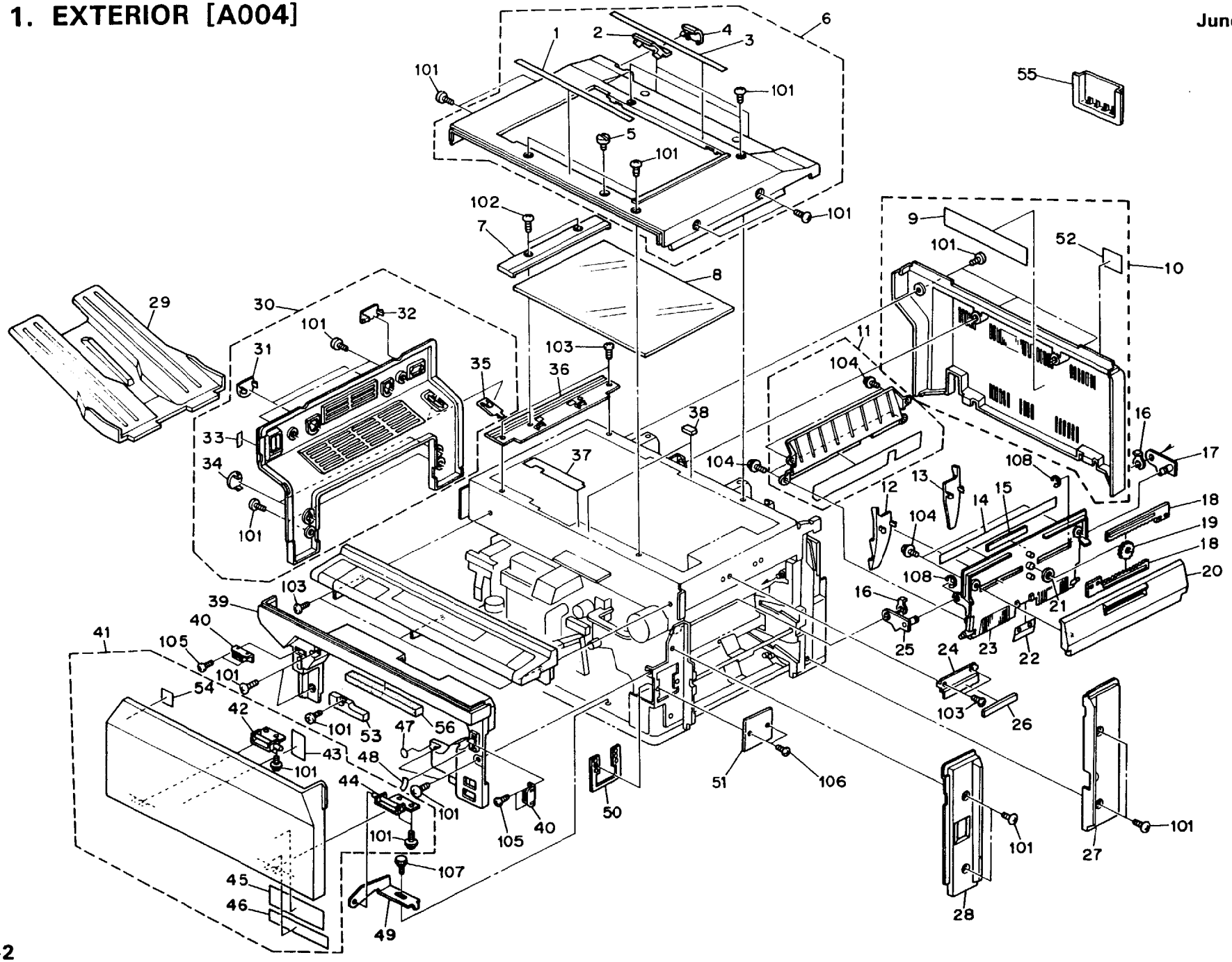

1. EXTERIOR [A004]

Rev. 10/91

Index No.	Parts No.	Description	Q'ty Per Assembly
*	A0048551	Installation Procedure - English	1
*	A0048552	Installation Procedure - 5 Languages	1
*	A0048627	Decal sheet - German	1
*	A0048628	Decal sheet - French	1
*	A0048629	Decal sheet - Italian	1
*	A0048630	Decal sheet - Spanish	1
1	52151319	Decal - Front Scale - LT/LDG	1
1	52151321	Decal - Front Scale - A4/A3	1
2	52151305	Upper Cover Cap - ADF	2
3	52151320	Decal - Rear Scale - LT/LDG	1
3	52151322	Decal - Rear Scale - A4/A3	1
4	52151306	Upper Cover Cap - Sensor	1
5	52051333	ADF Screw	1
6	52151269	Upper Cover - 115V	1
6	52151270	Upper Cover - 220/240V	1
7	52151930	Left Scale - A4/A3	1
7	52151933	Left Scale - LT/LDG	1
8	52151980	Exposure Glass	1
9	A0041323	Decal - DIP Switch	1
10	A0041288 ,	Rear Cover - US	1
10	ADO41289	Rear Cover - EU	1
10	A0041291	Rear Cover	1
11	52152679	Upper Guide - Manual Feed	1
12	52152690	Front Side Guide	1
13	52152689	Rear Side Guide	1
14	52152801	Decal - Manual Feed - LT/LOG	1
14	52152811	Decal - Manual Feed - A4/A3	1
15	52152693	Plate	1
16	54472681	Snap Ring	1
17	52152681	Rear Manual Feed Link	2
18	52152688	Side Fence Gear	2
19	52152687	Gear - 16T	1
20	52152686	Manual Feed Cover	1
21	52152691	Brake	1
22	52152678	Spring Plate	1

Index No.	Parts No.	Description	D'ty Per Assembly
2 3	52152698	Manual Feed Taole	1
24	52152694	Bracket	1
25	52152680	Front Manual Feed Link	1
26	52152685	Magnetic Rubber	1
27	52151283	Rear Right Cover	1
28	52151276	Front Right Cover	1
29	54424501	Copy Tray	1
30	52151278	Left Cover	1
31	54421374	Cap - Left Cover - L	2
32	52151307	Left Cover Cap - Sorter	1
33	54421277	Decal - Main Switch	1
34	54421375	Cap - Left Cover - S	2
35	52151308	Left Cover Cap - Duplex	1
36	52151935	Mounting Plate - A4 /A3	1
36	52151938	Mounting Plate - LT/LDG	1
37	52151926	Front Frame Seal	1
38	AA161031	Cushion - 20 x 5 x 3mm	2
39	A0041268	Inner Cover	1
40	50540536	Magnet Catch Ass'y	2
41	52151257	Front Cover Ass'y	1
42	52151297	Front Cover Hinge - Left	1
43	52154213	Decal - Misfeed Removal	1
44	52151295	Front Cover Hinge - Right	1
45	52151318	Decal - Toner Supply	1
46	52151317	Decal - Front Cover	1
47	52151315	Decal - A2	1
48	52151326	Decal - Toner Cartridge	1
49	52151293	Front Cover Angle - Right	2
50	54201515	Plate - Key Counter	2
51	54031145	Cover - Key Counter	2
52	54421372	Decal - Power Source - 220V	1
53	52153883	Harness Cover	1
54	52151292	Yylar - 20 x 28 mm	1
55	54421296	Operating Instruction Holder	1
56	52151300	Seal-6 x 20 x 270 mm	1

June 30, '86

Index No.	Parts No.	Description	Q'ty Per Assembly
101	08025094	Tapping Screw - M4x8	
102	034400600	Philips Truss Head Screw - M4 x 6	
103	04340080W	Tapping Screw - M4 x 8	
104	09653006W	Tapping Screw with Flat Washer - M3 x 6	
105	08025085	Tapping Screw - M4 x 8	
106	03140080W	Philips ran Head Screw - M4 x 8	
107	08030017	Knob Screw	
108	07200050E	Retaining Ring - M5	

2. OPERATION PANEL [A004]

Rev. 2/93

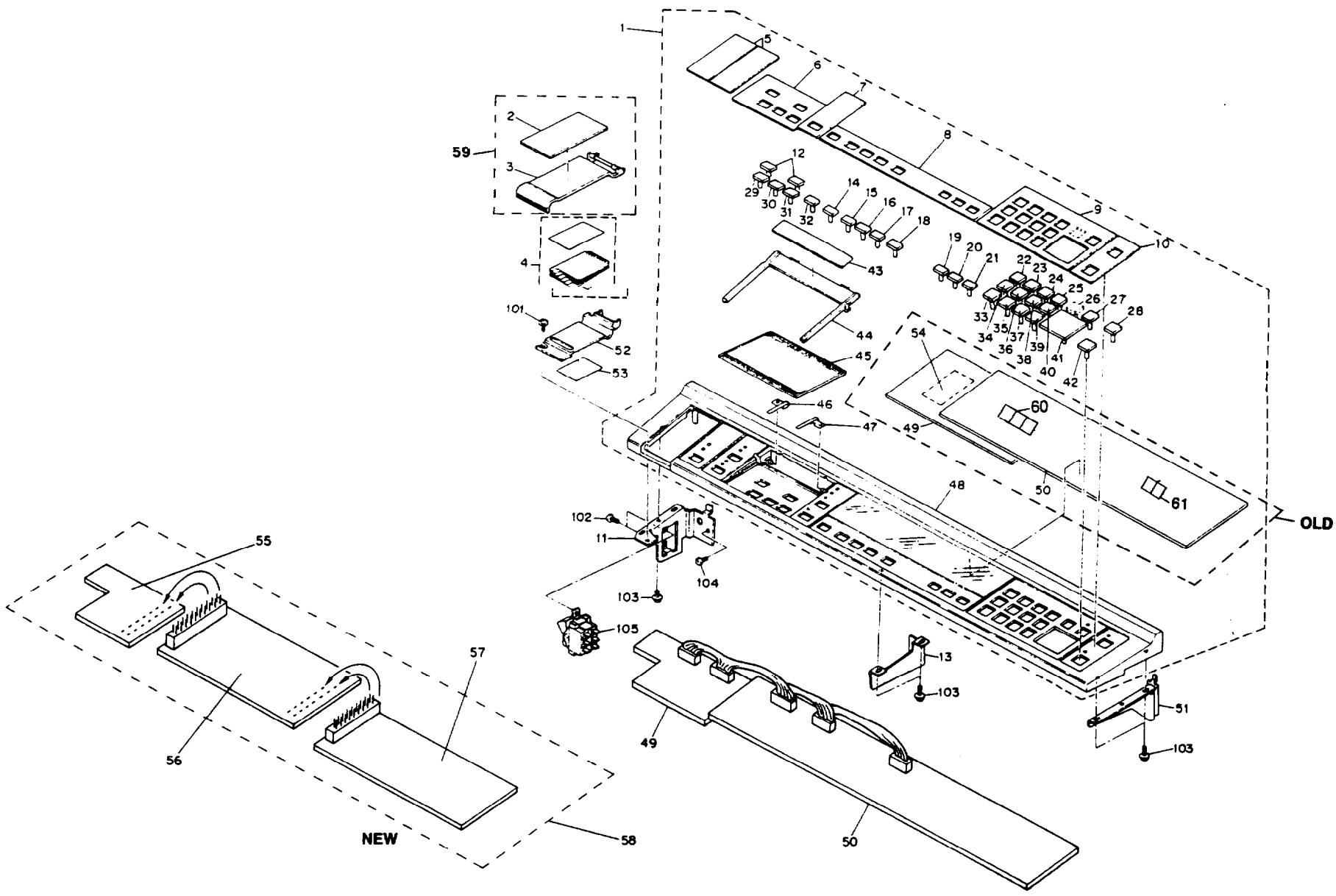

2. OPERATION PANEL [A004]

Rev. 2/93

Index No.	Parts No.	Description	Q'ty per Assembly
1	A0045135	Operation Panel Ass'y - LT/LDG	1
1	A0045141	Operation Panel Ass'y - A4/A3	1
1	A0045155	Operation Panel Ass'y - ROC	1
2	52155682	Cover - B	1
3	52155671	Instruction Cards Cover	1
4	A0048520	Instruction Cards - LT/LDG	1
4	A0048521	Instruction Cards - A4/A3	1
4	A0048523	Instruction Cards - German	1
4	A0048524	Instruction Cards - French	1
4	A0048525	Instruction Cards - Italian	1
4	A0048526	Instruction Cards - Spanish	1
4	A0048527	Instruction Cards - ROC	1
5	52155681	Cover - A	3
6	A0045680	Cover - C	1
8	A0045677	ADS Cover - LT/LDG	1
8	A0045733	ADS Cover - A4/A3	1
9	52155732	Ten Key Cover - A4/A3	1
9	52155755	Ten Key Cover - ROC (LT/LDG)	1
10	A0045675	Cover - E	1
11	52151329	Operation Panel Bracket - Left	1
13	52151335	Operation Panel Bracket - Middle	1
18	52155704	Key Top - Select Cassette	1
19	52155703	Key Top - Darker	1
20	52155702	Key Top - Lighter	1
21	52155701	Key Top - ADS	1
22	52155691	Key Top - 1	1
23	52155692	Key Top - 2	1
24	52155693	Key Top - 3	1
25	52155689	Key Top - Recall	1
27	52155688	Key Top - Interrupt	1
33	52155697	Key Top - 7	1
34	52155694	Key Top - 4	1
35	52155698	Key Top - 8	1
36	52155695	Key Top - 5	1
37	52155699	Key Top - 9	1
38	52155696	Key Top - 6	1
39	52155700	Key Top - C/S	1
40	52155690	Key Top - 0	1
41	52155685	Key Top - Start	1
43	A0045679	Cover - D	1
51	52151330	Operation Panel Bracket - Right	1
52	52155670	DIP Switch Cover	1
53	A0045673	Decal - Monitor Board	1
54	A0045128	IC - UPD 7811G	1
55	A0045252	Control Board	1
56	A0045251	Display Board - LT/LDG	1
56	A0045261	Display Board - A4/A3	1
56	A0045281	Display Board - ROC	1
57	A0045260	Ten Key Board	1
58	A0045136	Operation Panel Board - LT/LDG	1
58	A0046375	Operation Panel Board - A4/A3	1
58	A0045156	Operation Panel Board - ROC	1
59	52155664	Instruction Cards Cover Ass'y	1
60	**52159541**	**LED-SL-3180-20**	**3**
61	**52159540**	**LED-SL-7284-20**	**1**
101	08025094	Tapping Screw - M4x8	
102	09513008W	Philips Screw with Flat Washer - M3 x 8	
103	09654008W	Tapping Screw with Flat Washer - M4 x 8	
104	04340060W	Tapping Screw - M4 x 6	
105	18230024	Switch	

3. PLATEN COVER AND CASSETTE [A004]

Rev. 2/93

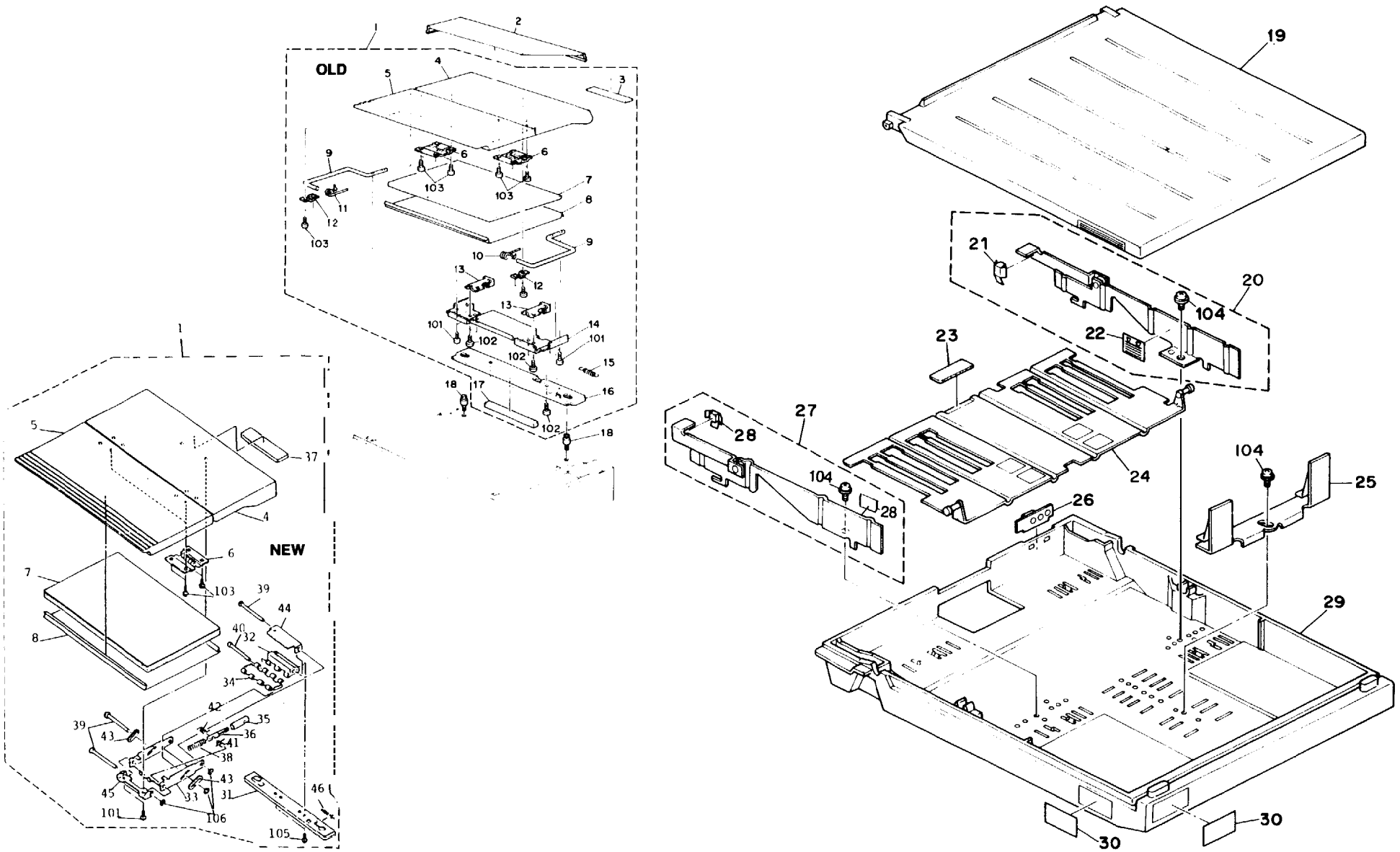

3. PLATEN COVER AND CASSETTE [A0041

Rev. 2/93

Index No.	Parts No.	Description	Q'ty Per Assembly
▶ 1	52151660	Platen Cover Ass'y	1
2	52151658	Original Holder	1
3	54241955	Lock - Platen Cover	1
4	52151657	Rear Platen Cover	1
5	52151656	Front Platen Cover	1
6	54482824	Flex Hinge - Plten Cover	1
7	54482803	Pad - Platen Cover	1
8	A4069505	Platen Cover Sheet - 10 Sheets/1 Set	1
9	54482806	Platen Cover Arm	1
10	54196245	Right Spring - Platen Cover	1
11	54196244	Left Spring - Platen Cover	1
12	54201779	Arm Holder - Platen Cover	2
13	54482813	Platen Cover Hinge	1
14	54482810	Hinge Bracket - Platen Cover	1
15	54203768	Spring - Release	1
16	54482811	Mounting Bracket - Platen Cover	1
17	54421657	Seal - 15 x 214 x 13	1
18	54421667	Stud - Platen Cover Mounting	4
19	52152734	Large Cassette Cover	2
19	52152737	Small Cassette Cover	1
20	52152727	Rear Side Fence	3
21	52152731	Rear Side Holder	3
22	54134835	Decal - Paper Level	3
23	52152713	Bottom Plate Pad	2
24	52152710	Bottom Plate	3
25	52152739	Rear Fence	3
26	52052960	Actuator - A3	1
26	52052961	Actuator - 84	1
26	52052962	Actuator - A4R	1
26	52052963	Actuator - 85R	1
26	52052964	Actuator - A4	1
26	52052965	Actuator - 85	1
26	52052966	Actuator - A5R	1
26	52052967	Actuator - A5	1
26	52052968	Actuator - 86R	1
26	52052969	Actuator - B6	1
26	52052970	Actuator - A6R	1
26	52052971	Actuator - 11 x 17	1
26	52052972	Actuator - 11 x 15	1
26	52052973	Actuator - 11 x 14	1
26	52052974	Actuator - 8-1/2 x 13	1
26	52052975	Actuator - 8-1/4 x 13	1
26	52052976	Actuator - 8 x 13	1
26	52052977	Actuator - 8 x 10-1/2	1
26	52052978	Actuator - 8 x 10	1
26	52052979	Actuator - 11 x 8-1/2	1
26	52052992	Actuator - 5-1/2 x 8-1/2	1
26	52052993	Actuator - 8-1/2 x 5-1/2	1
26	52052996	Actuator - 8-1/2 x 11R	1
26	52052997	Actuator - 8-1/2 x 14	1
27	A0082715	Side Fence-Front	3
28	52152720	Front Side Holder	3
29	52152706	Large Cassette Body	2
29	52152709	Small Cassette Body	2
30	59301031	Decal Sheet- Large - LT/LDG	1
30	59301032	Decal Sheet- Small - LT/LDG	1
30	59301033	Decal Sheet- Large - A4/A3	1
30	59301034	Decal Sheet- Small - A4/A3	1
31	52152819	Mounting Bracket Platen Cover	1
32	52152883	Base Holder	1
33	52152884	Arm Holder	1
34	52152835	Crank	1
35	52152888	Sleeve - 8x34	1
36	52152887	Shah- 7 x 40	1
37	52152838	Rubber Magnet	1
38	52152839	Balancer Spring	1
39	52152840	Pin - 4x115mm	1
40	52152841	Pin - 4x100mm	1
41	52152842	Right Spring Platen Cover	1
42	52152843	Left Spring Platen Cover	1
43	52152844	Slide Supporter	1

3. PLATEN COVER AND CASSETTE [A0041

Rev. 5/89

ndex o.	Parts No.	Description	Q'ty Per Assembly
44	52152845	Plate Magnet	1
45	52152848	Platen Base	1
46	52152880	Spring Release	1
101	03150080W	Philips Pan Head Screw - M5 x 8	
102	04130202W	Tapping Screw - M3 x 20	
103	07270050E	Retaining Ring - M5	
104	09644010W	Tapping Screw - M4 x 10	
105	04140102	Tapping Screw - M4x10	1
106	08050083	Retaining Ring - M4	1

4. 1ST AND 2ND PAPER FEED [A004]

Rev. 5/89

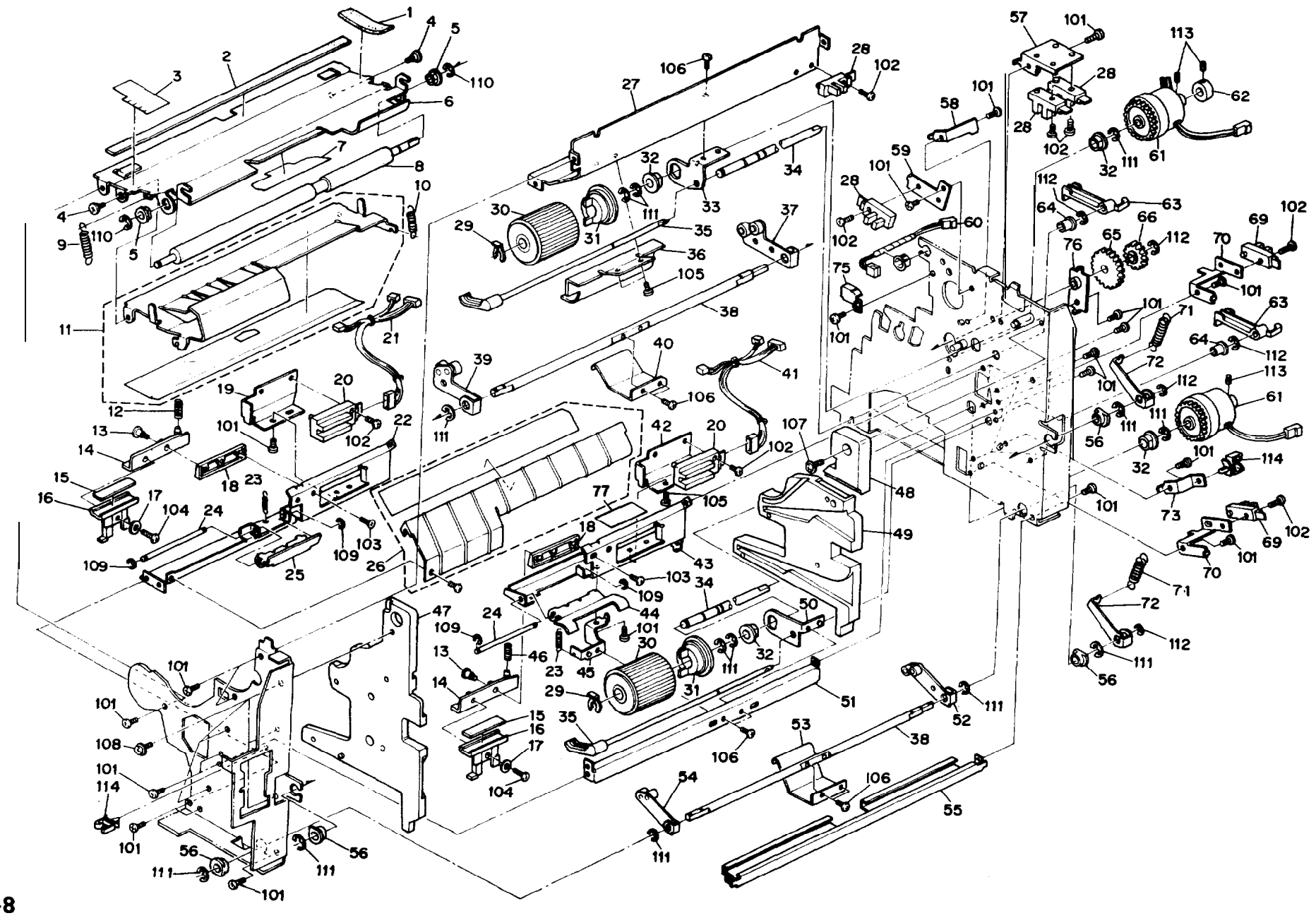

4. 1ST AND 2ND PAPER FEED [A004]

Rev. 10/91

Index No.	Parts ho.	Description	Q'ty Per Assembly
1	52153203	Seal - 1 x 10 x 60 mm	1
2	52153204	Seal - 4 x 10 x 370 mm	1
3	52153202	Mylar Seal - Front Upper Guide	1
4	54422117	Shoulder Screw - Hinge	2
5	50530447	Bushing - 6mm	2
6	52152602	Upper Guide Plate	1
7	52152605	Feed Roller Guide	1
8	52152889	Feed Roller	1
9	54422693	Front Spring - Middle Guide	1
10	54422692	Rear Spring - Middle Guide	1
11	52152606	Middle Guide Plate	1
12	52152644	Spring-Friction Pad	1
13	54422642	Shoulder Screw - M3	2
14	52152555	Pad Arm	2
15	52162844	Friction Pad	2
16	52152583	Pad Holder	2
17	54422638	Collar - Friction Pad Arm	2
18	52152673	Fixing Pad Bracket	2
19	52152590	Lower Size Detection Bracket	1
20	52055253	Photointerruptor Pack	2
21	52155496	Lower Paper Feed Harness	1
22	52152674	Lower Pad Mounting Plate	1
23	52152582	Spring	2
24	52152579	Shaft	2
25	52152593	Lower Arm	1
26	52152609	Lower Guide Plate	1
27	52152570	Upper Paper Feed Stay	1
28	52055250	L.E.O. Sensor Type S	1
29	52152621	Snap Ring - M6	2
30	52152619	Feed Roller	2
31	52152618	Feed Roller Hub	2
32	50530223	Bushing - 8mm	4
33	52152622	Upper Feed Shaft Bracket	1
34	52152617	Feed Shaft	2
35	52152624	Paper End Feeder	2

Inder No.	Parts No.	Description	Q'ty Per Assembly
36	52152780	Upper Feed Guide Plate	1
37	52152652	Upper Rear Arm	1
38	52152646	Shaft	2
39	52152648	Upper Front Arm	1
40	52152647	Upper Lift Arm	1
41	52155495	Transformer Harness - 220/240V	1
42	52152576	Upper Size Detection Bracket	1
43	52152629	Upper Pad Mounting Plate	1
44	52152578	Upper Arm	1
45	52152580	Spring Anchor	2
46	52152643	Upper Spring - Friction Pad	2
47	52152640	Front Cassette Holder	1
48	52152642	Manual Feed Guide	1
49	52152641	Rear Cassette Holder	1
50	52152630	Lower Feed Shaft Bracket	1
51	52152571	Lower Paper Feed Stay	1
52	52152659	Lower Rear Arm	1
53	52152656	Lower Lift Arm	1
54	52152657	Lower Front Arm	1
55	52151134	Lower Paper Feed Stay - Right	1
56	52152662	Bushing	4
57	52153381	Sensor Bracket	1
58	52152634	Paper Feed Clutch holder	1
59	52153481	Sensor Bracket	2
60	52155453	Toner End Harness	2
61	52155314	Magnetic Clutch	2
62	52052866	Magnetic Clutch Collar	1
63	52152626	Paper End Actuator	2
64	54432668	Bushing	1
65	52152597	Idle Gear - 30T	2
66	52152596	Gear - 16T	1
69	52055251	L.E.O. Sensor Type T	2
70	52152637	Paper End Bracket	4
71	52152665	Spring - Lower Lift	2
72	52152663	Pressure Arm	2

Rev. 10/91

Index NO.	Parts No.	Description	Q'ty Per Assembly
73	52152638	Harness Clamp Bracket	2
75	52153482	Sensor Cover	1
76	52152666	Bracket	1
77	A0082574	Upper Guide	1
78	52152788	Mylar-45x120x0.1 mm	1
101	04340080W	Tapping Screw - M4 x 8	
102	03140120W	Philips Pan Head Screw - M4 x 12	
103	03230080W	Philips Sunken Head Screw - M3 x 8	
104	03130120W	Philips Pan Head Screw - M3 x 12	
105	04340060W	Tapping Screw - M4 x 6	
106	03140080W	Philips Pan Head Screw - M4 x 8	
107	09654008W	Tapping Screw with Flat Washer - M4 x 8	
108	08025085	Tapping Screw - M4 x 8	
109	07200025E	Retaining Ring - M2.5	
110	07200050E	Retaining Ring - M5	
111	07200060E	Retaining Ring - M6	
112	07200030E	Retaining Ring - M3	
113	05750060E	Hexagon Headless Set Screw - MS x 6	
114	11050106	Wire Saddle	

6 , REGISTRATION [A004]

June 30, '86

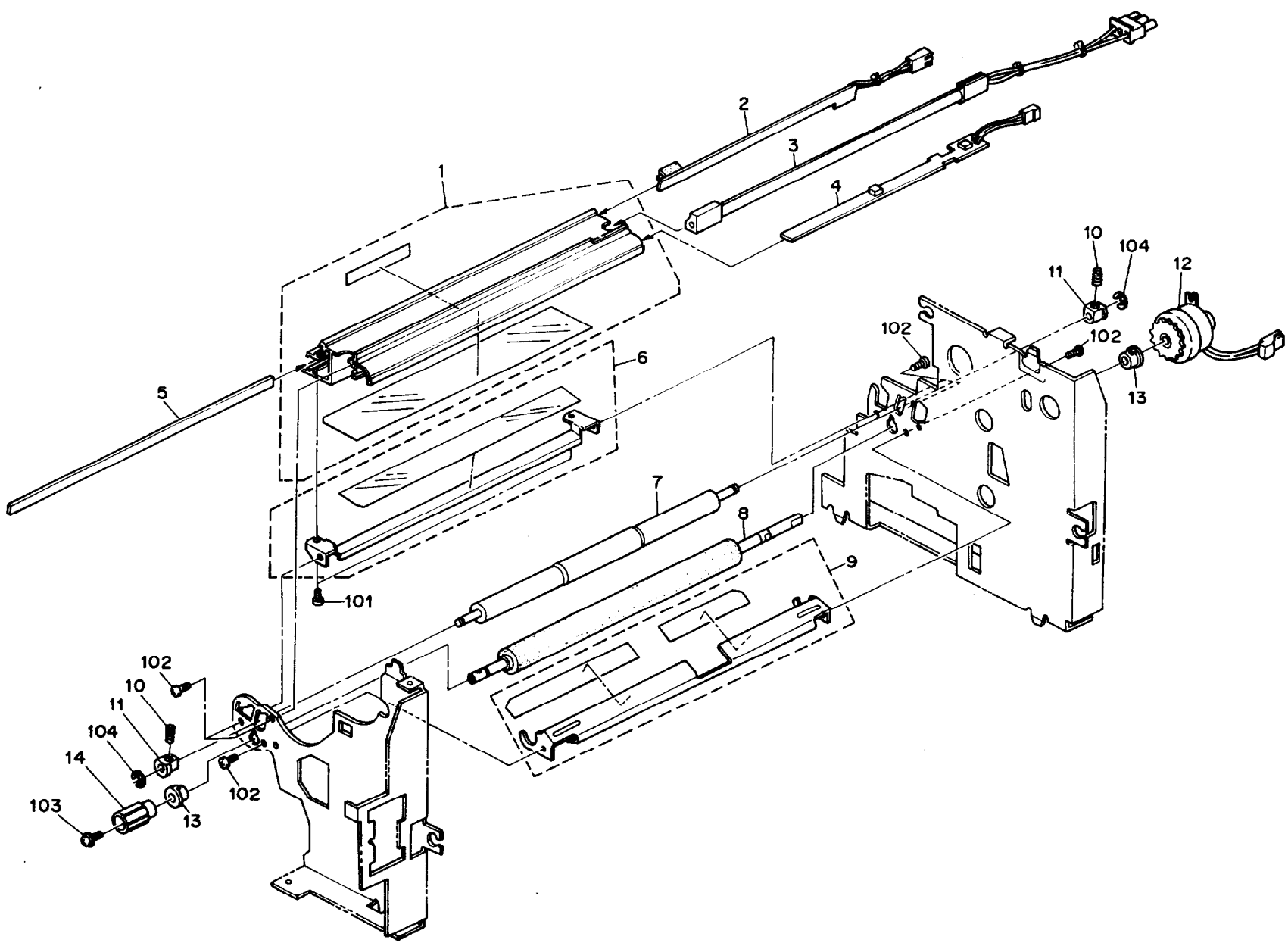

5. REGISTRATION [A004]

Index No.	Parts No.	Description	Q'ty Per Assembly
1	52152278	PTL Guide	1
2	52155225	ID Sensor Board	1
3	52155531	Pre-Transfer Lamp - 430V/1.3W	1
4	52155228	Regist Sensor Board	1
5	52152135	PTL Filter	1
6	52152283	Paper Guide	1
7	52152670	Upper Regist Roller	1
8	52152671	Lower Regist Roller	1
9	52152612	Regist Guide Plate	1
10	54422754	Spring - Registration Roller	2
11	52052697	Bushing - Upper Registration Roller	1
12	AX210011	Registration Clutch	1
13	52152672	Bushing	2
14	52092768	Knob - Registration Roller	1
101	04340060W	Tapping Screw - M4 x 6	
102	04340080W	Tapping Screw - M4 x 8	
103	09654008W	Tapping Screw with Flat Washer - M4 x 8	
104	07200050E	Retaining Ring - M5	

Index No.	Parts No.	Description	Q'ty Per Assembly

6. DRUM SECTION [A004]

June 30, '86

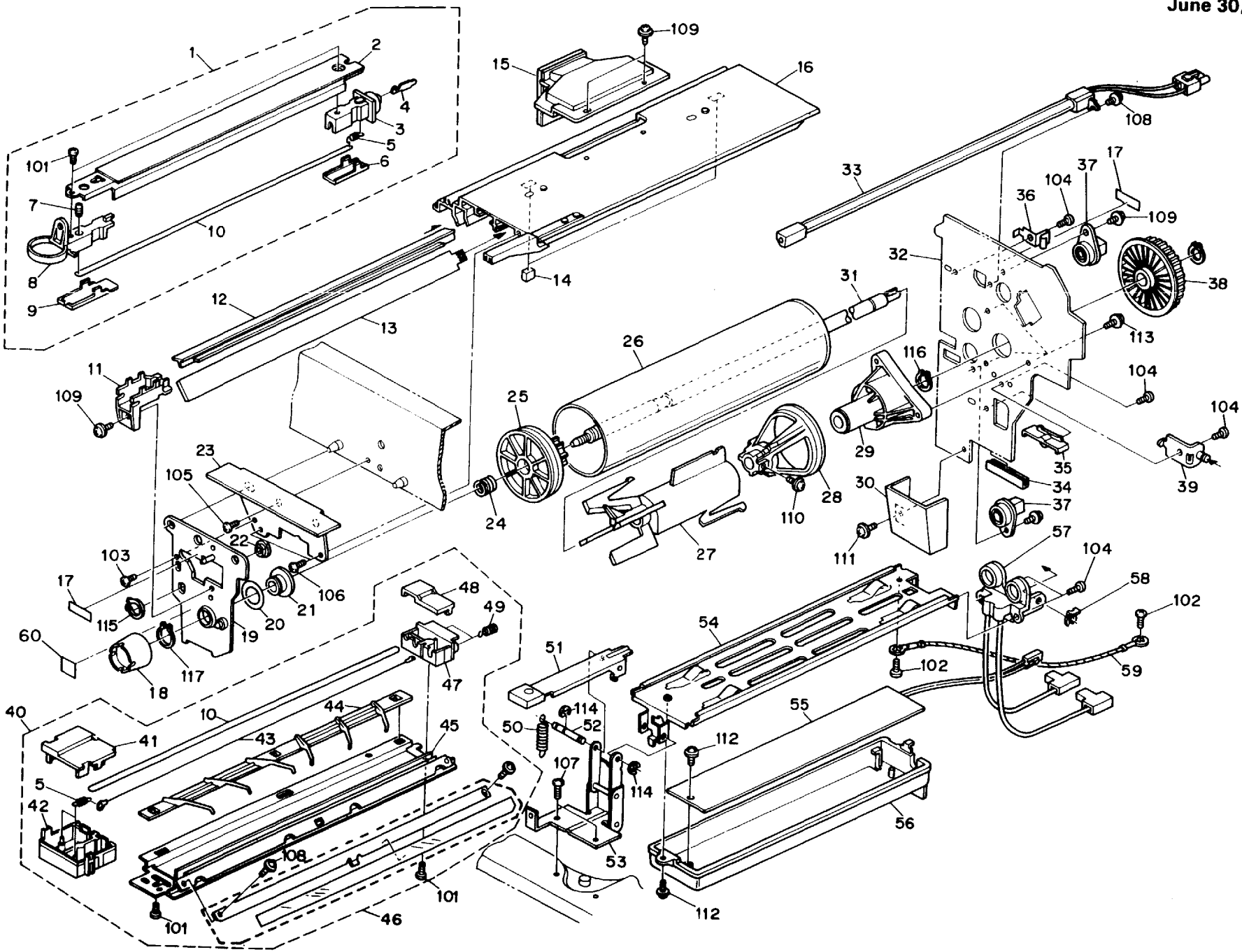

6. DRUM SECTION [A004]

Rev. 10/91

Index No.	Parts No.	Description	Q'ty Per Assemoly
1	52152059	Charge Corona Unit	1
2	54422060	Casing - Main Corona	1
3	A0002109	Rear Endblock - Main Corona	1
4	54422110	Plug - Corona Unit	1
5	54422108	Spring - Corona Wire	2
6	54422068	Rear Cover - Main Corona	1
7	52052069	Adjusting Screw	1
8	54422065	Front End Block - Main Corona	1
9	54422066	Front Cover - Main Corona	1
10	54429003	Main Corona Wire (10 pcs/set)	1
11	54422123	Cleaner - Main Corona Wire	1
12	52152130	QL Filter	1
13	52155234	Erase Lamp Board	1
14	52152054	Seal 2 x 10 x 15 mm	1
15	52152063	Duct Outlet	1
16	52152050	C & D Corona Rail	1
17	54347916	High Voltage Decal	1
18	52112267	Drum Shaft Knob	1
19	52152310	Drum Stay	1
20	52112259	Spacer - M20 x 0.1	1
21	52112365	Bushing - 12 x 19 x 11 mm	1
22	54423585	bushing	1
23	52152245	Front Drum Support	1
24	52112278	Drum Flange Spring	1
25	54472257	Front Orum Flange	1
26	52059510	Drum	1
27	54472286	Drum Guide	1
28	52112285	Rear Flange	1
29	52112262	Drum Shaft Holder	1
30	52152150	T & S Corona Harness Cover	1
31	AD015004	Drum Shaft	1
32	52152251	Rear Drum Support	1
33	52155532	wenching Lamp - 430V/1.3W	1
34	52152265	Edging	1
35	52053872	Rear Bracket - T & S Corona	1

Index No.	Parts No.	Description	Q'ty Per Assembly
36	52052121	Spring Plate	1
37	54422165	Receptacle Housing - Main Corona	2
▸38	A0092405	Timing Pulley - 48T	1
39	52152131	T & S Corona Holder	1
40	AD004048	T&S Corona Guide	1
41	52053850	Front Endblock Cover - T & S Corona	1
42	52053851	Front Endblock - T & S Corona	1
43	54429004	T&S Corona Wire (10 pcs/set)	1
44	A0472121	T & S Corona Guide	1
45	52152115	T & S Corona Casing	1
46	52152119	T & S Corona Guide Plate	1
47	52053853	Rear Endblock - T & S Corona	1
48	52053874	Rear-Endblock Cover - T & S Corona	1
49	52053821	Terminal Spring	2
50	54031030	Tension Spring	1
51	52152155	T/S Corona Lever	1
52	52152146	Shaft	1
53	52152137	Link	1
▸54	52152125	T & S Corona Rail	1
55	52155370	Drum Heater - 8W	1
56	52152270	Heater Casing	1
57	AD021032	T & S Receptacle	1
58	54472681	Snap Ring	1
59	52155371	Grounding Wire	1
60	52152315	Decal - Drum Knob	1
▸61	A0082274	Stopper- T&S Corona Unit	1
101	03140050W	Philips Pan Head Screw - M4 x 5	
102	03140060'4	Philips Pan Head Screw - M4 x 6	
103	03140060W	Philips Pan Head Screw - M4 x 6	
104	03140080W	Philips Pan Head Screw - M4 x 8	
105	04340060W	Tapping Screw - M4 x 6	

• NOTE: Refer to last frame on last fiche of product Parts Catalog

June 30, '86

ndex lo.	Parts No.	Description	Q'ty Per Assembly
106	04340080W	Tapping Screw - M4 x 8	
107	04340100W	Tapping Screw - M4 x 10	
108	09513006W	Philips Screw with Flat Washer - M3 x 6	
109	09514008W	Philips Screw with Flat Washer - M4 x 8	
110	09514012W	Philips Screw with Flat Washer - M4 x 12	
111	09644008W	Tapping Screw with Flat Washer - M4 x 8	
112	09654008W	Tapping Screw with Flat Washer - M4 x 8	
113	08025060	Tapping Screw - M4 x12	
114	072000308	Retaining Ring - M3	
115	07250100E	Retaining Ring - M10	
116	07250120E	Retaining Ring - M12	
117	07250180W	Retaining Ring - M18	

7. TRANSPORT SECTION [A004]

Rev. 10/91

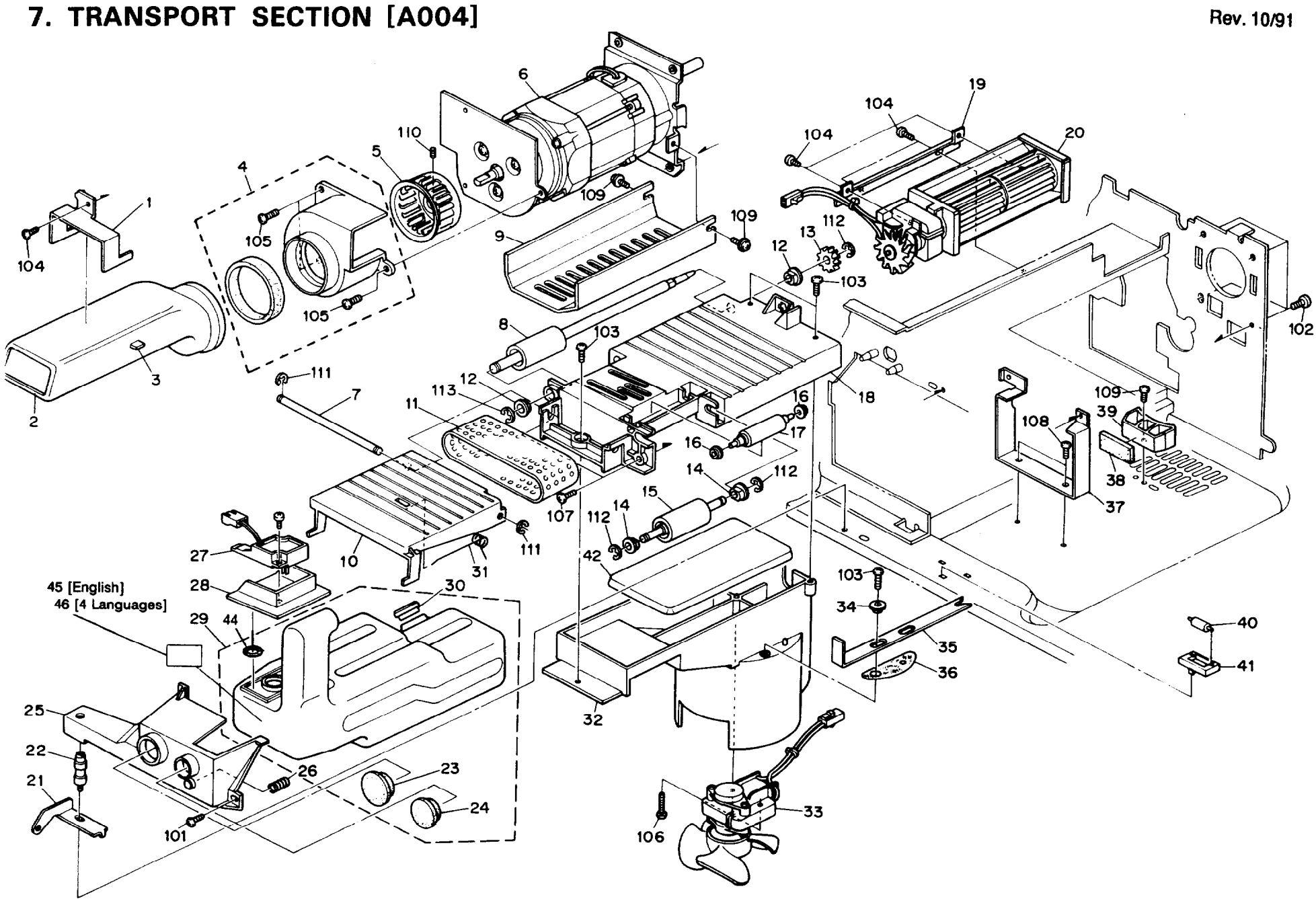

7. TRANSPORT SECTION [A004]

Rev. 10/91

Index No.	Parts No.	Description	Q'ty Per Assembly
1	52152061	Duct Bracket	1
2	52152060	Duct Inlet	1
3	52152054	Seal 2 x 10 x 15 mm	1
4	52152066	Fan Cover	1
5	54422143	Fan - Main Corona	1
6	52155410	Main Motor - AC 48W	1
6	52155411	Main Motor - AC 48W UL	1
7	52153855	Guide Plate Shaft	1
8	52153917	Transport Drive Roller	1
9	52151085	Cover Motor	1
10	52153853	Transport Guide Plate	1
11	52153978	Transport Belt	1
12	52153931	Bushing - 8 mm	2
13	54423872	Gear - 16z	1
14	50530447	Bushing - 6mm	2
15	52153923	Driven Roller	1
16	54432668	Bushing	1
17	52153942	Transport Guide Roller	1
18	52153910	Transport Frame	1
19	52151117	Outlet Fan Bracket	1
20	52155423	Outlet Fan Motor - AC 24/22W	1
21	52151293	Front Cover Angle - Right	2
22	52153884	Shaft	1
23	52153666	Toner Collection Bottle Cap	1
24	54423664	Toner Collection Bottle Cap - Small	1
25	52153886	Toner Collection Bottle Cover	1
26	52153889	Spring - Toner Collection Bottle	1
27	52155304	Toner Overflow Sensor	1
28	52153887	Sensor Holder	1
29	A0089505	Toner Collection Bottle	1
30	52153666	Toner Collection Bottle Cap	1
31	52153851	Spring - Guide Plate	1
32	52153928	Duct	1
33	52155426	Vacuum Fan Motor - 14/12W	1
34	54032048	Bushing - 4mm	1

Index No.	Parts No.	Description	Q'ty Per Assembly
35	52153877	Plate	1
36	52153878	Sheet	1
37	52153897	Transport Stay	1
38	52153880	Cushion	1
39	52153935	Toner Collection Bottle Stopper	1
40	52153677	Roller	1
41	52153675	Roller Holder	1
42	52153892	Ozone Filter	1
43	52151136	Cushion 12x65x2mm	1
44	AA151284	Seal - 15 x 26 x 3mm	1
45	AA000059	Caution Decal - English	1
46	AA000060	Caution Decal - 4 Languages	1
47	A0073763	Adhesive Tape Sensor Holder	1
101	03140060W	Philips Pan Head Screw - M4 x 6	
102	03150080W	Philips Pan Head Screw - M5 x 8	
103	04140102W	Tapping Screw - M4 x 10	
104	04340060W	Tapping Screw - M4 x 6	
105	04340080W	Tapping Screw - M4 x 8	
106	04130252W	Tapping Screw - M3 x 20	
107	04140100W	Tapping Screw - M3 x 10	
108	04140080W	Tapping Screw - M4 x 8	
109	09644008W	Tapping Screw with Flat Washer - M4 x 8	
110	05740060E	Hexagon Headless Set Screw - M4 x 6	
111	07200040E	Retaining Ring - M4	
112	07200050E	Retaining Ring - M5	
113	07200060E	Retaining Ring - M6	

8. FUSING SECTION I [A004]

June 30, '86

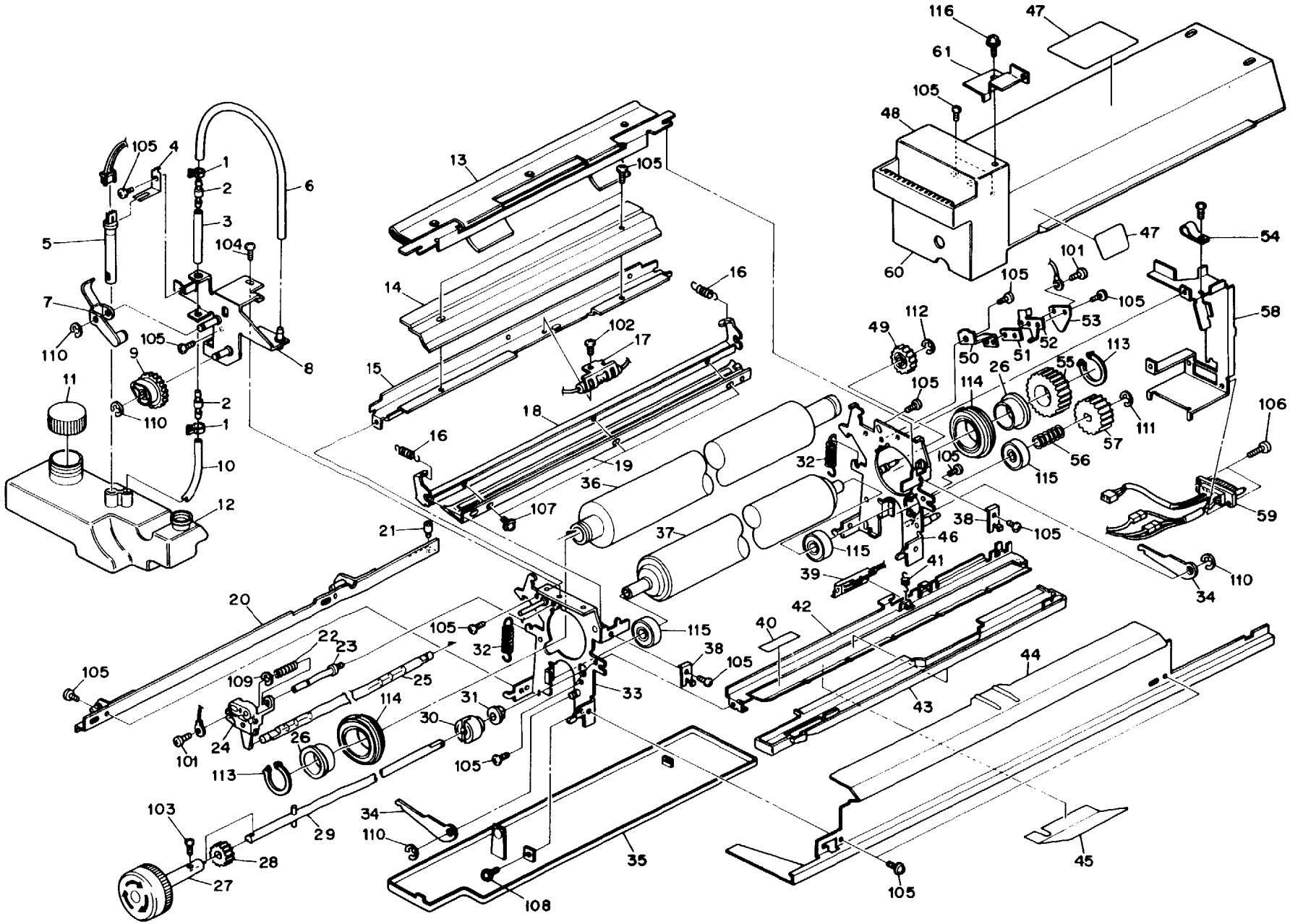

8. FUSING SECTION I [A004]

Rev. 10/91

Index No.	Parts No.	Description	Q'ty Per Assembly
*	52150240	Fusing Unit - 115V	1
*	52150245	Fusing Unit - 220/240V	1
1	54474241	Tube Clamp	1
2	54154310	Valve - Oil Pump	2
3	54474229	Sleeve - Oil Pump	1
4	52154411	Spring Plate	1
5	52095320	Oil End Sensor	1
6	52094410	Oil Tube - 140 mm	1
7	52094405	Oil Pump Lever	1
8	52094400	Oil Pump Bracket	1
9	52094407	Cam Gear - 32T	1
10	52094409	Oil Tube - 105 mm	
11	54474242	Oil Bottle Cap	1
12	52154225	Oil Tank	1
13	52154130	Oil Supply Pad	1
14	52154208	Spring Plate - Oil Supply Pad	1
15	52154093	Upper Frame	1
16	52154121	Spring - Oil Blade	2
17	52155390	Thermofuse	1
18	52154116	Oil Blade Holder	
19	52154117	Oil Blade	
20	54424100	Left Fusing Unit Slide Guide	1
21	54091855	Mounting Pin	1
22	54474221	Lamp Holder Spring	
23	54474220	Lamp Terminal Stud	1
24	54474216	Front Lamp Terminal - Fusing Unit	
25	52155307	Fusing Lamp - 115V	1
25	52155309	Fusing Lamp - 220/240V	
26	52054321	Bushing - 20 mm	2
27	52154139	Knob - Fusing Unit	1
28	52094408	Gear - 16T	1
29	52094149	Fusing Unit Shaft	1
30	52054135	Collar - Fusing	1
31	50530223	Bushing - 8mm	1
32	52154096	Spring - Pressure	2
33	52154051	Front Side Plate - Fusing	1
34	52154095	Pressure Lever	2
35	52154143	Oil Pan	1
36	52154320	Hot Roller	1
37	AE020015	Pressure Roller	1
38	52154196	Oil Sump Holder	2
39	52155250	Thermistor	1
40	52154211	Decal - Thermofuse	1
41	52034146	Thermistor Spring	1
42	52154177	Entrance Guide Bracket	1
43	52154195	Oil Sump	1
44	52154108	Right Rail - Fusing	1
46	52154052	Rear Side Plate - Fusing	1
47	54424421	Decal - Small	2
48	A0084167	Fusing Unit Cover	1
49	52054181	Gear - 18T	1
50	54424201	Rear Bracket - Lamp Terminal	1
51	54324118	Insulator - B	1
52	54154097	Lamp Terminal	1
53	54324117	Insulator - A	1
54	AA115003	Wire Clamp	1
55	54424086	Gear - 40Z	1
56	54424152	Spring - Fusing Drive	1
57	54424151	Gear - 30Z	1
58	52155818	Connector Unit Bracket	1
59	52155464	Fusing Harness	1
60	52154210	Decal	1
61	52154168	Fusing Mounting Bracket	1

Rev. 5/89

Index No.	Parts No.	Description	Q'ty Per Assemoly
101	09503005M	Philips Screw with Lock Washer - M3 x 5	
102	03130060W	Philips Pan Head Screw - M3 x 6	
103	03140100W	Philips Pan Head Screw - M4 x 10	
104	04340060W	Tapping Screw - M4 x 6	
105	04340080W	Tapping Screw - M4 x 8	
106	04340100W	Tapping Screw - M4 x 10	
107	09513005	Philips Screw with Flat Washer - M3	
108	09644008W	Tapping Screw with Flat Washer - M4 x 8	
109	07200030E	Retaining Ring - M3	
110	07200050E	Retaining Ring - M5	
111	07200060E	Retaining Ring - M6	
112	07200070E	Retaining Ring - M7	
113	07250180W	Retaining Ring - M18	
114	08053377	Ball Bearing - 25 x 42 x 9 mm	
115	08053104	Ball Bearing - 8x22x7mm	1
116	04440102W	Tapping Hexagon Head Screw - M4 x 10	

9. FUSING SECTION II [A004]

June 30, '86

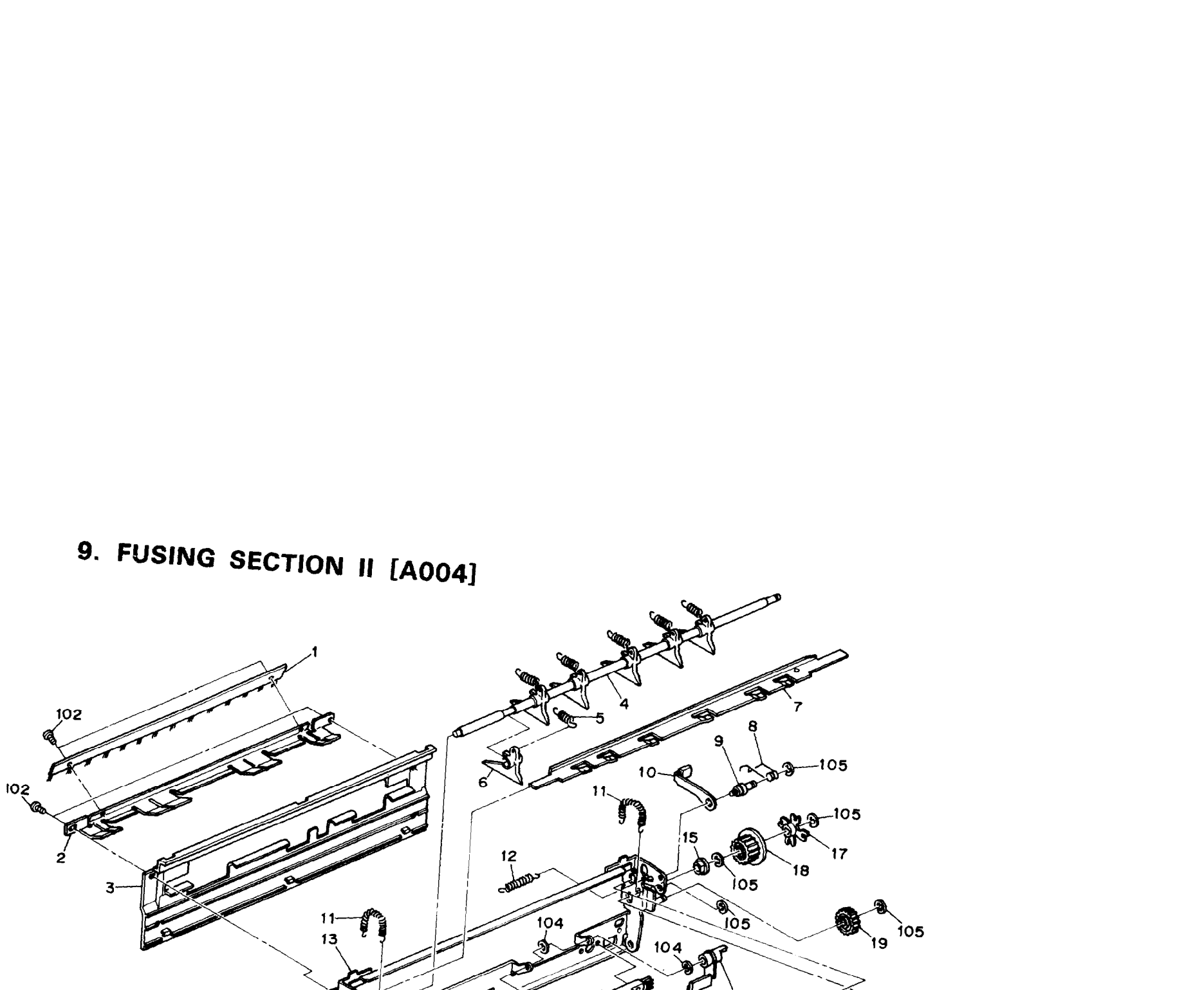

9. FUSING SECTION II [A004]

June 30, '86

Index No.	Parts No.	Description	Q'ty Per Assembly
1	52154497	Exit Antistatic Brush	1
2	54424482	Upper Exit Guide	1
3	54424500	Cover - Exit Ass'y	1
4	52054220	Shaft - Hot Roller Stripper	1
5	52054305	Spring - Hot Roller Stripper	6
6	52159002	Hot Roller Stripper (6pcs/set)	1
7	54424465	Stripper Pawl Plate	1
8	54424464	Spring - Rear Release Lever	1
9	54424444	Stud - Exit Ass'y Release Lever	2
10	54424442	Rear Release Lever - Exit Ass'y	1
11	54154457	Spring - Exit	2
12	54424467	Spring - Stripper Pawl Plate	1
13	54424451	Flame - Exit	1
14	54424440	Front Release Lever - Exit Ass'y	1
15	50530447	Bushing - 6mm	2
16	54424463	Spring - Front Release Lever	1
17	54424495	Slip Clutch	1
18	54424494	Gear 19Z	1
19	54424492	Gear 20Z	1
20	54424491	Actuator - Paper Exit Sensor	1
21	52155230	Photointerrupter - L Type	1
22	54424485	Feeler - Paper Exit Sensor	1
23	52094470	Upper Exit Roller	1
24	52154485	Lower Exit Roller	1
25	52154063	Lower Exit Guide	1
26	52154488	Exit Roller Belt	1

Index No.	Parts No.	Description	Q'ty Per Assembly
101	03140100W	Philips Pan Head Screw - M4 x 10	
102	04340080W	Tapping Screw - M4 x 8	
103	09644008W	Tapping Screw with Flat Washer - M4 x 8	
104	07200030E	Retaining Ring - M3	
105	07200050E	Retaining Ring - M5	
106	08053399	Bushing - 6 x 10 x 8 mm	

10. DEVELOPMENT UNIT [A004]

Rev. 10/91

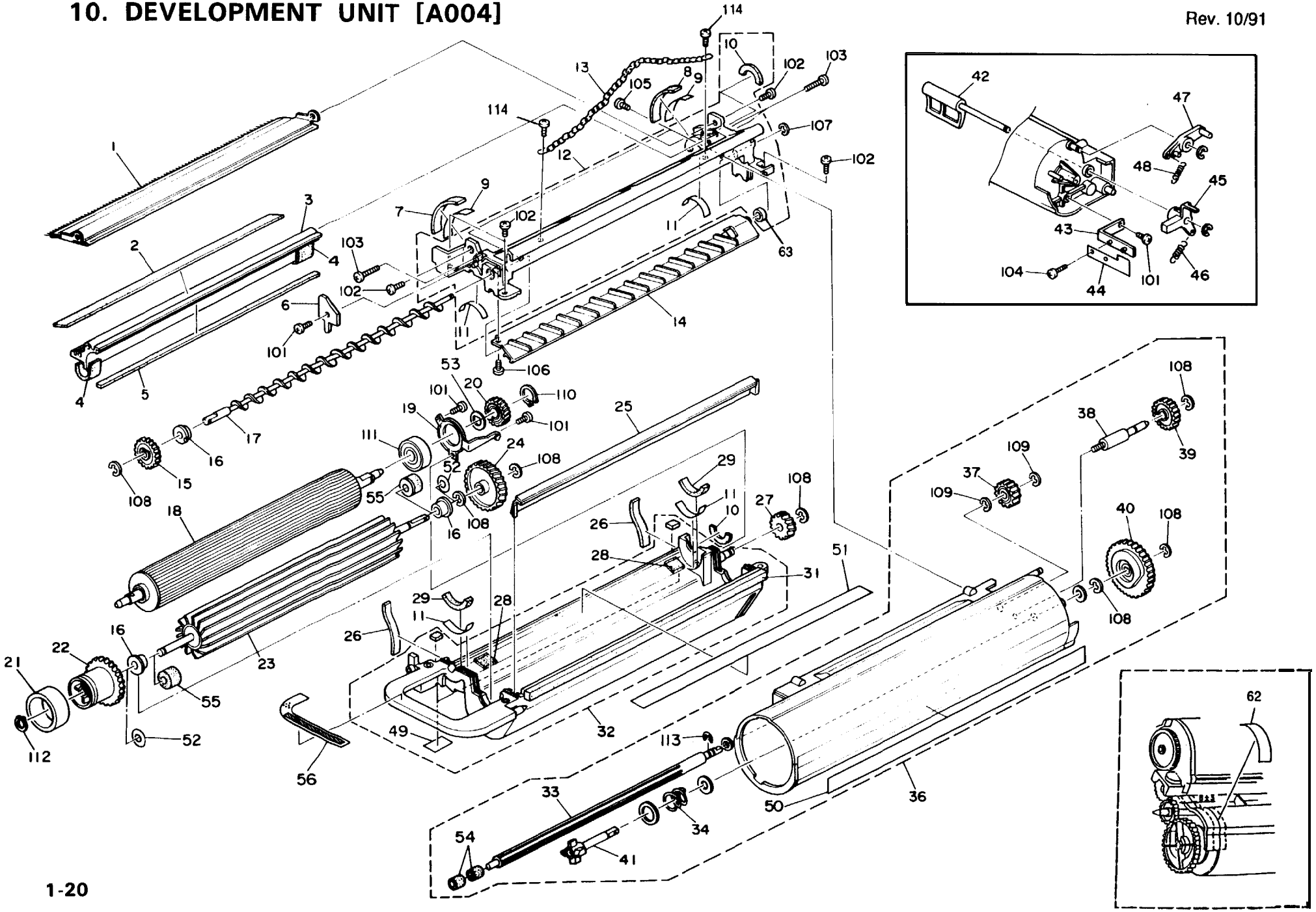

10. DEVELOPMENT UNIT [A004]

Rev. 10/91

Index No.	Parts No.	Description	Q'ty Per Assembly
*	52153000	Development Unit	1
*	59318752	Installation Procedure - Color Dev.	1
1	52153191	Entrance Seal Ass'y	1
2	52153154	Seal - Upper	1
3	52153161	Doctor Plate	1
4	52153162	Side Seal - Doctor Blade	1
5	52153155	Seal - Doctor	1
6	52153096	Adjusting Plate - Magnet Angle	1
7	52153051	Side Seal Right	1
8	52153052	Side Seal Left	1
9	52153060	Seal - 52 x 4 mm	1
10	54423109	Seal - Development Roller	2
11	52153097	Sheet	4
12	52153140	Upper Casing	1
13	AG051052	Development Unit Band	1
14	52153169	Backspill Plate	1
15	52153166	Gear - 25T	1
16	52053103	Bushing - 6mm	1
17	52153165	Development Auger	1
18	52153124	Development Sleeve	1
19	52153110	Bearing Retainer	1
20	52153111	Gear - 25T	1
21	52153089	Developer Knob	1
22	52153100	Gear - 44T	1
23	52153083	Paddle Roller	1
24	52153102	Gear - 39T	1
25	52153120	Toner Supply Guide	1
26	52153056	Seal Development	2
27	52153115	Gear - 17T	1
28	52153065	Brush Seal - 20 x 6 mm	1
29	52153153	Mylar - 6 x 35 mm	2
31	AA151194	Seal - Right	1
32	52153074	Lower Casing	1
33	52153302	Toner Supply Roller	1
34	52153347	Spring - Gear	1
36	A0093009	Toner Supply Unit	1
37	52053306	Gear - 18T	1
38	52153281	Pin	1
39	54473236	Gear - 23T	1
40	52153321	Gear - 56T	1
42	59313337	Color Toner End Lever	1
43	59313386	Actuator Bracket	1
44	59313382	Actuator - Red	1
44	59313384	Actuator - Blue	1
44	59313385	Actuator - Green	1
45	59313332	Toner End Actuator	1
46	59313394	Spring - Arm	1
47	59313330	Toner End Lever	1
48	54423233	Spring - Drive Wheel	1
49	52153073	Mylar	2
50	52153298	Seal - 405 x 5 x 2 mm	1
51	52153078	Plate - Developer Casing	1
52	54473145	Mylar Seal - Paddle Roller	1
53	52153108	Spacer - Development Sleeve	1
54	52153303	Seal - Toner Supply Roller	2
55	52153085	Seal - Paddle Roller	2
56	59313390	Decal - Color Development Unit	
• 57	52153327	Shaft -Agitator	1
• 58	52153328	Joint - Hopper	1
• 59	52153256	Seal - Toner Supply	1
• 60	52153072	Side Magnet	2
• 61	59313003	Color Toner Supply Unit	1
62	AA150205	Seal - 20 x 72mm	1
63	52153180	Seal-Ring	1

• NOTE: Refer to las frame on last fiche of product Parts Catalog

Rev. lo/91

Index No.	Parts No.	Description	Q'ty Per Assemblv
101	03140060W	Philips Pan Head Screw - M4 x 6	
102	03140100W	Philips Pan Head Screw - M4 x 10	
103	03140240W	Philips Pan Head Screw - M4 x 24	
104	03130080W	Philips Pan Head Screw - M3 x 8	
105	09514008W	Philips Screw with Flat Washer - M4 x 8	
106	09654008W	Tapping Screw with Flat Washer - M4 x 8	
107	07200025E	Retaining Ring - M2.5	
108	07200050E	Retaining Ring - M5	
109	07200070E	Retaining Ring - M7	
110	07250140E	Retaining Ring (C-type) - M14	
111	0803426	Ball Bearing - 15 x 32 x 9mm	
112	07270060E	Retaining Ring - M6	
113	07200060E	Retaining Ring - M6	
114	09654012W	Tapping Screw with Flat Washer - M4 x 12	
115	08074103	Spacer - 5mm	1
116	07200040E	Retaining Ring - 4mm	1

11. CLEANING UNIT [A004]

Rev. 10/91

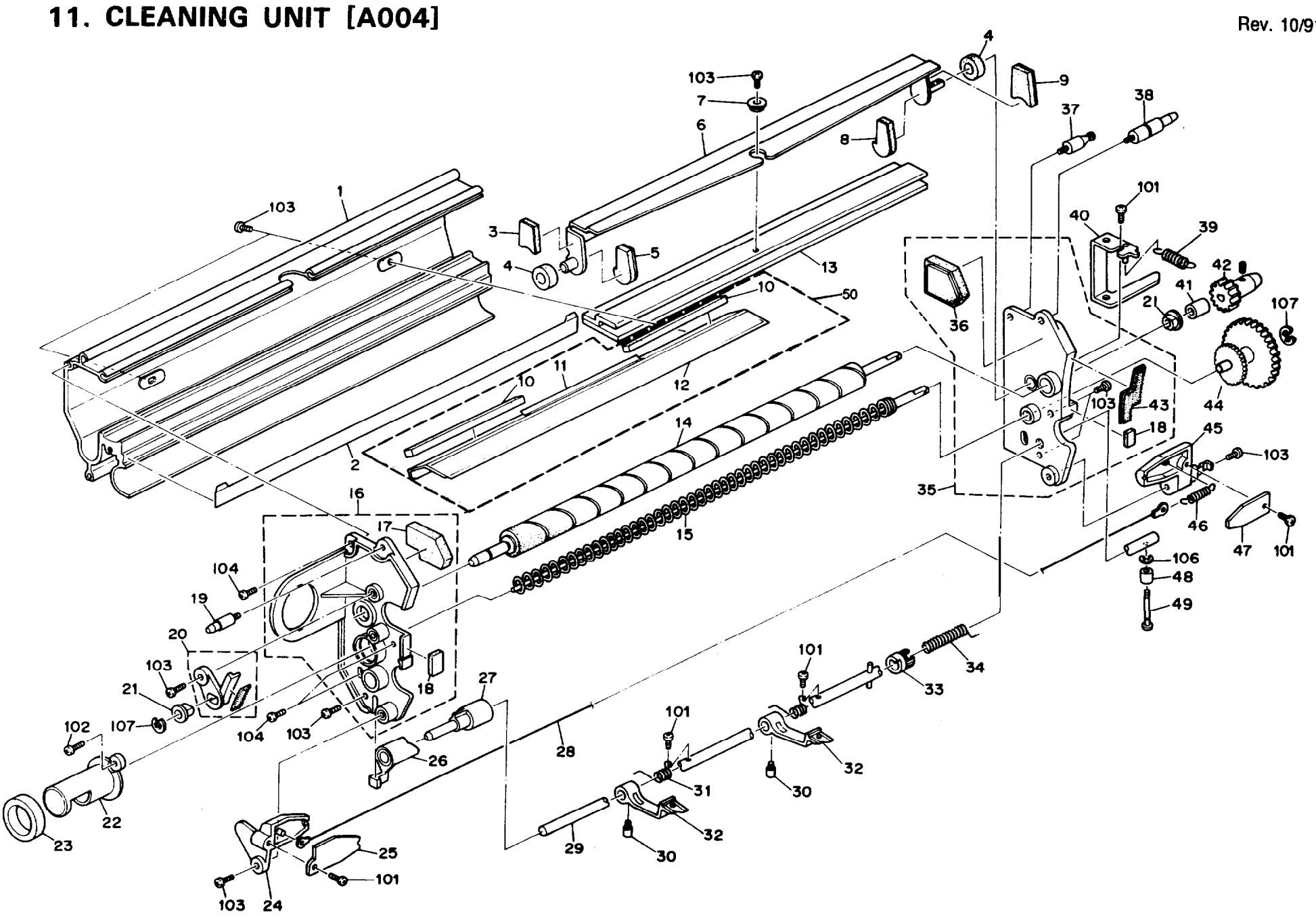

11. CLEANING UNIT [A004]

Rev 0/91

Index No.	Parts No.	Description	Q'ty Per Assembly
*	52153550	Cleaning Unit	1
1	52053551	Cleaning Unit Casing	1
2	52159003	Seal - Cleaning Unit	1
3	52053602	Seal - Front Outer	1
4	54423593	Seal - Cleaning Blade Shaft	2
5	52053604	Seal - Front Inner	1
6	52053575	Cleaning Blade Holder	1
7	54423570	Shoulder Sleeve	1
8	52053605	Seal - Rear Inner	1
9	52053603	Seal - Rear Outer	1
10	52153589	Seal - 6 x 8 x 105 mm	1
11	52153588	Blade Cleaner Plate	1
12	52153585	Blade Cleaner	1
13	52053565	Cleaning Blade	1
14	52153581	Cleaning Brush	1
15	52153606	Toner Collection Coil	1
16	52153552	Front Side Plate - Cleaning	1
17	52153600	Seal - Blade Front	1
18	52153555	Rubber Seal - Cleaning Small	2
19	52053673	Setting Pin	1
20	52053561	Holder	1
21	54463707	Bushing - 6 x 10 x 6 mm	1
22	52153663	Toner Collection Joint	1
23	52153680	Seal - 19 x 36 x 10 mm	1
24	52053647	Front Endblock - PCC	1
25	52053651	Front Endblock Cover - PCC	1
26	52053950	Cam	1
27	52053975	Cam	1
28	52059001	Charge Wire - Pre Cleaning Corona	1
29	52053958	Pick-Off Pawl Shaft	1
30	52053966	Set Screw	2
31	52053965	Spring	2
32	52153596	Pick-Off Pawl	2
33	52053981	Collar - Spring	1
34	54423904	Spring - Pick-Off Pawl Slide	1
35	52153553	Rear Side Plate - Cleaning	1
36	52153601	Seal - Blade Rear	1
37	52053671	Spring - Anchor	1
38	52053583	Rear Guide Pin - Cleaning	1
39	54182859	Spring - Regist Roller (Front)	1
40	52053617	Pressure Arm	1
41	54204193	Collar - Release Cam	1
42	52053582	Gear - 15T	1
43	52053599	Side Seal - Cleaning Rear	1
44	52153612	Gear - 35T	1
45	52053649	Rear Endblock - PCC	1
46	54422108	Spring - Corona Wire	2
47	52053653	Rear Endblock Cover - PCC	1
48	54182116	Spacer - Guard	1
49	52053968	Set Screw - Separator Shaft	1
50	**52153584**	**Blade Cleaner Assembly**	
101	03130060W	Philips Pan Head Screw - M3 x 6	
102	03130080W	Philips Pan Head Screw - M3 x 8	
103	03140080W	Philips Pan Head Screw - M4 x 8	
104	03140100W	Philips Pan Head Screw - M4 x 10	
105	06230140E	Spring Pin - 3 x 14mm	
106	07200025E	Retaining Ring - M2.5	
107	07200040E	Retaining Ring - M4	

12. OPTICS SECTION I [A004]

June 30, '86

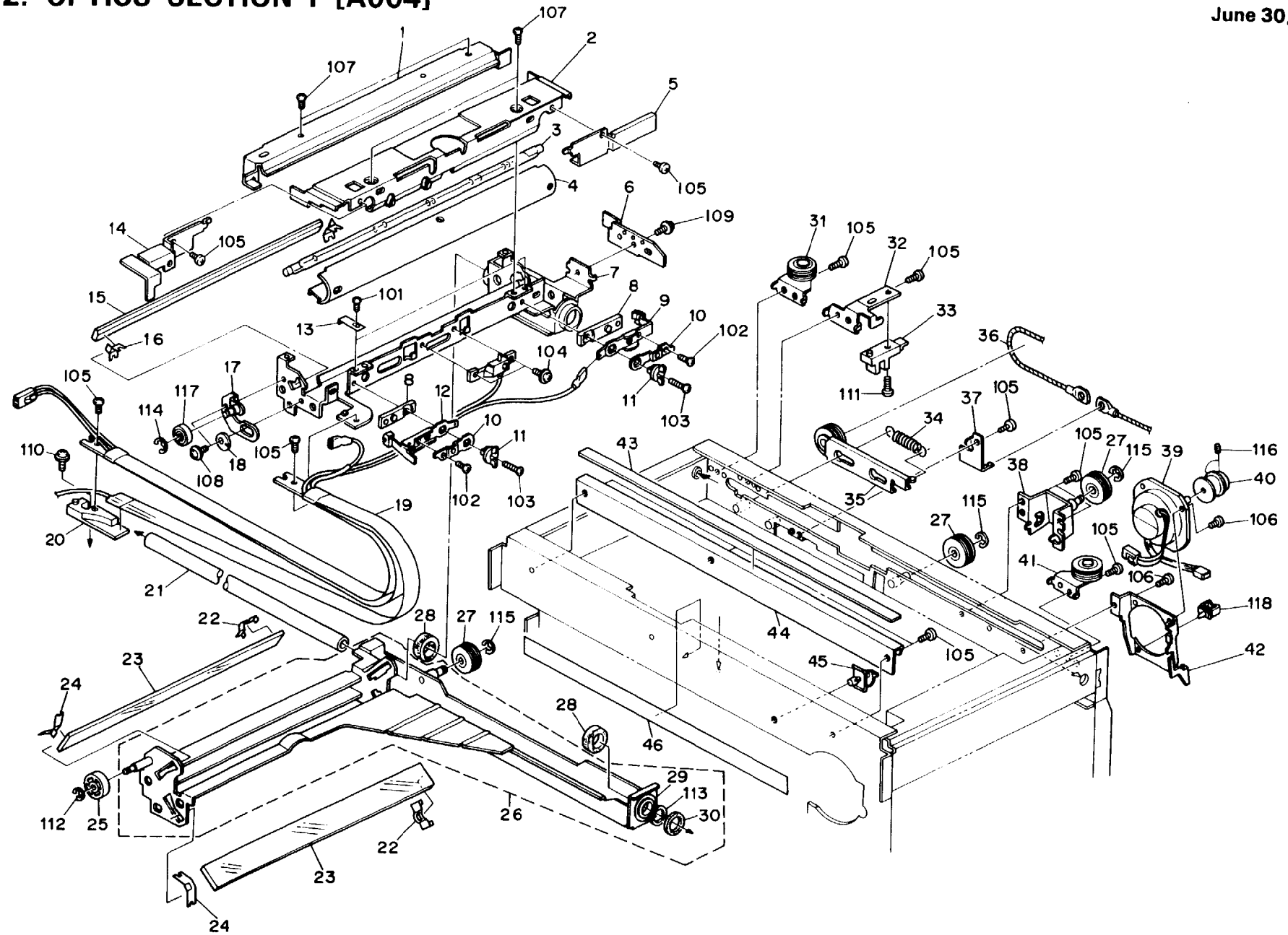

12. OPTICS SECTION I [A004]

Rev. 10/91

Index No.	Parts No.	Description	Q'ty Per Assembly
• 1	A0081698	Reflector - AID	1
2	52151691	Reflector Cover	1
3	52155303	Exposure Lamp - 85V/250W	1
4	52151696	Main Reflector	1
5	52111712	Rear Cover - Terminal	1
6	52151697	Wire Stopper Plate	1
7	52151681	1st Scanner Ass'y	1
8	54201675	Insulator - Lamp Terminal	2
• 9	54421700	Exposure Lamp Terminal	1
10	54201682	Support - Lamp Terminal	2
11	54201676	Spacer - Lamp Terminal	2
12	54421705	Rear Terminal - Exposure Lamp	1
13	54091705	Clamp - Reflector	2
14	52111711	Front Cover - Terminal	1
15	52111710	1st Mirror	1
16	54421711	Spring Plate - 1st Mirror	2
17	52051691	Stud Bracket	1
18	52051694	Adjusting Cam - Start Lever	1
19	52155288	Optics Harness	1
20	52151942	Scanner Drive Wire Bracket	1
21	52151864	Rear Guide Rod	1
22	54421741	Rear Spring Plate - 2nd and 3rd Mirror	2
23	54421740	2nd and 3rd Mirror	2
24	54421742	Front Spring Plate - 2nd and 3rd Mirror	2
25	52091694	Guide Roller - 1st Scanner	1
26	52151721	2nd Scanner Ass'y	1
27	54421735	Pulley	1
28	54421748	Cleaner - Guide Rod	2
29	52111733	Bushing - 2nd Scanner	2
30	52051923	Spacer - 12.5 x 19 x 1MM	1
31	52091870	Left Pulley	1
32	52151893	H.P. Sensor Bracket	1
33	52055251	L.E.D. Sensor Type T	2
34	54421890	Spring - Wire Tightner	1
35	52151886	Wire Pulley Tightener	1

Index No.	Parts No.	Description	Q'ty Per Assembly
36	A0041873	Scanner Drive Wire	1
37	A0041798	Scanner Wire Bracket	1
38	52151881	Pulley Bracket	1
39	52155300	Scanner Drive Motor - DC55W	1
39	52155301	Scanner Drive Motor - DC55W - ROC	1
40	52051869	Scanner Drive Pulley	1
41	52091875	Right Pulley	1
42	52151866	Lens Drive Motor Bracket	1
43	52151853	Mylar - 15 x 350 mm	1
44	52151859	Guide Channel	1
45	52151857	Harness Clamp	1
46	54421969	Mylar Sheet - Terminal	1
• 48	52151702	Clip - Exposure Lamp	1
101	03130040W	Philips Pan Head Screw - M3 x 4	
102	03130080W	Philips Pan Head Screw - M3 x 8	
103	03130120W	Philips Pan Head Screw - M3 x 12	
104	04140080W	Tapping Screw - M4 x 8	
105	04340060W	Tapping Screw - M4 x 6	
106	04340080W	Tapping Screw - M4 x 8	
107	09513006W	Philips Screw with Flat Washer - M3 x 6	
108	09514004W	Philips Screw with Flat Washer - M4 x 4	
109	09514008W	Philips Screw with Flat Washer - M4 x 8	
110	09644006W	Tapping Screw with Flat Washer - M4 x 6	
111	03140120W	Philips Pan Head Screw - M4 x 12	
112	07200040E	Retaining Ring - M4	
113	07250200E	Retaining Ring - M20	
114	07200060E	Retaining Ring - M6	
115	07200070E	Retaining Ring - M7	
116	05740060E	Hexagon Headless Set Screw - M4 x 6	
117	08053036	Ball Bearing - 8 x 16 x 5mm	
118	11050008	Nylon Clip - 2N	

• NOTE: Refer to last frame on last fiche of product Parts Catalog

13. OPTICS SECTION II [A004]

Rev. 10/91

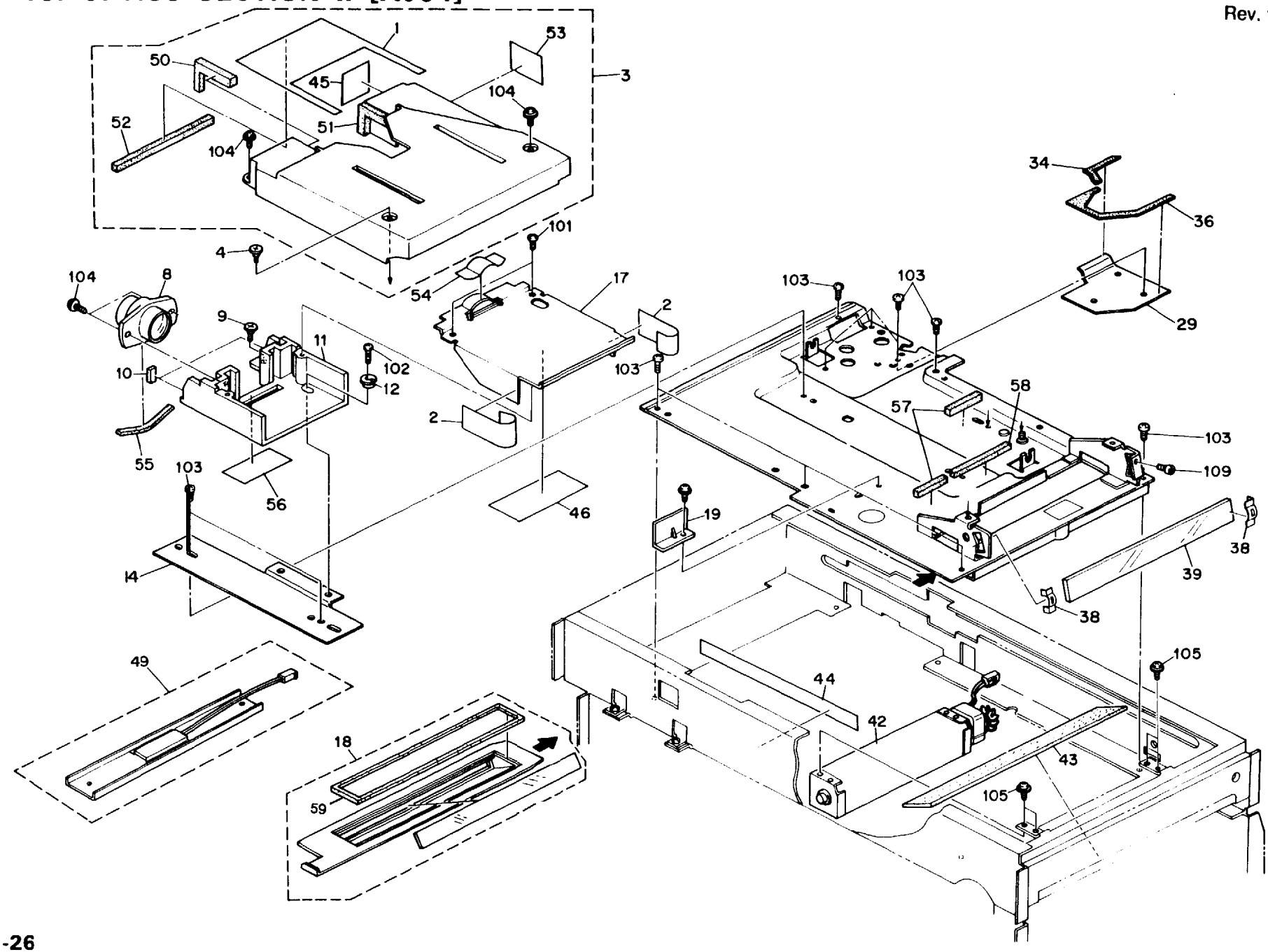

13. OPTICS SECTION II [A004]

Rev. 10/91

Index No.	Parts No.	Description	Q'ty per Assembly
1	A0041760	Mylar Seal - Mirror Cover - Upper	1
2	52151778	Mylar - Shielding Plate	2
3	A0041770	4th Mirror Cover	1
4	54032075	Stepped Screw	1
8	52051751	Lens - F8/180	1
9	54036118	Stepped Screw - Transformer	1
10	52051768	Rubber Seal - Mirror	2
11	52151765	Lens Bracket	1
12	54421770	Cam - Optics Axis	1
14	A0041751	Lens Carridge	1
17	52151772	Lens Bracket Cover	1
18	52151825	Toner Shield Cover	1
19	52151846	Shield Plate	1
29	A0041753	Shielding Plate	1
34	52151970	Seal - B	1
36	A0041969	Seal - A	1
38	54421847	Spring Plate	1
39	52051845	4th Mirror	1
42	52155422	Cooling Blower - AC 24/22W	1
43	52151918	Vacuum Fan Filter	1
44	54421969	Mylar Sheet - Terminal	1
45	A0041761	Mylar Seal - 50 x 60 mm	1
46	52151775	Mylar - 118 x 50 mm	1
49	54425315	Anti-Condensation Heater - 10W	1
50	A0041764	Seal - Mirror Cover - Front	1
51	A0041765	Seal - Mirror Cover - Rear	1
52	A0041763	Seal - Mirror Cover - Lower	1
53	A0041762	Mylar Seal - 40 x 50 mm	1
54	A0041766	Mylar Seal - Lens Bracket Cover	1
55	A0041767	Seal - Lens	1
56	A0041768	Mylar Seal - Lens Bracket	1
57	A0041771	Seal - Optics Base S	2
58	A0041769	Seal - Optics Base L	1
59	52151828	Seal-Toner Shield Cover	

Index No.	Parts No.	Description	Q'ty per Assembly
101	03140060W	Philips Pan Head Screw - M4 x 6	
102	03140120W	Philips Pan Head Screw - M4 x 12	
103	04340060W	Tapping Screw - M4 x 6	
104	09514008W	Philips Screw with Flat Washer - M4 x 8	
105	09644008W	Tapping Screw with Flat Washer - M4 x 8	
109	05930120E	Hexagon Bolt - M3 x 12	

14. FRAME [A004]

June 30, '86

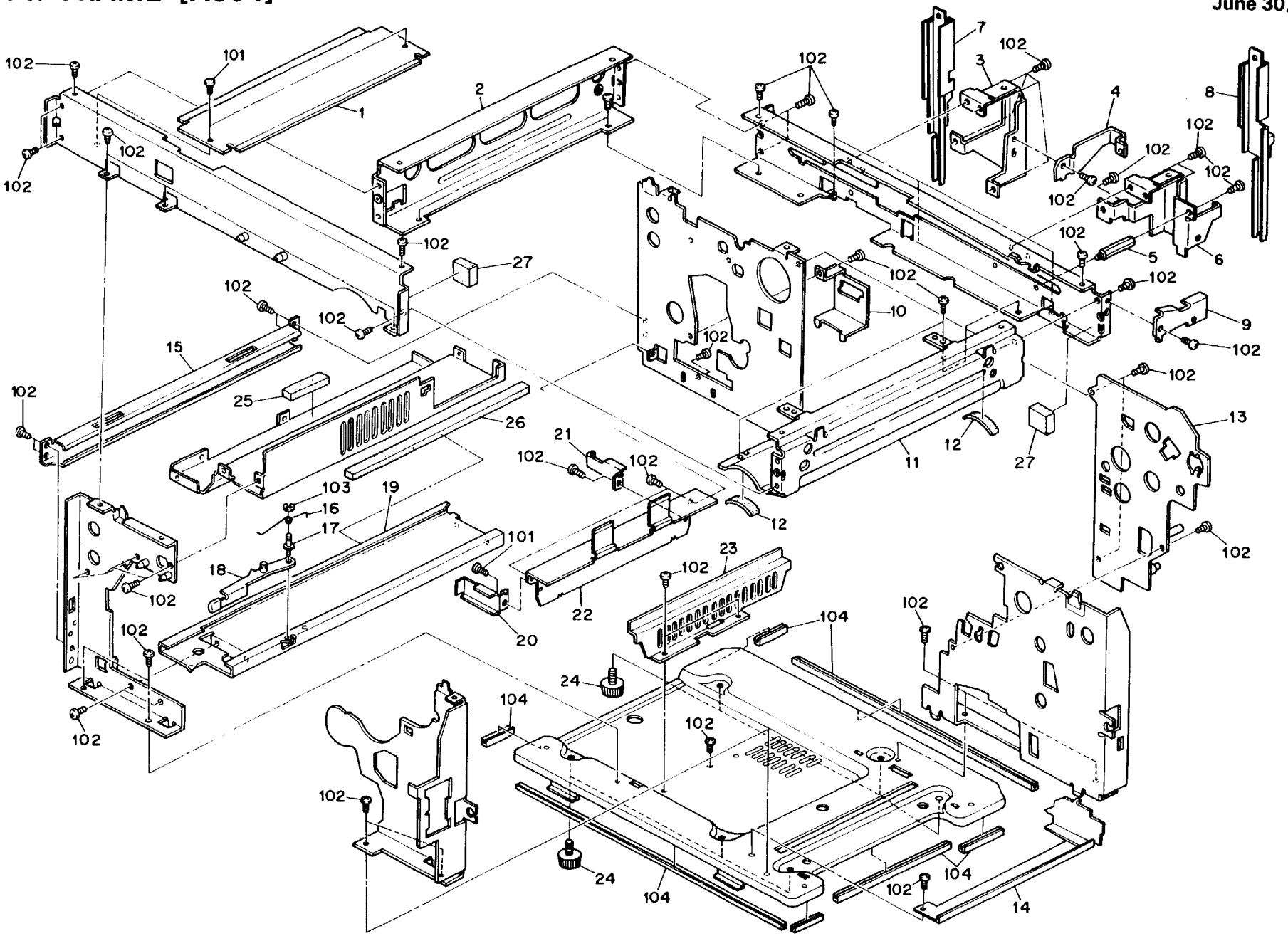

14. FRAME [A004]

Rev. 10/91

Index No.	Parts No.	Description	Q'ty Per Assembly
1	52151874	Left Base Plate Cover	1
2	52151905	Left Stay	1
3	52151672	Platen Cover Bracket - Left	1
4	52151673	Cover Bracket	1
5	52151665	Stud - Mounting Bracket - Platen	1
6	52151674	Platen Cover Bracket - Right	1
7	59183881	DF Mounting Bracket - Left	1
8	59183890	DF Mounting Bracket - Right	1
9	52151858	Right Cover Holder	1
10	52155825	Fusing Connector Bracket	1
11	52151913	Right Stay	1
12	52151916	Seal - Right Stay	2
13	52152251	Rear Drum Support	1
14	52151121	Base Plate Bracket	1
15	52151133	Left Stay	1
•16	AA066096	Spring - Fusing Unit Release Lever	1
•17	AA143224	Pin	1
18	52094183	Unit Lock Lever	1
19	52154181	Fusing Unit Rail	1
20	52155819	Harness Cover Angle - Front	1
21	52155820	Harness Cover Angle - Rear	1
22	52154502	Exit Tray Bracket	1
23	52155821	Power Supply Unit Cover	1
24	54191057	Rubber Foot	2
25	52153257	Seal	1
26	54421146	Seal - Fan Duct	1
27	52151861	Seal - 4.5 x 22 x 30	2

Index No.	Parts No.	Description	Q'ty Per Assembly
101	04340060W	Tapping Screw - M4 x 6	
102	04340080W	Tapping Screw - M4 x 8	
103	07200040E	Retaining Ring - M4	
104	10050383	Edging: B	

• NOTE: Refer to last frame on last fiche of product Parts Catalog

5. DRIVE SECTION [A004]

Rev. 5/89

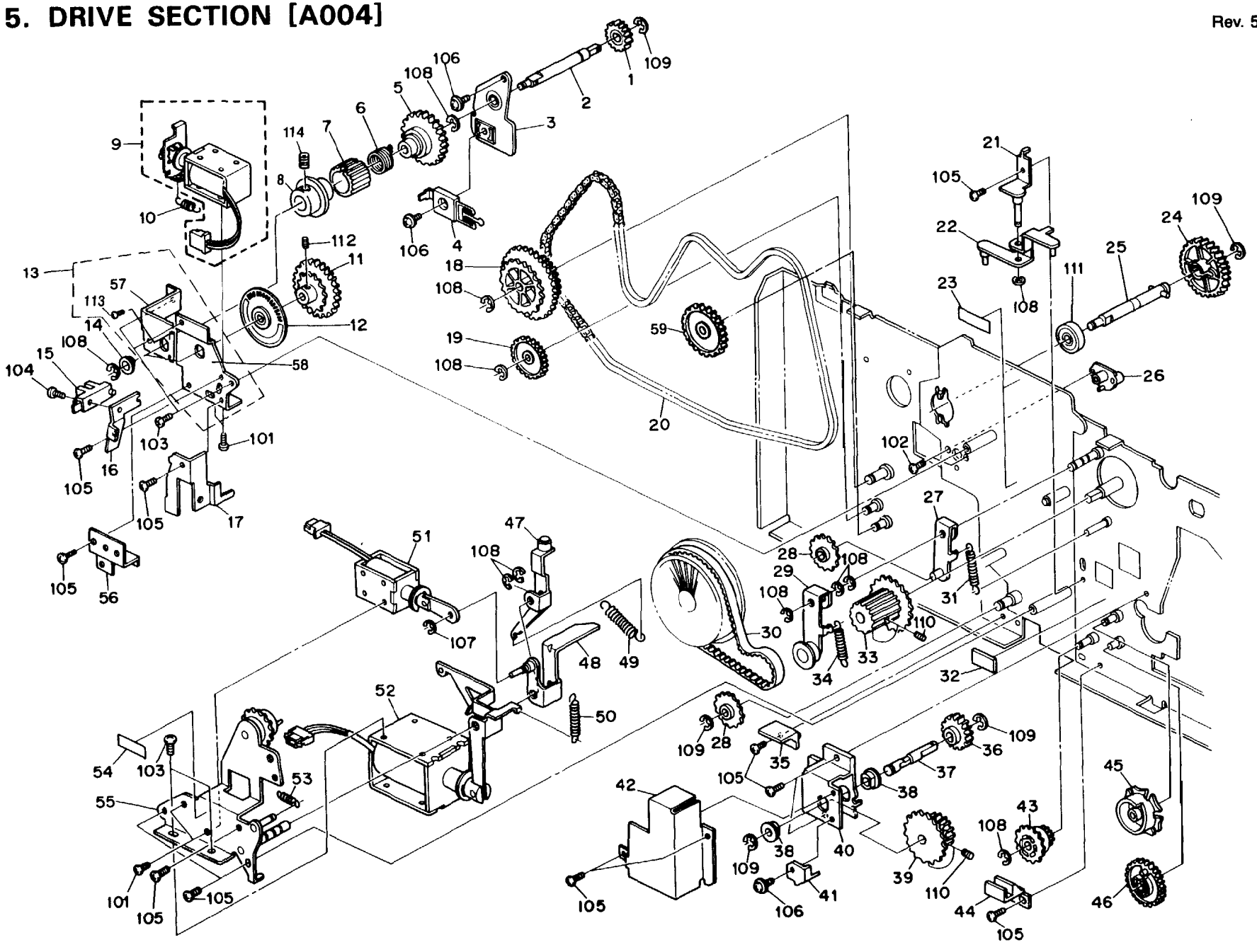

15. DRIVE SECTION [5215]

Rev. 10/91

Index No.	Parts No.	Description	Q'ty Per Assembly
1	52053306	Gear - 18T	1
◗ 2	52153471	Supply Shaft	2
3	52153462	Toner Supply Bracket	2
4	52153486	Bias Terminal	2
5	*52153476*	Gear - 26T	1
◗ 6	52151104	Spring Clutch	1
◗ 7	52151103	Ratchet Sleeve - Paper Feed	2
◗ 8	*52053467*	Boss - Toner Supply Clutch	2
9	*54473361*	Toner Supply Solenoid	1
10	54423233	Spring - Drive Wheel	1
◗11	A8023028	Sprocket 21T	1
12	52151090	Pulse Generator Disk	1
◗13	52158491	Development Drive Holder Ass'y.	1
14	5053044 7	Bushing - 6mm	1
15	52055251	L.E.D. Sensor Type T	2
16	52151116	Pulse Generator Bracket	1
17	52152633	Regist Holder	1
18	52152594	Sprocket - 3DT	1
19	52152597	Idle Gear - 30T	1
20	A0081115	Bushed Roller Chain - 222P	1
21	52153861	Follower	1
22	*52153873*	Follower Shaft	1
23	*54347916*	High Voltage Decal	1
24	*52153470*	Gear - 42T	1
◗25	52153474	Development Shaft	1
26	54423154	Holder - Development Unit	1
27	52051105	Chain Tightener	1
28	54421110	Sprocket - 20T	2
29	52051121	Belt Tightener	1
30	5205112 7	Timing Belt	1
31	54421111	Spring - Main Drive Tightener	1
32	52153860	Cushion	1
33	52051083	Sprocket - 30T/50Hz	1
33	52051084	Sprocket -27T/60Hz	1
34	52151102	Spring - Main Drive Tightener (60Hz)	1
34	54421111	Spring - Main Drive Tightner (50Hz)	1
35	52151106	Idler Chain Stopper	1
36	54421099	Gear - 242	1
37	52051099	Fusing Drive Shaft	1
38	50530223	Bushing - 8mm	2
39	54421100	Coupled Sprocket and Gear	1
40	52151096	Fusing Drive Bracket	1
41	52151105	Fusing Chain Stopper	1
42	52151111	Fusing Bracket	1
43	52153865	Sprocket - 2DT	1
44	52153951	Chain Guide	1
45	52153869	Toner Collection Bottle Cam	1
46	52153866	Gear - 45T	1
47	52053635	Pressure Lever	1
48	520539 *71*	Pick-Off Pawl Lever	1
49	*52053637*	Spring - Cleaning Blade	1
50	*58753026*	Spring - Original Feed Arm	1
51	52053964	Pick-Off Solenoid	1
52	52153639	Cleaning Blade Solenoid	1
53	54131812	Spring - Drum Return Arm	1
54	*54347916*	High Voltage Decal	1
55	A0082105	Solenoid Bracket	1
56	52152632	Guide Plate	1
57	52153488	Development Drive Holder Ass'y.	1
58	52153489	Toner Supply Drive Holder	1
59	59222099	Gear 32T	1
101	03130050W	Philips Pan Head Screw - M3 x 5	
102	03140060W	Philips Pan Head Screw - M4 x 6	
103	03140080W	Philips Pan Head Screw - M4 x 8	
104	03140120W	Philips Pan Head Screw - M4 x 12	
105	04340080W	Tapping Screw - M4 x B	
106	09654008W	Tapping Screw with Flat Washer - M4 x 8	
107	07200040E	Retaining Ring - M4	

• NOTE: Refer to last frame on last fiche of product Parts Catalog

Rev. 10/91

ndex o.	'arts No.	Description	)'ty Per \ssembly
109	)7200060E	etaining Ring - M6	
110	)5750060E	exagon Headless Set Screw - M5 x 6	
111	*37403008*	all Bearing	
112	05740050E	exagon Headless Set Screw 4x5	
113	04340060W	'apping Screw M4x6	1
114	05750050E	lexagon Headless Set Screw M5x5	1
115	05740050E	lexagon Headless Set *Screw*- M4 *x* 5	

16. ELECTRICAL COMPONENT I [521 5]

October 15, '85

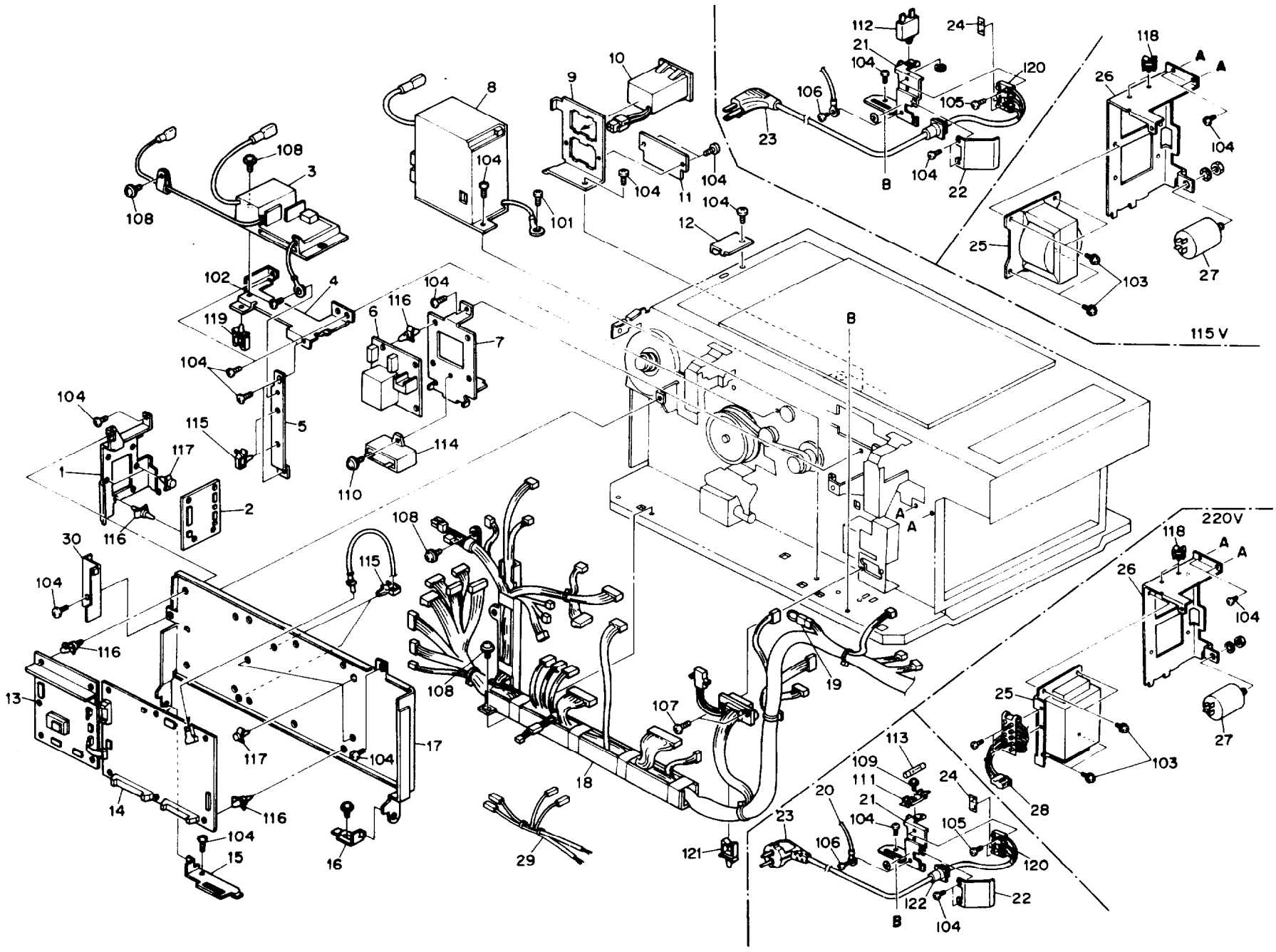

16. ELECTRICAL COMPONENT I [A004]

Index No.	Parts No.	Description	Q'ty Per Assembly
1	52155803	Feed Control Holder	2
2	52155240	Feed Control Board	2
3	52155361	Power Pack - C/B	1
4	52155805	C/B Power Pack Bracket	1
5	52155828	Harness Holder Angle	1
6	52155351	Stabilizer	1
7	52155810	Stabilizer Bracket	1
8	52155362	Power Pack - T/S/PCC	1
9	52155841	Counter Bracket	1
10	54395246	Totalizer Ass'y	1
11	54425856	Cover - Counter	1
12	52051914	Harness Holder	1
13	A0045190	Optics Board	1
14	A0045105	Main Board	1
15	52151290	Rear Cover Holder	1
16	52155827	Control Board Angle	1
17	52155814	Control Board Bracket	1
18	52155447	DC Harness	1
19	52155471	Shorting Connector	1
20	54195311	Grounding Wire	1
21	52155807	Power Cord Bracket - 115V	1
21	52155808	Power Cord Bracket - 220/240V	1
22	52151112	Power Cord Bracket Cover	1
23	28010027	Power Supply Cord - 220/240V	1
23	28010039	Power Supply Cord - ROC	1
23	28010040	Power Supply Cord - 115V	1
24	54034335	Decal - Terminal 115V	1
24	54474980	Decal - Terminal 220V	1
25	52055405	Transformer - 115V	1
25	52055407	Transformer - 220/240V	1
26	52155832	Transformer Bracket	1
27	16020923	Noise Filter - 115V	1
27	54475690	Noise Filter - 220/240V	1
28	52055494	Harness Transformer - 220/240V	1
29	52155275	Thermal Block Harness	1
30	52151109	Harness Cover	1
101	03140080M	Philips Pan Head Screw - M4 x 8	
102	03140080W	Philips Pan Head Screw - M4 x 8	
103	03150080W	Philips Pan Head Screw - M5 x 8	
104	04340080W	Tapping Screw - M4 x 8	
105	03130160W	Philips Pan Head Screw - M3 x 16	
106	08011185	Philips Screw with Toothed Washer - M4 x 8	
107	04340100W	Tapping Screw - M4 x 10	
108	09644008W	Tapping Screw with Flat Washer - M4 x 8	
109	09513006W	Philips Screw with Flat Washer - M3 x 6	
110	09514012W	Philips Screw with Flat Washer - M4 x 12	
111	11040322	Fuse Holder - 220/240V	
112	11070344	Circuit Breaker - 15A	
113	11070335	Fuse - 8A 220/240V	
114	16061484	Capacitor - 16μF 220V (115V)	
114	16061485	Capacitor - 16μF 220V (220/240V)	
115	11050087	Clamp	
116	11060395	Nylon Stud	
117	11060394	Locking Support	
118	11050201	Harness Clamp	
119	11050108	Nylon Clip	
120	11010359	Terminal - 3P	
121	11050144	Harness Clamp	
122	11060442	Cord Clamp - 220/240V	

17. ELECTRICAL COMPONENT II [A004]

June 30, '86

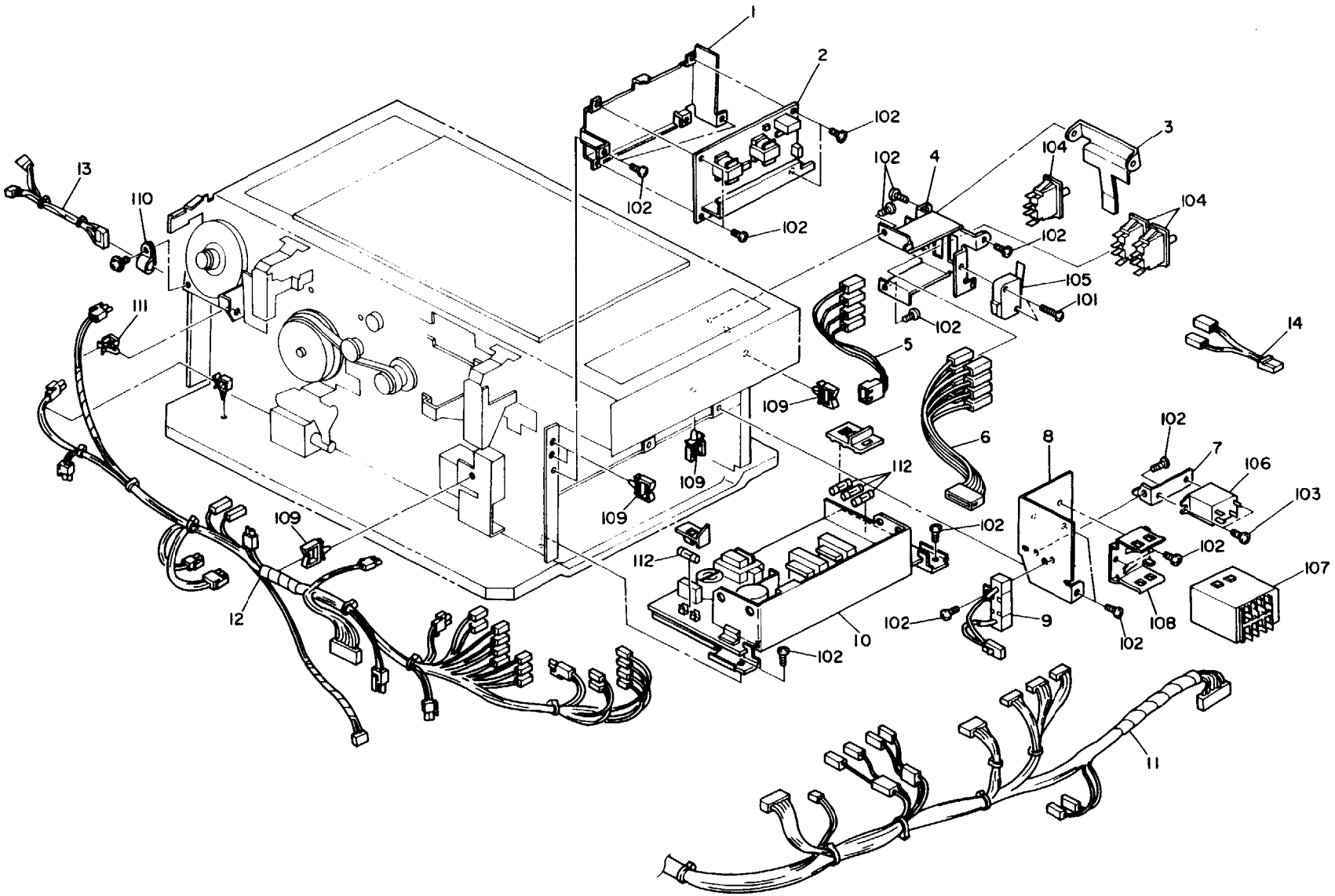

17. ELECTRICAL COMPONENT II [A004]

June 30, '86

Index No.	Parts No.	Description	Q'ty Per Assembly
1	52155804	AC Drive Board Bracket	1
2	52155216	AC Drive Board - 115V	1
2	52155236	AC Drive Board - 220/240V	1
3	52155824	Safety Switch Lever	1
4	52155822	Safety Switch Bracket	1
5	52155454	Front Door Harness	1
6	52155458	Safety Switch Harness	1
7	52155837	Outlet Fan Relay Bracket	1
8	52155813	Power Relay Bracket	1
9	52155436	Cement Registor	1
10	52155530	Power Supply Unit	1
11	52155447	DC Harness	1
12	52155459	AC Harness	1
13	52155449	Relay Harness	1
14	52155472	Harness - Exhaust Relay	1
101	03130120W	Philips Pan Head Screw - M3 x 12	
102	04340080W	Tapping Screw - M4 x 8	
103	09513006W	Philips Screw with Flat Washer - M3 x 6	
104	12041280	Push Switch	
105	12041078	Microswitch	
106	12081051	Relay - DC 24V (115V)	
106	52095450	Relay - Coling Fan Motor - 220/240V	
107	12081029	Power Relay	
108	11040224	Relay Bracket	
109	11050144	Harness Clamp	
110	11050010	Nylon Clip - 6N	
111	11050087	Clamp	
112	11070415	Fuse 5A	

Index No.	Parts No.	Description	Q'ty Per Assembly

18. MAIN BOARD [A004]

SYMBOL NO. : PRINTED NUMBER ON THE BOARD
INDEX NO. : REFERENCE NUMBER OF NEXT PAGE

BATTERY

SYMBOL NO.	INDEX NO.
BT1	113

CAPACITOR

SYMBOL NO.	INDEX NO.
C101	158
C102	158
C103	158
C104	159
C105	156
C106	158
C107	159
C108	158
C109	158
C110	158

CAPACITOR

SYMBOL NO.	INDEX NO.
C111	159
C112	159
C113	158
C114	157
C115	159
C116	153
C117	160
C118	160
C119	158
C120	159
C121	159
C122	158
C123	158
C124	158
C125	158
C126	158
C127	159
C128	159
C129	158
C130	158

SYMBOL NO.	INDEX NO.
C131	158
C132	158
C133	158
C134	158
C135	158
C136	159
C137	158
C138	157
C139	155
C140	159
C141	156
C142	152
C143	154

CONNECTOR

SYMBOL NO.	INDEX NO.
CN101	108
CN102	108
CN103	104
CN104	110
CN105	107
CN106	103
CN107	102
CN109	2
CN110	105
CN111	102
JP	
WS101	106
JSW1	109

DIODE

SYMBOL NO.	INDEX NO.
D101	116
D102	116
D103	116
D104	116
D105	116

DIODE ARRAY

SYMBOL NO.	INDEX NO.
DAY101	118
DAY102	118
DAY103	118
DAY104	118

DIP SW.

SYMBOL NO.	INDEX NO.
DPS101	112
DPS102	112

IC

SYMBOL NO.	INDEX NO.
IC101	132
IC102	121
IC103	121
IC104	136
IC105	121
IC106	130
IC107	121
IC108	128
IC109	135
IC110	123

IC

SYMBOL NO.	INDEX NO.
IC111	137
IC112	134
IC113	1
SOCKET	111
IC114	131
IC115	122
IC116	122
IC117	125
IC118	124
IC119	129
IC120	126
IC121	132
IC122	126
IC123	127
IC124	128
IC125	133
IC126	133
IC127	126
IC128	138

LED

SYMBOL NO.	INDEX NO.
LED101	120
LED102	120

RC ARRAY

SYMBOL NO.	INDEX NO.
HB101	151
HB102	151
HB103	151
HB104	151
HB105	151

RESISTOR

SYMBOL NO.	INDEX NO.
R111	172
R112	177
R113	164
R114	167
R115	172
R116	165
R117	162
R118	161
R119	172
R120	169
R121	172
R122	170
R123	174
R124	161
R125	172
R126	172
R127	175
R128	162
R129	174

RESISTOR ARRAY

SYMBOL NO.	INDEX NO.
RAY101	141
RAY102	141
RAY103	145
RAY104	143
RAY105	148
RAY106	146
RAY107	140
RAY108	142
RAY109	147
RAY110	145
RAY111	144
RAY112	140
RAY113	140
RAY114	145

TEST PIN

SYMBOL NO.	INDEX NO.
TP101	101
TP102	101
TP103	101
TP104	101
TP105	101
TP106	101
TP107	101
TP108	101
TP109	101
TP110	101
TP112	101
TP113	101

TRANSISTOR

SYMBOL NO.	INDEX NO.
Q103	114
Q104	115
Q105	114

ZENER DIODE

SYMBOL NO.	INDEX NO.
ZD101	119
ZD102	117

OSCILLATOR

SYMBOL NO.	INDEX NO.
OSC101	139

RESISTOR

SYMBOL NO.	INDEX NO.
R101	172
R102	164
R103	168
R104	168
R105	163
R106	171
R107	168
R108	176
R109	166
R110	173

POTENTIOMETER

SYMBOL NO.	INDEX NO.
VR101	149
VR102	150

18. EXPANSION UNIT [5922]

Index No.	Parts No.	Description	Q'ty Per Assembly
•	*59228751*	Installation Procedure- English	1
1	59222635	Expansion Unit Handle	1
2	59222384	Left Cover	1
3	*59222667*	Duplex Shipping Plate - Left	1
4	*59222637*	Rubber Seal	2
5	59222333	Expansion Relay Feed Guide	1
6	*59222094*	Gear - 4DT	2
7	*59222240*	Stud Bracket	1
8	*59222334*	Lower Guide Plate	1
9	59222336	Expansion Guide Plate	1
10	*54032075*	Stepped Screw	1
11	59222385	Rear Cover	1
12	59222636	Rubber Seal	2
13	59222391	Cover Bracket	2
14	50540536	Magnet Catch Ass'y	1
15	54191057	Rubber Foot	2
16	*59222665*	Duplex Shipping Plate - Front	1
17	59222451	Front Right Cover	1
18	59222450	Front Cover	1
19	52151297	Front Cover Hinge - Left	1
20	52151295	Front Cover Hinge - Right	1
21	59222211	Front Side Plate	1
22	59202115	Front Cassette Holder	1
23	54422642	Shoulder Screw - M3	1
24	52152644	Spring - Friction Pad	1
25	*59222396*	Switch Actuator	1
26	*59222395*	Safety Switch Bracket	1
27	52152598	Fixing Pad Bracket	1
28	52162844	Friction Pad	1
29	52152583	Pad Holder	1
30	54422638	Collar - Friction Pad Arm	1
31	*52152579*	Shaft	1
32	*59222344*	Size Sensor Bracket	1
33	*59225203*	Safety Switch Harness	1
34	59225201	3rd Feed Sensor Harness	1

Inde No.	Parts No.	Description	P'ty Per Assembly
3 5	52055253	Photointerruptor Pack	1
36	52152582	Spring	1
37	52152593	Lower Arm	1
▶38	59222342	Pad Mounting Plate	1
39	59222224	3rd Paper Feed Guide	1 '
40	59222372	Rear Cassette Holder	1
41	52152657	Lower Front Arm	1
42	52152646	Shaft	1
43	52152659	Lower Rear Arm	1
44	52152656	Lower Lift Arm	1
45	52151134	Lower Paper Feed Stay - Right	1
46	59222225	Paper Feed Guide	1
47	52152619	Feed Roller	1
48	52152618	Feed Roller Hub	1
49	50530223	Bushing - 8mm	1
50	59222236	Feed Roller Shaft	1
51	59202139	Sensor Feeler Cover	1
52	59222340	Paper End Feeler	1
53	59222229	Jpper Paper Guide	1
54	59222231	Gear - 32T	1
55	59222233	Gear - 46T	1
56	52155314	Magnetic Clutch	1
57	59222220	Rear Side Plate	1
58	54432668	Bushing	1
59	52152626	Paper End Actuator	1
60	59225202	Clutch Harness	1
61	59225200	Interface Harness	1
62	52055250	..E.O. Sensor Type S	1
63	59222237	Sensor Bracket	1
64	59225101	3rd Paper Feed Board	1
65	59222238	PCB Bracket	1
66	59222452	Lear Right Cover	1
67	52152665	Spring - Lower Lift	1
68	52152663	Pressure Arm	1
69	52152662	Bushing	2

● NOTE Refer to last frame on last fiche of Parts Catalog.

Rev. 10/91

Index YO.	Parts No.	Description	Q'ty Per Assembly
70	52152621	Snap Ring - M6	1
7 1	52152566	Pad Arm	1
72	59222456	Decal - Misfeed D	1
73	59222457	Decal - Misfeed E	1
74	59221125	3rd Paper Feed Unit	1
75	59222335	Guide Plate Holder	2
76	59201511	Mylar 100x19mm	
77	A0084612	Edging -505mm	
101	03130040W	Philips Pan Head Screw - M3 x 4	
102	03130120W	Philips Pan Head Screw - M3 x 12	
103	03140080M	Philips Pan Head Screw - M4 x B	
104	03140120W	Philips Pan Head Screw - M4 x 12	
105	03230080W	Philips Sunken Head Screw - M3 x 8	
106	034400600	Philips Truss Head Screw - M4 x 6	
107	04340080W	Tapping Screw - M4 x 8	
108	04340060W	Tapping Screw - M4 x 6	
109	08025094	Tapping Screw - M4x8	
110	096440084	Tapping Screw with Flat Washer - M4 x 8	
111	09654008W	Tapping Screw with Flat Washer - M4 x 8	
112	07200025E	Retaining Ring - M2.5	
113	07200030E	Retaining Ring - M3	
114	07200050E	Retaining Ring - M5	
115	07200060E	Retaining Ring - M6	
116	11050120	Wire Clip	
117	11050159	PCB Stud	
118	12041226	Push Switch	

RELAY UNIT [5922]

October 15, '85

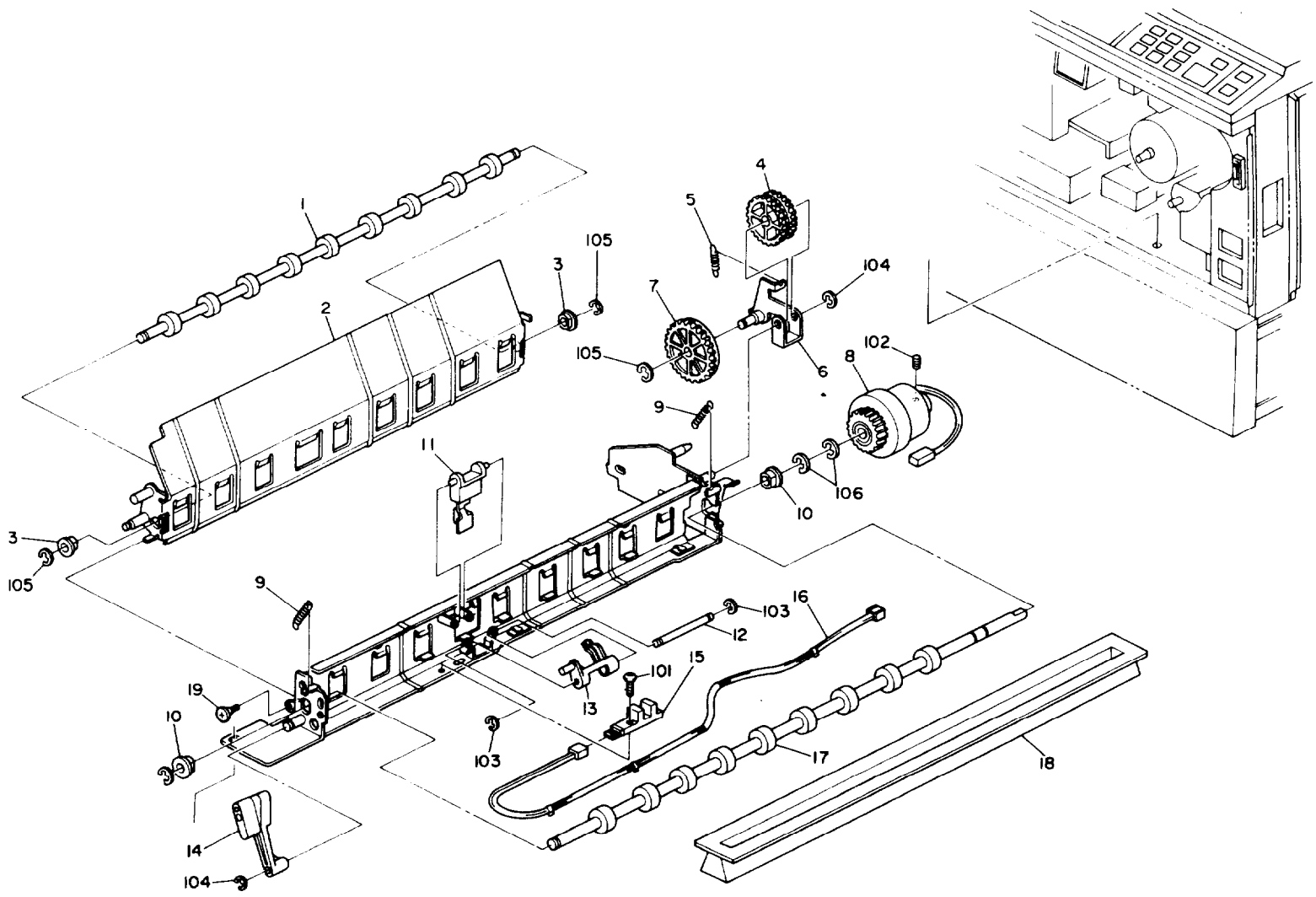

19. OPTICS BOARD [A004]

June 30, '86

Index No.	Parts No.	Description	Q'ty Per Assembly
*	A0045190	Optics Board	1
2	52155181	Harness - Optics Board	1
3	52155180	Heat Sink - Optics Board	1
4	A0045192	IC - UPD 7811G	
101	11020675	Connector - 6P	
102	11030750	Terminal - 2P	
103	11031726	Connector - 4P	
104	11031730	Connector - 8P	
105	11031731	Connector - 9P	
106	12041228	Switch	
107	12041327	Dip Switch	
108	14000031	Transistor - 2SC458B	
109	14000283	Transistor - 2SA1030	
110	14010237	Transistor - 2SB872R	
111	14010327	Transistor - 2SD1176R	
112	14010611	Diode - 1S1588	
113	14020110	Diode - V06C	
115	14070508	IC - HD74LS04N	
116	14070520	IC - HD74LS00P	
117	14070621	IC - SN74LS08N	
118	14071090	IC - HD74LS74AP	
119	14071534	IC - MPD8253C-2	
121	14071537	IC - TC74HC14P	
122	15030103	Oscillator - 10MHz	
123	16017215	Resistor Array - 4.7KΩ 1/8W ± 5%	
124	16017374	Resistor Array - 4.7kΩ	
125	16020934	RC Array - CR01-R	
126	16041355	Capacitor - 220MF 10V	
127	16041386	Capacitor - 100MF 50V	
128	16041418	Capacitor - 1μF 25V	
129	16060867	Capacitor - 3300μF 50V	
130	16061396	Capacitor - 0.1μF 25V	
131	16114102	Resistor - 1KΩ 1/4T ± 5%	
132	16114104	Resistor - 100KΩ 1/4T ± 5%	
133	16114332	Resistor - 3.3KΩ 1/4T ± 5%	
134	16114333	Resistor - 33KΩ 1/4T ± 5%	

20. AC DRIVE BOARD [A004]

SYMBOL NO. : PRINTED NUMBER ON THE BOARD
INDEX NO. : REFERENCE NUMBER OF NEXT PAGE

CAPACITOR

SYMBOL NO.	INDEX NO.
C501	
(115V)	120
(220V)	122
C502	
(115V)	121
(220V)	119
C503	118
C504	118
C505	118
C506	118

COIL

SYMBOL NO.	INDEX NO.
L501	
(115V)	123
(220V)	124

CONNECTOR

SYMBOL NO.	INDEX NO.
CN501	105
CN502	104
CN503	103
CN504	
(115V)	102
(220V)	101

DIODE

SYMBOL NO.	INDEX NO.
D501	108

NOISE KILLDER

SYMBOL NO.	INDEX NO.
CR501	
(115V)	116
(220V)	117
CR502	
(115V)	116
(220V)	117
CR503	
(115V)	116
(220V)	117

PHOTOTHYRISTOR

SYMBOL NO.	INDEX NO.
PC501	109
PC502	109
PC503	
(115V)	109
(220V)	111

RECTIFIER

SYMBOL NO.	INDEX NO.
DB501	110
DB502	110
DB503	110
DB504	110
DB505	
(115V)	110
(220V)	112

RELAY

SYMBOL NO.	INDEX NO.
RA501	106

RESISTOR

SYMBOL NO.	INDEX NO.
R501	128
R502	125
R503	127
R504	128
R505	125
R506	113
R507	131
R508	127
R509	130
R510	126

SYMBOL NO.	INDEX NO.
R511	130
R512	130
R513	126
R514	126
R515	114
R516	114
R517	114
R518	129
R519	129
R520	129

TRANSFORMER

SYMBOL NO.	INDEX NO.
TR501	1
TR502	1

TRANSISTOR

SYMBOL NO.	INDEX NO.
Q501	107
Q502	107

POTENTIOMETER

SYMBOL NO.	INDEX NO.
VR501	115

20. AC DRIVE BOARD [A004]

Index No.	Parts No.	Description	Q'ty Per Assembly
*	52155236	AC Drive Board - 220/240V	1
*	52155216	AC Drive Board - 115V	1
1	52155222	Transformer - 100/25V	1
101	11022112	Connector - 2P	
102	11022113	Connector - 2P	
103	11030701	Terminal - 6P	
104	11031724	Connector - 2P	
105	11031731	Connector - 9P	
106	12081034	Relay - DC 24V	
107	14000265	Transistor - 2SC1815Y	
108	14020467	Diode - S5566G	
109	14050127	Thyristor - TLP541G	
110	14050130	Rectifier - 400V 10A IG4B42	
111	14050151	Photothyristor - TLP545J	
112	14050152	Rectifier - 1J4B42	
113	16012844	Resistor - 1.8KΩ 1/2W	
114	16017468	Fuse Resistor - 100Ω 1/2W	
115	16018185	Variable Resistor - 200Ω 0.5W	
116	16020895	Noise Killer - 0.1MF, 120Ω	
117	16020920	Noise Killer - 0.1MF 120Ω	
118	16060689	Capacitor - 0.01μF 50V	
119	16061495	Capacitor - 0.1μF 250V	
120	16061496	Capacitor - 0.1μF 400V	
121	16061497	Capacitor - 0.047μF 125V	
122	16061542	Capacitor - 0.22μF 250V	
123	16070044	Coil - 100 UH	
124	16070129	Coil - 600 UH	
125	16114104V	Resistor - 100KΩ 1/4T ± 5% - 220/240V	
126	16114223	Resistor - 22KΩ 1/4T ± 5%	
127	16114472	Resistor - 4.7KΩ 1/4T ± 5%	
128	16114562V	Resistor - 5.6KΩ 1/4W ± 5%	
129	16114820	Resistor - 82Ω 1/4T ± 5%	
130	16116222	Resistor - 2.2KΩ 1/2T ± 5%	
131	16221800	Resistor - 185Ω 1/2W ± 1%	

2 . PAPER FEED BOARD [A004]

SYMBOL NO. : PRINTED NUMBER ON THE BOARD
INDEX NO. : REFERENCE NUMBER OF NEXT PAGE

CAPACITOR

SYMBOL NO.	INDEX NO.
C601	112
C602	112
C603	112
C604	111

CONNECTOR

SYMBOL NO.	INDEX NO.
CN601	104
CN602	102
CN603	101
CN604	107
CN605	106
CN606	103
CN607	105

DIODE

SYMBOL NO.	INDEX NO.
D601	108
D602	108
D603	108
D604	108
D605	108
D606	108
D607	108
D608	108
D609	108
D610	108
D611	108
D612	108
D613	108

IC

SYMBOL NO.	INDEX NO.
IC601	109
IC602	109

RESISTOR

SYMBOL NO.	INDEX NO.
R601	113
R602	113

RESISTOR ARRAY

SYMBOL NO.	INDEX NO.
RAY601	119

21. PAPER FEED BOARD [A004]

June 30, '86

Index No.	Parts No.	Description	Q'ty Per Assembly
*	52155240	Feed Control Board	1
101	11031725	Connector - 3P	
102	11031729	Connector - 7P	
103	11031731	Connector - 9P	
104	11031735	Connector - 13P	
105	11031739	Connector - 3P	
106	11031753	Connector - 3P	
107	11031757	Connector - 7P	
108	14010611	Diode - 1S1588	
109	14080200	IC - TA75339P	
110	16017374	Resistor Array - 4.7kΩ	
111	16041382	Capacitor - 10μF 50V	
112	16060998	Capacitor - 0.01μF 50V	
113	16114103	Resistor - 10KΩ 1/4T ±5%	

Index No.	Parts No.	Description	Q'ty Per Assembly

22. DC HARNESS [A004]

June 30, '86

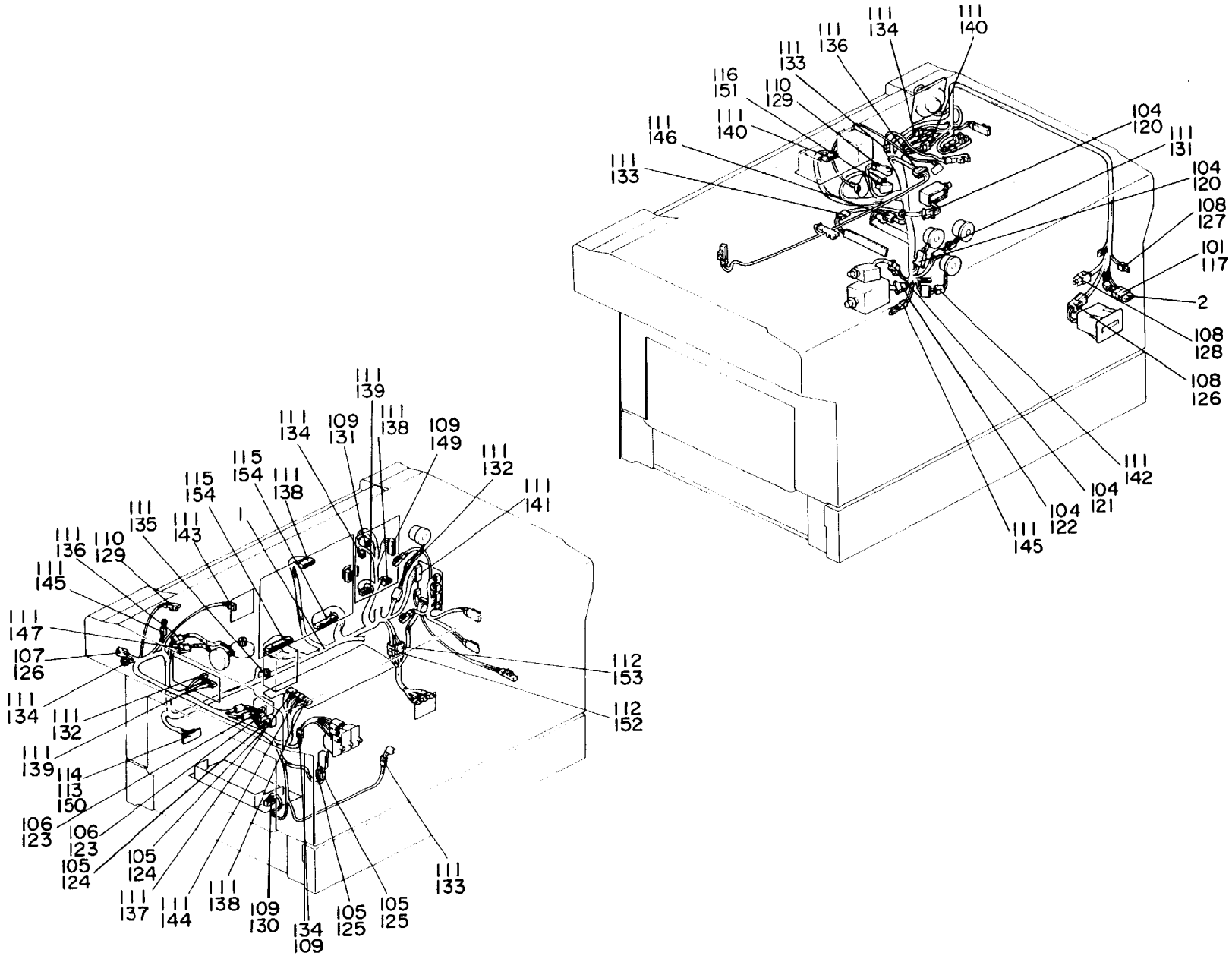

22. DC HARNESS [A004]

June 30, '86

Index No.	Parts No.	Description	Q'ty Per Assembly
1	52155447	DC Harness	1
2	54085160	Short Connector	1
101	11000844	Socket - Mate-N-Lock	
102	11000863	Stud Pin	
103	11001155	Noise Killer	
104	11001159	Socket - Mate-N-Lock	
105	11001169	Fastening Receptacle	
106	11001172	Fastening Receptacle	
107	11001239	Pin - Mate-N-Lock	
108	11001240	Socket - Mate-N-Lock	
109	11001247	Terminal	
110	11001249	Receptacle Terminal	
111	11001327	Contact	
112	11001328	Contact	
113	11001341	Pin Contact	
114	11001346	Pin Contact	
115	11001348	Pin Contact	
116	11001356	Pin Contact	
117	11020185	Connector - 4P	
118	11020977	Connector - Heater	
119	11021286	Connector	
120	11021306	Connector - 3P	
121	11021396	Connector - 2P	
122	11021397	Connector - 2P	
123	11021404	Receptacle Housing	
124	11021407	Receptacle Housing - 1P	
125	11021408	Receptacle Housing	
126	11021509	Connector - 4P	
127	11021515	Connector - 2P	
128	11021517	Connector - 4P	
129	11021620	Receptacle Housing - 3P	
130	11021892	Connector - 9P	
131	11021896	Connector - 2P	
132	11021910	Connector - 2P	
133	11021911	Connector - 3P	
134	11021912	Connector - 4P	
135	11021913	Connector - 5P	
136	11021914	Connector - 6P	
137	11021915	Connector - 7P	
138	11021916	Connector - 8P	
139	11021917	Connector - 9P	
140	11021918	Connector - 10P	
141	11021921	Connector - 13P	
142	11021924	Connector - 2P	
143	11021926	Connector - 4P	
144	11021930	Connector - 6P	
145	11021938	Connector - 2P	
146	11021939	Connector - 3P	
147	11021942	Connector - 6P	
148	11021976	Connector - 2P	
149	11022061	Connector - 6P	
150	11022099	Connector - 12P	
151	11022278	Connector - 18P	
152	11022369	Connector - 6P	
153	11022370	Connector - 6P	
154	11030657	Connector - 50P	
155	14020388	Diode - W03C	

23. AC HARNESS [A004]

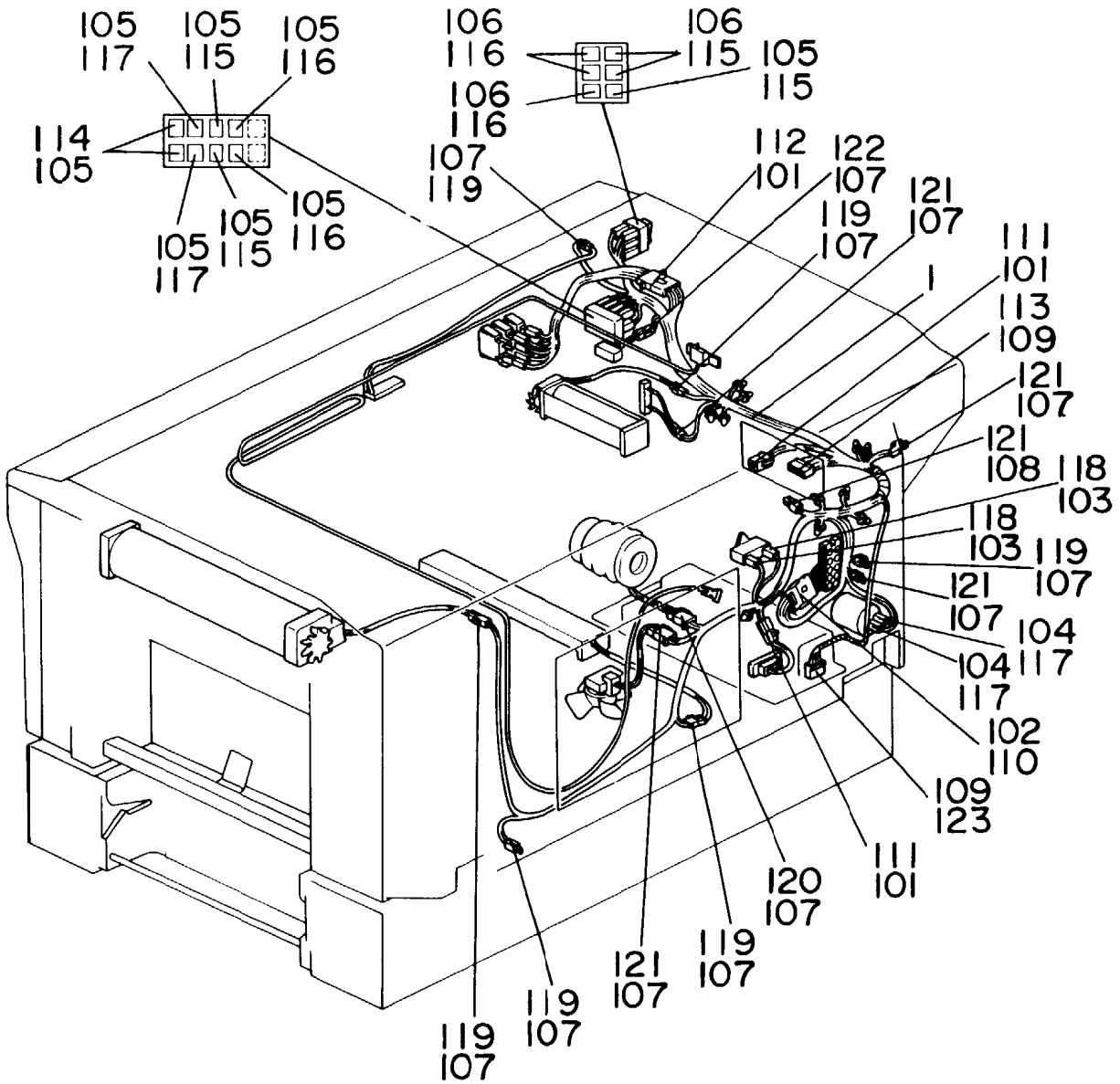

23. AC HARNESS [A004]

June 30, '86

Index No.	Parts No.	Description	Q'ty Per Assembly
1	52155459	AC Harness	
101	11000864	Housing - AWG14-20	
102	11000916	Pin - Mate-N-Lock	
103	11001169	Fastening Receptacle	
104	11001170	Fastening Receptacle	
105	11001171	Fastening Receptacle	
106	11001172	Fastening Receptacle	
107	11001240	Socket - Mate-N-Lock	
108	11001241	Socket - Mate-N-Lock	
109	11001247	Terminal	
110	11020782	Connector - 4P	
111	11020946	Housing - 3P	
112	11020948	Housing - 3P	
113	11021889	Connector - 6P	
114	11021401	Receptacle Housing - 1P	
115	11021402	Receptacle Housing - 1P	
116	11021403	Receptacle Housing	
117	11021404	Receptacle Housing	
118	11021408	Receptacle Housing	
119	11021515	Connector - 2P	
120	11021516	Connector - 3P	
121	11021532	Connector - 2P	
122	11021559	Connector - 2P (Black)	
123	11021815	Connector - 3P	

Index No.	Parts No.	Description	Q'ty Per Assembly

24. DECAL AND DOCUMENT [A004]

June 30, '86

1

A2

2

A 8/V Removing Misfed Paper



–Standard Unit– Push lever ❺ down.

–System Unit– Push lever ❹ down first, and push lever ❺ to the left.

Remove misfed paper by turning registration knob ❸ counterclockwise.

Return levers ❹ and ❺ to their original positions.

If no paper was found at step 2, take out cassette and remove misfed paper from entrance.

3

Adding Toner

Shake a new cartridge of toner well and insert it into the development unit.



Press in toner cartridge and turn it clockwise to "Unlock" position.

Pull toner cartridge out.

Insert new toner cartridge. Peel off seal while inserting.

Press in toner cartridge and turn it counterclockwise to "Lock" position.

4

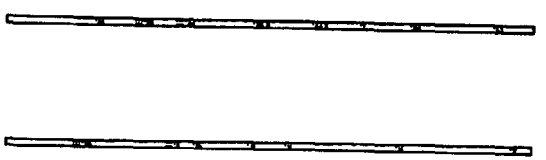

5

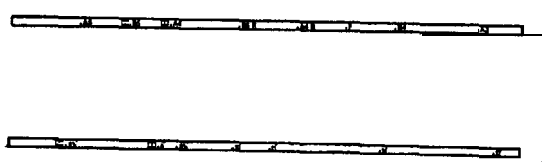

6

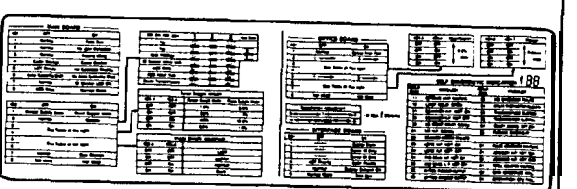

7

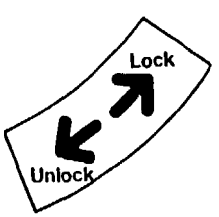

8

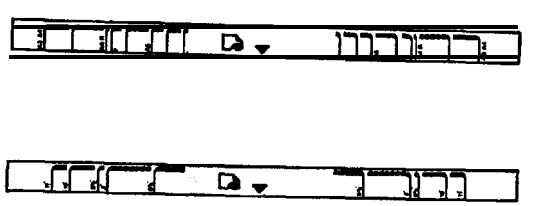

9

B1

10

高温ヒューズ THERMAL CUTOFF 182°C

11

B 8/V Removing Misfed Paper



Pull out knob ❽ and turn it clockwise. Remove any misfed paper by pulling gently. Slide the fusing unit back into the copier until it is locked in place.

12

DIP SWITCH 201

NO.	OFF	ON
1	Normal	Drum Conditioning
2	Auto Reset	No Auto Reset
3	1 min.	3 min.
4	Count Up	Count Down
5	—	—
6	Beeper ON	Beeper OFF
7	Normal	All Displays ON
8	Normal	Monitor

DIP SW 201-8: Start key; Recall key; 10 key; Exp. Lamp Volt.; Fusing Temp.; Exp. Lamp ON/OFF

24. DECAL AND DOCUMENT [A004] June 30, '86

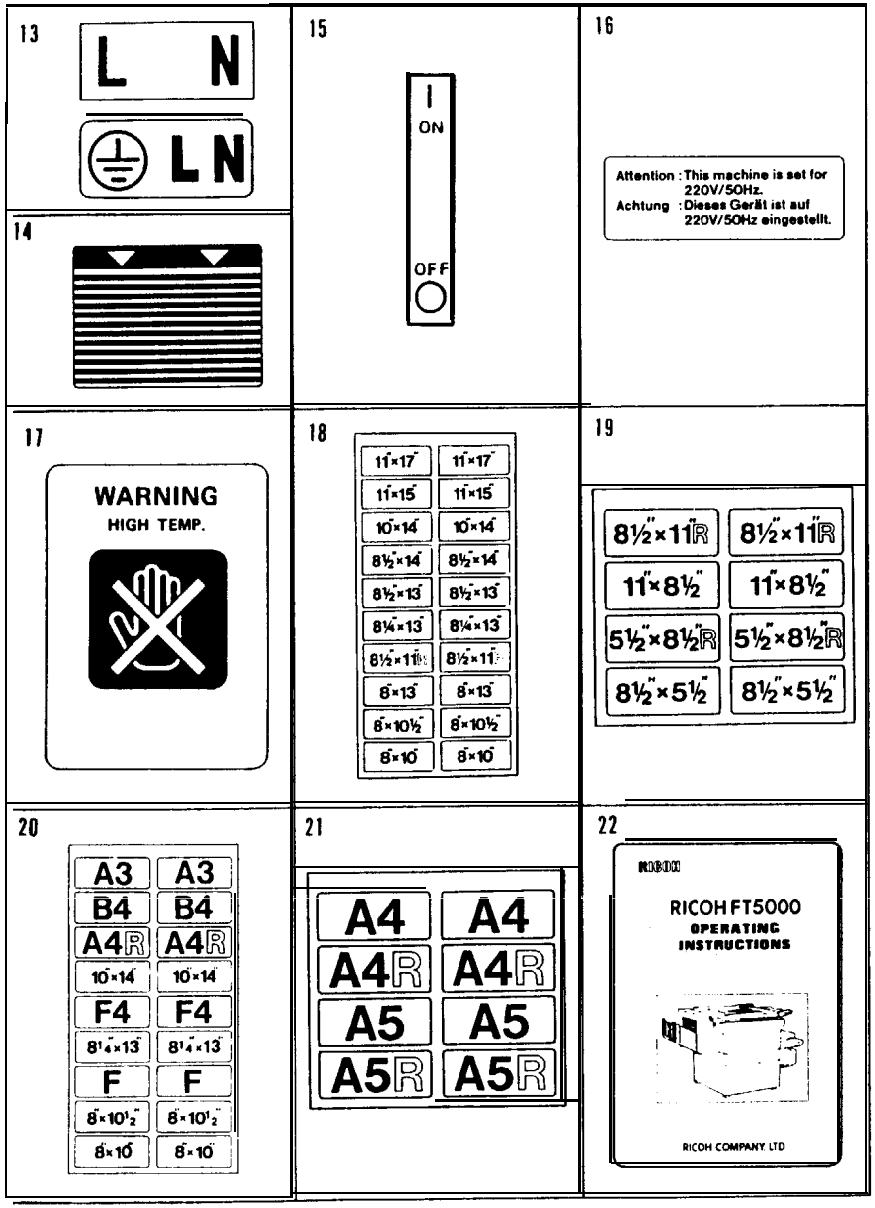

Index No.	Parts No.	Description	Q'ty Per Assembly
1	52151315	Decal - A2	1
2	52151317	Decal - Front Cover	1
3	52151318	Decal - Toner Supply	1
4	52151319	Decal - Front Scale - LT/LDG	1
4	52151321	Decal - Front Scale - A4/A3	1
5	52151320	Decal - Rear Scale - LT/LDG	1
5	52151322	Decal - Rear Scale - A4/A3	1
6	A0041323	Decal - DIP Switch	1
7	52151326	Decal - Toner Cartridge	1
8	52152801	Decal - Manual Feed - LT/LDG	1
8	52152811	Decal - Manual Feed - A4/A3	1
9	52154210	Decal - B1	1
10	52154211	Decal - Thermofuse	1
11	52154213	Decal - Misfeed Removal	1
12	A0045673	Decal - Monitor Board	1
13	54034335	Decal - Terminal 115V	1
13	54474980	Decal - Terminal 220V	1
14	54134835	Decal - Paper Level	3
15	54421277	Decal - Main Switch	1
16	54421372	Decal - Power Source 220V	1
17	54424421	Decal - Small	2
18	59301031	Decal Sheet - Large - LT/LDG	1
19	59301032	Decal Sheet - Small - LT/LDG	1
20	59301033	Decal Sheet - Large - A4/A3	1
21	59301034	Decal Sheet - Small - A4/A3	1
22	A0048501	Operating Instructions - English	1
22	A0048503	Operating Instructions - German	1
22	A0048504	Operating Instructions - French	1
22	A0048505	Operating Instructions - Italian	1
22	A0048506	Operating Instructions - Spanish	1

25. SPECIAL TOOL [A004]

June 30, '86

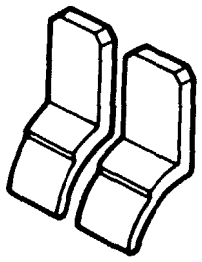

2

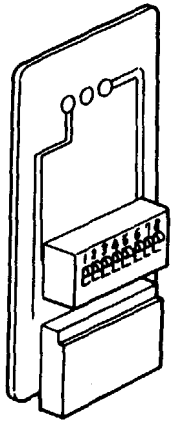

3

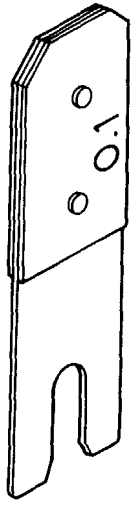

6

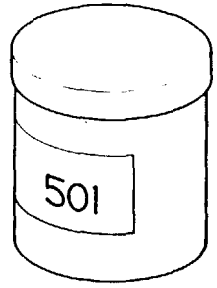

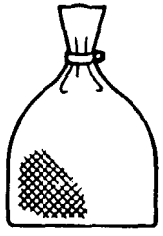

8

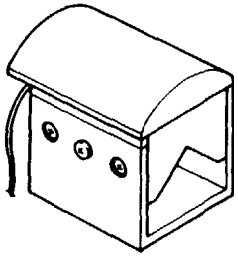

9

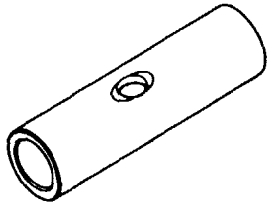

10

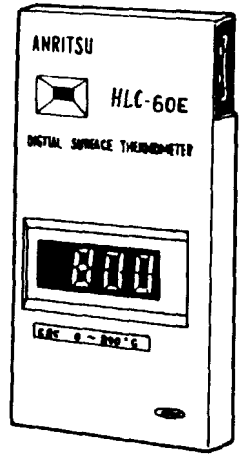

11



12

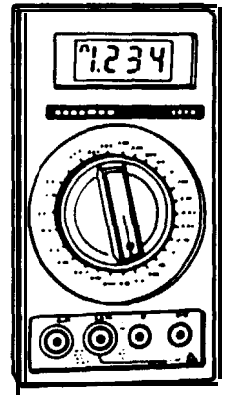

25. SPECIAL TOOL [A004]

June 30, '86

13	14	15
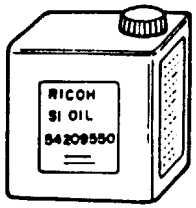	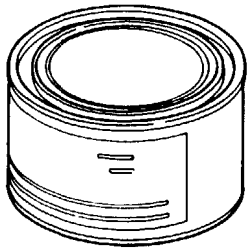	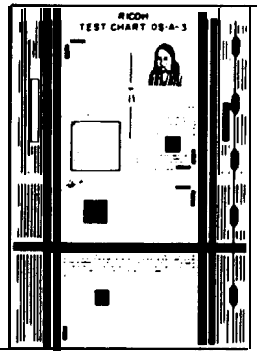
16		
		

Index No.	Parts No.	Description	Q'ty Per Assembly
1	52159500	DG Gauge (2 PCS/1 Set)	1
2	52059601	Switching Board	1
3	52059101	Gap Gauge	1
6	52039501	Grease 501	1
7	54429101	Setting Powder	1
8	54429106	Drum Shoe	1
9	54479104	Shoe Adaptor	1
10	54209504	Thermo Meter - HLC60-E	1
11	54209505	Probe - HLC60-E	1
12	54209507	Digital Multimeter - BECKMAN-RMS3030	1
13	54209550	Silicon Oil	1
14	54479078	Heat Resisting Grease MT-78	1
15	54209516	Test Chart - OS-A3 (10 pcs/set)	1
15	54209502	Test Chart - OS-A3 (100 pcs/set)	1
16	54429103	Launa Oil	1

FT5000 (A004)
PARTS INDEX

This section in you as to the numbers and names of the parts of this machine.

Parts No.	Description	Page and Index No.
AA066096	Spring-Fusing Unit Relase Level	29-16
AA115003	Wire Clamp	17-54
	Seal - Right	21-31
AA143224	Pin	29-17
AA150205	Seal - 20 x 72 mm	21-62
AA151284	Seal - 15 x 26 x 3mm	15-44
AA161031	Cushion - 20 x 5 x 3mm	3-38
AB023028	Sproket - 21T	31-11
AD004046	T&S Corona Guide	13-40
AD015004	Drum Shaft	13-31
AD021032	T&S Receptacle	13-57
AE020015	Pressure Roller	17-37
AG051052	Development Unit Band	21-13
AX210011	Registration Clutch	11-12
A0002109	Rear Endblock - Main Corona	13- 3
A0041268	Inner Cover	3-39
A0041288	Rear Cover - US	3-10
A0041289	Rear Cover - EU	3-10
A0041291	Rear Cover	3-10
A0041323	Decal - DIP Switch	3- 9
A0041323	Decal - DIP Switch	105- 6
A0041751	Lens Carridge	27-14
A0041753	Shielding Plate	27-29
A0041760	Mylar Seal - Mirror Cover - Upper	27- 1
A0041761	Mylar Seal - 50 x 60 mm	27-45
A0041762	Mylar Seal - 40 x 50 mm	27-53
A0041763	Seal - Mirror Cover - Lower	27-52
A0041764	Seal - Mirror Cover - Front	27-50
A0041765	Seal - Mirror Cover - Rear	27-51
A0041766	Mylar Seal - Lens Bracket Cover	27-54
A0041767	Seal - Lens	27-55
A0041768	Mylar Seal - Lens Bracket	27-56
A0041769	Seal - Optics Base L	27-58
A0041770	4th Mirror Cover	27- 3
A0041771	Seal - Optics Base S	27-57
A0041798	Scanner Wire Bracket	25-37
A0041873	Scanner Drive Wire	25-36
A0041969	Seal - A	27-36
A0045101	Main Board	33-14
A0045101	Main Board	37- *
A0045103	IC - UPD27256D	37- 1

Parts No.	Description	Page and Index No.
A0045128	IC - UPD 7811G	5-54
A0045135	Operation Panel Ass'y - LT/LDG	5- 1
A0045136	Operation Panel Board - LT/LDG	5-58
A0045141	Operation Panel Ass'y - A4/A3	5- 1
A0045155	Operation Panel Ass'y - ROC	5- 1
A0045156	Operation Panel Board - ROC	5-58
A0045190	Optics Board	33-13
A0045190	Optics Board	39- *
A0045192	IC - UPD 7811G	39- 4
A0045251	Display Board - LT/LDG	5-56
A0045252	Control Board	5-55
A0045260	Ten Key Board	5-57
A0045261	Display Board - A4/A3	5-56
A0045281	Display Board - ROC	5-56
A0045673	Decal - Monitor Board	5-53
A0045673	Decal - Monitor Board	105-12
A0045675	Cover - E	5-10
A0045677	ADS Cover - LT/LDG	5- 8
A0045679	Cover - D	5-43
A0045680	Cover - C	5- 6
A0045733	ADS Cover - A4/A3	5- 8
A0046375	Operation Panel Board - A4/A3	5-58
A0048501	Operating Instructions - English	105-22
A0048503	Operating Instructions - German	105-22
A0048504	Operating Instructions - French	105-22
A0048505	Operating Instructions - Italian	105-22
A0048506	Operating Instructions - Spanish	105-22
A0048520	Instruction Cards - LT/LDG	5- 4
A0048521	Instruction Cards - A4/A3	5- 4
A0048523	Instruction Cards - German	5- 4
A0048524	Instruction Cards - French	5- 4
A0048525	Instruction Cards - Italian	5- 4
A0048526	Instruction Cards - Spanish	5- 4
A0048527	Instruction Cards - ROC	5- 4
A0048551	Installation Procedure - English	3- *
A0048552	Installation Procedure - 5 Languages	3- *
A0048627	Decal sheet - German	3- *
A0048628	Decal sheet - French	3- *

Parts No.	Description	Page and Index No.
A0048629	Decal sheet - Italian	3- *
A0048630	Decal sheet - Spanish	3- *
A0081115	Bushed Roller Chain - 222P	31-20
A0081698	Reflector Aid	25-1
A0082105	Solenoid Bracket	31-55
A0082274	Stopper - T&S Corona Unit	13-61
A0082574	Upper Guide	9-A-77
A0084167	Fusing Unit Cover	17-48
A0092405	Timing Pulley - 48T	13-38
A0093009	Toner Supply Unit	21-36
A0472121	T&S Corona Guide	13-44
A4069505	Platen Cover Sheet - 10 Sheets/1 Set	7- 8

Parts No.	Description	Page and Index No.
52150240	Fusing Unit - 115V	17- *
52150245	Fusing Unit - 220/240V	17- *
52151085	Cover Motor	15- 9
52151090	Pulse Generator Disk	31-12
52151096	Fusing Drive Bracket	31-40
52151102	Spring - Main Drive Tightener (60Hz)	31-34
52151103	**Ratchet Sleeve Paper Feed**	**31-7**
52151104	**Spring Clutch**	**31-6**
52151105	Fusing Chain Stopper	31-41
52151106	Idler Chain Stopper	31-35
52151109	Harness Cover	33-30
52151111	Fusing Bracket	31-42
52151112	Power Cord Bracket Cover	33-22
52151116	Pulse Generator Bracket	31-16
52151117	Outlet Fan Bracket	15-19
52151121	Base Plate Bracket	29-14
52151133	Left Stay	29-15
52151134	Lower Paper Feed Stay - Right	9-55
52151136	**Cushion 12x65x2mm**	**15-43**
52151257	Front Cover Ass'y	3-41
52151269	Upper Cover - 115V	3- 6
52151270	Upper Cover - 220/240V	3- 6
52151276	Front Right Cover	3-28
52151278	Left Cover	3-30
52151283	Rear Right Cover	3-27
52151290	Rear Cover Holder	33-15
52151292	Mylar - 20 x 28 mm	3-54
52151293	Front Cover Angle - Right	3-49
52151293	Front Cover Angle - Right	15-21
52151295	Front Cover Hinge - Right	3-44
52151297	Front Cover Hinge - Left	3-42
52151300	Seal-6 x 20 x 270 mm	3-56
52151305	Upper Cover Cap - ADF	3- 2
52151306	Upper Cover Cap - Sensor	3- 4
52151307	Left Cover Cap - Sorter	3-32
52151308	Left Cover Cap - Duplex	3-35
52151315	Decal - A2	3-47
52151315	Decal - A2	105- 1

Parts No.	Description	Page and Index No.
52151317	Decal - Front Cover	3-46
52151317	Decal - Front Cover	105- 2
52151318	Decal - Toner Supply	3-45
52151318	Decal - Toner Supply	105- 3
52151319	Decal - Front Scale - LT/LDG	3- 1
52151319	Decal - Front Scale - LT/LDG	105- 4
52151320	Decal - Rear Scale - LT/LDG	3- 3
52151320	Decal - Rear Scale - LT/LDG	105- 5
52151321	Decal - Front Scale - A4/A3	3- 1
52151321	Decal - Front Scale - A4/A3	105- 4
52151322	Decal - Rear Scale - A4/A3	3- 3
52151322	Decal - Rear Scale - A4/A3	105- 5
52151326	Decal - Toner Cartridge	3-48
52151326	Decal - Toner Cartridge	105- 7
52151329	Operation Panel Bracket - Left	5-11
52151330	Operation Panel Bracket - Right	5-51
52151335	Operation Panel Bracket - Middle	5-13
52151655	Platen Cover Ass'y	7- 1
52151656	Front Platen Cover	7- 5
52151657	Rear Platen Cover	7- 4
52151658	Original Holder	7- 2
52151660	**Platen Cover Assembly**	**7-1**
52151665	Stud - Mounting Bracket - Platen	29- 5
52151672	Platen Cover Bracket - Left	29- 3
52151673	Cover Bracket	29- 4
52151674	Platen Cover Bracket - Right	29- 6
52151681	1st Scanner Ass'y	25- 7
52151691	Reflector Cover	25- 2
52151696	Main Reflector	25- 4
52151697	Wire Stopper Plate	25- 6
52151700	**Exposure Lamp Terminal Front**	**25-9**
52151702	**Clip - Exposure Lamp**	**25-48**
52151721	2nd Scanner Ass'y	25-26
52151765	Lens Bracket	27-11
52151772	Lens Bracket Cover	27-17
52151775	Mylar - 118 x 50 mm	27-46
52151778	Mylar - Shielding Plate	27- 2
52151825	Toner Shield Cover	27-18

[redacted]ts No.	Description	Page and Index No.
[redacted]151828	**Seal-Toner Shield Cover**	**27-59**
[redacted]151846	Shield Plate	27-19
[redacted]151853	Mylar - 15 x 350 mm	25-43
[redacted]151857	Harness Clamp	25-45
[redacted]151858	Right Cover Holder	29- 9
[redacted]151859	Guide Channel	25-44
[redacted]151861	Seal - 4.5 x 22 x 30	29-27
[redacted]151864	Rear Guide Rod	25-21
[redacted]151866	Lens Drive Motor Bracket	25-42
[redacted]151874	Left Base Plate Cover	29- 1
[redacted]151881	Pulley Bracket	25-38
[redacted]151886	Wire Pulley Tightener	25-35
[redacted]151893	H.P. Sensor Bracket	25-32
[redacted]151905	Left Stay	29- 2
[redacted]151913	Right Stay	29-11
[redacted]151916	Seal - Right Stay	29-12
[redacted]151918	Vacuum Fan Filter	27-43
[redacted]151924	Cushion	3-38
[redacted]151926	Front Frame Seal	3-37
[redacted]151930	Left Scale - A4/A3	3- 7
[redacted]151933	Left Scale - LT/LDG	3- 7
[redacted]151935	Mounting Plate - A4 /A3	3-36
[redacted]151938	Mounting Plate - LT/LDG	3-36
[redacted]151942	Scanner Drive Wire Bracket	25-20
[redacted]**2151957**	**Spacer**	**27-51**
[redacted]**2151958**	**Worm Gear**	**27-31**
[redacted]2151970	Seal - B	27-34
[redacted]**2151972**	**Motor Bracket**	**27-29**
[redacted]2151980	Exposure Glass	3- 8
[redacted]2152050	C & D Corona Rail	13-16
[redacted]2152054	Seal 2 x 10 x 15 mm	13-14
[redacted]2152054	Seal 2 x 10 x 15 mm	15- 3
[redacted]2152059	Charge Corona Unit	13- 1
[redacted]2152060	Duct Inlet	15- 2
[redacted]2152061	Duct Bracket	15- 1
[redacted]2152063	Duct Outlet	13-15
[redacted]2152066	Fan Cover	15- 4
[redacted]2152105	Solenoid Bracket	31-55
[redacted]2152108	T & S Receptacle	13-57

Parts No.	Description	Page and Index No
52152113	T & S Corona Unit	13-40
52152115	T & S Corona Casing	13-45
52152119	T & S Corona Guide Plate	13-46
52152121	T & S Corona Guide	13-44
52152125	T & S Corona Rail	13-54
52152130	QL Filter	13-12
52152131	T & S Corona Holder	13-39
52152135	PTL Filter	11- 5
52152137	Link	13-53
52152146	Shaft	13-52
52152150	T & S Corona Harness Cover	13-30
52152155	T/S Corona Lever	13-51
52152245	Front Drum Support	13-23
52152251	Rear Drum Support	13-32
52152251	Rear Drum Support	29-13
52152258	Drum Shaft	13-31
52152265	Edging	13-34
52152270	Heater Casing	13-56
52152278	PTL Guide	11- 1
52152283	Paper Guide	11- 6
52152310	Drum Stay	13-19
52152315	Decal - Drum Knob	13-60
52152568	Pad Arm	9-14
52152570	Upper Paper Feed Stay	9-27
52152571	Lower Paper Feed Stay	9-51
52152576	Upper Size Detection Bracket	9-42
52152578	Upper Arm	9-44
52152579	Shaft	9-24
52152580	Spring Anchor	9-45
52152582	Spring	9-23
52152583	Pad Holder	9-16
52152590	Lower Size Detection Bracket	9-19
52152593	Lower Arm	9-25
52152594	Sprocket - 30T	31-18
52152596	Gear - 16T	9-66

Parts No.	Description	Page and Index No.
52152597	Idle Gear - 30T	9-65
52152597	Idle Gear - 30T	31-19
52152600	Upper Feed Guide Plate	9-36
52152602	Upper Guide Plate	9- 6
52152604	Feed Roller	9- 8
52152605	Feed Roller Guide	9- 7
52152606	Middle Guide Plate	9-11
52152609	Lower Guide Plate	9-26
52152612	Regist Guide Plate	11- 9
52152617	Feed Shaft	9-34
52152618	Feed Roller Hub	9-31
52152619	Feed Roller	9-30
52152621	Snap Ring - M6	9-29
52152622	Upper Feed Shaft Bracket	9-33
52152624	Paper End Feeder	9-35
52152626	Paper End Actuator	9-63
52152629	Upper Pad Mounting Plate	9-43
52152630	Lower Feed Shaft Bracket	9-50
52152632	Guide Plate	31-56
52152633	Regist Holder	31-17
52152634	Paper Feed Clutch Holder	9-58
52152637	Paper End Bracket	9-70
52152638	Harness Clamp Bracket	9-73
52152639	**Feed Roller**	**9-8**
52152640	Front Cassette Holder	9-47
52152641	Rear Cassette Holder	9-49
52152642	Manual Feed Guide	9-48
52152643	Upper Spring - Friction Pad	9-46
52152644	Spring-Friction Pad	9-12
52152646	Shaft	9-38
52152647	Upper Lift Arm	9-40
52152648	Upper Front Arm	9-39
52152652	Upper Rear Arm	9-37
52152656	Lower Lift Arm	9-53
52152657	Lower Front Arm	9-54
52152659	Lower Rear Arm	9-52
52152662	Bushing	9-56

Parts No.	Description	Page and Index No.
52152663	Pressure Arm	9-72
52152665	Spring - Lower Lift	9-71
52152666	Bracket	9-76
52152670	Upper Regist Roller	11- 7
52152671	Lower Regist Roller	11- 8
52152672	Bushing	11-13
52152673	Fixing Pad Bracket	9-18
52152674	Lower Pad Mounting Plate	9-22
52152678	**Spring Plate**	**3-22**
52152679	Upper Guide - Manual Feed	3-11
52152680	Front Manual Feed Link	3-25
52152681	Rear Manual Feed Link	3-17
52152685	Magnetic Rubber	3-26
52152686	Manual Feed Cover	3-20
52152687	Gear - 16T	3-19
52152688	Side Fence Gear	3-18
52152689	Rear Side Guide	3-13
52152690	Front Side Guide	3-12
52152691	Brake	3-21
52152693	Plate	3-15
52152694	Bracket	3-24
52152697	Spring Plate	3-22
52152698	Manual Feed Table	3-23
52152706	Large Cassette Body	7-29
52152709	Small Cassette Body	7-29
52152710	Bottom Plate	7-24
52152713	Bottom Plate Pad	7-23
52152716	Front Side Fence	7-27
52152720	Front Side Holder	7-28
52152727	Rear Side Fence	7-20
52152731	Rear Side Holder	7-21
52152734	Large Cassette Cover	7-19
52152737	Small Cassette Cover	7-19
52152739	Rear Fence	7-25
52152780	**Upper Feed Guide Plate**	**9-36**
52152786	**Mylar - 45x120x0.1 mm**	**9-78**
52152801	Decal - Manual Feed - LT/LDG	3-14

Parts No.	Description	Page and Index No
52152801	Decal - Manual Feed - LT/LDG	105- 8
52152811	Decal - Manual Feed - A4/A3	3-14
52152811	Decal - Manual Feed - A4/A3	105- 8
52152819	**Mounting Bracket Platen Cover**	**7-31**
52152830	**Spring Release**	**7-46**
52152833	**Base Holder**	**7-32**
52152834	**Arm Holder**	**7-33**
52152835	**Crank**	**7-34**
52152836	**Sleeve 8x34**	**7-35**
52152837	**Shaft 7x46**	**7-36**
52152838	**Rubber Magnet**	**7-37**
52152839	**Balancer Spring**	**7-38**
52152840	**Pin 4x115mm**	**7-39**
52152841	**Pin 4x100mm**	**7-40**
52152842	**Right Spring Platen Cover**	**7-41**
52152843	**Left Spring Platen Cover**	**7-42**
52152844	**Slide Supporter**	**7-43**
52152845	**Plate Magnet**	**7-44**
52152846	**Platen Base**	**7-45**
52153000	Development Unit	21- *
52153006	Toner Supply Unit	21-36
52153007	**Toner Supply Unit**	**21-36**
52153089	Developer Knob	21-21
52153096	Adjusting Plate - Magnet Angle	21- 6
52153097	Sheet	21-11
52153051	Side Seal Right	21- 7
52153052	Side Seal Left	21- 8
52153056	Seal Development	21-26
52153060	Seal - 52 x 4 mm	21- 9
52153065	Brush Seal - 20 x 6 mm	21-28
52153072	**Slider Magnet**	**21-60**
52153073	Mylar	21-49
52153074	Lower Casing	21-32
52153078	Plate - Developer Casing	21-51
52153083	Paddle Roller	21-23
52153085	Seal - Paddle Roller	21-55

Parts No.	Description	Page and Index No.
52153100	Gear - 44T	21-22
52153102	Gear - 39T	21-24
52153108	Spacer - Development Sleeve	21-53
52153110	Bearing Retainer	21-19
52153111	Gear - 25T	21-20
52153115	Gear - 17T	21-27
52153120	Toner Supply Guide	21-25
52153124	Development Sleeve	21-18
52153133	Seal - Right	21-31
52153140	Upper Casing	21-12
52153153	Mylar - 6 x 35 mm	21-29
52153154	Seal - Upper	21- 2
52153155	Seal - Doctor	21- 5
52153161	Doctor Plate	21- 3
52153162	Side Seal - Doctor Blade	21- 4
52153165	Development Auger	21-17
52153166	Gear - 25T	21-15
52153169	Backspill Plate	21-14
52153180	**Seal-Ring**	**21-63**
52153191	Entrance Seal Ass'y	21- 1
52153202	Mylar Seal - Front Upper Guide	9- 3
52153203	Seal - 1 x 10 x 60 mm	9- 1
52153204	Seal - 4 x 10 x 370 mm	9- 2
52153256	**Seal - Toner Supply**	**21-59**
52153257	Seal	29-25
52153281	Pin	21-38
52153298	Seal - 405 x 5 x 2 mm	21-50
52153302	Toner Supply Roller	21-33
52153303	Seal - Toner Supply Roller	21-54
52153321	Gear - 56T	21-40
52153323	Coupling	21-41
52153327	**Shaft - Agitator**	**21-57**
52153328	**Joint - Hopper**	**21-58**
52153345	Spring - Gear	21-34
52153347	**Spring Gear**	**21-34**
52153381	Sensor Bracket	9-57
52153462	Toner Supply Bracket	31- 3

Parts No.	Description	Page and Index No.
52153468	Supply Shaft	31- 2
52153469	**Boss Toner Supply Clutch**	**31-8**
52153470	Gear - 42T	31-24
52153471	**Supply Shaft**	**31-2**
52153472	Development Shaft	31-25
52153474	**Development Shaft**	**31-25**
52153475	Sprocket - 19T	31-11
52153476	Gear - 26T	31- 5
52153478	**Boss Toner Supply Clutch**	**31-8**
52153481	Sensor Bracket	9-59
52153482	Sensor Cover	9-75
52153484	Development Drive Holder	31-13
52153486	Bias Terminal	31- 4
52153488	**Development Drive Holder Assembly**	**31-57**
52153489	**Toner Supply Drive Holder**	**31-58**
52153491	**Development Drive Holder Assembly**	**31-13**
52153550	Cleaning Unit	23- *
52153552	Front Side Plate - Cleaning	23-16
52153553	Rear Side Plate - Cleaning	23-35
52153555	Rubber Seal - Cleaning Small	23-18
52153581	Cleaning Brush	23-14
52153584	**Blade Cleaner Assembly**	**23-50**
52153585	Blade Cleaner	23-12
52153588	Blade Cleaner Plate	23-11
52153589	Seal - 6 x 8 x 105 mm	23-10
52153596	Pick-Off Pawl	23-32
52153600	Seal - Blade Front	23-17
52153601	Seal - Blade Rear	23-36

Parts No.	Description	Page and Index No.
52153606	Toner Collection Coil	23-15
52153612	Gear - 35T	23-44
52153639	Cleaning Blade Solenoid	31-52
52153663	Toner Collection Joint	23-22
52153666	Toner Collection Bottle Cap	15-23
52153666	Toner Collection Bottle Cap	15-30
52153675	Roller Holder	15-41
52153677	Roller	15-40
52153680	Seal - 19 x 36 x 10 mm	23-23
52153851	Spring - Guide Plate	15-31
52153853	Transport Guide Plate	15-10
52153855	Guide Plate Shaft	15- 7
52153860	Cushion	31-32
52153861	Follower	31-21
52153865	Sprocket - 20T	31-43
52153866	Gear - 45T	31-46
52153869	Toner Collection Bottle Cam	31-45
52153873	Follower Shaft	31-22
52153877	Plate	15-35
52153878	Sheet	15-36
52153880	Cushion	15-38
52153883	Harness Cover	3-53
52153884	Shaft	15-22
52153886	Toner Collection Bottle Cover	15-25
52153887	Sensor Holder	15-28
52153889	Spring - Toner Collection Bottle	15-26
52153892	Ozone Filter	15-42
52153897	Transport Stay	15-37
52153910	Transport Frame	15-18
52153917	Transport Drive Roller	15- 8
52153923	Driven Roller	15-15
52153928	Duct	15-32
52153931	Bushing - 8 mm	15-12
52153935	Toner Collection Bottle Stopper	15-39
52153942	Transport Guide Roller	15-17

Parts No.	Description	Page and Index No
52153951	Chain Guide	31-44
52153978	Transport Belt	15-11
52154051	Front Side Plate - Fusing	17-33
52154052	Rear Side Plate - Fusing	17-46
52154063	Lower Exit Guide	19-25
52154093	Upper Frame	17-15
52154095	Pressure Lever	17-34
52154096	Spring - Pressure	17-32
52154108	Right Rail - Fusing	17-44
52154116	Oil Blade Holder	17-18
52154117	Oil Blade	17-19
52154121	Spring - Oil Blade	17-16
52154130	Oil Supply Pad	17-13
52154139	Knob - Fusing Unit	17-27
52154143	Oil Pan	17-35
52154167	Fusing Unit Cover	17-48
52154168	Fusing Mounting Bracket	17-61
52154169	Mylar - Fusing Entrance	17-45
52154177	Entrance Guide Bracket	17-42
52154181	Fusing Unit Rail	29-19
52154195	Oil Sump	17-43
52154196	Oil Sump Holder	17-38
52154208	Spring Plate - Oil Supply Pad	17-14
52154210	Decal	17-60
52154210	Decal - Bl	105- 9
52154211	Decal - Thermofuse	17-40
52154211	Decal - Thermofuse	105-10
52154213	Decal - Misfeed Removal	3-43
52154213	Decal - Misfeed Removal	105-11
52154225	Oil Tank	17-12
52154282	Pressure Roller	17-37
52154320	Hot Roller	17-36
52154411	Spring Plate	17- 4
52154444	Pin	29-17
52154485	Lower Exit Roller	19-24

Parts No	Description	Page and Index No.
52154488	Exit Roller Belt	19-26
52154497	Exit Antistatic Brush	19- 1
52154502	Exit Tray Bracket	29-22
52155180	Heat Sink - Optics Board	39- 3
52155181	Harness - Optics Board	39- 2
52155216	AC Drive Board - 115V	35- 2
52155216	AC Drive Board - 115V	39- *
52155222	Transformer - 100/25V	39- 1
52155225	ID Sensor Board	11- 2
52155228	Regist Sensor Board	11- 4
52155230	Photointerrupter - L Type	19-21
52155234	Erase Lamp Board	13-13
52155236	AC Drive Board - 220/240V	35- 2
52155236	AC Drive Board - 220/240V	39- *
52155240	Feed Control Board	33- 2
52155240	Feed Control Board	41- *
52155250	Thermistor	17-39
52155260	Fiber Input Connector	37- 2
52155275	Thermal Block Harness	33-29
52155288	Optics Harness	25-19
52155300	Scanner Drive Motor - DC55W	25-39
52155301	Scanner Drive Motor - DC55W - ROC	25-39
52155303	Exposure Lamp - 85V/250W	25- 3
52155304	Toner Overflow Sensor	15-27
52155307	Fusing Lamp - 115V	17-25
52155309	Fusing Lamp - 220/240V	17-25
52155314	Magnetic Clutch	9-61
52155351	Stabilizer	33- 6
52155361	Power Pack - C/B	33- 3
52155362	Power Pack - T/S/PCC	33- 8
52155370	Drum Heater - 8W	13-55
52155371	Grounding Wire	13-59
52155390	Thermofuse	17-17
52155410	Main Motor - AC 48W	15- 6
52155411	Main Motor - AC 48W UL	15- 6

Parts No.	Description	Page and Index No.
52155422	Cooling Blower - AC 24/22W	27-42
52155423	Outlet Fan Motor - AC 24/22W	15-20
52155426	Vacuum Fan Motor - 14/12W	15-33
52155431	Pre-Transfer Lamp - 430V/1.3W	11- 3
52155432	Quenching Lamp - 430V/1.3W	13-33
52155436	Cement Registor	35- 9
52155447	DC Harness	33-18
52155447	DC Harness	35-11
52155447	DC Harness	43- 1
52155449	Relay Harness	35-13
52155453	Toner End Harness	9-60
52155454	Front Door Harness	35- 5
52155458	Safety Switch Harness	35- 6
52155459	AC Harness	35-12
52155459	AC Harness	45- 1
52155464	Fusing Harness	17-59
52155471	Shorting Connector	33-19
52155472	Harness - Exhaust Relay	35-14
52155495	Transformer Harness - 220/240V	9-41
52155496	Lower Paper Feed Harness	9-21
52155530	Power Supply Unit	35-10
52155664	Instruction Cards Cover Ass'y	5-59
52155670	DIP Switch Cover	5-52
52155671	Instruction Cards Cover	5- 3
52155681	Cover - A	5- 5
52155682	Cover - B	5- 2
52155685	Key Top - Start	5-41
52155688	Key Top - Interrupt	5-27
52155689	Key Top - Recall	5-25
52155690	Key Top - 0	5-40
52155691	Key Top - 1	5-22
52155692	Key Top - 2	5-23
52155693	Key Top - 3	5-24
52155694	Key Top - 4	5-34
52155695	Key Top - 5	5-36

Parts No.	Description	Page and Index No.
52155696	Key Top - 6	5-38
52155697	Key Top - 7	5-33
52155698	Key Top - 8	5-35
52155699	Key Top - 9	5-37
52155700	Key Top - C/S	5-39
52155701	Key Top - ADS	5-21
52155702	Key Top - Lighter	5-20
52155703	Key Top - Darker	5-19
52155704	Key Top - Select Cassette	5-18
52155732	Ten Key Cover - A4/A3	5- 9
52155755	Ten Key Cover - ROC (LT/LDG)	5- 9
52155803	Feed Control Holder	33- 1
52155804	AC Drive Board Bracket	35- 1
52155805	C/B Power Pack Bracket	33- 4
52155807	Power Cord Bracket - 115V	33-21
52155808	Power Cord Bracket - 220/240V	33-21
52155810	Stabilizer Bracket	33- 7
52155813	Power Relay Bracket	35- 8
52155814	Control Board Bracket	33-17
52155818	Connector Unit Bracket	17-58
52155819	Harness Cover Angle - Front	29-20
52155820	Harness Cover Angle - Rear	29-21
52155821	Power Supply Unit Cover	29-23
52155822	Safety Switch Bracket	35- 4
52155824	Safety Switch Lever	35- 3
52155825	Fusing Connector Bracket	29-10
52155827	Control Board Angle	33-16
52155828	Harness Holder Angle	33- 5
52155832	Transformer Bracket	33-26
52155837	Outlet Fan Relay Bracket	35- 7
52155841	Counter Bracket	33- 9
52159002	Hot Roller Stripper (6pcs/set)	19- 6
52159003	Seal - Cleaning Unit	23- 2
52159500	DG Gauge (2 PCS/1 Set)	107- 1
52159501	Toner Collection Bottle	15-29

Parts No.	Description	Page and Index No.
50530223	Bushing - 8mm	9-32
50530223	Bushing - 8mm	17-31
50530223	Bushing - 8mm	31-38
50530447	Bushing - 6mm	9- 5
50530447	Bushing - 6mm	15-14
50530447	Bushing - 6mm	19-15
50530447	Bushing - 6mm	31-14
50540536	Magnet Catch Ass'y	3-40
52034146	Thermistor Spring	17-41
52039501	Grease 501	107- 6
52051083	Sprocket - 30T/50Hz	31-33
52051084	Sprocket - 27T/60Hz	31-33
52051099	Fusing Drive Shaft	31-37
52051105	Chain Tightener	31-27
52051121	Belt Tightener	31-29
52051127	Timing Belt	31-30
52051333	ADF Screw	3- 5
52051336	Front Cover Chain	21-13
52051691	Stud Bracket	25-17
52051694	Adjusting Cam - Start Lever	25-18
52051751	Lens - F8/180	27- 8
52051768	Rubber Seal - Mirror	27-10
52051845	4th Mirror	27-39
52051869	**Scanner Driver Pulley**	**25-40**
52051914	Harness Holder	33-12
52051923	Spacer - 12.5 x 19 x 1MM	25-30
52052069	Adjusting Screw	13- 7
52052121	Spring Plate	13-36
52052697	Bushing - Upper Registration Roller	11-11
52052866	Magnetic Clutch Collar	9-62
52052960	Actuator - A3	7-26
52052961	Actuator - B4	7-26
52052962	Actuator - A4R	7-26
52052963	Actuator - B5R	7-26
52052964	Actuator - A4	7-26
52052965	Actuator - B5	7-26

Parts No.	Description	Page and Index No.
52052966	Actuator - A5R	7-26
52052967	Actuator - A5	7-26
52052968	Actuator - B6R	7-26
52052969	Actuator - B6	7-26
52052970	Actuator - A6R	7-26
52052971	Actuator - 11 x 17	7-26
52052972	Actuator - 11 x 15	7-26
52052973	Actuator - 11 x 14	7-26
52052974	Actuator - 8-1/2 x 13	7-26
52052975	Actuator - 8-1/4 x 13	7-26
52052976	Actuator - 8 x 13	7-26
52052977	Actuator - 8 x 10-1/2	7-26
52052978	Actuator - 8 x 10	7-26
52052979	Actuator - 11 x 8-1/2	7-26
52052992	Actuator - 5-1/2 x 8-1/2	7-26
52052993	Actuator - 8-1/2 x 5-1/2	7-26
52052996	Actuator - 8-1/2 x 11R	7-26
52052997	Actuator - 8-1/2 x 14	7-26
52053103	Bushing - 6mm	21-16
52053306	Gear - 18T	21-37
52053306	Gear - 18T	31- 1
52053467	Boss - Toner Supply Clutch	31- 8
52053551	Cleaning Unit Casing	23- 1
52053561	Holder	23-20
52053565	Cleaning Blade	23-13
52053575	Cleaning Blade Holder	23- 6
52053582	Gear - 15T	23-42
52053583	Rear Guide Pin - Cleaning	23-38
52053599	Side Seal - Cleaning Rear	23-43
52053602	Seal - Front Outer	23- 3
52053603	Seal - Rear Outer	23- 9
52053604	Seal - Front Inner	23- 5
52053605	Seal - Rear Inner	23- 8
52053617	Pressure Arm	23-40
52053635	Pressure Lever	31-47

Parts No.	Description	Page and Index No.
52053637	Spring - Cleaning Blade	31-49
52053647	Front Endblock - PCC	23-24
52053649	Rear Endblock - PCC	23-45
52053651	Front Endblock Cover - PCC	23-25
52053653	Rear Endblock Cover - PCC	23-47
52053671	Spring - Anchor	23-37
52053673	Setting Pin	23-19
52053821	Terminal Spring	13-49
52053850	Front Endblock Cover - T & S Corona	13-41
52053851	Front Endblock - T & S Corona	13-42
52053853	Rear Endblock - T & S Corona	13-47
52053872	Rear Bracket - T & S Corona	13-35
52053874	Rear-Endblock Cover - T & S Corona	13-48
52053950	Cam	23-26
52053958	Pick-Off Pawl Shaft	23-29
52053964	Pick-Off Solenoid	31-51
52053965	Spring	23-31
52053966	Set Screw	23-30
52053968	Set Screw - Separator Shaft	23-49
52053971	Pick-Off Pawl Lever	31-48
52053975	Cam	23-27
52053981	Collar - Spring	23-33
52054135	Collar - Fusing	17-30
52054181	Gear - 18T	17-49
52054220	Shaft - Hot Roller Stripper	19- 4
52054305	Spring - Hot Roller Stripper	19- 5
52054321	Bushing - 20 mm	17-26
52055250	L.E.D. Sensor Type S	9-28
52055251	L.E.D. Sensor Type T	9-69
52055251	L.E.D. Sensor Type T	25-33
52055251	L.E.D. Sensor Type T	31-15
52055253	Photointerruptor Pack	9-20
52055313	Registration Clutch	11-12
52055405	Transformer - 115V	33-25
52055407	Transformer - 220/240V	33-25

Parts No.	Description	Page and Index No.
52055494	Harness Transformer - 220/240V	33-28
52059001	Charge Wire - Pre Cleaning Corona	23-28
52059101	Gap Gauge	107- 3
52059510	Drum	13-26
52059601	Switching Board	107- 2
52091694	Guide Roller - 1st Scanner	25-25
52091704	Reflector - AID	25- 1
52091870	Left Pulley	25-31
52091875	Right Pulley	25-41
52092768	Knob - Registration Roller	11-14
52094126	Wire Clamp	17-54
52094149	Fusing Unit Shaft	17-29
52094183	Unit Lock Lever	29-18
52094400	Oil Pump Bracket	17- 8
52094405	Oil Pump Lever	17- 7
52094407	Cam Gear - 32T	17- 9
52094408	Gear - 16T	17-28
52094409	Oil Tube - 105 mm	17-10
52094410	Oil Tube - 140 mm	17- 6
52094470	Upper Exit Roller	19-23
52095320	Oil End Sensor	17- 5
52095450	Relay - Coling Fan Motor - 220/240V	35-106
52111710	1st Mirror	25-15
52111711	Front Cover - Terminal	25-14
52111712	Rear Cover - Terminal	25- 5
52111733	Bushing - 2nd Scanner	25-29
52112259	Spacer - M20 x 0.1	13-20
52112262	Drum Shaft Holder	13-29
52112267	Drum Shaft Knob	13-18
52112278	Drum Flange Spring	13-24
52112285	Rear Flange	13-28
52112365	Bushing - 12 x 19 x 11 mm	13-21
52162844	Friction Pad	9-15
54031030	Tension Spring	13-50
54031145	Cover - Key Counter	3-51

Parts No.	Description	Page and Index No
54032048	Bushing - 4mm	15-34
54032075	Stepped Screw	27- 4
54032106	Ratchet Sleeve - Paper Feed	31- 7
54034335	Decal - Terminal 115V	33-24
54034335	Decal - Terminal 115V	105-13
54036118	Stepped Screw - Transformer	27- 9
54085160	Short Connector	45- 2
54091705	Clamp - Reflector	25-13
54091855	Mounting Pin	17-21
54131812	Spring - Drum Return Arm	31-53
54134835	Decal - Paper Level	7-22
54134835	Decal - Paper Level	105-14
54154097	Lamp Terminal	17-52
54154310	Valve - Oil Pump	17- 2
54154457	Spring - Exit	19-11
54182116	Spacer - Guard	23-48
54182859	Spring - Regist Roller (Front)	23-39
54191057	Rubber Foot	29-24
54195311	Grounding Wire	33-20
54196244	Left Spring - Platen Cover	7-11
54196245	Right Spring - Platen Cover	7-10
54201515	Plate - Key Counter	3-50
54201675	Insulator - Lamp Terminal	25- 8
54201676	Spacer - Lamp Terminal	25-11
54201682	Support - Lamp Terminal	25-10
54201779	Arm Holder - Platen Cover	7-12
54203768	Spring - Release	7-15
54204193	Collar - Release Cam	23-41
54209502	Test Chart - OS-A3 (100 pcs/set)	107-15
54209504	Thermo Meter - HLC60-E	107-10
54209505	Probe - HLC60-E	107-11
54209507	Digital Multimeter - BECKMAN-RMS3030	107-12
54209516	Test Chart - OS-A3 (10 pcs/set)	107-15
54209550	Silicon Oil	107-13
54241955	Lock - Platen Cover	7- 3

Parts No.	Description	Page and Index No.
54324117	Insulator - A	17-53
54324118	Insulator - B	17-51
54347916	High Voltage Decal	13-17
54347916	High Voltage Decal	31-23
54347916	High Voltage Decal	31-54
54395246	Totalizer Ass'y	33-10
54421099	Gear - 24Z	31-36
54421100	Coupled Sprocket and Gear	31-39
54421110	Sprocket - 20T	31-28
54421111	Spring - Main Drive Tightener	31-31
54421111	Spring - Main Drive Tightener (50Hz)	31-34
54421146	Seal - Fan Duct	29-26
54421277	Decal - Main Switch	3-33
54421277	Decal - Main Switch	105-15
54421296	Operating Instruction Holder	3-55
54421372	Decal - Power Source - 220V	3-52
54421372	Decal - Power Source 220V	105-16
54421374	Cap - Left Cover - L	3-31
54421375	Cap - Left Cover - S	3-34
54421657	Seal - 15 x 214 x 13	7-17
54421667	Stud - Platen Cover Mounting	7-18
54421700	Front Terminal - Exposure Lamp	25- 9
54421705	Rear Terminal - Exposure Lamp	25-12
54421711	Spring Plate - 1st Mirror	25-16
54421735	Pulley	25-27
54421740	2nd and 3rd Mirror	25-23
54421741	Rear Spring Plate - 2nd and 3rd Mirror	25-22
54421742	Front Spring Plate - 2nd and 3rd Mirror	25-24
54421748	Cleaner - Guide Rod	25-28
54421770	Cam - Optics Axis	27-12
54421847	Spring Plate	27-38
54421867	Main Pulley - Scanner Drive	25-40
54421890	Spring - Wire Tightner	25-34
54421969	Mylar Sheet - Terminal	25-46
54421969	Mylar Sheet - Terminal	27-44

Parts No.	Description	Page and Index No.
54422060	Casing - Main Corona	13- 2
54422065	Front End Block - Main Corona	13- 8
54422066	Front Cover - Main Corona	13- 9
54422068	Rear Cover - Main Corona	13- 6
54422108	Spring - Corona Wire	13- 5
54422108	Spring - Corona Wire	23-46
54422110	Plug - Corona Unit	13- 4
54422117	Shoulder Screw - Hinge	9- 4
54422123	Cleaner - Main Corona Wire	13-11
54422143	Fan - Main Corona	15- 5
54422165	Receptacle Housing - Main Corona	13-37
54422638	Collar - Friction Pad Arm	9-17
54422642	Shoulder Screw - M3	9-13
54422692	Rear Spring - Middle Guide	9-10
54422693	Front Spring - Middle Guide	9- 9
54422754	Spring - Registration Roller	11-10
54423109	Seal - Development Roller	21-10
54423154	Holder - Development Unit	31-26
54423233	Spring - Drive Wheel	21-48
54423233	Spring - Drive Wheel	31-10
54423570	Shoulder Sleeve	23- 7
54423585	Bushing	13-22
54423593	Seal - Cleaning Blade Shaft	23- 4
54423664	Toner Collection Bottle Cap - Small	15-24
54423872	Gear - 16z	15-13
54423904	Spring - Pick-Off Pawl Slide	23-34
54424086	Gear - 40Z	17-55
54424100	Left Fusing Unit Slide Guide	17-20
54424151	Gear - 30Z	17-57
54424152	Spring - Fusing Drive	17-56
54424186	Spring - Fusing Unit Release Lever	29-16
54424201	Rear Bracket - Lamp Terminal	17-50
54424421	Decal - Small	17-47
54424421	Decal - Small	105-17
54424440	Front Release Lever - Exit Ass'y	19-14

Parts No.	Description	Page and Index No.
54424442	Rear Release Lever - Exit Ass'y	19-10
54424444	Stud - Exit Ass'y Release Lever	19- 9
54424451	Flame - Exit	19-13
54424463	Spring - Front Release Lever	19-16
54424464	Spring - Rear Release Lever	19- 8
54424465	Stripper Pawl Plate	19- 7
54424467	Spring - Stripper Pawl Plate	19-12
54424482	Upper Exit Guide	19- 2
54424485	Feeler - Paper Exit Sensor	19-22
54424491	Actuator - Paper Exit Sensor	19-20
54424492	Gear 20Z	19-19
54424494	Gear 19Z	19-18
54424495	Slip Clutch	19-17
54424500	Cover - Exit Ass'y	19- 3
54424501	Copy Tray	3-29
54425315	Anti-Condensation Heater - 10W	27-49
54425856	Cover - Counter	33-11
54429003	Main Corona Wire (10 pcs/set)	13-10
54429004	T&S Corona Wire (10 pcs/set)	13-43
54429101	Setting Powder	107- 7
54429103	Launa Oil	107-16
54429106	Drum Shoe	107- 8
54432668	Bushing	9-64
54432668	Bushing	15-16
54463707	Bushing - 6 x 10 x 6 mm	23-21
54472257	Front Drum Flange	13-25
54472267	Timing Pulley - 48T	13-38
54472286	Drum Guide	13-27
54472681	Snap Ring	3-16
54472681	Snap Ring	13-58
54473145	Mylar Seal - Paddle Roller	21-52
54473236	Gear - 23T	21-39
54473361	Toner Supply Solenoid	31- 9
54474216	Front Lamp Terminal - Fusing Unit	17-24
54474220	Lamp Terminal Stud	17-23

Parts No.	Description	Page and Index No.
54474221	Lamp Holder Spring	17-22
54474229	Sleeve - Oil Pump	17- 3
54474241	Tube Clamp	17- 1
54474242	Oil Bottle Cap	17-11
54474980	Decal - Terminal 220V	33-24
54474980	Decal - Terminal 220V	105-13
54475690	Noise Filter - 220/240V	33-27
54479078	Heat Resisting Grease MT-78	107-14
54479104	Shoe Adaptor	107- 9
54482803	Pad - Platen Cover	7- 7
54482806	Platen Cover Arm	7- 9
54482810	Hinge Bracket - Platen Cover	7-14
54482811	Mounting Bracket - Platen Cover	7-16
54482813	Platen Cover Hinge	7-13
54482824	Flex Hinge - Plten Cover	7- 6
55016555	Spring Clutch	31- 6
58753026	Spring - Original Feed Arm	31-50
59183881	DF Mounting Bracket - Left	29- 7
59183890	DF Mounting Bracket - Right	29- 8
59222099	**Gear - 32T**	**31-59**
59301031	Decal Sheet- Large - LT/LDG	7-30
59301031	Decal Sheet - Large - LT/LDG	105-18
59301032	Decal Sheet- Small - LT/LDG	7-30
59301032	Decal Sheet - Small - LT/LDG	105-19
59301033	Decal Sheet- Large - A4/A3	7-30
59301033	Decal Sheet - Large - A4/A3	105-20
59301034	Decal Sheet- Small - A4/A3	7-30
59301034	Decal Sheet - Small - A4/A3	105-21
59313001	Color Toner Supply Unit	21-36
59313003	**Color Toner Supply Unit**	**21-61**
59313330	Toner End Lever	21-47
59313332	Toner End Actuator	21-45
59313337	Color Toner End Lever	21-42
59313382	Actuator - Red	21-44
59313384	Actuator - Blue	21-44
59313385	Actuator - Green	21-44
59313386	Actuator Bracket	21-43

Parts No.	Description	Page and Index No.
59313390	Decal - Color Development Unit	21-56
59313394	Spring - Arm	21-46
59318752	Installation Procedure - Color Dev.	21-*

Parts No.	Description	Page and Index No.
03130040W	Philips Pan Head Screw - M3 x 4	25-101
03130050W	Philips Pan Head Screw - M3 x 5	31-101
03130060W	Philips Pan Head Screw - M3 x 6	17-102
03130060W	Philips Pan Head Screw - M3 x 6	23-101
03130080W	Philips Pan Head Screw - M3 x 8	21-104
03130080W	Philips Pan Head Screw - M3 x 8	23-102
03130080W	Philips Pan Head Screw - M3 x 8	25-102
03130120W	Philips Pan Head Screw - M3 x 12	9-104
03130120W	Philips Pan Head Screw - M3 x 12	25-103
03130120W	Philips Pan Head Screw - M3 x 12	35-101
03130160W	Philips Pan Head Screw - M3 x 16	33-105
03140050W	Philips Pan Head Screw - M4 x 5	13-101
03140060M	Philips Pan Head Screw - M4 x 6	13-102
03140060W	Philips Pan Head Screw - M4 x 6	13-103
03140060W	Philips Pan Head Screw - M4 x 6	15-101
03140060W	Philips Pan Head Screw - M4 x 6	21-101
03140060W	Philips Pan Head Screw - M4 x 6	27-101
03140060W	Philips Pan Head Screw - M4 x 6	31-102
03140080M	Philips Pan Head Screw - M4 x 8	33-101
03140080W	Philips Pan Head Screw - M4 x 8	3-106
03140080W	Philips Pan Head Screw - M4 x 8	9-106
03140080W	Philips Pan Head Screw - M4 x 8	13-104
03140080W	Philips Pan Head Screw - M4 x 8	23-103
03140080W	Philips Pan Head Screw - M4 x 8	31-103
03140080W	Philips Pan Head Screw - M4 x 8	33-102
03140100W	Philips Pan Head Screw - M4 x 10	17-103
03140100W	Philips Pan Head Screw - M4 x 10	19-101
03140100W	Philips Pan Head Screw - M4 x 10	21-102
03140100W	Philips Pan Head Screw - M4 x 10	23-104
03140120W	Philips Pan Head Screw - M4 x 12	9-102
03140120W	Philips Pan Head Screw - M4 x 12	25-111
03140120W	Philips Pan Head Screw - M4 x 12	27-102
03140120W	Philips Pan Head Screw - M4 x 12	31-104
03140240W	Philips Pan Head Screw - M4 x 24	21-103
03150080W	Philips Pan Head Screw - M5 x 8	7-101

Parts No.	Description	Page and Index No
03150080W	Philips Pan Head Screw - M5 x 8	15-102
03150080W	Philips Pan Head Screw - M5 x 8	33-103
03230080W	Philips Sunken Head Screw - M3 x 8	9-103
03440060D	Philips Truss Head Screw - M4 x 6	3-102
04130202W	Tapping Screw - M3 x 20	7-102
04130252W	Tapping Screw - M3 x 20	15-106
04140080W	Tapping Screw - M4 x 8	15-108
04140080W	Tapping Screw - M4 x 8	25-104
04140100W	Tapping Screw - M3 x 10	15-107
04140102W	Tapping Screw - M4 x 10	15-103
04140102B	**Tapping Screw M4x16**	**7-105**
04340060W	Tapping Screw - M4 x 6	5-104
04340060W	Tapping Screw - M4 x 6	9-105
04340060W	Tapping Screw - M4 x 6	11-101
04340060W	Tapping Screw - M4 x 6	13-105
04340060W	Tapping Screw - M4 x 6	15-104
04340060W	Tapping Screw - M4 x 6	17-104
04340060W	Tapping Screw - M4 x 6	25-105
04340060W	Tapping Screw - M4 x 6	27-103
04340060W	Tapping Screw - M4 x 6	29-101
04340080W	Tapping Screw - M4 x 8	3-103
04340080W	Tapping Screw - M4 x 8	9-101
04340080W	Tapping Screw - M4 x 8	11-102
04340080W	Tapping Screw - M4 x 8	13-106
04340080W	Tapping Screw - M4 x 8	15-105
04340080W	Tapping Screw - M4 x 8	17-105
04340080W	Tapping Screw - M4 x 8	19-102
04340080W	Tapping Screw - M4 x 8	25-106
04340080W	Tapping Screw - M4 x 8	29-102
04340080W	Tapping Screw - M4 x 8	31-105
04340080W	Tapping Screw - M4 x 8	33-104
04340080W	Tapping Screw - M4 x 8	35-102
04340100W	Tapping Screw - M4 x 10	13-107
04340100W	Tapping Screw - M4 x 10	17-106
04340100W	Tapping Screw - M4 x 10	33-107
04440102W	Tapping Hexagon Head Screw - M4 x 10	17-116

Parts No.	Description	Page and Index No.
05740060E	Hexagon Headless Set Screw - M4 x 6	15-110
05740060E	Hexagon Headless Set Screw - M4 x 6	25-116
05740060E	Hexagon Headless Set Screw - M4 x 6	31-112
05750060E	Hexagon Headless Set Screw - M5 x 6	9-113
05750060E	Hexagon Headless Set Screw - M5 x 6	31-110
05930120E	Hexagon Bolt - M3 x 12	27-109
06230140E	Spring Pin - 3 x 14mm	23-105
07200025E	Retaining Ring - M2.5	9-109
07200025E	Retaining Ring - M2.5	21-107
07200025E	Retaining Ring - M2.5	23-106
07200030B	Retaining Ring - M3	13-114
07200030E	Retaining Ring - M3	9-112
07200030E	Retaining Ring - M3	17-109
07200030E	Retaining Ring - M3	19-104
07200040E	Retaining Ring - M4	15-111
07200040E	**Retaining Ring 4mm**	**21-116**
07200040E	Retaining Ring - M4	23-107
07200040E	Retaining Ring - M4	25-112
07200040E	Retaining Ring - M4	29-103
07200040E	Retaining Ring - M4	31-107
07200050E	Retaining Ring - M5	3-108
07200050E	Retaining Ring - M5	9-110
07200050E	Retaining Ring - M5	11-104
07200050E	Retaining Ring - M5	15-112
07200050E	Retaining Ring - M5	17-110
07200050E	Retaining Ring - M5	19-105
07200050E	Retaining Ring - M5	21-108
07200050E	Retaining Ring - M5	31-108
07200060E	Retaining Ring - M6	9-111
07200060E	Retaining Ring - M6	15-113
07200060E	Retaining Ring - M6	17-111
07200060E	Retaining Ring - M6	21-113
07200060E	Retaining Ring - M6	25-114
07200060E	Retaining Ring - M6	31-109
07200070E	Retaining Ring - M7	17-112
07200070E	Retaining Ring - M7	21-109

Parts No	Description	Page and Index No.
07200070E	Retaining Ring - M7	25-115
07250100E	Retaining Ring - M10	13-115
07250120E	Retaining Ring - M12	13-116
07250140E	Retaining Ring (C-type) - M14	21-110
07250180W	Retaining Ring - M18	13-117
07250180W	Retaining Ring - M18	17-113
07250200E	Retaining Ring - M20	25-113
07270050E	Retaining Ring - M5	7-103
07270060E	Retaining Ring - M6	21-112
07403008	Ball Bearing	31-111
08011185	Philips Screw with Toothed Washer - M4 x 8	33-106
08025060	Tapping Screw - M4 x12	13-113
08025085	Tapping Screw - M4 x 8	3-105
08025085	Tapping Screw - M4 x 8	9-108
08025094	Tapping Screw - M4x8	3-101
08025094	Tapping Screw - M4x8	5-101
08030017	Knob Screw	3-107
08053036	Ball Bearing - 8 x 16 x 5mm	25-117
08053104	**Ball Bearing 8x22x7mm**	**17-115**
08053235	Ball Bearing - 15 x 32 x 9mm	21-111
08053291	Ball Bearing - 8 x 16 x 5 mm	17-115
08053377	Ball Bearing - 25 x 42 x 9 mm	17-114
08053399	Bushing - 6 x 10 x 8 mm	19-106
08074103	**Spacer .5mm**	**21-115**
08093426	**Ball Bearing 15x32x9**	**21-111**
08340060W	**Tapping Screw M4x8**	**31-113**
09161222	Bushed Roller Chain - 222P	31-20
09503005M	Philips Screw with Lock Washer - M3 x 5	17-101
09513005	Philips Screw with Flat Washer - M3	17-107
09513006W	Philips Screw with Flat Washer - M3 x 6	13-108
09513006W	Philips Screw with Flat Washer - M3 x 6	25-107
09513006W	Philips Screw with Flat Washer - M3 x 6	33-109
09513006W	Philips Screw with Flat Washer - M3 x 6	35-103
09513008W	Philips Screw with Flat Washer - M3 x 8	5-102
09514004W	Philips Screw with Flat Washer - M4 x 4	25-108
09514008W	Philips Screw with Flat Washer - M4 x 8	13-109
09514008W	Philips Screw with Flat Washer - M4 x 8	21-105
09514008W	Philips Screw with Flat Washer - M4 x 8	25-109
09514008W	Philips Screw with Flat Washer - M4 x 8	27-104

Parts No.	Description	Page and Index No.
09514012W	Philips Screw with Flat Washer - M4 x 12	13-110
09514012W	Philips Screw with Flat Washer - M4 x 12	33-110
09644006W	Tapping Screw with Flat Washer - M4 x 6	25-110
09644008W	Tapping Screw with Flat Washer - M4 x 8	13-111
09644008W	Tapping Screw with Flat Washer - M4 x 8	15-109
09644008W	Tapping Screw with Flat Washer - M4 x 8	17-108
09644008W	Tapping Screw with Flat Washer - M4 x 8	19-103
09644008W	Tapping Screw with Flat Washer - M4 x 8	27-105
09644008W	Tapping Screw with Flat Washer - M4 x 8	33-108
09644010W	Tapping Screw - M4 x 10	7-104
09653006W	Tapping Screw with Flat Washer - M3 x 6	3-104
09654008W	Tapping Screw with Flat Washer - M4 x 8	5-103
09654008W	Tapping Screw with Flat Washer - M4 x 8	9-107
09654008W	Tapping Screw with Flat Washer - M4 x 8	11-103
09654008W	Tapping Screw with Flat Washer - M4 x 8	13-112
09654008W	Tapping Screw with Flat Washer - M4 x 8	21-106
09654008W	Tapping Screw with Flat Washer - M4 x 8	31-106
09654012W	**Tapping Screw with Flat Washer - M4 x 12**	**21-114**
10050383	Edging: B	29-104
11000844	Socket - Mate-N-Lock	43-101
11000863	Stud Pin	43-102
11000864	Housing - AWG14-20	45-101
11000916	Pin - Mate-N-Lock	45-102
11001155	Noise Killer	43-103
11001159	Socket - Mate-N-Lock	43-104
11001169	Fastening Receptacle	43-105
11001169	Fastening Receptacle	45-103
11001170	Fastening Receptacle	45-104
11001171	Fastening Receptacle	45-105
11001172	Fastening Receptacle	43-106
11001172	Fastening Receptacle	45-106
11001239	Pin - Mate-N-Lock	43-107
11001240	Socket - Mate-N-Lock	43-108
11001240	Socket - Mate-N-Lock	45-107
11001241	Socket - Mate-N-Lock	45-108
11001247	Terminal	43-109

Parts No.	Description	Page and Index No.
11001247	Terminal	45-109
11001249	Receptacle Terminal	43-110
11001327	Contact	43-111
11001328	Contact	43-112
11001341	Pin Contact	43-113
11001346	Pin Contact	43-114
11001348	Pin Contact	43-115
11001356	Pin Contact	43-116
11010328	Connector Pin Contact	37-101
11010359	Terminal - 3P	33-120
11020185	Connector - 4P	43-117
11020675	Connector - 6P	39-101
11020782	Connector - 4P	45-110
11020946	Housing - 3P	45-111
11020948	Housing - 3P	45-112
11020977	Connector - Heater	43-118
11021286	Connector	43-119
11021306	Connector - 3P	43-120
11021396	Connector - 2P	43-121
11021397	Connector - 2P	43-122
11021401	Receptacle Housing - 1P	45-114
11021402	Receptacle Housing - 1P	45-115
11021403	Receptacle Housing	45-116
11021404	Receptacle Housing	43-123
11021404	Receptacle Housing	45-117
11021407	Receptacle Housing - 1P	43-124
11021408	Receptacle Housing	43-125
11021408	Receptacle Housing	45-118
11021509	Connector - 4P	43-126
11021515	Connector - 2P	43-127
11021515	Connector - 2P	45-119
11021516	Connector - 3P	45-120
11021517	Connector - 4P	43-128
11021532	Connector - 2P	45-121
11021559	Connector - 2P (Black)	45-122

Parts No.	Description	Page and Index No.
11021567	Connector - 2P	37-102
11021620	Receptacle Housing - 3P	43-129
11021815	Connector - 3P	45-123
11021889	Connector - 6P	45-113
11021892	Connector - 9P	43-130
11021896	Connector - 2P	43-131
11021910	Connector - 2P	43-132
11021911	Connector - 3P	43-133
11021912	Connector - 4P	43-134
11021913	Connector - 5P	43-135
11021914	Connector - 6P	43-136
11021915	Connector - 7P	43-137
11021916	Connector - 8P	43-138
11021917	Connector - 9P	43-139
11021918	Connector - 10P	43-140
11021921	Connector - 13P	43-141
11021924	Connector - 2P	43-142
11021926	Connector - 4P	43-143
11021930	Connector - 6P	43-144
11021938	Connector - 2P	43-145
11021939	Connector - 3P	43-146
11021942	Connector - 6P	43-147
11021976	Connector - 2P	43-148
11022061	Connector - 6P	43-149
11022099	Connector - 12P	43-150
11022112	Connector - 2P	39-101
11022113	Connector - 2P	39-102
11022278	Connector - 18P	43-151
11022369	Connector - 6P	43-152
11022370	Connector - 6P	43-153
11030347	Connector - 8P	37-103
11030657	Connector - 50P	43-154
11030701	Terminal - 6P	39-103
11030750	Terminal - 2P	39-102
11031724	Connector - 2P	39-104

Parts No.	Description	Page and Index No.
11031725	Connector - 3P	41-101
11031726	Connector - 4P	39-103
11031728	Connector - 6P	37-104
11031729	Connector - 7P	41-102
11031730	Connector - 8P	37-105
11031730	Connector - 8P	39-104
11031731	Connector - 9P	39-105
11031731	Connector - 9P	39-105
11031731	Connector - 9P	41-103
11031735	Connector - 13P	41-104
11031739	Connector - 3P	41-105
11031753	Connector - 3P	41-106
11031757	Connector - 7P	41-107
11031878	Connector - 2P	37-106
11033020	Connector - 20P	37-107
11033025	Connector - 50P	37-108
11033029	Connector - 2P	37-109
11033037	Connector - 26P	37-110
11040224	Relay Bracket	35-108
11040271	LSI Socket - 28P	37-111
11040322	Fuse Holder - 220/240V	33-111
11050008	Nylon Clip - 2N	25-118
11050010	Nylon Clip - 6N	35-110
11050087	Clamp	33-115
11050087	Clamp	35-111
11050106	Wire Saddle	9-114
11050108	Nylon Clip	33-119
11050144	Harness Clamp	33-121
11050144	Harness Clamp	35-109
11050201	Harness Clamp	33-118
11060394	Locking Support	33-117
11060395	Nylon Stud	33-116
11060442	Cord Clamp - 220/240V	33-122
11070335	Fuse - 8A 220/240V	33-113
11070344	Circuit Breaker - 15A	33-112

Parts No.	Description	Page and Index No.
11070415	Fuse 5A37-	35-112
12041078	Microswitch	35-105
12041228	Switch	39-106
12041280	Push Switch	35-104
12041327	Dip Switch	37-112
12041327	Dip Switch	39-107
12060029	Battery - BR2325	37-113
12081029	Power Relay	35-107
12081034	Relay - DC 24V	39-106
12081051	Relay - DC 24V (115V)	35-106
14000031	Transistor - 2SC458B	39-108
14000072	Transistor - 2SC372Y	37-114
14000135	Transistor - 2SA1015	37-115
14000265	Transistor - 2SC1815Y	39-107
14000283	Transistor - 2SA1030	39-109
14010237	Transistor - 2SB872R	39-110
14010327	Transistor - 2SD1176R	39-111
14010611	Diode - 1S1588	37-116
14010611	Diode - 1S1588	39-112
14010611	Diode - 1S1588	41-108
14010769	Zener Diode - RD3.6EB	37-117
14010807	Diode Array	37-118
14020110	Diode - V06C	39-113
14020388	Diode - W03C	43-155
14020430	Zener Diode - BZ-071	37-119
14020467	Diode - S5566G	39-108
14030255	Light Emitting Diode	37-120
14050127	Thyristor - TLP541G	39-109
14050130	Rectifier - 400V 10A IG4B42	39-110
14050151	Photothyristor - TLP545J	39-111
14050152	Rectifier - IJ4B42	39-112
14070508	IC - HD74LS04N	39-115
14070511	IC - HD7417P	37-121
14070520	IC - HD74LS00P	39-116
14070605	IC - TC4050BP	37-122

Parts No.	Description	Page and Index No
14070621	IC - SN74LS08N	37-123
14070621	IC - SN74LS08N	39-117
14070972	IC - HD74LS42P	37-124
14070974	IC - HD74LS32P	37-125
14070975	IC - HD7407P	37-126
14071026	IC - SN74LS373N	37-127
14071081	IC - HD7406P	37-128
14071090	IC - HD74LS74AP	39-118
14071259	IC - μPD8155C-2	37-129
14071334	IC - μPD7810G	37-130
14071335	IC - RF5G02-005	37-131
14071348	IC - TD62304P	37-132
14071534	IC - MPD8253C-2	39-119
14071535	IC - TD62308AP	37-133
14071537	IC - TC74HC14P	39-121
14071651	IC - TC5517APL	37-134
14071652	IC - TD62307P	37-135
14080200	IC - TA75339P	41-109
14080258	IC - AN6914	37-136
14080412	IC - 7705CP	37-137
14080413	IC - TL092CP	37-138
15030070	Ceramic Oscillator - 10MHz	37-139
15030103	Oscillator - 10MHz	39-122
16012844	Resistor - 1.8KΩ 1/2W	39-113
16017178	Resistor Array - 120KΩ 1/4W ± 5%	37-140
16017215	Resistor Array - 4.7KΩ 1/8W ± 5%	39-123
16017282	Resistor Array - 150Ω	37-141
16017325	Resistor Array - 18KΩ 1/4W ± 5%	37-142
16017370	Resistor Array - 1KΩ	37-143
16017373	Resistor Array - 3.3KΩ	37-144
16017374	Resistor Array - 4.7kΩ	37-145
16017374	Resistor Array - 4.7kΩ	39-124
16017374	Resistor Array - 4.7kΩ	41-110
16017375	Resistor Array - 3.3KΩ	37-146
16017376	Resistor Array - 10kΩ ± 5% 1/8W	37-147

Parts No.	Description	Page and Index No.
16017390	Resistor Array - 490Ω	37-148
16017468	Fuse Resistor - 100Ω 1/2W	39-114
16018137	Variable Resistor - 1KΩ 0.75W	37-149
16018185	Variable Resistor - 200Ω 0.5W	39-115
16018328	Variable Resistor - 30KΩ	37-150
16020895	Noise Killer - 0.1MF, 120Ω	39-116
16020920	Noise Killer - 0.1MF 120Ω	39-117
16020923	Noise Filter - 115V	33-27
16020934	RC Array - CR01-R	37-151
16020934	RC Array - CR01-R	39-125
16041355	Capacitor - 220MF 10V	39-126
16041378	Capacitor - 1MF 50V	37-152
16041381	Capacitor - 4.7μF 50V	37-153
16041382	Capacitor - 10μF 50V	37-154
16041382	Capacitor - 10μF 50V	41-111
16041383	Capacitor - 22μF 50V	37-155
16041386	Capacitor - 100MF 50V	37-156
16041386	Capacitor - 100MF 50V	39-127
16041418	Capacitor - 1μF 25V	39-128
16060689	Capacitor - 0.01μF 50V	39-118
16060867	Capacitor - 3300μF 50V	39-129
16060996	Capacitor - 470PF 25V	37-157
16060998	Capacitor - 0.01μF 50V	37-158
16060998	Capacitor - 0.01μF 50V	41-112
16060999	Capacitor - 0.1μF 25V	37-159
16061184	Capacitor - 27PF 50V	37-160
16061396	Capacitor - 0.1μF 25V	39-130
16061484	Capacitor - 16μF 220V (115V)	33-114
16061485	Capacitor - 16μF 220V (220/240V)	33-114
16061495	Capacitor - 0.1μF 250V	39-119
16061496	Capacitor - 0.1μF 400V	39-120
16061497	Capacitor - 0.047μF 125V	39-121
16061542	Capacitor - 0.22μF 250V	39-122
16070044	Coil - 100 UH	39-123
16070129	Coil - 600 UH	39-124

Parts No.	Description	Page and Index No.
16114102	Resistor - 1KΩ 1/4T ± 5%	37-161
16114102	Resistor - 1KΩ 1/4T ± 5%	39-131
16114103	Resistor - 10KΩ 1/4T ± 5%	37-162
16114103	Resistor - 10KΩ 1/4T ± 5%	41-113
16114104	Resistor - 100KΩ 1/4T ± 5%	37-163
16114104	Resistor - 100KΩ 1/4T ± 5%	39-132
16114104V	Resistor - 100KΩ 1/4T ± 5% - 220/240V	39-125
16114105	Resistor - 1MΩ 1/4T ± 5%	37-164
16114152	Resistor - 1.5KΩ 1/4T ± 5%	37-165
16114181	Resistor - 180Ω 1/4T	37-166
16114220	Resistor - 22Ω 1/4T ± 5%	37-167
16114223	Resistor - 22KΩ 1/4T ± 5%	37-168
16114223	Resistor - 22KΩ 1/4T ± 5%	39-126
16114273	Resistor - 27KΩ 1/4T ± 5%	37-169
16114275	Resistor - 2.7MΩ 1/4W ± 5%	37-170
16114332	Resistor - 3.3KΩ 1/4T ± 5%	39-133
16114333	Resistor - 33KΩ 1/4T ± 5%	39-134
16114471	Resistor - 470Ω 1/4T ± 5%	37-171
16114472	Resistor - 4.7KΩ 1/4T ± 5%	37-172
16114472	Resistor - 4.7KΩ 1/4T ± 5%	39-127
16114473	Resistor - 47KΩ 1/4T ± 5%	37-173
16114562	Resistor - 5.6KΩ 1/4T ± 5%	37-174
16114562V	Resistor - 5.6KΩ 1/4W ± 5%	39-128
16114820	Resistor - 82Ω 1/4T ± 5%	39-129
16116222	Resistor - 2.2KΩ 1/2T ± 5%	37-175
16116222	Resistor - 2.2KΩ 1/2T ± 5%	39-130
16221001	Resistor - 1KΩ 1/4T ± 1%	37-176
16221202	Resistor - 2KΩ 1/4T ± 1%	37-177
16221800	Resistor - 185Ω 1/2W ± 1%	39-131
18230024	Switch	5-105
28010027	Power Supply Cord - 220/240V	33-23
28010039	Power Supply Cord - ROC	33-23
28010040	Power Supply Cord - 115V	33-23

Parts No.	Description	Page and Index No.

FT5010 (5215)
PARTS LOCATION AND LIST

m m m

. EXTERIOR [5215]

Revised 8/86

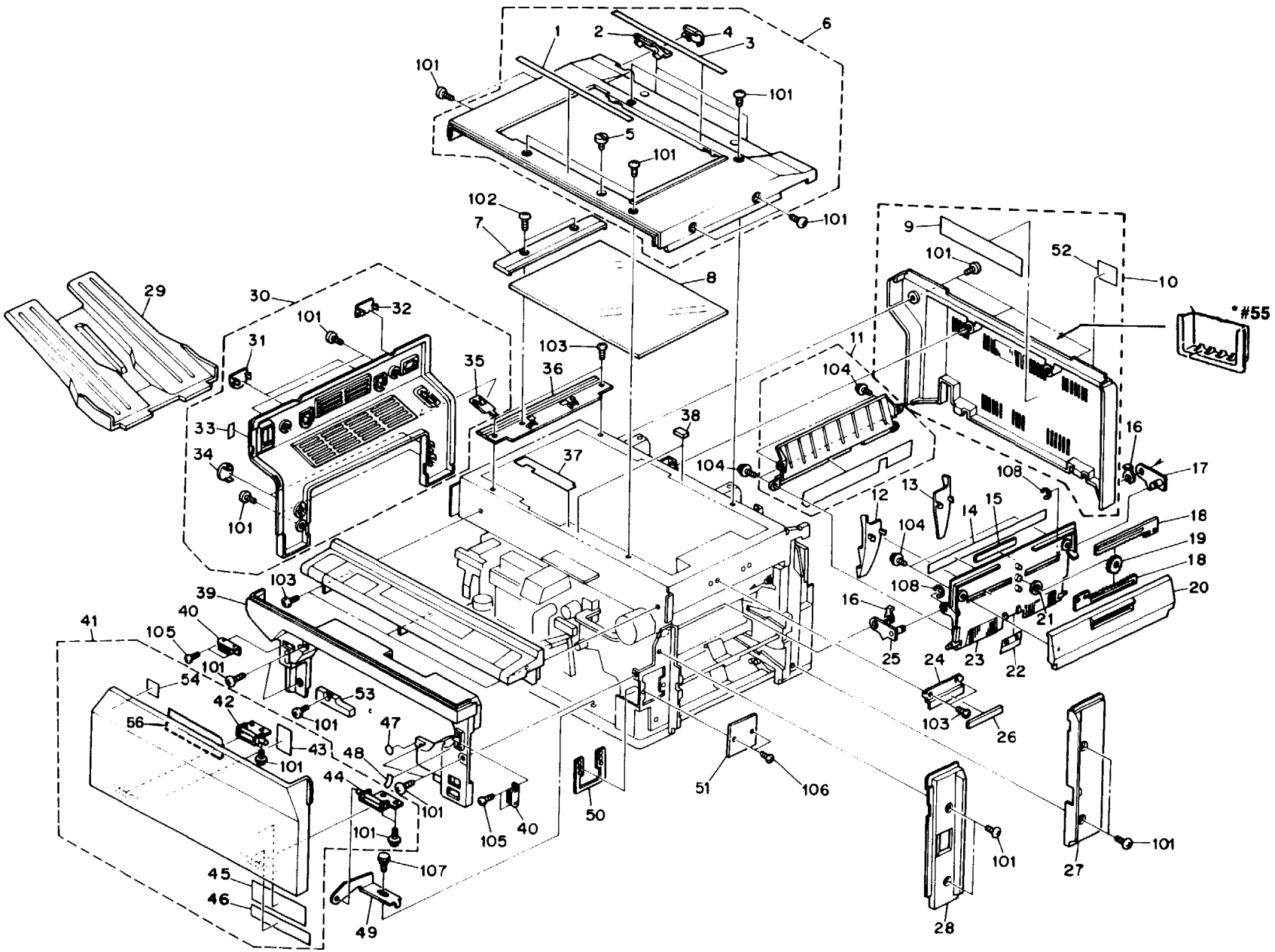

1. EXTERIOR [5215]

Rev. 10/91

ndex 0.	Parts No.	Description	Q'ty Per Assembly
*	52158751	Installation Procedure- English	1
*	52158752	Installation Procedure - 5 Languages	1
•	52154227	Decal sheet- German	1
•	52154228	Decal sheet- French	1
*	52154229	Decal sheet- Italian	1
•	52154230	Decal sheet- Spanish	1
1	52151319	Decal - Front Scale - LT/LDG	1
1	52151321	Decal - Front Scale - A4/A3	1
2	52151305	Upper Cover Cap - ADF	2
3	52151320	Decal - Rear Scale - LT/LDG	1
3	52151322	Decal - Rear Scale - A4/A3	1
4	52151306	Upper Cover Cap - Sensor	1
5	52051333	ADF Screw	1
6	52151269	Upper Cover - 115V	1
6	52151270	Upper Cover - 220/240V	1
7	52151930	Left Scale - A4/A3	1
7	52151933	Left Scale - LT/LDG	1
8	52151980	Exposure Glass	1
9	52151323	Decal - DIP Switch	1
10	52151288	Rear Cover - US	1
10	52151289	Rear Cover - EU	1
10	52151291	Rear Cover	1
11	52152679	Upper Guide - Manual Feed	1
12	52152690	Front Side Guide	1
13	52152669	Rear Side Guide	1
14	52152801	Decal - Manual Feed - LT/LDG	1
14	52152811	Decal - Manual Feed - A4/A3	1
15	52152693	Plate	1
16	54472681	Snap Ring	1
17	52152681	Rear Manual Feed Link	2
18	52152688	Side Fence Gear	2
19	52152687	Gear - 16T	1
20	52152686	Manual Feed Cover	1
21	52152691	Brake	1
22	52152676	Spring Plate	1

Index No;	Parts No.	Description	Q'ty Per Assembly
23	52152698	Manual Feed Table	1
24	52152694	Bracket	1
25	52152680	Front Manual Feed Link	1
26	52152685	Magnetic Rubber	1
27	52151283	Rear Right Cover	1
28	52151276	Front Right Cover	1
29	54424501	Copy Tray	1
30	52151278	Left Cover	1
31	54421374	Cap - Left Cover - L	2
32	52151307	Left Cover Cap - Sorter	1
33	54421277	Decal - Main Switch	1
34	54421375	Cap - Left Cover - S	2
35	52151308	Left Cover Cap - Duplex	1
36	52151935	Mounting Plate - A4 /A3	1
36	52151938	Mounting Plate - LT/LDG	1
37	52151926	Front Frame Seal	1
38	AA161031	Cushion - 20 x 5 x 3 mm	2
39	52151268	Inner Cover	1
40	50540536	Magnet Catch Ass'y	2
41	52151257	Front Cover Ass'y	1
42	52151297	Front Cover Hinge - Left	1
43	52154213	Decal - Misfeed Removal	1
44	52151295	Front Cover Hinge - Right	1
45	52151318	Decal - Toner Supply	1
46	52151317	Decal - Front Cover	1
47	52151315	Decal - A2	1
48	52151326	Decal - Toner Cartridge	1
49	52151293	Front Cover Angle - Right	2
50	54201515	Plate - Key Counter	2
51	54031145	Cover - Key Counter	2
52	54421372	Decal - Power Source - 220V	1
53	52153883	Harness Cover	1
54	52151292	Mylar - 20 x 28 mm	1
55	54421296	Operation Instruction Holder	
56	52151300	Seal-6x 20x 270mm	1

October 15, '85

Inde No.	Parts No.	Description	Q'ty Per Assembly
101	08025094	Tapping Screw - M4x8	
102	034400600	Philips Truss Head Screw - M4 x 6	
103	04340080W	Tapping Screw - M4 x 8	
104	09653006W	Tapping Screw with Flat Washer - M3 x 6	
105	08025085	Tapping Screw - M4 x 8	
106	03140080W	Philips Pan Head Screw - M4 x 8	
107	08030017	Knob Screw	
108	07200050E	Retaining Ring - M5	

2. OPERATION PANEL [5215]

Rev. **5/89**

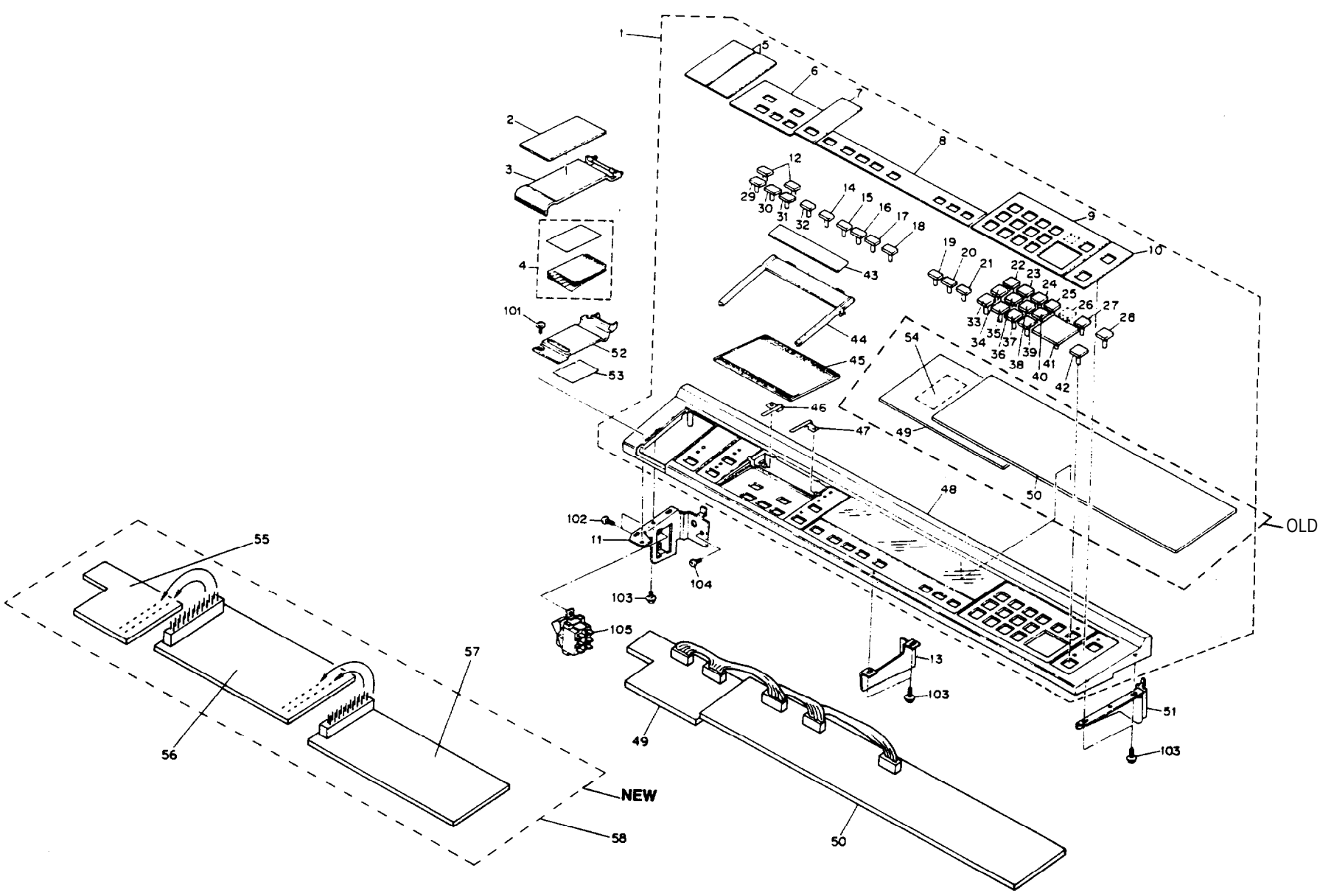

2. OPERATION PANEL [5215]

Rev. 5/89

Index NO.	Parts No.	Description	Q'ty Per Assembly
1	52155135	Operation Panel Ass'y - LT/LDG	1
1	52155140	Operation Panel Ass'y - A4/A3	1
1	52155150	Operation Panel Ass'y - RDC	1
2	52155682	Cover - B	1
3	52155671	Instruction Cards Cover	1
4	52158770	Instruction Cards - LT/LDG	1
4	52158771	Instruction Cards - A4/A3	1
4	52158773	Instruction Cards - German	1
4	52158774	Instruction Cards - French	1
4	52158775	Instruction Cards - Italian	1
4	52158776	Instruction Cards - Spanish	1
4	52158777	Instruction Cards - US	1
5	52155681	Cover - A	2
6	52155680	Margin Cover - LT/LDG	1
6	52155736	Margin Cover - A4/A3	1
6	52155757	Margin Cover - ROC	1
7	52155678	2 Single Copies Cover - LT/LDG	1
7	52155734	2 Single Copies Cover - A4/A3	1
8	52155677	ADS Cover - LT/LDG	1
8	52155733	ADS Cover - A4/A3	1
9	52155676	Ten Key Cover - LT/LDG	1
9	52155732	Ten Key Cover - A4/A3	1
9	52155755	Ten Key Cover - ROC	1
10	52155675	Program Cover - LT/LDG	1
10	52155731	Program Cover - A4/A3	1
11	52151329	Operation Panel Bracket - Left	1
12	52155713	Key Top - Margin - 115V	2
12	52155741	Key Top - Front Margin - 220/240V	1
12	52155742	Key Top - Back Margin - 220/240V	1
13	52151335	Operation Panel Bracket - Middle	1
14	52155708	Key Top - Select Original	1
15	52155707	Key Top - Reduce	1
16	52155706	Key Top - Enlarge	1
17	52155705	Key Top - Full Size	1
18	52155704	Key Top - Select Cassette	1
19	52155703	Key Top - Darker	1
20	52155702	Key Top - Lighter	1
21	52155701	Key Top - ADS	1
22	52155691	Key Top - 1	1
23	52155692	Key Top - 2	1
24	52155693	Key Top - 3	1
25	52155689	Key Top - Recall	1
25	52155716	Key Top - Decimal Point	1
26	52155689	Key Top - Recall	1
27	52155688	Key Top - Interrupt	1
28	52155686	Key Top - Program	1
29	52155712	Key Top - Size Magnification - US	1
29	52155740	Key Top - Size Magnification	1
30	52155711	Key Top - Zoom Down	1
31	52155710	Key Top - Zoom Up	1
32	52155709	Key Top - 2 Single Copies	1
33	52155697	Key Top - 7	1
34	52155694	Key Top - 4	1
35	52155698	Key Top - 8	1
36	52155695	Key Top - 5	1
37	52155699	Key Top - 9	1
38	52155696	Key Top - 6	1
39	52155700	Key Top - C/S	1
40	52155690	Key Top - 0	1
41	52155685	Key Top - Start	1
42	52155687	Key Top - Clear Mode	1
43	52155679	Size Cover - LT/LDG	1
43	52155735	Size Cover - A4/A3	1
43	52155756	Size Cover - ROC	1
44	52155666	Slide Cover Guide	1
45	52155667	Slide Cover	1
46	52155669	Left Spring Plate	1
47	52155668	Right Spring Plate	1
48	52155672	Display	1

Rev. 5/89

Index No.	Parts No.	Description	Q'ty Per Assembly
50	52155141	Display Control Board - A4/A3	1
50	52155151	Display Control Board - ROC	1
51	52151330	Operation Panel Bracket - Right	1
52	52155670	DIP Switch Cover	1
53	52155673	Decal - Monitor Board	1
54	52175126	IC-UPD7811G	1
55	52175252	Control Board	1
56	52175251	Display Board LT/LDG	1
57	51275250	Ten Key Board LT/LDG	1
58	[illegible]	Operational Panel PBA LT/LDG	1
59	52155660	OP Panel Cover	1
101	08025094	Tapping Screw - M4x8	
102	09513008W	Philips Screw with Flat Washer - M3 x 8	
103	09654008W	Tapping Screw with Flat Washer - M4 x B	
104	04340060W	lapping Screw - M4 x 6	
105	18230024	Switch	

3. PLATEN COVER AND CASSETTE [5215]

Rev. 5/89

3. PLATEN COVER AND CASSETTE [5215]

Rev. 5/8

Index NO.	Parts No.	Description	Q'ty Per Assembly
▶ 1	52151888	Platen Cover Ass'y	1
2	52151658	Original Holder	1
3	54241955	Lock - Platen Cover	1
4	52151657	Rear Platen Cover	1
5	52151656	Front Platen Cover	1
6	54482824	Flex Hinge - Plten Cover	1
7	54482803	Pad - Platen Cover	1
8	A4069505	Platen Cover Sheet - 10 Sheets/1 Set	1
9	54482806	Platen Cover Ann	1
10	54196245	Right Spring - Platen Cover	1
11	54196244	Left Spring - Platen Cover	1
12	54201779	Arm Holder - Platen Cover	2
13	54482813	Platen Cover Hinge	1
14	54482810	Hinge Bracket - Platen Cover	1
15	54203768	Spring - Release	1
16	54482811	Mounting Bracket - Platen Cover	1
17	54421657	Seal - 15 x 214 x 13	1
18	54421667	Stud - Platen Cover Mounting	4
19	52152734	Large Cassette Cover	2
19	52152737	Small Cassette Cover	1
20	52152727	Rear Side Fence	3
21	52152731	Rear Side Holder	3
22	54134835	Decal - Paper Level	3
23	52152713	Bottom Plate Pad	1
24	52152710	Bottom Plate	3
25	52152739	Rear Fence	3
26	52052960	Actuator - A3	1
26	52052961	Actuator - B4	1
26	52052962	Actuator - A4R	1
26	52052963	Actuator - A5R	1
26	52052964	Actuator - A4	1
26	52052965	Actuator - 85	1
26	52052966	Actuator - A5	1
26	52052967	Actuator - A5R	1
26	52052968	Actuator - B6	1

Index No.	Parts No.	Description	Q'ty Per Assembly
26	52052969	Actuator - A6R	1
26	52052970	Actuator - LG	1
26	52052971	Actuator - 11 x 17	1
26	52052972	Actuator - 11 x 15	1
26	52052973	Actuator - 11 x 14	1
26	52052974	Actuator - 8-1/2 x 13	1
26	52052975	Actuator - B-1/4 x 13	1
26	52052976	Actuator - 8 x 13	1
26	52052977	Actuator - 8 x 10-1/2	1
26	52052978	Actuator - 8 x 10	1
26	52052979	Actuator - 11 x 8-1/2	1
26	52052992	Actuator - 5-1/2 x 8-1/2	1
26	52052993	Actuator - 8-1/2 x 5-1/2	1
26	52052996	Actuator - 8-1/2 x 11R	1
26	52052997	Actuator - 8-1/2 x 14	1
27	52152716	Front Side Fence	3
28	52152720	Front Side Holder	3
29	52152704	Large Cassette Body	2
29	52152707	Small Cassette Body	2
30	59301031	Decal Sheet- Large - LT/LDG	1
30	59301032	Decal Sheet- Small - LT/LDG	1
30	59301033	Decal Sheet- Large - A4/A3	1
30	59301034	Decal Sheet- Small - A4/A3	1
▶ 31	52152819	Mounting Bracket Platen Cover	1
▶ 32	52152888	Base Holder	1
▶ 33	52152884	Arm Holder	1
▶ 34	50152835	Crank	1
▶ 35	52152836	Sleeve 8x84	1
▶ 36	52152887	Shaft 7x40	1
▶ 37	52152888	Rubber Magnet	1
▶ 38	52152889	Balancer Spring	1
▶ 39	52152840	Pin 4x115mm	1
▶ 40	52152841	Pin 4x100mm	1
▶ 41	52152842	Right Spring Platen Cover	1
▶ 42	52152843	Left Spring Platen Cover	1
▶ 43	52152844	Slide Supporter	1
▶ 44	52152845	Plate Magnet	1
▶ 45	52152848	Platen Base	1
▶ 46	52152830	Spring Release	1

• NOTE: Refer to fast frame on last fiche Of product Parts Catalog

Rev. 5/89

Index No.	Parts No.	Description	Q'ty Per Assembly
46	A0081675	Platen Cover Hinge Assembly	
101	09654012W	Tapping Screw w/Flat Washer M4x12	1
102	04130202W	Tapping Screw - M3 x 20	
103	08025131	Truss Head Screw M4x8	1
104	09644010W	Tapping Screw - M4 x 10	
▶ 105	04140120W	Tapping Screw M4x10	2
▶ 107	09654008W	Tapping Screw w/Flat Washer M4x8	1
108	03130100W	Philips Pan Head Screw M3x10	1
109	03540080W	Philips Truss Head Screw M4x8	1

4. 1ST AND 2ND PAPER FEED

Rev. 5/89

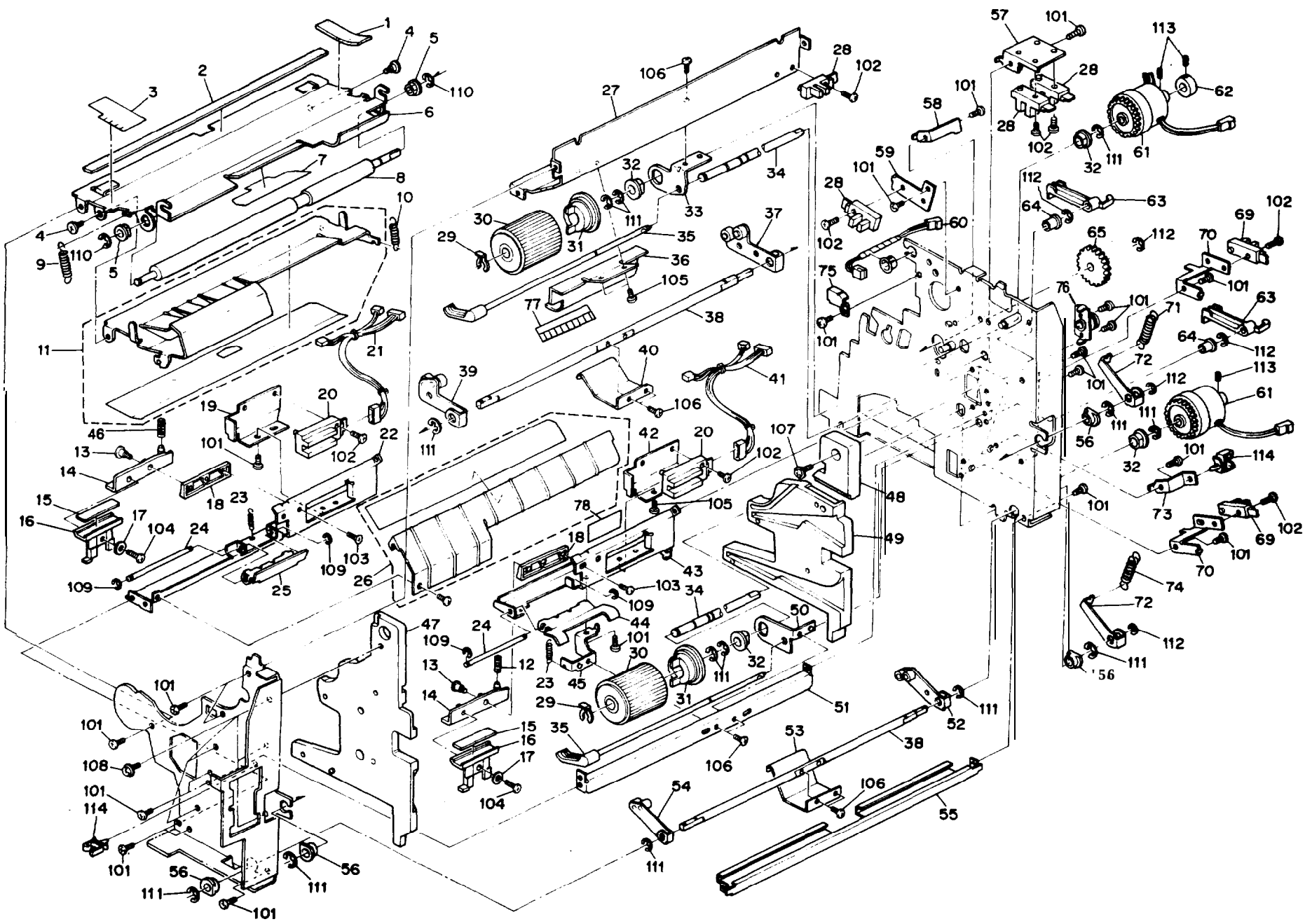

4. 1ST AND 2ND PAPER FEED [5215]

Revised 8/86

Index No.	Parts No.	Description	Q'ty Per Assembly
1	52153203	Seal - 1 x 10 x 60mm	1
2	52153204	Seal - 4 x 10 x 370 mm	1
3	52153202	Mylar Seal - Front Upper Guide	1
4	54422117	Shoulder Screw - Hinge	2
5	50530447	Bushing - 6mm	2
6	52152602	Upper Guide Plate	1
7	52152605	Feed Roller Guide	1
8	52152839	Feed Roller	1
9	54422693	Front Spring - Middle Guide	1
10	54422692	Rear Spring - Middle Guide	1
11	52152606	Middle Guide Plate	1
◗12	52152643	Upper Spring-Friction Pad	1
13	54422642	Shoulder Screw - M3	2
14	A0082555	Pad Arm	2
15	52162844	Friction Pad	2
◗16	52159520	Pad Holder	2
◗17	52159521	Collar - Friction Pad Arm	2
◗18	52152673	Fixing Pad Bracket	2
19	52152590	Lower Size Detection Bracket	1
20	52055253	Photointerruptor Pack	2
21	52155496	Lower Paper Feed Harness	1
◗22	52162674	Lower Pad Mounting Plate	1
23	52152582	Spring	2
24	52152579	Shaft	2
25	52152593	Lower Arm	1
26	52152609	Lower Guide Plate	1
27	52152570	Upper Paper Feed Stay	1
28	52055250	L.E.O. Sensor Type S	1
29	52152621	Snap Ring - M6	2
30	52152619	Feed Roller	2
31	52152618	Feed Roller Hub	2
32	50530223	Bushing - 8mm	4
33	52152622	Upper Feed Shaft Bracket	1
'34	52152617	Feed Shaft	2
35	52152624	Paper End Feeder	2
36	52152780	Upper Feed Guide Plate	1
37	52152652	Upper Rear Arm	1
38	A0242580	Shaft	2
39	52152648	Upper Front Arm	1
40	52152647	Upper Lift Ann	1
41	52155495	Transformer Harness - 220/240V	1
42	52152576	Upper Size Detection Bracket	1
◗43	52152573	Upper Pad Mounting Plate	1
44	52152578	Upper Arm	1
45	52152580	Spring Anchor	2
◗46	52152644	Spring - Friction Pad	2
47	52152640	Front Cassette Holder	1
48	52152642	Manual Feed Guide	1
49	52152641	Rear Cassette Holder	1
50	52152630	Lower Feed Shaft Bracket	1
51	52152571	Lower Paper Feed Stay	1
52	52152659	Lower Rear Arm	1
53	52152656	Lower Lift Arm	1
54	52152657	Lower Front Arm	1
55	52151134	Lower Paper Feed Stay - Right	1
56	52152662	Bushing	4
57	52153381	Sensor Bracket	1
58	52152634	Paper Feed Clutch Holder	1
59	52153481	Sensor Bracket	2
60	52155453	Toner End Harness	2
61	52155314	Magnetic Clutch	2
62	52052866	Magnetic Clutch Collar	1
63	A0082626	Paper End Actuator	2
64	54432668	Bushing	1
65	52152597	Idle Gear - 30T	2
69	52055251	L.E.O. Sensor Type T	2
70	52152637	Paper End Bracket	4

● NOTE: Refer to last frame on last fiche of Parts Catalog.

Rev. 5/89

Index No.	Parts No.	Description	Q'ty Per Assembly
71	52152665	Spring - Lower Lift	1
72	52152663	Pressure Arm	2
73	52152638	Harness Clamp Bracket	2
74	52152665	Spring Lower Lift	1
75	52153482	Sensor Cover	1
76	52152666	Bracket	1-1
77	52152781	Mylar Guide	
78	A0082574	Upper Guide	1
79	52152766	Mylar - 43 x IN x 0.1 mm	
101	04340080W	Tapping Screw - M4 x 8	
102	03140120W	Philips Pan Head Screw M4 x 12	
103	03230080W	Philips Sunken Head Screw - M3 x 8	
104	03130120W	Philips Pan Head Screw - M3 x 12	
105	04340060W	lapping Screw - M4 x 6	
106	03140080W	Philips Pan Head Screw - M4 x 8	
107	09654008W	Tapping Screw with Flat Washer - M4 x 6	
108	08025085	Tapping Screw - M4 x 8	
109	07200025E	Retaining Ring - M2.5	
110	07200050E	Retaining Ring - M5	
111	07200060E	Retaining Ring - M6	
112	07200030E	Retaining Ring - M3	
113	05750060E	Hexagon Headless Set Screw - M5 x 6	
114	11050106	Wire Saddle	
115	03130100W	Philips Pan Head Screw - M3x10	

5. REGISTRATION [5215]

October 15, '85

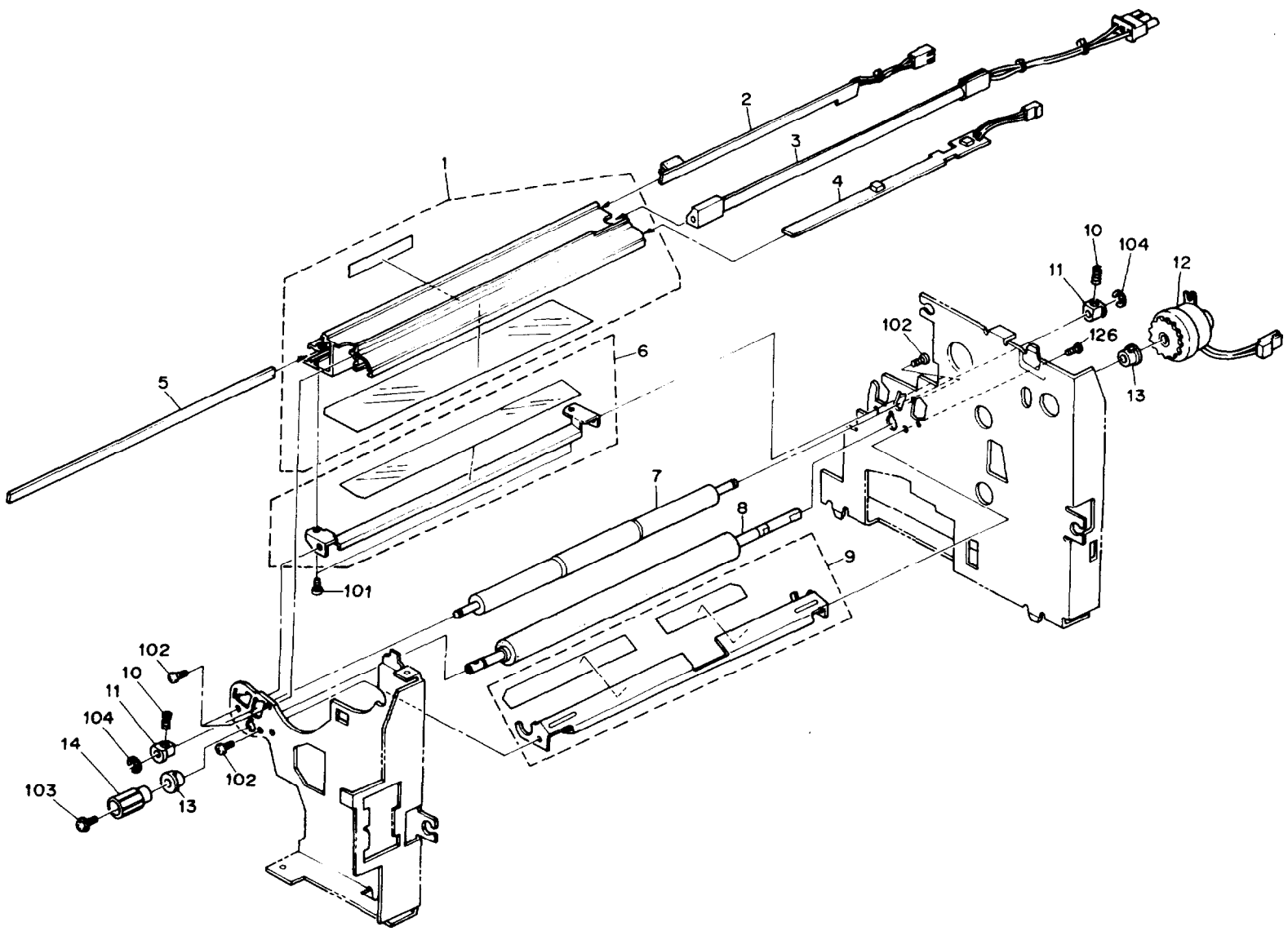

5. REGISTRATION [5215]

Rev. 5/89

Index No.	Parts No.	Description	Q'ty Per Assembly
1	52152278	PTL Guide	1
2	52155225	ID Sensor Board	1
3	52155531	Pre-Transfer Lamp - 430V/1.3W	1
4	52155228	Regist Sensor Board	1
5	52152135	PTL Filter	1
6	52152283	Paper Guide	1
7	52152670	Upper Regist Roller	1
8	52152671	Lower Regist Roller	1
9	52152612	Regist Guide Plate	1
10	54422754	Spring - Registration Roller	2
11	52052697	Bushing - Upper Registration Roller	1
12	AX210011	Registration Clutch	1
13	52152672	Bushing	2
14	52092768	Knob - Registration Roller	1
101	04340060W	Tapping Screw - M4 x 6	
102	04340080W	Tapping Screw - M4 x 8	
103	09654008W	Tapping Screw with Flat Washer - M4 x 8	
104	07200050E	Retaining Ring - M5	

Index No.	Parts No.	Description	Q'ty Per Assembly

6. DRUM SECTION [5215]

Rev. 10/91

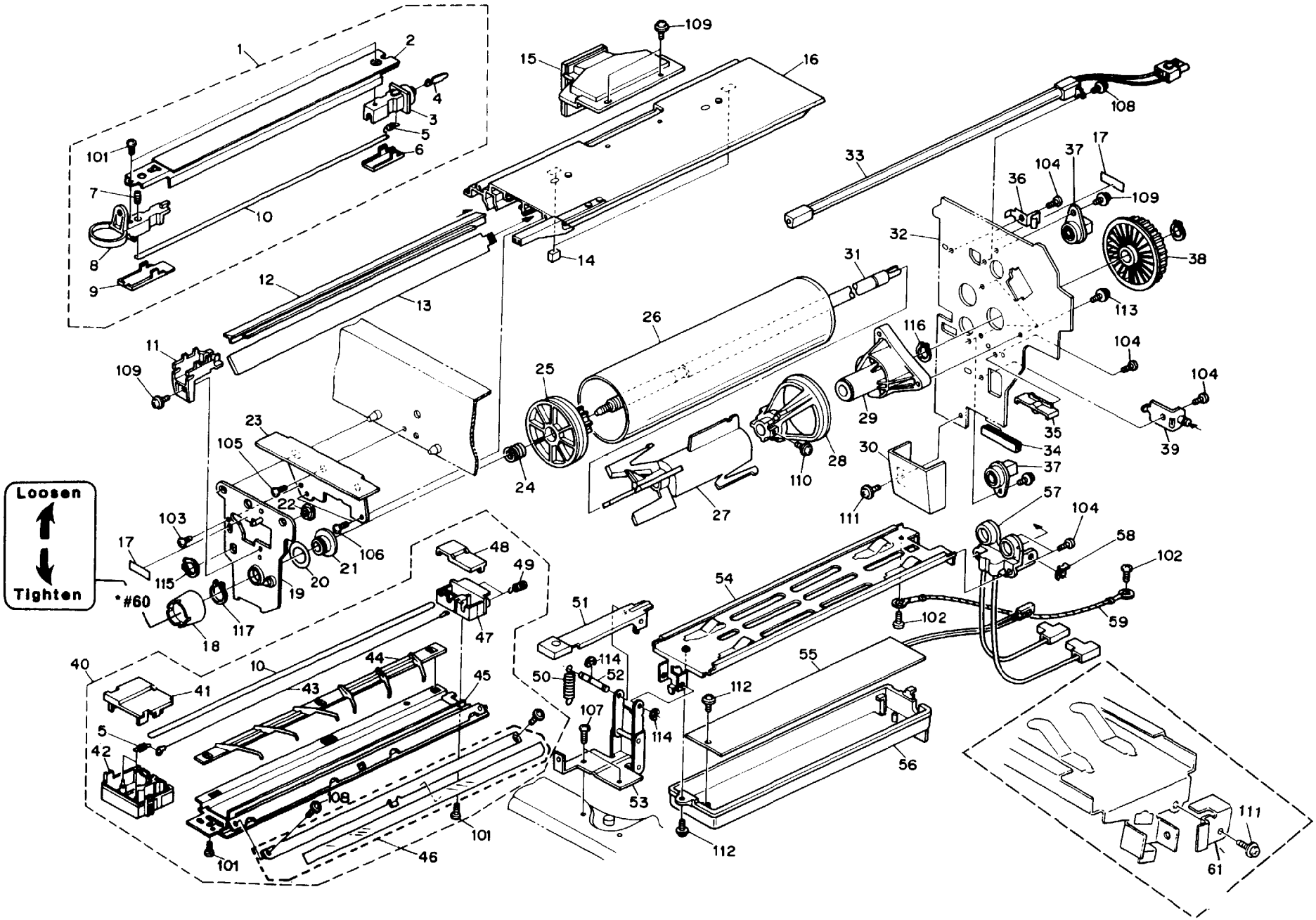

6. DRUM SECTION [5215]

Rev. 10/91

Index No.	Parts No.	Description	Q'ty Per Assembly
1	52152059	Charge Corona Unit	1
2	54422060	Casing - Main Corona	1
3	A0002109	Rear Endblock - Main Corona	1
4	54422110	Plug - Corona Unit	1
5	54422108	Spring - Corona Wire	2
6	54422068	Rear Cover - Main Corona	1
7	52052069	Adjusting Screw	1
8	54422065	Front End Block - Main Corona	1
9	54422066	Front Cover - Main Corona	1
10	54429003	Main Corona Wire (10 pcs/set)	1
11	54422123	Cleaner - Main Corona Wire	1
12	52152130	QL Filter	1
13	52155234	Erase Lamp Board	1
14	52152054	Seal 2 x 10 x 15 mm	1
15	52152063	Duct Outlet	1
16	52152050	C & 0 Corona Rail	1
17	54347916	High Voltage Decal	1
18	52112267	Drum Shaft Knob	1
19	52152310	Drum Stay	1
20	52112259	Spacer - M20 x 0.1	1
21	52112365	Bushing - 12 x 19 x 11 mm	1
22	54423585	Bushing	1
23	52152245	Front Drum Support	1
24	52112278	Drum Flange Spring	1
25	54472257	Front Drum Flange	1
26	52059510	Drum	1
27	54472286	Drum Guide	1
28	52112285	Rear Flange	1
29	52112262	Drum Shaft Holder	1
30	52152150	T & S Corona Harness Cover	1
● 31	AD015004	Drum Shaft	1
32	52152251	Rear Drum Support	1
33	52155632	Quenching Lamp - 430V/1.3W	1
34	52152265	Edging	1
35	52053872	Rear Bracket - T & S Corona	1
36	52052121	Spring Plate	1
37	54422165	Receptacle Housing - Main Corona	2
▶ 38	A0092405	Timing Pulley - 48T	1
39	52152131	T & S Corona Holder	1
40	AD004046	T & S Corona Unit	1
41	52053850	Front Endblock Cover - T & S Corona	1
42	52053851	Front Endblock - T & S Corona	1
43	54429004	T&S Corona Wire (10 pcs/set)	1
44	AD472121	T & S Corona Guide	1
45	52152115	T & S Corona Casing	1
46	52152119	T & S Corona Guide Plate	1
47	52053853	Rear Endblock - T & S Corona	1
48	52053874	Rear-Endblock Cover - T & S Corona	1
49	52053821	Terminal Spring	2
50	54031030	Tension Spring	1
51	52152155	T/S Corona Lever	1
52	52152146	Shaft	1
53	52152137	Link	1
▶ 54	52152125	T & S Corona Rail	1
55	52155370	Drum Heater - 8W	1
56	52152270	Heater Casing	1
57	AD021032	T & S Receptacle	1
58	54472681	Snap Ring	1
59	52155371	Grounding Wire	1
60	52132315	Decal - Drum Knob	1
a61	AD082274	Stopper-T/S Corona Unit	
101	03140050W	Philips Pan Head Screw - M4 x 5	
102	03140060M	Phi lips Pan Head Screw - M4 x 6	
103	03140060W	Philips Pan Head Screw - M4 x 6	
104	03140080W	Philips Pan Head Screw - M4 x 8	
105	04340060W	Tapping Screw - M4 x 6	
106	04340080W	Tapping Screw - M4 x 8	

● NOTE: Refer to last frame on last fiche of product Parts Catalog

6. DRUM SECTION [5215]

October 15, '85

Inde No.	Parts No.	Description	Q'ty Per Assemblv
107	04340100W	Tapping Screw - M4 x 10	
108	09513006W	Philips Screw with Flat Washer - M3 x 6	
109	09514008W	Philips Screw with Flat Washer - M4 x 8	
110	09514012W	Philips Screw with Flat Washer - M4 x 12	
111	09644008W	Tapping Screw with Flat Washer - M4 x 8	
112	096540084	Tapping Screw with Flat Washer - M4 x B	
113	08025060	Tapping Screw - M4 x12	
114	072000306	Retaining Ring - M3	
115	07250100E	Retaining Ring - M10	
116	07250120E	Retaining Ring - M12	
117	07250180W	Retaining Ring - M18	

7. TRANSPORT SECTION **[5215]**

Rev. 10/91

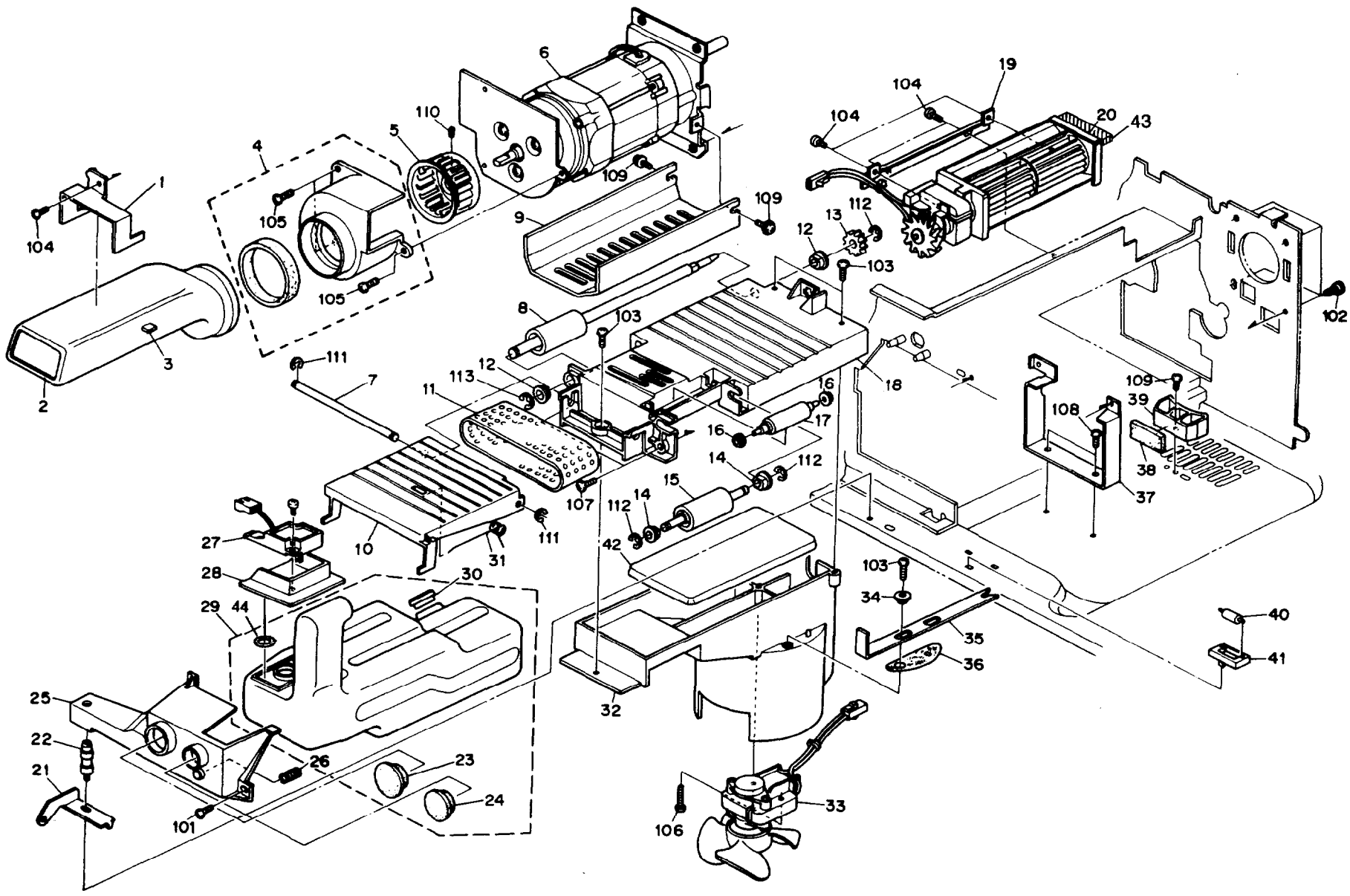

7. TRANSPORT SECTION [5215]

Index No.	Parts No.	Description	Q'ty Per Assembly
1	52152061	Duct Bracket	1
2	52152060	Duct Inlet	1
3	52152054	Seal 2 x 10 x 15 mm	1
4	52152066	Fan Cover	1
5	54422143	Fan - Main Corona	1
6	52155410	Main Motor - AC 48W	1
6	52155411	Main Motor - AC 48W UL	1
7	52153855	Guide Plate Shaft	1
8	52153917	Transport Drive Roller	1
9	52151085	Cover Motor	1
10	52153853	Transport Guide Plate	1
11	52153978	Transport Belt	1
12	52153931	Bushing - 8 mm	2
13	54423872	Gear - 16z	1
14	50530447	Bushing - 6mm	2
15	52153923	Driven Roller	1
16	54432668	Bushing	1
17	52153942	Transport Guide Roller	1
18	52153910	Transport Frame	1
19	52151117	Outlet Fan Bracket	1
20	52155423	Outlet Fan Motor - AC 24/22W	1
21	52151293	Front Cover Angle - Right	2
22	52153884	Shaft	1
23	52153666	Toner Collection Bottle Cap	1
24	54423664	Toner Collection Bottle Cap - Small	1
25	52153886	Toner Collection Bottle Cover	1
26	52153889	Spring - Toner Collection Bottle	1
27	52155304	Toner Overflow Sensor	1
28	52153887	Sensor Holder	1
29	52159501	Toner Collection Bottle	1
30	52153666	Toner Collection Bottle Cap	1
31	52153851	Spring - Guide Plate	1
32	52153928	Duct	1
33	52155426	Vacuum Fan Motor - 14/12W	1
34	54032048	Bushing - 4mm	1
35	52153877	Plate	1
36	52153878	Sheet	1
37	52153897	Transport Stay	1
38	52153880	Cushion	1
39	52153935	Toner Collection Bottle Stopper	1
40	52153677	Roller	1
41	52153675	Roller Holder	1
42	52153892	Ozone Filter	1
43	52151136	Cushion 12x65x2mm	0—1
44	AA151700	Seal - 15 x 26 x 5	1
45	AA000059	Caution Decal - Eng	1
46	AA000060	Caution Decal - 4 Languages	1
47	A0073763	Adhesive Tape Sensor Holder	1
101	03140060W	Philips Pan Head Screw - M4 x 6	
102	03150080W	Philips Pan Head Screw - M5 x 8	
103	04140102W	Tapping Screw - M4 x 10	
104	04340060W	Tapping Screw - M4 x 6	
105	04340080W	Tapping Screw - M4 x 8	
106	04130252W	Tapping Screw - M3 x 20	
107	04140100W	Tapping Screw - M3 x 10	
108	04140080W	Tapping Screw - M4 x 8	
109	09644008W	Tapping Screw with Flat Washer - M4 x 8	
110	05740060E	Hexagon Headless Set Screw - M4 x 6	
111	07200040E	Retaining Ring - M4	
112	07200050E	Retaining Ring - M5	
113	07200060E	Retaining Ring - M6	

8. FUSING SECTION [5215]

Rev. 5/89

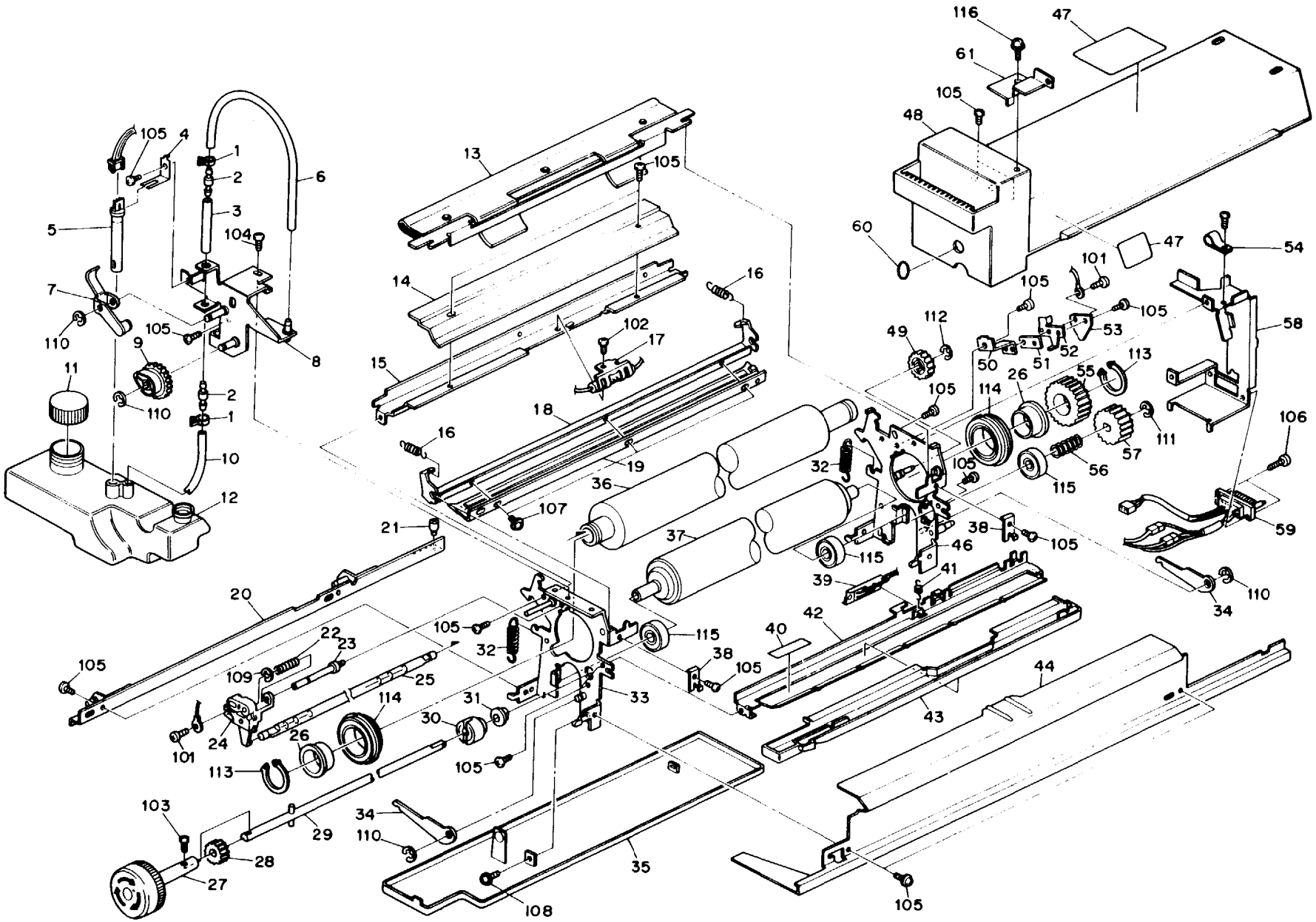

8. FUSING SECTION I [5215]

Rev. 10/91

Inde No.	Parts No.	Description	Q'ty Per Assembly
•	52150240	Fusing Unit - 115V	1
•	52150245	Fusing Unit - 220/240V	1
1	54474241	Tube Clamp	1
2	54154310	Valve - Oil Pump	2
3	54474229	Sleeve - Oil Pump	1
4	52154411	Spring Plate	1
5	52095320	Oil End Sensor	1
6	52094410	Oil Tube - 140 mm	1
7	52094405	Oil Pump Lever	1
8	52094400	Oil Pump Bracket	1
9	52094407	Cam Gear - 32T	1
10	52094409	Oil Tube - 105 mm	1
11	54474242	Oil Bottle Cap	1
12	52154225	Oil Tank	1
13	52154130	Oil Supply Pad	1
14	52154208	Spring Plate - Oil Supply Pad	1
15	52154093	Upper Frame	1
16	52154121	Spring - Oil Blade	2
17	52155390	Thenofuse	1
18	52154116	Oil Blade Holder	1
19	52154117	Oil Blade	1
20	54424100	Left Fusing Unit Slide Guide	1
21	54091855	Mounting Pin	1
22	54474221	Lamp Holder Spring	1
23	54474220	Lamp Terminal Stud	1
24	54474216	Front Lamp Terminal - Fusing Unit	1
25	52155307	Fusing Lamp - 115V	1
25	52155309	Fusing Lamp - 220/240V	1
26	52054321	Bushing - 20 mm	2
27	52154139	Knob - Fusing Unit	1
28	52094408	Gear - 16T	1
29	52094149	Fusing Unit Shaft	1
30	52054135	Collar - Fusing	1
31	50530223	Bushing - Bmm	1
32	52154096	Spring - Pressure	2
33	52154051	Front Side Plate - Fusing	1
34	52154095	Pressure Lever	2
35	52154143	Oil Pan	1
36	52164320	Hot Roller	1
37	AE020015	Pressure Roller	1
38	52154196	Oil Sump Holder	2
39	52155250	Thermistor	1
40	52154211	Decal - Thetmofuse	1
41	52034146	Thermistor Spring	1
42	52154177	Entrance Guide Bracket	1
43	52154195	Oil Sump	1
44	52154108	Right Rail - Fusing	1
46	52154052	Rear Side Plate - Fusing	1
47	54424421	Decal - Small	2
48	A0084167	Fusing Unit Cover	1
49	52054181	Gear - 18T	1
50	54424201	Rear Bracket - Lamp Terminal	1
51	54324118	Insulator - B	1
52	54154097	Lamp Terminal	1
53	54324117	Insulator - A	1
54	AA015003	Wire Clamp	1
55	54424086	Gear - 40Z	1
56	54424152	Spring - Fusing Orive	1
57	54424151	Gear - 30Z	1
58	52155818	Connector Unit Bracket	1
59	52155464	Fusing Harness	1
60	52154210	Decal	1
61	52154168	Fusing Mounting Bracket	1

Revised 8/86

Inde No.	Parts No.	Description	Q'ty Per Assembly
101	09503005M	Phillips Screw w/Lock Washer - M3x5	
102	03130060W	Philips Pan Head Screw - M3 x 6	
103	03140100W	Philips Pan Head Screw - M4 x 10	
104	04340060W	Tapping Screw - M4 x 6	
105	04340080W	Tapping Screw - M4 x 8	
106	04340100W	Tapping Screw - M4 x 10	
107	09513005	Philios Screw with Flat Washer - M3	
108	09644008W	Tapping Screw with Flat Washer - M4 x B	
109	07200030E	Retaining Ring - M3	
110	07200050E	Retaining Ring - M5	
111	07200060E	Retaining Ring - M6	
112	07200070E	Retaining Ring - M7	
113	07250180W	Retaining Ring - M18	
114	08053377	Ball Bearing - 25 x 42 x 9 nun	
115	08053104	Ball Bearing 8x22x7mm	1
116	04440102W	Tapping Hexagon Head Screw - M4 x 10	

9. FUSING SECTION II [5215]

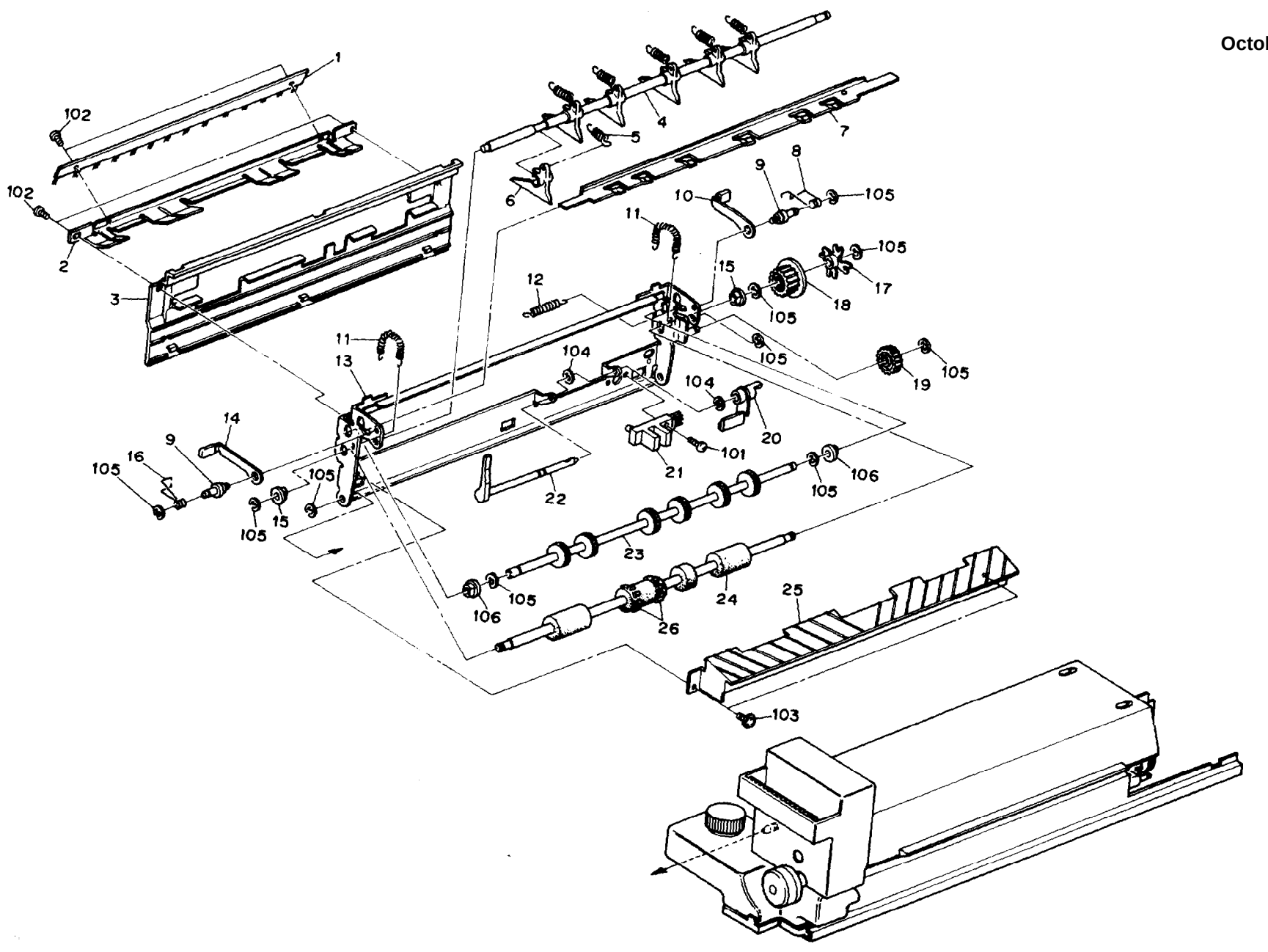

9. FUSING SECTION II [5215]

Revised 8/86

Index No.	Parts No.	Description	Q'ty Per Assembly
1	52154497	Exit Antistatic Brush	1
2	54424482	Upper Exit Guide	1
3	54424500	Cover - Exit Ass'y	1
4	52054220	Shaft - Hot Roller Stripper	1
5	52054305	Spring - Hot Roller Stripper	6
6	52159002	Hot Roller Stripper (6pcs/set)	1
7	54424465	Stripper Pawl Plate	1
8	54424464	Spring - Rear Release Lever	1
9	54424444	Stud - Exit Ass'y Release Lever	2
10	54424442	Rear Release Lever - Exit Ass'y	1
11	54154457	Spring - Exit	2
12	54424467	Spring - Stripper Pawl Plate	1
13	54424451	Flame - Exit	1
14	54424440	Front Release Lever - Exit Ass'y	1
15	50530447	Bushing - 6mm	2
16	54424463	Spring - Front Release Lever	1
17	54424495	Slip Clutch	1
18	54424494	Gear 19Z	1
19	54424492	Gear 20Z	1
20	54424491	Actuator - Paper Exit Sensor	1
21	52155230	Photointerrupter - L Type	1
22	54424485	Feeler - Paper Exit Sensor	1
23	52094470	Upper Exit Roller	1
24	52154485	Lower Exit Roller	1
25	52154063	Lower Exit Guide	1
26	52154488	Exit Roller Belt	1

Index No.	Parts No.	Description	Q'ty Per Assembly
101	03140100W	Philips Pan Head Screw - M4 x 10	
102	04340080W	Tapping Screw - M4 x 8	
103	09644008W	Tapping Screw with Flat Washer - M4 x 8	
104	07200030E	Retaining Ring - M3	
105	07200050E	Retaining Ring - M5	
106	08053399	Bushing - 6 x 10 x 8 mm	

10. DEVELOPMENT UNIT [5215]

Rev. 3/92

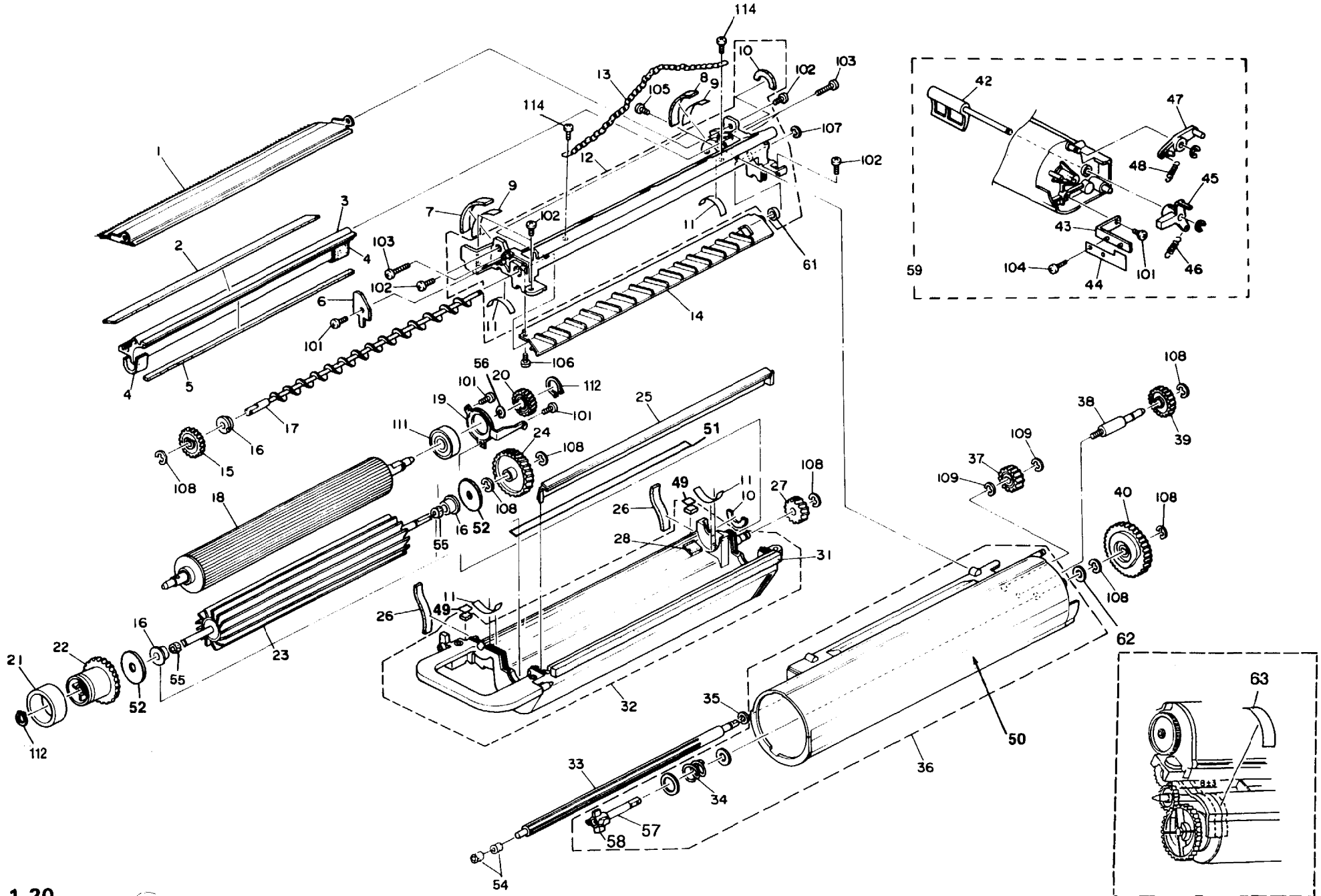

10. DEVELOPMENT UNIT [5215]

Rev. 3/92

Index No.	Parts No.	Description	Q'ty Per Assembly
*	52153000	Development Unit	
1	52153191	Entrance Seal Ass'y	1
2	52153154	Seal - Upper	1
3	52153161	Doctor Plate	1
4	52153162	Side Seal - Doctor Blade	1
5	52153155	Seal - Doctor	1
6	52153096	Adjusting Plate - Magnet Angle	1
7	52153051	Side Seal Right	1
a	52153052	Side Seal Left	1
9	52153060	Seal -52x411-m	1
JO	54423109	Seal - Development Roller	2
11	52153097	Sheet	2
12	52153140	Upper Casing	1
13	AGO51052	Development Unit Band	1
14	52153169	Backspill Plate	1
15	52153166	Gear - 25T	1
16	52053103	Bushing - 6mm	1
17	52153165	Development Auger	1
18	52153124	Development Sleeve	1
19	52153110	Bearing Retainer	1
20	52153111	Gear - 25T	1
21	52153089	Developer Knob	1
22	52153100	Gear - 44T	1
23	52153083	Paddle Roller	1
24	52153102	Gear - 39T	1
25	52153120	Toner Supply Guide	1
26	52153056	Seal Development	2
27	52153115	Gear - 17T	1
29	52153153	Mylar - 6x35mm	
30	52153153	Mylar - 6x35mm	
31	AA151194	Seal - Right	1
32	52153074	Lower Casing	1
33	52153302	Toner Supply Roller	1
▸ 34	52163347	Spring - Gear	1
36	A0093009	Toner Supply Unit	1
37	52053306	Gear - 18T	1
38	52153281	Pin	1
39	54473236	Gear - 23T	1
40	52153321	Gear - 56T	1
42	59313337	Color Toner End Lever	1
43	59313386	Actuator Bracket	1
44	59313382	Actuator - Red	1
44	59313384	Actuator - Blue	1
44	59313385	Actuator - Green	1
45	59313332	Toner End Actuator	1
46	59313394	Spring - Arm	1
47	59313330	Toner End Lever	1
48	54423233	Spring - Drive Wheel	1
49	52153073	Mylar	2
50	52153298	Seal - 405x5x2mm	1
51	52153078	Plate - Developer Casing	1
52	54473145	Mylar Seal - Paddle Roller	2
53	59313001	Color Toner Supply Unit	
54	52153303	Seal -Toner Supply Roller	2
55	52153085	Seal- Paddle Roller	2
56	52153108	Spacer-Development Sleeve	1
▸ 57	52153327	Shaft - Agitator	1
▸ 58	52153328	Joint - Hopper	1
59	59313003	Color Toner Supply Unit	1
60	AA150205	Seal-20x72	1
61	52153180	Seal- Ring	
62	52153256	Seal-Toner Supply	
63	AA150205	Seal- 20x 72mm	

Rev. 5/89

Index No.	Parts No.	Description	Q'ty Per Assembly
101	03140060W	Philips Pan Head Screw - M4 x 6	
102	03140100W	Philips Pan Head Screw - M4 x JO	
103	03140200W	Philips Pan Head Screw M4x20	1
104	03130080W	Philips Pan Head Screw - M3 x 8	
105	09514008W	Philips Screw with Flat Washer - M4 x B	
106	09654008W	Tapping Screw with Flat Washer - M4 x 8	
107	07200025E	Retaining Ring - M2.5	
108	07200050E	Retaining Ring - M5	
109	07200070E	Retaining Ring - M7	
110	07250140E	Retaining Ring (C-type) - Ml4	
111	08053426	Ball Bearing - 15 x 32 x 9mm	
112	17270060E	Retaining Ring - M-6	1
113	07200060E	Retaining Ring-M6	1
114	09654012W	Tapping Screw with Flat Washer - M4x12	
115	28074103	Spacer - .5mm	
116	07200040E	Retaining Ring - 4mm	1

11. CLEANING UNIT [5215]

Rev. 10/91

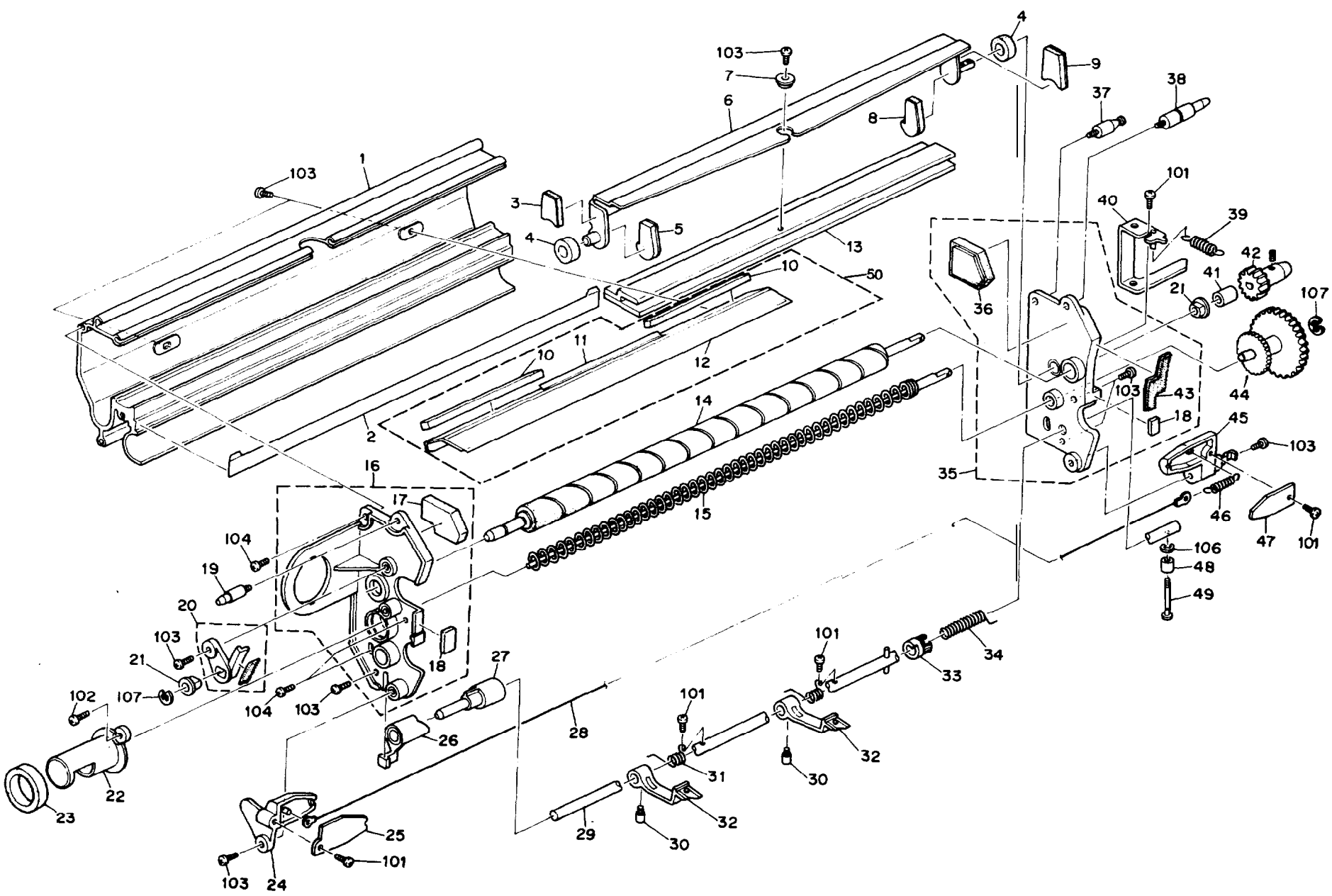

1 . CLEANING UNIT [52 5]

Rev 1°/91

Index No.	Parts No.	Description	Q'ty per Assembly
*	52153550	Cleaning Unit	1
1	52053551	Cleaning Unit Casing	1
2	52159003	Seal - Cleaning Unit	1
3	52053602	Seal - Front Outer	1
4	54423593	Seal - Cleaning Blade Shaft	2
5	52053604	Seal - Front Inner	1
6	52053575	Cleaning Blade Holder	1
7	54423570	Shoulder Sleeve	1
8	52053605	Seal - Rear Inner	1
9	52053603	Seal - Rear Outer	1
10	52153589	Seal - 6 x 8 x 105 mm	1
11	52153588	Blade Cleaner Plate	1
12	52153585	Blade Cleaner	1
13	52053565	Cleaning Blade	1
14	52153581	Cleaning Brush	1
15	52153606	Toner Collection Coil	1
16	52153552	Front Side Plate - Cleaning	1
17	52153600	Seal - Blade Front	1
18	52153555	Rubber Seal - Cleaning Small	2
19	52053673	Setting Pin	1
20	52053561	Holder	1
21	54463707	Bushing - 6 x 10 x 6 mm	1
22	52153663	Toner Collection Joint	1
23	52153680	Seal - 19 x 36 x 10 mm	1
24	52053647	Front Endblock - PCC	1
25	52053651	Front Endblock Cover - PCC	1
26	52053950	Cam	1
27	52053975	Cam	1
28	52059001	Charge Wire - Pre Cleaning Corona	1
29	52053958	Pick-Off Pawl Shaft	1
30	52053966	Set Screw	2
31	52053965	Spring	2
32	52153596	Pick-Off Pawl	2
33	52053981	Collar - Spring	1
34	54423904	Spring - Pick-Off Pawl Slide	1
35	52153553	Rear Side Plate - Cleaning	1
36	52153601	Seal - Blade Rear	1
37	52053671	Spring - Anchor	1
38	52053583	Rear Guide Pin - Cleaning	1
39	54182859	Spring - Regist Roller (Front)	1
40	52053617	Pressure Arm	1
41	54204193	Collar - Release Cam	1
42	52053582	Gear - 15T	1
43	52053599	Side Seal - Cleaning Rear	1
44	52153612	Gear - 35T	1
45	52053649	Rear Endblock - PCC	1
46	54422108	Spring - Corona Wire	2
47	52053653	Rear Endblock Cover - PCC	1
48	54182116	Spacer - Guard	1
49	52053968	Set Screw - Separator Shaft	1
50	52153584	Blade Cleaner Assembly	
101	03130060W	Philips Pan Head Screw - M3 x 6	
102	03130080W	Philips Pan Head Screw - M3 x 8	
103	03140080W	Philips Pan Head Screw - M4 x 8	
104	03140100W	Philips Pan Head Screw - M4 x 10	
105	06230140E	Spring Pin - 3 x 14mm	
106	07200025E	Retaining Ring - M2.5	
107	07200040E	Retaining Ring - M4	

12. OPTICS SECTION I [5215]

Rev. 5/89

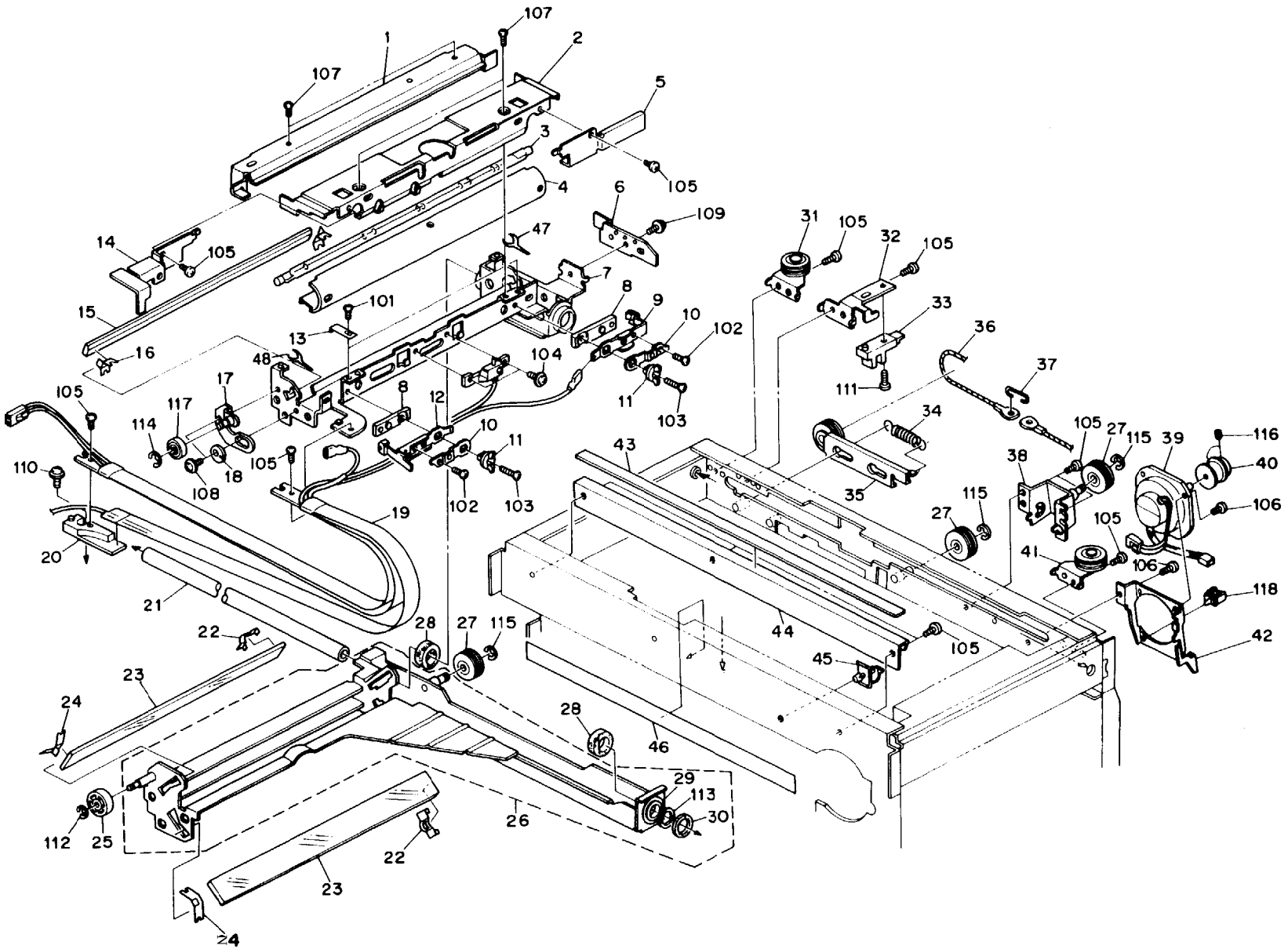

12. OPTICS SECTION I [5215]

Rev. 10/91

Index No.	Parts No.	Description	Q'ty Per Assembly
1	A0081698	Reflector - AID	1
2	52151691	Reflector Cover	1
3	52155303	Exposure Lamp - 85V/250W	1
4	52151696	Main Reflector	1
5	54421963	Rear Cover - Terminal	1
6	52151697	Wire Stopper Plate	1
7	52151681	1st Scanner Ass'y	1
8	54201675	Insulator - Lamp Terminal	2
9	52151700	Exposure Lamp Terminal - fix	1
10	54201682	Support - Lamp Terminal	2
11	54201676	Spacer - Lamp Terminal	2
12	54421705	Rear Terminal - Exposure Lamp	1
13	54091705	Clamp - Reflector	2
14	54421962	Front Cover - Terminal	1
15	52111710	1st Mirror	1
16	54421711	Spring Plate - 1st Mirror	2
17	52051691	Stud Bracket	1
18	52051694	Adjusting Cam - Start Lever	1
19	52155282	Optics Harness	1
20	52151942	Scanner Drive Wire Bracket	1
21	52151864	Rear Guide Rod	1
22	54421741	Rear Spring Plate - 2nd and 3rd Mirror	2
23	54421740	2nd and 3rd Mirror	2
24	54421742	Front Spring Plate - 2nd and 3rd Mirror	2
25	52091694	Guide Roller - 1st Scanner	1
26	52151721	2nd Scanner Ass'y	1
27	54421735	Pulley	1
28	54421748	Cleaner - Guide Rod	2
29	52111733	Bushing - 2nd Scanner	2
30	52051923	Spacer - 12.5 x 19 x 1MM	1
31	52091870	Left Pulley	1
32	52151893	H.P. Sensor Bracket	1
33	52055251	L.E.D. Sensor Type T	2
34	54421890	Spring - Wire Tightner	1
35	52151886	Wire Pulley Tightener	1
36	52151873	Scanner Drive Wire	1
37	54421798	Hook - scanner Drive Wire	1
38	52151881	Pulley Bracket	1
39	52155300	Scanner Drive Motor - DC55W	1
39	52155301	Scanner Drive Motor - DC55W - ROC	1
40	52051869	Scanner Drive Pulley	1
41	52091875	Right Pulley	1
42	52151866	Lens Drive Motor Bracket	1
43	52151853	Mylar - 15 x 350 mm	1
44	52151859	Guide Channel	1
45	52151857	Harness Clamp	1
46	54421969	Mylar Sheet - Terminal	1
47	52159503	Special Scanner Lock	1
48	52151702	Clip - Exposure Lamp	1
101	03130040W	Philips Pan Head Screw - M3 x 4	
102	03130080W	Philips Pan Head Screw - M3 x 8	
103	03130120W	Philips Pan Head Screw - M3 x 12	
104	04140080W	Tapping Screw - M4 x 8	
105	04340060W	Tapping Screw - M4 x 6	
106	04340080W	Tapping Screw - M4 x 8	
107	09513006W	Philips Screw with Flat Washer - M3 x 6	
108	09514004W	Philips Screw with Flat Washer - M4 x 4	
109	09514008W	Philips Screw with Flat Washer - M4 x 8	
110	09644006W	Tapping Screw with Flat Washer - M4 x 6	
111	03140120W	Philips Pan Head Screw - M4 x 12	
112	07200040E	Retaining Ring - M4	
113	07250200E	Retaining Ring - M20	
114	07200060E	Retaining Ring - M6	
115	07200070E	Retaining Ring - M7	
116	05740060E	Hexagon Headless Set Screw - M4 x 6	
117	08053036	Ball Bearing - 8 x 16 x 5mm	
118	11050008	Nylon Clip - 2N	

13. OPTICS SECTION II [5215]

Rev. 10/91

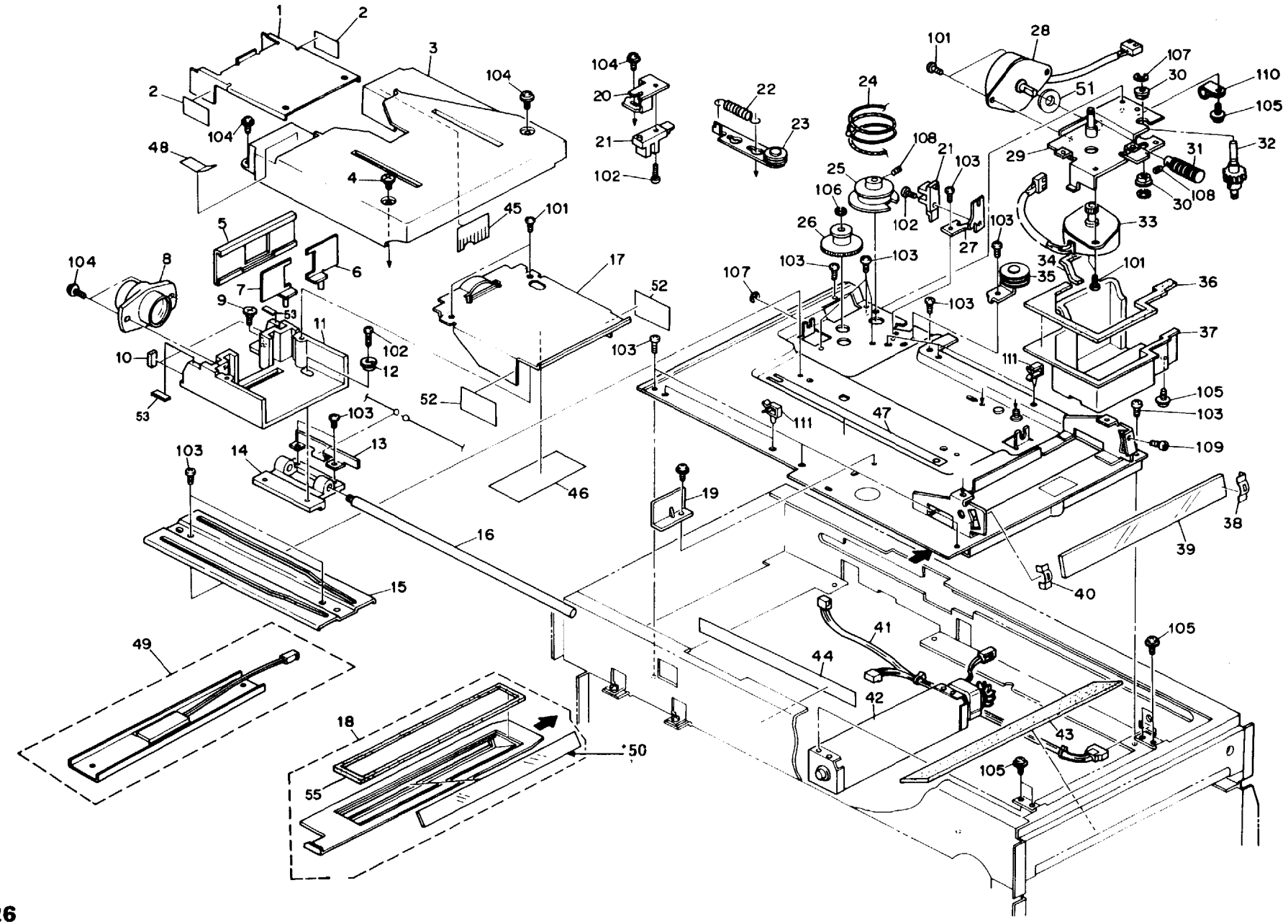

13. OPTICS SECTION II [5215]

Rev. 10/91

Index No.	Parts No.	Description	Q'ty Per Assembly
1	52151776	Shielding Plate	1
3	52151770	4th Mirror Cover	1
4	54032075	Stepped Screw	1
5	52051793	Shielding - Guide	1
6	52051797	Right Shield	1
7	52051794	Left Shield	1
8	52051751	Lens - F8/180	1
9	54036118	Stepped Screw - Transformer	1
10	52051768	Rubber Seal - Mirror	2
11	52151765	Lens Bracket	1
12	54421770	Cam - Optics Axis	1
13	52151767	Lens H.P. Actuator	1
14	52151766	Lens Carridge	1
15	52151842	Cam Plate - Lens Shield	1
16	52151780	Lens Guide Rod	1
17	52151772	Lens Bracket Cover	1
18	52151825	Toner Shield Cover	1
19	52151846	Shield Plate	1
20	52151816	Lens H.P. Sensor Bracket	1
21	52055251	L.E.D. Sensor Type T	2
22	52151811	Spring - Lens Drive Wire	1
23	52151805	Lens Tension Pulley	1
24	52151817	Lens Drive Wire	1
25	52051990	Pulley	1
26	52151813	Lens Drive Pulley	1
27	52151822	H.P. Sensor Bracket	1
28	52155296	Mirror Drive Motor - DC 7.5W	1
● 29	52151972	Motor Bracket	1
30	50530447	Bushing - 6mm	2
● 31	52151958	Worm Gear	1
32	52151981	Shaft	1
33	52155294	Lens Drive Motor - DC 6W	1
34	52151970	Seal - B	1
35	52151975	Pulley Bracket	1

Index No.	Parts No.	Description	Q'ty Per Assembly
36	52151969	Seal - A	1
37	52151968	Motor Cover	1
38	54421847	Spring Plate - 4th Mirror	1
39	52051845	4th Mirror	1
40	54421847	Spring Plate - 4th Mirror	1
41	52155468	Home Position Sensor Harness	1
42	52155422	Cooling Blower - AC 24/22W	1
43	52151918	Vacuum Fan Filter	1
44	54421969	Mylar Sheet - Terminal	1
45	52151771	Mylar - Seal 4th Mirror	1
46	52151775	Mylar - 118 x 50 mm	1
47	A0081844	Lens Sheet	1
48	52151779	Shield Plate Stopper	1
49	54425315	Anti-Condensation Heater - 10W	1
50	52151829	Toner Shield Plastic	1
● 51	52151957	Spacer	1
● 52	AA150006	Mylar - Lens Cover Bracket	2
● 53	AA151175	Seal - 9.5 x 37 x 3	2
● 54	AA151192	Seal - Lens Shield	
55	52151828	Seal-Toner Shield Cover	
101	03140060W	Philips Pan Head Screw - M4 x 6	
102	03140120W	Philips Pan Head Screw - M4 x 12	
103	04340060W	Tapping Screw - M4 x 6	
104	09514008W	Philips Screw with Flat Washer - M4 x 8	
105	09644008W	Tapping Screw with Flat Washer - M4 x 8	
106	07200040E	Retaining Ring - M4	
107	07200050E	Retaining Ring - M5	
108	05740050E	Hexagon Headless Set Screw - M4 x 5	
109	05930120E	Hexagon Bolt - M3 x 12	
110	11050010	Nylon Clip - 6N	
111	11050144	Harness Clamp	1

14. FRAME [5215]

Revised 8/86

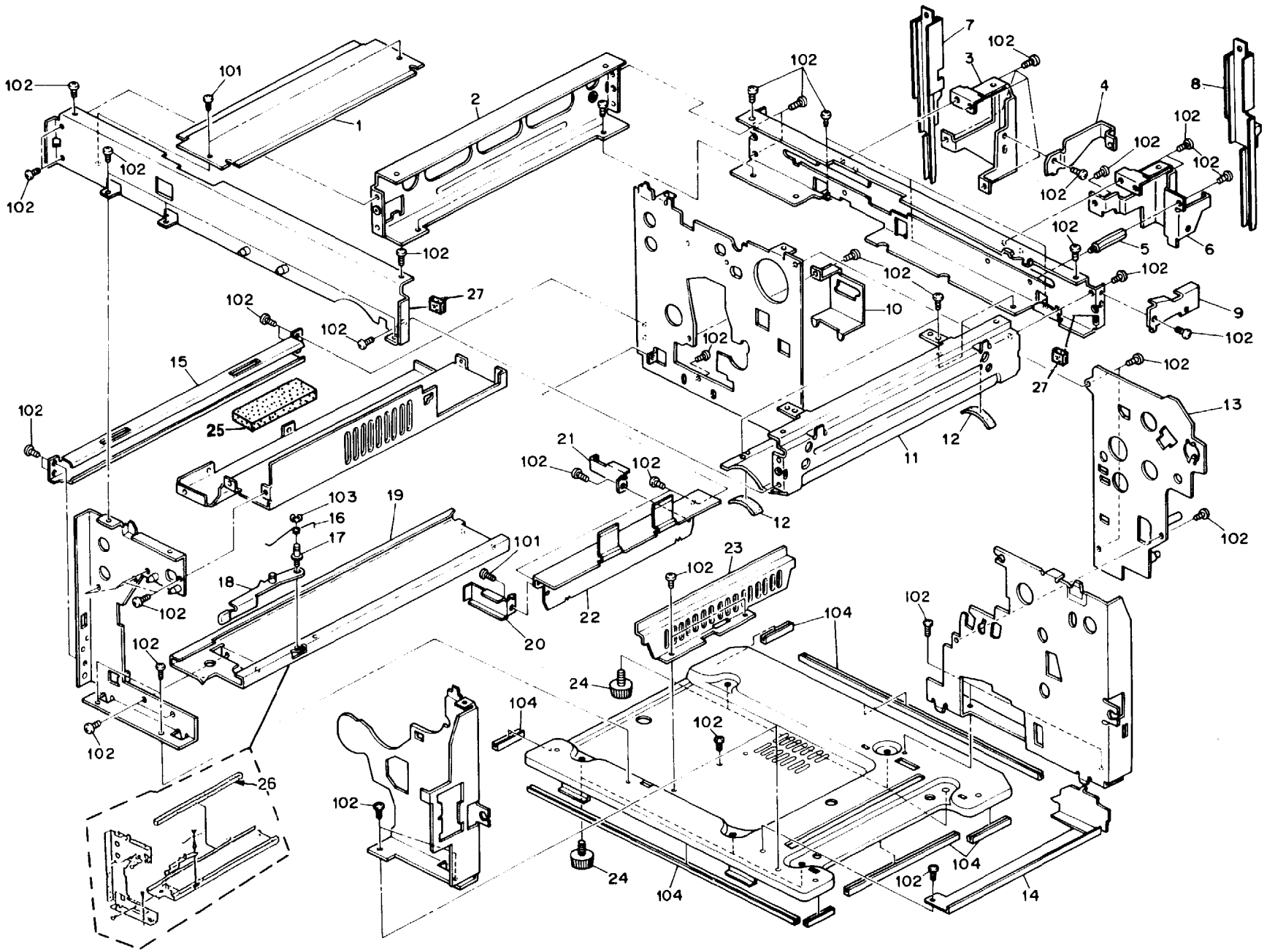

4. FRAME [5215]

Rev. 10/91

Index No.	Parts No.	Description	Q'ty Per Assembly
1	52151874	Left Base Plate Cover	1
2	52151905	Left Stay	1
3	52151672	Platen Cover Bracket - Left	1
4	52151673	Cover Bracket	1
5	52151665	Stud - Mounting Bracket - Platen	1
6	52151674	Platen Cover Bracket - Right	1
7	59183881	DF Mounting Bracket - Left	1
8	59183890	DF Mounting Bracket - Right	1
9	52151858	Right Cover Holder	1
10	52155825	Fusing Connector Bracket	1
11	52151913	Right Stay	1
12	52151916	Seal - Right Stay	2
13	52152251	Rear Drum Support	1
14	52151121	Base Plate Bracket	1
15	52151133	Left Stay	1
●16	AA066096	Spring - Fusing Unit Release Lever	1
●17	AA143224	Pin	1
18	52094183	Unit Lock Lever	1
19	52154181	Fusing Unit Rail	1
20	52155819	Harness Cover Angle - Front	1
21	52155820	Harness Cover Angle - Rear	1
22	52154502	Exit Tray Bracket	1
23	52155821	Power Supply Unit Cover	1
24	54191057	Rubber Foot	2
25	52153257	Seal	1
26	54421146	Seal - Fan Duct	
27		Seal - 4.5 x 22 x 30mm	2
101	04340060W	Tapping Screw - M4 x 6	
102	04340080W	Tapping Screw - M4 x 8	
103	07200040E	Retaining Ring - M4	
104	10050383	Edging: B	

Index No.	Parts No.	Description	Q'ty Per Assembly

• NOTE: Refer to last frame on last fiche of product Parts Catalog

15. DRIVE SECTION [5215]

Rev. 5/89

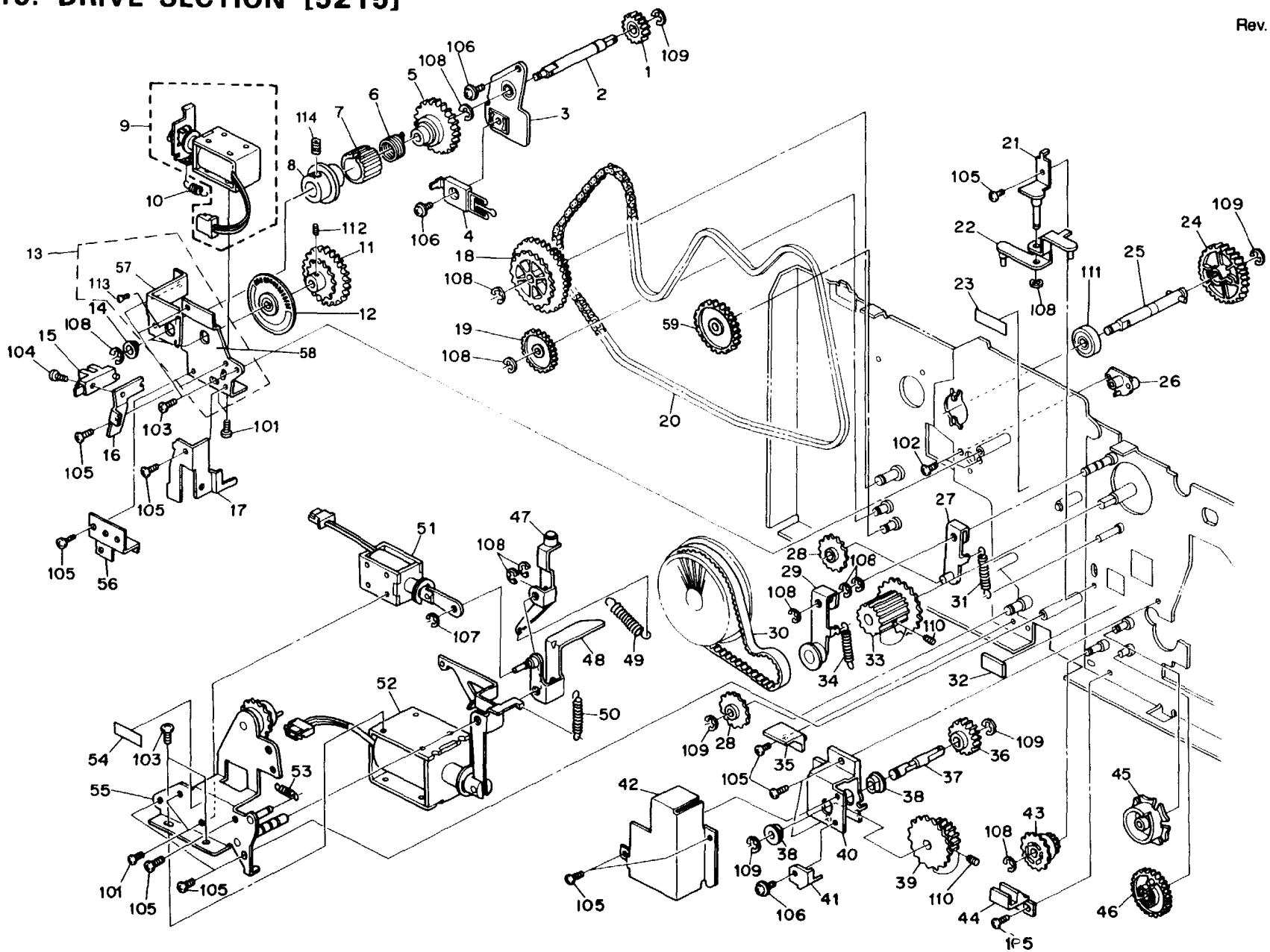

15. DRIVE SECTION [5215]

Rev. 10/91

Index No.	Parts No.	Description	Q'ty Per Assembly
1	52053306	Gear - 18T	1
▶ 2	52153471	Supply Shaft	2
3	52153462	Toner Supply Bracket	2
4	52153486	Bias Terminal	2
5	52153476	Gear - 26T	1
▶ 6	52151104	Spring Clutch	1
▶ 7	52151103	Ratchet Sleeve - Paper Feed	2
▶ 8	52053467	Boss - Toner Supply Clutch	2
9	54473361	Toner Supply Solenoid	1
10	54423233	Spring - Drive Wheel	1
▶ 11	A8023028	Sprocket 21T	1
12	52151090	Pulse Generator Disk	1
• 13	52153491	Development Drive Holder Ass'y.	1
14	50530447	Bushing - 6mm	1
15	52055251	L.E.D. Sensor Type T	2
16	52151116	Pulse Generator Bracket	1
17	52152633	Regist Holder	1
18	52152594	Sprocket - 3DT	1
19	52152597	Idle Gear - 30T	1
20	A0081115	Bushed Roller Chain - 222P	1
21	52153861	Follower	1
22	52153873	Follower Shaft	1
23	54347916	High Voltage Decal	1
24	52153470	Gear - 42T	1
▶ 25	52153474	Development Shaft	1
26	54423154	Holder - Development Unit	1
27	52051105	Chain Tightener	1
28	54421110	Sprocket - 20T	2
29	52051121	Belt Tightener	1
30	52051127	Timing Belt	1
31	54421111	Spring - Main Drive Tightener	
32	52153860	Cushion	1
33	52051083	Sprocket - 30T/50Hz	1
33	52051084	Sprocket - 27T/60Hz	1
34	52151102	Spring - Main Drive Tightener (60Hz)	1
34	54421111	Spring - Main Drive Tightner (50Hz)	1
35	52151106	Idler Chain Stopper	1
36	54421099	Gear - 242	1
37	52051099	Fusing Drive Shaft	1
38	50530223	Bushing - 8mm	2
39	54421100	Coupled Sprocket and Gear	1
40	52151096	Fusing Drive Bracket	1
41	52151105	Fusing Chain Stopper	1
42	52151111	Fusing Bracket	1
43	52153865	Sprocket - 20T	1
44	52153951	Chain Guide	1
45	52153869	Toner Collection Bottle Cam	1
46	52153866	Gear - 45T	1
47	52053635	Pressure Lever	1
48	52053971	Pick-Off Pawl Lever	1
49	52053637	Spring - Cleaning Blade	1
50	58753026	Spring - Original Feed Arm	1
51	52053964	Pick-Off Solenoid	1
52	52153639	Cleaning Blade Solenoid	1
53	54131812	Spring - Drum Return Arm	1
54	54347916	High Voltage Decal	1
55	AODB2105	Solenoid Bracket	1
56	52152632	Guide Plate	1
▶ 57	52153488	Development Drive Holder Ass'y.	1
▶ 58	52153489	Toner Supply Drive Holder	1
▶ 59	59222099	Gear 32T	1
101	03130050W	Philips Pan Head Screw - M3 x 5	
102	03140060W	Philips Pan Head Screw - M4 x 6	
103	03140080W	Philips Pan Head Screw - M4 x 8	
104	03140120W	Philips Pan Head Screw - M4 x 12	
105	04340080W	Tapping Screw - M4 x 8	
106	09654008W	Tapping Screw with Flat Washer - M4 x 8	
107	07200040E	Retaining Ring - M4	

• NOTE: Refer to last frame on last fiche of product Parts Catalog

Rev. 10/91

ndex 3.	Parts No.	Description	Q'ty Per Assembly
109	07200060E	rtaining Ring - M6	
110	05750060E	exagon Headless Set Screw - M5 x 6	
111	07403008	all Bearing	
112	05740050E	exagon Headless Set Screw 4x5	
113	04340060W	apping Screw M4x6	1
114	05750050E	lexagon Headless Setscrew M5x5	1
115	05740050E	lexagon Headless Set Screw - M4 x 5	

16. ELECTRICAL COMPONENT I [5215]

October 15, '85

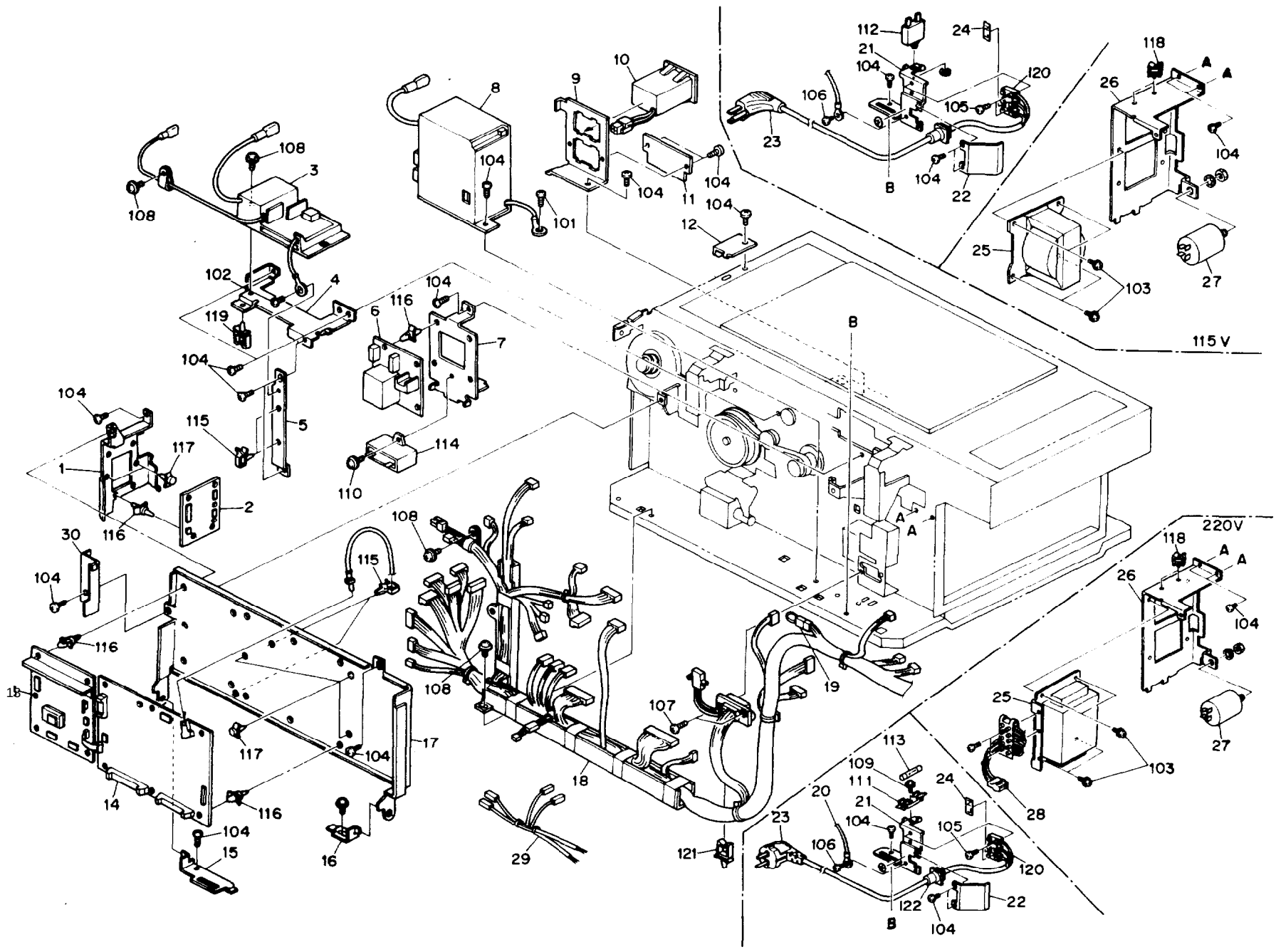

16. ELECTRICAL COMPONENT I [52 5]

Rev. 5/89

Index No.	Parts No.	Description	Q'ty Per Assembly
1	52155803	Feed Control Holder	2
2	52155240	Feed Control Board	2
3	52155361	Power Pack - C/B	1
4	52155805	C/B Power Pack Bracket	1
5	52155828	Harness Holder Angle	1
6	52155351	Stabilizer	1
7	52155810	Stabilizer Bracket	1
8	52155362	Power Pack - T/S/PCC	1
9	52155841	Counter Bracket	1
10	54395246	Totalizer Ass'y	1
11	54425856	Cover - Counter	1
12	52051914	Harness Holder	1
13	52155175	Optics Board	1
14	52155105	Main Board	1
15	52151290	Rear Cover Holder	1
16	52155827	Control Board Angle	1
17	52155814	Control Board Bracket	1
18	52155447	DC Harness	1
19	52155471	Shorting Connector	1
20	54195311	Grounding Wire	1
21	52155807	Power Cord Bracket - 115V	1
21	52155808	Power Cord Bracket - 220/240V	1
22	52151112	Power Cord Bracket Cover	1
23	28010027	Power Supply Cord - 220/240V	1
23	28010039	Power Supply Cord - ROC	1
23	28010040	Power Supply Cord - 115V	1
24	54034335	Decal - Terminal 115V	1
24	54474980	Decal - Terminal 220V	1
25	52055405	Transformer - 115V	1
25	52055407	Transformer - 220/240V	1
26	52155832	Transformer Bracket	1
27	16020923	Noise Filter - 115V	1
27	54475690	Noise Filter - 220/240V	1
28	52055494	Harness Transformer - 220/240V	1
29	52155275	Thermal Block Harness	1
30	52151109	Harness Cover	1
101	03140080M	Philips Pan Head Screw - M4 x 8	
102	03140080W	Philips Pan Head Screw - M4 x 8	
103	03150080W	Philips Pan Head Screw - M5 x 8	
104	04340080W	Tapping Screw - M4 x 8	
105	03130160W	Philips Pan Head Screw - M3 x 16	
106	08011185	Philips Screw with Toothed Washer - M4 x 8	
107	04340100W	Tapping Screw - M4 x 10	
108	09644008W	Tapping Screw with Flat Washer - M4 x 8	
109	09513006W	Philips Screw with Flat Washer - M3 x 6	
110	09514012W	Philips Screw with Flat Washer - M4 x 12	
111	11040322	Fuse Holder - 220/240V	
112	11070344	Circuit Breaker - 15A	
113	11070335	Fuse - 8A 220/240V	
114	16061484	Capacitor - 16μF 220V (115V)	
114	16061485	Capacitor - 16μF 220V (220/240V)	
115	11050087	Clamp	
116	11060395	Nylon Stud	
117	11060394	Locking Support	
118	11050201	Harness Clamp	
119	11050108	Nylon Clip	
120	11010359	Terminal - 3P	
121	11050144	Harness Clamp	
122	11060442	Cord Clamp - 220/240V	

17. ELECTRICAL COMPONENT II [5215]

October 15, '85

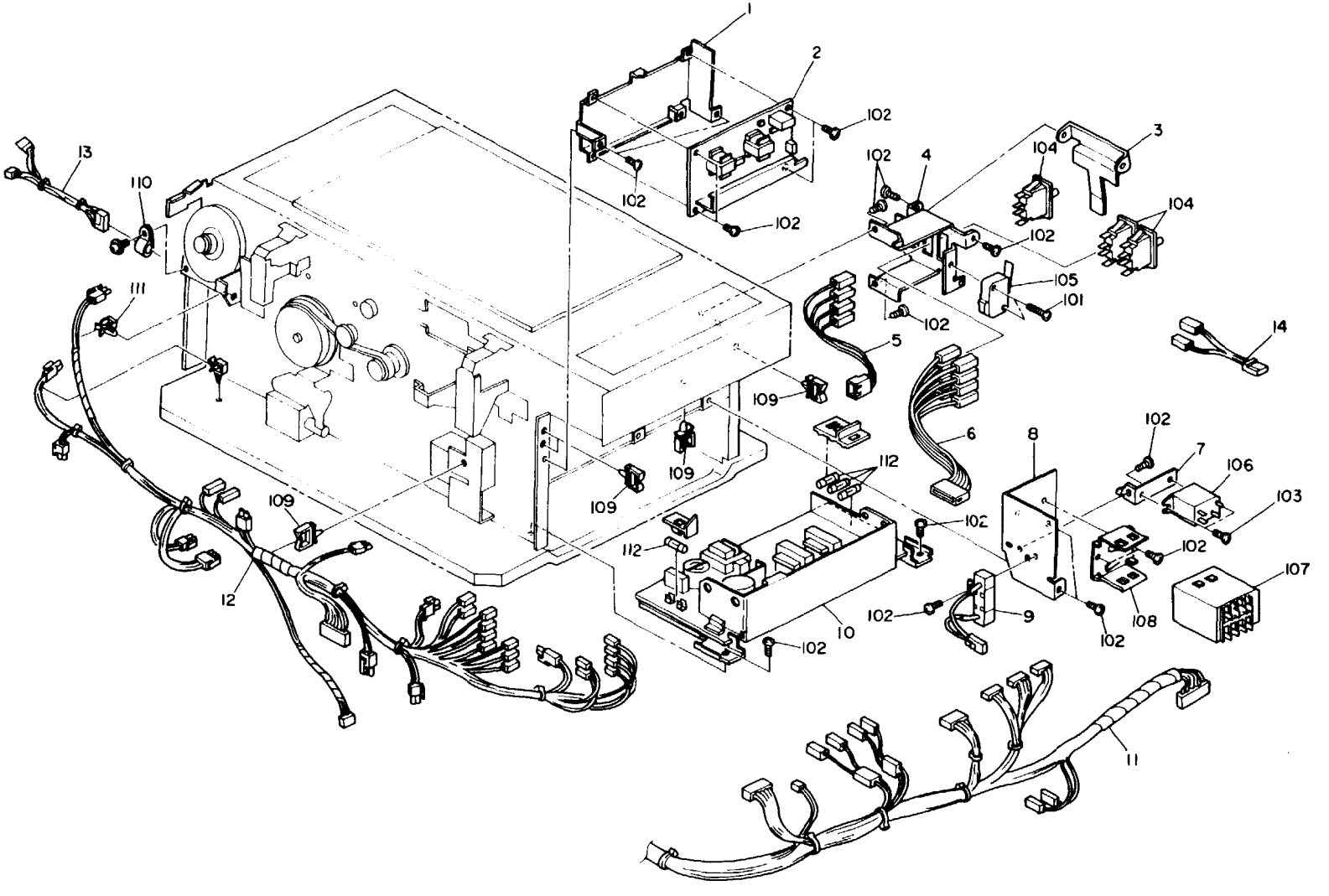

17. ELECTRICAL COMPONENT II [5215]

Rev. 5/89

Index No.	Parts No.	Description	Q'ty Per Assembly
1	52155804	AC Drive Board Bracket	1
2	AY110001	AC Drive Board - 115V	1
2	52155236	AC Drive Board - 220/240V	1
3	52155824	Safety Switch Lever	1
4	52155822	Safety Switch Bracket	1
5	52155454	Front Door Harness	1
6	52155458	Safety Switch Harness	1
7	52155837	Outlet Fan Relay Bracket	1
8	52155813	Power Relay Bracket	1
9	52155436	Cement Registor	1
10	52155530	Power Supply Unit	1
11	52155447	DC Harness	1
12	52155459	AC Harness	1
13	52155449	Relay Harness	1
14	52155472	Harness - Exhaust Relay	1
101	03130120W	Philips Pan Head Screw - M3 x 12	
102	04340080W	Tapping Screw - M4 x 8	
103	09513006W	Philips Screw with Flat Washer - M3 x 6	
104	12041280	Push Switch	
105	12041078	Microswitch	
106	12081051	Relay - DC 24V (115V)	
106	52095450	Relay - Coling Fan Motor - 220/240V	
107	12081029	Power Relay	
108	11040224	Relay Bracket	
109	11050144	Harness Clamp	
110	11050010	Nylon Clip - 6N	
111	11050087	Clamp	
112	11070415	Fuse 5A	

Index No.	Parts No.	Description	Q'ty Per Assembly

18. EXPANSION UNIT [5922]

Rev. 10/91

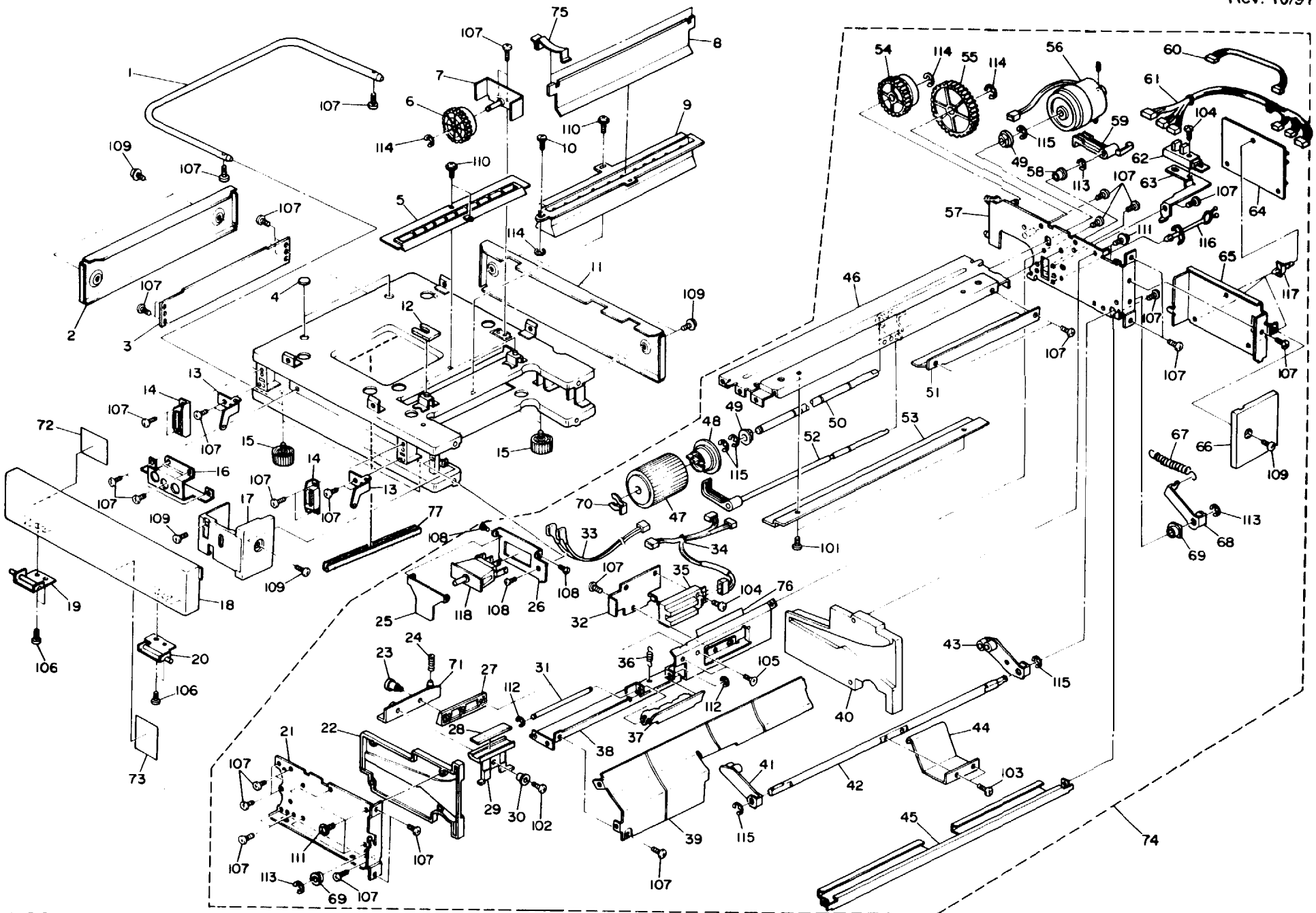

18. EXPANSION UNIT [5922]

Index No.	Parts No.	Description	Q'ty Per Assembly
*	59228751	Installation Procedure - English	1
1	59222635	Expansion Unit Handle	1
2	59222384	Left Cover	1
3	59222667	Duplex Shipping Plate - Left	1
4	59222637	Rubber Seal	2
5	59222333	Expansion Relay Feed Guide	1
6	59222094	Gear - 40T	2
7	59222240	Stud Bracket	1
8	59222334	Lower Guide Plate	1
9	59222336	Expansion Guide Plate	1
10	54032075	Stepped Screw	1
11	59222385	Rear Cover	1
12	59222636	Rubber Seal	2
13	59222391	Cover Bracket	2
14	50540536	Magnet Catch Ass'y	1
15	54191057	Rubber Foot	2
16	59222665	Duplex Shipping Plate - Front	1
17	59222451	Front Right Cover	1
18	59222450	Front Cover	1
19	52151297	Front Cover Hinge - Left	1
20	52151295	Front Cover Hinge - Right	1
21	59222211	Front Side Plate	1
22	59202115	Front Cassette Holder	1
23	54422642	Shoulder Screw - M3	1
24	52152844	Spring - Friction Pad	1
25	59222396	Switch Actuator	1
26	59222395	Safety Switch Bracket	1
27	52152598	Fixing Pad Bracket	1
28	52162844	Friction Pad	1
29	52152583	Pad Holder	1
30	54422638	Collar - Friction Pad Arm	1
31	52152579	Shaft	1
32	59222344	Size Sensor Bracket	1
33	59225203	Safety Switch Harness	1
34	59225201	3rd Feed Sensor Harness	1
35	52055253	Photointerruptor Pack	1
36	52152582	Spring	1
37	52152593	Lower Arm	1
38	59222342	Pad Mounting Plate	1
39	59222224	3rd Paper Feed Guide	1
40	59222372	Rear Cassette Holder	1
41	52152657	Lower Front Arm	1
42	52152646	Shaft	1
43	52152659	Lower Rear Arm	1
44	52152656	Lower Lift Arm	1
45	52151134	Lower Paper Feed Stay - Right	1
46	59222225	Paper Feed Guide	1
47	52152619	Feed Roller	1
48	52152618	Feed Roller Hub	1
49	50530223	Bushing - 8mm	1
50	59222236	Feed Roller Shaft	1
51	59202139	Sensor Feeler Cover	1
52	59222340	Paper End Feeler	1
53	59222229	Upper Paper Guide	1
54	59222231	Gear - 32T	1
55	59222233	Gear - 46T	1
56	52155314	Magnetic Clutch	1
57	59222220	Rear Side Plate	1
58	54432668	Bushing	1
59	52152626	Paper End Actuator	1
60	59225202	Clutch Harness	1
61	59225200	Interface Harness	1
62	52055250	L.E.D. Sensor Type S	1
63	59222237	Sensor Bracket	1
64	59225101	3rd Paper Feed Board	1
65	59222238	PCB Bracket	1
66	59222452	Rear Right Cover	1
67	52152665	Spring - Lower Lift	1
68	52152663	Pressure Arm	1
69	52152662	Bushing	2

● NOTE: Refer to last frame on last fiche of Parts Catalog.

Rev. 10/91

Index No.	Parts No.	Description	Q'ty Per Assembly
70	52152621	Snap Ring - M6	1
71	52152568	Pad Arm	1
72	59222456	Decal - Misfeed D	1
73	59222457	Decal - Misfeed E	1
74	59221125	3rd Paper Feed Unit	1
75	59222335	Guide Plate Holder	2
76	59201511	Mylar 100x19mm	
77	A0084612	Edging-505mm	
101	03130040W	Philips Pan Head Screw - M3 x 4	
102	03130120W	Philips Pan Head Screw - M3 x 12	
103	03140080M	Philips Pan Head Screw - M4 x 8	
104	03140120W	Philips Pan Head Screw - M4 x 12	
105	03230080W	Philips Sunken Head Screw - M3 x 8	
106	034400600	Philips Truss Head Screw - M4 x 6	
107	04340080W	Tapping Screw - M4 x 8	
108	04340060W	Tapping Screw - M4 x 6	
109	08025094	Tapping Screw - M4x8	
110	096440084	Tapping Screw with Flat Washer - M4 x 8	
111	09654008W	Tapping Screw with Flat Washer - M4 x 8	
112	07200025E	Retaining Ring - M2.5	
113	07200030E	Retaining Ring - M3	
114	07200050E	Retaining Ring - M5	
115	07200060E	Retaining Ring - M6	
116	11050120	Wire Clip	
117	11050159	PCB Stud	
113	12041226	Push Switch	

19. COPY RELAY UNIT [5922]

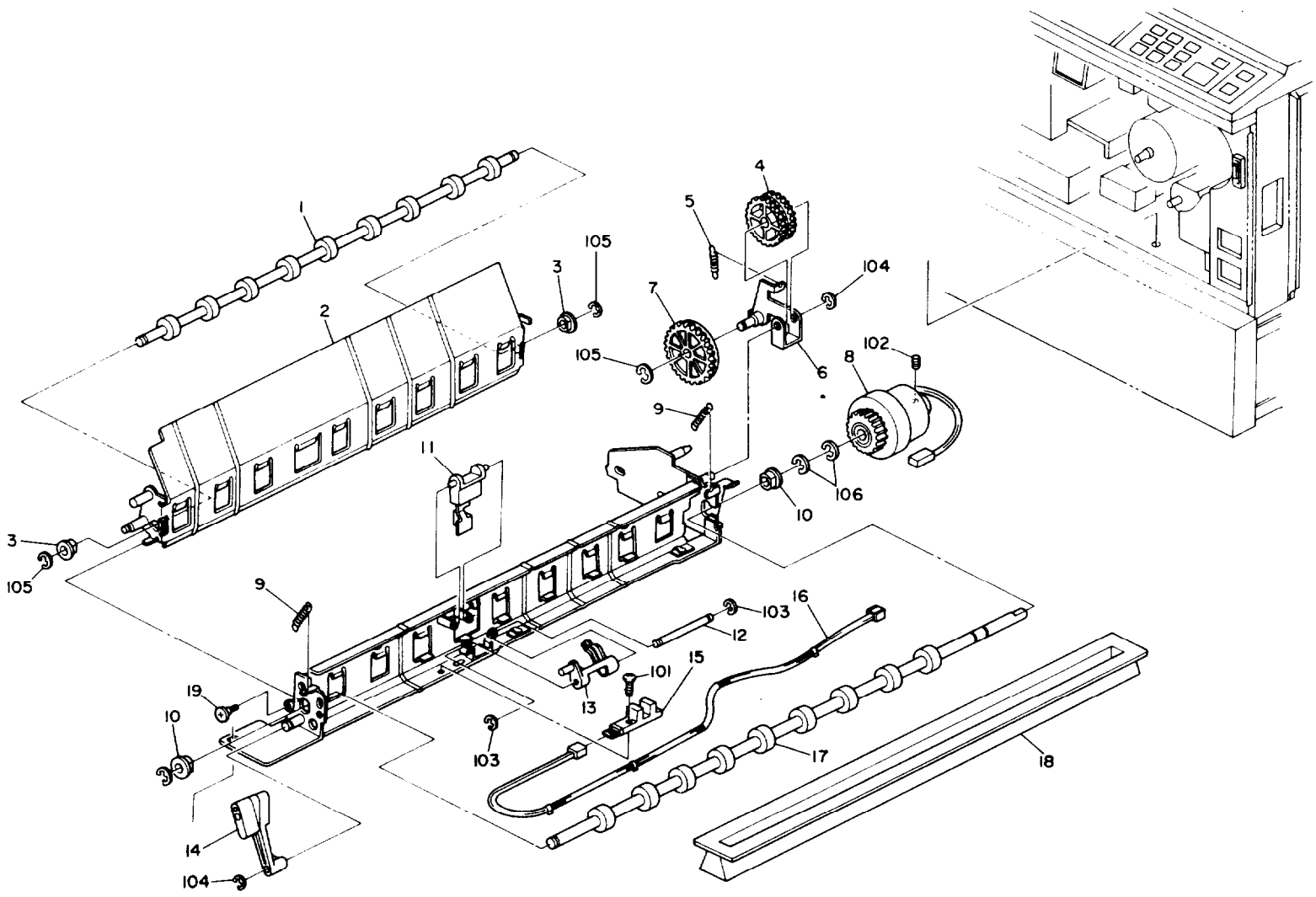

19. COPY RELAY UNIT [5922]

October 15, '85

Index No.	Parts No.	Description	Q'ty Per Assembly
*	59221032	Copier Relay Feed Unit	1
1	59222082	Copier Relay Roller	1
2	59222070	Left Guide - Copier Re ay Feed	1
3	50530447	Bushing - 6mm	1
4	59222093	Gear - 28T	1
5	59222095	Spring - Gear	1
6	59222090	Stud Bracket	1
7	59222094	Gear - 40T	2
8	59225300	Relay Feed Clutch	1
9	59222085	Spring - Relay Guide	2
10	50530223	Bushing - 8mm	1
11	59222062	Sensor Actuator	1
12	59222067	Feeler Shaft	1
13	59222066	Sensor Feeler	1
14	59222097	Relay Guide Lever	1
15	52055250	L.E.D. Sensor Type S	1
16	59225204	Copier Relay Harness	1
17	59222081	Copier Relay Drive Roller	1
18	59222332	Copier Relay Feed Guide	1
19	52062684	Shoulder Screw - M3	1
101	03140120W	Philips Pan Head Screw - M4 x 12	
102	05740040E	Hexagon Headless Set Screw - M4 x 4	
103	07200030E	Retaining Ring - M3	
104	07200040E	Retaining Ring - M4	
105	07200050E	Retaining Ring - M5	
106	07200060E	Retaining Ring - M6	

Index No.	Parts No.	Description	Q'ty Per Assembly

20. EXPANSION RELAY UNIT [5920]

Rev. 5/89

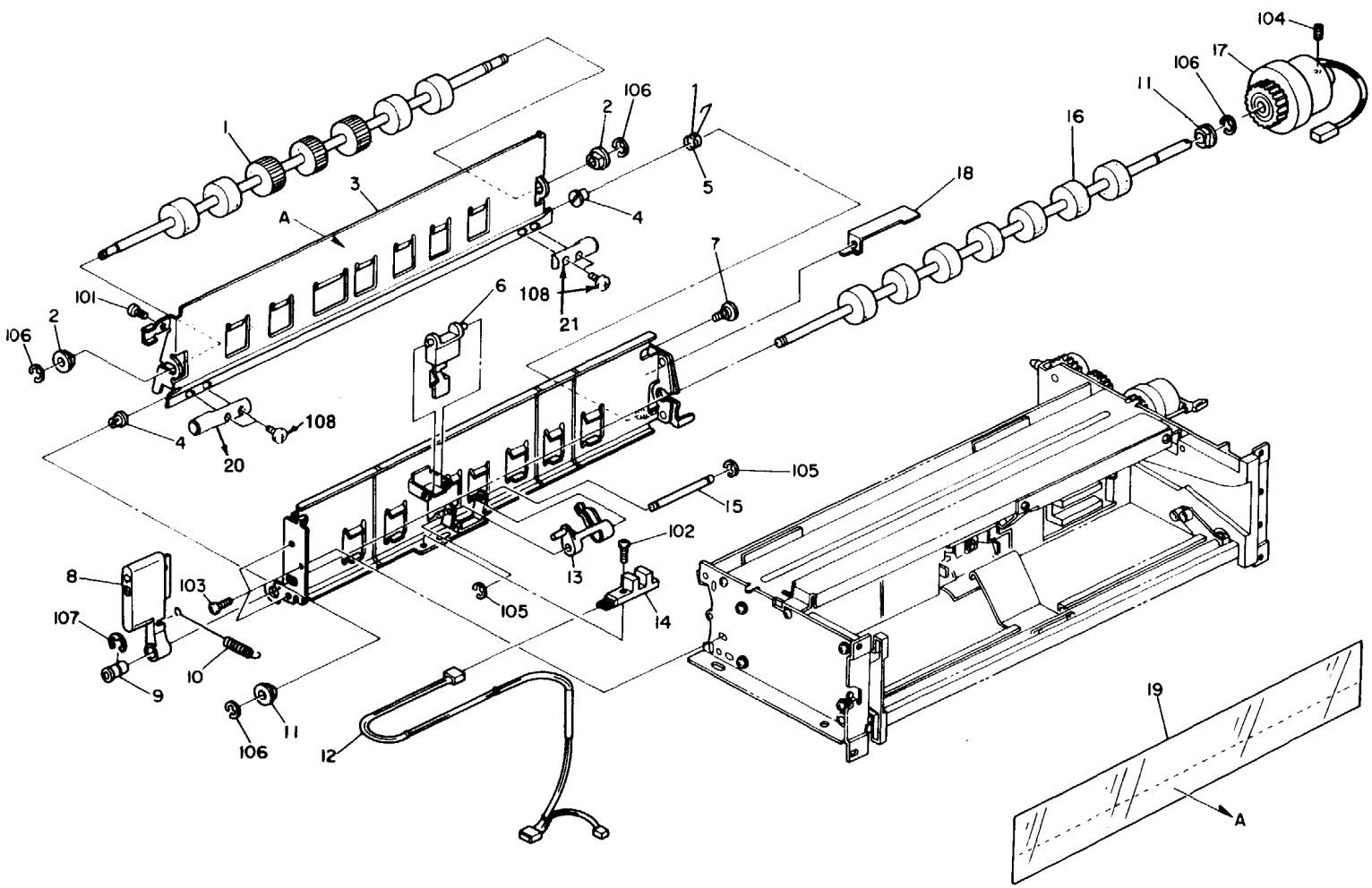

20. EXPANSION RELAY UNIT [5920]

Index No.	Parts No	Description	Q'ty Per Assembly
*	59201050	Expansion Relay Unit	1
*	59208751	Installation Procedure - English	1
*	59208752	Installation Procedure - 5 Languages	1
*	59204226	Multi-Lingual Decal	1
● 1	59202394	Expansion Relay Roller	1
2	50530447	Bushing - 6mm	2
● 3	59202392	Relay Feed Guide	1
● 5	A4152433	Rear Guide Plate Spring	1
6	59222062	Sensor Actuator	2
7	54032075	Stepped Screw	1
8	59202431	Guide Plate Lever	1
9	59202430	Guide Plate Bushing	1
● 10	A4152432	Front Guide Plate Spring	1
11	54032617	Bushing - Cleaning Roller	2
12	59205210	Expansion Relay Harness	1
13	59222066	Sensor Feeler	2
14	52055250	L.E.D. Sensor Type S	1
15	59222067	Feeler Shaft	2
16	59202421	Expansion Relay Drive Roller	1
17	59225300	Relay Feed Clutch	2
18	52152634	Paper Feed Clutch Holder	1
19	59202418	Mylar Seal - Guide Plate	1
● 20	59202395	Front Feed Guide Shaft	
☒ 21	59202396	Rear Feed Guide Shaft	
101	03140060W	Philips Pan Head Screw - M4 x 6	
102	03140120W	Philips Pan Head Screw - M4 x 12	
103	04340080W	Tapping Screw - M4 x 8	
104	05740040E	Hexagon Headless Set Screw - M4 x 4	
105	07200030E	Retaining Ring - M3	
106	07200050E	Retaining Ring - M5	
107	07200060E	Retaining Ring - M6	

Index No.	Parts No.	Description	Q'ty Per Assembly
● 108	03130040W	Philips Pan Head Screw M3x4	

● NOTE: Refer to last frame on last fiche of product Parts Catalog

21. PAPER BANK I [5920]

Rev. 5/89

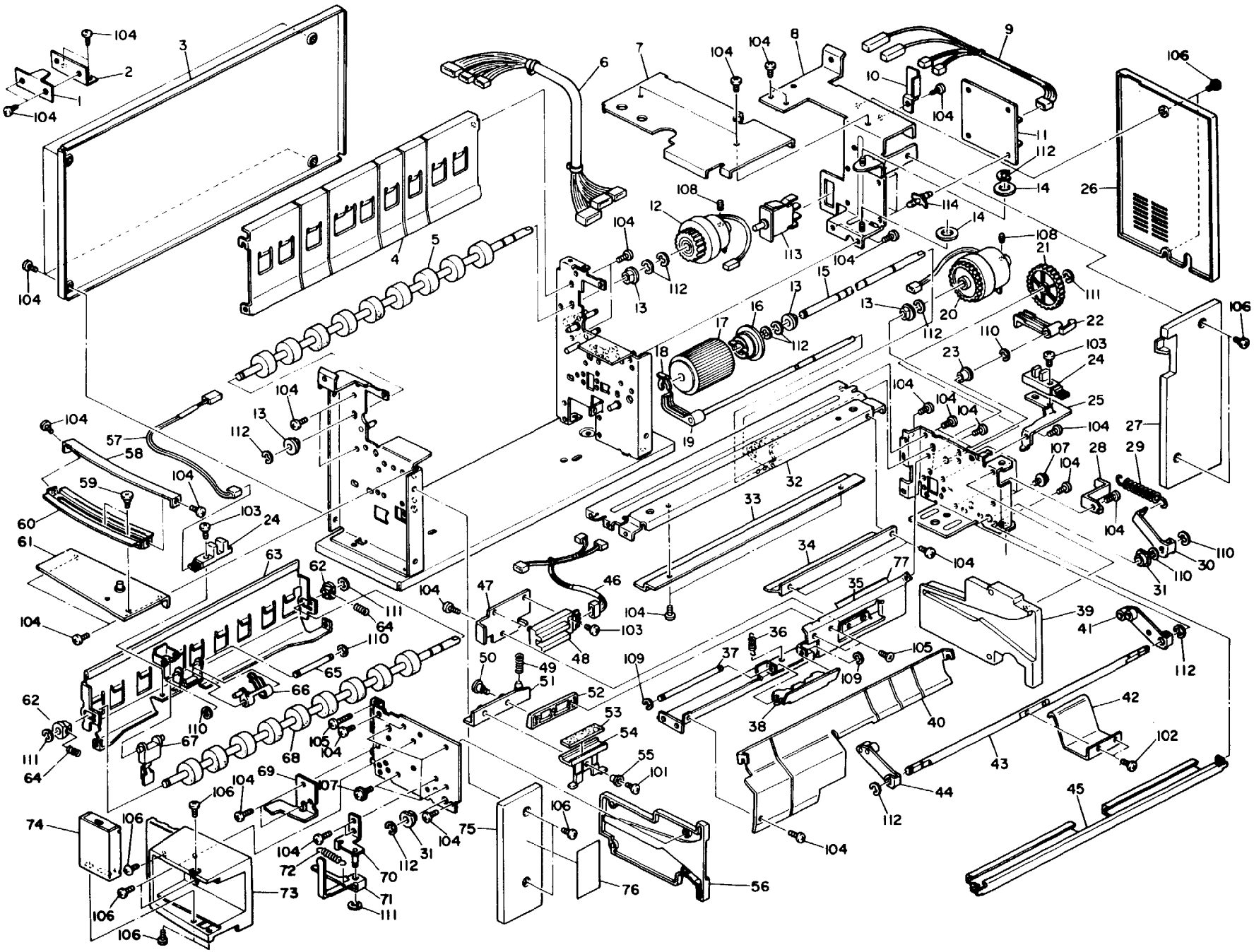

21. PAPER BANK I [5920]

Rev. 10/91

Index No.	Parts No.	Description	Q'ty Per Assembly
1	59222670	Expansion Docking Plate	2
2	59222671	Expansion Docking Bracket	2
3	59202340	Left Cover	1
4	59202252	Left Paper Guide	1
5	59202251	Feed Relay Drive Roller	1
6	59225200	Interface Harness	1
7	59202310	4th Feed Upper Stay	1
8	59202280	Rear Side Plate - 4th Feed	1
9	59205204	5th Feed Harness	1
10	59202279	Bank Docking Bracket	1
11	59205101	Paper Bank Board	1
12	59225300	Relay Feed Clutch	2
13	50530223	Bushing - 8mm	3
14	59202293	Nylon Washer	2
15	59222236	Feed Roller Shaft	2
16	52152618	Feed Roller Hub	2
17	52152619	Feed Roller	2
18	52152621	Snap Ring - M6	2
19	59222340	Paper End Feeler	2
20	52155314	Magnetic Clutch	2
21	59222099	Gear - 32T	2
22	A0082626	Paper End Actuator	2
23	54432668	Bushing	2
24	52055250	L.E.D. Sensor Type S	1
25	59222237	Sensor Bracket	2
26	59202350	Rear Cover - 220/240V	1
26	59202355	Rear Cover - 115V	1
27	59202330	Rear Right Cover - 220/240V	1
27	59202335	Rear Right Cover - 115V	1
28	59202151	Actuator Plate	1
30	52152663	Pressure Arm	2
31	52152662	Bushing	2
32	59222225	Paper Feed Guide	2
33	59222229	Upper Paper Guide	2

Index No.	Parts No.	Description	Q'ty Per Assembly
34	59202139	Sensor Feeler Cover	1
▶35	A4152846	Pad Mounting Plate	2
36	52152582	Spring	2
37	52152579	Shaft	2
38	52152591	Lower Arm	2
39	59202125	Rear Cassette Holder	2
40	59202137	Paper Guide Plate	2
41	52152659	Lower Rear Arm	2
42	52152656	Lower Lift Arm	2
43	52152646	Shaft	2
44	52152657	Lower Front Arm	2
45	52151134	Lower Paper Feed Stay - Right	1
46	59205202	4th Feed Harness	1
47	59222344	Size Sensor Bracket	2
48	52055253	Photointerruptor Pack	2
49	52152644	Spring - Friction Pad	2
50	54422642	Shoulder Screw - M3	2
51	52152584	Pad Arm	1
52	52152673	Fixing Pad Bracket	2
53	52162844	Friction Pad	1
54	52152583	Pad Holder	2
55	54422638	Collar - Friction Pad Arm	2
56	59202115	Front Cassette Holder	2
57	59205203	5th Feed Harness - Paper Feed	1
58	59202296	Guide Cover	1
59	54131882	Stepped Screw - Lamp Terminal	2
60	59202273	Guide Rail	1
61	59202270	Front Guide Plate	1
62	52052697	Bushing - Upper Registration Roller	2
63	59202129	Right Paper Guide	1
64	52052698	Relay Roller Spring	2
65	59222067	Feeler Shaft	2
66	59222066	Sensor Feeler	2
67	59222062	Sensor Actuator	2
▶68	59202136	Feed Relay Roller - 4th Feed	1

● NOTE: Refer to last frame on last fiche of Parts Catalog.

Rev. 5/89

Index No.	Parts No.	Description	Q'ty Per Assembly
69	59202145	Guide Arm	1
70	59202140	Lock Stud	1
71	59202143	Lock Arm	1
72	59202144	Spring - Lock	1
73	59202146	Front Cover - 4th Feed	1
74	59202147	4th Feed Grip	1
75	59202322	Front Right Cover	1
76	59202152	Decal 4th Feed	1
77	59201511	Mylar 100x19mm	
101	03130120W	Philips Pan Head Screw - M3 x 12	
102	03140080W	Philips Pan Head Screw - M4 x 8	
103	03140120W	Philips Pan Head Screw - M4 x 12	
104	04340080W	Tapping Screw - M4 x 8	
105	03230080W	Philips Pan Head Screw - M4 x 14	
106	08025094	Tapping Screw - M4x8	
107	09654008W	Tapping Screw with Flat Washer - M4 x 8	
108	05740040E	Hexagon Headless Set Screw - M4 x 4	
109	07200025E	Retaining Ring - M2.5	
110	07200030E	Retaining Ring - M3	
111	07200050E	Retaining Ring - M5	
112	07200060E	Retaining Ring - M6	
113	12041280	Push Switch	
114	11050159	PC8 Stud	

22. PAPER BANK I I [5920]

Rev. 5/89

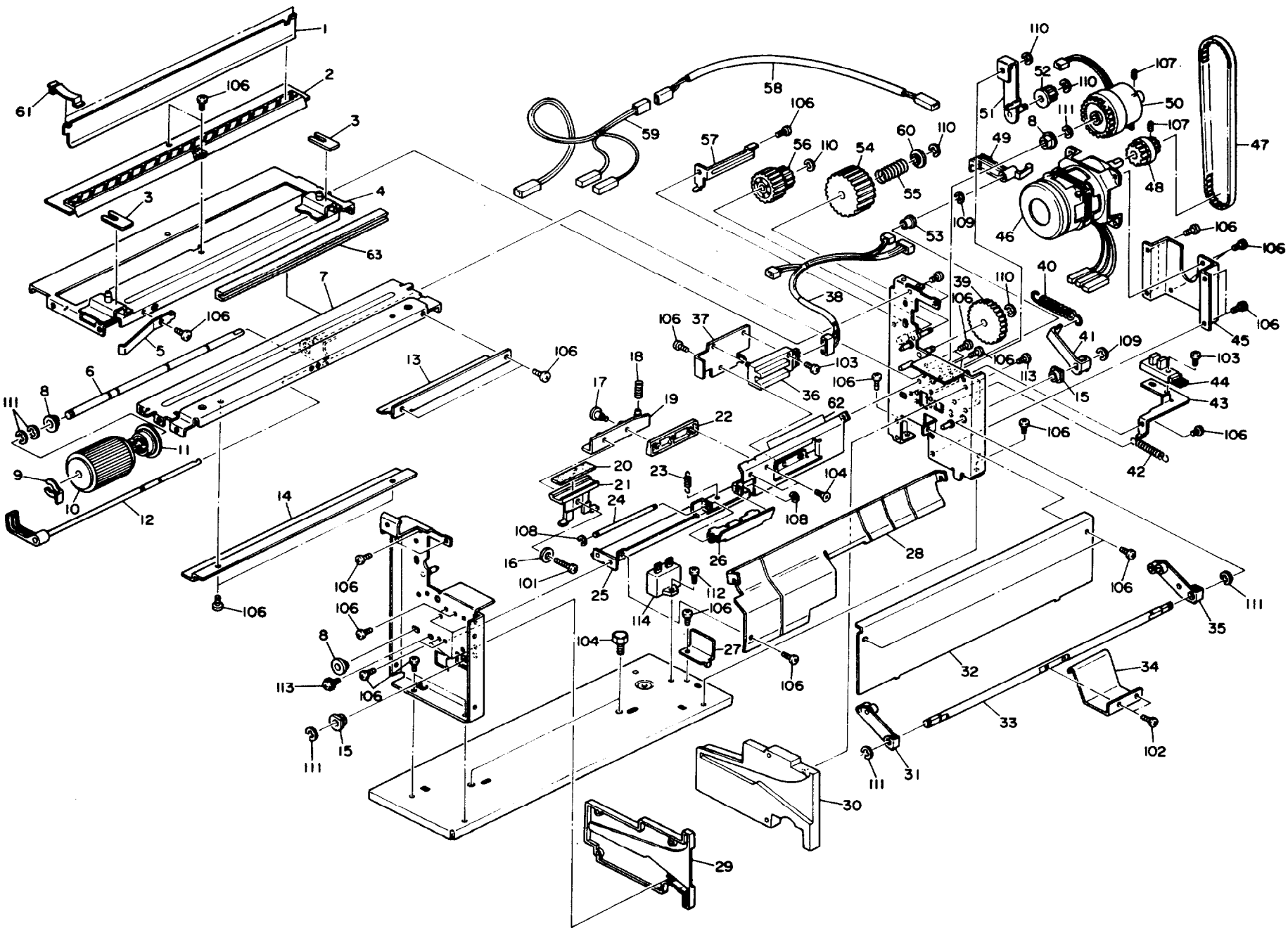

22. PAPER BANK II [5920]

Rev. 5/89

Index No.	Parts No.	Description	Q'ty Per Assembly
1	59222334	Lower Guide Plate	1
2	59222333	Expansion Relay Feed Guide	1
3	59222636	Rubber Seal	2
4	59202240	Top Stay	1
5	59202246	Spring Plate	1
6	59222236	Feed Roller Shaft	2
7	59222225	Paper Feed Guide	2
8	50530223	Bushing - 8mm	3
9	52152621	Snap Ring - M6	2
10	52152619	Feed Roller	2
11	52152618	Feed Roller Hub	2
12	59222340	Paper End Feeler	2
13	59202139	Sensor Feeler Cover	1
14	59222229	Upper Paper Guide	2
15	52152662	Bushing	2
16	54422638	Collar - Friction Pad Ann	2
17	54422642	Shoulder Screw - M3	2
18	52152644	Spring - Friction Pad	2
19	52152584	Pad Arm	1
20	52162844	Friction Pad	1
21	52152583	Pad Holder	2
22	62152673	Fixing Pad Bracket	2
23	52152582	Spring	2
24	52152579	Shaft	2
▶25	A4152346	Pad Mounting Plate	2
26	52152591	Lower Arm	2
27	59202294	Support Bracket	1
28	59202137	Paper Guide Plate	1
29	59202115	Front Cassette Holder	2
30	59202125	Rear Cassette Holder	2
31	52152657	Lower Front Arm	2
32	59202291	Inner Plate	1
33	52152646	Shaft	2
34	52152656	Lower Lift Arm	2
35	52152659	Lower Rear Arm	2
36	52055253	Photointerruptor Pack	2
37	59222344	Size Sensor Bracket	2
38	59205201	5th Feed Harness - Paper Size	1
39	59222099	Gear - 32T	2
40	52152664	Spring - Upper Lift	2
41	52152663	Pressure Arm	2
42	59202264	Spring - Tightener	1
43	59222237	Sensor Bracket	2
44	52055250	L.E.D. Sensor Type S	1
45	59202255	Motor Bracket	1
46	59205400	Drive Motor - AC 4.1W	1
47	59202269	Timing Belt - 160XL	1
48	59202256	Motor Pulley	1
49	A0082626	Paper End Actuator	2
50	52155314	Magnetic Clutch	2
51	59202260	Tightener Bracket	1
52	58874183	Idler Pulley	1
53	54432668	Bushing	2
54	59202266	Gear - 34T	1
55	59202267	Spring	1
56	59202268	Pulley - 13T/24T	1
57	59202292	Clutch Stopper	1
58	59205221	Relay AC Harness - 115V	1
58	59205222	Relay AC Harness - 220/240V	1
59	59205220	Bank AC Harness	1
60	58862146	Exit Spring Seat	1
61	59222335	Guide Plate Holder	2
62	59201511	Mylar 100x19mm	
63	59202171	Edge Guard	

●NOTE: Refer to last frame on last sheet of Parts Catalog fiche.

Rev. 5/89

Index No.	Parts No.	Description	Q'ty Per Assemblv
101	03130120W	Philips Pan Head Screw - M3 x 12	
102	03140080W	Philips Pan Head Screw - M4 x 8	
103	03140120W	Philips Pan Head Screw - M4 x 12	
104	058982008	Bolt M10x20	
104	03230080W	Philips Sunken Head Screw - M3 x 8	
105	03230060W	Philips Sunken Head Screw - M3 x 6	
106	04340080W	Tapping Screw - M4 x 8	
107	05740040E	Hexagon Headless Set Screw - M4 x 4	
108	07200025E	Retaining Ring - M2.5	
109	07200030E	Retaining Ring - M3	
110	07200050E	Retaining Ring - M5	
111	07200060E	Retaining Ring - M6	
112	09644010W	Tapping Screw - M4 x 10	
113	09654008W	Tapping Screw with Flat Washer - M4 x 8	
114	16061506	Capacitor - 3μF 220V VOE	
114	16061507	Capacitor - 3μF 220V UL	

23. SORTER [6803]

Rev. 10/91

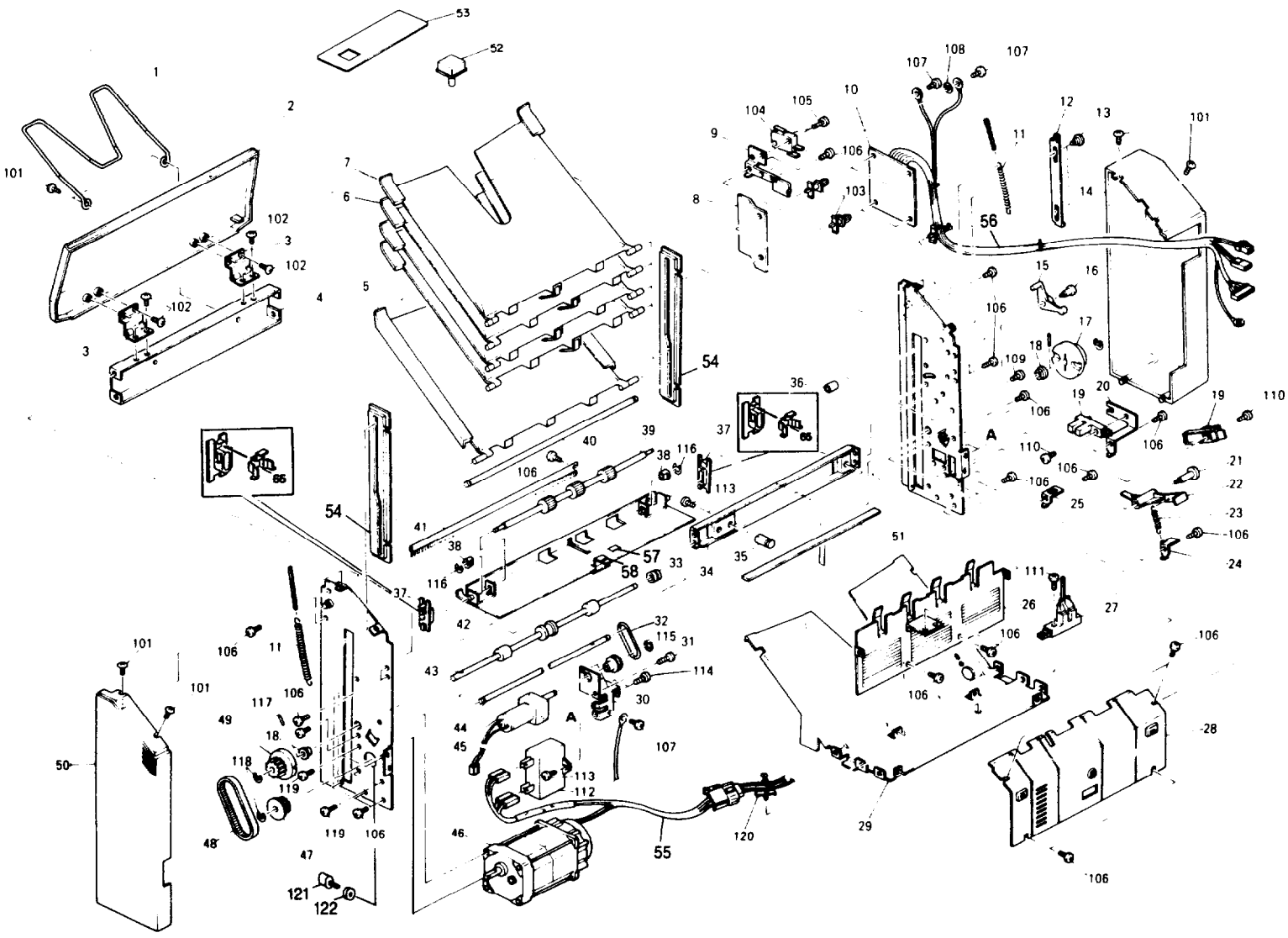

23. SORTER [6803]

Rev.10/91

ndex IO.	Parts No.	Description	Q'ty Per Assembly
*	68036613	Multi-Lingual Decal	1
•	68036517	Installation Procedure - 115V	1
•	68036527	Installation Procedure - 220V	1
1	59171641	Original Holder	1
2	68036311	Upper Cover	1
3	68036911	Hinge - Upper Cover	2
4	68031141	Upper Support Plate	1
5	68033221	Sorter Bin - Bottom	1
6	68033151	Sorter Bin - Even	10
7	68033111	Sorter Bin - Odd	10
a	68036411	Insurating Plate	1
9	68034431	Bracket - Safety Switch	1
10	68035500	Bin Motor Board	1
11	68033311	Transfer Wheel Shaft	2
12	68032271	Lever - Upper Guide Plate	1
13	54032075	Stepped Screw	2
14	A4146213	Rear Cover	1
15	A4232272	Arm - Upper Guide Plate	1
16	68032273	Stepped Screw - M4	1
17	68033326	Rear Transfer Wheel	
18	50530447	Bushing - 6mm	2
19	52055250	L.E.D. Sensor Type S	2
20	68033421	Half Turn Sensor	1
21	68033412	Stepped Screw - M4	1
22	68033411	Lever - Home Position Sensor	1
23	68033413	Lever Spring	1
24	68033414	Lever Stopper	1
25	68034441	Cover Bracket	1
26	A4232311	Cover - Electrical Section	1
27	68035430	Faper Exit Sensor	1
28	68032111	Lower Guide Plate	1
29	A4231131	Base Plate	
30	68034411	Cover Bracket	1
31	A4234216	Pulley	1
32	68034316	O-ring	1

.Inde No.	Parts No.	Description	Q'ty Per Assembly
3 3	68032415	Drive Pulley	1
34	68031151	Mounting Stay	1
35	68031161	Upper Mounting Stud	2
36	68032261	Dumper - Upper Guide Plate	1
37	68032221	Guide - Upper Guide Plate	2
38	68032231	Bushing - 4 x 6 x 5 mm	2
39	68032241	Upper Exit Roller	1
40	68033316	Lift Bar	1
41	68032251	Antistatic Brush	1
42	A4232110	Upper Guide Plate	1
43	68032410	Lower Exit Roller	1
44	68033331	Transfer Wheel Shaft	1
45	A.4235410	Paper Exit Motor - DC 24V 2.9W	1
46	68035400	Bin Motor - AC 14/17W	1
47	68034211	Pulley - 18T	1
48	68034311	Timing Belt - 94 x L	1
49	68033321	Front Transfer Wheel	1
50	A4146113	Front Cover	1
51	67691128	Mounting Stay Magnet	1
52	59184020	Option Key Top	1
53	68037512	Sorter Key Cover - English	1
53	68037513	Sorter Key Cover - International	1
54	A4231127	Slot Liner	2
55	68035610	Interface Harness	1
56	68035600	Main Harness	1
57	A4146521	Decal . Guide Plate	1
58	A4232531	Guide Plate	1
59	A4231144	Base Roller	2
60	A4231143	Base Shaft	2
61	A4231145	Receive Plate	1
62	A4233513	Bin Support Shaft	1
63	A4233517	Bin Support Wire	2
64	A4233511	Bin Shaft Positioner	2
65	A4142311	Spring Plate - Guide Stopper	2

Rev. 10/91

ndex IO.	Parts No.	Description	Q'ty Per Assembly
101	03340080D	Philips Sunken Head Screw - M4 x 8	
102	03140060W	Philips Pan Head Screw - M4 x 6	
103	11050162	Locking Support	
104	12041318	Microswitch	
105	03130140W	Philips Pan Head Screw - M3 x 14	
106	04340080W	Tapping Screw - M4x8	
107	03140080M	Philips Pan Head Screw - M4 x 8	
108	07040040C	Toothed Washer - M4	
109	04340100W	Tapping Screw - M4 x 10	
110	03140120W	Philips Pan Head Screw - M4 x 12	
111	03130120W	Philips Pan Head Screw - M3 x 12	
112	16060755	Capacitor - 10μF 220V (115V)	
112	16061380	Capacitor - 10μF (220/240V)	
113	03140080W	Philips Pan Head Screw - M4 x 8	
114	09653010W	Tapping Screw With Flat Washer - M3 x 10	
115	07200040E	Retaining Ring - M4	
116	07200030E	Retaining Ring - M3	
117	063201406	Parallel Pin	
118	07200060E	Retaining Ring - M6	
119	03150080W	Philips Pan Head Screw - M5 x 8	
120	11050196	Harness Clamp	
121	08030019	Thumb Screw	2
122	08073090	Spacer-4.2x12x3.9	2
123	03130060W	Philips Pan Head Screw - M3x6	2

24. SORTER ADAPTER [6805]

October 15, '85

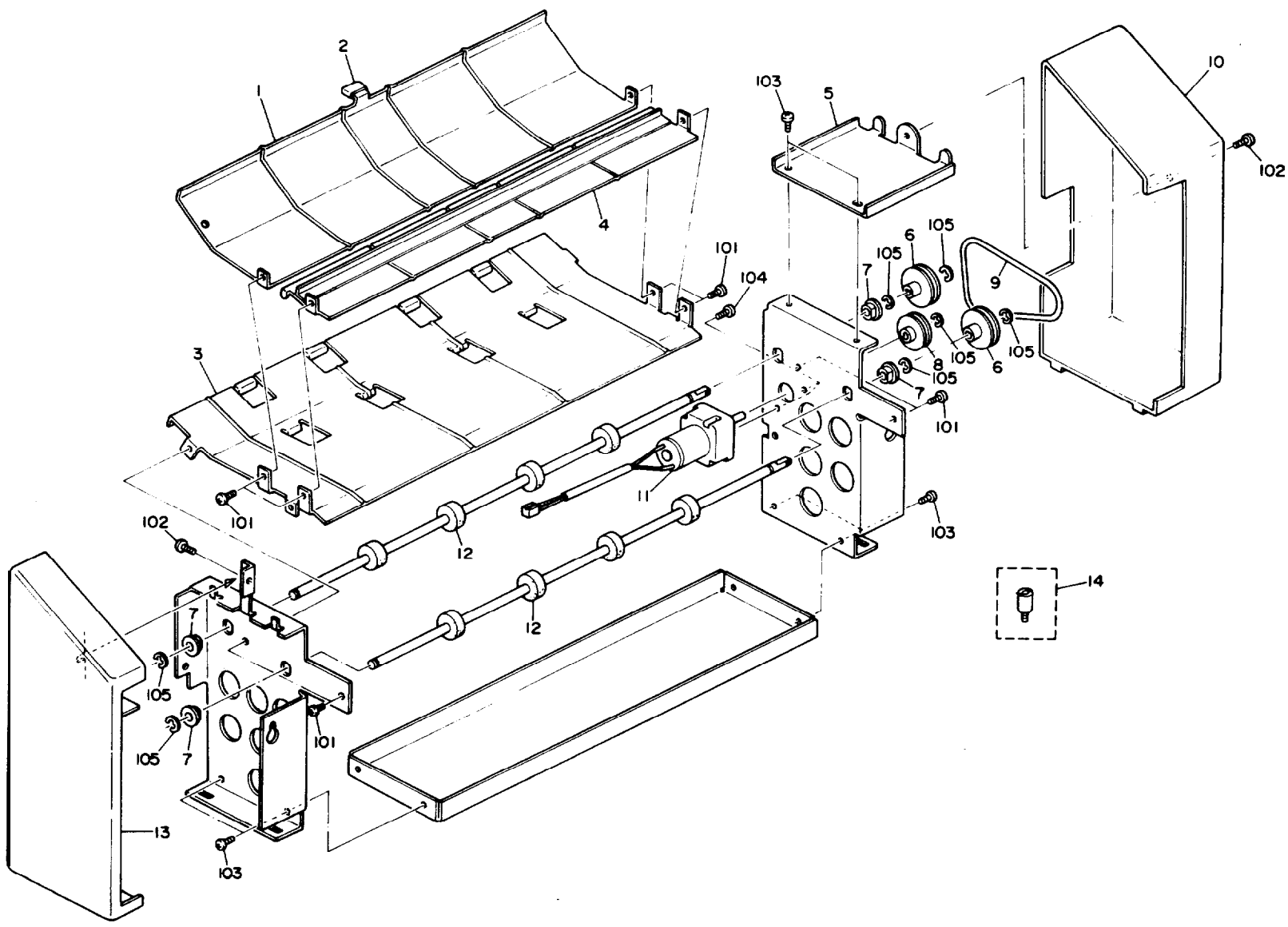

24. SORTER ADAPTER [6805]

Rev. 10/91

Index No.	Parts No.	Description	Q'ty Per Assembly
1	A9101231	Upper Guide Plate - Large	1
2	67541242	Knob Cap	1
3	68051211	Lower Guide Plate	1
4	A9101221	Upper Guide Plate - Small	1
5	68051631	Rear Cover Bracket	1
6	68051311	Pulley - 6 x 25 x 11MM	2
7	50530447	Bushing - 6mm	2
8	68034216	Pulley	1
9	68051321	O-Ring - 3 x 225.8 mm	1
10	68051621	Rear Cover	1
11	68035410	Paper Exit Roller	1
12	A9101241	Transport Roller	2
13	68051611	Front Cover	1
14	67691127	Lower Mounting Stud	2
101	03140080W	Philips Pan Head Screw - M4 x 8	
102	03440080D	Philips Truss Head Screw - M4 x 8	
103	04340080W	Tapping Screw - M4 x 8	
104	09653010W	Tapping Screw With Flat Washer - M3 x 10	
105	07200040E	Retaining Ring - M4	

Index No.	Parts No.	Description	Q'ty Per Assembly

25. DOCUMENT FEEDER I [5918]

Rev.08/9

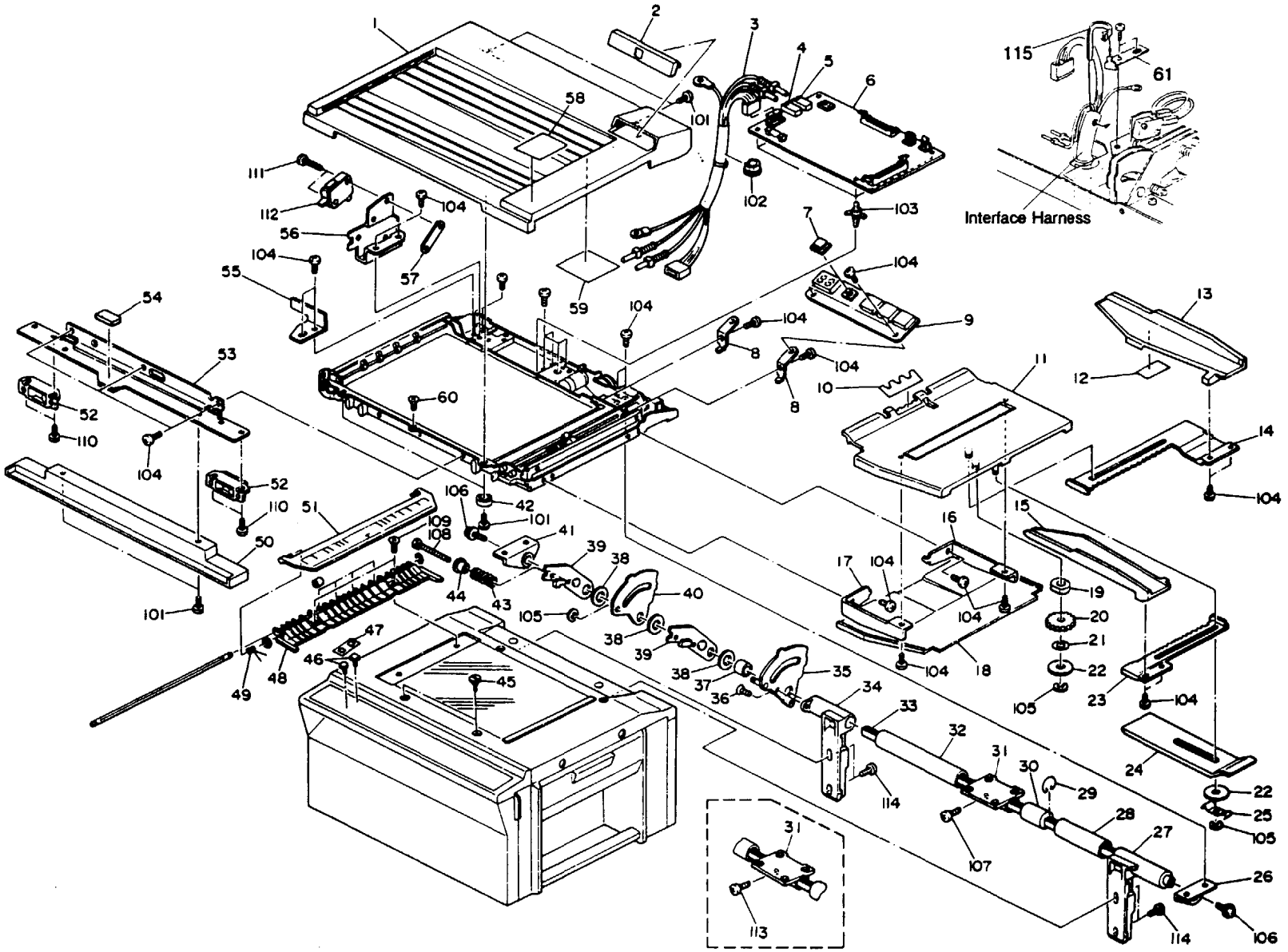

25. DOCUMENT FEEDER I [5918]

Rev.08/91

Index No.	Parts No.	Description	Q'ty Per Assembly
*	59188751	Installation Procedure- English	1
*	59188752	Installation Procedure- Europe	1
*	59184226	Multilanguage Decal	1
1	59183764	DF Cover Ass'y - 115V	1
1	59183749	DF Cover Ass'y - 220/240V	1
2	59183762	Display Panel	1
3	59185801	Interface Harness	1
4	59185711	Fiber Output Connector	1
5	59185712	Fiber Input Connector	1
● 6	A4195636	DF Main Board	1
7	59182645	Key top	1
8	59182390	Display Board Bracket	2
9	59185621	Display Board	1
10	59182725	Mylar - Feed In	1
11	59182711	Original Feed Table - LT/LDG	1
11	59182712	Original Feed Table - A4/A3	1
12	58942747	Mylar - Original Guides	2
13	59182740	Rear Original Guide	1
14	58754145	Pack - Rear Original Guide	1
15	59182730	Front Original Guide	1
16	59182776	Front Table Bracket	1
17	59182775	Front Table Bracket	1
18	59182755	Original Table Cover	1
19	54432712	Cork Pad	1
20	54432657	Gear - 282	1
21	54432713	Wave Washer	1
22	54432660	Spacer - 6 x 22 x 0.5 mm	2
23	58754140	Pack - Front Original Guide	1
24	59182760	Original Table Extender	1
25	59182770	Extender Spring Plate	2
26	59183160	Right Bracket - Torsion Spring	1
27	59183235	Right Mounting Post	1
28	59183244	Right Spring Pipe	1
29	58753553	Ring - Holder	1
◗30	59183249	Spring Holder	1

● NOTE: Refer to last frame on last fiche of Parts Catalog.

index No.	Parts No.	Description	Q'ty Per Assembly
◗31	59183248	Bracket	2
32	59183243	Left Spring Pipe	1
◗33	59183250	Torsion Spring - 1.0 mm	1
34	59183230	Left Mounting Post	1
35	59183210	Right Brake Plate	1
36	58943215	Brake Stopper	1
37	58943219	Leaf Spring Holder	1
38	58943218	AID Pad	3
39	59183225	Brake Pad Plate	2
40	59183217	Left Brake Plate	1
41	59183156	Left Bracket - Torsion Spring	1
42	58863114	Roller Cover	2
43	58753287	Spring - Brake shoe	1
44	54032048	Bushing - 4mm	2
45	58755510	Shoulder Screw - M5	2
46	59184020	Option Key Top	2
47	59184003	ADF Key Cover - International	1
47	59184002	ADF Key Cover - English	1
48	59183875	Original Exit Guide	1
49	59183855	Spring - Flip Scale	1
50	59183770	Grip	1
51	59183911	Flip Scale - LT/LDG	1
51	59183912	Flip Scale - A4/A3	1
52	50540440	Magnet Catch Ass'y	2
53	59183390	Grip plate	1
54	59183394	Seal - 15 x 30mm	1
55	59183261	Brake Plate Stopper	1
56	59183255	Brake Plate Bracket	1
57	50560509	Nut Plate - Microswitch	1
58	59183981	Decal - Misfeed Removal	1
59	59183986	Decal - Dip SW	1
60	59183040	Shoulder Screw - M4	1
61	A4198385	Harness Bracket	1

1-51

Rev. 08/91

Index No.	Parts No.	Description	Q'ty Per Assembly
101	03440060D	Philips Truss Head Screw - M4 x 6	
102	11060134	Universal Bushing	
103	11060395	Nylon Stud	
104	03140060W	Philips Pan Head Screw - M4 x 6	
105	07200040E	Retaining Ring - M4	
106	09515008W	Philips Screw with Flat Washer - M5 x 8	
107	03150080W	Philips Pan Head Screw - M5 x 8	
108	03140350W	Philips Pan Head Screw - M4 x 35	
109	A4193877	Shoulder Screw - Scale	2
110	03130060W	Philips Pan Head Screw - M3 x 6	
111	03130160W	Philips Pan Head Screw - M3 x 16	
● 112	12040770	Reed Switch	1
● 113	03160100G	Phillips Pan Head Screw -M6 x 10	
115	11050047	TY Wrap	1

● NOTE: Refer to last frame on last fiche of Parts Catalog.

1-51A

26. DOCUMENT FEEDER II [5918]

Rev. 5/89

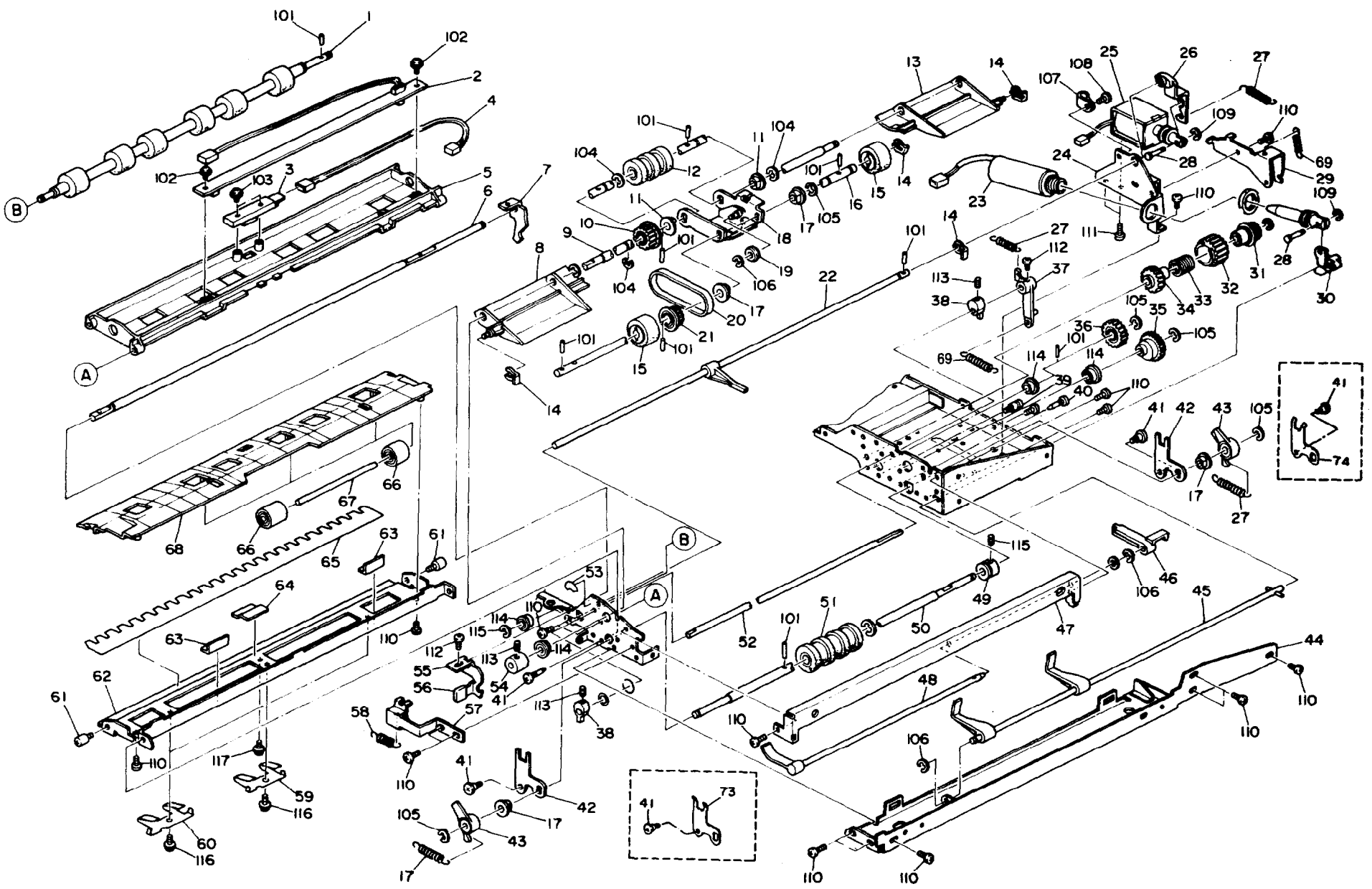

a

26. DOCUMENT FEEDER II [5918]

Rev. 5/89

Index No.	Parts No.	Description	Q'ty Per Assembly
1	59182155	Registration Roller	1
2	59185631	Paper Size Sensor	1
3	59185721	Photosensor	1
4	59185821	Registration Sensor Harness	1
5	59182520	Upper Feed-in Guide	1
6	59182168	Release Lever Shaft	1
7	59182172	Rear Release Lever	1
8	A4182230	Front Feed-in Guide	1
9	59182224	Feed Roller Shaft	1
10	58942186	Separation Roller Pulley	1
11	50530233	Bracket - Blower	1
12	58942181	Upper Separation Roller	1
13	A4182231	Rear Feed-in Guide	1
14	54472681	Snap Ring	4
15	58942171	Original Feed Roller	2
16	59182220	Pick-up Roller Shaft	1
17	50530447	Bushing - 6mm	1
18	59182215	Pick-up Roller Bracket	1
19	58942163	Center Roller	1
20	58942174	Timing Belt	1
21	59182223	Pulley - 24T	1
22	59182375	Pick-up Control Shaft	1
23	59185501	Stopper Solenoid	1
24	59182370	Pick-up Solenoid Bracket	1
25	59185515	Pick-up Solenoid	1
26	59182371	Pick-up Lever	1
28	58942229	Solenoid Pin	2
29	59182373	Stopper Bracket	1
30	59182372	Stopper Lever	1
31	59182159	Pulley 25T	1
32	59182164	Clutch Sleeve	1
33	59182163	Clutch Spring	1
34	59182158	Gear 24T	1
35	59182230	Gear - 45T	1

Index No.	Parts No.	Description	Q'ty Per Assembly
36	59182156	Gear - 24T	1
37	59182340	Release Arm	1
38	59182105	Eccentric Cam	2
39	54032049	Spring Anchor	1
40	54462824	Screw - Duplex Guide Plate	2
41	54132298	Stepped Screw - M4	1
43	59182106	One Way Bearing Lever	2
44	59183355	Right Frame	1
45	59182150	Feed-in Stopper	1
46	59182250	Sensor Actuator	1
47	59182252	Right Stay	1
48	59182260	Feed-in Sensor Feeler	1
49	58942264	Collar	1
50	59182101	Separation Roller Shaft	1
51	58942183	Lower Separation Roller	1
52	59182103	Eccentric Cam Shaft	1
53	59182781	Decal - Feed-in	1
54	59182210	Collar - 6mm	1
55	59182170	Front Release Lever	1
56	67541242	Knob Cap	1
57	59182108	Adjusting Plate	1
58	52012832	Spring -Cassette Release	1
59	59182616	Middle Spring Plate	2
60	59182615	Spring Plate	1
61	54131875	Knob Screw	2
62	59182621	Entrace Guide	1
63	58755501	Sensor Pad	1
64	59182624	Seal - 12 x 17 x 0.7 mm	1
65	59182623	Paper Guide Mylar	1
66	58942412	Roller	6
67	58942413	Relay Roller Shaft	3
68	59182610	Lower Feed-in Guide	1
69	58942293	Spring - Original Stopper	1
70	08074005	Washer 5.1x8x.2mm	1

Rev. 5/89

Index No.	Parts No.	Description	Q'ty Per Assembly
73	A4182102	Front Adjusting Plate	
74	A4182103	Rear Adjusting Plate	
101	06320100E	Pin - M2 x 10	
102	09654006W	Tapping Screw - M4 x 6	
103	09050610W	Tapping Screw w/Flat Washer M3x10	
104	07200060E	Retaining Ring - M6	
105	07200050E	Retaining Ring - M5	
106	07200030E	Retaining Ring - M3	
107	11050008	Nylon Clip - 2N	
108	03140080W	Philips Pan Head Screw - M4 x 8	
109	07200025E	Retaining Ring - M2.5	
110	0314006%'	Philips Pan Head Screw - M4x6	
111	03130040W	Philips Pan Head Screw - M3 x 4	
112	03130060W	Philips Pan Head Screw - M3 x 6	
113	05740040W	Hexagon Headless Set Screw - M4 x 4	
114	08053145	Ball Bearing - 6x12x4mm	
115	05730040W	Hexagon Headless Set Screw - M3 x 4	
116	09514006W	Philips Screw with Flat Washer - M4 X 6	

27. DOCUMENT FEEDER III [5918]

October 15, '85

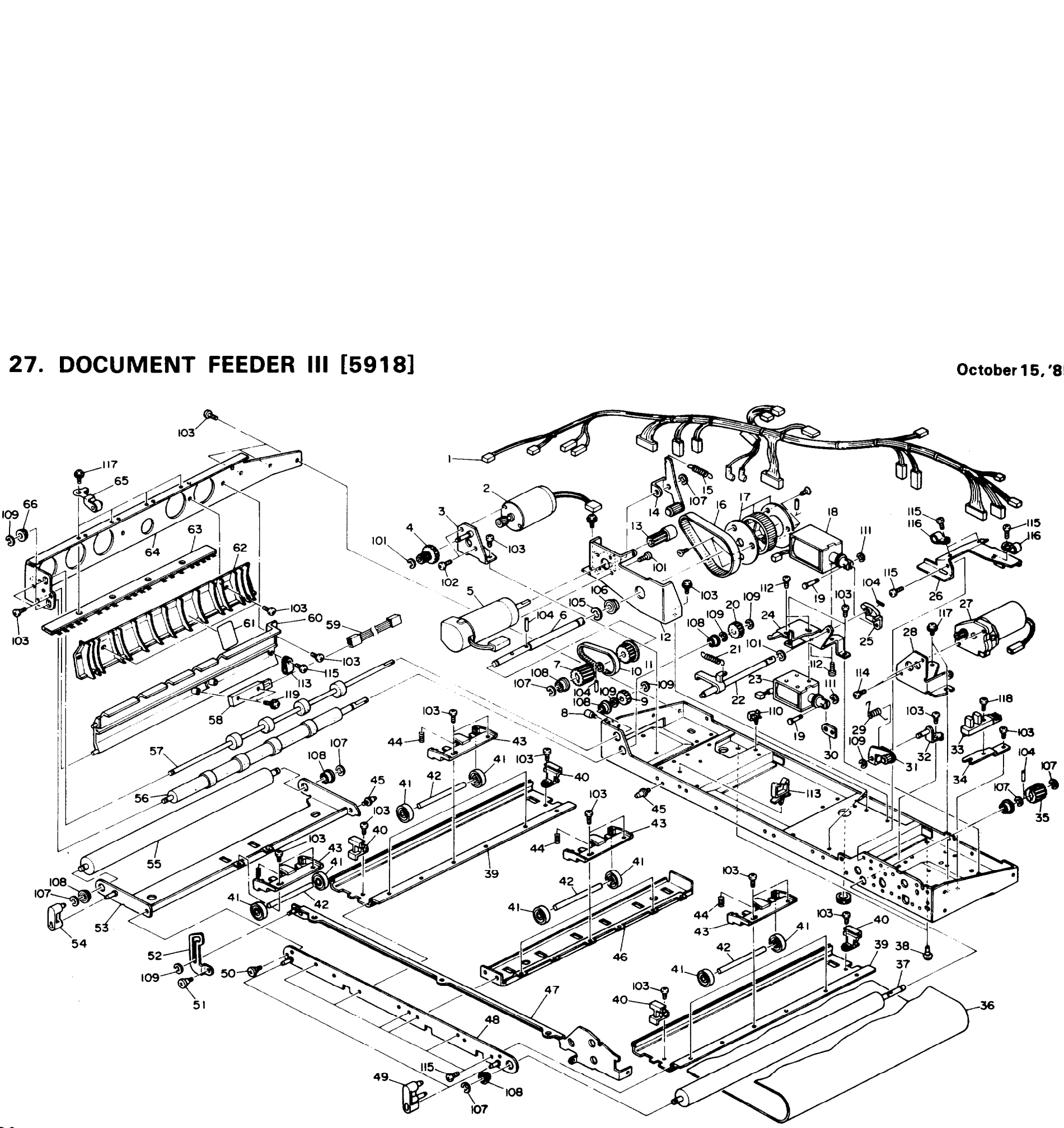

27. DOCUMENT FEEDER III [5918]

Rev. 10/91

Index No.	Parts No.	Description	Q'ty Per Assembly
1	59185811	Main Harness	1
2	59183516	Exit Drive Motor - DC1.69W	1
3	59183523	Exit Motor Bracket	1
4	59183146	Gear - 16T/33T	1
5	58865480	Separation Motor - DC 21W	1
• 6	59365501	Transport Drive Motor DC-21W	1
7	59182317	Gear - 19T	1
8	59183120	Stud - M4	1
9	59183538	Gear - 38T	1
10	59182314	Timing Belt - MM63	1
11	59182313	Pulley - 30T	1
12	59182301	Motor Bracket	1
• 13	59182270	Pulley - 15T	1
14	59182321	Timing Belt Tightner	1
15	59182307	Spring - Drive Motor Tension	1
16	59182316	Timing Belt - P2M 208	1
17	59182295	Pulley - 79T	1
18	59185525	Registration Solenoid	1
19	58942229	Solenoid Pin	2
20	59183539	Gear - 44T	1
21	54083253	Spring - Cassette	1
22	59182330	Clutch Lever	1
23	59185516	Release Solenoid	1
24	59182324	Solenoid Bracket	1
25	59182325	Stopper Lever	1
26	59182385	Harness Backet Ass'y	1
27	59182349	Feed-in Motor Ass'y - DC24V	1
28	59182355	Feed-in Motor Bracket	1
29	59182289	Spring	1
30	59182327	Release Lever	1
31	59182285	Tightener Stud	1
32	59182275	Timing Belt Tightner	1
33	52155230	Photointerrupter - L Type	1
34	59182380	Sensor Bracket	1
35	59182318	Gear - 19T	1
36	59181125	Original Feed Belt	1
37	59183369	Belt Drive Roller	1
38	58943121	Base Damper	2
39	59181556	Belt Stay	2
40	59183382	Belt Stopper	4
41	59183381	Floating Roller	18
42	58751540	Shaft - Floating roller	9
43	59183383	Holder - Floating Roller	3
44	59183380	Spring - Floating Roller	9
45	59183125	Stud - M4	3
46	59183385	Belt Unit Stay	1
47	59183351	Front Frame	1
48	59183395	Front Belt Unit Plate	1
49	59183007	Belt Unit Holder - A	2
50	58401632	Stepped Screw - M4	1
51	54131882	Stepped Screw - Lamp Terminal	2
52	59183093	Link	1
53	59183365	Belt Release Bracket	1
54	59183092	Belt Unit Holder - B	1
55	59183370	Belt Roller	1
56	59183537	Lower Exit Roller	1
57	59183536	Exit Roller	1
58	59185721	Photosensor	2
59	59185825	Exit Sensor Harness	1
60	59183566	Right Exit Guide	1
61	58755501	Sensor Pad	1
62	59183561	Left Exit Guide	1
63	59183562	Antistatic Brush	1
64	59183563	Left Frame	1
65	59183585	Upper Exit Roller	4
66	50530447	Bushing - 6mm	1

• NOTE: Refer to last frame on last fiche of product Parts Catalog

October 15, '85

Index No.	Parts No.	Description	Q'ty Per Assembly
101	07200030E	Retaining Ring - M3	
102	03430060W	Philips Pan Head Screw - M3 x 6	
103	03140060W	Philips Pan Head Screw - M4 x 6	
104	06320100E	Pin - M2 x 10	
105	07200070W	Retaining Ring - M7	
106	08053291	Ball Bearing - 8 x 16 x 5mm	
107	07200050W	Retaining Ring - M5	
108	08053140	Ball Bearing - 6x12x4mm	
109	07200040E	Retaining Ring - M4	
110	11050087	Clamp	
111	07200025E	Retaining Ring - M2.5	
112	03130040W	Philips Pan Head Screw - M3 x 4	
113	11050008	Nylon Clip - 2N	
114	03130060W	Philips Pan Head Screw - M3 x 6	
115	03140080W	Philips Pan Head Screw - M4 x 8	
116	11050034	Nylon Clip - 7N	
117	09514006W	Philips Screw with Flat Washer - M4 x 6	
118	03140100W	Philips Pan Head Screw - M4 x 10	
119	09653010W	Tapping Screw With Flat Washer - M3 x 10	

28. DUPLEX I [5919]

Rev. 10/91

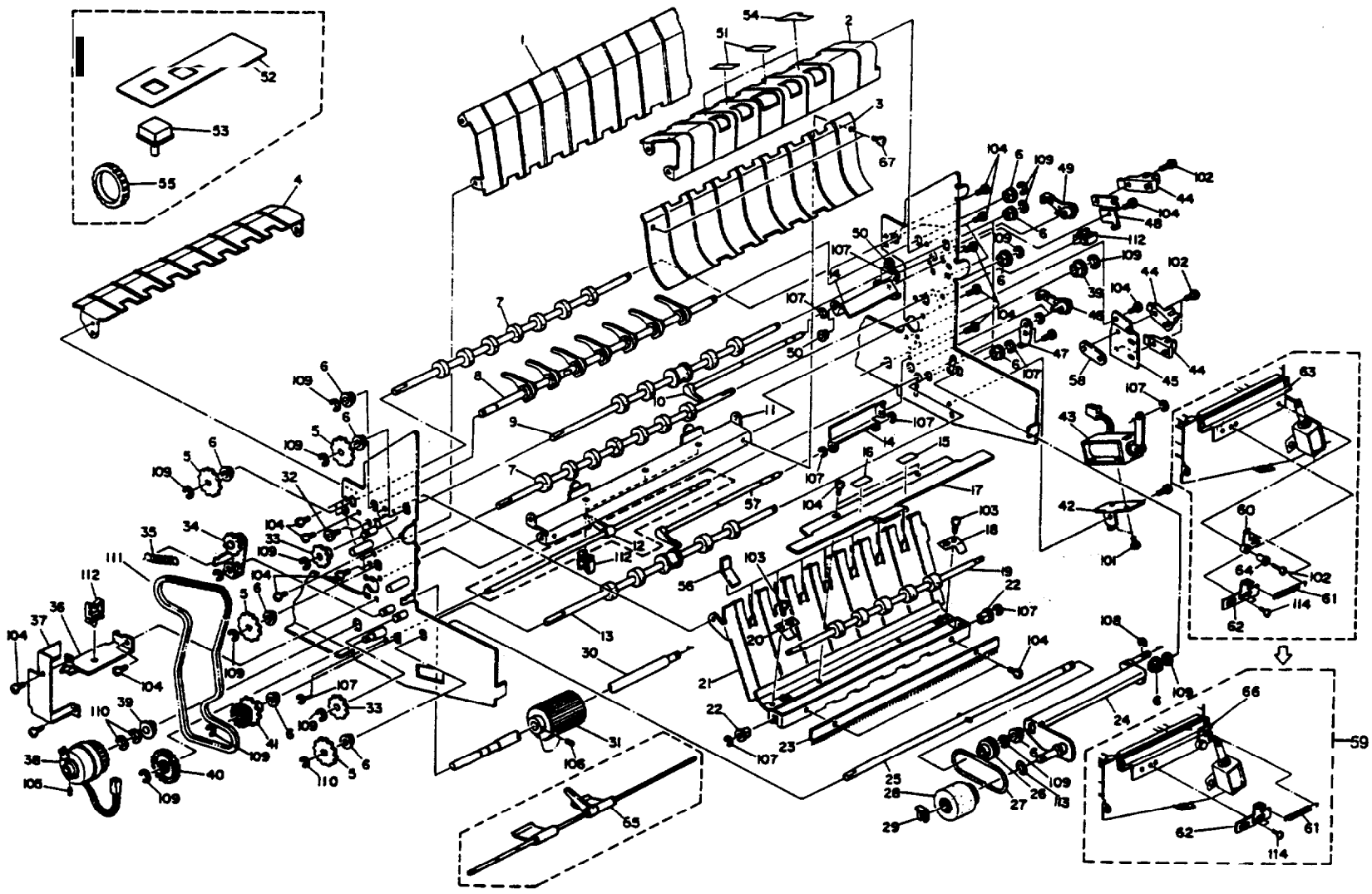

28. DUPLEX I [5919]

Rev. 2/91

Index No.	Parts No.	Description	Q'ty Per Assembly
•	59198751	Installation Procedure - English	1
•	59198752	Installation Procedure - Europe	1
•	59194226	Multilanguage Decal	1
•	59194227	Multilanguage Decal	1
1	59192091	Upper Entrance Guide	1
2	59192197	Exit Roller Guide Plate	1
3	59192092	Lower Entrance Guide	1
4	59192192	Lower Entrance Relay Guide	1
5	59192251	Sprocket - 16T	4
6	50530447	Bushing - 6mm	10
7	AF023005	Entrance Relay Roller	2
8	59192075	Junction Gate	1
▶ 9	A4162195	Duplex Exit Drive Roller	1
10	59192115	Duplex Entrance Feeler	2
11	59192088	Entrance Roller Stay	1
12	A4162109	Duplex Sensor Feeler	1
13	59192080	Duplex Entrance Roller	1
14	59192120	Entrance Feeler Bracket	2
15	59192315	Decal - Duplex Entrance	1
16	59192316	Decal - C2	1
17	59192235	Entrance Roller Cover	1
18	59192361	Front Spring Plate	1
19	59192241	Duplex Exit Roller	2
20	59192362	Rear Spring Plate	1
21	59192231	Upper Entrance Guide Plate	1
22	59192218	Bushing - 4 x 7 x 10MM	2
23	52062808	Anti Static Brush - Duplex Transport	2
24	A4162122	Positioning Roller Arm	1
25	59192125	Positioning Roller Shaft	1
26	59192127	Positioning Roller Pulley	1
27	59192132	Positioning Roller Belt	1
28	52062671	Positioning Roller	1
29	54472681	Snap Ring	1
30	59192103	Duplex Feed Shaft	1
31	54422616	Paper Feed Roller	1
32	54195714	Stepped Screw - M4	1
33	54032016	Tension Sprocket (11T) - Paper Feed	2
34	59192267	Chain Tightener	2
35	54243667	Spring - Solenoid	2
36	59192270	Feed Clutch Stopper	1
37	59192305	Harness Cover	1
38	52155314	Magnetic Clutch	1
39	50530223	Bushing - 8mm	2
40	54474164	Gear - 31T	1
41	59192252	Gear & Sprocket - 20T/60T	1
42	59192135	Solenoid Bracket	1
43	59192137	Positioning Roller Solenoid	1
44	52055251	L.E.D. Sensor Type T	3
45	59192286	Bracket - Photo Sensor	1
46	59192121	Duplex Entrance Actuator	2
47	52052850	Paper End Bushing	1
48	59192278	Exit Sensor Bracket	1
49	59192123	Duplex Exit Actuator	1
50	54432668	Bushing	2
51	59192310	Mylar - 14 x 42 mm	1
52	59192341	Duplex Key Cover - English	1
52	59192342	Duplex Key Cover - International	1
53	59192355	Duplex Key Top	1
54	59192309	Mylar Exit Guide	2
55	52154488	Exit Roller Belt	2
56	59192363	Mylar Entrance Guide	7
57	59192349	Duplex Entrance Feeler	1
58	59192285	Sensor Mounting Plate	1
59	59192156	Positioning Roller Spring Assembly	1
61	59192158	Spring Positioning Roller	1
62	59192159	Adjusting Plate	1
			1
65	A4162911	Adjusting Plate Bracket	2
66	59192153	Paper Flattener	1
67	52141974	Screw - Slider Stopper	

• NOTE: Refer to last frame on last fiche of product Parts Catalog

Rev.5/89

Index No.	Parts No.	Description	Q'ty Per Assembly
101	03130050W	Philips Pan Head Screw - M3 x 5	
103	04340060W	Tapping Screw - M4 x 6	
104	04340080W	Tapping Screw - M4x8	
105	05740040E	Hexagon Headless Set Screw - M4 x 4	
106	05740050E	Hexagon Headless Set Screw - M4 x 5	
107	07200030E	Retaining Ring - M3	
108	07200040E	Retaining Ring - M4	
109	07200050E	Retaining Ring - M5	
110	07200060E	Retaining Ring - M6	
111	09160148	Bushed Roller Chain - 148P	
112	11050099	Wire Saddle	
113	03140060W	Philips Pan Head Screw	2

29. DUPLEX II [5919]

October 15, '85

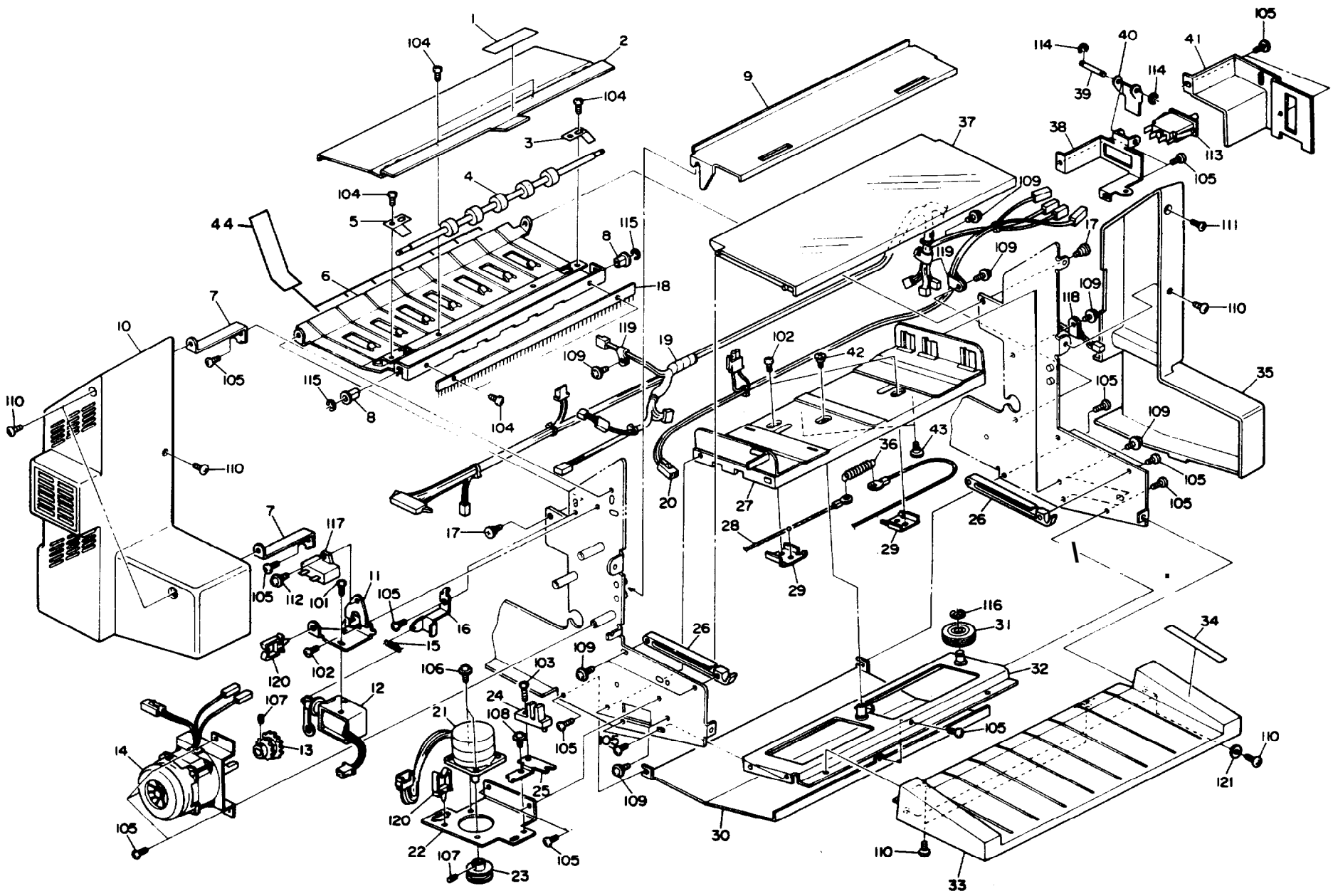

29. DUPLEX II [5919]

Rev. 5/89

Index No.	Parts No.	Description	Q'ty Per Assembly
1	59192314	Decal - Duplex Exit	1
2	59192296	Duplex Exit Guide Plate	1
3	59192243	Front Spring Plate	1
4	59192241	Duplex Exit Roller	2
5	59192244	Rear Spring Plate	1
6	59192238	Duplex Exit Guide Plate	1
7	59192283	Cover Bracket	2
8	59192218	Bushing - 4 x 7 x 10MM	2
9	A4182299	Duplex Tray Holder	1
10	59192288	Rear Cover - 220/240V	1
10	59194288	Rear Cover - 115V	1
11	59192274	Solenoid Bracket	1
12	59192265	Junction Gate Solenoid - 220/240V	1
12	59192282	Junction Gate Solenoid - 115V	1
13	59192247	Motor Sprocket - 50/60Hz	1
14	59195705	Duplex Drive Motor - AC 6.3W	1
15	59192284	Spring - Junction Gate Solenoid	1
16	59192279	Solenoid Stopper	1
17	54195714	Stepped Screw - M4	2
18	52062808	Anti Static Brush - Duplex Transport	2
19	59195430	DC Harness	1
20	59195431	AC Harness	1
21	59195309	Stepper Motor - DC24V	1
22	59192168	Jogger Motor Bracket	1
23	59192169	Wire Drive Pulley	1
24	52155230	Photointerrupter - L Type	1
25	59192171	H.P. Sensor Bracket	1
26	59192290	Duplex Tray Cover Holder	2
27	59192714	Jogger Unit Base	1
28	59192172	Jogger Wire	1
29	52062877	Wire Clamp Plate	2
30	59192294	Duplex Lower Cover	1
31	54421735	Pulley	1
32	59192162	Jogger Stay	1
33	59192280	Duplex Tray	1
34	59192371	Decal - Removing Misfed Paper C	1
35	59192287	Front Cover - 220/240V	1
35	59194287	Front Cover - 115V	1
36	52062876	Spring - Wire	1
37	59192289	Duplex Tray Cover	1
38	59192301	Safety Switch Bracket	1
39	59192303	Actuator Shaft	1
40	59192302	Safety Switch Actuator	1
41	59192298	Safety Switch Cover - 220/240V	1
41	59194298	Safety Switch Cover - 115V	1
42	54032075	Stepped Screw	1
43	52062922	Shoulder Screw - M4	2
44	59192389	Mylar Exit Guide	7
101	03130050W	Philips Pan Head Screw - M3 x 5	
102	03140060W	Philips Pan Head Screw - M4 x 6	
103	03140120W	Philips Pan Head Screw - M4 x 12	
104	04340060W	Tapping Screw - M4 x 6	
105	04340080W	Tapping Screw - M4 x 8	
106	04340100W	Tapping Screw - M4 x 10	
107	05740040E	Hexagon Headless Set Screw - M4 x 4	
108	09514008W	Philips Screw with Flat Washer - M4 x 8	
109	09654008W	Tapping Screw with Flat Washer - M4 x 8	
110	034400800	Philips Truss Head Screw - M4 x 6	
111	03240080W	Philips Sunken Head Screw - M4 x 8	
112	09514010W	Philips Screw with Flat Washer	
113	12041280	Push Switch	
114	07200025E	Retaining Ring - M2.5	
115	07200030E	Retaining Ring - M3	
116	0720006DE	Retaining Ring - M6	
117	16061498	Capacitor - 4UF AC 220V	
116	11050005	Nylon Clip - 3N	

October 15, '85

Index No.	Parts No.	Description	Q'ty Per Assembly
119	11050008	Nylon Clip - 2N	
120	11050099	Wire Saddle	
121	08073067	Washer - 4.2 x 20 mm	

30. DUPLEX [5919]

Rev. 10/91

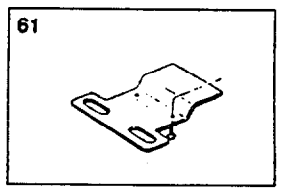

30. DUPLEX III [5919]

Rev. 5/89

Index No.	Parts No.	Description	Q'ty Per Assembly
1	59192077	Duplex Transit Drive Roller	3
2	50530447	Bushing - 6mm	2
3	59192199	Duplex Turn Guide	1
4	59192201	Shoulder Screw - M4	1
5	59192225	Rear Transport Side Plate	1
6	54032016	Tension Sprocket (11T) - Paper Feed	1
7	59192251	Sprocket - 16T	1
8	59192255	Solenoid - Feed-in Tray Clutch	1
9	59192258	Spring - Feed-in Tray Clutch	1
10	59192267	Chain Tightener	2
11	54243667	Spring - Solenoid	2
12	59195425	Feed-in Relay Clutch	1
13	59192249	Sprocket - 16T	1
14	50530223	Bushing - 8mm	4
15	59192260	Gear - 58T	1
16	50530465	Spring Clutch	1
17	59192264	Clutch Sleeve	1
18	59192262	Feed-in Tray Cam	1
19	59192083	Spring - Relay Roller	2
20	52052697	Bushing - Upper Registration Roller	2
21	59192144	Feed-in Tray Lever	1
22	54195714	Stepped Screw - M4	2
23	59192271	Relay Clutch Stopper	1
24	59192218	Bushing - 4 x 7 x 10MM	1
25	59192216	Duplex Transport Roller	3
26	59192244	Rear Spring Plate	1
27	59192243	Front Spring Plate	1
28	59192081	Upper Relay Roller	1
29	59192307	Spring - Duplex Transport	1
30	59192211	Lower Transport Plate	1
31	59192202	Turn Guide Holder	1
32	59192095	Upper Transport Plate	1
33	59192312	Decal - D2	1
34	59192220	Front Transport Side Plate	2
35	59192229	Stopper Plate	1
36	59192203	Turn Guide Cover	1
37	58861315	Spring - Separation Release	2
38	59192293	Transport Release Bar	1
39	59192055	Release Bar Bracket	1
40	59192147	Spring Hook	1
41	59192148	Spring - Feed-in Tray	1
42	59192146	Pressure Lever	1
43	59192100	Upper Feed Guide Plate	1
44	54422645	Spring - Friction Pad	1
45	54422642	Shoulder Screw - M3	1
46	52152584	Pad Arm	1
47	AF033003	Friction Pad	1
48	A4242147	Holder - Friction Pad	1
49	AA132014	Spacer - Friction Pad Arm	1
50	59192082	Lower Relay Roller	1
51	59192105	Friction Pad Arm	1
52	59192141	Arm Shaft	1
53	59192142	Feed-in Tray Arm	1
54	59192098	Lower Feed Guide Plate	1
55	A4162117	Duplex Feed Guide	1
56	59192270	Feed Clutch Stopper	1
57	59192305	Harness Cover	1
58	59192328	Decal - D1	1
59	59192364	Rubber Collar - 4.5 x 8 x 8 mm	1
●60	59192213	Support Stay	2
61	52159502	Duplex Transport Tool	1
62	A4162319	Chain Stopper Bracket	
63	59192411	Spacer - 1mm	
64	A4162119	Mylar Seal 52x62x.1mm	

● NOTE: Refer to last frame on last fiche of Parts Catalog.

October 15, '85

Index No.	Parts No.	Description	Q'ty Per Assembly
101	03130050W	Philips Pan Head Screw - M3 x 5	
102	03130120W	Philips Pan Head Screw - M3 x 12	
103	04340060W	Tapping Screw - M4 x 6	
104	04340080W	Tapping Screw - M4 x 8	
105	05740040E	Hexagon Headless Set Screw - M4 x 4	
106	09160190	Bushed Roller Chain - 190P	
107	03240080W	Philips Sunken Head Screw - M4 x 8	
108	09534014W	Philips Screw with Flat Washer	
109	07200030E	Retaining Ring - M3	
110	07200050E	Retaining Ring - M5	
111	07200060E	Retaining Ring - M6	
112	07010040W	Flat Washer - M4	

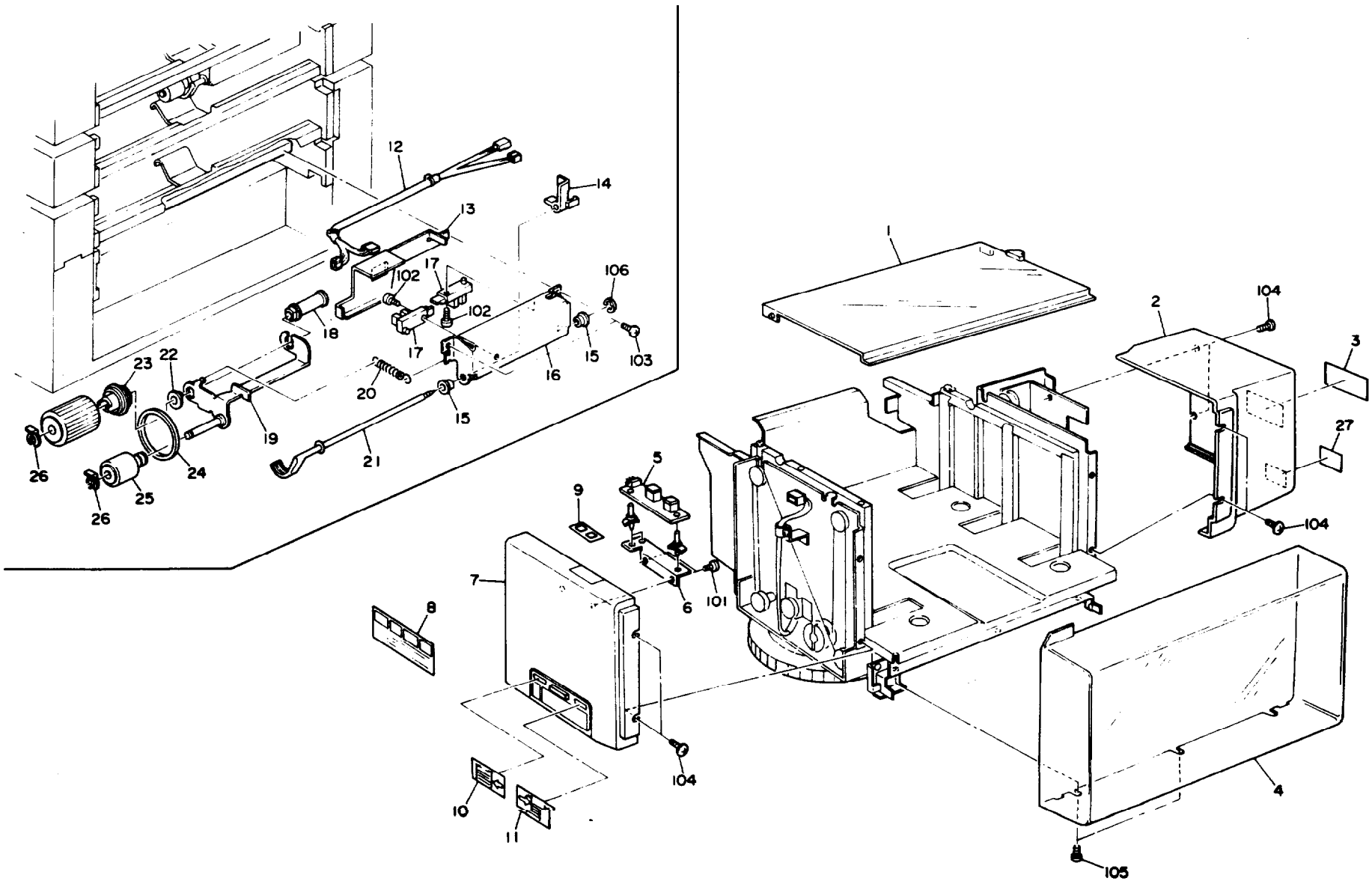
1
2
3
4
5
6
7
8
9
10
11
12
13
14
15
16
17
18
19
20
21
22
23
24
25
26
27
101
102
103
104
105
106

31. LCT I [5925]

Rev. 5/89

Index No.	Parts No.	Description	Q'ty Per Assembly
*	59258751	Installation Procedure - English	1
*	59258752	Installation Procedure - 5 Language	1
*	59254226	Multi-Lingual Decal	1
1	58971251	Top Cover	1
• 2	59251265	Rear Cover	1
3	54468905	Decal - English, French - 115V	1
3	54468906	Decal - English, German - 220V	1
• 4	59252234	Side Cover	1
5	58975515	Operation Board	1
6	58971272	Operation Board Mounting Bracket	1
7	58971256	Front Cover	1
8	59252292	Decal - Instructions	1
9	58971264	Operation Skin	1
10	58971257	Decal - Increase Size	1
11	58971258	Decal - Decrease Size	1
12	59255202	Pick-up Harness	1
13	59252129	Harness Cover	1
14	59252126	Sensor Actuator	1
15	54432668	Bushing	2
16	59252122	Sensor Bracket	1
17	52055250	L.E.D. Sensor Type S	1
18	59252133	Snap Collar	1
19	59252102	Pick-up Roller Holder	1
20	59252113	Spring - Pick-up Roller	1
21	59252124	Paper End Feeler	1
22	50540197	Bushing - 8 x 15 x 5 mm	1
23	59252111	Pick-up Drive Pulley	1
24	59252114	Pick-up Drive Belt	1
25	59252105	Pick-up Roller	1
26	54472681	Snap Ring	1
27	54421372	Decal - Power Source - 220V	1
• 28	59252334	Magnetic Catch Plate	1

Index No.	Parts No.	Description	Q'ty Per Assembly
101	03140040W	Philips Pan Head Screw - M4 x 4	
102	03140100W	Philips Pan Head Screw - M4 x 10	
103	04340080W	Tapping Screw - M4 x 8	
• 104	08025094	Tapping Screw - M4x8	
105	09644008W	Tapping Screw with Flat Washer - M4 x 8	
106	07200030E	Retaining Ring - M3	

• NOTE: Refer to last frame on last fiche of product Parts Catalog

32. LCT II [5925]

October 15, '85

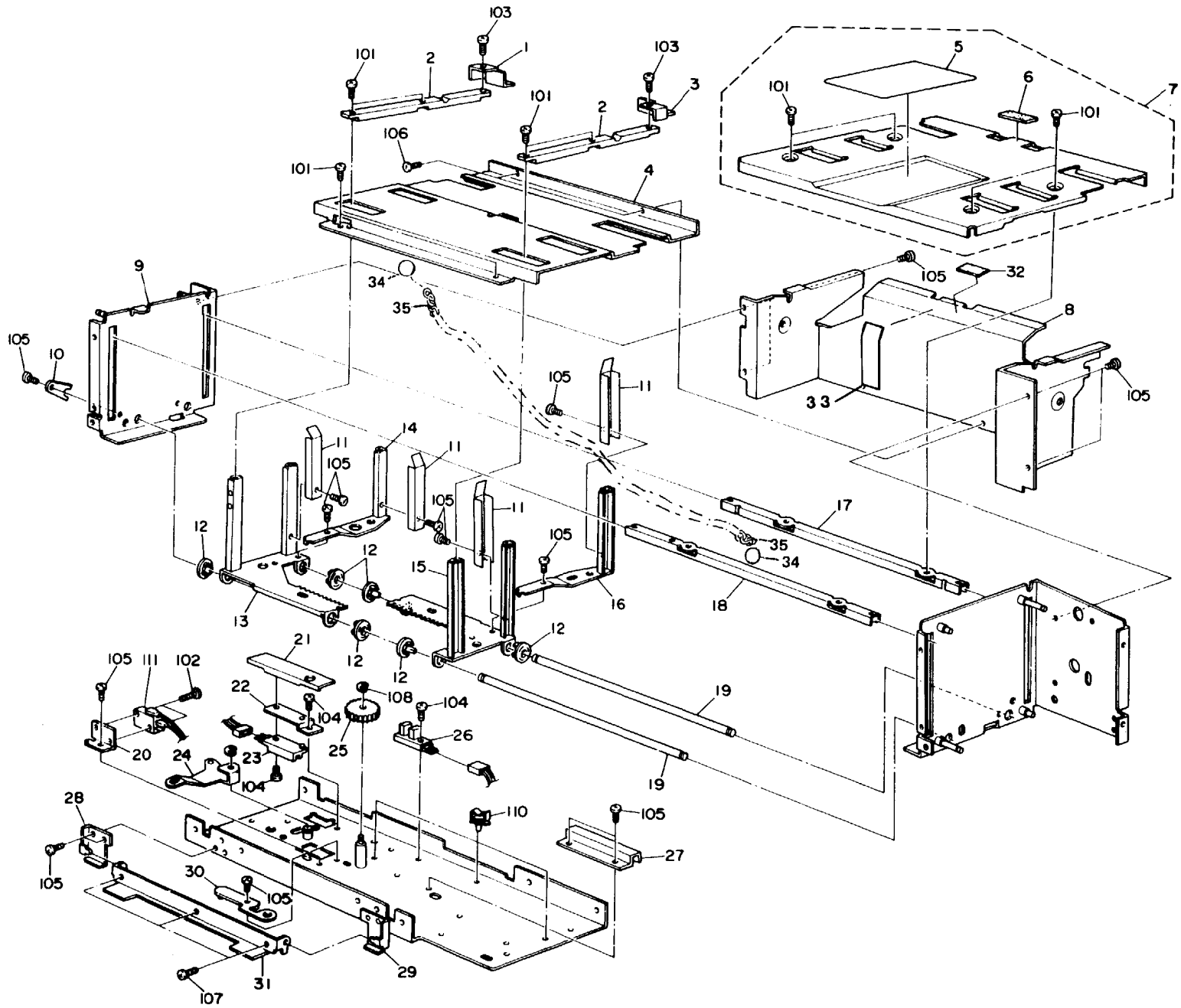

32. LCT II [5925]

Rev. 5/89

Index No.	Parts No.	Description	Q'ty Per Assembly
1	58971462	Front Paper Guide	1
2	58971459	Side Post Grip	2
3	58971465	Rear Paper Guide	1
4	59252226	Inner Cover	1
5	58971374	Decal - Paper Size	1
6	54472927	Friction Pad - B	1
7	59252261	Tray Bottom Plate	1
8	59252222	Feed-in Guide	1
9	59252211	Front Side Plate	1
10	59252255	Side Guide Stopper	1
11	58971458	Side Post Spring Plate	2
12	58971455	Bushing	6
13	58971451	Front Post Rack	1
14	58971460	Front Guide Post	1
15	58971457	Rear Post Rack	1
16	58971463	Rear Guide Post	1
17	59252257	Left Lift Stay	1
18	58971372	Right Lift Rod	1
19	59252249	Side Guide Shaft	2
20	58971493	Micro Switch Mounting Bracket	1
21	58971497	Harness Cover 1	2
22	58971496	Sensor Mounting Bracket	2
23	52055253	Photointerruptor Pack	1
24	58971473	Size Lever	1
25	54432657	Gear - 28Z	1
26	52055250	L.E.D. Sensor Type S	1
27	58971498	Harness Cover 2	1
28	59252203	Front Bracket	1
29	59252204	Rear Bracket	2
30	58971477	Leaf Spring	1
31	59252233	Side Cover Plate	1
32	59252224	Pad - 19 x 38 mm	1
33	59252225	Mylar Seal - Paper Feed	1
34	58972259	Hook	2
35	59252258	Stopper Chain	
• 36	59252331	Side Cover Holder	1

Index No.	Parts No.	Description	Q'ty Per Assembly
101	03130060W	Philips Pan Head Screw - M3 x 6	
102	03130120W	Philips Pan Head Screw - M3 x 12	
103	03130200W	Philips Pan Head Screw - M3 x 20	
104	03140100W	Philips Pan Head Screw - M4 x 10	
105	04340060W	Tapping Screw - M4 x 6	
106	03140040W	Philips Pan Head Screw - M4 x 4	
107	09644008W	Tapping Screw with Flat Washer - M4 x 8	
108	07200040E	Retaining Ring - M4	
109	07270060E	Retaining Ring - M6	
110	11050106	Wire Saddle	
111	12040192	Microswitch - UL	

• NOTE: Refer to last frame on last fiche of product Parts Catalog

33. LCT III [5925]

October 15, '85

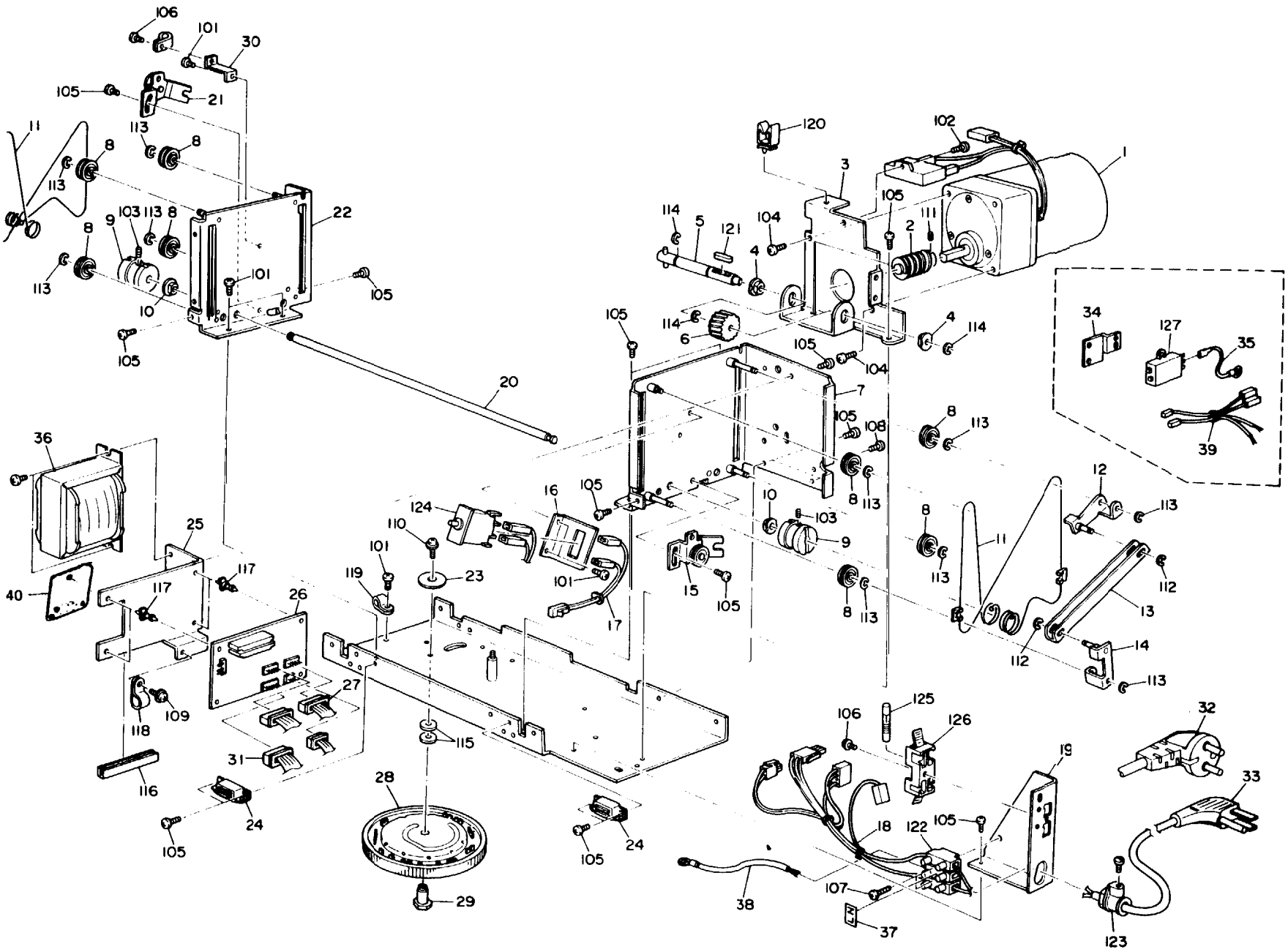

33. LCT III [5925]

Rev. 5/89

Index No.	Parts No.	Description	Q'ty Per Assembly
1	54465411	Tray Drive Motor - AC 7/8W/115V	1
1	54465412	Tray Drive Motor - AC 7/8W/220V	1
2	58971352	Worm Gear - M5 x 5	1
3	58971351	Drive Motor Bracket	1
4	50530223	Bushing - 8mm	2
5	59252239	Drive Gear Shaft	1
6	54462702	Gear - 22T	1
● 7	59252218	Rear Side Plate	1
8	54462620	Idler Pulley - 20	8
9	59252246	Drive Pulley	2
10	50530419	Bushing - 10mm - Long - 7mm	2
11	59252241	Drive Wire	2
12	58971274	Upper Actuator Lever	1
13	58971279	Safety Switch Actuator	1
14	58971277	Lower Actuator Lever	1
15	59252253	Rear Wire Tightener	1
16	58971126	Safety Switch Bracket	1
17	59255212	Safety Switch Harness	1
18	59255211	AC Harness - 115V	1
18	59255215	AC Harness - 220/240V	1
19	59252266	Power Cord Bracket	1
20	59252247	Drive Shaft	1
21	59252251	Front Wire Tightener	1
22	59252211	Front Side Plate	1
23	58971472	Bottom Plate	1
24	50540536	Magnet Catch Ass'y	2
25	59252265	PCB Bracket	1
26	59255101	Tray Control Board	1
27	59255206	DC Harness	1
28	59252223	Paper Size Dial	1
29	59252235	Dial Shaft	1
30	58971125	Nylon Clamp Stay	1
31	59255205	Interface Harness	1
32	54087968	Power Supply Cord - 220V	1
33	67697930	Power Supply Cord - 115V	1

● NOTE: Refer to last frame on last fiche of Parts Catalog.

Index No.	Parts No.	Description	Q'ty Per Assembly
34	58971514	Noise Filter Bracket - 220/240V	1
35	58975555	Noise Filter Grounding Wire	1
36	58975520	Transformer - 115V, 220V, 240V/30W	1
37	54034335	Decal - Terminal 115V	1
38	58975537	Grounding Wire	1
39	59255216	Noise Filter Harness	1
▶40	59255105	Sub Board -Tray Control	1
101	03140050W	Philips Pan Head Screw - M4 x 5	
102	03140100W	Philips Pan Head Screw - M4 x 10	
103	03140120W	Philips Pan Head Screw - M4 x 12	
104	03150080W	Philips Pan Head Screw - M5 x 8	
105	04340060W	Tapping Screw - M4 x 6	
106	04340080W	Tapping Screw - M4 x 8	
107	03140140W	Philips Pan Head Screw - M4 x 14	
108	08011185	Philips Screw with Toothed Washer - M4 x 8	
109	09644008W	Tapping Screw with Flat Washer - M4 x 8	
110	09654010W	Tapping Screw with Flat Washer - M4 x 10	
111	05740050E	Hexagon Headless Set Screw - M4 x 5	
112	07200030E	Retaining Ring - M3	
113	07200040E	Retaining Ring - M4	
114	07200060E	Retaining Ring - M6	
115	08077021	Spacer	
116	10050383	Edging: B	
117	11060336	Nylon Stud	4—7
118	11050011	Nylon Clip - 8N	
119	11050008	Nylon Clip - 2N	
120	11050108	Nylon Clip	
121	09300400	Parallel Key	
122	11010359	Terminal - 3P	
123	11060442	Cord Clamp - 220/240V	

October 15, '85

ndex lo.	Parts No.	Description	Q'ty Per Assembly
124	12041280	Push Switch	
125	11070271	Fuse - 3A	
125	11070487	Circuit Breaker - 115V	
126	11040323	Fuse Holder	
127	16020927	Noise Filter - 220/240V	

34. MAIN BOARD [5215]

SYMBOL NO. : PRINTED NUMBER ON THE BOARD
INDEX NO. : REFERENCE NUMBER OF NEXT PAGE

BATTERY

SYMBOL NO.	INDEX NO.
BT1	113

CAPACITOR

SYMBOL NO.	INDEX NO.
C101	158
C102	158
C103	158
C104	159
C105	156
C106	158
C107	159
C108	158
C109	158
C110	158
C111	159
C112	159
C113	158
C114	157
C115	149
C116	153
C117	160
C118	160
C119	158
C120	159
C121	159
C122	158
C123	158
C124	158
C125	158
C126	158
C127	159
C128	159
C129	158
C130	158
C131	158
C132	158
C133	158
C134	158
C135	158
C136	159
C137	158
C138	157
C139	155
C140	159
C141	156
C142	152
C143	154

CONNECTOR

SYMBOL NO.	INDEX NO.
CN101	108
CN102	108
CN103	104
CN104	110
CN105	107
CN106	103
CN107	102
CN109	2
CN110	105
CN111	102
JP	
WS101	106
JSW1	109

DIODE

SYMBOL NO.	INDEX NO.
D101	116
D102	116
D103	116
D104	116
D105	116

DIODE ARRAY

SYMBOL NO.	INDEX NO.
DAY101	118
DAY102	118
DAY103	118
DAY104	118

DIP SW.

SYMBOL NO.	INDEX NO.
DPS101	112
DPS102	112

IC

SYMBOL NO.	INDEX NO.
IC111	137
IC112	134
IC113	1
SOCKET	111
IC114	131
IC115	122
IC116	122
IC117	125
IC118	124
IC119	121
IC120	121
IC121	132
IC122	121
IC123	127
IC124	128
IC125	133
IC126	133
IC127	126
IC128	138

IC

SYMBOL NO.	INDEX NO.
IC101	132
IC102	121
IC103	121
IC104	136
IC105	121
IC106	130
IC107	121
IC108	128
IC109	135
IC110	123

LED

SYMBOL NO.	INDEX NO.
LED101	120
LED102	120

OSCILLATOR

SYMBOL NO.	INDEX NO.
OSC101	139

RC ARRAY

SYMBOL NO.	INDEX NO.
HB101	151
HB102	151
HB103	151
HB104	151
HB105	151

RESISTOR

SYMBOL NO.	INDEX NO.
R101	172
R102	164
R103	168
R104	168
R105	163
R106	171
R107	168
R108	176
R109	166
R110	173
R111	172
R112	177
R113	164
R114	167
R115	172
R116	165
R117	162
R118	161
R119	172
R120	169
R121	172
R122	170
R123	174
R124	161
R125	172
R126	172
R127	175
R128	162
R129	174

RESISTOR ARRAY

SYMBOL NO.	INDEX NO.
RAY101	141
RAY102	141
RAY103	145
RAY104	143
RAY105	148
RAY106	146
RAY107	140
RAY108	142
RAY109	147
RAY110	145
RAY111	144
RAY112	140
RAY113	140
RAY114	145

TEST PIN

SYMBOL NO.	INDEX NO.
TP101	101
TP102	101
TP103	101
TP104	101
TP105	101
TP106	101
TP107	101
TP108	101
TP109	101
TP110	101
TP112	101
TP113	101

TRANSISTOR

SYMBOL NO.	INDEX NO.
Q103	114
Q104	115
Q105	114

POTENTIOMETER

SYMBOL NO.	INDEX NO.
VR101	149
VR102	150

ZENER DIODE

SYMBOL NO.	INDEX NO.
ZD101	119
ZD102	117

34. MAIN BOARD [5215]

Rev. 5/89

Index No.	Parts No.	Description	Q'ty Per Assembly
•	52155105	Main Board	1
1	52155106	IC - UPD27256D	1
2	52155260	Fiber Input Connector	1
101	11010328	Connector Pin Contact	
102	11021567	Connector - 2P	
103	11030347	Connector - 8P	
104	11031728	Connector - 6P	
105	11031730	Connector - 8P	
106	11031878	Connector - 2P	
107	11033020	Connector - 20P	
108	11033025	Connector - 50P	
109	11033029	Connector - 2P	
110	11033037	Connector - 26P	
111	11040271	LSI Socket - 28P	
112	12041327	Dip Switch	
113	12060029	Battery - BR2325	
114	14000072	Transistor - 2SC372Y	
115	14000135	Transistor - 2SA1015	
116	14010611	Diode - 1S1588	
117	14010769	Zener Diode - RD3.6EB	
118	14010807	Diode Array	
119	14020430	Zener Diode - BZ-071	
120	14030255	Light Emitting Diode	
121	14070511	IC - HD7417P	
122	14070605	IC - TC4050BP	
123	14070621	IC - SN74LS08N	
124	14070972	IC - HD74LS42P	
125	14070974	IC - HD74LS32P	
126	14070975	IC - HD7407P	
127	14071026	IC - SN74LS373N	
128	14071081	IC - HD7406P	
129	14071259	IC - μPD8155C-2	
130	14071334	IC - μPD7810G	
131	14071335	IC - RF5G02-005	
132	14071348	IC - TD62304P	
133	14071535	IC - TD62308AP	
134	14071651	IC - TC5517APL	
135	14071652	IC - TD62307P	
136	14080258	IC - AN6914	
137	14080412	IC - 7705CP	
138	14080413	IC - TL092CP	
139	15030070	Ceramic Oscillator - 10MHz	
140	16017178	Resistor Array - 120KΩ 1/4W ±5%	
141	16017282	Resistor Array - 150Ω	
142	16017325	Resistor Array - 18KΩ 1/4W ±5%	
143	16017370	Resistor Array - 1KΩ	
144	16017373	Resistor Array - 3.3KΩ	
145	16017374	Resistor Array - 4.7kΩ	
146	16017375	Resistor Array - 3.3KΩ	
147	16017376	Resistor Array - 10kΩ ±5% 1/8W	
148	16017390	Resistor Array - 490n	
149	16018137	Variable Resistor - 1KΩ 0.75W	
150	16018328	Variable Resistor - 30KΩ	
151	16020934	RC Array - CR01-R	
152	16041378	Capacitor - 1μF 50V	
153	16041381	Capacitor - 4.7μF 50V	
154	16041382	Capacitor - 10μF 50V	
155	16041383	Capacitor - 22μF 50V	
156	16041386	Capacitor - 100μF 50V	
157	16060996	Capacitor - 470PF 25V	
158	16060998	Capacitor - 0.01μF 50V	
159	16060999	Capacitor - 0.1μF 25V	
160	16061184	Capacitor - 27PF 50V	
161	16114102	Resistor - 1KΩ 1/4T ±5%	
162	16114103	Resistor - 10KΩ 1/4T ±5%	

October 15, '85

Index	Parts No.	Description	Q'ty Per Assembly
163	16114104	Resistor - 100KΩ 1/4T ±5%	
164	16114105	Resistor - 1MΩ 1/4T ±5%	
165	16114152	Resistor - 1.5KΩ 1/4T ±5%	
166	16114181	Resistor - 180Ω 1/4T	
	16114220	Resistor - 22Ω 1/4T ±5%	
168	16114223	Resistor - 22KΩ 1/4T ±5%	
169	16114273	Resistor - 27KΩ 1/4T ±5%	
	16114275	Resistor - 2.7MΩ 1/4W ±5%	
	16114471	Resistor - 470Ω 1/4T ±5%	
	16114472	Resistor - 4.7KΩ 1/4T ±5%	
	16114473	Resistor - 47KΩ 1/4T ±5%	
	16114562	Resistor - 5.6KΩ 1/4T ±5%	
	16116222	Resistor - 2.2KΩ 1/2T ±5%	
	16221001	Resistor - 1KΩ 1/4T ±1%	
	16221202	Resistor - 2KΩ 1/4T ±1%	

35. OPTICS BOARD [5215]

SYMBOL NO. PRINTED NUMBER ON THE BOARD
INDEX NO. REFERENCE NUMBER OF NEXT PAGE

CAPACITOR

SYMBOL NO.	INDEX NO.
C401	126
C402	130
C403	130
C404	130
C405	130
C406	130
C407	130
C408	130
C409	130
C410	130
C411	129
C412	129
C413	128
C414	130
C415	129
C416	129
C417	127

CONNECTOR

SYMBOL NO.	INDEX NO.
CN401	101
CN402	104
CN403	105
CN404	102
CN405	103

DIGITAL SW.

SYMBOL NO.	INDEX NO.
DGS401	106

DIODE

SYMBOL NO.	INDEX NO.
D401	113
D402	113
D403	113
D404	112
D405	113

DIP SW.

SYMBOL NO.	INDEX NO.
DPS401	107

IC

SYMBOL NO.	INDEX NO.
IC401	117
IC402	119
IC403	4
IC404	120
IC405	120
IC406	115
IC407	121
IC408	118
IC409	118
IC410	116

OSCILLATOR

SYMBOL NO.	INDEX NO.
OSC401	122

RESISTOR

SYMBOL NO.	INDEX NO.
R401	133
R402	134
R403	133
R404	134
R405	133
R406	134
R407	133
R408	132
R409	131
R410	133
R412	133
R413	134
R414	133
R415	133
R416	131
R417	133
R418	131
R419	133

RESISTOR ARRAY

SYMBOL NO.	INDEX NO.
RAY401	123
RAY402	124

RC ARRAY

SYMBOL NO.	INDEX NO.
HB401	125

TRANSISTOR

SYMBOL NO.	INDEX NO.
Q401	108
Q402	111
Q403	108
Q404	111
Q405	108
Q406	110
Q407	108
Q408	109
Q409	110

ZENER DIODE

SYMBOL NO.	INDEX NO.
ZD401	114

35. OPTICS BOARD [52 5]

October 15, '85

Index No.	Parts No.	Description	Q'ty Per Assembly
*	52155175	Optics Board	1
1	52155185	Optics ROM Board - Male	1
2	52155181	Harness - Optics Board	1
3	52155180	Heat Sink - Optics Board	1
101	11020675	Connector - 6P	
102	11030750	Terminal - 2P	
103	11031726	Connector - 4P	
104	11031730	Connector - 8P	
105	11031731	Connector - 9P	
106	12041228	Switch	
107	12041327	Dip Switch	
108	14000031	Transistor - 2SC458B	
109	14000283	Transistor - 2SA1030	
110	14010237	Transistor - 2SB872R	
111	14010327	Transistor - 2SD1176R	
112	14010611	Diode - 1S1588	
113	14020110	Diode - V06C	
114	14020277	Zener Diode - 1Z12	
115	14070508	IC - HD74LS04N	
116	14070520	IC - HD74LS00P	
117	14070621	IC - SN74LS08N	
118	14071090	IC - HD74LS74AP	
119	14071534	IC - MPD8253C-2	
120	14071535	IC - TD62308AP	
121	14071537	IC - TC74HC14P	
122	15030103	Oscillator - 10MHz	
123	16017215	Resistor Array - 4.7KΩ 1/8W ±5%	
124	16017374	Resistor Array - 4.7kΩ	
125	16020934	RC Array - CR01-R	
126	16041355	Capacitor - 220μF 10V	
127	16041386	Capacitor - 100μF 50V	
128	16041418	Capacitor - 1μF 25V	
129	16060867	Capacitor - 3300μF 50V	
130	16061396	Capacitor - 0.1μF 25V	
131	16114102	Resistor - 1KΩ 1/4T ±5%	
132	16114104	Resistor - 100KΩ 1/4T ±5%	
133	16114332	Resistor - 3.3KΩ 1/4T ±5%	
134	16114333	Resistor - 33KΩ 1/4T ±5%	

36. AC DRIVE BOARD [5215]

SYMBOL NO. : PRINTED NUMBER ON THE BOARD
INDEX NO. : REFERENCE NUMBER OF NEXT PAGE

CAPACITOR

SYMBOL NO.	INDEX NO.
C501	
(115V)	120
(220V)	122
C502	
(115V)	121
(220V)	119
C503	118
C504	118
C505	118
C506	118

COIL

SYMBOL NO.	INDEX NO.
L501	
(115V)	123
(220V)	124

CONNECTOR

SYMBOL NO.	INDEX NO.
CN501	105
CN502	104
CN503	103
CN504	
(115V)	102
(220V)	101

DIODE

SYMBOL NO.	INDEX NO.
D501	108

NOISE KILLDER

SYMBOL NO.	INDEX NO.
CR501	
(115V)	116
(220V)	117
CR502	
(115V)	116
(220V)	117
CR503	
(115V)	116
(220V)	117

PHOTOTHYRISTOR

SYMBOL NO.	INDEX NO.
PC501	109
PC502	109
PC503	
(115V)	109
(220V)	111

RECTIFIER

SYMBOL NO.	INDEX NO.
DB501	110
DB502	110
DB503	110
DB504	110
DB505	
(115V)	110
(220V)	112

RELAY

SYMBOL NO.	INDEX NO.
RA501	106

RESISTOR

SYMBOL NO.	INDEX NO.	SYMBOL NO.	INDEX NO.
R501	128	R511	130
R502	125	R512	130
R503	127	R513	126
R504	128	R514	126
R505	125	R515	114
R506	113	R516	114
R507	131	R517	114
R508	127	R518	129
R509	130	R519	129
R510	126	R520	129

TRANSFORMER

SYMBOL NO.	INDEX NO.
TR501	1
TR502	1

TRANSISTOR

SYMBOL NO.	INDEX NO.
Q501	107
Q502	107

POTENTIOMETER

SYMBOL NO.	INDEX NO.
VR501	115

36. AC DRIVE BOARD [5215]

Rev. 5/89

Index No.	Parts No.	Description	Q'ty Per Assembly
*	52155236	AC Drive Board - 220/240V	1
*	AY110001	AC Drive Board - 115V	1
1	52155222	Transformer - 100/25V	1
101	11022112	Connector - 2P	
102	11022113	Connector - 2P	
103	11030701	Terminal - 6P	
104	11031724	Connector - 2P	
105	11031731	Connector - 9P	
106	12081034	Relay - DC 24V	
107	14000265	Transistor - 2SC1815Y	
108	14020467	Diode - S5566G	
109	14050127	Thyristor - TLP541G	
110	14050130	Rectifier - 400V 10A IG4B42	
111	14050151	Photothyristor - TLP545J	
112	14050152	Rectifier - 1J4B42	
113	16012844	Resistor - 1.8KΩ 1/2W	
114	16017468	Fuse Resistor - 100Ω 1/2W	
115	16018185	Variable Resistor - 200Ω 0.5W	
116	16020895	Noise Killer - 0.1μF, 120Ω	
117	16020920	Noise Killer - 0.1μF 120Ω	
118	16060689	Capacitor - 0.01μF 50V	
119	16061495	Capacitor - 0.1μF 250V	
120	16061496	Capacitor - 0.1μF 400V	
121	16061497	Capacitor - 0.047μF 125V	
122	16061542	Capacitor - 0.22μF 250V	
123	16070044	Coil - 100 UH	
124	16070129	Coil - 600 UH	
125	16114104V	Resistor - 100KΩ 1/4T ±5% - 220/240V	
126	16114223	Resistor - 22KΩ 1/4T ±5%	
127	16114472	Resistor - 4.7KΩ 1/4T ±5%	
128	16114562V	Resistor - 5.6KΩ 1/4W ±5%	
129	16114820	Resistor - 82Ω 1/4T ±5%	
130	16116222	Resistor - 2.2KΩ 1/2T ±5%	
131	16221800	Resistor - 185Ω 1/2W ±1%	

37. PAPER FEED BOARD [5215]

October 15, '85

SYMBOL NO. : PRINTED NUMBER ON THE BOARD
INDEX NO. : REFERENCE NUMBER OF NEXT PAGE

CAPACITOR

SYMBOL NO.	INDEX NO.
C601	112
C602	112
C603	112
C604	111

CONNECTOR

SYMBOL NO.	INDEX NO.
CN601	104
CN602	102
CN603	101
CN604	107
CN605	106
CN606	103
CN607	105

DIODE

SYMBOL NO.	INDEX NO.
D601	108
D602	108
D603	108
D604	108
D605	108
D606	108
D607	108
D608	108
D609	108
D610	108
D611	108
D612	108
D613	108

IC

SYMBOL NO.	INDEX NO.
IC601	109
IC602	109

RESISTOR

SYMBOL NO.	INDEX NO.
R601	113
R602	113

RESISTOR ARRAY

SYMBOL NO.	INDEX NO.
RAY601	119

37. PAPER FEED BOARD [52 5]

October 15, '85

Index No.	Parts No.	Description	Q'ty Per Assembly
*	52155240	Feed Control Board	1
101	11031725	Connector - 3P	
102	11031729	Connector - 7P	
103	11031731	Connector - 9P	
104	11031735	Connector - 13P	
105	11031739	Connector - 3P	
106	11031753	Connector - 3P	
107	11031757	Connector - 7P	
108	14010825	Diode - 1SS176	
109	14080200	IC - TA75339P	
110	16017374	Resistor Array - 4.7kΩ	
111	16041382	Capacitor - 10μF 50V	
112	16060998	Capacitor - 0.01μF 50V	
113	16114103	Resistor - 10KΩ 1/4T ±5%	

Index No.	Parts No.	Description	Q'ty Per Assembly

38. 3RD PAPER FEED BOARD [5922]

October 15, '85

SYMBOL NO. : PRINTED NUMBER ON THE BOARD
INDEX NO. : REFERENCE NUMBER OF NEXT PAGE

CONNECTOR

SYMBOL NO.	INDEX NO.
CN901	106
CN902	101
CN903	102
CN904	106
CN905	101
CN906	102
CN907	103
CN908	105
CN909	107
CN910	109
CN911	104
CN912	108

DIODE

SYMBOL NO.	INDEX NO.
D901	110
D902	110
D903	110
D904	110
D905	110
D906	110
D907	110
D908	110
D909	110
D910	110
D911	111
D912	111

38. 3RD PAPER FEED BOARD [5922]

October 15, '85

Index No.	Parts No.	Description	Q'ty Per Assembly
*	59225101	3rd Paper Feed Board	1
101	11022365	Connector - 6P	
102	11022366	Connector - 8P	
103	11031724	Connector - 2P	
104	11031726	Connector - 4P	
105	11031729	Connector - 7P	
106	11031731	Connector - 9P	
107	11031739	Connector - 3P	
108	11031741	Connector - 5P	
109	11031752	Connector - 2P	
110	14010825	Diode - 1SS176	
111	14010467	Diode - S5566G	

Index No.	Parts No.	Description	Q'ty Per Assembly

39. PAPER BANK BOARD [5920]

October 15, '85

SYMBOL NO. : PRINTED NUMBER ON THE BOARD
INDEX NO. : REFERENCE NUMBER OF NEXT PAGE

CONNECTOR

SYMBOL NO.	INDEX NO.
CN951	105
CN952	101
CN953	102
CN954	109
CN955	108
CN956	104
CN957	106
CN958	103
CN959	107

DIODE

SYMBOL NO.	INDEX NO.	SYMBOL NO.	INDEX NO.
D951	110	D961	110
D952	110	D962	110
D953	110	D963	110
D954	110	D964	110
D955	110	D965	110
D956	110	D966	110
D957	110	D967	110
D958	110	D968	111
D959	110	D969	111
D960	110	D970	111

39. PAPER BANK BOARD [5920]

October 15, '85

Index No.	Parts No.	Description	Q'ty Per Assembly
*	59205101	Paper Bank Board	
101	11022365	Connector - 6P	
102	11022366	Connector - 8P	
103	11031726	Connector - 4P	
104	11031729	Connector - 7P	
105	11031731	Connector - 9P	
106	11031739	Connector - 3P	
107	11031756	Connector - 6P	
108	11031757	Connector - 7P	
109	11031758	Connector - 8P	
110	14010825	Diode - 1SS176	
111	14020467	Diode - S5566G	

Index No.	Parts No.	Description	Q'ty Per Assembly

40. BIN MOTOR BOARD [6803]

October 15, '85

SYMBOL NO. : PRINTED NUMBER ON THE BOARD
INDEX NO. : REFERENCE NUMBER OF NEXT PAGE

CONNECTOR

SYMBOL NO.	INDEX NO.
CN101	101
CN102	102
CN103	104
CN104	103

DIODE

SYMBOL NO.	INDEX NO.
D101	106
D102	106

SSR

SYMBOL NO.	INDEX NO.
SSR101	105
SSR102	105

40. BIN MOTOR BOARD [6803]

October 15, '85

Index No.	Parts No.	Description	Q'ty Per Assembly
*	68035500	Bin Motor Board	1
101	11020995	Connector - 2P	
102	11021194	Pin Connector - 3P	
103	11031695	Connector - 15P	
104	11031748	Connector - 12P	
105	12081024	Solid State Relay - 240V, 2A	
106	14010832	Diode - DSA1A1	

Index No.	Parts No.	Description	Q'ty Per Assembly

4 . DF MAIN BOARD [5918]

SYMBOL NO. : PRINTED NUMBER ON THE BOARD
INDEX NO. : REFERENCE NUMBER OF NEXT PAGE

CAPACITOR

SYMBOL NO.	INDEX NO.	SYMBOL NO.	INDEX NO.
C101	134	C121	142
C102	136	C122	142
C103	136	C123	142
C104	137		
C105	138		
C106	135	C126	142
		C127	142
C108	139	C128	142
C109	139	C129	142
C110	142	C130	142
C111	142	C131	142
C112	142	C132	142
C113	142	C133	142
C114	142	C134	142
C115	142	C135	142
C116	142	C136	142
C117	142	C137	142
C118	142	C138	142
C119	142		
C120	142	C140	140

CONNECTOR

SYMBOL NO.	INDEX NO.
CN101	104
CN102	103
CN103	105
CN104	106
CN105	107

DIODE

SYMBOL NO.	INDEX NO.
D101	114
D103	144
D104	114

DIP SW

SYMBOL NO.	INDEX NO.
DPS101	111

FUSE

SYMBOL NO.	INDEX NO.
DPS101 (HOLDER)	110 109

IC

SYMBOL NO.	INDEX NO.
IC101	117
IC102	1
(SOCKET)	108
IC103	123
(HEAT)	
SINK)	101
IC104	120
IC105	119
IC106	118
IC107	125
IC108	121
IC109	116
IC110	122
IC111	124
IC112	113
IC113	3
IC114	2
IC115	124
IC116	124

LED

SYMBOL NO.	INDEX NO.
LED101	115
LED102	115
LED103	115
LED104	115
LED105	115
LED106	115

OSCILATOR

SYMBOL NO.	INDEX NO.
OSC101	126

POTENTIOMETER

SYMBOL NO.	INDEX NO.
VR101	132
VR103	132
VR104	133
VR105	133

RESISTOR

SYMBOL NO.	INDEX NO.	SYMBOL NO.	INDEX NO.	SYMBOL NO.	INDEX NO.	SYMBOL NO.	INDEX NO.	SYMBOL NO.	INDEX NO.
R101	151	R121	144	R141	143			R181	145
R102	127	R122	144	R142	143	R162	150	R182	145
R103	154	R123	144	R143	143	R163	147	R183	147
R104	129	R124	144	R144	143	R164	147	R184	145
R105	151	R125	144	R145	147	R165	147	R185	147
R106	130	R126	144	R146	147	R166	147	R186	147
R107	130	R127	150	R147	147	R167	147	R187	145
R108	155	R128	150	R148	147	R168	147	R188	147
R109	151	R129	150	R149	147	R169	147	R189	147
R110	128	R130	150	R150	143	R170	147	R190	144
R111	152	R131	147	R151	143	R171	147	R191	147
R112	152	R132	147	R152	143	R172	147	R192	147
R113	153	R133	147	R153	143	R173	144	R193	146
R114	153	R134	147	R154	143	R174	148	R194	149
R115	144	R135	147	R155	143	R175	148	R195	146
R116	144	R136	147	R156	143	R176	145	R196	149
R117	144	R137	147	R157	143	R177	147	R197	146
R118	144	R138	147	R158	148	R178	145	R198	148
R119	144	R139	143	R159	144	R179	147	R199	149
R120	144	R140	143	R160	147	R180	147	R200	146

TEST PIN

SYMBOL NO.	INDEX NO.	SYMBOL NO.	INDEX NO.
R201	149	TP101	102
R202	148	TP102	102
R203	147	TP103	102
R204	147	TP104	102
R205	147	TP105	102

RESISTOR ARRAY

SYMBOL NO.	INDEX NO.
RAY101	131

TRANSISTOR

SYMBOL NO.	INDEX NO.
Q101	112
Q102	112

41. DF MAIN BOARD [5918]

October 15, '85

Index No.	Parts No.	Description	Q'ty Per Assembly
*	59185601	DF Main Board	1
1	59185605	IC - HN482764G-3	1
2	59185701	IC - HCTL-1	1
3	59185702	IC - HCTL-2	1
101	10050767	Head Sink	
102	11010328	Connector Pin Contact	
103	11020958	Connector - 2P	
104	11030881	Connector - 4P	
105	11031726	Connector - 4P	
106	11033020	Connector - 20P	
107	11033022	Connector - 30P	
108	11040271	LSI Socket - 28P	
109	11040333	Fuse Holder	
110	11070413	Fuse - 3A	
111	12040883	DIP Switch	
112	14000100	Transistor - 2SA683	
113	14010329	IC - MP4503	
114	14010832	Diode - DSA1A1	
115	14030308	LED - TLR-102A	
116	14070604	IC - TC4049BP	
117	14071026	IC - SN74LS373N	
118	14071094	IC - HD74LS93P	
119	14071334	IC - μPD7810G	
120	14071337	IC - MN1215Q	
121	14071348	IC - TD62304P	
122	14071535	IC - TD62308AP	
123	14080076	IC - UPC1431Z	
124	14080099	IC - HA17901P	
125	14080408	IC - PST518A	
126	15030070	Ceramic Oscillator - 10MHz	
127	16000544	Resistor - 1KΩ 1W	
128	16000569	Resistor - 0.2Ω 1W	
129	16000576	Resistor - 33Ω 5W	
130	16011732	Resistor - 390Ω 1W	
131	16017326	Resistor Array - 10KΩ	
133	16018157	Variable Resistor - 100KΩ	
134	16041358	Capacitor - 1000μF 10V	
135	16041381	Capacitor - 4.7μF 50V	
136	16041382	Capacitor - 10μF 50V	
137	16041383	Capacitor - 22μF 50V	
138	16041386	Capacitor - 100μF 50V	
139	16061184	Capacitor - 27PF 50V	
140	16061336	Capacitor - 1000PF 50V	
141	16061451	Capacitor - 0.1μF 50V	
142	16061452	Capacitor - 0.01μF 50V	
143	16100045	Resistor - 270Ω 1/8W ±5%	
144	16100053	Resistor - 1KΩ 1/8W ±5%	
145	16100057	Resistor - 1.5KΩ 1/8W ±5%	
146	16100065	Resistor - 3.3KΩ 1/8W ±5%	
147	16100067	Resistor - 4.7KΩ 1/8W ±5%	
148	16100071	Resistor - 10KΩ ±5%	
149	16100079	Resistor - 22KΩ 1/8W ±5%	
150	16100107	Resistor - 111Ω 1/8W ±5%	
151	16114222	Resistor - 10KΩ 1/4T ±5%	
152	16114330	Resistor - 2.2KΩ 1/4T ±5%	
● 153	16114472	Resistor - 330Ω 1/4T ±5%	
154	16116872	Resistor - 4.7KΩ 1/4T ±5%	
155	16116821	Resistor - 820Ω 1/2W	
● 156	16028147	Variable Resistor	
● 157	16114562	Resistor 5.6 K ohm ¼T ±5%	

NOTE: Refer to last frame on last fiche of product Parts Catalog

42. LCT BOARD [5925]

October 15, '85

SYMBOL NO. : PRINTED NUMBER ON THE BOARD
INDEX NO. : REFERENCE NUMBER OF NEXT PAGE

CAPACITOR

SYMBOL NO.	NDEX NO.
C1	113
C2	114
C3	113
C4	115
C5	118
C6	116
C7	116
C8	117
C9	117
C10	117
C11	117
C12	117
C13	117

CONNECTOR

SYMBOL NO.	INDEX NO.
CN1	105
CN2	104
CN3	102
CN4	103
CN5	101

DIODE

SYMBOL NO.	INDEX NO.
D1	108
D2	108
D3	108
D4	108
D5	108
D6	108
D7	108
D8	108
D9	108

IC

SYMBOL NO.	INDEX NO.
IC1	109
IC2	109
IC3	110
IC4	111
IC5	112

RESISTOR

SYMBOL NO.	INDEX NO.
R1	119
R2	119
R3	119
R4	119
R5	119
R6	119
R7	122
R8	122
R9	122
R10	120
R11	120
R12	120
R13	120
R14	120
R15	123
R16	121
R17	121
R18	124
R19	119

SSR

SYMBOL NO.	INDEX NO.
SSR1	106
SSR2	106

TRANSISTOR

SYMBOL NO.	INDEX NO.
Q1	107

42. LCT BOARD [5925]

October 15, '85

Index No.	Parts No.	Description	Q'ty Per Assembly
*	59255101	Tray Control Board	1
101	11031247	Connector - 3P	
102	11031729	Connector - 7P	
103	11031730	Connector - 8P	
104	11031739	Connector - 3P	
105	11031743	Connector - 7P	
106	12081077	Solid State Relay	
107	14000324	Transistor - 2SC458C	
108	14010825	Diode - 1SS176	
109	14070520	IC - HD74LS00P	
110	14070622	IC - HD74LS10P	
111	14071002	IC - TD62003P	
112	14080124	IC - LM555CN	
113	16040288	Capacitor - 47μF 25WV	
114	16040903	Capacitor - 10μF 35V	
115	16040909	Capacitor - 1μF 50V	
116	16060689	Capacitor - 0.01μF 50V	
117	16060916	Capacitor - 0.01μF 50V	
118	16060999	Capacitor - 0.1μF 25V	
119	16114101V	Resistor - 100Ω 1/4W ±5% - 220/240V	
120	16114102V	Resistor - 1KΩ 1/4W ±5%	
121	16114103V	Resistor - 10KΩ 1/4T ±5% - 220/240V	
122	16114471V	Resistor - 470Ω 1/4W ±5%	
123	16114472V	Resistor - 4.7KΩ 1/4W ±5%	
124	16114564V	Resistor - 560KΩ 1/4W ±5%	

Index No.	Parts No.	Description	Q'ty Per Assembly

43. INTERFACE BOARD [5924]

SYMBOL NO. : PRINTED NUMBER ON INTERFACE BOARD
INDEX NO. : REFERENCE NUMBER OF NEXT PAGE

CAPACITOR

SYMBOL NO.	INDEX NO.
C801	124
C802	124
C803	123
C804	125
C805	123
C806	122
C807	125
C808	123
C809	121
C810	124

SYMBOL NO.	INDEX NO.
C811	122
C812	124
C813	123
C814	123
C815	121

CONNECTOR

SYMBOL NO.	INDEX NO.
CN801	105
CN802	102
CN803	104
CN804	103
CN806	2
CN807	3

DIP SW.

SYMBOL NO.	INDEX NO.
DPS801	107

IC

SYMBOL NO.	INDEX NO.
IC801	1
SOCKET	106
IC802	110
IC803	113
IC804	111
IC805	114
IC806	112
IC807	115
IC808	114
IC809	114

OSCILATOR

SYMBOL NO.	INDEX NO.
OSC801	116

PHOTOCOUPLER

SYMBOL NO.	INDEX NO.
PC801	109

RC ARRAY

SYMBOL NO.	INDEX NO.
HB801	120
HB802	120

RESISTOR

SYMBOL NO.	INDEX NO.
R801	128
R802	126
R803	126
R804	127
R805	127
R806	128

RESISTOR ARRAY

SYMBOL NO.	INDEX NO.
RAY801	118
RAY802	118
RAY803	118
RAY804	117
RAY805	119

TEST PIN

SYMBOL NO.	INDEX NO.
TP801	101
TP802	101
TP803	101

ZENER DIODE

SYMBOL NO.	INDEX NO.
ZD801	108

43. INTERFACE BOARD [5924]

October 15, '85

Index No.	Parts No.	Description	Q'ty per Assembly
1	59245103	IC - UPD8041AC	1
2	59185711	Fiber Output Connector	1
3	59185712	Fiber Input Connector	1
101	11010328	Connector Pin Contact	
102	11031177	Connector - 26P	
103	11031733	Connector - 11P	
104	11033019	Connector - 16P	
105	11033036	Connector - 26P	
106	11040338	IC Socket - 40P	
107	12041326	Dip Switch	
108	14020269	Zener Diode - RD39F	
109	14030317	Photocoupler - ON3112	
110	14070423	IC - SN7473N	
111	14070975	IC - HD7407P	
112	14071016	IC - UPD8255AC-5	
113	14071348	IC - TD62304P	
114	14071535	IC - TD62308AP	
115	14080099	IC - HA17901P	
116	15030062	Ceramic Oscillator - 6MHz	
117	16017352	Resistor Array - 4.7kΩ	
118	16017374	Resistor Array - 4.7kΩ	
119	16017381	Resistor Array - 68kΩ	
120	16020934	RC Array - CR01-R	
121	16041383	Capacitor - 22μF 50V	
122	16041386	Capacitor - 100μF 50V	
123	16060998	Capacitor - 0.01μF 50V	
124	16060999	Capacitor - 0.1μF 25V	
125	16061129	Capacitor - 30pF 50V	
126	16114102	Resistor - 1KΩ 1/4T ±5%	
127	16114103	Resistor - 10KΩ 1/4T ±5%	
128	16114181	Resistor - 180Ω 1/4T	

Index No.	Parts No.	Description	Q'ty per Assembly

44. DC HARNESS [5215]

October 15, '85

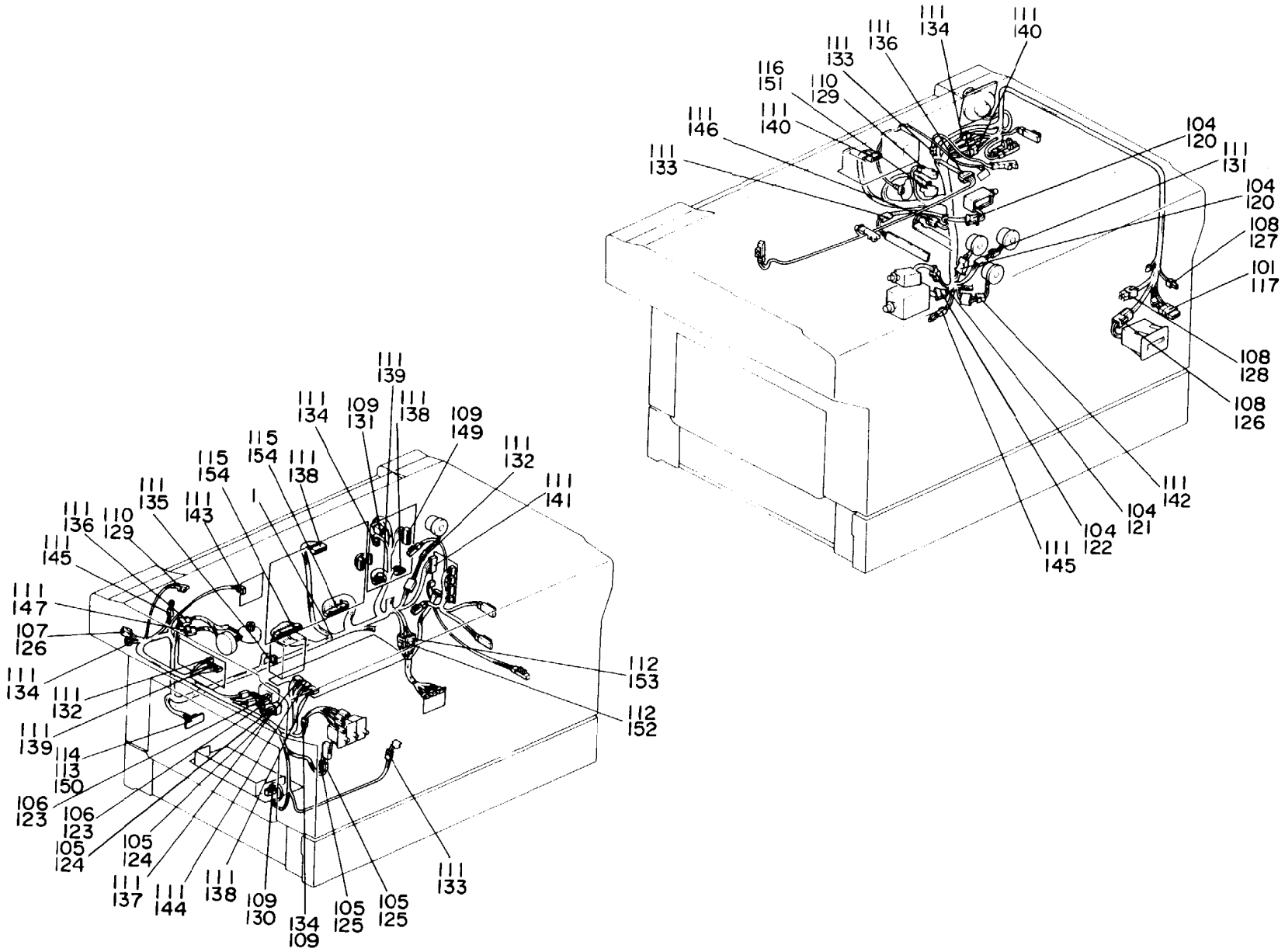

44. DC HARNESS [5215]

Rev. 5/89

Index No.	Parts No.	Description	Q'ty per Assembly
1	52155447	DC Harness	1
101	11000844	Socket - Mate-N-Lock	
102	11000863	Stud Pin	
103	11001155	Noise Killer	
104	11001159	Socket - Mate-N-Lock	
105	11001169	Fastening Receptacle	
106	11001172	Fastening Receptacle	
107	11001239	Pin - Mate-N-Lock	
108	11001240	Socket - Mate-N-Lock	
109	11001247	Terminal	
110	11001249	Receptacle Terminal	
111	11001327	Contact	
112	11001328	Contact	
113	11001341	Pin Contact	
114	11001346	Pin Contact	
115	11001348	Pin Contact	
116	11001356	Pin Contact	
117	11020185	Connector - 4P	
118	11020977	Connector - Heater	
119	11021286	Connector	
120	11021306	Connector - 3P	
121	11021396	Connector - 2P	
122	11021397	Connector - 2P	
123	11021404	Receptacle Housing	
124	11021407	Receptacle Housing - 1P	
125	11021408	Connector - 1P	
126	11021509	Connector - 4P	
127	11021515	Connector - 2P	
128	11021517	Connector - 4P	
129	11021620	Receptacle Housing - 3P	
130	11021892	Connector - 9P	
131	11021896	Connector - 2P	
132	11021910	Connector - 2P	
133	11021911	Connector - 3P	
134	11021912	Connector - 4P	
135	11021913	Connector - 5P	
136	11021914	Connector - 6P	
137	11021915	Connector - 7P	
138	11021916	Connector - 8P	
139	11021917	Connector - 9P	
140	11021918	Connector - 10P	
141	11021921	Connector - 13P	
142	11021924	Connector - 2P	
143	11021926	Connector - 4P	
144	11021930	Connector - 6P	
145	11021938	Connector - 2P	
146	11021939	Connector - 3P	
147	11021942	Connector - 6P	
148	11021976	Connector - 2P	
149	11022061	Connector - 6P	
150	11022099	Connector - 12P	
151	11022278	Connector - 18P	
152	11022369	Connector - 6P	
153	11022370	Connector - 6P	
154	11030657	Connector - 50P	
155	14020388	Diode - W03C	

45. AC HARNESS [5215]

October 15, '85

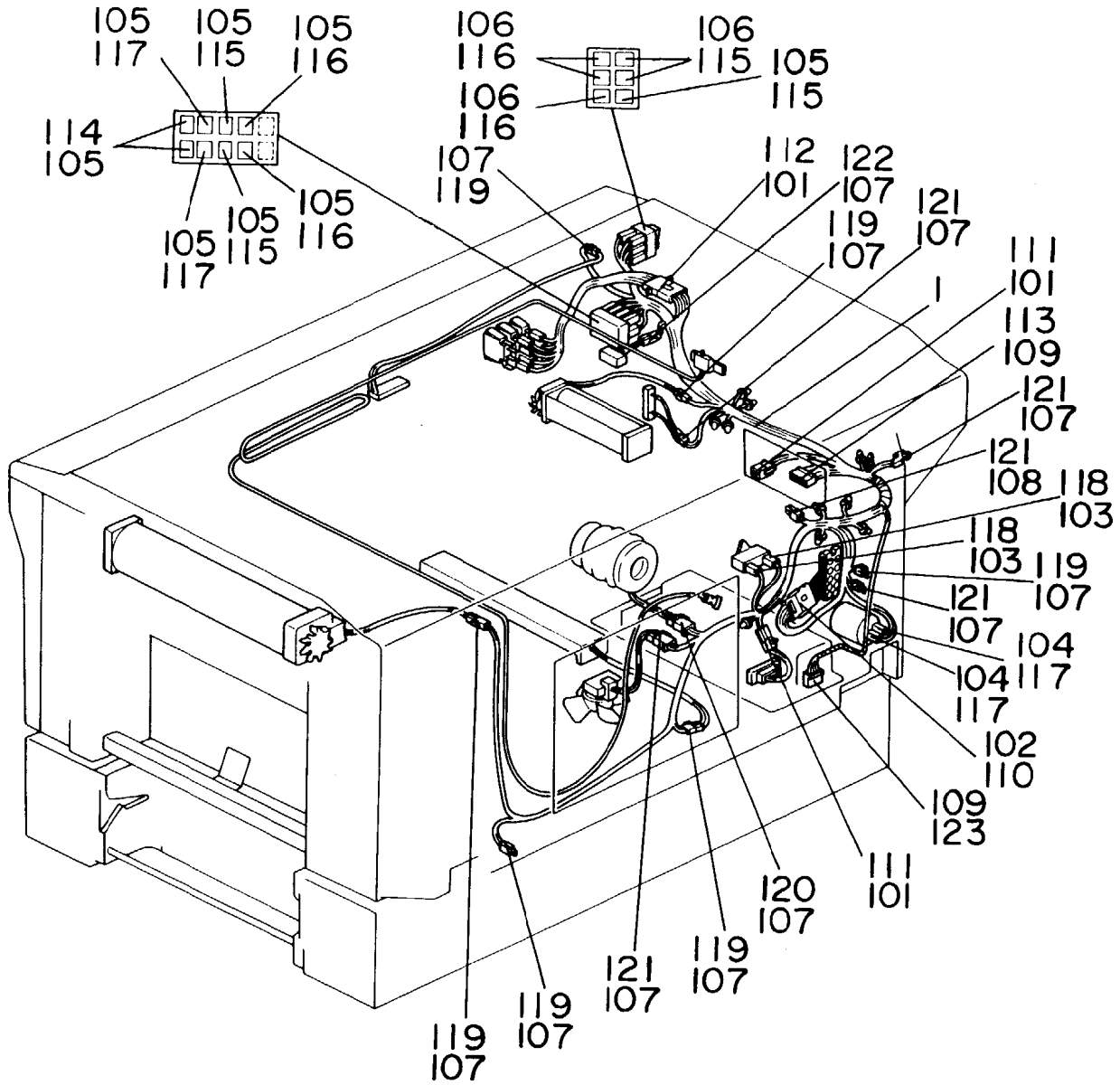

45. AC HARNESS [5215]

October 15, '85

Index No.	Parts No.	Description	Q'ty Per Assembly
1	52155459	AC Harness	1
101	11000864	Housing - AWG14-20	
102	11000916	Pin - Mate-N-Lock	
103	11001169	Fastening Receptacle	
104	11001170	Fastening Receptacle	
105	11001171	Fastening Receptacle	
106	11001172	Fastening Receptacle	
107	11001240	Socket - Mate-N-Lock	
108	11001241	Socket - Mate-N-Lock	
109	11001247	Terminal	
110	11020782	Connector - 4P	
111	11020946	Housing - 3P	
112	11020948	Housing - 3P	
113	11021889	Connector - 6P	
114	11021401	Receptacle Housing - 1P	
115	11021402	Receptacle Housing - 1P	
116	11021403	Receptacle Housing	
117	11021404	Receptacle Housing	
118	11021408	Receptacle Housing	
119	11021515	Connector - 2P	
120	11021516	Connector - 3P	
121	11021532	Connector - 2P	
122	11021559	Connector - 2P (Black)	
123	11021815	Connector - 3P	

Index No.	Parts No.	Description	Q'ty Per Assembly

46. EXPANSION HARNESS [5922]

October 15, '85

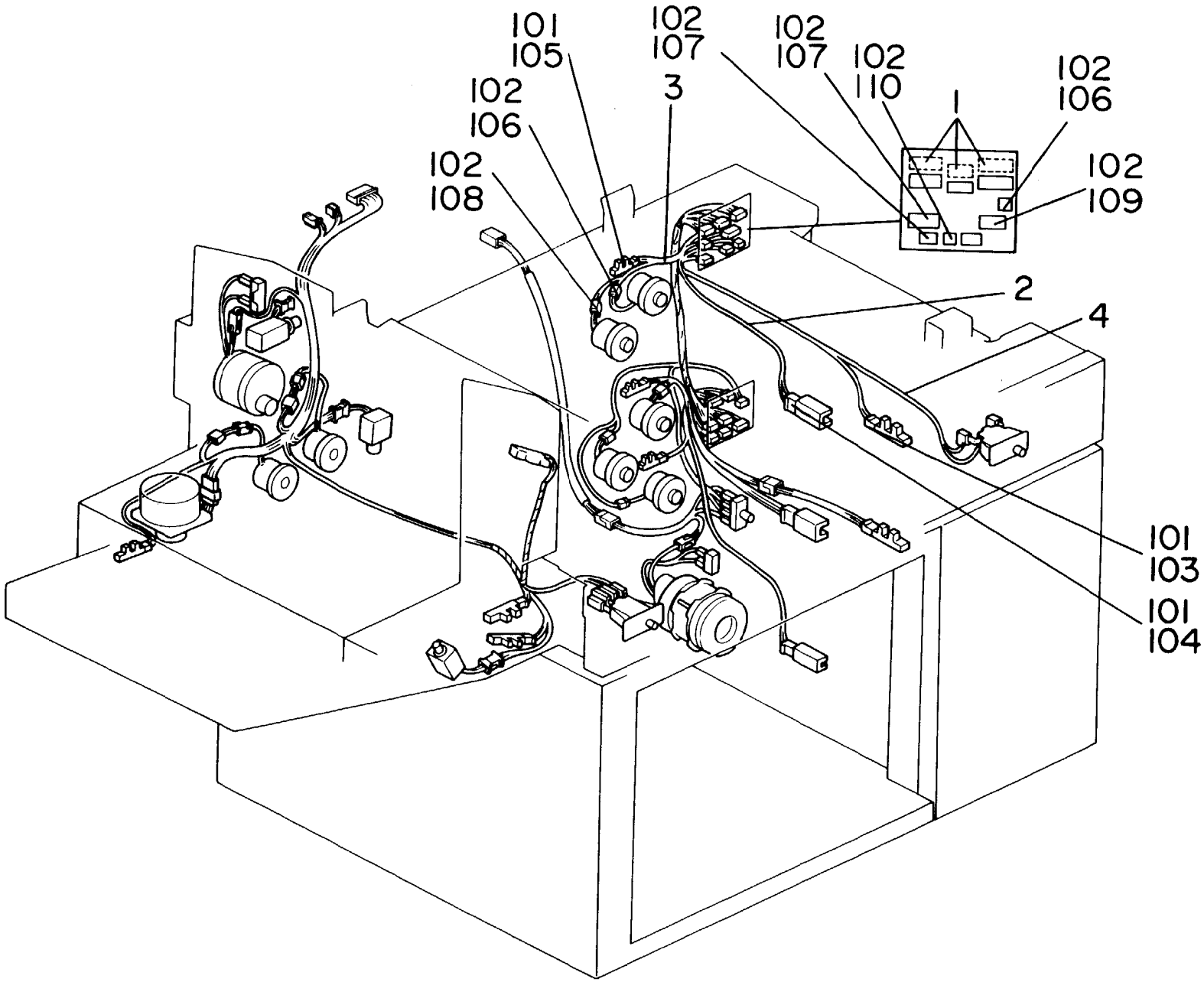

46. EXPANSION HARNESS [5922]

Index No.	Parts No.	Description	Q'ty Per Assembly
1	59225200	Interface Harness	1
2	59225201	3rd Feed Sensor Harness	1
3	59225202	Clutch Harness	1
4	59225203	Safety Switch Harness	1
101	11001249	Receptacle Terminal	
102	11001327	Contact	
103	11021620	Receptacle Housing - 3P	
104	11021623	Receptacle Housing - 7P	
105	11021786	Connector - 3P	
106	11021910	Connector - 2P	
107	11021915	Connector - 7P	
108	11021924	Connector - 2P	
109	11021927	Connector - 5P (Red)	
110	11021938	Connector - 2P	

Index No.	Parts No.	Description	Q'ty Per Assembly

47. PAPER BANK HARNESS [5920]

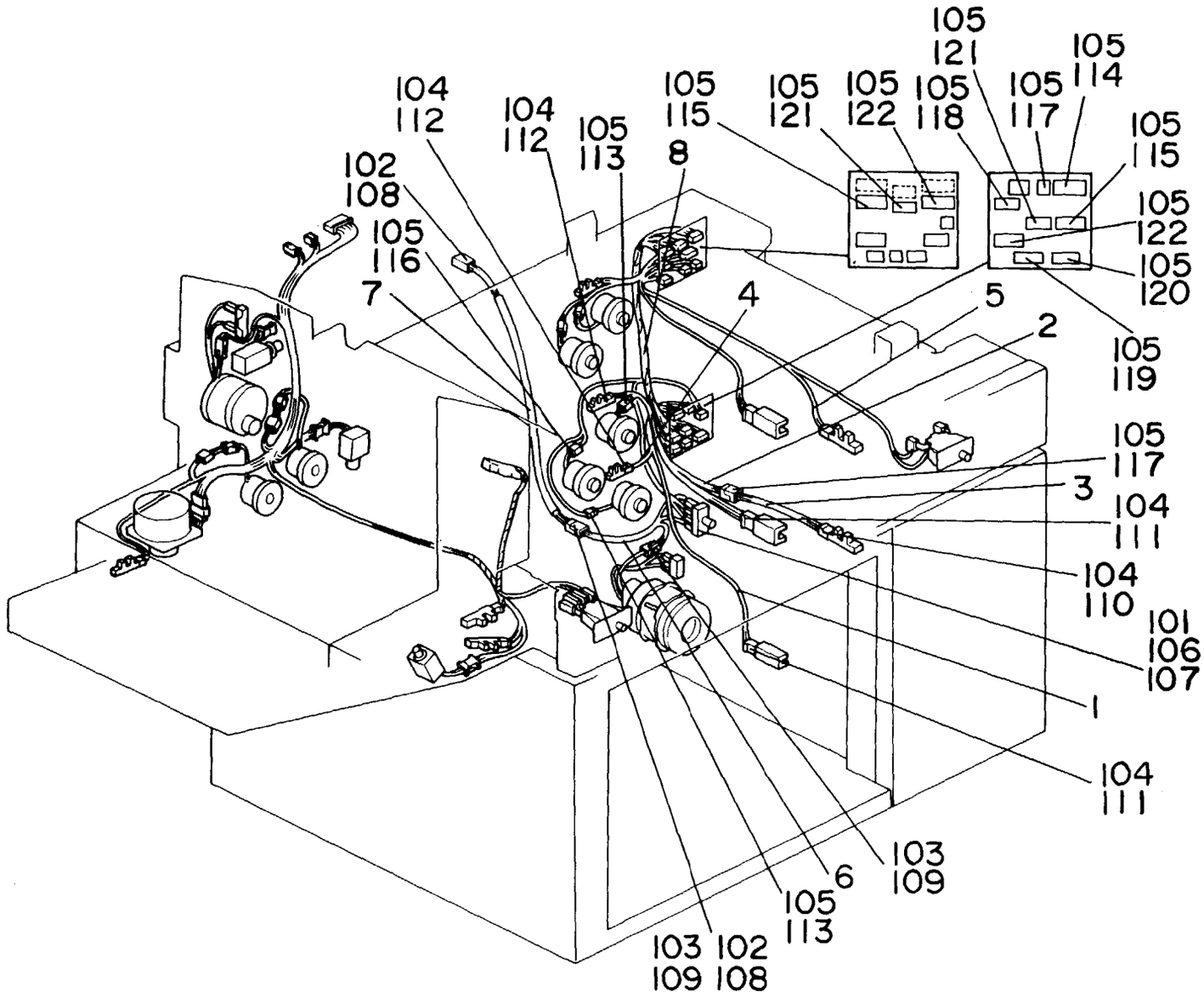

47. PAPER BANK HARNESS [5920]

October 15, '85

Index No.	Parts No.	Description	Q'ty Per Assembly
1	59205201	5th Feed Harness - Paper Size	1
2	59205202	4th Feed Harness	1
3	59205203	5th Feed Harness - Paper Feed	1
4	59205204	5th Feed Harness	1
5	59205210	Expansion Relay Harness	1
6	59205220	Bank AC Harness	1
7	59205221	Relay AC Harness - 115V	1
7	59205222	Relay AC Harness - 220/240V	1
8	59225200	Interface Harness	1
101	11001172	Fastening Receptacle	
102	11001239	Pin - Mate-N-Lock	
103	11001241	Socket - Mate-N-Lock	
104	11001249	Receptacle Terminal	
105	11001327	Contact	
106	11021402	Receptacle Housing - 1P	
107	11021404	Receptacle Housing	
108	11021507	Connector - 2P	
109	11021515	Connector - 2P	
110	11021620	Receptacle Housing - 3P	
111	11021623	Receptacle Housing - 7P	
112	11021786	Connector - 3P	
113	11021910	Connector - 2P	
114	11021915	Connector - 7P	
115	11021917	Connector - 9P	
116	11021924	Connector - 2P	
117	11021925	Connector - 3P	
118	11021942	Connector - 6P	
119	11021943	Connector - 7P	
120	11021944	Connector - 8P	
121	11022367	Connector - 6P	
122	11022368	Connector - 8P	

Index No.	Parts No.	Description	Q'ty Per Assembly

48. SORTER HARNESS [6803]

October 15, '85

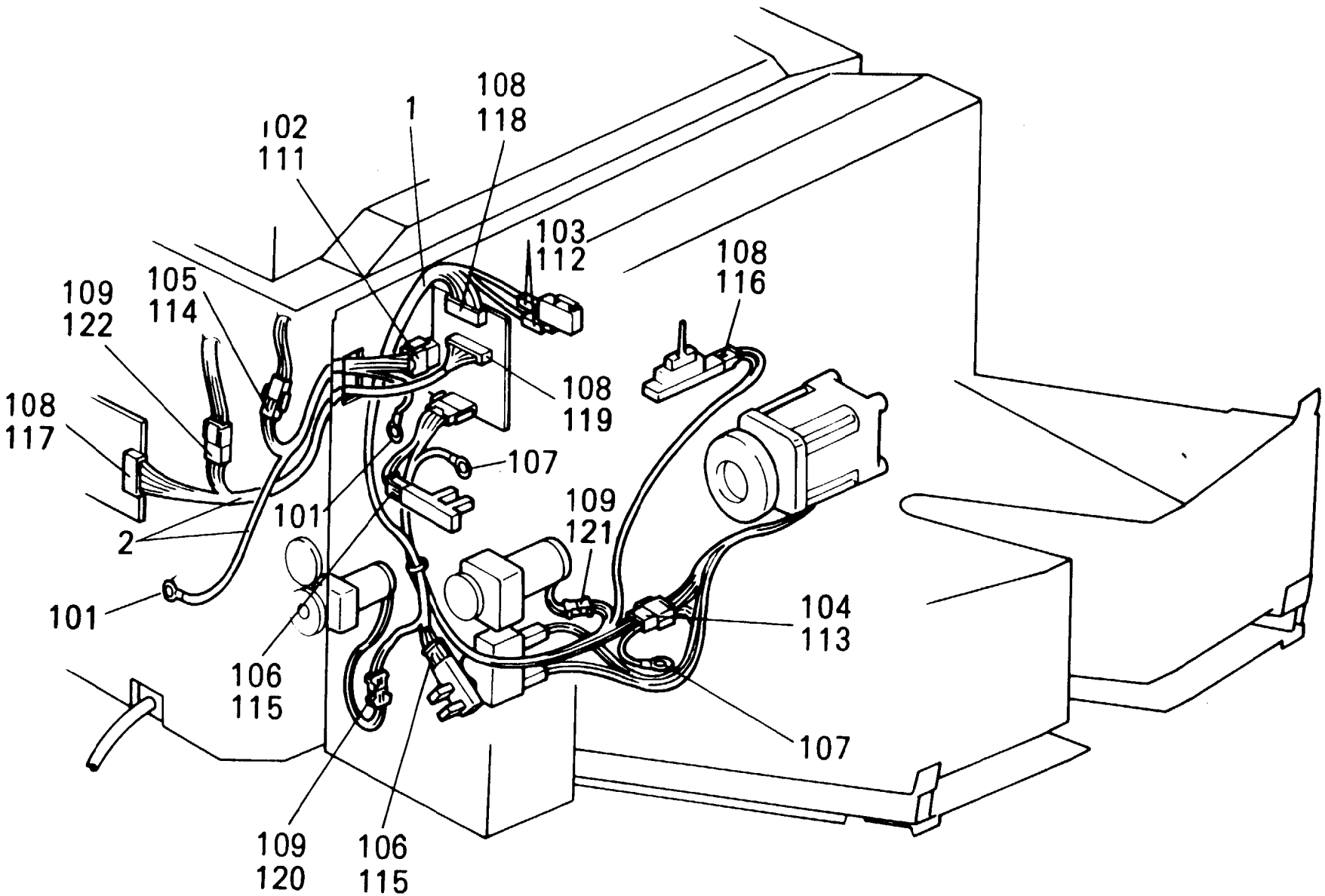

48. SORTER HARNESS [6803]

October 15, '85

Index No.	Parts No.	Description	Q'ty Per Assembly
1	68035600	Main Harness	1
2	68035610	Interface Harness	1
101	11000051	Solid Strand	
102	11001042	Socket - Mate-N-Lock	
103	11001169	Fastening Receptacle	
104	11001238	Pin - Mate-N-Lock	
105	11001239	Pin - Mate-N-Lock	
106	11001249	Receptacle Terminal	
107	11001264	Terminal	
108	11001327	Contact	
109	11001328	Contact	
110	11020512	Connector - 3P	
111	11020983	Connector - 2P	
112	11021408	Receptacle Housing	
113	11021508	Connector - 3P	
114	11021524	Connector - 2P	
115	11021620	Receptacle Housing - 3P	
116	11021911	Connector - 3P	
117	11021919	Connector - 11P	
118	11021923	Connector - 15P	
119	11021934	Connector - 12P	
120	11021952	Connector - 2P	
121	11021964	Connector - 2P	
122	11021966	Connector - 4P	

Index No.	Parts No.	Description	Q'ty Per Assembly

49. DF HARNESS [5918]

October 15, '85

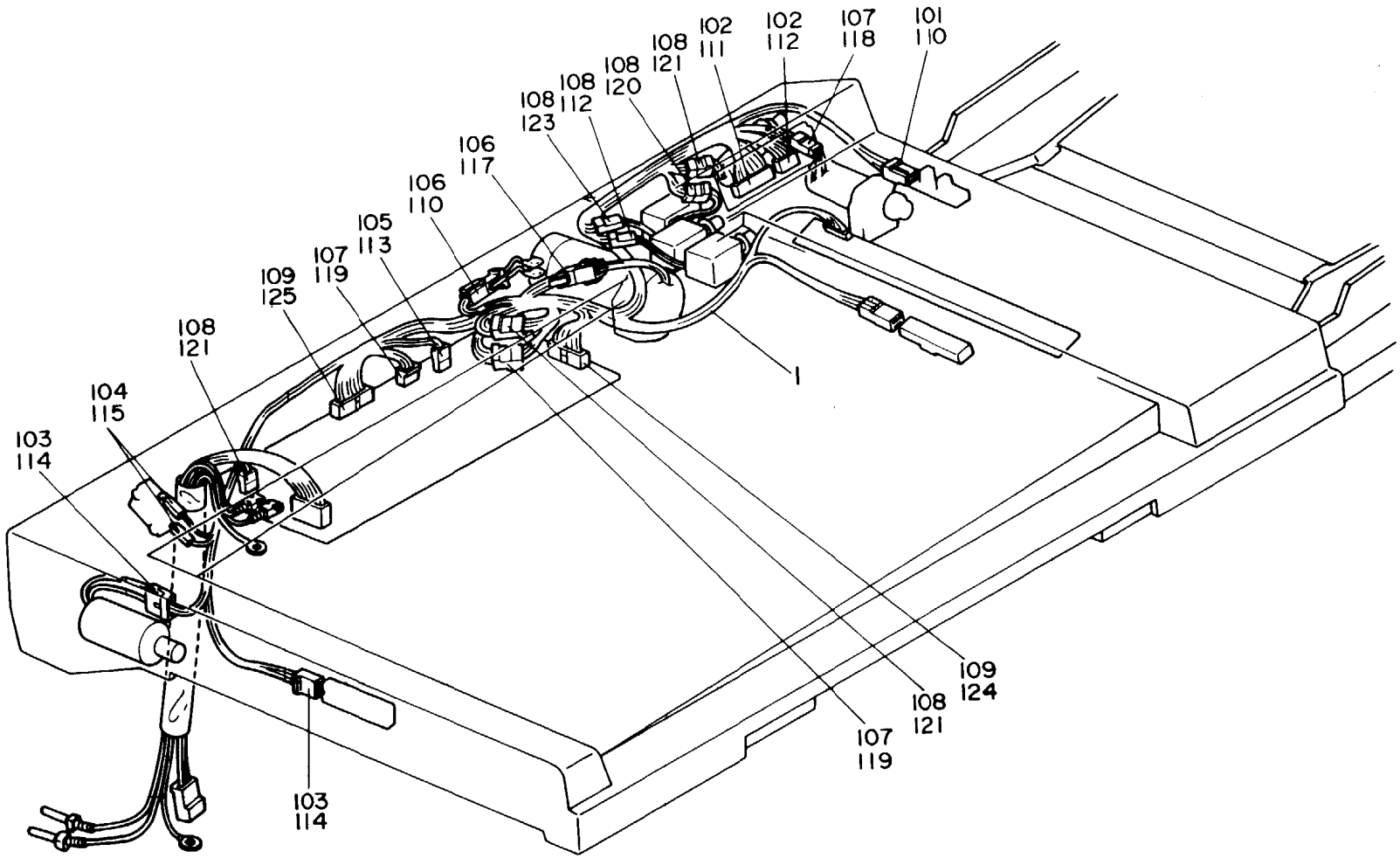

49. DF HARNESS [5918]

Index No.	Parts No.	Description	Q'ty Per Assembly
1	59185811	Main Harness	
101	11001089	Socket - MATE-N-LOCK	
102	11001147	Socket - MATE-N-LOCK	
103	11001159	Socket - Mate-N-Lock	
104	11001169	Fastening Receptacle	
105	11001190	Socket - Mate-N-Lock	
106	11001240	Socket - Mate-N-Lock	
107	11001327	Contact	
108	11001328	Contact	
109	11001348	Pin Contact	
110	11021089	Connector - 3P	
111	11021244	Connector - 15P	
112	11021289	Connector - 6P	
113	11021350	Connector - 5239-2P	
114	11021396	Connector - 2P	
115	11021408	Receptacle Housing	
116	11021515	Connector - 2P	
117	11021517	Connector - 4P	
118	11021910	Connector - 2P	
119	11021912	Connector - 4P	
120	11021964	Connector - 2P	
121	11021965	Connector - 3P	
122	11021970	Connector - 2P	
123	11021971	Connector - 3P	
124	11030660	Connector - 16P	
125	11030662	Connector - 20P	

Index No.	Parts No	Description	Q'ty Per Assembly

50. DUPLEX HARNESS [5919]

October 15, '85

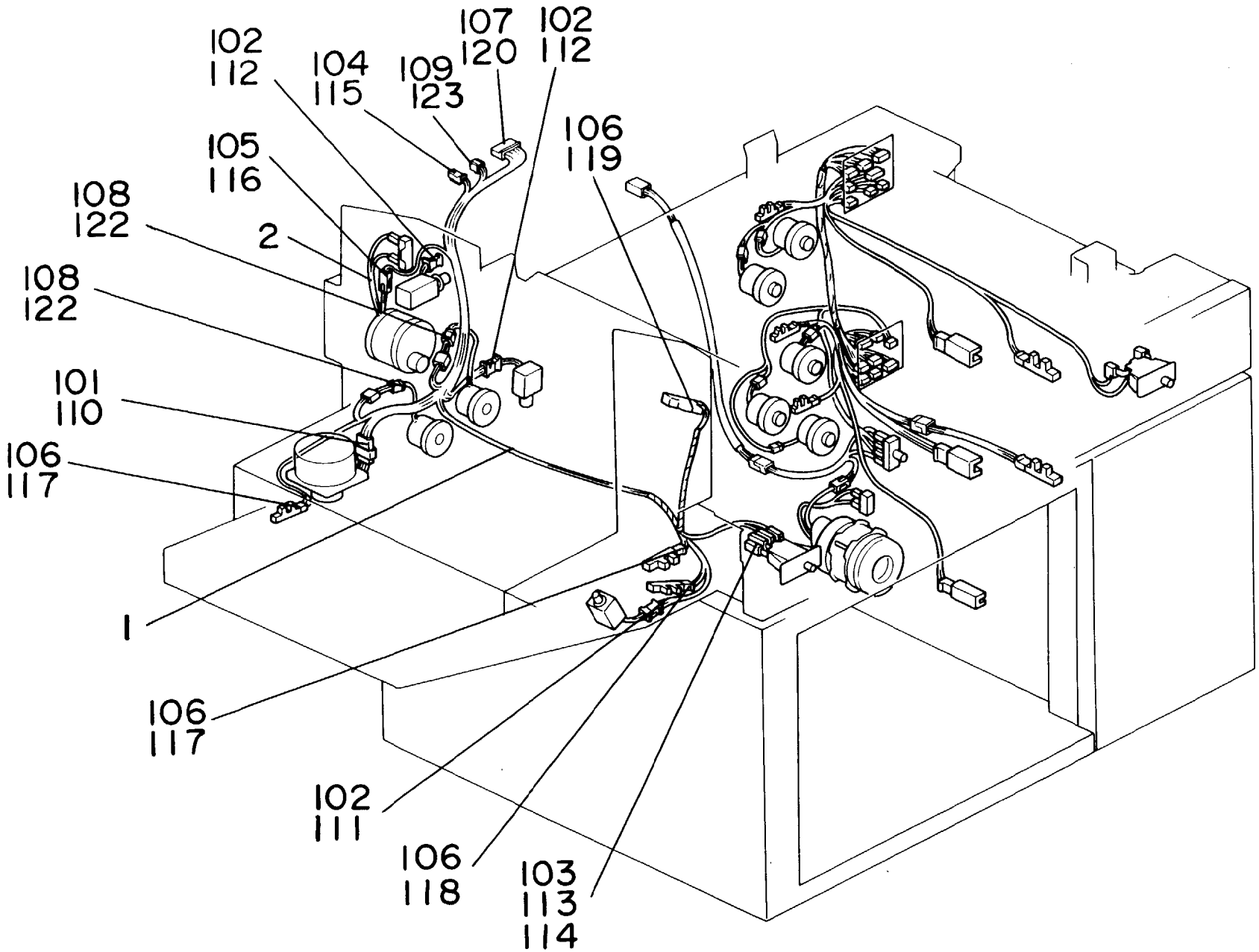

50. DUPLEX HARNESS [5919]

Index No.	Parts No.	Description	Q'ty per Assembly
1	59195430	DC Harness	1
2	59195431	AC Harness	1
101	11001089	Socket - MATE-N-LOCK	
102	11001159	Socket - Mate-N-Lock	
103	11001172	Fastening Receptacle	
104	11001239	Pin - Mate-N-Lock	
105	11001241	Socket - Mate-N-Lock	
106	11001249	Receptacle Terminal	
107	11001269	Fastening Receptacle	
108	11001327	Contact	
109	11001328	Contact	
110	11021091	Connector - 6P	
111	11021397	Connector - 2P	
112	11021398	Connector - 2P	
113	11021402	Receptacle Housing - 1P	
114	11021404	Receptacle Housing	
115	11021507	Connector - 2P	
116	11021515	Connector - 2P	
117	11021620	Receptacle Housing - 3P	
118	11021786	Connector - 3P	
119	11021787	Connector - 3P	
120	11021906	Connector - 26P	
121	11021910	Connector - 2P	
122	11021938	Connector - 2P	
123	11021976	Connector - 2P	

Index No.	Parts No.	Description	Q'ty per Assembly

51. LCT HARNESS [5925]

October 15, '85

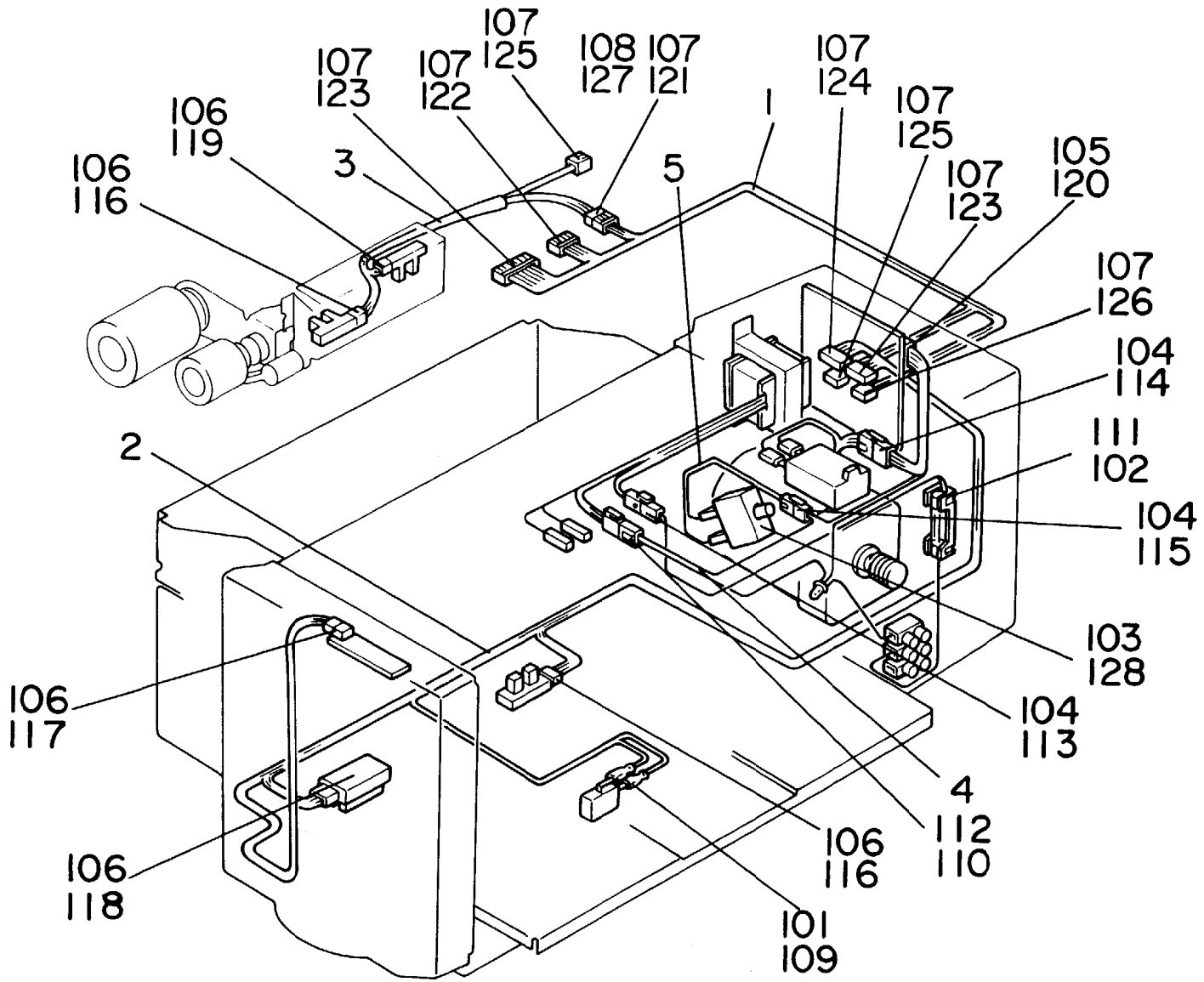

51. LCT HARNESS [5925]

Index No.	Parts No.	Description	Q'ty Per Assembly
1	59255200	Interface Harness	1
2	59255201	DC Harness	1
3	59255202	Pick-up Harness	1
4	59255211	AC Harness	1
5	59255212	Safety Switch Harness	1
101	11000277	Fastening Receptacle	
102	11001169	Fastening Receptacle	
103	11001172	Fastening Receptacle	
104	11001241	Socket - Mate-N-Lock	
105	11001247	Terminal	
106	11001249	Receptacle Terminal	
107	11001327	Contact	
108	11001328	Contact	
109	11020796	Insulating Sleeve	
110	11001239	Pin - Mate-N-Lock	
111	11021408	Receptacle Housing	
112	11021507	Connector - 2P	
113	11021514	Connector - 1P	
114	11021516	Connector - 3P	
115	11021532	Connector - 2P	
116	11021620	Connector - 3P	
117	11021621	Receptacle Housing - 3P	
118	11021623	Receptacle Housing - 7P	
119	11021786	Connector - 3P	
120	11021815	Connector - 3P	
121	11021911	Connector - 3P	
122	11021912	Connector - 4P	
123	11021915	Connector - 7P	
124	11021916	Connector - 8P	
125	11021925	Connector - 3P	

1. LCT HARNESS

Index No.	Parts No.	Description	Q'ty Per Assembly
126	11021929	Connector - 7P	
127	11021965	Connector - 3P	
128	11021404	Receptacle Housing	

52. DECAL AND DOCUMENT [5215]

October 15, '85

1

A2

2

A Removing Misfed Paper



—Standard Unit— Push lever ❶ down.

—System Unit— Push lever ❷ down first, and push lever ❸ to the left.

Remove misfed paper by turning registration knob ❹ counterclockwise.

Return levers ❸ and ❷ to their original positions.

If no paper was found at step 2, take out cassette and remove misfed paper from entrance.

3

Adding Toner

Shake a new cartridge of toner well and insert it into the development unit.



Press in toner cartridge and turn it clockwise to "Unlock" position.

Pull toner cartridge out.

Insert new toner cartridge. Peel off seal while inserting.

Press in toner cartridge and turn it counterclockwise to "Lock" position.

4



5

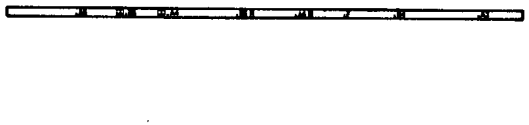

6

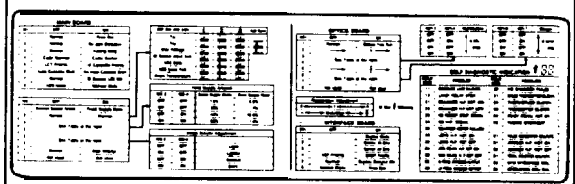

7

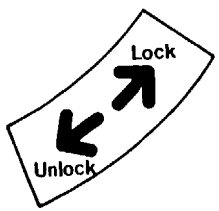

8

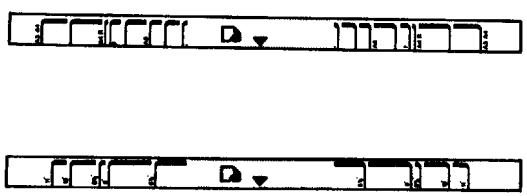

9

B1

10

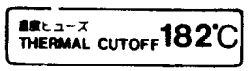

11

B Removing Misfed Paper

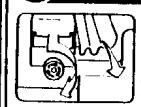

Pull out knob ❶ and turn it clockwise. Remove any misfed paper by pulling gently. Slide the fusing unit back into the copier until it is locked in place.

12

DIP SWITCH 201

NO.	OFF	ON
1	Normal	Drum Conditioning
2	Auto Reset	No Auto Reset
3	1 min.	3 min.
4	Count Up	Count Down
5	50% ↓ 155%	50% ↓ 200%
6	Beeper ON	Beeper OFF
7	Normal	All Displays ON
8	Normal	Monitor

DIP SW 201-8 | Exp. Lamp Volt | Fusing Temp. | Exp. Lamp ON / OFF | 10 key | Recall key | Start key

52. DECAL AND DOCUMENT [5215] October 15, '85

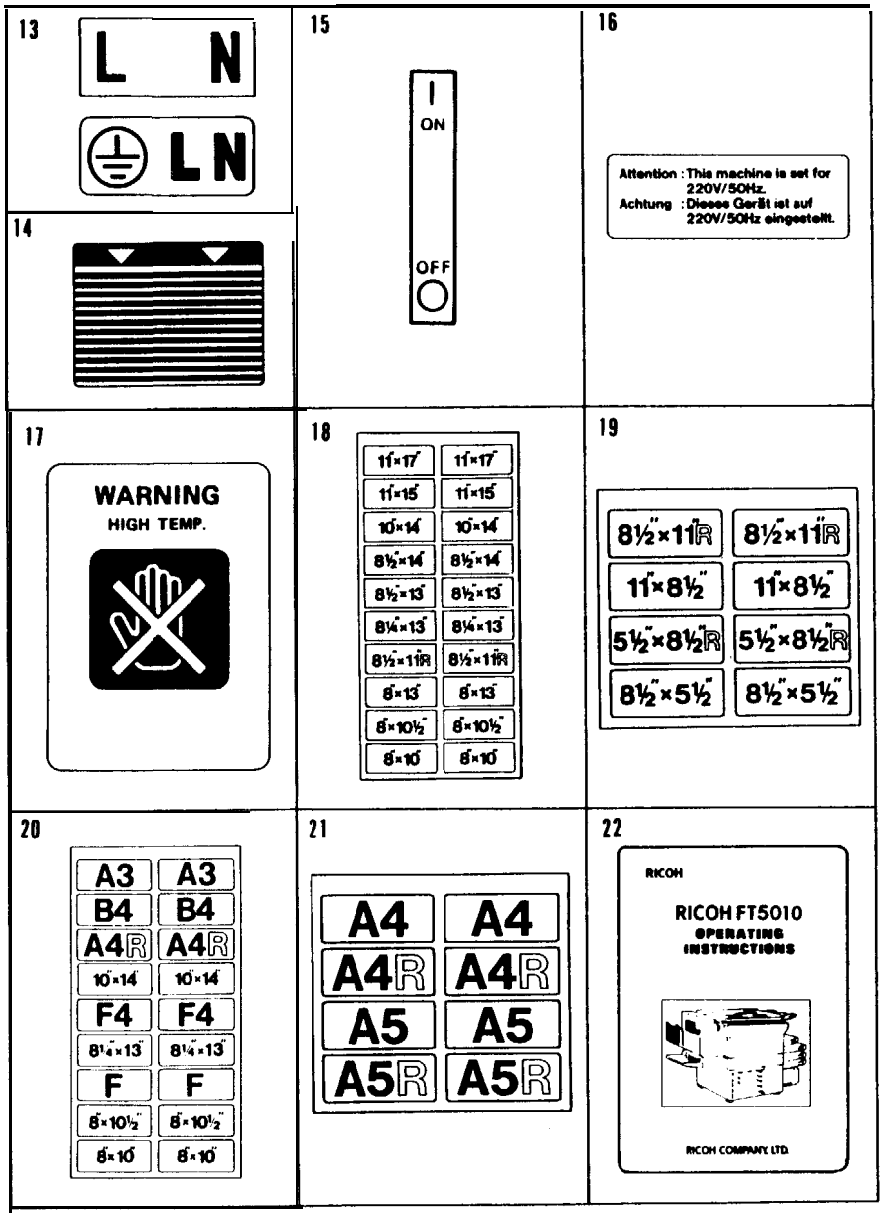

Index No.	Parts No.	Description	Q'ty Per Assembly
1	52151315	Decal - AZ	1
2	52151317	Decal - Front Cover	1
3	52151318	Decal - Toner Supply	1
4	52151319	Decal - Front Scale - LT/LDG	1
4	52151321	Decal - Front Scale - A4/A3	1
5	52151320	Decal - Rear Scale - LT/LDG	1
5	52151322	Decal - Rear Scale - A4/A3	1
6	52151323	Decal - DIP Switch	1
7	52151326	Decal - Toner Cartridge	1
8	52152801	Decal - Manual Feed - LT/LDG	1
8	52152811	Decal - Manual Feed - A4/A3	1
9	52154210	Decal - B1	1
10	52154211	Decal - Thermofuse	1
11	52154213	Decal - Misfeed Removal	1
12	52155673	Decal - Monitor Board	1
13	54034335	Decal - Terminal 115V	1
13	54474980	Decal - Terminal 220V	1
14	54134835	Decal - Paper Level	3
15	54421277	Decal - Main Switch	1
16	54421372	Decal - Power Source 220V	1
17	54424421	Decal - Small	2
18	59301031	Decal Sheet - Large - LT/LDG	1
19	59301032	Decal Sheet - Small - LT/LDG	1
20	59301033	Decal Sheet - Large - A4/A3	1
21	59301034	Decal Sheet - Small - A4/A3	1
22	52158761	Operating Instructions - English	1
22	52158763	Operating Instructions - German	1
22	52158764	Operating Instructions - French	1
22	52158765	Operating Instructions - Italian	1
22	52158766	Operating Instructions - Spanish	1

53. SPECIAL TOOL [5215]

October 15, '85

1	2	3	4	5	6
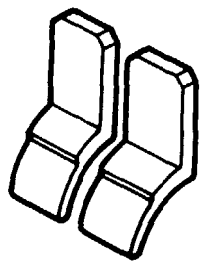	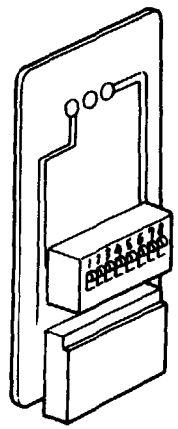	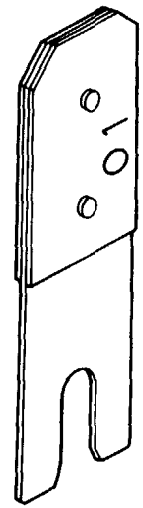	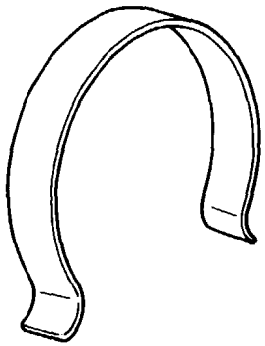	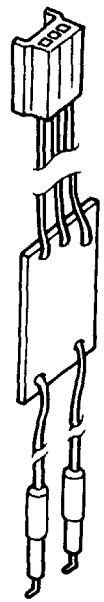	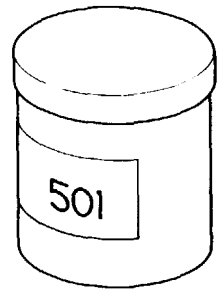
7	8	9	10	11	12
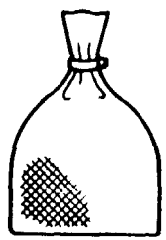	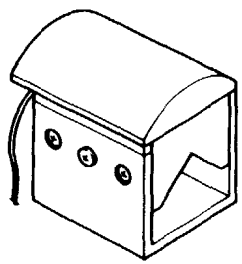	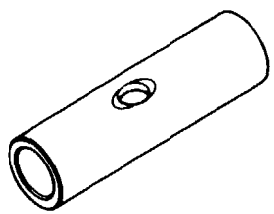	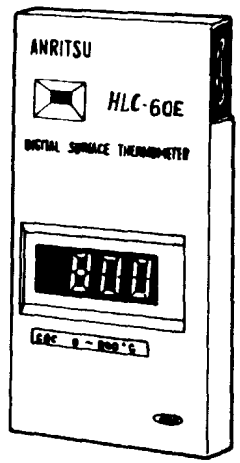		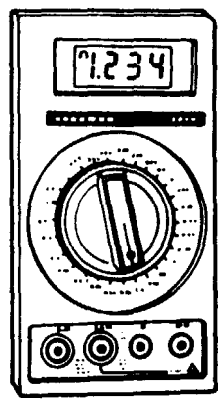

53. SPECIAL TOOL [5215]

October 15, '85

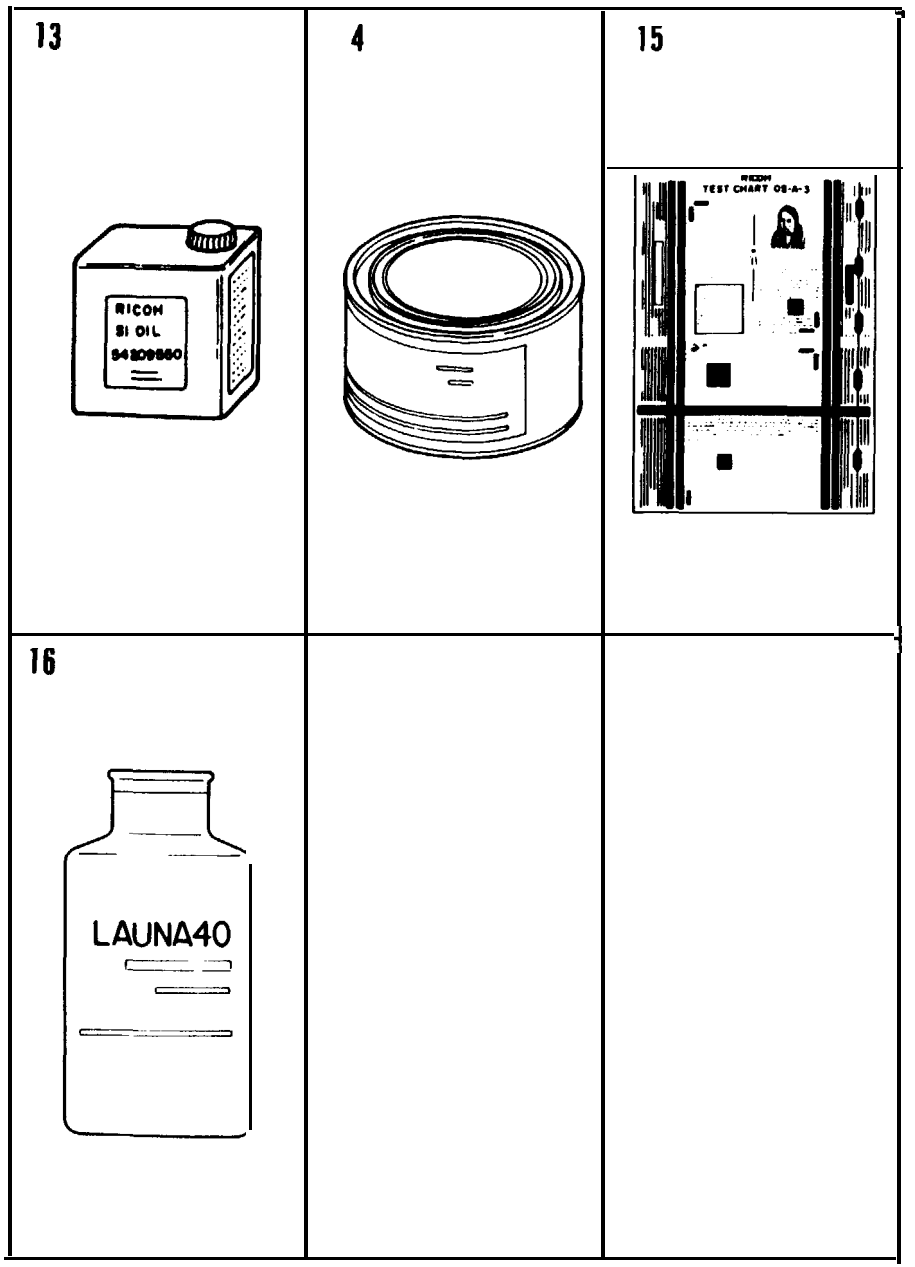

Index No.	Parts No.	Description	Q'ty Per Assembly
1	52159500	DG Gauge (2 PCS/1 Set)	1
2	52059601	Switching Board	1
3	52059101	Gap Gauge	1
4	52059111	Omega Clamp	1
5	52069600	Sensor Checker	1
6	52039501	Grease 501	1
7	54429101	Setting Powder	1
8	54429106	Drum Shoe	1
9	54479104	Shoe Adaptor	1
10	54209504	Thermo Meter - HLC60-E	1
11	54209505	Probe - HLC60-E	1
12	54209507	Digital Multimeter - BECKMAN-RMS3030	1
13	54209550	Silicon Oil	1
14	54479078	Heat Resisting Grease MT-78	1
15	54209516	Test Chart - OS-A3 (10 psc/set)	1
15	54209502	Test Chart - OS-A3 (100 psc/set)	1
16	54429103	Launa Oil	1

FT5010(5215)
PARTS INDEX

This section instructs you as to the numbers and names of the parts of this machine.

Parts No.	Description	Page and Index No.
52150240	Fusing Unit - 115V	17-*
52150245	Fusing Unit - 220/240V	17- *
52151085	Cover Motor	15- 9
52151090	Pulse Generator Disk	31-12
52151096	Fusing Drive Bracket	31-40
52151102	Spring - Main Drive Tightener (60Hz)	31-34
52151103	Ratchet Sleeve - Paper Feed	31- 7
52151104	Spring Clutch	31- 6
52151105	Fusing Chain Stopper	31-41
52151106	Idler Chain Stopper	31-35
52151109	Harness Cover	33-30
52151111	Fusing Bracket	31-42
52151112	Power Cord Bracket Cover	33-22
52151116	Pulse Generator Bracket	31-16
52151117	Outlet Fan Bracket	15-19
52151121	Base Plate Bracket	29-14
52151133	Left Stay	29-15
52151134	Lower Paper Feed Stay - Right	9-55
52151134	Lower Paper Feed Stay - Right	37-45
52151134	Lower Paper Feed Stay - Right	43-45
52151136	Cushion 12 x 65 x 2 mm	15-43
52151257	Front Cover Ass'y	3-41
52151268	Inner Cover	3-39
52151269	Upper Cover - 115V	3-6
52151270	Upper Cover - 220/240V	3-6
52151276	Front Right Cover	3-28
52151278	Left Cover	3-30
52151283	Rear Right Cover	3-27
52151288	Rear Cover - US	3-10
52151289	Rear Cover - EU	3-10
52151290	Rear Cover Holder	33-15
52151291	Rear Cover	3-10
52151292	Mylar - 20 x 28 mm	3-54
52151293	Front Cover Angle - Right	3-49
52151293	Front Cover Angle - Right	15-21

Parts No.	Description	Page and Index No.
52151295	Front Cover Hinge - Right	3-44
52151295	Front Cover Hinge - Right	37-20
52151297	Front Cover Hinge - Left	3-42
52151297	Front Cover Hinge - Left	37-19
52151300	Seal 6 x 21 x 270 mm	3-56
52151305	Upper Cover Cap - ADF	3-2
52151306	Upper Cover Cap - Sensor	3-4
52151307	Left Cover Cap - Sorter	3-32
52151308	Left Cover Cap - Duplex	3-35
52151315	Decal - A2	3-47
52151315	Decal - A2	105- 1
52151317	Decal - Front Cover	3-46
52151317	Decal - Front Cover	105- 2
52151318	Decal - Toner Supply	3-45
52151318	Decal - Toner Supply	105- 3
52151319	Decal - Front Scale - LT/LDG	3-1
52151319	Decal - Front Scale - LT/LDG	105- 4
52151320	Decal - Rear Scale - LT/LDG	3-3
52151320	Decal - Rear Scale - LT/LDG	105- 5
52151321	Decal - Front Scale - A4/A3	3-1
52151321	Decal - Front Scale - A4/A3	105- 4
52151322	Decal - Rear Scale - A4/A3	3-3
52151322	Decal - Rear Scale - A4/A3	105- 5
52151323	Decal - DIP Switch	3-9
52151323	Decal - DIP Switch	105- 6
52151326	Decal - Toner Cartridge	3-48
52151326	Decal - Toner Cartridge	105- 7
52151329	Operation Panel Bracket - Left	5-11
52151330	Operation Panel Bracket - Right	5-51
52151335	Operation Panel Bracket - Middle	5-13
52151655	Platen Cover Ass'y	7- 1
52151656	Front Platen Cover	7- 5
52151657	Rear Platen Cover	7- 4
52151658	Original Holder	7- 2
52151660	Platen Cover Ass'y	7- 1

Parts No.	Description	Page and Index No.
52151665	Stud Mounting Bracket - Platen	29- 5
52151672	Platen Cover Bracket - Left	29- 3
52151673	Cover Bracket	29- 4
52151674	Platen Cover Bracket - Right	29- 6
52151681	1st Scanner Ass'y	25- 7
52151691	Reflector Cover	25- 2
52151696	Main Reflector	25- 4
52151697	Wire Stopper Plate	25- 6
52151700	Exposure Lamp Terminal - Fit	25- 9
52151702	Clip - Exposure Lamp	25-48
52151721	2nd Scanner Ass'y	25-26
52151765	Lens Bracket	27-11
52151766	Lens Carridge	27-14
52151767	Lens H.P. Actuator	27-13
52151770	4th Mirror Cover	27- 3
52151771	Mylar - Seal 4th Mirror	27-45
52151772	Lens Bracket Cover	27-17
52151775	Mylar - 118 x 50 mm	27-46
52151776	Shielding Plate	27- 1
52151778	Mylar - Shielding Plate	27- 2
52151779	Shield Plate Stopper	27-48
52151780	Lens Guide Rod	27-16
52151805	Lens Tension Pulley	27-23
52151811	Spring - Lens Drive Wire	27-22
52151813	Lens Drive Pulley	27-26
52151816	Lens H.P. Sensor Bracket	27-20
52151817	Lens Drive Wire	27-24
52151822	H.P. Sensor Bracket	27-27
52151825	Toner Shield Cover	27-18
52151828	Seal-Toner Shield Cover	27-55
52151829	Toner Shield - Plastic	27-56
52151842	Cam Plate - Lens Shield	27-15
52151844	Mylar - Lens Bracket Guide	27-47
52151846	Shield Plate	27-19
52151853	Mylar - 15 x 350 mm	25-43
52151857	Harness Clamp	25-45

Parts No.	Description	Page and Index No.
52151858	Right Cover Holder	29- 9
52151859	Guide Channel	25-44
52151861	Seal 4.5 x 22 x 30 mm	29-27
52151864	Rear Guide Rod	25-21
52151866	Lens Drive Motor Bracket	25-42
52151873	Scanner Drive Wire	25-36
52151874	Left Base Plate Cover	29- 1
52151881	Pulley Bracket	25-38
52151886	Wire Pulley Tightener	25-35
52151893	H.P. Sensor Bracket	25-32
52151905	Left Stay	29- 2
52151913	Right Stay	29-11
52151916	Seal - Right Stay	29-12
52151918	Vacuum Fan Filter	27-43
52151924	Cushion	3-38
52151926	Front Frame Seal	3-37
52151930	Left Scale - A4/A3	3-7
52151933	Left Scale - LT/LDG	3-7
52151935	Mounting Plate - A4 /A3	3-36
52151938	Mounting Plate - LT/LDG	3-36
52151942	Scanner Drive Wire Bracket	25-20
52151956	Worm Gear	27-31
52151957	Spacer	27-51
52151958	Worm Gear	27-31
52151861	Seal 4.5 x 22 x 30 mm	29-27
52151962	Motor Bracket	27-29
52151968	Motor Cover	27-37
52151969	Seal - A	27-36
52151970	Seal - B	27-34
52151972	Motor Bracket	27-29
52151975	Pulley Bracket	27-35
52151980	Exposure Glass	3-8
52151981	Shaft	27-32
52152050	C & D Corona Rail	13-16

Parts No.	Description	Page and Index No.
52152054	Seal 2 x 10 x 15 mm	13-14
52152054	Seal 2 x 10 x 15 mm	15- 3
52152059	Charge Corona Unit	13- 1
52152060	Duct Inlet	15- 2
52152061	Duct Bracket	15- 1
52152063	Duct Outlet	13-15
52152066	Fan Cover	15- 4
52152105	Solenoid Bracket	31-55
52152109	T & S Receptacle	13-57
52152113	T & S Corona Unit	13-40
52152115	T & S Corona Casing	13-45
52152119	T & S Corona Guide Plate	13-46
52152121	T & S Corona Guide	13-44
52152125	T & S Corona Rail	13-54
52152130	QL Filter	13-12
52152131	T & S Corona Holder	13-39
52152135	PTL Filter	11- 5
52152137	Link	13-53
52152146	Shaft	13-52
52152150	T & S Corona Harness Cover	13-30
52152155	T/S Corona Lever	13-51
52152245	Front Drum Support	13-23
52152251	Rear Drum Support	13-32
52152251	Rear Drum Support	29-13
52152258	Drum Shaft	13-31
52152265	Edging	13-34
52152270	Heater Casing	13-56
52152278	PTL Guide	11- 1
52152283	Paper Guide	11- 6
52152310	Drum Stay	13-19
52152315	Decal - Drum Knob	13-60
52152555	Pad Arm	9-14
52152598	Fixing Pad Bracket	9-18
52152568	Pad Arm	9-14
52152593	Lower Arm	9-25

Parts No.	Description	Page and Index No.
52152570	Upper Paper Feed Stay	9-27
52152571	Lower Paper Feed Stay	9-51
52152573	Upper Pad Mounting Plate	9-43
52152576	Upper Size Detection Bracket	9-42
52152578	Upper Arm	9-44
52152579	Shaft	9-24
52152579	Shaft	37-31
52152579	Shaft	43-37
52152579	Shaft	45-24
52152580	Spring Anchor	9-45
52152582	Spring	9-23
52152582	Spring	37-36
52152582	Spring	43-36
52152582	Spring	45-23
52152583	Pad Holder	9-16
52152583	Pad Holder	37-29
52152583	Pad Holder	43-54
52152583	Pad Holder	45-21
52152584	Pad Arm	43-51
52152584	Pad Arm	45-19
52152584	Pad Arm	61-46
52152587	Lower Pad Mounting Plate	9-22
52152590	Lower Size Detection Bracket	9-19
52152591	Lower Arm	43-38
52152591	Lower Arm	45-26
52152592	Spring-Friction Pad	9-12
52152594	Sprocket - 30T	31-18
52152596	Gear - 16T	9-66
52152597	Idle Gear - 30T	9-65
52152600	Upper Feed Guide Plate	9-36
52152602	Upper Guide Plate	9- 6
52152604	Feed Roller	9- 8
52152605	Feed Roller Guide	9- 7
52152606	Middle Guide Plate	9-11
52152609	Lower Guide Plate	9-26

Parts No	Description	Page and Index No
52152612	Regist Guide Plate	11- 9
52152617	Feed Shaft	9-34
52152618	Feed Roller Hub	9-31
52152618	Feed Roller Hub	37-48
52152618	Feed Roller Hub	43-16
52152618	Feed Roller Hub	45-11
52152619	Feed Roller	9-30
52152619	Feed Roller	37-47
52152619	Feed Roller	43-17
52152619	Feed Roller	45-10
52152621	Snap Ring - M6	9-29
52152621	Snap Ring - M6	37-70
52152621	Snap Ring - M6	43-18
52152621	Snap Ring - M6	45- 9
52152622	Upper Feed Shaft Bracket	9-33
52152624	Paper End Feeder	9-35
52152626	Paper End Actuator	9-63
52152626	Paper End Actuator	37-59
52152626	Paper End Actuator	43-22
52152626	Paper End Actuator	45-49
52152627	Lower Pad Mounting Plate	9-22
52152630	Lower Feed Shaft Bracket	9-50
52152632	Guide Plate	31-56
52152633	Regist Holder	31-17
52152634	Paper Feed Clutch Holder	9-58
52152634	Paper Feed Clutch Holder	41-18
52152637	Paper End Bracket	9-70
52152638	Harness Clamp Bracket	9-73
52152639	Feed Roller	9- 8
52152640	Front Cassette Holder	9-47
52152641	Rear Cassette Holder	9-49
52152642	Manual Feed Guide	9-48
52152646	Shaft	9-38
52152646	Shaft	37-42
52152646	Shaft	43-43
52152646	Shaft	45-33
52152647	Upper Lift Arm	9-40
52152648	Upper Front Arm	9-39
52152652	Upper Rear Arm	9-37

Parts No	Description	Page and Index No.
52152656	Lower Lift Arm	9-53
52152656	Lower Lift Arm	37-44
52152656	Lower Lift Arm	43-42
52152656	Lower Lift Arm	45-34
52152657	Lower Front Arm	9-54
52152657	Lower Front Arm	37-41
52152657	Lower Front Arm	43-44
52152657	Lower Front Arm	45-31
52152659	Lower Rear Arm	9-52
52152659	Lower Rear Arm	37-43
52152659	Lower Rear Arm	43-41
52152659	Lower Rear Arm	45-35
52152662	Bushing	9-56
52152662	Bushing	37-69
52152662	Bushing	43-31
52152662	Bushing	45-15
52152663	Pressure Arm	9-72
52152663	Pressure Arm	37-68
52152663	Pressure Arm	43-30
52152663	Pressure Arm	45-41
52152664	Spring - Upper Lift	37-67
52152664	Spring - Upper Lift	43-29
52152664	Spring - Upper Lift	45-40
52152665	Spring - Lower Lift	9-71
52152665	Spring - Lower Lift	9-74
52152665	Spring - Lower Lift	36-67
52152665	Spring - Lower Lift	43-29
52152665	Spring - Lower Lift	45-40
52152666	Bracket	9-76
52152668	Bushing	31-19
52152669	Bracket	9-68
52152670	Upper Regist Roller	11- 7
52152671	Lower Regist Roller	11- 8
52152672	Bushing	11-13
52152673	Fixing Pad Bracket	43-52
52152673	Fixing Pad Bracket	45-22
52152678	Spring Plate	3-22
52152679	Upper Guide - Manual Feed	3-11
52152680	Front Manual Feed Link	3-25

Parts No.	Description	Page and Index No.
52152681	Rear Manual Feed Link	3-17
52152685	Magnetic Rubber	3-26
52152686	Manual Feed Cover	3-20
52152687	Gear - 16T	3-19
52152688	Side Fence Gear	3-18
52152689	Rear Side Guide	3-12
52152690	Front Side Guide	3-13
52152691	Brake	3-21
52152693	Plate	3-15
52152694	Bracket	3-24
52152697	Spring Plate	3-22
52152698	Manual Feed Table	3-23
52152704	Large Cassette Body	7-29
52152707	Small Cassette Body	7-29
52152710	Bottom Plate	7-24
52152713	Bottom Plate Pad	7-23
52152716	Front Side Fence	7-27
52152720	Front Side Holder	7-28
52152727	Rear Side Fence	7-20
52152731	Rear Side Holder	7-21
52152734	Large Cassette Cover	7-19
52152737	Small Cassette Cover	7-19
52152739	Rear Fence	7-25
52152740	Rear Fence	7-25
52152780	Upper Feed Guide Plate	9-36
52152781	Mylar Guide	9-77
52152786	Mylar - 45 x 120 x 0.1 mm	9-79
52152801	Decal - Manual Feed - LT/LDG	3-14
52152801	Decal - Manual Feed - LT/LDG	105-8
52152811	Decal - Manual Feed - A4/A3	3-14
52152811	Decal - Manual Feed - A4/A3	105-8
52152819	Mounting Bracket Platen Cover	7-31
52152830	Spring Release	7-46
52152833	Base Holder	7-32
52152834	Arm Holder	7-33
52152835	Crank	7-34
52152836	Sleeve 8 x 34	7-35

Parts No.	Description	Page and Index No.
52152837	Shaft 7 x 40	7-36
52152838	Rubber Magnet	7-37
52152839	Balancer Spring	7-38
52152840	Pin 4 x 115 mm	7-39
52152841	Pin 4 x 100 mm	7-40
52152842	Right Spring Platen Cover	7-41
52152843	Left Spring Platen Cover	7-42
52152844	Slide Supporter	7-43
52152845	Plate Magnet	7-44
52152846	Platen Base	7-45
52153000	Development Unit	21-*
52153006	Toner Supply Unit	21-36
52153007	Toner Supply Unit	21-36
52153051	Side Seal Right	21-7
52153052	Side Seal Left	21-8
52153056	Seal Development	21-26
52153060	Seal - 52 x 4 mm	21-9
52153065	Brush Seal - 20 x 6 mm	21-28
52153072	Side Magnet	21-59
52153073	Mylar	21-49
52153074	Lower Casing	21-32
52153078	Plate - Developer Casing	21-51
52153083	Paddle Roller	21-23
52153088	Seal Paddle Roller	21-55
52153089	Developer Knob	21-21
52153096	Adjusting Plate - Magnet Angle	21-6
52153097	Sheet	21-11
52153098	Mylar Seal - Right	21-29
52153099	Mylar Seal - Left	21-30
52153100	Gear - 44T	21-22
52153102	Gear - 39T	21-24
52153108	Spacer - Development Sleeve	21-56
52153110	Bearing Retainer	21-19
52153111	Gear - 25T	21-20
52153115	Gear - 17T	21-27
52153120	Toner Supply Guide	21-25

Parts No.	Description	Page and Index No.
52153124	Development Sleeve	21-18
52153133	Seal - Right	21-31
52153140	Upper Casing	21-12
52153153	Mylar - 6 x 35 mm	21-29
52153153	Mylar - 6 x 35 mm	21-30
52153154	Seal - Upper	21- 2
52153155	Seal - Doctor	21- 5
52153257	Seal	29-25
52153161	Doctor Plate	21- 3
52153162	Side Seal - Doctor Blade	21- 4
52153165	Development Auger	21-17
52153166	Gear - 25T	21-15
52153169	Backspill Plate	21-14
52153180	Seal-Ring	21- 61
52153191	Entrance Seal Ass'y	21- 1
52153202	Mylar Seal - Front Upper Guide	9- 3
52153203	Seal - 1 x 10 x 60 mm	9- 1
52153204	Seal - 4 x 10 x 370 mm	9- 2
52153256	Seal - Toner Supply	21-60
52153281	Pin	21-38
52153298	Seal - 405 x 5 x 2 mm	21-50
52153302	Toner Supply Roller	21-33
52153303	Seal - Toner Supply Roller	21-54
52153308	Spacer	21-35
52153321	Gear - 56T	21-40
52153323	Coupling	21-41
52153327	Shaft Agitator	21-57
52153328	Joint Hopper	21-58
52153345	Spring - Gear	21-34
52153347	Spring - Gear	21-34
52153381	Sensor Bracket	9-57
52153462	Toner Supply Bracket	31- 3
52153468	Supply Shaft	31- 2
52153469	Boss Toner Supply Clutch	31- 8
52153470	Gear - 42T	31-24
52153471	Supply Shaft	31- 2

Parts No.	Description	Page and Index No.
52153472	Development Shaft	31-25
52153474	Development Shaft	31- 25
52153475	Sprocket - 19T	31-11
52153476	Gear - 26T	31- 5
52153478	Boss Toner Supply Clutch	31- 8
52153481	Sensor Bracket	9-59
52153482	Sensor Cover	9-75
52153484	Development Drive Holder	31-13
52153486	Bias Terminal	31- 4
52153488	Development Drive Holder	31-57
52153489	Toner Supply Drive Holder	31-58
52153491	Development Drive Holder Ass'y	
52153550	Cleaning Unit	23- *
52153552	Front Side Plate - Cleaning	23-16
52153553	Rear Side Plate - Cleaning	23-35
52153555	Rubber Seal - Cleaning Small	23-18

Parts No.	Description	Page and Index No.
52153565	Cleaning Blade	23-13
52153581	Cleaning Brush	23-14
52153584	Blade Cleaner Assembly	23-50
52153585	Blade Cleaner	23-12
52153588	Blade Cleaner Plate	23-11
52153589	Seal - 6 x 8 x 105 mm	23-10
52153596	Pick-Off Pawl	23-32
52153600	Seal - Blade Front	23-17
52153601	Seal - Blade Rear	23-36
52153606	Toner Collection Coil	23-15
52153612	Gear - 35T	23-44
52153639	Cleaning Blade Solenoid	31-52
52153663	Toner Collection Joint	23-22
52153666	Toner Collection Bottle Cap	15-23
52153666	Toner Collection Bottle Cap	15-30
52153675	Roller Holder	15-41
52153677	Roller	15-40
52153680	Seal - 19 x 36 x 10 mm	23-23
52153851	Spring - Guide Plate	15-31
52153853	Transport Guide Plate	15-10
52153855	Guide Plate Shaft	15- 7
52153860	Cushion	31-32
52153861	Follower	31-21
52153865	Sprocket - 20T	31-43
52153866	Gear - 45T	31-46
52153869	Toner Collection Bottle Cam	31-45
52153873	Follower Shaft	31-22
52153877	Plate	15-35
52153878	Sheet	15-36
52153880	Cushion	15-38
52153883	Harness Cover	3-53
52153884	Shaft	15-22
52153886	Toner Collection Bottle Cover	15-25
52153887	Sensor Holder	15-28
52153889	Spring - Toner Collection Bottle	15-26
52153892	Ozone Filter	15-42

Parts No.	Description	Page and Index No.
52153897	Transport Stay	15-37
52153910	Transport Frame	15-18
52153917	Transport Drive Roller	15- 8
52153923	Driven Roller	15-15
52153928	Duct	15-32
52153931	Bushing - 8 mm	15-12
52153935	Toner Collection Bottle Stopper	15-39
52153942	Transport Guide Roller	15-17
52153951	Chain Guide	31-44
52153978	Transport Belt	15-11
52154051	Front Side Plate - Fusing	17-33
52154052	Rear Side Plate - Fusing	17-46
52154063	Lower Exit Guide	19-25
52154093	Upper Frame	17-15
52154095	Pressure Lever	17-34
52154096	Spring - Pressure	17-32
52154108	Right Rail - Fusing	17-44
52154116	Oil Blade Holder	17-18
52154117	Oil Blade	17-19
52154121	Spring - Oil Blade	17-16
52154130	Oil Supply Pad	17-13
52154139	Knob - Fusing Unit	17-27
52154143	Oil Pan	17-35
52154167	Fusing Unit Cover	17-48
52154168	Fusing Mounting Bracket	17-61
52154169	Mylar - Fusing Entrance	17-45
52154177	Entrance Guide Bracket	17-42
52154181	Fusing Unit Rail	29-19
52154195	Oil Sump	17-43
52154196	Oil Sump Holder	17-38
52154208	Spring Plate - Oil Supply Pad	17-14
52154210	Decal	17-60
52154210	Decal - B1	105- 9
52154211	Decal - Thermofuse	17-40
52154211	Decal - Thermofuse	105-10

Parts No.	Description	Page and Index No
52154213	Decal - Misfeed Removal	3-43
52154213	Decal - Misfeed Removal	105-11
52154225	Oil Tank	17-12
52154227	Decal sheet - German	3-*
52154228	Decal sheet - French	3-*
52154229	Decal sheet - Italian	3-*
52154230	Decal sheet - Spanish	3-*
52154275	Hot Roller	17-36
52154282	Pressure Roller	17-37
52154411	Spring Plate	17- 4
52154444	Pin	29-17
52154485	Lower Exit Roller	19-24
52154488	Exit Roller Belt	19-26
52154488	Exit Roller Belt	57-55
52154497	Exit Antistatic Brush	19- 1
52154502	Exit Tray Bracket	29-22
52155101	Main Board	33-14
52155101	Main Board	69- *
52155104	IC - UPD27256D	69- 1
52155105	Main Board	33-14
52155105	Main Board	69- *
52155106	IC-UPD 27256 D	69-1
52155128	IC-UPD 7811 G	5-54
52155130	Operation Panel Ass'y - LT/LDG	5-1
52155131	Display Control Board - LT/LDG	5-50
52155132	AC Control Board	5-49
52155135	Operational Panel Ass'y	5- 1
52155136	Operational Panel Board LT/LDG	5-58
52155140	Operation Panel Ass'y - A4/A3	5-1
52155141	Display Control Board - A4/A3	5-50
52155150	Operation Panel Ass'y - ROC	5-1
52155151	Display Control Board - ROC	5-50
52155175	Optics Board	33-13
52155175	Optics Board	71- *
52155180	Heat Sink - Optics Board	71- 3

Parts No.	Description	Page and Index No.
52155181	Harness - Optics Board	71- 2
52155185	Optics ROM Board - Male	71- 1
52155216	AC Drive Board - 115V	35- 2
52155216	AC Drive Board - 115V	67-39
52155216	AC Drive Board - 115V	73- *
52155222	Transformer - 100/25V	73- 1
52155225	ID Sensor Board	11- 2
52155228	Regist Sensor Board	11- 4
52155230	Photointerrupter - L Type	19-21
52155230	Photointerrupter - L Type	55-33
52155230	Photointerrupter - L Type	59-24
52155234	Erase Lamp Board	13-13
52155236	AC Drive Board - 220/240V	35- 2
52155236	AC Drive Board - 220/240V	73- *
52155240	Feed Control Board	33- 2
52155240	Feed Control Board	75- *
52155250	Thermistor	17-39
52155260	Fiber Input Connector	69- 2
52155275	Thermal Block Harness	33-29
52155282	Optics Harness	25-19
52155294	Lens Drive Motor - DC 6W	27-33
52155296	Mirror Drive Motor - DC 7.5W	27-28
52155300	Scanner Drive Motor - DC55W	25-39
52155301	Scanner Drive Motor - DC55W - ROC	25-39
52155303	Exposure Lamp - 85V/250W	25- 3
52155304	Toner Overflow Sensor	15-27
52155307	Fusing Lamp - 115V	17-25
52155309	Fusing Lamp - 220/240V	17-25
52155314	Magnetic Clutch	9-61
52155314	Magnetic Clutch	37-56
52155314	Magnetic Clutch	43-20
52155314	Magnetic Clutch	45-50
52155314	Magnetic Clutch	57-38
52155351	Stabilizer	33- 6
52155361	Power Pack - C/B	33- 3

Parts No.	Description	Page and Index No.
52155362	Power Pack - T/S/PCC	33- 8
52155370	Drum Heater - 8W	13-55
52155371	Grounding Wire	13-59
52155390	Thermofuse	17-17
52155410	Main Motor - AC 48W	15- 6
52155411	Main Motor - AC 48W UL	15- 6
52155422	Cooling Blower - AC 24/22W	27-42
52155423	Outlet Fan Motor - AC 24/22W	15-20
52155426	Vacuum Fan Motor - 14/12W	15-33
52155431	Pre-Transfer Lamp - 430V/1.3W	11- 3
52155432	Quenching Lamp - 430V/1.3W	13-33
52155436	Cement Registor	35- 9
52155447	DC Harness	33-18
52155447	DC Harness	35-11
52155447	DC Harness	89- 1
52155449	Relay Harness	35-13
52155453	Toner End Harness	9-60
52155454	Front Door Harness	35- 5
52155458	Safety Switch Harness	35- 6
52155459	AC Harness	35-12
52155459	AC Harness	91- 1
52155464	Fusing Harness	17-59
52155468	Home Position Sensor Harness	27-41
52155471	Shorting Connector	33-19
52155472	Harness - Exhaust Relay	35-14
52155495	Transformer Harness - 220/240V	9-41
52155496	Lower Paper Feed Harness	9-21
52155530	Power Supply Unit	35-10
52155531	Pre-Transfer Lamp 430 V/1.3W	11-3
52155532	Quenching Lamp 430 V/1.3W	13-33
52155660	OP Panel Cover	5A-59
52155666	Slide Cover Guide	5-44
52155667	Slide Cover	5-45
52155668	Right Spring Plate	5-47
52155669	Left Spring Plate	5-46

Parts No.	Description	Page and Index No.
52155670	DIP Switch Cover	5-52
52155671	Instruction Cards Cover	5-3
52155672	Display	5-48
52155673	Decal - Monitor Board	5-53
52155673	Decal - Monitor Board	105-12
52155675	Program Cover - LT/LDG	5-10
52155676	Ten Key Cover - LT/LDG	5-9
52155677	ADS Cover - LT/LDG	5-8
52155678	2 Single Copies Cover - LT/LDG	5-7
52155679	Size Cover - LT/LDG	5-43
52155680	Margin Cover - LT/LDG	5-6
52155681	Cover - A	5-5
52155682	Cover - B	5-2
52155685	Key Top - Start	5-41
52155686	Key Top - Program	5-28
52155687	Key Top - Clear Mode	5-42
52155688	Key Top - Interrupt	5-27
52155689	Key Top - Recall	5-25
52155689	Key Top - Recall	5-26
52155690	Key Top - 0	5-40
52155691	Key Top - 1	5-22
52155692	Key Top - 2	5-23
52155693	Key Top - 3	5-24
52155694	Key Top - 4	5-34
52155695	Key Top - 5	5-36
52155696	Key Top - 6	5-38
52155697	Key Top - 7	5-33
52155698	Key Top - 8	5-35
52155699	Key Top - 9	5-37
52155700	Key Top - C/S	5-39
52155701	Key Top - ADS	5-21
52155702	Key Top - Lighter	5-20
52155703	Key Top - Darker	5-19
52155704	Key Top - Select Cassette	5-18
52155705	Key Top - Full Size	5-17

Parts No.	Description	Page and Index No.
52155706	Key Top - Enlarge	5-16
52155707	Key Top - Reduce	5-15
52155708	Key Top - Select Original	5-14
52155709	Key Top - 2 Single Copies	5-32
52155710	Key Top - Zoom Up	5-31
52155711	Key Top - Zoom Down	5-30
52155712	Key Top - Size Magnification - US	5-29
52155713	Key Top - Margin - 115V	5-12
52155716	Key Top - Decimal Point	5-25
52155731	Program Cover - A4/A3	5-10
52155732	Ten Key Cover - A4/A3	5-9
52155733	ADS Cover - A4/A3	5-8
52155734	2 Single Copies Cover - A4/A3	5-7
52155735	Size Cover - A4/A3	5-43
52155736	Margin Cover - A4/A3	5-6
52155740	Key Top - Size Magnification	5-29
52155741	Key Top - Front Margin - 220/240V	5-12
52155742	Key Top - Back Margin - 220/240V	5-12
52155755	Ten Key Cover - ROC	5-9
52155756	Size Cover - ROC	5-43
52155757	Margin Cover - ROC	5-6
52155803	Feed Control Holder	33- 1
52155804	AC Drive Board Bracket	35- 1
52155805	C/B Power Pack Bracket	33- 4
52155807	Power Cord Bracket - 115V	33-21
52155808	Power Cord Bracket - 220/240V	33-21
52155810	Stabilizer Bracket	33- 7
52155813	Power Relay Bracket	35- 8
52155814	Control Board Bracket	33-17
52155818	Connector Unit Bracket	17-58
52155819	Harness Cover Angle - Front	29-20
52155820	Harness Cover Angle - Rear	29-21
52155821	Power Supply Unit Cover	29-23
52155822	Safety Switch Bracket	35- 4
52155824	Safety Switch Lever	35- 3

Parts No.	Description	Page and Index No.
52155825	Fusing Connector Bracket	29-10
52155827	Control Board Angle	33-16
52155828	Harness Holder Angle	33- 5
52155832	Transformer Bracket	33-26
52155837	Outlet Fan Relay Bracket	35- 7
52155841	Counter Bracket	33- 9
52158751	Installation Procedure - English	3-*
52158752	Installation Procedure - 5 Languages	3-*
52158761	Operating Instructions - English	105-22
52158763	Operating Instructions - German	105-22
52158764	Operating Instructions - French	105-22
52158765	Operating Instructions - Italian	105-22
52158766	Operating Instructions - Spanish	105-22
52158770	Instruction Cards - LT/LDG	5-4
52158771	Instruction Cards - A4/A3	5-4
52158773	Instruction Cards - German	5-4
52158774	Instruction Cards - French	5-4
52158775	Instruction Cards - Italian	5-4
52158776	Instruction Cards - Spanish	5-4
52158777	Instruction Card - U.S.	5-4
52159002	Hot Roller Stripper (6pcs/set)	19- 6
52159003	Seal - Cleaning Unit	23- 2
52159500	DG Gauge (2 PCS/1 Set)	107- 1
52159501	Toner Collection Bottle	15-29
52159502	Duplex Transport Tool	61-61
52159503	Special Scanner Lock	25-47
52175132	AC Control Board	5-49
52175250	Ten Key Board LT/LDG	5-57
52175251	Display Board LT/LDG	5-56
52175252	Control Board	5-55
52192213	Support Stay	61-60

Parts No.	Description	Page and Index No
59181125	Original Feed Belt	55-36
59181556	Belt Stay	55-39
59182101	Separation Roller Shaft	53-50
59182102	Adjusting Plate	53-42
59182103	Eccentric Cam Shaft	53-52
59182105	Eccentric Cam	53-38
59182106	One Way Bearing Lever	53-43
59182108	Adjusting Plate	53-57
59182150	Feed-in Stopper	53-45
59182155	Registration Roller	53- 1
59182156	Gear - 24T	53-36
59182158	Pulley - 25T	53-34
59182159	Gear - 24T	53-31
59182163	Clutch Spring	53-33
59182164	Clutch Sleeve	53-32
59182168	Release Lever Shaft	53- 6
59182170	Front Release Lever	53-55
59182172	Rear Release Lever	53- 7
59182210	Collar - 6mm	53-54
59182215	Pick-up Roller Bracket	53-18
59182220	Pick-up Roller Shaft	53-16
59182223	Pulley - 24T	53-21
59182224	Feed Roller Shaft	53- 9
59182225	Front Feed-in Guide	53- 8
59182226	Rear Feed-in Guide	53-13
59182230	Gear - 45T	53-35
59182250	Sensor Actuator	53-46
59182252	Right Stay	53-47
59182260	Feed-in Sensor Feeler	53-48
59182275	Timing Belt Tightner	55-32
59182285	Tightener Stud	55-31
59182289	Spring	55-29
59182292	Pulley - 15T	55-13
59182295	Pulley - 79T	55-17
59182301	Motor Bracket	55-12

Parts No.	Description	Page and Index No.
59182307	Spring - Drive Motor Tension	55-15
59182311	Middledrive Shaft	55- 6
59182313	Pulley - 30T	55-11
59182314	Timing Belt - MM63	55-10
59182316	Timing Belt - P2M 208	55-16
59182317	Gear - 19T	55- 7
59182318	Gear - 19T	55-35
59182321	Timing Belt Tightner	55-14
59182324	Solenoid Bracket	55-24
59182325	Stopper Lever	55-25
59182327	Release Lever	55-30
59182330	Clutch Lever	55-22
59182340	Release Arm	53-37
59182349	Feed-in Motor Ass'y - DC24V	55-27
59182355	Feed-in Motor Bracket	55-28
59182370	Pick-up Solenoid Bracket	53-24
59182371	Pick-up Lever	53-26
59182372	Stopper Lever	53-30
59182373	Stopper Bracket	53-29
59182375	Pick-up Control Shaft	53-22
59182380	Sensor Bracket	55-34
59182385	Harness Backet Ass'y	55-26
59182390	Display Board Bracket	51- 8
59182520	Upper Feed-in Guide	53- 5
59182610	Lower Feed-in Guide	53-68
59182615	Spring Plate	53-60
59182616	Middle Spring Plate	53-59
59182621	Entrace Guide	53-62
59182623	Paper Guide Mylar	53-65
59182624	Seal - 12 x 17 x 0.7 mm	53-64
59182645	Key top	51- 7
59182711	Original Feed Table - LT/LDG	51-11
59182712	Original Feed Table - A4/A3	51-11
59182725	Mylar - Feed In	51-10
59182730	Front Original Guide	51-15

Parts No.	Description	Page and Index No.
59182740	Rear Original Guide	51-13
59182755	Original Table Cover	51-18
59182760	Original Table Extender	51-24
59182770	Extender Spring Plate	51-25
59182775	Front Table Bracket	51-17
59182776	Front Table Bracket	51-16
59182781	Decal - Feed-in	53-53
59183007	Belt Unit Holder - A	55-49
59183040	Shoulder Screw - M4	51-60
59183092	Belt Unit Holder - B	55-54
59183093	Link	55-52
59183120	Stud - M4	55- 8
59183125	Stud - M4	55-45
59183146	Gear - 16T/33T	55- 4
59183156	Left Bracket - Torsion Spring	51-41
59183160	Right Bracket - Torsion Spring	51-26
59183210	Right Brake Plate	51-35
59183217	Left Brake Plate	51-40
59183225	Brake Pad Plate	51-39
59183230	Left Mounting Post	51-34
59183235	Right Mounting Post	51-27
59183243	Left Spring Pipe	51-32
59183244	Right Spring Pipe	51-28
59183245	Spring Holder	51-30
59183246	Torsion Spring - 1.0 mm	51-33
59183255	Brake Plate Bracket	51-56
59183261	Brake Plate Stopper	51-55
59183351	Front Frame	55-47
59183355	Right Frame	53-44
59183365	Belt Release Bracket	55-53
59183369	Belt Drive Roller	55-37
59183370	Belt Roller	55-55
59183380	Spring - Floating Roller	55-44
59183381	Floating Roller	55-41
59183382	Belt Stopper	55-40

Parts No.	Description	Page and Index No.
59183383	Holder - Floating Roller	55-43
59183385	Belt Unit Stay	55-46
59183390	Grip plate	51-53
59183394	Seal - 15 x 30mm	51-54
59183395	Front Belt Unit Plate	55-48
59183516	Exit Drive Motor - DC1.69W	55- 2
59183523	Exit Motor Bracket	55- 3
59183536	Exit Roller	55-57
59183537	Lower Exit Roller	55-56
59183538	Gear - 38T	55- 9
59183539	Gear - 44T	55-20
59183561	Left Exit Guide	55-62
59183562	Antistatic Brush	55-63
59183563	Left Frame	55-64
59183566	Right Exit Guide	55-60
59183585	Upper Exit Roller	55-65
59183749	DF Cover Ass'y - 220/240V	51- 1
59183750	DF Cover Ass'y - 115V	51- 1
59183762	Display Panel	51- 2
59183770	Grip	51-50
59183855	Spring - Flip Scale	51-49
59183875	Original Exit Guide	51-48
59183881	DF Mounting Bracket - Left	29- 7
59183890	DF Mounting Bracket - Right	29- 8
59183911	Flip Scale - LT/LDG	51-51
59183912	Flip Scale - A4/A3	51-51
59183981	Decal - Misfeed Removal	51-58
59183986	Decal - Dip SW	51-59
59184002	ADF Key Cover - English	51-47
59184003	ADF Key Cover - International	51-47
59184020	Option Key Top	47-52
59184020	Option Key Top	51-46
59184226	Multilanguage Decal	51- *
59185501	Stopper Solenoid	53-23
59185515	Pick-up Solenoid	53-25

Parts No.	Description	Page and Index No.
59185516	Release Solenoid	55-23
59185525	Registration Solenoid	55-18
59185601	DF Main Board	51- 6
59185601	DF Main Board	83- *
59185605	IC - HN482764G-3	83- 1
59185621	Display Board	51- 9
59185631	Paper Size Sensor	53- 2
59185701	IC - HCTL-1	83- 2
59185702	IC - HCTL-2	83- 3
59185711	Fiber Output Connector	51- 4
59185711	Fiber Output Connector	87- 2
59185712	Fiber Input Connector	51- 5
59185712	Fiber Input Connector	87- 3
59185721	Photosensor	53- 3
59185721	Photosensor	55-58
59185801	Interface Harness	51- 3
59185811	Main Harness	55- 1
59185811	Main Harness	99- 1
59185821	Registration Sensor Harness	53- 4
59185825	Exit Sensor Harness	55-59
59188751	Installation Procedure - English	51- *
59188752	Installation Procedure - Europe	51- *

Parts No.	Description	Page and Index No.
59192055	Release Bar Bracket	61-39
59192075	Junction Gate	57- 8
59192077	Duplex Transit Drive Roller	61- 1
59192078	Entrance Relay Roller	57- 7
59192080	Duplex Entrance Roller	57-13
59192081	Upper Relay Roller	61-28
59192082	Lower Relay Roller	61-50
59192083	Spring - Relay Roller	61-19
59192088	Entrance Roller Stay	57-11
59192091	Upper Entrance Guide	57- 1
59192092	Lower Entrance Guide	57- 3
59192095	Upper Transport Plate	61-32
59192100	Upper Feed Guide Plate	61-43
59192101	Lower Feed Guide Plate	61-54
59192103	Duplex Feed Shaft	57-30
59192104	Duplex Feed Guide	61-55
59192105	Friction Pad Arm	61-51
59192106	Holder - Friction Pad	61-48
59192109	Duplex Sensor Feeler	57-12
59192115	Duplex Entrance Feeler	57-10
59192120	Entrance Feeler Bracket	57-14
59192121	Duplex Entrance Actuator	57-46
59192123	Duplex Exit Actuator	57-49
59192125	Positioning Roller Shaft	57-25
59192127	Positioning Roller Pulley	57-26
59192128	Positioning Roller Arm	57-24
59192132	Positioning Roller Belt	57-27
59192135	Solenoid Bracket	57-42
59192137	Positioning Roller Solenoid	57-43
59192141	Arm Shaft	61-52
59192142	Feed-in Tray Arm	61-53
59192144	Feed-in Tray Lever	61-21
59192146	Pressure Lever	61-42
59192147	Spring Hook	61-40
59192148	Spring - Feed-in Tray	61-41
59192153	Adjusting Plate Bracket	57-66

Parts No.	Description	Page and Index No.
59192162	Jogger Stay	59-32
59192168	Jogger Motor Bracket	59-22
59192169	Wire Drive Pulley	59-23
59192171	H.P. Sensor Bracket	59-25
59192172	Jogger Wire	59-28
59192192	Lower Entrance Relay Guide	57- 4
59192195	Duplex Exit Drive Roller	57- 9
59192197	Exit Roller Guide Plate	57- 2
59192199	Duplex Turn Guide	61- 3
59192201	Shoulder Screw - M4	61- 4
59192202	Turn Guide Holder	61-31
59192203	Turn Guide Cover	61-36
59192211	Lower Transport Plate	61-30
59192216	Duplex Transport Roller	61-25
59192218	Bushing - 4 x 7 x 10MM	57-22
59192218	Bushing - 4 x 7 x 10MM	59- 8
59192218	Bushing - 4 x 7 x 10MM	61-24
59192220	Front Transport Side Plate	61-34
59192225	Rear Transport Side Plate	61- 5
59192229	Stopper Plate	61-35
59192231	Upper Entrance Guide Plate	57-21
59192235	Entrance Roller Cover	57-17
59192238	Duplex Exit Guide Plate	59- 6
59192241	Duplex Exit Roller	57-19
59192241	Duplex Exit Roller	59- 4
59192243	Front Spring Plate	57-18
59192243	Front Spring Plate	59- 3
59192243	Front Spring Plate	61-27
59192244	Rear Spring Plate	59- 5
59192244	Rear Spring Plate	61-26
59192247	Motor Sprocket - 50/60Hz	59-13
59192249	Sprocket - 16T	61-13
59192251	Sprocket - 16T	57- 5
59192251	Sprocket - 16T	61- 7

Parts No.	Description	Page and Index No.
59192252	Gear & Sprocket - 20T/60T	57-41
59192255	Solenoid - Feed-in Tray Clutch	61- 8
59192258	Spring - Feed-in Tray Clutch	61- 9
59192260	Gear - 58T	61-15
59192262	Feed-in Tray Cam	61-18
59192264	Clutch Sleeve	61-17
59192265	Junction Gate Solenoid - 220/240V	59-12
59192267	Chain Tightener	57-34
59192267	Chain Tightener	61-10
59192270	Feed Clutch Stopper	57-36
59192270	Feed Clutch Stopper	61-56
59192271	Relay Clutch Stopper	61-23
59192274	Solenoid Bracket	59-11
59192277	Entrance Sensor Bracket	57-45
59192278	Exit Sensor Bracket	57-48
59192279	Solenoid Stopper	59-16
59192280	Duplex Tray	59-33
59192281	Duplex Tray Holder	59- 9
59192282	Junction Gate Solenoid - 115V	59-12
59192283	Cover Bracket	59- 7
59192284	Spring - Junction Gate Solenoid	59-15
59192287	Front Cover - 220/240V	59-35
59192288	Rear Cover - 220/240V	59-10
59192289	Duplex Tray Cover	59-37
59192290	Duplex Tray Cover Holder	59-26
59192293	Transport Release Bar	61-38
59192294	Duplex Lower Cover	59-30
59192296	Duplex Exit Guide Plate	59- 2
59192298	Safety Switch Cover - 220/240V	59-41
59192301	Safety Switch Bracket	59-38
59192302	Safety Switch Actuator	59-40
59192303	Actuator Shaft	59-39
59192305	Harness Cover	57-37
59192305	Harness Cover	61-57
59192307	Spring - Duplex Transport	61-29

Parts No.	Description	Page and Index No.
59192309	Mylar Exit Guide	57-54
59192310	Mylar - 14 x 42 mm	57-51
59192312	Decal - D2	61-33
59192314	Decal - Duplex Exit	59- 1
59192315	Decal - Duplex Entrance	57-15
59192316	Decal - C2	57-16
59192328	Decal - D1	61-58
59192341	Duplex Key Cover - English	57-52
59192342	Duplex Key Cover - International	57-52
59192355	Duplex Key Top	57-53
59192364	Rubber Collar - 4.5 x 8 x 8 mm	61-59
59192371	Decal - Removing Misfed Paper C	59-34
59192714	Jogger Unit Base	59-27
59194226	Multilanguage Decal	57-*
59194227	Multilanguage Decal	57-*
59194287	Front Cover - 115V	59-35
59194288	Rear Cover - 115V	59-10
59194298	Safety Switch Cover - 115V	59-41
59195309	Stepper Motor - DC24V	59-21
59195425	Feed-in Relay Clutch	61-12
59195430	DC Harness	59-19
59195430	DC Harness	101- 1
59195431	AC Harness	59-20
59195431	AC Harness	101- 2
59195705	Duplex Drive Motor - AC 6.3W	59-14
59198751	Installation Procedure - English	57-*
59198752	Installation Procedure - Europe	57-*

Parts No.	Description	Page and Index No.
59201050	Expansion Relay Unit	41- *
59202115	Front Cassette Holder	37-22
59202115	Front Cassette Holder	43-56
59202115	Front Cassette Holder	45-29
59202125	Rear Cassette Holder	43-39
59202125	Rear Cassette Holder	45-30
59202129	Right Paper Guide	43-63
59202135	Feed Relay Roller - 4th Feed	43-68
59202137	Paper Guide Plate	43-40
59202137	Paper Guide Plate	45-28
59202139	Sensor Feeler Cover	37-51
59202139	Sensor Feeler Cover	43-34
59202139	Sensor Feeler Cover	45-13
59202140	Lock Stud	43-70
59202143	Lock Arm	43-71
59202144	Spring - Lock	43-72
59202145	Guide Arm	43-69
59202146	Front Cover - 4th Feed	43-73
59202147	4th Feed Grip	43-74
59202151	Actuator Plate	43-28
59202162	Decal 4th Feed	43-76
59202240	Top Stay	45- 4
59202246	Spring Plate	45- 5
59202251	Feed Relay Drive Roller	43- 5
59202252	Left Paper Guide	43- 4
59202255	Motor Bracket	45-45
59202256	Motor Pulley	45-48
59202260	Tightener Bracket	45-51
59202264	Spring - Tightener	45-42
59202266	Gear - 34T	45-54
59202267	Spring	45-55
59202268	Pulley - 13T/24T	45-56
59202269	Timing Belt - 160XL	45-47
59202270	Front Guide Plate	43-61
59202273	Guide Rail	43-60

Parts No.	Description	Page and Index No.
59202279	Bank Docking Bracket	43-10
59202280	Rear Side Plate - 4th Feed	43- 8
59202291	Inner Plate	45-32
59202292	Clutch Stopper	45-57
59202293	Nylon Washer	43-14
59202294	Support Bracket	45-27
59202296	Guide Cover	43-58
59202310	4th Feed Upper Stay	43- 7
59202322	Front Right Cover	43-75
59202330	Rear Right Cover - 220/240V	43-27
59202335	Rear Right Cover - 115V	43-27
59202340	Left Cover	43- 3
59202350	Rear Cover - 220/240V	43-26
59202355	Rear Cover - 115V	43-26
59202391	Relay Feed Guide	41- 3
59202418	Mylar Seal - Guide Plate	41-19
59202421	Expansion Relay Drive Roller	41-16
59202426	Expansion Relay Roller	41- 1
59202427	Guide Plate Collar	41- 4
59202430	Guide Plate Bushing	41- 9
59202431	Guide Plate Lever	41- 8
59202432	Spring - Guide Plate	41-10
59202433	Spring - Guide Plate	41- 5
59204226	Multi-Lingual Decal	41- *
59205101	Paper Bank Board	43-11
59205101	Paper Bank Board	79- *
59205201	5th Feed Harness - Paper Size	45-38
59205201	5th Feed Harness - Paper Size	95- 1
59205202	4th Feed Harness	43-46
59205202	4th Feed Harness	95- 2
59205203	5th Feed Harness - Paper Feed	43-57
59205203	5th Feed Harness - Paper Feed	95- 3
59205204	5th Feed Harness	43- 9
59205204	5th Feed Harness	95- 4
59205210	Expansion Relay Harness	41-12

Parts No.	Description	Page and Index No.
59205210	Expansion Relay Harness	95- 5
59205220	Bank AC Harness	45-59
59205220	Bank AC Harness	95- 6
59205221	Relay AC Harness - 115V	45-58
59205221	Relay AC Harness - 115V	95- 7
59205222	Relay AC Harness - 220/240V	45-58
59205222	Relay AC Harness - 220/240V	95- 7
59205400	Drive Motor - AC 4.1W	45-46
59208751	Installation Procedure - English	41- *
59208752	Installation Procedure - 5 Languages	41- *

Parts No.	Description	Page and Index No.
59221032	Copier Relay Feed Unit	39- *
59221125	3rd Paper Feed Unit	37-74
59222062	Sensor Actuator	39-11
59222062	Sensor Actuator	41- 6
59222062	Sensor Actuator	43-67
59222066	Sensor Feeler	39-13
59222066	Sensor Feeler	41-13
59222066	Sensor Feeler	43-66
59222067	Feeler Shaft	39-12
59222067	Feeler Shaft	41-15
59222067	Feeler Shaft	43-65
59222070	Left Guide - Copier Relay Feed	39- 2
59222081	Copier Relay Drive Roller	39-17
59222082	Copier Relay Roller	39- 1
59222085	Spring - Relay Guide	39- 9
59222090	Stud Bracket	39- 6
59222093	Gear - 28T	39- 4
59222094	Gear - 40T	37- 6
59222094	Gear - 40T	39- 7
59222095	Spring - Gear	39- 5
59222097	Relay Guide Lever	39-14
59222099	Gear - 32T	31-59
59222099	Gear - 32T	43-21
59222099	Gear - 32T	45-39
59222211	Front Side Plate	37-21
59222220	Rear Side Plate	37-57
59222224	3rd Paper Feed Guide	37-39
59222225	Paper Feed Guide	37-46
59222225	Paper Feed Guide	43-32
59222225	Paper Feed Guide	45- 7
59222229	Upper Paper Guide	37-53
59222229	Upper Paper Guide	43-33
59222229	Upper Paper Guide	45-14
59222231	Gear - 32T	37-54
59222233	Gear - 46T	37-55
59222236	Feed Roller Shaft	37-50
59222342	Pad Mounting Plate	43-35
59222342	Pad Mounting Plate	45-25

Parts No.	Description	Page and Index No.
59222236	Feed Roller Shaft	43-15
59222236	Feed Roller Shaft	45- 6
59222237	Sensor Bracket	37-63
59222237	Sensor Bracket	43-25
59222237	Sensor Bracket	45-43
59222238	PCB Bracket	37-65
59222240	Stud Bracket	37- 7
59222332	Copier Relay Feed Guide	39-18
59222333	Expansion Relay Feed Guide	37- 5
59222333	Expansion Relay Feed Guide	45- 2
59222334	Lower Guide Plate	37- 8
59222334	Lower Guide Plate	45- 1
59222335	Guide Plate Holder	37-75
59222335	Guide Plate Holder	45-61
59222336	Expansion Guide Plate	37- 9
59222340	Paper End Feeler	37-52
59222340	Paper End Feeler	43-19
59222340	Paper End Feeler	45-12
59222343	Pad Mounting Plate	37-38
59222343	Pad Mounting Plate	43-35
59222343	Pad Mounting Plate	45-25
59222344	Size Sensor Bracket	37-32
59222346	Pad Mounting Bracket	43-35
59222346	Pad Mounting Bracket	45-25
59222372	Rear Cassette Holder	37-40
59222384	Left Cover	37- 2
59222385	Rear Cover	37-11
59222391	Cover Bracket	37-13
59222395	Safety Switch Bracket	37-26
59222396	Switch Actuator	37-25
59222450	Front Cover	37-18
59222451	Front Right Cover	37-17
59222452	Rear Right Cover	37-66
59222456	Decal - Misfeed D	37-72
59222457	Decal - Misfeed E	37-73
59222346	Pad Mounting Plate	37-38
59222346	Pad Mounting Plate	43-35
59222346	Pad Mounting Plate	45-25

Parts No.	Description	Page and Index No.
59222635	Expansion Unit Handle	37- 1
59222636	Rubber Seal	37-12
59222636	Rubber Seal	45- 3
59222637	Rubber Seal	37- 4
59222665	Duplex Shipping Plate - Front	37-16
59222667	Duplex Shipping Plate - Left	37- 3
59222670	Expansion Docking Plate	43- 1
59222671	Expansion Docking Bracket	43- 2
59225101	3rd Paper Feed Board	37-64
59225101	3rd Paper Feed Board	77- *
59225200	Interface Harness	37-61
59225200	Interface Harness	43- 6
59225200	Interface Harness	93- 1
59225200	Interface Harness	95- 8
59225201	3rd Feed Sensor Harness	37-34
59225201	3rd Feed Sensor Harness	93- 2
59225202	Clutch Harness	37-60
59225202	Clutch Harness	93- 3
59225203	Safety Switch Harness	37-33
59225203	Safety Switch Harness	93- 4
59225204	Copier Relay Harness	39-16
59225300	Relay Feed Clutch	39- 8
59225300	Relay Feed Clutch	41-17
59225300	Relay Feed Clutch	43-12
59228751	Installation Procedure - English	37- *

Parts No.	Descript	Page and Index No.
59245103	IC - UPD8041AC	87- 1
59252102	Pick-up Roller Holder	63-19
59252105	Pick-up Roller	63-25
59252111	Pick-up Drive Pulley	63-23
59252113	Spring - Pick-up Roller	63-20
59252114	Pick-up Drive Belt	63-24
59252122	Sensor Bracket	63-16
59252124	Paper End Feeler	63-21
59252126	Sensor Actuator	63-14
59252129	Harness Cover	63-13
59252133	Snap Collar	63-18
59252203	Front Bracket	65-28
59252204	Rear Bracket	65-29
59252211	Front Side Plate	65- 9
59252211	Front Side Plate	67-22
59252216	Rear Side Plate	67- 7
59252222	Feed-in Guide	65- 8
59252223	Paper Size Dial	67-28
59252224	Pad - 19 x 38 mm	65-32
59252226	Inner Cover	65- 4
59252232	Side Cover	63- 4
59252233	Side Cover Plate	65-31
59252235	Dial Shaft	67-29
59252239	Drive Gear Shaft	67- 5
59252241	Drive Wire	67-11
59252246	Drive Pulley	67- 9
59252247	Drive Shaft	67-20
59252249	Side Guide Shaft	65-19
59252251	Front Wire Tightener	67-21
59252253	Rear Wire Tightener	67-15
59252255	Side Guide Stopper	65-10
59252257	Left Lift Stay	65-17
59252261	Tray Bottom Plate	65- 7
59252264	PCB Bracket	67-25
59252266	Power Cord Bracket	67-19

Parts No.	Description	Page and Index No.
59252292	Decal - Instructions	63- 8
59254226	Multi-Lingual Decal	63- *
59255101	Tray Control Board	67-26
59255101	Tray Control Board	85- *
59255200	Interface Harness	103- 1
59255201	DC Harness	103- 2
59255202	Pick-up Harness	63-12
59255202	Pick-up Harness	103- 3
59255211	AC Harness - 115V	67-18
59255211	AC Harness	103- 4
59255212	Safety Switch Harness	67-17
59255212	Safety Switch Harness	103- 5
59255215	AC Harness - 220/240V	67-18
59255216	Noise Filter Harness	67-39
59258751	Installation Procedure - English	63- *
59258752	Installation Procedure - 5 Language	63- *

Parts No.	Description	Page and Index No.
68031131	Base Plate	47-29
68031141	Upper Support Plate	47- 3
68031151	Mounting Stay	47-34
68031161	Upper Mounting Stud	47-35
68032111	Lower Guide Plate	47-28
68032211	Upper Guide Plate	47-42
68032221	Guide - Upper Guide Plate	47-37
68032231	Bushing - 4 x 6 x 5 mm	47-38
68032241	Upper Exit Roller	47-39
68032251	Antistatic Brush	47-41
68032261	Dumper - Upper Guide Plate	47-36
68032271	Lever - Upper Guide Plate	47-12
68032272	Arm - Upper Guide Plate	47-15
68032273	Stepped Screw - M4	47-16
68032311	Cover - Electrical Section	47-26
68032410	Lower Exit Roller	47-43
68032415	Drive Pulley	47-33
68033211	Sorter Bin - Bottom	47- 5
68033311	Transfer Wheel Shaft	47-11
68033316	Lift Bar	47-40
68033321	Front Transfer Wheel	47-49
68033326	Rear Transfer Wheel	47-17
68033331	Transfer Wheel Shaft	47-44
68033411	Lever - Home Position Sensor	47-22
68033412	Stepped Screw - M4	47-21
68033413	Lever Spring	47-23
68033414	Lever Stopper	47-24
68033421	Half Turn Sensor	47-20
68034211	Pulley - 18T	47-47
68034216	Pulley	47-31
68034216	Pulley	49- 8
68034311	Timing Belt - 94 x L	47-48
68034316	O-ring	47-32
68034411	Cover Bracket	47-30
68034431	Bracket - Safety Switch	47- 9

Parts No.	Description	Page and Index No.
68034441	Cover Bracket	47-25
68035400	Bin Motor - AC 14/17W	47-46
68035410	Paper Exit Motor	47-45
68035410	Paper Exit Roller	49-11
68035430	Paper Exit Sensor	47-27
68035500	Bin Motor Board	47-10
68035500	Bin Motor Board	81- *
68035600	Main Harness	97- 1
68035610	Interface Harness	97- 2
68036111	Front Cover	47-50
68036211	Rear Cover	47-14
68036311	Upper Cover	47- 2
68036411	Insurating Plate	47- 8
68036517	Installation Procedure - 115V	47- *
68036527	Installation Procedure - 220V	47- *
68036613	Multi-Lingual Decal	47- *
68036911	Hinge - Upper Cover	47- 3
68037512	Sorter Key Cover - English	47-53
68037513	Sorter Key Cover - International	47-53

Parts No.	Description	Page and Index No.
68051211	Lower Guide Plate	49- 3
68051221	Upper Guide Plate - Small	49- 4
68051231	Upper Guide Plate - Large	49- 1
68051241	Transport Roller	49-12
68051311	Pulley - 6 x 25 x 11MM	49- 6
68051321	O-Ring - 3 x 225.8 mm	49- 9
68051611	Front Cover	49-13
68051621	Rear Cover	49-10
68051631	Rear Cover Bracket	49- 5

Parts No.	Description	Page and Index No.
50530223	Bushing - 8mm	9-32
50530223	Bushing - 8mm	17-31
50530223	Bushing - 8mm	31-38
50530223	Bushing - 8mm	37-49
50530223	Bushing - 8mm	39-10
50530223	Bushing - 8mm	43-13
50530223	Bushing - 8mm	45- 8
50530223	Bushing - 8mm	57-39
50530223	Bushing - 8mm	61-14
50530223	Bushing - 8mm	67- 4
50530233	Bracket - Blower	53-11
50530419	Bushing - 10mm - Long - 7mm	67-10
50530447	Bushing - 6mm	9- 5
50530447	Bushing - 6mm	15-14
50530447	Bushing - 6mm	19-15
50530447	Bushing - 6mm	27-30
50530447	Bushing - 6mm	31-14
50530447	Bushing - 6mm	39- 3
50530447	Bushing - 6mm	41- 2
50530447	Bushing - 6mm	47-18
50530447	Bushing - 6mm	49- 7
50530447	Bushing - 6mm	53-17
50530447	Bushing - 6mm	55-66
50530447	Bushing - 6mm	57- 6
50530447	Bushing - 6mm	61- 2
50530465	Spring Clutch	61-16
50540197	Bushing - 8 x 15 x 5 mm	63-22
50540440	Magnet Catch Ass'y	51-52
50540536	Magnet Catch Ass'y	3-40
50540536	Magnet Catch Ass'y	37-14
50540536	Magnet Catch Ass'y	67-24
50560509	Nut Plate - Microswitch	51-57
52012832	Spring -Cassette Release	53-58
52034146	Thermistor Spring	17-41
52039501	Grease 501	107- 6

Parts No.	Description	Page and Index No.
52051083	Sprocket - 30T/50Hz	31-33
52051084	Sprocket - 27T/60Hz	31-33
52051099	Fusing Drive Shaft	31-37
52051105	Chain Tightener	31-27
52051121	Belt Tightener	31-29
52051127	Timing Belt	31-30
52051333	ADF Screw	3-5
52051336	Front Cover Chain	21-13
52051691	Stud Bracket	25-17
52051694	Adjusting Cam - Start Lever	25-18
52051751	Lens - F8/180	27- 8
52051768	Rubber Seal - Mirror	27-10
52051793	Shielding - Guide	27- 5
52051794	Left Shield	27- 7
52051797	Right Shield	27- 6
52051845	4th Mirror	27-39
52051847	Spring Plate	27-38
52051848	Front Spring Plate - 4th Mirror	27-40
52051869	Scanner Drive Pulley	25-40
52051914	Harness Holder	33-12
52051923	Spacer - 12.5 x 19 x 1MM	25-30
52051990	Pulley	27-25
52052069	Adjusting Screw	13- 7
52052121	Spring Plate	13-36
52052697	Bushing - Upper Registration Roller	11-11
52052697	Bushing - Upper Registration Roller	43-62
52052697	Bushing - Upper Registration Roller	61-20
52052698	Relay Roller Spring	43-64
52052850	Paper End Bushing	57-47
52052866	Magnetic Clutch Collar	9-62
52052960	Actuator - A3	7-26
52052961	Actuator - B4	7-26
52052962	Actuator - A4R	7-26
52052963	Actuator - A5R	7-26
52052964	Actuator - A4	7-26
52052965	Actuator - B5	7-26

Parts No.	Description	Page and Index No.
52052966	Actuator - A5	7-26
52052967	Actuator - A5R	7-26
52052968	Actuator - B6	7-26
52052969	Actuator - A6R	7-26
52052970	Actuator - LG	7-26
52052971	Actuator - 11 x 17	7-26
52052972	Actuator - 11 x 15	7-26
52052973	Actuator - 11 x 14	7-26
52052974	Actuator - 8-1/2 x 13	7-26
52052975	Actuator - 8-1/4 x 13	7-26
52052976	Actuator - 8 x 13	7-26
52052977	Actuator - 8 x 10-1/2	7-26
52052978	Actuator - 8 x 10	7-26
52052979	Actuator - 11 x 8-1/2	7-26
52052992	Actuator - 5-1/2 x 8-1/2	7-26
52052993	Actuator - 8-1/2 x 5-1/2	7-26
52052996	Actuator - 8-1/2 x 11R	7-26
52052997	Actuator - 8-1/2 x 14	7-26
52053103	Bushing - 6mm	21-16
52053306	Gear - 18T	21-37
52053306	Gear - 18T	31- 1
52053467	Boss - Toner Supply Clutch	31- 8
52053551	Cleaning Unit Casing	23- 1
52053561	Holder	23-20
52053565	Cleaning Blade	23-13
52053575	Cleaning Blade Holder	23- 6
52053582	Gear - 15T	23-42
52053583	Rear Guide Pin - Cleaning	23-38
52053599	Side Seal - Cleaning Rear	23-43
52053602	Seal - Front Outer	23- 3
52053603	Seal - Rear Outer	23- 9
52053604	Seal - Front Inner	23- 5
52053605	Seal - Rear Inner	23- 8
52053617	Pressure Arm	23-40
52053635	Pressure Lever	31-47
52053637	Spring - Cleaning Blade	31-49

Parts No.	Description	Page and Index No.
52053647	Front Endblock - PCC	23-24
52053649	Rear Endblock - PCC	23-45
52053651	Front Endblock Cover - PCC	23-25
52053653	Rear Endblock Cover - PCC	23-47
52053671	Spring - Anchor	23-37
52053673	Setting Pin	23-19
52053821	Terminal Spring	13-49
52053850	Front Endblock Cover - T & S Corona	13-41
52053851	Front Endblock - T & S Corona	13-42
52053853	Rear Endblock - T & S Corona	13-47
52053872	Rear Bracket - T & S Corona	13-35
52053874	Rear-Endblock Cover - T & S Corona	13-48
52053950	Cam	23-26
52053958	Pick-Off Pawl Shaft	23-29
52053964	Pick-Off Solenoid	31-51
52053965	Spring	23-31
52053966	Set Screw	23-30
52053968	Set Screw - Separator Shaft	23-49
52053971	Pick-Off Pawl Lever	31-48
52053975	Cam	23-27
52053981	Collar - Spring	23-33
52054135	Collar - Fusing	17-30
52054181	Gear - 18T	17-49
52054220	Shaft - Hot Roller Stripper	19- 4
52054305	Spring - Hot Roller Stripper	19- 5
52054321	Bushing - 20 mm	17-26
52055250	L.E.D. Sensor Type S	9-28
52055250	L.E.D. Sensor Type S	37-62
52055250	L.E.D. Sensor Type S	39-15
52055250	L.E.D. Sensor Type S	41-14
52055250	L.E.D. Sensor Type S	43-24
52055250	L.E.D. Sensor Type S	45-44
52055250	L.E.D. Sensor Type S	47-19
52055250	L.E.D. Sensor Type S	63-17
52055250	L.E.D. Sensor Type S	65-26

Parts No.	Description	Page and Index No.
52055251	L.E.D. Sensor Type T	9-69
52055251	L.E.D. Sensor Type T	25-33
52055251	L.E.D. Sensor Type T	27-21
52055251	L.E.D. Sensor Type T	31-15
52055251	L.E.D. Sensor Type T	57-44
52055253	Photointerruptor Pack	9-20
52055253	Photointerruptor Pack	37-35
52055253	Photointerruptor Pack	43-48
52055253	Photointerruptor Pack	45-36
52055253	Photointerruptor Pack	65-23
52055313	Registration Clutch	11-12
52055405	Transformer - 115V	33-25
52055407	Transformer - 220/240V	33-25
52055494	Harness Transformer - 220/240V	33-28
52059001	Charge Wire - Pre Cleaning Corona	23-28
52059101	Gap Gauge	107- 3
52059111	Omega Clamp	107- 4
52059510	Drum	13-26
52059601	Switching Board	107- 2
52062671	Positioning Roller	57-28
52062684	Shoulder Screw - M3	39-19
52062808	Anti Static Brush - Duplex Transport	57-23
52062808	Anti Static Brush - Duplex Transport	59-18
52062876	Spring - Wire	59-36
52062877	Wire Clamp Plate	59-29
52062922	Shoulder Screw - M4	59-43
52069600	Sensor Checker	107- 5
52091694	Guide Roller - 1st Scanner	25-25
52091704	Reflector - AID	25- 1
52091870	Left Pulley	25-31
52091875	Right Pulley	25-41
52092768	Knob - Registration Roller	11-14
52094126	Wire Clamp	17-54
52094149	Fusing Unit Shaft	17-29
52094183	Unit Lock Lever	29-18

Parts No.	Description	Page and Index No.
52094400	Oil Pump Bracket	17- 8
52094405	Oil Pump Lever	17- 7
52094407	Cam Gear - 32T	17- 9
52094408	Gear - 16T	17-28
52094409	Oil Tube - 105 mm	17-10
52094410	Oil Tube - 140 mm	17- 6
52094470	Upper Exit Roller	19-23
52095320	Oil End Sensor	17- 5
52095450	Relay - Coling Fan Motor - 220/240V	35-106
52111710	1st Mirror	25-15
52111733	Bushing - 2nd Scanner	25-29
52112259	Spacer - M20 x 0.1	13-20
52112262	Drum Shaft Holder	13-29
52112267	Drum Shaft Knob	13-18
52112278	Drum Flange Spring	13-24
52112285	Rear Flange	13-28
52112365	Bushing - 12 x 19 x 11 mm	13-21
52162844	Friction Pad	9-15
52162844	Friction Pad	37-28
52162844	Friction Pad	43-53
52162844	Friction Pad	45-20
54031030	Tension Spring	13-50
54031145	Cover - Key Counter	3-51
54032016	Tension Sprocket (11T) - Paper Feed	57-33
54032016	Tension Sprocket (11T) - Paper Feed	61- 6
54032048	Bushing - 4mm	15-34
54032048	Bushing - 4mm	51-44
54032049	Spring Anchor	53-39
54032075	Stepped Screw	27- 4
54032075	Stepped Screw	37-10
54032075	Stepped Screw	41- 7
54032075	Stepped Screw	47-13
54032075	Stepped Screw	59-42
54032106	Ratchet Sleeve - Paper Feed	31- 7
54032617	Bushing - Cleaning Roller	41-11

Parts No.	Description	Page and Index No.
54034335	Decal - Terminal 115V	33-24
54034335	Decal - Terminal 115V	67-37
54034335	Decal - Terminal 115V	105-13
54036118	Stepped Screw - Transformer	27- 9
54083253	Spring - Cassette	55-21
54087968	Power Supply Cord - 220V	67-32
54091705	Clamp - Reflector	25-13
54091855	Mounting Pin	17-21
54131812	Spring - Drum Return Arm	31-53
54131875	Knob Screw	53-61
54131882	Stepped Screw - Lamp Terminal	43-59
54131882	Stepped Screw - Lamp Terminal	55-51
54132298	Stepped Screw - M4	53-41
54132298	Stepped Screw - M4	55-50
54134835	Decal - Paper Level	7-22
54134835	Decal - Paper Level	105-14
54154097	Lamp Terminal	17-52
54154310	Valve - Oil Pump	17- 2
54154457	Spring - Exit	19-11
54182116	Spacer - Guard	23-48
54182859	Spring - Regist Roller (Front)	23-39
54191057	Rubber Foot	29-24
54191057	Rubber Foot	37-15
54195311	Grounding Wire	33-20
54195714	Stepped Screw - M4	57-32
54195714	Stepped Screw - M4	59-17
54195714	Stepped Screw - M4	61-22
54196244	Left Spring - Platen Cover	7-11
54196245	Right Spring - Platen Cover	7-10
54201515	Plate - Key Counter	3-50
54201675	Insulator - Lamp Terminal	25- 8
54201676	Spacer - Lamp Terminal	25-11
54201682	Support - Lamp Terminal	25-10
54201779	Arm Holder - Platen Cover	7-12
	Spring - Release	7-15

Parts No.	Description	Page and Index No.
54204193	Collar - Release Cam	23-41
54209502	Test Chart - OS-A3 (100 psc/set)	107-15
54209504	Thermo Meter - HLC60-E	107-10
54209505	Probe - HLC60-E	107-11
54209507	Digital Multimeter - BECKMAN-RMS3030	107-12
54209516	Test Chart - OS-A3 (10 psc/set)	107-15
54209550	Silicon Oil	107-13
54241955	Lock - Platen Cover	7- 3
54243667	Spring - Solenoid	57-35
54243667	Spring - Solenoid	61-11
54324117	Insulator - A	17-53
54324118	Insulator - B	17-51
54347916	High Voltage Decal	13-17
54347916	High Voltage Decal	31-23
54347916	High Voltage Decal	31-54
54395246	Totalizer Ass'y	33-10
54421099	Gear - 24Z	31-36
54421100	Coupled Sprocket and Gear	31-39
54421110	Sprocket - 20T	31-28
54421111	Spring - Main Drive Tightener	31-31
54421111	Spring - Main Drive Tightener (50Hz)	31-34
54421277	Decal - Main Switch	3-33
54421277	Decal - Main Switch	105-15
54421292	Operation Instruction Holder	3-55
54421372	Decal - Power Source - 220V	3-52
54421372	Decal - Power Source - 220V	63-27
54421372	Decal - Power Source 220V	105-16
54421374	Cap - Left Cover - L	3-31
54421375	Cap - Left Cover - S	3-34
54421657	Seal - 15 x 214 x 13	7-17
54421660	Stud - Mounting Bracket - Platen	29- 5
54421667	Stud - Platen Cover Mounting	7-18
54421700	Front Terminal - Exposure Lamp	25- 9
54421705	Rear Terminal - Exposure Lamp	25-12
54421711	Spring Plate - 1st Mirror	25-16

Parts No.	Description	Page and Index No.
54421735	Pulley	25-27
54421735	Pulley	59-31
54421740	2nd and 3rd Mirror	25-23
54421741	Rear Spring Plate - 2nd and 3rd Mirror	25-22
54421742	Front Spring Plate - 2nd and 3rd Mirror	25-24
54421748	Cleaner - Guide Rod	25-28
54421770	Cam - Optics Axis	27-12
54421798	Hook - scanner Drive Wire	25-37
54421847	Spring Plate - 4th Mirror	27-38
54421847	Spring Plate - 4th Mirror	27-40
54421867	Main Pulley - Scanner Drive	25-40
54421890	Spring - Wire Tightner	25-34
54421962	Front Cover - Terminal	25-14
54421963	Rear Cover - Terminal	25- 5
54421969	Mylar Sheet - Terminal	25-46
54421969	Mylar Sheet - Terminal	27-44
54422060	Casing - Main Corona	13- 2
54422065	Front End Block - Main Corona	13- 8
54422066	Front Cover - Main Corona	13- 9
54422068	Rear Cover - Main Corona	13- 6
54422108	Spring - Corona Wire	13- 5
54422108	Spring - Corona Wire	23-46
54422110	Plug - Corona Unit	13- 4
54422117	Shoulder Screw - Hinge	9- 4
54422123	Cleaner - Main Corona Wire	13-11
54422143	Fan - Main Corona	15- 5
54422165	Receptacle Housing - Main Corona	13-37
54422187	Spring Plate-4th Mirror Main Corona	27-40
54422616	Paper Feed Roller	57-31
54422637	Friction Pad	61-47
54422638	Collar - Friction Pad Arm	9-17
54422638	Collar - Friction Pad Arm	37-30
54422638	Collar - Friction Pad Arm	43-55
54422638	Collar - Friction Pad Arm	45-16
54422638	Collar - Friction Pad Arm	61-49
54422642	Shoulder Screw - M3	9-13
54422642	Shoulder Screw - M3	37-23

Parts No.	Description	Page and Index No.
54422642	Shoulder Screw - M3	43-50
54422642	Shoulder Screw - M3	45-17
54422642	Shoulder Screw - M3	61-45
54422644	Spring - Friction Pad	43-49
54422644	Spring - Friction Pad	45-18
54422645	Spring - Friction Pad	9-46
54422645	Spring - Friction Pad	61-44
54422692	Rear Spring - Middle Guide	9-10
54422693	Front Spring - Middle Guide	9- 9
54422754	Spring - Registration Roller	11-10
54423109	Seal - Development Roller	21-10
54423154	Holder - Development Unit	31-26
54423233	Spring - Drive Wheel	21-48
54423233	Spring - Drive Wheel	31-10
54423570	Shoulder Sleeve	23- 7
54423585	Bushing	13-22
54423593	Seal - Cleaning Blade Shaft	23- 4
54423664	Toner Collection Bottle Cap - Small	15-24
54423872	Gear - 16z	15-13
54423904	Spring - Pick-Off Pawl Slide	23-34
54424086	Gear - 40Z	17-55
54424100	Left Fusing Unit Slide Guide	17-20
54424151	Gear - 30Z	17-57
54424152	Spring - Fusing Drive	17-56
54424186	Spring - Fusing Unit Release Lever	29-16
54424201	Rear Bracket - Lamp Terminal	17-50
54424421	Decal - Small	17-47
54424421	Decal - Small	105-17
54424440	Front Release Lever - Exit Ass'y	19-14
54424442	Rear Release Lever - Exit Ass'y	19-10
54424444	Stud - Exit Ass'y Release Lever	19- 9
54424451	Flame - Exit	19-13
54424463	Spring - Front Release Lever	19-16
54424464	Spring - Rear Release Lever	19- 8
54424465	Stripper Pawl Plate	19- 7

Parts No.	Description	Page and Index No.
54424467	Spring - Stripper Pawl Plate	19-12
54424482	Upper Exit Guide	19- 2
54424485	Feeler - Paper Exit Sensor	19-22
54424491	Actuator - Paper Exit Sensor	19-20
54424492	Gear 20Z	19-19
54424494	Gear 19Z	19-18
54424495	Slip Clutch	19-17
54424500	Cover - Exit Ass'y	19- 3
54424501	Copy Tray	3-29
54425315	Anti-Condensation Heater - 10W	27-49
54425856	Cover - Counter	33-11
54429003	Main Corona Wire (10 pcs/set)	13-10
54429004	T&S Corona Wire (10 pcs/set)	13-43
54429101	Setting Powder	107- 7
54429103	Launa Oil	107-16
54429106	Drum Shoe	107- 8
54432657	Gear - 28Z	51-20
54432657	Gear - 28Z	65-25
54432660	Spacer - 6 x 22 x 0.5 mm	51-22
54432668	Bushing	9-64
54432668	Bushing	15-16
54432668	Bushing	37-58
54432668	Bushing	43-23
54432668	Bushing	45-53
54432668	Bushing	57-50
54432668	Bushing	63-15
54432712	Cork Pad	51-19
54432713	Wave Washer	51-21
54462620	Idler Pulley - 20	67- 8
54462702	Gear - 22T	67- 6
54462824	Screw - Duplex Guide Plate	53-40
54463707	Bushing - 6 x 10 x 6 mm	23-21
54465411	Tray Drive Motor - AC 7/8W/115V	67- 1
54465412	Tray Drive Motor - AC 7/8W/220V	67- 1
54468905	Decal - English, French - 115V	63- 3

Parts No.	Description	Page and Index No.
54468906	Decal - English, German - 220V	63- 3
54472257	Front Drum Flange	13-25
54472267	Timing Pulley - 48T	13-38
54472286	Drum Guide	13-27
54472681	Snap Ring	3-16
54472681	Snap Ring	13-58
54472681	Snap Ring	53-14
54472681	Snap Ring	57-29
54472681	Snap Ring	63-26
54472927	Friction Pad - B	65- 6
54473236	Gear - 23T	21-39
54473361	Toner Supply Solenoid	31- 9
54474164	Gear - 31T	57-40
54474216	Front Lamp Terminal - Fusing Unit	17-24
54474220	Lamp Terminal Stud	17-23
54474221	Lamp Holder Spring	17-22
54474229	Sleeve - Oil Pump	17- 3
54474241	Tube Clamp	17- 1
54474242	Oil Bottle Cap	17-11
54474980	Decal - Terminal 220V	33-24
54474980	Decal - Terminal 220V	105-13
54475690	Noise Filter - 220/240V	33-27
54479078	Heat Resisting Grease MT-78	107-14
54479104	Shoe Adaptor	107- 9
54482803	Pad - Platen Cover	7- 7
54482806	Platen Cover Arm	7- 9
54482810	Hinge Bracket - Platen Cover	7-14
54482811	Mounting Bracket - Platen Cover	7-16
54482813	Platen Cover Hinge	7-13
54482824	Flex Hinge - Plten Cover	7- 6
55016555	Spring Clutch	31- 6
58401632	Stepped Screw	55-50
58751540	Shaft - Floating roller	55-42
58753026	Spring - Original Feed Arm	31-50
58753287	Spring - Brake shoe	51-43
58753553	Ring - Holder	51-29

Parts No.	Description	Page and Index No.
58754140	Pack - Front Original Guide	51-23
58754145	Pack - Rear Original Guide	51-14
58755501	Sensor Pad	53-63
58755501	Sensor Pad	55-61
58755510	Shoulder Screw - M5	51-45
58861315	Spring - Separation Release	61-37
58862146	Exit Spring Seat	45-60
58863114	Roller Cover	51-42
58865480	Separation Motor - DC 21W	55- 5
58874183	Idler Pulley	45-52
58942163	Center Roller	53-19
58942171	Original Feed Roller	53-15
58942174	Timing Belt	53-20
58942176	Spring - Detent Arm	53-27
58942181	Upper Separation Roller	53-12
58942183	Lower Separation Roller	53-51
58942186	Separation Roller Pulley	53-10
58942229	Solenoid Pin	53-28
58942229	Solenoid Pin	55-19
58942264	Collar	53-49
58942412	Roller	53-66
58942413	Relay Roller Shaft	53-67
58942747	Mylar - Original Guides	51-12
58943121	Base Damper	55-38
58943215	Brake Stopper	51-36
58943218	AID Pad	51-38
58943219	Leaf Spring Holder	51-37
58943246	Bracket	51-31
58971125	Nylon Clamp Stay	67-30
58971126	Safety Switch Bracket	67-16
58971251	Top Cover	63- 1
58971256	Front Cover	63- 7
58971257	Decal - Increase Size	63-10
58971258	Decal - Decrease Size	63-11
58971264	Operation Skin	63- 9

Parts No.	Description	Page and Index No.
58971265	Rear Cover	63- 2
58971272	Operation Board Mounting Bracket	63- 6
58971274	Upper Actuator Lever	67-12
58971277	Lower Actuator Lever	67-14
58971279	Safety Switch Actuator	67-13
58971351	Drive Motor Bracket	67- 3
58971352	Worm Gear - M5 x 5	67- 2
58971372	Right Lift Rod	65-18
58971374	Decal - Paper Size	65- 5
58971451	Front Post Rack	65-13
58971455	Bushing	65-12
58971457	Rear Post Rack	65-15
58971458	Side Post Spring Plate	65-11
58971459	Side Post Grip	65- 2
58971460	Front Guide Post	65-14
58971462	Front Paper Guide	65- 1
58971463	Rear Guide Post	65-16
58971465	Rear Paper Guide	65- 3
58971472	Bottom Plate	67-23
58971473	Size Lever	65-24
58971477	Leaf Spring	65-30
58971493	Micro Switch Mounting Bracket	65-20
58971496	Sensor Mounting Bracket	65-22
58971497	Harness Cover 1	65-21
58971498	Harness Cover 2	65-27
58971514	Noise Filter Bracket - 220/240V	67-34
58975515	Operation Board	63- 5
58975520	Transformer - 115V, 220V, 240V/30W	67-36
58975537	Grounding Wire	67-38
58975555	Noise Filter Grounding Wire	67-35
59171641	Original Holder	47- 1
59301031	Decal Sheet- Large - LT/LDG	7-30
59301031	Decal Sheet - Large - LT/LDG	105-18
59301032	Decal Sheet- Small - LT/LDG	7-30
59301032	Decal Sheet - Small - LT/LDG	105-19

Parts No.	Description	Page and Index No.
59301033	Decal Sheet - Large - A4/A3	7-30
59301033	Decal Sheet - Large - A4/A3	105-20
59301034	Decal Sheet - Small - A4/A3	7-30
59301034	Decal Sheet - Small - A4/A3	105-21
03120100W	Philips Pan Head Screw - M3 x 10	
59313001	Color Toner Supply Unit	21-53
59313003	Color Toner Supply Unit	21-59
9313330	Toner End Lever	21-47
59313332	Toner End Actuator	21-45
59313337	Color Toner End Lever	21-42
59313382	Actuator - Red	21-44
59313384	Actuator - Blue	21-44
59313385	Actuator - Green	21-44
59313386	Actuator Bracket	21-43
59313394	Spring - Arm	21-46
67541242	Knob Cap	49- 2
67541242	Knob Cap	53-56
67691127	Lower Mounting Stud	49-14
67691128	Mounting Stay Magnet	47-51
67697930	Power Supply Cord - 115V	57-33
68023111	Slot Liner	47-54
68033111	Sorter Bin - Odd	47- 7
68033151	Sorter Bin - Even	47- 6
A0002109	Rear Endblock - Main Corona	13- 3
A4069505	Platen Cover Sheet - 10 Sheets/1 Set	7- 8
A0081115	Bushed Roller Chain - 222P	31-20
A0081675	Platen Cover Hinge Ass'y	7-48
A0081698	Reflector Aid	25- 1
A0081844	Lens Sheet	27-47
A0082105	Solenoid Bracket	31-55
A0082274	Stopper - T & S Corona Unit	13-61
A0082574	Upper Guide	9-78
A0082626	Paper End Actuator	43-22
A0084167	Fusing Unit Cover	17-48
A0084612	Edging - 505 mm	37-77
A0092405	Timing Pulley 48T	13-38
A0093009	Toner Supply Unit	21-36
A0243886	Toner Collection Bottle - Cover	15- 9

Parts No.	Description	Page and Index No.
A0472121	T & S Corona Guide	13-44
A4146113	Front Cover	47-50
A4146213	Rear Cover	47-14
A4152432	Front Guide Plate Spring	41-10
A4152433	Rear Guide Plate Spring	41-5
A4162122	Positioning Roller Arm	57-24
A4162319	Chain Stopper Bracket	61-62
A4162911	Paper Flattener	57-65
A4182102	Front Adjusting Plate	53-73
A4182103	Rear Adjusting plate	53-74
A4193365	Harness Bracket	51-60
A4231127	Slot Liner	47-54
A4231131	Base Plate	47-29
A4231143	Base Shaft	47-60
A4231144	Base Roller	47-59
A4231145	Receive Plate	47-61
A4232110	Upper Guide Plate	47-42
A4232272	Arm-Upper Guide Plate	47-15
A4232311	Cover - Electrical Section	47-26
A4232531	Guide Plate	47-85
A4233511	Bin Shaft Positioner	47-64
A4233513	Bin Support Wire	47-62
A4233517	Bin Support Wire	47-63
A4234216	Pulley	47-31
A4235410	Paper Exit Motor-DC 24V 2.9W	47-45
A9101221	Upper Guide Plate - Small	49-4
A9101231	Upper Guide Plate - Large	49-1
A9101241	Transport Roller	49-12
AA066096	Spring-Fusing Unit Relase Lever	29-16
AA143036	Stepped Screw	
AA143224	Pin	29-17
AA150006	Mylar - Lens Cover Bracket	27-52
AA150205	Seal - 20 x 72	21-60
AA151175	Seal - 9.5 x 37 x 3	27-53
AA151192	Seal - Lens Shield	27-54
AA151194	Seal - Right	21-31
AA151284	Seal - 15 x 26 x 3mm	15-44
AA161031	Cushion - 20 x 5 x 3mm	3-38
AB023028	Sprokel - 21 T	31-11
AD004046	T & S Corona Unit	13-40
AD021032	T & S Receptacle	13-57
AE020015	Pressure Roller	17-37
AF023005	Entrance Relay Roller	57-7
AG051052	Development Unit Band	21-13
AX210011	Registration Clutch	11-12
AY115004	AC Drive Board	35- 2
AY115004	AC Drive Board	73- 2

Parts No.	Description	Page and Index No.
AA015003	Wire Clamp	17-54
AA140041	Shaft	9-38
AA140041	Shaft	9-77
AD015004	Drum Shaft	13-31
03130040W	Philips Pan Head Screw - M3 x 4	25-101
03130040W	Philips Pan Head Screw - M3 x 4	37-101
03130040W	Philips Pan Head Screw - M3 x 4	53-111
03130040W	Philips Pan Head Screw - M3 x 4	55-112
03130050M	Philips Pan Head Screw - M3 x 5	17-101
03130050W	Philips Pan Head Screw - M3 x 5	31-101
03130050W	Philips Pan Head Screw - M3 x 5	57-101
03130050W	Philips Pan Head Screw - M3 x 5	59-101
03130050W	Philips Pan Head Screw - M3 x 5	61-101
03130060W	Philips Pan Head Screw - M3 x 6	17-102
03130060W	Philips Pan Head Screw	47-123
03130060W	Philips Pan Head Screw - M3 x 6	23-101
03130060W	Philips Pan Head Screw - M3 x 6	51-110
03130060W	Philips Pan Head Screw - M3 x 6	53-112
03130060W	Philips Pan Head Screw - M3 x 6	55-114
03130060W	Philips Pan Head Screw - M3 x 6	65-101
03130080W	Philips Pan Head Screw - M3 x 8	21-104
03130080W	Philips Pan Head Screw - M3 x 8	23-102
03130080W	Philips Pan Head Screw - M3 x 8	25-102
03130106W	Philips Pan Head Screw - M3 x 10	9-115
03130120W	Philips Pan Head Screw - M3 x 12	9-104
03130120W	Philips Pan Head Screw - M3 x 12	25-103
03130120W	Philips Pan Head Screw - M3 x 12	35-101
03130120W	Philips Pan Head Screw - M3 x 12	37-102
03130120W	Philips Pan Head Screw - M3 x 12	43-101
03130120W	Philips Pan Head Screw - M3 x 12	45-101
03130120W	Philips Pan Head Screw - M3 x 12	47-111
03130120W	Philips Pan Head Screw - M3 x 12	61-102
03130120W	Philips Pan Head Screw - M3 x 12	65-102
03130140W	Philips Pan Head Screw - M3 x 14	47-105
03130160W	Philips Pan Head Screw - M3 x 16	33-105
03130160W	Philips Pan Head Screw - M3 x 16	51-111

Parts No.	Description	Page and Index No.
03130200W	Philips Pan Head Screw - M3 x 20	65-103
03140040W	Philips Pan Head Screw - M4 x 4	63-101
03140040W	Philips Pan Head Screw - M4 x 4	65-106
03140050W	Philips Pan Head Screw - M4 x 5	13-101
03140050W	Philips Pan Head Screw - M4 x 5	67-101

Parts No.	Description	Page and Index No.
03140060M	Philips Pan Head Screw - M4 x 6	13-102
03140060W	Philips Pan Head Screw - M4 x 6	13-103
03140060W	Philips Pan Head Screw - M4 x 6	15-101
03140060W	Philips Pan Head Screw - M4 x 6	21-101
03140060W	Philips Pan Head Screw - M4 x 6	27-101
03140060W	Philips Pan Head Screw - M4 x 6	31-102
03140060W	Philips Pan Head Screw - M4 x 6	41-101
03140060W	Philips Pan Head Screw - M4 x 6	47-102
03140060W	Philips Pan Head Screw - M4 x 6	51-104
03140060W	Philips Pan Head Screw - M4 x 6	53-110
03140060W	Philips Pan Head Screw - M4 x 6	55-103
03140060W	Philips Pan Head Screw - M4 x 6	59-102
03140080W	Philips Pan Head Screw - M4 x 8	3-106
03140080W	Philips Pan Head Screw - M4 x 8	9-106
03140080W	Philips Pan Head Screw - M4 x 8	13-104
03140080W	Philips Pan Head Screw - M4 x 8	23-103
03140080W	Philips Pan Head Screw - M4 x 8	31-103
03140080M	Philips Pan Head Screw - M4 x 8	33-101
03140080W	Philips Pan Head Screw - M4 x 8	33-102
03140080M	Philips Pan Head Screw - M4 x 8	37-103
03140080W	Philips Pan Head Screw - M4 x 8	43-102
03140080W	Philips Pan Head Screw - M4 x 8	45-102
03140080M	Philips Pan Head Screw - M4 x 8	47-107
03140080W	Philips Pan Head Screw - M4 x 8	47-113
03140080W	Philips Pan Head Screw - M4 x 8	49-101
03140080W	Philips Pan Head Screw - M4 x 8	53-108
03140080W	Philips Pan Head Screw - M4 x 8	55-115
03140100W	Philips Pan Head Screw - M4 x 10	17-103
03140100W	Philips Pan Head Screw - M4 x 10	19-101
03140100W	Philips Pan Head Screw - M4 x 10	21-102
03140100W	Philips Pan Head Screw - M4 x 10	23-104
03140100W	Philips Pan Head Screw - M4 x 10	55-118
03140100W	Philips Pan Head Screw - M4 x 10	63-102
03140100W	Philips Pan Head Screw - M4 x 10	65-104
03140100W	Philips Pan Head Screw - M4 x 10	67-102

Parts No.	Description	Page and Index No
03140120W	Philips Pan Head Screw - M4 x 12	9-102
03140120W	Philips Pan Head Screw - M4 x 12	25-111
03140120W	Philips Pan Head Screw - M4 x 12	27-102
03140120W	Philips Pan Head Screw - M4 x 12	31-104
03140120W	Philips Pan Head Screw - M4 x 12	37-104
03140120W	Philips Pan Head Screw - M4 x 12	39-101
03140120W	Philips Pan Head Screw - M4 x 12	41-102
03140120W	Philips Pan Head Screw - M4 x 12	43-103
03140120W	Philips Pan Head Screw - M4 x 12	45-103
03140120W	Philips Pan Head Screw - M4 x 12	47-110
03140120W	Philips Pan Head Screw - M4 x 12	57-102
03140120W	Philips Pan Head Screw - M4 x 12	59-103
03140120W	Philips Pan Head Screw - M4 x 12	67-103
03140140W	Philips Pan Head Screw - M4 x 14	43-105
03140140W	Philips Pan Head Screw - M4 x 14	45-104
03140140W	Philips Pan Head Screw - M4 x 14	67-107
03140200W	Philips Pan Head Screw - M4 x 16	21-103
03140240W	Philips Pan Head Screw - M4 x 24	21-103
03140350W	Philips Pan Head Screw - M4 x 35	51-108
03150080W	Philips Pan Head Screw - M5 x 8	7-101
03150080W	Philips Pan Head Screw - M5 x 8	15-102
03150080W	Philips Pan Head Screw - M5 x 8	33-103
03150080W	Philips Pan Head Screw - M5 x 8	47-119
03150080W	Philips Pan Head Screw - M5 x 8	51-107
03150080W	Philips Pan Head Screw - M5 x 8	67-104
03230060W	Philips Sunken Head Screw - M3 x 6	45-105
03230080W	Philips Sunken Head Screw - M3 x 8	9-103
03230080W	Philips Sunken Head Screw - M3 x 8	37-105
03230080W	Philips Sunken Head Screw - M3 x 8	45-104
03240060W	Philips Sunken Head Screw - M4 x 6	51-109
03240080W	Philips Sunken Head Screw - M4 x 8	59-111
03240080W	Philips Sunken Head Screw - M4 x 8	61-107
03340080D	Philips Sunken Head Screw - M4 x 8	47-101
03430060W	Philips Pan Head Screw - M3 x 6	55-102
03440060D	Philips Truss Head Screw - M4 x 6	3-102
03440060D	Philips Truss Head Screw - M4 x 6	37-106

Parts No.	Description	Page and Index No.
03440060D	Philips Truss Head Screw - M4 x 6	51-101
03440080D	Philips Truss Head Screw - M4 x 8	49-102
03440080D	Philips Truss Head Screw - M4 x 8	59-110
03540080W	Philips Truss Head Screw - M4 x 8	7-109
04130202W	Tapping Screw - M3 x 20	7-102
04130252W	Tapping Screw - M3 x 20	15-106
04140080W	Tapping Screw - M4 x 8	15-108
04140080W	Tapping Screw - M4 x 8	25-104
04140100W	Tapping Screw - M3 x 10	15-107
04140102W	Tapping Screw - M4 x 10	15-103
04140102B	Tapping Screw - M4 x 10	7-105
04140102W	Tapping Screw - M4 x 10	7-105
04340060W	Tapping Screw - M4 x 6	5-104
04340060W	Tapping Screw - M4 x 6	9-105
04340060W	Tapping Screw - M4 x 6	11-101
04340060W	Tapping Screw - M4 x 6	13-105
04340060W	Tapping Screw - M4 x 6	15-104
04340060W	Tapping Screw - M4 x 6	17-104
04340060W	Tapping Screw - M4 x 6	25-105
04340060W	Tapping Screw - M4 x 6	27-103
04340060W	Tapping Screw - M4 x 6	29-101
04340060W	Tapping Screw - M4 x 6	31-113
04340060W	Tapping Screw - M4 x 6	37-108
04340060W	Tapping Screw - M4 x 6	57-103
04340060W	Tapping Screw - M4 x 6	59-104
04340060W	Tapping Screw - M4 x 6	61-103
04340060W	Tapping Screw - M4 x 6	65-105
04340060W	Tapping Screw - M4 x 6	67-105
04340080W	Tapping Screw - M4 x 8	3-103
04340080W	Tapping Screw - M4 x 8	9-101
04340080W	Tapping Screw - M4 x 8	11-102
04340080W	Tapping Screw - M4 x 8	13-106
04340080W	Tapping Screw - M4 x 8	15-105
04340080W	Tapping Screw - M4 x 8	17-105
04340080W	Tapping Screw - M4 x 8	19-102

Parts No.	Description	Page and Index No.
04340080W	Tapping Screw - M4 x 8	25-106
04340080W	Tapping Screw - M4 x 8	29-102
04340080W	Tapping Screw - M4 x 8	31-105
04340080W	Tapping Screw - M4 x 8	33-104
04340080W	Tapping Screw - M4 x 8	35-102
04340080W	Tapping Screw - M4 x 8	37-107
04340080W	Tapping Screw - M4 x 8	41-103
04340080W	Tapping Screw - M4 x 8	43-104
04340080W	Tapping Screw - M4 x 8	45-106
04340080W	Tapping Screw - M4 x 8	47-106
04340080W	Tapping Screw - M4 x 8	49-103
04340080W	Tapping Screw - M4 x 8	57-104
04340080W	Tapping Screw - M4 x 8	59-105
04340080W	Tapping Screw - M4 x 8	61-104
04340080W	Tapping Screw - M4 x 8	63-103
04340080W	Tapping Screw - M4 x 8	67-106
04340100W	Tapping Screw - M4 x 10	13-107
04340100W	Tapping Screw - M4 x 10	17-106
04340100W	Tapping Screw - M4 x 10	33-107
04340100W	Tapping Screw - M4 x 10	47-109
04340100W	Tapping Screw - M4 x 10	59-106
04440102W	Tapping Hexagon Head Screw - M4 x 10	17-116
05730040W	Hexagon Headless Set Screw - M3 x 4	53-115
05740040E	Hexagon Headless Set Screw - M4 x 4	39-102
05740040E	Hexagon Headless Set Screw - M4 x 4	41-104
05740040E	Hexagon Headless Set Screw - M4 x 4	43-108
05740040E	Hexagon Headless Set Screw - M4 x 4	45-107
05740040W	Hexagon Headless Set Screw - M4 x 4	53-113
05740040E	Hexagon Headless Set Screw - M4 x 4	57-105
05740040E	Hexagon Headless Set Screw - M4 x 4	59-107
05740040E	Hexagon Headless Set Screw - M4 x 4	61-105
05740050E	Hexagon Headless Set Screw - M4 x 5	27-108
05740050E	Hexagon Headless Set Screw - M4 x 5	57-106
05740050E	Hexagon Headless Set Screw - M4x5	31-115
05740050E	Hexagon Headless Set Screw - M4 x 5	67-111
05740060E	Hexagon Headless Set Screw - M4 x 6	15-110

Parts No.	Description	Page and Index No.
05740060E	Hexagon Headless Set Screw - M4 x 6	25-116
05740060E	Hexagon Headless Set Screw - M4 x 6	31-112
05750060E	Hexagon Headless Set Screw - M5 x 6	9-113
05750060E	Hexagon Headless Set Screw - M5 x 6	31-110
05750050E	Hexagon Headless Set Screw	31-114
05840160B	Hexagon Bolt - M4 x 16	27-111
05930120E	Hexagon Bolt - M3 x 12	27-109
06230140E	Spring Pin - 3 x 14mm	23-105
06316140G	Parallel Pin	47-117
06320100E	Pin - M2 x 10	53-101
06320100E	Pin - M2 x 10	55-104
06320140G	Parallel Pin	47-117
07040040C	Toothed Washer - M4	47-108
07200025E	Retaining Ring - M2.5	9-109
07200025E	Retaining Ring - M2.5	21-107
07200025E	Retaining Ring - M2.5	23-106
07200025E	Retaining Ring - M2.5	37-112
07200025E	Retaining Ring - M2.5	43-109
07200025E	Retaining Ring - M2.5	45-108
07200025E	Retaining Ring - M2.5	53-109
07200025E	Retaining Ring - M2.5	55-111
07200025E	Retaining Ring - M2.5	59-114
07200030E	Retaining Ring - M3	9-112
07200030B	Retaining Ring - M3	13-114
07200030E	Retaining Ring - M3	17-109
07200030E	Retaining Ring - M3	19-104
07200030E	Retaining Ring - M3	37-113
07200030E	Retaining Ring - M3	39-103
07200030E	Retaining Ring - M3	41-105
07200030E	Retaining Ring - M3	43-110
07200030E	Retaining Ring - M3	45-109
07200030E	Retaining Ring - M3	47-116
07200030E	Retaining Ring - M3	53-106
07200030E	Retaining Ring - M3	55-101
07200030E	Retaining Ring - M3	57-107
07200030E	Retaining Ring - M3	59-115
07200030E	Retaining Ring - M3	61-109

Parts No.	Description	Page and Index No
07200030E	Retaining Ring - M3	63-106
07200030E	Retaining Ring - M3	67-112
07200040E	Retaining Ring - M4	15-111
07200040E	Retaining Ring - M4	23-107
07200040E	Retaining Ring - M4	25-112
07200040E	Retaining Ring - M4	27-106
07200040E	Retaining Ring - M4	29-103
07200040E	Retaining Ring - M4	31-107
07200040E	Retaining Ring - M4	39-104
07200040E	Retaining Ring - M4	47-115
07200040E	Retaining Ring	21-116
07200040E	Retaining Ring - M4	49-105
07200040E	Retaining Ring - M4	51-105
07200040E	Retaining Ring - M4	55-109
07200040E	Retaining Ring - M4	57-108
07200040E	Retaining Ring - M4	65-108
07200040E	Retaining Ring - M4	67-113
07200050E	Retaining Ring - M5	3-108
07200050E	Retaining Ring - M5	9-110
07200050E	Retaining Ring - M5	11-104
07200050E	Retaining Ring - M5	15-112
07200050E	Retaining Ring - M5	17-110
07200050E	Retaining Ring - M5	19-105
07200050E	Retaining Ring - M5	21-108
07200050E	Retaining Ring - M5	27-107
07200050E	Retaining Ring - M5	31-108
07200050E	Retaining Ring - M5	37-114
07200050E	Retaining Ring - M5	39-105
07200050E	Retaining Ring - M5	41-106
07200050E	Retaining Ring - M5	43-111
07200050E	Retaining Ring - M5	45-110
07200050E	Retaining Ring - M5	53-105
07200050W	Retaining Ring - M5	55-107
07200050E	Retaining Ring - M5	57-109
07200050E	Retaining Ring - M5	61-110
07200060E	Retaining Ring - M6	9-111

Parts No.	Description	Page and Index No.
07200060E	Retaining Ring - M6	15-113
07200060E	Retaining Ring - M6	17-111
07200060E	Retaining Ring - M6	25-114
07200060E	Retaining Ring - M6	31-109
07200060E	Retaining Ring - M6	21-113
07200060E	Retaining Ring - M6	21-113
07200060E	Retaining Ring - M6	37-115
07200060E	Retaining Ring - M6	39-106
07200060E	Retaining Ring - M6	41-107
07200060E	Retaining Ring - M6	43-112
07200060E	Retaining Ring - M6	45-111
07200060E	Retaining Ring - M6	47-118
07200060E	Retaining Ring - M6	53-104
07200060E	Retaining Ring - M6	57-110
07200060E	Retaining Ring - M6	59-116
07200060E	Retaining Ring - M6	61-111
07200060E	Retaining Ring - M6	65-109
07200060E	Retaining Ring - M6	67-114
07200070E	Retaining Ring - M7	17-112
07200070E	Retaining Ring - M7	21-109
07200070E	Retaining Ring - M7	25-115
07200070W	Retaining Ring - M7	55-105
07250100E	Retaining Ring - M10	13-115
07250120E	Retaining Ring - M12	13-116
07250140E	Retaining Ring (C-type) - M14	21-110
07250180W	Retaining Ring - M18	13-117
07250180W	Retaining Ring - M18	17-113
07250200E	Retaining Ring - M20	25-113
07270050E	Retaining Ring - M5	7-103
07270060E	Retaining Ring - M6	21-112
07403008	Ball Bearing	31-111
08011185	Philips Screw with Toothed Washer - M4 x 8	33-106
08011185	Philips Screw with Toothed Washer - M4 x 8	67-108
08025060	Tapping Screw - M4 x12	13-113
08025085	Tapping Screw - M4 x 8	3-105

Parts No.	Description	Page and Index No.
08025085	Tapping Screw - M4 x 8	9-108
08025094	Tapping Screw - M4x8	3-101
08025094	Tapping Screw - M4x8	5-101
08025094	Tapping Screw - M4x8	37-109
08025094	Tapping Screw - M4x8	43-106
08025094	Tapping Screw - M4x8	63-104
08025131	Truss Head Screw - M4x8	7-103
08030017	Knob Screw	3-107
08050083	Retaining Ring	7-107
08053036	Ball Bearing - 8 x 16 x 5 mm	25-117
08053104	Ball Bearing - 8 x 22 x 7 mm	17-115
08053145	Ball Bearing - 6x12x4mm	53-114
08053145	Ball Bearing - 6x12x4mm	55-108
08053235	Ball Bearing - 15 x 32 x 9mm	21-111
08053291	Ball Bearing - 8 x 16 x 5 mm	17-115
08053291	Ball Bearing - 8 x 16 x 5mm	55-106
08053377	Ball Bearing - 25 x 42 x 9 mm	17-114
08053399	Bushing - 6 x 10 x 8 mm	19-106
08053426	Ball Bearing - 15 x 32 x 9 mm	21-111
08073067	Washer - 4.2 x 20 mm	59-121
08077021	Spacer	67-115
09160148	Bushed Roller Chain - 148P	57-111
09160190	Bushed Roller Chain - 190P	61-106
09160222	Bushed Roller Chain - 222P	31-20
09161222	Bushed Roller Chain - 222P	30- 20
09300400	Parallel Key	67-121
09503005M	Philips Screw with Lock Washer - M3 x 5	17-101
09513005	Philips Screw with Flat Washer - M3	17-107
09513006W	Philips Screw with Flat Washer - M3 x 6	13-108
09513006W	Philips Screw with Flat Washer - M3 x 6	25-107
09513006W	Philips Screw with Flat Washer - M3 x 6	33-109
09513006W	Philips Screw with Flat Washer - M3 x 6	35-103
09513008W	Philips Screw with Flat Washer - M3 x 8	5-102
09514004W	Philips Screw with Flat Washer - M4 x 4	25-108
09514006W	Philips Screw with Flat Washer - M4 x 6	53-116

Parts No.	Description	Page and Index No.
09514006W	Philips Screw with Flat Washer - M4 x 6	55-117
09514008W	Philips Screw with Flat Washer - M4 x 8	13-109
09514008W	Philips Screw with Flat Washer - M4 x 8	21-105
09514008W	Philips Screw with Flat Washer - M4 x 8	25-109
09514008W	Philips Screw with Flat Washer - M4 x 8	27-104
09514008W	Philips Screw with Flat Washer - M4 x 8	59-108
09514010W	Philips Screw with Flat Washer	59-112
09514012W	Philips Screw with Flat Washer - M4 x 12	13-110
09514012W	Philips Screw with Flat Washer - M4 x 12	33-110
09514014W	Philips Screw with Flat Washer	61-108
09515008W	Philips Screw with Flat Washer - M5 x 8	51-106
09644006W	Tapping Screw with Flat Washer - M4 x 6	25-110
09644008W	Tapping Screw with Flat Washer - M4 x 8	13-111
09644008W	Tapping Screw with Flat Washer - M4 x 8	15-109
09644008W	Tapping Screw with Flat Washer - M4 x 8	17-108
09644008W	Tapping Screw with Flat Washer - M4 x 8	19-103
09644008W	Tapping Screw with Flat Washer - M4 x 8	27-105
09644008W	Tapping Screw with Flat Washer - M4 x 8	33-108
09644008W	Tapping Screw with Flat Washer - M4 x 8	37-110
09644008W	Tapping Screw with Flat Washer - M4 x 8	63-105
09644008W	Tapping Screw with Flat Washer - M4 x 8	65-107
09644008W	Tapping Screw with Flat Washer - M4 x 8	67-109
09644010W	Tapping Screw - M4 x 10	7-104
09644010W	Tapping Screw - M4 x 10	45-112
09650308W	Tapping Screw - M3 x 8	53-103
09650406W	Tapping Screw - M4 x 6	53-102
09653006W	Tapping Screw with Flat Washer - M3 x 6	3-104
09653010W	Tapping Screw With Flat Washer - M3 x 10	47-114
09653010W	Tapping Screw With Flat Washer - M3 x 10	49-104
09653010W	Tapping Screw With Flat Washer - M3 x 10	55-119
09654008W	Tapping Screw with Flat Washer - M4 x 8	5-103
09654008W	Tapping Screw with Flat Washer - M4 x 8	9-107
09654008W	Tapping Screw with Flat Washer - M4 x 8	11-103
09654008W	Tapping Screw with Flat Washer - M4 x 8	13-112
09654008W	Tapping Screw with Flat Washer - M4 x 8	21-106

Parts No.	Description	Page and Index No.
09654008W	Tapping Screw with Flat Washer - M4 x 8	31-106
09654008W	Tapping Screw with Flat Washer - M4 x 8	37-111
09654008W	Tapping Screw with Flat Washer - M4 x 8	43-107
09654008W	Tapping Screw with Flat Washer - M4 x 8	7-107
09654008W	Tapping Screw with Flat Washer - M4 x 8	45-113
09654008W	Tapping Screw with Flat Washer - M4 x 8	59-109
09654010W	Tapping Screw with Flat Washer - M4 x 10	67-110
09654012	Tapping Screw with Flat Washer - M4 x 12	7-101
09654012W	Tapping Screw with Flat Washer - M4 x 12	21-114
10050383	Edging: B	29-104
10050383	Edging: B	67-116
10050767	Head Sink	83-101
11000051	Solid Strand	97-101
11000277	Fastening Receptacle	103-101
11000844	Socket - Mate-N-Lock	89-101
11000863	Stud Pin	89-102
11000864	Housing - AWG14-20	91-101
11000916	Pin - Mate-N-Lock	91-102
11001042	Socket - Mate-N-Lock	97-102
11001089	Socket - MATE-N-LOCK	99-101
11001089	Socket - MATE-N-LOCK	101-101
11001147	Socket - MATE-N-LOCK	99-102
11001155	Noise Killer	89-103
11001159	Socket - Mate-N-Lock	89-104
11001159	Socket - Mate-N-Lock	99-103
11001159	Socket - Mate-N-Lock	101-102
11001169	Fastening Receptacle	89-105
11001169	Fastening Receptacle	91-103
11001169	Fastening Receptacle	97-103
11001169	Fastening Receptacle	99-104
11001169	Fastening Receptacle	103-102
11001170	Fastening Receptacle	91-104
11001171	Fastening Receptacle	91-105
11001172	Fastening Receptacle	89-106
11001172	Fastening Receptacle	91-106
11001172	Fastening Receptacle	95-101

Parts No.	Description	Page and Index No.
11001172	Fastening Receptacle	101-103
11001172	Fastening Receptacle	103-103
11001190	Socket - Mate-N-Lock	99-105
11001238	Pin - Mate-N-Lock	97-104
11001239	Pin - Mate-N-Lock	89-107
11001239	Pin - Mate-N-Lock	95-102
11001239	Pin - Mate-N-Lock	97-105
11001239	Pin - Mate-N-Lock	101-104
11001239	Pin - Mate-N-Lock	103-110
11001240	Socket - Mate-N-Lock	89-108
11001240	Socket - Mate-N-Lock	91-107
11001240	Socket - Mate-N-Lock	99-106
11001241	Socket - Mate-N-Lock	91-108
11001241	Socket - Mate-N-Lock	95-103
11001241	Socket - Mate-N-Lock	101-105

Parts No.	Description	Page and Index No.
11001241	Socket - Mate-N-Lock	103-104
11001247	Terminal	89-109
11001247	Terminal	91-109
11001247	Terminal	103-105
11001249	Receptacle Terminal	89-110
11001249	Receptacle Terminal	93-101
11001249	Receptacle Terminal	95-104
11001249	Receptacle Terminal	97-106
11001249	Receptacle Terminal	101-106
11001249	Receptacle Terminal	103-106
11001264	Terminal	97-107
11001269	Fastening Receptacle	101-107
11001327	Contact	89-111
11001327	Contact	93-102
11001327	Contact	95-105
11001327	Contact	97-108
11001327	Contact	99-107
11001327	Contact	101-108
11001327	Contact	103-107
11001328	Contact	89-112
11001328	Contact	97-109
11001328	Contact	99-108
11001328	Contact	101-109
11001328	Contact	103-108
11001341	Pin Contact	89-113
11001346	Pin Contact	89-114
11001348	Pin Contact	89-115
11001348	Pin Contact	99-109
11001356	Pin Contact	89-116
11010328	Connector Pin Contact	69-101
11010328	Connector Pin Contact	83-102
11010328	Connector Pin Contact	87-101
11010359	Terminal - 3P	33-120
11010359	Terminal - 3P	67-122
11020185	Connector - 4P	89-117

Parts No.	Description	Page and Index No.
11020512	Connector - 3P	97-110
11020675	Connector - 6P	71-101
11020782	Connector - 4P	91-110
11020796	Insulating Sleeve	103-109
11020946	Housing - 3P	91-111
11020948	Housing - 3P	91-112
11020958	Connector - 2P	83-103
11020977	Connector - Heater	89-118
11020983	Connector - 2P	97-111
11020995	Connector - 2P	81-101
11021089	Connector - 3P	99-110
11021091	Connector - 6P	101-110
11021194	Pin Connector - 3P	81-102
11021244	Connector - 15P	99-111
11021286	Connector	89-119
11021289	Connector - 6P	99-112
11021306	Connector - 3P	89-120
11021350	Connector - 5239-2P	99-113
11021396	Connector - 2P	89-121
11021396	Connector - 2P	99-114
11021397	Connector - 2P	89-122
11021397	Connector - 2P	101-111
11021398	Connector - 2P	101-112
11021401	Receptacle Housing - 1P	91-114
11021402	Receptacle Housing - 1P	91-115
11021402	Receptacle Housing - 1P	95-106
11021402	Receptacle Housing - 1P	101-113
11021403	Receptacle Housing	91-116
11021404	Receptacle Housing	89-123
11021404	Receptacle Housing	91-117
11021404	Receptacle Housing	95-107
11021404	Receptacle Housing	101-114
11021404	Receptacle Housing	103-128
11021407	Receptacle Housing - 1P	89-124
11021408	Connector	89-125
11021408	Receptacle Housing	89-125

Parts No.	Description	Page and Index No.
11021408	Receptacle Housing	91-118
11021408	Receptacle Housing	97-112
11021408	Receptacle Housing	99-115
11021408	Receptacle Housing	103-111
11021507	Connector - 2P	95-108
11021507	Connector - 2P	101-115
11021507	Connector - 2P	103-112
11021508	Connector - 3P	97-113
11021509	Connector - 4P	89-126
11021514	Connector - 1P	103-113
11021515	Connector - 2P	89-127
11021515	Connector - 2P	91-119
11021515	Connector - 2P	95-109
11021515	Connector - 2P	99-116
11021515	Connector - 2P	101-116
11021516	Connector - 3P	91-120
11021516	Connector - 3P	103-114
11021517	Connector - 4P	89-128
11021517	Connector - 4P	99-117
11021524	Connector - 2P	97-114
11021532	Connector - 2P	91-121
11021532	Connector - 2P	103-115
11021559	Connector - 2P (Black)	91-122
11021567	Connector - 2P	69-102
11021620	Receptacle Housing - 3P	89-129
11021620	Receptacle Housing - 3P	93-103
11021620	Receptacle Housing - 3P	95-110
11021620	Receptacle Housing - 3P	97-115
11021620	Receptacle Housing - 3P	101-117
11021620	Receptacle Housing - 3P	103-116
11021621	Receptacle Housing - 3P	103-117
11021623	Receptacle Housing - 7P	93-104
11021623	Receptacle Housing - 7P	95-111
11021623	Receptacle Housing - 7P	103-118
11021786	Connector - 3P	93-105

Parts No.	Description	Page and Index No.
11021786	Connector - 3P	95-112
11021786	Connector - 3P	101-118
11021786	Connector - 3P	103-119
11021787	Connector - 3P	101-119
11021815	Connector - 3P	91-123
11021815	Connector - 3P	103-120
11021889	Connector - 6P	91-113
11021892	Connector - 9P	89-130
11021896	Connector - 2P	89-131
11021906	Connector - 26P	101-120
11021910	Connector - 2P	89-132
11021910	Connector - 2P	93-106
11021910	Connector - 2P	95-113
11021910	Connector - 2P	99-118
11021910	Connector - 2P	101-121
11021911	Connector - 3P	89-133
11021911	Connector - 3P	97-116
11021911	Connector - 3P	103-121
11021912	Connector - 4P	89-134
11021912	Connector - 4P	99-119
11021912	Connector - 4P	103-122
11021913	Connector - 5P	89-135
11021914	Connector - 6P	89-136
11021915	Connector - 7P	89-137
11021915	Connector - 7P	93-107
11021915	Connector - 7P	95-114
11021915	Connector - 7P	103-123
11021916	Connector - 8P	89-138
11021916	Connector - 8P	103-124
11021917	Connector - 9P	89-139
11021917	Connector - 9P	95-115
11021918	Connector - 10P	89-140
11021919	Connector - 11P	97-117
11021921	Connector - 13P	89-141
11021923	Connector - 15P	97-118

Parts No.	Description	Page and Index No.
11021924	Connector - 2P	89-142
11021924	Connector - 2P	93-108
11021924	Connector - 2P	95-116
11021925	Connector - 3P	95-117
11021925	Connector - 3P	103-125
11021926	Connector - 4P	89-143
11021927	Connector - 5P (Red)	93-109
11021929	Connector - 7P	103-126
11021930	Connector - 6P	89-144
11021934	Connector - 12P	97-119
11021938	Connector - 2P	89-145
11021938	Connector - 2P	93-110
11021938	Connector - 2P	101-122
11021939	Connector - 3P	89-146
11021942	Connector - 6P	89-147
11021942	Connector - 6P	95-118
11021943	Connector - 7P	95-119
11021944	Connector - 8P	95-120
11021952	Connector - 2P	97-120
11021964	Connector - 2P	97-121
11021964	Connector - 2P	99-120
11021965	Connector - 3P	99-121
11021965	Connector - 3P	103-127
11021966	Connector - 4P	97-122
11021970	Connector - 2P	99-122
11021971	Connector - 3P	99-123
11021976	Connector - 2P	89-148
11021976	Connector - 2P	101-123
11022061	Connector - 6P	89-149
11022099	Connector - 12P	89-150
11022112	Connector - 2P	73-101
11022113	Connector - 2P	73-102
11022278	Connector - 18P	89-151
11022365	Connector - 6P	77-101
11022365	Connector - 6P	79-101

Parts No.	Description	Page and Index No.
11022366	Connector - 8P	77-102
11022366	Connector - 8P	79-102
11022367	Connector - 6P	95-121
11022368	Connector - 8P	95-122
11022369	Connector - 6P	89-152
11022370	Connector - 6P	89-153
11030347	Connector - 8P	69-103
11030657	Connector - 50P	89-154
11030660	Connector - 16P	99-124
11030662	Connector - 20P	99-125
11030701	Terminal - 6P	73-103
11030750	Terminal - 2P	71-102
11030881	Connector - 4P	83-104
11031177	Connector - 26P	87-102
11031247	Connector - 3P	85-101
11031695	Connector - 15P	81-103
11031724	Connector - 2P	73-104
11031724	Connector - 2P	77-103
11031725	Connector - 3P	75-101
11031726	Connector - 4P	71-103
11031726	Connector - 4P	77-104
11031726	Connector - 4P	79-103
11031726	Connector - 4P	83-105
11031728	Connector - 6P	69-104
11031729	Connector - 7P	75-102
11031729	Connector - 7P	77-105
11031729	Connector - 7P	79-104
11031729	Connector - 7P	85-102
11031730	Connector - 8P	69-105
11031730	Connector - 8P	71-104
11031730	Connector - 8P	85-103
11031731	Connector - 9P	71-105
11031731	Connector - 9P	73-105
11031731	Connector - 9P	75-103
11031731	Connector - 9P	77-106

Parts No	Description	Page and Index No.
11031731	Connector - 9P	79-105
11031733	Connector - 11P	87-103
11031735	Connector - 13P	75-104
11031739	Connector - 3P	75-105
11031739	Connector - 3P	77-107
11031739	Connector - 3P	79-106
11031739	Connector - 3P	85-104
11031741	Connector - 5P	77-108
11031743	Connector - 7P	85-105
11031748	Connector - 12P	81-104
11031752	Connector - 2P	77-109
11031753	Connector - 3P	75-106
11031756	Connector - 6P	79-107
11031757	Connector - 7P	75-107
11031757	Connector - 7P	79-108
11031758	Connector - 8P	79-109
11031878	Connector - 2P	69-106
11033019	Connector - 16P	87-104
11033020	Connector - 20P	69-107
11033020	Connector - 20P	83-106
11033022	Connector - 30P	83-107
11033025	Connector - 50P	69-108
11033029	Connector - 2P	69-109
11033036	Connector - 26P	87-105
11033037	Connector - 26P	69-110
11040224	Relay Bracket	35-108
11040271	LSI Socket - 28P	69-111
11040271	LSI Socket - 28P	83-108
11040322	Fuse Holder - 220/240V	33-111
11040323	Fuse Holder	67-126
11040333	Fuse Holder	83-109
11040338	IC Socket - 40P	87-106
11050005	Nylon Clip - 3N	59-118
11050008	Nylon Clip - 2N	25-118
11050008	Nylon Clip - 2N	53-107
11050008	Nylon Clip - 2N	55-113

Parts No.	Description	Page and Index No.
11050008	Nylon Clip - 2N	59-119
11050008	Nylon Clip - 2N	67-119
11050010	Nylon Clip - 6N	27-110
11050010	Nylon Clip - 6N	35-110
11050011	Nylon Clip - 8N	67-118
11050034	Nylon Clip - 7N	55-116
11050047	Ty Wrap	51-113
11050087	Clamp	33-115
11050087	Clamp	35-111
11050087	Clamp	55-110
11050099	Wire Saddle	57-112
11050099	Wire Saddle	59-120
11050106	Wire Saddle	9-114
11050106	Wire Saddle	65-110
11050108	Nylon Clip	33-119
11050108	Nylon Clip	67-120
11050120	Wire Clip	37-116
11050144	Harness Clamp	33-121
11050144	Harness Clamp	27-111
11050144	Harness Clamp	35-109
11050159	PCB Stud	37-117
11050159	PCB Stud	43-114
11050162	Locking Support	47-103
11050196	Harness Clamp	47-120
11050201	Harness Clamp	33-118
11060134	Universal Bushing	51-102
11060336	Nylon Stud	67-117
11060394	Locking Support	33-117
11060395	Nylon Stud	33-116
11060395	Nylon Stud	51-103
11060442	Cord Clamp - 220/240V	33-122
11060442	Cord Clamp - 220/240V	67-123
11070271	Fuse - 3A	67-125
11070335	Fuse - 8A 220/240V	33-113
11070344	Circuit Breaker - 15A	33-112
11070413	Fuse - 3A	83-110

Parts No.	Description	Page and Index No.
11070415	Fuse 5A	35-112
11070487	Circuit Breaker - 115V	67-125
12040192	Microswitch - UL	65-111
12040883	DIP Switch	83-111
12041078	Microswitch	35-105
12041226	Push Switch	37-118
12041228	Switch	71-106
12041280	Push Switch	35-104
12041280	Push Switch	43-113
12041280	Push Switch	59-113
12041280	Push Switch	67-124
12041318	Microswitch	47-104
12041319	Microswitch	51-112
12041326	Dip Switch	87-107
12041327	Dip Switch	69-112
12041327	Dip Switch	71-107
12060029	Battery - BR2325	69-113
12081024	Solid State Relay - 240V, 2A	81-105
12081029	Power Relay	35-107
12081034	Relay - DC 24V	73-106
12081051	Relay - DC 24V (115V)	35-106
12081077	Solid State Relay	85-106
14000031	Transistor - 2SC458B	71-108
14000072	Transistor - 2SC372Y	69-114
14000100	Transistor - 2SA683	83-112
14000135	Transistor - 2SA1015	69-115
14000265	Transistor - 2SC1815Y	73-107
14000283	Transistor - 2SA1030	71-109
14000324	Transistor - 2SC458C	85-107
14010237	Transistor - 2SB872R	71-110
14010327	Transistor - 2SD1176R	71-111
14010329	IC - MP4503	83-113
14010467	Diode - S5566G	77-111
14010611	Diode - 1S1588	69-116
14010611	Diode - 1S1588	71-112

Parts No.	Description	Page and Index No.
14010769	Zener Diode - RD3.6EB	69-117
14010807	Diode Array	69-118
14010825	Diode - 1SS176	75-108
14010825	Diode - 1SS176	77-110
14010825	Diode - 1SS176	79-110
14010825	Diode - 1SS176	85-108
14010832	Diode - DSA1A1	81-106
14010832	Diode - DSA1A1	83-114
14020110	Diode - V06C	71-113
14020269	Zener Diode - RD39F	87-108
14020277	Zener Diode - 1Z12	71-114
14020388	Diode - W03C	89-155
14020430	Zener Diode - BZ-071	69-119
14020467	Diode - S5566G	73-108
14020467	Diode - S5566G	79-111
14030255	Light Emitting Diode	69-120
14030308	LED - TLR-102A	83-115
14030317	Photocoupler - ON3112	87-109
14050127	Thyristor - TLP541G	73-109
14050130	Rectifier - 400V 10A IG4B42	73-110
14050151	Photothyristor - TLP545J	73-111
14050152	Rectifier - 1J4B42	73-112
14070423	IC - SN7473N	87-110
14070508	IC - HD74LS04N	71-115
14070511	IC - HD7417P	69-121
14070520	IC - HD74LS00P	71-116
14070520	IC - HD74LS00P	85-109
14070604	IC - TC4049BP	83-116
14070605	IC - TC4050BP	69-122
14070621	IC - SN74LS08N	69-123
14070621	IC - SN74LS08N	71-117
14070622	IC - HD74LS10P	85-110
14070972	IC - HD74LS42P	69-124
14070974	IC - HD74LS32P	69-125
14070975	IC - HD7407P	69-126

Parts No.	Description	Page and Index No.
14070975	IC - HD7407P	87-111
14071002	IC - TD62003P	85-111
14071016	IC - UPD8255AC-5	87-112
14071026	IC - SN74LS373N	69-127
14071026	IC - SN74LS373N	83-117
14071081	IC - HD7406P	69-128
14071090	IC - HD74LS74AP	71-118
14071094	IC - HD74LS93P	83-118
14071259	IC - μPD8155C-2	69-129
14071334	IC - μPD7810G	69-130
14071334	IC - μPD7810G	83-119
14071335	IC - RF5G02-005	69-131
14071337	IC - MN1215Q	83-120
14071348	IC - TD62304P	69-132
14071348	IC - TD62304P	83-121
14071348	IC - TD62304P	87-113
14071534	IC - MPD8253C-2	71-119
14071535	IC - TD62308AP	69-133
14071535	IC - TD62308AP	71-120
14071535	IC - TD62308AP	83-122
14071535	IC - TD62308AP	87-114
14071537	IC - TC74HC14P	71-121
14071651	IC - TC5517APL	69-134
14071652	IC - TD62307P	69-135
14080076	IC - UPC14312	83-123
14080099	IC - HA17901P	83-124
14080099	IC - HA17901P	87-115
14080124	IC - LM555CN	85-112
14080200	IC - TA75339P	75-109
14080258	IC - AN6914	69-136
14080408	IC - PST518A	83-125
14080412	IC - 7705CP	69-137
14080413	IC - TL092CP	69-138
15030062	Ceramic Oscillator - 6MHz	87-116
15030070	Ceramic Oscillator - 10MHz	69-139

Parts No.	Description	Page and Index No.
15030070	Ceramic Oscillator - 10MHz	83-126
15030103	Oscillator - 10MHz	71-122
16000544	Resistor - 1KΩ 1W	83-127
16000569	Resistor - 0.2Ω 1W	83-128
16000576	Resistor - 33Ω 5W	83-129
16011732	Resistor - 390Ω 1W	83-130
16012844	Resistor - 1.8KΩ 1/2W	73-113
16017178	Resistor Array - 120KΩ 1/4W ±5%	69-140
16017215	Resistor Array - 4.7KΩ 1/8W ±5%	71-123
16017282	Resistor Array - 150Ω	69-141
16017325	Resistor Array - 18KΩ 1/4W ±5%	69-142
16017326	Resistor Array - 10KΩ	83-131
16017352	Resistor Array - 4.7kΩ	87-117
16017370	Resistor Array - 1KΩ	69-143
16017373	Resistor Array - 3.3KΩ	69-144
16017374	Resistor Array - 4.7kΩ	69-145
16017374	Resistor Array - 4.7kΩ	71-124
16017374	Resistor Array - 4.7kΩ	75-110
16017374	Resistor Array - 4.7kΩ	87-118
16017375	Resistor Array - 3.3KΩ	69-146
16017376	Resistor Array - 10kΩ ±5% 1/8W	69-147
16017381	Resistor Array - 68kΩ	87-119
16017390	Resistor Array - 490Ω	69-148
16017468	Fuse Resistor - 100Ω 1/2W	73-114
16018137	Variable Resistor - 1KΩ 0.75W	69-149
16018145	Variable Resistor - 5KΩ	83-132
16018157	Variable Resistor - 100KΩ	83-133
16018185	Variable Resistor - 200Ω 0.5W	73-115
16018328	Variable Resistor - 30KΩ	69-150
16020895	Noise Killer - 0.1μF, 120Ω	73-116
16020920	Noise Killer - 0.1μF 120Ω	73-117
16020923	Noise Filter - 115V	33-27
16020927	Noise Filter - 220/240V	67-127
16020934	RC Array - CR01-R	69-151
16020934	RC Array - CR01-R	71-125

Parts No.	Description	Page and Index No
16020934	RC Array - CR01-R	87-120
16040288	Capacitor - 47µF 25WV	85-113
16040903	Capacitor - 10µF 35V	85-114
16040909	Capacitor - 1µF 50V	85-115
16041355	Capacitor - 220µF 10V	71-126
16041358	Capacitor - 1000µF 10V	83-134
16041378	Capacitor - 1µF 50V	69-152
16041381	Capacitor - 4.7µF 50V	69-153
16041381	Capacitor - 4.7µF 50V	83-135
16041382	Capacitor - 10µF 50V	69-154
16041382	Capacitor - 10µF 50V	75-111
16041382	Capacitor - 10µF 50V	83-136
16041383	Capacitor - 22µF 50V	69-155
16041383	Capacitor - 22µF 50V	83-137
16041383	Capacitor - 22µF 50V	87-121
16041386	Capacitor - 100µF 50V	69-156
16041386	Capacitor - 100µF 50V	71-127
16041386	Capacitor - 100µF 50V	83-138
16041386	Capacitor - 100µF 50V	87-122
16041418	Capacitor - 1µF 25V	71-128
16060689	Capacitor - 0.01µF 50V	73-118
16060689	Capacitor - 0.01µF 50V	85-116
16060755	Capacitor - 10µF 220V (115V)	47-112
16060867	Capacitor - 3300µF 50V	71-129
16060916	Capacitor - 0.01µF 50V	85-117
16060996	Capacitor - 470PF 25V	69-157
16060998	Capacitor - 0.01µF 50V	69-158
16060998	Capacitor - 0.01µF 50V	75-112
16060998	Capacitor - 0.01µF 50V	87-123
16060999	Capacitor - 0.1µF 25V	69-159
16060999	Capacitor - 0.1µF 25V	85-118
16060999	Capacitor - 0.1µF 25V	87-124
16061129	Capacitor - 30pF 50V	87-125
16061184	Capacitor - 27PF 50V	69-160
16061184	Capacitor - 27PF 50V	83-139

Parts No.	Description	Page and Index No.
16061336	Capacitor - 1000PF 50V	83-140
16061380	Capacitor - 10µF (220/240V)	47-112
16061396	Capacitor - 0.1µF 25V	71-130
16061451	Capacitor - 0.1µF 50V	83-141
16061452	Capacitor - 0.01µF 50V	83-142
16061484	Capacitor - 16µF 220V (115V)	33-114
16061485	Capacitor - 16µF 220V (220/240V)	33-114
16061495	Capacitor - 0.1µF 250V	73-119
16061496	Capacitor - 0.1µF 400V	73-120
16061497	Capacitor - 0.047µF 125V	73-121
16061498	Capacitor - 4µF AC 220V	59-117
16061506	Capacitor - 3µF 220V VDE	45-114
16061507	Capacitor - 3µF 220V UL	45-114
16061542	Capacitor - 0.22µF 250V	73-122
16070044	Coil - 100 UH	73-123
16070129	Coil - 600 UH	73-124
16100045	Resistor - 270Ω 1/8W ±5%	83-143
16100053	Resistor - 1KΩ 1/8W ±5%	83-144
16100057	Resistor - 1.5KΩ 1/8W ±5%	83-145
16100065	Resistor - 3.3KΩ 1/8W ±5%	83-146
16100067	Resistor - 4.7KΩ 1/8W ±5%	83-147
16100071	Resistor - 10KΩ ±5%	83-148
16100079	Resistor - 22KΩ 1/8W ±5%	83-149
16100107	Resistor - 111Ω 1/8W ±5%	83-150
16114101V	Resistor - 100Ω 1/4W ±5% - 220/240V	85-119
16114102	Resistor - 1KΩ 1/4T ±5%	69-161
16114102	Resistor - 1KΩ 1/4T ±5%	71-131
16114102V	Resistor - 1KΩ 1/4W ±5%	85-120
16114102	Resistor - 1KΩ 1/4T ±5%	87-126
16114103	Resistor - 10KΩ 1/4T ±5%	69-162
16114103	Resistor - 10KΩ 1/4T ±5%	75-113
16114103V	Resistor - 10KΩ 1/4T ±5% - 220/240V	85-121
16114103	Resistor - 10KΩ 1/4T ±5%	87-127
16114104	Resistor - 100KΩ 1/4T ±5%	69-163

Parts No.	Description	Page and Index No
16114104	Resistor - 100KΩ 1/4T ±5%	71-132
16114104V	Resistor - 100KΩ 1/4T ±5% - 220/240V	73-125
16114105	Resistor - 1MΩ 1/4T ±5%	69-164
16114152	Resistor - 1.5KΩ 1/4T ±5%	69-165
16114181	Resistor - 180Ω 1/4T	69-166
16114181	Resistor - 180Ω 1/4T	87-128
16114220	Resistor - 22Ω 1/4T ±5%	69-167
16114222	Resistor - 2.2KΩ 1/4T ±5%	83-152
16114223	Resistor - 22KΩ 1/4T ±5%	69-168
16114223	Resistor - 22KΩ 1/4T ±5%	73-126
16114273	Resistor - 27KΩ 1/4T ±5%	69-169
16114275	Resistor - 2.7MΩ 1/4W ±5%	69-170
16114330	Resistor - 330Ω 1/4T ±5%	83-151
16114332	Resistor - 3.3KΩ 1/4T ±5%	71-133
16114333	Resistor - 33KΩ 1/4T ±5%	71-134
16114471	Resistor - 470Ω 1/4T ±5%	69-171
16114471V	Resistor - 470Ω 1/4W ±5%	85-122
16114472	Resistor - 4.7KΩ 1/4T ±5%	69-172
16114472	Resistor - 4.7KΩ 1/4T ±5%	73-127
16114472V	Resistor - 4.7KΩ 1/4W ±5%	85-123
16114473	Resistor - 47KΩ 1/4T ±5%	69-173
16114562	Resistor - 5.6KΩ 1/4T ±5%	69-174
16114562V	Resistor - 5.6KΩ 1/4W ±5%	73-128
16114564V	Resistor - 560KΩ 1/4W ±5%	85-124
16114820	Resistor - 82Ω 1/4T ±5%	73-129
16116222	Resistor - 2.2KΩ 1/2T ±5%	69-175
16116222	Resistor - 2.2KΩ 1/2T ±5%	73-130
16116821	Resistor - 820Ω 1/2W	83-155
16221001	Resistor - 1KΩ 1/4T ±1%	69-176
16221202	Resistor - 2KΩ 1/4T ±1%	69-177
16221800	Resistor - 185Ω 1/2W ±1%	73-131
18230024	Switch	5-105
28010027	Power Supply Cord - 220/240V	33-23
28010039	Power Supply Cord - ROC	33-23

Parts No.	Description	Page and Index No.
28010040	Power Supply Cord - 115V	33- 23
28074103	Spacer .5 mm	21-115

PS100 (5922)
PARTS LOCATION AND LIST

This section instructs you as to the numbers and names of the parts of this machine.

1. EXPANSION UNIT [5922]

Rev. 10/91

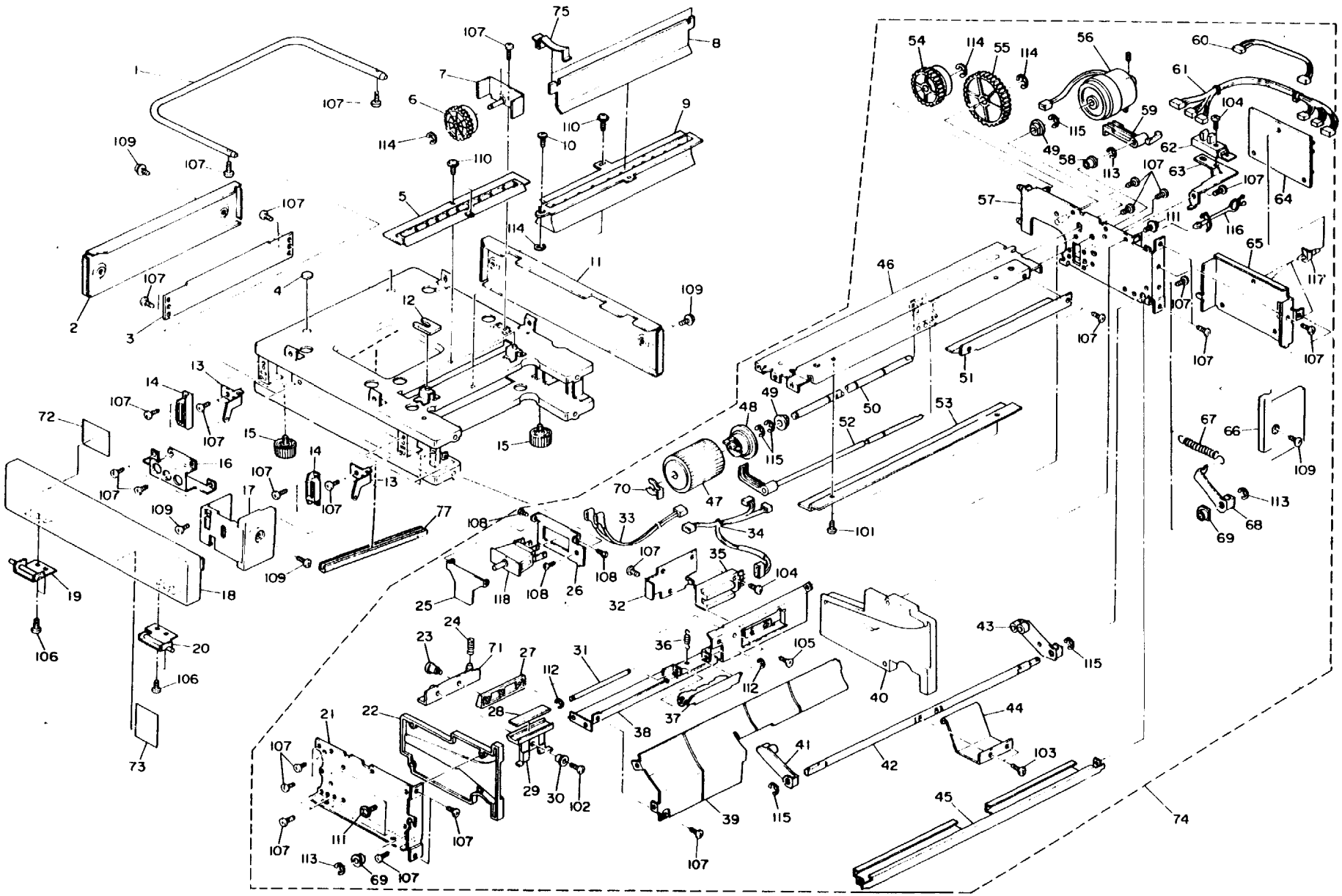

Index No.	Parts No.	Description	Q'ty Per Assembly
69	52152662	Busning	2
70	52152621	Snap Ring - M6	1
71	52152568	Pad Arm	1
72	59222456	Decal - Misfeed D	1
73	59222457	Decal - Misfeed E	1
74	59221125	3rd Paper Feed Unit	1
75	59222335	Guide Plate Holder	2
77	A0084612	Edging - 505mm	1
101	03130040W	Philips Pan Head Screw - M3 x 4	
102	03130120W	Philips Pan Head Screw - M3 x 12	
103	03140080M	Philips Pan Head Screw - M4 x 8	
104	03140120W	Philips Pan Head Screw - M4 x 12	
105	03230080W	Philips Sunken Head Screw - M3 x 8	
106	03440060D	Philips Truss Head Screw - M4 x 6	
107	04340080W	Tapping Screw - M4 x 8	
108	04340060W	Tapping Screw - M4 x 6	
109	08025094	Tapping Screw - M4x8	
110	09644008W	Tapping Screw with Flat Washer - M4 x 8	
111	09654008W	Tapping Screw with Flat Washer - M4 x 8	
112	07200025E	Retaining Ring - M2.5	
113	07200030E	Retaining Ring - M3	
114	07200050E	Retaining Ring - M5	
115	07200060E	Retaining Ring - M6	
116	11050120	Wire Clip	
117	11050159	PCB Stud	
118	12041226	Push Switch	

1. EXPANSION UNIT [5922]

Index No.	Parts No.	Description	Q'ty Per Assembly
*	59228751	Installation Procedure English	1
*	59228752	Installation Procedure-5 Languages	1
1	59222635	Expansion Unit Handle	1
2	59222384	Left Cover	1
3	59222667	Duplex Shipping Plate - Left	1
4	59222637	Rubber Seal	2
5	59222333	Expansion Relay Feed Guide	1
6	59222094	Gear 40T	2
7	59222240	Stud Bracket	1
8	59222334	Lower Guide Plate	1
9	59222336	Expansion Guide Plate	1
10	54032075	Stepped Screw	1
11	59222385	Rear Cover	1
12	59222636	Rubber Seal	2
13	59222391	Cover Bracket	2
14	50540536	Magnet Catch Ass'y	1
15	54191057	Rubber Foot	2
16	59222665	Duplex Shipping Plate - Front	1
17	59222451	Front Right Cover	1
18	59222450	Front Cover	1
19	52151297	Front Cover Hinge - Left	1
20	52151295	Front Cover Hinge - Right	1
21	59222211	Front Side Plate	1
22	59202115	Front Cassette Holder	1
23	54422642	Shoulder Screw - M3	1
24	52152644	Spring - Friction Pad	1
25	59222396	Switch Actuator	1
26	59222395	Safety Switch Bracket	1
27	52152598	Fixing Pad Bracket	1
28	52162844	Friction Pad	1
29	52152583	Pad Holder	1
30	54422638	Collar - Friction Pad Arm	1
31	52152579	Shaft	1
32	59222344	Size Sensor Bracket	1
33	59225203	Safety Switch Harness	1
34	59225201	3rd Feed Sensor Harness	1
35	52055253	Photointerruptor Pack	1
36	52152582	Spring	1
37	52152593	Lower Arm	1
38	59222342	Pad Mounting Plate	1
39	59222224	3rd Paper Feed Guide	1
40	59222372	Rear Cassette Holder	1
41	52152657	Lower Front Arm	1
42	52152646	Shaft	1
43	52152659	Lower Rear Arm	1
44	52152656	Lower Lift Arm	1
45	52151134	Lower Paper Feed Stay - Rignt	1
46	59222225	Paper Feed Guide	1
47	52152619	Feed Roller	1
48	52152618	Feed Roller Hub	1
49	50530223	Bushing - 8mm	1
50	59222236	Feed Roller Shaft	1
51	59202139	Sensor Feeler Cover	1
52	59222340	Paper End Feeler	1
53	59222229	Upper Paper Guide	1
54	59222231	Gear - 32T	1
55	59222233	Gear - 46T	1
56	52155314	Magnetic Clutch	1
57	59222220	Rear Side Plate	1
58	54432668	Bushing	1
59	52152626	Paper End Actuator	1
60	59225202	Clutch Harness	1
61	59225200	Interface Harness	1
62	52055250	..E.D. Sensor Type S	1
63	59222237	Sensor Bracket	1
64	59225101	3rd Paper Feed Board	1
65	59222238	PCB Bracket	1
66	59222452	Rear Right Cover	1
67	52152665	Spring - Lower Lift	1
68	52152663	Pressure Arm	1

2. COPIER RELAY UNIT [5922]

July 31, '86

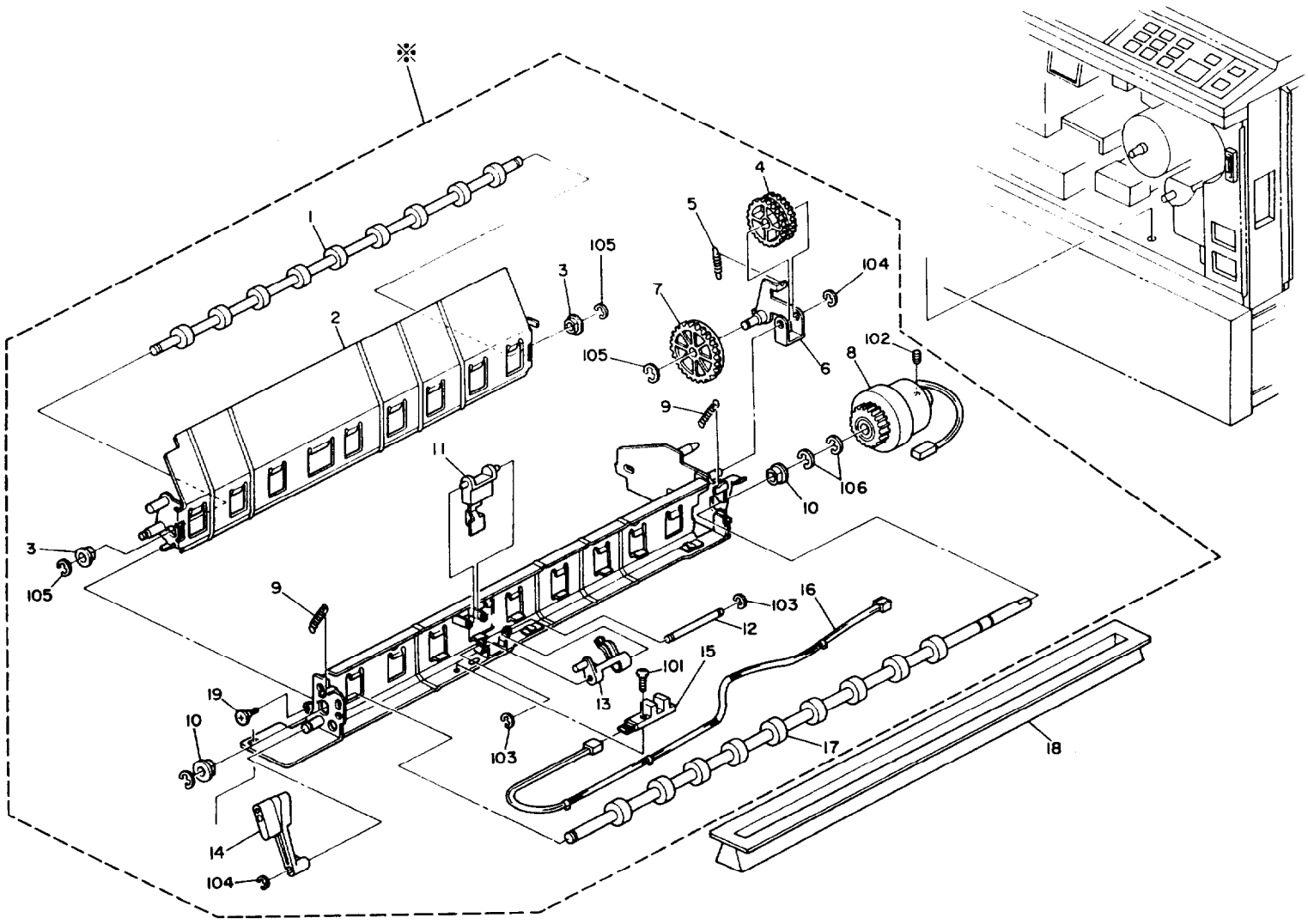

2. COPIER RELAY UNIT [5922]

July 31, '86

Index No.	Parts No.	Description	Q'ty Per Assembly
*	59221032	Copier Relay Feed Unit	1
1	59222082	Copier Relay Roller	1
2	59222070	Left Guide - Copier Relay Feed	1
3	50530447	Busning - 6mm	1
4	59222093	Gear - 28T	1
5	59222095	Spring - Gear	1
6	59222090	Stud Bracket	1
7	59222094	Gear - 40T	2
8	59225300	Relay Feed Clutch	1
9	59222085	Spring - Relay Guide	2
10	50530223	Bushing - 8mm	1
11	59222062	Sensor Actuator	1
12	59222067	Feeler Shaft	1
13	59222066	Sensor Feeler	1
14	59222097	Relay Guide Lever	1
15	52055250	L.E.D. Sensor Type S	1
16	59225204	Copier Relay Harness	1
17	59222081	Copier Relay Drive Roller	1
18	59222332	Copier Relay Feed Guide	1
19	52062684	Shoulder Screw - M3	1
101	03140120W	Pnilips Pan Head Screw - M4 x 12	
102	05740040E	Hexagon Headless Set Screw - M4 x 4	
103	07200030E	Retaining Ring - M3	
104	07200040E	Retaining Ring - M4	
105	07200050E	Retaining Ring - M5	
106	07200060E	Retaining Ring - M6	

Index No.	Parts No.	Description	Q'ty Per Assembly

3. 3RD PAPER FEED BOARD [5922]

July 31, '86

SYMBOL NO. : PRINTED NUMBER ON THE BOARD
INDEX NO. : REFERENCE NUMBER OF NEXT PAGE

CONNECTOR

SYMBOL NO.	INDEX NO.
CN901	106
CN902	101
CN903	102
CN904	106
CN905	101
CN906	102
CN907	103
CN908	105
CN909	107
CN910	109
CN911	104
CN912	108

DIODE

SYMBOL NO.	INDEX NO.
D901	110
D902	110
D903	110
D904	110
D905	110
D906	110
D907	110
D908	110
D909	110
D910	110
D911	111
D912	111

3. 3RD PAPER FEED BOARD [5922]

July 31, '86

Index No.	Parts No.	Description	Qty per Assembly
*	59225101	3rd Paper Feed Board	1
101	11022365	Connector - 6P	
102	11022366	Connector - 8P	
103	11031724	Connector - 2P	
104	11031726	Connector - 4P	
105	11031729	Connector - 7P	
106	11031731	Connector - 9P	
107	11031739	Connector - 3P	
108	11031741	Connector - 5P	
109	11031752	Connector - 2P	
110	14010825	Diode - 1SS176	
111	14010467	Diode - S5566G	

Index No.	Parts No.	Description	Qty per Assembly

4. EXPANSION HARNESS [5922]

July 31, '86

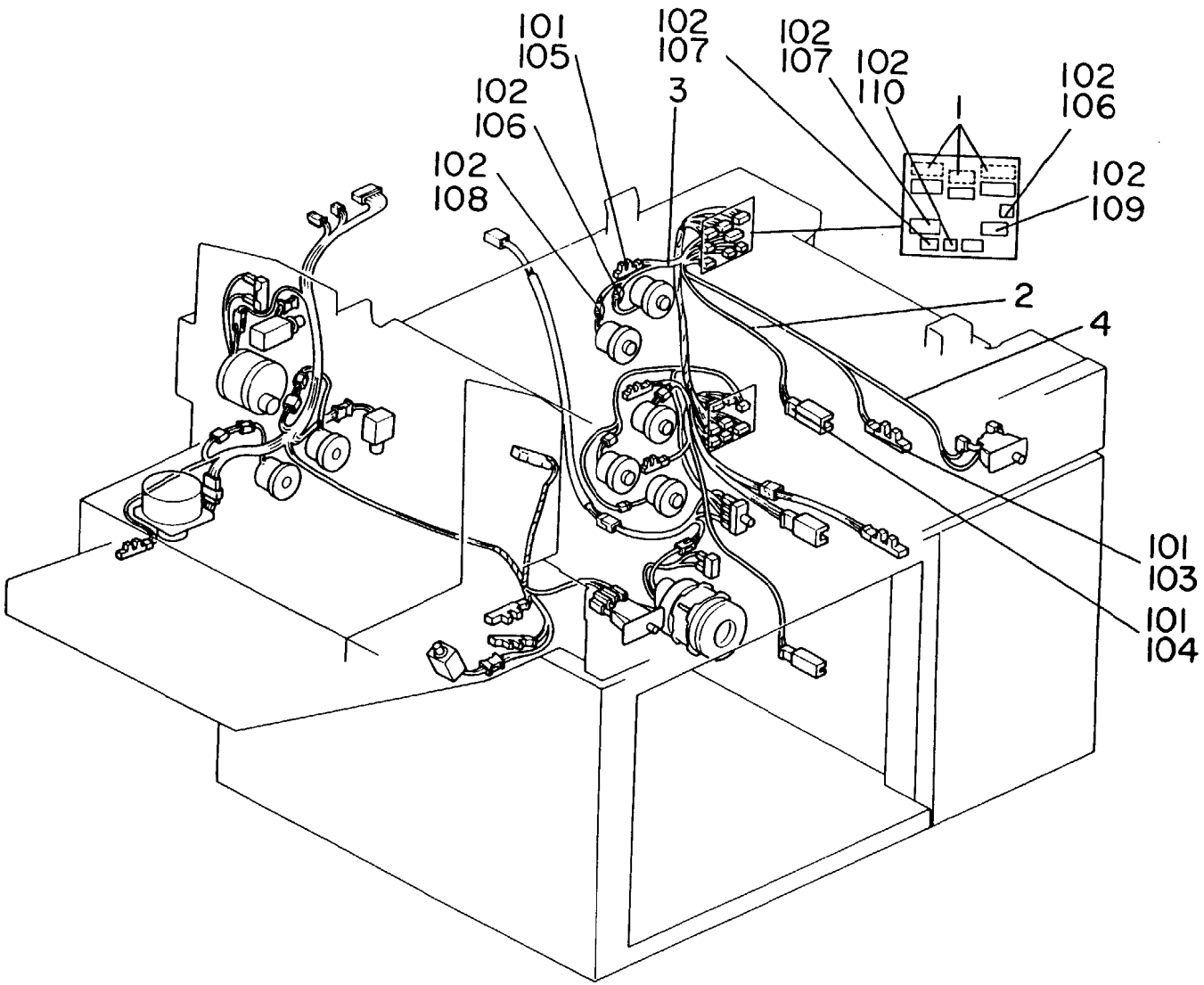

4. EXPANSION HARNESS [5922]

July 31, '86

Index No.	Parts No.	Description	Q'ty Per Assembly
1	59225200	Interface Harness	1
2	59225201	3rd Feed Sensor Harness	1
3	59225202	Clutch Harness	1
4	59225203	Safety Switch Harness	1
101	11001249	Receptacle Terminal	
102	11001327	Contact	
103	11021620	Receptacle Housing - 3P	
104	11021623	Receptacle Housing - 7P	
105	11021786	Connector - 3P	
106	11021910	Connector - 2P	
107	11021915	Connector - 7P	
108	11021924	Connector - 2P	
109	11021927	Connector - 5P (Red)	
110	11021938	Connector - 2P	

Index No.	Parts No.	Description	Q'ty Per Assembly

PS100 (5922)
PARTS INDEX

This section instructs you as to the numbers and names of the parts of this machine.

Parts No.	Description	Page and Index No.
59221032	Copier Relay Feed Unit	5- *
59221125	3rd Paper Feed Unit	3-74
59222062	Sensor Actuator	5-11
59222066	Sensor Feeler	5-13
59222067	Feeler Shaft	5-12
59222070	Left Guide - Copier Relay Feed	5- 2
59222081	Copier Relay Drive Roller	5-17
59222082	Copier Relay Roller	5- 1
59222085	Spring - Relay Guide	5- 9
59222090	Stud Bracket	5- 6
59222093	Gear - 28T	5- 4
59222094	Gear - 40T	3- 6
59222094	Gear - 40T	5- 7
59222095	Spring - Gear	5- 5
59222097	Relay Guide Lever	5-14
59222211	Front Side Plate	3-21
59222220	Rear Side Plate	3-57
59222224	3rd Paper Feed Guide	3-39
59222225	Paper Feed Guide	3-46
59222229	Upper Paper Guide	3-53
59222231	Gear - 32T	3-54
59222233	Gear - 46T	3-55
59222236	Feed Roller Shaft	3-50
59222237	Sensor Bracket	3-63
59222238	PCB Bracket	3-65
59222240	Stud Bracket	3- 7
59222332	Copier Relay Feed Guide	5-18
59222333	Expansion Relay Feed Guide	3- 5
59222334	Lower Guide Plate	3- 8
59222335	Guide Plate Holder	3-75
59222336	Expansion Guide Plate	3- 9
59222340	Paper End Feeler	3-52
59222344	Size Sensor Bracket	3-32
59222346	Pad Mounting Plate	3-38
59222372	Rear Cassette Holder	3-40

Parts No.	Description	Page and Index No.
59222384	Left Cover	3- 2
59222385	Rear Cover	3-11
59222391	Cover Bracket	3-13
59222395	Safety Switch Bracket	3-26
59222396	Switch Actuator	3-25
59222450	Front Cover	3-18
59222451	Front Right Cover	3-17
59222452	Rear Right Cover	3-66
59222456	Decal - Misfeed D	3-72
59222457	Decal - Misfeed E	3-73
59222635	Expansion Unit Handle	3- 1
59222636	Rubber Seal	3-12
59222637	Rubber Seal	3- 4
59222665	Duplex Shipping Plate - Front	3-16
59222667	Duplex Shipping Plate - Left	3- 3
59225101	3rd Paper Feed Board	3-64
59225101	3rd Paper Feed Board	7- *
59225200	Interface Harness	3-61
59225200	Interface Harness	9- 1
59225201	3rd Feed Sensor Harness	3-34
59225201	3rd Feed Sensor Harness	9- 2
59225202	Clutch Harness	3-60
59225202	Clutch Harness	9- 3
59225203	Safety Switch Harness	3-33
59225203	Safety Switch Harness	9- 4
59225204	Copier Relay Harness	5-16
59225300	Relay Feed Clutch	5- 8
59228752	Installation Procedure - Englisn	3- *

Parts No.	Description	Page and Index No.
50530223	Bushing - 8mm	3-49
50530223	Bushing - 8mm	5-10
50530447	Bushing - 6mm	5- 3
50540536	Magnet Catch Ass'y	3-14
52055250	L.E.D. Sensor Type S	3-62
52055250	L.E.D. Sensor Type S	5-15
52055253	Photointerruptor Pack	3-35
52062684	Shoulder Screw - M3	5-19
52151134	Lower Paper Feed Stay - Right	3-45
52151295	Front Cover Hinge - Right	3-20
52151297	Front Cover Hinge - Left	3-19
52152568	Pad Arm	3-71
52152579	Shaft	3-31
52152582	Spring	3-36
52152583	Pad Holder	3-29
52152593	Lower Arm	3-37
52152618	Feed Roller Hub	3-48
52152619	Feed Roller	3-47
52152621	Snap Ring - M6	3-70
52152626	Paper End Actuator	3-59
52152644	Spring - Friction Pad	3-24
52152646	Shaft	3-42
52152656	Lower Lift Arm	3-44
52152657	Lower Front Arm	3-41
52152659	Lower Rear Arm	3-43
52152662	Bushing	3-69
52152663	Pressure Arm	3-68
52152665	Spring - Lower Lift	3-67
52152673	Fixing Pad Bracket	3-27
52155314	Magnetic Clutch	3-56
52162844	Friction Pad	3-28
54032075	Stepped Screw	3-10
54191057	Rubber Foot	3-15
54422638	Collar - Friction Pad Arm	3-30
54422642	Shoulder Screw - M3	3-23

Parts No.	Description	Page and Index No.
54432668	Bushing	3-58
59202117	Front Cassette Holder - NSA	3-22
59202139	Sensor Feeler Cover	3-51
A0084612	Edging - 505mm	3-77

Parts No.	Description	Page and Index No.
03130040W	Philips Pan Head Screw - M3 x 4	3-101
03130120W	Philips Pan Head Screw - M3 x 12	3-102
03140080M	Philips Pan Head Screw - M4 x 8	3-103
03140120W	Philips Pan Head Screw - M4 x 12	3-104
03140120W	Philips Pan Head Screw - M4 x 12	5-101
03230080W	Philips Sunken Head Screw - M3 x 8	3-105
03440060D	Philips Truss Head Screw - M4 x 6	3-106
04340060W	Tapping Screw - M4 x 6	3-108
04340080W	Tapping Screw - M4 x 8	3-107
05740040E	Hexagon Headless Set Screw - M4 x 4	5-102
07200025E	Retaining Ring - M2.5	3-112
07200030E	Retaining Ring - M3	3-113
07200030E	Retaining Ring - M3	5-103
07200040E	Retaining Ring - M4	5-104
07200050E	Retaining Ring - M5	3-114
07200050E	Retaining Ring - M5	5-105
07200060E	Retaining Ring - M6	3-115
07200060E	Retaining Ring - M6	5-106
08025094	Tapping Screw - M4x8	3-109
09644008W	Tapping Screw with Flat Washer - M4 x 8	3-110
09654008W	Tapping Screw with Flat Washer - M4 x 8	3-111
11001249	Receptacle Terminal	9-101
11001327	Contact	9-102
11021620	Receptacle Housing - 3P	9-103
11021623	Receptacle Housing - 7P	9-104
11021786	Connector - 3P	9-105
11021910	Connector - 2P	9-106
11021915	Connector - 7P	9-107
11021924	Connector - 2P	9-108
11021927	Connector - 5P (Red)	9-109
11021938	Connector - 2P	9-110
11022365	Connector - 6P	7-101
11022366	Connector - 8P	7-102
11031724	Connector - 2P	7-103
11031726	Connector - 4P	7-104

Parts No.	Description	Page and Index No.
11031729	Connector - 7P	7-105
11031731	Connector - 9P	7-106
11031739	Connector - 3P	7-107
11031741	Connector - 5P	7-108
11031752	Connector - 2P	7-109
11050120	Wire Clip	3-116
11050159	PCB Stud	3-117
12041226	Push Switch	3-118
14010467	Diode - S5566G	7-111
14010825	Diode - 1SS176	7-110

DF34 (5918)
PARTS LOCATION AND LIST

This section instructs you as to the numbers and names of the parts of this machine.

1. DOCUMENT FEEDER I [5918]

Rev. 08/91

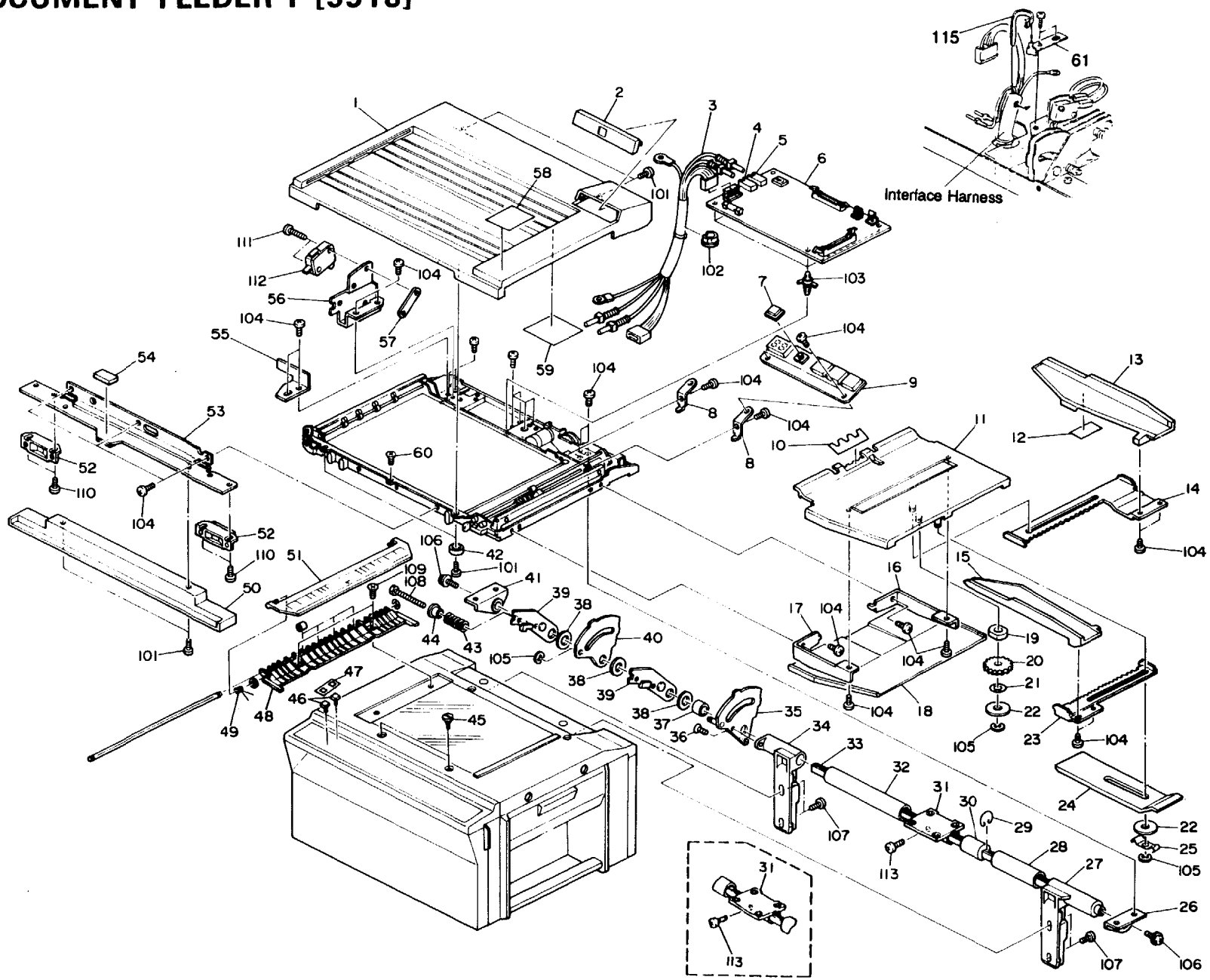

1 . DOCUMENT FEEDER I [5918]

Rev. 08/91

Index No.	Parts No.	Description	Q'ty Per Assembly
•	59188751	Installation Procedure - English	1
•	59188752	Installation Procedure - Europe	1
▫	59184226	Multilanguage Decal	1
1	59183754	DF Cover Ass'y - 115V	1
1	59183749	DF Cover Ass'y - 220/240V	1
2	59183762	Display Panel	1
3	59185801	Interface Harness	1
4	59185711	Fiber Output Connector	1
5	59185712	Fiber Input Connector	1
6	59185601	DF Main Board	1
7	59182645	Key top	1
8	59182390	Display Board Bracket	2
9	59185621	Display Board	1
10	59182725	Mylar - Feed In	1
11	59182711	Original Feed Table - LT/LDG	1
11	59182712	Original Feed Table - A4/A3	1
12	58942747	Mylar - Original Guides	2
13	59182740	Rear Original Guide	1
14	58754146	Rack - Rear Original Guide	1
15	59182730	Front Original Guide	1
16	59182776	Front Table Bracket	1
17	59182775	Front Table Bracket	1
18	59182755	Original Table Cover	1
19	54432712	Cork Pad	1
20	54432657	Gear - 28Z	1
21	54432713	Wave Washer	1
22	54432660	Spacer - 6 x 22 x 0.5 mm	2
23	58754141	Rack - Front Original Guide	1
24	59182760	Original Taole Extender	1
25	59182770	Extender Spring Plate	2
26	59183160	Right Bracket - Torsion Spring	1
27	59183235	Right Mounting Post	1
28	59183244	Right Spring Pipe	1
29	58753553	Ring - Holder	1
30	59183249	Spring Holder	1
31	59183248	Bracket	2
32	59183243	Left Spring Pipe	1
33	59183250	Torsion Spring - 1.0 mm	1
34	59183230	Left Mounting Post	1
35	59183210	Right Brake Plate	1
36	58943215	Brake Stopper	1
37	58943219	Leaf Spring Holder	1
38	58943218	AID Pad	3
39	59183225	Brake Pad Plate	2
40	59183217	Left Brake Plate	1
41	59183156	Left Bracket - Torsion Spring	1
42	58863114	Roller Cover	2
43	58753287	Spring - Brake shoe	1
44	54032048	Busning - 4mm	2
45	58755510	Shoulder Screw - M5	2
46	59184020	Option Key Top	2
47	59184003	ADF Key Cover - International	1
47	59184002	ADF Key Cover - English	1
48	59183875	Original Exit Guide	1
49	59183855	Spring - Flip Scale	1
50	59183770	Grip	1
51	59183911	Flip Scale - LT/LDG	1
51	59183912	Flip Scale - A4/A3	1
52	50540440	Magnet Catch Ass'y	2
53	59183390	Grip plate	1
54	59183394	Seal - 15 x 30mm	1
55	59183261	Brake Plate Stopper	1
56	59183255	Brake Plate Bracket	1
57	50560509	Nut Plate - Microswitch	1
58	59183981	Decal - Misfeed Removal	1
59	59183986	Decal - Dip SW	1
60	59183040	Shoulder Screw - M4	1
61	A41 93365	Harness Bracket	1

Rev. 08/91

Index No.	Parts No.	Description	Q'ty Per Assembly
*	59189500	Torsion spring Kit (Index No. 30, Parts No. 59183249, Q'ty 1) (Index No. 31, Parts No. 59183248, Q'ty 1) (Index No. 33, Parts No. 59183250, Q'ty 4) (Index No. 113, Parts No. 03160100G, Q'ty 1)	
101	034400600	Philips Truss Head Screw - M4 x 6	
102	11060134	Universal Bushing	
103	11060395	Nylon Stud	
104	03140060W	Philips Pan Head Screw - M4 x 6	
105	07200040E	Retaining Ring - M4	
106	09515008W	Philips Screw with Flat Washer - M5 x 8	
107	03150080W	Philips Pan Head Screw - M5 x 8	
108	03140350W	Philips Pan Head Screw - M4 x 35	
109	A4193677	Shoulder Screw - Scale	2
110	03130060W	Philips Pan Head Screw - M3 x 6	
111	03130160W	Philips Pan Head Screw - M3 x 16	
112	12040770	Reed Switch	
113	03160100G	Philips Pan Head Screw - M6 x 10	
115	11050047	TY Wrap	1

2. DOCUMENT FEEDER II [5918]

July 31, '86

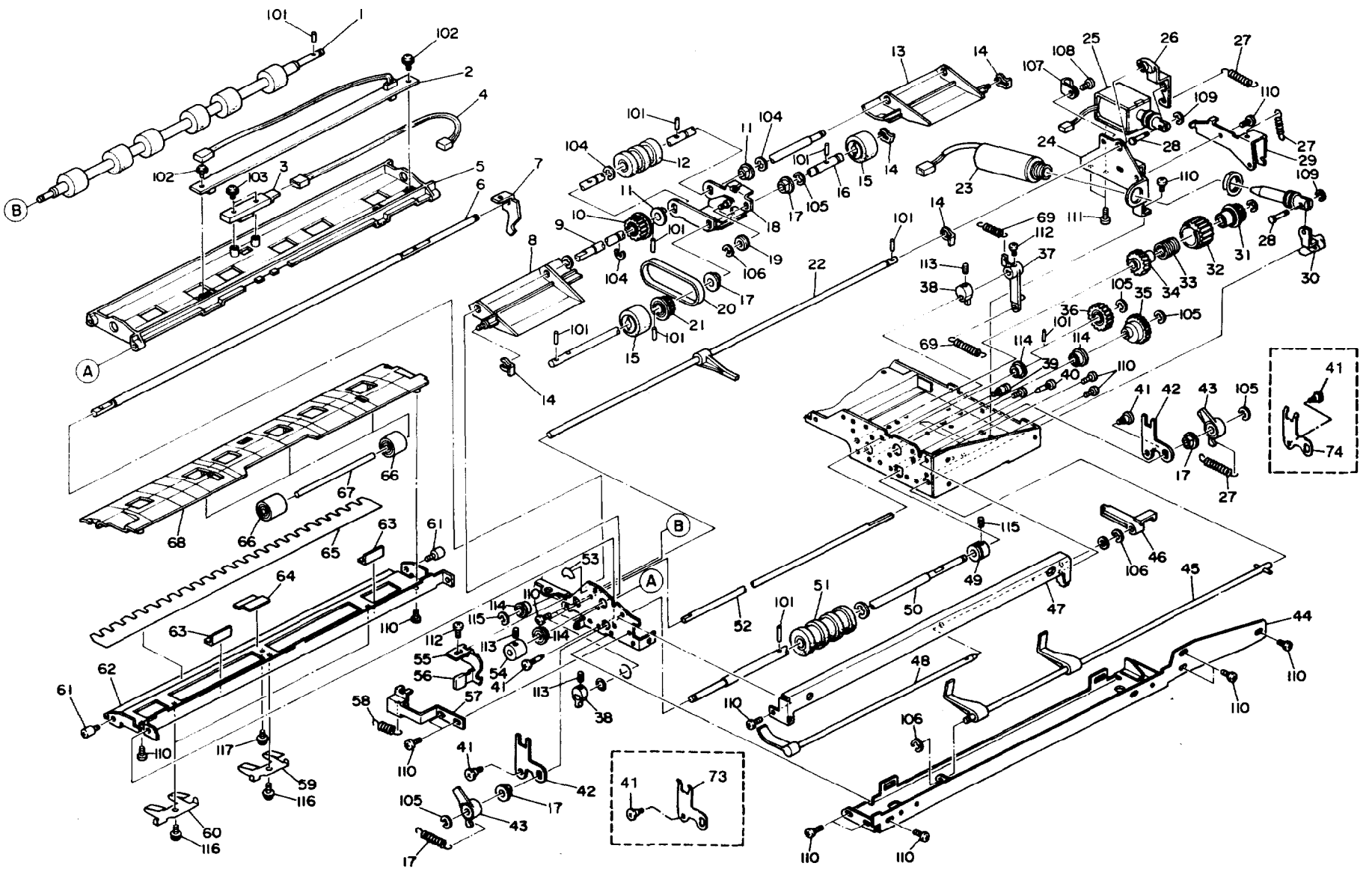

2. DOCUMENT FEEDER II **[5918]**

Rev. 10/91

Index No.	Parts No.	Description	Q'ty Per Assembly
1	59182155	Registration Roller	1
2	59185631	Paper Size Sensor	1
3	59185721	Pnotosensor	1
4	59185821	Registration Sensor Harness	1
5	59182520	Upper Feed-in Guide	1
6	59182168	Release Lever Shaft	1
7	59182172	Rear Release Lever	1
8	A4182230	Front Feed-in Guide	1
9	59182224	Feed Roller Snaft	1
10	58942186	Separation Roller Pulley	1
11	50530233	Bracket - Blower	1
12	58942181	Upper Separation Roller	1
13	A4182231	Rear Feed-in Guide	1
14	54472681	Snap Ring	4
15	58942171	Original Feed Roller	2
16	59182220	Pick-up Roller Snaft	1
17	50530447	Bushing - 6mm	1
18	59182215	Pick-up Roller Bracket	1
19	58942163	Center Roller	1
20	58942174	Timing Belt	1
21	59182223	Pulley - 24T	1
22	59182375	Pick-up Control Snaft	1
23	59185501	Stopper Solenoid	1
24	59182370	Pick-up Solenoid Bracket	1
25	59185515	Pick-up Solenoid	1
26	59182371	Pick-up Lever	1
28	58942229	Solenoid Pin	2
29	59182373	Stopper Bracket	1
30	59182372	Stopper Lever	1
31	59182158	Pulley - 25T	1
32	59182164	Clutcn Sleeve	1
33	59182163	Clutch Spring	1
34	59182159	Gear - 24T	1
35	59182230	Gear - 45T	1

Index YO.	Parts No.	Description	Q'ty Per Assembly
3 6	59182156	Gear - 24T	1
37	59182340	Release Arm	1
38	59182105	Eccentric Cam	2
39	54032049	Spring Anchor	1
40	54462824	Screw - Duplex Guide Plate	2
41	54132298	Stepped Screw - M4	1
43	59182106	One Way Bearing Lever	2
44	59183355	Right Frame	1
45	59182150	Feed-in Stopper	1
46	59182250	Sensor Actuator	1
47	59182252	Rignt Stay	1
48	59182260	Feed-in Sensor Feeler	1
49	58942264	Collar	1
50	59182101	Separation Roller Shaft	1
51	58942183	Lower Separation Roller	1
52	59182103	Eccentric Cam Shaft	1
53	59182781	Decal - Feed-in	1
54	59182210	Collar - 6mm	1
55	59182170	Front Release Lever	1
56	67541242	Knob Cap	1
57	59182108	Adjusting Plate	1
58	52012832	Spring -Cassette Release	1
59	59182616	Middle Spring Plate	2
60	59182615	Spring Plate	1
61	54131875	Knob Screw	2
62	59182621	Entrace Guide	1
63	58755501	Sensor Pad	1
64	59182624	Seal - 12 x 17 x 0.7 mm	1
65	59182623	Paper Guide Mylar	1
66	58942412	Roller	6
67	58942413	Relay Roller Snaft	3
68	59182610	Lower Feed-in Guide	1
69	58942293	Spring - Original Stopper	1
73	A4182102	Front Adjusting Plate	1
74	A4182103	Rear Adjusting Plate	1

July 31, '86

Index No.	Parts No.	Description	Q'ty Per Assembly
101	06320100E	Pin - M2 x 10	
102	09654006W	Tapping Screw - M4 x 6	
103	09653010W	Tapping Screw with Flat Washer - M3 x 10	
104	07200060E	Retaining Ring - M6	
105	07200050E	Retaining Ring - M5	
106	07200030E	Retaining Ring - M3	
107	11050008	Nylon Clip - 2N	
108	03140080W	Philips Pan Head Screw - M0 x 8	
109	07200025E	Retaining Ring - M2.5	
110	03140060W	Philips Pan Head Screw - M4 x 6	
111	03130040W	Philips Pan Head Screw - M3 x 4	
112	03130060W	Philips Pan Head Screw - M3 x 6	
113	05740040W	Hexagon Headless Set Screw - M4 x 4	
114	08053145	Ball Bearing - 6x12x4mm	
115	05730040W	Hexagon Headless Set Screw - M3 x 4	
116	09514006W	Philips Screw with Flat Washer - M4 x 6	

3. DOCUMENT FEEDER [5918]

July 31, '86

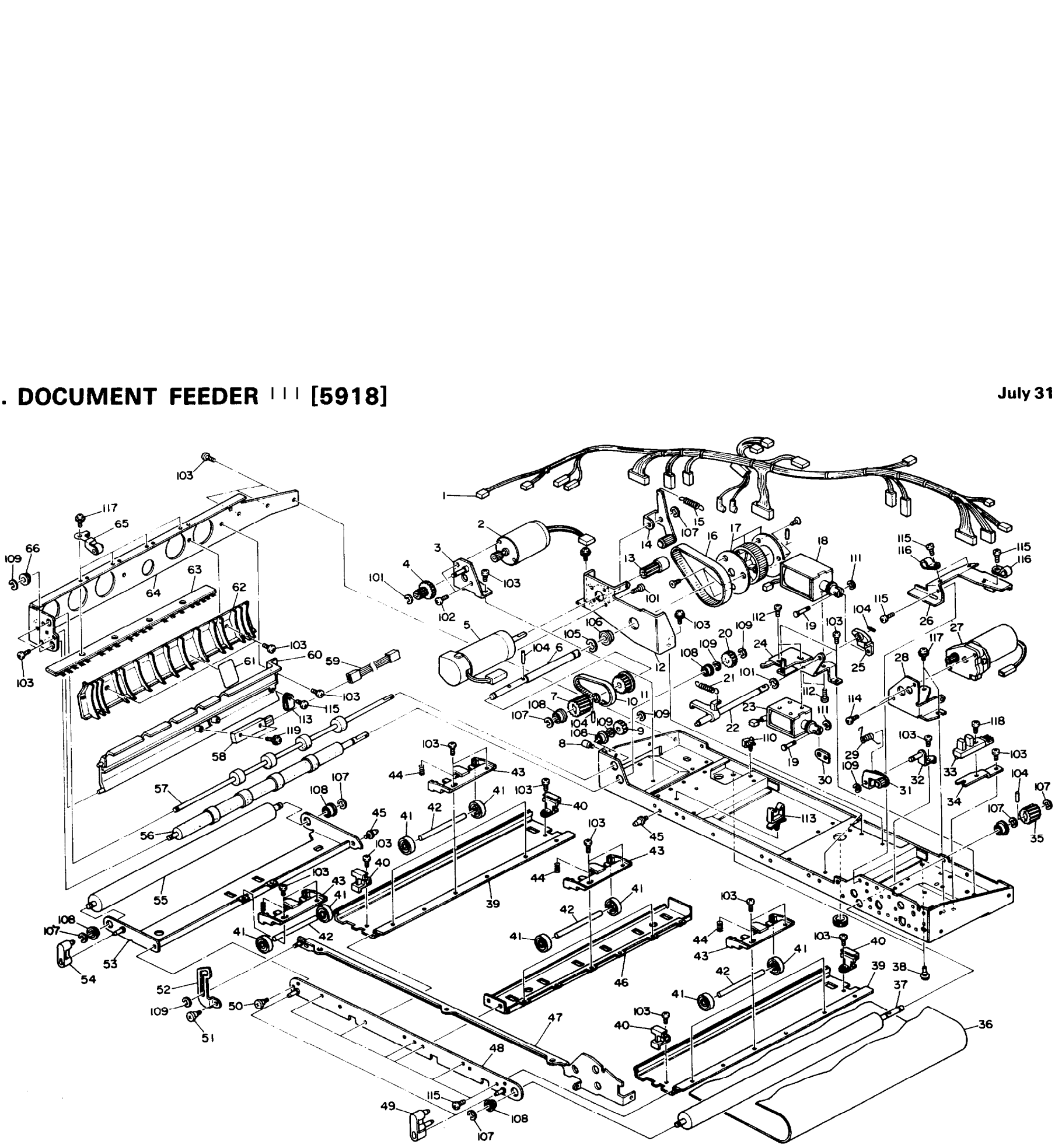

3. DOCUMENT FEEDER III [5918]

Rev. 10/91

Index No.	Parts No.	Description	Q'ty Per Assembly
1	59185811	Main Harness	1
2	59183516	Exit Drive Motor - DC1.69W	1
3	59183523	Exit Motor Bracket	1
4	59183146	Gear - 16T/33T	1
8	59365501	Transport Drive Motor DC-21W	1
6	59182311	Middledrive Shaft	1
7	59182317	Gear - 19T	1
8	59183120	Stud - M4	1
9	59183538	Gear - 38T	1
10	59182314	Timing Belt - MM63	1
11	59182313	Pulley - 30T	1
12	59182301	Motor Bracket	1
13	59182270	Pulley - 15T	1
14	59182321	Timing Belt Tightner	1
15	59182307	Spring - Drive Motor Tension	1
16	59182316	Timing Belt - P2M 208	1
17	59182295	Pulley - 79T	1
18	59185525	Registration Solenoid	1
19	58942229	Solenoid Pin	2
20	59183539	Gear - 44T	1
21	54083253	Spring - Cassette	1
22	59182330	Clutch Lever	1
23	59185516	Release Solenoid	1
24	59182324	Solenoid Bracket	1
25	59182325	Stopper Lever	1
26	59182385	Harness Backet Ass'y	1
27	59182349	Feed-in Motor Ass'y - DC24V	1
28	59182355	Feed-in Motor Bracket	1
29	59182289	Spring	1
30	59182327	Release Lever	1
31	59182285	Tightener Stud	1
32	59182275	Timing Belt Tightner	1
33	52155230	Photointerrupter - L Type	1
34	59182380	Sensor Bracket	1
35	59182318	Gear - 19T	1
36	59181125	Original Feed Belt	1
37	59183369	Belt Drive Roller	1
38	58943121	Base Damper	2
39	59181556	Belt Stay	2
40	59183382	Belt Stopper	4
41	59183381	Floating Roller	18
42	58751540	Shaft - Floating roller	9
43	59183383	Holder - Floating Roller	3
44	59183380	Spring - Floating Roller	9
45	59183125	Stud - M4	3
46	59183385	Belt Unit Stay	1
47	59183351	Front Frame	1
48	59183395	Front Belt Unit Plate	1
49	59183007	Belt Unit Holder - A	2
50	58401632	Stepped Screw	1
51	54131882	Stepped Screw - Lamp Terminal	2
52	59183093	Link	1
53	59183365	Belt Release Bracket	1
54	59183092	Belt Unit Holder - B	1
55	59183370	Belt Roller	1
56	59183537	Lower Exit Roller	1
57	59183536	Exit Roller	1
58	59185721	Photosensor	2
59	59185825	Exit Sensor Harness	1
60	59183566	Right Exit Guide	1
61	58755501	Sensor Pad	1
62	59183561	Left Exit Guide	1
63	59183562	Antistatic Brush	1
64	59183563	Left Frame	1
65	59183585	Upper Exit Roller	4
66	50530447	Bushing - 6mm	1

July 31, '86

Index No.	Parts No.	Description	Q'ty Per Assembly
101	07200030E	Retaining Ring - M3	
102	03430060W	Pnilips Pan Head Screw - M3 x 6	
103	03140060W	Pnilips Pan Head Screw - M4 x 6	
104	06320100E	Pin - M2 x 10	
105	07200070W	Retaining Ring - M7	
106	08053291	Ball Bearing - 8 x 16 x 5mm	
107	07200050W	Retaining Ring - M5	
108	08053145	Ball Bearing - 6x12x4mm	
10	07200040E	Retaining Ring - M4	
11	11050087	Clamp	
11	07200025E	Retaining Ring - M2.5	
11	03130040W	Philips Pan Head Screw - M3 x 4	
11	11050008	Nylon Clip - 2N	
11	03130060W	Pnilips Pan Head Screw - M3 x 6	
115	03140080W	Philips Pan Head Screw - M4 x 8	
116	11050034	Nylon Clip - 7N	
117	09514006W	Philips Screw with Flat Wasner - M4 x 6	
118	03140100W	Philips Pan Head Screw - M4 x 10	
119	09653010W	Tapping Screw With Flat Washer - M3 x 10	

4. DF MAIN BOARD [5918]

July 31, '86

SYMBOL NO. : PRINTED NUMBER ON THE BOARD
INDEX NO. : REFERENCE NUMBER OF NEXT PAGE

CAPACITOR

SYMBOL NO.	INDEX NO.	SYMBOL NO.	INDEX NO.	SYMBOL NO.	INDEX NO.
C101	134	C125	142	C141	158
C102	136	C126	142	C142	157
C103	136	C127	142	C143	142
C104	137	C128	142	C144	142
C105	138	C129	142	C145	142
C106	135	C130	142	C146	142
C107		C131	142	C147	142
C108	139	C132	142		
C109	139	C133	142		
C110	142	C134	142		
C111	142	C135	142		
C112	142	C136	142		
C113	142	C137	142		
C114	142	C138	142		
C115	142	C139	142		
C116	142	C140	140		
C117	142				
C118	142				
C119	142				
C120	142				

CONNECTOR

SYMBOL NO.	INDEX NO.
CN101	104
CN102	103
CN103	105
CN104	106
CN105	107

DIP SW

SYMBOL NO.	INDEX NO.
DPS101	111

IC

SYMBOL NO.	INDEX NO.
IC101	117
IC102	1
(SOCKET) IC103	108
	123
(HEAT) SINK)	101
IC104	121
IC105	119
	118
	125
	121
IC112	116
	122
	124
	113
IC113	3
IC114	2
IC115	124
IC116	124

LED

SYMBOL NO.	INDEX NO.
LED101	115
LED102	115
LED103	115
LED104	115
LED105	115
LED106	115

OSCILATOR

SYMBOL NO.	INDEX NO.
OSC101	126

POTENTIOMETER

SYMBOL NO.	INDEX NO.
VR101	132
VR103	132
VR104	133
VR105	133

JACK

SYMBOL NO.	INDEX NO.
J101	156

FUSE

SYMBOL NO.	INDEX NO.
F101	114
F103	144
F104	114

COIL

SYMBOL NO.	INDEX NO.
L101	126

RESISTOR

SYMBOL NO.	INDEX NO.	SYMBOL NO.	INDEX NO.	SYMBOL NO.	INDEX NO.	SYMBOL NO.	INDEX NO.	SYMBOL NO.	INDEX NO.
R101	151	R121	149	R141	143			R181	145
R102	127	R122	149	R142	143	R162	150	R182	145
R103	154	R123	149	R143	143	R163	147	R183	147
R104	129	R124	144	R144	143	R164	147	R184	145
R105	151	R125	149	R145	147	R165	147	R185	147
R106	130	R126	144	R146	147	R166	147	R186	147
R107	130	R127	150	R147	147	R167	147	R187	145
R108	155	R128	150	R148	147	R168	147	R188	147
R109	151	R129	150	R149	147	R169	147	R189	147
R110	128	R130	150	R150	143	R170	147	R190	144
R111	152	R131	147	R151	143	R171	147	R191	147
R112	141	R132	147	R152	149	R172	147	R192	147
R113	153	R133	147	R153	143	R173	149	R193	146
R114	153	R134	147	R154	143	R174	148	R194	149
R115	149	R135	147	R155	143	R175	148	R195	146
R116	144	R136	147	R156	143	R176	145	R196	149
R117	149	R137	147	R157	143	R177	147	R197	146
R118	149	R138	147	R158	148	R178	145	R198	148
R119	149	R139	143	R159	149	R179	147	R199	149
R120	149	R140	143	R160	147	R180	147	R200	146

RESISTOR

SYMBOL NO.	INDEX NO.
R201	149
R202	148
R203	147
R204	147
R205	147

RESISTOR ARRAY

SYMBOL NO.	INDEX NO.
RAY101	131

TEST PIN

SYMBOL NO.	INDEX NO.
TP101	102
TP102	102
TP103	102
TP104	102
TP105	102

TRANSISTOR

SYMBOL NO.	INDEX NO.
Q101	112
Q102	112

4. DF MAIN BOARD [5918]

July 31, '86

Index No.	Parts No.	Description	Q'ty per Assembly
6	59185642	DF Main Board	1
1	59185613	IC - HN482764G-3	1
2	59185701	IC - HCTL-1	1
3	59185702	IC - HCTL-2	1
101	10050767	Heat Sink	
102	11010328	Connector Pin Contact	
103	11020958	Connector - 2P	
104	11030881	Connector - 4P	
105	11031726	Connector - 4P	
106	11033020	Connector - 20P	
107	11033022	Connector - 30P	
108	11040271	LSI Socket - 28P	
109	11040333	Fuse Holder	
110	11070413	Fuse - 3A	
111	12040883	DIP Switch	
112	14000100	Transistor - 2SA683	
113	14010329	IC - MP4503	
114	14010832	Diode - DSA1A1	
115	14030308	LED - TLR-102A	
116	14070604	IC - TC4049BP	
117	14071026	IC - SN74LS373N	
118	14071094	IC - HD74LS93P	
119	14071334	IC - μPD7810G	
120	14071337	IC - MN1215Q	
121	14071348	IC - TD62304P	
122	14071535	IC - TD62308AP	
123	14080076	IC - μPC14312	
124	14080099	IC - HA17901P	
125	14080408	IC - PST518A	
126	15030070	Ceramic Oscillator - 10MHz	
127	16000544	Resistor - 1KΩ 1W	
128	16000569	Resistor - 0.2Ω 1W	
129	16000576	Resistor - 33Ω 5W	
130	16011732	Resistor - 390Ω 1W	
131	16017326	Resistor Array - 10KΩ	
132	16018145	Variable Resistor - 5KΩ	
133	16018157	Variable Resistor - 100KΩ	
134	16041358	Capacitor - 1000μF 10V	
135	16041381	Capacitor - 4.7μF 50V	
136	16041382	Capacitor - 10μF 50V	
137	16041383	Capacitor - 22μF 50V	
138	16041386	Capacitor - 100μF 50V	
139	16061184	Capacitor - 27PF 50V	
140	16061336	Capacitor - 1000PF 50V	
141	16061451	Capacitor - 0.1μF 50V	
142	16061452	Capacitor - 0.01μF 50V	
143	16100045	Resistor - 270Ω 1/8W ±5%	
144	16100053	Resistor - 1KΩ 1/8W ±5%	
145	16100057	Resistor - 1.5KΩ 1/8W ±5%	
146	16100065	Resistor - 3.3KΩ 1/8W ±5%	
147	16100067	Resistor - 4.7KΩ 1/8W ±5%	
148	16100071	Resistor - 10KΩ ±5%	
149	16100079	Resistor - 22KΩ 1/8W ±5%	
150	16100107	Resistor - 111Ω 1/8W ±5%	
151	16114222	Resistor - 10KΩ 1/4W ±5%	
152	16114330	Resistor - 2.2KΩ 1/4W ±5%	
153	16114472	Resistor - 330KΩ 1/4W ±5%	
154	16116872	Resistor - 4.7KΩ 1/4W ±5%	
155	16116821	Resistor - 820Ω 1/2W	
156	16020953	Coil - 800μH 2.5A	
157	16060658	Capacitor - 0.1μF 50V	
158	16100286	Capacitor - 100PF 50V	

5. DF H RNESS [5918]

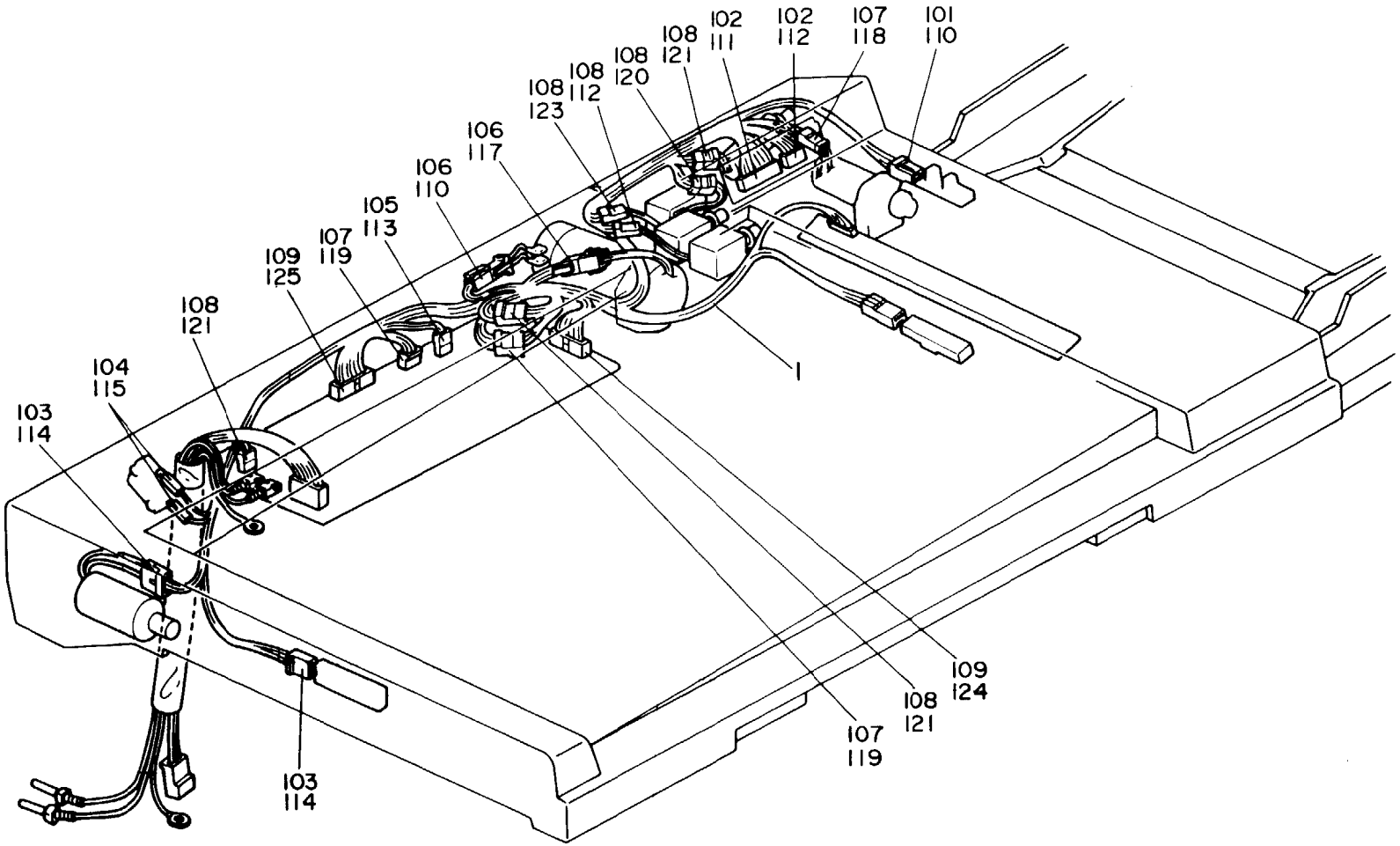

5. DF HARNESS [5918]

July 31, '86

Index No.	Parts No.	Description	Q'ty Per Assembly
1	59185811	Main Harness	1
101	11001089	Socket - MATE-N-LOCK	
102	11001147	Socket - MATE-N-LOCK	
103	11001159	Socket - Mate-N-Lock	
104	11001169	Fastening Receptacle	
105	11001190	Socket - Mate-N-Lock	
106	11001240	Socket - Mate-N-Lock	
107	11001327	Contact	
108	11001328	Contact	
109	11001348	Pin Contact	
110	11021089	Connector - 3P	
111	11021244	Connector - 15P	
112	11021289	Connector - 6P	
113	11021350	Connector - 5239-2P	
114	11021396	Connector - 2P	
125	11021408	Connector - 1P	
116	11021515	Connector - 2P	
117	11021517	Connector - 4P	
118	11021910	Connector - 2P	
119	11021912	Connector - 4P	
120	11021964	Connector - 2P	
121	11021965	Connector - 3P	
122	11021970	Connector - 2P	
123	11021971	Connector - 3P	
124	11030660	Connector - 16P	
125	11030662	Connector - 20P	

Index No.	Parts No.	Description	Q'ty Per Assembly

DF34 (5918)
PARTS INDEX

This section instructs you as to the numbers and names of the parts of this machine.

Parts No.	Description	Page and Index No.
59181125	Original Feed Belt	7-36
59181556	Belt Stay	7-39
59182101	Separation Roller Shaft	5-50
59182102	Adjusting Plate	5-42
59182103	Eccentric Cam Shaft	5-52
59182105	Eccentric Cam	5-38
59182106	One Way Bearing Lever	5-43
59182108	Adjusting Plate	5-57
59182150	Feed-in Stopper	5-45
59182155	Registration Roller	5- 1
59182156	Gear - 24T	5-36
59182158	Pulley - 25T	5-34
59182159	Gear - 24T	5-31
59182163	Clutch Spring	5-33
59182164	Clutch Sleeve	5-32
59182168	Release Lever Shaft	5- 6
59182170	Front Release Lever	5-55
59182172	Rear Release Lever	5- 7
59182210	Collar - 6mm	5-54
59182215	Pick-up Roller Bracket	5-18
59182220	Pick-up Roller Shaft	5-16
59182223	Pulley - 24T	5-21
59182224	Feed Roller Shaft	5- 9
59182225	Front Feed-in Guide	5- 8
59182226	Rear Feed-in Guide	5-13
59182230	Gear - 45T	5-35
59182250	Sensor Actuator	5-46
59182252	Right Stay	5-47
59182260	Feed-in Sensor Feeler	5-48
59182275	Timing Belt Tightner	7-32
59182285	Tightener Stud	7-31
59182289	Spring	7-29
59182292	Pulley - 15T	7-13
59182295	Pulley - 79T	7-17
59182301	Motor Bracket	7-12

Parts No.	Description	Page and Index No.
59182307	Spring - Drive Motor Tension	7-15
59182311	Middledrive Shaft	7- 6
59182313	Pulley - 30T	7-11
59182314	Timing Belt - MM63	7-10
59182316	Timing Belt - P2M 208	7-16
59182317	Gear - 19T	7- 7
59182318	Gear - 19T	7-35
59182321	Timing Belt Tightner	7-14
59182324	Solenoid Bracket	7-24
59182325	Stopper Lever	7-25
59182327	Release Lever	7-30
59182330	Clutch Lever	7-22
59182340	Release Arm	5-37
59182349	Feed-in Motor Ass'y - DC24V	7-27
59182355	Feed-in Motor Bracket	7-28
59182370	Pick-up Solenoid Bracket	5-24
59182371	Pick-up Lever	5-26
59182372	Stopper Lever	5-30
59182373	Stopper Bracket	5-29
59182375	Pick-up Control Shaft	5-22
59182380	Sensor Bracket	7-34
59182385	Harness Backet Ass'y	7-26
59182390	Display Board Bracket	3- 8
59182520	Upper Feed-in Guide	5- 5
59182610	Lower Feed-in Guide	5-68
59182615	Spring Plate	5-60
59182616	Middle Spring Plate	5-59
59182621	Entrace Guide	5-62
59182623	Paper Guide Mylar	5-65
59182624	Seal - 12 x 17 x 0.7 mm	5-64
59182645	Key top	3- 7
59182711	Original Feed Table - LT/LDG	3-11
59182712	Original Feed Table - A4/A3	3-11
59182725	Mylar - Feed In	3-10
59182730	Front Original Guide	3-15

Parts No.	Description	Page and Index No
59182740	Rear Original Guide	3-13
59182755	Original Table Cover	3-18
59182760	Original Table Extender	3-24
59182770	Extender Spring Plate	3-25
59182775	Front Table Bracket	3-17
59182776	Front Table Bracket	3-16
59182781	Decal - Feed-in	5-53
59183007	Belt Unit Holder - A	7-49
59183040	Shoulder Screw - M4	3-60
59183092	Belt Unit Holder - B	7-54
59183093	Link	7-52
59183120	Stud - M4	7- 8
59183125	Stud - M4	7-45
59183146	Gear - 16T/33T	7- 4
59183156	Left Bracket - Torsion Spring	3-41
59183160	Right Bracket - Torsion Spring	3-26
59183210	Right Brake Plate	3-35
59183217	Left Brake Plate	3-40
59183225	Brake Pad Plate	3-39
59183230	Left Mounting Post	3-34
59183235	Right Mounting Post	3-27
59183243	Left Spring Pipe	3-32
59183244	Right Spring Pipe	3-28
59183248	Bracket	3-31
59183249	Spring Holder	3-30
59183250	Torsion Spring - 1.0 mm	3-33
59183255	Brake Plate Bracket	3-56
59183261	Brake Plate Stopper	3-55
59183351	Front Frame	7-47
59183355	Right Frame	5-44
59183365	Belt Release Bracket	7-53
59183369	Belt Drive Roller	7-37
59183370	Belt Roller	7-55
59183380	Spring - Floating Roller	7-44
59183381	Floating Roller	7-41

Parts No.	Description	Page and Index No.
59183381	Floating Roller	7-41
59183382	Belt Stopper	7-40
59183383	Holder - Floating Roller	7-43
59183385	Belt Unit Stay	7-46
59183390	Grip plate	3-53
59183394	Seal - 15 x 30mm	3-54
59183395	Front Belt Unit Plate	7-48
59183516	Exit Drive Motor - DC1.69W	7- 2
59183523	Exit Motor Bracket	7- 3
59183536	Exit Roller	7-57
59183537	Lower Exit Roller	7-56
59183538	Gear - 38T	7- 9
59183539	Gear - 44T	7-20
59183561	Left Exit Guide	7-62
59183562	Antistatic Brusn	7-63
59183563	Left Frame	7-64
59183566	Right Exit Guide	7-60
59183585	Upper Exit Roller	7-65
59183749	OF Cover Ass'y - 220/240V	3- 1
59183750	OF Cover Ass'y - 115V	3- 1
59183762	Display Panel	3- 2
59183770	Grip	3-50
59183855	Spring - Flip Scale	3-49
59183875	Original Exit Guide	3-48
59183911	Flip Scale - LT/LDG	3-51
59183912	Flip Scale - A4/A3	3-51
59183981	Decal - Misfeed Removal	3-58
59183986	Decal - Dip SW	3-59
59184002	ADF Key Cover - English	3-47
59184003	ADF Key Cover - International	3-47
59184020	Option Key Top	3-46
59184226	Multilanguage Decal	3- *
59185501	Stopper Solenoid	5-23
59185515	Pick-up Solenoid	5-25
59185516	Release Solenoid	7-23

Parts No.	Description	Page and Index No.
59185525	Registration Solenoid	7-18
59185601	DF Main Board	3- 6
59185613	IC - HN482764G-3	9- 1
59185615	DF Main Board	9- *
59185621	Display Board	3- 9
59185631	Paper Size Sensor	5- 2
59185701	IC - HCTL-1	9- 2
59185702	IC - HCTL-2	9- 3
59185711	Fiber Output Connector	3- 4
59185712	Fiber Input Connector	3- 5
59185721	Photosensor	5- 3
59185721	Photosensor	7-58
59185801	Interface Harness	3- 3
59185811	Main Harness	7- 1
59185811	Main Harness	11- 1
59185821	Registration Sensor Harness	5- 4
59185825	Exit Sensor Harness	7-59
59188751	Installation Procedure - English	3- *
59188752	Installation Procedure - Europe	3- *
59189500	Torsion Spring Kit	3- *
A4182102	**Front Adjusting Plate**	**5-73**
A4182103	**Rear Adjusting Plate**	**5-74**

Parts No.	Description	Page and Index No.
50530233	Bracket - Blower	5-11
50530447	Bushing - 6mm	5-17
50530447	Bushing - 6mm	7-66
50540440	Magnet Catch Ass'y	3-52
50560509	Nut Plate - Microswitch	3-57
52012832	Spring -Cassette Release	5-58
52155230	Photointerrupter - L Type	7-33
54032048	Bushing - 4mm	3-44
54032049	Spring Anchor	5-39
54083253	Spring - Cassette	7-21
54131875	Knob Screw	5-61
54131882	Stepped Screw - Lamp Terminal	7-51
54132298	Stepped Screw - M4	5-41
54132298	Stepped Screw - M4	7-50
54432657	Gear - 28Z	3-20
54432660	Spacer - 6 x 22 x 0.5 mm	3-22
54432712	Cork Pad	3-19
54432713	Wave Washer	3-21
54462824	Screw - Duplex Guide Plate	5-40
54472681	Snap Ring	5-14
58751540	Shaft - Floating roller	7-42
58753287	Spring - Brake shoe	3-43
58753553	Ring - Holder	3-29
58754141	Rack - Front Original Guide	3-23
58754146	Rack - Rear Original Guide	3-14
58755501	Sensor Pad	5-63
58755501	Sensor Pad	7-61
58755510	Shoulder Screw - M5	3-45
58863114	Roller Cover	3-42
58865480	Separation Motor - DC 21W	7- 5
58942163	Center Roller	5-19
58942171	Original Feed Roller	5-15
58942174	Timing Belt	5-20
58942176	Spring - Detent Arm	5-27
58942181	Upper Separation Roller	5-12

Parts No.	Description	Page and Index No.
58942183	Lower Separation Roller	5-51
58942186	Separation Roller Pulley	5-10
58942229	Solenoid Pin	5-28
58942229	Solenoid Pin	7-19
58942264	Collar	5-49
58942293	Spring - Original Stopper	5-69
58942412	Roller	5-66
58942413	Relay Roller Shaft	5-67
58942747	Mylar - Original Guides	3-12
58943121	Base Damper	7-38
58943215	Brake Stopper	3-36
58943218	AIU Pad	3-38
58943219	Leaf Spring Holder	3-37

Parts No.	Description	Page and Index No.
03130040W	Philips Pan Head Screw - M3 x 4	5-111
03130040W	Philips Pan Head Screw - M3 x 4	7-112
03130060W	Philips Pan Head Screw - M3 x 6	3-110
03130060W	Philips Pan Head Screw - M3 x 6	5-112
03130060W	Philips Pan Head Screw - M3 x 6	7-114
03130160W	Philips Pan Head Screw - M3 x 16	3-111
03140060W	Philips Pan Head Screw - M4 x 6	3-104
03140060W	Philips Pan Head Screw - M4 x 6	5-110
03140060W	Philips Pan Head Screw - M4 x 6	7-103
03140080W	Philips Pan Head Screw - M4 x 8	5-108
03140080W	Philips Pan Head Screw - M4 x 8	7-115
03140100W	Philips Pan Head Screw - M4 x 10	7-118
03140350W	Philips Pan Head Screw - M4 x 35	3-108
03150080W	Philips Pan Head Screw - M5 x 8	3-107
03160100G	Philips Pan Head Screw - M6 x 10	3-113
03240060W	Philips Sunken Head Screw - M4 x 6	3-109
03430060W	Philips Pan Head Screw - M3 x 6	7-102
03440060D	Philips Truss Head Screw - M4 x 6	3-101
05730040W	Hexagon Headless Set Screw - M3 x 4	5-115
05740040W	Hexagon Headless Set Screw - M4 x 4	5-113
06320100E	Pin - M2 x 10	5-101
06320100E	Pin - M2 x 10	7-104
07200025E	Retaining Ring - M2.5	5-109
07200025E	Retaining Ring - M2.5	7-111
07200030E	Retaining Ring - M3	5-106
07200030E	Retaining Ring - M3	7-101
07200040E	Retaining Ring - M4	3-105
07200040E	Retaining Ring - M4	7-109
07200050E	Retaining Ring - M5	5-105
07200050W	Retaining Ring - M5	7-107
07200060E	Retaining Ring - M6	5-104
07200070W	Retaining Ring - M7	7-105
08053145	Ball Bearing - 6x12x4mm	5-114
08053145	Ball Bearing - 6x12x4mm	7-108
08053291	Ball Bearing - 8 x 16 x 5mm	7-106

Parts No.	Description	Page and Index No.
09514006W	Pnilips Screw with Flat Washer - M4 x 6	5-116
09514006W	Pnilips Screw with Flat Wasner - M4 x 6	7-117
09515008W	Pnilips Screw with Flat Washer - M5 x 8	3-106
09b53010W	Tapping Screw with Flat Wasner - M3 x 10	5-103
09653010W	Tapping Screw With Flat Washer - M3 x 10	7-119
09654006W	Tapping Screw - M4 x 6	5-102
10050767	Heat Sink	9-101
11001089	Socket - MATE-N-LOCK	11-101
11001147	Socket - MATE-N-LOCK	11-102
11001159	Socket - Mate-N-Lock	11-103
11001169	Fastening Receptacle	11-104
11001190	Socket - Mate-N-Lock	11-105
11001240	Socket - Mate-N-Lock	11-106
11001327	Contact	11-107
11001328	Contact	11-108
11001348	Pin Contact	11-109
11010328	Connector Pin Contact	9-102
11020958	Connector - 2P	9-103
11021089	Connector - 3P	11-110
11021244	Connector - 15P	11-111
11021289	Connector - 6P	11-112
11021350	Connector - 5239-2P	11-113
11021396	Connector - 2P	11-114
11021408	Receptacle Housing	11-115
11021515	Connector - 2P	11-116
11021517	Connector - 4P	11-117
11021910	Connector - 2P	11-118
11021912	Connector - 4P	11-119
11021964	Connector - 2P	11-120
11021965	Connector - 3P	11-121
11021970	Connector - 2P	11-122
11021971	Connector - 3P	11-123
11030660	Connector - 16P	11-124
11030662	Connector - 20P	11-125
11030881	Connector - 4P	9-104

Parts No.	Description	Page and Index No.
11031726	Connector - 4P	9-105
11033020	Connector - 20P	9-106
11033022	Connector - 30P	9-107
11040271	LSI Socket - 28P	9-108
11040333	Fuse Holder	9-109
11050008	Nylon Clip - 2N	5-107
11050008	Nylon Clip - 2N	7-113
11050034	Nylon Clip - 7N	7-116
11050087	Clamp	7-110
11060134	Universal Bushing	3-102
11060395	Nylon Stud	3-103
11070413	Fuse - 3A	9-110
12040883	DIP Switch	9-111
12041319	Microswitch	3-112
14000100	Transistor - 2SA683	9-112
14010329	IC - MP4503	9-113
14010832	Diode - DSA1A1	9-114
14030308	LED - TLR-102A	9-115
14070604	IC - TC4049BP	9-116
14071026	IC - SN74LS373N	9-117
14071094	IC - HD74LS93P	9-118
14071334	IC - μPD7810G	9-119
14071337	IC - MN1215Q	9-120
14071348	IC - TD62304P	9-121
14071535	IC - TD62308AP	9-122
14080076	IC - μPC14312	9-123
14080099	IC - HA17901P	9-124
14080408	IC - PST518A	9-125
15030070	Ceramic Oscillator - 10MHz	9-126
16000544	Resistor - 1KΩ 1W	9-127
16000569	Resistor - 0.2Ω 1W	9-128
16000576	Resistor - 33Ω 5W	9-129
16011732	Resistor - 390Ω 1W	9-130
16017326	Resistor Array - 10KΩ	9-131
16018145	Variable Resistor - 5KΩ	9-132

Parts No.	Description	Page and Index No.
16018147	Variable Resistor	83-156
16114562	Resistor 5.6K ohm 1/4T ±5%	
16018157	Variable Resistor - 100KΩ	9-133
16020953	Coil - 800UH 2.5A	9-156
16041358	Capacitor - 1000μF 10V	9-134
16041381	Capacitor - 4.7μF 50V	9-135
16041382	Capacitor - 10μF 50V	9-136
16041383	Capacitor - 22μF 50V	9-137
16041386	Capacitor - 100μF 50V	9-138
16060658	Capacitor - 0.1μF 50V	9-157
16061184	Capacitor - 27PF 50V	9-139
16061336	Capacitor - 1000PF 50V	9-140
16061451	Capacitor - 0.1μF 50V	9-141
16061452	Capacitor - 0.01μF 50V	9-142
16100045	Resistor - 270Ω 1/8W ± 5%	9-143
16100053	Resistor - 1KΩ 1/8W ± 5%	9-144
16100057	Resistor - 1.5KΩ 1/8W ± 5%	9-145
16100065	Resistor - 3.3KΩ 1/8W ± 5%	9-146
16100067	Resistor - 4.7KΩ 1/8W ± 5%	9-147
16100071	Resistor - 10KΩ ±5%	9-148
16100079	Resistor - 22KΩ 1/8W ± 5%	9-149
16100107	Resistor - 111Ω 1/8W ± 5%	9-150
16100286	Capacitor - 100μF 50V	9-158
16114103	Resistor - 10KΩ 1/4T ± 5%	9-151
16114222	Resistor - 2.2KΩ 1/4T ± 5%	9-152
16114330	Resistor - 330Ω 1/4T ± 5%	9-153
16114472	Resistor - 4.7KΩ 1/4T ± 5%	9-154
16116821	Resistor - 820Ω 1/2W	9-155
67541242	Knob Cap	5-56

Parts No.	Description	Page and Index No.

CS2050 (6803)
PARTS LOCATION AND LIST

This section instructs you as to the numbers and names of the parts of this machine

1. SORTER [6803]

Rev. 1° /91

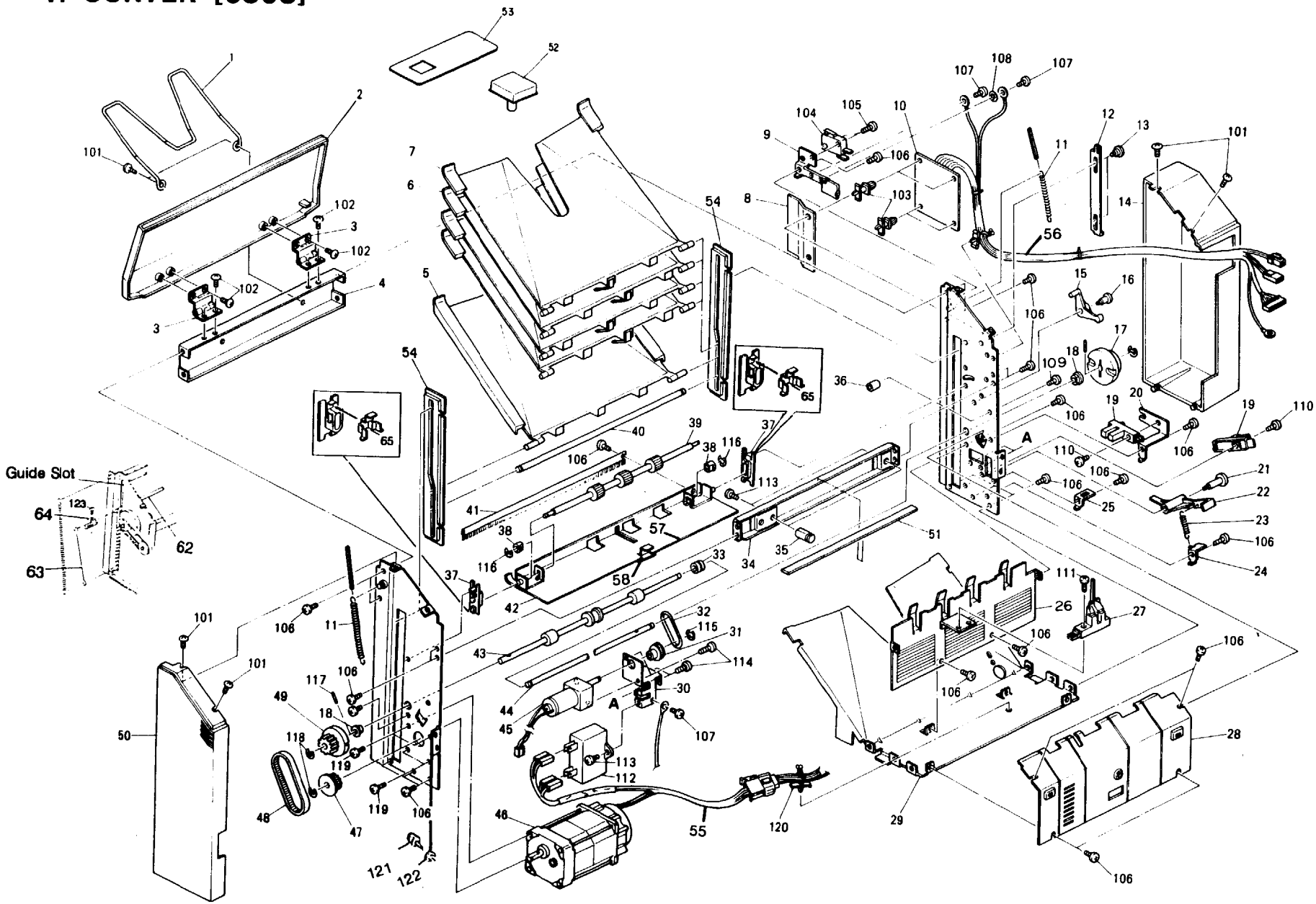

1. SORTER [6803]

Rev. 10/91

Index No.	Parts No.	Description	Q'ty Per Assembly
•	68036613	Multi-Lingual Decal	1
*	68036517	Installation Procedure - 115V	
*	68036527	Installation Procedure - 220V	
1	59171641	Original Holder	1
2	68036311	Upper Cover	
4	68031141	Upper Support Plate	
3	68036911	Hinge - Upper Cover	2
5	68033221	Sorter Bin - Bottom	
6	68033151	Sorter Bin - Even	10
7	68033111	Sorter Bin - Odd	10
8	68036411	Insulating Plate	1
9	68034431	Bracket - Safety Switch	
10	68035500	Bin Motor Board	
11	68033311	Transfer Wheel Snaft	2
12	68032271	Lever - Upper Guide Plate	1
13	54032075	Stepped Screw	2
14	A4146213	Rear Cover	1
15	A4232272	Arm - Upper Guide Plate	
16	68032273	Stepped Screw - M4	1
17	68033326	Rear Transfer Wheel	1
18	50530447	Busning - 6mm	2
19	52055250	L.E.D. Sensor Type S	2
20	68033421	Half Turn Sensor	1
21	68033412	Stepped Screw - M4	
22	68033411	Lever - Home Position Sensor	1
23	68033413	Lever Spying	1
24	68033414	Lever Stopper	
25	68034441	Cover Bracket	
26	A423231 1	Cover - Electrical Section	
27	68035430	Paper Exit Sensor	
28	68032111	Lower Guide Plate	
29	A4231131	Base Plate	
30	68034411	Cover Bracket	
31	A4234216	Pulley	
32	68034316	O-ring	
33	68032415	Drive Pulley	1
34	68031151	Mounting Stay	1
35	68031161	Upper Mounting Stud	2
36	68032261	Dumper - Upper Guide Plate	1
37	68032221	Guide - Upper Guide Plate	2
38	68032231	Bushing - 4 x 6 x 5 mm	2
39	68032241	Upper Exit Roller	1
40	68033316	Lift Bar	1
41	68032251	Antistatic Brush	1
42	A4232110	Upper Guide Plate	1
43	68032410	Lower Exit Roller	1
44	68033331	Transfer Wheel Snaft	1
45	A4235410	Paper Exit Motor - DC 24V 2.9W	1
46	68035400	Bin Motor - AC 14/17W	1
47	68034211	Pulley - 18T	1
48	68034311	Timing Belt - 94 x L	1
49	68033321	Front Transfer Wheel	1
50	A41461 13	Front Cover	1
51	67691128	Mounting Stay Magnet	1
52	59184020	Option Key Top	1
53	68037512	Sorter Key Cover - English	1
53	68037513	Sorter Key Cover - International	1
54	A4231127	Slot Liner	2
55	68035610	Interface Harness	1
56	68035600	Main Harness	1
57	A4146521	Decal - Guide Plate	1
58	A423253 1	Guide Plate	1
59	A4231 144	Base Roller	2
60	A4231143	Base Shaft	2
61	A4231145	Receive Plate	1
62	A4233513	Bin Support Shaft	1
63	A42335 17	Bin Support Wire	2
64	A423351 1	Bin Shaft Positioner	2
65	A4142311	Spring Plate - Guide Stopper	2

Rev. 10/91

Index No.	Parts No.	Description	Q'ty Per Assembly
101	03340080D	Philips Sunken Head Screw - M4 x 8	
102	03140060W	Philips Pan Head Screw - M4 x 6	
103	11050162	Locking Support	
104	12041318	Microswitch	
105	03130140W	Philips Pan Head Screw - M3 x 14	
106	04340080W	Tapping Screw - M4 x 8	
107	03140080M	Philips Pan Head Screw - M4 x 8	
108	07040040C	Toothed Washer - M4	
109	04340100W	Tapping Screw - M4 x 10	
110	03140120W	Philips Pan Head Screw - M4 x 12	
111	03130120W	Philips Pan Head Screw - M3 x 12	
112	16060755	Capacitor - 10uF 220V (115V)	
112	16061380	Capacitor - 10uF (220/240V)	
113	03140080W	Philips Pan Head Screw - M4 x 8	
114	09653010W	Tapping Screw With Flat Wasner - M3 x 10	
115	07200040E	Retaining Ring - M4	
116	07200030E	Retaining Ring - M3	
117	06320140G	Parallel Pin	
118	07200060E	Retaining Ring - M6	
119	03150080W	Philips Pan Head Screw - M5 x 8	
120	11050196	Harness Clamp	
121	08030019	Thumb Screw	2
122	08073090	Spacer - 4.2 x 12 x 3.0	2
123	03130060W	Philips Pan Head Screw - M3x6	2

2. BIN MOTOR BOARD [6803]

SYMBOL NO. : PRINTED NUMBER ON THE BOARD
INDEX NO. : REFERENCE NUMBER OF NEXT PAGE

CONNECTOR

SYMBOL NO.	INDEX NO.
CN101	101
CN102	102
CN103	104
CN104	103

DIODE

SYMBOL NO.	INDEX NO.
D101	106
D102	106

SSR

SYMBOL NO.	INDEX NO.
SSR101	105
SSR102	105

2. BIN MOTOR BOARD [6803]

July 31, '86

Index No.	Parts No.	Description	Q'ty Per Assembly
*	68035500	Bin Motor Board	1
101	11020995	Connector - 2P	
102	11021194	Pin Connector - 3P	
103	11031695	Connector - 15P	
104	11031748	Connector - 12P	
105	12081024	Solid State Relay - 240V, 2A	
106	14010832	Diode - DSA1A1	

Index No.	Parts No.	Description	Q'ty Per Assembly

3. SORTER HARNESS [6803]

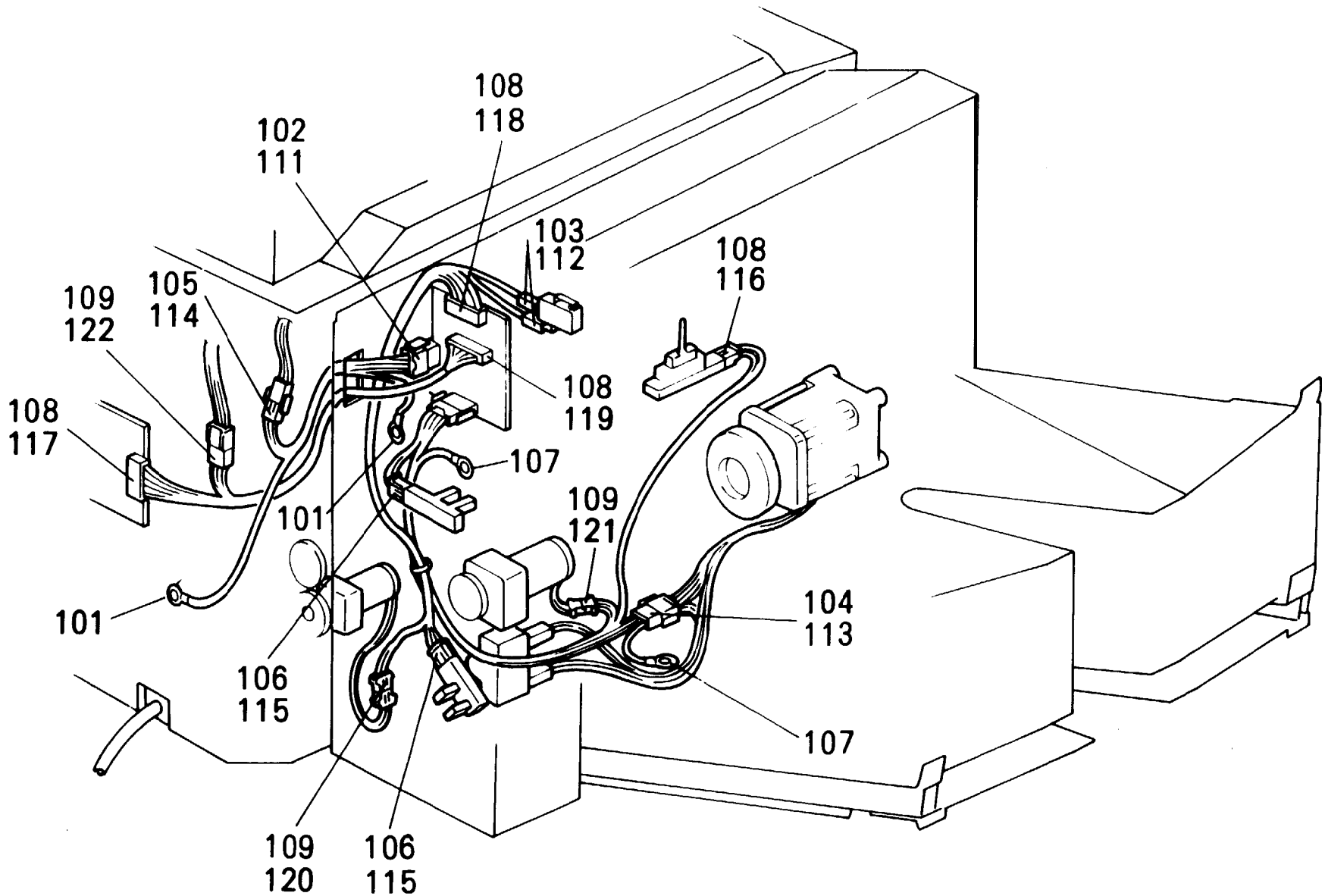

3. SORTER HARNESS [6803]

July 31, '86

Index No.	Parts No.	Description	Q'ty per Assembly
1	68035600	Main Harness	1
2	68035610	Interface Harness	1
101	11000051	Solid Strand	
102	11001042	Socket - Mate-N-Lock	
103	11001169	Fastening Receptacle	
104	11001238	Pin - Mate-N-Lock	
105	11001239	Pin - Mate-N-Lock	
106	11001249	Receptacle Terminal	
107	11001264	Terminal	
108	11001327	Contact	
109	11001328	Contact	
110	11020512	Connector - 3P	
111	11020983	Connector - 2P	
112	11021408	Receptacle Housing	
113	11021508	Connector - 3P	
114	11021524	Connector - 2P	
115	11021620	Receptacle Housing - 3P	
116	11021911	Connector - 3P	
117	11021919	Connector - 11P	
118	11021923	Connector - 15P	
119	11021934	Connector - 12P	
120	11021952	Connector - 2P	
121	11021964	Connector - 2P	
122	11021966	Connector - 4P	

Index No.	Parts No.	Description	Q'ty per Assembly

CS2050 (6803)
PARTS INDEX

This section instructs you as to m m of the parts of this machine.

Parts No.	Description	Page and Index No.
67691128	Mounting Stay Magnet	3-51
68031115	Slot Liner	3-54
68031131	Base Plate	3-29
68031141	Upper Support Plate	3- 4
68031151	Mounting Stay	3-34
68031161	Upper Mounting Stud	3-35
68032111	Lower Guide Plate	3-28
68032211	Upper Guide Plate	3-42
68032221	Guide - Upper Guide Plate	3-37
68032231	Busning - 4 x 6 x 5 mm	3-38
68032241	Upper Exit Roller	3-39
68032251	Antistatic Brusn	3-41
68032261	Dumper - Upper Guide Plate	3-36
68032271	Lever - Upper Guide Plate	3-12
68032272	Arm - Upper Guide Plate	3-15
68032273	Stepped Screw - M4	3-16
68032311	Cover - Electrical Section	3-26
68032410	Lower Exit Roller	3-43
68032415	Drive Pulley	3-33
68033111	Sorter Bin - Odd	47- 7
68033115	Slot Liner	47-54
68033151	Sorter Bin - Even	47- 6
68033221	Sorter Bin - Bottom	3- 5
68033311	Transfer Wheel Shaft	3-11
68033316	Lift Bar	3-40
68033321	Front Transfer Wheel	3-49
68033326	Rear Transfer Wheel	3-17
68033331	Transfer Wheel Shaft	3-44
68033411	Lever - Home Position Sensor	3-22
68033412	Stepped Screw - M4	3-21
68033413	Lever Spring	3-23
68033414	Lever Stopper	3-24
68033421	Half Turn Sensor	3-20
68034211	Pulley - 18T	3-47
68034216	Pulley	3-31

Parts No.	Description	Page and Index No.
68034311	Timing Belt - 94 x L	3-48
68034316	O-ring	3-32
68034411	Cover Bracket	3-30
68034431	Bracket - Safety Switch	3- 9
68034441	Cover Bracket	3-25
68035400	Bin Motor - AC 14/17W	3-46
68035410	Paper Exit Motor	3-45
68035430	Paper Exit Sensor	3-27
68035500	Bin Motor Board	5- *
68035500	Bin Motor Board	3-10
68035600	Main Harness	47-56
68035610	Interface Harness	47-55
68036111	Front Cover	3-50
68036211	Rear Cover	3-14
68036311	Upper Cover	3- 2
68036411	Insulating Plate	3- 8
68036517	Installation Procedure - 115V	3- *
68036527	Installation Procedure - 220V	3- *
68036613	Multi-Lingual Decal	3- *
68036911	Hinge - Upper Cover	3- 3
68037512	Sorter Key Cover - English	3-53
68037513	Sorter Key Cover - International	3-53
A4146113	Front Cover	3-50
A4146213	Rear Cover	3-14
A4146521	Decal - Guide Plate	47-57
A4112531	Knob Cap	47-58
A4231127	Slot Liner	3-54
A4231131	Base Plate	3-29
A4231143	Base Shaft	3-60
A4231144	Base Roller	3-59
A4231145	Receive Plate	3-61
A4232110	Upper Guide Plate	3-42
A4232272	Arm - Upper Guide Plate	3-15
A4232311	Cover - Electrical Section	3-26
A4232531	Guide Plate	3-58
A4233511	Bin Shaft Positioner	3-64

Parts No.	Description	Page and Index No.
A4233513	Bin Support Shaft	3-62
A4233517	Bin Support Wire	3-63
A4234216	Pulley	3-31
A4235410	Paper Exit Motor - DC24V 2.9W	3-45
031300600W	Phillips Pan Head Screw - M3x6	3-123
06320140G	Parallel Pin	3-117
08030019	Thumb Screw	47-121
08073090	Spacer - 4.2 x 12 x 3.9	47-122
11000051	Solid Strand	7-101
11001042	Socket - Mate-N-Lock	7-102
11001169	Fastening Receptacle	7-103
11001238	Pin - Mate-N-Lock	7-104
11001239	Pin - Mate-N-Lock	7-105
11001249	Receptacle Terminal	7-106
11001264	Terminal	7-107
11001327	Contact	7-108
11001328	Contact	7-109
11020512	Connector - 3P	7-110
11020983	Connector - 2P	7-111
11020995	Connector - 2P	5-101
11021194	Pin Connector - 3P	5-102
11021408	Receptacle Housing	7-112
11021508	Connector - 3P	7-113
11021524	Connector - 2P	7-114
11021620	Receptacle Housing - 3P	7-115
11021911	Connector - 3P	7-116
11021919	Connector - 11P	7-117
11021923	Connector - 15P	7-118
11021934	Connector - 12P	7-119
11021952	Connector - 2P	7-120
11021964	Connector - 2P	7-121
11021966	Connector - 4P	7-122
11031695	Connector - 15P	5-103
11031748	Connector - 12P	5-104
12081024	Solid State Relay - 240V, 2A	5-105
14010832	Diode - DSA1A1	5-106

Parts No.	Description	Page and Index No.

SORTER ADAPTER (6805)
PARTS LOCATION AND LIST

This section instructs you as to the numbers and names of the parts of this machine.

1. SORTER ADAPTER [6805]

July 31, '86

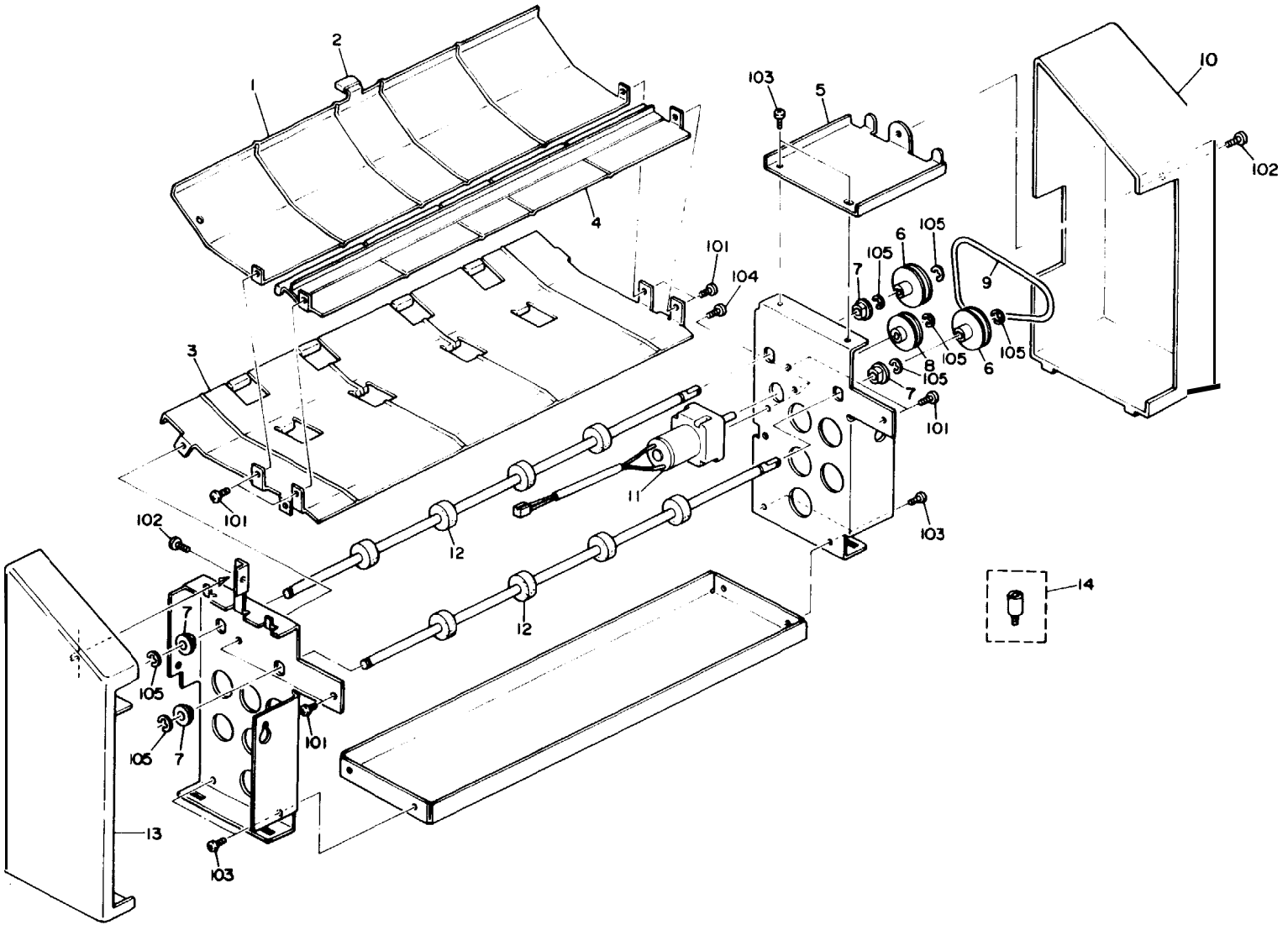

1. SORTER ADAPTER [6805]

Rev. 10/91

Index No.	Parts No.	Description	Q'ty Per Assembly
● 1	A9101231	Upper Guide Plate - Large	1
2	67541242	Knob Cap	1
3	68051211	Lower Guide Plate	1
● 4	A9101221	Upper Guide Plate - Small	1
5	68051631	Rear Cover Bracket	1
6	68051311	Pulley - 6 x 25 x 11MM	2
7	50530447	Busning - 6mm	2
8	68034216	Pulley	1
9	68051321	O-Ring - 3 x 225.8 mm	1
10	68051621	Rear Cover	1
11	68035410	Paper Exit Roller	1
12	A9101241	Transport Roller	2
13	68051611	Front Cover	1
14	67691127	Lower Mounting Stud	2
101	03140080W	Philips Pan Head Screw - M4 x 8	
102	03440080D	Philips Truss Head Screw - M4 x 8	
103	04340080W	Tapping Screw - M4 x 8	
104	09653010W	Tapping Screw With Flat Washer - M3 x 10	
105	07200040E	Retaining Ring - M4	

Index No.	Parts No.	Description	Q'ty Per Assembly

•NOTE: Refer to last frame on last fiche of parts catalog

SORTER ADAPTER (6805)
PARTS INDEX

This section instructs you as to the numbers and names of the parts of this machine.

Parts No.	Description	Page and Index No.
68051211	Lower Guide Plate	3- 3
68051221	Upper Guide Plate - Small	3- 4
68051231	Upper Guide Plate - Large	3- 1
68051241	Transport Roller	3-12
68051311	Pulley - 6 x 25 x 11MM	3- 6
68051321	O-Ring - 3 x 225.8 mm	3- 9
68051611	Front Cover	3-13
68051621	Rear Cover	3-10
68051631	Rear Cover Bracket	3- 5
A9101221	Upper Guide Plate - Small	3-4
A9101231	Upper Guide Plate - Large	3-1
A9101241	Transport Roller	3-12

Parts No.	Description	Page and Index No.
50530447	Bushing - 6mm	3- 7

Parts No.	Description	Page and Index No.
03140080W	Philips Pan Head Screw - M4 x 8	3-101
03440080D	Philips Truss Head Screw - M4 x 8	3-102
04340080W	Tapping Screw - M4 x 8	3-103
07200040E	Retaining Ring - M4	3-105
09653010W	Tapping Screw With Flat Washer - M3 x 10	3-104
67541242	Knob Cap	3- 2
67691127	Lower Mounting Stud	3-14
68034216	Pulley	3- 8
68035410	Paper Exit Roller	3-11

Parts No.	Description	Page and Index No.

RT14 (5925)
PARTS LOCATION AND LIST

This section instructs you as to the numbers and names of the parts of this machine.

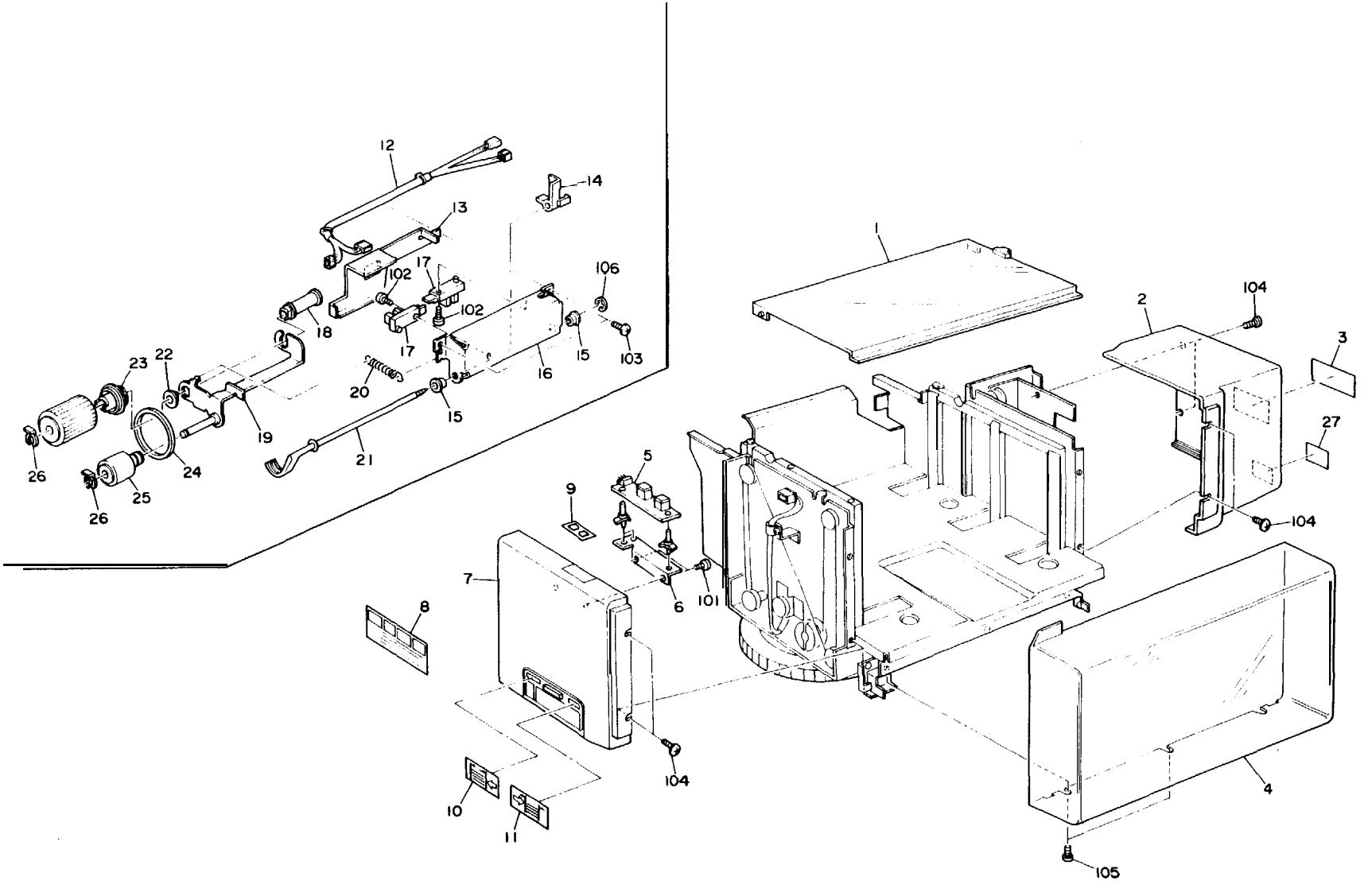
12
14
13
102
17
106
18
102
17
15
103
16
20
15
23
22
19
21
26
24
25
26
1
2
104
3
27
104
5
9
7
6
101
8
104
10
11
4
105

1. LCT I [5925]

July 31, '86

Index No.	Parts No	Description	Q'ty Per Assembly
*	59258751	Installation Procedure - English	1
*	59258752	Installation Procedure - 5 Language	1
*	59254226	Multi-Lingual Decal	1
1	58971251	Top Cover	1
2	58971265	Rear Cover	1
3	54468905	Decal - English, French - 115V	1
3	54468906	Decal - English, German - 220V	1
4	59252232	Side Cover	1
5	58975515	Operation Board	1
6	58971272	Operation Board Mounting Bracket	1
7	58971256	Front Cover	1
8	59252292	Decal - Instructions	1
9	58971264	Operation Skin	1
10	58971257	Decal - Increase Size	1
11	58971258	Decal - Decrease Size	1
12	59255202	Pick-up Harness	1
13	59252129	Harness Cover	1
14	59252126	Sensor Actuator	1
15	54432668	Bushing	2
16	59252122	Sensor Bracket	1
17	52055250	L.E.D. Sensor Type S	1
18	59252133	Snap Collar	1
19	59252102	Pick-up Roller Holder	1
20	59252113	Spring - Pick-up Roller	1
21	59252124	Paper End Feeler	1
22	50540197	Busning - 8 x 15 x 5 mm	1
23	59252111	Pick-up Drive Pulley	1
24	59252114	Pick-up Drive Belt	1
25	59252105	Pick-up Roller	1
26	54472681	Snap Ring	1
27	54421372	Decal - Power Source - 220V	1

Index No.	Parts No.	Description	Q'ty Per Assembly
101	03140040W	Philips Pan Head Screw - M4 x 4	
102	03140100W	Philips Pan Head Screw - M4 x 10	
103	04340080W	Tapping Screw - M4 x 8	
104	08025094	Tapping Screw - M4x8	
105	09644008W	Tapping Screw with Flat Washer - M4 x 8	
106	07200030E	Retaining Ring - M3	

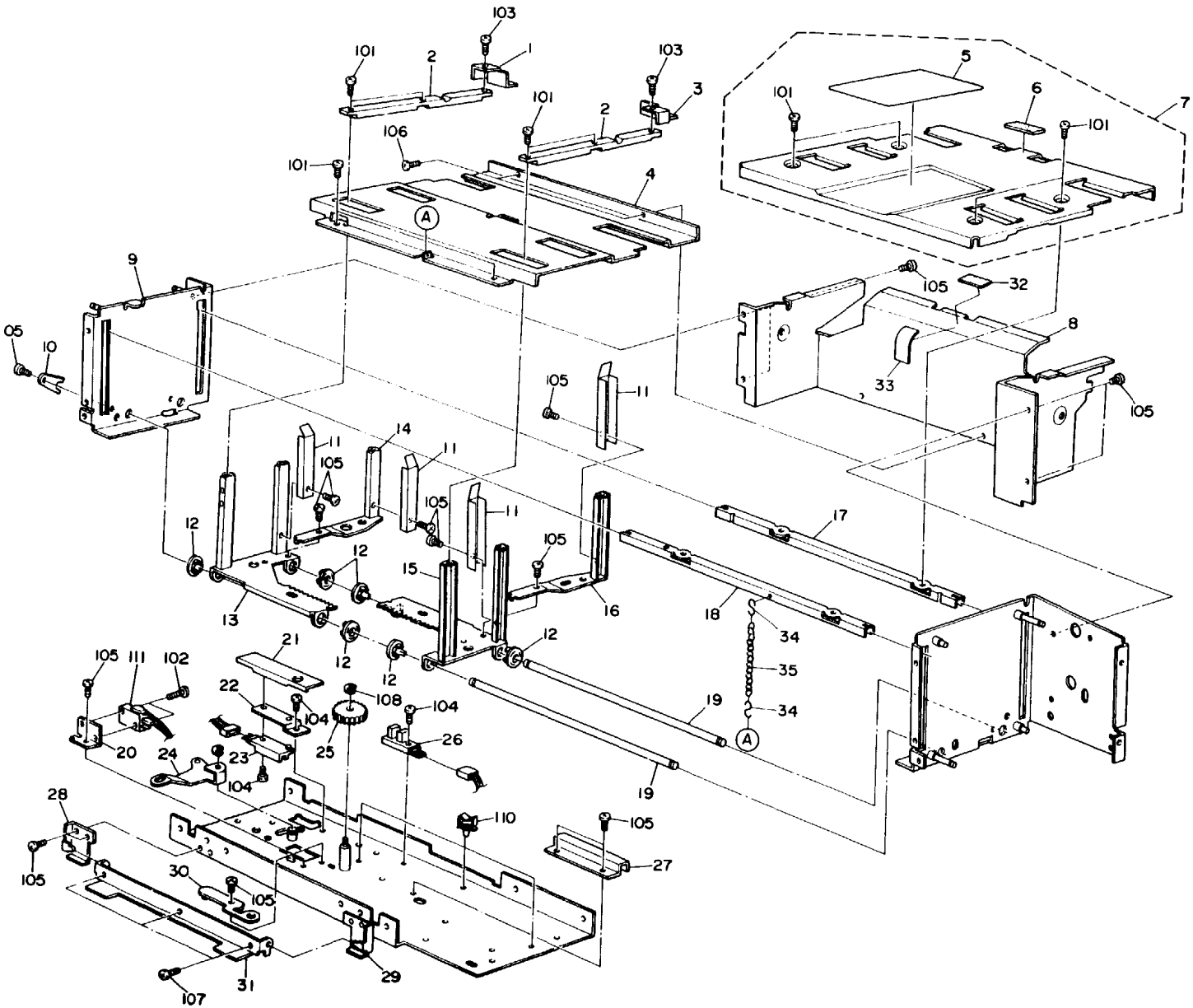
103
101
2
1
103
3
101
2
106
101
4
A
5
101
6
101
7
9
105
32
8
05
10
33
105
105
11
11
14
11
105
105
11
12
12
15
105
16
17
12
13
18
34
12
12
12
35
21
105
111
102
22
108
104
19
34
20
24
23
25
26
A
104
19
28
110
105
105
27
30
105
105
29
31
107

2. LCT II [5925]

July 31, '86

Index No.	Parts No.	Description	Q'ty Per Assembly
1	58971462	Front Paper Guide	1
2	58971459	Side Post Grip	2
3	58971465	Rear Paper Guide	1
4	59252226	Inner Cover	1
5	58971374	Decal - Paper Size	1
6	54472927	Friction Pad - B	1
7	59252261	Tray Bottom Plate	1
8	59252222	Feed-in Guide	1
9	59252211	Front Side Plate	1
10	59252255	Side Guide Stopper	1
11	58971458	Side Post Spring Plate	2
12	58971455	Bushing	6
13	58971451	Front Post Rack	1
14	58971460	Front Guide Post	1
15	58971457	Rear Post Rack	1
16	58971463	Rear Guide Post	1
17	59252257	Left Lift Stay	1
18	58971372	Right Lift Rod	1
19	59252249	Side Guide Shaft	2
20	58971493	Micro Switch Mounting Bracket	1
21	58971497	Harness Cover 1	2
22	58971496	Sensor Mounting Bracket	2
23	52055253	Photointerruptor Pack	1
24	58971473	Size Lever	1
25	54432657	Gear - 28Z	1
26	52055250	L.E.D. Sensor Type S	1
27	58971498	Harness Cover 2	1
28	59252203	Front Bracket	1
29	59252204	Rear Bracket	2
30	58971477	Leaf Spring	1
31	59252233	Side Cover Plate	1
32	59252224	Pad - 19 x 38 mm	1
33	59252225	Mylar Seal - Paper Feed	1
34	58971488	Hook	2
35	59252258	Stopper Chain	1

Index No.	Parts No.	Description	Q'ty Per Assembly
101	03130060W	Philips Pan Head Screw - M3 x 6	
102	03130120W	Philips Pan Head Screw - M3 x 12	
103	03130200W	Philips Pan Head Screw - M3 x 20	
104	03140100W	Philips Pan Head Screw - M4 x 10	
105	04340060W	Tapping Screw - M4 x 6	
106	03140040W	Philips Pan Head Screw - M4 x 4	
107	09644008W	Tapping Screw with Flat Washer - M4 x 8	
108	07200040E	Retaining Ring - M4	
109	07200060E	Retaining Ring - M6	
110	11050106	Wire Saddle	
111	12040192	Microswitch - UL	

3. LCT III [5925]

July 31, '86

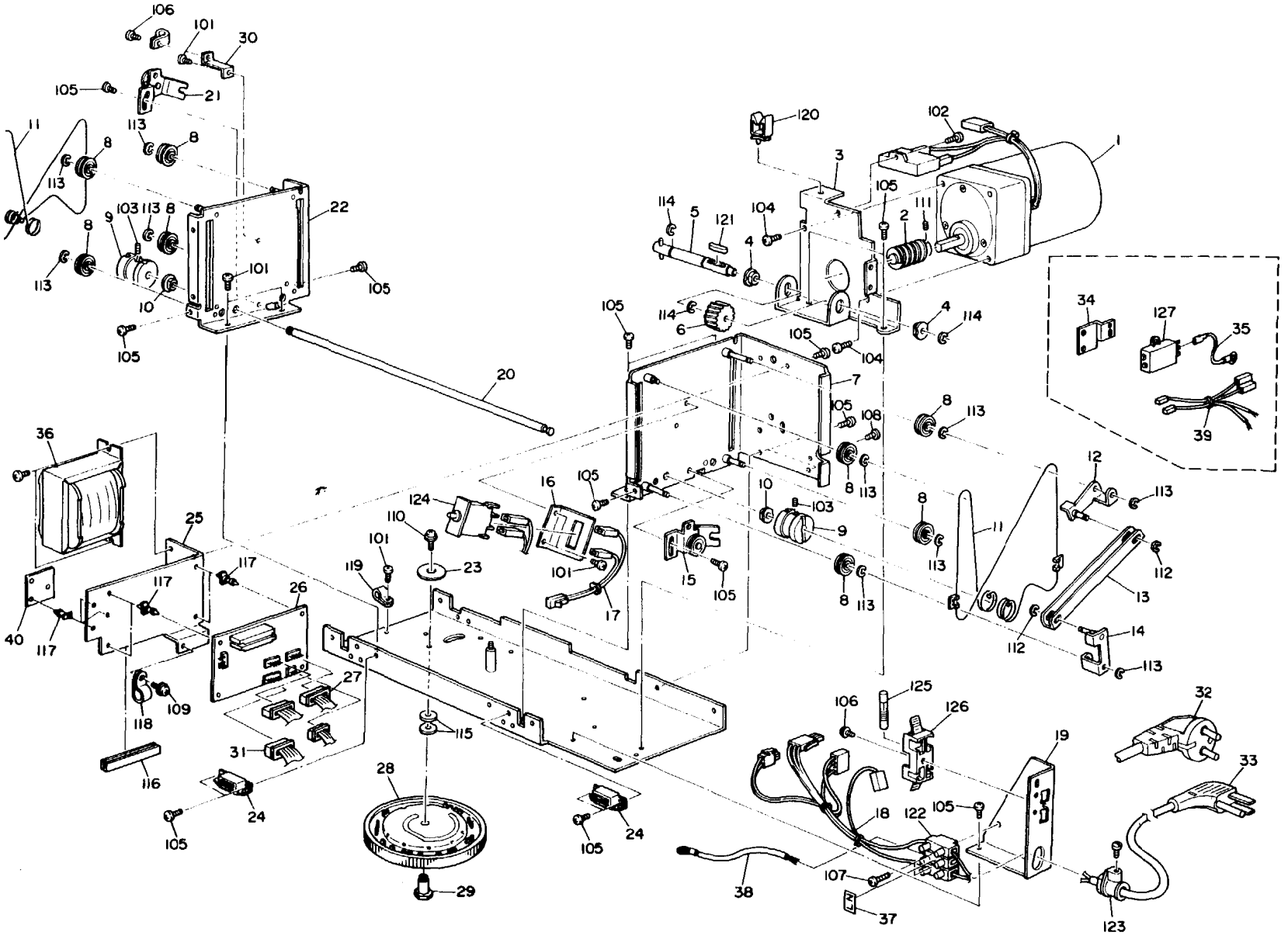

3. LCT III [5925]

Index No.	Parts No.	Description	Q'ty Per Assembly
1	54465411	Tray Drive Motor - AC 7/8W/115V	1
1	54465412	Tray Drive Motor - AC 7/8W/220V	1
2	58971352	Worm Gear - M5 x 5	1
3	58971351	Drive Motor Bracket	1
4	50530223	Busning - 8mm	2
5	59252239	Drive Gear Snaft	1
6	54462702	Gear - 22T	1
7	59252216	Rear Side Plate	1
8	54462620	Idler Pulley - 20	8
9	59252246	Drive Pulley	2
10	50530419	Busning - 10mm - Long - 7mm	2
11	59252241	Drive Wire	2
12	58971274	Upper Actuator Lever	1
13	58971279	Safety Switch Actuator	1
14	58971277	Lower Actuator Lever	1
15	59252253	Rear Wire Tightener	1
16	58971126	Safety Switch Bracket	1
17	59255212	Safety Switch Harness	
18	59255211	AC Harness - 115V	
18	59255215	AC Harness - 220/240V	
19	59252266	Power Cord Bracket	1
20	59252247	Drive Shaft	1
21	59252251	Front Wire Tightener	1
22	59252211	Front Side Plate	1
23	58971472	Bottom Plate	1
24	50540536	Magnet Catch Ass'y	2
25	59252265	PCB Bracket	1
26	59255101	Tray Control Board	1
27	59255206	DC Harness	1
28	59252223	Paper Size Dial	1
29	59252235	Dial Snaft	1
30	58971125	Nylon Clamp Stay	1
31	59255205	Interface Harness	1
32	54087968	Power Supply Cord - 220V	1
33	67697930	Power Supply Cord - 115V	1
34	58971514	Noise Filter Bracket - 220/240V	1
35	58975555	Noise Filter Grounding Wire	1
36	58975520	Transformer - 115V, 220V, 240V/30W	1
37	54034335	Decal - Terminal 115V	1
38	58975537	Grounding Wire	1
39	59255216	Noise Filter Harness	1
40	59255105	Sub Board - Tray Control	1
101	03140050W	Pnilips Pan HeaScrew M4 x 5	
102	03140100W	Philips Pan HScrew -M4 x 10	
103	03140120W	Philips Pan Head Screw - M4 x 12	
104	03150080W	Philips Pan HScrew -M5 x 8	
105	04340060W	Tapping Screw - M4 x 6	
106	04340080W	Tapping Screw - M4 x 8	
107	03140140W	Pnilips Pan HScrew -M4 x 14	
108	08011185	Philips Screw with Toothed Washer - M4 x 8	
109	09644008W	Tapping Screw FlatitWasher- M4 x 8	
110	09654010W	Tapping Screw FlatitWasher- M4 x 10	
111	05740050E	Hexagon Headless Set Screw-M4 x 5	
112	07200030E	Retaining Ring- M3	
113	07200040E	Retaining Ring- M4	
114	07200060E	Retaining Ring - M6	
115	08077021	Spacer	
116	10050383	Edging: B	
117	11060336	Nylon Stud	
118	11050011	Nylon Clip - 8N	
119	11050008	Nylon Clip - 2N	
120	11050108	Nylon Clip	
121	09300400	Parallel Key	
122	11010359	Terminal - 3P	
123	11060442	Cord Clamp - 220/240V	

July 31, '86

Inde: No.	Parts No.	Description	Q'ty Per Assembly
124	12041280	Pusn Switch	
125	11070271	Fuse - 3A	
125	11070487	Circuit Breaker - 115V	
126	11040323	Fuse Holder	
127	16020927	Noise Filter - 220/240V	

4. 131 BOARD [5925]

SYMBOL NO. PRINTED NUMBER ON THE BOARD
INDEX NO. REFERENCE NUMBER OF NEXT PAGE

CAPACITOR

SYMBOL NO.	INDEX NO
C1	113
C2	114
C3	113
C4	115
C5	118
C6	116
C7	116
C8	117
C9	117
C10	117
C11	117
C12	117
C13	117

CONNECTOR

SYMBOL NO.	INDEX NO.
CN1	105
CN2	104
CN3	102
CN4	103
CN5	101

DIODE

SYMBOL NO.	INDEX NO.
D1	108
D2	108
D3	108
D4	108
D5	108
D6	108
D7	108
D8	108
D9	108

IC

SYMBOL NO.	INDEX NO.
IC1	109
IC2	109
IC3	110
IC4	111
IC5	112

RESISTOR

SYMBOL NO.	INDEX NO.
R1	119
R2	119
R3	119
R4	119
R5	119
R6	119
R7	122
R8	122
R9	122
R10	120
R11	120
R12	121
R13	120
R14	120
R15	123
R16	121
R17	121
R18	124
R19	119

SSR

SYMBOL NO.	INDEX NO.
SSR1	106
SSR2	106

TRANSISTOR

SYMBOL NO.	INDEX NO.
Q1	107

4. LCT BOARD [5925]

July 31, '86

Index No.	Parts No.	Description	Q'ty Per Assembly
*	59255101	Tray Control Board	1
101	11031247	Connector - 3P	
102	11031729	Connector - 7P	
103	11031730	Connector - 8P	
104	11031739	Connector - 3P	
105	11031743	Connector - 7P	
106	12081077	Solid State Relay	
107	14000324	Transistor - 2SC458C	
108	14010825	Diode - 1SS176	
109	14070520	IC - HD74LS00P	
110	14070622	IC - HD74LS10P	
111	14071002	IC - TD62003P	
112	14080124	IC - LM555CN	
113	16040288	Capacitor - 47μF 25WV	
114	16040903	Capacitor - 10μF 35V	
115	16040909	Capacitor - 1μF 50V	
116	16060689	Capacitor - 0.01μF 50V	
117	16060916	Capacitor - 0.01μF 50V	
118	16060999	Capacitor - 0.1μF 25V	
119	16114101V	Resistor - 100Ω 1/4W ±5% - 220/240V	
120	16114102V	Resistor - 1KΩ 1/4W ±5%	
121	16114103V	Resistor - 10KΩ 1/4T ±5% - 220/240V	
122	16114471V	Resistor - 470Ω 1/4W ±5%	
123	16114472V	Resistor - 4.7KΩ 1/4W ±5%	
124	16114564V	Resistor - 560KΩ 1/4W ±5%	

Index No.	Parts No.	Description	Q'ty Per Assembly

5. LCT HARNESS [5925]

July 31, '86

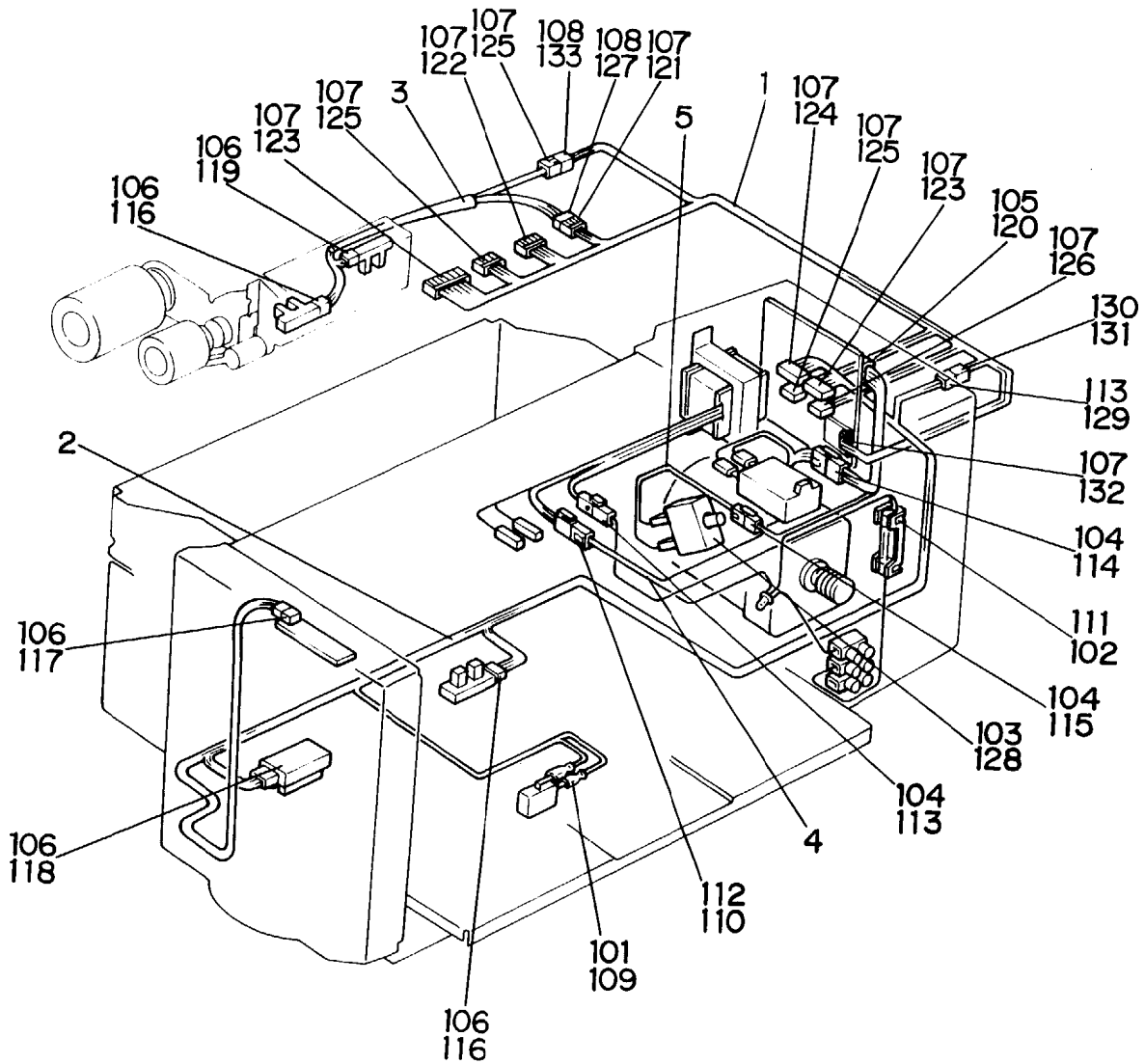

5. LCT HARNESS [5925]

July 31, '86

Index No.	Parts No.	Description	Q'ty Per Assembly
1	59255205	Interface Harness	1
2	59255206	DC Harness	1
3	59255202	Pick-up Harness	1
4	59255211	AC Harness	1
5	59255212	Safety Switch Harness	1
101	11000277	Fastening Receptacle	
102	11001169	Fastening Receptacle	
103	11001172	Fastening Receptacle	
104	11001241	Socket - Mate-N-Lock	
105	11001247	Terminal	
106	11001249	Receptacle Terminal	
107	11001327	Contact	
108	11001328	Contact	
109	11020796	Insulating Sleeve	
110	11001239	Pin - Mate-N-Lock	
111	11021408	Receptacle Housing	
112	11021507	Connector - 2P	
113	11021514	Connector - 1P	
114	11021516	Connector - 3P	
115	11021532	Connector - 2P	
116	11021620	Receptacle Housing - 3P	
117	11021621	Receptacle Housing - 3P	
118	11021623	Receptacle Housing - 7P	
119	11021786	Connector - 3P	
120	11021815	Connector - 3P	
121	11021911	Connector - 3P	
122	11021912	Connector - 4P	
123	11021915	Connector - 7P	
124	11021916	Connector - 8P	
125	11021925	Connector - 3P	
126	11021929	Connector - 7P	
127	11021965	Connector - 3P	
128	11021404	Receptacle Housing	
129	11001240	Socket - Mate - N - Lock	
130	11021506	Connector - 1P	
131	11001238	Pin - Mate - N - Lock	
132	11021943	Receptacle Housing	
133	11021971	Connector 3P	

RT14 (5925)
PARTS INDEX

This section instructs you as to the numbers and names of the parts of this machine.

Parts No.	Description	Page and Index No.
59252102	Pick-up Roller Holder	3-19
59252105	Pick-up Roller	3-25
59252111	Pick-up Drive Pulley	3-23
59252113	Spring - Pick-up Roller	3-20
59252114	Pick-up Drive Belt	3-24
59252122	Sensor Bracket	3-16
59252124	Paper End Feeler	3-21
59252126	Sensor Actuator	3-14
59252129	Harness Cover	3-13
59252133	Snap Collar	3-18
59252203	Front Bracket	5-28
59252204	Rear Bracket	5-29
59252211	Front Side Plate	5- 9
59252211	Front Side Plate	7-22
59252216	Rear Side Plate	7- 7
59252222	Feed-in Guide	5- 8
59252223	Paper Size Dial	7-28
59252224	Pad - 19 x 38 mm	5-32
59252225	Mylar Seal - Paper Feed	5-33
59252226	Inner Cover	5- 4
59252232	Side Cover	3- 4
59252233	Side Cover Plate	5-31
59252235	Dial Shaft	7-29
59252239	Drive Gear Shaft	7- 5
59252241	Drive Wire	7-11
59252246	Drive Pulley	7- 9
59252247	Drive Shaft	7-20
59252249	Side Guide Shaft	5-19
59252251	Front Wire Tightener	7-21
59252253	Rear Wire Tightener	7-15
59252255	Side Guide Stopper	5-10
59252257	Left Lift Stay	5-17
59252258	Stopper Chain	5-35
59252261	Tray Bottom Plate	5- 7
59252265	PCB Bracket	7-25

Parts No.	Description	Page and Index No.
59252266	Power Cord Bracket	7-19
59252292	Decal - Instructions	3- 8
59254226	Multi-Lingual Decal	3- *
59255101	Tray Control Board	7-26
59255101	Tray Control Board	9- *
59255105	Sub Board - Tray Control	7-40
59255202	Pick-up Harness	3-12
59255202	Pick-up Harness	11- 3
59255205	Interface Harness	7-31
59255205	Interface Harness	11- 1
59255206	DC Harness	7-27
59255206	DC Harness	11- 2
59255211	AC Harness - 115V	7-18
59255211	AC Harness	11- 4
59255212	Safety Switch Harness	7-17
59255212	Safety Switch Harness	11- 5
59255215	AC Harness - 220/240V	7-18
59255216	Noise Filter Harness	7-39
59258751	Installation Procedure - English	3- *
59258752	Installation Procedure - 5 Language	3- *

Parts No	Description	Page and Index No.
50530223	Bushing - 8mm	7- 4
50530419	Bushing - 10mm - Long - 7mm	7-10
50530447	Bushing - 6mm	3-18
50540197	Bushing - 8 x 15 x 5 mm	3-22
50540536	Magnet Catch Ass'y	7-24
52055250	L.E.D. Sensor Type S	3-17
52055250	L.E.D. Sensor Type S	5-26
52055250	L.E.D. Sensor Type S	3-19
52055253	Photointerruptor Pack	5-23
54032075	Stepped Screw	3-13
54034335	Decal - Terminal 115V	7-37
54087968	Power Supply Cord - 220V	7-32
54421372	Decal - Power Source - 220V	3-27
54432657	Gear - 28Z	5-25
54432668	Bushing	3-15
54462620	Idler Pulley - 20	7- 8
54462702	Gear - 22T	7- 6
54465411	Tray Drive Motor - AC 7/8W/115V	7- 1
54465412	Tray Drive Motor - AC 7/8W/220V	7- 1
54468905	Decal - English, French - 115V	3- 3
54468906	Decal - English, German - 220V	3- 3
54472681	Snap Ring	3-26
54472927	Friction Pad - B	5- 6
58971125	Nylon Clamp Stay	7-30
58971126	Safety Switch Bracket	7-16
58971251	Top Cover	3- 1
58971256	Front Cover	3- 7
58971257	Decal - Increase Size	3-10
58971258	Decal - Decrease Size	3-11
58971264	Operation Skin	3- 9
58971265	Rear Cover	3- 2
58971272	Operation Board Mounting Bracket	3- 6
58971274	Upper Actuator Lever	7-12
58971277	Lower Actuator Lever	7-14
58971279	Safety Switch Actuator	7-13

Parts No.	Description	Page and Index No.
58971351	Drive Motor Bracket	7- 3
58971352	Worm Gear - M5 x 5	7- 2
58971372	Right Lift Rod	5-18
58971374	Decal - Paper Size	5- 5
58971451	Front Post Rack	5-13
58971455	Bushing	5-12
58971457	Rear Post Rack	5-15
58971458	Side Post Spring Plate	5-11
58971459	Side Post Grip	5- 2
58971460	Front Guide Post	5-14
58971462	Front Paper Guide	5- 1
58971463	Rear Guide Post	5-16
58971465	Rear Paper Guide	5- 3
58971472	Bottom Plate	7-23
58971473	Size Lever	5-24
58971477	Leaf Spring	5-30
58971488	Hook	5-34
58971493	Micro Switch Mounting Bracket	5-20
58971496	Sensor Mounting Bracket	5-22
58971497	Harness Cover 1	5-21
58971498	Harness Cover 2	5-27
58971514	Noise Filter Bracket - 220/240V	7-34
58975515	Operation Board	3- 5
58975520	Transformer - 115V, 220V, 240V/30W	7-36
58975537	Grounding Wire	7-38
58975555	Noise Filter Grounding Wire	7-35
59171641	Original Holder	3- 1
59184020	Option Key Top	3-52

Parts No.	Description	Page and Index No.
03130060W	Philips Pan Head Screw - M3 x 6	5-101
03130120W	Philips Pan Head Screw - M3 x 12	5-102
03130120W	Philips Pan Head Screw - M3 x 12	3-111
03130140W	Philips Pan Head Screw - M3 x 14	3-105
03130200W	Philips Pan Head Screw - M3 x 20	5-103
03140040W	Philips Pan Head Screw - M4 x 4	3-101
03140040W	Philips Pan Head Screw - M4 x 4	5-106
03140050W	Philips Pan Head Screw - M4 x 5	7-101
03140060W	Philips Pan Head Screw - M4 x 6	3-102
03140080M	Philips Pan Head Screw - M4 x 8	3-107
03140080W	Philips Pan Head Screw - M4 x 8	3-113
03140100W	Philips Pan Head Screw - M4 x 10	3-102
03140100W	Philips Pan Head Screw - M4 x 10	5-104
03140100W	Philips Pan Head Screw - M4 x 10	7-102
03140120W	Philips Pan Head Screw - M4 x 12	7-103
03140120W	Philips Pan Head Screw - M4 x 12	3-110
03140140W	Philips Pan Head Screw - M4 x 14	7-107
03150080W	Philips Pan Head Screw - M5 x 8	7-104
03150080W	Philips Pan Head Screw - M5 x 8	3-119
03340080D	Philips Sunken Head Screw - M4 x 8	3-101
04340060W	Tapping Screw - M4 x 6	5-105
04340060W	Tapping Screw - M4 x 6	7-105
04340080W	Tapping Screw - M4 x 8	3-103
04340080W	Tapping Screw - M4 x 8	7-106
04340080W	Tapping Screw - M4 x 8	3-106
04340100W	Tapping Screw - M4 x 10	3-109
05740050E	Hexagon Headless Set Screw - M4 x 5	7-111
06316140G	Parallel Pin	3-117
07040040C	Toothed Washer - M4	3-108
07200030E	Retaining Ring - M3	3-106
07200030E	Retaining Ring - M3	7-112
07200030E	Retaining Ring - M3	3-116
07200040E	Retaining Ring - M4	5-108
07200040E	Retaining Ring - M4	7-113
07200040E	Retaining Ring - M4	3-115

Parts No.	Description	Page and Index No.
07200060E	Retaining Ring - M6	5-109
07200060E	Retaining Ring - M6	7-114
07200060E	Retaining Ring - M6	3-118
08011185	Philips Screw with Toothed Washer - M4 x 8	7-108
08025094	Tapping Screw - M4x8	3-104
08077021	Spacer	7-115
09300400	Parallel Key	7-121
09644008W	Tapping Screw with Flat Washer - M4 x 8	3-105
09644008W	Tapping Screw with Flat Washer - M4 x 8	5-107
09644008W	Tapping Screw with Flat Washer - M4 x 8	7-109
09653010W	Tapping Screw With Flat Washer - M3 x 10	3-114
09654010W	Tapping Screw with Flat Washer - M4 x 10	7-110
10050383	Edging: B	7-116
11000277	Fastening Receptacle	11-101
11001169	Fastening Receptacle	11-102
11001172	Fastening Receptacle	11-103
11001238	Pin - Mate - N - Lock	11-131
11001239	Pin - Mate-N-Lock	11-110
11001240	Socket - Mate - N - Lock	11-129
11001241	Socket - Mate-N-Lock	11-104
11001247	Terminal	11-105
11001249	Receptacle Terminal	11-106
11001327	Contact	11-107
11001328	Contact	11-108
11010359	Terminal - 3P	7-122
11020796	Insulating Sleeve	11-109
11021404	Receptacle Housing	11-128
11021408	Receptacle Housing	11-111
11021506	Connector - 1P	11-130
11021507	Connector - 2P	11-112
11021514	Connector - 1P	11-113
11021516	Connector - 3P	11-114
11021532	Connector - 2P	11-115
11021620	Receptacle Housing - 3P	11-116
11021621	Receptacle Housing - 3P	11-117

Parts No.	Description	Page and Index No.
11021623	Receptacle Housing - 7P	11-118
11021786	Connector - 3P	11-119
11021815	Connector - 3P	11-120
11021911	Connector - 3P	11-121
11021912	Connector - 4P	11-122
11021915	Connector - 7P	11-123
11021916	Connector - 8P	11-124
11021925	Connector - 3P	11-125
11021929	Connector - 7P	11-126
11021943	Receptacle Housing	11-132
11021965	Connector - 3P	11-127
11021971	Connector 3P	11-133
11031247	Connector - 3P	9-101
11031729	Connector - 7P	9-102
11031730	Connector - 8P	9-103
11031739	Connector - 3P	9-104
11031743	Connector - 7P	9-105
11040323	Fuse Holder	7-126
11050008	Nylon Clip - 2N	7-119
11050011	Nylon Clip - 8N	7-118
11050106	Wire Saddle	5-110
11050108	Nylon Clip	7-120
11050162	Locking Support	3-103
11050196	Harness Clamp	3-120
11060336	Nylon Stud	7-117
11060442	Cord Clamp - 220/240V	7-123
11070271	Fuse - 3A	7-125
11070487	Circuit Breaker - 115V	7-125
12040192	Microswitch - UL	5-111
12041280	Push Switch	7-124
12041318	Microswitch	3-104
12081077	Solid State Relay	9-106
14000324	Transistor - 2SC458C	9-107
14010825	Diode - 1SS176	9-108
14070520	IC - HD74LS00P	9-109

Parts No.	Description	Page and Index No.
14070622	IC - HD74LS10P	9-110
14071002	IC - TD62003P	9-111
14080124	IC - LM555CN	9-112
16020927	Noise Filter - 220/240V	7-127
16040288	Capacitor - 47µF 25WV	9-113
16040903	Capacitor - 10µF 35V	9-114
16040909	Capacitor - 1µF 50V	9-115
16060689	Capacitor - 0.01µF 50V	9-116
16060755	Capacitor - 10µF 220V (115V)	3-112
16060916	Capacitor - 0.01µF 50V	9-117
16060999	Capacitor - 0.1µF 25V	9-118
16061380	Capacitor - 10µF (220/240V)	3-112
16114101V	Resistor - 100Ω 1/4W ±5% - 220/240V	9-119
16114102V	Resistor - 1KΩ 1/4W ±5%	9-120
16114103V	Resistor - 10KΩ 1/4T ±5% - 220/240V	9-121
16114471V	Resistor - 470Ω 1/4W ±5%	9-122
16114472V	Resistor - 4.7KΩ 1/4W ±5%	9-123
16114564V	Resistor - 560KΩ 1/4W ±5%	9-124
67697930	Power Supply Cord - 115V	7-33

INTERFACE BOARD (5924)

This section instructs you as to the numbers and names of the parts of this machine.

1. INTERFACE BOARD (5924)

SYMBOL NO. : PRINTED NUMBER ON THE BOARD
INDEX No. : REFERENCE NUMBER OF NEXT PAGE

CAPACITOR

SYMBOL NO.	INDEX NO.
C801	124
C802	124
C803	123
C804	125
C805	123
C806	122
C807	125
C808	123
C809	121
C810	124

SYMBOL NO.	INDEX NO.
C811	122
C812	124
C813	123
C814	123
C815	121

CONNECTOR

SYMBOL NO.	INDEX NO.
CN801	105
CN802	102
CN803	104
CN804	103
CN806	2
CN807	3

DIP SW.

SYMBOL NO.	INDEX NO.
DPS801	107

IC

SYMBOL NO.	INDEX NO.
IC801	1
SOCKET	106
IC802	110
IC803	113
IC804	111
IC805	114
IC806	112
IC807	115
IC808	114
IC809	114

OSCILLATOR

SYMBOL NO.	INDEX NO.
OSC801	116

PHOTOCOUPLER

SYMBOL NO.	INDEX NO.
PC180	109

RC ARRAY

SYMBOL NO.	INDEX NO.
HB801	120
HB802	120

RESISTOR

SYMBOL NO.	INDEX NO.
R801	128
R802	126
R803	126
R804	127
R805	127
R806	128

RESISTOR ARRAY

SYMBOL NO.	INDEX NO.
RAY801	118
RAY802	118
RAY803	118
RAY804	117
RAY805	119

TEST PIN

SYMBOL NO.	INDEX NO.
TP801	101
TP802	101
TP803	101

ZENER DIODE

SYMBOL NO.	INDEX NO.
ZD801	108

1. INTERFACE BOARD (5924)

April 30, '87

Index No.	Parts No.	Description	Q'ty Per Assembly
1	59245103	IC - μPD8041AC	1
2	59185711	Fiber Output Connector	1
3	59185712	Fiber Input Connector	1
101	11010328	Connector Pin Contact	
102	11031177	Connector - 26P	
103	11031733	Connector - 11P	
104	11033019	Connector - 16P	
105	11033036	Connector - 26P	
106	11040338	IC Socket - 40P	
107	12041326	Dip Switch	
108	14020269	Zener Diode - RD39F	
109	14030317	Photcoupler - ON3112	
110	14070423	IC - SN7473N	
111	14070975	IC - HD7407P	
112	14071016	IC - μPD8255AC-5	
113	14071348	IC - TD62304P	
114	14071535	IC - TD62308AP	
115	14080099	IC - HA17901P	
116	15030062	Ceramic Oscillator - 6MHz	
117	16017352	Resistor Array - 4.7KΩ	
118	16017374	Resistor Array - 4.7KΩ	
119	16017381	Resistor Array - 68KΩ	
120	16020934	RC Array - CR01-R	
121	16041383	Capacitor - 22μF 50V	
122	16041386	Capacitor - 100μF 50V	
123	16060998	Capacitor - 0.01μF 50V	
124	16060999	Capacitor - 0.1μF 25V	
125	16061129	Capacitor - 30pF 50V	
126	16114102	Resistor - 1KΩ 1/4T ±5%	
127	16114103	Resistor - 10KΩ 1/4T ±5%	
128	16114181	Resistor - 180Ω 1/4T	

Index No.	Parts No.	Description	Q'ty Per Assembly

INTERFACE BOARD (5924)
PARTS INDEX

This section instructs you as to the numbers and names of the parts of this machine.

Parts No.	Description	Page and Index No.
59245103	IC - μPD8041AC	3- 1

Parts No.	Description	Page and Index No
59185711	Fiber Output Connector	3- 2
59185712	Fiber Input Connector	3- 3

Parts No.	Description	Page and Index No.
11010328	Connector Pin Contact	3-101
11031177	Connector - 26P	3-102
11031733	Connector - 11P	3-103
11033019	Connector - 16P	3-104
11033036	Connector - 26P	3-105
11040338	IC Socket - 40P	3-106
12041326	Dip Switch	3-107
14020269	Zener Diode - RD39F	3-108
14030317	Photcoupler - ON3112	3-109
14070423	IC - SN7473N	3-110
14070975	IC - HD7407P	3-111
14071016	IC - μPD8255AC-5	3-112
14071348	IC - TD62304P	3-113
14071535	IC - TD62308AP	3-114
14080099	IC - HA17901P	3-115
15030062	Ceramic Oscillator - 6MHz	3-116
16017352	Resistor Array - 4.7KΩ	3-117
16017374	Resistor Array - 4.7KΩ	3-118
16017381	Resistor Array - 68KΩ	3-119
16020934	RC Array - CR01-R	3-120
16041383	Capacitor - 22μF 50V	3-121
16041386	Capacitor - 100μF 50V	3-122
16060998	Capacitor - 0.01μF 50V	3-123
16060999	Capacitor - 0.1μF 25V	3-124
16061129	Capacitor - 30pF 50V	3-125
16114102	Resistor - 1KΩ 1/4T ±5%	3-126
16114103	Resistor - 10KΩ 1/4T ±5%	3-127
16114181	Resistor - 180Ω 1/4T	3-128

Parts No.	Description	Page and Index No.

MODIFIED PARTS REFERENCE LIST

MODIFIED PARTS REFERENCE

NEW PART NUMBER	OLD PART NUMBER	BULLETIN REFERENCE
03160100G	N/A	5010-028
5215-2629	5215-2573	5010-019
5215-2643	5215-2593	5010-019
5215-2644	5442-2644	5010-019
5215-2673	5215-2598	5010-019
5215-2674	5215-2627	5010-019
5219-2213	N/A	5010-002
5918-3248	5894-3246	5010-028
5918-3249	5918-3245	5010-028
5918-3250	5918-3246	5010-028
5922-2342	5922-2343	5010-013
5922-2346	5922-2342	5010-019
5925-2265	N/A	5010-021 and 022
N/A	5215-9520	5010-007
N/A	5215-9521	5010-007

NEW PART NUMBER	OLD PART NUMBER	BULLETIN REFERENCE