FT5233/5433/5733

SERVICE MANUAL

IMPORTANT SAFETY NOTICES

PREVENTION OF PHYSICAL INJURY

1. Before disassembling or assembling parts of the copier and peripherals, make sure that the copier power cord is unplugged.
2. The wall outlet should be near the copier and easily accessible.
3. Note that some components of the copier and the paper tray unit are supplied with electrical voltage even if the main switch is turned off.
4. If any adjustment or operation check has to be made with exterior covers off or open while the main switch is turned on, keep hands away from electrified or mechanically driven components.
5. If the hot roller temperature is low when the main switch is turned on, the copier starts idling automatically when the warm-up period is completed. Keep hands away from the mechanical and the electrical components to avoid any injury.
6. If the start key is pressed before the copier completes the warm-up period (Ready indicator starts blinking), keep hands away from the mechanical and the electrical components as the copier starts making copies as soon as the warm-up period is completed.
7. The inside and the metal parts of the fusing unit become extremely hot while the copier is operating. Be careful to avoid touching those components with your bare hands.

HEALTH SAFETY CONDITIONS

1. Never operate the copier without the ozone filters installed.
2. Always replace the ozone filters with the specified ones at the specified intervals.
3. Toner and developer are non-toxic, but if you get either of them in your eyes by accident, it may cause temporary eye discomfort. Try to remove with eye drops or flush with water as first aid. If unsuccessful, get medical attention.

OBSERVANCE OF ELECTRICAL SAFETY STANDARDS

1. The copier and its peripherals must be installed and maintained by a customer service representative who has completed the training course on those models.
2. The RAM board on the main control board has a lithium battery which can explode if replaced incorrectly. Replace the battery only with an identical one. The manufacturer recommends replacing the entire RAM board. Do not recharge or burn this battery. Used batteries must be handled in accordance with local regulations.

SAFETY AND ECOLOGICAL NOTES FOR DISPOSAL

1. Do not incinerate the toner cartridge or the used toner. Toner dust may ignite suddenly when exposed to open flame.
2. Dispose of used toner, developer, and organic photoconductor according to local regulations. (These are non-toxic supplies.)
3. Dispose of replaced parts in accordance with local regulations.
4. When keeping used lithium batteries in order to dispose of them later, do not put more than 100 batteries per sealed box. Storing larger numbers or not sealing them apart may lead to chemical reactions and heat build-up.

SECTION 1

OVERALL MACHINE INFORMATION

1. SPECIFICATIONS

Configuration: Desktop

Copy Process: Dry electrostatic transfer system

Originals: Sheet/Book

Original Size: Maximum A3/11" x 17"

Copy Paper Size: Maximum A3/11" x 17"
Minimum B5/11" x 8 1/2" - Paper tray
A6/5 1/2" x 8 1/2" (lengthwise)
-By-pass feed table
(LCT B5/A4/11" x 8 1/2" sideways only)

(Duplex Copying)
Multiple: A4 and B5/8 1/2" x 11" (sideways)
Single/Overlay: Maximum A3/11" x 17"
Minimum B5/8" x 13"

Copy Paper Weight:

- 250-sheet paper tray and 1000-sheet large capacity tray:
  52 –128g/m^2, 14 –34lb
- By-pass feed table:
  52 –157g/m^2, 14 –43lb
- Duplex and overlay:
  64 –105 g/m^2, 17 –28lb

Reproduction Ratios: 4 Enlargement and 6 Reduction

	A4/A3 Version	LT/LDG Version
Enlargement	200% 141% 122% 115%	200% 155% 129% 121%
Full Size	100%	100%
Reduction	93% 82% 75% 71% 65% 50%	93% 85% 77% 74% 65% 50%

Receiving Tray Capacity: 250 sheets (B4/8 1/2" x 14" and smaller)
100 sheets (A3/11" x 17")

Power Source: 115V, 60Hz, more than 12A (for N.A)
110V, 60Hz, (for Taiwan)
220/230/240V, 50Hz/60Hz, more than 7A (for EU and AA)

Power Consumption: Maximum: 1.5 KW
Warm-up: 0.77 KW
Stand-by: 0.14 KW
Copy Cycle (average): 1.2 KW

Noise Emission: Stand-by: less than 40 dB
Copy Cycle (average):
less than 57 dB (copier only)
less than 59 dB (full system)
Maximum:
less than 62 dB (copier only)
less than 63 dB (full system)

Dimensions:

	Width	Depth	Height
Type 1	697 mm (1035 mm) 27.4" (40.7")	600 mm 23.6"	542 mm (574 mm) 21.3" (22.6")
Type 2	871 mm (1075 mm) 34.3" (42.2")	600 mm 23.6"	542 mm (574 mm) 21.3" (22.6")
Type 3	871 mm (1075 mm) 34.3" (42.2")	600 mm 23.6"	542 mm (574 mm) 21.3" (22.6")

( ): When the by-pass feed table is opened, the copy tray is extended, and the platen cover is installed.

Weight: Copier only (Without the optional platen cover=Approximately 2 kg)

Type 1: approximately 78 kg (172.0 lb)
Type 2: approximately 88 kg (194.0 lb)
Type 3: approximately 84 kg (185.2 lb)

Zoom: From 50% to 200% in 1% steps

Copying Speed: 33 copies/minute (A4/8 1/2" x 11" sideways)
19 copies/minute (A3)
18 copies/minute (11" x 17")

Warm-up Time: Less than 110 seconds (20°C)

First Copy Time:	Black copy: 4.5 seconds (A4/8 1/2" x 11" sideways) Type 1, 3: (Upper tray feed) 4.9 seconds Type 2: (Large capacity tray feed) Color copy: 6.6 seconds Type 1, 3: (Upper tray feed) 7.0 seconds Type 2: (Large capacity tray feed)
Copy Number Input:	Ten keys, 1 to 999 (count up or count down)
manual Image Density Selection:	7 steps
Automatic Reset:	1 minute standard setting; can also be set to 3 minutes or no auto reset.
Copy Paper Capacity:	• By-pass feed table; approximately 20 sheets • Paper tray: approximately 250 sheets • Large capacity tray; approximately 1000 sheets
Toner Replenishment:	Black: cartridge exchange (320 g/cartridge) Color: manual exchange (red, blue, & green 60 g/cartridge)
Optional Equipment:	• Platen cover • Document feeder • Paper tray unit with one paper tray • Paper tray unit with three paper trays • 10 bin micro sorter • 20 bin mini sorter • 20 bin midi sorter • 20 bin sorter stapler • Sorter adapter (needed when installing the mini or midi sorter, or the sorter stapler) • Interface PCB (needed when installing the sorter stapler or the menu reader) • Editor (only for A074) • Editing interface adapter (needed when installing the editor)

- Color development unit
- Key counter
- Menu reader (except for Europe)
- A3 counter (service part)

2. MACHINE CONFIGURATION

2.1 COPIER

	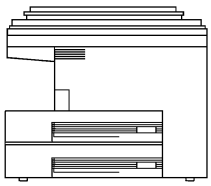	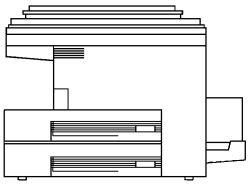	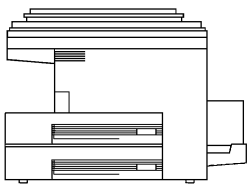
	TYPE 1 (A069)	TYPE 2 (A074)	TYPE 3 (A073)
UPPER TRAY	250	DUPLEX	250
LOWER TRAY	250	250	250
LCT	–	1,000	1,000

2.2 OPTIONAL EQUIPMENT

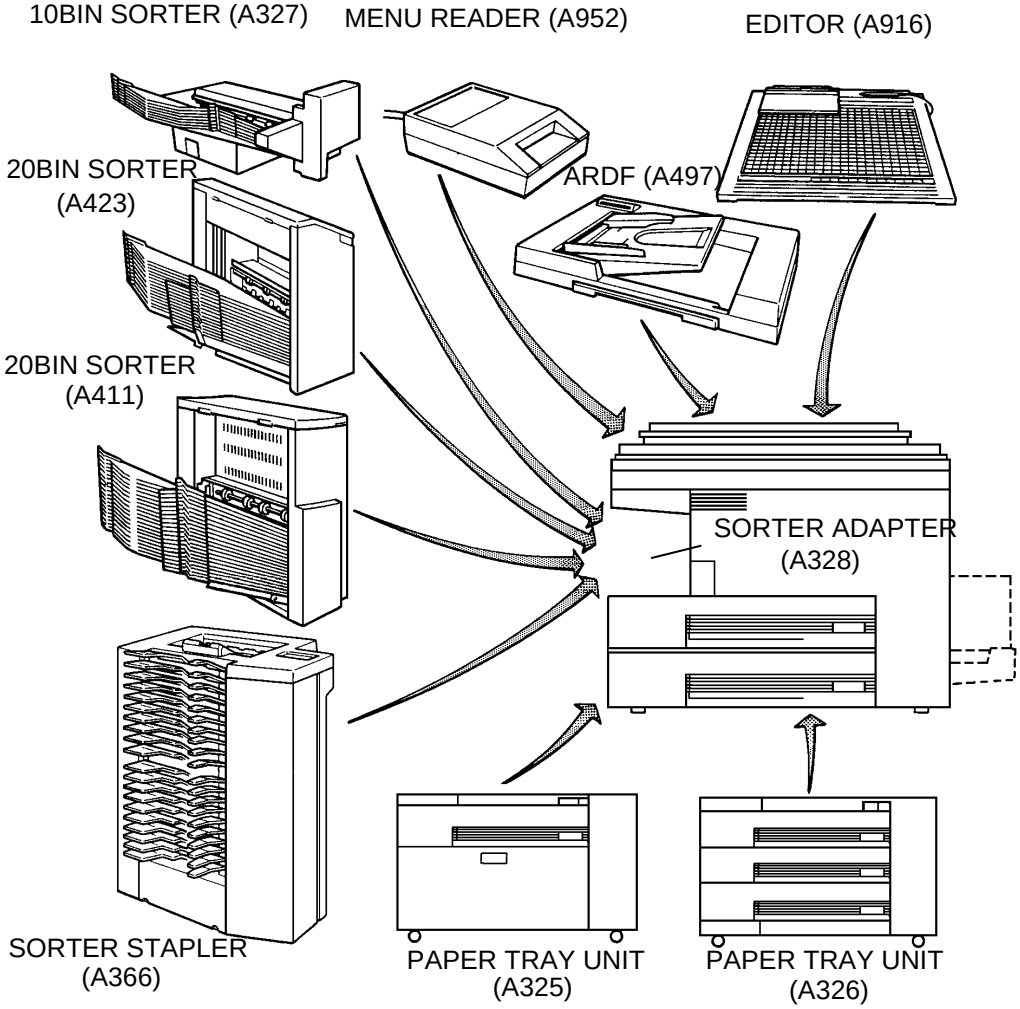

		COPIER			REQUIRED OPTIONAL EQUIPMENT		
PAPER TRAY UNIT	1 TRAY (A325)	TYPE 1 (A069)	TYPE 2 (A074)	TYPE3 (A073)	SORTER ADAPTER (A328)	INTERFACE PCB (A344)	EDITING INTERFACE ADAPTER (A345)
	3 TRAY (A326)	o	o	o			
SORTER	10 BIN (A327)	o	o	o			
	20 BIN MINI (A423)	o	o	o	*		
	20 BIN MIDI (A411)	o	o	o	*		
	20 BIN STAPLER (A366)	o	o	o	*	**	
DOCUMENT FEEDER	ARDF (A497)	o	o	o			
EDITOR (A916)		x	o	x			* **
MENU READER (A952)		o	o	o		**	
COLOR DEVELOPMENT UNIT (A337)		o	o	o			

NOTE1: * The sorter adapter is required to install the 20 bin mini sorter, 20 bin midi sorter or sorter stapler.

*** * The I/F board is required to install the sorter stapler or Menu Reader.**

**** * (1) The editing interface adapter is required to install the editor.**

(2) The editing interface adapter can be installed independently when more precise erasing is desired.

NOTE 2: When installing the sorter stapler, the copier must be placed on the paper tray unit or a table of exactly the same height.

3. COPY PROCESS AROUND THE DRUM

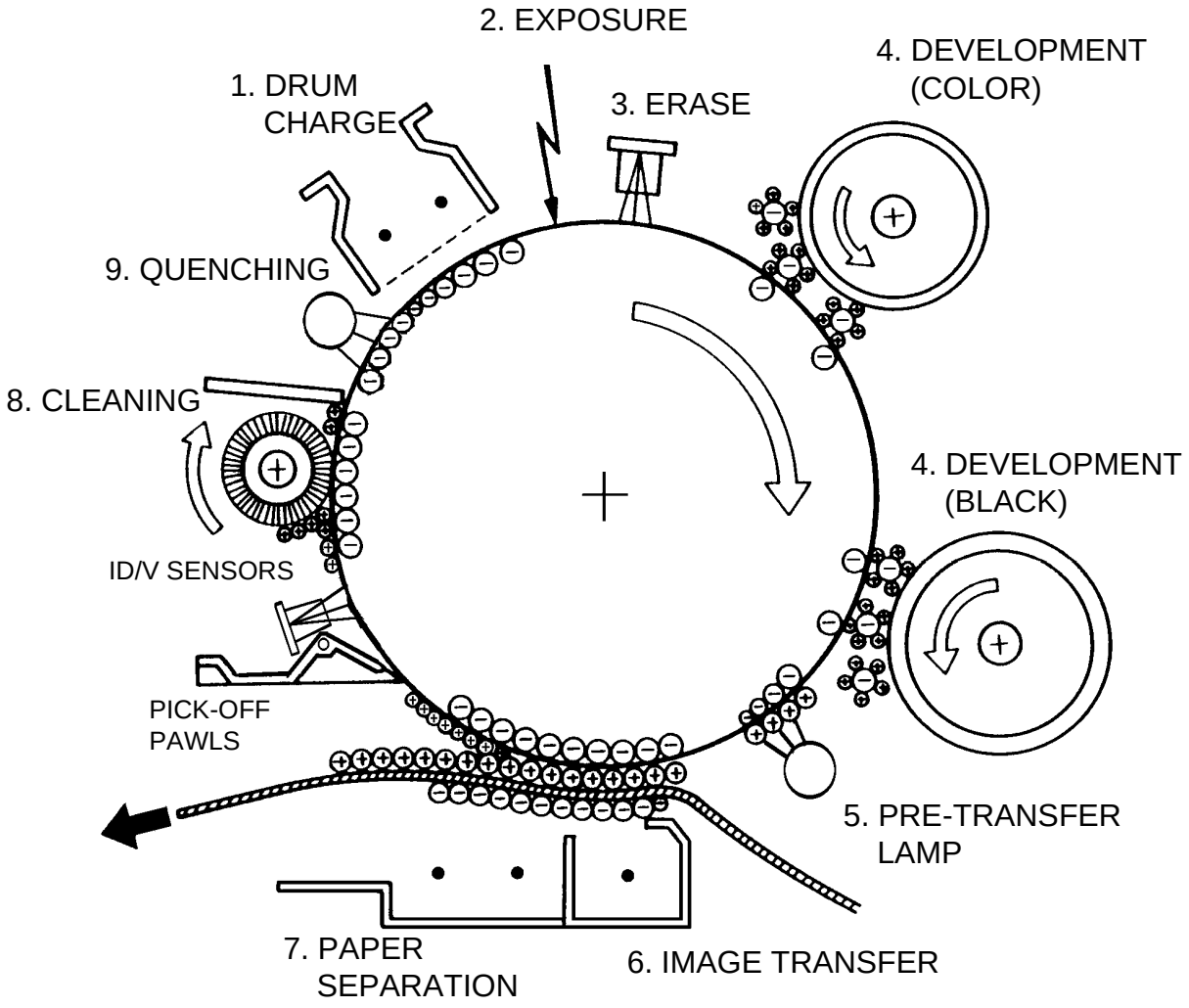

1. DRUM CHARGE

In the dark, the charge corona unit gives a uniform negative charge to the organic photo conductive (OPC) drum. The charge remains on the surface of the drum because the OPC layer has a high electrical resistance in the dark. The amount of negative charge on the drum is proportional to the negative grid bias voltage applied to the grid plate on the charge corona unit.

2. EXPOSURE

An image of the original is reflected to the OPC drum surface via the optics assembly. The charge on the drum surface is dissipated in direct proportion to the intensity of the reflected light, thus producing an electrical latent image on the drum surface.

The amount of remaining charge as a latent image on the drum depends on exposure lamp intensity controlled by the exposure lamp voltage.

3. ERASE

The erase lamp illuminates the areas of the charged drum surface that will not be used for the copy image. The resistance of the drum in the illuminated areas drops and the charge on those areas dissipates.

4. DEVELOPMENT

Positively charged toner is attracted to the negatively charged areas of the drum, thus developing the latent image. (The positive triboelectric charge is caused by friction between the carrier and toner particles.)

The development bias voltage applied to the development roller shaft controls two things:

1) The threshold level if toner is attracted to the drum or toner remains on the development roller.
2) The amount of toner to be attracted to the drum.

The higher the negative development bias voltage is, the less toner is attracted to the drum surface.

5. PRE-TRANSFER LAMP (PTL)

The PTL illuminates the drum to remove almost all the negative charge from the exposed areas of the drum. This prevents the toner particles from being reattracted to the drum surface during paper separation and makes paper separation easier.

6. IMAGE TRANSFER

Paper is fed to the drum surface at the proper timing so as to align the copy paper and the developed image on the drum surface. Then, a strong negative charge is applied to the reverse side of the copy paper, producing an electrical force which pulls the toner particles from the drum surface onto the copy paper. At the same time, the copy paper is electrically attracted to the drum surface.

7. PAPER SEPARATION

A strong ac corona discharge is applied to the reverse side of the copy paper, reducing the negative charge on the copy paper and breaking the electrical attraction between the paper and the drum. Then, the stiffness and the weight of the copy paper causes it to separate from the drum surface. The pick-off pawls help to separate paper and drum.

8. CLEANING

The cleaning brush removes toner remaining on the drum after image transfer and the cleaning blade scrapes off all the remaining toner.

9. QUENCHING

Light from the quenching lamp electrically neutralizes the charge potential of the drum surface.

4. MECHANICAL COMPONENT LAYOUT

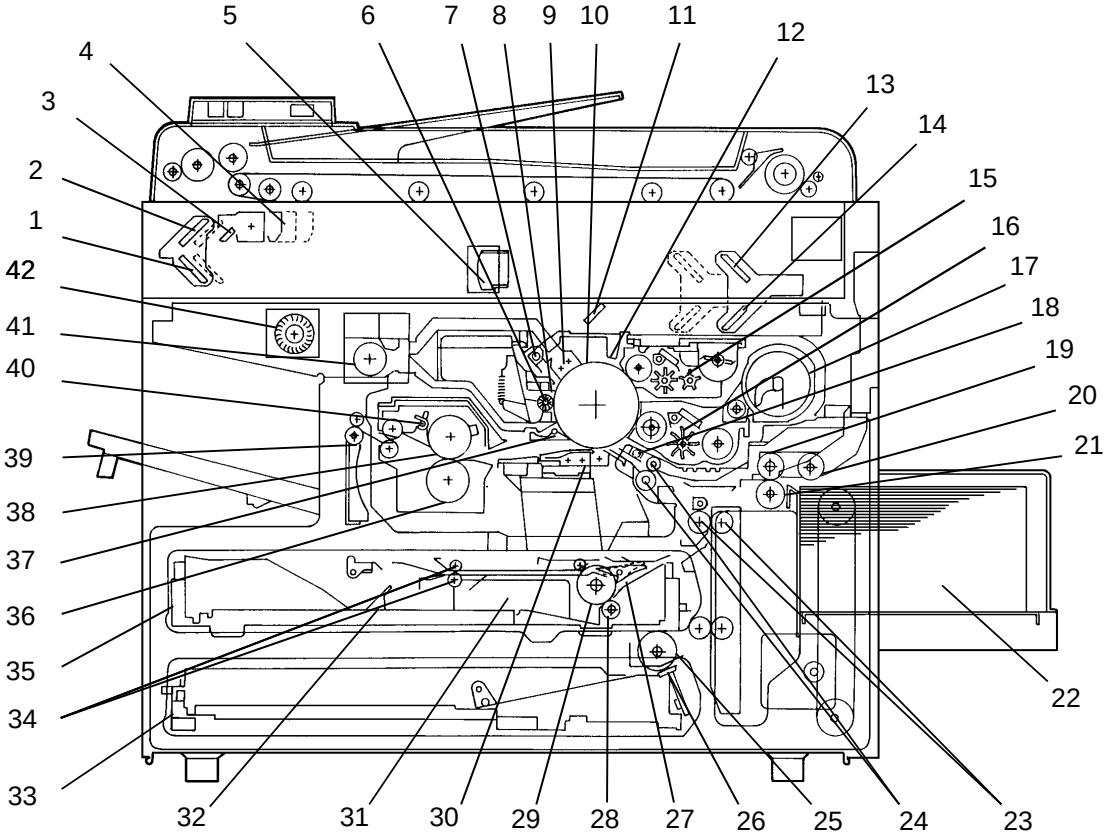

1. 3rd Mirror
2. 2nd Mirror
3. 1st Mirror
4. Exposure Lamp
5. Lens
6. Cleaning Brush
7. Quenching Lamp
8. Cleaning Blade
9. Change Corona Unit
10. OPC Drum
11. 6th Mirror
12. Erase Unit
13. 4th Mirror
14. 5th Mirror
15. Color Development Unit
16. Black Development Unit
17. Black Toner Supply Unit
18. Pre-Transfer Lamp
19. Feed Roller
20. Pick-up Roller
21. Separation Roller
22. Large Capacity Tray
23. Relay Rollers
24. Registration Rollers
25. Paper Tray Feed Roller
26. Friction Pad
27. Turn Gate
28. Duplex Friction Roller
29. Duplex Feed Roller
30. Transfer & Separation Corona Unit
31. Jogger Fences
32. End Fence
33. Lower Paper Tray
34. Entrance Rollers
35. Duplex Tray
36. Pressure Roller
37. Pick-off Pawls
38. Hot Roller
39. Junction Gate
40. Hot Roller Strippers
41. Transport Fan
42. Fusing Exhaust Fan

5. DRIVE LAYOUT

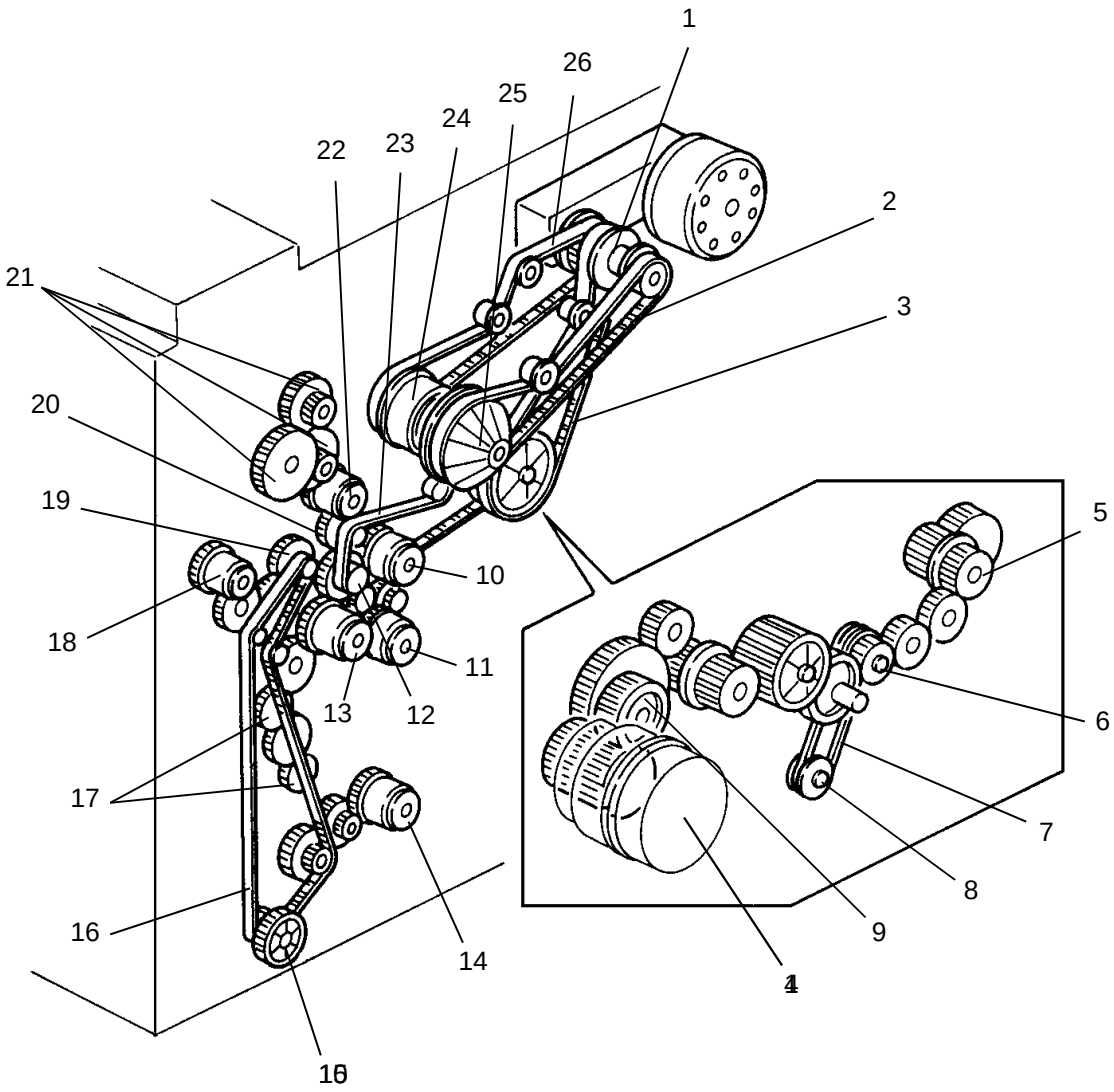

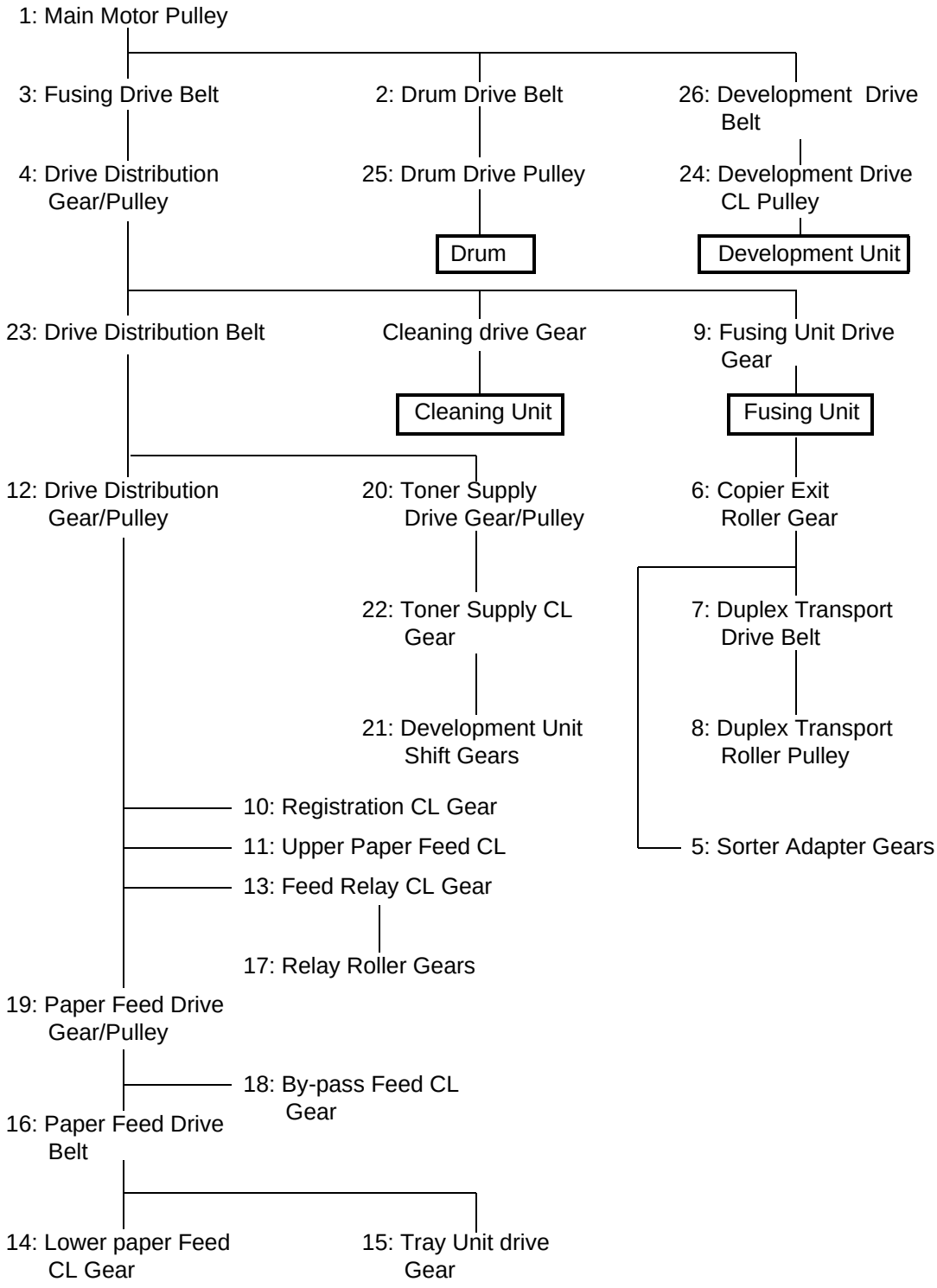
1: Main Motor Pulley
3: Fusing Drive Belt
2: Drum Drive Belt
26: Development Drive Belt
4: Drive Distribution Gear/Pulley
25: Drum Drive Pulley
24: Development Drive CL Pulley
Drum
Development Unit
23: Drive Distribution Belt
Cleaning drive Gear
9: Fusing Unit Drive Gear
Cleaning Unit
Fusing Unit
12: Drive Distribution Gear/Pulley
20: Toner Supply Drive Gear/Pulley
6: Copier Exit Roller Gear
22: Toner Supply CL Gear
7: Duplex Transport Drive Belt
21: Development Unit Shift Gears
8: Duplex Transport Roller Pulley
10: Registration CL Gear
11: Upper Paper Feed CL
5: Sorter Adapter Gears
13: Feed Relay CL Gear
17: Relay Roller Gears
19: Paper Feed Drive Gear/Pulley
18: By-pass Feed CL Gear
16: Paper Feed Drive Belt
14: Lower paper Feed CL Gear
15: Tray Unit drive Gear

6. PAPER PATH

6.1 NORMAL COPYING

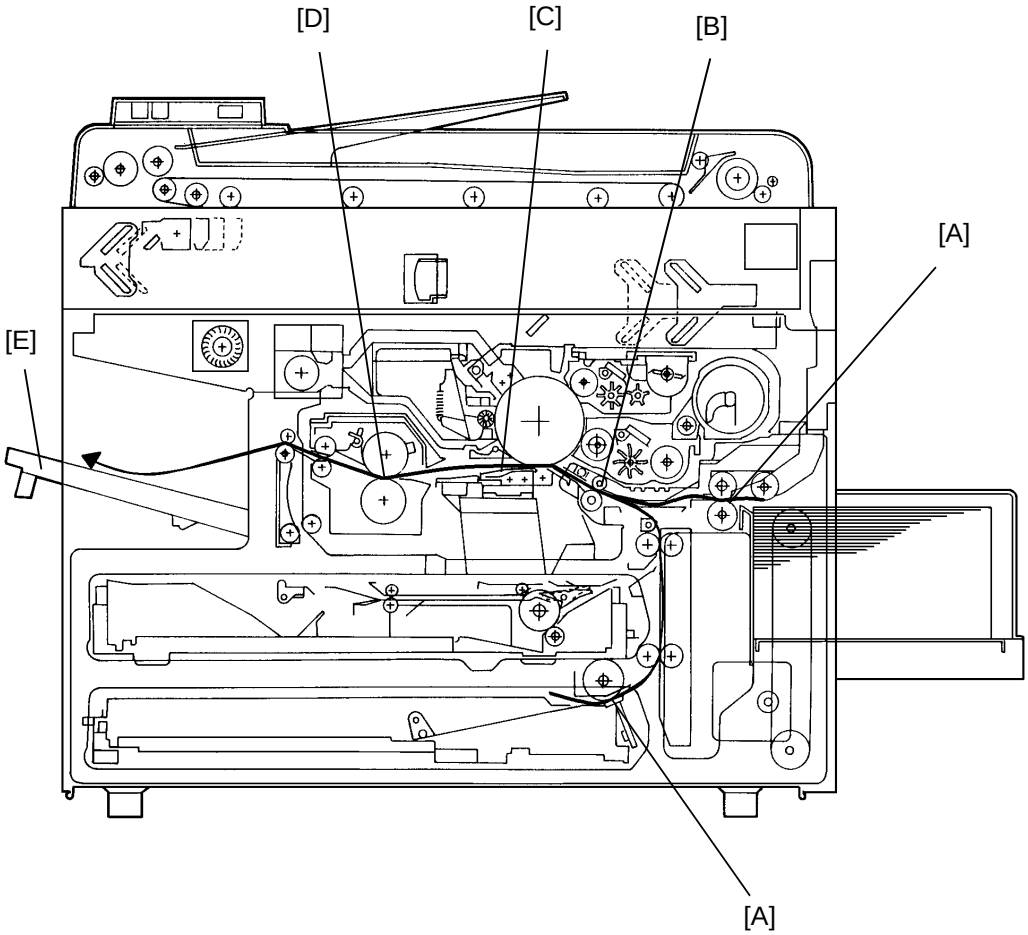

-

Paper feed begins from the LCT or paper tray unit paper feed stations. The copy paper then follows one of two paths inside the copier. The path followed depends on which mode the operator has selected. For copy processing, all sheets follow the same path from the paper feed mechanism [A] through the registration [B], T & S corona [C], and fusing unit [D]. After that, normal copies are delivered to the copy tray [E], however, 2 sided copies and overlay copies are diverted for further processing.

6.2 MULTIPLE 2-SIDED COPYING

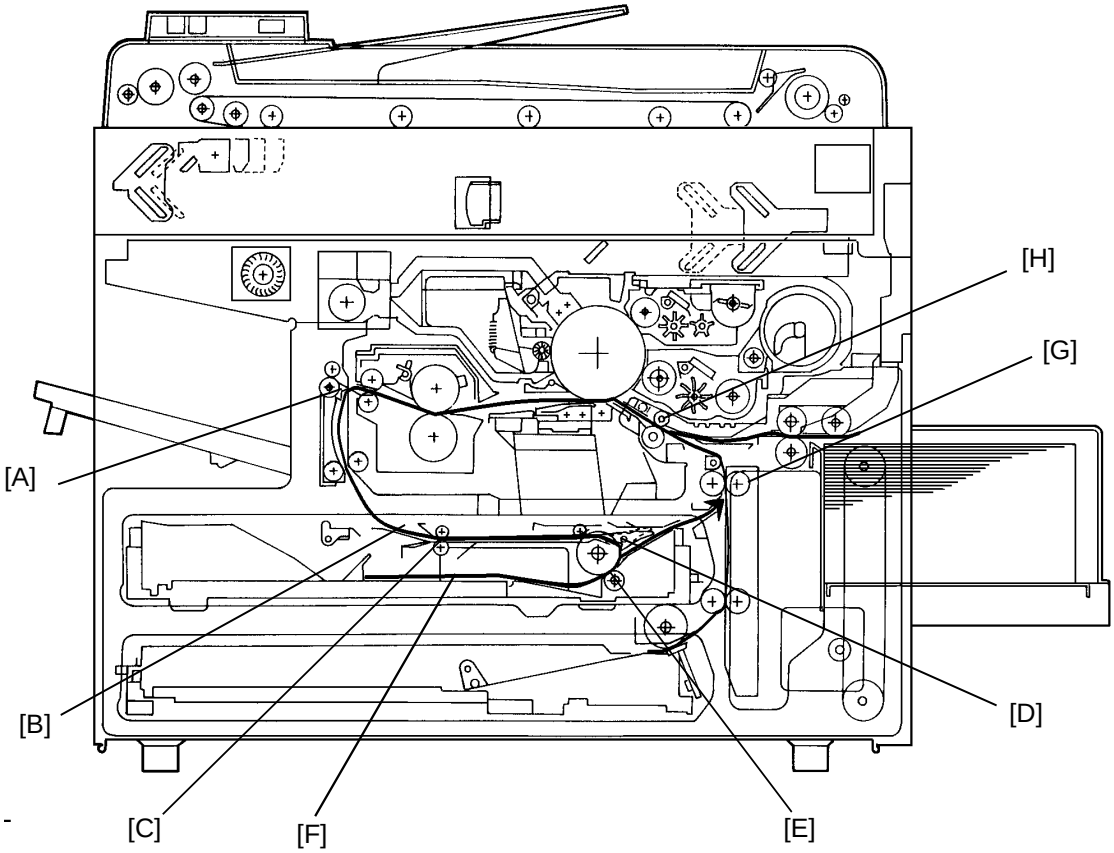

Paper that is A4, B5, and 8 1/2" X 11" sideways can be used for multiple 2-sided copying. In this mode the junction gate [A] directs sheets exiting the fusing unit to the duplex tray entrance [B]. After that, all sheets follow the path through the entrance rollers [C], and the turn gate [D]. The turn gate directs paper through the duplex feed mechanism [E] to the duplex tray [F]. After all sheets are stacked in the duplex tray, these sheets follow the path through the duplex feed mechanism and relay rollers [G] to the registration rollers [H]. After that, these sheets follow the same path as normal copying from the registration rollers to the copy tray.

6.3 SINGLE 2-SIDED COPYING

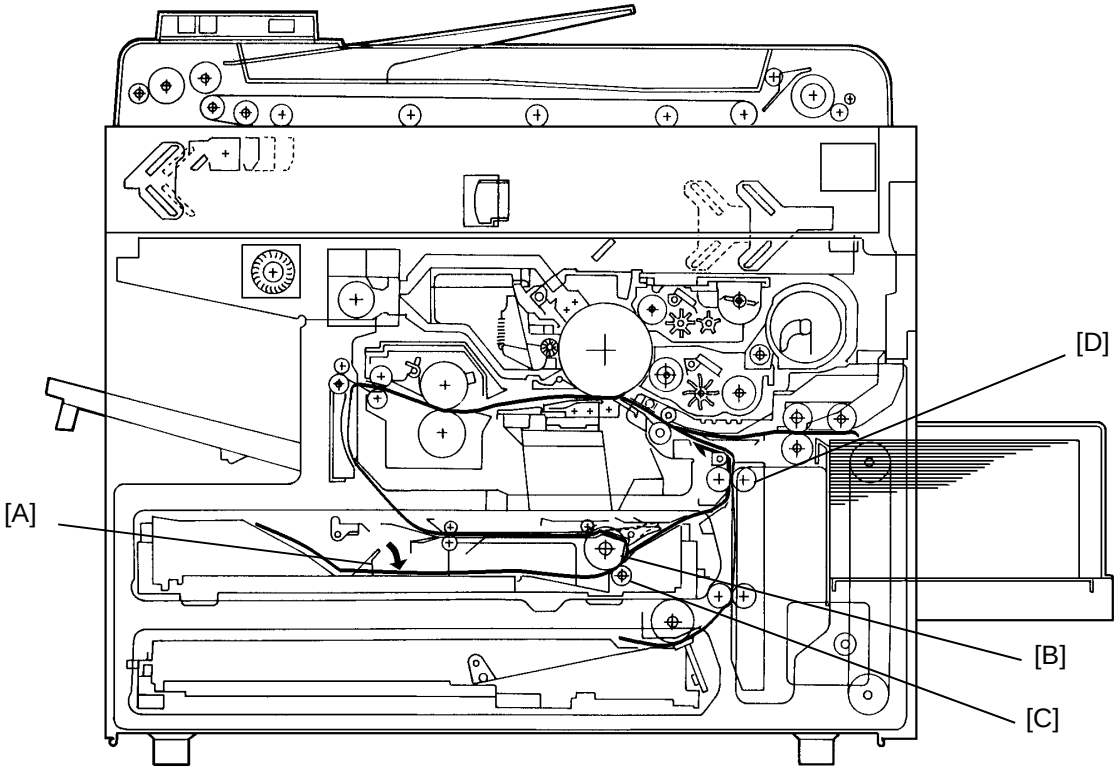

Any sheet up to A3\11" x 17" but except for A4, B5, or 8$\frac{1}{2}$" X 11" sideways can be used for single 2-sided copying. In this mode, the sheet follows the same path as in multiple 2-sided copying to the duplex tray. However, the end fence [A] of the duplex tray lowers. The sheet advances over the lowered end fence. The sheet is stopped by the friction between the duplex feed and friction rollers [B,C]. It is directed to the relay rollers [D] by the reversed duplex feed roller. It stays there once. After that, the sheet follows the same path as in multiple 2-sided copying from the relay rollers to copy tray.

6.4 SINGLE IMAGE OVERLAY COPYING

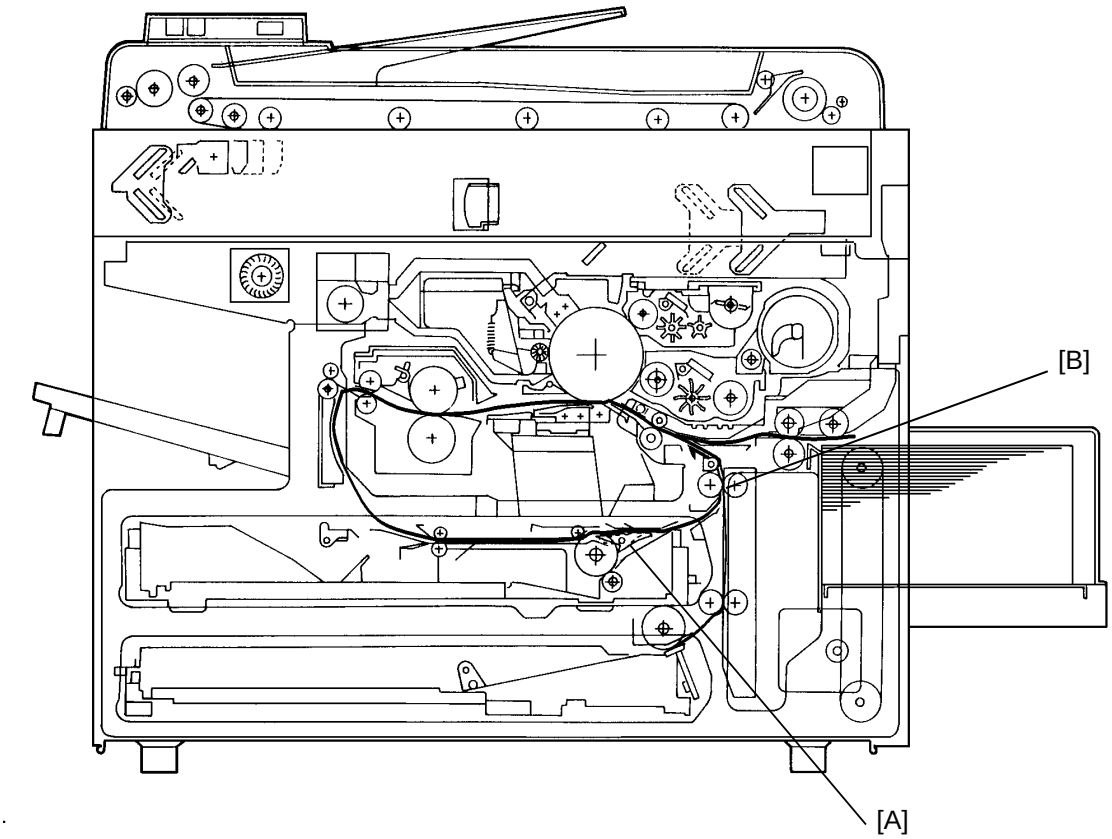

In this mode, the sheet follows the same path as in multiple 2-sided copying to the turn gate [A]. The turn gate directs the sheet to the relay rollers [B]. The sheet stays there once. After that, the sheet follows the same path as in multiple 2-sided copying from the relay rollers to the copy tray.

7. ELECTRICAL COMPONENT DESCRIPTION

Refer to the electrical component layout on the reverse side of the Point to Point (Water proof paper) for symbols and index numbers.

Symbol	Name	Function	Index No.
Motors			
M1	Main	Drives the main unit components.	1
M2	Exhaust blower	Blows the ozone built up around the charge section through the ozone filter.	6
M3	Upper tray lift (non-duplex machine only)	Raises the bottom plate in the upper paper tray.	31
M4	Lower tray lift	Raises the bottom plate in the lower paper tray.	28
M5	Transport fan	Provides air flow to the transport section so that paper is held on the transport guide. Also the air flow isolates the toner collection tank from fusing heat. Provides air flow to the charge corona section as well.	65
M6	Fusing exhaust fan	Removes the heat from around the fusing unit.	66
M7	Scanner drive	Drives the 1st and 2nd scanners (dc stepper).	67
M8	3rd scanner drive	Drives the 3rd scanner (dc stepper).	75
M9	Optics cooling fan	Removes heat from the optics unit.	77
M10	Lens drive	Positions the lens.	100
M11	Duplex feed (duplex machine only)	Drives the feed roller and moves the bottom plate up and down (24 V dc stepper).	103
M12	Jogger (duplex machine only)	Drives the jogger fences to square the paper stack in the duplex tray (dc stepper).	107
M13	LCT lift	Lifts up and lowers the LCT bottom plate.	79

Symbol	Name	Function	Index No.
Circuit Board			
PCB1	dc power supply	Drives the exposure and fusing lamps and rectifies 100 Vac or 220/230/240 Vac input and outputs dc voltages.	44
PCB2	Main control	Controls all copier functions both directly and through the other control boards.	10
PCB3	Scanner motor control	Controls the speed of the scanner drive motor.	69
PCB4	Main motor control	Controls the rotation of the main motor.	71
PCB5	Operation panel	Controls the LED matrix, and monitors the key matrix.	93
PCB6	ADS sensor	Senses the background density of the original.	90
PCB7	High voltage supply - CTBG	Supplies high voltage for the charge corona, grid bias, transfer corona, and development bias.	9
PCB8	High voltage supply - D	Supplies high voltage for the separation corona.	8
PCB9	PTL/QL stabilizer	Provides high voltage for the quenching and pre-transfer lamps.	73
PCB10	Duplex control (duplex machine only)	Controls the rotation of the duplex feed motor.	106
PCB11	LCT interface (LCT machine only)	Interfaces the LCT control signal between the main control board and the LCT.	80
PCB12	Guidance display control (duplex machine only)	Controls the guidance display board.	92
PCB13	Guidance display (duplex machine only)	Displays guidance for machine operation.	94

Symbol	Name	Function	Index No.
PCB14	Interface - type G (option for sorter stapler and menu reader)	Interfaces the sorter stapler and menu reader with the main control board.	16
PCB15	Nose filter (230 V machine only)	Removes electrical noise	35
Switches			
SW1	Upper paper size - 1 (non-duplex machine only)	Determines what size paper is in the upper paper tray.	2
SW2	Upper paper size - 2 (non-duplex machine only)	Determines what size paper is in the upper paper tray.	3
SW3	Upper paper size - 3 (non-duplex machine only)	Determines what size paper is in the upper paper tray.	4
SW4	Upper paper size - 4 (non-duplex machine only)	Determines what size paper is in the upper paper tray.	5
SW5	Lower paper size - 1	Determines what size paper is in the lower paper tray.	36
SW6	Lower paper size - 2	Determines what size paper is in the lower paper tray.	34
SW7	Lower paper size - 3	Determines what size paper is in the lower paper tray.	33
SW8	Lower paper size - 4	Determines what size paper is in the lower paper tray.	32
SW9	Color detection	Detects if color development unit is set or not and which color toner development unit is installed.	13
SW10	Exit cover (Duplex machine only)	Cuts the ac power line.	64
SW11	Platen cover	Informs the CPU when the platen cover is closed.	88

Symbol	Name	Function	Index No.
SW12	Front door safety	Cuts the ac power line through RA1 and detects if the front door is open or not.	91
SW13	Main	Supplies power to the copier.	95
SW14	LCT cover - 1 (LCT machine only)	Detects if the LCT cover is open or not.	83
SW15	LCT cover - 2 (LCT machine only)	Cuts the dc power line of the LCT lift motor.	84
SW16	LCT down (LCT machine only)	Sends a signal to the CPU to lower the LCT bottom plate.	85
Lamps			
L1	Quenching	Neutralizes any charge remaining on the drum surface after cleaning.	47
L2	Pre-transfer	Reduces the charge on the drum surface before transfer.	49
L3	Fusing	Provides heat to the hot roller.	60
L4	Exposure	Applies high intensity light to the original exposure.	99
L5	Erase	Eliminates the charge for unnecessary areas of the image on the drum surface before exposure.	48
Magnetic Clutches			
MC1	Development drive	Drives the development roller.	11
MC2	Toner supply	Drives the toner supply roller.	14
MC3	By-pass feed	Starts paper feed from the by-pass feed table or LCT.	17
MC4	Feed relay	Drives the relay rollers.	19
MC5	Registration	Drives the registration rollers.	20

Symbol	Name	Function	Index No.
MC6	Upper paper feed (non-duplex machine only)	Starts paper feed from the upper paper tray.	22
MC7	Lower paper feed	Starts paper feed from the lower paper tray.	24
Solenoids			
SOL1	Development unit change	Changes the position of the black development unit and color development unit.	12
SOL2	Pick-up roller	Picks paper up from the by-pass feed table or LCT.	18
SOL3	Duplex tray lock (duplex machine only)	Locks the duplex tray in the main copier.	29
SOL4	Upper tray lock (non-duplex machine only)	Locks the upper paper tray in the main copier.	39
SOL5	Lower tray lock	Locks the lower paper tray in the main copier.	37
SOL6	Junction gate (duplex machine only)	Moves the junction gate to direct copies to the duplex tray or to the paper exit.	43
SOL7	Duplex turn gate (duplex machine only)	Moves the duplex turn gate to direct copies to the duplex tray or to the relay rollers.	105
Sensors			
S1	By-pass feed table	Detects if the by-pass feed table is open or closed.	15
S2	Upper tray set (non-duplex machine only)	Detects if the upper paper tray is set or not.	21
S3	Lower tray set	Detects if the lower paper tray is set or not.	26
S4	By-pass feed paper end	Informs the CPU that there is no paper in the by-pass feed table.	53
S5	Upper tray paper end (non-duplex machine only)	Informs the CPU when the upper paper tray runs out of paper.	23

Symbol	Name	Function	Index No.
S6	Lower tray paper end	Informs the CPU when the lower paper tray runs out of paper.	25
S7	Upper tray upper limit (non-duplex machine only)	Detects the upper position of the paper stack in the upper tray to stop the upper lift motor.	30
S8	Lower tray upper limit	Detects the upper position of the paper stack in the lower tray to stop the lower lift motor.	27
S9	Lower relay	Detects the lead edge of paper from the lower paper tray to determine the stop timing of the lower paper feed clutch and detects misfeeds.	51
S10	Upper relay	Detects the lead edge of paper from the upper paper tray to determine the stop timing of the upper paper feed clutch and detects misfeeds.	50
S11	Registration	Detects the lead edge of paper to determine the stop timing of the feed relay clutch and detects misfeeds.	52
S12	Image density (ID)	Detects the density of the ID sensor pattern on the drum to control the toner density.	57
S13	V	Detects the VR and VL patterns.	58
S14	Fusing exit	Detects misfeeds.	62
S15	Junction gate (duplex machine only)	Detects misfeeds.	63
S16	Scanner H.P.	Informs the CPU when the 1st scanner is at the home position.	68
S17	Lens H.P.	Informs the CPU when the lens is at the full-size position.	72
S18	Platen position	Informs the CPU when the platen cover is positioned. When the angle between, the platen cover and the exposure glass is about 30 degrees.	74
S19	3rd scanner H.P.	Informs the CPU when the 3rd scanner is in the full size position.	76
S20	Original length	Detects the original length.	89

Symbol	Name	Function	Index No.
S21	Original width	Detects the original width.	96
S22	Duplex entrance (duplex machine only)	Detects misfeed.	109
S23	Duplex turn gate (duplex machine only)	Detects the trail edge of paper to determine the reverse timing of the duplex motor and detects misfeed.	101
S24	Duplex paper end (duplex machine only)	Detects copy in the duplex tray.	102
S25	Jogger H.P. (duplex machine only)	Detects if the jogger fences are at home position.	108
S26	LCT paper end (LCT machine only)	Informs the CPU when the LCT runs out of paper.	82
S27	LCT lower limit (LCT machine only)	Sends signal to CPU to stop lowering the LCT bottom plate.	81
S28	LCT upper limit (LCT machine only)	Sends signal to CPU to stop lifting up the LCT bottom plate.	78
Heaters			
H1	Drum	Turns on when the main switch is off to prevent moisture around the drum.	54
H2	Optics anti-condensation (option)	Turns on when the main switch is off to prevent moisture from forming on the optics.	97
H3	Upper tray (option)	Turns on when the main switch is off to keep paper dry in the upper paper tray.	55
H4	Lower tray (option)	Turns on when the main switch is off to keep paper dry in the lower paper tray.	87
Thermistor			
TH1	Drum	Monitors the temperature around the drum.	56
TH2	Fusing	Monitors the temperature of the hot roller.	59

Symbol	Name	Function	Index No.
TH3	Optics	Monitors the temperature of the optics cavity.	98
TH4	Duplex motor (duplex machine only)	Monitors the temperature of the duplex motor.	104
Thermofuse			
TF1	Fusing	Provides back-up overheat protection in the fusing unit.	61
Thermoswitch			
TS1	Optics	Provides overheat protection in the optics unit.	70
Noise filter			
NF1		Removes electrical noise.	40
Fuse			
FU1	Main (115 V machine only)	Provides back-up high current protection in the electrical components.	42
FU2	Sorter line (115 V machine only)	Provides back-up high current protection in the electrical components of the sorter.	46
FU3	DF line (115 V machine only)	Provides back-up high correct protection in the electrical components of the ARDF.	7
Circuit Breaker			
CB1	(230 V machine only)	Provides back-up high current protection in the electrical components.	41
Relay			
RA1	Main power	Controls main power.	45
Transformer			
TR1	Main	Steps down the wall voltage to 100 V ac.	38
Counter			
CO1	Total	Keeps track of the total number of copies made.	86

SECTION 2

DETAILED SECTION DESCRIPTIONS

1. PROCESS CONTROL

1.1 OVERVIEW

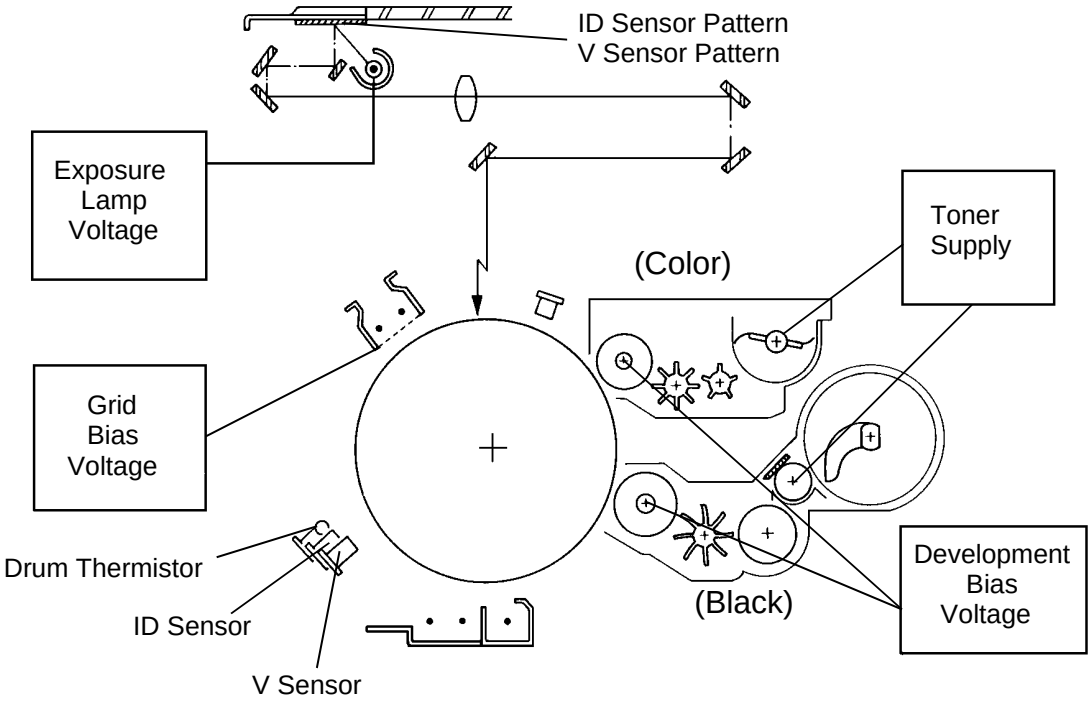

As seen in section 1 the copy process around the drum and the copy image (image and background density) are controlled by many factors.

On this copier, the following items are controlled during the copy process to maintain good copy quality:

- The exposure lamp voltage of the optics section
- The grid bias voltage of the drum charge section
- The development bias voltage and toner supply of the development section

The items above use the following electrical components:

- The operation panel (manual ID selection and reproduction ratio), ADS sensor, ID sensor, V sensor, drum thermistor, paper size switches, color detection switches, and RAM board (drum rotation time and SP mode data)

Refer to the process control table in the supplement sheet bag for the details on which electrical component controls which controlled item.

In the following sections, we will explain briefly how the major electrical components are controlled in the copy process.

1.2 ID SENSOR CONTROL

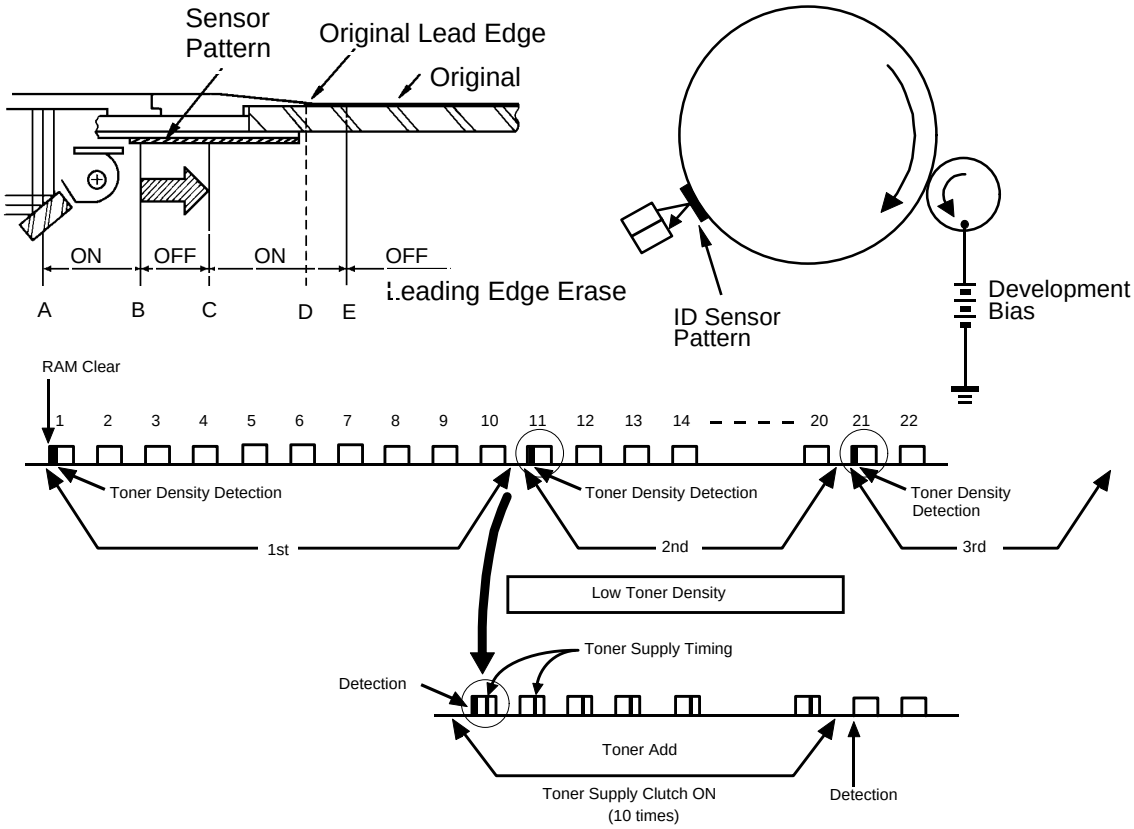

1.2.1 Overview

An ID (Image Density) sensor is used to control toner supply.

The sensor is located on the drum unit, under the cleaning unit. Placing the sensor under the cleaning unit, instead of the development unit, reduces the risk of scattered toner getting on the sensor.

The CPU checks toner density through the ID sensor by directly sensing the image density on the drum. This is done every 10 copy cycles (every 5 copy cycles for the color development unit). Turning the main switch off and on has no effect because the count is stored in RAM. If the drum initialization is performed (SP mode #66) or the RAM is cleared (SP mode #99), the CPU starts counting for the toner density check from the beginning of the first copy cycle.

The ID sensor pattern (black) is stuck on the operator side of the bottom of the left scale bracket. During the check cycle, the ID sensor pattern is exposed prior to exposure of the original.

After the ID sensor pattern is developed, the ID sensor checks the pattern's reflectivity and the CPU notes it. If the reflected light is too strong, indicating toner density is too low, toner is added to the development unit.

The toner is not added all at once. The CPU energizes the toner supply clutch solenoid for the proper amount of time to add a calculated amount of toner over the next 10 copy cycles (5 copy cycles for color toner).

Such toner supply control through the ID sensor is called a detect supply mode. On this copier, this mode is used to control both black and color toner supply.

1.2.2 ID Sensor Output

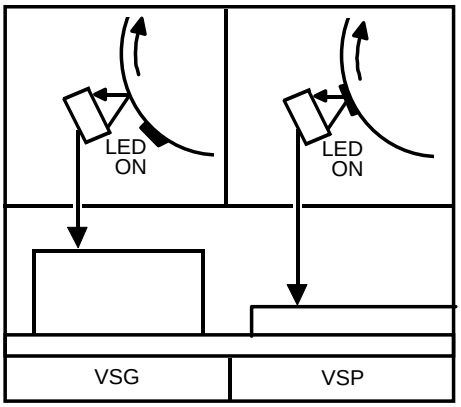

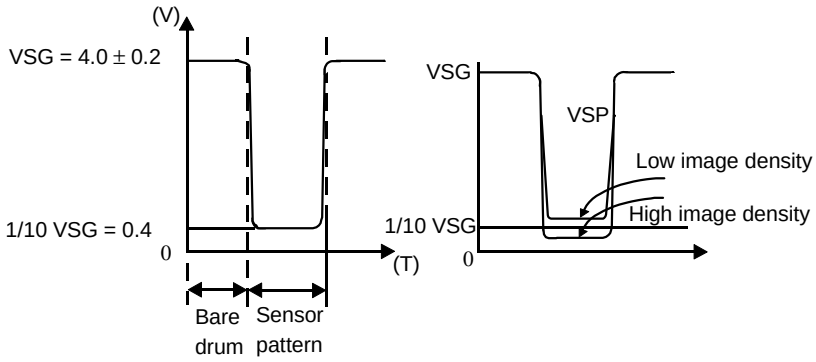

When in the toner density check cycle, the CPU receives two voltage values directly from the ID sensor: Vsg and Vsp. Vsg is the voltage value for the area of the drum made bare by the erase lamp unit before the ID sensor pattern is exposed. Vsp is the voltage value for the developed ID sensor pattern. The CPU compares these two values to monitor the image density on the drum and with this controls the toner supply.

[Standard setting]	0 to 500 copies	Over 500 copies
Black toner	– 220 V	– 200 V
Red/Blue toner	– 200 V	– 180 V
Green toner	– 240 V	– 220 V

Vsg is the reference voltage of the ID sensor output and is automatically adjusted to 4V whenever SP mode #54 is called.

The development bias for the ID sensor pattern is fixed for each toner color. This is to avoid any influence from the manual ID level setting on toner density control. (See chart.)

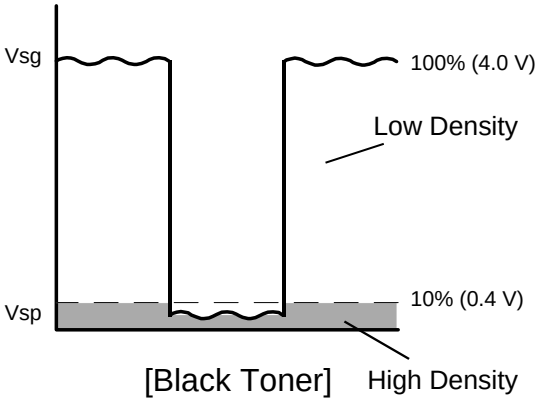

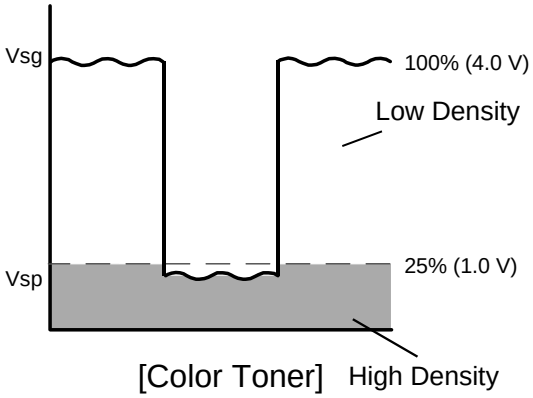

(1) Detect supply mode

In the detect supply mode toner will be supplied under the following conditions:

Black toner .....Vsp/ Vsg x 100 ≥ 10
Color toner .....Vsp/ Vsg x 100 ≥ 25

(2) Fixed supply mode

A fixed amount of toner is supplied every copy cycle when the fixed supply mode is selected (when the data of SP mode #30 is "1").
On this copier, this mode can be selected only for black toner.
The CPU monitors Vsp and Vsg once every 10 copy cycles even in the fixed supply mode.
To avoid over toning, the CPU stops toner supply when Vsp becomes 1/10 Vsg or less.

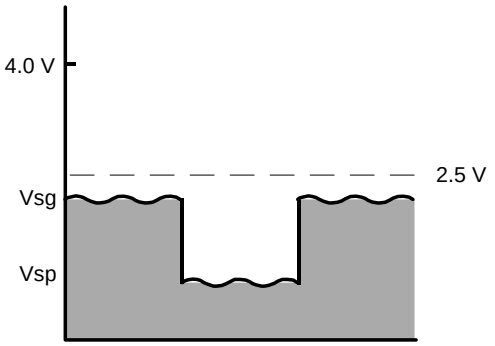

[Vsg abrormal]

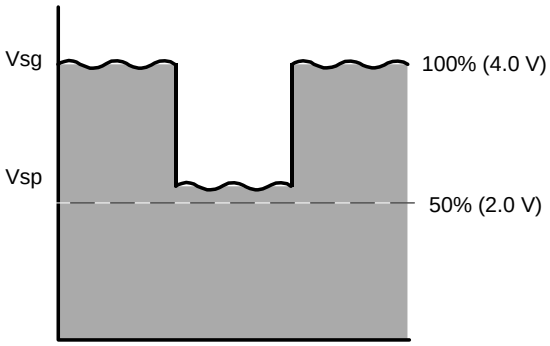

[Vsp abnormal]

(3) ID Sensor Abnormal Conditions

The following ID sensor abnormal conditions apply to both the detect and fixed supply modes.

a. Vsg abnormal
When Vsg falls under 2.5V, the CPU stops the toner supply and continues the ID sensor pattern detection (every 10 copies for black and every 5 copies for color). If this abnormal value of Vsg is detected 5 times in a row under this condition (without any toner supply), the CPU makes the call service indicator blink. Then the CPU shifts the toner supply to the abnormal fixed supply mode. But in this condition the CPU never stops the toner supply as it does to avoid overtoning in the normal fixed supply mode.

b. Vsp abnormal
When [Vsp/Vsg X 100] goes to 50 or more, the CPU changes the toner supply amount to the ID sensor abnormal level and continues toner supply and ID sensor pattern detection. If this abnormal value of Vsp is detected 5 times in a row, the CPU makes the call service indicator blink. Then the CPU shifts the toner supply to the abnormal fixed supply mode, as it does under a Vsg abnormal condition.

NOTE: The CPU continues the ID sensor pattern detection even under the ID sensor abnormal conditions.
For both black and color toners, if Vsg and Vsp return to the normal range at any of the subsequent toner density check cycles, the CPU will return the toner supply control to normal.

1.3 VR PATTERN CONTROL

1.3.1 Overview

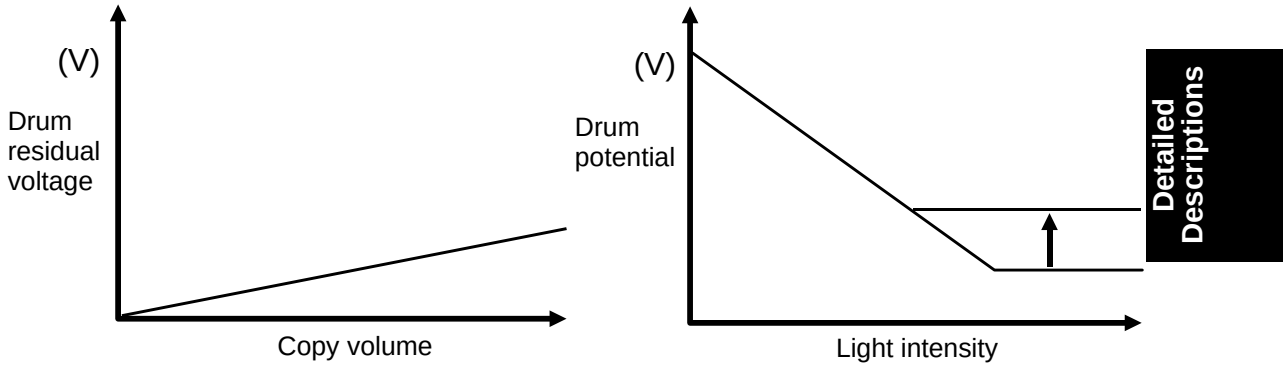

During the OPC drum's life, drum residual voltage gradually increases due to electrical fatigue. This may cause dirty backgrounds on copies. The V sensor is used to avoid this problem.

The V sensor is located on the drum unit, on the same frame as the ID sensor. The ID sensor is located on the non-operator side and the V sensor is on the operator side.

The CPU checks the drum residual voltage through the V sensor by directly sensing the VR pattern on the drum surface. This VR pattern detection is performed after the drum initial setting (SP mode #66). After this, the CPU will do one VR pattern detection every 200 copies for the next 2,000 copies, and every 1,000 copies after that. Also when VR data correction (See 1.5 Drum Temperature Control) is applied and the drum temperature goes over 25°C, this detection is performed.

According to the data of the VR pattern detection, the CPU applies VR correction to the grid bias voltage and the development bias voltage.

1.3.2 V_R Pattern Detection

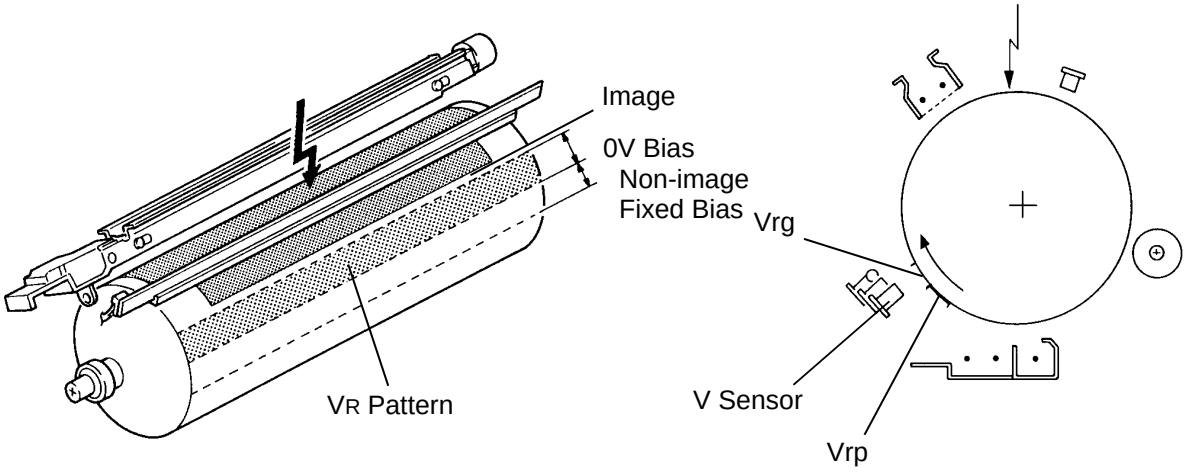

The V_R pattern is made on the drum before the original latent image, as in the case of the ID sensor pattern.

During V_R pattern detection, the drum surface is charged with a fixed grid bias voltage: – 500V + V_G correction (see 1.6 Drum Rotation Time Control). At the same time all the blocks of the erase lamp unit turn on to illuminate this charged area of the drum.

The exposed area of the drum is developed with a fixed bias voltage for non-image area: – 160V + V_R correction + V_R Data correction (See 1.5 Drum Temperature Control) + Black Bias correction (SP mode #37). The V sensor checks the reflectivity of the bare area of the drum and this sensor output voltage is called Vrg. (The meaning of Vrg is the same as that of Vsg detected by the ID sensor.)

Just next to this bare drum area, the drum is developed with V_R pattern bias voltage (0V). If there is residual voltage on the drum, this area of the drum will attract some toner, making a V_R pattern. The V sensor checks the reflectivity of the V_R pattern and this sensor output voltage is called Vrp.

The CPU notes the ratio, Vrp/Vrg. This V_R pattern check is done 5 times in a row during the copy cycle (among 5 copies) and the CPU takes their average.

During the 5 V_R pattern check cycles, if color copies are made, or if a toner density check is done, the CPU skips the V_R pattern check and will do it in the next copy cycles.

If an ID sensor abnormal condition occurs, the CPU does not perform the V_R pattern detection because toner density may not be proper.

1.3.3 V_R Correction

V_R level	Vrp/Vrg x 100(%)	Grid bias correction voltage	Development bias correction voltage
0	100~84	± 0 V	± 0 V
1	83~58	– 40 V	– 40 V
2	57~41	– 80 V	– 80 V
3	40~28	– 120 V	– 120 V
4	27~0	– 160 V	– 160 V

When calling SP mode #54, the reference voltage of the V sensor output Vrg, is automatically adjusted to 4V at the same time as Vsg is adjusted.

The grid bias voltage and the development bias voltage are corrected (V_R correction) according to the ratio between Vrp and Vrg as shown in the above table.

(ex. If there is no residual voltage on the drum, Vrp=4V and Vrg=4V. Then the proportion is: Vrp/Vrg x 100 = 4/4 x 100 = 100%)

When the drum residual voltage increases, the V_R pattern becomes darker. The value of Vrp decreases and also the Vrp/Vrg ratio decreases. Then the CPU increases the negative development bias voltage to prevent a dirty background, and simultaneously increases the negative grid bias voltage to prevent low image density.

1.4 VL PATTERN CONTROL

1.4.1 Overview

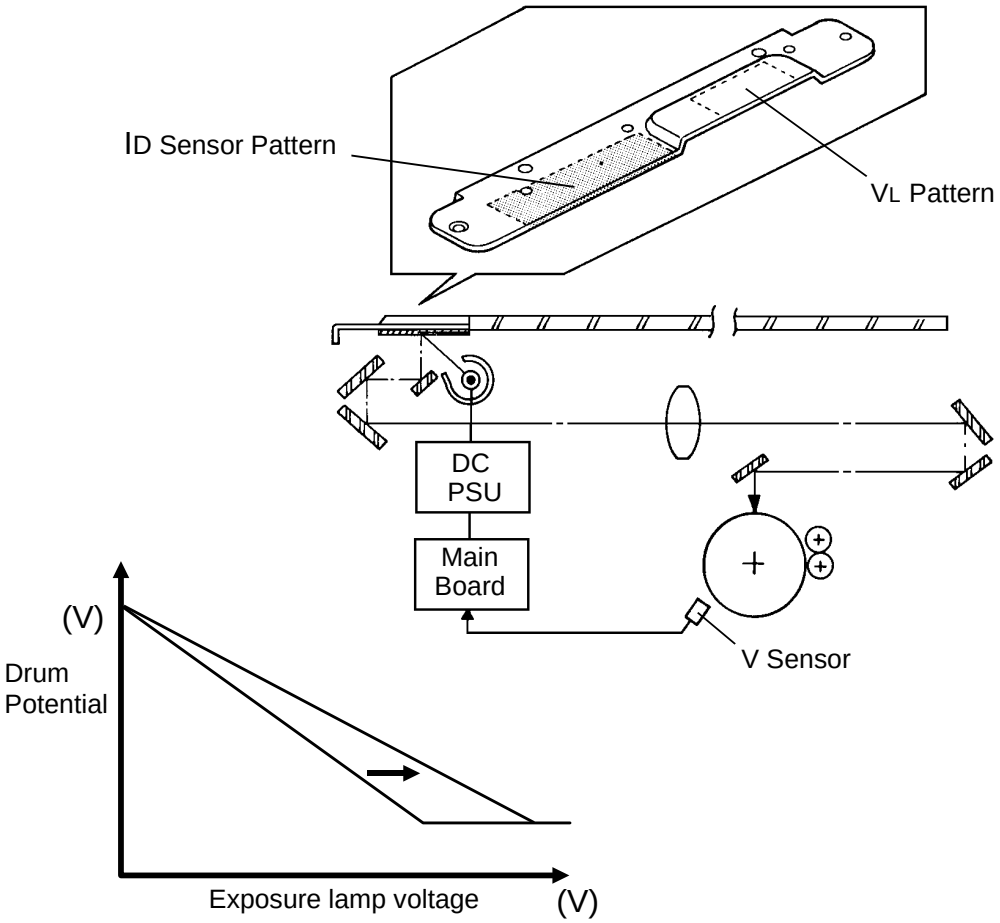

Dirty optics or deterioration of the exposure lamp decreases the intensity of the light that reaches the drum via the optics cavity. As more copies are made during the drum's life, the photo conductive layer gets worn and drum sensitivity drops. The drum sensitivity also drops under low temperature condition.

VL pattern control is performed on this copier to prevent dirty backgrounds caused by the factors mentioned above. The V sensor is also used for VL pattern control as well as for VR pattern control.

The VL pattern (light gray) is located on the non-operator side of the bottom of the left scale bracket. When a copy job finishes in VL pattern detection timing, the exposure lamp stays on for about 6 seconds while at the home position. The VL pattern is lit and a latent image of it is made on the drum. After this image is developed, its reflectivity is checked by the V sensor. The CPU notes the strength of reflectivity, and if the reflected light is too weak, the exposure lamp voltage is increased.

1.4.2 VL Pattern Detection

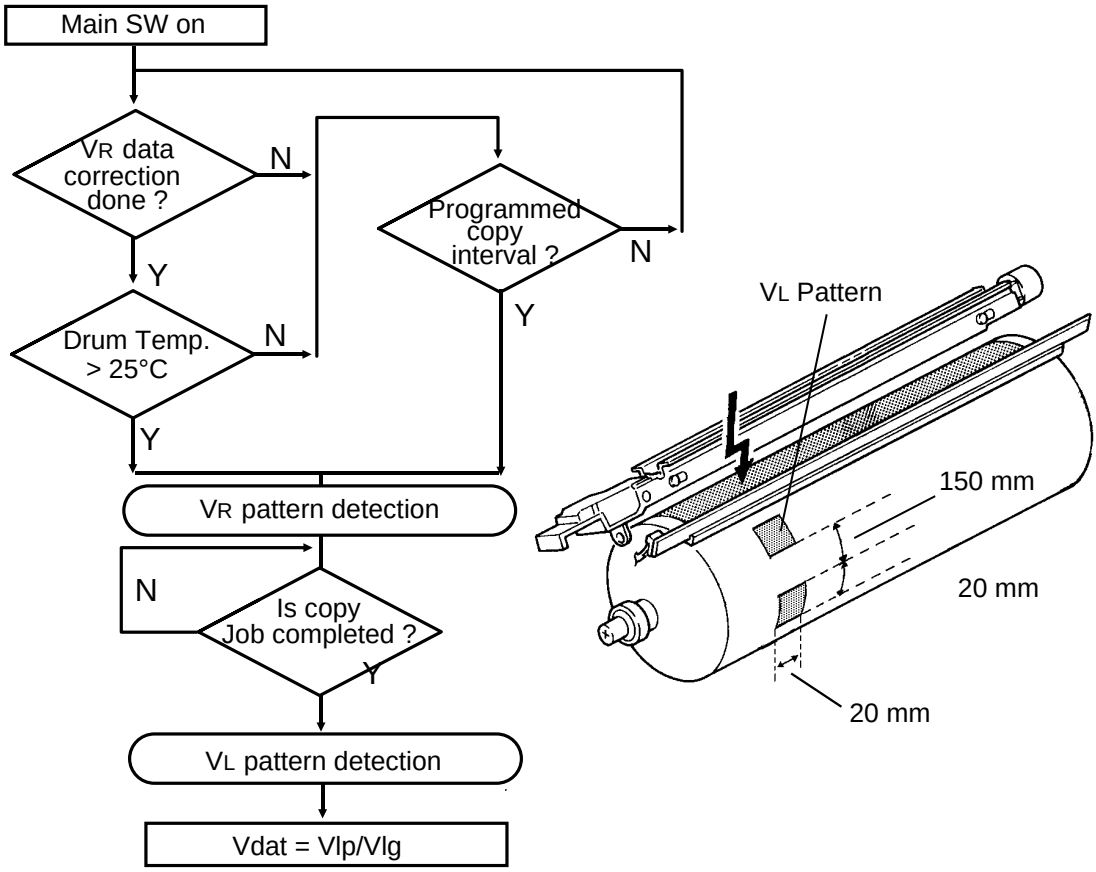

VL pattern detection is done after VR pattern detection, but unlike VR pattern detection it is done after the copy job is finished. This means after the drum initial setting (SP mode #66), every 200 copies for the first 2,000 copies, every 1,000 copies after exceeding 2,000 copies, and when the drum temperature goes over 25°C under the VR data correction condition.

When VL pattern detection starts, the exposure lamp turns on, the main motor stays, on together with other fan motors, to rotate the drum. The charge corona, grid bias, all the blocks of the erase lamp, the pre-transfer lamp, and the quenching lamp turn on.

After about one revolution of the drum, the appropriate blocks of the erase lamp turn off and on to make a VL pattern (20 x 20 mm) on the drum surface. The drum surface is developed with non-image area bias for both the bare drum and VL pattern.

The V sensor checks the reflectivity of the bare drum (Vlg) and that of the VL pattern (Vlp). The CPU calculates the ratio between Vlp and Vlg (Vlp/Vlg). The VL pattern is made 4 times with 150 mm distance between each pattern. The CPU takes the average of Vlp/Vlg (=Vdat).

When the drum initial setting (SP mode #66) is performed and more than 7 black copies are made, the initial V_L detection is performed at the end of the copy job and the CPU stores the V_L reference value (initial Vlp/Vlg = Vref) in memory. ID sensor pattern detection and V_R pattern detection is done prior to this initial V_L detection.

ID sensor pattern and V_R pattern detections are performed when black copies are made even in the SP mode. However, V_L pattern detection is performed when a black copy is made in enlarge or full size mode and not in the SP mode.

1.4.3 V_L Correction

V_L Level (%)	Lamp correction voltage
151~	–1 V
101~150	±0 V
0~100	+1 V

The V sensor output is automatically adjusted to 4V (for Vlg=Vrg) by calling SP mode #54 as we mentioned in 1.3.3 V_R Correction.

When the V_L pattern detection is performed during the operation, the CPU compares the Vdat with the Vref. According to the ratio between Vdat and Vref, the CPU applies the voltage correction to the exposure lamp (V_L Correction) as shown in the above table.

Vdat/Vref x 100 = V_L level (%)

The exposure lamp voltage for V_L pattern detection depends on all previous correction factors, and the new V_L correction factor is added to them. This result is then applied to the exposure lamp voltage till the next V_L pattern detection.

1.5 DRUM TEMPERATURE CONTROL

1.5.1 Overview

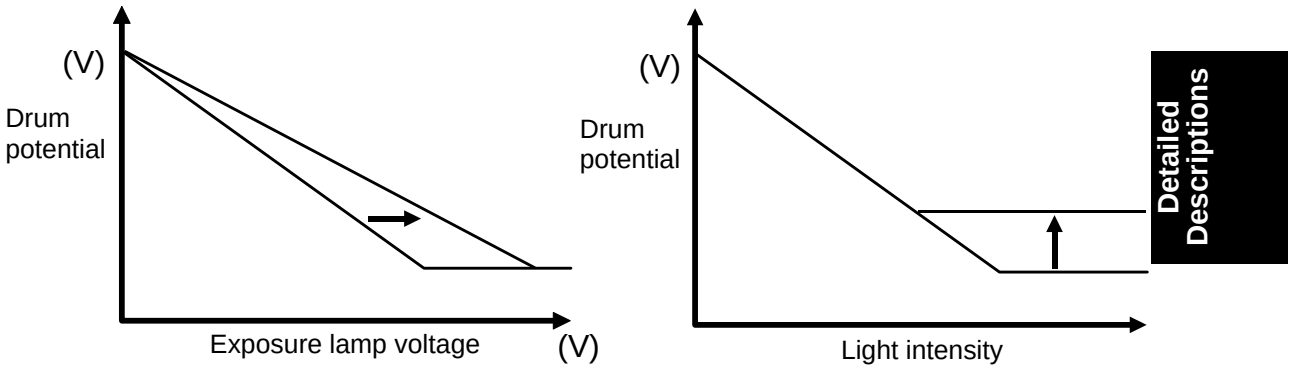

Under low temperature conditions drum sensitivity drops and drum residual voltage increases. This is a characteristic of the drum and may cause dirty backgrounds on copies.

To compensate for this, a drum thermistor is installed on the ID sensor board to monitor the temperature around the drum.

When the main switch is turned on, the CPU checks the temperature through the drum thermistor. If the temperature is 25°C or less, the CPU applies appropriate corrections to the exposure lamp voltage (low temp. correction), to the grid bias voltage (V_R data correction), and to the development bias voltage (V_R data correction).

When the temperature goes over 25°C, the V_R pattern detection and V_L pattern detection are performed and the above corrections are canceled.

If the temperature is already over 25°C when the main switch is turned on, no correction is applied.

	Low Temp. correction	V_R Data correction	
	Exposure lamp voltage	Grid bias voltage	Development bias voltage
Over 25°C	No correction	No correction	No correction
25°C or lower	Lamp voltage + 1V	V_R level + 1	V_R level + 1

1.5.2 Low Temp. Correction

When a correction is required under low temperature conditions, the CPU increases the exposure lamp voltage by 1V.

1.5.3 V_R Data Correction

When the low temp. correction is applied, V_R data correction is applied simultaneously. The V_R correction level for both the grid bias voltage and the development bias voltage is stepped up by 1. This means the negative voltage for the charge grid and the development bias is increased by 40V.

1.6 DRUM ROTATION CONTROL

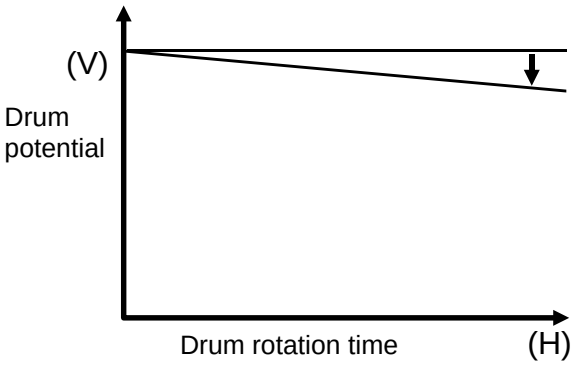

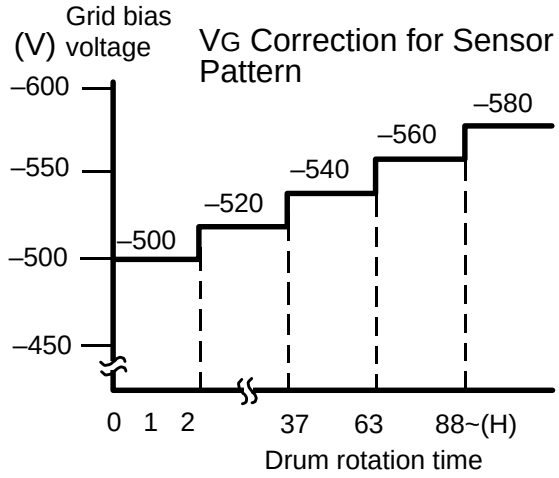

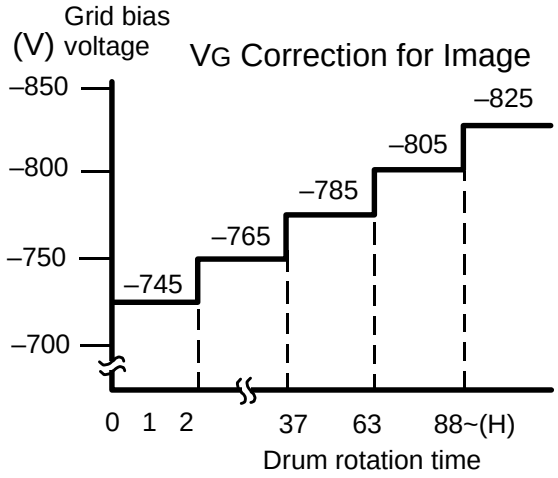

1.6.1 Overview

During the OPC drum's life the photo conductive layer gets worn and this causes a drop in drum sensitivity and a decrement in the drum potential after the drum charge.

The CPU keeps track of the drum rotation time (main motor on time) that corresponds to the wear of the drum surface. The grid bias voltage is increased at set intervals (V_G correction).

1.6.2 V_G Correction

If drum potential decreases after the drum charge, the ID sensor pattern on the drum becomes lighter, causing higher toner concentration in the developer. Also, copy image density becomes slightly lighter.

To control toner density properly and to keep copy image density, drum potential is maintained by increments of the grid bias voltage at set intervals. (See graph above)

The drop of drum sensitivity due to the drum wear is compensated by V_L correction. V_L correction is performed more often than V_G correction, therefore, V_G correction is not applied to the exposure lamp voltage, only to the grid bias voltage.

2. DRUM

2.1 OPC DRUM CHARACTERISTICS

An OPC has the characteristics of:

1. Being able to accept a high negative electrical charge in the dark. (The electrical resistance of a photoconductor is high in the absence of light.)
2. Dissipating the electrical charge when exposed to light. (Exposure to light greatly increases the conductivity of a photoconductor.)
3. Dissipating an amount of charge in direct proportion to the intensity of the light. That is, where stronger light is directed to the photoconductor surface, a smaller voltage remains on the OPC.
4. Being less sensitive to changes in temperature (when compared to selenium F type drums).
5. Being less sensitive to changes in rest time (light fatigue). This makes it unnecessary to compensate development bias voltage for variations in rest time.

2.2 DRUM UNIT

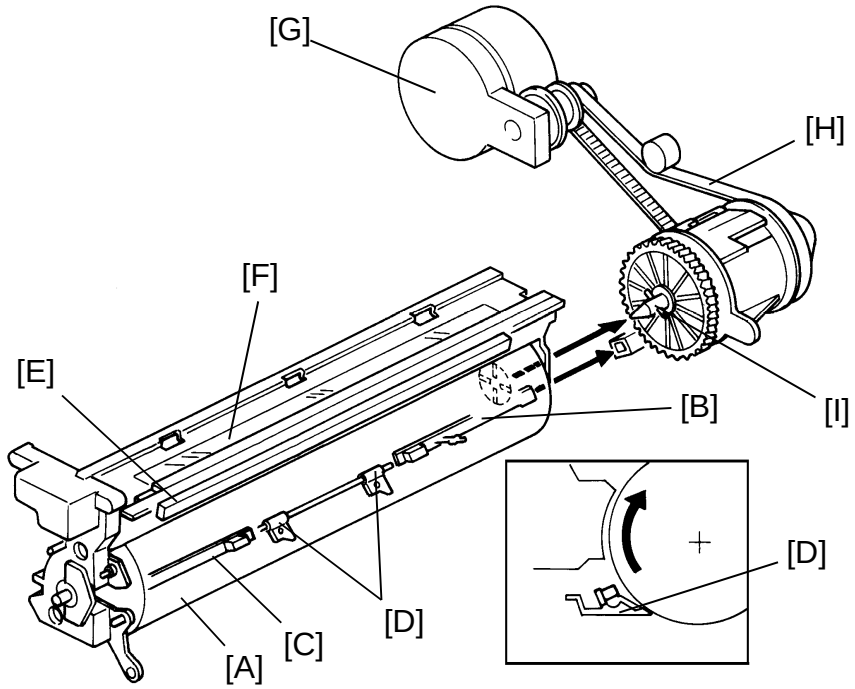

An organic photoconductor drum is used on this model.

To prevent stress on the drum, a drum unit is used to hold the drum without a drum shaft.

The drum unit consists of an OPC drum [A], ID sensor board with a drum thermistor [B], V sensor board [C], pick-off pawls [D], erase lamp unit [E], and toner shield glass.

The pick-off pawls are always in contact with the drum surface with weak spring pressure. They move side to side during the copy cycle. This movement is made via a worm gear and an eccentric cam gear.

The ID sensor is used to control the toner density in the developer. The V sensor is used for V_R and V_L pattern detections. The drum thermistor is used for drum temperature control.

A green color filter [F] is stuck just above the toner shield glass on the drum unit top plate to decrease the sensitivity of the OPC layer against red light.

The drum is driven by the main motor [G] through a timing belt [H], and a drum drive shaft [I].

3. DRUM CHARGE

3.1 OVERVIEW

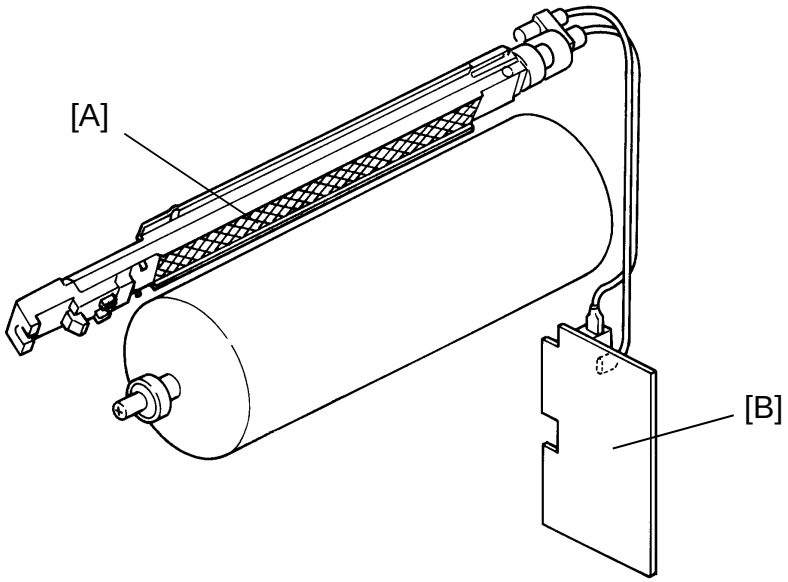

This copier uses a double corona wire scorotron system for drum charge. Two corona wires are required to give sufficient negative charge on the drum surface because of a rather high drum speed (180 mm/sec.). The stainless steel grid plate [A] makes the corona charge uniform and controls the amount of negative charge on the drum surface by applying the negative grid bias voltage.

The high voltage supply board - CTBG [B] gives a constant corona current to the corona wires (– 500 μA (– 5.6 kV)) and a constant bias voltage to the grid plate (– 745 V: for image, – 500 V: for sensor pattern). The corona current is controlled by the variable resistor in the circuit and the grid bias voltage is controlled by a PWM (Pulse Width Modulation) system.

The transport fan located above the fusing unit provides an air flow to the charge corona unit to prevent uneven built-up of negative ions that can cause an uneven charge of the drum surface.

The air around the drum is exhausted outside of the copier by the exhaust blower located on the rear side frame. The exhaust blower assembly has two ozone filters (ceramic type and paper type) to absorb the ozone (O_3) around the drum generated by the corona discharge.

3.2 CHARGE CORONA WIRE CLEANER MECHANISM

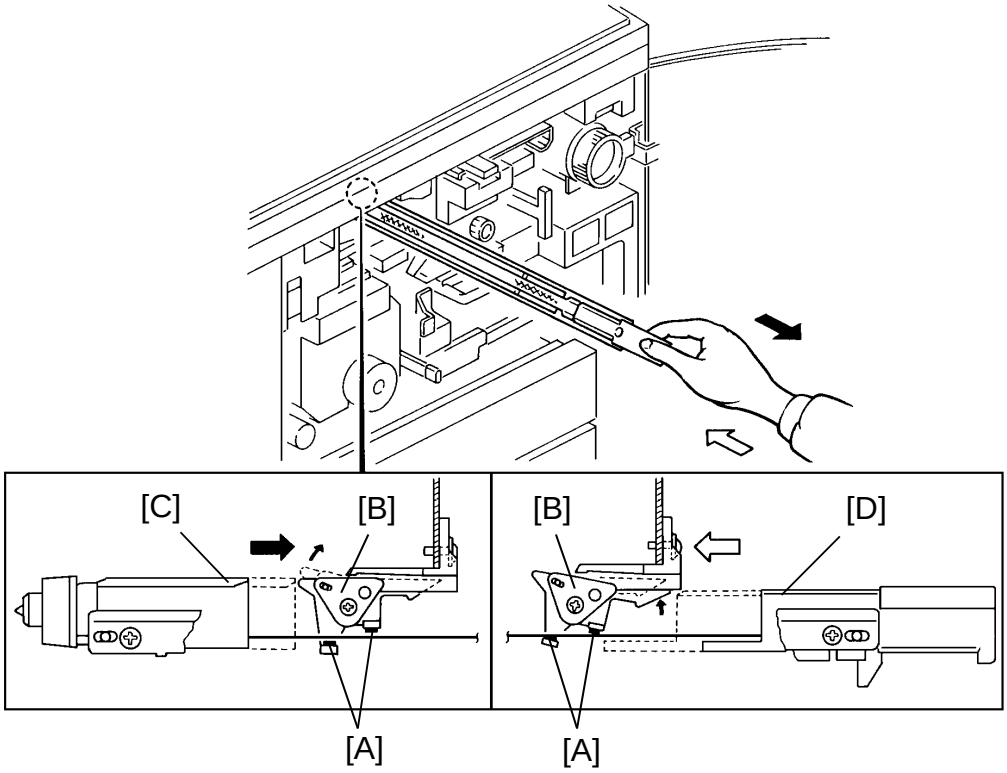

The flow of air around the charge corona wire may deposit paper dust or toner particles on the corona wires. These particles may interfere with charging and cause low density bands on copies.

The wire cleaner pads [A] above and below the charge corona wires clean the wires as the charge corona unit is manually slid in and out.

The cleaner pad bracket [B] rotates when the charge unit is fully extended and the bracket is pulled up against the rear block [C]. This moves the pads against the corona wire (see illustration). If the charge unit is not fully extended, the pads do not touch the corona wires.

The pads move away from the wire when the charge unit is fully inserted and the cleaning bracket is pushed against the front block [D].

After copier installation, the key operator should be told how to use this mechanism when white streaks appear on copies.

3.3 GRID BIAS VOLTAGE CORRECTION

The grid bias voltage differs depending on the modes and correction factors (see the process control section).

3.3.1 Base Grid Bias Voltage

There are two base grid bias voltages, one for image and the other for sensor patterns (ID sensor pattern and VR pattern).

Grid bias voltage for image (Vgi): -745 V

Grid bias voltage for sensor pattern (Vgp): -500 V

The high voltage supply board - CTBG is adjusted at the factory to output the correct Vgi and Vgp. When the high voltage supply board - CTBG is replaced in the field, the variation of the grid bias output should be corrected by entering the grid voltage correction data in SP mode #62.

3.3.2 Manual ID Correction

When the image density is selected by the manual image density keys on the operation panel, the grid bias voltage is changed as shown in the above table.

The image density for each manual ID level is also controlled by the exposure lamp voltage and the development bias voltage. The manual ID correction for the grid bias voltage is applied only to levels 6 and 7. This is to expand the difference of image density at levels 6 and 7 from the other manual ID levels.

ID Level	Grid Bias Voltage
1	Vgi ±0V
2	Vgi ±0V
3	Vgi ±0V
4	Vgi ±0V
5	Vgi ±0V
6	Vgi +50V
7	Vgi +50V

NOTE: Vgi (Grid bias voltage for image)= –745V

3.3.3 VR Correction

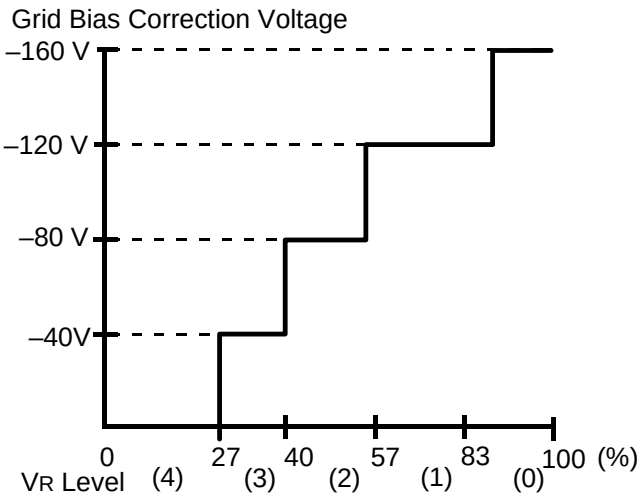

VR Level	Vrp/Vrg x 100 (%)	Grid Bias Correction Voltage
0	100~84	±0V
1	83~58	–40V
2	57~41	–80V
3	40~28	–120V
4	27~0	–160V

According to the results of the VR pattern detection, the grid bias voltage is corrected as shown in the above table.

The VR correction is also applied to the development bias voltage.

3.3.4 VR Data Correction

Drum Temperature	Grid Bias VR Correction
Over 25°C	No correction
25°C or lower	VR level +1

NOTE: VR level (max.)=4

If the temperature around the drum is 25°C or less when the main switch is turned on, the VR data correction is applied to the grid bias voltage as shown in the above table.

VR data correction is also applied to the development bias voltage and the low temp. correction is applied to the exposure lamp voltage simultaneously under this condition.

3.3.5 VG Correction

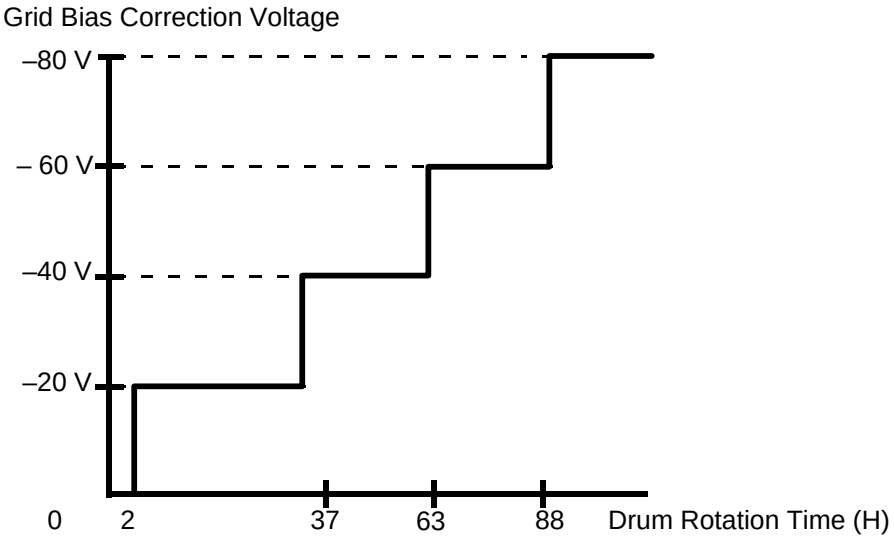

SP100: Drum Rotation Time (H)	Grid Bias Correction Voltage
0~1	±0V
2~36	–20V
37~62	–40V
63~87	–60V

According to the drum rotation time after performing SP mode #66 when a new drum is installed, VG correction is applied to the grid bias voltage as shown in the above table.

3.3.6 SP Mode Data Setting

SP34: ADS Density

Data	Density	Grid Bias Correction Voltage
0	Normal	±0V
1	Darker	–50V
2	Lighter	±0V

When the darker setting for ADS (data "1") is selected in SP mode #34 (ADS density), the negative grid bias voltage is increased by –50 V.

When the lighter setting is selected, the negative development bias voltage is increased.

3.3.7 Total Grid Bias Voltage

The total grid bias voltage for each mode is determined by the CPU as follows:

(1) ADS Mode
Vgi(–745 V) + V_R Correction + V_R Data Correction + V_G Correction + ADS Density(SP34)

(2) Manual ID Mode
Vgi(–745 V) + Manual ID Correction + V_R Correction + V_R Data Correction + V_G Correction

(3) ID Sensor Pattern Detection
Vgp(–500 V) + V_G Correction

(4) V_R Pattern Detection
Vgp(–500 V) + V_G Correction

(5) V_L Pattern Detection
Vgi(–745 V) + V_R Correction + V_R Data Correction + V_G Correction

(6) Non-Image Area
0 V

4. OPTICS

4.1 OVERVIEW

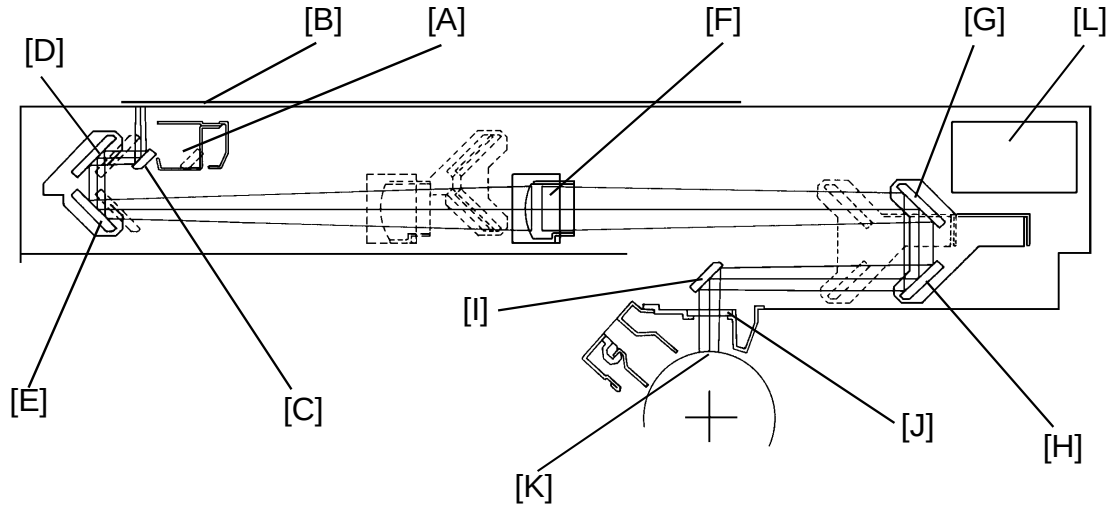

During the copy cycle, an image of the original is reflected onto the drum surface via the optics assembly as follows.

Light Path:

Exposure Lamp [A] → Original [B] → 1st Mirror [C] →
→ 2nd Mirror [D] → 3rd Mirror [E] → Lens [F] →
→ 4th Mirror [G] → 5th Mirror [H] → 6th Mirror [I] →
→ Toner Shield Glass [J] → OPC Drum [K]

The optics cooling fan [L] removes warm air (heated by the exposure lamp) from the optics cavity. This blower operates if the optics thermister installed on the left scale bracket senses 40°C or more. This operation reduces the possibility of the optics unit becoming dirty by the optics cooling fan.

The 1st scanner (lamp and 1st mirror), 2nd scanner (2nd and 3rd mirrors), 3rd scanner (4th and 5th mirrors), and the lens function together to achieve a wide range of reproduction ratios (50 –200%).

The auto density selection (ADS) sensor board is mounted on the optics bottom plate in the lens housing cover. The ADS sensor board collects light reflected from the original in ADS mode. Original length and width sensors are mounted in the optics cavity for the original size detection.

A thermoswitch (turning off at 130°C) is installed on the back of the exposure lamp reflector as a back-up safety for preventing the optics unit overheating.

4.2 SCANNER DRIVE

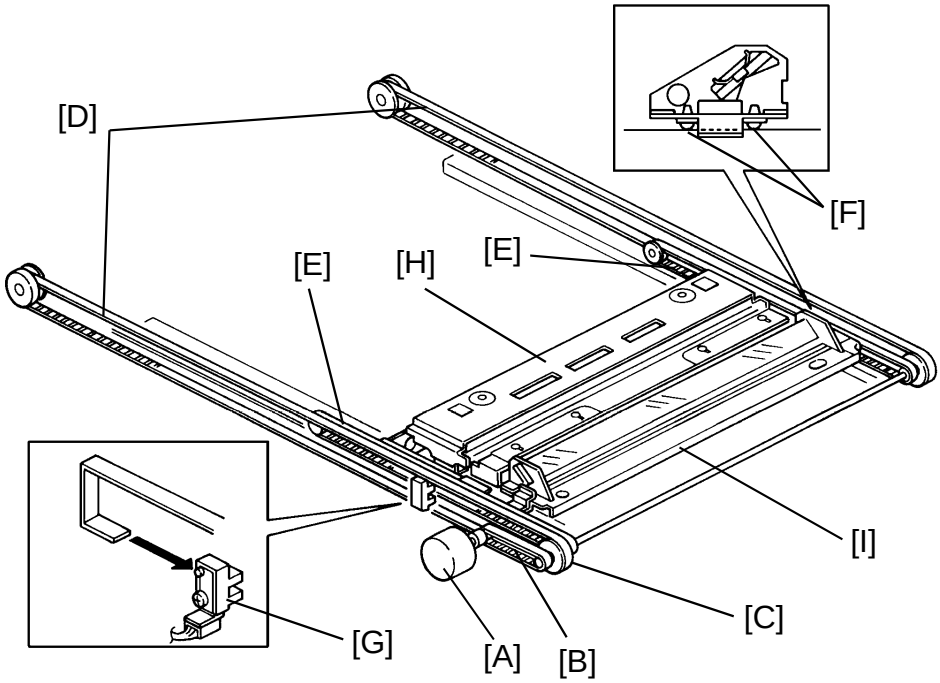

This model uses a stepper motor [A] to drive the scanners via a timing belt [B], scanner drive pulley [C], and 2 long & short scanner drive belts [D, E]. Both ends of each scanner are driven to prevent skewing. The scanners have sliders [F], which ride on guide rails.

The scanner home position is detected by the home position sensor [G]. The main CPU sends the appropriate pulses to the scanner drive motor to determine the scanner return position.

The first scanner [H], which consists of the exposure lamp and the first mirror, is connected to 2 long scanner drive belts by the belt clamps. The second scanner [I], which consists of the second and third mirrors, is connected to 2 short scanner drive belts by belt clamps.

The relay pulley moves the second scanner at half the velocity of the first scanner. The diameter of the pulley for the short belts is half that for the long belts. This is to maintain the focal distance between the original and the lens during scanning. This relationship can be expressed as:

V_{1r} = 2 (V_{2r}) = V_D/r
where r = Reproduction ratio
V_{1r} = First scanner velocity (when the reproduction ratio is "r")
V_{2r} = Second scanner velocity (when the reproduction ratio is "r")
V_D = Drum peripheral velocity (180 mm/s)

4.3 LENS DRIVE

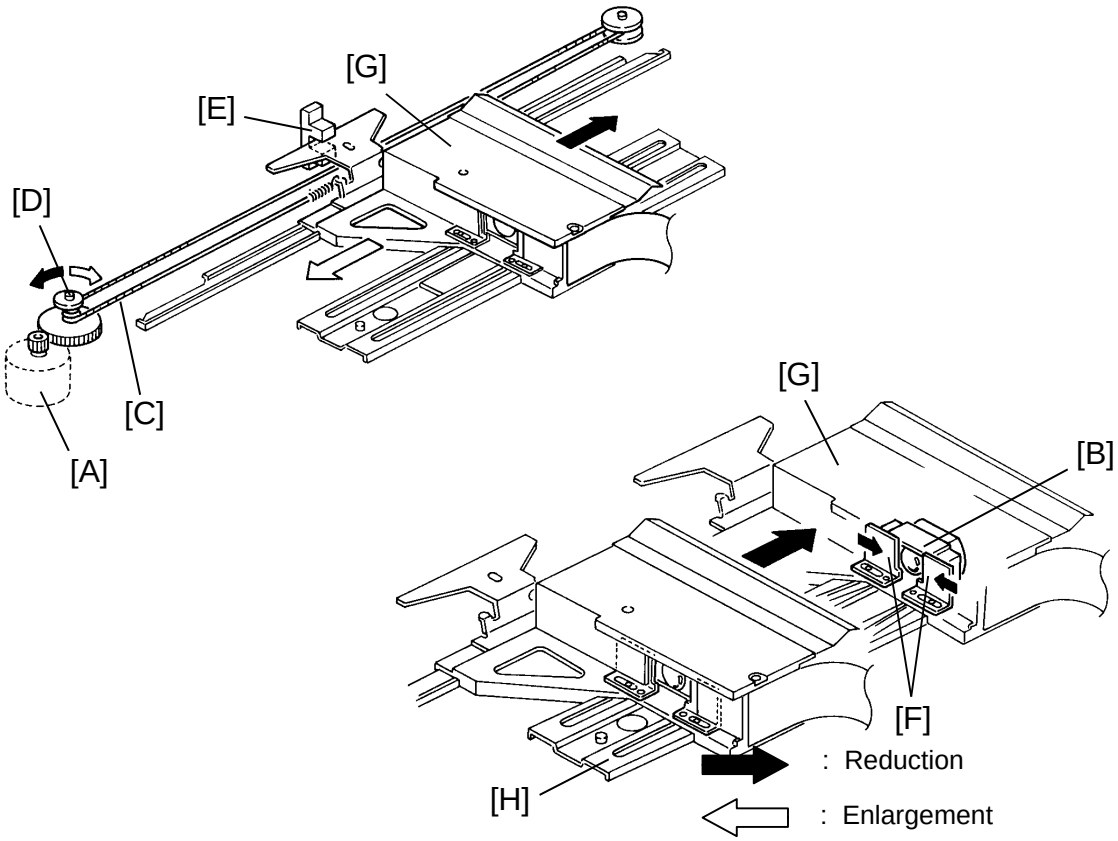

4.3.1 Lens Drive

The lens motor [A] (stepper motor) changes the lens [B] position through the lens drive wire [C] in accordance with the selected reproduction ratio to provide the proper optical distance between the lens and the drum surface.

The rotation of the lens drive pulley [D] moves the lens back and forth in discrete steps. The home position of the lens is detected by the home position sensor [E]. The main board keeps track of the lens position based on the number of pulses sent to the lens motor.

4.3.2 Shading Mechanism

The shading plates [F] are installed on the lens housing [G] and are slid open and shut by the shading cam [H]. This shading mechanism adjusts the horizontal light intensity, which becomes uneven in reduction mode, when the light at the sides of the image is more intense. The shading plates close in reduction mode to even out the light intensity.

4.3.3 Lens Positioning

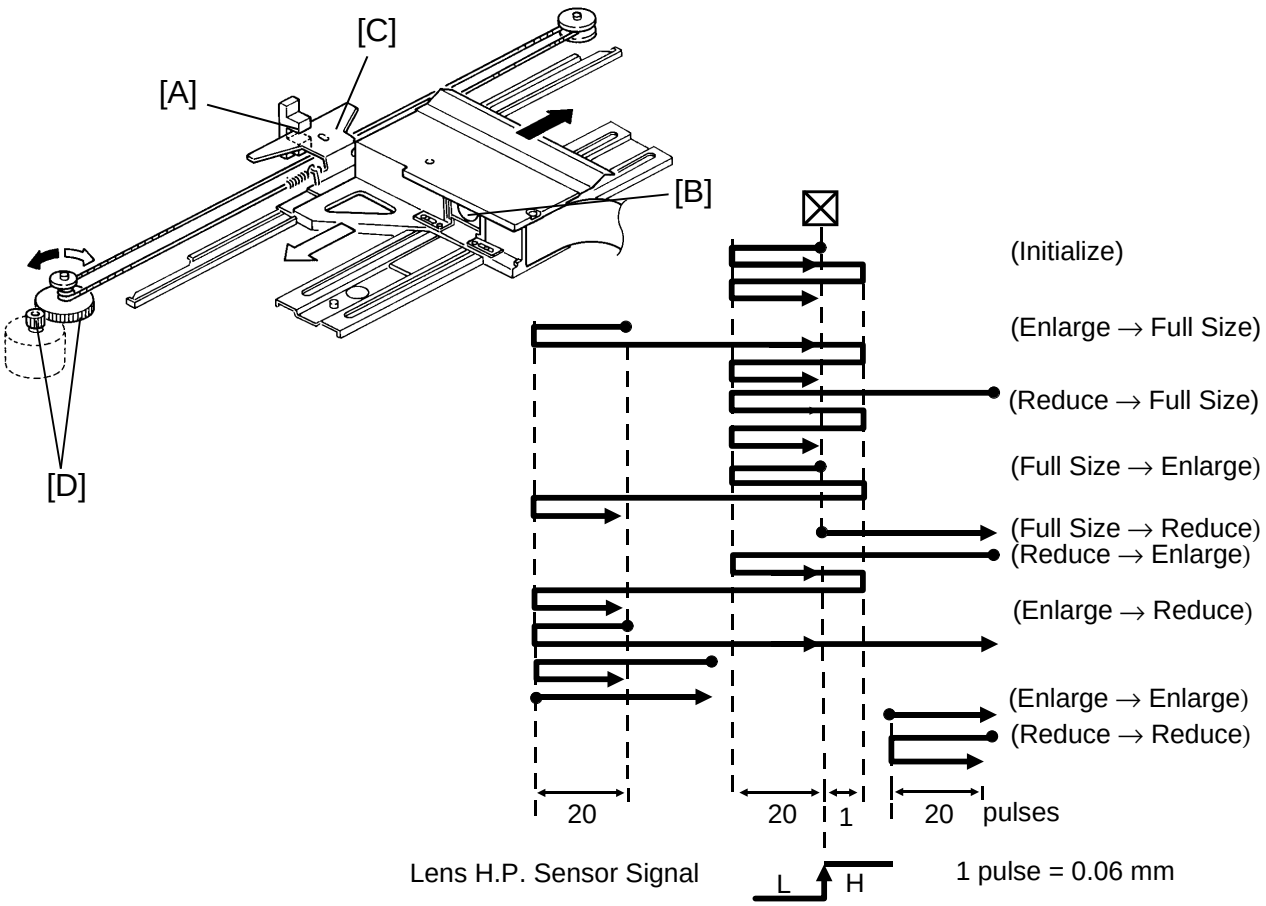

The lens home position sensor [A] informs the main board when the lens is at full size position (home position). The main board determines the lens stop position in reduction and enlargement modes by counting the number of steps the motor makes with reference to the lens home position. When a new reproduction ratio is selected, the lens [B] moves directly to the selected magnification position.

The lens home position is registered each time the lens starts from or passes through the lens home position sensor. As the lens moves from the enlargement side to the reduction side, the sensor registers the home position. This occurs when the actuator plate [C] enters the lens home position sensor.

The lens can be seen to go back and forth when the lens moves through the home position from the reduction side to the enlargement side. The lens is going in the wrong direction to register the home position. The lens overshoots the home position by 20 pulses before going back to register the home position and it then overshoots it by 1 pulse before finally settling there.

The lens always stops while moving from left to right (as viewed from the front) to minimize the error caused by mechanical play in the drive gears [D].

4.4 3RD SCANNER DRIVE

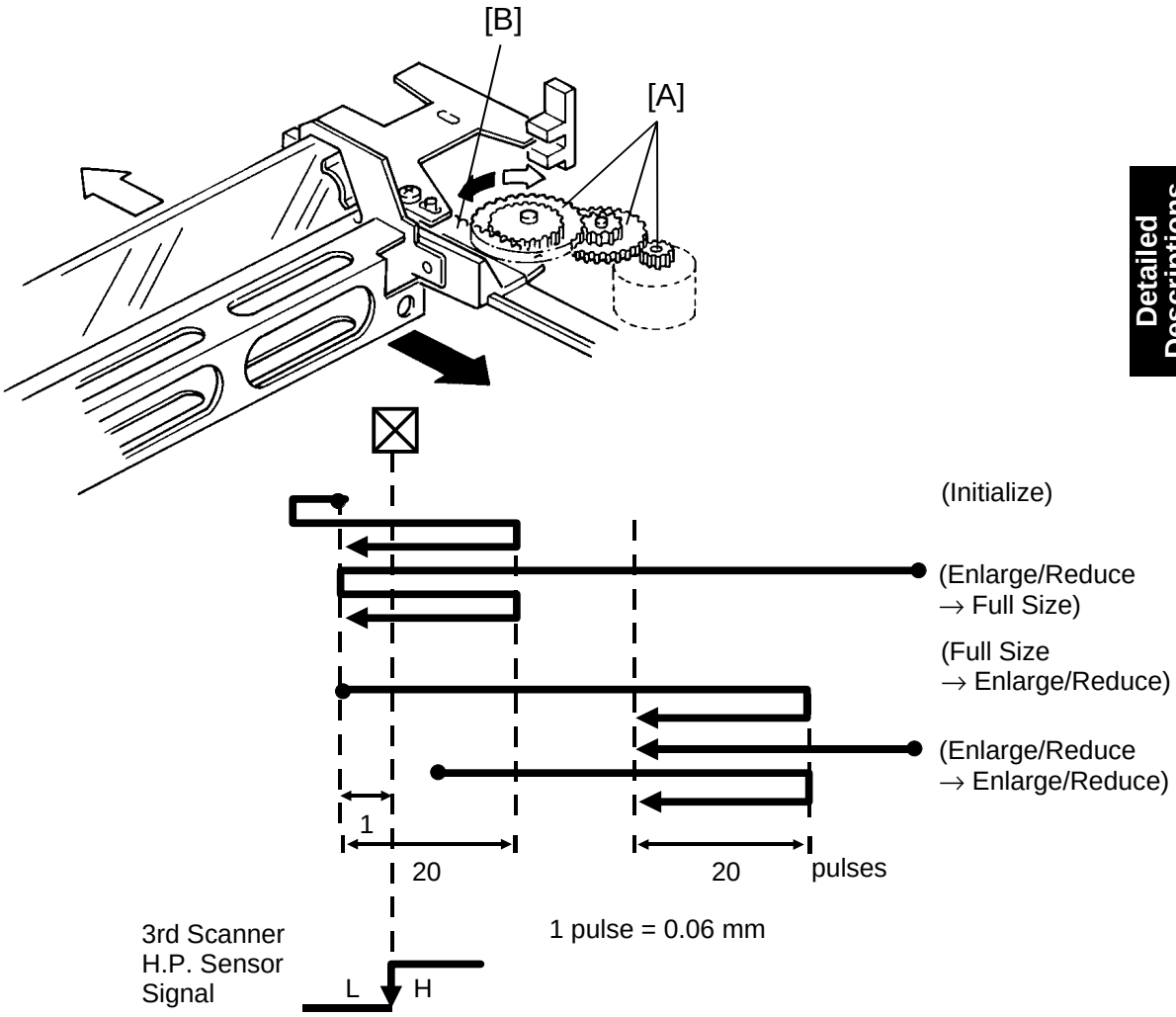

4.4.1 Drive

The 3rd scanner drive motor (stepper motor) changes the 3rd scanner position through the pinion gears [A] and the rack gear [B] in accordance with the selected reproduction ratio to provide the proper optical distance between the lens and drum surface.

4.4.2 Positioning

The positioning mechanism is similar to that for lens positioning, as shown in the above positioning chart. The scanner always stops while moving from right to left (as viewed from the front).

4.5 ORIGINAL SIZE DETECTION

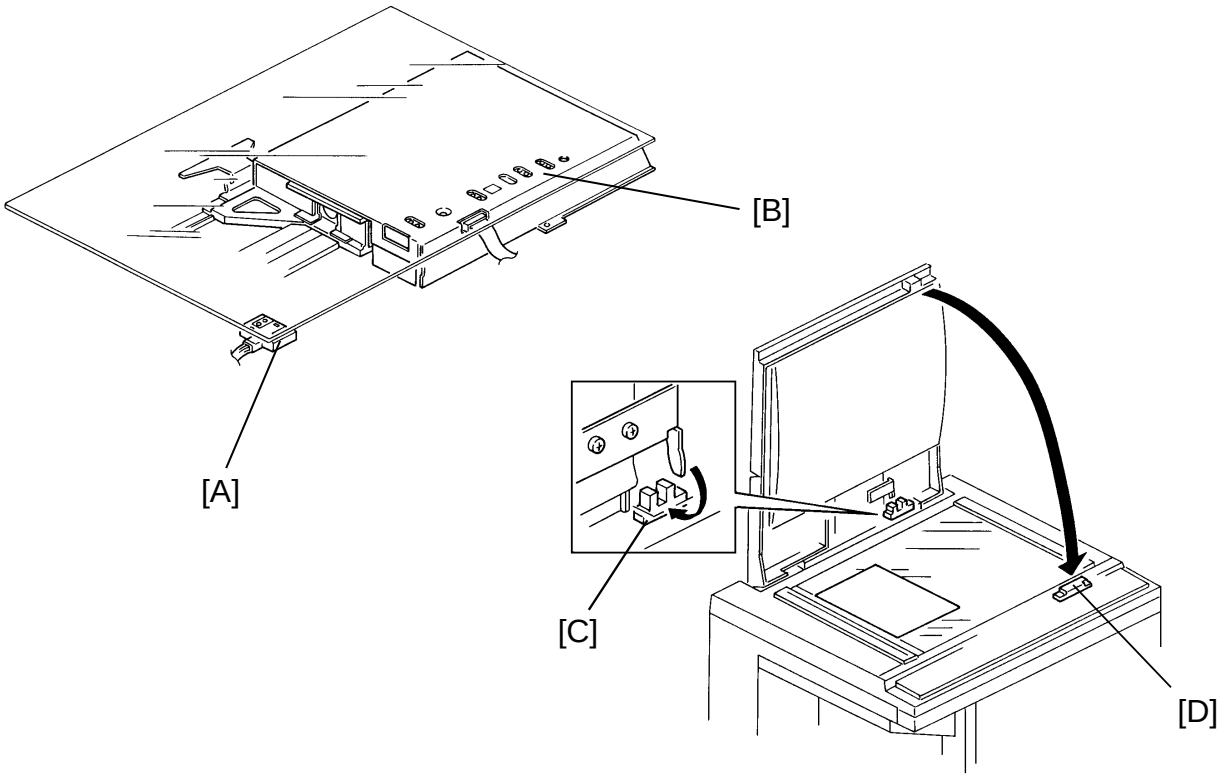

There are six (for LT version) or seven (for A4 version) reflective sensors in the optics cavity for the original size detection. Two of them [A] are used for sensing the original width and the other four/five [B] are for the original length.

While the main switch is on, these sensors are active and the original size data is always sent to the main CPU. You can recognize this by the changes of the original size indicator when moving an original on the exposure glass. However, the CPU checks the data only twice in platen mode for determining the original size for actual copying in APS or AMS modes.

First check is done when the platen (or DF) position sensor [C] is activated. At this time the angle between the platen cover and the exposure glass is about 30 degrees. Only the sensor(s) underneath the original receive the reflective light and output a low signal. The other sensor(s) output a high signal. The CPU sends an original size signal to the operation panel board and stores this data.

A second check is done when the platen cover (or DF) is closed and the platen cover switch [D] turns on. The CPU compares the second check with the first one to confirm if the detected original size is correct or not.

If there is any difference between the first and second check, the CPU judges if the original exists above the respective sensor or not according to the following table.

First data	Second data	Judgment
High	High	Paper exists
High	Low	No paper
Low	High	Indicates "Check paper size"
Low	Low	Paper exists

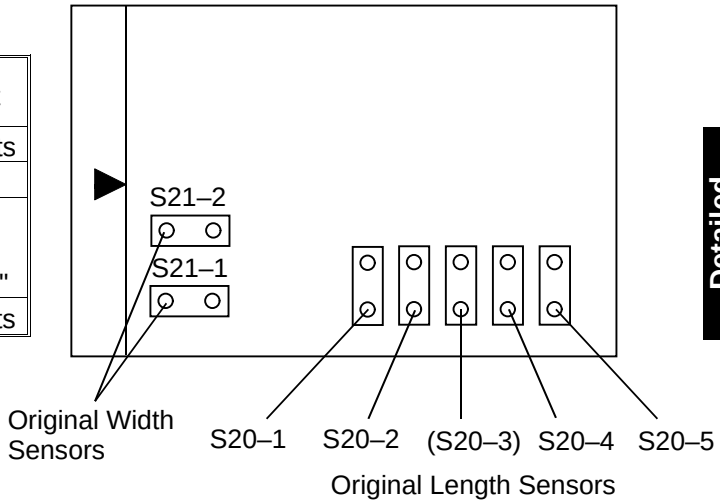

The CPU finally determines the original size from the above judgments. The following table shows how the original size is determined with information of each sensor.

Original Size \ Sensors		Original Width Sensor		Original Length Sensor				
		S21–1	S21–2	S20–1	S20–2	(S20–3)	S20–4	S20–5
A3	11" x 17"	O	O	O	O	O	O	O
B4	11" x 15" 10" x 14"	O	O	O	O	O	O	X
—	8 1/2" x 14"	X	O	O	O	O	O	X
F4	—	X	O	O	O	O	X	X
A4 lengthwise	8 1/2" x 11"	X	O	O	O	X	X	X
B5 lengthwise or smaller	8" x 10"	X	O	O	X	X	X	X
A5 lengthwise	5 1/2" x 8 1/2" or smaller	X	X	X	X	X	X	X
A4 sideways or smaller	11" x 8 1/2"	O	O	O	X	X	X	X
B5 sideways	8 1/2" x 5 1/2"	O	O	X	X	X	X	X
A5 sideways or smaller	8 1/2" x 5 1/2" or smaller	X	O	X	X	X	X	X

O: Paper exists X: No paper

If the start key is pressed with the platen cover open, the CPU uses the original size data detected when the start key is pressed.

If an original is fed on to the exposure glass through the ARDF, the CPU uses the original size data from the ARDF.

4.6 AUTOMATIC IMAGE DENSITY CONTROL SYSTEM (ADS)

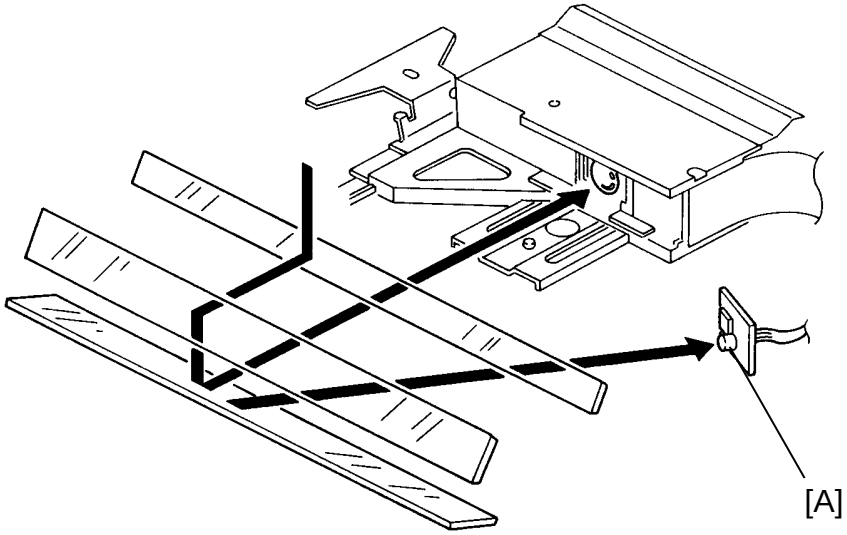

In ADS mode the original background density is sensed by the ADS sensor [A] and the CPU determines an appropriate development bias voltage for the original to prevent the background from appearing on copies.

The ADS sensor board is mounted on the front side of the optics base plate. The sensor board is covered by the lens housing cover which has a small hole to direct the reflected light from the original to the ADS sensor.

The ADS sensor standard voltage is adjusted to 1.5V when SP mode #56 is performed. The exposure lamp turns on with 64V (fixed voltage) at the home position and the light reflected by the middle part of the reverse side of the left scale bracket (white painted) reaches the ADS sensor. The CPU adjusts the ADS gain data automatically to make the output to 1.5V. This gain data is stored in the RAM board.

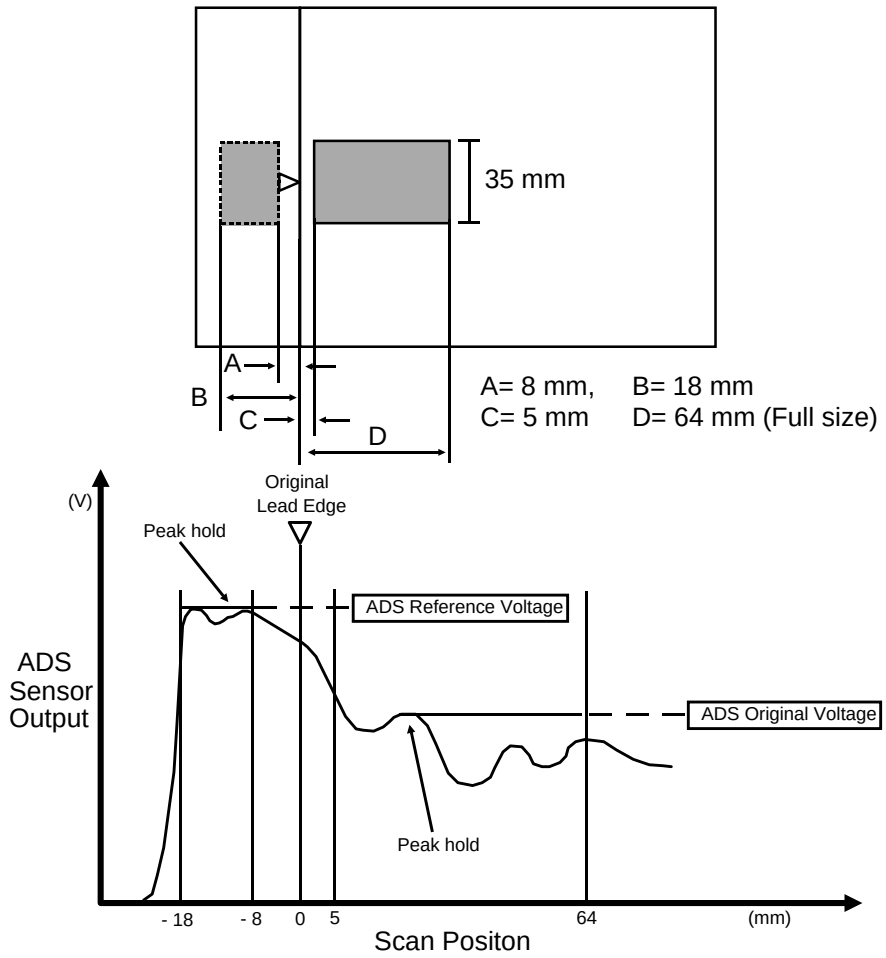

For the first scanning of an original in ADS mode, the CPU starts sampling of the ADS sensor output from when the scanner moves from -18mm to -8mm from the original lead edge. Then the CPU memorizes the maximum ADS sensor output as a reference voltage. This means that every ADS check cycle, the first scanning for the original, the ADS reference voltage is renewed by the latest exposure light reflected by the white left scale bracket.

In the full size mode, the CPU samples the ADS sensor output for the original when the scanner moves from 5mm to 64mm from the original lead edge. The CPU takes the maximum ADS sensor output during the sampling period and compares it with the ADS reference voltage to determine the proper development bias voltage. (See ADS Data Correction in development bias control section for the detail.)

The sampling length of ADS sensor output for the original differs depending on the reproduction ratio because the scanner speed is different. It also differs when color copies are made because the latent image on the drum surface comes to the development point faster.

4.7 EXPOSURE LAMP CONTROL

The base exposure lamp voltage (Vexp) is determined by SP mode #48 according to the actual copy image when the drum initial setting (SP66) is performed. Based on this Vexp, the exposure lamp voltage differs depending on the modes and correction factors.

4.7.1 Manual ID Correction

ID Level	Lamp Voltage
1	Vexp –2V
2	Vexp –2V
3	Vexp –1V
4	Vexp ±0V
5	Vexp +1V
6	Vexp +1V
7	Vexp +2V

SP48: **Lamp Voltage**
0~75 V=Vexp
(63V=Default)

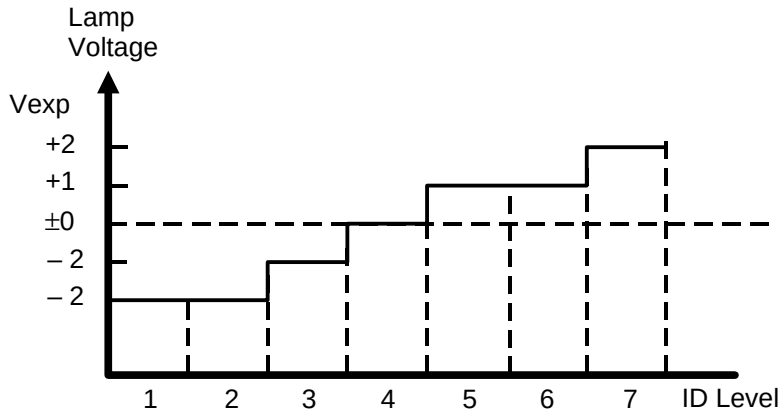

When an image density level is selected by the manual image density keys on the operation panel, the exposure lamp voltage is changed as shown in the above table.

The voltage changes ±2V within manual ID levels 1 to 7.

The grid bias voltage and the development bias voltage also change to make the appropriate image density graduation for each ID level.

4.7.2 Reproduction Ratio Correction

Reproduction Ratio (%)	Lamp Correction Voltage
50~120	±0V
121~140	+1V
141~160	+2V
161~180	+4V
181~200	+6V

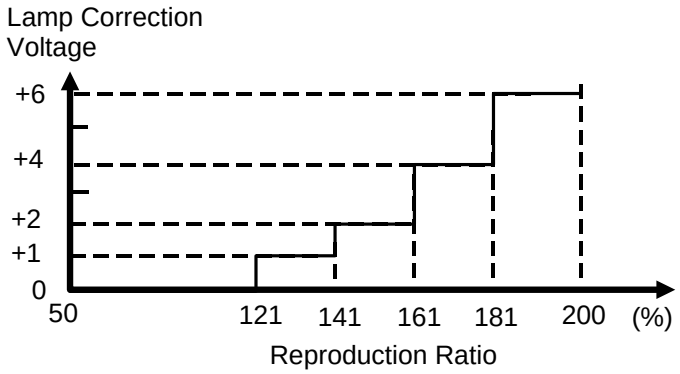

In the reduction and enlargement modes the light path is longer than the full size mode. The light intensity for a unit square in enlargement mode is less than that in the full size mode and that in the reduction mode is more.

To compensate, the exposure lamp voltage is increased in the enlargement mode according to the reproduction ratios, as shown in the above table.

The compensation in the reduction mode is done by the light shading mechanism (see 4. 3. 2).

4.7.3 VL Correction

VL level (%)	Lamp Correction Voltage
151~	–1V
101~150	±0V
~100	+1V

NOTE: Lamp correction voltage is added to the previous correction voltage.

According to the result of the VL pattern detection, the exposure lamp voltage is corrected as shown in the above table.

When the VL level (= Vdat/Vref X 100) corresponds to the level less than 100%, meaning that the intensity of the light reaching the drum surface is less than the initial condition, the lamp voltage is increased by 1V. If the VL level is within the range of 101 and 150%, no correction is applied because the light intensity is strong enough. If the VL level is more than 150%, the lamp voltage is decreased by 1V to compensate for too intense light.

This voltage correction is applied to the exposure lamp voltage till the next VL pattern detection. This means that the lamp voltage increases more and more by 1V steps if the optics section gets dirty.

4.7.4 Low Temperature Correction

Drum Temperature	Lamp Correction Voltage
Over 25°C	±0V
25°C or lower	+1V

If the temperature around the drum is 25°C or less when the main switch is turned on, low temperature correction is applied to the exposure lamp voltage as shown in the above table.

Under this condition V_R data correction is also applied to both the grid bias and development bias voltage.

4.7.5 Total Exposure Lamp Voltage

The total exposure lamp voltage for each mode is determined by the CPU as follows:

(1) ADS Mode
Vexp(SP48) + Reproduction Ratio Correction + V_L Correction + Low Temp. Correction

(2) Manual ID Mode
Vexp(SP48) + Manual ID Correction + Reproduction Ratio Correction + V_L Correction + Low Temp. Correction

(3) ID Sensor Pattern Detection
The same as the ADS mode or the manual ID mode depending on which mode is being set for making the ID sensor pattern.

(4) V_L Pattern Detection
Vexp(SP48) + V_L Correction + Low Temp. Correction

(5) Auto ADS Gain Adjustment (SP56)
64V (fixed)

4.8 OPTICAL COMPONENT CONTROL TIMING

4.8.1 Normal Copying (A4 sideways, full size)

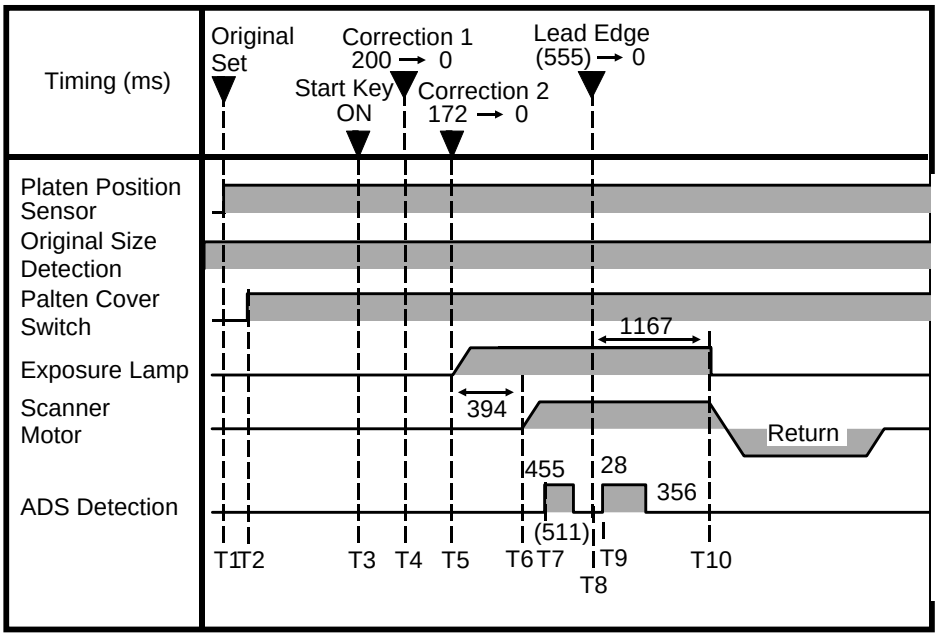

T1: When the platen cover is being closed after positioning an original, the platen position sensor is activated and the original size data is stored by the CPU (first check).

T2: When the platen cover is completely closed, the platen cover switch is activated. The CPU takes the second original size data and determines the original size by comparing the fist and the second data.

T3: When the start key is pressed, the copier starts the copy job if the appropriate paper is loaded in paper trays. If there is no paper of the appropriate size, the copier stops and "check paper size" indicator blinks.

T4: The drum idling period for the preparation of paper feed after the start key is pressed. At this timing, paper feeding starts. This period differs depending on the paper feeding station.

		By-pass feed table	Upper paper tray	Lower paper tray
After the start key is pressed	Black	255ms	200ms	27ms
	Color	3,922ms	3,867ms	3,394ms

(The drum idling period for color is much longer than for black because of the development unit change time.)

T5: The exposure lamp turns on 172ms after the drum idling period is completed. This period differs depending on the selected paper feeding station.

	By-pass feed table	Upper paper tray	Lower paper tray	Duplex Tray
After the drum idling period is completed	305ms	172ms	728ms	683ms

T6: The scanner motor starts the forward rotation 394ms after the exposure lamp turns on. This timing differs depending on the reproduction ratio.

	200%	100%	50%
After the exposure lamp turns on	280ms	394ms	405ms

T7: The CPU starts sampling the ADS sensor output for the reverse side of the left scale bracket (ADS reference voltage) 455ms after the exposure lamp turns on.

T8: The lead edge signal is sent from the I/O CPU to the main CPU about 555ms after the exposure lamp turns on.

T9: The CPU starts sampling the ADS sensor output for the original 28ms after the lead edge signal is sent to the main CPU. The sampling period differs depending on the reproduction ratio and the selected development unit.

T10: The exposure lamp turns off and the scanner motor starts the reverse rotation 1,167 ms after the lead edge signal is sent to the main CPU. This timing differs depending on the original size and the reproduction ratio.

	A3	B4	A4 lengthwise	A4 sideways
After the lead edge signal is sent	2,333ms	2,022ms	1,650ms	1,167ms

4.8.2 VL Pattern Detection

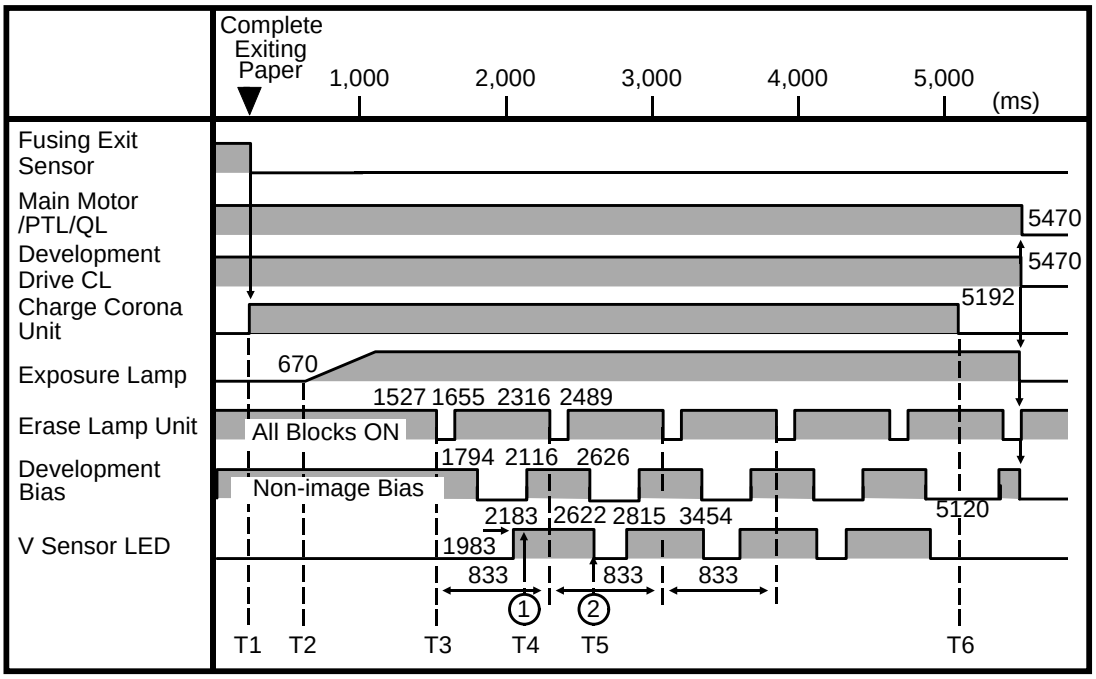

T1: When the last paper is exited at the programmed copy counter for the VL pattern detection, the VL pattern detection cycle starts. The main motor, PTL, QL, development drive clutch, erase lamp unit, development bias continue on condition. The charge corona turns on.

T2: The exposure lamp turns on 670ms after the VL pattern detection stars.

T3: The erase lamp unit changes its mode from the trail edge erase to the VL pattern erase 1527ms after the VL pattern erase starts, making the VL patterns on the drum surface. The development bias changes from the non-image bias (about -160V) to the VL pattern bias (VB0-20V) 1794ms after the VL pattern detection starts. The V sensor LED starts lighting (pulse) for the sensing Vlg and Vlp 1983ms later.

T4: The CPU takes the Vlg data 2183ms after the VL pattern detection starts. The CPU takes the Vlp data during the period between 1 and 2 in the above timing chart.

T5: The CPU detects the Vlg and Vlp data 4 times with 833ms intervals.

T6: The charge corona output turns off 5192ms after the VL pattern detection starts and all the other electrical components turn off 5470ms. This timing difference is to reduce the remaining drum potential.

5. ERASE

5.1 OVERVIEW

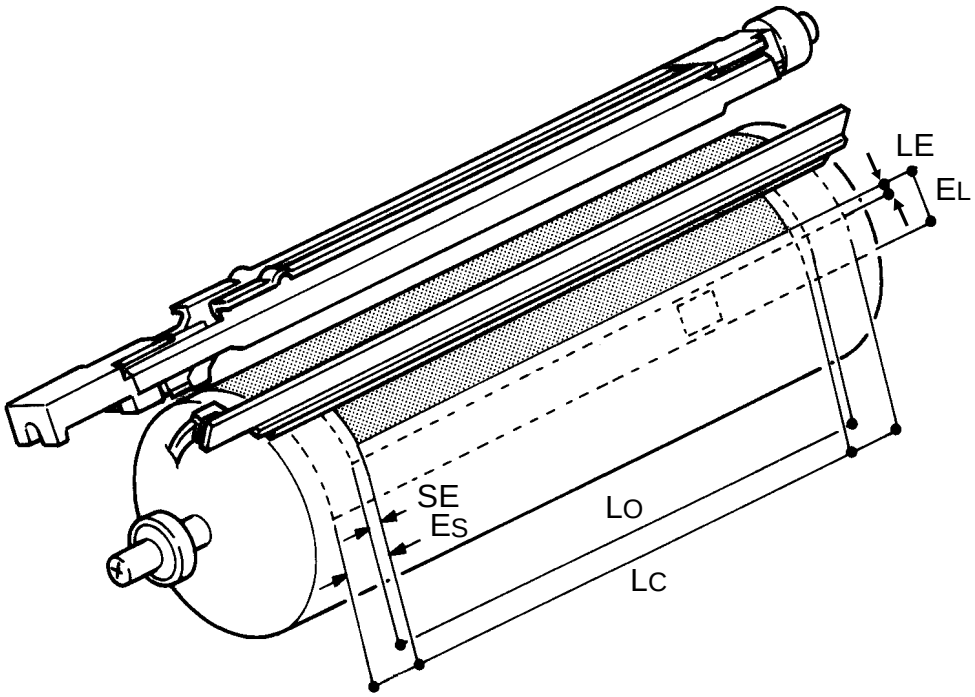

LE: Lead edge erase margin	2.5 ± 1.5 mm
SE: Side erase margin	1.5 ± 1.5 mm on each side; total of both sides 4 mm or less
LO: Original width	
LC: Charged width of drum	
EL: Lead edge erase	
ES: Side erase	

The erase lamp unit consists of a line of LEDs extending across the full width of the drum.

The erase lamp unit has four functions: lead edge erase, trail edge erase, side erase, and pattern erase.

This copier has two types of erase lamp unit. One is a standard type with 31 blocks (48 LEDs). The other is an edit type with 120 blocks (120 LEDs) which should be used when the editor board is installed.

5.2 LEAD EDGE AND TRAIL EDGE ERASE

The entire line of LEDs turns on when the main motor turns on. They stay on until the erase margin slightly overlaps the lead edge of the original image on the drum (lead edge erase margin). This prevents the ID sensor pattern and the V_L pattern from being developed every copy cycle. It also prevents the shadow of the original lead edge from appearing on the copy paper. This lead erase margin is also necessary for the lead edge of the copy paper to separate from the hot roller. The width of the lead edge erase margin can be adjusted by SP mode #41.

When the scanner reaches the return position, the charge corona, the grid bias, and the exposure lamp turn off. However, the charged area on the drum surface is a little longer than the actual original length in order to have the entire latent image of the original.
The entire line of LEDs turn on when the trail edge of the latent image has passed by 2 mm under the erase lamp unit. This prevents developing unnecessary parts of the drum surface, reducing toner consumption and drum cleaning load.
The LEDs stay on to erase the lead edge of the latent image in the next copy cycle. After the final copy, the erase lamps turn off at the same time as the main motor.
Normally, there is no trail edge erase margin on copies. But we can make a trail edge erase margin using SP mode #157, if necessary (see troubleshooting section).

5.3 SIDE ERASE

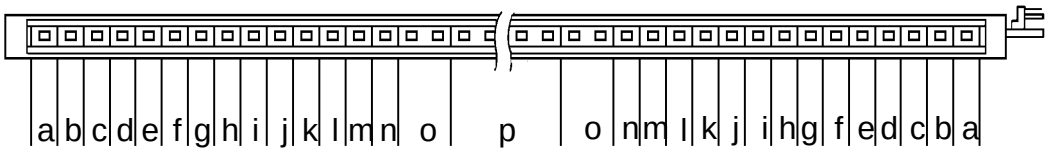

Based on the combination of copy paper size and the reproduction ratio data, the LEDs turn on in blocks. This prevents the shadow of the original side edge and unexposed front and rear sides of the drum surface in reduction mode from being developed. This reduces toner consumption and drum cleaning load.

The following table shows which blocks of erase lamp LEDs turn on depending on the paper size and the reproduction ratio:

Blocks ON	Paper Size	Reproduction Ratio(%)
None	A3, A4 Sideways, 11" x 17", 11" x 8 1/2" by-pass feed	99–200
a		95–98
a–b		91–94
a–c	B4, B5 Sideways	86–90
a–d		82–85
a–e		78–81
a–f	8 1/2" x 11", 8 1/2" x 5 1/2", F4	74–77
a–g	A4 Lengthwise	70–73
a–h		66–69
a–i		63–65
a–j		60–62
a–k		57–59
a–l		54–56
a–m		52–53
a–n	A5 Lengthwise, 5 1/2" x 8 1/2"	50–51
All (a–p)	Lead Edge and Trail Edge Erase	

Although no erase lamp LEDs turn on when paper size is A3/11"X17" or A4/8 1/2"X11" sideways and when the reproduction ratio is 99 to 200 %, there are side erase margins because the charged area is limited by the charge corona end block covers.
When the ARDF is used, one more inner block of erase lamp LEDs on the front and the rear sides turn on. This is one more block turning on than for normal side erase to erase the shadow of the ARDF transport belt.

5.4 PATTERN ERASE

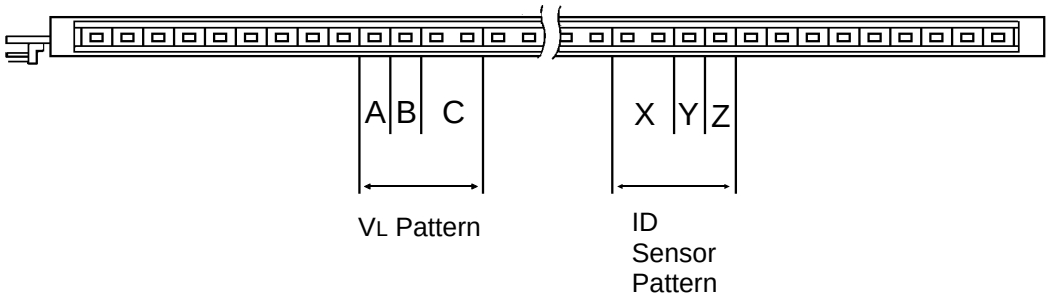

The erase lamp unit has another task besides the lead edge erase, trail edge erase, and side erase which is making the ID sensor pattern, VR pattern, and VL pattern.

When in the ID sensor pattern detection cycle, the lead edge erase period is a little longer to make the ID sensor pattern before the original latent image. The ID sensor pattern is made by turning off the LED blocks X, Y, Z on the rear side for 133 msec. before making the lead edge erase margin.

When in the VR pattern detection cycle, the entire line of the erase lamp LEDs turn on a little longer than the normal lead edge erase period. The VR pattern is made by applying a development bias of 0 V for the erased drum surface before the original latent image.

When in the VL pattern detection cycle, the trail edge erase stays longer than the normal copy cycle. The exposure lamp turns on at the scanner home position and the LED blocks A, B, C of the front side turn off for 111 msec. 4 times at 833 msec. intervals. (4 times a 20 X 20 mm VL pattern at 150 mm intervals)

5.5 EDIT ERASE LAMP UNIT

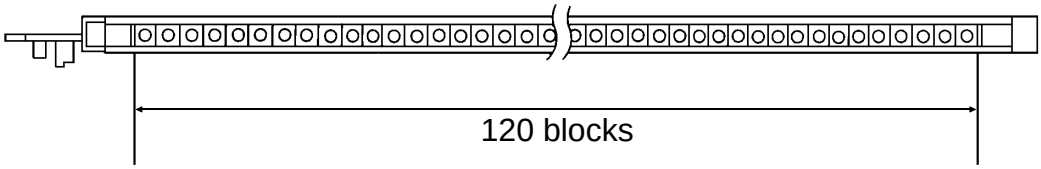

The edit erase lamp unit has 120 blocks the width of each being about 2 mm. When the editor is installed, this erase lamp unit must be used for the editing function. If a customer wants side erase margins narrower than standard ones, the edit erase lamp unit can be used independently without the editor board.

If the erase lamp unit is replaced with another type, the data of SP mode #84 (editing eraser) should be changed accordingly. (When the editor is installed, the copier CPU automatically changes the data of SP84 to 1.)

SP84:	Editing Eraser
0:	No (Standard erase lamp unit)
1:	Yes (Edit erase lamp unit)

If this data setting is wrong, incorrect side erase margins appear on copies, and the ID sensor pattern is not made correctly, causing the ID sensor abnormal condition.

5.6 ERASE LAMP CONTROL TIMING (Upper paper tray, black development unit)

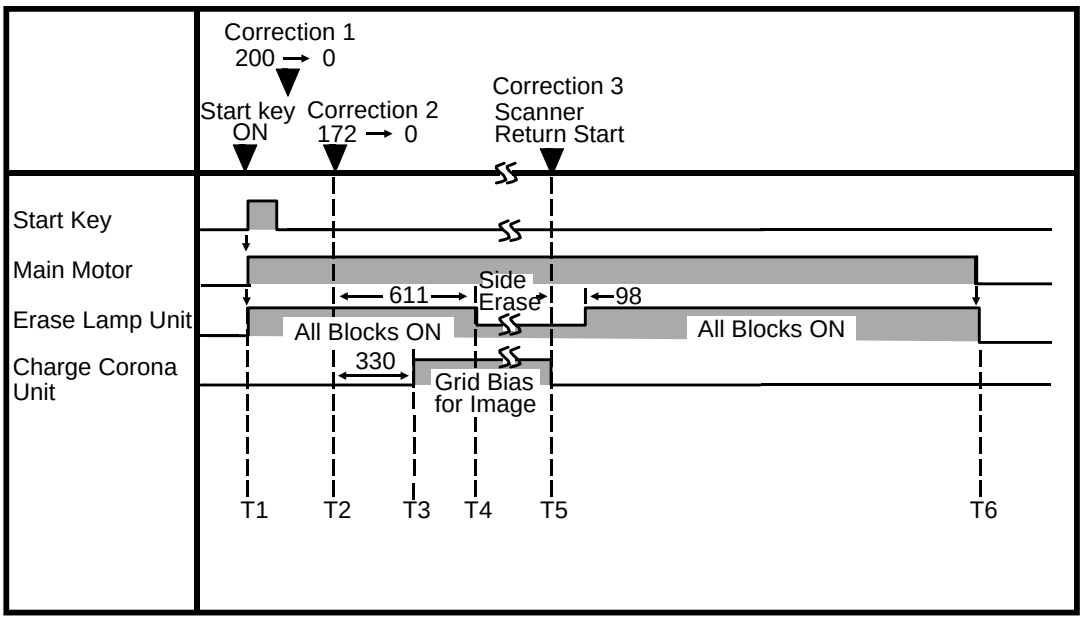

T1: When the start key is pressed, the main motor and all the blocks of the erase lamp unit turn on simultaneously.

T2: The timing is corrected twice according to the combination of the selected development unit and the paper feeding station. (The above timing is for the combination of the black development unit and the upper paper tray.)

T3: The charge corona turns on for the original image 330ms after correction 2.

T4: The erase lamp unit changes its mode from the lead edge erase to the side erase 611ms after correction 2. This side erase period differs depending on the paper size. (In case of the full size mode):

Paper size	Period
A3	2,355ms
B4	2,044ms
A4 lengthwise	1,650ms
A4 sideways	1,189ms

T5: The charge corona turns off when the scanner starts the return movement. 98ms after that the erase lamp changes its mode from the side erase to the trail edge erase.

T6: The erase lamp and the main motor turn off simultaneously.

6. DEVELOPMENT

6.1 OVERVIEW

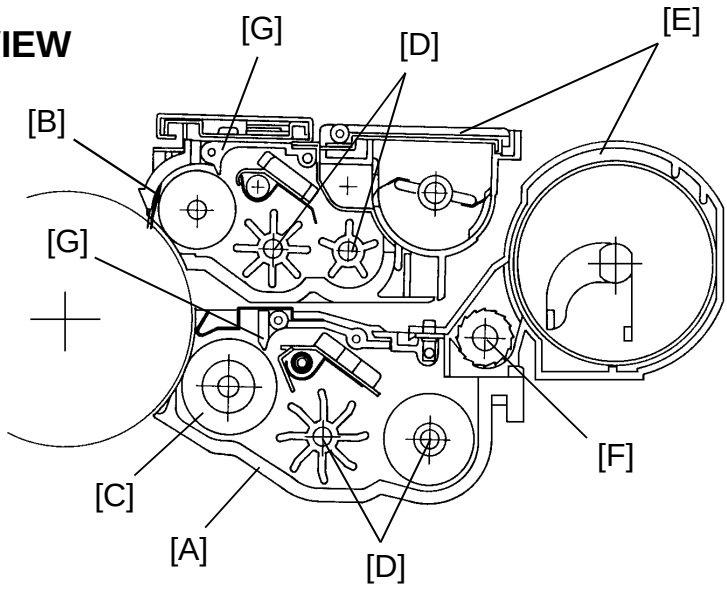

The development section is composed of a black development unit [A] and a color development unit [B] (option). Normally, the black development roller [C] is in contact with the drum. When color copy mode is selected, the color development unit moves against the drum and the black development unit is pulled back.

Both development units have a development roller, two paddle rollers [D], and a toner hopper [E].

The black development unit has a toner supply roller [F] but the color development unit does not.

The paddle rollers pick up developer in their paddles and transport it to the development roller. Internal permanent magnets in the development roller attract the developer to the development roller sleeve.

The turning sleeve of the development roller then carries the developer past the doctor blade [G]. The doctor blade trims the developer to the desired thickness and creates a backspill for the cross-mixing mechanism.

The development roller continues to turn, carrying the developer to the drum.

When the developer brush contacts the drum surface, the negatively charged areas of the drum surface attract and hold the positively charged toner. In this way, the latent image is developed.

Negative bias is applied to the development roller to prevent toner from being attracted to non-image areas on the drum that may have a residual negative charge. Negative bias also controls image density.

6.2 DEVELOPMENT UNIT CHANGE MECHANISM

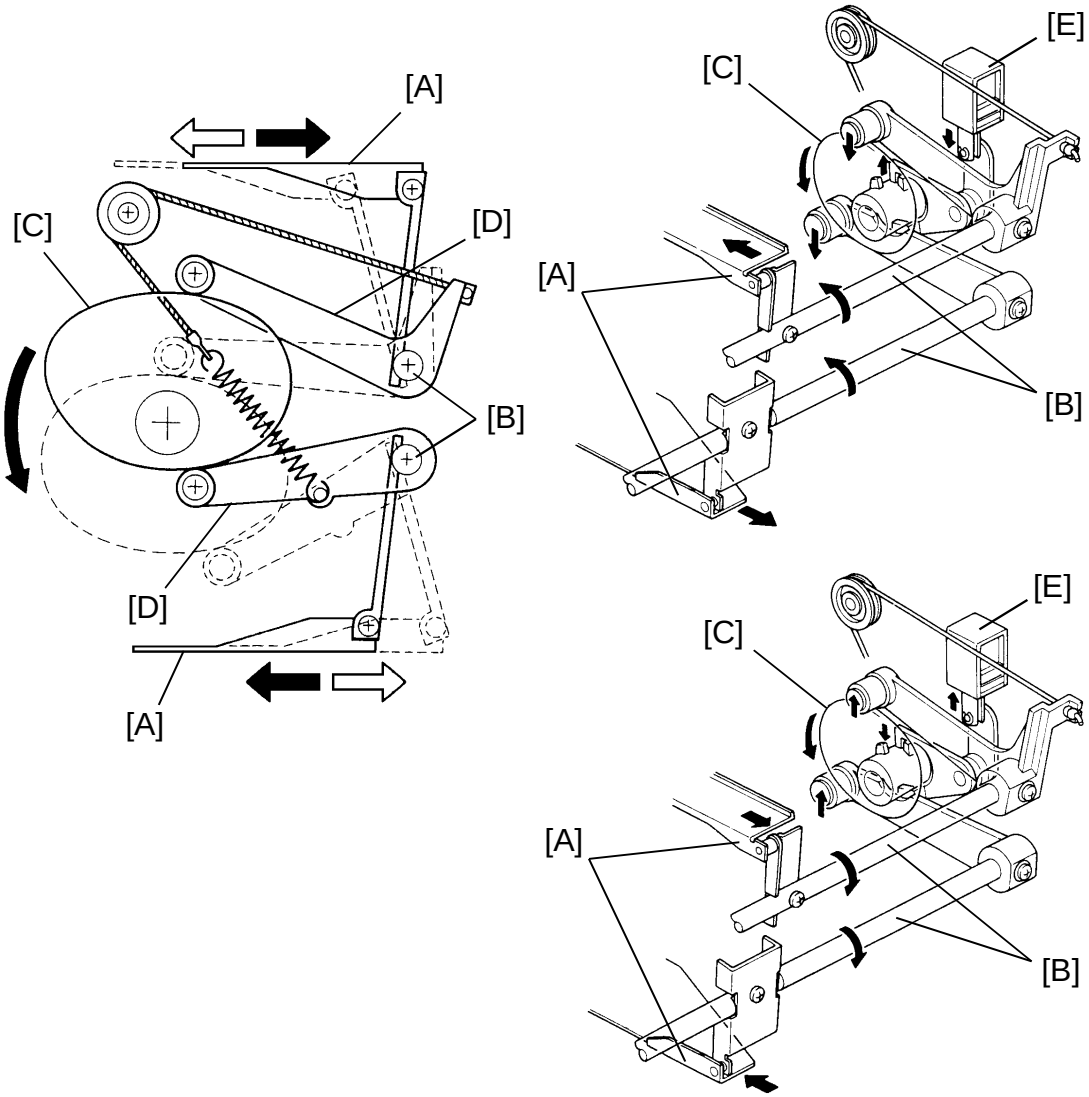

The development guide rails [A] are slid back and forth by the color development change shaft [B].

The change shafts are turned by the development change cam [C] through the change lever [D]. The cam is driven by the main motor through gears and timing belts. The development change solenoid [E] controls the spring clutch to set the cam position.

6.3 DRIVE MECHANISM

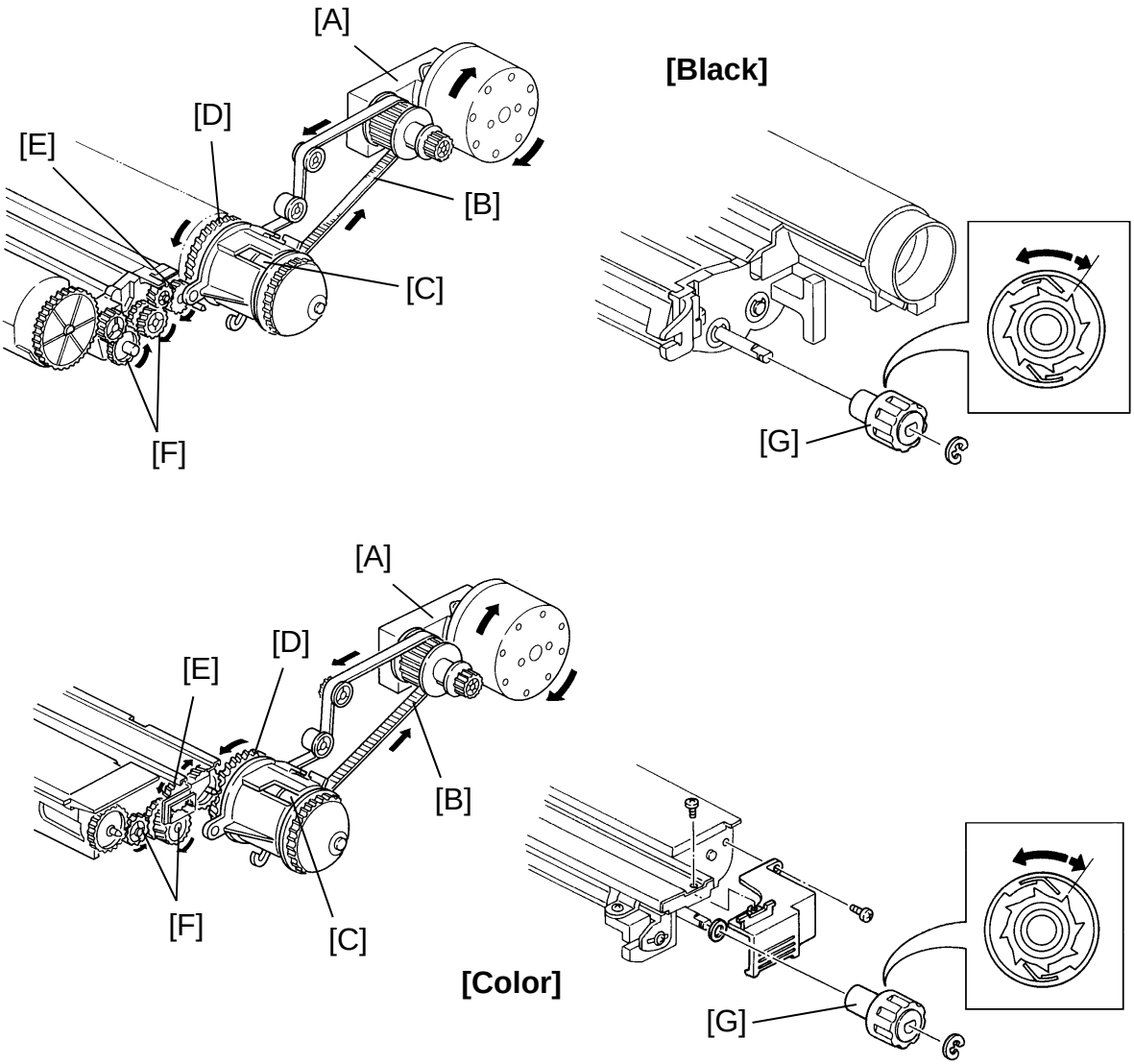

The main motor [A] rotation is transmitted to the development unit drive gears through a timing belt [B] and the development drive clutch [C]. When the drive clutch is energized, the rotation of the clutch gear [D] is transmitted to the development roller gear [E] and the paddle roller gears [F].

The paddle roller shaft has a knob [G] on the front end so that it can be turned manually to exchange developer.

The knob has a one-way clutch inside. The one-way clutch prevents the development roller from turning in the wrong direction.

6.4 CROSS MIXING

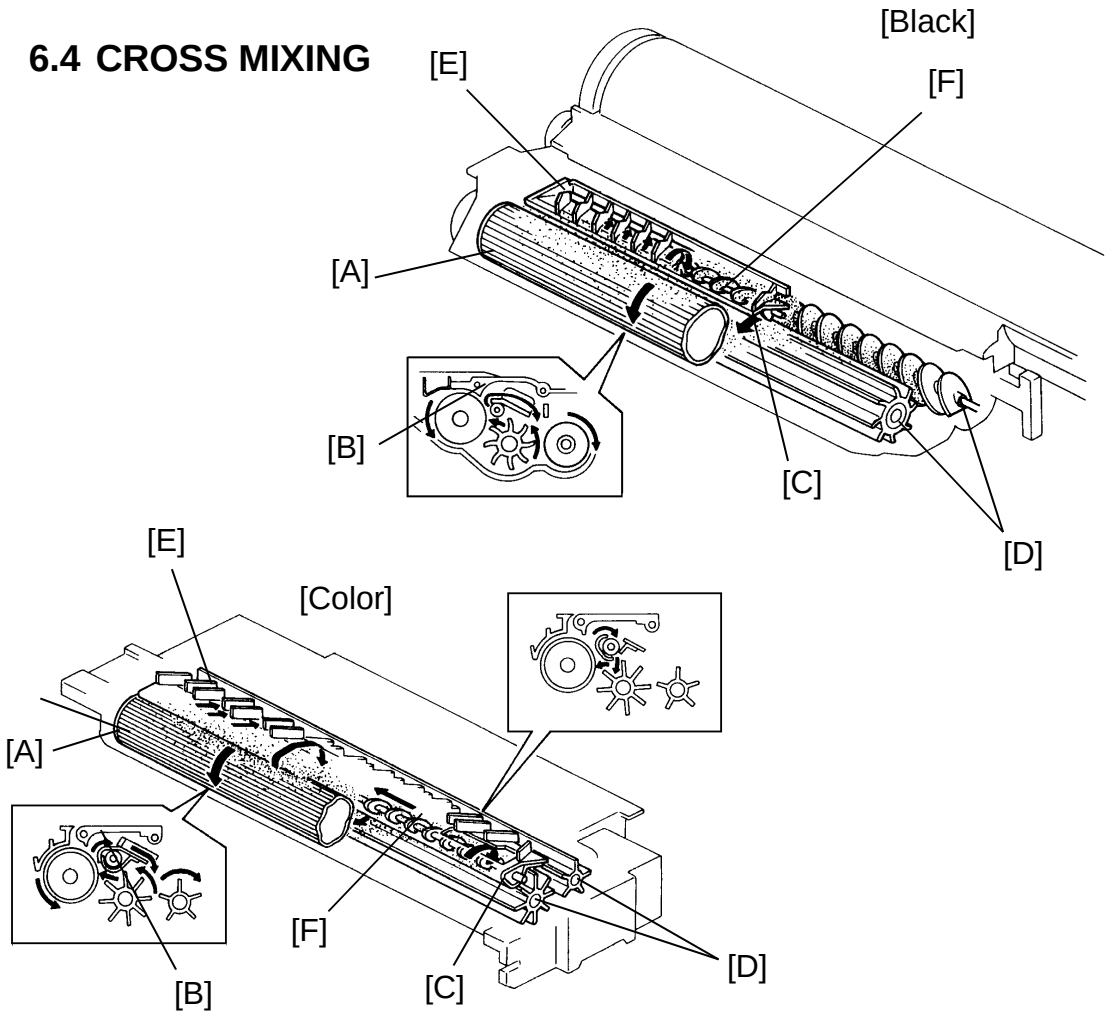

This copier uses a standard cross-mixing mechanism to keep the toner and developer evenly mixed. It also helps agitate the developer to prevent developer clumps from forming and helps create the triboelectric charge.

The developer on the rotating development roller [A] is split into two parts by the doctor blade [B]. The part that stays on the development roller forms the magnetic brush and develops the latent image on the drum. The part that is trimmed off goes to the backspill plate.

The rest of the developer slides down the backspill plate [C] to the paddle roller [D]. The mixing vanes [E] move it slightly toward the rear (toward the front for the color development unit) of the unit. Part of the developer falls into the auger inlet and is transported to the front of the development unit (rear of the color unit) by the mixing auger [F].

The agitator moves the developer slightly to the front as it turns, so the developer stays level in the development unit.

6.5 DEVELOPMENT BIAS CONTROL

The base development bias voltage for image is –160 V. However, it differs depending on the modes and correction factors (see the process control section).

6.5.1 Manual ID Correction

Manual ID Correction

ID Level	Development Bias voltage
1	–120V
2	–160V
3	–160V
4	–160V
5	–160V
6	–200V
7	SP46

SP46: Highlight Bias

Data	Density	Development Bias Correction Voltage
0	Normal	–240V
1	Darker	–200V
2	Lighter	–280V
3	Lightest	–320V

When the image density is selected by the manual image density keys on the operation panel, the development bias voltage is changed as shown in the above table.

The image density for each manual ID level is also controlled by the exposure lamp voltage and the grid bias voltage.

The manual ID correction for the development bias voltage is applied to levels 1, 6, and 7.

The development bias for level 7 can be adjusted by SP mode #46 (highlight bias) to meet customer requests.

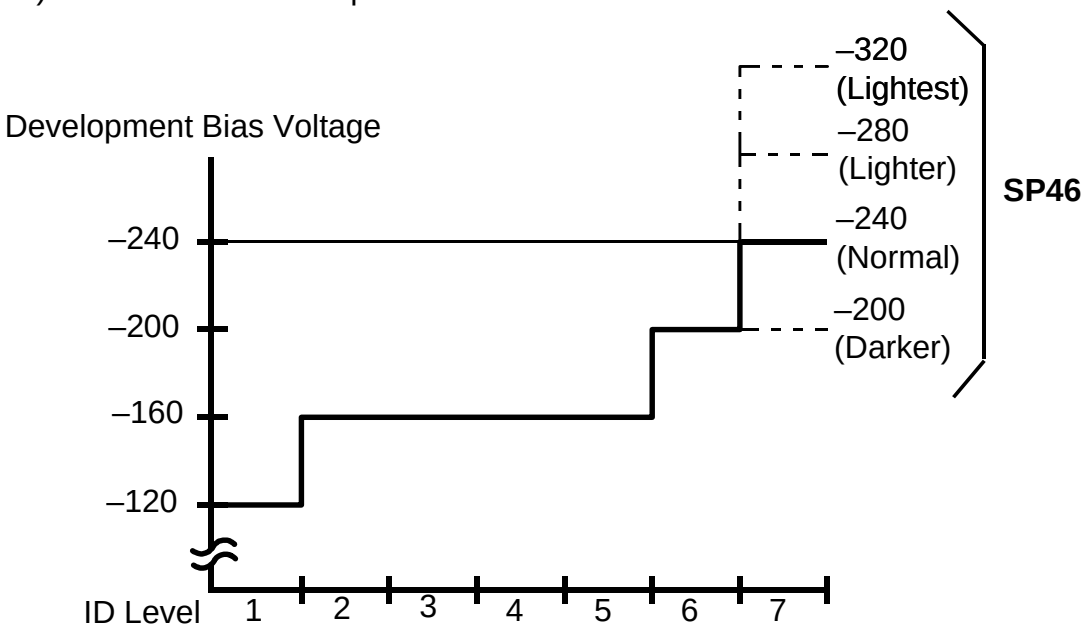

6.5.2 ADS Data Correction

When in the ADS mode, original background density is detected by the ADS sensor board. According to the original background ratio, the CPU decides the appropriate development bias voltage, as shown in the table at right.
This is to prevent the original background from appearing on copies. The image and background density on copies in the ADS mode are controlled only by changing the development bias voltage.

ADS Data Correction

Original Background Ratio (%)	Development Bias Voltage	
	SP34: ADS Density	
	0: Normal 1: Darker	2: Lighter
80~	–160V	–200V
75~79	–200V	–240V
70~74	–240V	–280V
60~69	–280V	–320V
45~59	–320V	–360V
0~44	–360V	–400V

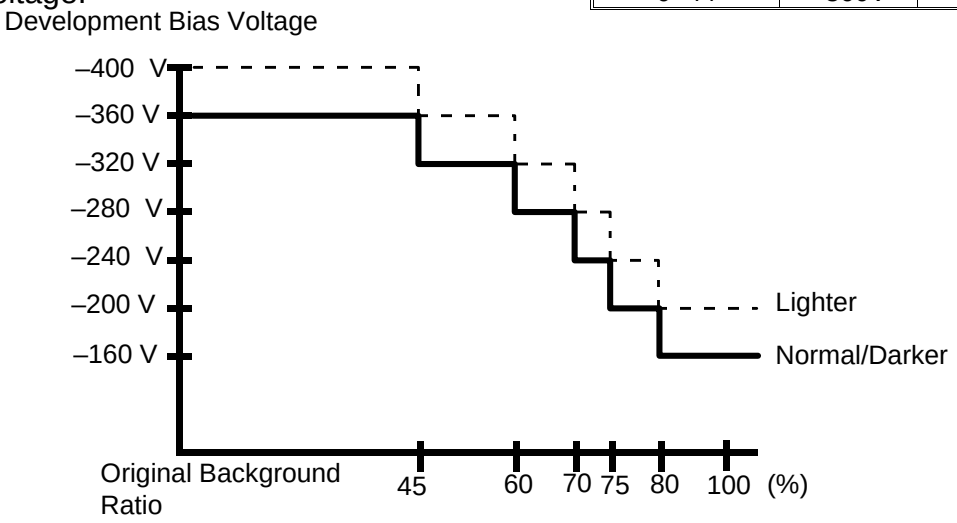

Copy image and background density in the ADS mode can be selected from three levels by SP mode #34.

The normal and darker settings have the same development bias voltage table and the difference is made through the grid bias voltage (–50V). The development bias voltage difference between the lighter and normal settings is 40V.

6.5.3 VR Correction

VR Correction

VR Level	Vrp/Vrg x 100 (%)	Development Bias Correction Voltage
0	100~84	±0V
1	83~58	–40V
2	57~41	–80V
3	40~28	–120V
4	27~0	–160V

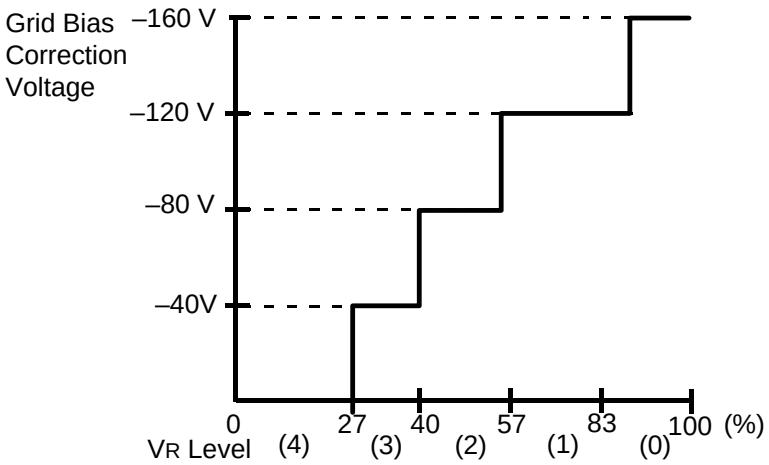

According to the results of the VR pattern detection, the development bias voltage is corrected as shown in the above table.

VR correction is also applied to the grid bias voltage.

6.5.4 VR Data Correction

VR Data Correction

Drum Temperature	Development Bias VR Correction
Over 25°C	No correction
25°C or lower	VR level +1

NOTE: VR level (max.)=4

If the temperature around the drum is 25°C or less when the main switch is turned on, the VR data correction is applied to the development bias voltage as shown in the above table.

VR data correction is also applied to the grid bias voltage and the low temperature correction is applied to the exposure lamp voltage simultaneously under this condition.

6.5.5 Bias Voltage Selection by SP Mode

SP37: Black Bias
SP79: Color Bias

Data	Density	Develpment Bias Correction Voltage
0	Normal	±0V
1	Darkest	+40V
2	Darker	+20V
3	Lighter	–20V
4	Lightest	–40V

The development bias for original image can be selected from among four levels by SP mode #37 for black and SP mode #79 for color as shown in the above table.

The selected development bias voltage does not affect the toner density control because the development bias for the ID sensor patterns have a different table.

Since the V_R pattern and V_L pattern detections are performed in black copy cycles, the setting of SP37 is applied to the development bias voltage for the V_R and V_L patterns. Therefore, if you change the black development bias after the initial V_L detection, the difference will be gradually neutralized by the exposure lamp voltage when the subsequent V_L detections are performed. (Ex. If you decrease the negative development bias voltage by +40V to get a darker image, the V_L pattern will also become darker and the exposure lamp voltage increases by 1V. After several V_L pattern detections, the image darkened by the development bias voltage will return to the initial image density as a result of V_L pattern detections.) The development bias voltage adjustment should be done with the exposure lamp voltage adjustment (SP48) only when the drum initial setting (SP66) is performed.

The color development bias voltage can be adjusted any time.

6.5.6 Bias for Sensor Patterns

(1) Development bias voltage for ID sensor pattern

SP33: Black Pattern Bias

Data	Black Toner Density	Development Bias Voltage for ID sensor Pattern	
		0~500	501~
0	Normal	–220V	–200V
1	Lighter	–180V	–160V
2	Darker	–240V	–220V
3	Darkest	–260V	–240V

SP75: Red/Blue/Green Pattern Bias

Data	Color Toner Density	Development Bias Voltage for ID sensor Pattern			
		0~500		501~	
		Red/Blue	Green	Red/Blue	Green
0	Normal	–200V	–240V	–180V	–220V
1	Lighter	–160V	–200V	–140V	–180V
2	Darker	–220V	–260V	–200V	–240V
3	Darkest	–240V	–280V	–220V	–260V

The development bias voltage for the ID sensor patterns (both Vsg and Vsp) are shown in the above table. They differ depending on color because the relation between the reflected light intensity and developed sensor pattern density is different from color to color. The difference of development bias voltage for each color's ID sensor pattern compensates them.

The development bias voltage for ID sensor pattern is –20V more for the first 500 copies than that for the rest. This is to compensate a tendency of the developer to have a slightly higher toner density until it stabilizes.

The toner density can be adjusted by changing the setting of SP33 for black and that of SP75 for color, as shown in the table.

(2) Development bias voltage for V_R pattern

The development bias voltage for non-image area is applied to the bare drum where Vrg output is sampled.

0V is applied for the V_R pattern which gives Vrp output, as explained in the process control section.

(3) Development bias voltage for V_L pattern

The base development bias voltage (VB0–20V) for the V_L pattern (both Vlg and Vlp) is decided in the process of the initial V_L pattern detection. The actual bias voltage for the V_L pattern has some corrections.

6.5.7 Total Development Bias Voltage

The total development bias voltage for each mode is determined by the CPU as follows:

(1) ADS Mode
–160V + ADS Data Correction + V_R Correction + V_R Data Correction + SP Mode Data Setting (SP34:ADS Density / SP37:Black Bias / SP79:Color Bias)

(2) Manual ID Mode
–160V + Manual ID Correction + V_R Correction + V_R Data Correction + SP Mode Data Setting (SP37:Black Bias / SP46:Highlight Bias / SP79:Color Bias)

(3) ID Sensor Pattern Detection
SP Mode Data Setting (SP33:Black Pattern Bias / SP75:Red/Blue/Green Pattern Bias)

(4) V_R Pattern Detection
Vrg: –160V + V_R Correction + V_R Data Correction + SP Mode Data Setting (SP37:Black Bias)
Vrp: 0V

(5) V_L Pattern Detection
VB0–20V + V_R Correction + V_R Data Correction + SP Mode Data Setting (SP37:Black Bias)

(6) Non-image Area
–160V + V_R Correction + V_R Data Correction + SP Mode Data Setting (SP37:Black Bias / SP79:Color Bias)

6.6 COLOR DEVELOPMENT UNIT DETECTION

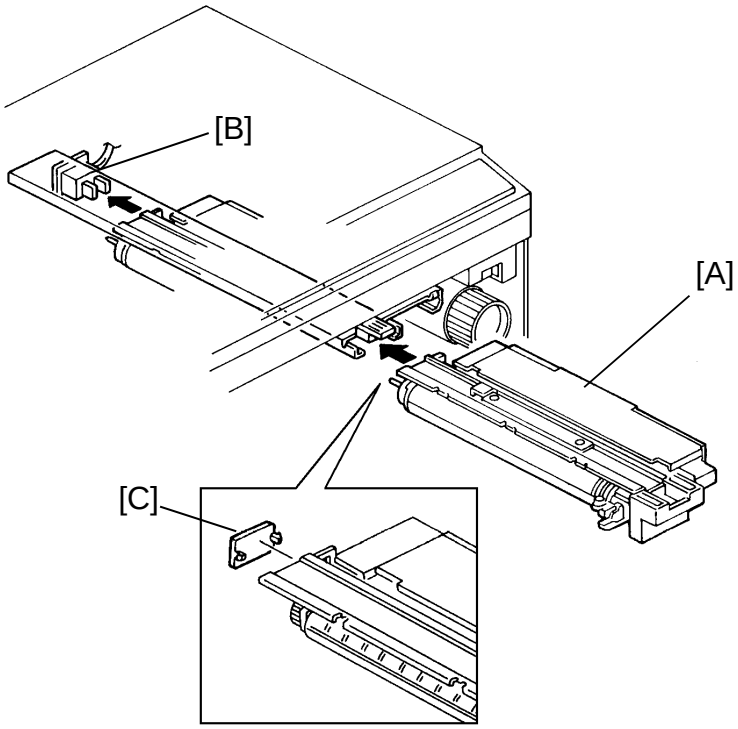

Color Development unit detection table

Color	SW 1	SW 2
Red	ON	ON
Blue	ON	OFF
Green	OFF	ON
No Dev. Unit	OFF	OFF

When a color development unit [A] is installed in the copier, the color switch [B] is activated by a color detect plate [C] at the development unit.

The color switch has two microswitches inside.

The CPU receive a LOW signal from the micro switch activated by the color detect plate and determines which color unit has been installed.

6.7 DEVELOPMENT COMPONENT CONTROL TIMING (A4 sideways, upper paper tray, black development unit)

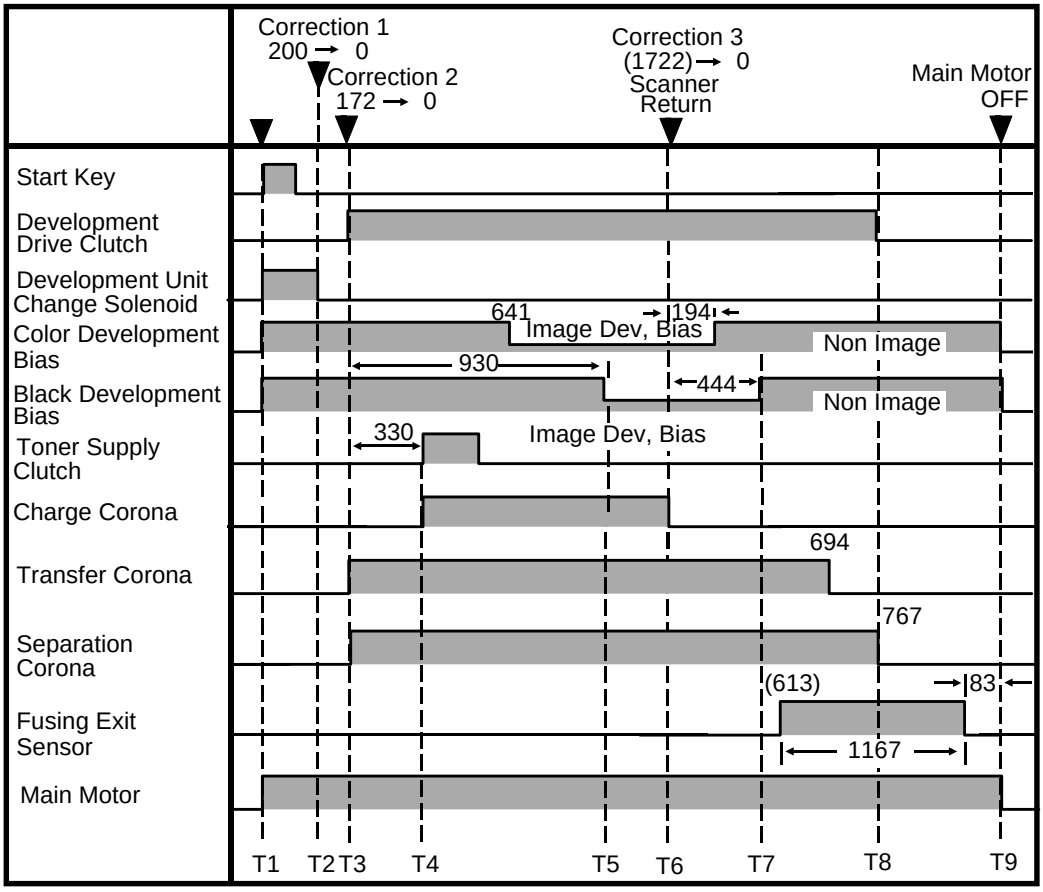

T1: When the start key is pressed, the main motor turns on and the non-image development bias (about -160V) is applied to the development roller. If color copy mode is selected, the development unit change solenoid turns on to shift the development unit to the color one.

T2: The timing is corrected to 0 (correction 1) depending on a combination of the selected development unit and the paper feeding station.

Paper Feeding Station		Black Dev. Unit	Color Dev. Unit
Upper Paper Tray		200 ms	3867 ms
Lower Paper Tray		27ms	3339 ms
By-pass Feed Table		255 ms	3922 ms
Paper Tray Unit	Paper Tray - 1	27 ms	2394 ms
	Paper Tray - 2	27 ms	1839 ms
	Paper Tray - 3	27 ms	1283 ms

The development change solenoid turns off 200ms after it turned on.

T3: The timing is corrected to 0 again (correction 2) when the image process preparation period starts. This timing differs depending on the selected paper feeding station.

Paper Feeding Station		Black Dev. Unit
Upper Paper Tray		172ms
Lower Paper Tray		728ms
By-pass Feed Table		305ms
Paper Tray Unit	Paper Tray - 1	1,728ms
	Paper Tray - 2	2,284ms
	Paper Tray - 3	2,840ms

T4: The charge corona turns on 330ms after correction 2. If the toner density is low, the toner supply clutch turns on at this timing.

T5: The development bias changes from the non-image bias to the image bias 930ms (641ms for color) after correction 2.

T6: According to the original size and the reproduction ratio, the scanner return timing is decided. The timing is corrected to 0 and the charge corona turns off.

T7: The development bias changes from the image bias to the non-image bias 444ms (194ms for color) after correction 3.

T8: The separation corona turns off 767ms after correction 3. Then the development unit drive clutch turns off.

T9: The main motor and non-image development bias turn off 83ms after the fusing exit sensor detects the trailing edge of the copy paper.

7. TONER SUPPLY

7.1 OVERVIEW

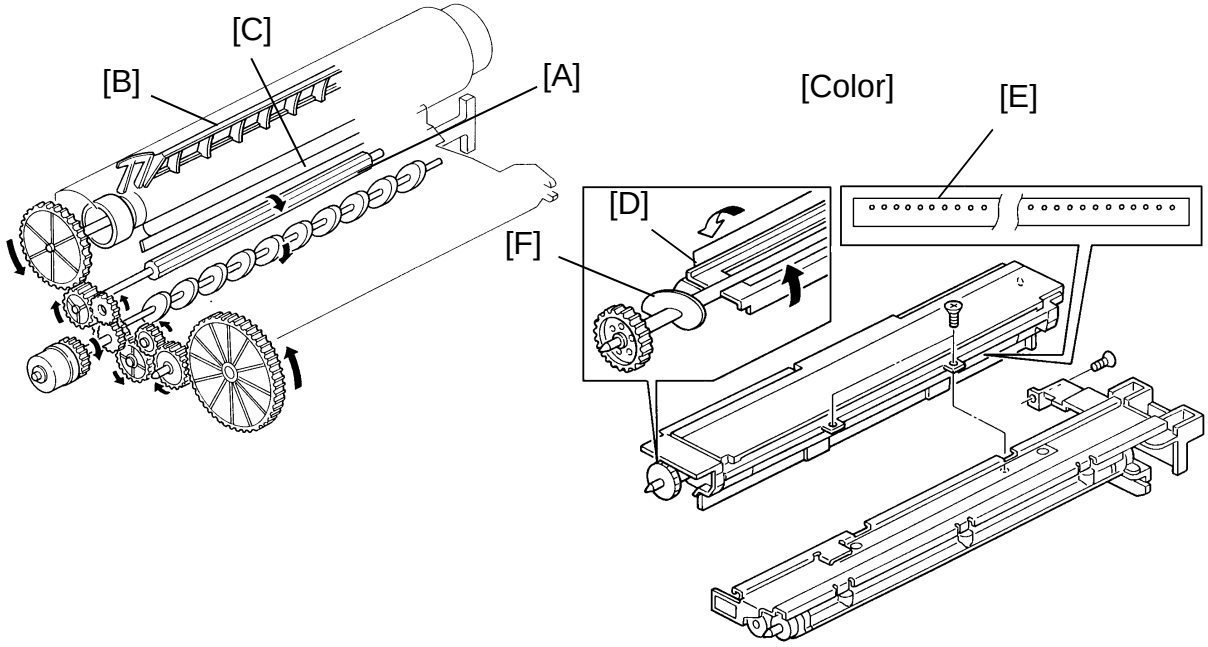

The black toner supply roller [A] has 16 grooves. Toner is caught in these grooves and trimmed by the toner supply shaft plate located on one side of the toner supply roller. This toner then enters the development unit.

The black toner agitator [B] is in the toner cartridge and prevents toner from clumping. The black toner agitator is knocked each rotation by the arm [C] to prevent toner from building up.

The color toner is supplied by rotating the color toner agitator [D] through the toner supply mylar [E]. The toner supply mylar has 50 holes (0.6 mm ϕ)

The color toner agitator is in the toner hopper and also prevents toner from clumping. Both ends of the color agitator have an auger [F] to transport the toner to the middle where the toner supply mylar is located.

This copier has two different ways of controlling the amount of toner supplied. Normally, the detect supply mode controls toner supply for the black and color development units: however, a fixed supply mode can be selected by SP mode #30 for the black development unit.

The amount of toner supplied depends on the ID sensor data, the detect toner supply ratio data, the paper size data and color data.

7.2 TONER SUPPLY DRIVE MECHANISM

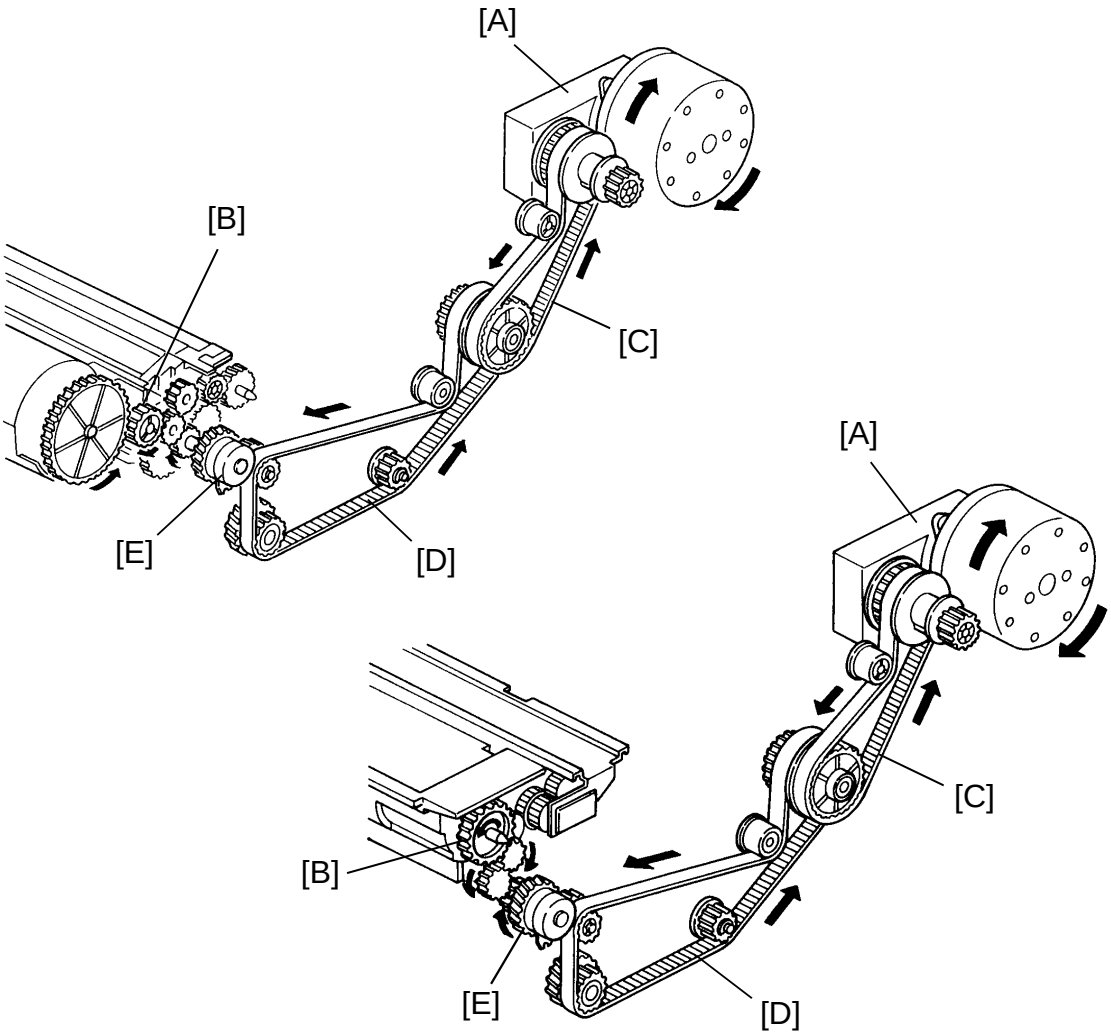

The main motor [A] rotation is transmitted to the toner supply gears [B] through timing belts [C,D] and the toner supply clutch [E]. When the toner supply clutch is energized, the rotation of the clutch gears is transmitted to the toner supply gears.

The black toner agitator rotates at the same speed as the toner supply roller.

7.3 TONER SUPPLY CONTROL

7.3.1 Detect Supply Mode (SP #30 = 0)

The amount of toner supplied depends on the ID sensor data, the detect toner supply ratio data, the paper size data, and color data. The toner supply clutch on time in each copy cycle is calculated as explained below.

Toner Supply Clutch ON Time:

ON time (msec.)= 2.777 x 1/20 x [Toner Supply Ratio Parameter] x [ID Sensor Level Parameter] x [Paper Size parameter] x [Color Parameter]

Example:

- SP mode #31 is set to "0".
  Toner supply ratio parameter =2
- Vsp=0.44V, Vsg= 4.0 V.
  ID sensor level parameter=1/2
- Paper size is A3 or DLT.
  Paper size parameter=49
- Copies are made by black toner mode.
  Color parameter=24

ON time = 2.777 x 1/20 x 2 x 1/2 x 49 x 24
= 163 (msec.)

Toner Supply Ratio: This ratio can be selected by following SP modes. When select the color toner supply ratio, the color development unit must be installed the machine.

SP31: Black Toner Supply Ratio (Detect Mode)

Data	0	1	2	3
Supply Ratio	15%	7.5%	30%	60%
Toner Supply Ratio Parameter	2	1	4	8

SP81: Red/Blue/Green Toner Supply Ratio (Detect Mode)

Data	0	1	2	3
Supply Ratio	14%	7%	21%	28%
Toner Supply Ratio Parameter	2	1	3	4

ID Sensor Data (Detect Mode): The amount of toner supplied depends on the ID sensor data. When the ID sensor data is abnormal, the ID sensor level parameter decreases to 1/2.

ID Sensor Level	Vsp/Vsg x 100 (%)		ID Sensor Level Parameter
	Black	Color	
No Toner Supply	0~9.9	0~24.9	0
Toner Supply 1	10.0~10.4	25.0~26.9	1/4
Toner Supply 2	10.5~11.9	27.0~28.9	1/2
Toner Supply 3	12.0~14.9	29.0~30.9	1
Toner End	15.0~49.9	31.0~49.9	2
ID Sensor Abnormal	50.0~	50.0~	1/2

Paper Size Data: The amount of toner supplied depends on paper size.

Paper Size	A3	A4	B4	B5	F4	DLT	LG	LT	By-pass Feed
Paper Size Parameter	49	24	37	18	29	48	42	24	50

Color Data: The amount of toner supplied depends on color data.

Color	Black	Red	Blue	Green
Color Parameter	24	52	40	40

7.3.2 Fixed Supply Mode (SP mode #30 = 1)

The amount of toner supplied depends on the ID sensor data, the fixed toner supply ratio data the paper size data and the color data (black only). The toner supply clutch on time in each copy cycle is calculated as explained below:
The fixed supply mode is used for black toner only.

Toner supply Clutch ON Time:

ON time (msec.)= 2.777 x 1/20 x [Toner Supply Ratio Parameter] x [ID Sensor Level Parameter] x [Paper Size parameter] x [Color Parameter]

Example:

- SP mode #32 is set to "0".
  Toner supply ratio parameter =2
- Vsp=0.44 V, Vsg= 4.0 V.
  ID sensor level parameter=1/2
- Paper size is A4 or LT.
  Paper size parameter=24
- Color parameter=24

ON time = 2.777 x 1/20 x 2 x 1/2 x 24 x 24
= 80 (msec.)

Toner Supply Ratio: The amount of toner supplied depends on the toner supply ratio.

SP32: Black Toner Supply Ratio (Fixed Mode)

Data	0	1	2	3
Supply Ratio	7%	3.5%	10.5%	14.0%
Toner Supply Ratio Parameter	2	1	3	4

ID Sensor Data (Fixed Mode): The ID sensor level parameter is fixed to 1/2.

ID Sensor Level	Vsp/Vsg x 100 (%)	ID Sensor Level Parameter
No Toner Supply	0~9.9	0
Toner Supply	10.0~24.9	1/2
Toner End	25.0~49.9	1/2
ID Sensor Abnormal	50.0~	1/2

Paper Size Data: The amount of toner supplied depends on paper size.

Paper Size	A3	A4	B4	B5	F4	DLT	LG	LT	By-pass Feed
Paper Size Parameter	49	24	37	18	29	48	42	24	50

Color Data: The amount of toner supplied depends on color data.

Color	Black
Color Parameter	24

7.4 TONER END DETECTION

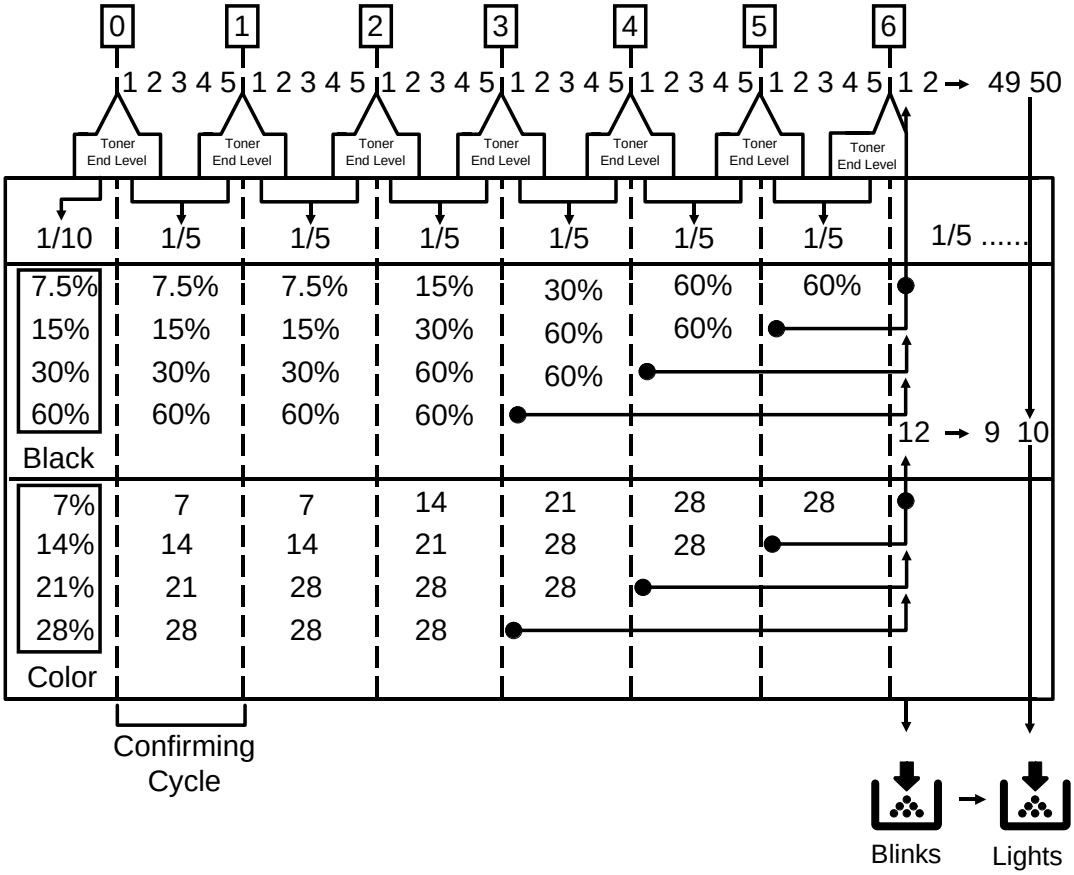

This copier uses an ID sensor to detect the toner end condition for black and color toner.

When the CPU detects the toner end level from the ID sensor data, the copier goes to toner end detect mode.

		ID Sensor Data (Vsp/Vsg x 100%)
Toner End Level	Black	15.0~49.9
	Color	31.0~49.9

The process of the toner end detect mode is shown above.

When the ID sensor data reaches the toner end level, the detection mode changes from once every 10 to once every 5 copies.

Also the ID sensor level parameter increases by 1 step (1→2).

After the second check if the ID sensor data is still at the toner end level on every check, the toner supply ratio increases by 1 step until it reaches the maximum toner supply ratio (60%: black, 28%: color).

If the CPU detects the toner end level twice at maximum toner supply ratio, the Add Toner indicator starts blinking.

50 more black copies (or 10 more color copies) can be made before the "Add Toner" indicator turns on continuously and the Start key turns red.

If the main switch is turned off and on while "Add Toner" is indicated (blinking or lighting) the main motor starts turning and toner is supplied for about 10 seconds.

After 10 seconds an ID sensor pattern is made 4 times.

If the average of the ID sensor data is in the toner end range , the Add Toner indicator turns on continuously and the start key turns red.

Opening and closing the front door is the same as turning the main switch off and on.

These main switch and front door operations are for black toner mode only.

8. IMAGE TRANSFER AND PAPER SEPARATION

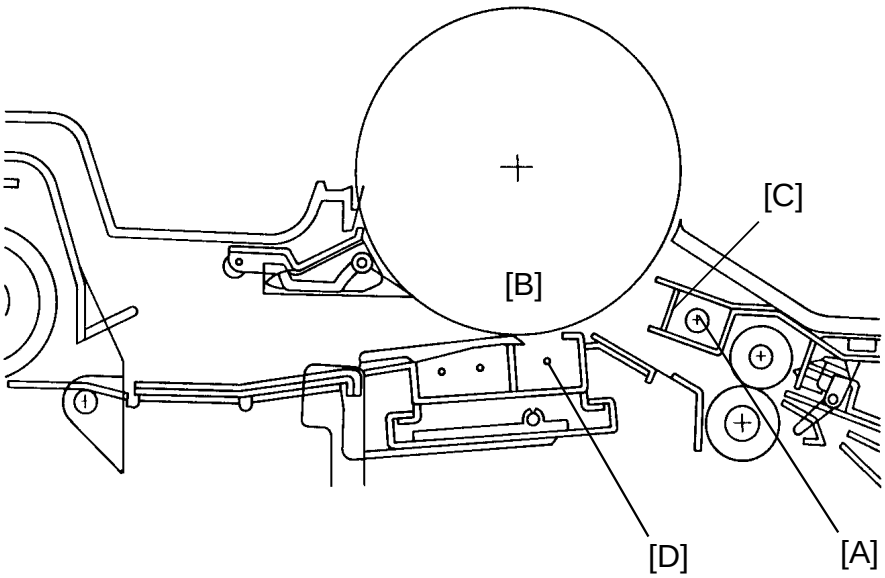

8.1 PRE-TRANSFER LAMP (PTL)

After the latent image is developed but before the image is transferred to the copy paper, the drum surface is illuminated by the pre-transfer lamp [A]. This illumination reduces the negative potential on the drum surface [B]. This prevents toner particles from being re-attracted to the negatively charged drum during the paper separation process. It also makes image transfer and paper separation easier.

A cold cathode tube is used for the pre-transfer lamp to provide sufficient light intensity. A yellow filter [C] is installed for the PTL to reduce ultraviolet light which would cause light fatigue on the OPC drum.

8.2 IMAGE TRANSFER

A high negative voltage (–5 kV) is applied to the transfer corona wire [D], the corona wire generates a negative charge, and attracts the positively charged toner away from the drum and onto the paper. In addition, the paper is held against the drum by the positive countercharge on the drum.

8.3 PAPER SEPARATION

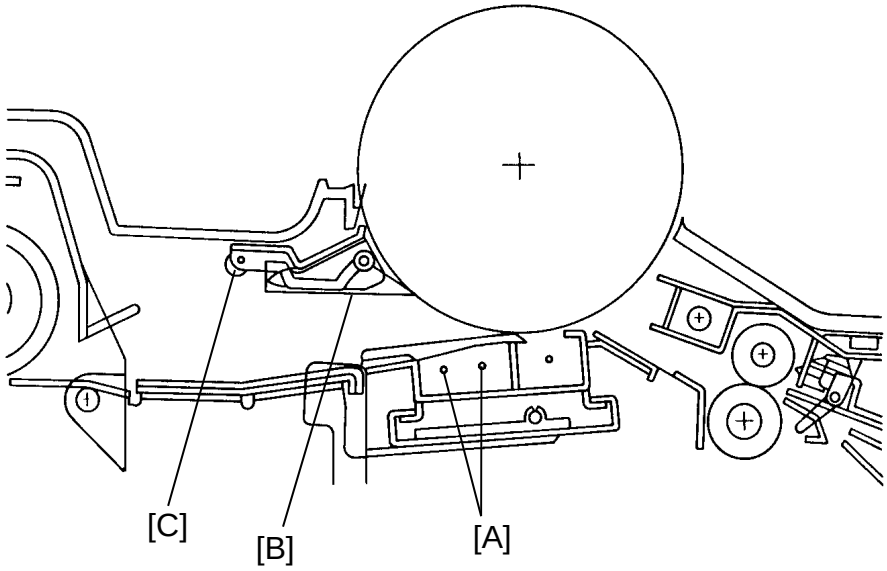

After image transfer the copy must be separated from the drum. To break the attraction between the paper and the drum, the separation corona wire [A] applies an ac corona to the reverse side of the paper. The stiffness and weight of the paper causes it to separate from the drum.

The negative charge on the paper (from the transfer corona) is not completely discharged until the paper is far enough from the drum that the toner will not be reattracted to the drum. The two pick-off pawls [B] ensure that thin, low stiffness paper and upward curled paper separate completely.

The spurs [C] prevents the unfused toner on the paper from being smeared by the pick-off pawls.

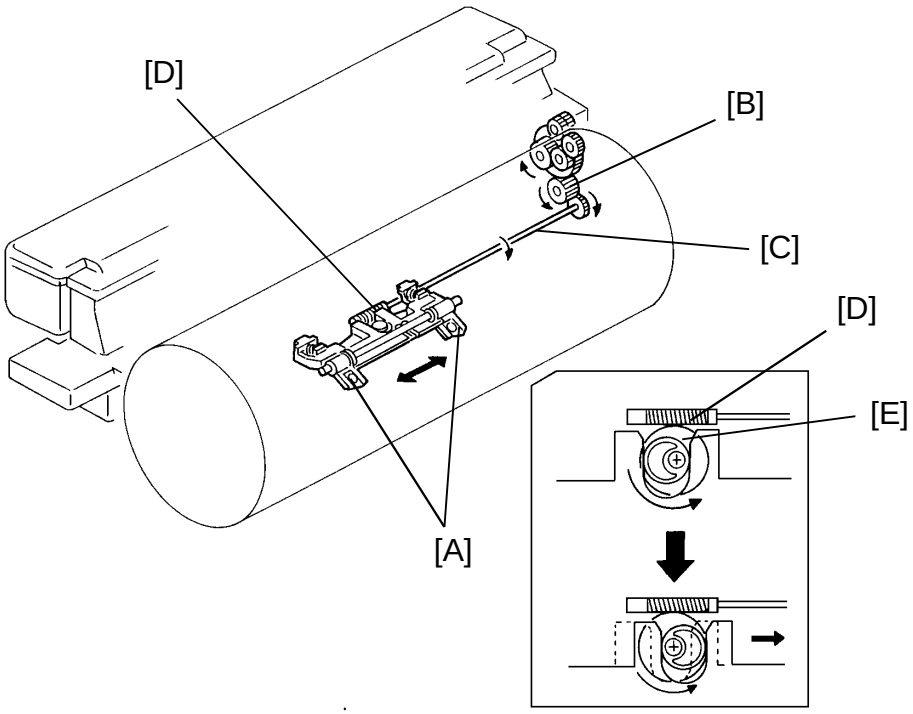

The pick-off pawls [A] are always in contact with the drum. They have a side to side movement mechanism to prevent the parts of the drum surface touched by the pick-off pawls from wearing faster than other parts.
The cleaning brush drive gear [B] drives the pick-off pawl drive shaft [C] which has a worm gear [D] on the other end. The worm gear drives the cam gear [E] which provides the side to side movement to the pick-off pawl assembly.

8.4 AUTOMATIC DRUM CURRENT ADJUSTMENT

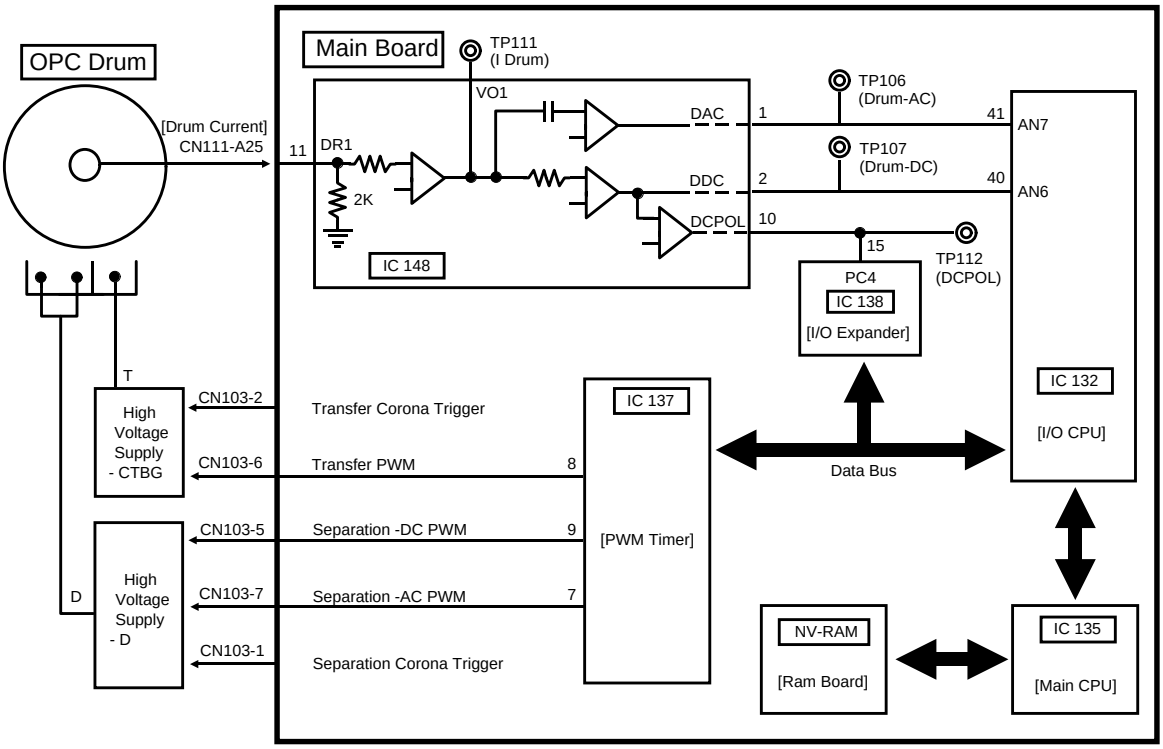

This copier has an automatic drum current adjustment circuit for the transfer and separation corona outputs.

8.4.1 Drum Current Detection

The drum current detection circuit is shown in the above circuit diagram.

The drum current on the drum surface produced by the transfer or the separation corona output is sent at CN111-A25 of the main board through the drum front shaft, drum shaft bearing, and drum unit connector. Inside the IC148 (hybrid IC), the drum current is grounded via the resistor (2 KOhm) and the voltage produced between both ends of the resistor corresponds to the amount of the drum current. This voltage is separated into ac and dc components and these are amplified in the IC148. The amplified components are sent to the analog input port of IC132 (I/O CPU) and are converted into an 8 bit digital signal. The I/O CPU detects the drum current from this digital signal.

8.4.2 Automatic Drum Current Adjustment

When SP mode #57 (auto drum current adjustment) is performed, the high voltage supply for transfer corona turns on first. The I/O CPU detects the drum current and compares it with the target current. If it is different, the I/O CPU changes PWM value which is sent to IC137 (PWM timer) by an 8 bit signal through data bus line. Then the PWM timer generates pulses with a new width and send then to the high voltage supply board - CTBG. The new drum current is fed back to the I/O CPU and it determines the final PWM value by repeating this feedback routine. The determined PWM value is stored in the RAM board through IC135 (main CPU).

Second, the high voltage supply for separation corona turns on and the I/O CPU determines the proper PWM values for the separation (- ac and -dc) by doing the same routine as for the transfer corona. These PWM values are also stored in the RAM board.

For the charge corona output, this automatic drum current adjustment is not applied because the drum current is determined by setting the charge grid bias voltage. (The grid bias voltage is set by inputting a voltage correction data for individual high voltage supply board -CTBG in SP mode #62.)

NOTE: This automatic drum current adjustment must be done with a new drum, new corona wires, and a clean corona unit casing. The production line adjusts the drum currents more precisely with a special tool and the factory setting has wider margin against the variation of each OPC drum characteristics than this adjustment procedure. Therefore, the manufacturer recommends not to perform this automatic drum current adjustment unless the high voltage supply board is replaced.

8.5 T&S CORONA CONTROL TIMING (A4 sideways, upper paper tray, black development unit)

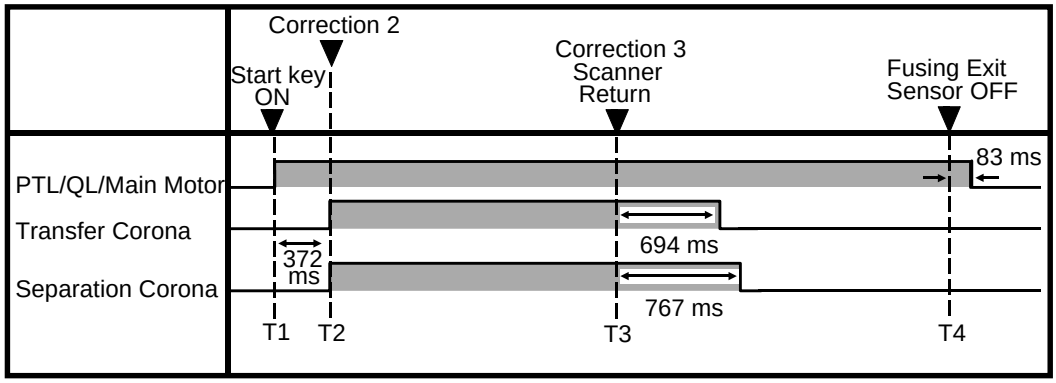

T1: When the start key is pressed, the PTL, QL, and main motor turn on together.

T2: The transfer and separation corona turn on 372ms after the start key is pressed. This timing differs depending on the selected development unit and the paper feeding station.

T3: The transfer corona turns off 694ms after the scanner starts the return movement (correction 3) and the separation corona turns off 767ms after correction 3.

9. DRUM CLEANING

9.1 OVERVIEW

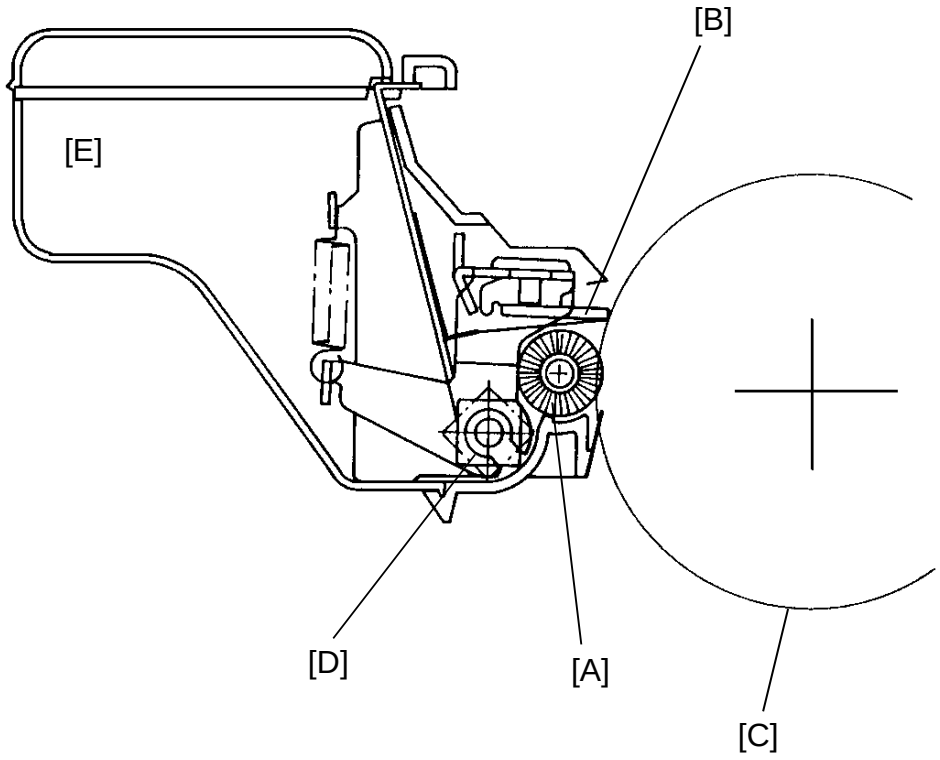

The cleaning brush [A] and cleaning blade [B] remove any toner remaining on the drum [C] after the image is transferred to the paper.

The cleaning brush and the drum move in opposite directions at their point of contact. The cleaning brush removes paper dust and nearly half of the toner from the drum surface to reduce the cleaning load placed on the blade.

The cleaning blade removes the remaining toner. The falling toner catches in the fibers of the cleaning brush and is carried inside the cleaning unit. The toner collection roller [D] carries the used toner to the used toner tank [E].

9.2 DRIVE MECHANISM

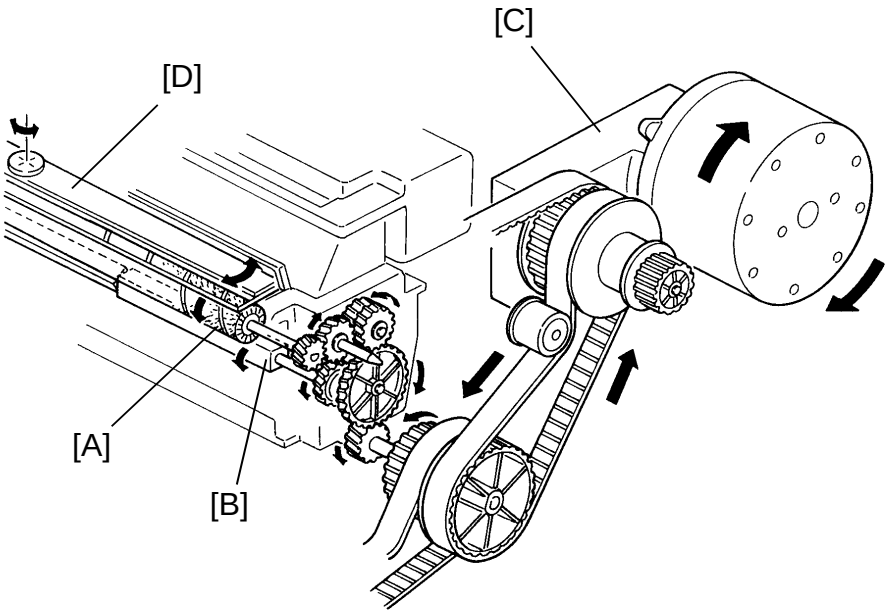

The cleaning brush [A] and the toner collection roller [B] are driven by the main motor [C] through a timing belt and gears. The cleaning brush and the cleaning blade [D] are always touching the drum surface.

The toner collection roller rotates at the same time as the cleaning brush to collect used toner. The cleaning blade is mounted in the center of the blade and is tilted to apply even pressure.

9.3 RELEASE MECHANISM

9.3.1 Cleaning unit Release

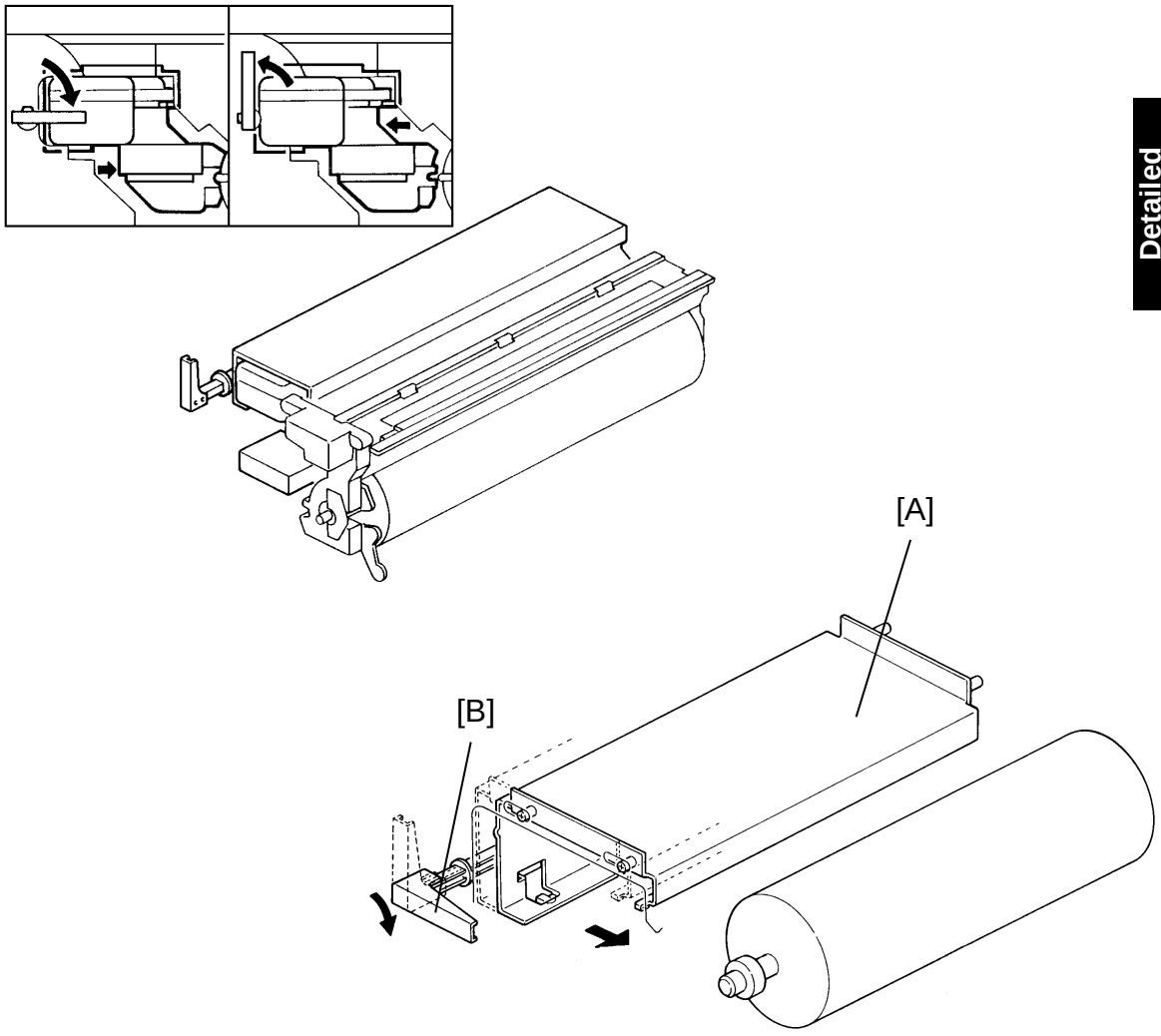

The cleaning unit releases with the cleaning unit guide rail [A] when the cleaning unit release lever [B] is turned counterclockwise. This prevents the drum from being scratched by the cleaning unit, when the cleaning unit is pulled out.

9.3.2 Cleaning Blade Release

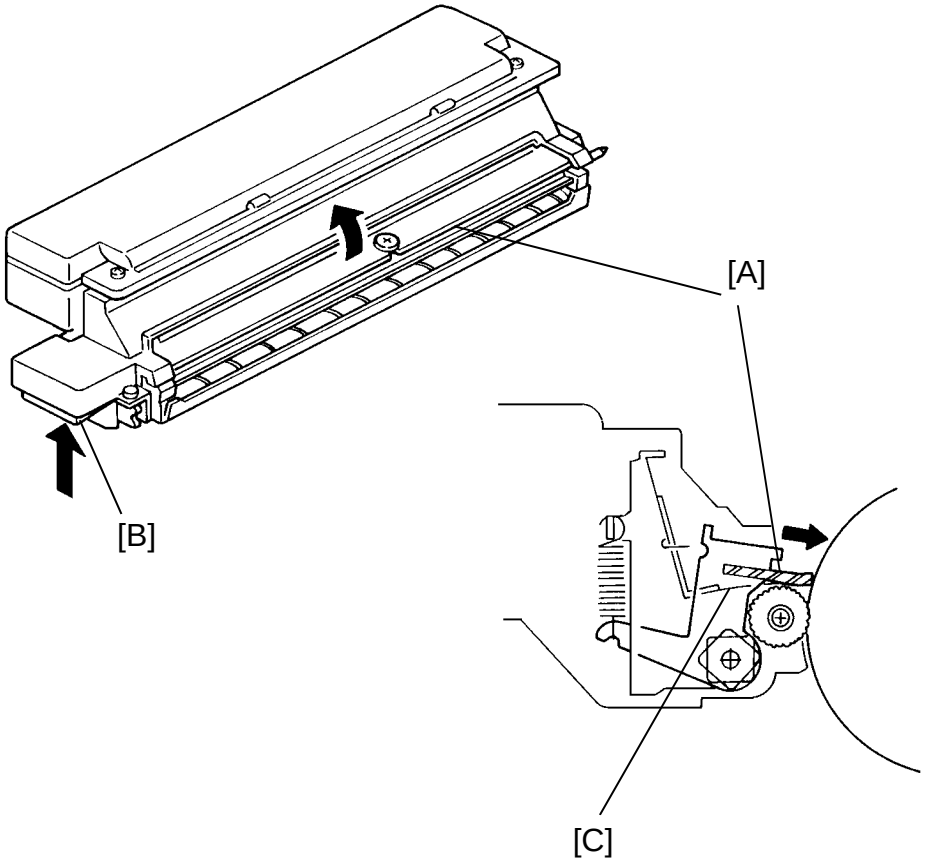

The cleaning blade [A] releases when the cleaning blade release lever [B] is held up. This cleans the edge of the cleaning blade using the blade scraper [C], which is mounted underneath the cleaning blade.

9.4 USED TONER DETECTION

This copier does not use a sensor to detect used toner overflow. Instead, this is determined by software counters.

When the CPU has counted 10 black toner end occurrences meaning that 10 cartridges have been used, the CPU calculates the number of copies per toner cartridge $\underline{n}$.

$$\underline{n} = \frac{\text{Total number of copies (black and color)}}{10}$$

The number of copies per toner cartridge $(\overline{n})$ is used to determine when the used toner tank indicator should be made to blink.

1) $\underline{n} \geq 7{,}975$
   After 250 copies are made, the used toner indicator starts blinking, after another 250 copies are made, it lights continuously.

2) $7975 > \underline{n} \geq 7{,}500$
   After 5,000 copies are made, the used toner indicator starts blinking. After another 250 copies are made, it lights continuously.

3) $\underline{n} < 7{,}500$
   After $\underline{n} \times 0.67$ copies are made, the used toner indicator starts blinking. After another 250 copies are made, it lights continuously.

4) Total number of copies (black and color) = 80,250
   The used toner indicator starts blinking, after 250 copies are made, it lights continuously.

When the used toner tank indicator lights, the start key turns to red and no more copy is made.

NOTE: Under the following conditions, the used toner tank must be emptied and the counter for the number of black toner end occurrences must be reset by SP mode # 83.
1) When performing PM.
2) When an abnormal condition occurs in toner density detection. (The toner end cannot be detected in abnormal condition.)

10. QUENCHING

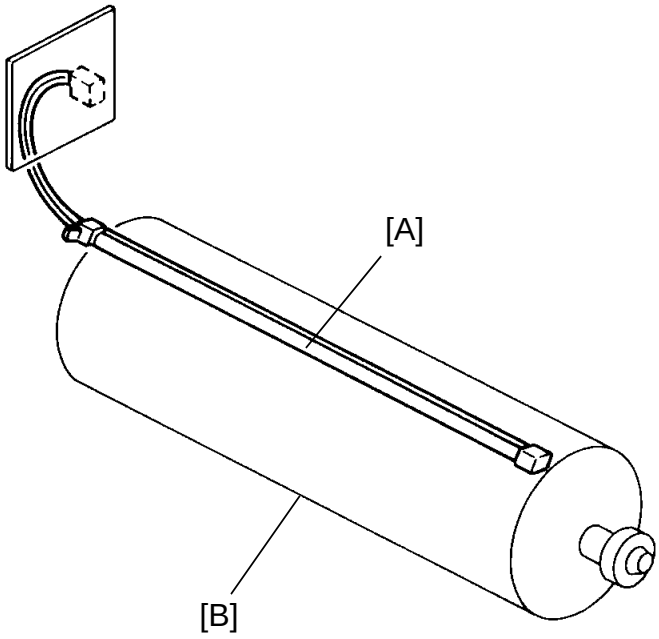

In preparation for the next copy cycle, light from the quenching lamp (QL) [A] neutralizes any charge remaining on the drum [B].

A cold cathode lamp is used for quenching and it is turned on whenever the main motor rotates.
A yellow filter is installed for the QL to reduce ultraviolet light which would cause light fatigue on the OPC drum.

11. PAPER FEED AND REGISTRATION

11.1 OVERVIEW

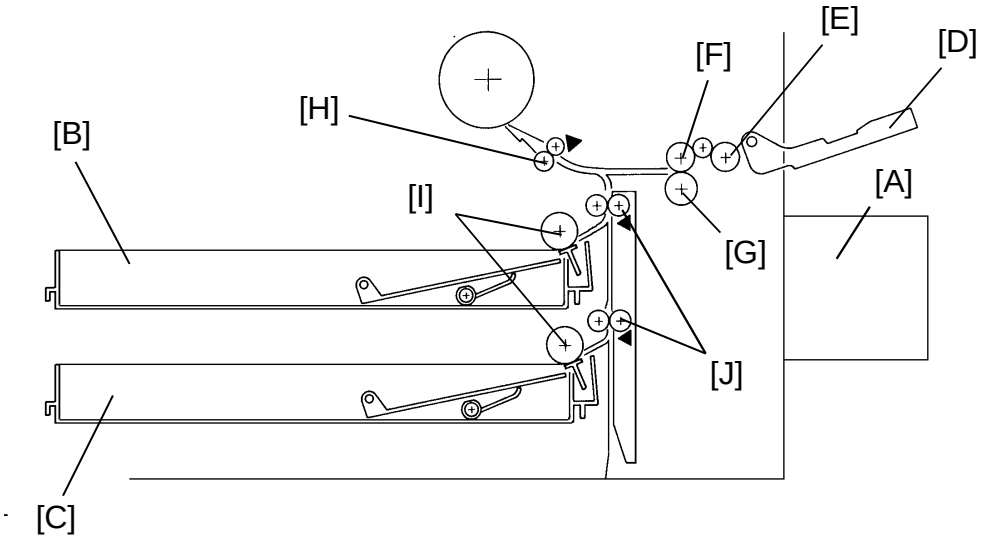

This model has three paper feed stations. The large capacity tray feed station [A] (1000 sheets) is located on the right side of the copier (LCT machine only) and the upper paper tray [B] (non- duplex machine only) and lower paper tray [C] feed stations are located inside the copier. The upper and lower paper trays are drawer trays that holds 250 sheets of paper. Paper can also be fed using the by-pass feed table [D] which utilizes the feed mechanism of the LCT feed station. The by-pass feed table can hold 20 sheets of paper.

The LCT feed station uses an FRR feed system. Rotation of the pick-up roller [E] drives the top sheet of paper from the LCT to the feed and the separation rollers. The feed [F] and separation [G] rollers then take over the paper drive. If more than one sheet is fed by the pick-up roller, the separation roller rotates in the opposite direction and prevents all but the top sheet from passing through to the registration rollers [H].

The upper and lower paper tray stations use the feed roller [I] and friction pad feed mechanism. During paper feed, the top sheet of paper separates from the stack and is fed to the relay rollers [J] then to the registration rollers. The friction pad prevents all but the top sheet from going in.

11.2 FRICTION PAD SYSTEM

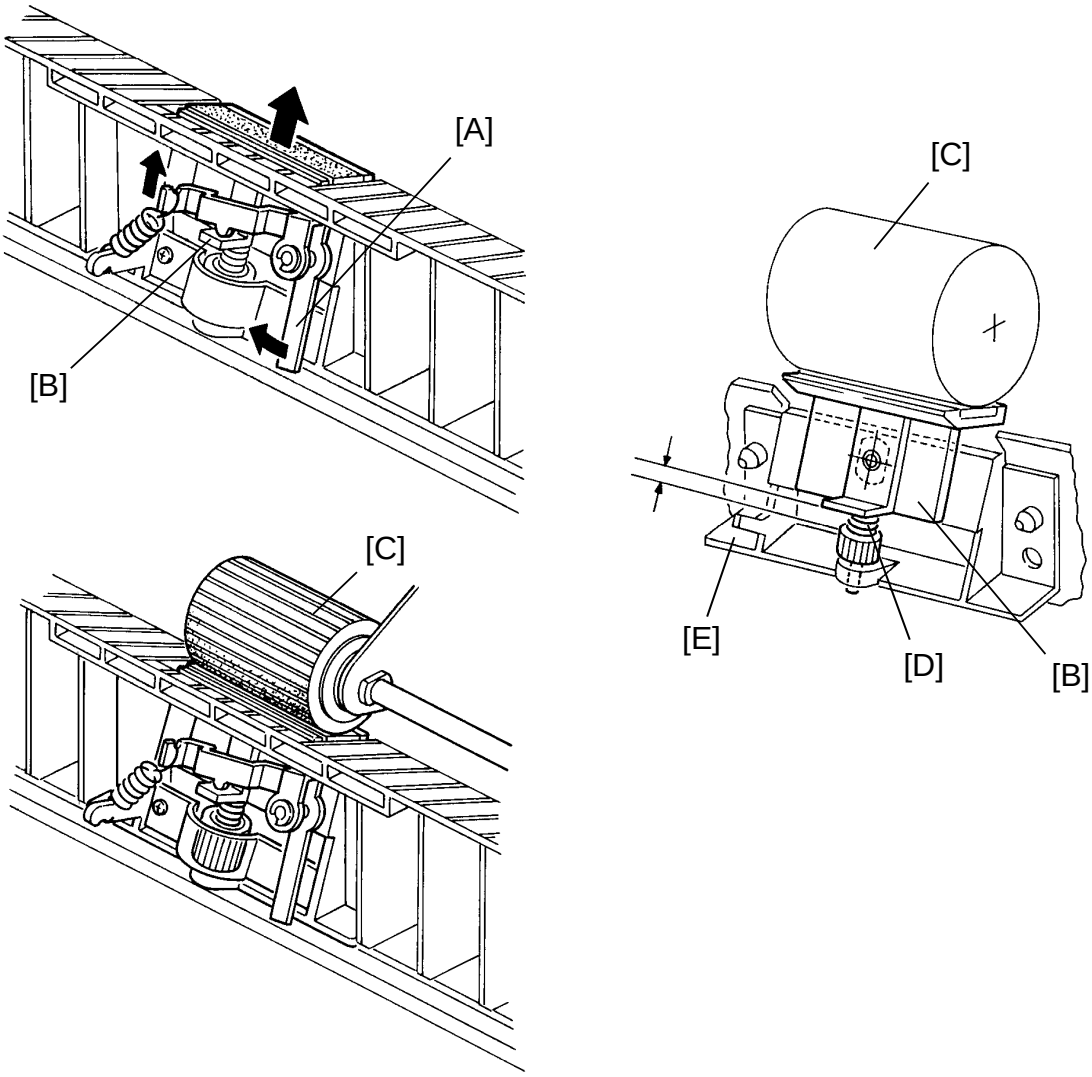

This copier uses a feed roller and friction pad feed system for paper feed from the paper trays. When the paper tray is set in the copier, the pressure release lever [A] is pushed and turns clockwise. Then the friction pad holder [B] is pressed up against the paper feed roller [C]. The friction pad pressure against the paper feed roller is determined by the friction pad pressure spring [D].

This friction pad pressure is applied evenly to the paper feed roller because the friction pad holder is mounted on the mounting bracket [E] with a swivel bushing.

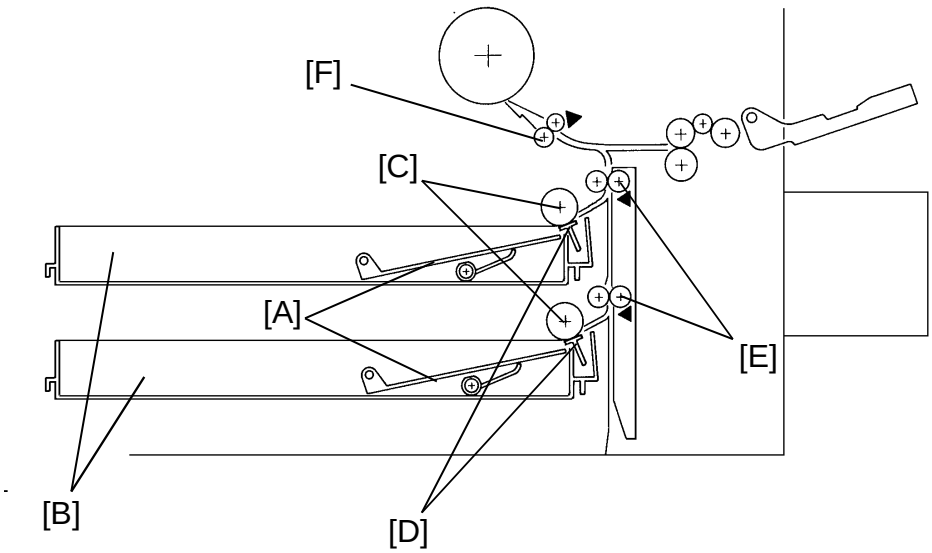

The tray bottom plate [A] is also lifted up when the paper tray [B] is set, and the lead edge of the paper stack is pressed against the paper feed roller [C].

When the feed roller starts turning, it forces the top sheet of the paper stack across the friction pad [D]. The relay rollers [E] which start turning at the same time as the feed roller also transport the paper. The feed roller keeps driving the paper until all but a 50mm trailing edge of paper has passed. Then the relay rollers take over the paper transport until the paper reaches the registration rollers [F]. At that time, the paper slightly buckles; and although the paper feed roller does not have its own driving force (paper feed clutch is off), the feed roller keeps turning as it is driven by the friction between the roller and the moving paper. As the trailing edge clears the lead edge of the paper stack, the feed roller catches the next sheet and starts moving it forward. The feed roller stops turning when the trailing edge of the first sheet leaves the feed roller. The leading edge of the next sheet is then held ready for feeding between the friction pad and feed roller.

Sometime sheets of paper tend to stick together (perhaps due to static electricity or poorly cut edges). When this happens, two sheets may feed between the feed roller and friction pad. However, the friction between the friction pad and the lower sheet is much greater than that between the two sheets of paper; so, the top sheet slips through while the pad holds the lower sheet.

The friction pad edge of the paper entrance side is covered by a thin guide mylar to prevent the lead edge of some paper from being folded by the friction pad.

11.3 FRR FEED SYSTEM

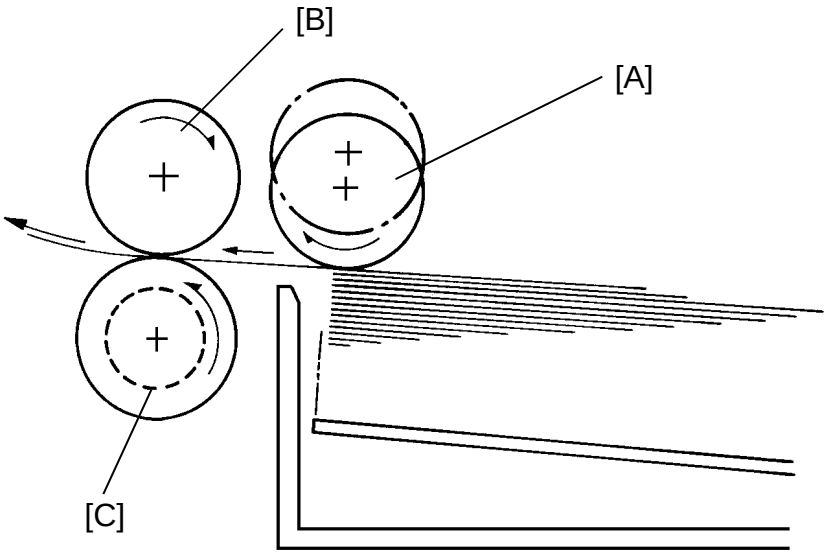

This copier uses an FRR paper feed system which utilizes three rollers.

11.3.1 Pick-up Roller

The pick-up roller [A] is not in contact with the paper stack before it starts feeding paper. Shortly after the Start key is pressed, the pick-up roller drops down and feeds the top sheet between the feed [B] and the separation rollers [C]. At almost the same time that the paper's leading edge arrives at the feed roller, the pick-up roller lifts off the paper stack so that it does not interfere with the operation of the feed and separation rollers. The feed and separation rollers then take over the paper feed process.

11.3.2 Feed and Separation Rollers

There is a one-way bearing inside the feed roller so it can turn only in one direction. The separation roller is driven in the opposite direction to the feed roller. The separation roller, however, is driven through a slip clutch (torque limiter clutch) which allows it to turn in either direction depending on the friction between the rollers. A spring keeps the separation roller in contact with the feed roller.

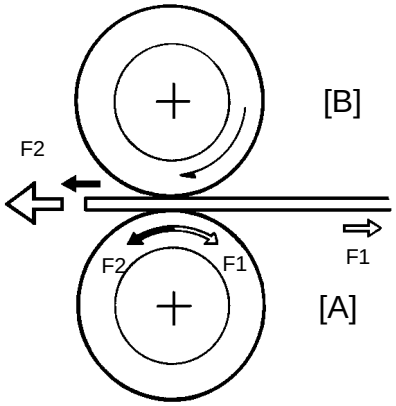

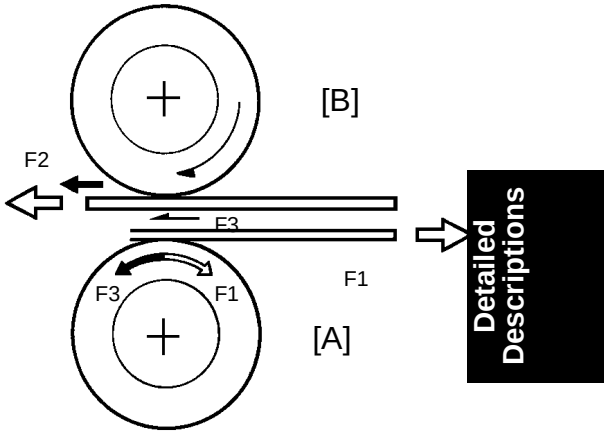

The direction in which the separation roller [A] turns depends on the frictional forces acting on it. The slip clutch applies a constant clockwise force (F1). When there is a single sheet of paper being driven between the rollers, the force of friction between the feed roller [B] and the paper (F2) is greater then F1. So, the separation roller turns counterclockwise.

If two or more sheets are fed between the rollers, the forward force on the second sheet (F3), becomes less than F1 because the friction between the two sheets is small. So, the separation roller starts turning clockwise and drives the second sheet back to the tray.

11.4 PAPER TRAY

11.4.1 Paper Lift Mechanism

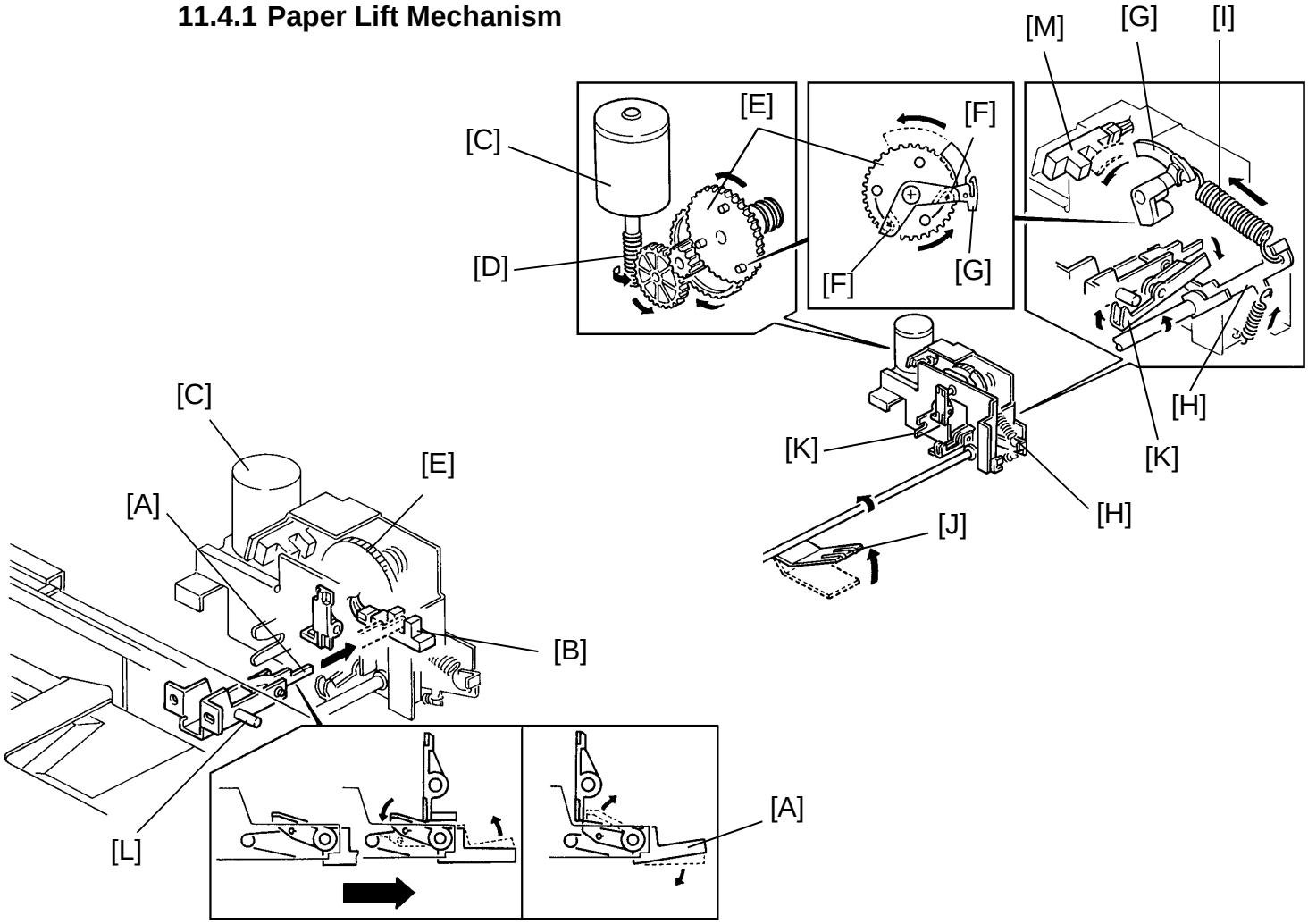

– when setting the paper tray –

When the paper tray is set in the copier, the tray set feeler [A] activates the tray set sensor [B] and the tray lift motor [C] starts turning the worm gear[D]. The rotation is transmitted to the tray lift gear [E] via 2 coupled idle gears. The tray lift gear has 3 projections on its disc surface. As the tray lift gear rotates, 2 of the 3 projections are caught by the coupling hooks [F] of the limit feeler disc [G]. Then the limit feeler disc rotates counterclockwise to pull the tray lift lever [H] via the bottom plate pressure spring [I]. The tray lift arm [J] rotates counterclockwise to lift up the tray bottom plate. At the same time, as the tray lift lever rotates, the tray lock lever [K] rotates up by its own weight and is located at the safety lock position against the tray lock pin [L]. When the limit feeler disc activates the tray upper limit sensor [M], the tray lift motor stops.

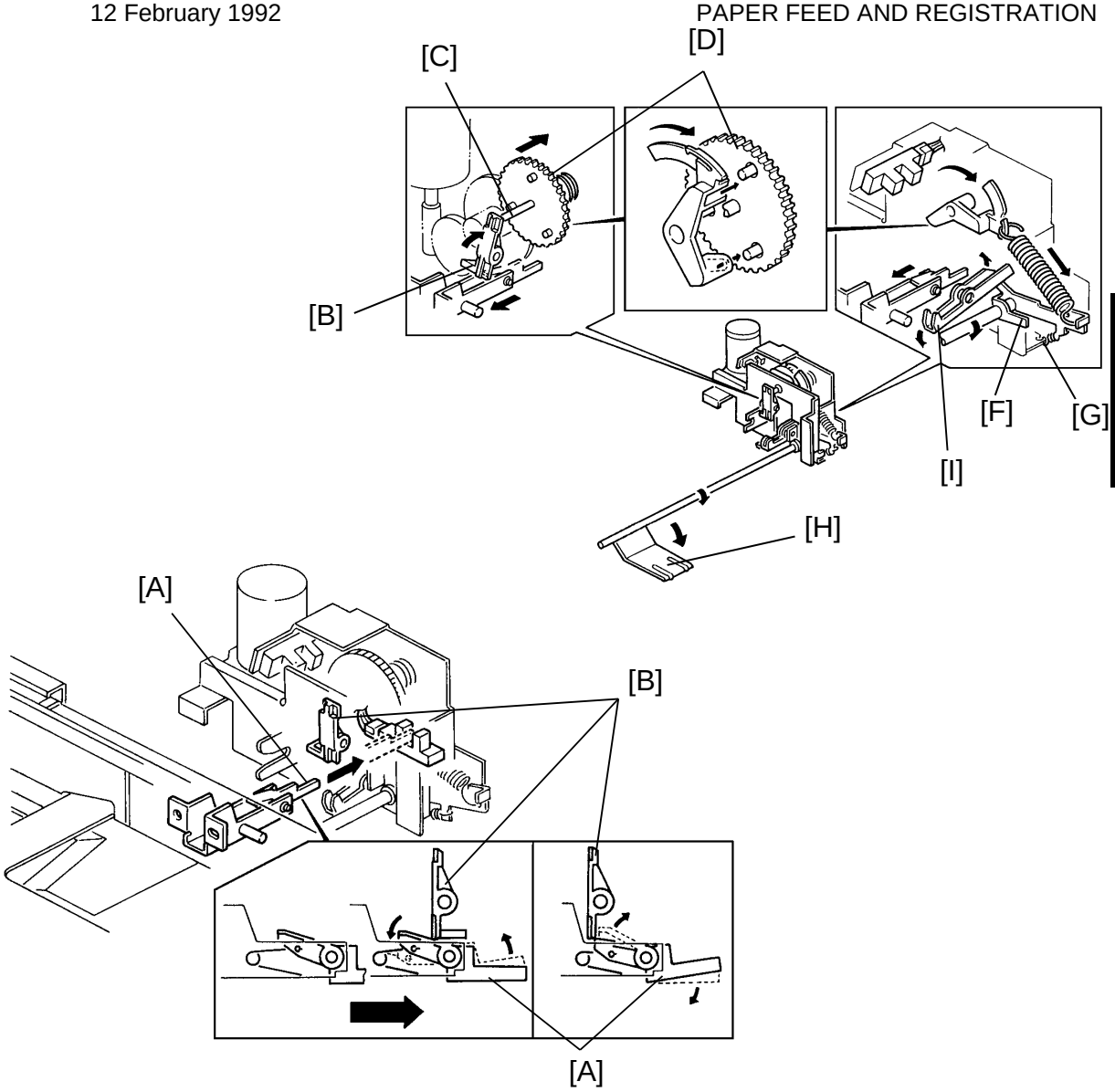

– when pulling out the paper tray –

While the paper tray is being set in position, the operator side of the tray set feeler [A] is pushed down by the tray release lever [B]. When the tray is completely set in position, the operator side of the tray set feeler rotates up and is positioned behind the tray release lever.

When the paper tray is pulled out, the operator side of the tray set feeler pulls the bottom end of the tray release lever. The tray release lever rotates and its upper end pushes back the tray lift gear shaft [C] which is pressed towards the front by the spring. As the coupling between the tray lift gear [D] and the limit feeler disc [E] is released, the tray lift lever [F] rotates back to its lower position by the lever return spring [G] and the weight loaded to the tray lift arm [H]. As the tray lift lever rotates back, it lifts the rear end of the tray lock lever [I] to move it away from the safety lock position.

11.4.2 Paper End Detection

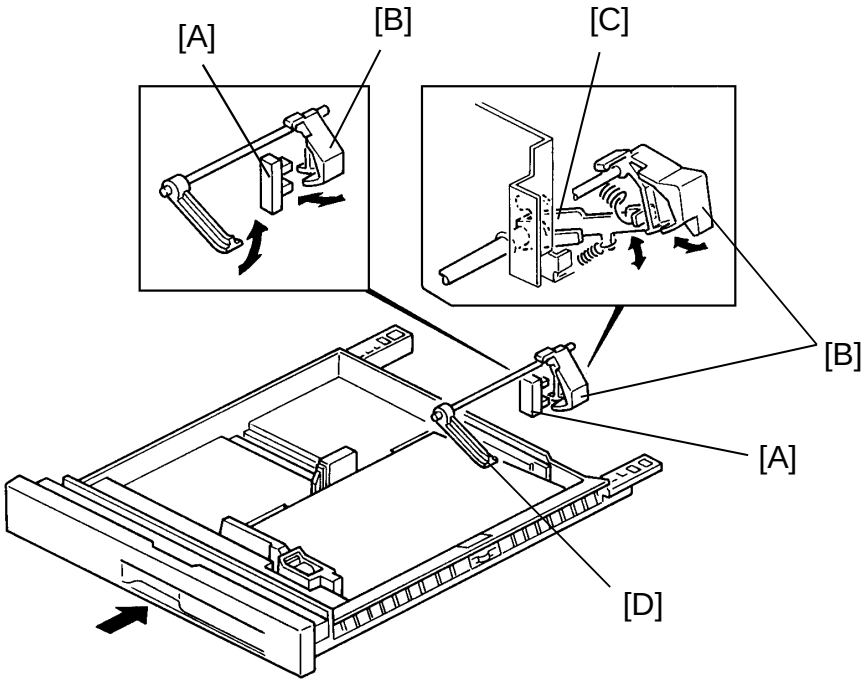

The paper end sensor [A] (photointerruptor) is located on the rear side frame next to the tray lift assembly for each paper tray. When the paper tray is not set in position, the paper end actuator [B] is pushed away from the paper end sensor by the tray lift lever [C].

When the paper tray is set, the tray lift lever rotates and the paper end actuator turns towards the sensor by its own weight. If paper is loaded in the paper tray, the paper end feeler [D] is raised by the paper stack and the paper end sensor is deactivated.

When the paper tray runs out of paper, the paper end feeler drops in the cut out of the tray bottom plate and the paper end sensor is activated. Then the tray lift motor starts the reverse rotation and lowers the tray bottom plate. The tray lift motor stops when the paper end sensor becomes deactivated.

11.4.3 Tray Lock Mechanism

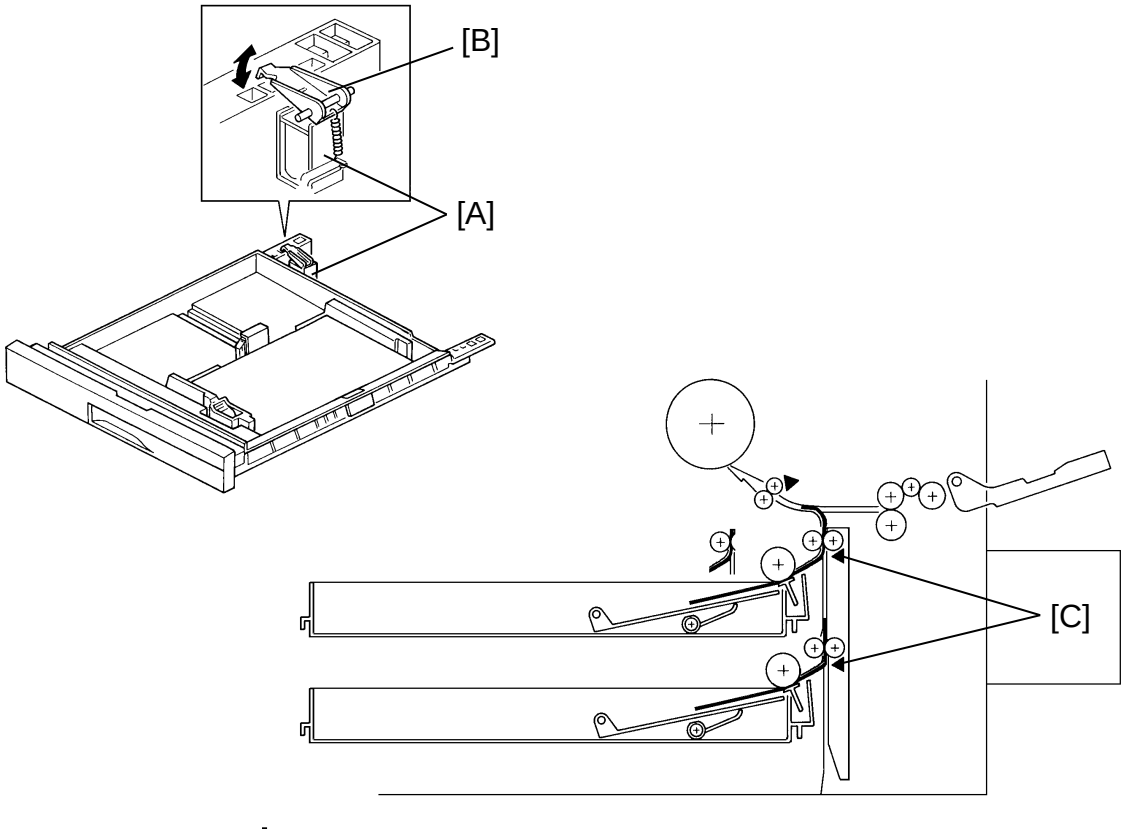

A tray lock solenoid [A] is installed on the rear side frame for each paper tray.

When the start key is pressed, the tray lock solenoid for the selected paper tray is energized and the tray lock lever [B] catches the rear part of the left tray rail. This is to prevent the paper tray from being pulled out while the paper is being fed out.

Also, when a paper jam happens between the paper tray and the relay rollers (the nearest relay sensor [C] is activated) the tray lock solenoid turns on. This is to prevent the jammed paper from being torn to pieces by pulling out the paper tray before clearing the jammed paper.

When jammed paper is cleared and the relay sensor is deactivated, the tray lock solenoid is deenergized even when the front door is open. Then the paper tray can be drawn out.

11.4.4 Paper Size Detection

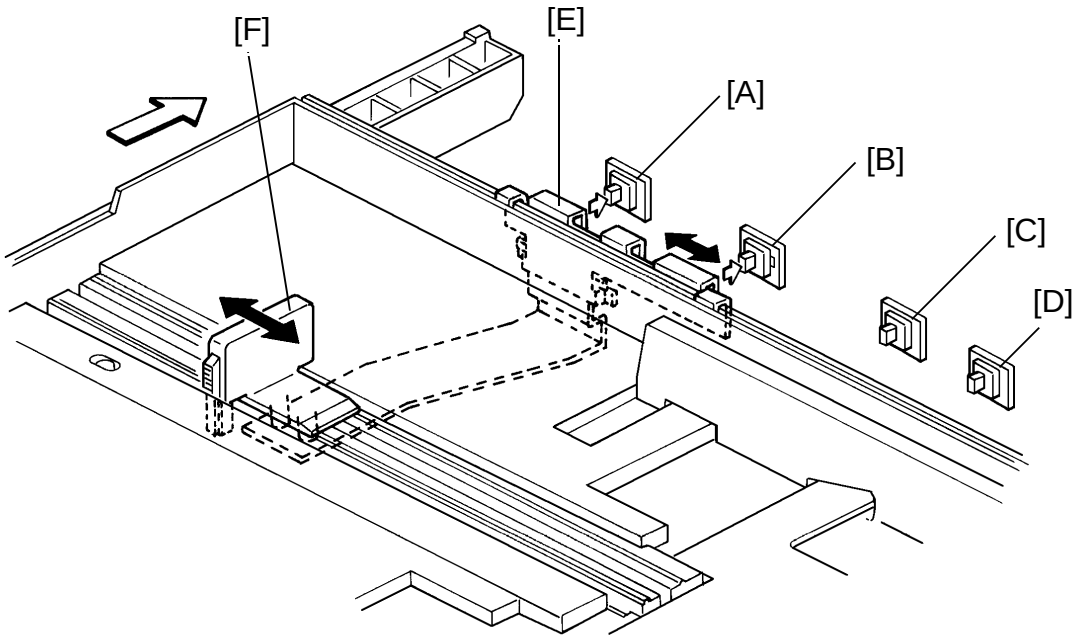

Four paper size switches (SW-A [A], SW-B [B], SW-C [C], SW-D [D]) on the rear side frame are used for detecting the paper size loaded in the paper tray. The paper size switches are actuated by actuator plate [E] on the rear of the paper tray. The paper end guide [F] is connected to the actuator plate. When the paper end guide is pushed against the paper stack loaded in the tray, the actuator plate slides into position and actuates the appropriate paper size switches.

[Paper Size Detection Table]

Paper Size	Switch				Size Indication
	4	5	6	7	
A3	0	1	1	1	A3
F (8" x 13")	1	0	1	1	F
A4 lengthwise	1	0	0	1	A4
A4 sideways	1	1	0	1	A4
B4	0	0	1	1	B4
11" x 17"	0	1	1	1	11" x 17"
11" x 8 1/2"	1	1	1	0	11" x 8 1/2"
8 1/2" x 11"	1	1	0	1	8 1/2" x 11"
8 1/2" x 14"	1	0	1	1	8 1/2" x 14"

0: Low (ON)
1: High (OFF)

11.5 LARGE CAPACITY TRAY

11.5.1 Paper Lift Mechanism

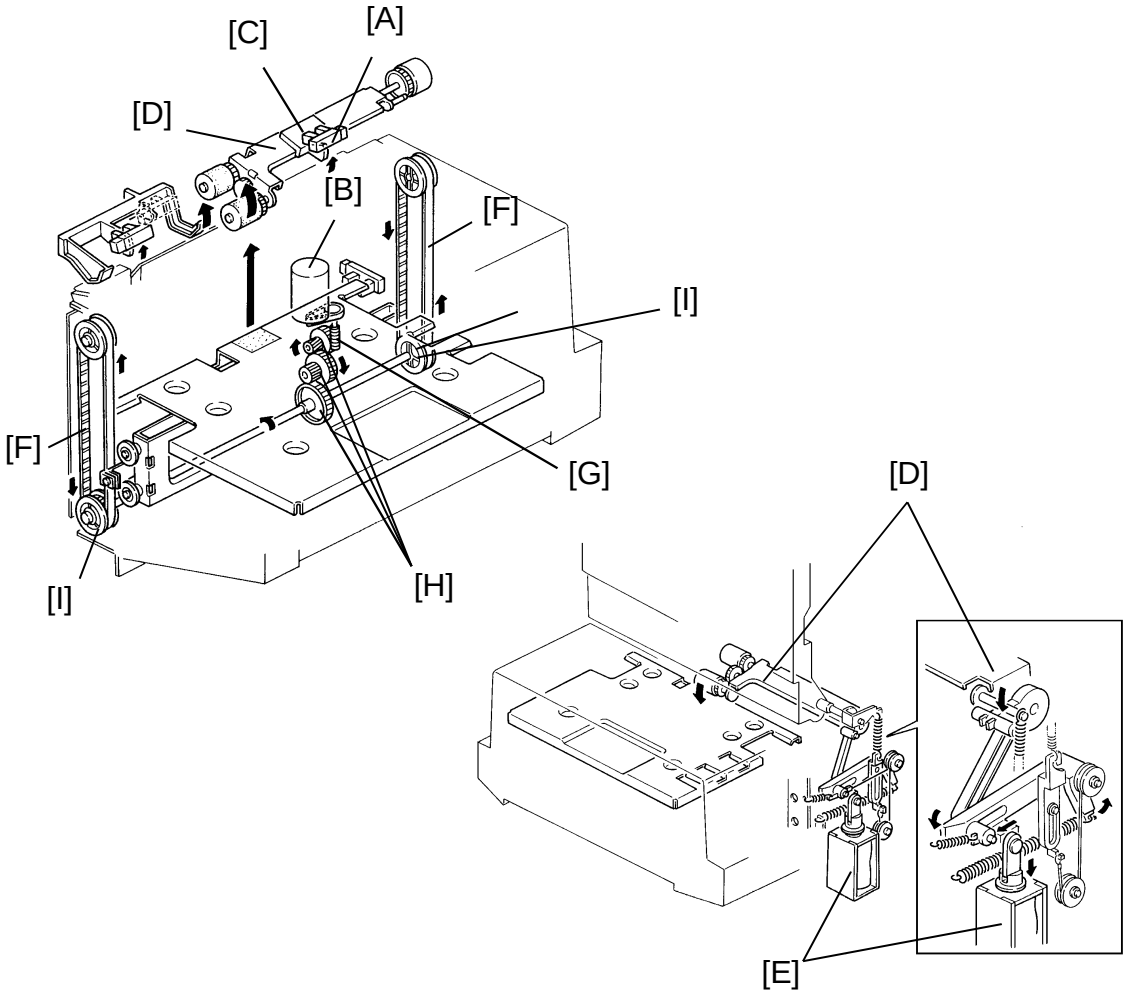

There is an LCT upper limit sensor [A] above the paper feed upper guide plate to control the LCT lift motor[B]. The actuator [C] for the sensor is located on the pick-up roller bracket [D]. Normally the pick-up solenoid [E] is off and the pick-up roller bracket stays in the up position. At this time the LCT upper limit sensor is activated.

When the LCT top cover is closed, the LCT cover switches turn on and the pick-up solenoid is energized. The pick-up roller bracket lowers and the LCT upper limit sensor is deactivated. Then the LCT lift motor starts turning and the rotation is transmitted to the LCT drive belt [F] via worm gear [G], diagonal gears[H], and belt drive pulleys [I]. The LCT bottom plate, which is fixed on the LCT drive belts by belt clamps, is lifted up.

When the top sheet of the paper stack raises the pick-up roller, the LCT upper limit sensor is activated and the LCT lift motor stops. Shortly after, the pick-up solenoid turns off and the pick-up roller goes back to the up position.

During the copy cycle the pick-up roller is lowered to prepare for feeding the next sheet of paper. If the top sheet level of the paper stack lowers, the LCT upper limit sensor becomes deactivated and the LCT lift motor turns on to maintain the top sheet level.

11.5.2 Paper End Detection

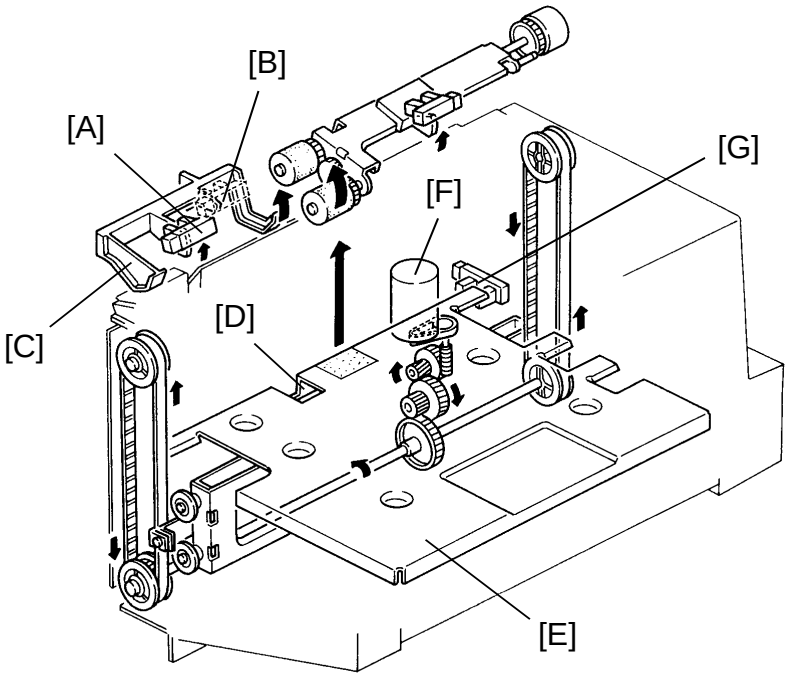

There are two paper end sensors for the FRR feed station above the paper feed upper guide plate. One [A] is for the LCT and the other [B] is for the by-pass feed table. The paper end feeler plate [C] is common for both paper end sensors and it has two actuators for them.

When there is paper in the LCT, the paper end feeler is kept up by the paper and the LCT paper end sensor is activated.

When the LCT runs out of paper, the paper end feeler drops into the cut out [D] of the LCT bottom plate [E] and the LCT paper end sensor is deactivated. Then the LCT lift motor [F] starts the reverse rotation to lower the LCT bottom plate. When the LCT lower limit sensor [G] is activated by the bottom plate, the LCT lift motor stops.

11.5.3 Paper Size Setting

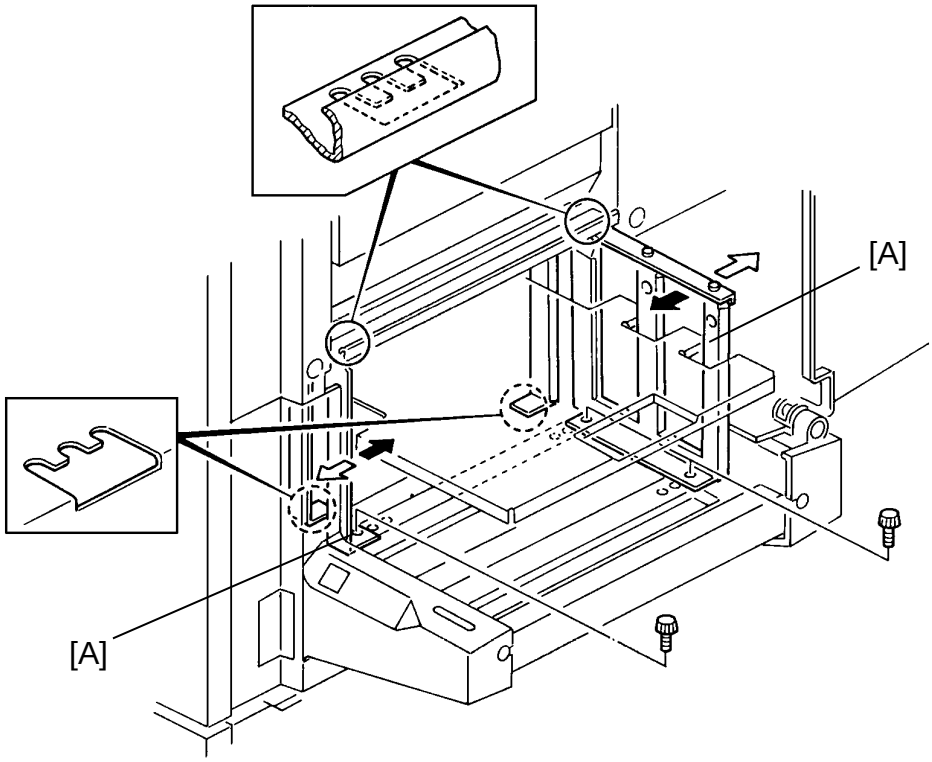

The LCT can hold three paper sizes (A4 sideways, B5 sideways, and 11" X 8 1/2") by changing the side fence [A] position. However, there is no paper size switches for the LCT. The paper size of the LCT is set by SP mode #73.

SP73: LCT Paper Size

0: A4 1: B5 2: LT (11" X 8 1/2")

The default setting for A3/A4 machine is "0" and that for LT/DLT machine is "2".

11.6 BY-PASS FEED TABLE

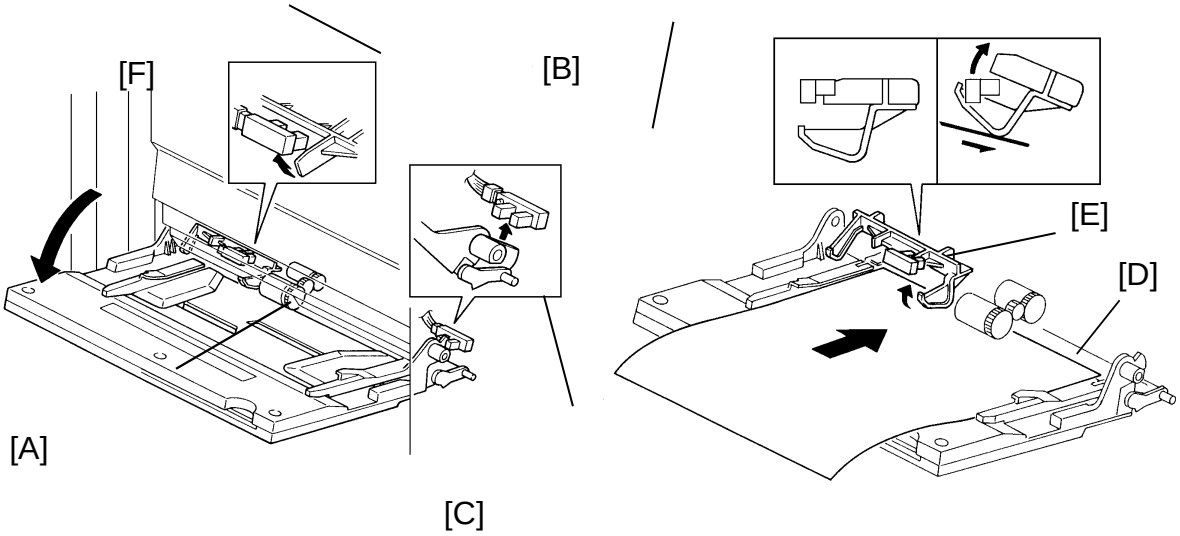

The by-pass feed table [A] uses the FRR feed system for feeding non-standard sized paper, thick paper, and application paper such as OHP sheet, translucent paper, etc.

When the by-pass feed table is opened, the by-pass feed table sensor [B] is activated by the by-pass feed side plate [C]. Then the CPU lights the by-pass feed indicator on the operation panel.

On this model, opening the by-pass feed table does not shift the mode into the interrupt mode. The selected modes and input data from before opening the by-pass feed table remain. Also other paper trays can be selected while the by-pass feed table is open.

While the by-pass feed table is being opened, the front side of the by-pass feed lower guide plate [D] lifts up the paper end feeler [E] to the detect position. When there is no paper on the by-pass feed table, the paper end feeler is positioned in the cut out of the lower guide plate and the by-pass feed paper end sensor [F] is deactivated. When the paper is set on the by-pass feed table, the paper end feeler is raised by the paper and the paper end sensor becomes activated. The CPU turns off the paper end indicator, turns the start key from red to green, and sounds the beeper once.

11.6.1 Pick-up Roller Position for Non-LCT Machine

The pick-up roller position of the non-LCT machine is higher than that of the LCT machine when the by-pass feed table is closed. The position is designed only for the by-pass feed table. Therefore, there is no pick-up roller lift mechanism while opening the by-pass feed table.

11.6.2 Pick-up Roller Position for LCT Machine

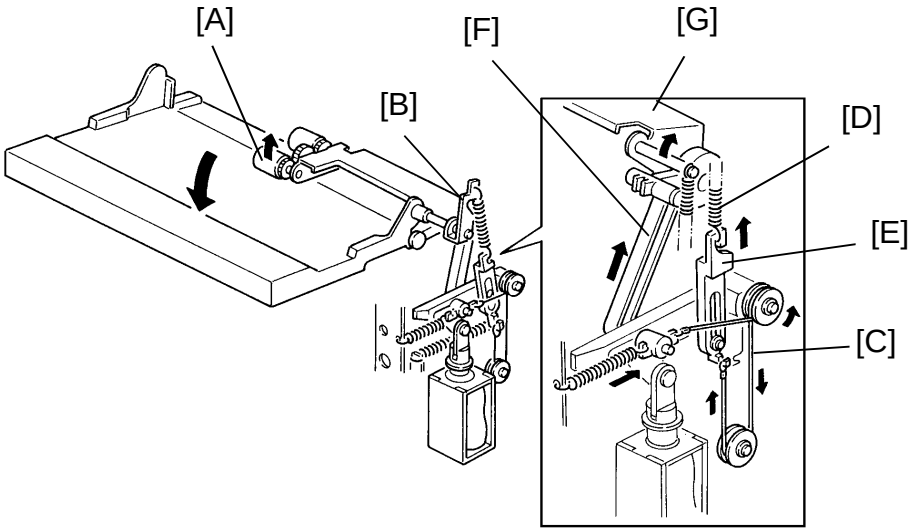

For the LCT machine the pick-up roller [A] is positioned for feeding paper from the LCT when the by-pass feed table is closed.

When the by-pass feed table is opened, the pick-up roller lift lever [B] fixed on the by-pass feed table shaft rotates counterclockwise. This rotation lifts up the wire [C] through the lift spring [D] and the junction plate [E]. The other end of the wire pulls the lower end of the pick-up roller lift slider [F]. This movement lifts up the pick-up roller bracket [G] and the pick-up roller is positioned to be ready for feeding paper from the by- pass feed table.

11.7 PAPER FEED AND REGISTRATION DRIVE MECHANISM

11.7.1 Friction Pad Feed and Registration Drive Mechanism

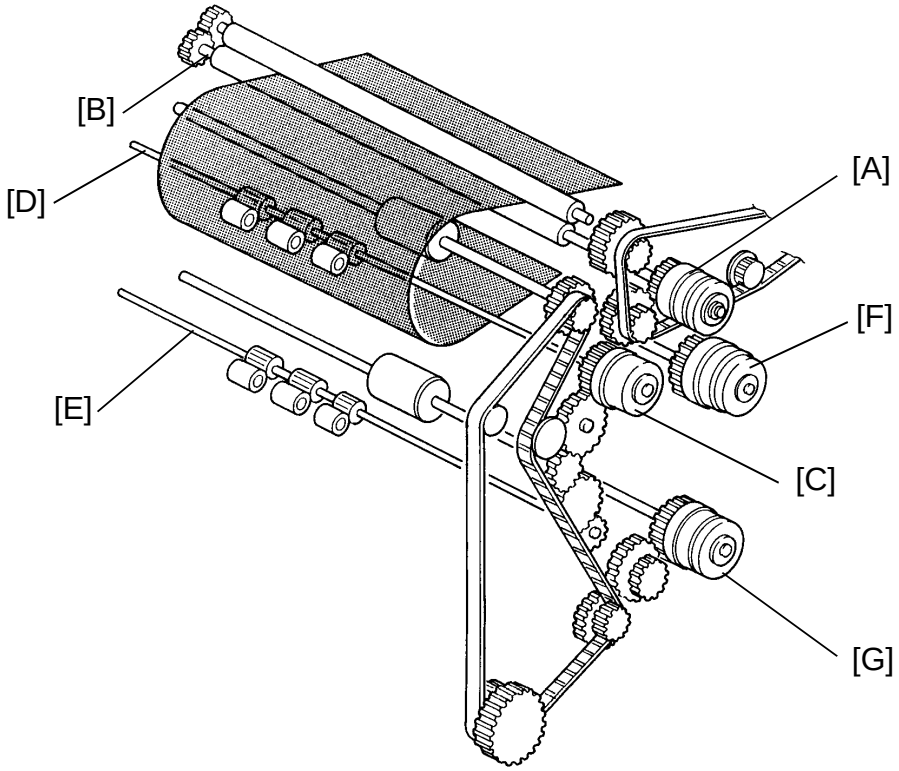

Through several timing pulleys and timing belts, main motor rotation is transmitted to the registration, feed relay, upper paper feed (non-duplex machine only), and lower paper feed clutches.

The registration clutch [A] is located on the lower registration roller shaft [B]. The feed relay clutch [C] is located on the upper relay roller shaft [D]. The rotation of the upper relay roller shaft is transmitted to the lower relay roller shaft [E] via several idle gears. The upper and lower paper feed clutches [F,G] are located on the paper feed roller shafts.

The CPU controls the rotation of these rollers in the paper path by turning the respective clutches on and off.

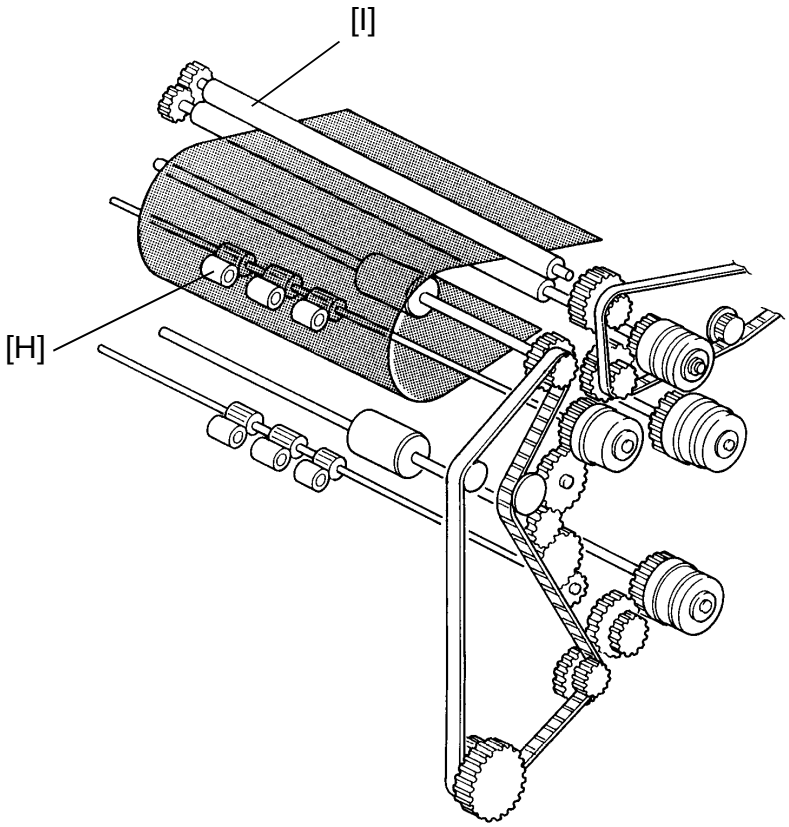

The registration rollers have two functions. One is aligning the lead edge of the paper with the leading edge of the latent image on the drum with the lead edge of paper. When the CPU receives the lead edge signal from the I/O CPU, the registration clutch turns on 364 ms after that. It turns off 115 ms after the trailing edge of paper is detected by the registration sensor.

The other function is to correct skewing of paper fed from the trays. The feed relay clutch turns off a certain time after the registration sensor detects the lead edge of the paper, making a little buckle on the paper between the upper relay rollers [H] and the registration rollers [I]. The timing for turning off the feed relay clutch differs for each paper tray and it can be changed by SP mode.

The registration roller pressure springs are different at the front and the rear to prevent skewing during transportation. The front spring is a little stronger and is black color.

11.7.2 FRR Feed Drive Mechanism

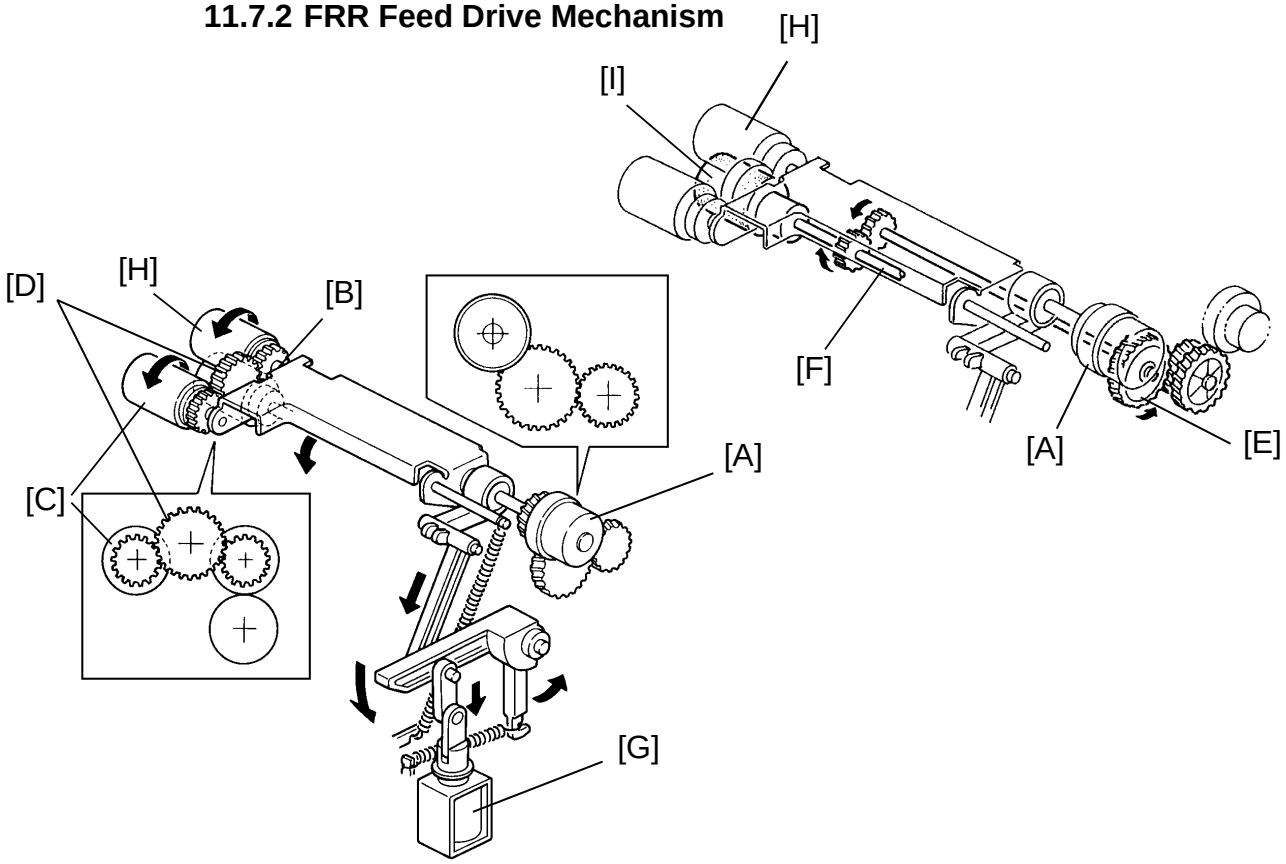

The rotation of the main motor is first transmitted to the registration clutch, and then is transmitted to the by-pass feed clutch [A] via several idle gears. The feed roller shaft [B] and the pick-up roller [C] turn together because they are engaged by the idle gear [D]. One of the gears [E] between the registration clutch and the by-pass feed clutch is used to drive the separation roller shaft [F] (see the above illustration). This shaft is always turning when the main motor is on.

When the start key is pressed, the pick-up solenoid [G] is energized at the same time as the main motor, and the pick-up roller lowers to make contact with the top sheet of the paper stack. Shortly after that, the by-pass feed clutch turns on, and the pick-up roller and the feed roller start moving the top sheet of paper. When the lead edge of the paper passes between the feed roller [H] and the separation roller [I], the pick-up solenoid de-energizes to lift up the pick-up roller. The feed roller stops turning a certain time after the registration sensor detects the lead edge of the paper, causing a little buckle between the feed roller and the registration rollers.

In case of using the LCT, after the trailing edge passes under the pick-up roller, the pick-up roller lowers onto the paper stack again in preparation for the next copy cycle. In case of using the by-pass feed table, when the registration sensor detects the trailing edge of the paper, the pick-up roller lowers.

11.8 PAPER FEED AND MISFEED TIMING

<A4 Sideways, Full Size>

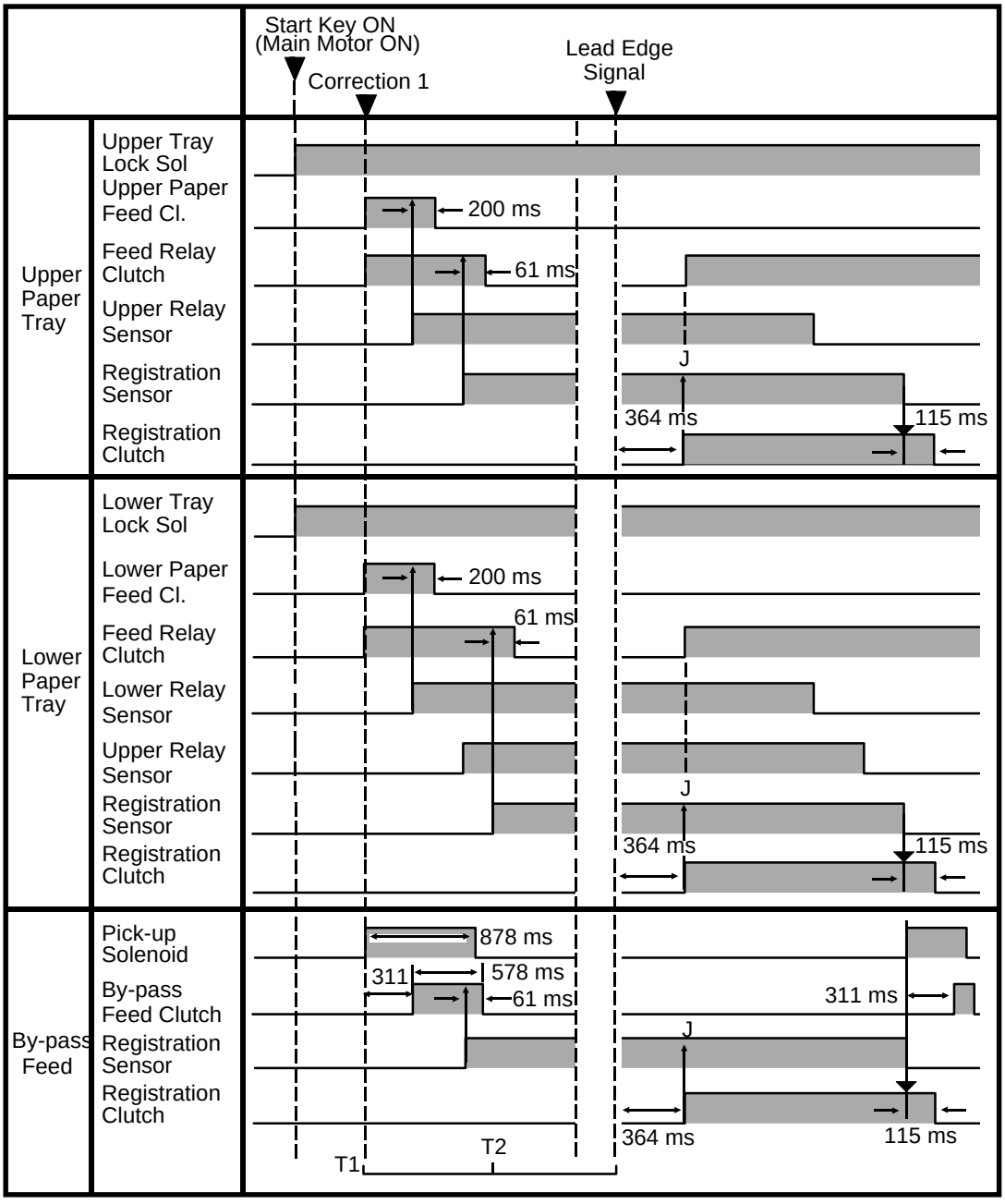

T1: The time from when the start key is pressed until the paper feed clutch turns on differs depending on the paper feeding station and the selected development unit. This is to have enough time for cleaning the drum surface before feeding the paper.

Paper Feeding Station		Black Dev. Unit	Color Dev. Unit
Upper Paper Tray		200 ms	3867 ms
Lower Paper Tray		27ms	3339 ms
By-pass Feed Table		255 ms	3922 ms
Paper Tray Unit	Paper Tray - 1	27 ms	2394 ms
	Paper Tray - 2	27 ms	1839 ms
	Paper Tray - 3	27 ms	1283 ms

T2: The timing from paper feed start until the main CPU receives the Lead Edge signal differs depending on the paper feeding station.

Paper Feeding Station		Black Dev. Unit
Upper Paper Tray		172 ms + (555 ms)
Lower Paper Tray		728 ms + (555 ms)
By-pass Feed Table		305 ms + (555 ms)
Paper Tray Unit	Paper Tray - 1	1728 ms + (555 ms)
	Paper Tray - 2	2284 ms + (555 ms)
	Paper Tray - 3	2840 ms + (555 ms)

J: On check for the registration sensor

12. IMAGE FUSING

12.1 OVERVIEW

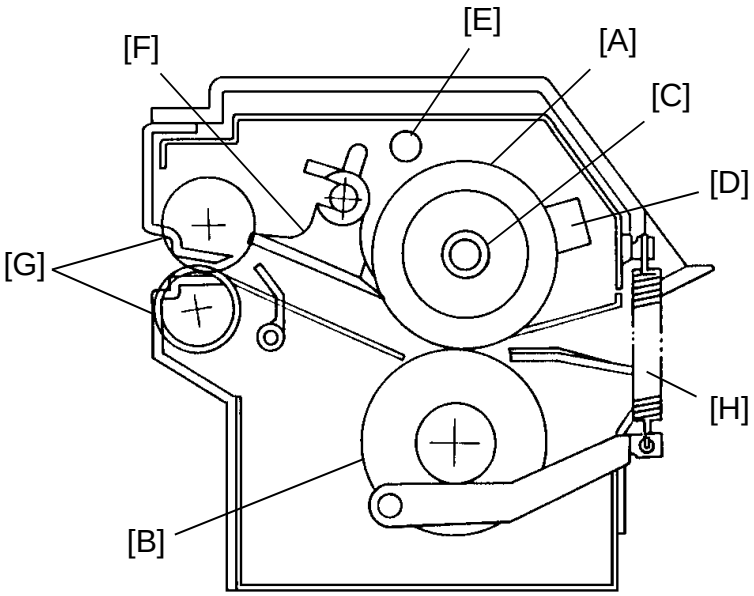

After the image is transfered, the copy paper enters the fusing unit. Then the image is fused to the copy paper by a heat and pressure process through the use of a hot roller [A] and pressure roller [B].

The fusing lamp [C] located inside the hot roller is turned on and off to maintain the operating temperature of 185°C. The CPU monitors the hot roller surface temperature through a thermistor [D] which is in contact with the hot roller's surface. A thermofuse [E] protects the fusing unit form overheating.

This model uses an oilless hot roller system, and does not have a hot roller cleaning mechanism.

The hot roller strippers [F] separate the copy paper from the hot roller and direct it to the exit rollers [G]. The exit sensor monitors the progress of the copy paper through the fusing unit and acts as a misfeed detector while the exit rollers drive the copy paper to the copy tray. When the sorter is installed, the paper sensor on the sorter also functions as a misfeed detector.

The hook positions of the pressure lever tension springs [H] adjust the roller pressure.

12.2 FUSING DRIVE RELEASE MECHANISM

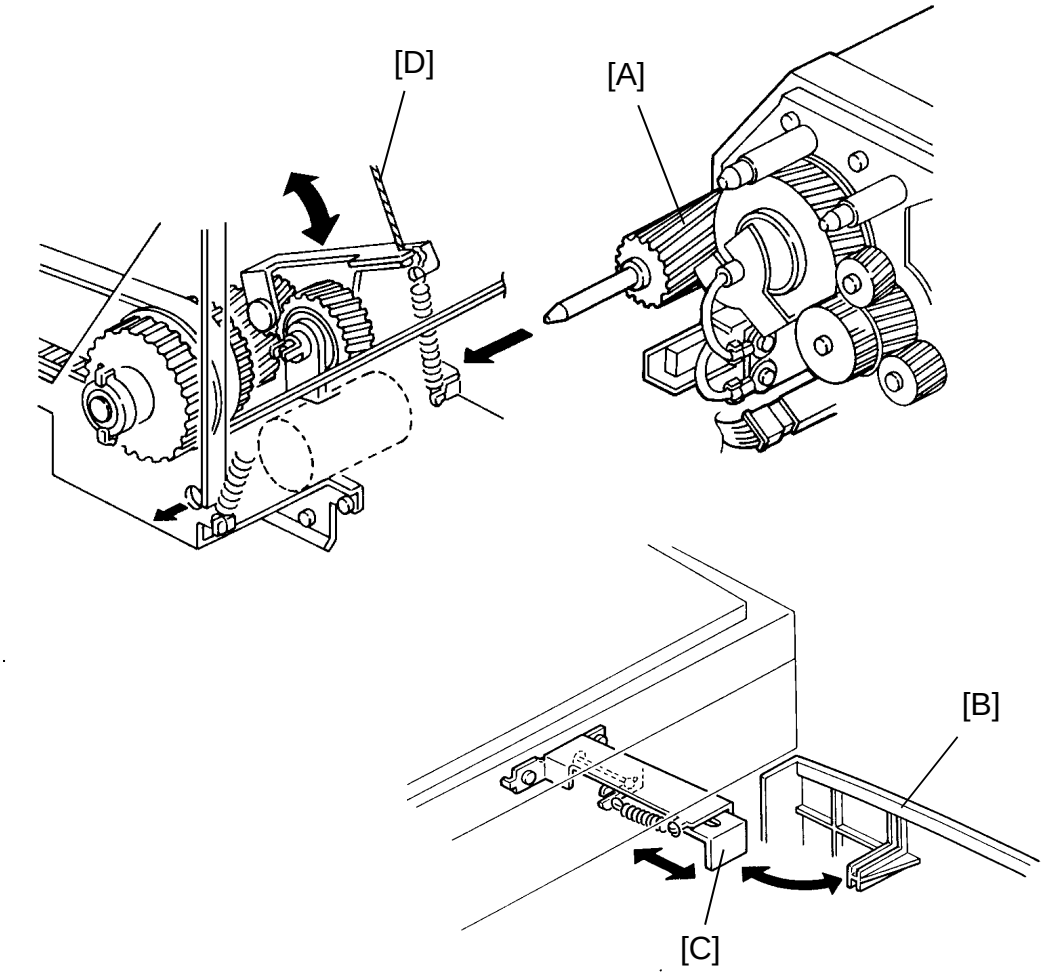

The fusing unit drive release mechanism automatically disengages the fusing unit drive gear [A] when the front cover [B] is opened. This allows the fusing unit drive gear to rotate freely so that misfed paper can be easily removed.

When the front cover is opened, the actuator plate [C] pulls release wire [D] and the fusing unit drive gear is disengaged.

12.3 FUSING ENTRANCE GUIDE SHIFT MECHANISM

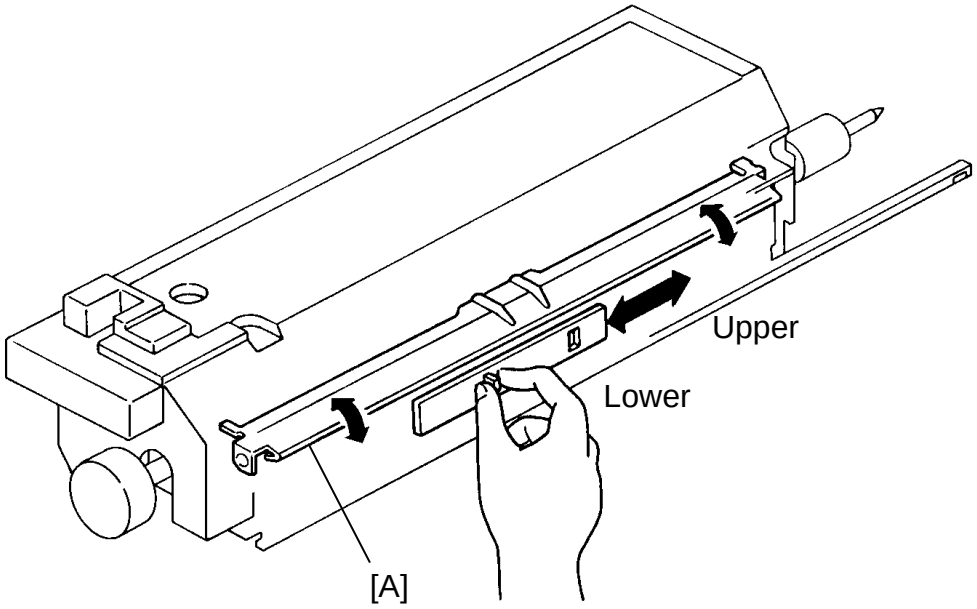

The entrance guide [A] for this machine is adjustable for thick or thin paper.

With thin paper, set the entrance guide in the upper position (standard position). This slightly lengthens the paper path which prevents the paper from creasing in the fusing unit. With thick paper, set the entrance guide in the lower position.

This is because thick paper does not bend as easily, and is therefore less prone to creasing. Also, the lower setting allows more direct access to the gap between the fusing and pressure rollers. This prevents thick paper from buckling against the fusing roller, which can cause blurring at the leading edge of the copy.

12.4 FUSING LAMP CONTROL

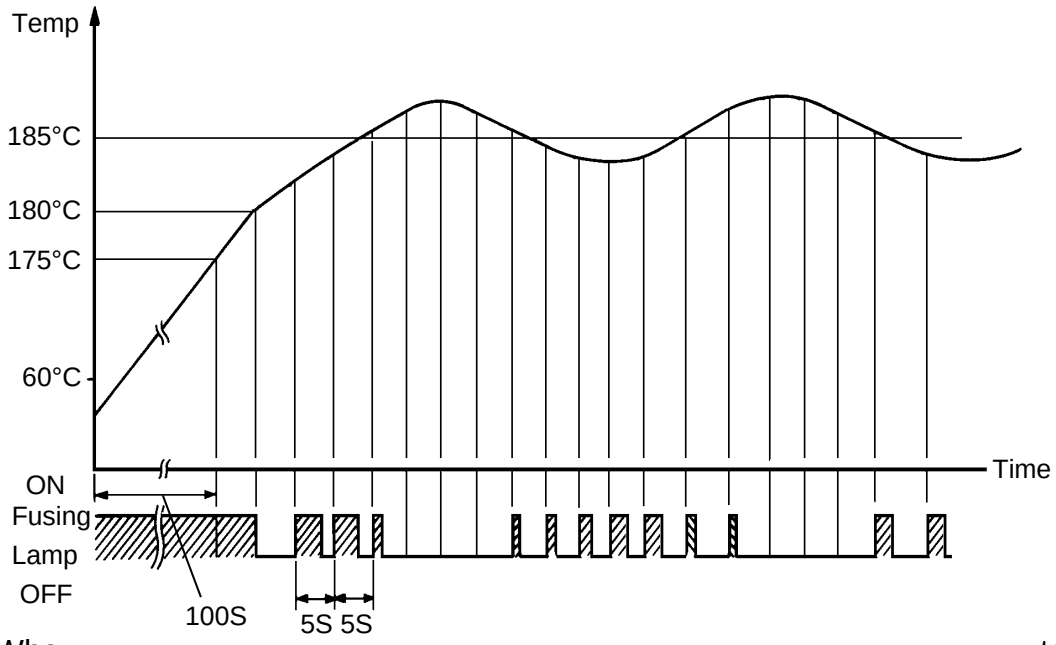

When the main switch is turned on the CPU starts sending a trigger pulse to the fusing control circuit to turn on the fusing lamp.

When the CPU detects a fusing temperature of 175°C through the thermistor, the copier starts fusing idling. When the fusing idling finishes, the warm-up period is completed and the Ready indicator turns on. This should take less than 110 seconds. If the fusing temperature is above 60°C when the main switch is turned on, the copier does not go into the fusing idling mode.

When the fusing temperature reaches 180°C the CPU changes the fusing lamp on/off check cycle from every 1 second to every 5 seconds.

The CPU also changes the fusing lamp on period every check cycle. The change is calculated according to the result of the previous check. This keeps the fusing temperature as close as possible to the target temperature (185°C).

If the fusing lamp (830W) is turned on or off while the exposure lamp is on, the power supplied to the exposure lamp may fluctuate, possibly degrading the copy image.

To prevent this, the fusing lamp does not change while the exposure lamp is on; it stays either on or off.

This copier controls the fusing temperature in zero cross control mode as a standard. It can be changed to phase control mode by SP29 as necessary.

13. DUPLEX

13.1 OVERVIEW

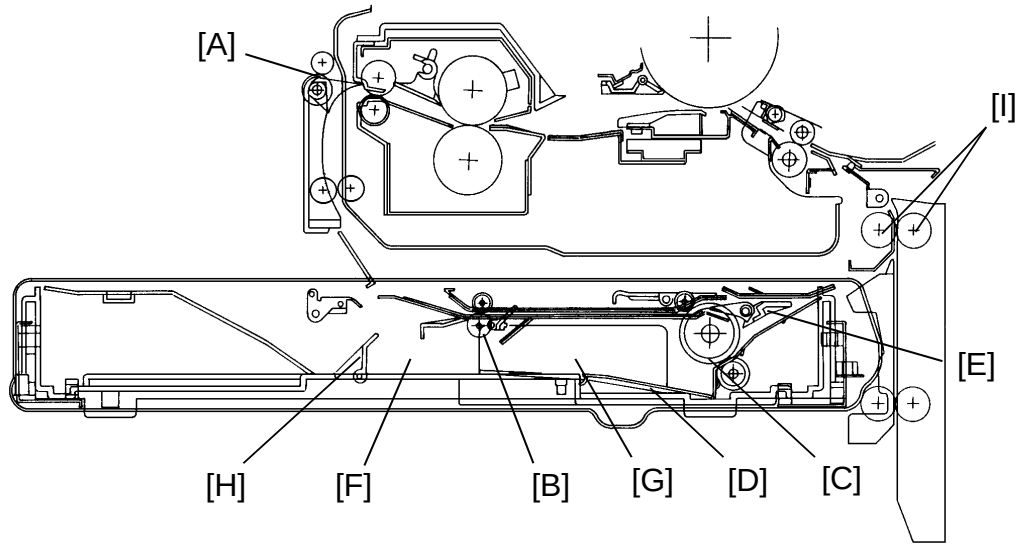

The duplex tray unit is used for multiple 2-sided, single 2-sided, and single image overlay copying.

When the registration clutch turns on, the junction gate [A] rotates up to direct the copy to the duplex tray. Shortly after the fusing exit sensor detects the lead edge of the paper, the entrance roller [B] and duplex feed roller [C] start to rotate. At the same time, the duplex bottom plate [D] lowers.

13.1.1 Multiple 2-sided Copy

In multiple 2-sided copying mode, the turn gate [E] rotates up to direct the copy to the duplex stack section [F].

After the copy is delivered to the duplex stack section, the jogger fences [G] and end fence [H] move inward to square the copy stack, then the jogger side fences move back 5 mm and the jogger end fence moves back 8 mm. After the final copy is delivered to the stack section, the jogger and end fences remain against the paper stack.

Soon after the final copy is squared by the jogger and end fences, the duplex bottom plate raises up to the final position and the duplex feed rollers start rotating counterclockwise (front view) to feed the copy to the relay rollers [I]. Second side copying is then made with the copy following the upper paper tray feed station paper path.

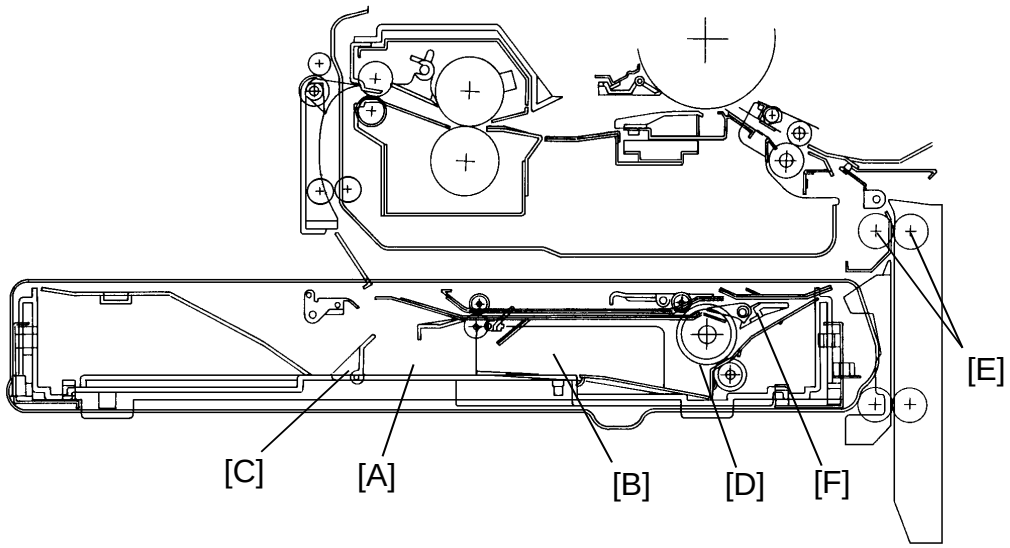

13.1.2 Single 2-sided Copy

The sheet, except for the multiple 2-sided copy of A4, B5 or 81/2" x 11" sideways, can be used for single 2-sided copying.

In single 2-sided copying mode, the same operation as in multiple 2-sided copying mode is made until the copy is directed to the duplex stack section [A].

However, the jogger fences [B] move outward and the end fence [C] lowers. The copy advances over the lowered end fence. After the appropriate timing for the selected paper, the duplex feed roller [D] reverses. The copy is directed to the relay rollers [E] and is stopped there.

Second side copying is then made with the copy following the upper paper tray feed station paper path.

13.1.3 Image Overlay

In single image overlay copying mode, the same operation as in the other duplex mode is made until the turn gate [F]. In this case, the turn gate does not rotate. The copy is directly delivered to the relay rollers [B] and is stopped there.

Then the 2nd image is copied on the same side as the first image.

13.2 DRIVE MECHANISM

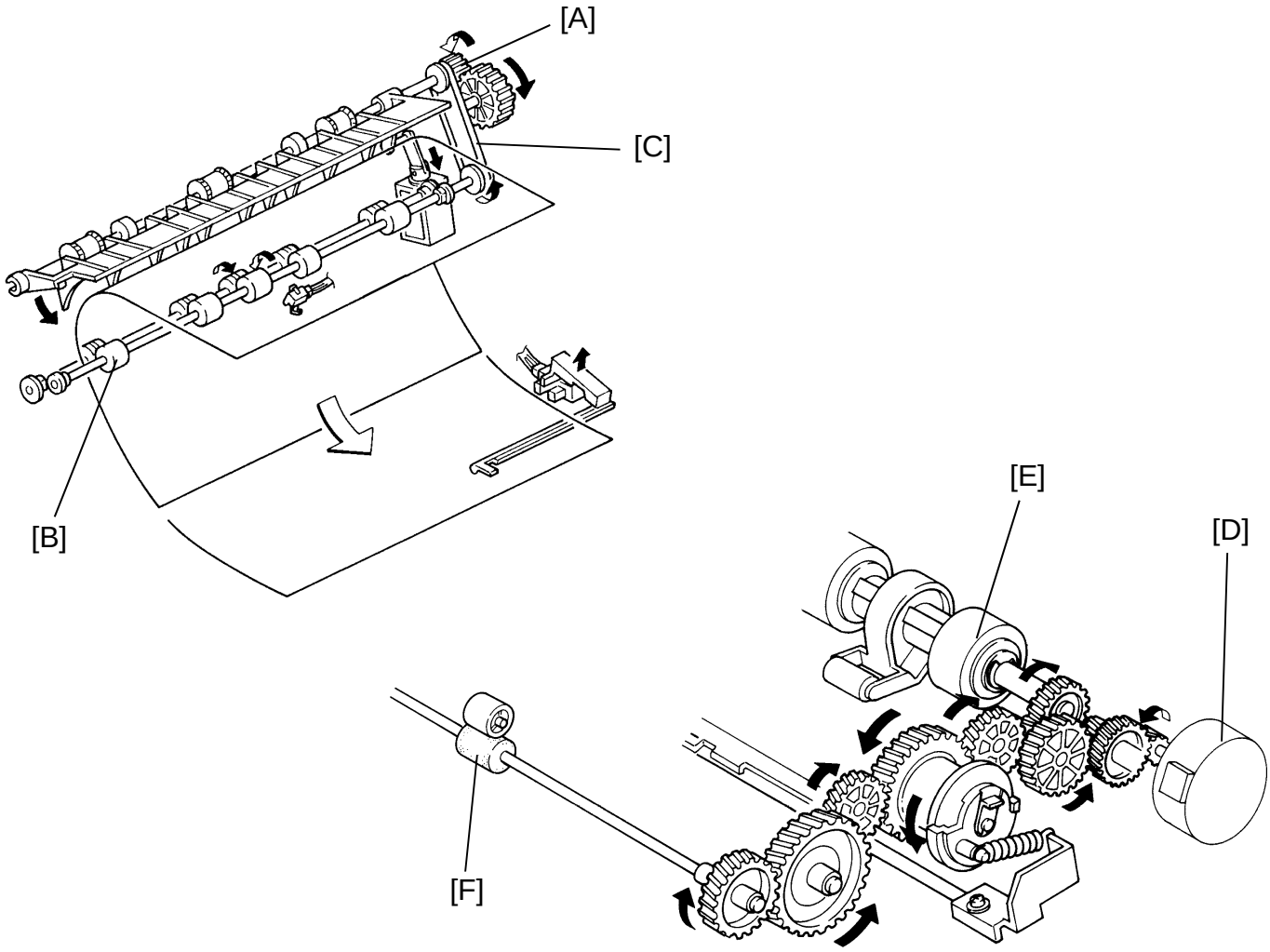

The copier exit roller gear [A] drives the transport rollers [B] through the timing belt [C].
All the rollers in the duplex tray are driven by the duplex feed motor [D]. The drive of the duplex feed motor is transmitted to the duplex feed rollers [E] and the duplex entrance rollers [F] through a series of gears. All the gears have diagonal teeth to reduce driving noise.
The duplex feed motor also drives the duplex bottom plate up and down.

13.3 TURN GUIDE SECTION

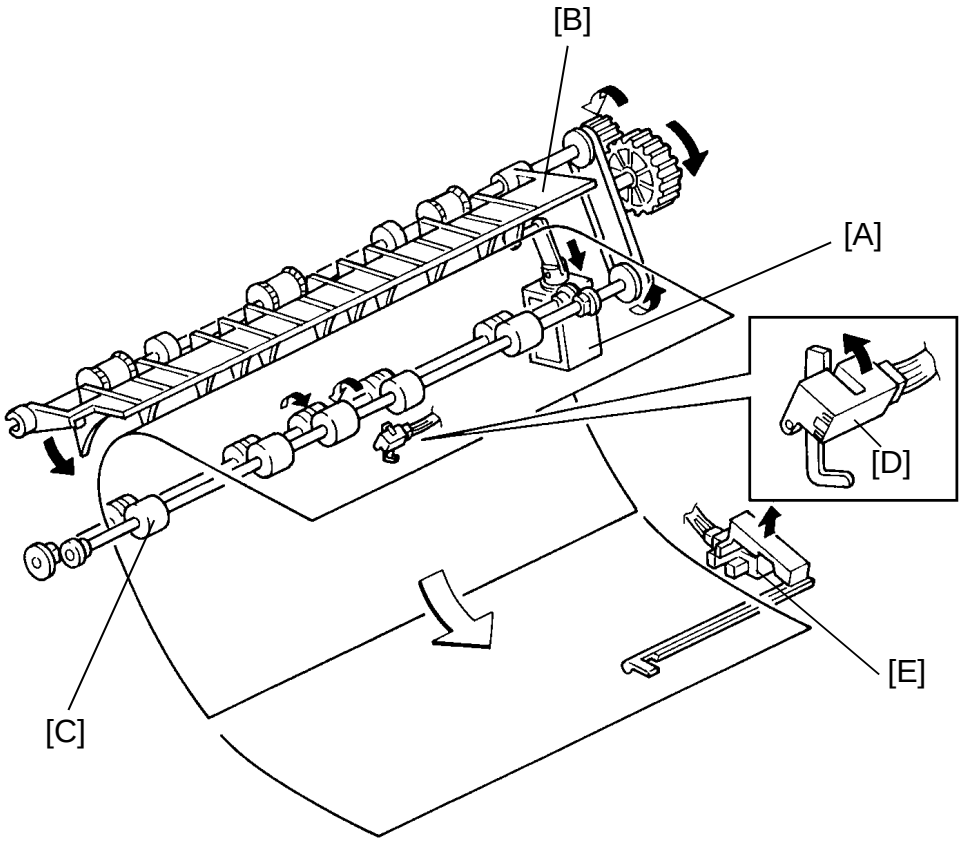

When the registration clutch turns on for feeding the first copy in the duplex mode, the junction gate solenoid [A] is energized. Then, the junction gate [B] rotates up to direct the copy paper to the duplex turn guide section. The junction gate solenoid stays on until first side copying is finished.

The copy is then directed to the duplex entrance rollers by the transport rollers [C]. The leading edge of the copy actuates the junction gate sensor [D] and then the duplex entrance sensor [E]. these are monitored by the CPU to detect misfeeds.

13.4 DUPLEX ENTRANCE TO DUPLEX TRAY

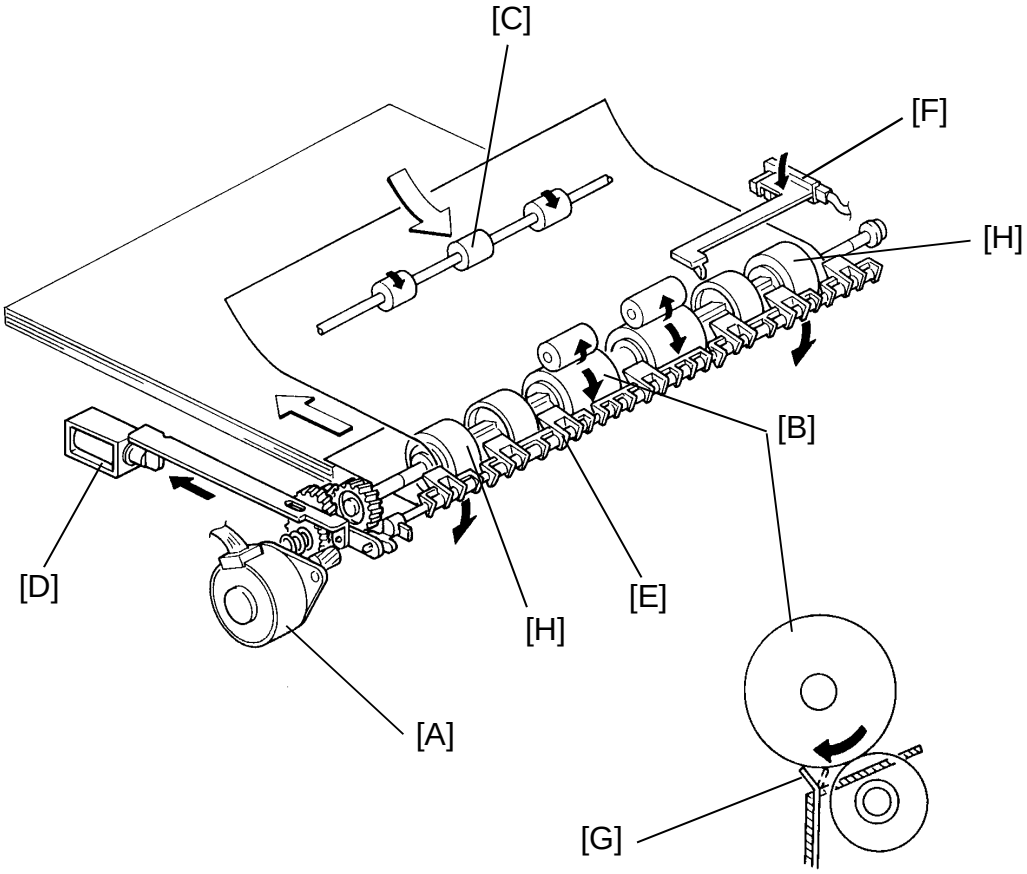

139 ms after the leading edge of the copy paper actuates the fusing exit sensor, the duplex feed motor [A] starts turning. This rotation is transmitted to the duplex feed rollers [B] and the duplex entrance rollers [C]. 63 ms after that, the duplex turn gate solenoid [D] is energized to rotate the duplex turn gate [E].

Then the copy paper from the turn guide section is directed to the duplex tray through the duplex entrance rollers and the duplex turn gate sensor [F], which is monitored by the CPU to detect misfeeds.

The tip of the flip mylar [G] moves to the left (front view) when the duplex feed rollers rotate to feed the copy into the duplex tray. The mylar presses the copy against the duplex stack rollers [H], ensuring that the trailing edge of the copy clears the guide plate.

13.5 DUPLEX STACKING

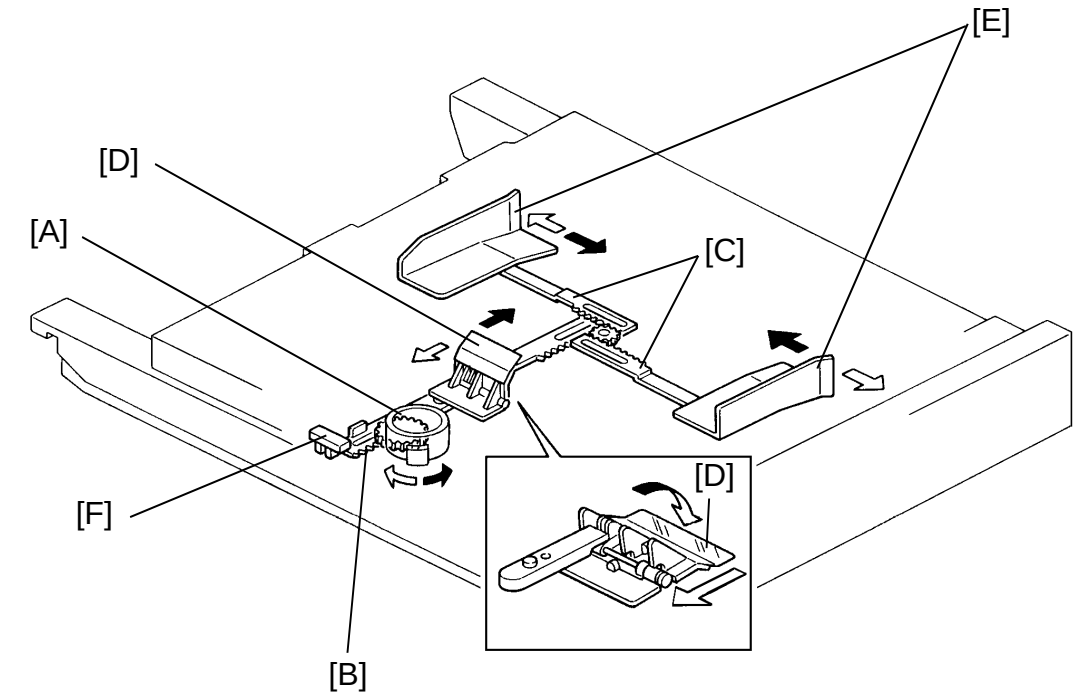

The jogger motor (stepper motor) [A] drives the end fence rack gear [B] inward or outward. The other end of the end fence rack gear is engaged with the side fence rack gears [C] through an idle gear. Therefore, the drive of the jogger motor moves the jogger end fence [D] and the jogger side fences [E] inward or outward.

When the main switch is turned on, the jogger motor rotates to place the jogger fences at the home position by monitoring the signal of the jogger home position sensor [F].

In multiple 2-sided copying mode, 833 ms after the fusing exit sensor detects the leading edge of the first copy, the jogger motor rotates to position the jogger side fences 5 mm, and the jogger end fence 8 mm, away from the selected paper size. When the copy paper is delivered in the duplex tray, actually 205 ms after the duplex turn gate sensor detects the trailing edge of the paper, the jogger fences move inward to square the paper. 833 ms after the fusing exit sensor detects the leading edge of the next copy paper, the jogger fences move back to the previous positions (5 mm and 8 mm away from the paper size).

The jogger fences move inward to square the paper stack at the same timing as before. After the last copy of the first side copying run enters the duplex tray, the jogger fences remain against the paper stack.

In single 2-sided copying mode, the jogger motor rotates at the same time as in the multiple 2-sided copying mode. But in this mode the jogger motor moves the jogger fences outward.

The jogger end fence rotates down as it is pressed against the end fence stopper [G]. The jogger side fences stay at their widest position. This clears the paper path for inverting the copy paper.

13.6 PAPER FEED FROM DUPLEX TRAY

13.6.1 Tray Lift Mechanism

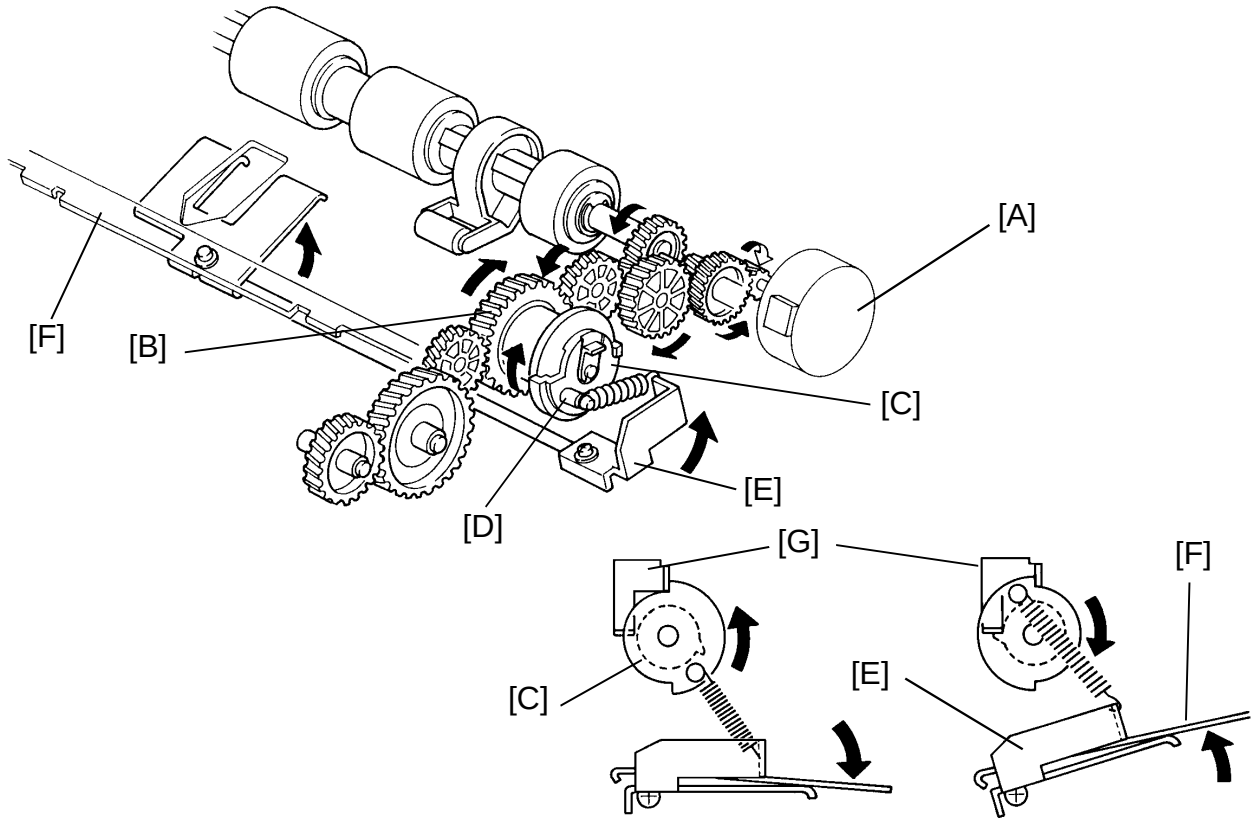

The rotation of the duplex feed motor [A] is transmitted to the cam clutch gear [B] through a series of idle gears. When the duplex feed motor rotates clockwise, the cam clutch gear also rotates clockwise. Then the spring inside the cam clutch [C] is tightened and the cam clutch rotates clockwise. The pin [D] on the cam clutch lifts up the duplex lift lever [E] through a lift spring, raising the duplex bottom plate [F].

When the cam clutch is caught by the cam stopper bracket [G], the clutch spring is loosened to keep the duplex bottom plate up. The bottom plate pressure against the duplex feed roller is also maintained by this mechanism.

When the duplex feed motor rotates counterclockwise, the clutch spring is loosened completely and the bottom plate lowers by its own weight.

When the main switch is turned on, the duplex bottom plate lowers then raises to check if there is paper in the duplex tray or not, using a duplex paper end sensor. During stand-by conditions the duplex bottom plate stays in the up position.

13.6.2 Paper Feed System

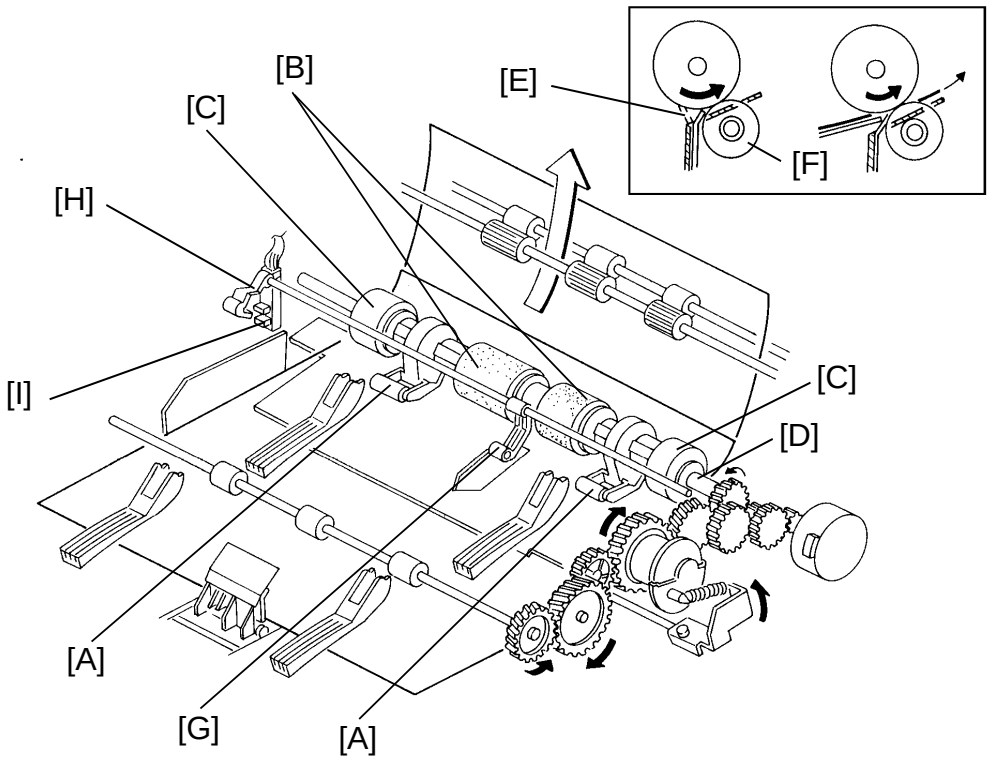

While stacking the copy paper in the duplex tray, the paper flatteners [A] correct curl on the leading edge of the copies.

After the last copy of the first side copying run enters the duplex tray, the jogger fences square the paper stack and then the duplex feed motor starts reverse rotation (counterclockwise). Then the duplex bottom plate rises.

Since the duplex feed rollers [B] and the duplex stack rollers [C] are driven by the pins on the duplex feed roller shaft [D], the rollers rotate counterclockwise about one revolution after the duplex feed roller shaft starts turning. The rollers move the flip mylars [E] back to the right (front view) to prepare paper feeding from the duplex tray.

The duplex paper feed system consists of two sets of the duplex feed roller and the friction roller [F]. The two sets of rollers ensure paper feeding from the duplex tray. As the friction roller has a one-way bearing inside, it rotates freely during paper stacking and it locks during paper feeding. The duplex feed rollers feed only the top sheet of the stack copies to the relay rollers because the friction rollers function the same way as the friction pad does.

After that, the second side copies follow the upper paper tray feed station paper path.

After the final copy leaves the duplex bottom plate, the paper end feeler [G] drops through a slot in the duplex bottom plate. The duplex paper end actuator [H], which is on the same shaft as the duplex paper end feeler, pivots into the duplex paper end sensor [I], sending a High signal to the main board to stop the next paper feeding cycle.

The duplex feed motor may heat up because of its own rotation. The heated motor may rotate irregurlarly. To prevent this, the feed timing from the duplex tray will be delayed every 2 seconds if the duplex motor thermistor senses 77°C or more for the duplex feed motor temperature. This cools the duplex feed motor.

13.7 DUPLEX TRAY LOCK MECHANISM

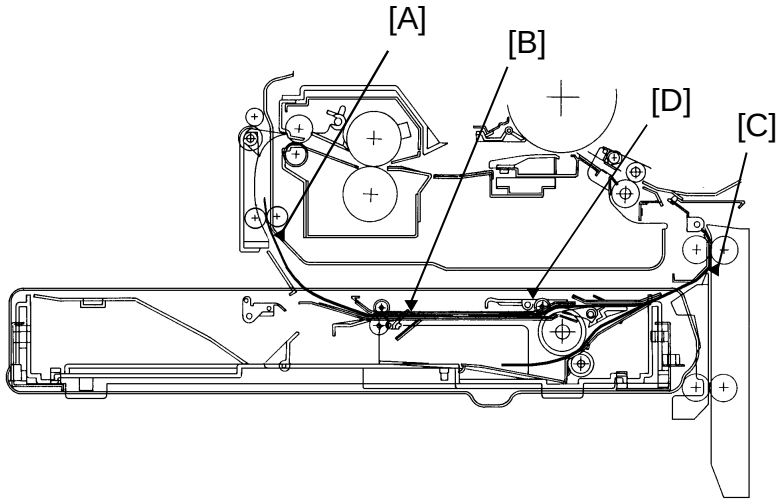

A tray lock solenoid is installed for the duplex tray on the rear side frame like for paper trays. The location of the tray lock solenoid is on the left side rail but that of the duplex tray lock solenoid is on the right side rail.

When the start key is pressed in duplex mode, the duplex tray lock solenoid is energized and the tray lock lever catches the rear part of the right tray rail. This is to prevent the duplex tray from being pulled out while the paper is fed into or fed out from the duplex tray.

Also in the case of the duplex mode, when a paper jam happens between the junction gate and the duplex entrance gate (both the junction gate and the duplex entrance sensors [A, B] are activated) or between the duplex feed roller and the upper relay rollers (the upper relay sensor [C] is activated), the duplex tray lock solenoid turns on. In the case of the overlay mode, when a paper jam happens between the junction gate and the duplex entrance gate, or between the duplex turn gate and the upper relay rollers (both the duplex turn gate [D] and the upper relay sensors are activated), the duplex tray lock solenoid turns on.

These are to prevent the jammed paper from being torn to pieces by pulling out the duplex tray before clearing the jammed paper.

When the jammed paper is cleared and either of the sensors is deactivated, the duplex tray lock solenoid is de-energized even when the copier front door is open. Then the duplex tray can be pulled out.

13.8 DUPLEX FEED DRIVE RELEASE MECHANISM

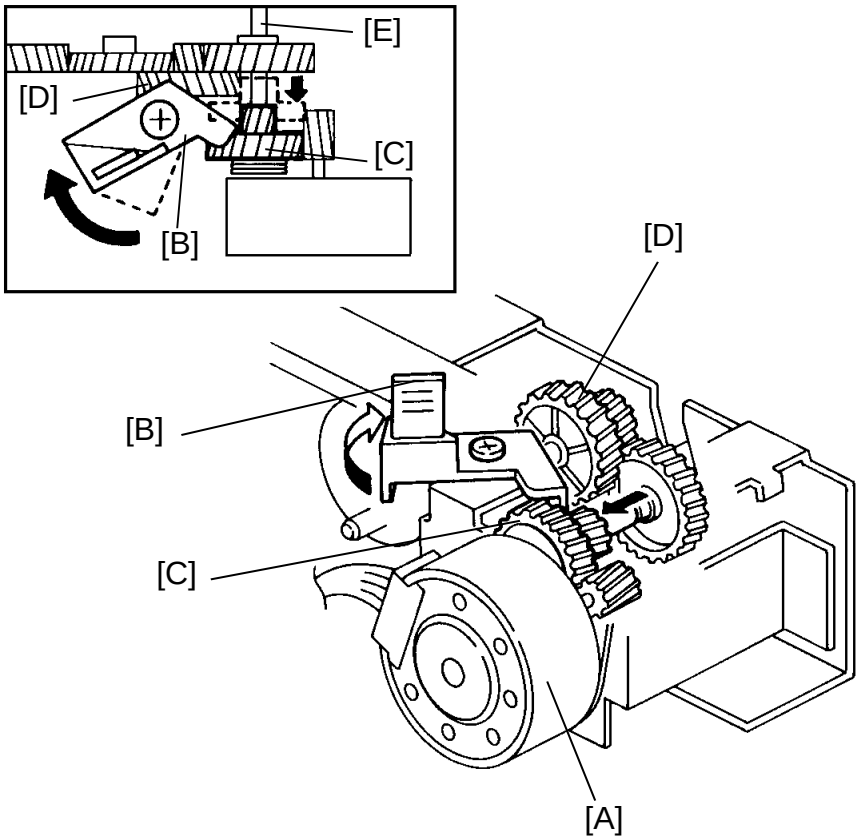

If a paper jam occurs when feeding paper from the duplex tray, the duplex feed motor [A] rotates counterclockwise to lower the duplex bottom plate.

At this time the duplex tray is locked as the duplex tray lock solenoid is energized. This is to prevent the jammed paper from being torn to pieces by pulling out the duplex tray before clearing the jammed paper.

In order to make clearing the jammed paper easier, there is a drive release lever [B]. When this lever is rotated, the duplex drive gear [C] is pressed toward the front and the gear engagement with the idle gear [D] is released. Then the duplex feed roller shaft [E] can be turned freely.

13.9 DUPLEX COMPONENT CONTROL TIMING

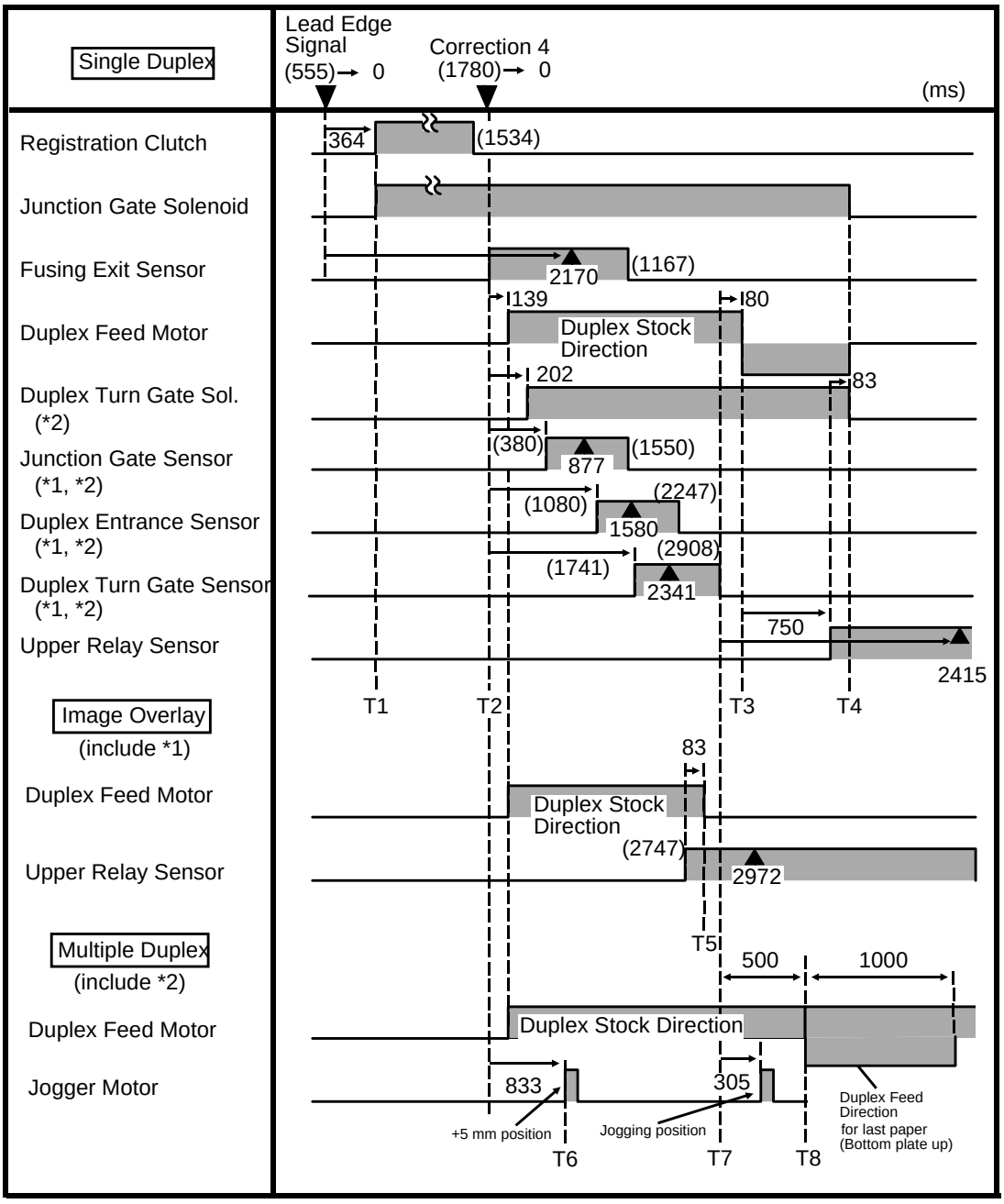

Single Duplex Mode

T1: 364ms after the lead edge signal is sent from the I/O CPU to the main CPU, the registration clutch and the junction gate solenoid turn on together.

T2: When the fusing exit sensor detects the lead edge of the paper, the timing is corrected to 0 (Correction 4). From this correction 4, the duplex feed motor turns on 139ms later, the duplex turn gate solenoid turns on 202ms later, the junction gate sensor turns on about 380ms later, the duplex entrance sensor tuns on about 1,080ms later, and the duplex turn gate sensor turns on about 1,741ms later.

T3: 80ms after the duplex turn gate sensor detects the trail edge of the paper, the duplex feed motor starts the reverse rotation.

T4: 83ms after the upper relay sensor detects the lead edge of the paper, the junction gate solenoid, duplex feed motor, and duplex turn gate solenoid turn off all together.

Image Overlay Mode

The timing of the junction gate solenoid, duplex entrance sensor, and duplex turn gate sensor is the same as that for the single duplex mode.

T5: 83ms after the upper relay sensor detects the lead edge of the paper, the duplex feed motor stops.

Multiple Duplex Mode

The timing of the duplex turn gate solenoid, junction gate sensor, duplex entrance sensor, and duplex turn gate sensor is the same as that for the single duplex mode.

T6: 833ms after the correction 4, the jogger motor moves the jogger side fences 5mm away, and the jogger rear fence 8mm away from the actual paper size.

T7: The duplex turn gate sensor detects the trail edge of the paper. 305ms after that, the jogger motor moves the jogger side fences and the rear fence inward to square the paper stack.

T8: 500ms after the duplex turn gate sensor detects the trail edge of the last paper, the duplex feed motor starts the reverse rotation to lift up the bottom plate and rotate the duplex feed roller to the feed direction.

SECTION 3

INSTALLATION

1. INSTALLATION REQUIREMENT

1.1 ENVIRONMENT

1. Temperature Range: 10°C to 30°C (50°F to 86°F)
2. Humidity Range: 15% to 90% RH
3. Ambient Illumination: Less than 1,500 lux (do not expose to direct sunlight)
4. Ventilation: Minimum space 20 m^3. Room air should turn over at least 30 m^3/hr/person.
5. Ambient Dust: Less than 0.15 mg/m^3 (4 x 10^{-6} oz/yd^3)
6. If the machine location is air-conditioned or heated, place the machine:
    a) where it will not be subjected to sudden temperature changes.
    b) where it will not be directly exposed to cool air from an air-conditioner in the summer.
    c) where it will not be directly exposed to reflected heat from a space heater in winter.
7. Avoid placing the machine in an area filled with corrosive gas.
8. Avoid any places higher than 2,000 meters (6,500 feet) above sea level.
9. Place the machine on a strong and level base.
10. Avoid any area where the machine may be frequently subjected to strong vibration.

1.2 MACHINE LEVEL

1. Front to back level: within 5 mm (0.2")
2. Right to left level: within 5 mm (0.2")

Use a carpenter's level to level the machine

1.3 MINIMUM SPACE REQUIREMENTS

Copier only

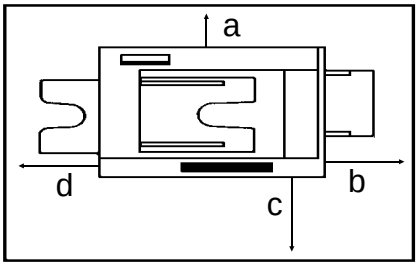

a: more than 10 cm/3.9" (When the micro sorter is installed: 15 cm/5.9")

b: more than 40 cm/15.7"

c: more than 80 cm/31.5"

d: (When you use the copy tray): more than 30 cm/11.8"

Full system

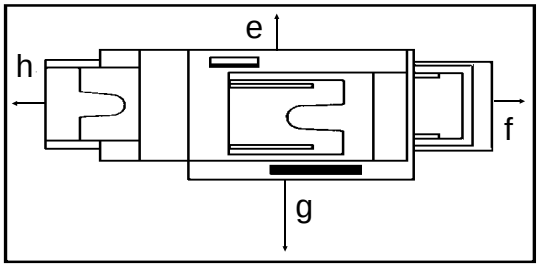

e: more than 10 cm/3.9" (When the micro sorter is installed: 15 cm/5.9")

f: more than 40 cm/15.7"

g: more than 80 cm/31.5"

h: more than 20 cm/11.8" (When the sorter stapler is installed: 10 cm/3.9")

NOTE: When the micro sorter is equipped, make sure there is at least 15 cm (6.0") clearance on the back side, in order to avoid damaging the sorter when it is opened.

1.4 POWER REQUIREMENTS

1. Input voltage level:

110V/60Hz	: More than 12A (for Taiwan)
115V/60Hz	: More than 12A (for N.A.)
220V/230V/240V/50Hz	: More than 7A (for EU.)
220V/60Hz	: More than 7A

2. Permissible voltage fluctuation: ±10%

3. Do not set anything on the power cord.

NOTE: a) Make sure the plug is firmly inserted in the outlet.
b) Avoid multi-wiring.

2. COPIER INSTALLATION

2.1 COPIER INSTALLATION

2.1.1 Accessory Check

1. Receiving Tray 1
2. Outer Decal - Symbol Explanation 1
3. Sorter Key Top and Cover 1
4. Counter Set Key (–17 machine only) 1
5. Installation Procedure 1
6. Operating Instructions (Except –27 machine) 1
7. Now Equipment Condition Report (–17, –19, –27, –29 machine only) 1
8. Envelope for NECR (–17 machine only) 1
9. User Survey Card (–17 machine only) 1

2.1.2 Installation Procedure

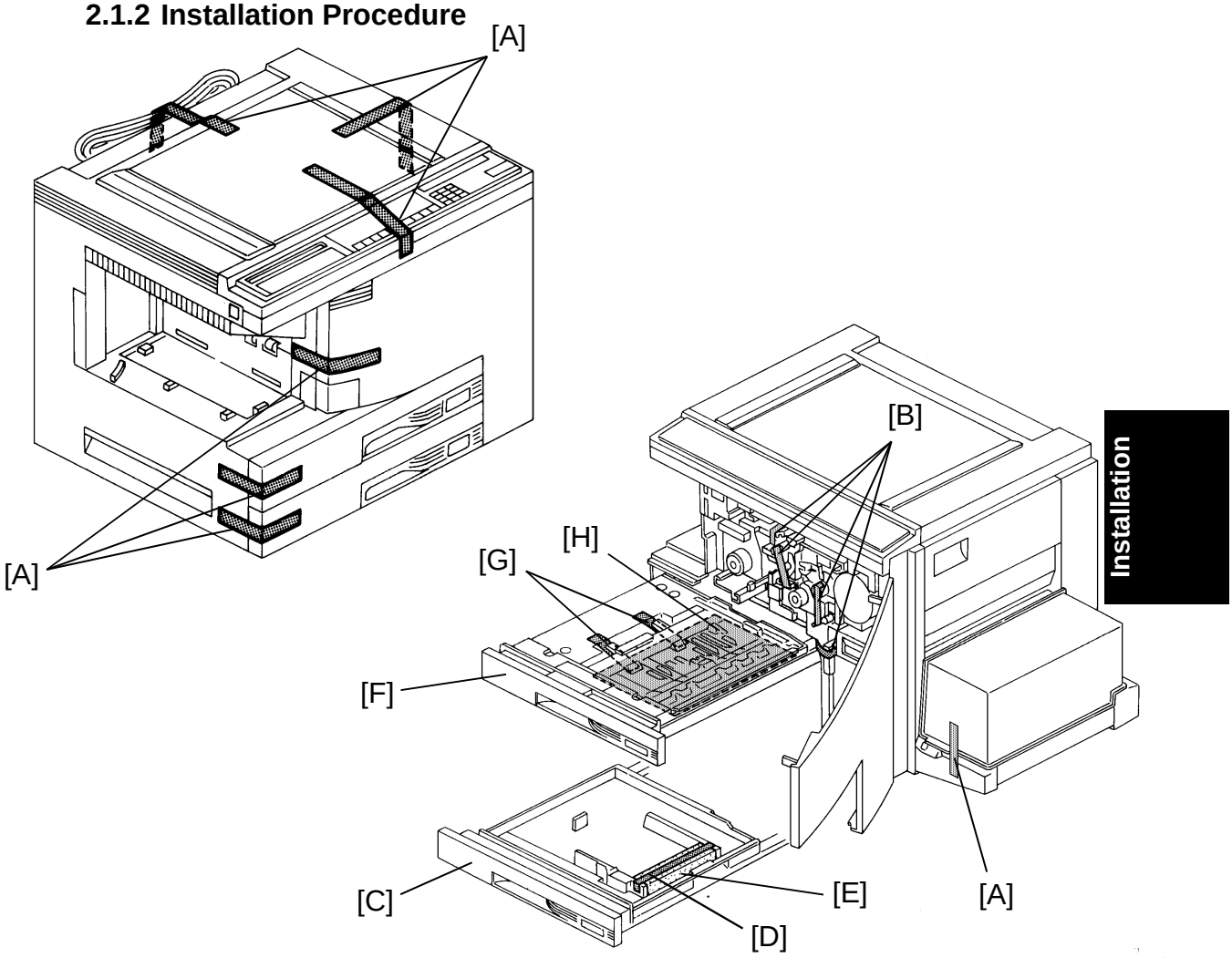

NOTE: Keep the shipping retainers after installing the machine. They will be reused if in the future the machine is transported to another location.
Proper reinstallation of the shipping retainers is required in order to avoid any transport damage. It is important to replace the scanner lock pins and the scanner lock plate before transporting this copier. If it is not done, skewed image may result.

1. Remove the 7 strips of tape [A] as shown.
2. Open the front door and remove 4 strips of tape [B] as shown.
3. Pull out the paper tray [C], and remove a strip of tape [D] and the foam block [E] (1 tray for the duplex machine and 2 trays for the non-duplex machine).
4. Pull out the duplex tray [F] and remove the 2 strips of tape [G] and 3 sheets of paper [H] (duplex machine only).

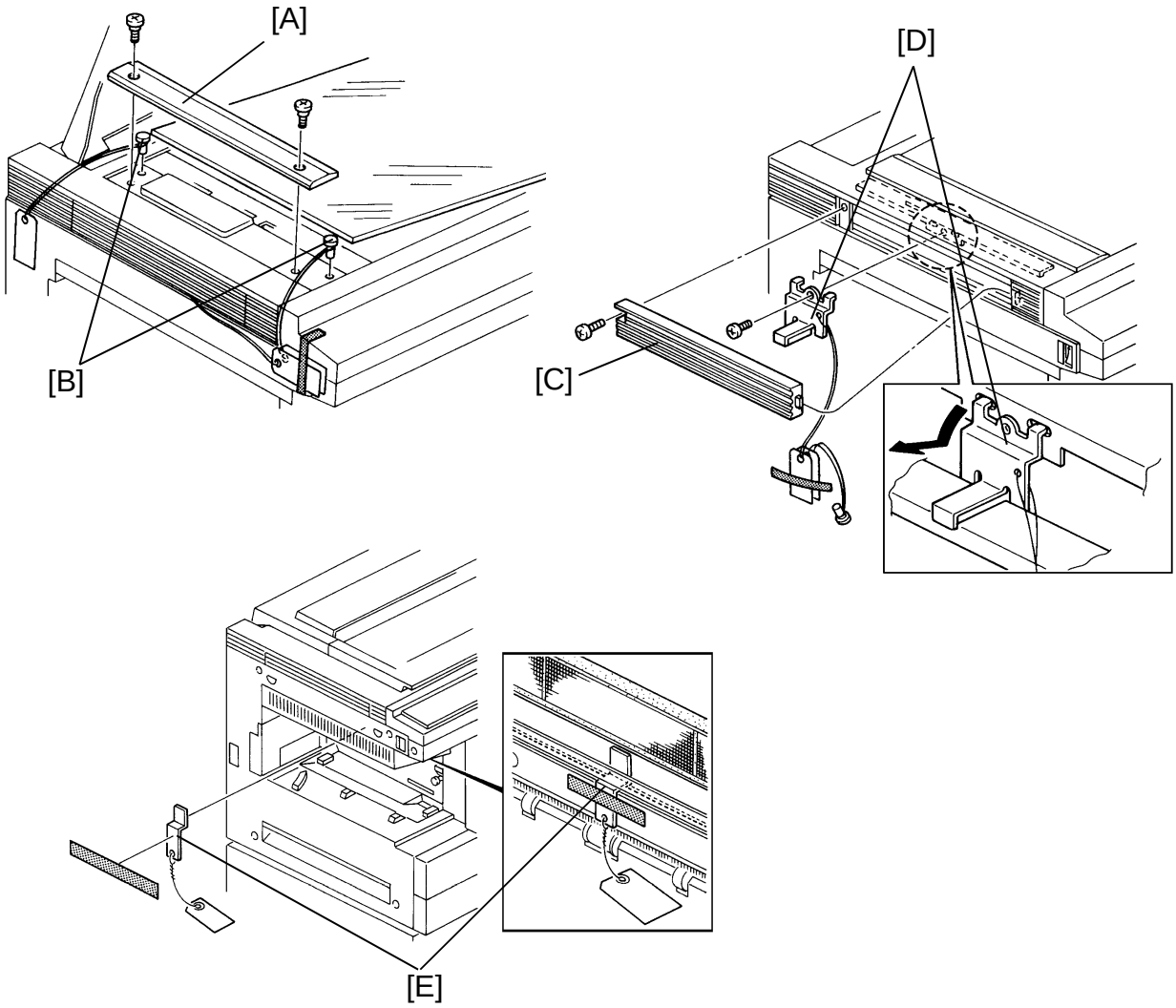

5. Remove the left scale [A] (2 shoulder screws).
6. Remove the scanner lock pin [B] simply by pulling it up from the front and the rear side of the left scale bracket.
7. Reinstall the left scale.
8. Remove the left optics cover [C] (1 screw).
9. Remove the scanner lock plate [D] (1 screw) by pulling and lifting it up and reinstall the left optics cover.
10. Remove the shipping retainer [E] holding the ozone filter. The retainer is taped on the upper exit cover.

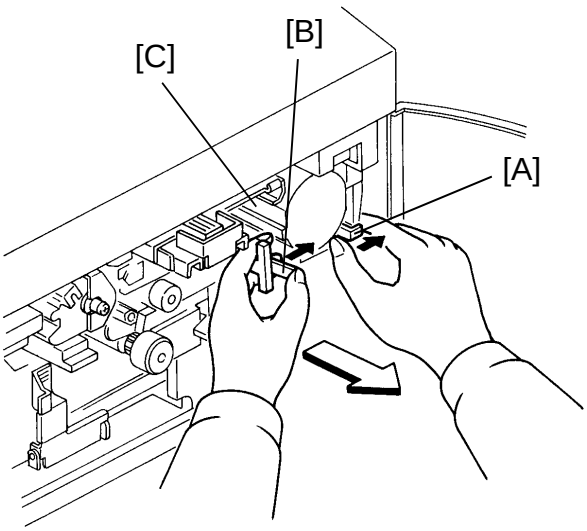

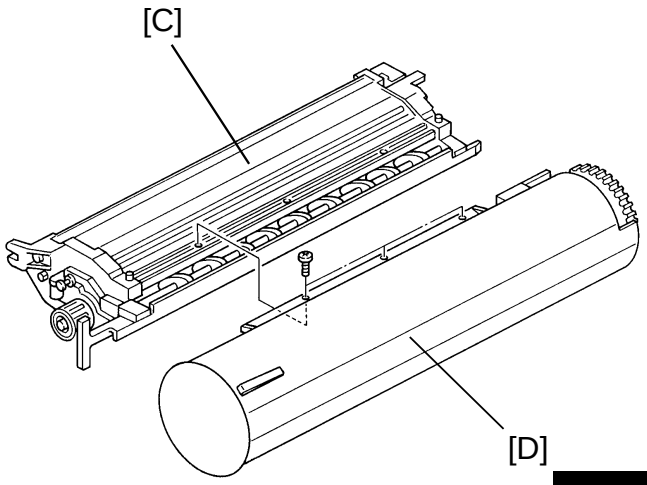

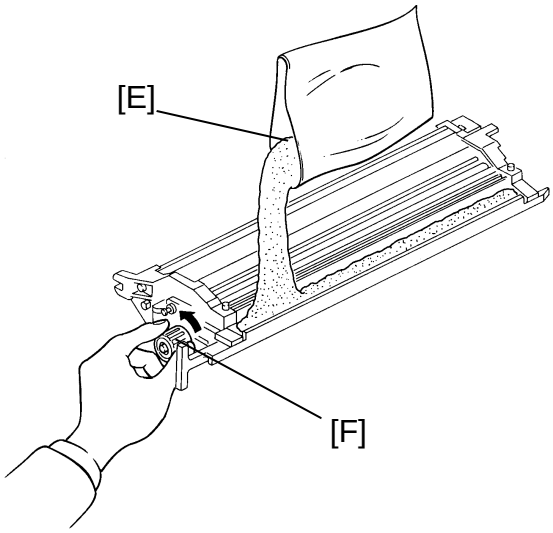

11. Push the development unit lock lever [A] to the right (to the lock position).
12. Move the development release lever [B] to the right and pull out the black development unit [C] half way. Holding the toner supply unit [D] with your right hand and the bottom of the development unit with your left hand, pull the unit all the way out . Place the unit on a clean sheet of paper.
13. Separate the toner supply unit from the development unit (3 screws).
14. Pour one pack of black developer [E] into the development unit while turning the development roller knob [F] counterclockwise. This will distribute the developer inside the unit.
15. Remount the toner supply unit on the development unit.

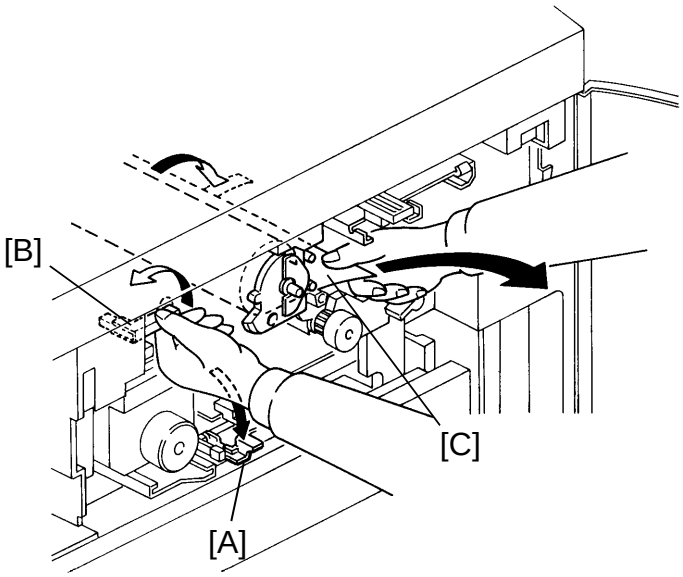

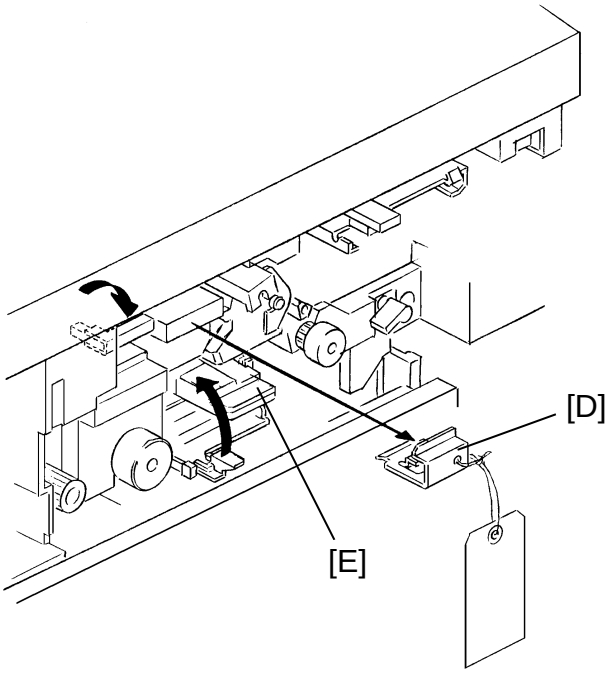

16. Lower the transfer & separation corona unit by pulling down the release lever [A].
17. Turn the cleaning unit release lever [B] counterclockwise to the upright position. (The cleaning unit is released from the drum.)
18. Remove the drum protective sheet [C] from the development unit opening.

CAUTION: To avoid damaging the pick-off pawls, remove the drum protective sheet by pulling the lower side as shown in the figure.

19. Turn the cleaning unit release lever clockwise to the set position.
20. Remove the cleaning blade lock plate [D].
21. Reset the transfer & separation corona unit [E].

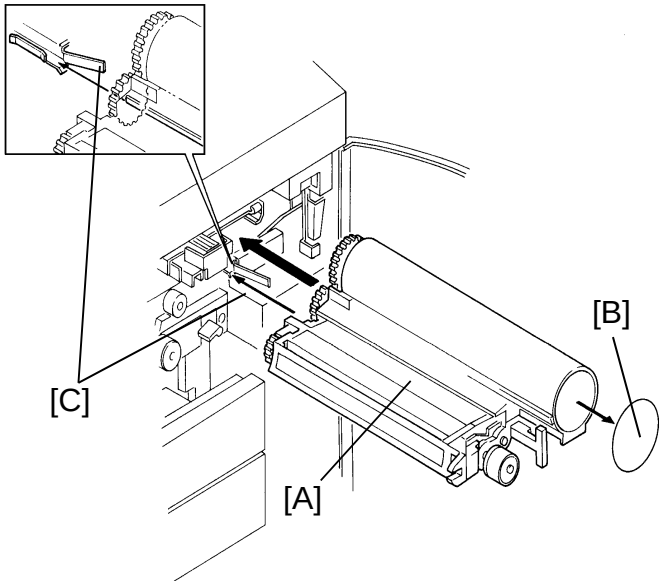

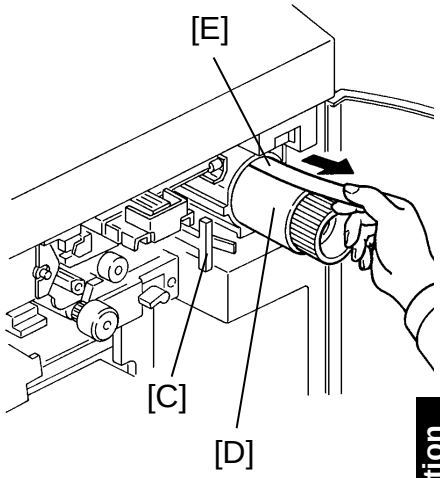

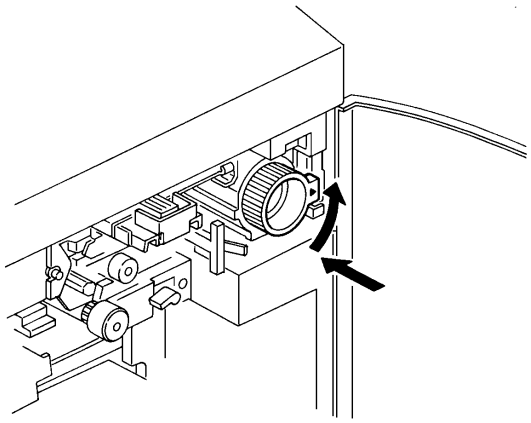

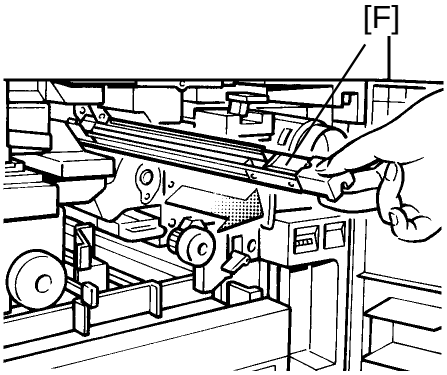

22. Install the black development unit [A] in the copier, and remove the cover sheet [B] from the toner supply unit.

    NOTE:
    - When installing the development unit, be sure that the development unit rail is placed directly on the development unit guide rail.
    - Make sure that the development release lever [C] is in its original position after the development unit is set.

23. Shake the toner cartridge [D] well from side to side. While pushing the toner cartridge in, insert it halfway into the holder with the seal [E] up.

24. As you peel off the seal, insert the cartridge completely. While pushing the toner cartridge in, turn it counterclockwise until it stops.

25. Slide out the charge corona unit [F] until it is fully extended and push it back in to the original position. Repeat this action several times.

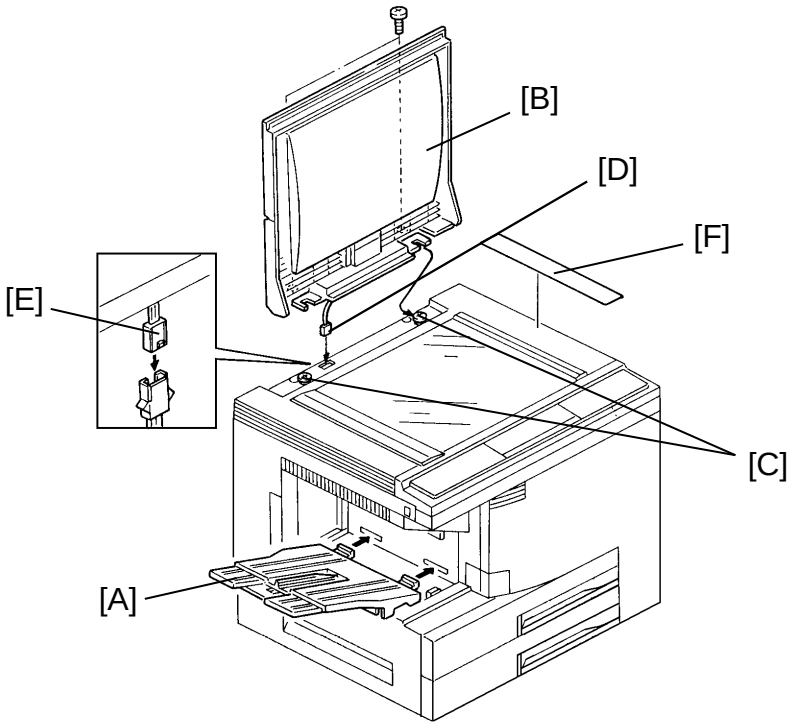

26. Close the front door and set the copy tray [A].

NOTE: The following steps from 27 to 30 are required only to install the optional platen cover [B].

27. Remove the rear cover (remove 2 screws and loosen 2 screws).

28. Install the 2 shoulder screws [C] on the top cover as shown.

29. Pass the harness [D] through the hole of the top cover and install the optional platen cover (2 screws).

30. Couple the platen cover sensor connector [E] (3P white) with the copier and reinstall the rear cover.

31. Stick the symbols explanation decal [F] on the top cover as shown. (If the ARDF will be installed, stick the decal on the corresponding position of the ARDF.)

32. If local voltage is 230 V or 240 V, perform the voltage change procedure (following the installation procedure).

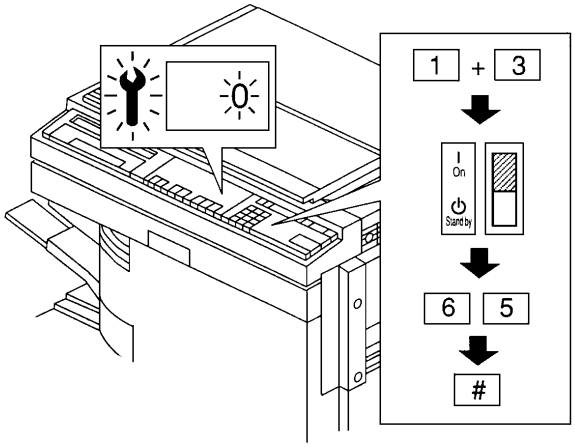

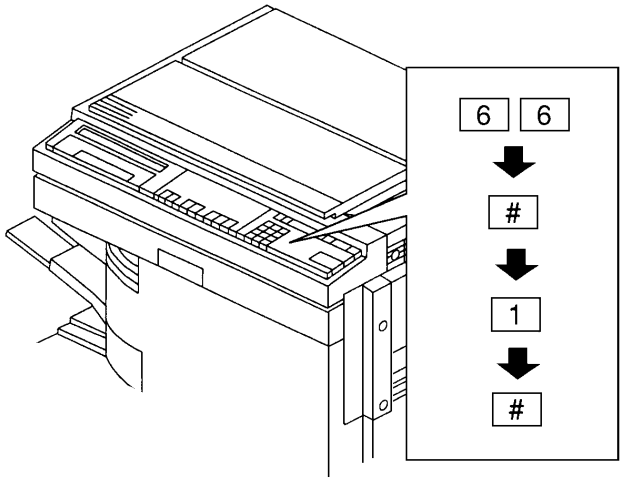

33. Load A3 (11" x 17") paper either in the 1st or the 2nd paper tray and plug in the machine.

34. While pressing both the "1" and "3" on the operation panel number keys, turn on the main switch in order to access the SP mode.

    NOTE: Release the number keys after confirming that the call service indicator and the copy counter number "0" are blinking.

35. Enter "65" using the number keys and then press the enter key.
    (The copier starts the black developer initialization, this lasts about 5 minutes, and the beeper sounds 5 times when it is finished.)

36. Enter "66" using the number keys and press the enter key.
    Press "1", then the enter key.
    (The copier performs the drum initial setting and the beeper sounds 5 times.)

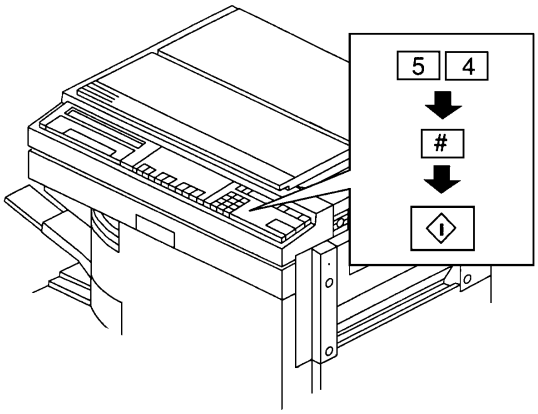

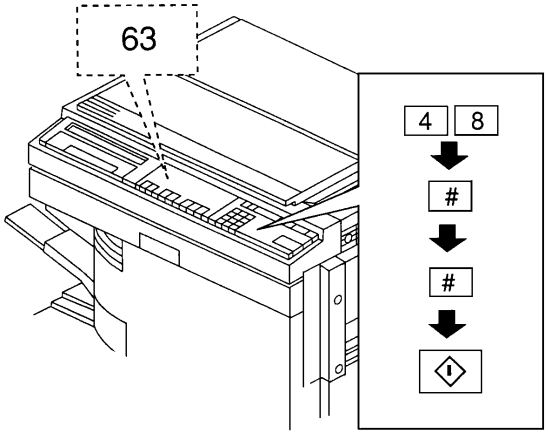

37. Enter "54" using the number keys and press the enter key, then the start key.
    (The copier performs ID/V sensor adjustments and the beeper sounds 2 times after 4 seconds.)
38. Enter "48" using the number keys and then press the enter key twice.
39. Set the test chart on the exposure glass.
40. Make a full size copy at the manual image density level #4 (center) after the copier has warmed up (the beeper sounds 3 times).

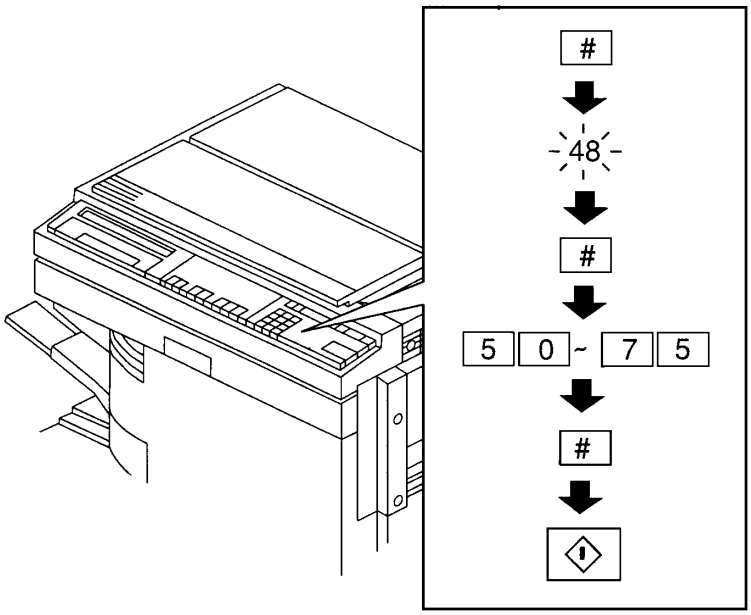

41. Confirm that level 2 of the gray scale is just visible on the copy.

If the image density is not correct, go through the following steps.

(1) Press the enter key twice.

(2) Change the exposure lamp voltage data displayed in the magnification ratio indicator. Use the number keys and follow these rules:

If the image density is too dark:	increase the setting
If the image density is too light:	decrease the setting

NOTE: The data can be set between 50 and 75 in 0.5 steps.(The default setting is "63".)

(3) Press the enter key and then make a copy.

(4) Confirm if the image density is correct or not. If not, repeat the above steps from (1) to (3).

NOTE: The initial exposure lamp voltage **must** be adjusted in this step. If the adjustment is done after step 45 (the machine performs the initial V_L pattern detection), the reference voltage for the exposure lamp voltage correction will be wrong throughout the drum's life.

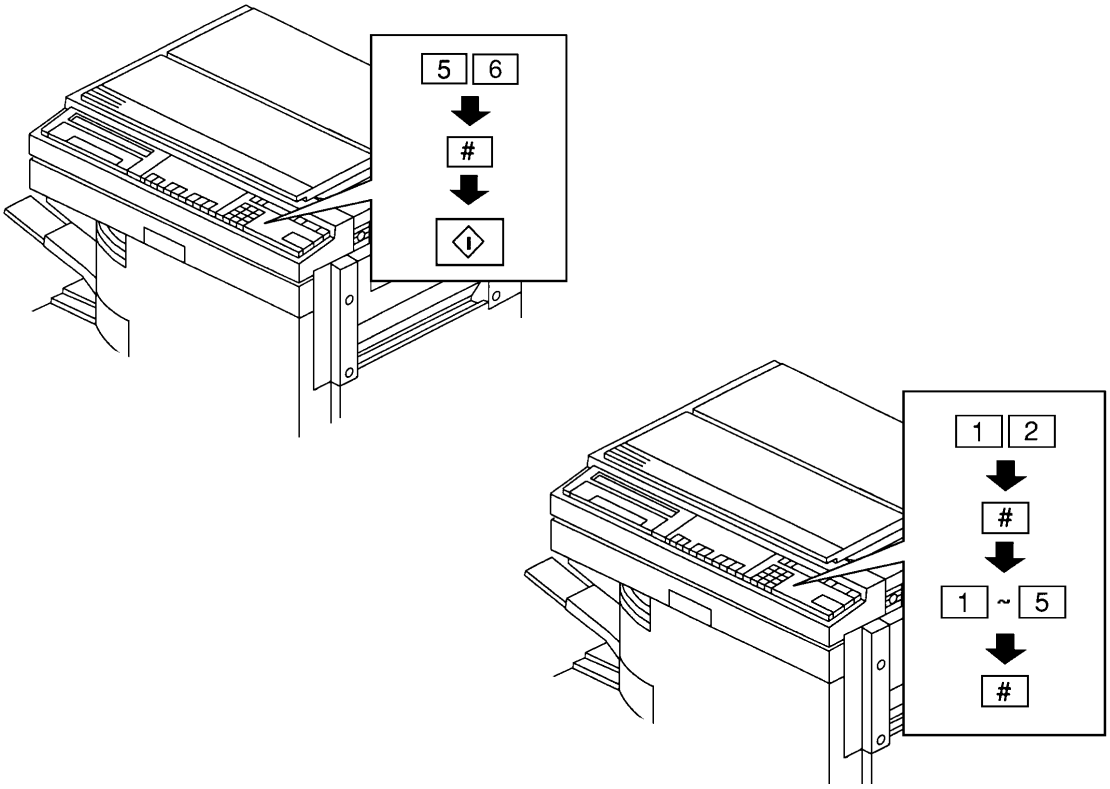

42. Press the enter key and enter "56" using the number keys.

43. Press the enter key, then the start key.
    (The copier performs the ADS sensor adjustment and the beeper sounds 2 times after 4 seconds.)

44. Enter "12" using the number keys and press the enter key.
    (duplex machine only)

45. Enter the number for the desired language on the guidance display, and press the enter key. (duplex machine only).
    1: English 2: French 3: German 4: Italian 5: Spanish

46. Turn the main switch off and on.

47. Enter "6" using the number keys and make copies in the full size mode.
    (The copier performs the V_R sensor initial check during the copy cycle. When the copy cycle is finished, the copier performs the V_L sensor initial check by lighting the exposure lamp at the home position.)

48. Check the machine operation and copy quality.

49. Tell the customers that this copier sometimes keeps turning on the exposure lamp at the home position when copy jobs are finished (the same phenomenon as in step 47).
    This is normal for this copier, and this also helps maintain good copy quality.

2.2 VOLTAGE CHANGE (220V to 230/240V)

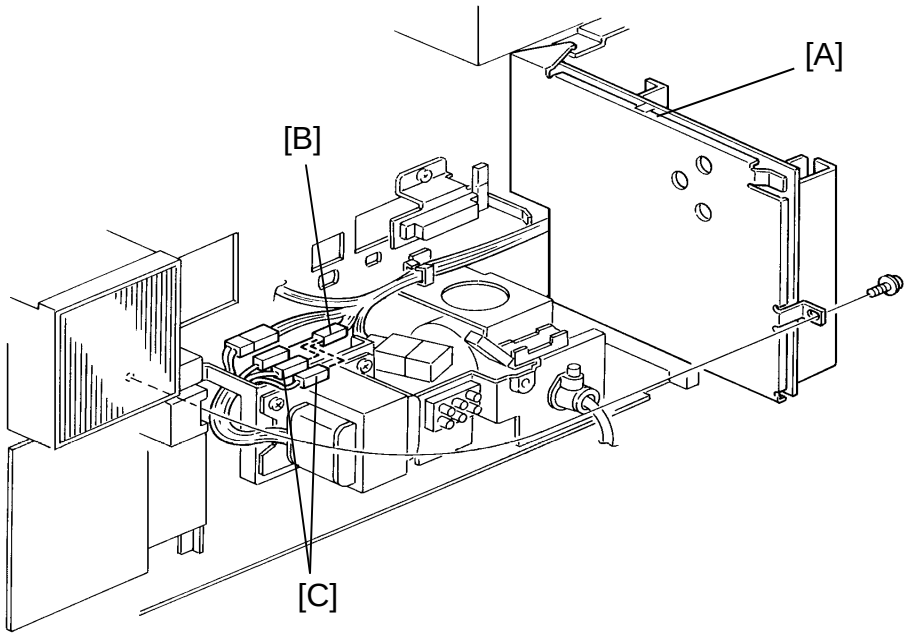

NOTE: If the voltage of electrical power supply from wall outlets is 230V or 240V, the following procedure must be done before plugging in the machine.

CAUTION: Make sure that the power cord of the machine is unplugged before starting the following procedure.

1. Remove the rear cover (remove 2 screws and loosen 2 screws).
2. Swing out the dc power supply board assembly [A] (1screw).
3. Disconnect the 1P connector [B] of the ac main harness and reconnect it to the appropriate voltage connector [C] of the main transformer.

   NOTE: Each 1P connector of the main transformer has its voltage rating printed on it.
4. Reassemble the copier.

2.3 COLOR DEVELOPMENT UNIT INSTALLATION (OPTION)

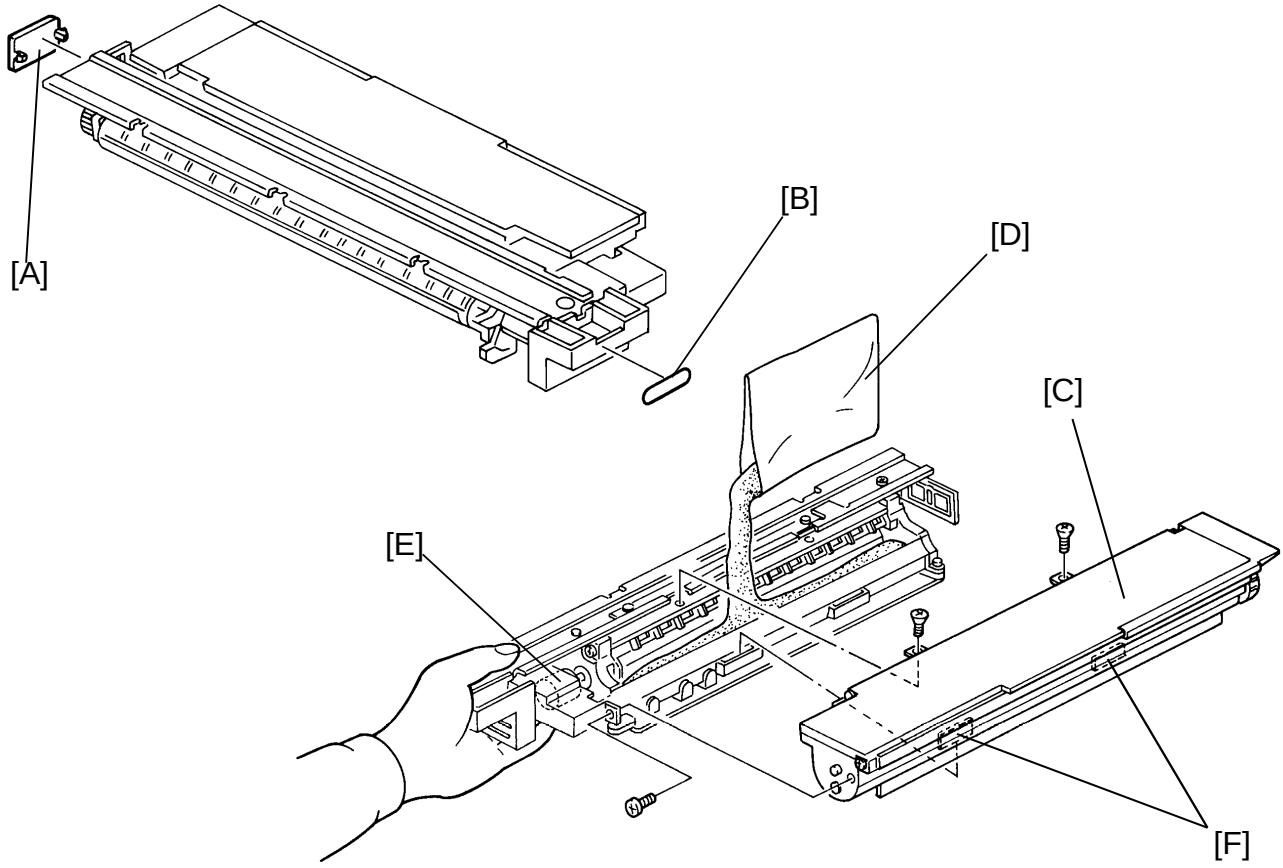

NOTE: This is a universal color development unit for red, blue, and green developer and toner.

1. Install the appropriate color detection plate [A] on the rear bracket of the color development unit. (The plate color corresponds to the developer and toner color.)
2. Stick the appropriate color decal [B] on the development unit handle.
3. Separate the toner supply unit [C] from the development unit (3 screws).
4. Pour one bag of color developer [D] into the development unit while turning the development roller knob [E] counterclockwise. This will distribute the developer evenly inside the unit.
5. Remount the toner supply unit on the development unit.

   NOTE: When setting the toner supply unit, be sure that the 2 plates of the toner supply unit [F] fit in the positioning grooves.

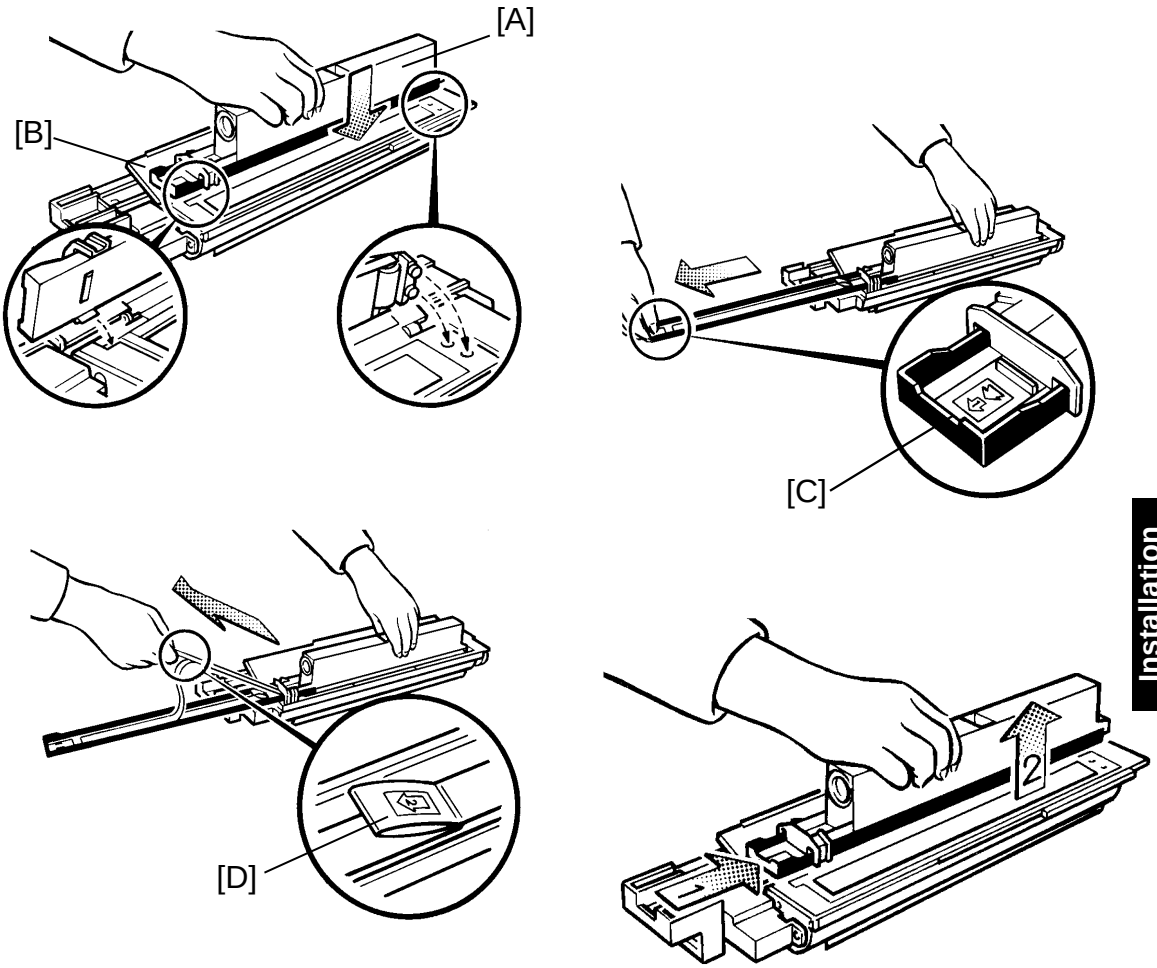

6. Shake the color toner cartridge [A].
7. Open the color toner supply unit cover [B] and set the color toner cartridge on the color toner supply unit as shown.
8. Holding the center part of the cartridge, push down and pull out the slide plate [C] until it stops.
9. Pull out the seal [D] until the red line is visible.
10. Gently tap the cartridge so that all the toner in the cartridge falls inside the toner supply unit.
11. Return the slide plate to its original position and remove the cartridge.
12. Close the color toner supply unit cover.

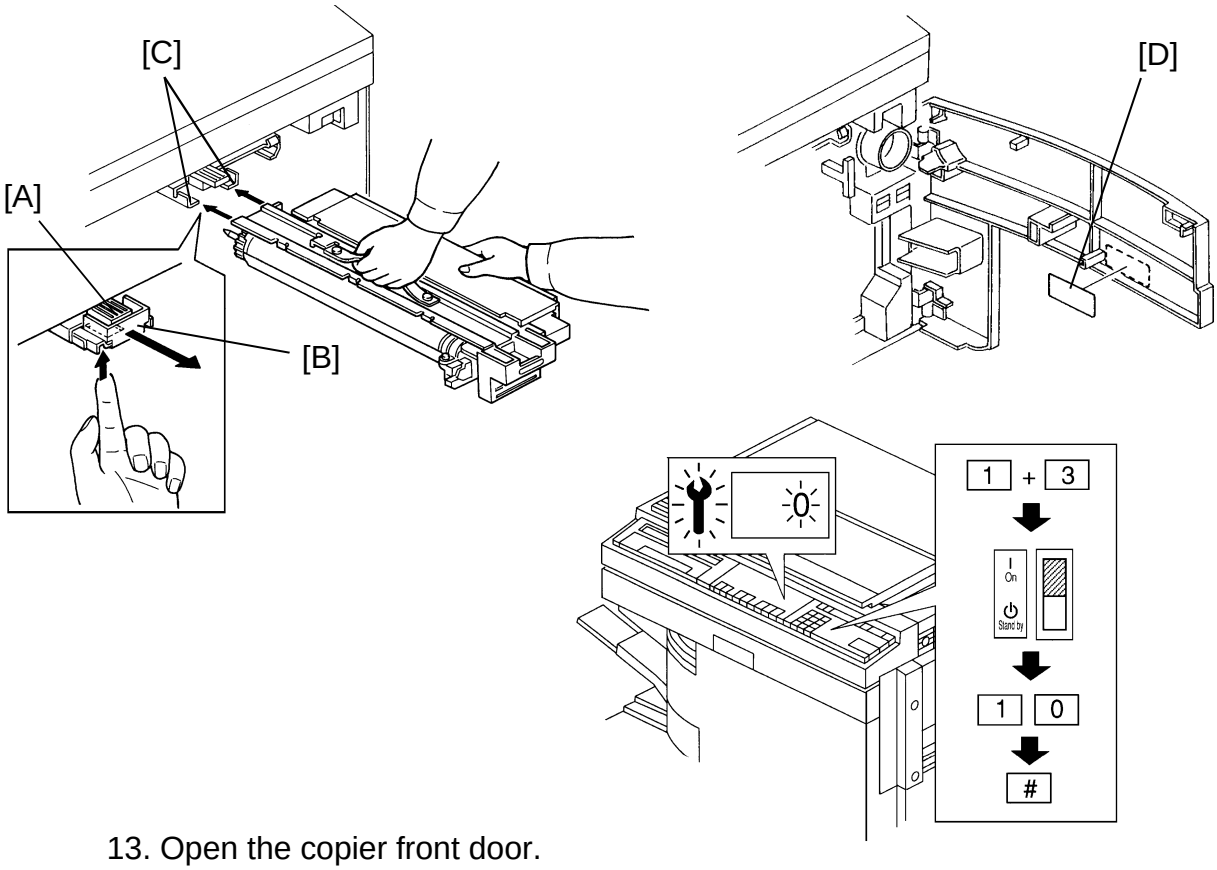

13. Open the copier front door.
14. While lifting the color development unit lock lever [A], pull out he cover plate [B].
15. Holding the strap of the color development unit with your left hand, hold the toner supply unit with your right hand, and insert the development unit along the guide rails [C].
16. While lifting the color development unit lock lever, push the unit in until it stops.
17. Stick the decal [D] on the copier front door as shown and close the copier front door.
18. While pressing both "1" and "3" on the operation panel number keys, turn on the main switch in order to access the SP mode.

    NOTE: Release the number keys after confirming that the call service indicator and the copy counter number "0" are blinking.
19. Enter "10" using the number keys and then press the enter key.
    (The copier starts the color developer initialization, this lasts about 1 minute, and the beeper sounds 5 times)
20. Turn the main switch off and on.
21. Check the color copy quality.

2.4 KEY COUNTER HOLDER INSTALLATION (OPTION)

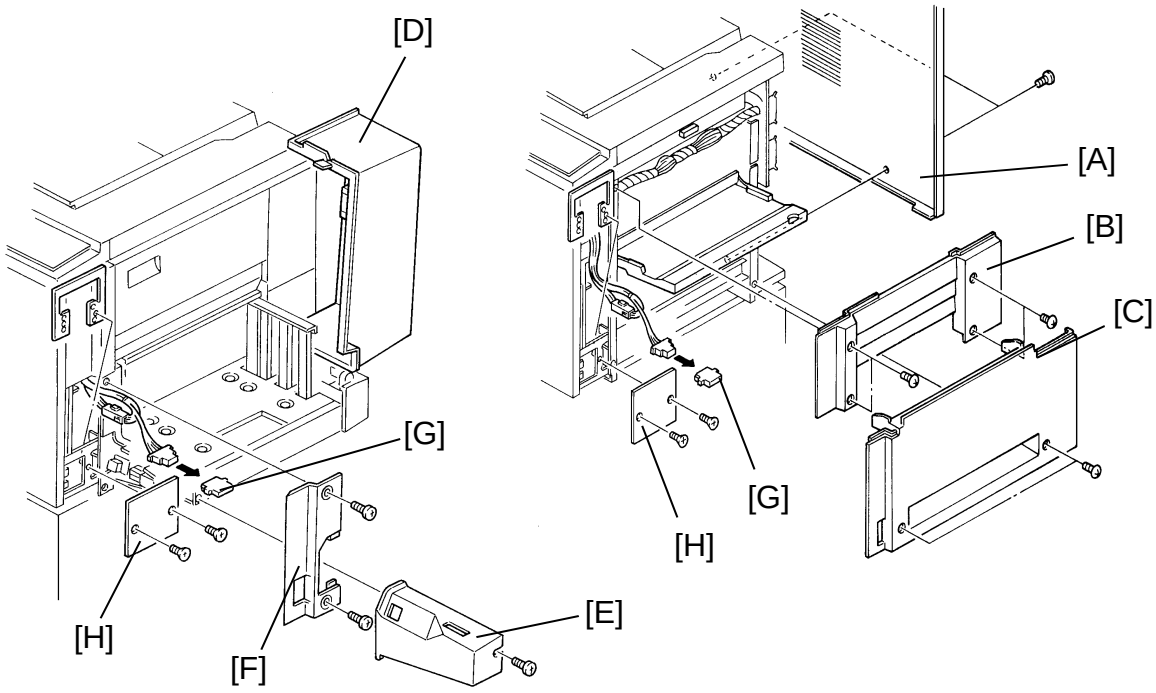

CAUTION: Make sure that the main switch is turned off.

[Machines without LCT]

1. Remove the rear cover [A] (remove 2 screws and loosen 2 screws).
2. Open the by-pass feed table and remove the right upper cover [B] (4 screws).
3. Remove the right lower cover [C] (2 screws).
   --- Go to step 4.

[Machines with LCT]

1. Lift up the LCT top cover [D] and remove the LCT front cover [E] (1 screw).
2. Remove the right front lower cover [F] (2 screws).
   --- Go to step 4.

[Common procedure]

4. Remove the shorting connector [G] from the key counter connector.
5. Remove the key counter cover [H] from the key counter holder bracket (2 screws).

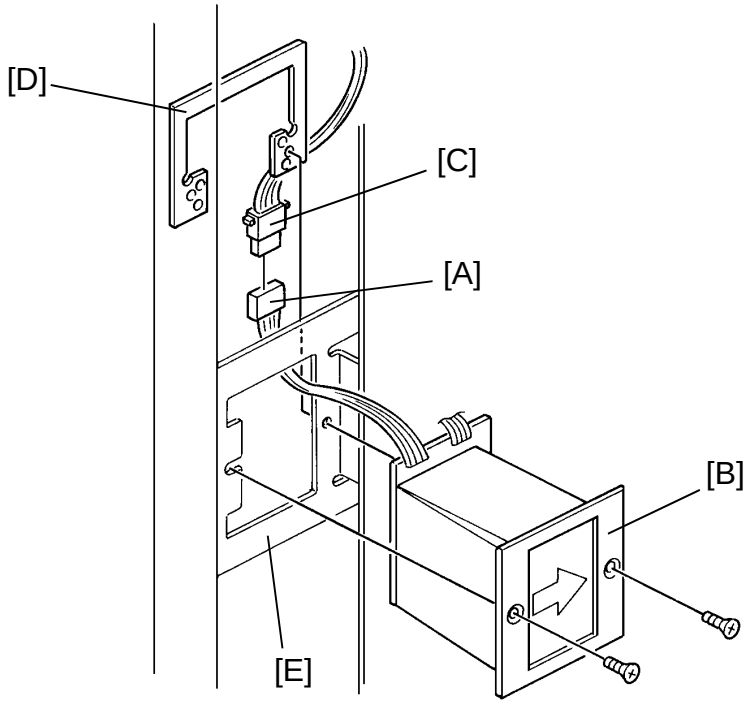

6. Pass the 4P connector [A] of the key counter holder [B] through the key counter holder access hole and couple it with the key counter connector [C] of the copier.
7. Hold the fixing plate [D] on the inside of the key counter holder bracket [E] and insert the key counter holder.
8. Align the holes in the fixing plate with the mounting holes of the key counter holder and secure the key counter holder (2 screws).

   NOTE: The fixing plate has three different hole sizes. Use the holes that match those on the key counter holder that you are installing.
9. Reinstall all the covers and check the key counter operation.

2.5 TRAY HEATER INSTALLATION (OPTION)

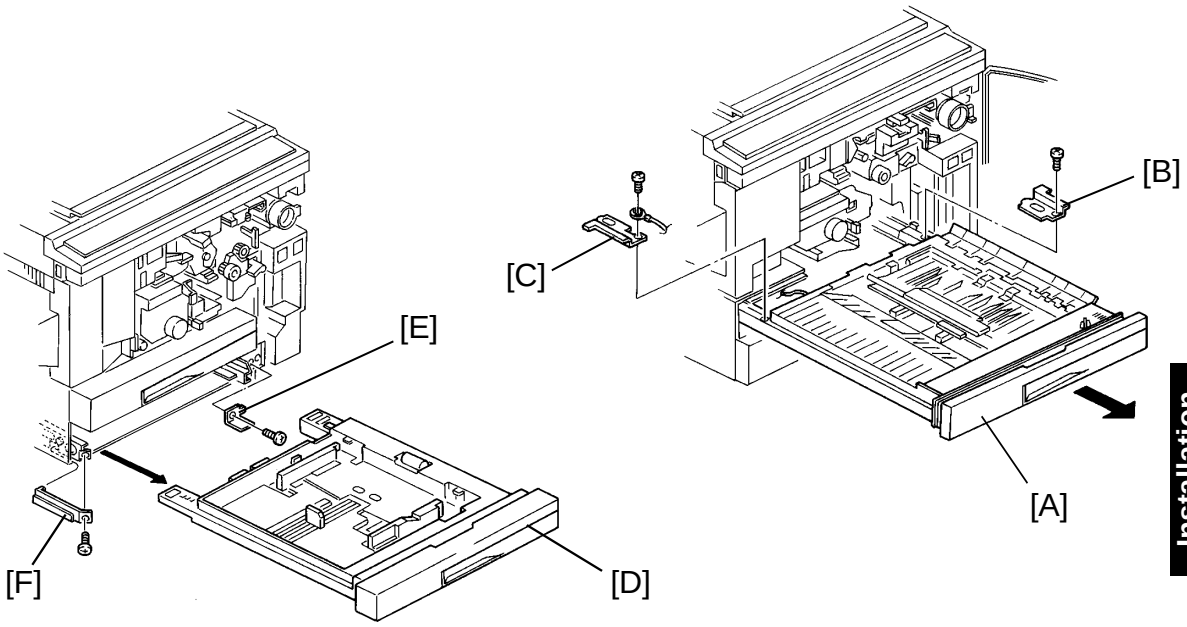

NOTE: The optional tray heaters keep copy paper dry. In humid environments, copy paper may crease as it comes out of the fusing unit. The heaters are available as service parts.

Required parts:	P/N A0699500: Tray Heater Kit –115V	2 sets
	P/N A0699501: Tray Heater Kit –230V	2 sets
The contents of the kits are as follows:	Tray heater	1 piece
	Tray heater bracket	1 piece
	Wire saddle	1 piece
	Philips pan head screw	3 pieces
	Decal: High Temp.	1 piece

CAUTION: Unplug the copier power cord before starting the following procedure.

1. Open the copier front door.
2. Pull out the duplex tray [A] and remove the tray stopper brackets [B], [C] on both side rails as shown (1 screw each), and then remove the duplex tray from the copier [duplex machines only].
3. Pull out the paper tray [D] and remove the tray stopper brackets [E], [F] on both sides as shown (1 screw each) and then remove the paper tray from the copier [both paper trays for non-duplex machines].

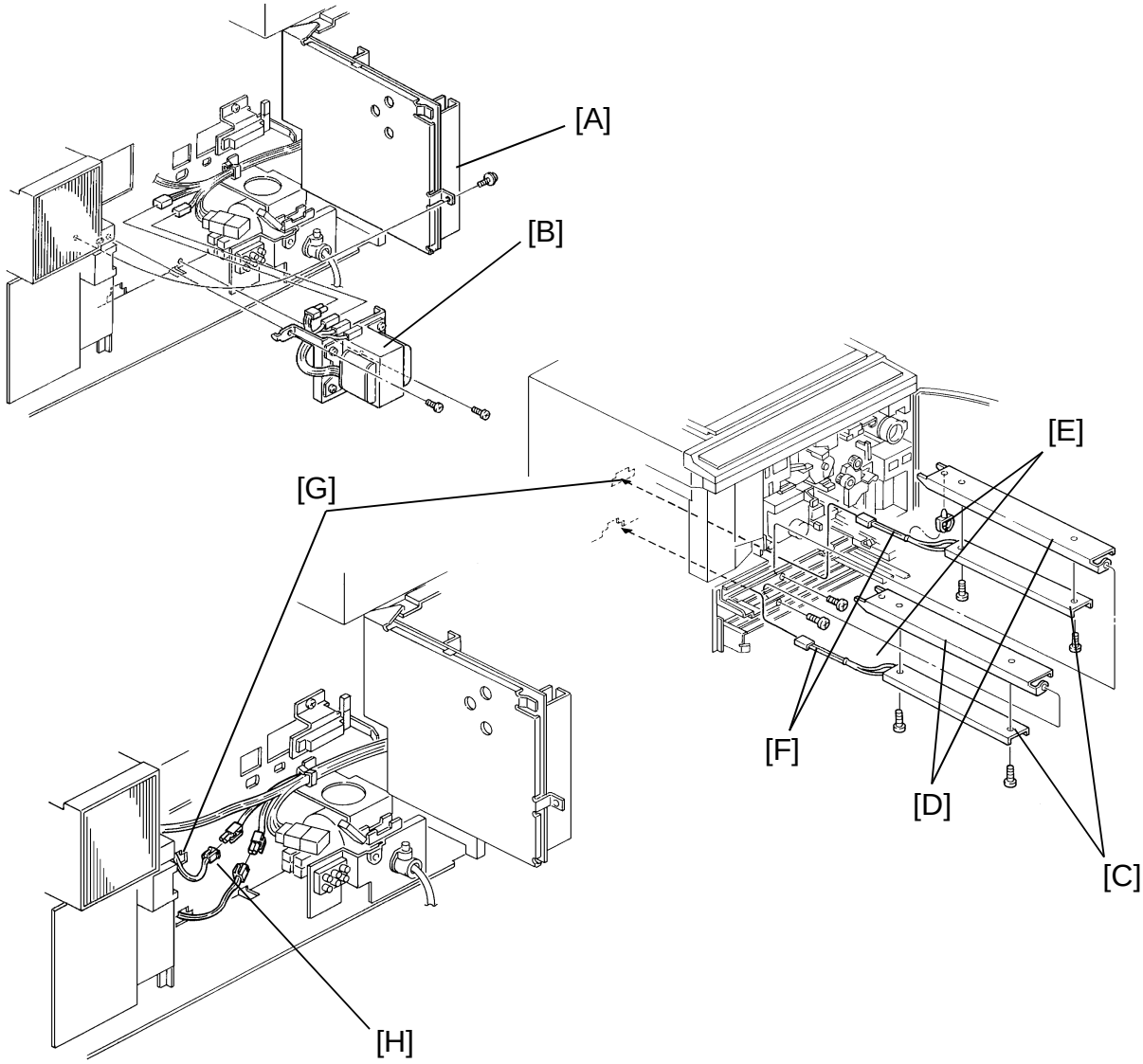

4. Remove the rear cover (remove 2 screws and loosen 2 screws).
5. Swing out the dc power supply board assembly [A] (1 screw).
6. Remove the main transformer assembly [B] (2 screws and 2 connectors).
7. Fix the tray heater [C] on the tray heater bracket [D] (2 screws), and set the wire saddle [E] and the heater harness [F] on the bracket as shown. Make 2 sets of this assembly.

[Upper tray heater]

8. Pass the heater harness through the upper heater access hole [G] and install the tray heater assembly as shown (1 screw at the front).
9. Connect the heater connector [H] with the copier as shown (2P red).

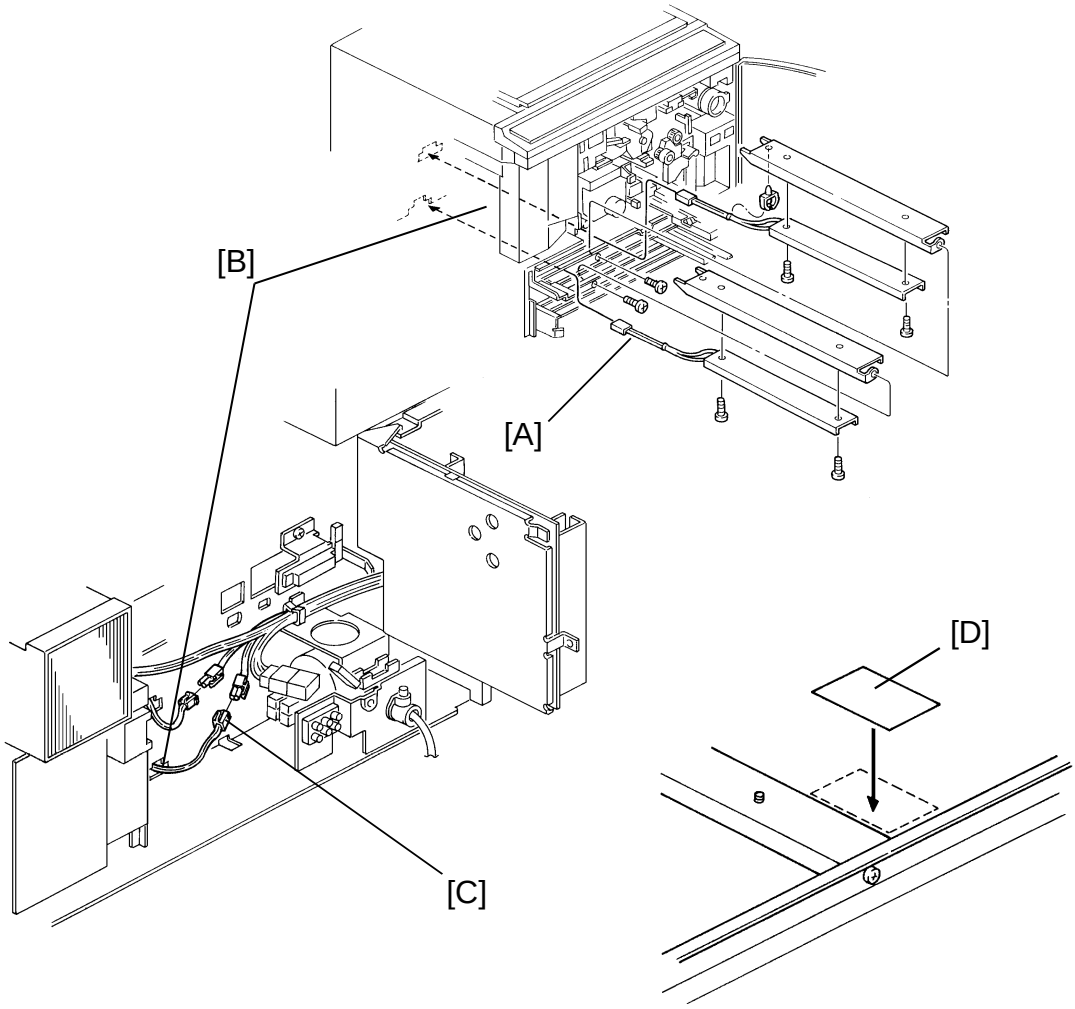

[Lower tray heater]

10. Pass the heater harness [A] through the lower heater access hole [B] and install the tray heater assembly as shown (1 screw at the front).
11. Connect the heater connector [C] with the copier as shown (2P red).

[Upper and Lower tray heaters]

12. Stick the warning high temp. decal [D] on the plate, to the right of the tray heater bracket as shown.
13. Reassemble the copier.
14. Tell the customer that the copier main switch should be turned off and the power cord should not be unplugged at night. Otherwise, the tray heaters will not function.

2.6 OPTICS ANTI-CONDENSATION HEATER INSTALLATION (OPTION)

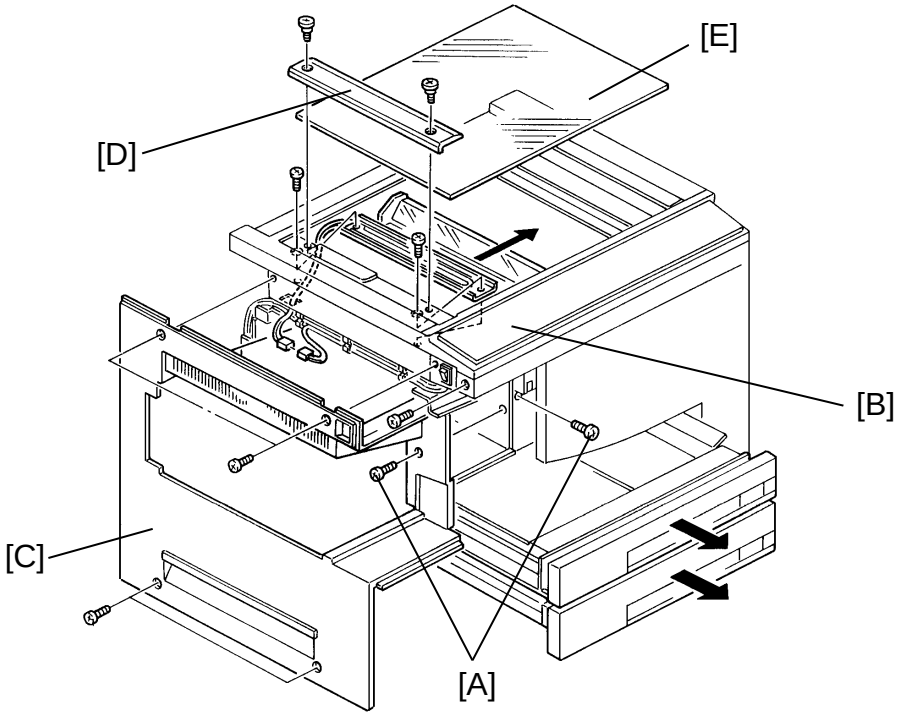

NOTE: The optional optics anti-condensation heater keeps water from condensing on the copier's mirrors. Such condensation occurs under cold and high humidity conditions, and causes the first few copies of the day to be black or dark. The heater is available as a service part.

Required parts:

Optics anti-condensation heater	(P/N AX400008 for 115V area, P/N AX400009 for 220/230/240V area)	1 piece
Philips pan head screw (M4 x 8)	(P/N 04340080W)	2 pieces

CAUTION: Unplug the copier power cord before starting the following procedure.

1. Open the front door and pull out the 1st and 2nd (or the paper and duplex) trays.
2. Remove the left and front side screws [A] of the front upper cover [B] and remove the left cover [C] (5 screws).
3. Remove the left scale [D] (2 shoulder screws) and the exposure glass [E].

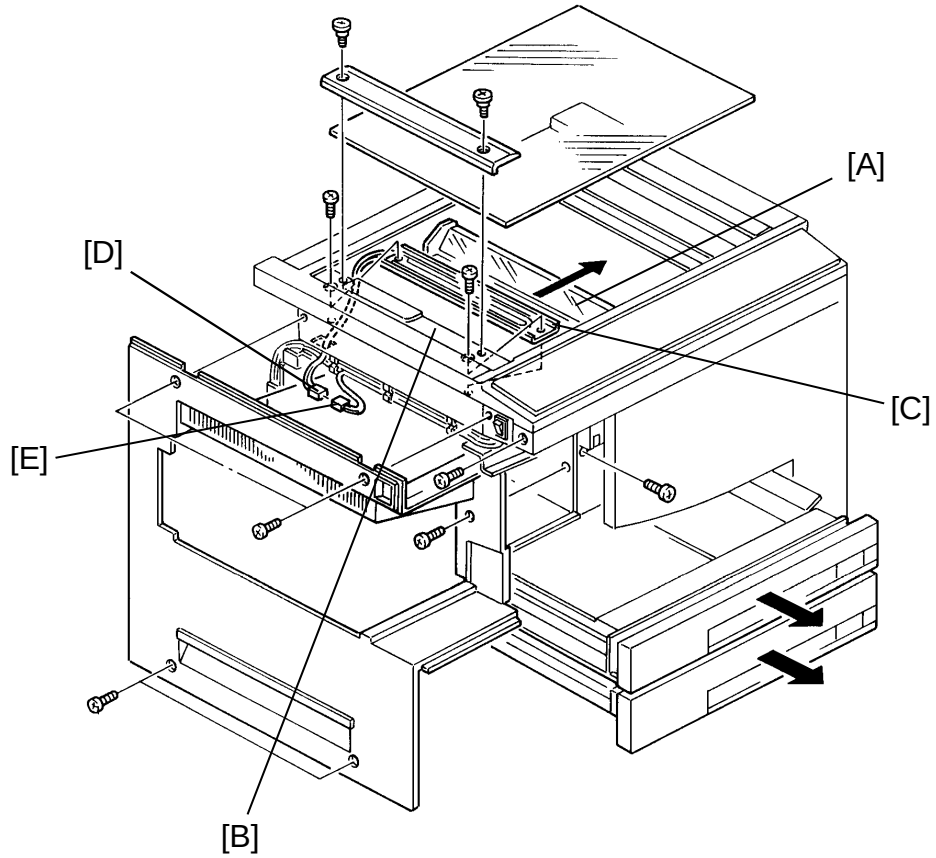

4. Move the 1st and 2nd scanners [A] to the left so that you can access under the left scale bracket [B].
5. Install the optics anti-condensation heater [C] on the optics bottom plate as shown with 2 screws.
6. Pass the heater connector [D] through the heater harness access hole and connect it with the ac harness connector [E] (2P red) as shown.
7. Reassemble the copier.
8. Tell the customer that the copier main switch should be turned off and the power cord should not be unplugged at night. Otherwise. the optics anti-condensation heater will not function.

SECTION 4

SERVICE TABLES

1. SERVICE REMARKS

1.1 HANDLING THE DRUM

The organic photoconductor drum is comparatively more sensitive to light and ammonia gas than a selenium drum.

1. Never expose the drum to direct sunlight.
2. Never touch the drum surface with bare hands. When the drum surface is touched with a finger or becomes dirty, wipe with a dry cloth or clean with wet cotton. Wipe with a dry cloth after cleaning with wet cotton.
3. Never use alcohol to clean the drum; alcohol dissolves the drum surface.
4. Store the drum in a cool, dry place away from heat.
5. Take care not to scratch the drum as the drum layer is thin and is easily damaged.
6. Never expose the drum to corrosive gases such as ammonia gas.
7. Always keep the drum in the protective sheet when keeping the drum unit, or the drum itself, out of the copier. Doing so avoids exposing the drum to bright light or direct sunlight. This will protect the drum from light fatigue.
8. Before inserting or pulling out the drum unit, the following should be performed to avoid damaging the drum:
   a) Remove the black and color development units
   b) Remove the cleaning unit
   c) Remove the charge corona unit
   d) Lower the T&S corona unit
9. Drum initial setting (SP66) must be performed when a new drum is installed.

1.2 DRUM UNIT

1. Make sure that the drum unit is set in position and secured with the screw when the main switch is turned on. If the drum unit is loose, poor contact of the drum connectors may cause electrical noise, resulting in unexpected malfunction (RAM data change is the worst case).
2. Clean the green color filter on the drum unit top plate with a dry cloth and discharge static electricity by touching it with your finger. Do not clean the filter with water or any other cleaning solution as the filter has an antistatic coating.

1.3 CHARGE CORONA

1. Clean the corona wires by sliding the corona unit in and out. (The cleaner pads come into contact with the corona wires when the corona unit is slid all the way out.) The wires can be also cleaned with water. Do not use sandpaper or a solvent.
2. Clean the charge corona casing with water first to remove NOx. Then clean it with alcohol if any toner still remains on the casing.
3. Clean the end blocks with a blower brush first to remove toner and paper dust. Then clean it with alcohol if any toner still remains on it.
4. Do not touch the corona wires with oily bare hands. Oil stains may cause white bands on copies.
5. Make sure that the corona wires are correctly positioned between the cleaner pads and that there is no foreign material (iron filings, etc.) on the casing.
6. When installing new corona wires, do not bend or scratch the wire surface to avoid any uneven charge. Also be sure that the corona wires are correctly positioned in the rear end block and that the damper rings are correctly positioned in the front end block. (See charge corona wire replacement.)
7. Clean the charge grid plate with a blower bush (not with a cloth).
8. Do not touch the charge grid plate with oily bare hands. Also, do not bend the charge grid plate or make any dent on it. Doing so may cause uneven charge.
9. The corona wire height should only be adjusted when the front end block is replaced.

1.4 OPTICS

1. When installing the exposure glass, make sure that the red mark on the edge of the glass faces up. This side has received a special treatment to be smoother and generate less static electricity. This is especially important when the ARDF is installed.
2. When moving the 1st or 2nd scanners, always hold them at the center. Move them slowly, carefully, and gently.
   Abrupt movement may cause the belt to slip into the wrong position on the scanner drive pulleys.
3. Do not bend or crease the exposure lamp flat cable. Be careful of this especially when reinstalling the lens housing cover.
4. When reinstalling the lens housing cover, make sure that the light shielding mylar on the original length sensor does not interfere with the light path to the ADS sensor board.
5. Do not touch the following parts with bare hands:
   a) Reflectors
   b) Exposure lamp
   c) Mirrors and lens
   d) ID sensor and V_L patterns
6. To clean the mirrors and lens, only use a clean soft cloth damped with alcohol or water.
7. Do not adjust uneven exposure by changing the exposure lamp position but by using the exposure adjusting plates. Adjusting the lamp position is very difficult because the filament cannot be seen clearly as the lamp is frosted.
8. Adjust the exposure lamp voltage (SP48) only when the drum initial setting (SP66) is performed.
9. Do not remove the lens housing guide plate and the 3rd scanner guide plate. They were positioned on the optics base plate with a special jig at the factory.

1.5 ERASE LAMP

1. A narrower lead edge erase margin increases the possibility of fusing jams. The margin should be at least 1.0 mm.
2. After cleaning the erase lamp unit, rub it lightly with your finger to discharge any static electricity on the unit surface.
3. Make sure that the erase lamp setting (SP84) is correct. Otherwise, ID sensor abnormal condition will occur.

1.6 DEVELOPMENT UNIT

1. Be careful not to nick or scratch the development roller sleeve.
2. Place the development unit on a sheet of paper after removing it from the copier. This prevents any small metal objects (staples, clips, E-rings, etc.) from being attracted to the development roller and getting inside the unit.
3. Be careful not to bend the bias terminals.
4. Clean the drive gears after removing the used developer.
5. Never load different types of developer or toner (black and color) into the development unit. Doing so will cause poor copy image and toner scattering inside the copier.
6. Developer initialization is necessary when new developer is loaded.
   a) Black developer initialize (SP65)
   b) Color developer initialize (SP10)
7. Adjust the black development bias voltage (SP37) together with the exposure lamp voltage (SP48) if necessary. This should be done only when the drum initial setting (SP66) is performed. The results of adjusting the black bias voltage with the used drum will be compensated by the exposure lamp voltage when the VL pattern detections are performed. The color development bias voltage (SP79) can be adjusted any time.
8. The doctor gaps must not be adjusted in the field as they are strictly adjusted at the factory.

1.7 TRANSFER AND SEPARATION

1. Clean the T&S corona unit casing with water then with alcohol if necessary.
2. Clean the separation corona wire only with dry cloth as it is carbon coated.
3. Clean the end blocks with a blower brush and alcohol.

1.8 CLEANING UNIT

1. When servicing the cleaning unit, be careful not to damage the edge of the cleaning blade.
2. Do not touch the cleaning brush with bare hands.
3. Before pulling out the cleaning unit, place a sheet of paper under it to catch any toner falling from the unit.
4. Empty the used toner tank in the following cases:
   a) At PM
   b) When the used toner tank is filled more than half of its capacity. (Of course it is better to do it at every visit.)
   c) When an ID sensor abnormal condition happens. (Used toner tank overflow cannot be detected.)
5. Perform the toner end counter clear (SP83) whenever the used toner tank is emptied.
6. If the toner end counter (SP58) is cleared by accident (by SP83 or any other reason), empty the used toner tank.

1.9 PRE-TRANSFER AND QUENCHING LAMPS

1. When removing the PTL filter to clean it, take out the drum unit first to prevent any damage on the drum.
2. When reinstalling the PTL filter, make sure that the filter is correctly positioned.
3. After cleaning the quenching lamp filter, rub it lightly with your finger to discharge any static electricity on the filter.

1.10 PAPER FEED

1. Do not touch the pick-up, feed, separation rollers and the friction pads with oily bare hands.
2. The side fences and the rear fence of the paper trays should be positioned correctly to align with the actual paper size. Otherwise, paper misfeeds may occur.
3. The friction pad should be replaced together with the friction pad holder and pad entrance seal as an assembly.
4. The friction pad assembly and the paper feed roller should be replaced as a set to maintain paper feed ability. (A worn out feed roller will provide incorrect friction pad pressure.)
5. The friction pad holder mounting bracket must be reinstalled on the original paper tray. Because the friction pad pressure is adjusted for each paper feed station independently at the factory.
6. The paper tray with the friction pad mechanism must be reinstalled at the original paper feeding station.
7. The friction pad pressure should not be adjusted in the field.

1.11 FUSING UNIT

1. Be careful not to damage the edges of the hot roller strippers or their tension springs.
2. Do not touch the fusing lamp with bare hands.
3. Make sure that the fusing lamp is positioned correctly and that it does not touch the inner surface of the hot roller.

2. SERVICE PROGRAM MODE

2.1 SERVICE PROGRAM MODE OPERATION

The service program (SP) mode is used to check electrical data, change mode, and adjust settings.

2.1.1 Service Program Access Procedure

There are three ways to access the SP mode.

1: By key operation (for users and sales representatives).

2: By turning on the main switch while holding down number keys. (for service representatives for normal SP modes).

3: By turning on the main switch while holding down mode keys (for service representatives for memory all clear mode (SP99) and normal SP modes).

Access Procedure 1: Key operation

Accessible SP mode numbers:

11, 14, 15, 16, 17, 18, 19, 20, 21, 26, 27, 34, 36, 38, 39, 46, 86, 91, 92, 93

(Refer to the SP mode table for details.)

1. Turn on the main switch.
2. Press the Clear Modes key.
3. Press the Clear/Stop key.
4. Press the Enter key.

   NOTE: The Call Service indicator and the Copy Counter number "0" start blinking to show that the SP mode has been accessed.
5. Enter the desired SP mode number using the number keys and press the Enter key.

NOTE: 1. An SP mode number will blink in the copy counter. The Copy Counter will stop blinking and stay on when the Enter key is pressed.
2. When the SP mode number is blinking, it can be changed by pressing the Clear/Stop key and entering a new number. The SP mode number can also be changed by using the Zoom keys ("+" & "–").
3. If the Enter key is pressed with an invalid SP mode number, the Max indicator will blink and the Copy Counter number will change to "0". In this case, Enter a valid SP mode number and press the Enter.

6. To leave the SP mode, press the Clear Modes key.

Access Procedure 2: Main switch and number keys

Accessible SP mode numbers:

All SP mode numbers except SP99 (memory all clear).

1. Turn the main switch off.
2. While pressing both 1 and 3 on the operation panel number keys, turn on the main switch.

   NOTE: Release the number keys after confirming that the Call Service indicator and the Copy Counter number "0" are blinking.

3. Enter the desired SP mode number using the number keys and press the Enter key.

   NOTE: 1. An SP mode number will blink in the Copy Counter. The Copy Counter will stop blinking and stay on when the Enter key is pressed.
   2. When the SP mode number is blinking, it can be changed by pressing the Clear/Stop key and entering the new number. The SP mode number can also be changed by using the zoom keys ("+" & "–").
   3. If the Enter key is pressed with an invalid SP mode number, the Max indicator will blink and the Copy Counter number will change to "0". Enter a valid SP mode number and press the Enter key.

4. To leave the SP mode, turn off the main switch.

Access Procedure 3: Main switch and mode keys

Accessible SP mode numbers:

All SP mode numbers including the SP99 (memory all clear)

1. Turn the main switch off.
2. While pressing both the Modes Clear and Clear/Stop keys on the operation panel, turn on the main switch.

   NOTE: Release the keys after confirming that the Call Service indicator and the Copy Counter number "0" are blinking.
3. After that follow access procedure 2.

2.1.2 Change Adjustment Values or Modes

1. Follow steps1 to 5 of access procedure 1 or steps 1 to 3 of access procedure 2.
2. The factory-set value/mode or the default setting will be displayed in the three digit indicator.
3. Enter the desired value or mode using the number keys. (SP mode numbers and information are given in the SP Mode table.)
4. To leave the SP mode, press the Clear Modes key (access procedure 1) or turn off the main switch (access procedure 2).

2.1.3 Memory All Clear Procedure (SP99)

CAUTION: Memory all clear mode (SP99) clears all the correction data for process control and software counters, and returns all the modes to the default settings. Normally, this mode should not be performed.

This procedure is required only when the copier malfunctions due to a damaged RAM or when replacing the RAM board for any reason.

1. Access the SP mode through Access Procedure 3.
2. Enter "99" and press the Enter key.
3. Enter "1" and press the Enter key. (Beeper sounds 5 times when memory has been cleared.)

4. Enter the factory-set values in the following SP modes:

40:	Jogger span (Duplex machine only)
41:	Lead edge erase
42:	Registration
43:	Vertical magnification
44:	Horizontal magnification
45:	Duplex magnification (Duplex machine only)
47:	Focus adjustment
50:	Lens error correction
62:	Grid reference voltage
161:	Grid volt/M-CH drum current check (P)
162:	T-CH PWM/drum current check
163:	D-CH (AC) PWM/drum current check
164:	D-CH (DC) PWM/drum current check

NOTE: Open the front cover and remove the cover plate (1 screw) from the front upper cover. There is an SP data table sheet inside the front upper cover which gives the above factory-set values.

5. Turn off the main switch.
6. Clean the used toner tank because the toner end counter has been cleared.
7. Replace the OPC drum with a new one.

   NOTE: Since the drum counter for the process control has been cleared, the old drum cannot be used. If the old drum is used after all memory is cleared, a dirty background and/or toner scattering will appear on copies sooner or later because proper V_G correction will not be applied to the drum.
8. Clean the optics, sensors, and inside of the machine if necessary.
9. If the high voltage supply board - CTBG and/or -D is not the original one, do the following:
   1) Clean the corona unit casings and replace the corona wires with new ones.
   2) Enter to the SP mode by the access procedure 2.
   3) Enter the grid voltage correction data in SP62 referring to the label on the high voltage supply board - CTBG.
   4) Perform the auto drum current adjustment by SP57.
10. Enter the SP mode by access procedure 2.

11. Enable optional equipment operation by SP71 (sorter), SP72 (paper tray unit), and SP84 (edit erase lamp unit) as necessary.

12. Perform the following SP modes:
    SP66: Drum initialize
    SP54: Auto Vsg/Vlg adjustment
    SP48: Exposure lamp voltage adjustment
    SP56: Auto ADS gain adjustment

13. Check copy quality and the paper path and do the necessary adjustments.

2.2 SERVICE PROGRAM MODE TABLE

NOTE: 1. A "❒" after the mode name means that copies can be made. For these modes, the copier goes automatically into copy mode when an SP mode number is selected by pressing the "#" key, or when the data number for adjustment is entered by pressing the "#" key after selecting the SP mode number. To make copies, enter desired copy quantity, select ID level and paper tray, then press the Start key. If you do not wish to make copies, press the "#" key instead of the Start key.

2. A "•" before the mode number means that the mode can be accessed by users and sales representatives.
3. In the *Function* column, comments (extra information) are in italics.
4. In the *Data* column, the default value is printed in bold letters.

Mode No.		Function	Data
2	Free Run Set	Sets the copier in free run mode. *(The copier runs without paper feeding.* After SP2 is set, press the start key to start free run operation. Before pressing the start key you can select any other SP mode in which copying is possible [❒ mark]. ["#"→SPNo.→"#"→Start key].)	
3	Free Run Reset ❒	Resets the copier from free run mode.	
4	Forced Start ❒	Copies can be made before being warmed up. *(Copy quality and paper transport are not assured.*)	
5	Lamp OFF ❒	Copies are made with exposure lamp OFF. *(Black copies are made.)*	
6	No Misfeed Detection ❒	Copies are made without ON check of jam detection.	
7	Call Service Indicator	Indicates the cause of a blinking call service indicator. *(Indicates 0, 1, 2, 3, 12, 13, 23, or 123 in the three digit indicator.)*	0: Normal 1: PM 2: ID sensor failure 3: Toner overflow.
8	Input Check ❒	Displays the input data from sensors and switches. *(For data, see page 4 - 28.)*	
9	Output Check	Electrical components turn on. *(For data, see page 4 - 31.)*	

Mode No.		Function	Data
10	Color Developer Initialize	Agitates new color developer for about 1 minute. Press the start key to begin operation. *(This must be done when new color developer is put in.* *Beeper sounds 5 times when initialization is completed.)*	
•11	All Indicators ON	Turns on all the indicators on the operation panel. *(To turn off the indicators, press the "#" key.)*	
12	Language	Selects the language displayed in the guidance display. *(SP12 applies to type 2 copiers only.* *For other languages the optional ROM is required.)*	0: Japanese **1: English** 2: French 3: German 4: Italian 5: Spanish [Other Languages] 0: **1:** 2: 3: 4: 5:
13	A3/DLT Double Count	Selects single or double count for the total counter and key counter in A3/11" x 17" copying. *(Double count is not applied for copies from the by-pass feed table.* *Double count is applied to the user code counter [SP91] and the mechanical counters.)*	**0: Single** 1: Double
•14	Manual Staple Reset	Selects accessible period for manual stapling after completing a copy job in sort mode. *(Only when the sorter stapler is installed.)*	**0: 20 sec.** 1: 1 min. 2: None
•15	Auto Reset	Selects auto reset time of 1 or 3 minutes, or cancels this mode.	**0: 1 min.** 1: 3 min. 2: None
•16	Count Up/Down	Selects count up or count down.	**0: Up** 1: Down
•17	Auto Cassette Shift	Selects auto cassette shift mode. *(Copier automatically shifts to the LCT or paper tray holding the same size paper when paper runs out.)*	**0: Yes** 1: No
•18	Beeper On	Turns beeper on or off.	**0: On** 1: Off
•19	ID Mode	Specifies whether the copier defaults to ADS or manual ID mode when the main switch is turned on.	**0: ADS** 1: Manual
•20	LCT Priority	Sets the feed station priority to LCT or the 1st tray.	**0: On** 1: Off

Mode No.		Function	Data
•21	APS Priority (Copier)	Specifies whether the copier defaults to APS or manual mode when the main switch is turned on.	**0: APS** 1: Manual 2: No
22	SADF Auto Reset	Selects auto reset time for SADF mode.	**0: 5 sec.** 1: 60 sec
23	ADF Free Size	Enables originals of various sizes to be fed from the same width stack. (When this mode is enabled, the job interval for each original increases.)	**0: No** 1: Yes
24	Overlay Border Erase	Makes a white frame on the border line when using "Black in area" or "Color in area" mode. *(Only when the editor is installed.)*	**0: No** 1: Yes
25	Staple Limit	Sets the staple limit of copies in each bin in staple mode. *(Only when the sorter stapler is installed.)*	**0: Yes (30 copies)** 1: No (50 copies)
•26	Auto APS Select (ADF)	Selects the priority of APS mode when originals are set on the ADF. *(Only when the ADF is installed.)*	**0: Yes** 1: No
•27	Overlay Series Priority	Sets the priority of series copying in overlay mode. *(For type 2 copiers only)*	**0: No** 1: Yes
28	Auto Sort Select (ADF)	Sort Mode is automatically selected when more than 1 original is set on the ADF and the entered copy quantity is greater than 1 and less than 21 (11 for the micro sorter). *(Sorter and ADF must be installed on the machine.* *When in duplex 1 [1-sided original mode] or overlay mode, more than 2 originals must be set.)*	**0: Manual** 1: Auto Sort
29	Zero Cross Control	Selects fusing temperature control mode. *(After selecting the control mode and turning the main switch off/on, the fusing temperature control mode changes.)*	**0: Yes (Zero cross)** 1: No (Phase)
30	Black Toner Supply Mode	Selects black toner supply mode. *(See SP 31/SP32 for toner supply amount.)*	**0: Detect Mode** 1: Fixed Mode
31	Black Toner Supply Ratio (Detect Mode)	Determines how much toner is supplied in detect mode.	**0: 15%** 1: 7% 2: 30% 3: 60%
32	Black Toner Supply Ratio (Fixed Mode)	Determines how much toner is supplied in fixed mode.	**0: 7.0%** 1: 3.5% 2: 10.5% 3: 14.0%

Mode No.		Function	Data
33	Black (ID sensor) Pattern Bias	Sets the bias voltage applied to the development roller for the ID sensor pattern. *(0: –200 V= Normal* *1: –160 V= Lighter* *2: –220 V= Darker* *3: –240 V= Darkest)*	**0: N** 1: L 2: H 3: HH
•34	ADS Density	Selects the image density level in ADS mode. *(Data 1: Increases charge grid voltage [–50 V]. Development bias voltage has standard value. Data 2: Increases development bias voltage [–40 V]. Charge grid voltage has standard value.)*	**0: N (Normal)** 1: H (Darker) 2: L (Lighter)
35	Black ID Detection	Black ID sensor check is performed every 5 copies or 10 copies. *(If low image density occurs in the toner near end condition, change the data to "1".)*	**0: 10 copies** 1: 5 copies
•36	Image Shift (Duplex 1)	Selects the margin on the right side of the reverse page in duplex 1 mode. *(For type 2 copier only. When duplex 1 [1-sided original mode] is selected, this margin is automatically added.)*	**0: 5 mm** 1: 0 mm 2: 10 mm 3: 15 mm
37	Black Bias	Adjusts black bias voltage if the image density at level 4 cannot be adjusted by (SP48 exposure lamp voltage). This must be done only other replacing the OPC drum. *(0: Vo = Normal* *1: Vo +40 V = Darkest* *2: Vo +20 V = Darker* *3: Vo –20 V = Lighter* *4: Vo –40 V = Lightest)*	**0: N** 1: HH 2: H 3: L 4: LL
•38	Edge Erase	Selects the width of the edge erase margin. *(Only when the editor is installed.)*	**0: 10 mm** 1: 5 mm 2: 15 mm 3: 20 mm
•39	Center Erase	Selects the width of the center erase margin. *(Only when the editor is installed.)*	**0: 20 mm** 1: 10 mm 2: 15 mm 3: 25 mm
40	Jogger Span	Adjusts the stop position of the jogger fences. *(For type 2 copier only. 0.5 mm per step. [max, –4.0 mm to +3.5 mm].)*	0~15 **8 = default**
41	Lead Edge Erase ❒	Adjusts lead edge erase margin. *(0.5 mm per step [max –4.0 mm to +3.5 mm].)*	0~15 **8 = default**
42	Registration ❒	Adjusts lead edge registration. *(0.5 mm per step [max –4.0 mm to +3.5 mm].)*	0~15 **8 = default**
43	Vertical Magnification ❒	Adjusts magnification in the paper travel direction. *(0.2 % per step. [max. –1.6% to +1.4%].)*	0~15 **8 = default**

Service Tables

Mode No.		Function	Data
44	Horizontal Magnification ❒	Adjusts magnification perpendicular to the direction of paper travel. *(0.2 % per tep. [max. –3.2% to +3.0%].)*	0~31 **16 = default**
45	Duplex Magnification	Adjusts vertical magnification of the first image to equal the second image when using overlay or duplex mode.	**0: +0.4%** 1: No correction 2: +0.2% 3: +0.6% 4: +0.8% 5: +1.0% 6: +1.2% 7: +1.4% 8: +1.6% 9: +1.8% 10: +2.0%
•46	Highlight Bias (Manual ID Level 7)	Selects the development bias voltage of manual ID level 7. *(0: –240 V = Normal* *1: –200 V = Darker* *2: –280 V = Lighter* *3: –320 V = Lightest)*	**0: N** 1: D 2: L 3: LL
47	Focus Adjustment ❒	Adjusts the 4th/5th mirror position to correct the fine focus. *(0.6 mm per pulse. SP47 must be done after vertical and horizontal magnification adjustments [SP43 and 44].)*	0~80 **40 = default**
48	Lamp Voltage ❒	Adjusts the exposure lamp voltage. *(50 to 75 V in 0.5 V steps.* *The lamp voltage must be adjusted only after performing SP 66 when replacing the OPC drum.)*	50~75V **63V = default**
49	Fusing Temperature	Adjusts fusing temperature. *(175 to 190 °C in 1 °C steps.)*	175~190 °C **185 ° = default**
50	Lens Error Correction ❒	Adjusts the lens position to correct magnification in enlarge/reduction mode. *(0.1% per step [max. –0.8%, to +0.7%].)*	0~15 **8 = default**
51	Lamp Voltage Check	Displays the exposure lamp voltage. *(The exposure lamp, main motor,optics cooling fan fusing exhaust fan, and exhaust blower turn on for 10 seconds when the Enter key is pressed.* *Press the "•" key to check the target lamp voltage (including corrections).* *Press the C/S key to turn this mode off.* *Do not repeat more than 5 times to avoid overheating the optics cavity.)*	[V]
52	Fusing Temperature Check ❒	Displays the fusing temperature.	[°C]

Mode No.		Function	Data
53	Drum Temperature Check ❒	Displays the temperature around the drum.	[°C]
54	Auto Vsg/Vlg Adjustment ❒	Adjusts Vsg of ID sensor and Vlg of V sensor automatically at once. *(Adjusted PWM values of ID sensor and V sensor are displayed in the three digit indicator.* *Beeper sounds 2 times when the adjustments [about 4 sec.] are completed.)*	
55	Vsp/Vsg Data ❒	Displays the Vsg and Vsp readings. The Vsg reading is displayed while the "0" key is held down. *(When making copies, the Vsp and Vsg voltage readings are updated every 10 or 5 copies [ID sensor check timing].)*	[V]
56	Auto ADS Gain Adjustment	Adjusts ADS gain data automatically when the start key is pressed. *(Close the platen cover to prevent external light from reaching the ADS sensor when performing this adjustment.* *The gain data is displayed in the three digit counter.* *Beeper sounds 2 times when the adjustment [about 4 sec.] is completed.)*	
57	Auto Drum Current Adjustment	Adjusts the transfer and separation corona currents automatically. Press the start key to perform. *(When the high voltage supply board [CTBG] and/or [D] is replaced, perform this mode after setting the data of SP62.* *When separation corona current adjustment fails, beeper sounds twice and the copier tries the adjustment again.* *Beeper sounds twice when the adjustment is completed.)*	[Display only] 1: Measuring and adjusting the transfer corona current. 2: Measuring and adjusting the separation corona current. 3: Completed
58	Toner End Counter Check	Displays the contents of the black toner end counter. *(Toner end condition is not counted if the toner end condition happens within 250 copies after the previous toner end condition.)*	
59	Bias Voltage Check ❒	Displays bias voltage. Press the Start key to display the bias voltage. Press the C/S key to stop.	[V]

Service Tables

Mode No.		Function	Data
62	Grid Reference Voltage	Sets the grid voltage correction data to correct the output from the high voltage supply board. *(A label on the high voltage supply board gives the correct value.* *When the high voltage supply board [CTBG] is replaced, set the data using SP62 before performing SP57.)*	**704**
65	Black Developer Initialize	Agitates new black developer for about 5 minutes. Press the start key to begin operation. *(This mode must be done when new black developer is put in.* *Beeper sounds 5 times when the initialization is completed.)*	
66	Drum Initialize	Used to set new drum condition. *(This must be done when a new drum is installed. The OPC counter, V_R correction level, and Vref [initial Vlp/Vlg] are cleared.* *To set, press "1" then the "#" key.* *Beeper sounds 5 times when the initialization is done.)*	**0: NO** 1: YES
67	Drum Correction Level (V_R)	Displays the present V_R correction level. *(V_R level [%]=Vrp/Vrg x 100)*	[Display only] 0: 100-84 1: 83-58 2: 57-41 3: 40-28 4: 27-0
68	Lamp Correction Level (V_L)	Displays the present Vdat. [Vlp/Vlg x 100=Vdat] The V_L level (%) is displayed while the "•" key is held down. *(V_L level [%]=Vdat/Vref x 100*=[(Vlp/Vlg)/ (Initial Vlp/Vlg)] *x 100.)*	[Display only] V_L level 0-100 : +1V 101-150 : 0V 151- : –1V
69	Sense Drum Correction Level (V_R) (Forced V_R Detection)	Detects V_R correction level regardless of the drum counter. *(The detection will be done in the first 5 copy cycles after exiting the SP mode.* *Beeper sounds 5 times when this mode is accepted.)*	
70	Sense Lamp Correction level (V_L) (Forced V_L Detection)	Detects V_L correction level regardless of the drum counter. *(V_L pattern detection is done 4 times.* *Beeper sounds for each detection and Vdat is displayed in the three digit indicator each time.* *The average of the 4 detections can be monitored by SP68.)*	

Mode No.		Function	Data
71	Sorter	Enables sorter operation *(0: No sorter* *1: Micro sorter* *2: Mini sorter* *3: Midi sorter* *4: Sorter stapler* *5: Sorter adapter).*	**0: No** 1: MC 2: MIN 3: MID 4: SS 5: ADP
72	Option Paper Tray Unit	Enables paper tray unit operation.	**0: No** 1: Yes
73	LCT Paper Size	Selects paper size for the LCT. *(For type 2 and type 3 only)*	**0: A4** 1: B5 **2: LT**
74	Color ID Detection	Color ID sensor check is performed every 5 copies or 10 copies. *(Normally, "0" should be selected for color toner.)*	**0: 5 copies** 1: 10 copies
75	Red/Blue/Green (ID sensor) Pattern Bias	Selects the bias voltage applied to the development roller for the color ID sensor pattern. *(0: Vo = Normal* *1: Vo +40V = Lighter* *2: Vo –20V = Darker* *3: Vo –40V = Darkest)*	**0: N** 1: L 2: H 3: HH
76	Sorter Max	Sets the sort/stack quantity limit. (0: No= No sort/stack limit. 1: Yes= Sort/stack amount is limited, the amount depends on which sorter is installed.)	**0: No** 1: Yes
77	(ADF) Auto Feed Out (Duplex mode)	Sets the copier to eject the final copy if an odd number of originals are set. *(When "Yes", the final sheet is fed out;* *When "No", the sheet stays in the duplex tray.)*	**0: Yes** 1: No
79	Color Bias	Adjusts color bias voltage if color image density is improper compared with black image density. *(0: Vo = Normal* *1: Vo +40V = Darkest* *2: Vo +20V = Darker* *3: Vo –20V =Lighter* *4: Vo –40V = Lightest)*	**0: N** 1: HH 2: H 3: L 4: LL
81	Red/Blue/Green Toner Supply Ratio (Detect mode)	Selects color toner supply ratio in detect supply mode. *(Each color can have independent toner supply ratio.* *Selected toner supply ratio corresponds to the color development unit installed in the copier.)*	**0: 14 %** 1: 7 % 2: 21 % 3: 28 %
83	Toner End Counter Clear	Resets the used toner overflow condition and clears the toner end counter (SP58). *(To clear, press "1" then the "#" key.* *SP83 must be used when the used toner tank is cleaned.)*	**0: No** 1: Yes

Service Tables

Mode No.		Function	Data
84	Editing Eraser	Enables edit erase lamp unit operation. *(The copier CPU automatically enables edit erase lamp unit when the editor is installed.)*	**0: No** 1: Yes
85	TEL No.	Use to input the telephone number of the service depot. *(Pressing "•" key shows "–" in the guidance display.)*	
•86	Under Color Density	Adjusts color background density in highlight color mode of editor. *(Only effective when the editor is installed. Each color can have an independent under color density.* *Adjusted under color density corresponds to the color development unit installed in the copier.)*	1: Darkest – **4: Normal** – 7: Lightest
87	PM Interval	Sets the interval of the PM counter.	**0: No PM** 1: 60 K 2: 80 K 3: 100 K 4: 120 k
88	PM Counter	Displays contents of the PM counter. *(When entering this mode by pressing the "#" key, the first three digits are displayed in the three digit indicator.* *Hold down the "•" key to display the second three digits.* *When the PM counter is exceeded, the call service indicator blinks and the key counter indicator lights.)*	
89	PM Counter Clear	Resets the PM counter. *(Use this mode after performing PM. Beeper sounds 2 times when this function is used.)*	
90	User Code Mode	Enables user code mode (Key counter shorting connector must be removed.) *(If this mode is set, a user must enter a code to make copies.* *Resets when auto clear mode functions or when C/S and clear mode keys are pressed together.* *The user codes are the following 20 numbers: 1101, 1202, 1303, 1404, 1505, 1606, 1707, 1808, 1909, 2010, 2111, 2212, 2313, 2414, 2515, 2616, 2717, 2818, 2919, 3020).*	**0: No** 1: Yes

Mode No.		Function	Data
•91	User code Counter Check	Displays the contents of each user code counter. use the "+" and "–" ("up" and "down") keys to select user code. (The last two digits of the user code are displayed in the copy counter.) *(User counters count from 0 to 999999.* *Press "#" key to display the first three digits in the three digit indicator.* *Hold down "•" key to display the final three digits.)*	
•92	User Code Counter Clear	Resets counters of all the user codes (SP91). *(To reset, press "1" then the "#" key).*	**0: No** 1: Yes
•93	Copy Limit	Limits the maximum copy quantity that can be entered.	1 – 999 **999 = default**
97	SC/Jam Counter Clear	Clears all the service call and jam counters. *(To clear, press "1" then the "#" key.* *Beeper sounds 3 times when this function is used.)*	**0: No** 1: Yes
98	Counter Clear	Clears the following counters: - Operation Time (motor count only) (SP100) - Copy/Original Counters (SP101) - SC Counters (SP120) - Jam Counters (SP130) - PM Counter (SP88) - User Code Counters (SP91) - User Program *(To clear, press "1" then the "#" key.* *Beeper sounds 4 times when this function is used.)*	**0: No** 1: Yes
99	Memory All Clear	Clears all counters and returns all modes to the default setting. *(To access this mode turn on the main switch while pressing both the "Clear Modes" and "C/S" keys. Then enter "99" and press the "#" key.* *To clear, press "1" then the "#" key.* *Beeper sounds 5 times when this function is used.)*	**0: No** 1: Yes

Mode No.		Function	Data
100	Operation Time	Displays the total (accumulated) time that the main motor has operated. (*Time in hours.* *-Motor Count-* *Press the "#" key to display the first three digits in the three digit indicator. Hold down the "•" key to display the second three digits.* *-Drum Count-* *Hold down the "0" key to display the first three digts in the three digit indicator. Hold down the "0" & "•" keys to display the second three digits.* ***NOTE:*** *Drum counter can be cleared by using SP66.)*	
101	Copy/Original Counter	Displays the total number of the following copies or originals. Use the "+ " & "–" ("up" & "down") keys to select the desired number. *(Press the "#" key to enter this mode.* *When the desired number displayed in the copy counter is selected by using the "+" & "–" keys, the first three digits are displayed in the three digit indicator.* *Hold down the "•" key to display the second three digits.* *Type 2 copier displays all 6 digits in the guidance display.)*	
101-1	Total Counter	Displays the total number of copies	
101-2	Total Color Counter	Displays the total number of color copies.	
101-3	Red Counter	Displays the total number of red copies.	
101-4	Green Counter	Displays the total number of green copies.	
101-5	Blue Counter	Displays the total number of blue copies.	
101-6	Duplex Counter	Displays the total number of duplex copies made.	
101-7	ADF Counter	Displays the total number of copies made using the ADF.	
101-8	Staple Counter	Displays the total number of sets of stapled copies.	
101-9	Paper Tray Unit Counter	Displays the total number of sheets fed from the paper tray unit.	
101-10	By-pass/LCT Counter	Displays the total number of sheets fed from the by-pass feed table or the LCT.	
101-11	Overlay Counter	Displays the total number of overlay copies made.	
101-12	A3/11" x 17" (DLT) Counter	Displays the total number of A3 or 11"x 17" copies.	
101-13	B4/8 1/2" x 14" (LG) Counter	Displays the total number of B4 or 81/2" x 14" copies.	
101-14	A4/8 1/2" x 11" (LT) Counter	Displays the total number of A4 or 8 1/2" x 11" copies.	

Mode No.		Function	Data
101-15	B5 Counter	Displays the total number of B5 copies.	
101-16	Original Total Counter	Displays the total number of originals copied.	
101-17	Original Counter (ADF)	Displays the total number of originals copied using the ADF.	
101-18	Reduction Counter	Displays the total number of copies made in reduction mode.	
101-19	Enlargement Counter	Displays the total number of copies made in enlargement mode.	
110	Supply Counter	Displays the total number of copies made by using the following supplies. Use the "+" & "–" ("up" & "down") keys to select the desired number. *(Press the "#" key to enter this mode.* *When the desired number displayed in the copy counter is selected by using the "+" & "–" keys, the first three digits are displayed in the three digit indicator.* *Hold down the "•" key to display the second three digits.* *Type 2 copier displays all 6 digits in the guidance display.)*	
110-1	Drum Counter	Displays the total number of copies made using the present drum.	
110-2	Black Developer Counter	Displays the total number of copies made using the present black developer.	
110-3	Red Developer Counter	Displays the total number of copies made using the present red developer.	
110-4	Green Developer Counter	Displays the total number of copies made using the present green developer.	
110-5	Blue Developer Counter	Displays the total number of copies made using the present blue developer.	
120	SC Counter	Displays the total number of the following service calls. Use the "+" & "–" ("up" & "down") keys to select the desired number. *(Press the "#" key to enter this mode.* *When the desired number displayed in the copy counter is selected by using the "+" & "–" keys, the first three digts are displayed in the three digt indicator.* *Hold down the"•" key to display the second three digts.* *Type 2 copier displays all 6 digits in the guidance display.)*	
120-1	SC Total Counter	Displays the total number of times the service call indicator has turned on.	
120-2	SC Optics Counter	Displays the total number of "Optics" service calls.	

Service Tables

Mode No.		Function	Data
120-3	SC Exposure Counter	Displays the total number of "Exposure" service calls.	
120-4	SC Drive Counter	Displays the total number of "Functional Drive" service calls.	
120-5	SC Fuser Counter	Displays the total number of "Fusing" service calls.	
120-6	SC Communication Counter	Displays the total number of "Interface communication" service calls.	
120-7	SC Duplex Counter	Displays the total number of "Duplex" service calls.	
120-8	SC Feed Counter	Displays the total number of "Paper Feed" service calls.	
120-9	SC Sorter Counter	Displays the total number of "Sorter" service calls.	
130	Jam Counter	Displays the total number of paper jams. Use the "+" & "–" ("up & "down") keys to select the desired number. *(Press the "#" key to enter this mode.* *When the desired number displayed in the copy counter is selected by using the "+" & "–" keys, the first three digts are displayed in the three digt indicator.* *Hold down the "•" key to display the second three digts.* *Type 2 copier displays all 6 digits in the guidance display.)*	
130-1	Jam Total Counter	Displays the total number of paper jams excluding original jams in the ADF (SP130-14).	
130-2	Jam 1st Feed Counter	Displays the total number of paper jams from the upper paper tray (Type 1 & 3).	
130-3	Jam 2nd Feed Counter	Displays the total number of paper jams from the lower paper tray.	
130-4	Jam 3rd Feed Counter	Displays the total number of paper jams from the upper tray of the paper tray unit.	
130-5	Jam 4th Feed Counter	Displays the total number of paper jams from the middle tray of the paper tray unit.	
130-6	Jam 5th Feed Counter	Displays the total number of paper jams from the lower tray of the paper tray unit.	
130-7	Jam By-pass/LCT Feed Counter	Displays the total number of paper jams from the by-pass feed table or the LCT.	
130-8	Jam Fuser Counter	Displays the total number of paper jams in the fusing unit area.	
130-9	Jam Inverter Counter	Displays the total number of paper jams in the duplex entrance area.	
130-10	Jam Duplex Stack Counter	Displays the total number of paper jams in the turn gate area during duplex stacking.	
130-11	Jam Duplex Feed Counter	Displays the total number of paper jams from duplex tray.	

Mode No.		Function	Data
130-12	Jam Exit Counter	Displays the total number of paper jams in the copier exit area.	
130-13	Jam Sorter Counter	Displays the total number of paper jams in the sorter.	
130-14	Jam ADF Counter	Displays the total number of original jams in the ADF.	
150	Paper Feed Timing (By-pass/LCT) ❒	Adjusts the registration paper buckle amount for the paper fed from the by-pass feed table or the LCT. *(The data value is the approximate distance that the paper is fed after the lead edge is detected by the registration sensor.)*	0: 27 mm – 15: 42 mm **16: 43 mm** 17: 44 mm – 24: 51 mm
151	Paper Feed Timing (1st tray) ❒	Adjusts the registration paper buckle amount for the paper fed from the upper paper tray (Type 1 & 3 only). *(The data value is the approximate distance that the paper is fed after the lead edge is detected by the registration sensor.)*	0: 27 mm – 9: 36 mm **10: 37 mm** 11: 38 mm – 24: 51 mm
152	Paper Feed Timing (2nd~5th tray) ❒	Adjusts the registration paper buckle amount for the paper fed from the lower paper tray or the paper tray unit. *(The data value is the approximate distance that the paper is fed after the lead edge is detected by the registration sensor.)*	0: 27 mm – 6: 33 mm **7: 34 mm** 8: 35 mm – 24: 51 mm
153	Paper Feed Timing (Duplex) ❒	Adjusts the registration paper buckle amount for the paper fed from the duplex tray. *(The data value is the approximate distance that the paper is fed after the lead edge is detected by the registration sensor.)*	0: 27 mm – 14: 41 mm **15: 42 mm** 16: 43 mm – 24: 51 mm
154	Single Duplex Reverse Timing ❒	Adjusts the switch-back timing of paper in the duplex tray in single 2-sided copying. *(The smaller the data is, the earlier the switch-back timing becomes.)*	0: –4 mm – 3: –1 mm **4:** 5: +1 mm – 8: +4 mm
157	Trail Edge Erase ❒	Adjusts the trail edge erase start timing. *(When the default value is selected, the trail edge erase starts 2mm after the trail edge of the image.)*	0: –6 mm – 11: –0.5 mm **12:** 13: +0.5 mm – 15: 1.5 mm

Service Tables

Mode No.		Function	Data
160	Grid Volt./M-CH Drum Current Check	Displays the grid bias voltage and the charge corona current for the image area in the three digit indicator. *(When entering this mode by pressing the "#" key, grid bias voltage [V] is displayed.* *Hold down the start key to display the charge corona current [μA].* *Grid bias voltage can be changed by using "+" & "–" ["up" & "down"] keys in 5V steps.)*	**745 V**
161	Grid Volt./M-CH Drum Current Check (P)	Displays the grid bias voltage and the charge corona current for the ID sensor pattern in the three digit indicator. *(When entering this mode by pressing the "#" key, grid bias voltage [V] is displayed.* *Hold down the start key to display the charge corona current [μA].* *Grid bias voltage can be changed by using "+" & "–" ["up" & "down"] keys in 5V steps.)*	**500 V**
162	T-CH PWM/Drum Current Check	Displays the transfer corona current in the three digit indicator. *(When entering this mode by pressing the "#" key, the adjusted PWM value for the high voltage supply board [T] is displayed.* *Hold down the start key to display the transfer corona current [μA].* *The PWM value can be changed by using the "+" & "–" ["up" & "down"] keys in 1 step.)*	
163	D-CH (AC) PWM/Drum Current Check	Displays the separation ac corona current in the three digit indicator. *(When entering this mode by pressing the "#" key, the adjusted PWM value for the high voltage supply board [D-ac] is displayed.* *Hold down the start key to display the separation ac corona current [μA]. The value displayed will change by a large amount after 1.4 seconds. The check value is the value immediately before the change.* *The PWM value can be changed by using the "+" & "–" ["up" & "down"] keys.)*	
164	D-CH (DC) PWM/Drum Current Check.	Displays the separation dc corona current in the three digit indicator. *(When entering this mode by pressing the "#" key, the adjusted PWM value for the high voltage supply board [D-dc] is displayed.* *Hold down the start key to the display separation dc corona current [μA]. The value displayed will change by a large amount after 1.4 seconds. The check value is the value immediately before the change.* *The PWM value can be changed by using "+" & "–" ["up" & "down"] keys.)*	

Mode No.		Function	Data
165	ID-sensor PWM/Output Check	Displays the ID sensor output in the three digit indicator. *(When entering this mode by pressing the "#" key, the adjusted PWM value for the ID sensor is displayed.* *Hold down the start key to display the ID sensor output voltage.* *The PWM value can be changed by using the "+" & "–" ["up" & "down"] keys.)*	
166	V-Sensor PWM/Output Check	Displays the V sensor output in the three digit indicator. *(When entering this mode by pressing the "#" key, the adjusted PWM value for the V sensor is displayed.* *Hold down the start key to display the V sensor output voltage.* *The PWM value can be changed by using the "+" & "–" ["up" & "down"] keys.)*	
167	ADS Gain/Output Check	Displays the ADS sensor output in the three digit counter. *(When entering this mode by pressing the "#" key, the adjusted gain data for the ADS sensor is displayed.* *Hold down the start key to display the ADS sensor output voltage.* *Do not hold down the start key too long [about 20 sec], otherwise SC12 comes up.* *Gain data can be changed by using the "+" & "–" ["up" & "down"] keys.)*	

2.3 SP-8 SENSOR/SWITCH/SIGNAL DATA CHECK

- How to check sensor/switch/signal -

1. While pressing both 1 and 3 on the operation panel number keys, turn on the main switch in order to access the SP mode.

   NOTE: Release the number keys after confirming that the call service indicator and the copy counter number "0" are blinking.

2. Enter 8 and then press the "#" key.
3. Enter the desired input number using the number keys and press the "#" key.

   NOTE: The input number entered is displayed in the three digit indicator.

4. Enter the number of copies in the copy counter and press the start key if you want to check the input data during the copy cycle.

   NOTE: The on/off status can also be checked manually.

5. The data ("0" or "1") will be displayed in the three digit indicator.
6. To check input data for another sensor, switch, or signal, press the "#" key twice and repeat from step 3.

Input No.	Sensor/Switch/Signal	Data	
		0	1
1	Registration sensor (S11)	Paper not detected	Paper detected
2	Fusing exit sensor(S14)	Paper not detected	Paper detected
4	Upper relay sensor (S10)	Paper not detected	Paper detected
5	Lower relay sensor (S9)	Paper not detected	Paper detected
6	Tray relay sensor - 1 (Paper tray unit) (S9)	Paper not detected	Paper detected
7	Tray relay sensor - 2 (Paper tray unit) (S10)	Paper not detected	Paper detected
8	Tray relay sensor - 3 (Paper tray unit) (S11)	Paper not detected	Paper detected
10	Upper tray set sensor (S2)	Tray set	Tray not set
11	Lower tray set sensor (S3)	Tray set	Tray not set
12	Tray set sensor - 1 (Paper tray unit) (S1)	Tray set	Tray not set
13	Tray set sensor - 2 (Paper tray unit) (S2)	Tray set	Tray not set
14	Tray set sensor - 3 (Paper tray unit) (S3)	Tray set	Tray not set
16	Upper tray upper limit sensor (S7)	Down	Up
17	Lower tray upper limit sensor (S8)	Down	Up

Input No.	Sensor/Switch/Signal	Data	
		0	1
18	Tray upper limit sensor - 1 (Paper tray unit) (S4)	Down	Up
19	Tray upper limit sensor - 2 (Paper tray unit) (S5)	Down	Up
20	Tray upper limit sensor - 3 (Paper tray unit) (S6)	Down	Up
22	Upper tray paper end sensor (S5)	Paper detected	Paper not detected
23	Lower tray paper end sensor (S6)	Paper detected	Paper not detected
24	Paper end sensor - 1 (Paper tray unit) (S7)	Paper detected	Paper not detected
25	Paper end sensor -2 (Paper tray unit)	Paper detected	Paper not detected
26	Paper end sensor - 3 (Paper tray unit) (S8)	Paper detected	Paper not detected
28	LCT paper end sensor (S26)	Paper detected	Paper not detected
29	LCT cover switch (S15)	Cover closed	Cover open
30	LCT down switch (S16)	Off	On
31	LCT lower limit sensor (S27)	Off	On
32	LCT upper limit sensor (S28)	Off	On
34	Sorter bin H.P. sensor	Not at H.P.	At H.P.
35	Sorter bin lift sensor	Off	On
36	Sorter cover switch	Cover open	Cover closed
37	Sorter entrance sensor	Paper not detected	Paper detected
39	By-pass feed table sensor (S1)	Table closed	Table open
40	By-pass feed paper end sensor (S4)	Paper detected	Paper not detected
41	Duplex unit set detection	Off	On
42	Duplex paper end sensor (S24)	Paper not detected	Paper detected
43	Duplex turn gate sensor (S23)	Paper not detected	Paper detected
44	Duplex entrance sensor (S22)	Paper not detected	Paper detected
45	Junction gate sensor (S15)	Paper not detected	Paper detected
47	Platen cover switch (SW11)	Platen cover closed	Platen cover open
48	Scanner H.P. sensor (S16)	Off	On
50	Color development unit switch - 1 (SW9)	Off	On
51	Color development unit switch - 2 (SW9)	Off	On
53	Tray unit door switch (SW13)	Door closed	Door open
54	Exit cover switch (SW10)	Cover open	Cover closed
55	Paper tray unit detection	Tray unit detected	Tray unit not detected
58	Key counter set signal	Not set	Set
59	Total counter micro read switch	Off	On
61	Jogger motor high temperature signal	Off	On
64	Exposure lamp on signal	Off	On

Input No.	Sensor/Switch/Signal	Data	
		0	1
67	Upper tray paper size switches (SW1 - SW4)	Refer to table 1	Refer to table 1
68	Lower tray paper size switches (SW5 - SW8)		
69	Tray paper size switches - 1 (Paper tray unit) (SW1 - SW4)		
70	Tray paper size switches - 2 (Paper tray unit) (SW5 - SW8)		
71	Tray paper size switches - 3 (Paper tray unit) (SW9 - SW12)		
72	Original length&width sensors (S20 & S21)	Refer to tables 2 and 3	Refer to tables 2 and 3

Table 1

Paper size	Data
A3 / 11" X 17"	1
B4	3
F / 8 1/2" X 14"	2
A4 lengthwise	6
A4 sideways / 8 1/2" X 11" lengthwise	4
B5 lengthwise	12
B5 sideways / 8 1/2" X 11" sideways	8

Table 2

Sensor	Data
Original width 1	1
Original width 2	2
Original length 1	4
Original length 2	8
Original length 3 (A3/A4 type machine only)	10
Original length 4	20
Original length 5	40

Table 3

Original size	Data
A3	7F
11" X 17"	6F
B4	3F
A4 Lengthwise	E
A4 sideways / 8 1/2" X 11" lengthwise	7
B5 lengthwise	6
B5 sideways / 8 1/2" X 11" sideways	3
A5 lengthwise	0
A5 sideways	2
No original	0

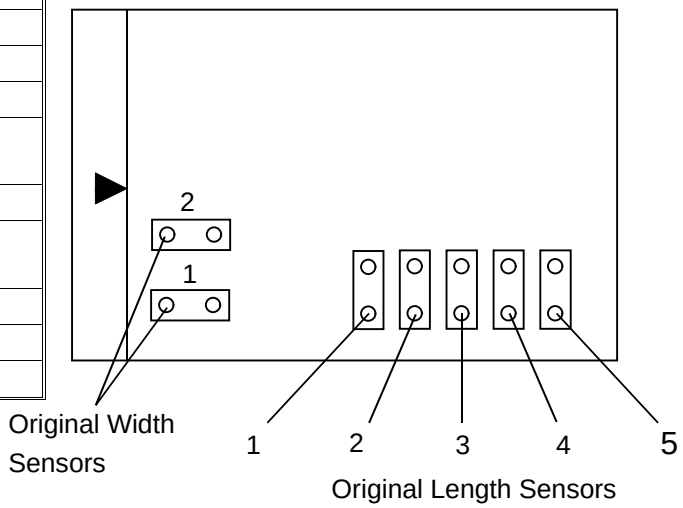

2.4 SP-9 ELECTRICAL COMPONENT CHECK

- How to turn electrical component on/off -

1. While pressing both 1 and 3 on the operation panel number keys, turn on the main switch in order to access the SP mode.

   NOTE: Release the number keys after confirming that the call service indicator and the copy counter number "0" are blinking.

2. Enter 9 using the number keys and then press the "#" key.

3. Enter the desired output number using the number keys.

   NOTE: The output number entered will blink in the three digit indicator.

4. Press the start key to turn on the electrical component.

   NOTE: Pressing the start key while holding down the interrupt key turns on the selected electrical component together with the main motor.

5. Press the Clear/Stop key to turn off the electrical component.

6. To turn on another electrical component, repeat from step 3.

CAUTION: The motors keep turning in this output mode regardless of upper or lower limit sensor signal. Do not keep the electrical component on for a long time to prevent any mechanical or electrical damage.

Output No.	Electrical component
1	Main motor (M1)
2	High voltage supply - Charge corona (PCB7)
3	High voltage supply - Charge corona and grid bias without V_R correction (PCB7)
4	High voltage supply - Charge corona and grid bias for ID sensor pattern (PCB7)
5	High voltage supply - Charge corona and grid bias for V_R pattern (PCB7)
6	High voltage supply - Charge corona and grid bias for V_L pattern (PCB7)
7	High voltage supply - Transfer corona (PCB7)
8	High voltage supply - Separation corona (PCB8)
9	High voltage supply - Development bias (PCB7)
10	ID sensor LED (S12)
11	V sensor LED (S13)
12	Scanner drive motor : Scanner moves forward and returns to the H.P. (M7)
13	Black development unit **(Note 1)**
14	Color development unit **(Note 2)**
15	Development drive clutch (MC1)
16	Toner supply clutch (MC2)
17	Pre-transfer lamp (L2)
19	Erase lamp unit - All blocks (L5)

Output No.	Electrical component
20	Erase lamp unit - Designated blocks for ID sensor pattern (L5)
21	Erase lamp unit - Designated blocks for VL pattern (L5)
22	Sorter drive motor
23	Sorter bin drive motor : Up **(CAUTION)**
24	Sorter bin drive motor : Down **(CAUTION)**
25	Registration clutch (MC5)
27	By-pass feed clutch (MC3)
28	Feed relay clutch (MC4)
29	Tray unit drive clutch (Paper Tray Unit) (MC4)
30	Upper paper feed clutch (MC6)
31	Lower paper feed clutch (MC7)
32	Paper feed clutch - 1 (Paper tray unit) (MC1)
33	Paper feed clutch - 2 (Paper tray unit) (MC2)
34	Paper feed clutch - 3 (Paper tray unit) (MC3)
35	Upper tray lock solenoid (SOL4)
36	Lower tray lock solenoid (SOL5)
37	Tray lock solenoid - 1 (Paper tray unit) (SOL1)
38	Tray lock solenoid - 2 (Paper tray unit) (SOL2)
39	Tray lock solenoid - 3 (Paper tray unit) (SOL3)
40	Pick-up solenoid (SOL2)
41	Upper tray lift motor : Up (M3)
42	Lower tray lift motor : Up (M4)
43	Tray lift motor - 1 (Paper tray unit) : Up (M1)
44	Tray lift motor - 2 (Paper tray unit) : Up (M2)
45	Tray lift motor - 3 (Paper tray unit) : Up (M3)
46	Upper tray lift motor : Down (M3)
47	Lower tray lift motor : Down (M4)
48	Tray lift motor - 1 (Paper tray unit) : Down (M1)
49	Tray lift motor - 2 (Paper tray unit) : Down (M2)
50	Tray lift motor - 3 (Paper tray unit) : Down (M3)
51	Jogger motor : Set jogger fences at the H.P. (M12)
52	Duplex feed motor : Normal rotation (M11)
53	Duplex feed motor : Reverse rotation (M11)
54	Duplex turn gate solenoid (SOL7)
56	Junction gate solenoid (SOL6)
57	Exhaust blower motor (M2)
58	Fusing exhaust fan motor : High speed (M6)
59	LCT lift motor : Up (M13) **(CAUTION)**
60	LCT lift motor : Down (M13) **(CAUTION)**

NOTE 1: When the start key is pressed, the main motor starts turning and the development unit change solenoid is energized. While the "●" key is held down, the development drive and toner supply clutches turn on to supply **black** toner.

NOTE 2: When the start key is pressed, the main motor starts turning and the development unit change solenoid is de-energized to shift the development unit from black to color. While the "●" key is held down, the development drive and toner supply clutches turn on to supply **color** toner.
After performing this output number, perform No.13 (Black development unit) to return the color development unit to its original position.

3. SP MODE PRACTICAL USE TABLE

3.1 REPLACEMENT AND CLEANING

The following table shows the necessary SP modes and the priority order when the listed items are replaced or cleaned:

(Priority Number) NOTE:

No.	SP Mode No.	Replaced or Cleaned / Item / Description	Black Developer	Color Developer	OPC Drum (replace)	ID/V Sensors	ADS Sensor	Exposure Lamp /Optics	Used Toner Tank
1.	65	Black Developer Initialize	O						
2.	10	Color Developer Initialize		O					
3.	66	Drum Initialize			O				
4.	54	Auto Vsg/Vlg Adjustment			O	O			
5.	48	Lamp Voltage			O			(O)	
6.	51	Lamp Voltage Check						O	
7.	70	Forced VL Detection						O	
8.	56	Auto ADS Gain Adjustment			O		O	O	
9.	83	Toner End Counter Clear							O

NOTE: After replacing the exposure lamp or cleaning the optics, check the lamp voltage setting [X] by SP48. Then check the target lamp voltage [Y] decided by the process control through SP51 (press the "." key for reading). Perform the forced V_L detection (SP70) [Y- X] times. Check the target lamp voltage [Z] by SP51. Perform the forced VL detection (SP70) again. Confirm that the target lamp voltage [Z] is the same value. If not, repeat the SP70 until the value [Z] does not change.

3.2 MAJOR ADJUSTMENT

The following table shows SP modes for major adjustments in the field:

TONER DENSITY (Detect Mode)

[Black]

Mode No.	Description	Data
SP31	Black Toner Supply Ratio	0:15% 1:7% 2:30% 3:60%
SP33	Black (ID Sensor) Pattern Bias	0:N 1:L 2:H 3:HH
SP35	Black ID Detection	0:10 copies 1:5 copies

[Color]

Mode No.	Description	Data
SP81	Color Toner Supply Ratio	0:14% 1:7% 2:21% 3:28%
SP75	Color (ID Sensor) Pattern Bias	0:N 1:L 2:H 3:HH
SP74	Color ID Detection	0:5 copies 1:10 copies
SP79	Color Bias	0:N 1:HH 2:H 3:L 4:LL

IMAGE DENSITY

Mode No.	Description	Data
SP34	ADS Density	0:N 1:H 2:L
SP48	Lamp Voltage (only when changing the drum)	50 - 75V
SP46	Highlight Bias (ID Level 7)	0:N 1:D 2:L 3:LL
SP79	Color Bias	0:N 1:HH 2:H 3:L 4:LL

OTHER COPY IMAGE

Mode No.	Description	Data
SP41	Lead Edge Erase	0 - 15 (0.5mm/step)
SP42	Registration	0 - 15 (0.5mm/step)
SP43	Vertical Magnification	0 - 15 (0.2%/step)
SP44	Horizontal Magnification	0 -31 (0.2%/step)
SP45	Duplex Magnification	0:0.4% 1:0% 2:0.2% 3:0.6% 4:0.8% 5:1.0% ...
SP47	Focus Adjustment	0 - 80

3.3 CHECKING

The following table shows SP modes for checking major items in the field:

Mode No.	Description
SP2	Free Run Set
SP3	Free Run Reset
SP8-1 to -72	Sensor/Switch/Signal Data Check
SP9-1 to -60	Electrical Component Check
SP51	Lamp Voltage Check
SP52	Fusing Temperature Check
SP55	Vsg/Vsp Data
SP58	Toner End Counter Check
SP100	Operation Time (Motor/Drum Count)
SP101-1	Total Counter
SP101-2	Total Color Counter
SP101-6	Total Duplex Counter
SP101-9	Paper Tray Unit Counter
SP101-10	By-pass/LCT Counter
SP101-17	Original Counter (ADF)
SP110-1	Drum Counter
SP110-2	Black Developer Counter
SP120-1 to -9	SC Counter
SP130-1 to -14	Jam Counter
SP165	ID-Sensor PWM/Output Check
SP166	V-Sensor PWM/Output Check
SP167	ADS Gain/Output Check

3.4 OPTIONAL EQUIPMENT INSTALLATION

The following table shows SP modes for enabling the optional equipment's function:

Mode No.	Description	Data
SP71	Sorter	0:No 1:MC 2:MIN 3:MID 4:SS 5:ADP
SP72	Paper Tray Unit	0:No 1:Yes
SP84	Editing Eraser	0:No 1:Yes

4. TEST POINTS

4.1 MAIN CONTROL BOARD

Number	Label	Function
TP101	(LAMP)	Exposure lamp feedback voltage
TP102	(DRAMTH)	Drum thermistor reference voltage (25°C: 2V, 35°C: 1.6V, Open: 5V, Short: 0V)
TP103	(SCN-TNT)	Scanner free run with exposure lamp off by shorting TP103 and TP104.
TP104	(C GND)	Ground
TP105	(VCC)	+5V
TP106	(DRUM AC)	Feedback voltage for drum current ac component
TP107	(DRUM DC)	Feedback voltage for drum current dc component
TP108	(P-SEN)	ID sensor output
TP109	(VL)	V sensor output
TP110	(ADS)	ADS sensor output
TP111	(I-DRUM)	Feedback voltage for drum current
TP112	(DCPOL)	Reference voltage for drum current dc component's polarity
TP113	(FUSER)	Fusing thermistor reference voltage (Room temp: 4.8V, 185°C: 0.9V, Open: 5V, Short: 0V)

5. PREVENTIVE MAINTENANCE SCHEDULE

5.1 PM TABLE

NOTE: The amounts mentioned in the PM interval indicate the number of scans.
Symbol key: **C**: Clean **R**: Replace **L**: Lubricate **A**: Add **I**: Inspect

	EM	80K	160K	240K	NOTE
OPTICS					
Mirrors, Lens, Reflectors		C	C	C	Cotton pad with water, or blower brush **NOTE:** Clean 6th mirror with blower brush.
Exposure Glass	C	C	C	C	Alcohol or glass cleaner
Platen Cover Sheet	C	R	R	R	Alcohol or water (replace if necessary)
Scanner Guide Rail		C	C	C	Dry cloth
Magnification Guide Rail		C	C	C	Dry cloth
ADS, Original Size sensors	(C)	C	C	C	Blower brush
Optics Fan Filter		C	C	C	Replace if necessary
Optics Ozone Filter		R	R	R	
PAPER FEED	(for each paper feed station)				
Paper Feed Rollers (LCT/By-pass feed)	C	R	R	R	Water, replace pick-up, feed, and separation rollers as a set.
Paper Feed Roller (Paper Tray)	C	R	R	R	Water, replace with friction pad ass'y as a set.
Friction Pad Ass'y	C	R/L	R/L	R/L	Water / Albania 2 grease **Refer to NOTE1**
Separation Roller Slip Clutch (LCT, By-pass feed)		L	L	L	Mobil temp. 78 **Refer to NOTE 1**
Paper Feed Guide Plate		C	C	C	Alcohol
Registration Roller		C	C	C	Water
Relay Roller		C	C	C	Water
Paper Tray/LCT Bottom Plate Pad		R	R	R	Water
By-pass Feed Bottom Plate Pad		R	R	R	Water
Registration Sensor		C	C	C	Blower brush
AROUND THE DRUM					
Corona Wires	C	R	R	R	Dry cloth or water
Wire Cleaner		R	R	R	
Charge Grid		C	R	C	Blower brush

	EM	80K	160K	240K	NOTE
End Blocks and Casing	C	C	C	C	Water or alcohol
Transfer Guide Plate	C	C	C	C	Dry cloth
Pre-Transfer Lamp Filter	C	C	C	C	Dry cloth and blower brush, discharge any static before installation
Quenching Lamp Filter	C	C	C	C	Dry cloth, discharge any static before installation
Toner Shield Glass and Filter	C	C	C	C	Dry cloth, discharge any static before installation
ID Sensor	(C)	C	C	C	Blower brush
V Sensor	(C)	C	C	C	Blower brush
Erase Lamp Unit	C	C	C	C	Dry cloth
Pick-off Pawls	C	C	C	C	Replace if necessary
CLEANING UNIT					
Cleaning Blade		R	R	R	
Cleaning Seal		C	C	C	Replace if necessary
Cleaning Brush		R	R	R	
Used Toner Tank	(C)	C	C	C	Empty used toner
DEVELOPMENT UNIT					
Developer		R	R	R	
Development Unit Gears				C/L	Grease G–40M **Refer to NOTE 2**
Upper Seal		C	C	C	
Side Seals		C	C	C	
FUSING UNIT					
Hot Roller		C	R/L	C	Replace if necessary, Grease Barrierta L55/2 **Refer to NOTE 3**
Pressure Roller		C	R/L	C	Replace if necessary, Grease Barrierta L55/2 **Refer to NOTE 3**
Stripper Pawls	C	R	R	R	Replace
Fusing Entrance and Exit Guides		C	C	C	Suitable solvent
Fusing Thermistor		I	I	I	Suitable solvent, clean if necessary
Fusing Drive Gear			R/L		Grease G501 **Refer to NOTE 3**
DUPLEX		(for duplex copies)			
Feed Roller		R	R	R	
Bottom Plate Pad		R	R	R	

	EM	80K	160K	240K	NOTE
Clutch Spring		L	L	L	Mobil temp. 78, lubricate if necessary **Refer to NOTE 4**
OTHERS					
Ozone Filters (Paper)		R	R	R	
Ozone Filter (Ceramic)					Replace at 400K
Drive Belt		I	I	I	Replace if necessary
Bushings			L		Spindle oil **Refer to NOTE 5**
Exit Sensor		C	C	C	Blower brush
Development Unit Shift Clutch Spring				L	Mobil temp. 78 **Refer to NOTE 2**
Development Drive Gear				R/L	Grease G–40M **Refer to NOTE 2**
PAPER TRAY UNIT (A325/A326)					
Paper Feed Roller	C	R	R	R	Water, replace with friction pad ass'y as a set.
Friction Pad Ass'y	C	R/L	R/L	R/L	Water/Albania 2 grease **Refer to NOTE 1**
Paper Tray Bottom Plate Pad		R	R	R	Water
DOCUMENT FEEDER (A497) (for originals)					
Transport Belt	C	R	R	R	Belt cleaner, replace if necessary
Pick-up Roller	C	C	C	C	Water, replace if necessary
Feed Roller	C	R	R	R	Water, replace if necessary
Friction Belt	C	R	R	R	Water, replace if necessary
SORTER (A327)					
Bin Guide/Wheel		L	L	L	Grease G501(if necessary)
Round Belt		C	C	C	Alcohol
Guide Plate		C	C	C	Dry cloth

Sorter Stapler (A366)	EM	320K	NOTE
Transport, Distribution, and Exit Rollers	C		Damp cloth
Bins	C		Damp cloth
Bin/Jam, Paper Sensors	C		Blower brush
Bushings	L		Launa oil or equivalent; if bushings generate noise.
Gears	L		Grease-501; if gears generate noise.
Worm gears	L		Heat resisting grease MT-78; if worm gears generate noise.
Diagonal Transport Rollers		C	Damp cloth
Diagonal Transport Stopper		C	Alcohol
Staple Unit Guide Rod, Pad	L		Launa oil

The location of the parts which should be lubricated at PM, are shown in the following figures:

Note1: Paper feed Section

(1)<u>Separation Roller Slip Clutch</u>

Clean the slip clutch [A]. Then, lubricate the inner surface of the spring [B] and the three grease holes [C] of the hub [D] with Mobil Temp. 78 every 80K.

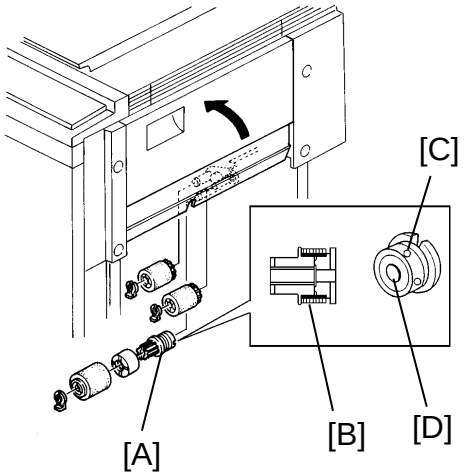

(2)<u>Friction Pad Assembly</u>

Replace the friction pad assembly [E] every 80k. Then, lubricate the pad holder with ALBANIA 2 grease as shown.

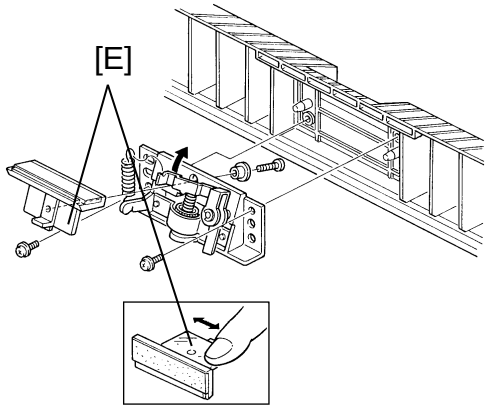

Note2: Development Section

(1)Development Unit Change Clutch Clean the shift clutch assembly [A].
Then, lubricate the clutch spring [B] with Mobil Temp. 78 every 240K.

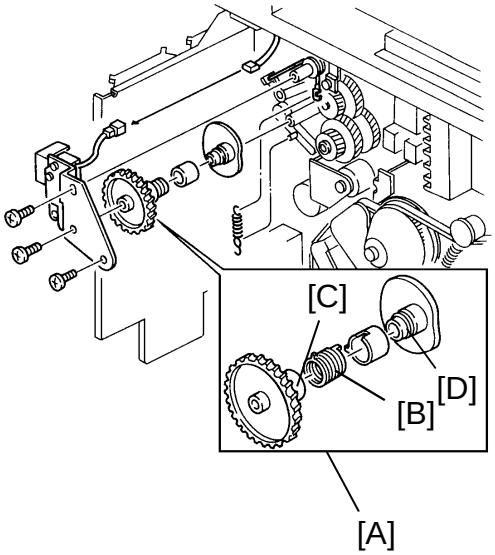

(2)Development Drive Gear
Replace the development drive gear [E] every 240K.
Then, lubricate it with Silicone Grease G-40M.

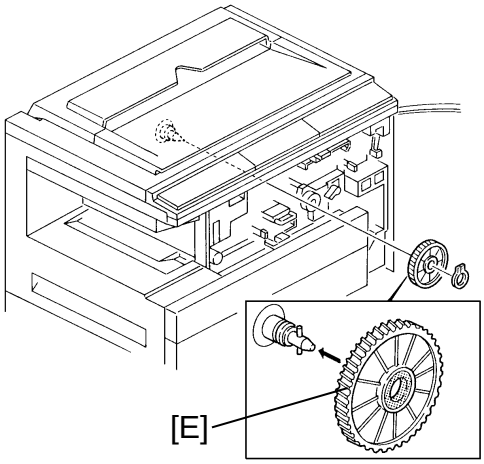

(3)Development Unit Gears
Clean the gears [F] located on the rear side of development unit.
Then, lubricate them with Silicone Grease G-40M every 240K.

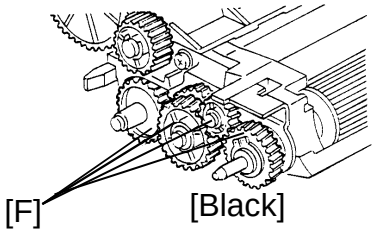

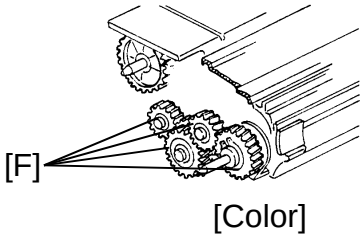

Note3: Fusing Section

(1)Hot and Pressure Rollors

Replace the hot [A] and pressure [B] rollers every 160K if necessary.
Then, lubricate the roller shaft [C], bushings [D] and bearings [E] with BARRIERTA L55/2 grease.

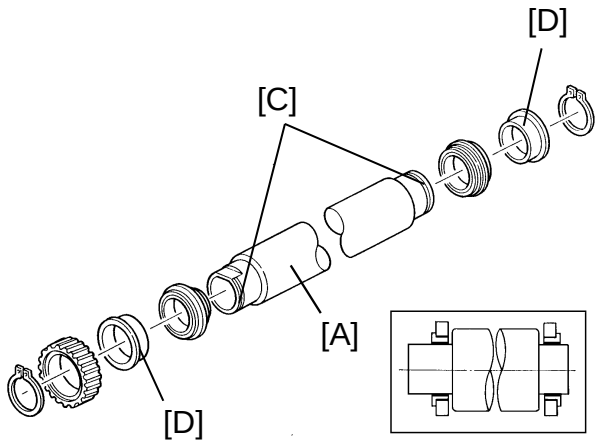

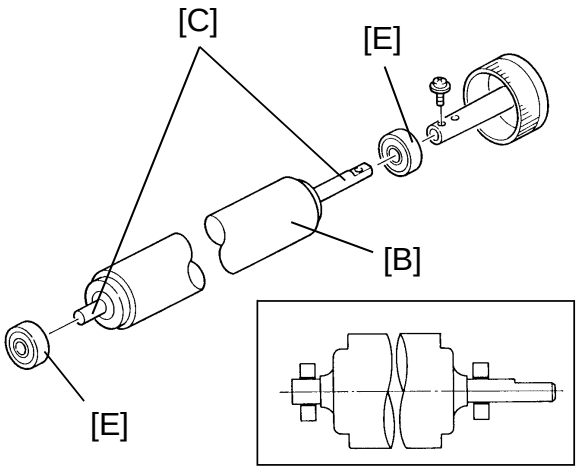

(2)Fusing Drive Gears

Replace the fusing drive gears [F] every 160K.
Then, lubricate them and their shafts [G] with Grease G501.

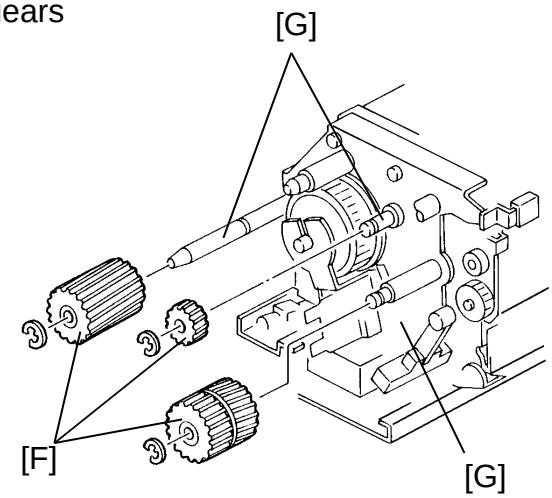

Note4: Duplex Section

(1)Clutch Spring

Clean the clutch assembly [A]. Then, lubricate the clutch spring with Mobil Temp. 78 every 80K.

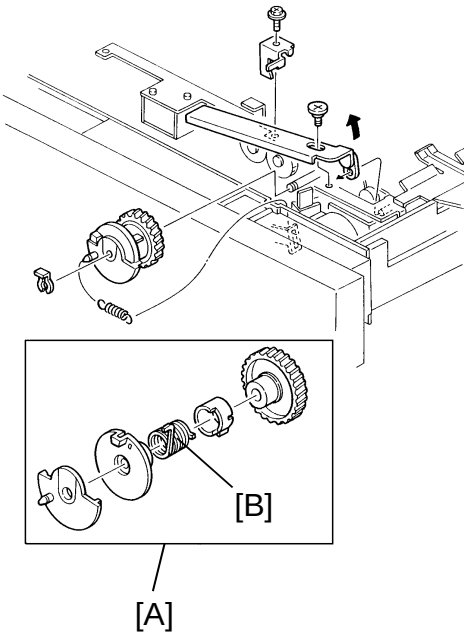

Note5: Bushings

Lubricate the following bushings with machine oil every 160K.

(1)Paper Feed (LCT/By-pass Feed)

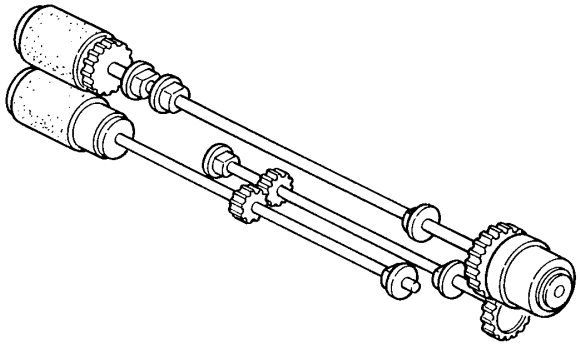

(2)Relay Rollers and Tray Paper Feed

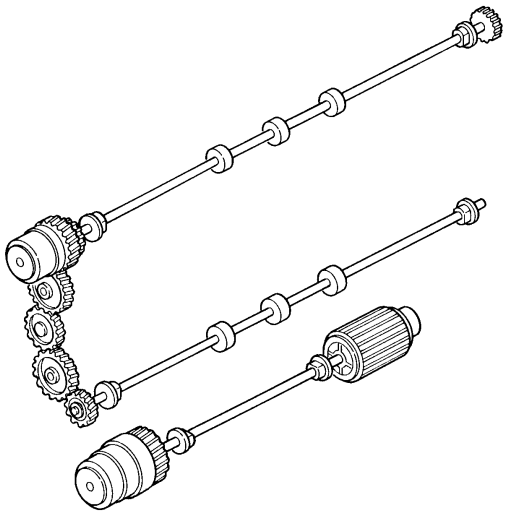

(3)Registration Roller

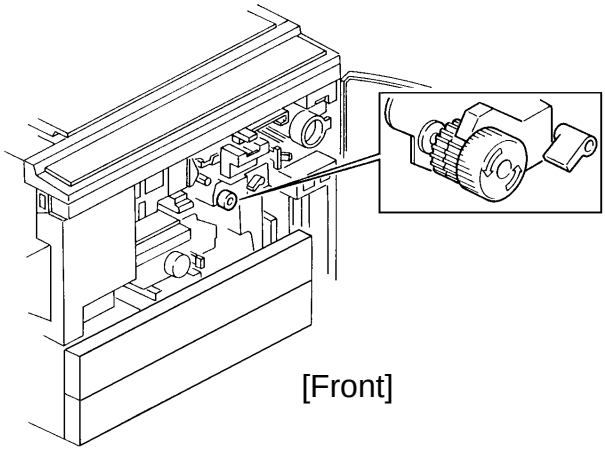

[Front]

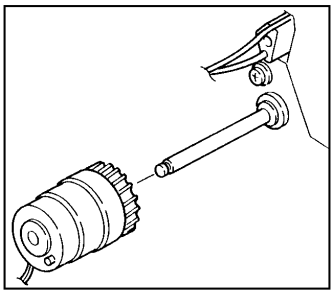

[Rear]

(4)Development Shift Section

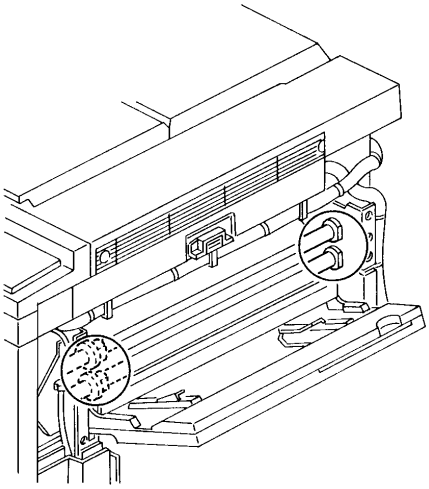

(5)Exit Roller

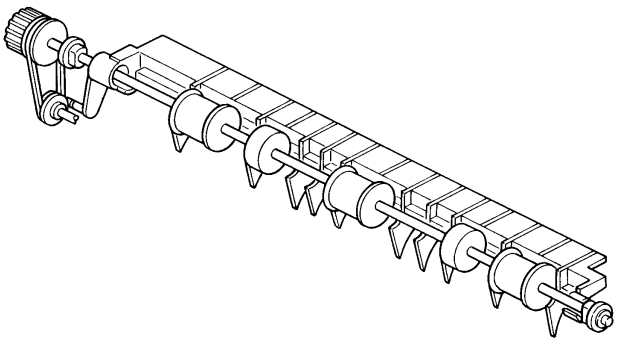

(6)Duplex Tray

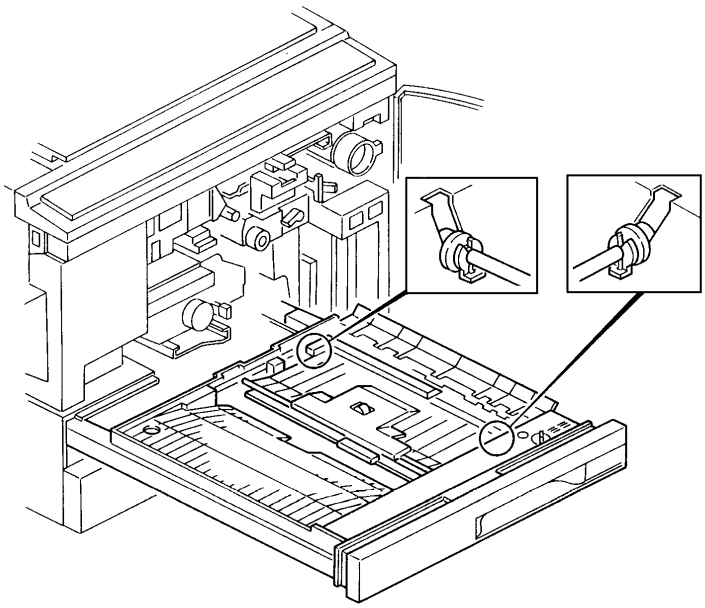

5.2 EXPLANATION OF REGULAR PM

Item		Explanation
Optics Unit	Mirrors, Lens, Reflector, Exposure Glass, Platen Cover	Stains on any part of the optics unit result in black lines or areas of decreased sharpness on the copy image. Periodic cleaning is required. The exposure glass and the platen cover must also be cleaned. If stains on the platen cover cannot be removed, it must be replaced.
	Exposure Lamp	Deterioration of the exposure lamp affects the copy image. Check the lamp at regular intervals and replace if discolored.
	Ozone Filter	When an ozone filter deteriorates, ozone produced in the copier well not be absorbed causing headaches irritations, or other discomforts. Replace at regular intervals.
Paper Feed, Registration	Paper Feed Roller, Pick-up Roller, Separation Roller Friction Pad Ass'y Bottom Plate Pad	This machine uses paper trays and LCT for paper feeding. If paper dust adheres to the paper feed roller, friction pad ass'y and bottom plate pads are worn out, paper may not feed correctly and/or skewing may result. Cleaning or replacement is required at regular intervals.
	Registration Roller	A dirty registration roller can cause paper to register incorrectly, skew, or jam. Cleaning is required at regular intervals.
Transport	Transfer Guide Plate	If the transfer guide plate is dirty, the back side of the copy may become dirty. Clean the plate at regular intervals.

Item		Explanation
Around Drum	Drum	The drum exceeding its lifetime may cause black lines in half tone area, dirty background, and overtoning. Replace the drum at regular intervals.
	Charge Wires Charge Grid	Dirty charge wires may cause uneven image density. They should be cleaned or replaced at regular intervals.
	End Blocks	Toner tends to accumulate on the corona end blocks, and this can result in poor copy quality or even a high voltage leak. Clean end blocks at regular intervals.
	QL	If toner accumulates on the QL filter, a dirty background or a repeating negative image may result. Clean the QL filter at regular intervals.
	PTL	If paper dust or toner accumulates on the PTL filter, its efficiency may be reduced. This can cause toner to be reattracted to the drum during transfer, reducing image density. Clean the PTL filter at regular intervals.
	ID Sensor	If paper dust or toner accumulates on the ID sensor, the toner density cannot be controlled correctly. This results in light copy or overtoning. Clean this sensor at regular intervals.
	V Sensor	If paper dust or toner accumulates on the V sensor, the image density cannot be controlled correctly. This results in light or dark copies. Clean this sensor at regular intervals.
Around Drum	Erase Lamp	If toner accumulates on the erase lamp, a dirty background may occur in the erased area that becomes progressively worse in long copy runs. Also this affects sensor pattern detection, causing incorrect toner density and exposure lamp control. Clean this lamp at regular intervals.
Cleaning Unit	Cleaning Blade	A dirty or worn out cleaning blade will cause black lines on copies and/or scratches on the drum. The blade must be replaced or cleaned at regular intervals.
	Cleaning Brush	A worn out cleaning brush will not clean the drum surface effectively, resulting in a dirty background and damage to the cleaning blade. Replace at regular intervals.
	Used Toner Tank	The used toner tank becomes full before the used toner overflow detection if the tank is not emptied when resetting the toner end counter (SP83). This may cause poor cleaning, damage to the cleaning empty the tank at regular intervals unit and the drum, and/or toner scattering inside the machine.

Item		Explanation
Fusing Unit	Thermistor	If toner accumulates on the thermistor, fusing temperature control may not be accurate. Inspect the thermistor at regular intervals.
	Stripper Pawls	Toner or dust adhering to the stripper pawls can cause a paper jam. Clean or replace the pawls at regular intervals.
	Fusing Entrance and Exit Guides	Toner piling up on the guide plate will cause a dirty background on the copy or paper jam. Clean the guide plate at regular intervals.
Duplex Unit	Feed Roller and Bottom Plate Pad	If paper dust adheres to the feed roller and bottom plate pad, paper may not feed correctly and/or skewing may result. Cleaning or replacement is required at regular intervals.
Others	Ozone Filters	When an ozone filter deteriorates, ozone produced in the copier well not be absorbed causing headaches irritations, or other discomforts. Replace at regular intervals.
Paper Tray Unit	Paper Feed Roller, Friction Pad Ass'y Bottom Plate Pads	This machine uses paper trays for paper feeding. If paper powder or dust adheres to the paper feed roller, friction pad ass'y and bottom plate pads are worn out, paper may not feed correctly and/or skewing may result. Cleaning or replacement is required at regular intervals.
ARDF	Transport Belt	A dirty transport belt can leave stains on copies. Clean or replace the belt at regular intervals.
	Pick-up Roller, Separation Roller, Separation Belt	When dirty, these rollers and this belt can leave stains on the copy paper. Also, original misfeeds or multifeeds may occur. Clean or replace these parts at regular intervals.
Sorter	Bin Drive Wheel, Bin Guide	Dust adhering to the bin drive wheel or bin guide may interfere with bin movement and result in uneven bin positioning. Clean and lubricate if necessary.
Sorter Stapler	Diagonal Transport Roller Diagonal Transport Stopper	If paper dust adheres to the diagonal transport rollers and stopper, paper may not transport correctly and/or paper jam may result. Cleaning or replacement is required at regular intervals.

5.3 REGULAR PM PROCEDURE

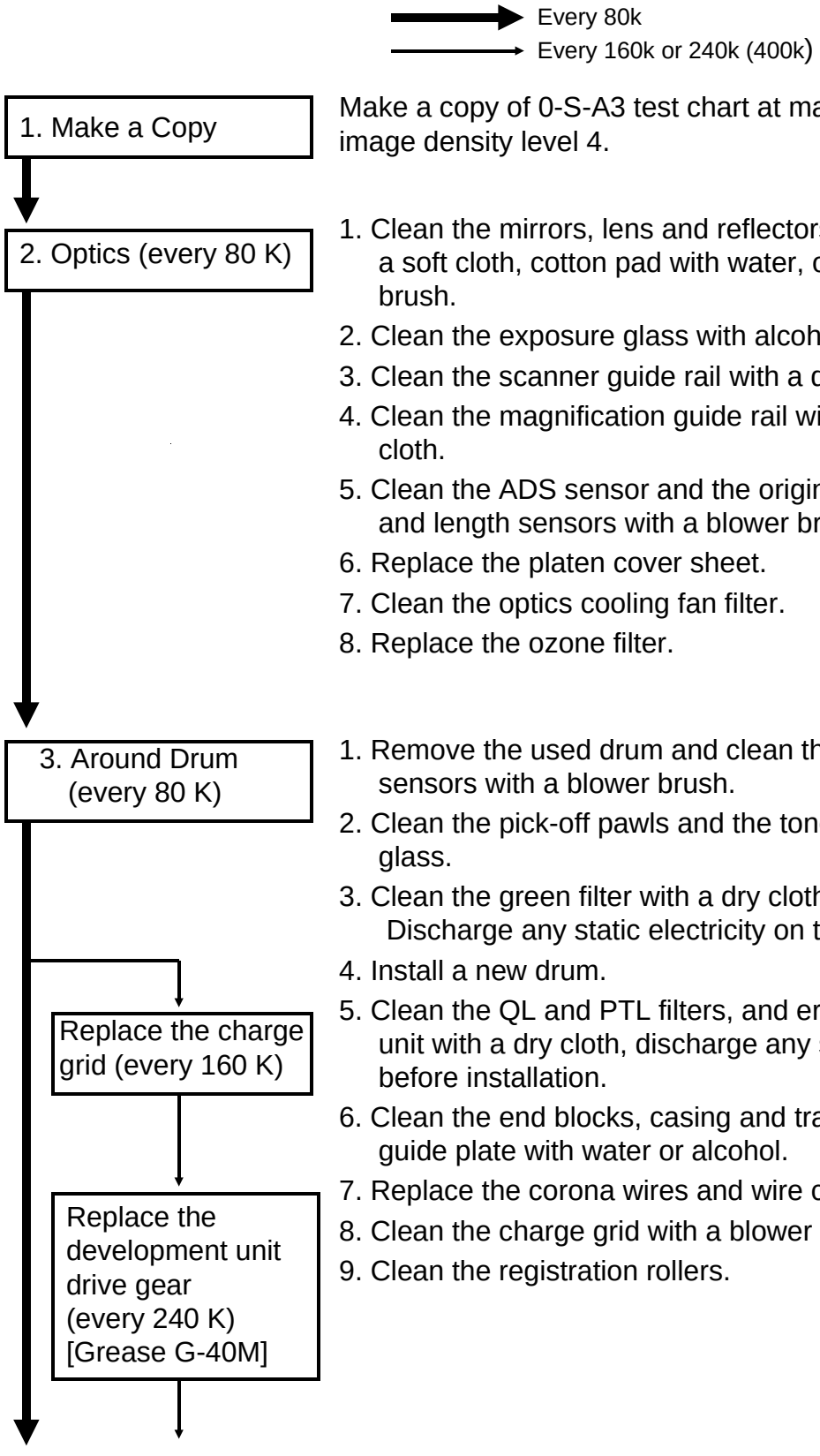

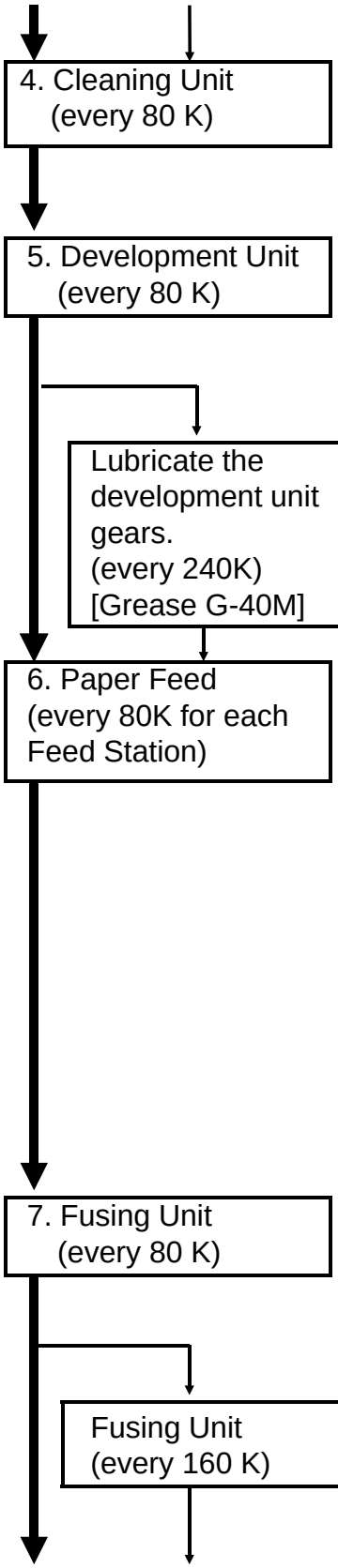

1. Empty the used toner tank.
2. Clean the inside of the cleaning unit and seals.
3. Replace the cleaning blade and brush.

1. Clean the development unit guide plate in the copier with a damp cloth.
2. Remove the developer.
3. Clean the development unit and gears.
4. Pour a pack of new developer.

1. Clean the paper guide plate.
2. Lubricate the slip clutch for the separation roller (LCT). [Mobil Temp. 78]
3. Replace the paper feed, pick-up, and separation rollers (LCT).
4. Replace the feed rollers, friction pad assemblies and paper tray bottom plate pads. [Albania 2]
5. Replace the duplex paper feed roller.
6. Replace the by-pass feed bottom plate pad.
7. Lubricate the duplex clutch spring. [Mobil Temp. 78]

1. Clean the entrance and exit guide plates.
2. Inspect the thermistor.
3. Replace the stripper pawls.
4. Lubricate the drive gears. [Grease G501]

1. Clean the thermistor.
2. Replace the hot roller, pressure roller and drive gears. [Barrierta L55/2] [Grease G501]

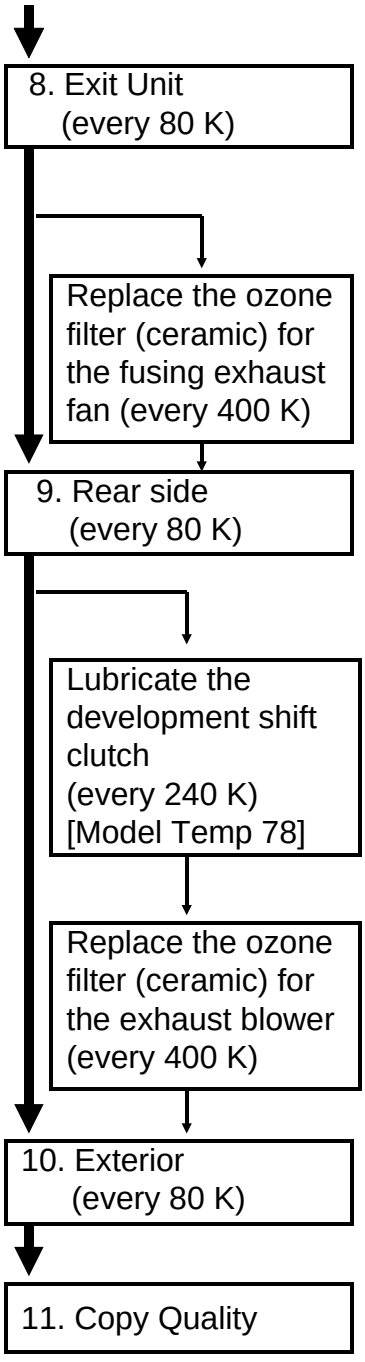

1. Clean the exit rollers.
2. Inspect the antistatic brush.

1. Replace the ozone filter (paper) for the exhaust blower.
2. Lubricate the gears.
3. Inspect the timing belts.

1. Clean the covers.

1. Perform the black developer initialization (SP65).
2. Perform the color developer initialization (SP10) if the color developer has been replaced.
3. Perform the drum initial setting (SP66).
4. Perform the auto Vsg/Veg adjustment (SP54).
5. Adjust the exposure lamp voltage (SP48).
6. Perform the auto ADS gain adjustment (SP56).
7. Reset the toner end counter (SP83).

SECTION 5

REPLACEMENT AND ADJUSTMENT

1. EXTERIOR AND INNER COVERS

1.1 EXTERIOR COVER REMOVAL

1.1.1 Front Door

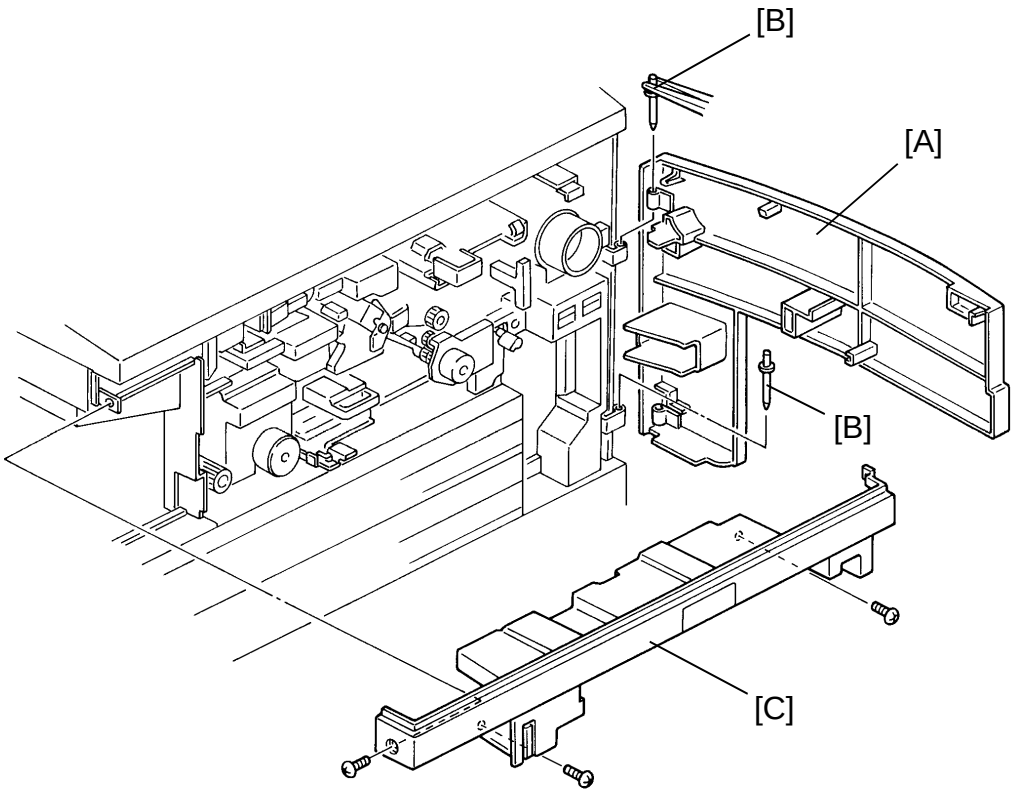

1. Open the front door [A].
2. Pull out the 2 pins [B].

1.1.2 Front Upper Cover

1. Open the front door and remove.
2. Remove the front upper cover [C] (3 screws).

1.1.3 Rear Cover

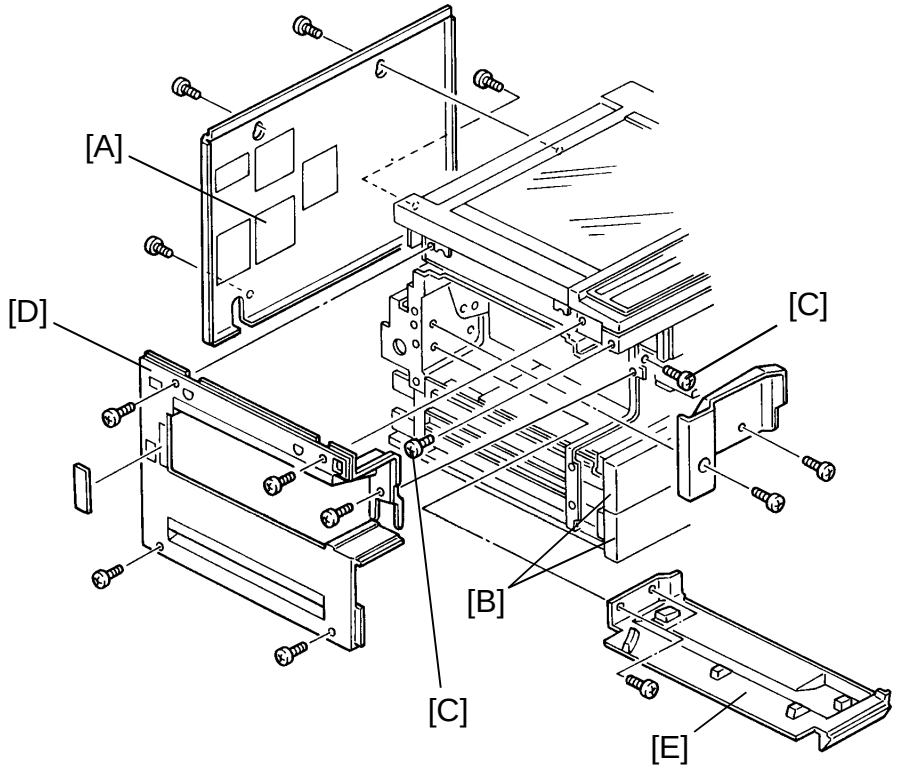

1. Remove the rear cover [A] (remove 2 screws and loosen 2 screws).

1.1.4 Left Cover

1. Open the front door and pull out the upper and lower paper trays (or the duplex tray) [B].
2. Remove the rear cover.
3. Remove the left and front side screws [C] of the front upper cover (1 screw).
4. Remove the left cover [D] (5 screws).

   NOTE: Remove the sorter, sorter stapler and sorter adapter if they are installed.

1.1.5 Left Bottom Cover

1. Remove the left cover.
2. Remove the left bottom cover [E] (4 screws).

   NOTE: Remove the sorter, (sorter stapler) and sorter adapter if they are installed.

1.1.6 Right Upper Cover

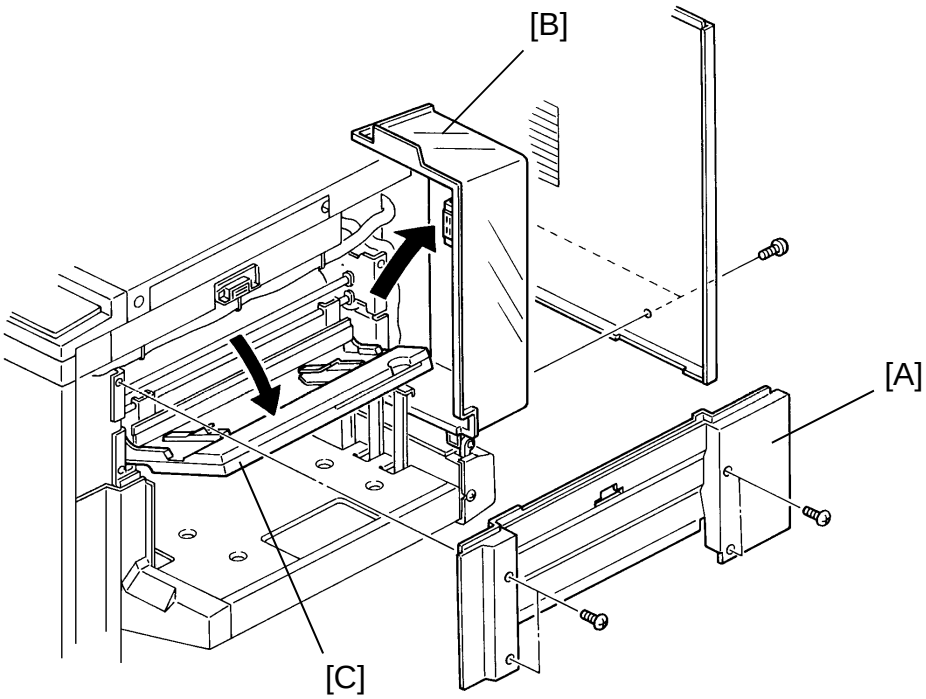

Type 2 and Type 3

1. Remove the rear cover.
2. Remove 4 screws of the right upper cover [A].
3. Open the LCT top cover [B].
4. Open the by-pass feed table [C] and remove the right upper cover.

Type 1

1. Remove the rear cover.
2. Open the by-pass feed table.
3. Remove the right upper cover (4 screws).

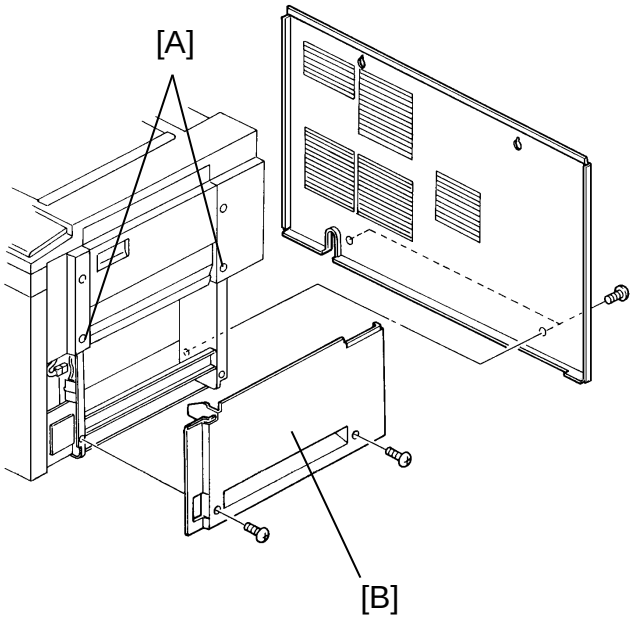

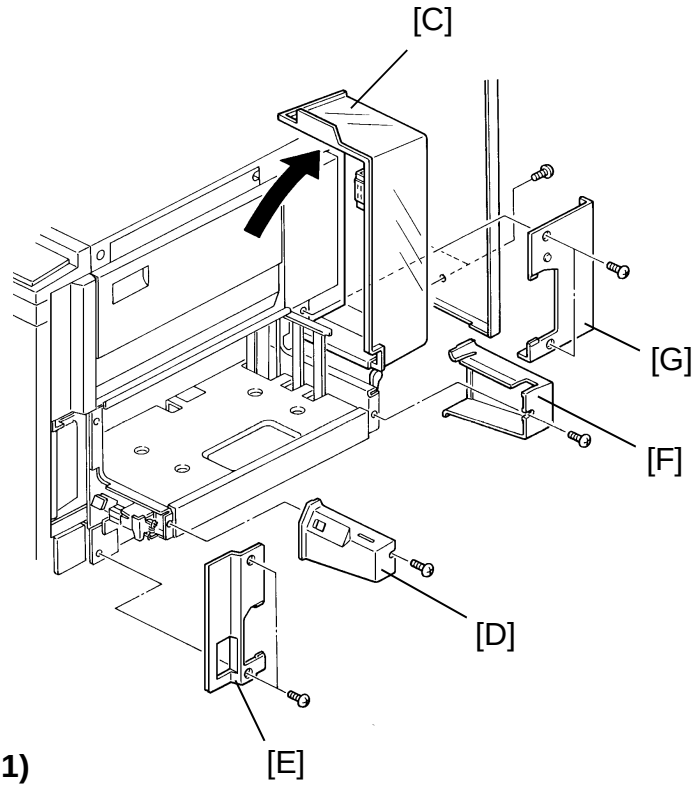

1.1.7 Right Lower Cover (for Type 1)

1. Remove the rear cover.
2. Remove the lower side 2 screws [A] of the right upper cover.
3. Remove the right lower cover [B] (2 screws).

1.1.8 Right Lower Covers (for Type 2 and Type 3)

1. Open the LCT top cover [C].
2. Remove the LCT front cover [D] (1 screw).
3. Remove the right lower front cover [E] (2 screws).
4. Close the LCT top cover.
5. Remove the LCT rear cover [F] (1 screw).
6. Remove the right lower rear cover [G] (2 screws).

1.1.9 Top Cover

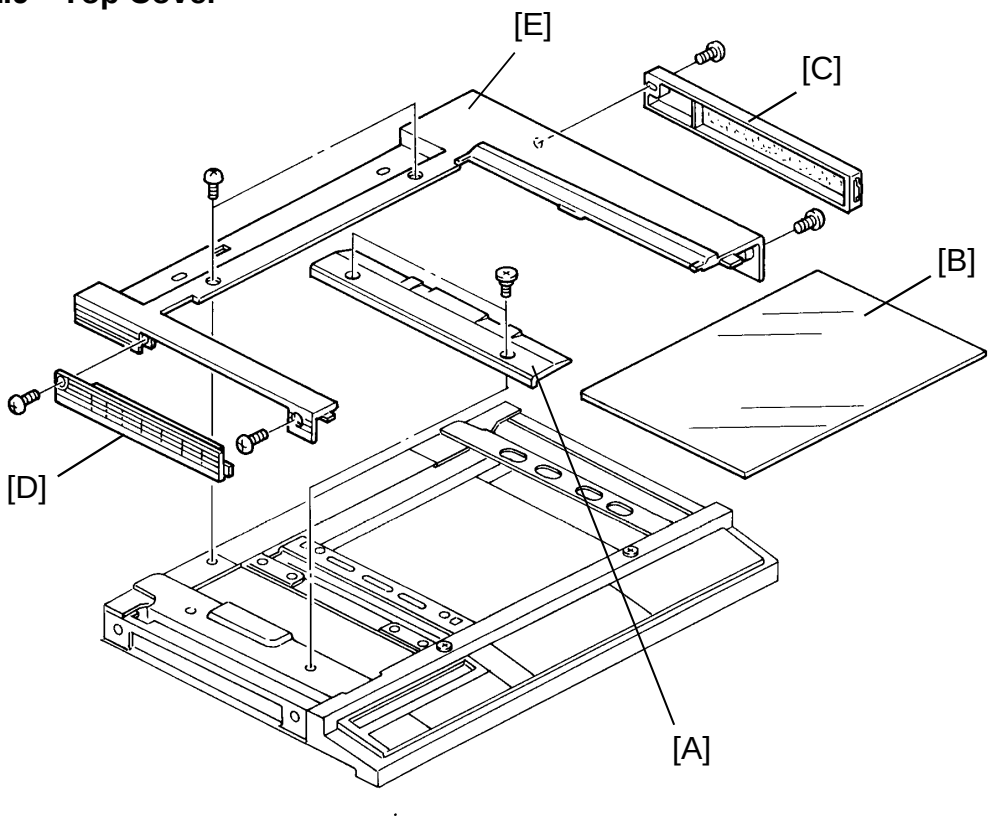

NOTE: Remove the document feeder or platen cover if either is installed.

1. Remove the left scale [A] (2 shoulder screws).
2. Remove the exposure glass [B].
3. Remove the right and left optics covers [C, D] (1 screw each).
4. Remove the top cover [E] (4 screws).

1.2 INNER COVER REMOVAL

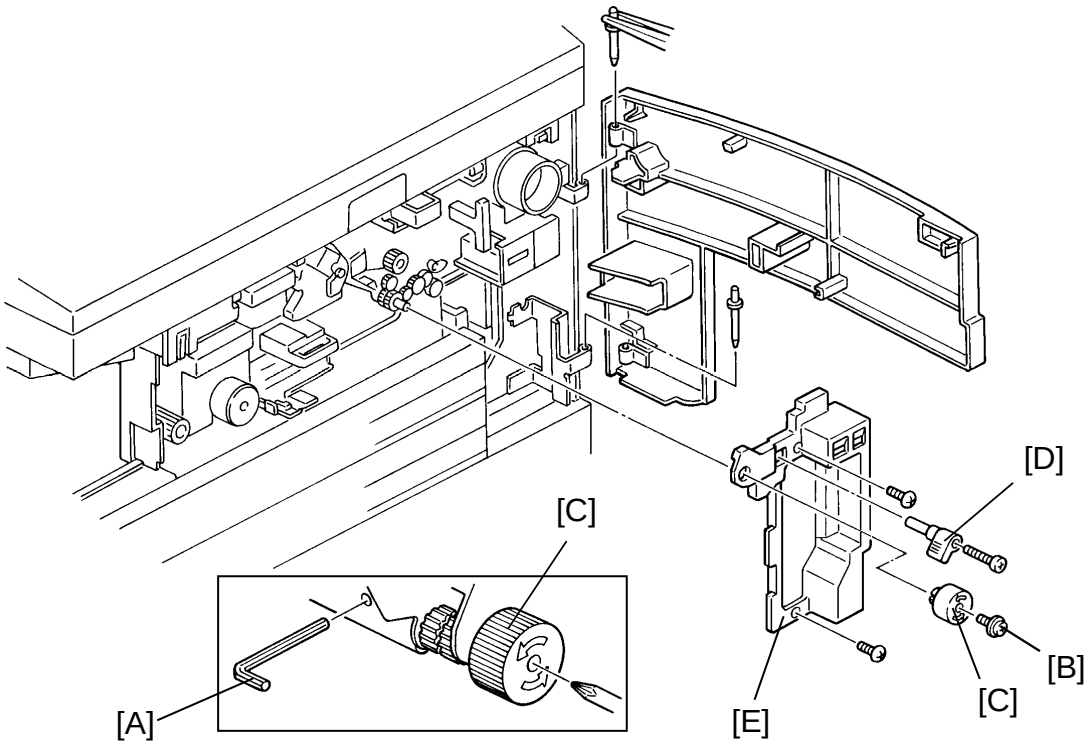

1. Open the front door and remove.
2. Insert an Allen key [A] in the hole of the registration roller shaft through a hole in the bracket.
3. While holding the Allen key, remove the fixing screw [B].
4. Remove the registration knob [C] and paper guide release lever [D] (1 screw each).
5. Remove the inner cover [E] (2 screws).

2. OPTICS

2.1 EXPOSURE GLASS REMOVAL

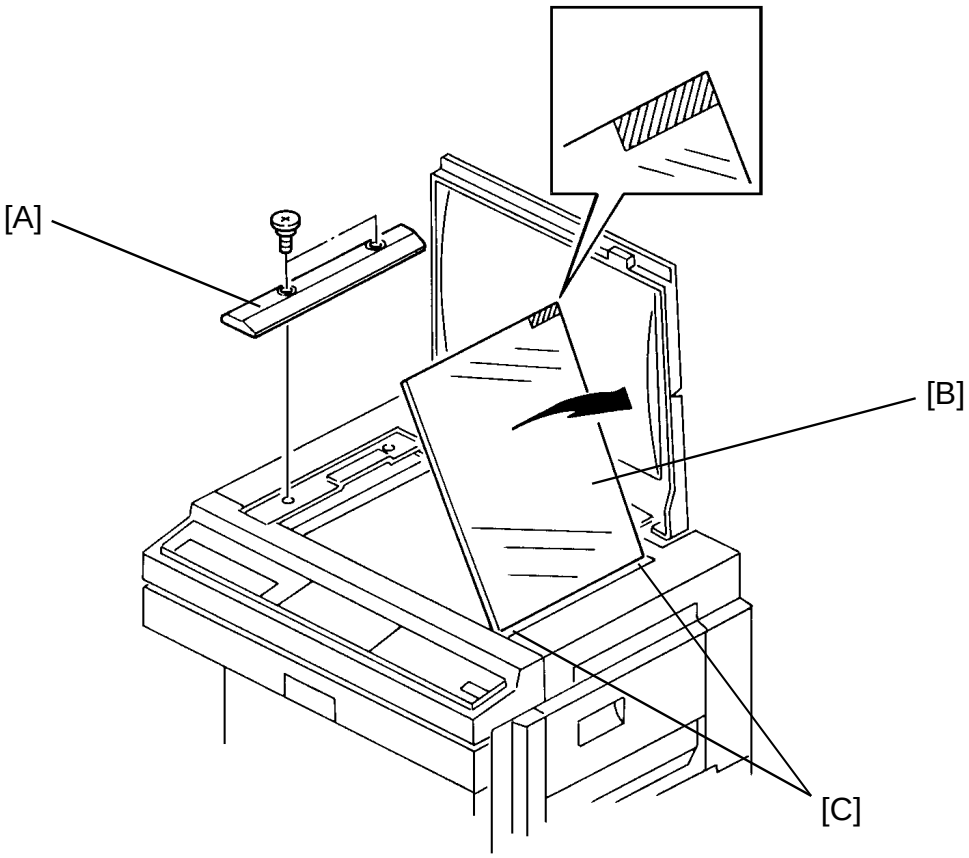

1. Remove the left scale [A] (2 shoulder screws).
2. Grasp the left edge of the exposure glass [B] and lift up slightly. Slide the other edge out from under the right glass holder [C]. Remove the exposure glass.

   NOTE: When reinstalling the exposure glass, make sure of the following:

   a) That the red mark on the edge of the glass faces up. This side is smoother and it generates less static electricity when the DF is used.

2.2 EXPOSURE LAMP REPLACEMENT

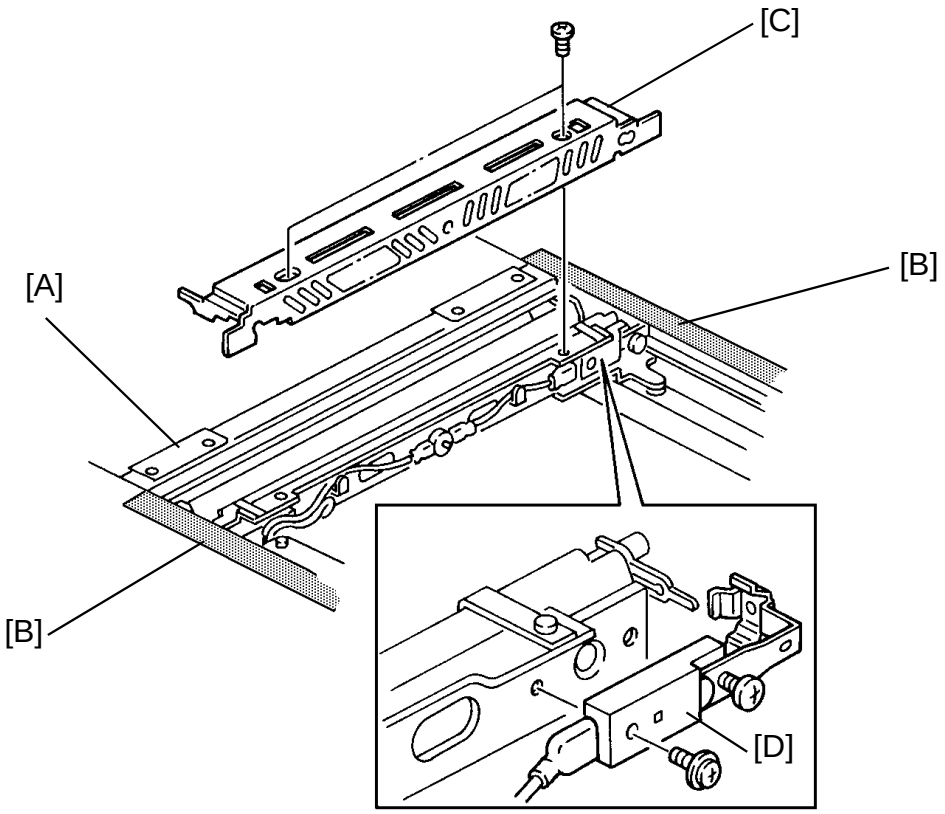

NOTE: Do not touch the reflector or the new exposure lamp with your bare hands. Use a strip of paper as shown aver page. (Oil marks from fingers on the lamp or reflectors will be affected by heat from the lamp and will cause discoloration.)

1. Turn off the main switch.
2. Remove the exposure glass. (See Exposure Glass Removal.)
3. Move the first scanner [A] to the cutout position at the front and rear frames [B]. (See illustration.)
4. Remove the reflector cover [C] (2 screws).
5. Remove the rear terminal bracket [D] (1 screw).

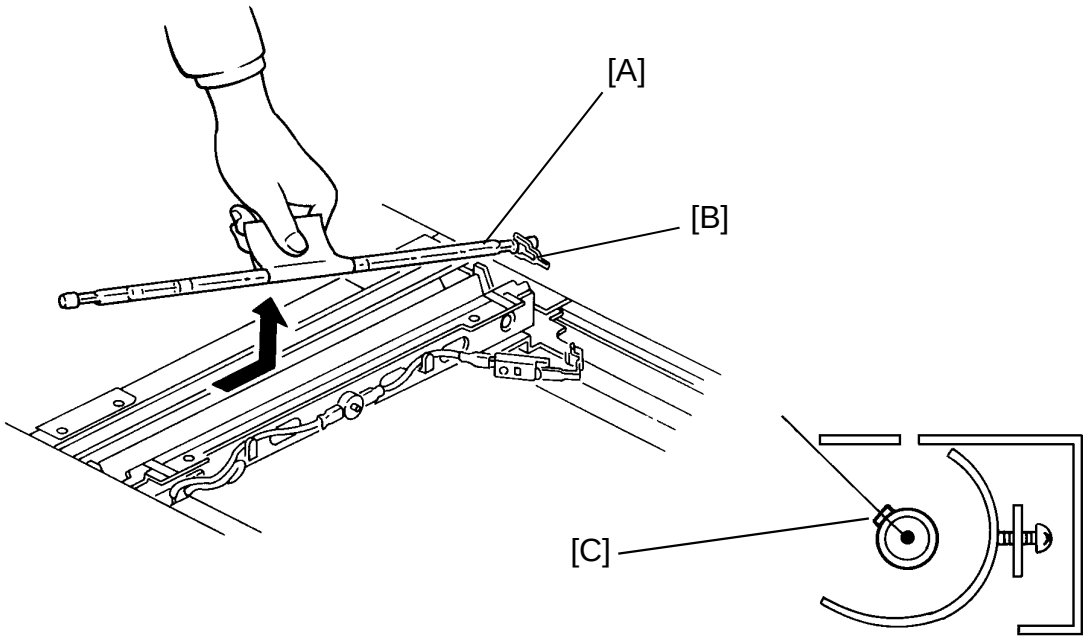

6. Remove the exposure lamp [A] from the front terminal by moving the lamp toward the rear.
7. Install a new lamp. Use a strip of paper as shown to hold the lamp. Reassemble the rear terminal bracket while confirming that the lamp is properly set by both terminals and the clip [B] is set properly.

   NOTE: Make sure that the blister [C] on the lamp points towards the reflector opening (left side of the copier) as shown.
8. Reassemble the copier.
9. Check the exposure lamp voltage setting [X] by SP48.
10. Check the target lamp voltage [Y] by SP51 (press "." key for reading).
11. Perform the forced V_L detection (SP70) [Y-X] times.
12. Check the target lamp voltage by SP51.
13. Perform the forced V_L detection (SP70) a few more times.
14. Check the target lamp voltage [Z] by SP51 again and confirm that the voltage [Z] is the same as that in step 12. If not, repeat the forced VL detection (SP70) until the voltage [Z] does not change.
15. Perform the auto ADS gain adjustment (SP56).
16. Adjust the ADS density (SP34) if necessary.

2.3 OPTICS THERMOSWITCH REPLACEMENT

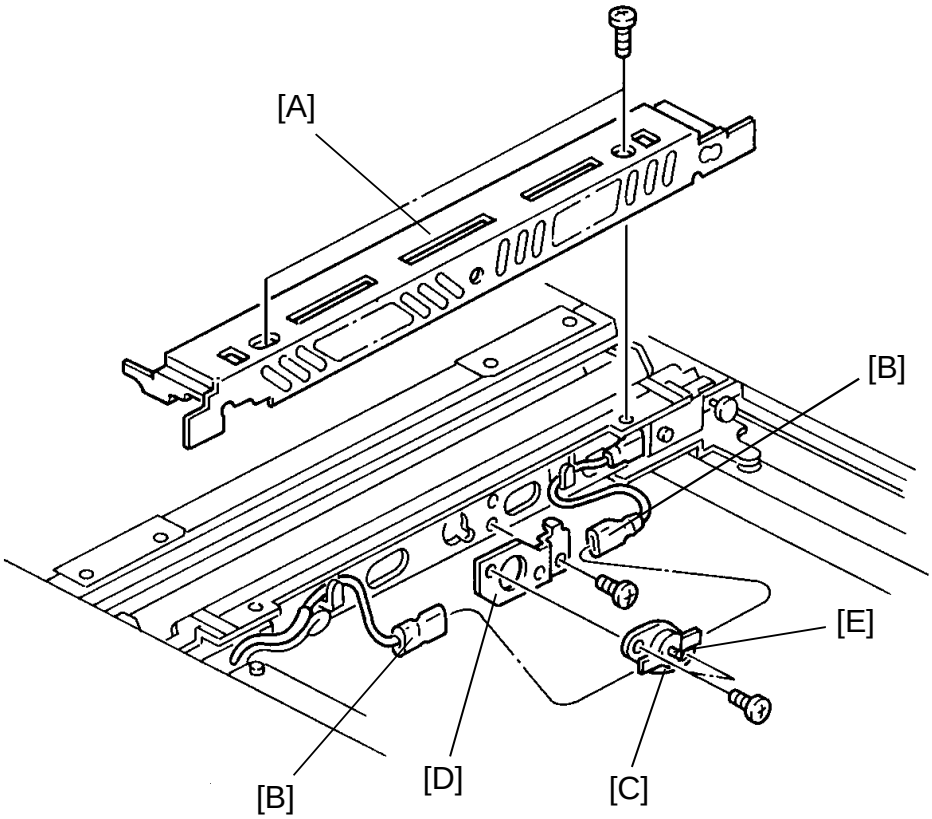

NOTE: The thermoswitch can be reset manually to push the red button [E] when the exposure lamp area cools.

1. Turn off the main switch.
2. Remove the exposure glass.
3. Slide the 1st scanner about 150 mm (6") to the right.
4. Remove the refector cover [A] (2 screws).
5. Remove the exposure lamp leads [B] from the terminals on both sides of the thermoswitch [C].
6. Remove the thermoswitch bracket [D] (1 screw).
7. Remove the thermoswitch from the bracket (2 screws), and replace it.

2.4 OPTICS FAN FILTER CLEANING AND REPLACEMENT

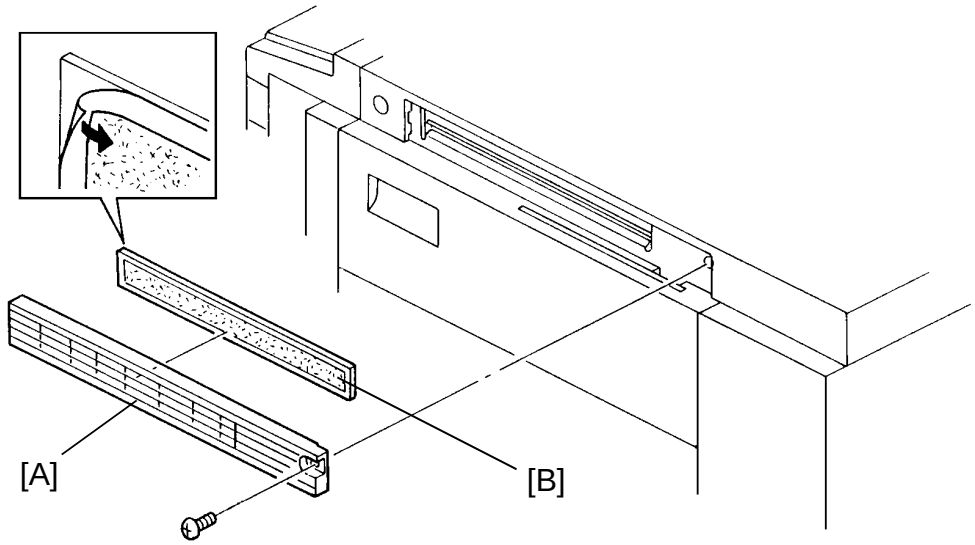

1. Turn off the main switch.
2. Remove the right optics cover [A] (1 screw).
3. Clean or replace the optics fan filter [B].

2.5 SCANNER DRIVE BELT REPLACEMENT

2.5.1 Belt Removal

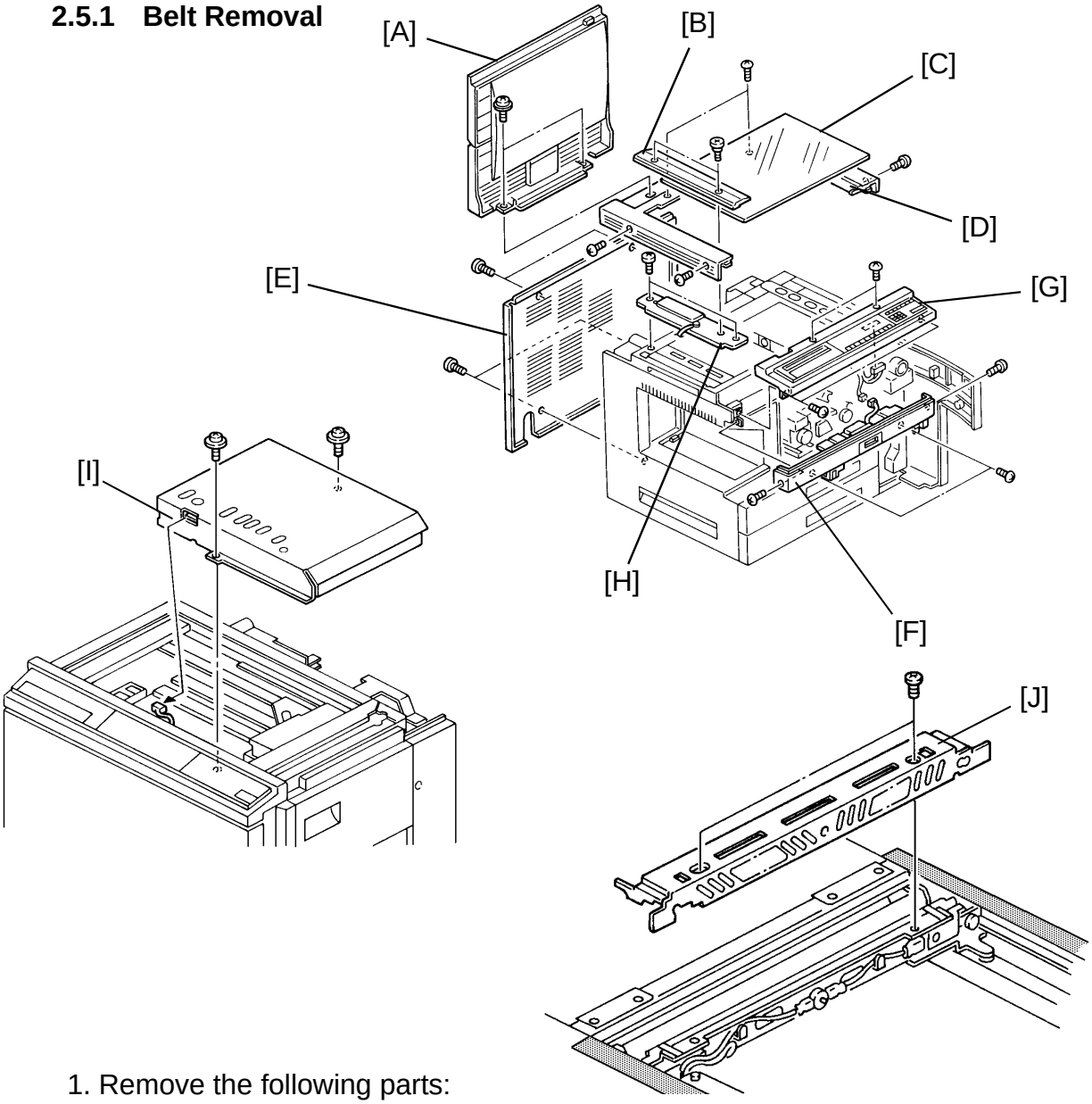

1. Remove the following parts:
   - Platen cover or ADF [A]
   - Left scale [B] (2 shoulder screws)
   - Exposure glass [C]
   - Top cover [D] (6 screws)
   - Rear cover [E] (loosen 2 screws and remove 2 screws)
   - Front upper cover [F] (3 screws)
   - Operation panel [G] (4 screws and 2 connectors)
   - Left scale bracket [H] (2 screws, 1 connector and 1 harness clamp)
   - Lens cover [I] (2 screws and 1 connector)
   - Reflector over [I] (2 screws)

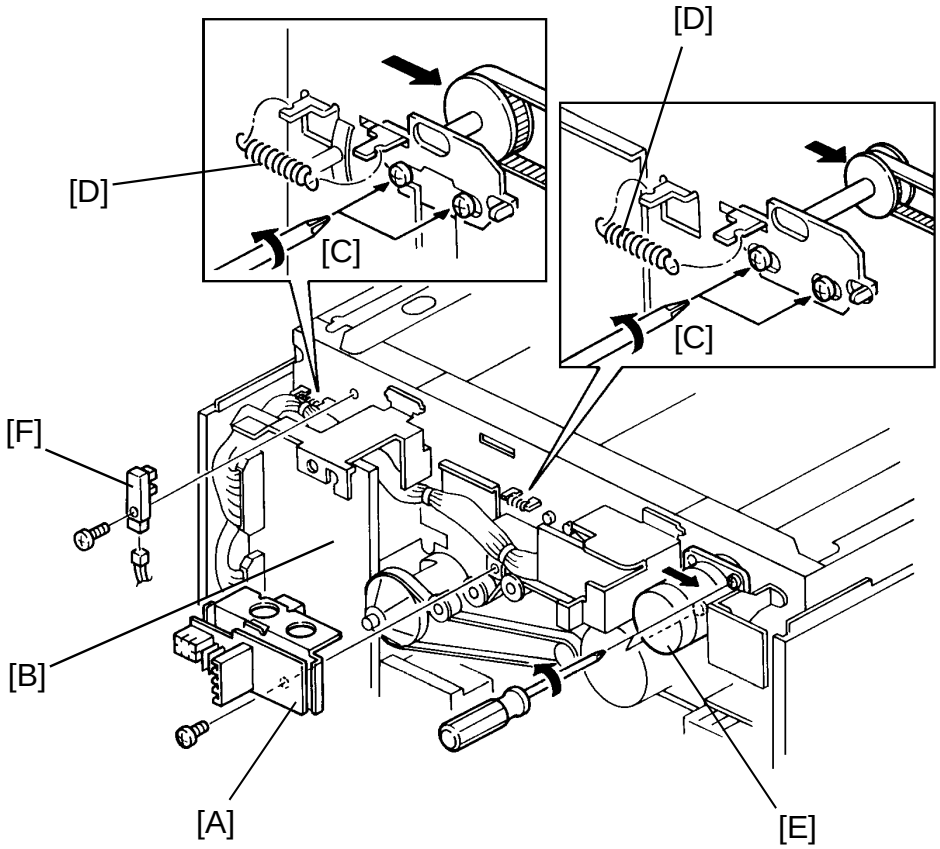

<Rear side of the scanner drive belts>

2. Remove the PTL/QL stabilizer [A] (1 screw, 6 connectors, 2 wire saddles).
3. Swing out the main control board assembly [B] (1 screw).
4. Loosen the screws [C] for the tension brackets of the long and short scanner drive belts (2 screws each).
5. Remove 2 tension springs [D].
6. Remove the scanner drive motor [E] (2 screws, 1 connector).
7. Remove the 3rd scanner home position sensor [F] (1 screw).

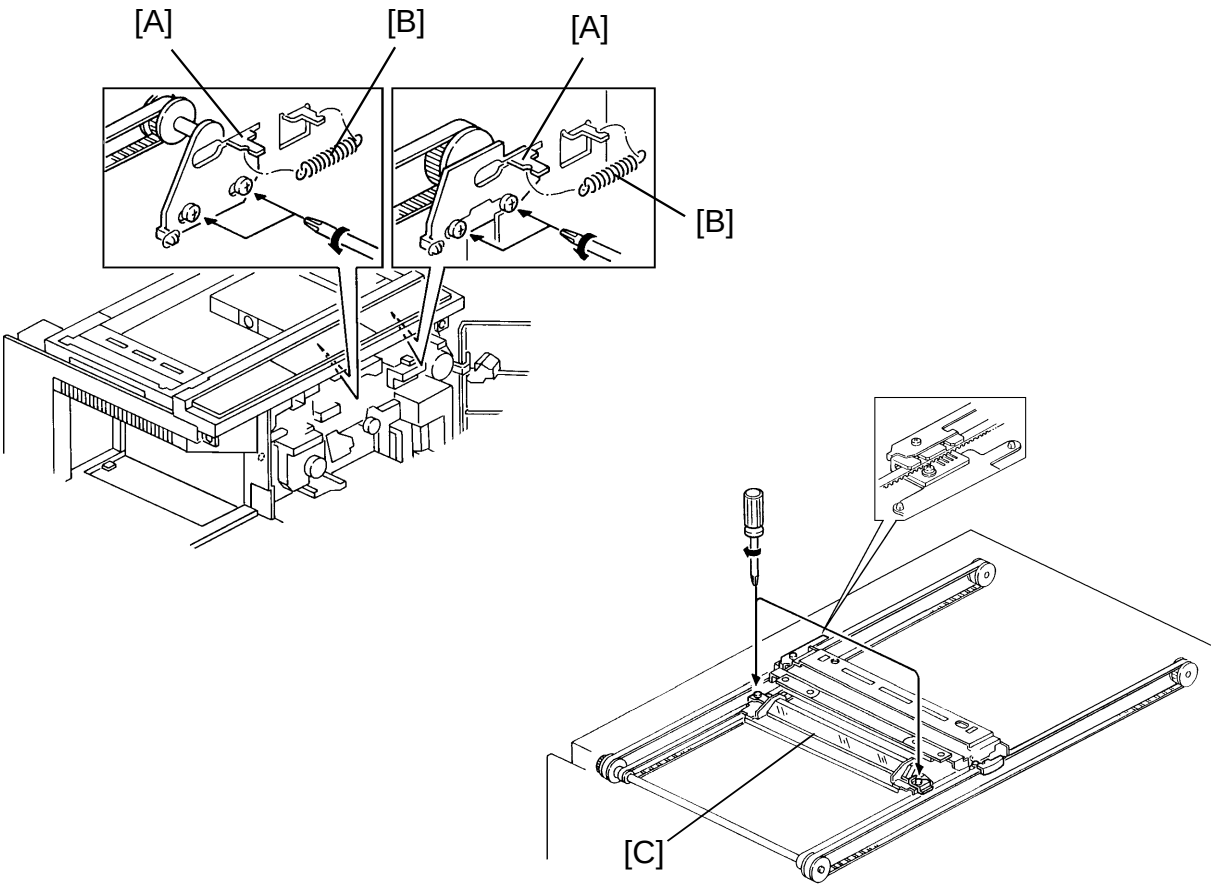

<Front side of the scanner drive belts>

8. Loosen the screws for the tension bracket [A].
9. Remove 2 tension springs [B].
10. Remove the 2nd scanner [C] (loosen 2 screws).

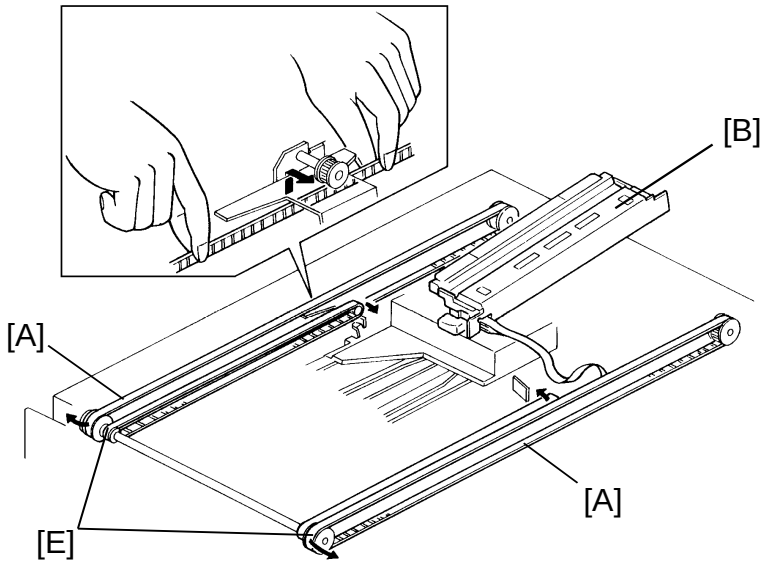

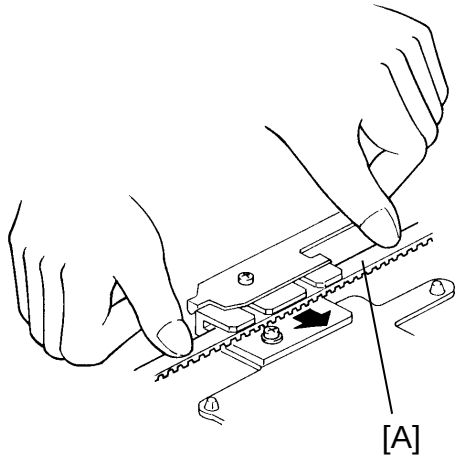

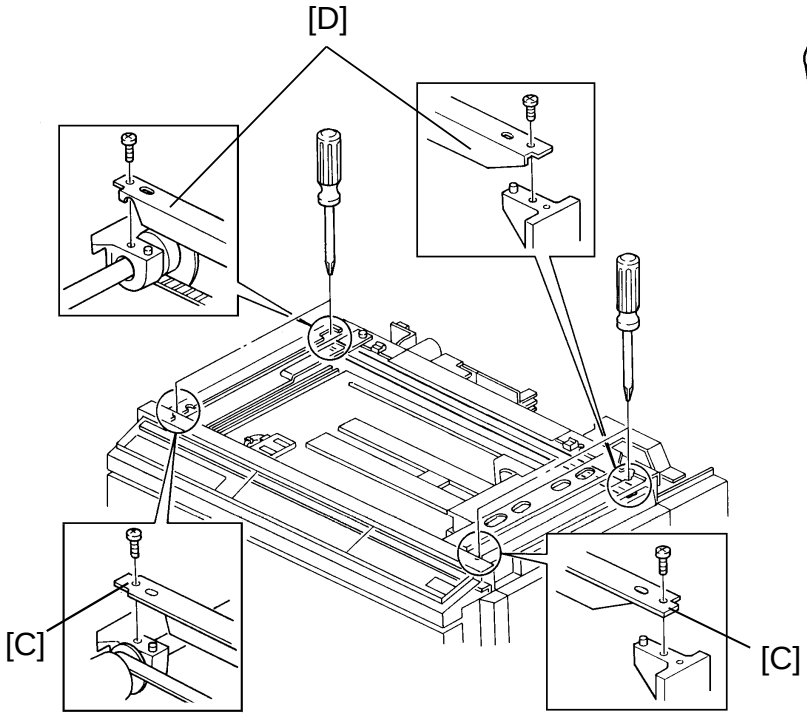

11. Unhook the long timing belt [A] from the belt clamp of the 1st scanner and put the 1st scanner [B] on the machine as shown.
12. Remove the front and rear guide rails [C, D] (2 screws each).
13. Remove the short and long scanner drive belts as shown [A, E].

2.5.2 Belt Installation

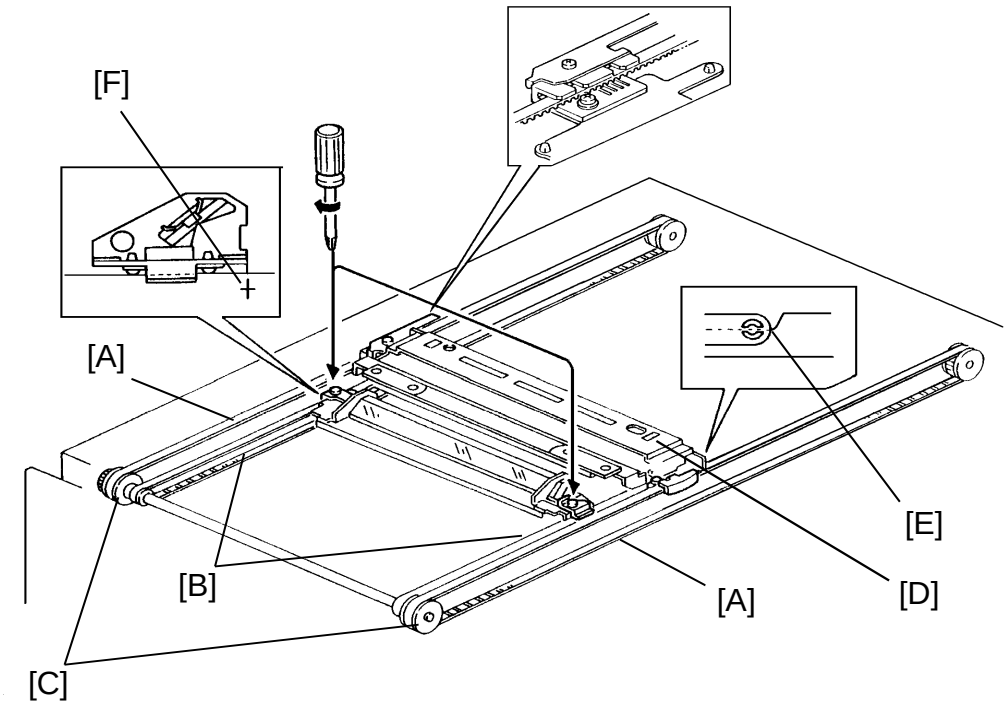

1. Install the short and long scanner drive belts [A, B] or both sides.

   NOTE: Put the short scanner drive belt on to the left pulley [C] first.

2. Reinstall the 4 tension springs and tighten the 4 tension brackets (2 screws each).
3. Reinstall the front and rear guide rails (2 screws each).
4. Reinstall the timing belt and scanner drive motor (2 screws and 1 grounding wire).
5. Set the 1st scanner [D] at the position [E] as shown, and insert the long scanner drive belt to the belt clamp.
6. Set the 2nd scanner at the position [F] as shown and install the belt clamp for the short scanner drive belt (1 screw each).

   NOTE: When fixing the 2nd scanner, make sure the 1st scanner is set at the position [E] (step 5).

7. Reassemble all the necessaryparts.

2.5.3 1st and 2nd Scanner Position Adjustment

1. Make a copy sample performing the vertical, and horizontal magnification adjustments, and then perform the focus adjustment. (See vertical magnification, horizontal magnification, and focus adjustments.)

2.6 3RD SCANNER DRIVE MOTOR REPLACEMENT

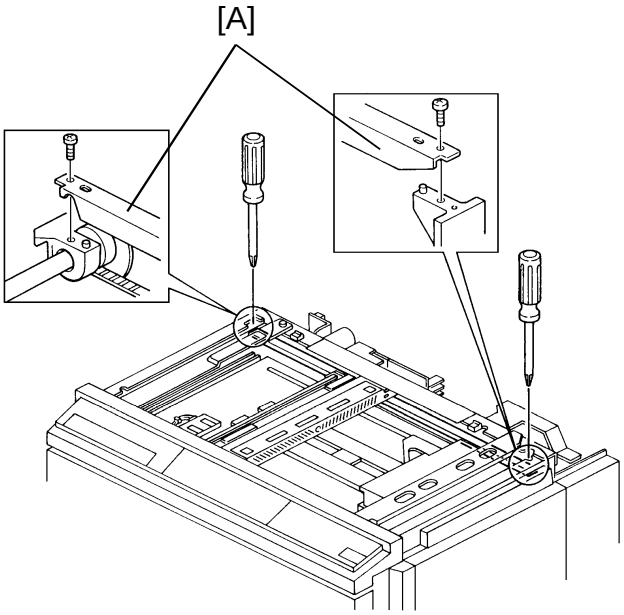

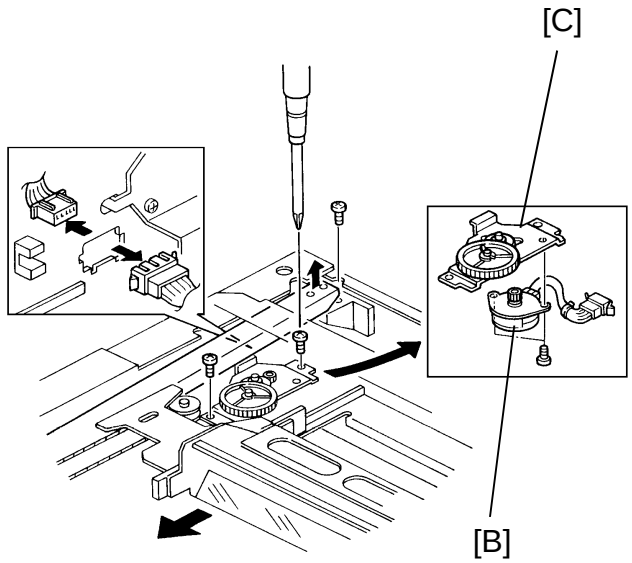

1. Turn off the main switch.
2. Remove the following parts:
   - The exposure glass
   - The top cover
   - The rear cover
   - The lens cover
3. Remove the 2 fixing screws of the rear scanner guide rail [A].
4. Slide the 3rd scanner to the left.
5. While holding up the rear scanner guide rail, remove the 3rd scanner drive motor assembly (2 screws and 1 connector).
6. Separate the motor [B] from the bracket [C] (2 screws) and replace.

2.7 LENS DRIVE WIRE REPLACEMENT

2.7.1 Wire Removal

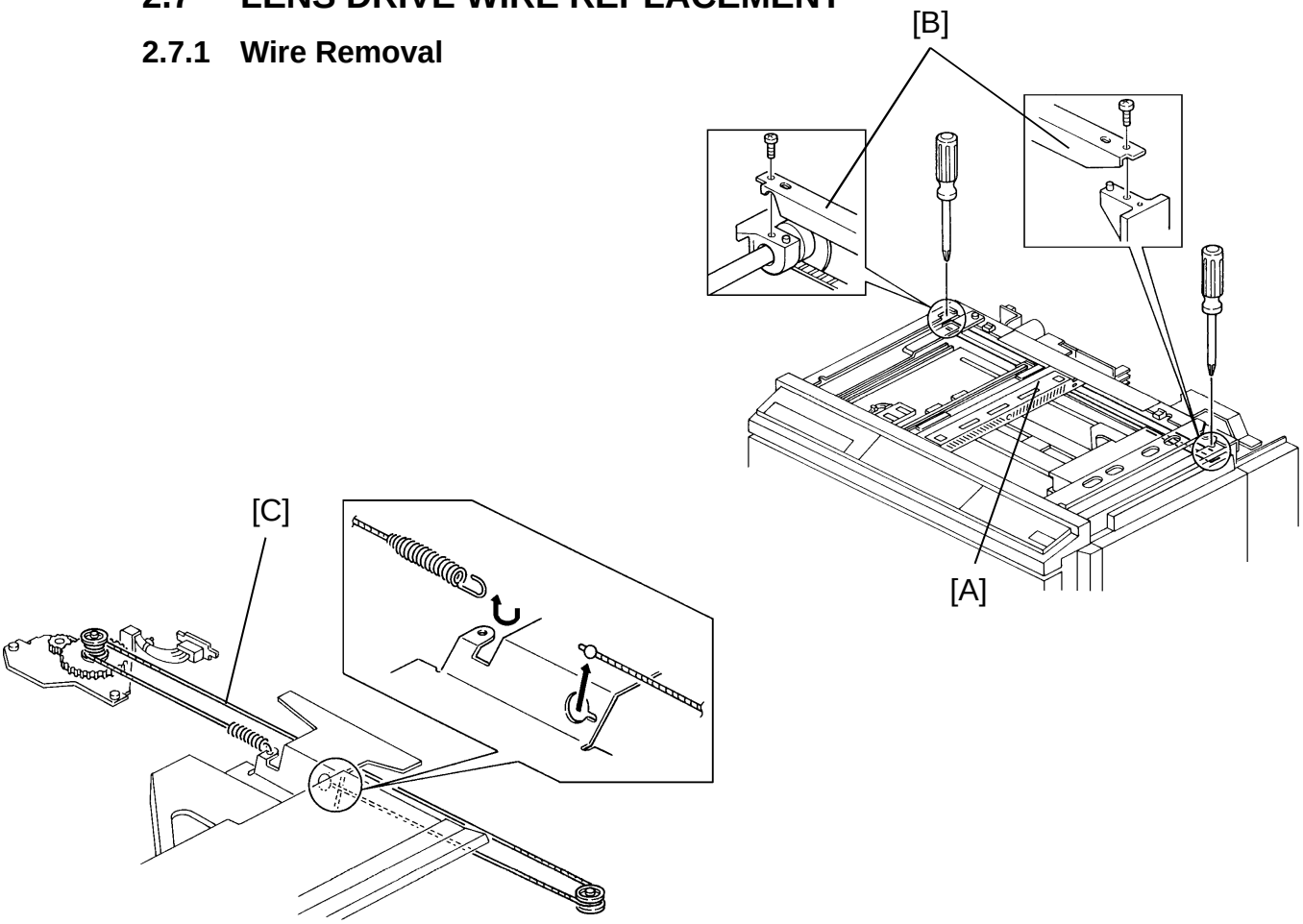

1. Turn off the main switch.
2. Remove the following parts:
    - The exposure glass
    - The top cover
    - The rear cover
    - The lens cover
    - The left scale bracket
3. Slide the 1st scanner [A] half of the way to the right.
4. Remove the 2 fixing screws of the rear scanner guide rail [A].
5. Remove the lens drive wire [B] as shown.

2.7.2 Wire Installation

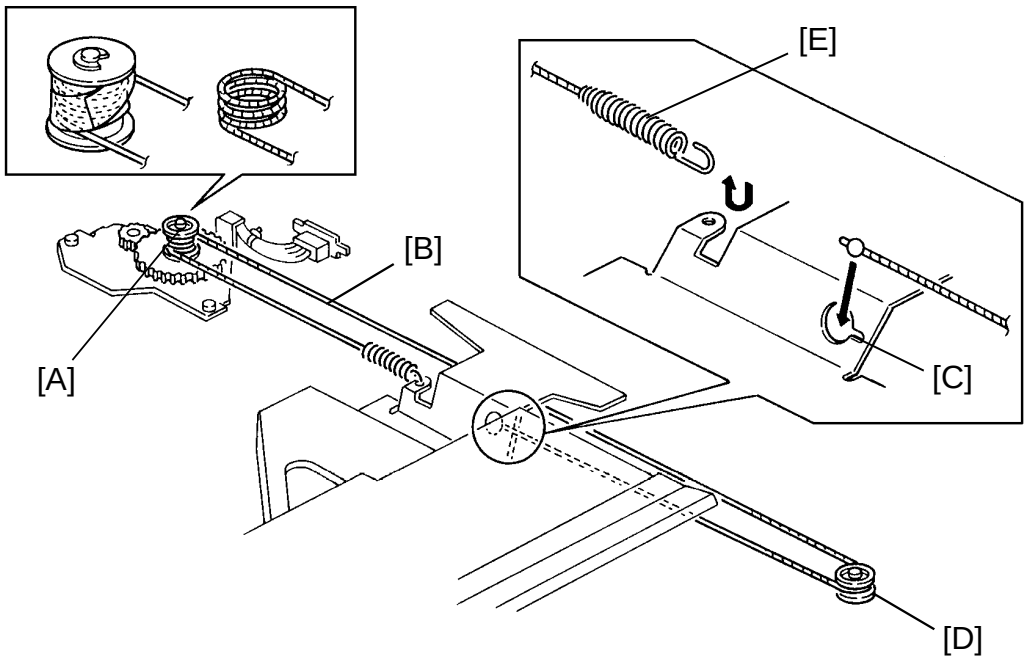

1. Remove the pulley [A] (1 E-ring).
2. Wind the lens drive wire [B] three and a half turns around the pulley and then wrap the pulley with tape as shown.
3. Reinstall the pulley.
4. Position the wire in the cutout of the shutter plate [C] and pulley [D].
5. Hook the spring [E] as shown.

2.8 LENS DRIVE MOTOR REPLACEMENT

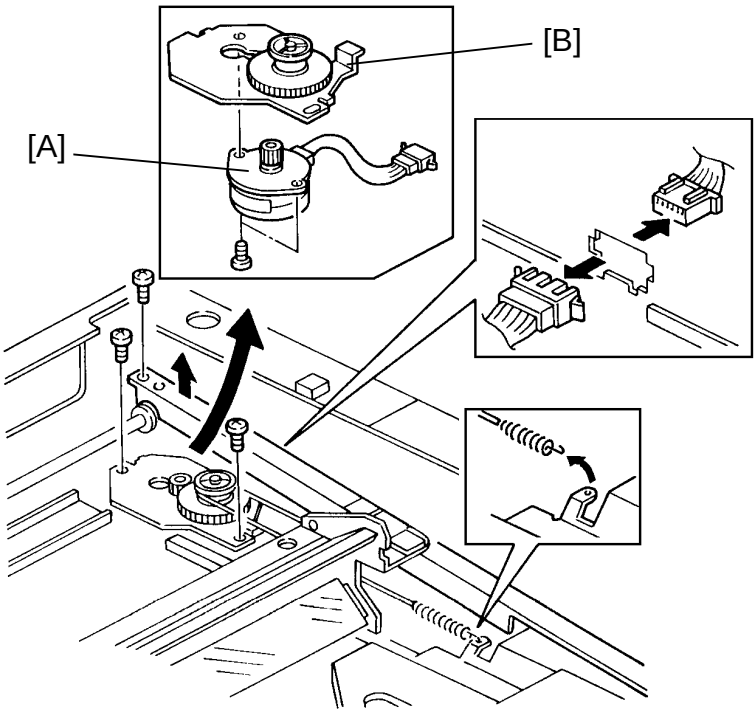

1. Remove the lens drive wire (see Lens Drive Wire Replacement).
2. Remove the lens drive motor assembly (2 screws and 1 connector).
3. Separate the motor [A] from the bracket [B] (2 screws) and replace.

2.9 ORIGINAL SIZE SENSORS REPLACEMENT

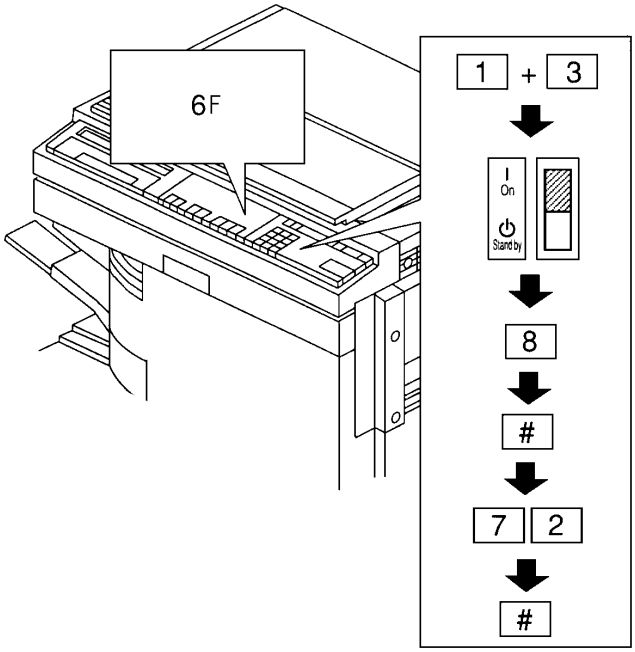

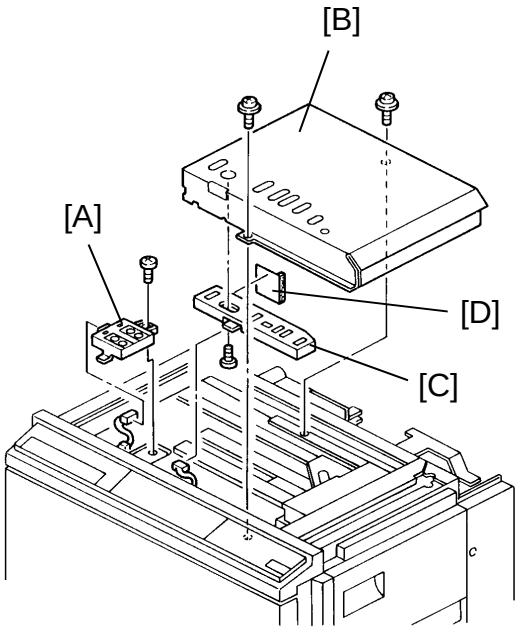

Original size	Data
A3	7F
11" x 17"	6F
B4	3F
A4 Lensthwise	E
A4 sideways/8 1/2" x 11" lengthwise	7
B5 length wise	6
B5 sideways/8 1/2" x 11" sideways	3
A5 lengthwise	0
A5 sideways	2
No original	0

1. Turn off the main switch.
2. Remove the exposure glass.
3. Replace the original width sensor [A] (1 screw and 1 connector).
4. Remove the lens cover [B] (2 screws and 1 connector).
5. Separate the original length sensor [C] from the lens cover (1 screw) and replace.
6. Remove the mylar [D] from the old original size sensor and reinstall it on the new original size sensor as shown.
7. Reassemble all the parts.
8. Check the original size sensor's function by SP#8 (input no.72).

3. DEVELOPMENT AND TONER SUPPLY

3.1 DEVELOPMENT UNIT REMOVAL

3.1.1 Black Development Unit

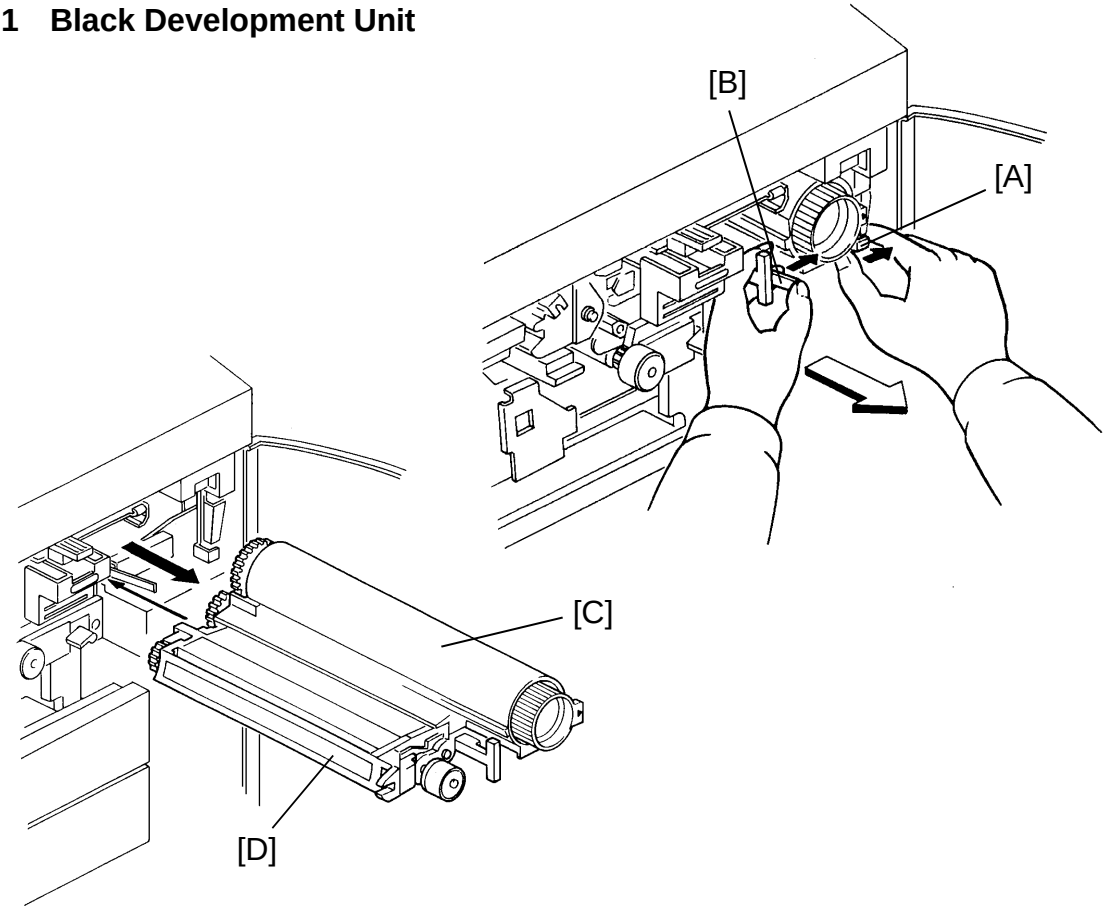

1. Open the front door.
2. Push the development unit lock lever [A] to the right (to the lock position).
3. Move the development release lever [B] to the right and pull out the black development unit [C] half way. Holding the toner supply unit [D] with your right hand and the bottom of the development unit with your left hand, pull the unit all the way out. Place the unit on a clean sheet of paper.

   NOTE: The color development unit or cover plate should be installed before installation.

3.1.2 Color Development Unit

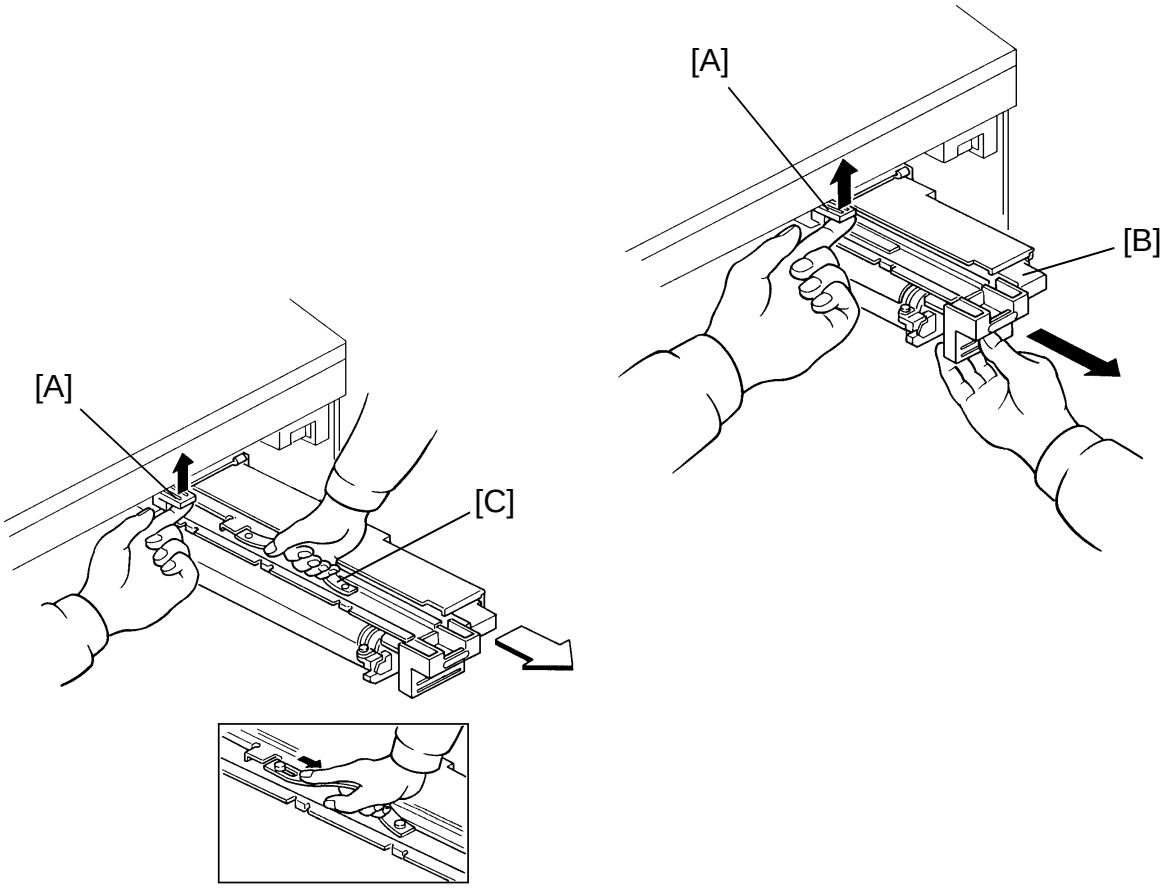

1. Open the front door.
2. While lifting the color development unit lock lever [A], pull out the color development unit [B] until it stops.
3. Holding the strap [C] of the color development unit with the left hand, pull out the color development unit while lifting the color development unit lock lever.

3.2 DEVELOPER REPLACEMENT

3.2.1 Black Developer (SP#65)

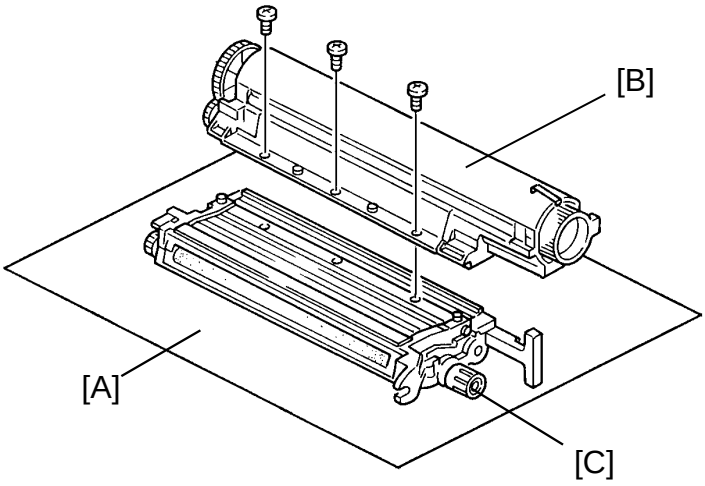

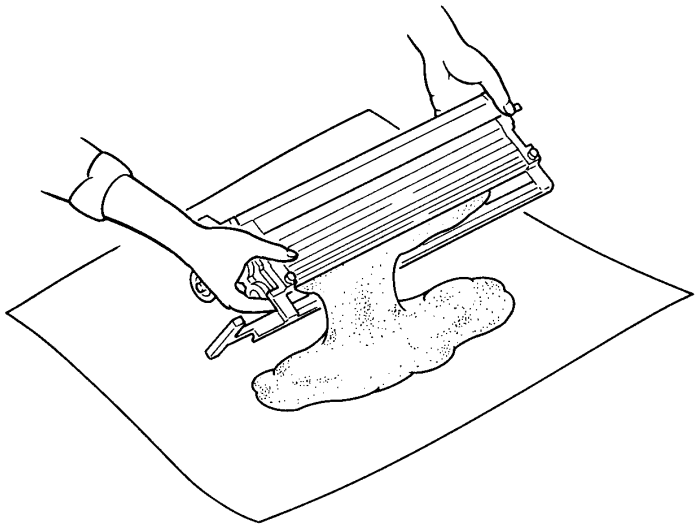

1. Take out the development unit.
2. Set the development unit on a large sheet of paper [A].
3. Remove the toner supply unit [B] (3 screws).
4. Turn the paddle roller knob [C] counterclockwise to empty developer onto the paper.

   NOTE: Dispose of the used developer according to local regulations.
5. Make sure that no developer remains on the development roller or in the development unit.
6. Pour one pack of developer into the development unit while turning the paddle roller knob.
7. Reinstall the toner supply unit and set the development unit in the machine.
8. Perform initial setting for new black developer using SP65.

3.2.2 Color Developer (SP #10)

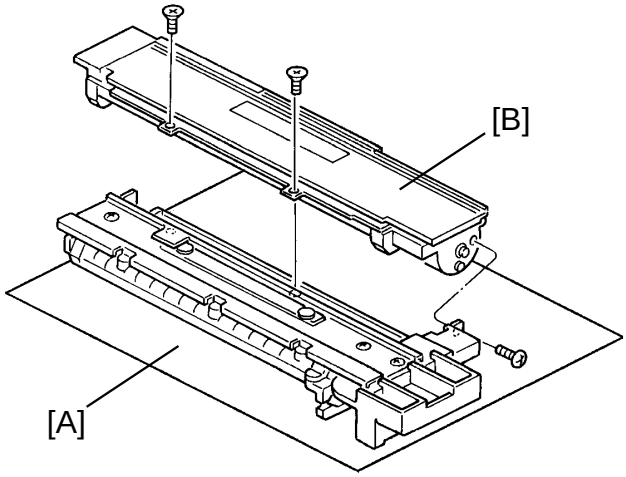

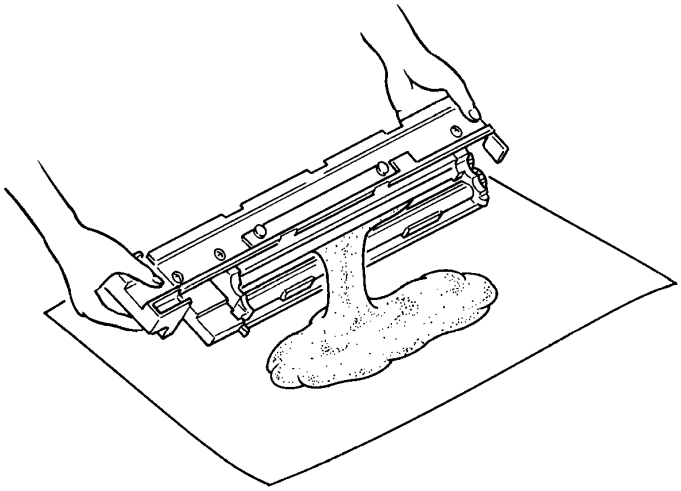

1. Take out the color development unit.
2. Put the color development unit on a large sheet of paper [A].
3. Remove the toner supply unit [B] (3 screws).
4. Turn the paddle roller knob counterclockwise to empty developer onto the paper.

   NOTE: Dispose of the used developer according to local regulations.
5. Make sure that no developer remains on the development roller or in the development unit.
6. Pour one pack of developer into the development unit while turning the paddle roller knob.
7. Reinstall the toner supply unit and set the color development unit in the machine.
8. Perform initial setting for new color developer using SP10.

3.3 DEVELOPMENT UNIT SHIFT CLUTCH LUBRICATION

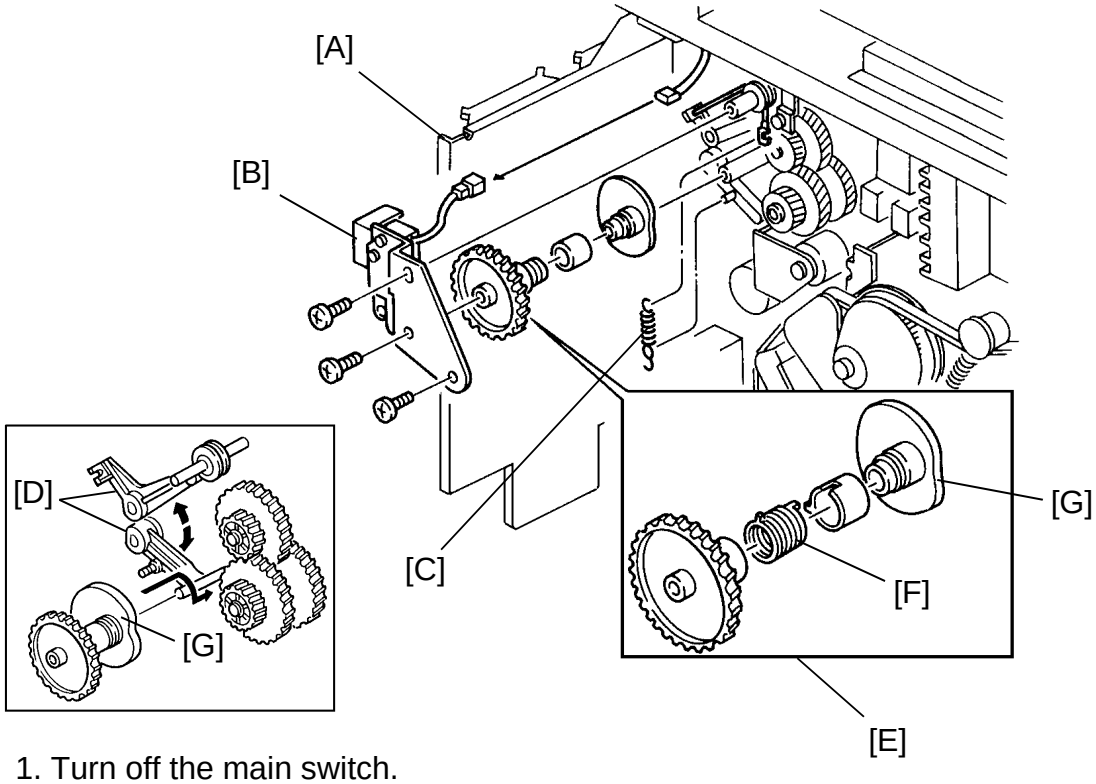

1. Turn off the main switch.
2. Remove the rear and right upper cover.
3. Swing out the main control board assenbly [A] (1 screw).
4. Remove the development unit change solenoid bracket [B] (3 screws).
5. Remove the development pressure spring [C] and open the development unit change levers [D].
6. Remove the development unit shift clutch assembly [E].
7. Lubricate the clutch spring [F] with Mobil Temp. 78 and reassemble the shift clutch.
8. Reinstall the shift clutch assembly as shown.
9. Turn the cam plate [G] clockwise about 90°C.
   The highest position of the cam plate should be at the top.

   NOTE: The shift clutch must be reinstalled as an assembly.

3.4 TONER SUPPLY CLUTCH REMOVAL

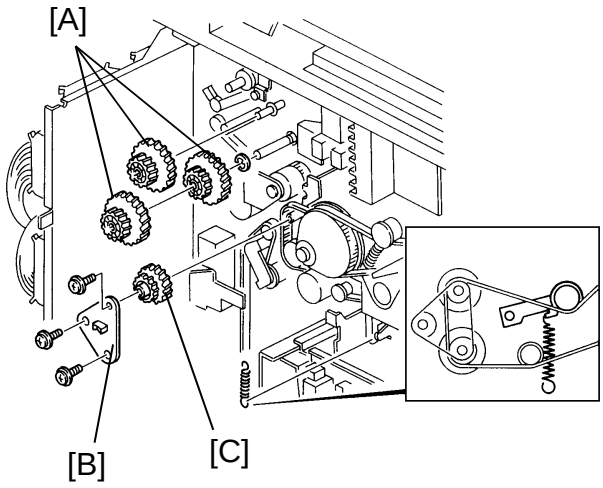

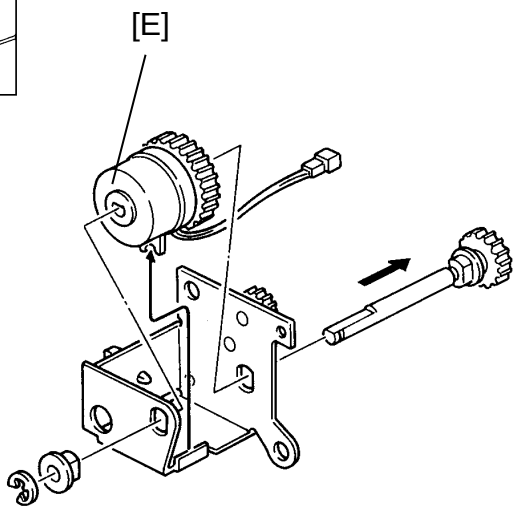

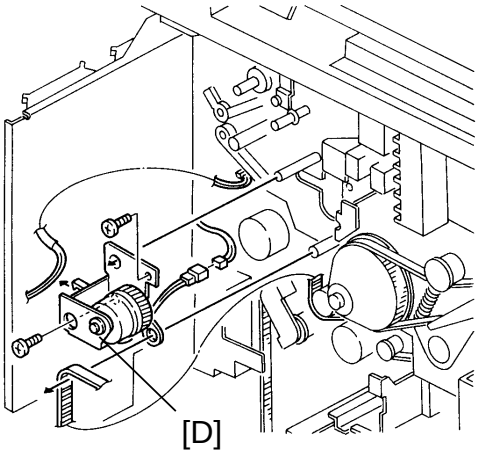

1.Turn off the main switch.

2. Remove the development unit shift clutch assembly.

3. Remove the 3 gears [A] (1 E-ring).

4. Remove the support bracket [B] (3 screws) and gear [C].

5. Remove the toner supply clutch assembly [D] (2 screws, 1 E-ring, 1 harness clump, and 1 connector).

6. Remove the toner supply clutch [E] (1 E-ring).

3.5 COLOR DEVELOPMENT SWITCH REPLACEMENT

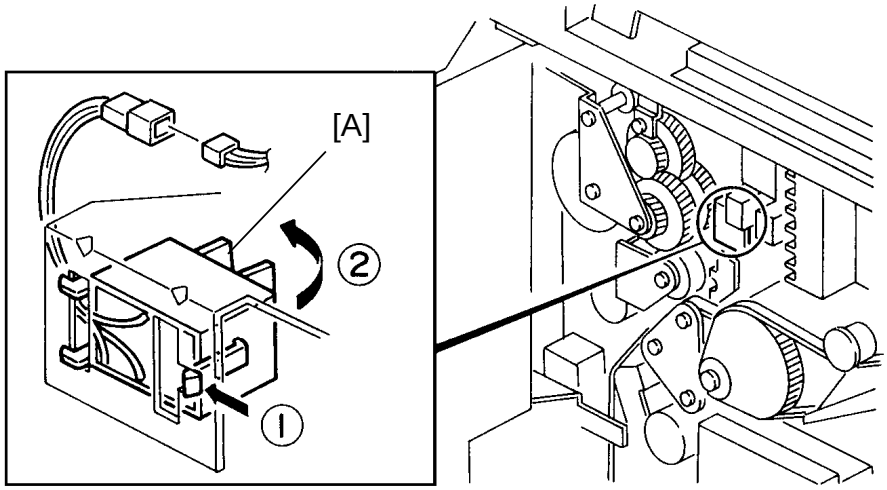

1. Turn off the main switch.
2. Remove the color development unit.
3. Remove the rear cover.
4. Swing out the main control board assenbly (1 screw).
5. Unhook the color development switch [A] and replace (1 connector).

4. CLEANING

4.1 CLEANING UNIT REMOVAL

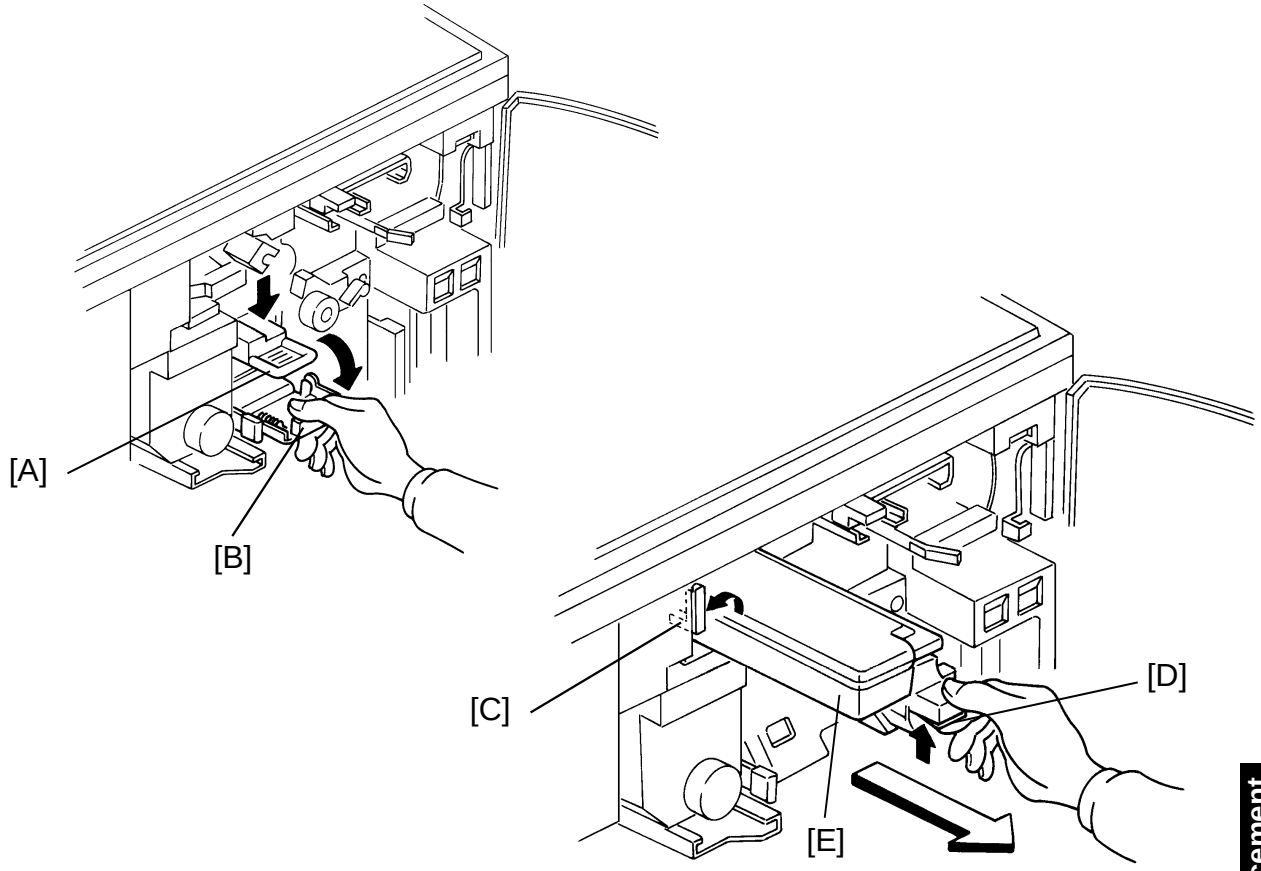

1. Open the front door and lower the transfer & separation corona unit [A] by pulling down the release lever [B].
2. Place a sheet of paper under the cleaning unit.
3. Turn the cleaning unit release lever [C] counterclockwise.
4. While holding up the cleaning blade release lever [D], pull out the cleaning unit [E]. Place the unit on a clean sheet of paper.

4.2 CLEANING BLADE REPLACEMENT

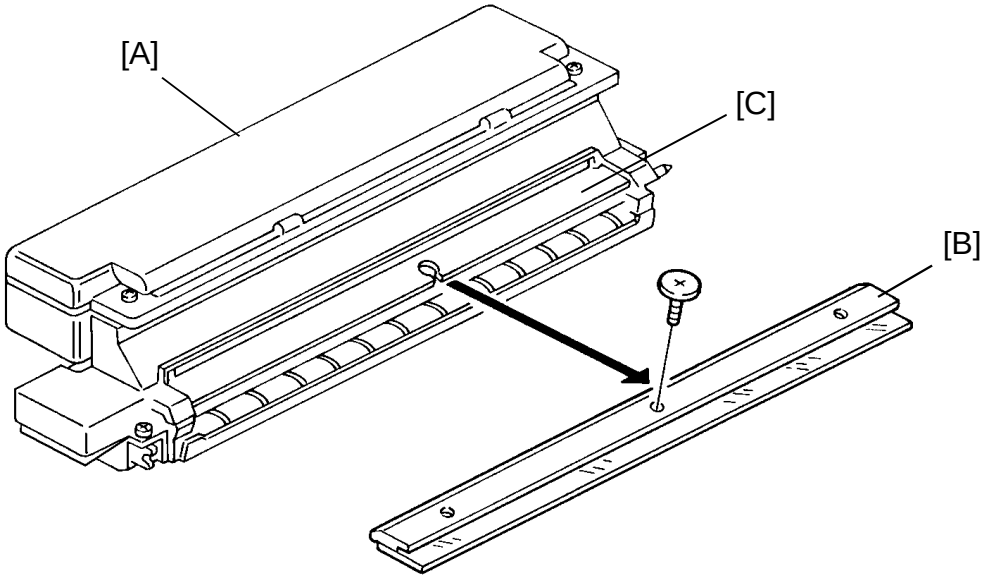

1. Remove the cleaning unit [A] (see Cleaning Unit Removal.)
2. Remove the cleaning blade [B] (1 shoulder screw).
3. While holding up the cleaning blade release lever, install the new cleaning blade between the blade bracket [C] and the blade scraper.

   NOTE: a) Do not touch the edge of a new cleaning blade, as it is damaged easily.

   b) After installing a new cleaning blade, make sure that the blade swivels smoothly.

4.3 CLEANING BRUSH REPLACEMENT

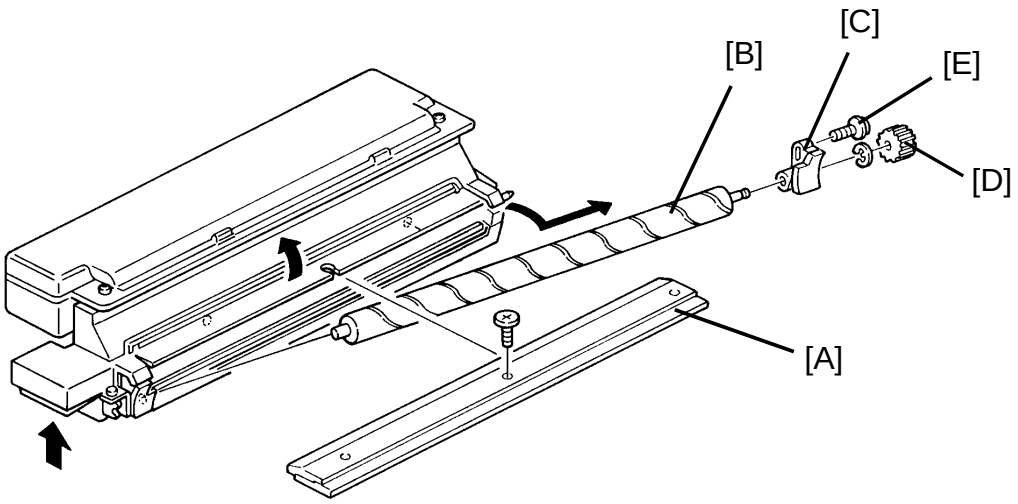

1. Remove the cleaning blade [A]. (See Cleaning Blade Replacement.)
2. Remove the screw of the rear cleaning side bracket [C] and pull out the cleaning brush [B] together with the cleaning side bracket (1 E-ring) and gear [D].
3. Remove the gear and the rear cleaning side bracket, and replace the cleaning brush.

   NOTE: a) Do not touch the cleaning brush surface. Handle only the shaft-ends.
   b) Do not bend or damage the entrance seal.
   c) This screw [E] is a tapping screw. Do not tighten it too much as this will strip the resin threads.

4.4 BLADE SCRAPER REPLACEMENT

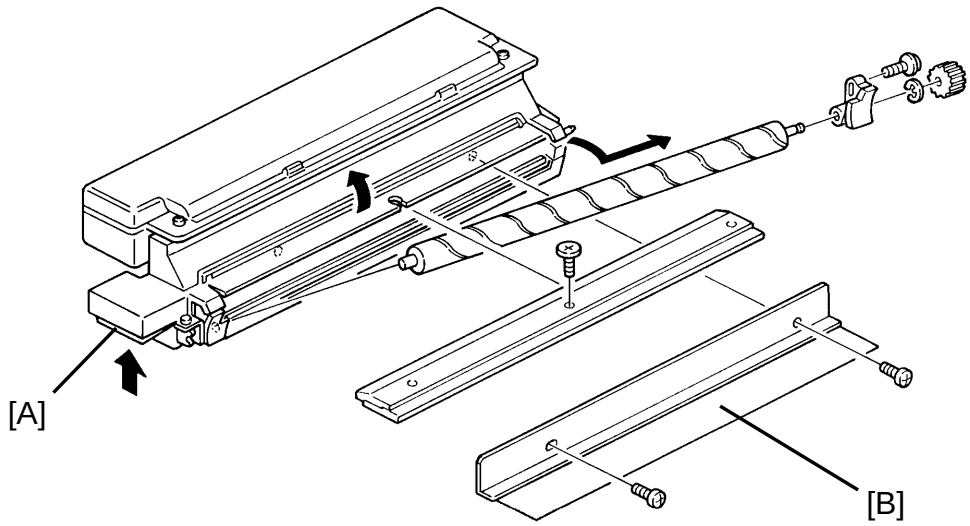

1. Remove the cleaning blade and brush. (See Cleaning Blade and Brush Replacement.)
2. While holding up the cleaning blade release lever [A], remove the blade scraper [B] (2 screws).

4.5 USED TONER COLLECTION (SP83)

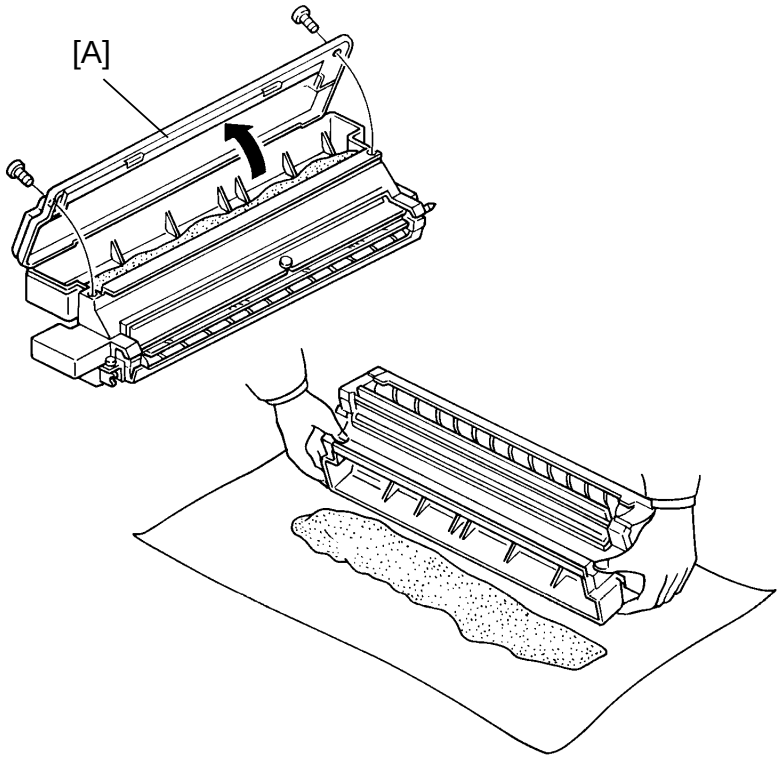

1. Turn off the main switch.
2. Remove the cleaning unit and set it on a large sheet of paper.
3. Remove the used toner tank cover [A] (2 screws).
4. Pour the used toner slowly onto the paper so that it does not scatter.
5. Place the paper sheet with the toner into a vinyl bag.

   NOTE: Dispose of according to local regulations.
6. Reinstall the used toner tank cover.
7. Reinstall the cleaning unit.
8. While pressing both "1" and "3" on the operation panel number keys, turn on the main switch in order to access the SP mode.

   NOTE: Release the number keys after confirming that the call service indicator and the copy counter number "0" are blinking.
9. Enter "83" using the number keys and press the enter key.
10. Enter "1" using the number keys and press the enter key.
11. Turn the main switch off.

4.6 ENTRANCE SEAL REPLACEMENT

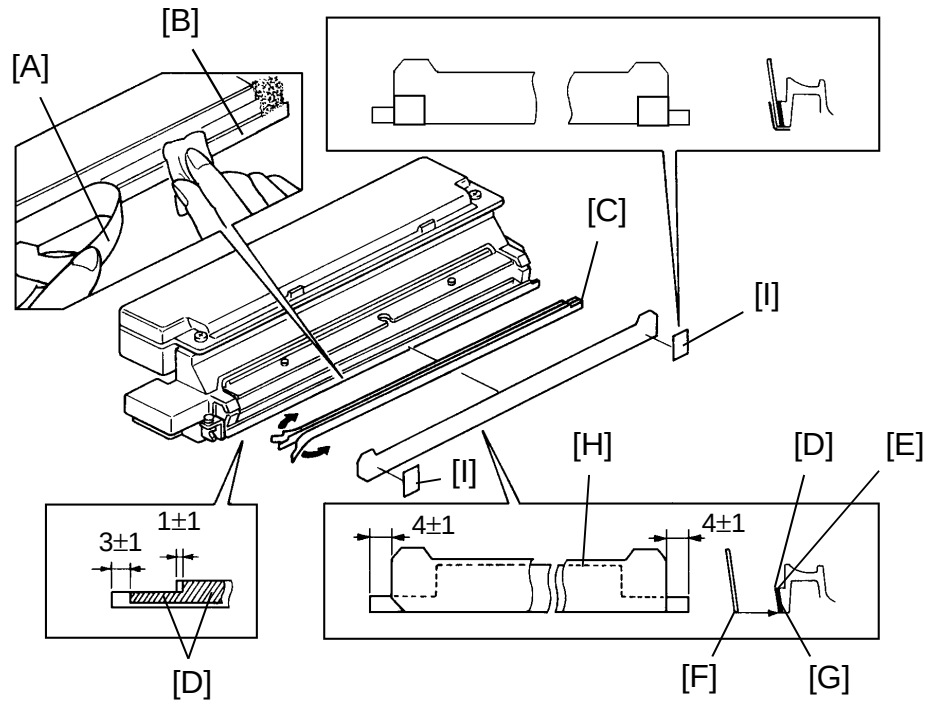

1. Remove the cleaning unit and the following parts:
   Cleaning Blade
   Cleaning Brush
2. Remove the used toner. (See Used Toner Collection.)
3. Clean the cleaning unit with a vacuum cleaner.
4. Remove the entrance seal [A] together with the strip of 2 sided tape securing it to the lower casing.
5. Clean the lower casing [B] with alcohol: make sure that no tape remains on the casing surface.
6. Place a new strip of 2-sided tape [C] on the lower casing surface. The upper edge [D] of the tape must be flush with the edge [E] of the projection as shown in the illustration.
7. Place the new entrance seal on the 2-sided tape as shown in the illustration.

   NOTE: a)The lower edge [F] of the entrance seal must be aligned with the edge [G] of the lower casing.
   b) Make sure that there are no waves in the upper edge [H] of the entrance seal.
8. Place the new seal [I] on the entrance seal.

5. PAPER FEED

5.1 PAPER TRAY REMOVAL

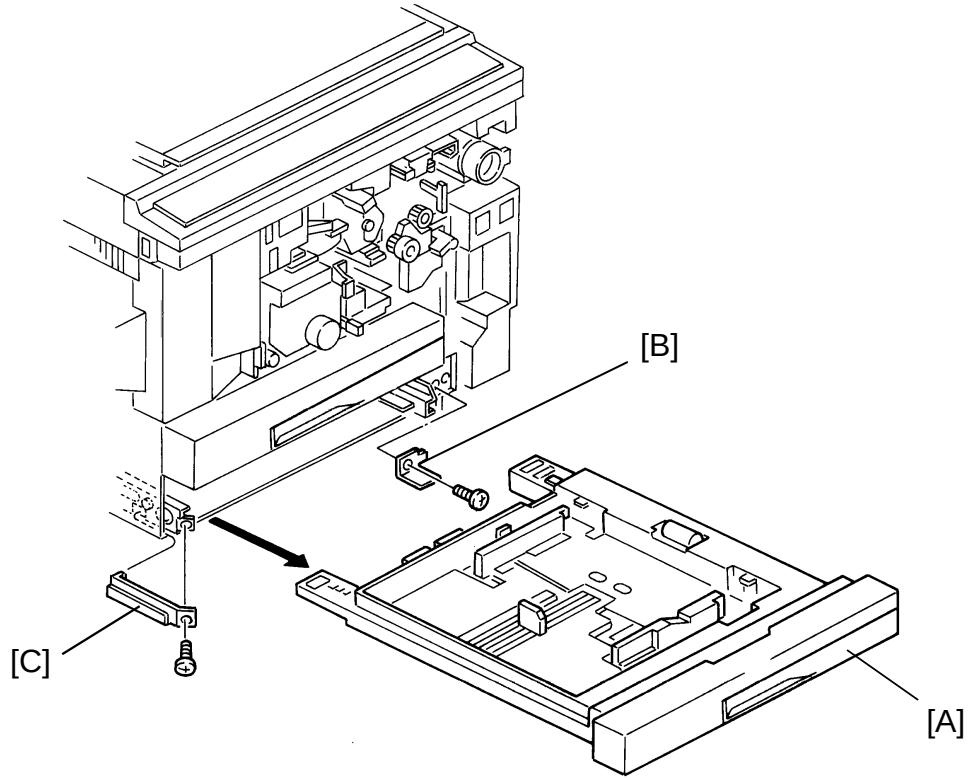

1. Open the copier front door.
2. Pull out the paper tray [A] and remove the tray stopper brackets [B], [C] on both sides as shown (1 screw each) and then remove the paper tray from the copier.

NOTE: When removing several paper trays at a time, make sure that the paper tray is returned to the original feeding station. To identify the original feeding station, each paper tray has its own decal on the right side.

(A: Copier Upper Paper Tray)
(B: Copier Lower Paper Tray)
(C: Paper Tray Unit - Tray 1)
(D: Paper Tray Unit - Tray 2)
(E: Paper Tray Unit - Tray 3)

5.2 PAPER FEED ROLLER REPLACEMENT

5.2.1 Friction Pad Feed System (Paper Tray)

NOTE: Replace the paper feed roller and the friction pad assembly as a set to maintain paper feeding ability.

(1) Feed Roller Replacement

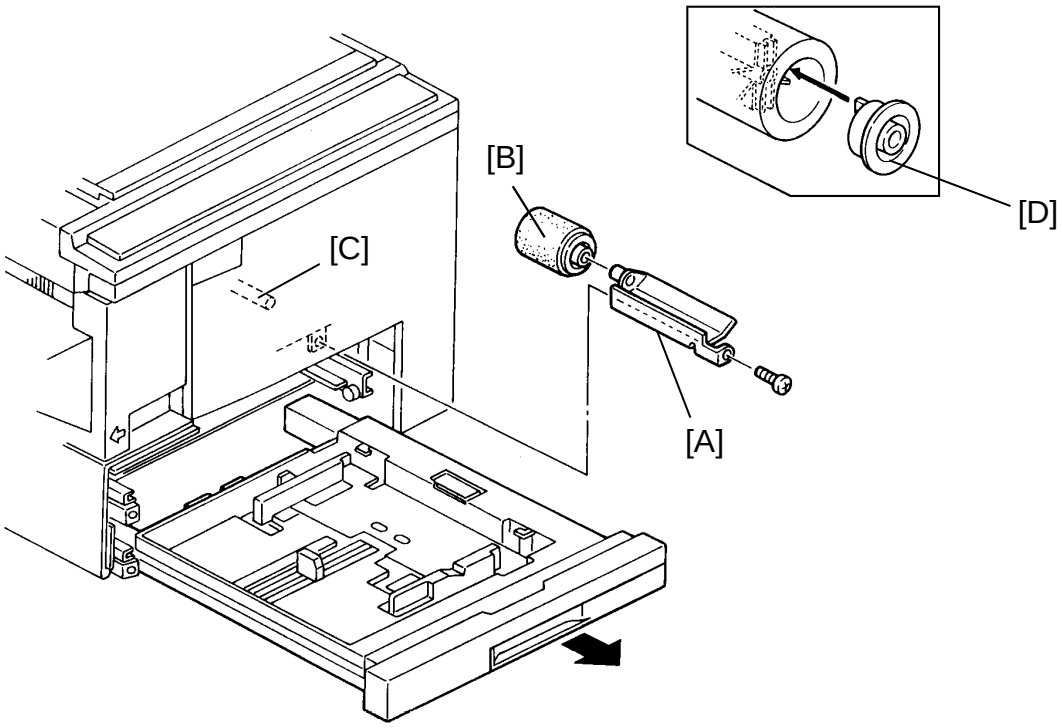

1. Remove the paper tray (see Paper Tray Removal).
2. Remove the feed roller guide [A] (1 screw).
3. Remove the feed roller assembly [B] from the shaft [C].
4. Replace the feed roller hub [D] from the old to the new feed roller.

   NOTE: When replacing the feed roller hub, make sure that the projections of the hub engage with the grooves of the feed roller.
5. Reassemble the copier.

(2) Friction Pad Replacement

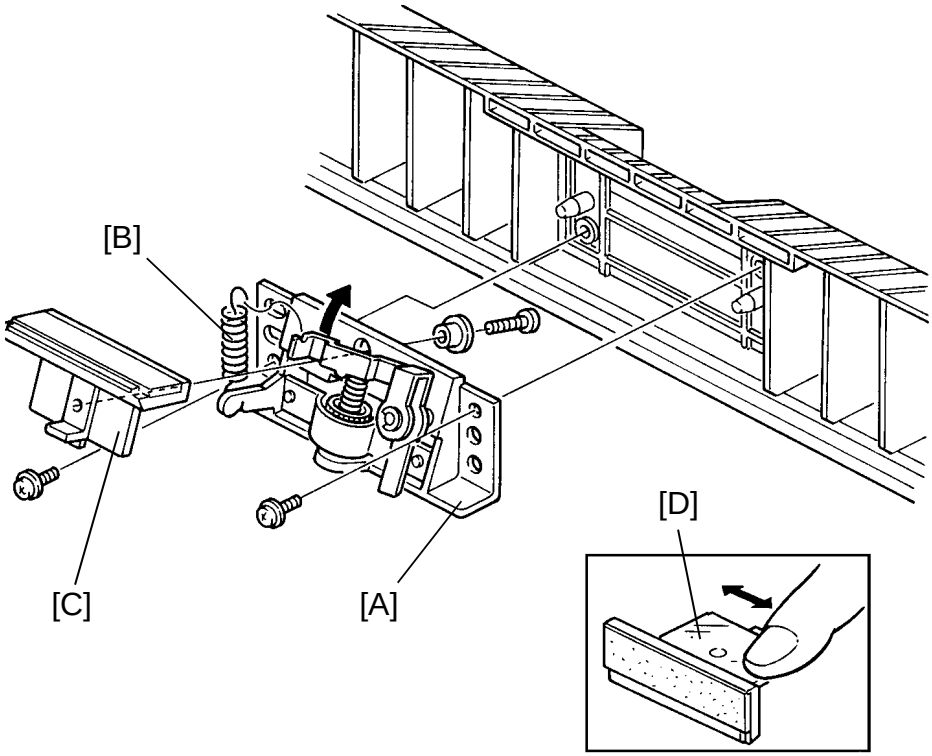

1. Pull out the paper tray.
2. Remove the friction pad holder mounting bracket [A] from the paper tray (2 screws with washers).
3. Unhook the spring [B] from the pressure release lever.
4. Remove the friction pad assembly [C] from the mounting bracket (1 screw and 1 swivel bushing).
5. Lubricate the sliding surface [D] of the new friction pad assembly slightly with "Albania 2" grease.
6. Install the new friction pad assembly on the mounting bracket and reassemble the paper tray.

NOTE: If the friction pad assembly is replaced for several paper trays at the same time, make sure that the friction pad holder mounting bracket is placed back to the original paper tray.

To identify the original position, the mounting bracket and the paper tray have the identical decals such as "A", "B", ...

5.2.2 FRR-Feed System (Manual Feed/Large Capacity Tray)

(1) Pick-up, Paper Feed, and Separation Rollers Replacement

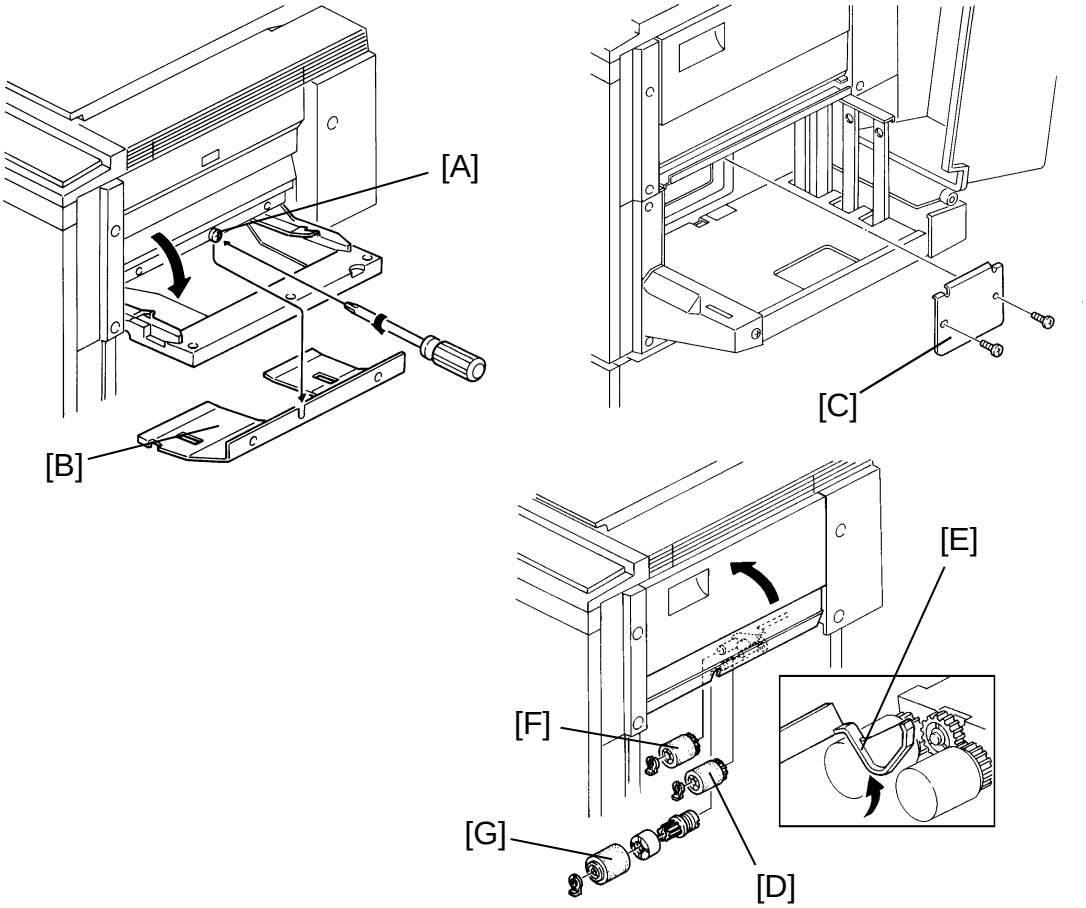

1. Open the by-pass feed table.
2. Loosen the screw [A] and remove the by-pass feed guide plate [B] while lifting the by-pass feed table a little.
3. Close the by-pass feed table.
4. Non-LCT machine:
   Remove the right lower cover (4 screws).
   LCT machine:
   Lower the LCT bottom plate and remove the paper stack.
   Open the LCT top cover and remove the LCT cover plate [C](2 screws).
5. Remove the pick-up roller [D] (1 snap ring).
6. While lifting up the paper end feeler [E], remove the paper feed roller [F] (1 snap ring).
7. Remove the separation roller [G] (1 snap ring).

(2) Separation Clutch Lubrication

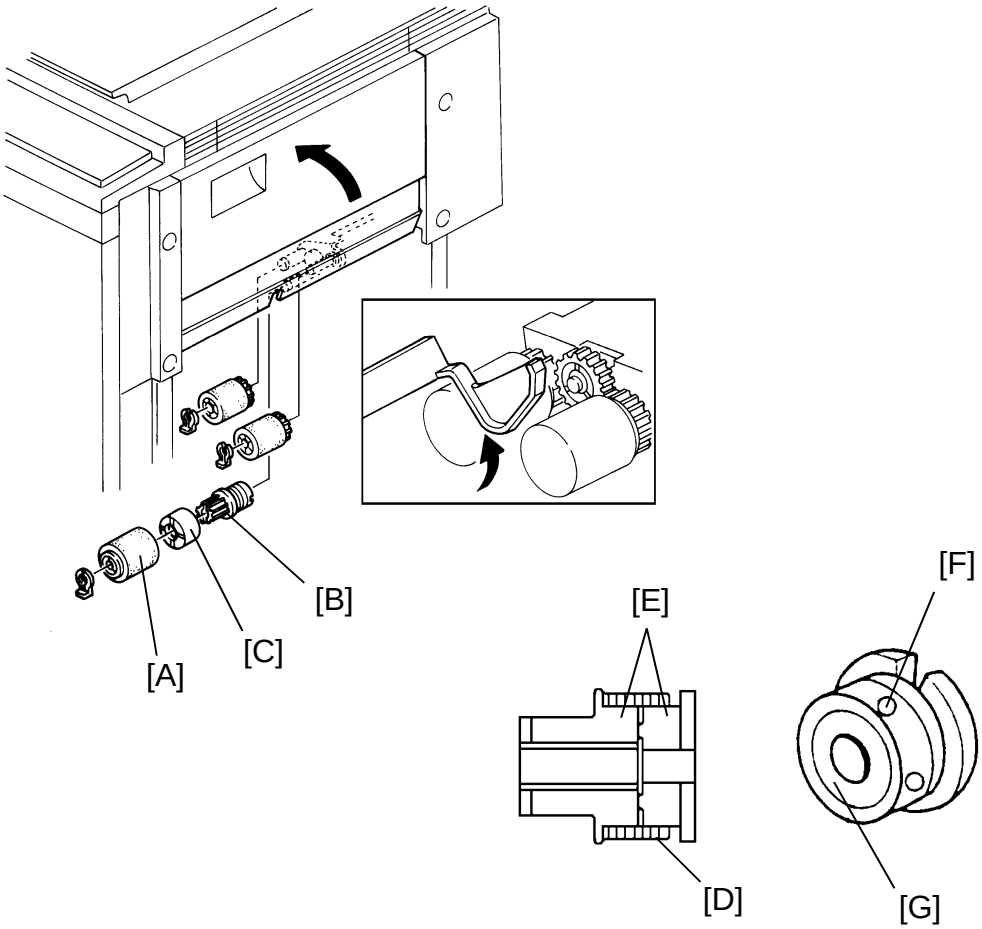

1. Remove the separation roller [A] (see Separation Roller Replacement).
2. Slide the slip clutch [B] with the clutch cover [C] off the shaft.
3. Separate the slip clutch into the three components.
4. Clean the clutch spring [D] and the clutch hubs [E].
5. Put Mobil Temp. 78 in the three grease holes [F] of the drive hub [G] and the inner surface of the spring.

5.3 BY-PASS FEED TABLE REMOVAL

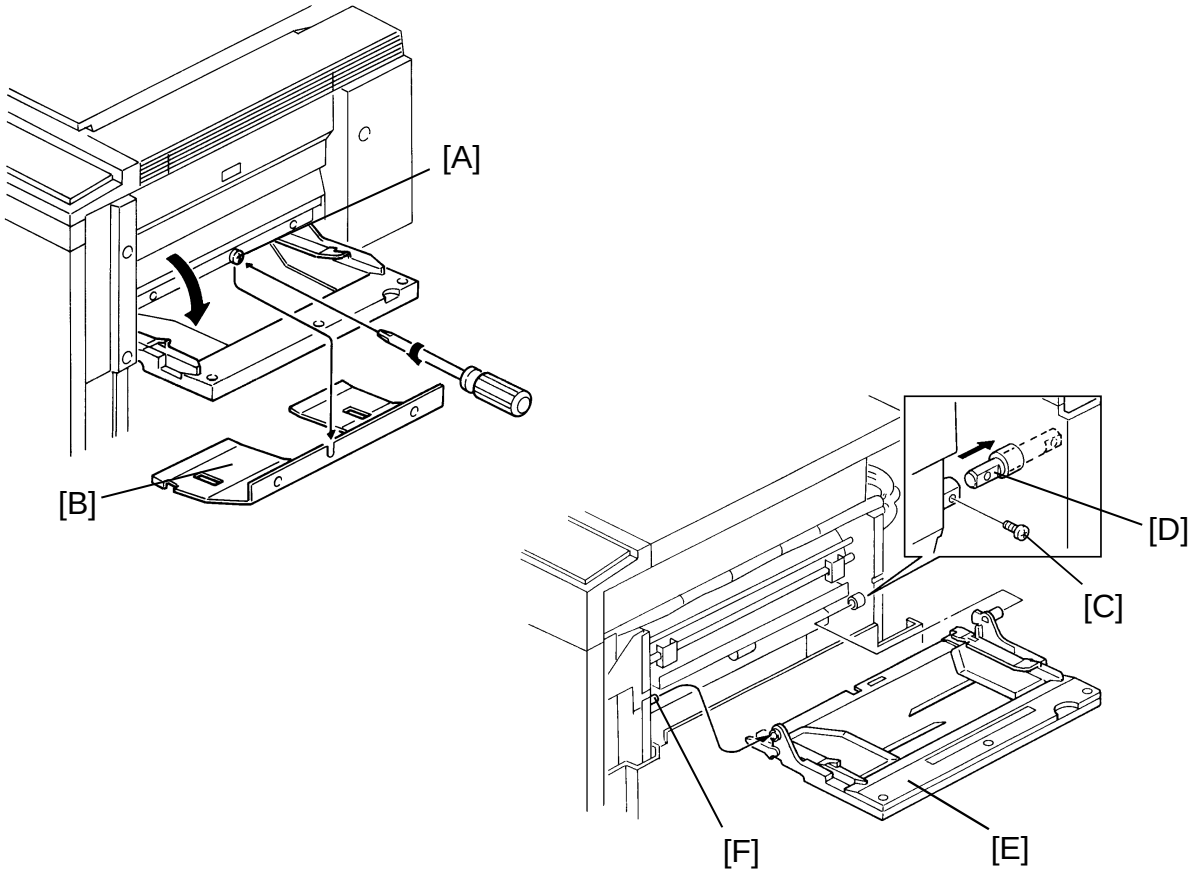

1. Open the by-pass feed table.
2. Loosen the screw [A] and remove the by-pass feed guide plate [B] while lifting the by-pass feed table a little.
3. Remove the right upper cover and the rear cover.
4. Remove the fixing screw [C] for the by-pass feed rear support pin [D].
5. While sliding the by-pass feed rear support pin to the rear, slide the by-pass feed table [E] off the by-pass feed front support pin [F].

5.4 PAPER FEED CLUTCHES REPLACEMENT

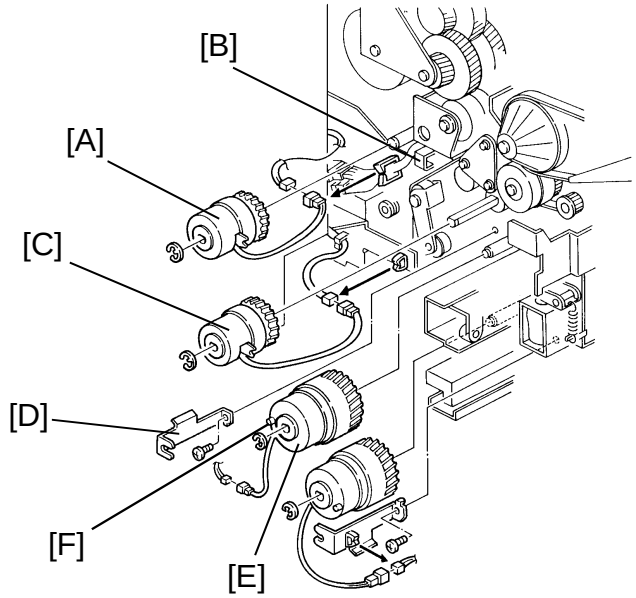

< Common Procedure>

1. Turn off the main switch and unplug the power cord.
2. Remove the rear cover.
3. Swing out the main control board assembly (1 screw).

(1) By-pass Feed Clutch

1. Remove the by-pass feed clutch [A](1 E-ring, 1 connector, and 1 wire saddle).

NOTE: When reinstalling the clutch, make sure that the clutch stopper groove engages with the stopper bracket [B].

(2) Relay Feed Clutch

1. Remove the relay feed clutch [C] (1 E-ring, 1 connector, and 1 wire saddle).

NOTE: When reinstalling the clutch, make sure that the clutch stopper groove engages with the stopper bracket [D].

(3) Upper Paper Feed Clutch

1. Remove the stopper bracket [D] (1 screw).
2. Remove the upper paper feed clutch [E] (1 E-ring, 1 connector, and 1 wire saddle).

NOTE: When reinstalling the clutch, make sure that the clutch stopper pin [F] engages with the groove of the stopper bracket.

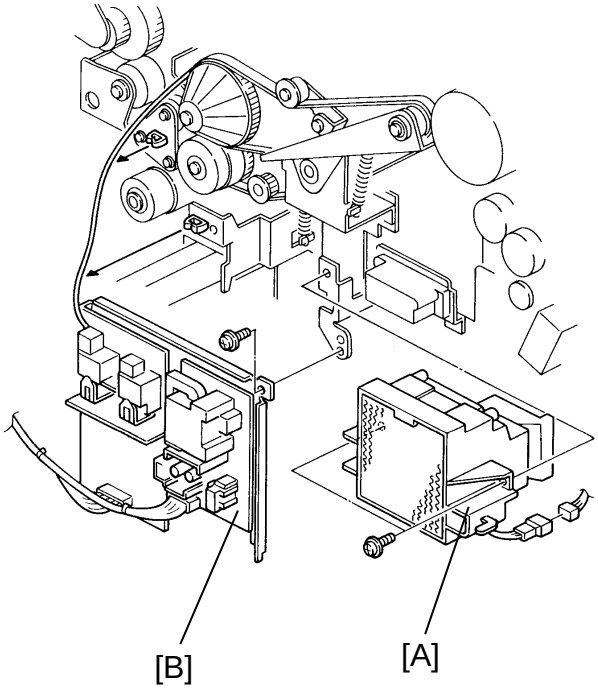

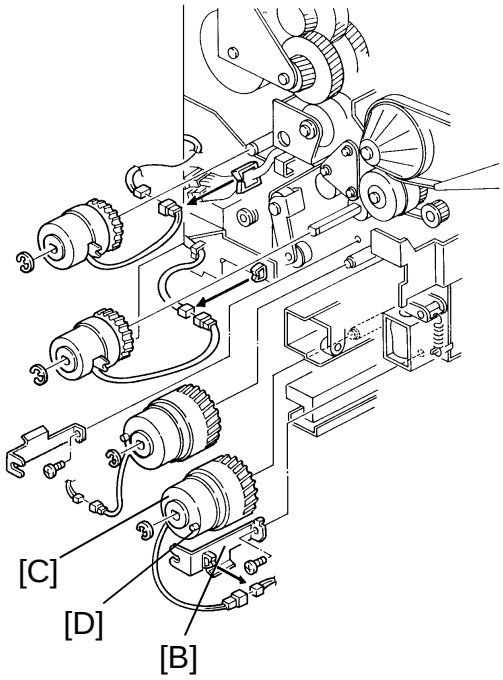

(4) Lower Paper Feed Clutch

1. Take the high voltage cables off the hooks on the exhaust blower housing.
2. Remove the exhaust blower assembly [A] (2 screws and 1 connector).
3. Move the high voltage supply board assembly [B] from the copier base plate (1 screw, 2 wire saddles for bias cable).
4. Remove the stopper bracket [B] (1 screw).
5. Remove the lower paper feed clutch [C] (1 E-ring, 1 connector, 1 wire saddle).

NOTE: When reinstalling the clutch, make sure that the clutch stopper pin [D] engages with the groove of the stopper bracket.

5.5 REGISTRATION CLUTCH REPLACEMENT

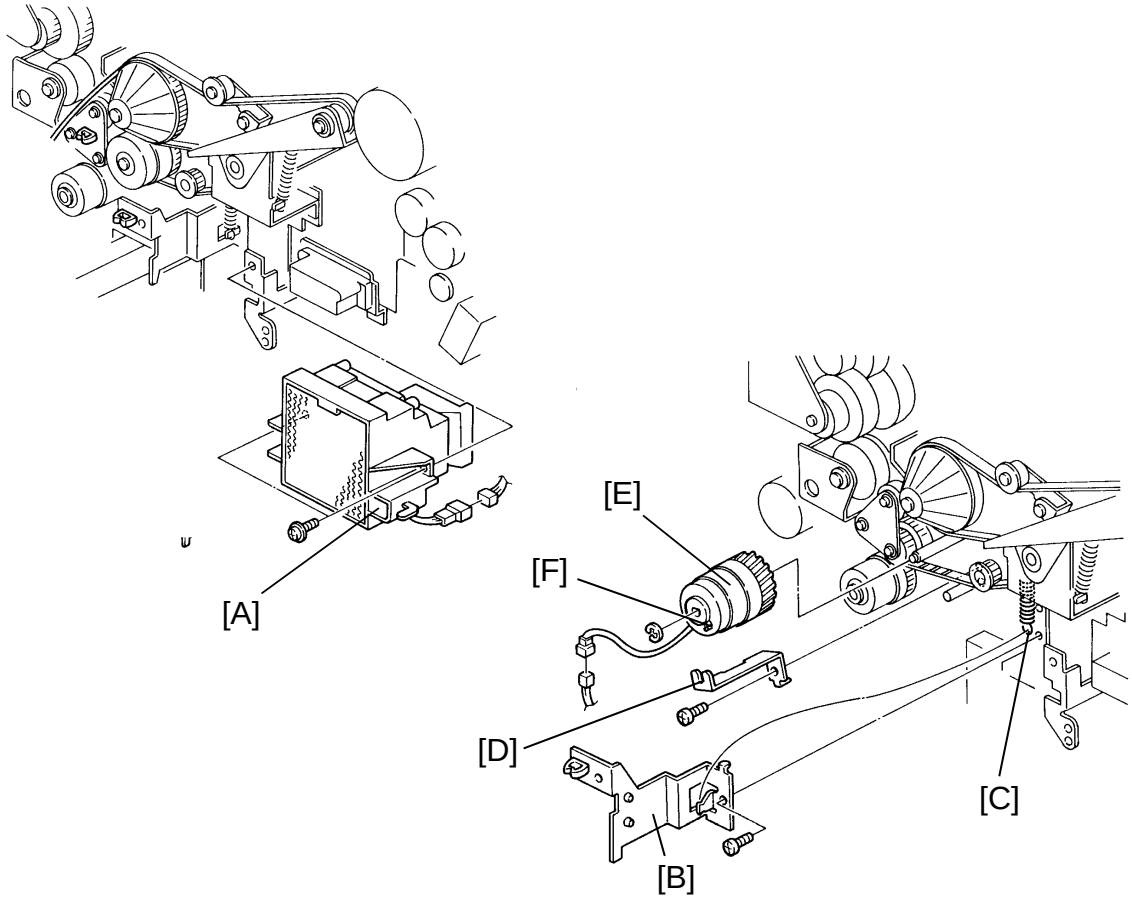

1. Turn off the main switch and unplug the power cord.
2. Remove the rear cover.
3. Take the high voltage cables off the hooks on the exhaust blower housing.
4. Remove the exhaust blower assembly [A] (2 screws and 1 connector).
5. Remove the exhaust blower bracket [B] (1 spring [C] and 1 screw).
6. Remove the stopper bracket [D] (1 screw).
7. Remove the registration clutch [E] (1 E-ring, 1 connector, 1 wire saddle).

   NOTE: When reinstalling the clutch, make sure that the clutch stopper pin [F] engages with the groove of the stopper bracket.

5.6 TRAY LIFT MOTOR/TRAY REPLACEMENT

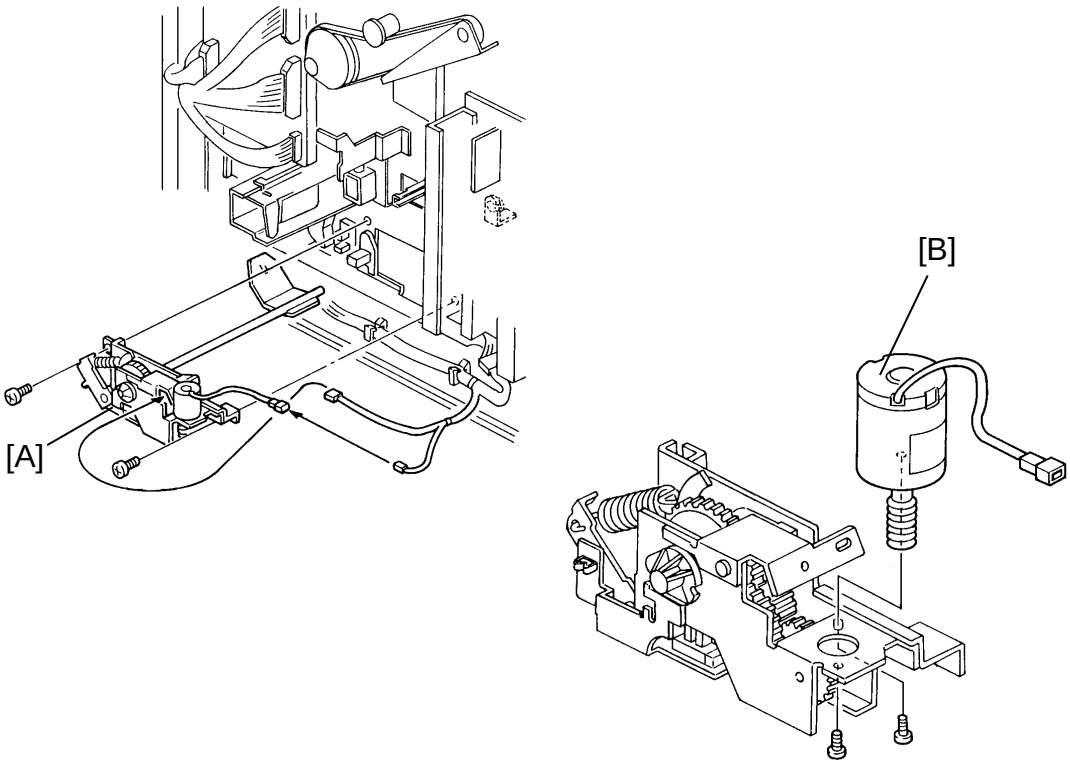

<Lower paper tray for example>

1. Turn off the main switch and unplug the power cord.
2. Remove the lower tray from the copier. (see paper tray removal)
3. Remove the rear cover and swing out the main control board and the dc power supply board assemblies (1 screw each).
4. Take the high voltage cables off the hooks on the exhaust blower housing.
5. Remove the exhaust blower assembly (2 screws and 1 connector).
6. Remove the high voltage supply board assembly from the copier base plate (1 screw, 3 wire saddles, 6 connectors).
7. Pull out the paper lift motor assembly [A] from the copier (2 screws, 3 connectors, 3 wire saddles).
8. Remove the tray lift motor [B] (2 screws).

5.7 LCT DRIVE BELT REPLACEMENT

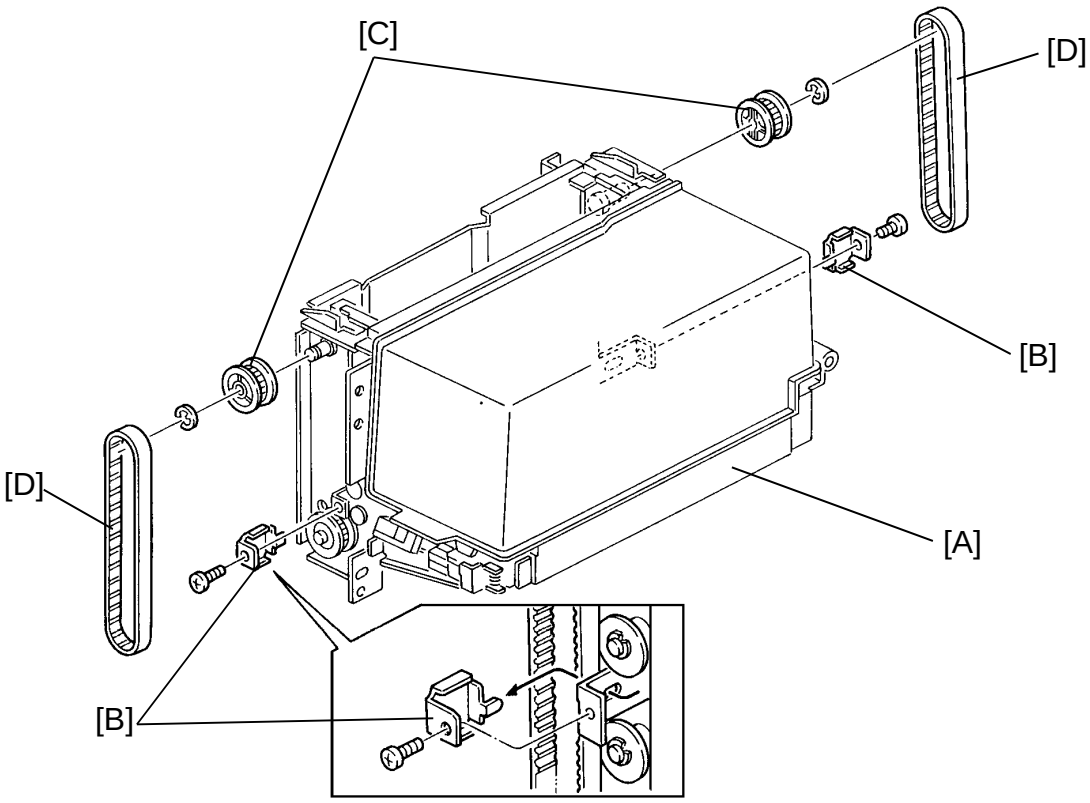

1. Remove the right upper cover.
2. Remove the LCT front and rear covers (1 screw each).
3. Remove the right front lower and right rear lower covers (2 screws each).
4. Remove the LCT [A] from the copier (4 screws and 3 connectors).
5. Remove the belt stoppers [B] (1 screw).
6. Remove the pulley [C] (1 retaining ring).
7. Replace the LCT drive belt [].

5.8 LCT LIFT MOTOR REPLACEMENT

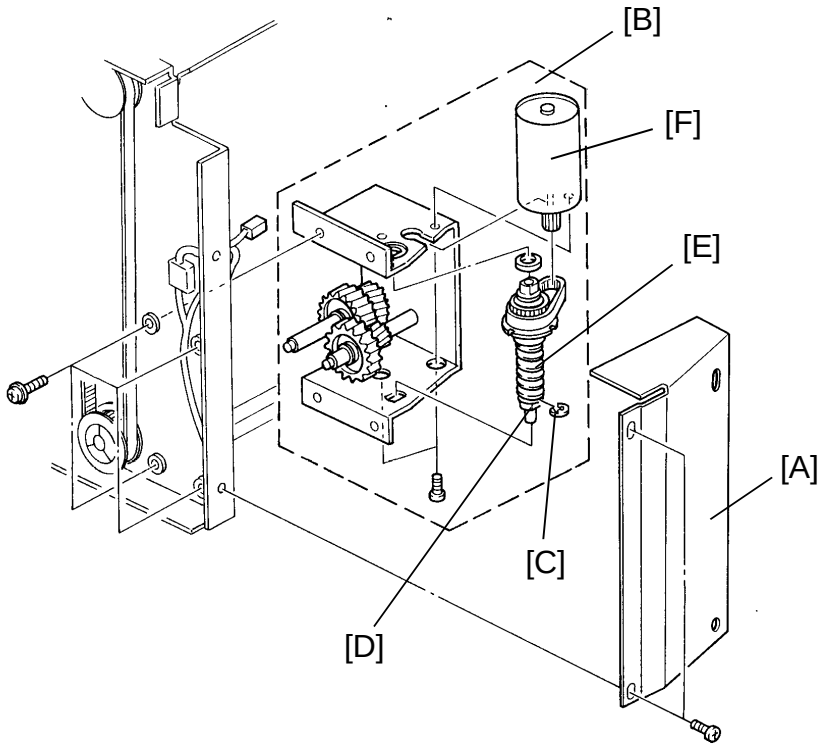

1. Remove the LCT from the copier (refer to LCT Drive Belt Replacement).
2. Remove the motor cover plate [A] (2 screws).
3. Remove the LCT lift motor assembly [B] (4 screws, 4 rubber rings, 1 connector).
4. Remove the E-ring [C] from the worm gear shaft.
5. Slide the bushing [D] inwards and remove the worm gear assembly [E].
6. Remove the LCT lift motor [F] (2 screws).

6. AROUND THE DRUM

6.1 DRUM UNIT REMOVAL

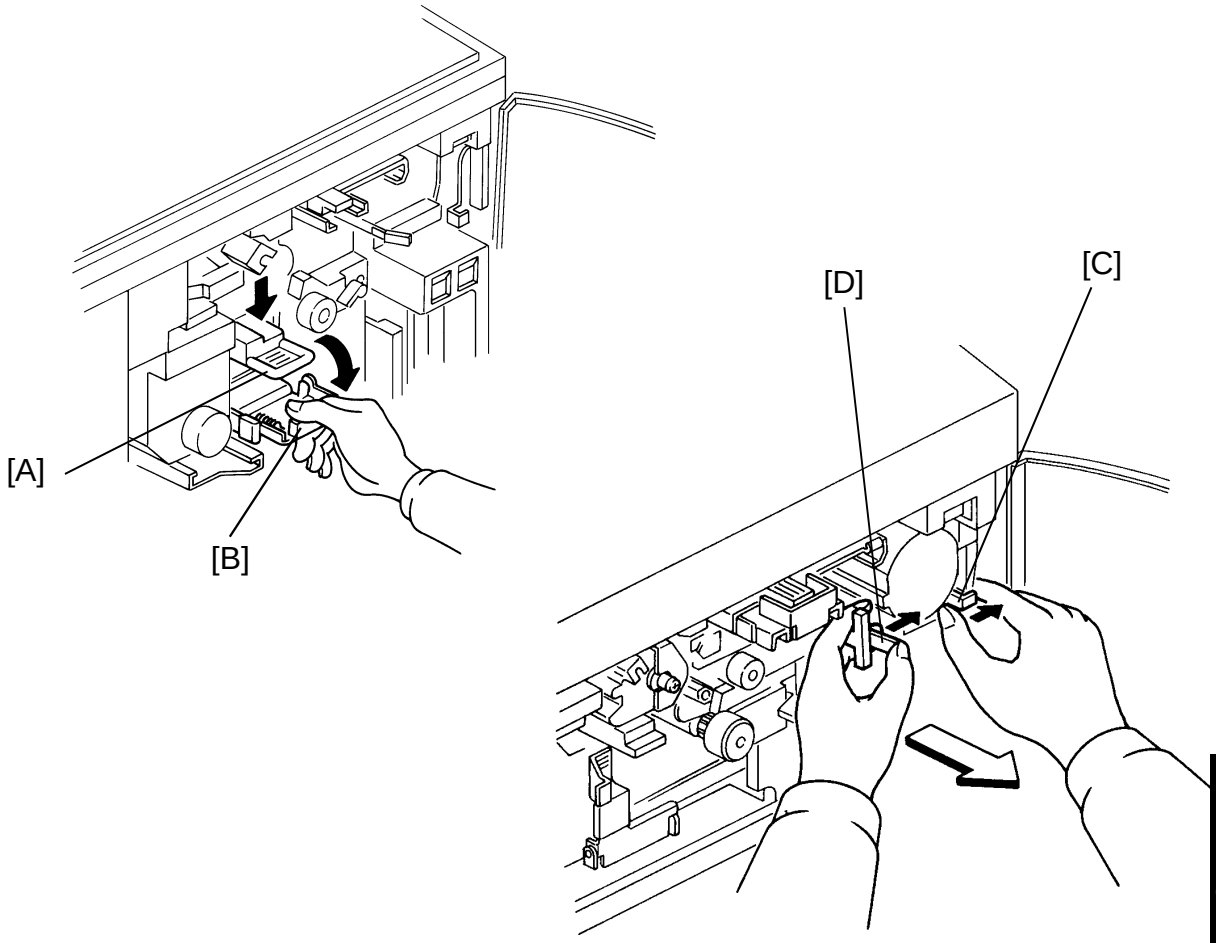

1. Open the front door and lower the transfer & separation corona unit [A] by pulling down the release lever [B].
2. Push the development unit lock lever [C] to the right (to the lock position).
3. Move the development release lever [D] to the right and pull the black development unit half way out. Holding the toner supply unit with your right hand and the bottom of the development unit with your left hand, pull the unit all the way out. Place the unit on a clean sheet of paper.

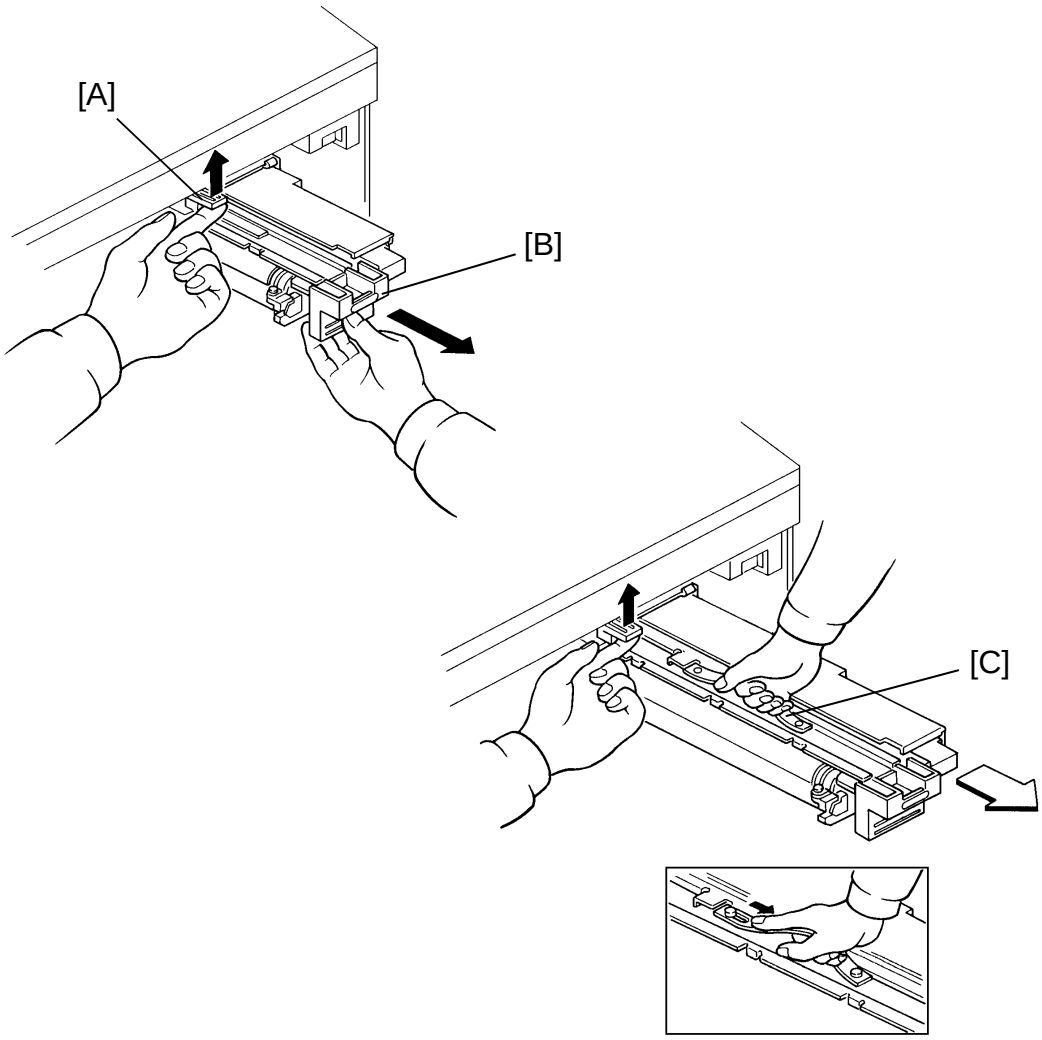

4. If the color development unit (option) is installed, continue the following:
   (1) While lifting the color development unit lock lever [A], pull the color development unit [B] until it locks.
   (2) Hold the belt [C] of the unit and pull out the unit while lifting the lock lever again.
   (3) Place the unit on a clean sheet of paper.

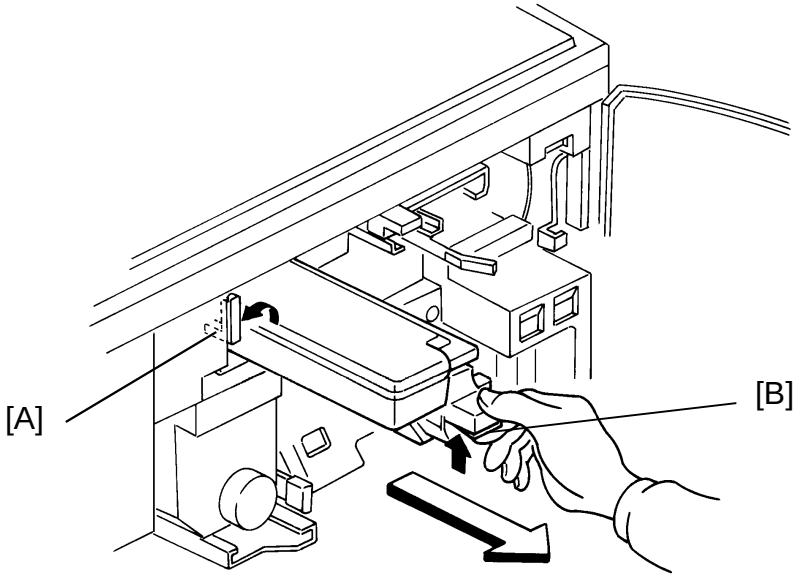

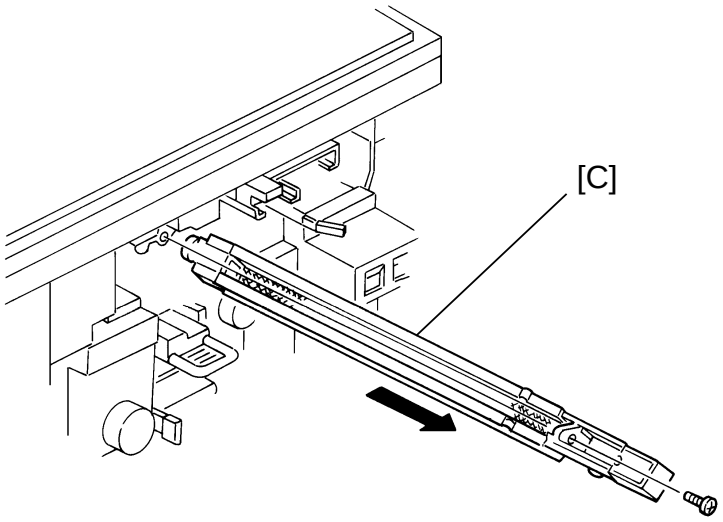

5. Turn the cleaning unit release lever [A] counterclockwise. While holding up the cleaning blade release lever [B], remove the cleaning unit. Place the unit on a clean sheet of paper.
6. Remove the charge corona unit [C] together with the wire cleaner (1 screw).

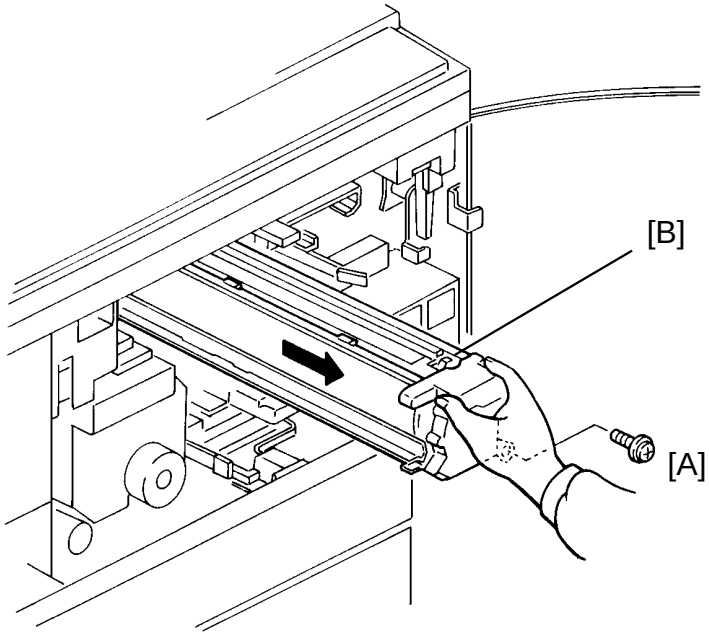

7. Remove the fixing screw [A] securing the drum stay and pull out the drum unit [B] gently along the rail.
8. Place the drum unit on a clean sheet of paper.

6.2 DRUM REPLACEMENT

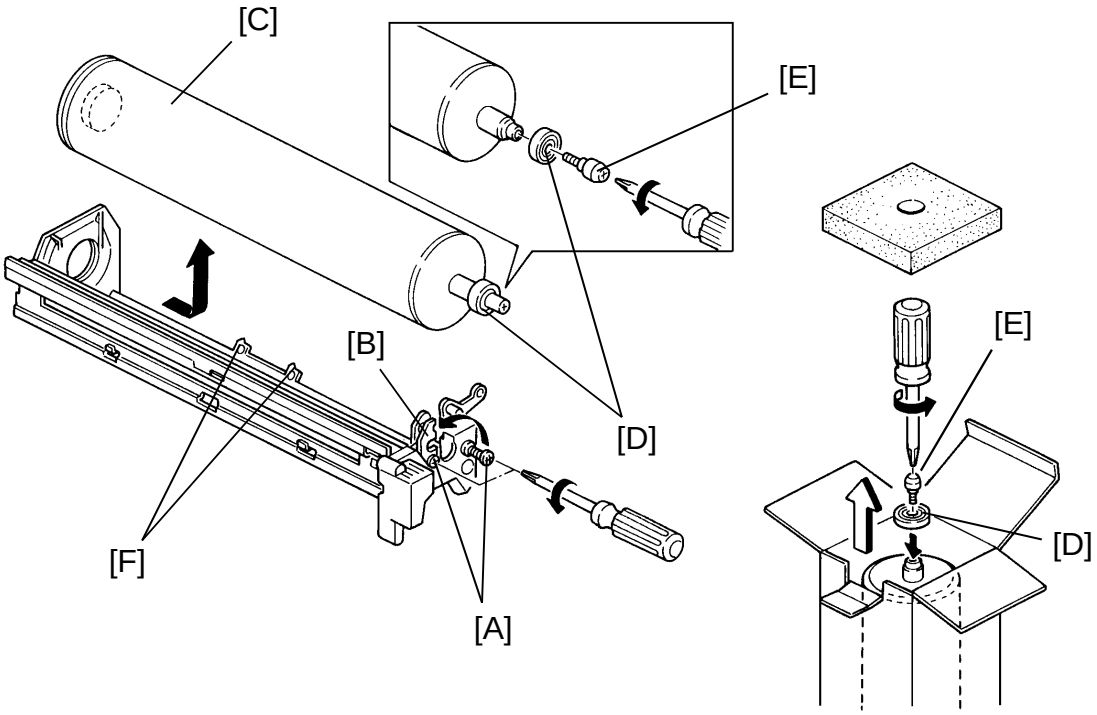

1. Pull out the drum unit from the copier and place it with the left side down on a clean sheet of paper (see Drum Unit Removal).
2. Loosen the two screws [A] securing the bearing holder [B] and rotate the holder as shown.
3. While holding the front side of the drum unit, push the rear end of the drum [C] towards the front to loosen the bearing [D].
4. While holding the front and rear ends of the drum, remove the drum from the drum unit by lifting it up.
5. Remove the bearing and the bearing screw [E] from the old drum and install them on a new drum.

   NOTE: Keep the drum protective sheet on the new drum.

6. Clean the ID sensor and the V sensor with a blower brush (see ID sensor Cleaning and Replacement, V sensor cleaning and Replacement).
7. Clean the toner shield glass and the green filter (see Toner Shield Glass Cleaning and Replacement).

8. Install the new drum in the drum unit, then position and secure the bearing holder.

   NOTE: a) When setting the drum in the unit, be careful not to strike it against the unit frame or the pick-off pawls [F].

   b) Do not bend the bearing holder. Make sure that the bearing holder is in contact with the bearing, as they are both used to ground the drum. If they are not in contact, solid black copies may appear.

9. Install the drum unit in the copier and remove the drum protective sheet.

   NOTE: Be sure that the drum unit is secured with the screw.

10. Install the other remaining units in the copier.

11. Clean the optics and plug in the copier.

12. While pressing both "1" and "3" of the number keys, turn on the main switch to enter the SP mode.

    NOTE: Release the number keys after confirming that the call service indicator and the copy counter number "0" are blinking.

13. Enter "66" using the number keys and press the enter key. Press "1", then the enter key. (The copier performs the drum initial setting and the beeper sounds 5 times.)

14. Enter "54" using the number keys and press the enter key, then the start key. (The copier performs ID/V sensor adjustments and the beeper sounds 2 times after 4 seconds.)

15. Enter "48" using the number keys and then press the enter key twice.

16. Make copies from the test chart at the ID level #4 and adjust the exposure lamp voltage if necessary (see Light Intensity Adjustment).

17. Turn the main switch off and on.

6.3 PICK-OFF PAWL REPLACEMENT

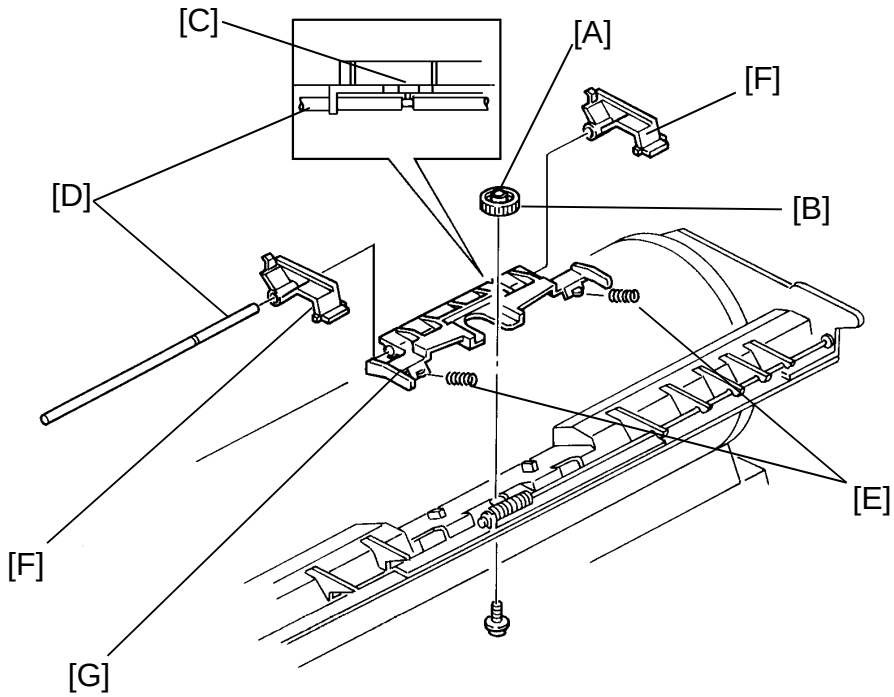

CAUTION: Be careful not to injure your hands with the pick-off pawls as the top of them is very sharp.

1. Remove the drum from the drum unit (see Drum Replacement) and keep the drum wrapped in the protective sheet or a clean sheet of paper.
2. Remove the cam gear shaft [A] (1 screw) and the cam gear [B].
3. While turning the pick-off pawl assembly towards the drum side, slide it to the rear. Lifting the front side of the assembly, remove it from the drum unit.
4. While releasing the shaft stopper [C], pull out the pick-off pawl shaft [D] from the assembly.

   NOTE: Be careful not to lose the pick-off pawl springs [E].
5. Install the new pick-off pawls [F] on the pick-off pawl holder and set the pick-off pawl springs.

   NOTE: a) Make sure that the pick-off pawls are positioned correctly on the pick-off pawl holder [G].

   b) Make sure that the pick-off pawl shaft is locked by the shaft stopper.
6. Reassemble the drum unit.

6.4 ID SENSOR CLEANING AND REPLACEMENT

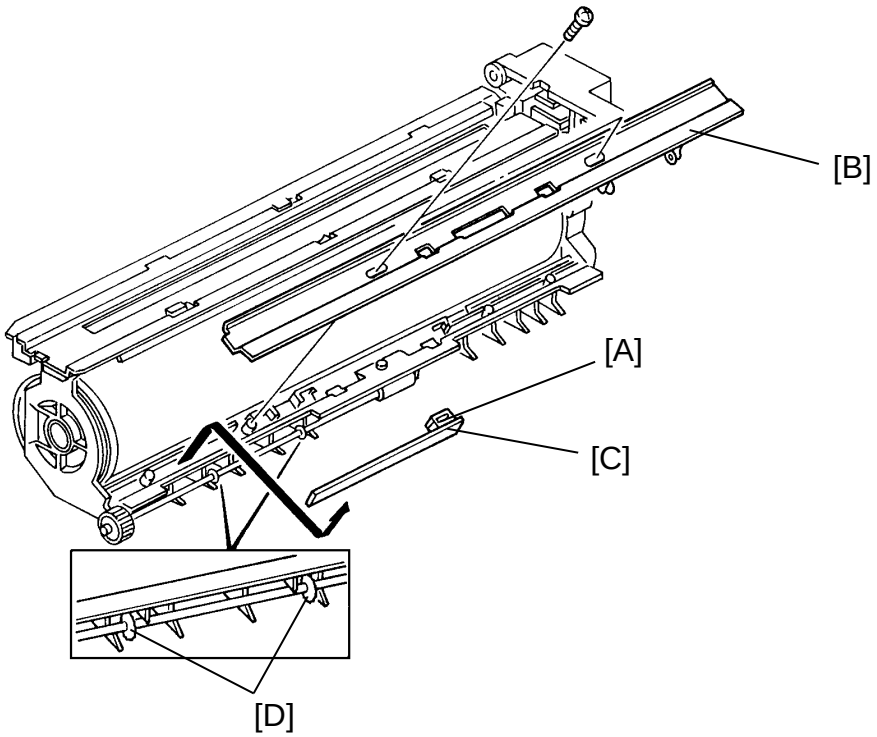

1. Remove the drum from the drum unit (see Drum Replacement) and keep the drum wrapped in the protective sheet or a clean sheet of paper.

[Cleaning]

2. Clean the ID sensor [A] with a blower brush from the drum side.

[Replacement]

2. Remove the ID/V sensor bracket [B] from the drum unit (2 screws).
3. Remove the ID sensor board [C] from the drum unit by simply lifting it up.
4. Reassemble the drum unit and install all the removed units in the copier.

   NOTE: When reinstalling the ID/V sensor bracket, make sure that the spurs [D] are correctly positioned as shown.

5. Perform the ID/V sensor adjustment (see ID Sensor and V Sensor Adjustment SP54).

6.5 V SENSOR CLEANING AND REPLACEMENT

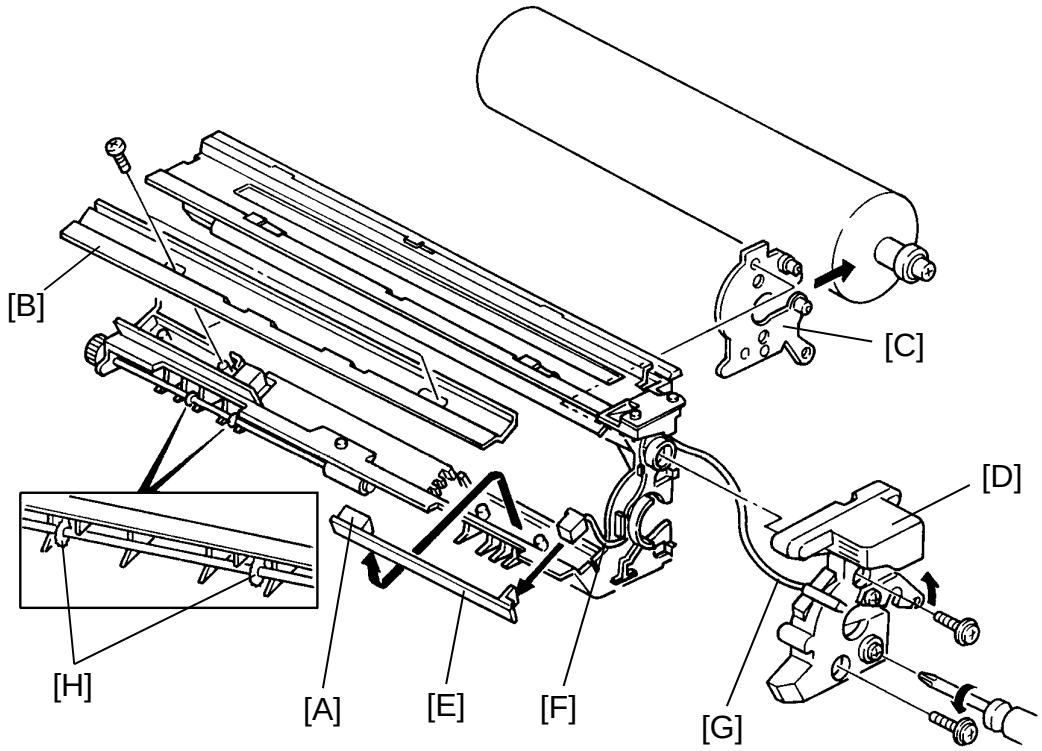

1. Remove the drum from the drum unit (see Drum Replacement) and keep the drum wrapped in the protective sheet or a clean sheet of paper.

[Cleaning]

2. Clean the V sensor [A] with a blower brush from the drum side.

[Replacement]

2. Remove the ID/V sensor bracket [B] from the drum unit (2 screws).
3. Remove the drum stay [C] (2 long screws) from the drum unit.
4. Remove the front drum cover [D] from the unit.
5. Remove the V sensor board [E] from the drum unit (1 connector).
6. Couple the V sensor connector with a new V sensor board and install the board on the drum unit.

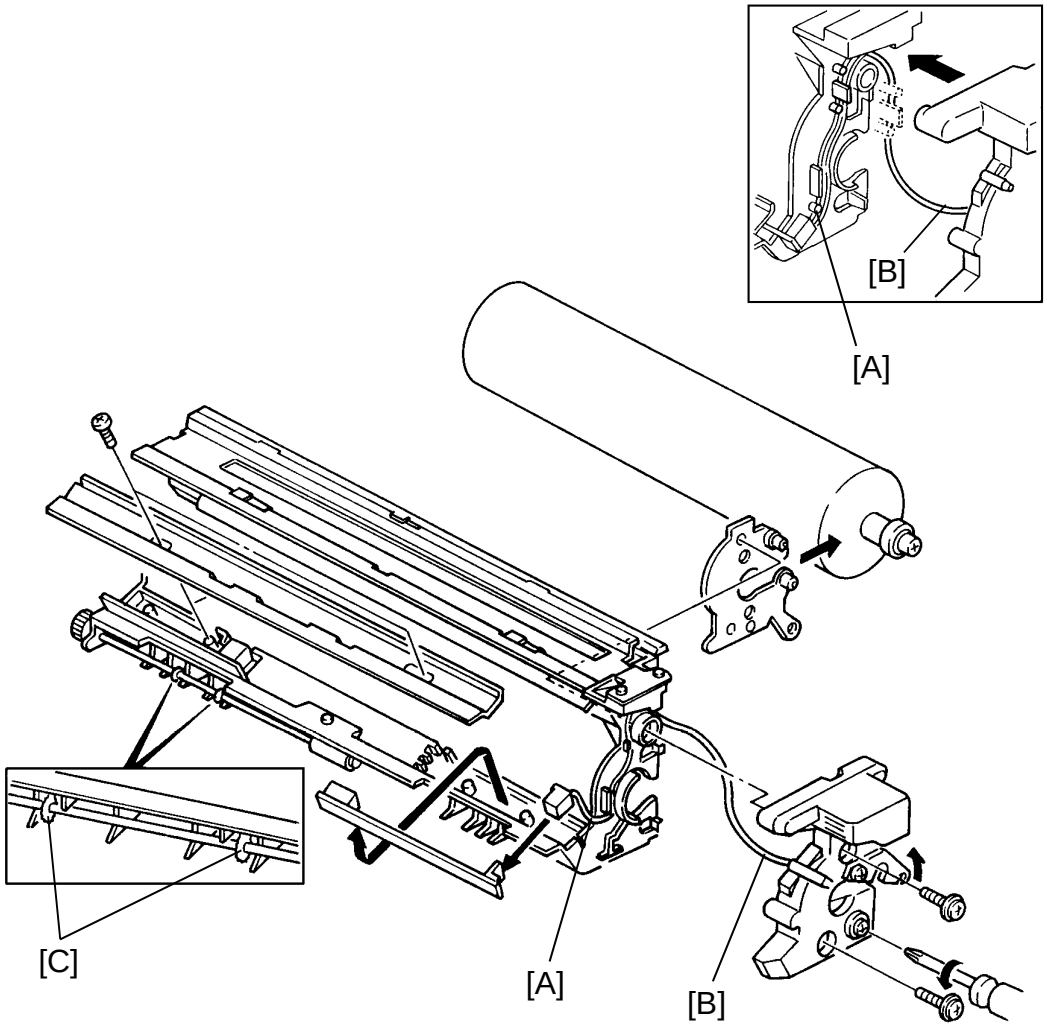

7. Run the V sensor harness [A] and the drum grounding wire [B] on the drum unit frame as shown and install the front drum cover.

   NOTE: Make sure that the harnesses are correctly positioned and that no wire is nicked or pinched by the drum front cover.

8. Reassemble the drum unit and install all the removed units in the copier.

   NOTE: When reinstalling the ID/V sensor bracket, make sure that the spurs [C] are correctly positioned as shown.

9. Perform the ID/V sensor adjustment (see ID Sensor and V Sensor Adjustment SP54).

6.6 TONER SHIELD GLASS AND GREEN FILTER CLEANING

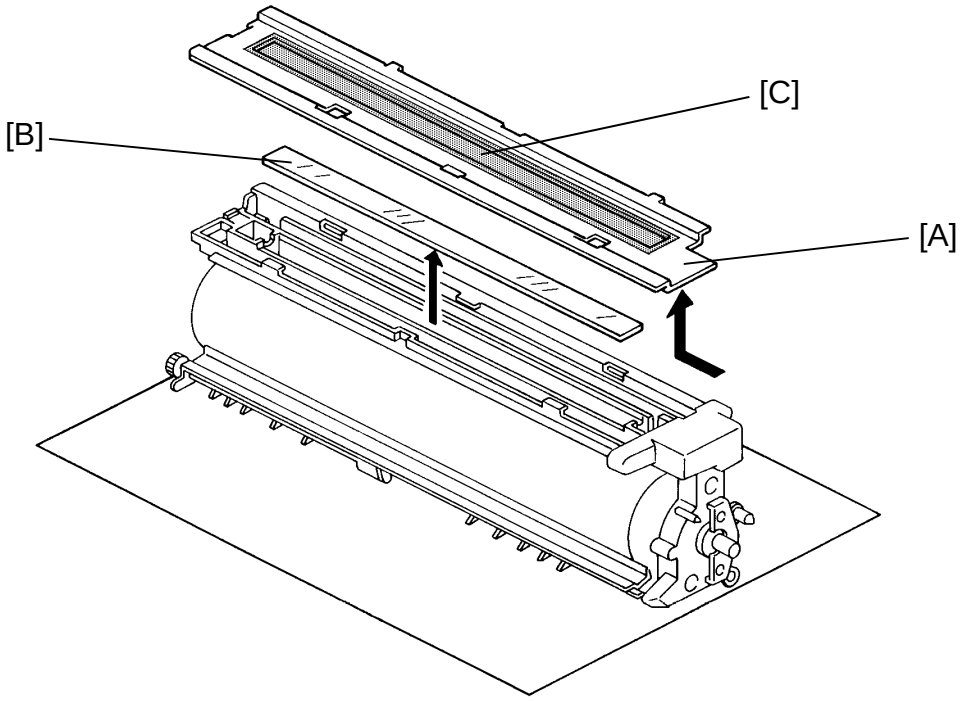

1. Remove the drum unit from the copier (see Drum Unit Removal) and place it on a clean sheet of paper with the drum unit top plate up [A].
2. While holding the front side of the drum unit, slide the drum unit top plate to the rear and remove.
3. While holding both the front and rear ends of the toner shield glass [B] with your fingers, lift the glass up.
4. Clean the toner shield glass and the green filter [C] on the drum unit top plate with a dry cloth.

   NOTE: a) After cleaning the green filter, discharge static electricity on the filter by touching it with your finger.

   b) Do not clean the green filter with water or any other cleaning solution as the filter has an antistatic coating.
5. Reassemble the drum unit.

   NOTE: When reinstalling the drum unit top plate, be careful not to nick or pinch the erase lamp unit harness.

6.7 ERASE LAMP UNIT REPLACEMENT

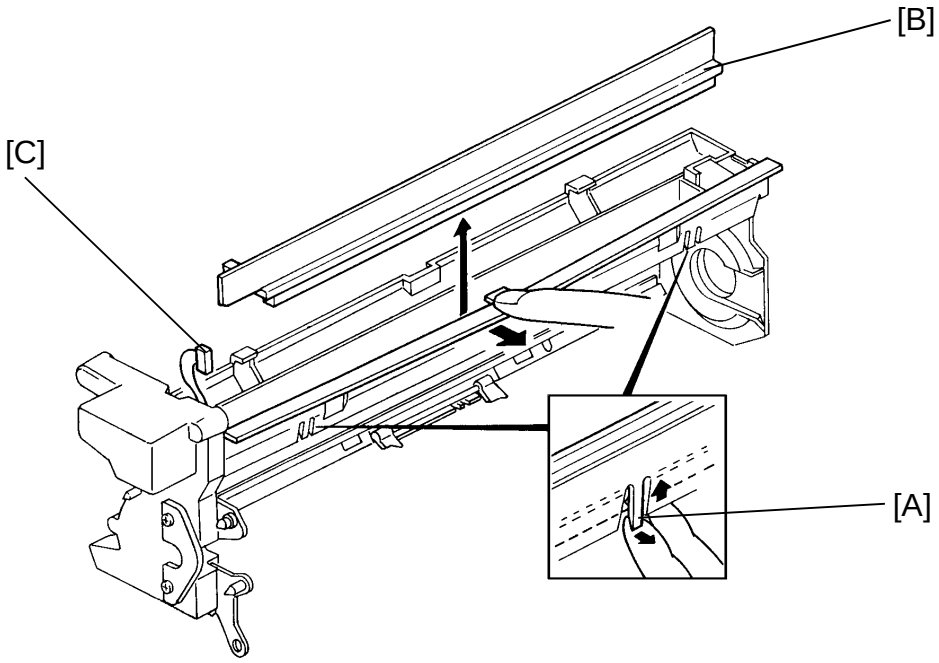

1. Remove the drum and the toner shield glass from the drum unit (see Drum Replacement and Toner Shield Glass Cleaning).
2. While unhooking the positioning pawls [A], remove the erase lamp unit [B] (1 connector) as shown.
3. Couple the erase lamp connector [C] with a new erase lamp unit and install the unit in the drum unit.

   NOTE: Make sure that the erase lamp unit is hooked correctly with positioning pawls and the harness is set in position.
4. Reassemble the drum unit.

   NOTE: When reinstalling the drum unit top plate, be careful not to nick or pinch the erase lamp unit harness.
5. If you have replaced the erase lamp unit with a different type (standard type and edit type), set SP84 (Editing Eraser) to correct the setting for the type of lamp installed.

6.8 PTL FILTER CLEANING AND REPLACEMENT

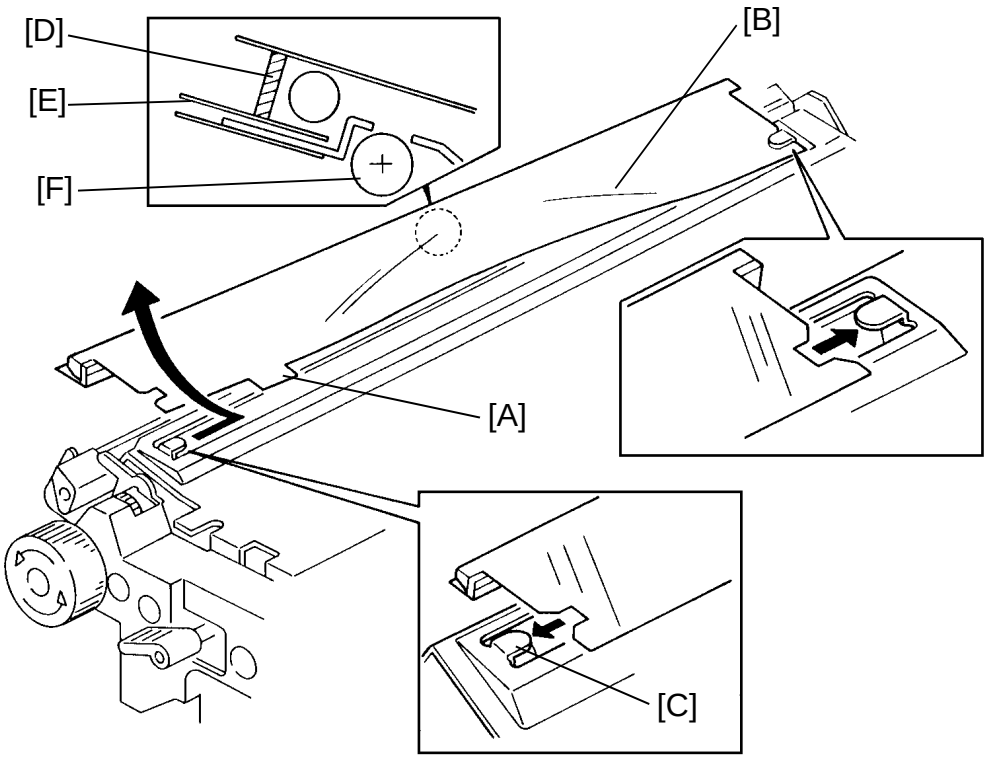

1. Lower the T&S corona unit and remove the following units from the copier: Black (and color) development unit/Cleaning unit/Charge corona unit / Drum unit
2. While holding the tab [A] of the PTL top mylar [B], bend the mylar and unhook the front side of the mylar from the hook [C], then from the rear side.
3. Remove the PTL filter assembly from the drum side.
4. Clean the PTL filter [D] with a blower brush and a dry cloth. Discharge static electricity on the filter by touching it with your finger.
5. Reinstall the PTL filter assembly in the copier.

   NOTE: a) Make sure that the PTL lower mylar [E] is positioned under the pre-transfer lamp [F].

   b) Slide the top mylar towards the front and the rear to make sure that the front and rear sides of the PTL top mylar are positioned correctly in the hooks. If the mylar edge of the tab side is wavy, the position is incorrect.

6.9 PRE-TRANSFER LAMP REPLACEMENT

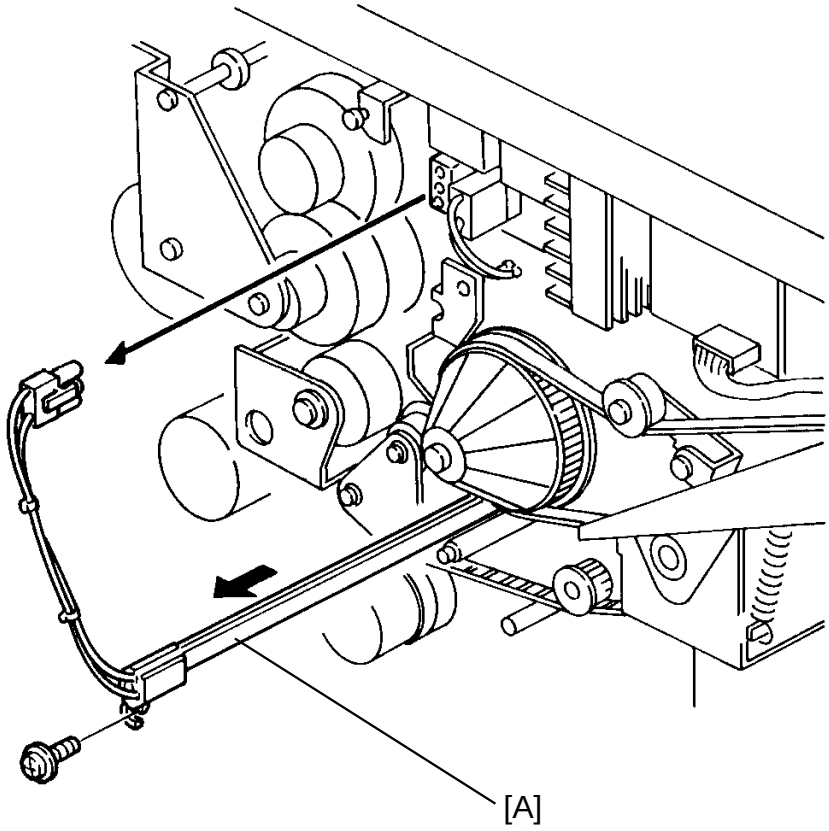

1. Remove the PTL filter assembly from the copier (see PTL Filter Cleaning And Replacement).
2. Remove the registration clutch from the copier (see Registration Clutch Replacement).
3. Slide out the pre-transfer lamp [A] from the copier (1 screw, 1 connector, and 2 wire saddles).
4. Install a new pre-transfer lamp and reassemble the copier.

6.10 QUENCHING LAMP FILTER CLEANING

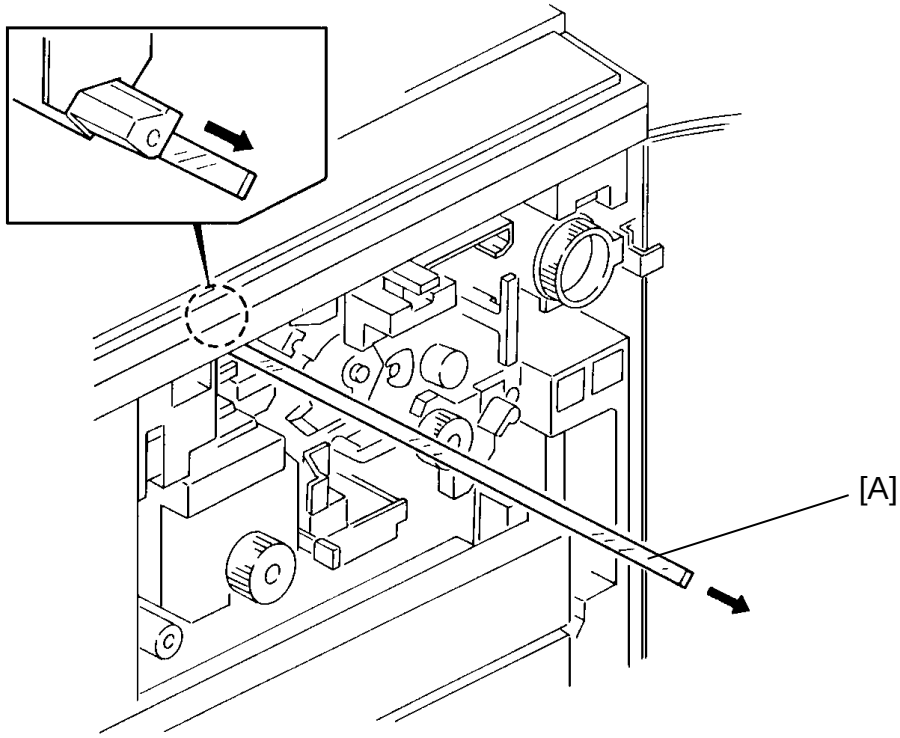

1. Open the front cover and pull out the quenching lamp filter [A].
2. Clean the filter with a dry cloth and discharge static electricity on the filter by touching it with your finger.
3. Reinstall the filter in the copier.

   NOTE: When inserting the quenching filter, be careful not to break it.

6.11 QUENCHING LAMP REPLACEMENT

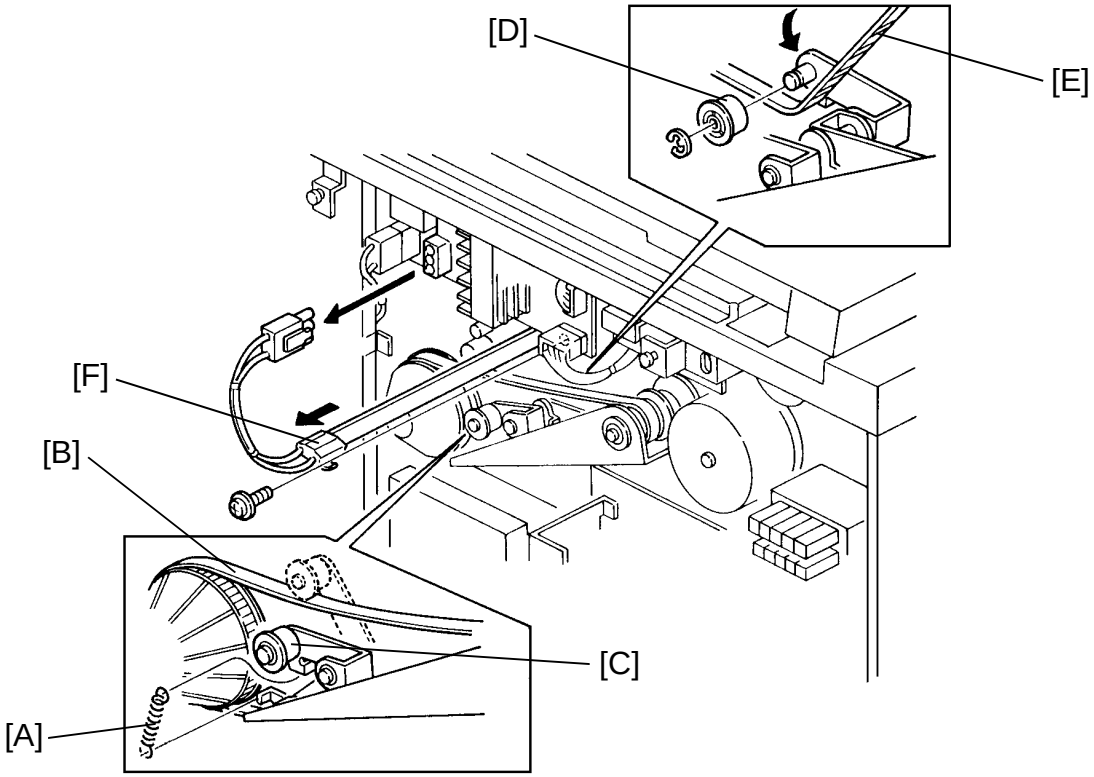

1. Remove the copier rear cover.
2. Remove the tension spring [A] of the drum drive belt [B].
3. Slip off the drum drive belt from the tension pulley [C] and lower the tension pulley.
4. Remove the tension pulley [D] (1 E-ring) for the development drive belt [E].
5. Slide out the quenching lamp [F] from the copier (1 screw and 1 connector).
6. Install a new quenching lamp and reassemble the copier.

6.12 CHARGE CORONA WIRE REPLACEMENT

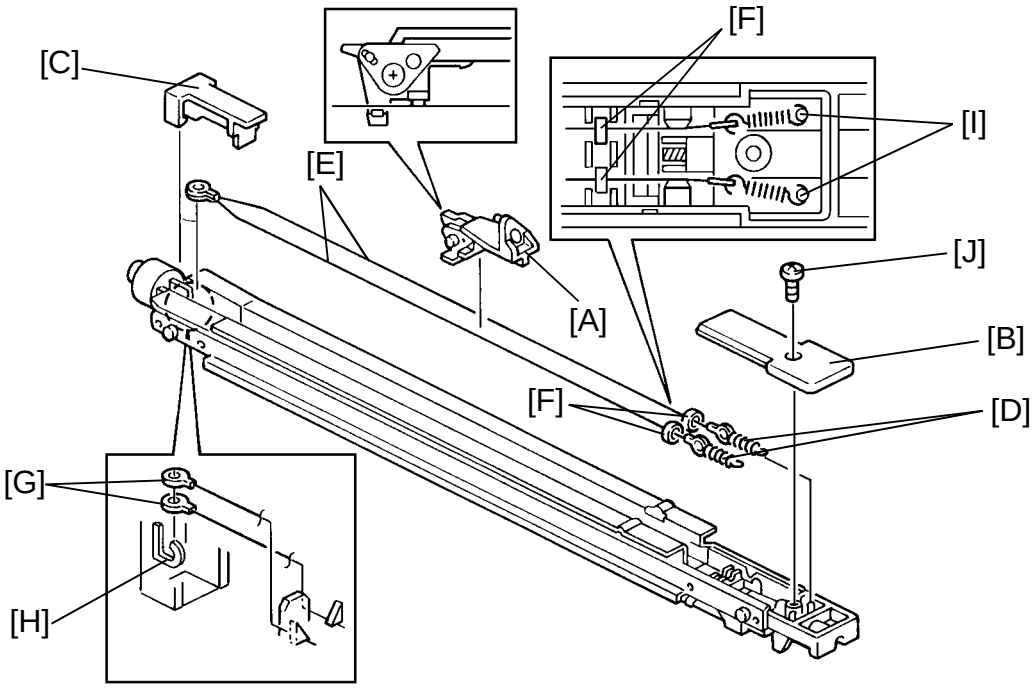

1. Remove the screw securing the charge corona wire cleaner [A] and pull out the charge corona unit with the wire cleaner.
2. Remove the wire cleaner from the charge corona unit.
3. Remove the front end block cover [B] (1 plastic screw) and the rear end block cover [C] (2 hooks).

   NOTE: When removing the rear end block cover, be careful not to break off the side hooks.
4. Unhook the corona wire tension spring [D] and remove the charge corona wire [E]. Remove both corona wires.

   NOTE: a) Be careful not to damage the corona wire tension spring.
   b) Be careful not to lose the tension springs and the damper rings [F].
5. Clean the charge corona casing and the end blocks.

   NOTE: a) Clean the casing with water first to remove NOx. Then clean it with alcohol if any toner still remains on the casing.
   b) Clean the end blocks with a blower brush to remove toner and paper dust. Then clean it with alcohol if any toner still remains on it.
   c) Do not touch the charge guide plate with bare hands, bend or dent it.

6. Install new corona wires with the damper rings on the corona unit.

NOTE: a) Set the big eyelet [G] of the corona wire in the rear hook [H], then set the front end with the tension spring. The spring should be positioned at the bottom part of the hooking pole [I].

b) Do not touch the corona wire with oily bare hands. Oil stains may cause white bands on copies.

c) Do not bend or scratch the wire to avoid any uneven charge.

d) Make sure that the damper rings are correctly positioned in the front end block as shown.

e) Make sure that the corona wires are correctly positioned in both the front and rear end blocks as shown.

f) Do not change the corona wire height by turning the wire height adjustment screw.

7. Install the front and rear end block covers and set the wire cleaner.

NOTE: a) Do not secure the plastic screw [J] for the front end block cover too tight. Otherwise, it may be damaged when removing it.

b) Make sure that the corona wires are correctly positioned between the cleaner pads.

6.13 CHARGE CORONA WIRE HEIGHT ADJUSTMENT

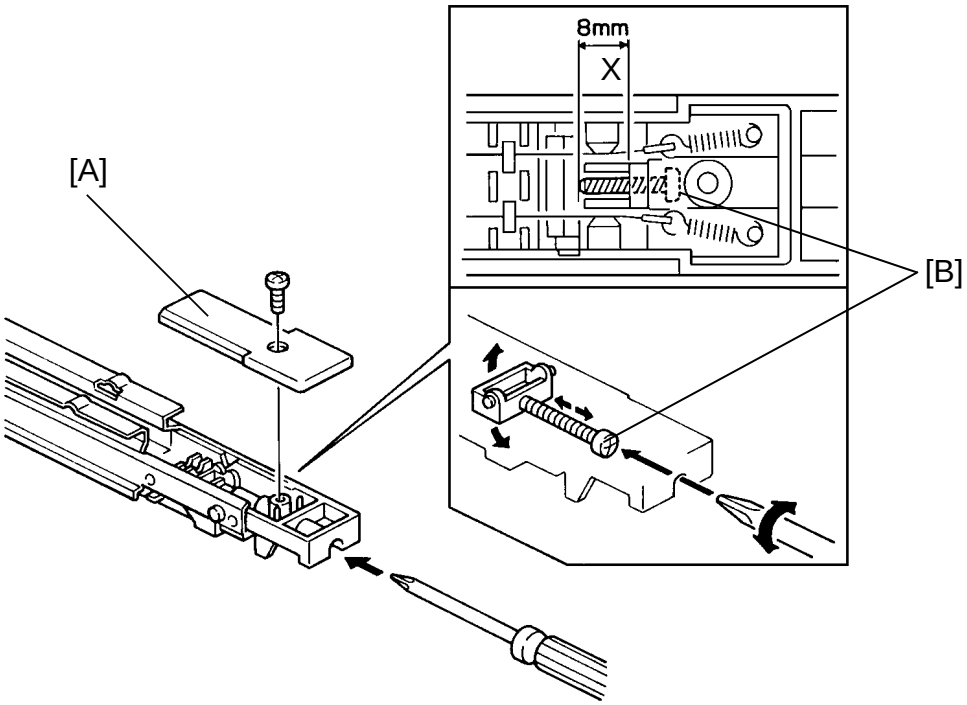

NOTE: a) The charge corona wire height adjustment should be done only when the front end block is replaced.

b) Before replacing the front end block of the charge corona unit, adjust the uneven exposure with the exposure adjusting plates and make a copy sample with the test chart for the reference.

1. Remove the wire cleaner and the front end block cover [A] (1 plastic screw) from the charge corona unit.
2. Adjust the gap "X" (between the wire height adjusting block and the screw holder edge) to 8.0 mm by turning the wire height adjusting screw [B] as shown in the illustration.
3. Reassemble the charge corona unit and set it in the copier.
4. Make copies with the test chart and compare the front and rear gray scales with those of the reference copy made before replacing the front end block. Adjust the corona wire height by turning the wire height adjusting screw, if necessary.

   Turning the screw clockwise decreases the image density at the front side.

   Turning the screw counterclockwise increases the image density at the front side.

6.14 CHARGE GRID PLATE REPLACEMENT

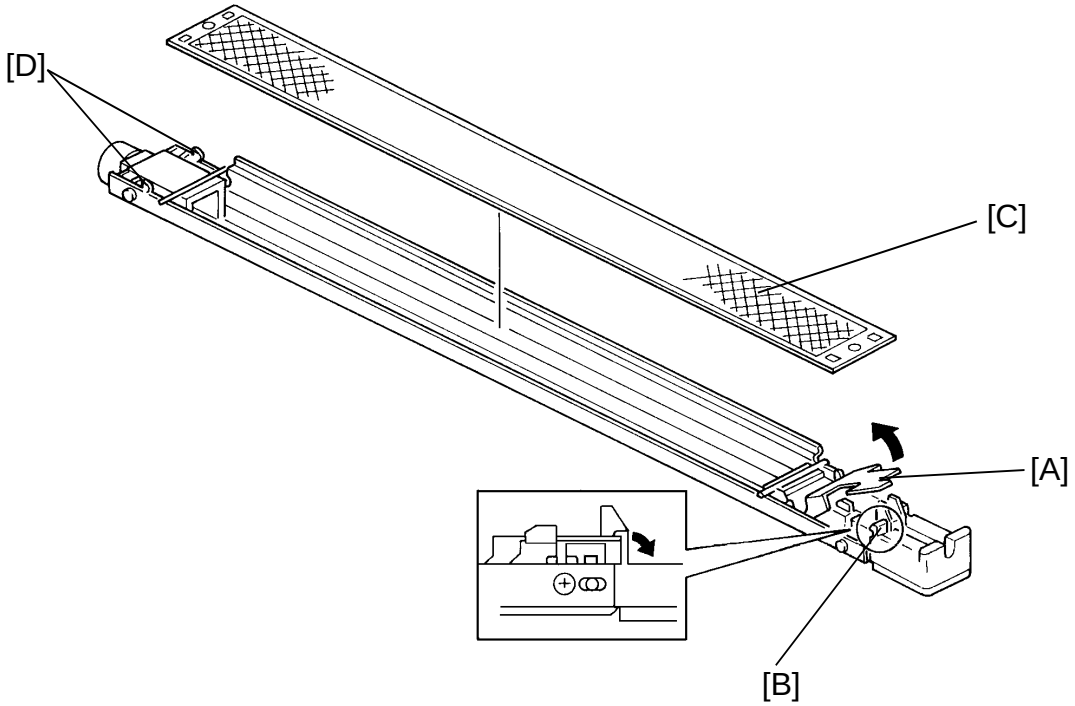

1. Remove the wire cleaner from the charge corona unit.
2. Unhook the grid anchor plate [A] from the hook on the front end block, and lift up the grid anchor plate as shown.

   NOTE: When unhooking the anchor grid plate, be careful not to break off the hook [B].
3. Remove the old grid plate [C] from the charge corona unit.
4. Set a new grid plate on the rear hooks [D] first, then on the front hooks of the anchor plate by closing the anchor plate.

   NOTE: a) Do not touch the charge grid plate with oily bare hands.
   b) Do not bend the charge grid plate, or make any dent on it, to avoid uneven charge.

6.15 TRANSFER/SEPARATION CORONA WIRE REPLACEMENT

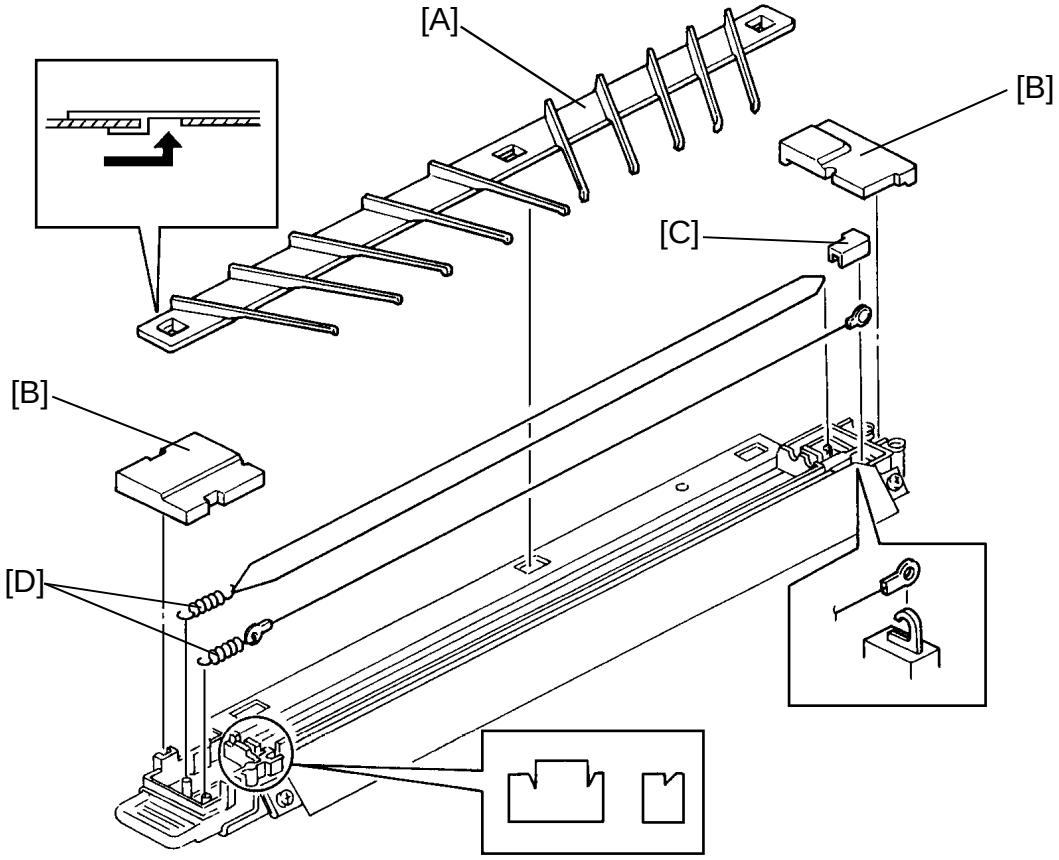

1. Lower the T & S corona unit and remove it from the copier.
2. Remove the paper guide [A] from the T & S corona unit by lifting the rear part and sliding it to the rear.
3. Remove the front and rear end block covers [B] (2 hooks each).

   NOTE: When removing the end block covers, be careful not to break off the side hooks.
4. Remove the wire hook cover [C] from the rear end block.
5. Unhook the corona wire tension springs [D] and remove the transfer and separation corona wires.

   NOTE: Be careful not to damage or lose the tension springs.

6. Clean the T & S corona casing and the end blocks.

   NOTE: a) Clean the casing with water first to remove NOx. Then clean it with alcohol if any toner still remains on the casing.

   b) Clean the end blocks with a blower brush to remove toner and paper dust. Then clean it with alcohol if any toner still remains.

   c) Do not loosen the screws securing the transfer entrance guide mylar bracket.

7. Install a new transfer and separation corona wires.

   NOTE: a) Do not touch the corona wires with oily bare hands.

   b) Do not bend or scratch the corona wires.

   c) When installing the separation corona wire, make sure that the wire junction is positioned in the rear end block.

   d) Make sure that the corona wires are correctly positioned in both the front and rear end blocks.

8. Reassemble the T & S corona unit.

7. FUSING

7.1 FUSING UNIT REMOVAL

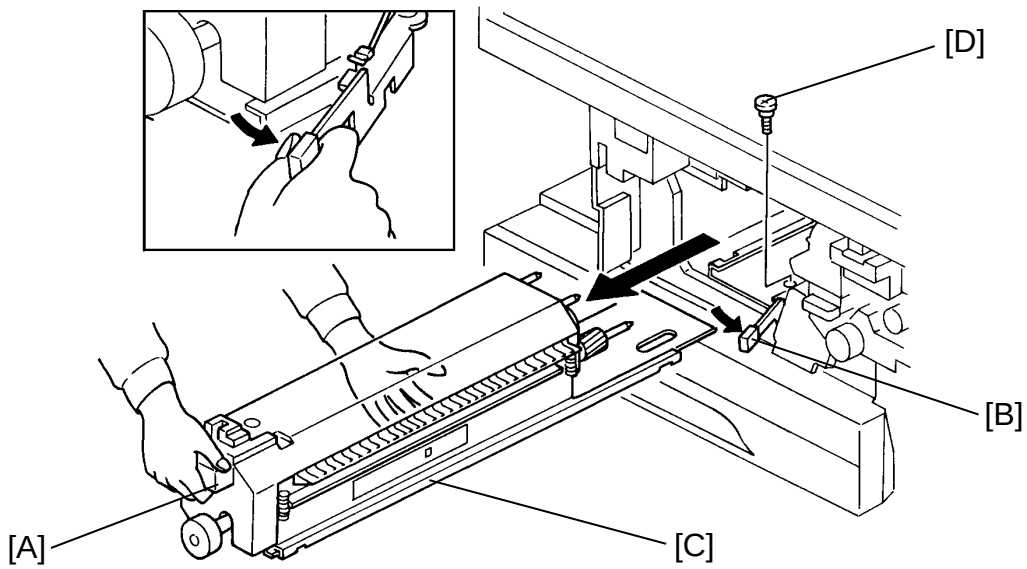

1. Open the front cover and lower the T & S corona unit.
2. Remove the cleaning unit (see Cleaning Unit Removal).
3. Hold the fusing unit cover [A] while pushing the release lever [B], and pull out the fusing unit [C] until it stops.
4. Remove the fusing unit lock screw [D] (1 shoulder screw).
5. Remove the fusing unit completely while pushing the release lever.

   NOTE: Before completely removing the fusing unit, support the bottom of the fusing unit.

7.2 FUSING LAMP REPLACEMENT

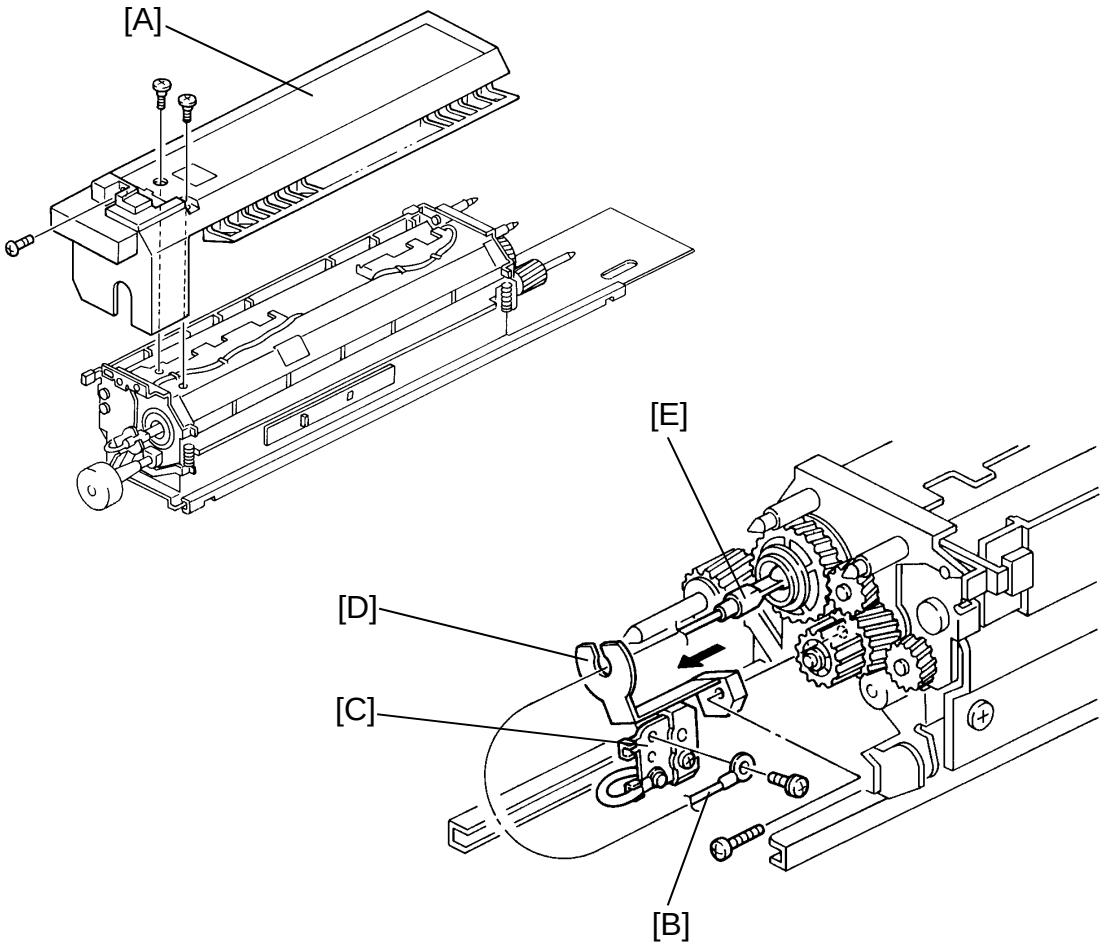

1. Remove the fusing unit (see Fusing Unit Removal).
2. Remove the fusing unit cover [A] (2 shoulder screws, 1 screw).
3. Remove the fusing lamp harness [B] from the front and rear fusing lamp terminals [C] (1 screw each).
4. Remove the rear lamp holder [D] (1 screw) and replace the fusing lamp [E].

7.3 HOT ROLLER REPLACEMENT

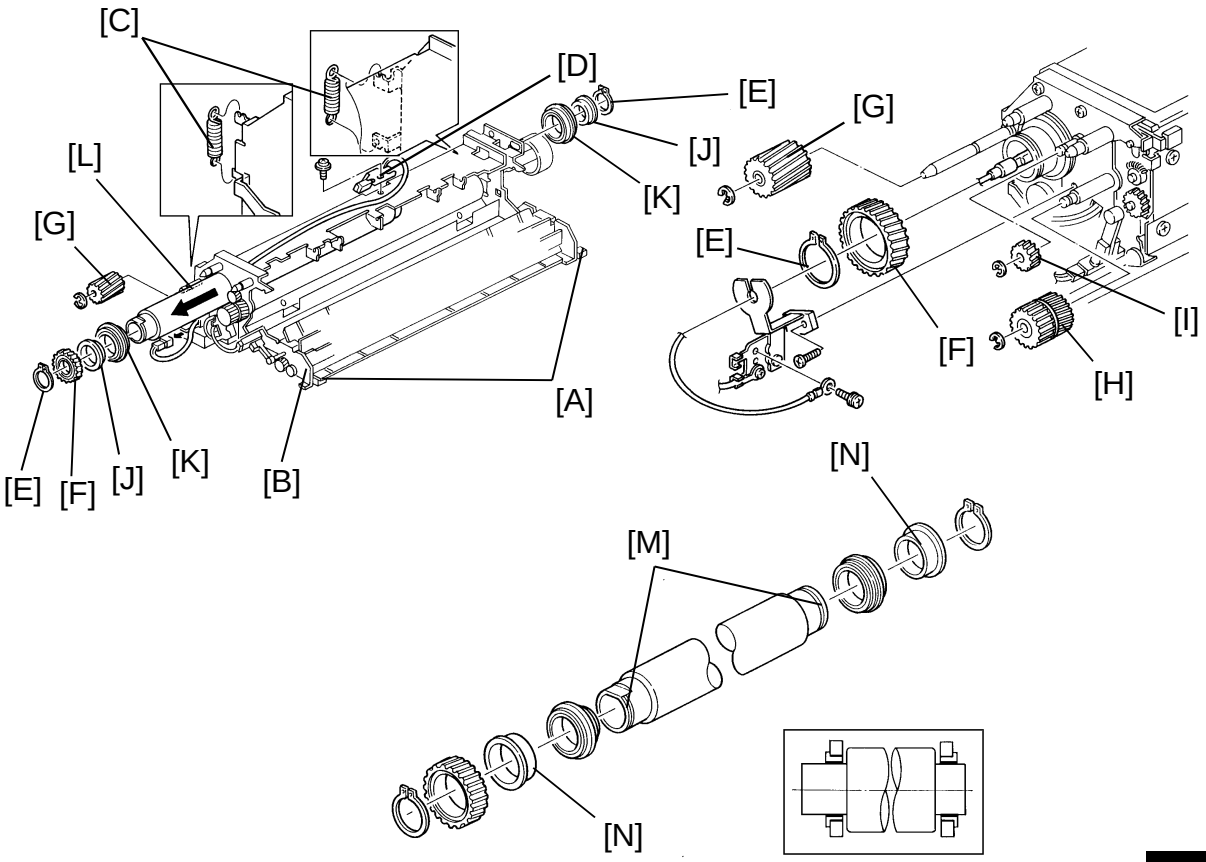

1. Remove the fusing lamp (see Fusing Lamp Replacement).
2. Press both "B2" release levers [A] and lower the fusing exit assembly [B].
3. Remove the front and rear pressure springs [C].
4. Remove the fusing thermistor [D] (1 screw).
5. Remove the front and rear C-rings [E], 4 gears [F, G, H, I], front and rear collars [J], front fusing bearings [K], and then remove the hot roller [L].

   NOTE: a) Lubricate the roller shaft [M] and fushing [N] with BARRIERTA L55/2 grease

   b) Peel off 3 cm (1 inch) from both ends of the protective sheet, and install the hot roller.

   c) Before setting the pressure springs, remove the rest of the protective sheet.

   d) Lubicate the fusing drive gears and their shafts with grease G501.

7.4 PRESSURE ROLLER REPLACEMENT

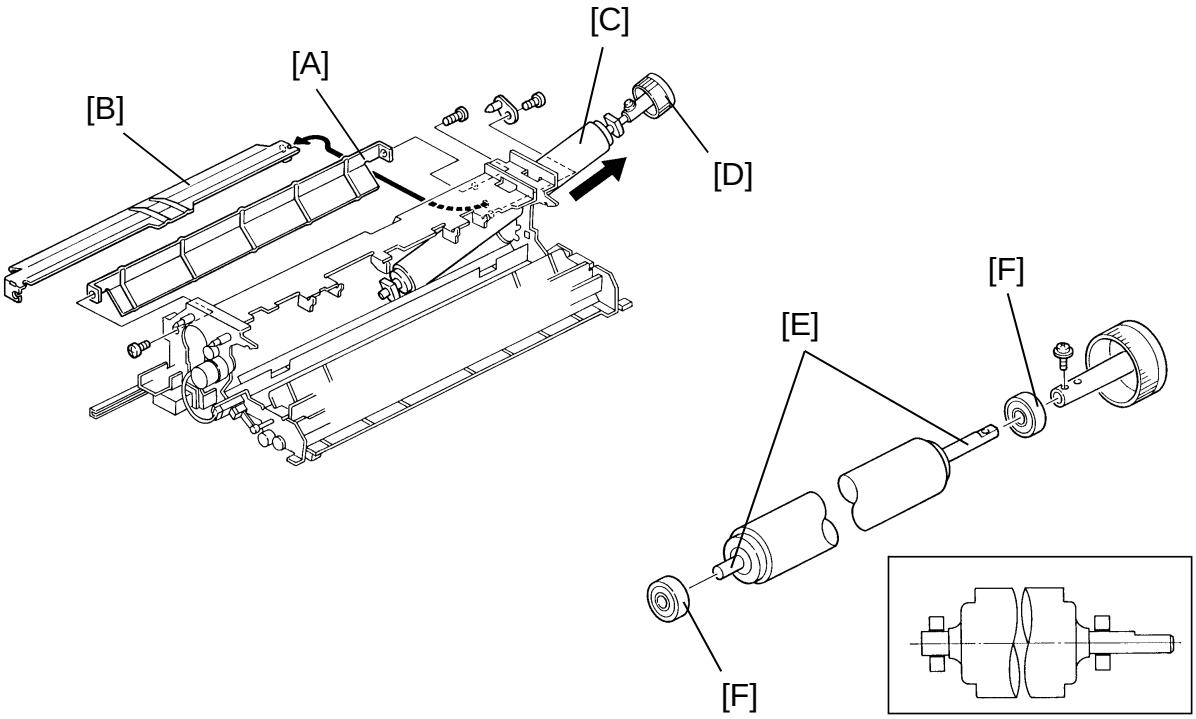

1. Remove the hot roller (see Hot Roller Replacement).
2. Remove the upper fusing entrance guide [A] (2 screws).
3. Remove the lower fusing entrance guide [B] (1 screw) as shown.
4. Remove the front lamp holder (1 screw).
5. Lift the front end of the pressure roller [C] and slide, along with its bearings, out the front side of the unit.
6. Remove the front and rear bearings and the fusing knob [D] (1 screw).
7. Replace the pressure roller.

   NOTE: When installing a new pressure roller:

   a) Lubricate the roller shaft [E] and bearings [F] with BARRIERTA L55/2 grease.

   b) Lubricate the fusing drive gears and their shafts with grease G501

7.5 FUSING STRIPPER PAWL REPLACEMENT

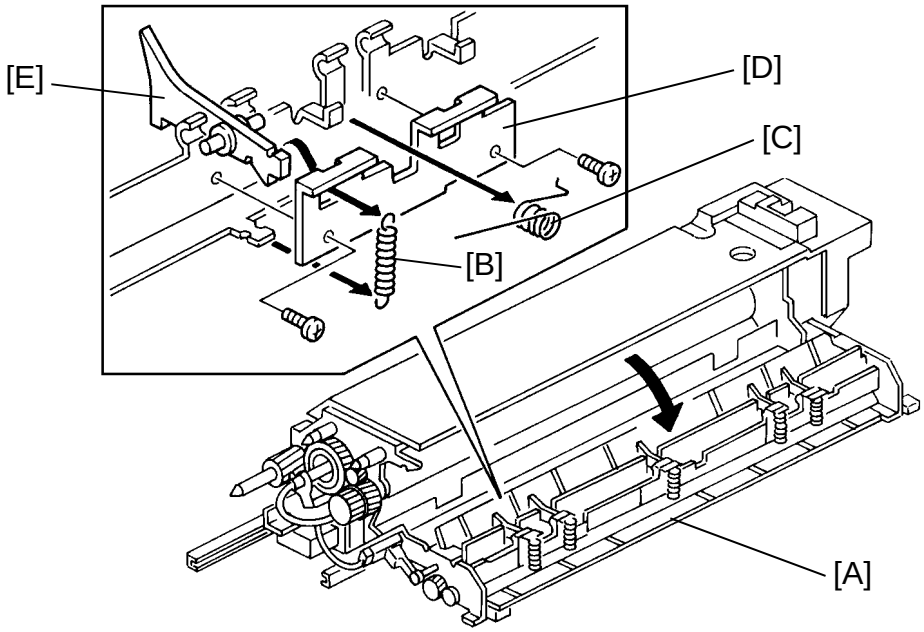

1. Remove the fusing unit (see Fusing Unit Removal).
2. Lower the fusing exit assembly [A].
3. Remove the pawl pressure springs [B] and pawl release springs [C].
4. Remove the 3 fusing pawl brackets [D] (5 screws).
5. Remove the fusing stripper pawls [E] and replace.

7.6 THERMOFUSE REPLACEMENT

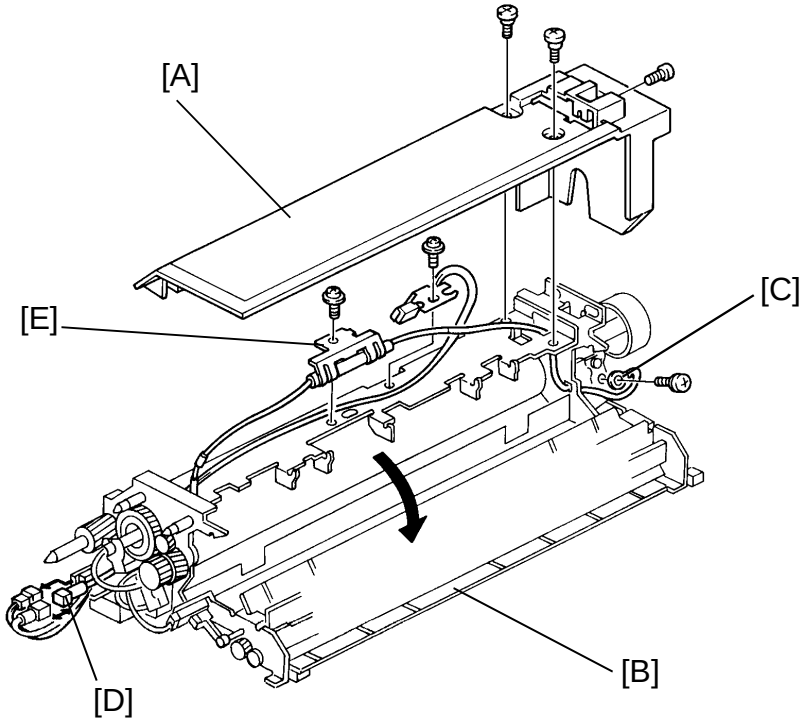

1. Remove the fusing unit (see Fusing Unit Removal).
2. Remove the fusing unit cover [A] (2 shoulder screws, 1 screw).
3. Lower the fusing exit assembly [B].
4. Remove the thermofuse harness lead [C] (1 screw) from the front fusing lamp terminal and disconnect the thermofuse harness from the fusing harness [D].
5. Remove the thermofuse holder [E] (1 screw) then remove the thermofuse (2 plate clamps).

7.7 FUSING THERMISTOR REPLACEMENT

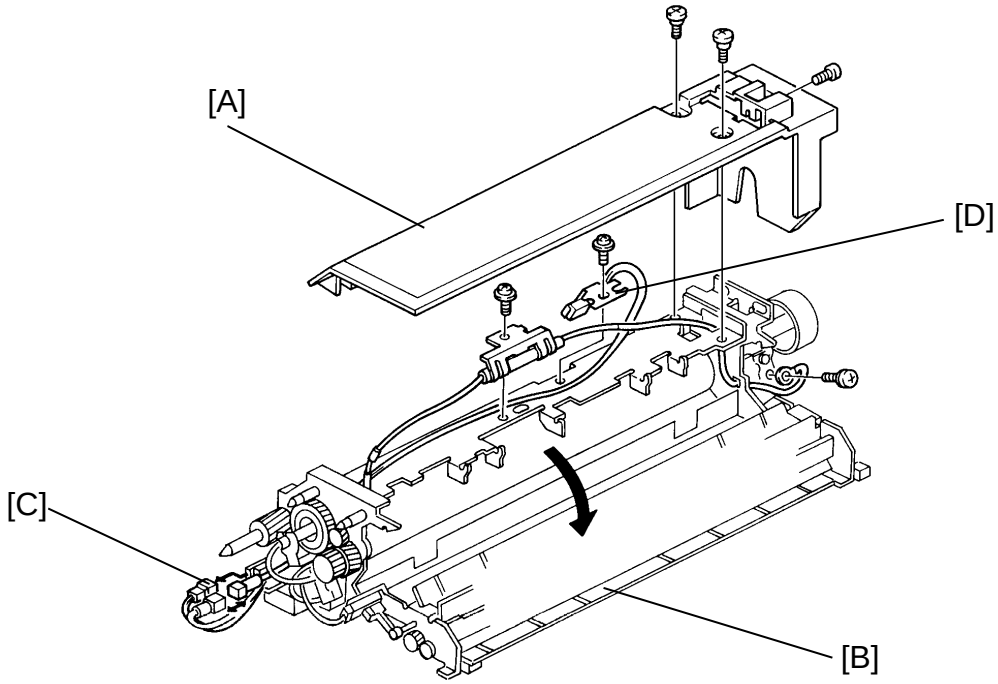

1. Remove the fusing unit (see Fusing Unit Removal).
2. Remove the fusing unit cover [A] (2 shoulder screws, 1 screw).
3. Lower the fusing exit assembly [B].
4. Disconnect the thermistor harness [C] from the fusing harness.
5. Remove the fusing thermistor [D] (1 screw, 2 plate clamps).

7.8 FUSING TEMPERATURE CHECK (SP52)

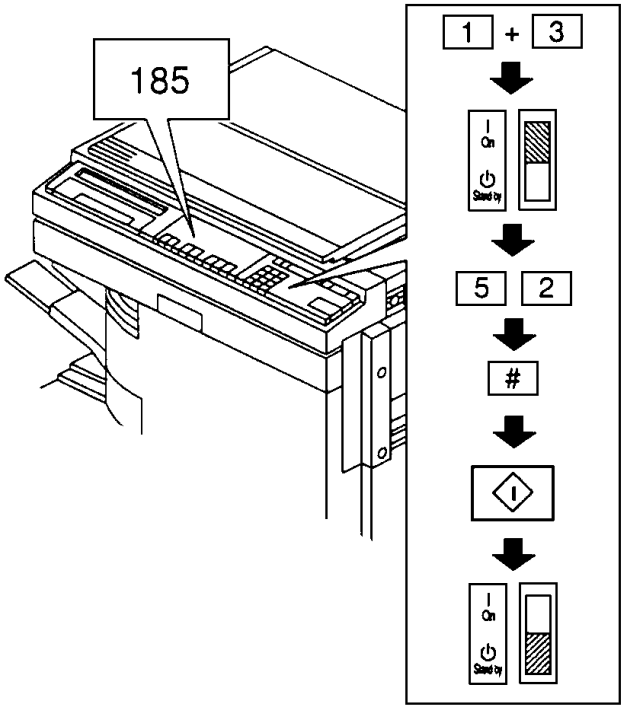

1. Turn the main switch off.
2. While pressing both "1" and "3" on the operation panel number keys, turn on the main switch to access the SP mode.
3. Enter "52" (fusing temperature check mode) using the number keys and then press the enter key.
4. The current fusing temperature is indicated on the three digit indicator.
5. Turn the main switch off.

7.9 FUSING TEMPERATURE ADJUSTMENT (SP49)

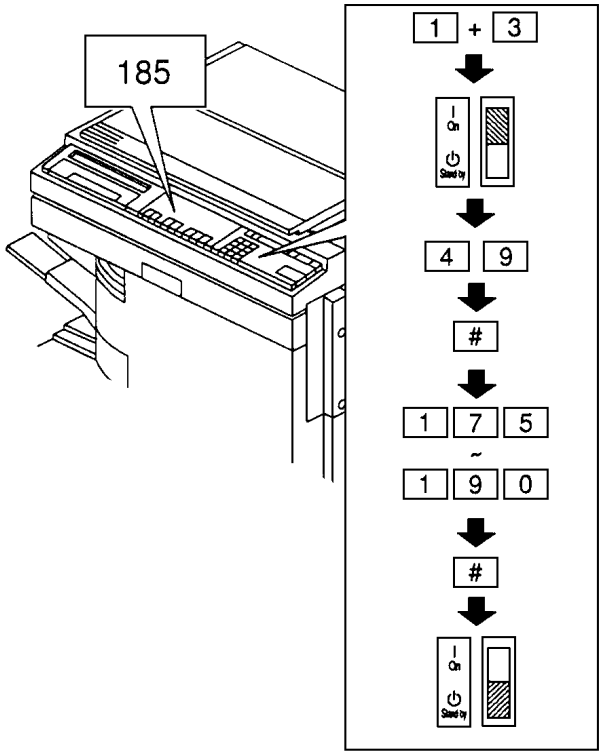

Standard Setting: 185°C

The fusing temperature can be adjusted between 175°C and 190°C in 1°C steps according to the following procedure:

1. Turn the main switch off.
2. While pressing both "1" and "3" on the operation panel number keys, turn on the main switch to access the SP mode.
3. Enter "49" (fusing temperature adjustment mode) using the number keys and then press the enter key.
4. The current temperature setting blinks in the thre digit indicator. Enter the new temperature setting with the number key, then press the enter key.
5. Turn the main switch off.

8. DUPLEX

8.1 DUPLEX UNIT REMOVAL

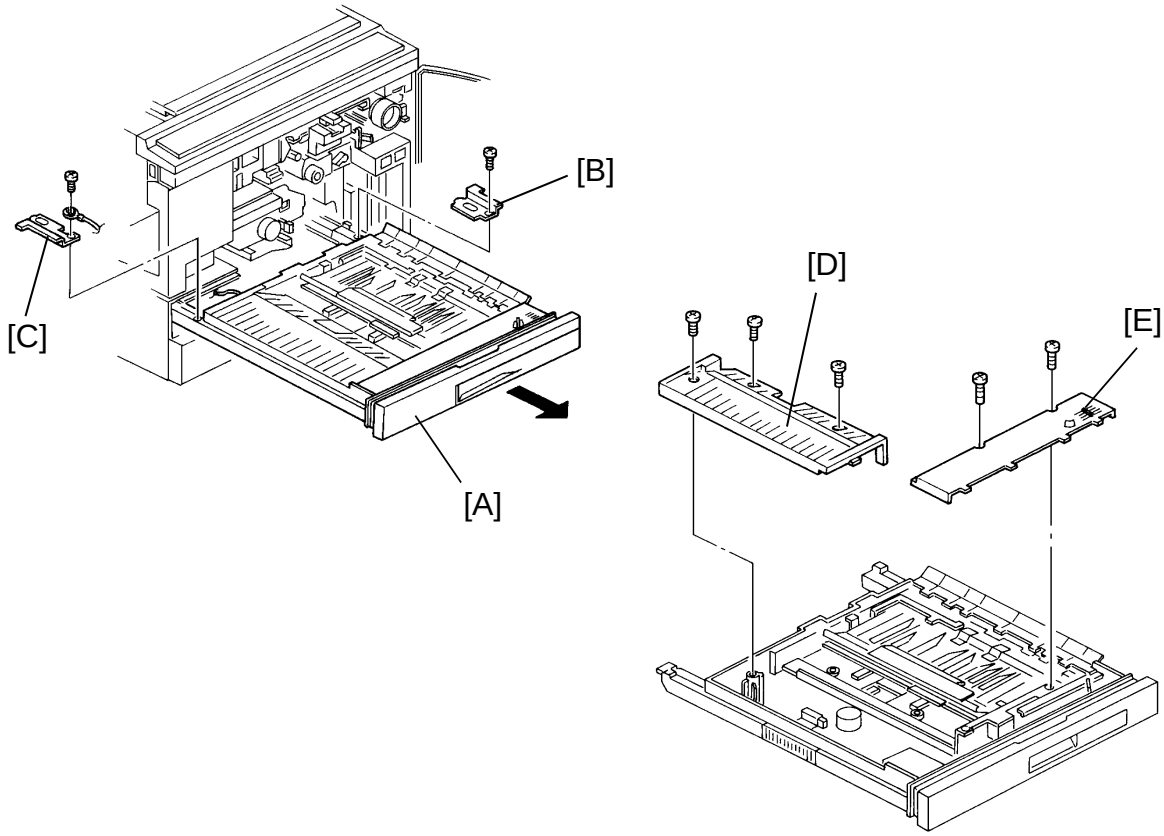

1. Open the front door.
2. Pull out the duplex tray [A] and remove the tray stopper brackets [B, C] from both side rails as shown (1 screw each), then remove the duplex tray from the copier.
3. Remove the side inner cover [D] (3 screws).
4. Remove the front inner cover [E] (2 screws).

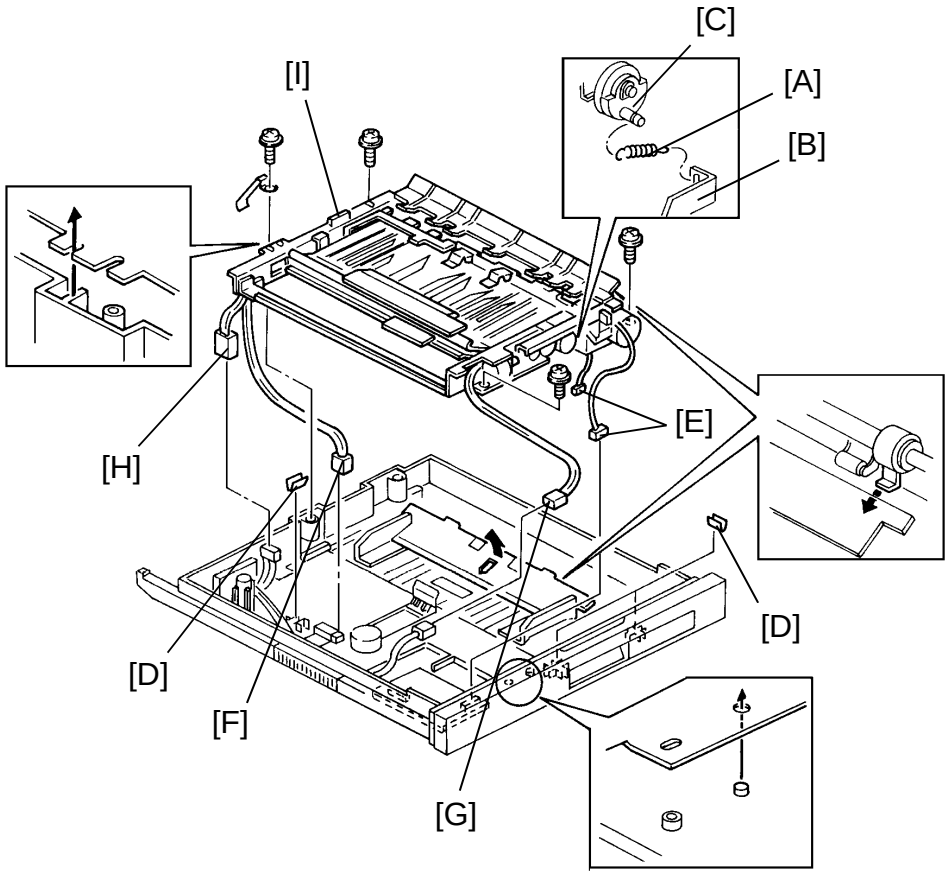

5. Unhook the lift spring [A] from the duplex lift lever [B] and the cam clutch [C].
6. Remove 3 clamps [D] with a pair of pliers.
7. Disconnect CN602, and CN603 [E] from the duplex control board.
8. Disconnect the sensor connector [F] from the jogger home position sensor.
9. Disconnect the connectors [G, H] from the duplex turn gate solenoid and from the duplex entrance sensor.
10. Remove the duplex unit [I] (4 screws) from the tray.

    NOTE: Hold both sides of the duplex unit frame when lifting the duplex unit out of the tray.

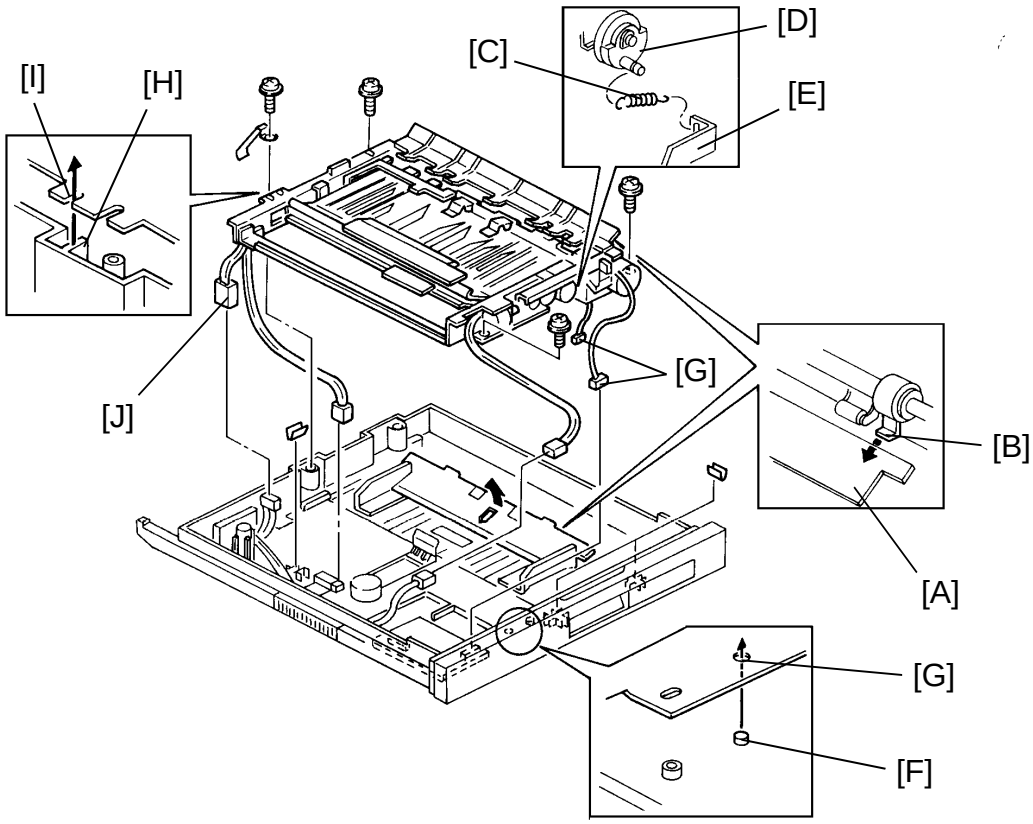

-Installation-

1. When placing the duplex unit back into the tray, hold up the bottom plate [A] so that the flipmylar brackets [B] fit under it as shown.

2. Hook the lift spring [C] to the cam clutch [D] and the duplex lift lever [E] as shown.

   NOTE: When installing the duplex unit, make sure of the following:

   a) The positioning pin [F] fits through hole [G] in the side plate.

   b) The positioning rib [H] fits through the cutout [I] in the side plate.

   c) The sensor harness [J] is not caught under the unit frame.

8.2 DUPLEX FEED ROLLER REPLACEMENT

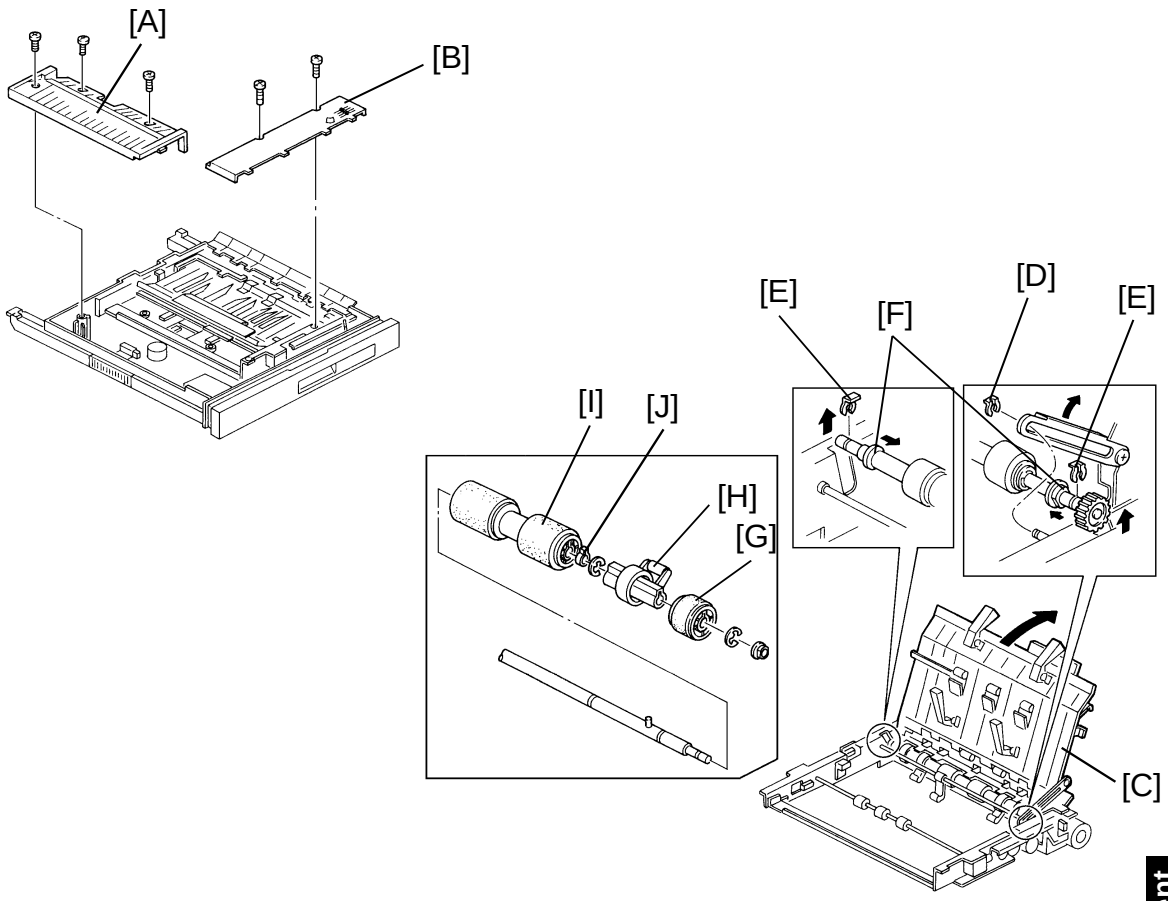

1. Open the front door.
2. Pull out the duplex tray.
3. Remove the side inner cover [A] and front inner cover [B] (5 screws).
4. Raise the upper and lower paper guide plates [C] all the way up and remove the snap ring [D] for the guide plate support arm.
5. Remove the snap ring [E] from both ends of the paper feed roller shaft.
6. Move the front and rear bushings [F] of the paper feed roller shaft inward and remove the paper feed roller assembly.
7. Remove the bushing, the rear stack roller [G] (1 E-ring) and rear paper flattener [H] from the shaft.
8. Remove the duplex feed roller [I] from the shaft (1 E-ring).
9. Remove the feed roller bushing [J] from the roller and place it in the new roller.
10. Reassemble the duplex unit.

8.3 DUPLEX FRICTION ROLLER REPLACEMENT

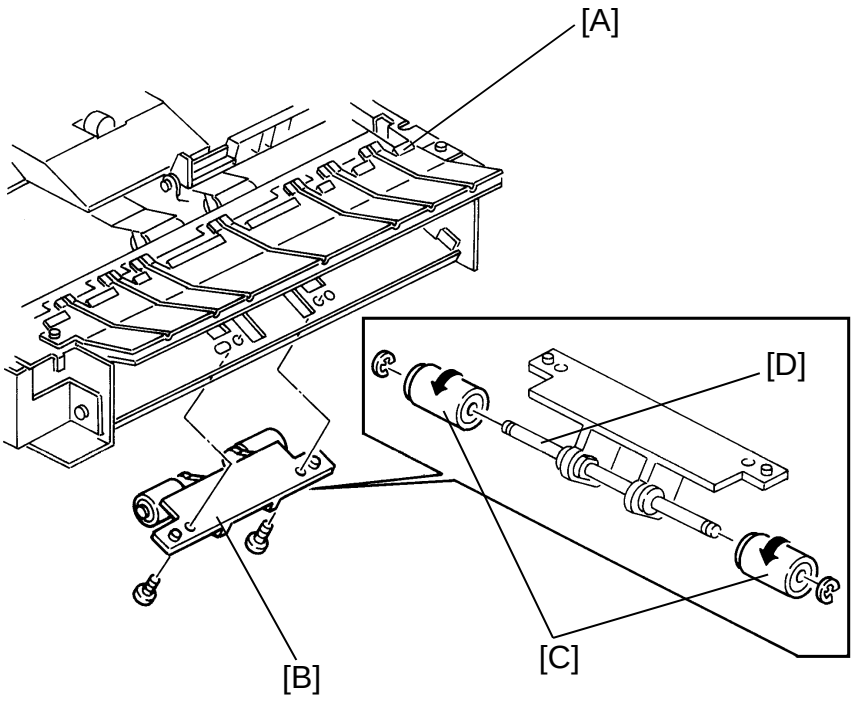

1. Remove the duplex unit [A] from the tray (see Duplex Unit Removal).
2. Remove the friction roller assembly [B] (2 screws) from the duplex unit.
3. Remove the friction rollers [C] (1 E-ring each) from the shaft [D].
4. Install new friction rollers on the shaft and reassemble the duplex unit.

   NOTE: This friction roller has a one-way clutch. Be sure to install the roller so that it rotates in the direction of the arrow (see illustration).

8.4 JOGGER HOME POSITION SENSOR AND JOGGER MOTOR REPLACEMENT

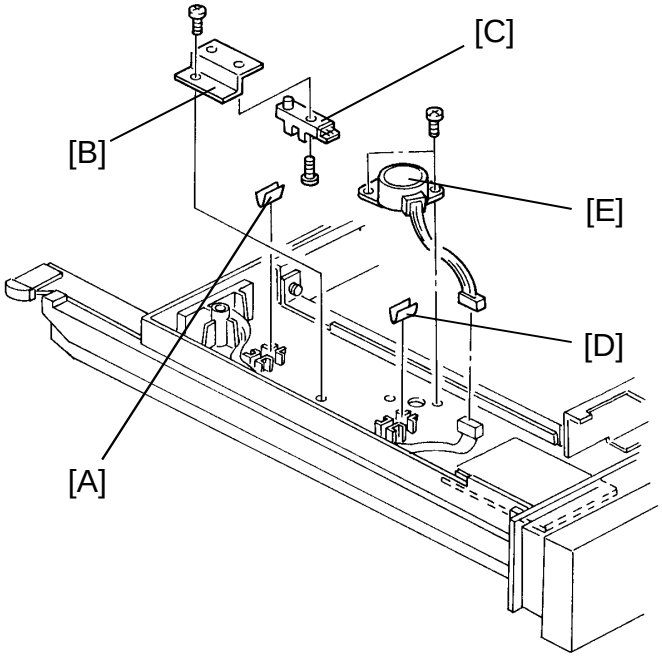

1. Pull out the duplex tray and remove the side and front inner covers.
2. Remove the clamp [A] and sensor bracket [B] (1 screw).
3. Remove the jogger home position sensor [C] from the bracket and replace it (1 screw and 1 connector).
4. Remove the clamp [D] and replace the jogger motor [E] (2 screws and 1 connector).

8.5 DUPLEX MOTOR REPLACEMENT

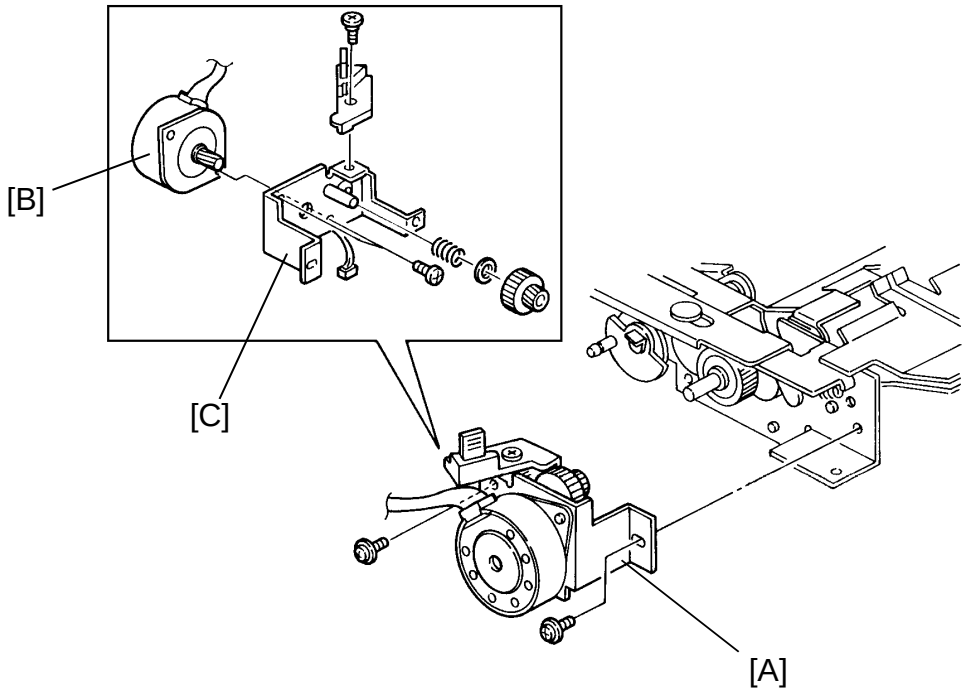

1. Remove the duplex unit from the tray (see duplex unit removal).
2. Remove the duplex motor assembly [A] (2 screws).
3. Separate the duplex motor [B] from the bracket [C] and replace it (2 screws).

   NOTE: When installing a new duplex motor, make sure that the duplex motor thermistor is secured on the motor bracket by the screw for the motor.

9. COPY QUALITY ADJUSTMENT

9.1 LIGHT INTENSITY ADJUSTMENT (SP48)

When: After performing SP66 (Drum initialize) and before exiting the SP mode when replacing the drum.

Purpose: To properly adjust light intensity for the initial V_L pattern detection (storing Vref = initial Vlp/Vlg)

Adjustment standard: Level 2 of the gray scale on the OS-A3 test chart should be just visible on the copy when the 4th manual image density level is selected.

How: SP48 changes the exposure lamp voltage from ac drive circuit on the dc power supply board.

NOTE: Light intensity adjustment should be done only after performing SP66 when replacing the drum. If light intensity is adjusted after the initial V_L pattern detection, the light intensity will be changed to the initial setting by subsequent V_L corrections. As an exception for this ±0.5 V change of SP48 data is effective to the light intensity even after the initial V_L pattern detection. Because the V_L correction changes the lamp voltage ±1 V step.

1. Turn the main switch off.
2. Clean the following parts:

Item No.	Section	Method
(1)	Optics (mirrors, lens, reflectors, and exposure glass)	Damp cotton, and blower brush
(2)	Corona wires (charge, transfer, and separation) and corona unit casing	Dry cloth or water
(3)	QL filter, PTL filter, toner shield glass and filter, and erase lamp unit	Dry cloth and blower brush

3. While pressing both "1" and "3" on the operation panel number keys, turn on the main switch.

   NOTE: Release the number keys after confirming that the Call Service indicator and the copy counter number "0" are blinking.

4. Enter "48" using the number keys and press the "#" key.
5. Press the "#" key again and set the OS-A3 chart on the exposure glass.

6. Make a full size copy at the manual image density level 4 (center) after the copier has warmed up (when the beeper sounds 3 times).

   NOTE: Make sure that the data in SP37 (black bias) is set to "0" (standard value).

7. Confirm that level 2 of the gray scale is just visible on the copy.

8. If the image density is not correct, go through the following steps.
   (1) Press the "#" key twice.
   (2) Change the exposure lamp voltage data displayed in the three digit indicator. Use the number keys and follow these rules:
   If image density is too dark: increase the setting
   If image density is too light: decrease the setting

   NOTE: The data can be set between 50 and 75 in 0.5 steps. The default setting is "63".

   (3) Press the "#" key twice and then make a copy at the manual image density level 4.
   (4) Confirm if the image density is correct or not. If not, repeat the above steps from (1) to (3).

9. Turn the main switch off and on.

9.2 UNEVEN EXPOSURE ADJUSTMENT

When: If the exposure is uneven.

Purpose: To maintain even exposure.

Adjustment standard: The side-to-side variation of the gray scales on the test chart should be less than one level.

How: Change the position of the exposure adjusting plates to make the light intensity from the exposure lamp even across its length.

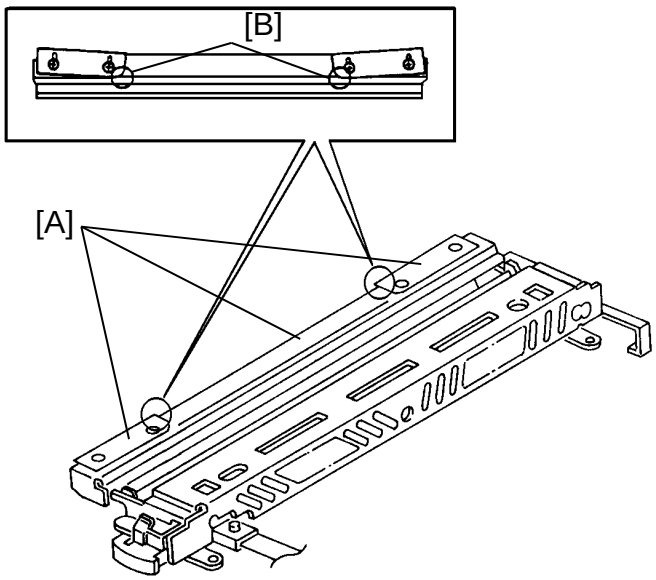

NOTE: Do not adjust the charge corona wire height to correct uneven image density on the copy. Otherwise, the total charge corona current will change, causing incorrect toner density control.

1. Clean the optics components and the charge corona wire.
2. Place a test chart on the exposure glass and make an A3/11" x 17" copy.
3. If the side-to-side variations of the gray scales is not within the adjustment standard, turn off the main switch and remove the exposure glass (see Exposure Glass Removal).
4. Position the adjusting plates [A] so that the copy image meets the adjustment standard. The leading edges [B] of the three adjusting plates must be aligned to avoid white streaks.

9.3 IMAGE AREA BIAS VOLTAGE ADJUSTMENT

9.3.1 Black Bias Adjustment (SP37)

When: If the image density at the manual density level 4 cannot be adjusted by exposure lamp voltage (SP48) after performing SP66 (drum initialize) when replacing the drumis replaced.

Purpose: To adjust the copy image density.

How: SP37 changes the development bias voltage for black image and V_L pattern.

NOTE: Normally the black bias data should be set to "0" (standard).
Black bias adjustment should be done only when adjusting light intensity (SP48) after performing the drum initialization (SP66), if necessary.
If black bias is adjusted after the initial V_L detection, the light intensity will be corrected to make the V_L pattern similar in density to the initial setting, by subsequent V_L corrections. This means that the effect of changing black bias is gradually eliminated.

SP37: Black Bias

Data	Density	Development Bias Correction Voltage
0	Normal	±0 V
1	Darkest	+40V
2	Darker	+20V
3	Lighter	– 20V
4	Lightest	– 40V

1. Turn the main switch off.
2. While pressing both "1" and "3" on the operation panel number keys, turn on the main switch.

   NOTE: Release the number keys after confirming that the Call Service indicator and the Copy Counter number "0" are blinking.
3. Enter "37" using the number keys and press the "#" key.
4. Change the setting displayed in the three digit indicator by the number keys. Determine the proper setting from the above table. Press the "#" key.

9.3.2 Color Bias Adjustment (SP79)

When: If color image density is improper compared with black image density.

Purpose: To improve color image density.

How: SP79 changes the development bias voltage for color images.

SP79: Color Bias

Data	Density	Development Bias Correction Voltage
0	Normal	±0 V
1	Darkest	+40V
2	Darker	+20V
3	Lighter	– 20V
4	Lightest	– 40V

1. Turn the main switch off.
2. While pressing both "1" and "3" on the operation panel number keys, turn on the main switch.

   NOTE: Release the number keys after confirming that the Call Service indicator and the copy counter number "0" are blinking.
3. Enter "79" using the number keys and press the "#" key.
4. Change the setting displayed in the three digit indicator by the number keys. Determine the new setting from the above table. Press the "#" key.
5. Turn the main switch off and on.

9.3.3 Highlight Bias (Manual ID Level 7) Adjustment (SP46)

When: If a customer requests a lighter or darker copy image density at manual image density level 7.

Purpose: To meet customer's request about the image density at manual ID level 7.

How: SP47 changes the development bias voltage for images at manual ID level 7.

SP46: Highlight Bias

Data	Density	Development Bias Correction Voltage
0	Normal	–240V
1	Darker	–200V
2	Lighter	–280V
3	Lightest	–320V

1. Turn the main switch off.
2. While pressing both "1" and "3" on the operation panel number keys, turn on the main switch.

   NOTE: Release the number keys after confirming that the Call Service indicator and the copy counter number "0" are blinking.
3. Enter "46" using the number keys and press the "#" key.
4. Change the setting displayed in the three digit indicator by the number keys. Determine the new setting from the above table. Press the "#" key.
5. Turn the main switch off and on.

9.4 TONER DENSITY ADJUSTMENT

9.4.1 Black Toner Density Adjustment (SP33)

When: If a customer wants to change the overall image density of black copies.

Purpose: To change toner concentration inside the black development unit.

How: SP33 changes the development bias for the black ID sensor pattern.

SP33: Black Pattern Bias

Data	Black Toner Density	Development Bias Voltage for ID sensor Pattern	
		0~500	501~
0	Normal	–220V	–200V
1	Lighter	–180V	–160V
2	Darker	–240V	–220V
3	Darkest	–260V	–240V

1. Turn the main switch off.
2. While pressing both "1" and "3" on the operation panel number keys, turn on the main switch.

   NOTE: Release the number keys after confirming that the Call Service indicator and the copy counter number "0" are blinking.
3. Enter "33" using the number keys and press the "#" key.
4. Change the setting displayed in the three digit indicator by the number keys. Determine the new setting from the above table. Press the "#" key.
5. Turn the main switch off and on.

9.4.2 Color Toner Density Adjustment (SP75)

When: If a customer wants to change the overall image density of color copies.

Purpose: To change toner concentration inside the color development unit.

How: SP75 changes the development bias for the color ID sensor pattern.

SP75: Red/Blue/Green Pattern Bias

Data	Black Toner Density	Development Bias Voltage for ID sensor Pattern			
		0~500		501~	
		Red/Blue	Green	Red/Blue	Green
0	Normal	–200V	–240V	–180V	–220V
1	Lighter	–160V	–200V	–140V	–180V
2	Darker	–220V	–260V	–200V	–240V
3	Darkest	–240V	–280V	–220V	–260V

1. Turn the main switch off.
2. While pressing both "1" and "3" on the operation panel number keys, turn on the main switch.

   NOTE: Release the number keys after confirming that the Call Service indicator and the copy counter number "0" are blinking.
3. Enter "75" using the number keys and press the "#" key.
4. Change the setting displayed in the three digit indicator by the number keys. Determine the new setting from the above table. Press the "#" key.
5. Turn the main switch off and on.

9.5 DETECT / FIXED TONER SUPPLY MODE SELECTION (SP30)

When: If the type of original is almost the same with high image density and proportion, and adjusting the toner supply ratio (SP31) and toner density check interval (SP35) do not give constant image density without toner scattering problem.

Purpose: To leave the detect mode and to supply a constant amount of toner in every copy cycle.

How: SP30 turns on the toner supply clutch every black copy cycle.

NOTE: On this copier the ID sensor is used in the fixed supply mode as well as in the detect mode. Therefore, the fixed supply mode cannot be used when the ID sensor is in an abnormal condition.
The fixed toner supply mode is applied only to the black development unit, not to the color one.

SP30: Black Toner Supply Mode
0: Detect mode
1: Fixed mode

9.6 TONER SUPPLY RATIO SELECTION (SP31/SP32/SP81)

When: If the standard setting for toner supply amount is not appropriate for the type of original in use.

Purpose: To adjust the toner supply amount.

How: Detect mode: SP31 for black toner,
SP81 for color toner
Fixed mode: SP32 for black toner

All three service programs change the toner supply clutch ON period.

NOTE: Each color can have an independent toner supply ratio. The selected toner supply ratio corresponds to the color development unit installed in the copier.

SP31: Black Toner Supply Ratio (Detect Mode)

Data	0	1	2	3
Supply Ratio	15%	7.5%	30%	60%
Toner Supply Ratio Parameter	2	1	4	8

SP81: Red/Blue/Green Toner Supply Ratio (Detect Mode)

Data	0	1	2	3
Supply Ratio	14%	7%	21%	28%
Toner Supply Ratio Parameter	2	1	3	4

SP32: Black Toner Supply Ratio (Fixed Mode)

Data	0	1	2	3
Supply Ratio	7%	3.5%	10.5%	14.0%
Toner Supply Ratio Parameter	2	1	3	4

9.7 TONER DENSITY CHECK INTERVAL SELECTION (SP35/SP74)

When: If a customer complains of low image density of copies during a toner near end condition.

Purpose: To check toner density more often.

How: SP35 for black toner and SP74 for color toner change the interval of ID sensor pattern detection.

NOTE: Normally, "0" (every 5 copies) should be selected for color toner (SP74).

SP30:	**Black ID Detection**	**SP74:**	**Color ID Detection**
	0: Every 10 copies		0: Every 5 copies
	1: Every 5 copies		1: Every 10 copies

9.8 ID SENSOR AND V SENSOR AUTOMATIC ADJUSTMENT (SP54)

When:
1. After cleaning, removing, or replacing the ID sensor board or V sensor board.
2. At replacement of the OPC drum or RAM board on the main control board.
3. If a toner supply control problem occurs.
4. If memory all clear (SP99) has been performed.

Purpose: To make sure that ID sensor and V sensor functions correctly.

Adjustment standard: ID sensor: Vsg = 4.0 ±0.2 V
V sensor: Vlg = 4.0 ±0.2 V

How: SP54 adjusts PWM value in memory for ID sensor and V sensor LED's to get correct sensor output.

NOTE: Beeper sounds 2 times when the adjustment (about 4 seconds) are completed.
The adjusted PWM value and sensor output can be monitored by SP165 (ID-sensor PWM/Output Check) and SP166 (V-sensor PWM/Output Check). Refer to the SP mode table for details.

9.9 ADS SENSOR AUTOMATIC ADJUSTMENT (SP56)

When:
1. If ADS output voltage is not within the adjustment standard after cleaning the optics.
2. At replacement of the following parts: ADS board, Exposure lamp, RAM board on the main control board, and dc power supply board
3. If memory all clear (SP99) has been performed.

Purpose: To make sure that the ADS sensor functions correctly.

Adjustment standard: ADS Voltage = 1.5 ±0.1 V

How: SP56 adjusts ADS gain data in memory to get the correct sensor output.

NOTE: Close the platen cover to prevent external light from reaching the ADS sensor when performing this adjustment.
The beeper sounds 2 times when the adjustment (about 4 seconds) are completed.
The adjusted ADS gain data and the sensor output can be monitored by SP167 (ADS gain/Output Check). Refer to the SP mode table for details.

9.10 ADS DENSITY SELECTION (SP34)

When: If image density of copies is too light or dirty background appears on copies in ADS mode.

Purpose: To maintain good copy quality in ADS mode.

How: SP34 increases negative grid bias voltage for darker setting and increases negative development bias voltage for lighter setting.

SP34: ADS Density
0: Normal
1: Darker
2: Lighter

9.11 VERTICAL MAGNIFICATION ADJUSTMENT (SP43)

When:	If vertical magnification is not within the adjustment standard.
Purpose:	To maintain proper vertical magnification.
Adjustment standard:	Less than ±1.0% difference between original and copy.
How:	SP43 changes the scanner speed compensation.

1. Turn the main switch off.
2. While pressing both "1" and "3" on the operation panel number keys, turn on the main switch.

   NOTE: Release the number keys after confirming that the Call Service indicator and the copy counter number "0" are blinking.
3. Enter "43" using the number keys and press the "#" key.
4. Press the "#" key again and place a 150 mm scale on the exposure glass perpendicular to the left scale.
5. Make a full size copy after the copier has warmed up.
6. Confirm that vertical magnification is within the adjustment standard.
7. If vertical magnification is not correct, go through the following steps.
   (1) Press the "#" key twice.
   (2) Change the vertical magnification setting displayed in the three digit indicator. Use the number keys and follow these rules:
   If the copy image is too short: increase the setting
   If the copy image is too long: decrease the setting

   NOTE: SP43 can be set between 0 and 15. Vertical magnification changes 0.2% per step.

   (3) Press the "#" key twice and then make a copy.
   (4) Confirm if vertical magnification is correct or not. If not, repeat the above steps from (1) to (3).
8. Turn the main switch off and on.

9.12 HORIZONTAL MAGNIFICATION ADJUSTMENT (SP44)

When:	If horizontal magnification is not within the adjustment standard.
Purpose:	To maintain proper horizontal magnification.
Adjustment standard:	Less than ±0.5% difference in full size mode between original and copy.
How:	SP44 changes the lens home position.

1. Turn the main switch off.
2. While pressing both "1" and "3" on the operation panel number keys, turn on the main switch.

   NOTE: Release the number keys after confirming that the Call Service indicator and the copy counter number "0" are blinking.
3. Enter "44" using the number keys and press the "#" key.
4. Press the "#" key again and place a 150 mm scale parallel to the left scale on the exposure glass.
5. Make a full size copy after the copier has warmed up.
6. Confirm that horizontal magnification is within the adjustment standard.
7. If horizontal magnification is not correct, go through the following steps:
   (1) Press the "#" key twice.
   (2) Change the horizontal magnification setting displayed in the three digit indicator. Use the number keys and follow these rules:
   If the copy image is too short: increase the setting
   If the copy image is too long: decrease the setting

   NOTE: SP44 can be set between 0 and 31. Horizontal magnification changes 0.2% per step.

   (3) Press the "#" key twice and then make a copy.
   (4) Confirm if horizontal magnification is correct or not. If not, repeat the above steps from (1) to (3).
8. Turn the main switch off and on.

9.13 FOCUS ADJUSTMENT IN FULL SIZE (SP47)

When: If the copy image in full size mode is out of focus. After adjusting horizontal magnification.

Purpose: To maintain correct focus in full size mode.

How: SP47 changes the 3rd scanner home position.

NOTE: Adjust focus by checking pictures on copies. Check the horizontal magnification after SP47, and adjust it if necessary.

SP47: Focus Adjustment
0 - 80 (40 = default), 0.6 mm per step

9.14 FOCUS ADJUSTMENT IN ENLARGE/REDUCTION (SP50)

When: If the copy image is out of focus in enlarge/reduction mode after adjusting SP43 (vertical magnification), SP44 (horizontal magnification), and SP47 (focus adjustment in full size).

Purpose: To maintain correct focus in enlarge/reduction mode.

How: SP50 changes the lens position 0.1% per step in enlarge/reduction mode.

NOTE: Normally the factory-set value is best for this adjustment.

SP50: Lens Error Correction
0 - 15 (8 = default, – 0.8% to + 0.7%)

9.15 VERTICAL MAGNIFICATION ADJUSTMENT IN DUPLEX/ OVERLAY MODE (SP45)

When: If vertical magnification is different between the first and second images in duplex/overlay mode.

Purpose: To equal vertical magnification between the first and second images in duplex/overlay mode.

How: SP45 increases vertical magnification for the first image to equal that for the second image.

NOTE: Normally in duplex/overlay mode, the first image is a little shorter than the second image in the paper travel direction, because paper length becomes a little shorter after fusing the first image. The second image is transferred on the copy paper before paper returns to normal length as it does under normal condition.
This adjustment is not to make vertical magnification accurate, but to make the first and the second images fit, especially in overlay mode. Since copies cannot be made in this SP mode, turn the main switch off and on, and make a copy to check the results of the adjustment.

SP45: Duplex Magnification

0	1	2	3	4	5	6	7	8	9	10
+0.4%	No Correction	+0.2%	+0.6%	+0.8%	+1.0%	+1.2%	+1.4%	+1.6%	+1.8%	+2.0%

9.16 LEAD EDGE REGISTRATION ADJUSTMENT (SP42)

When: If lead edge registration is not within the adjustment standard.

Purpose: To maintain a proper lead edge registration.

Adjustment standard: 0 ±2 mm (0 ±0.08")

How: SP42 changes the registration roller start timing.

SP42: Registration
0 - 15 (8 = default, – 4.0 mm to +3.5 mm), 0.5 mm per step

9.17 LEAD EDGE ERASE MARGIN ADJUSTMENT (SP41)

When:	If lead edge erase margin is not within the adjustment standard.
Purpose:	To maintain a proper lead edge erase margin.
Adjustment Standard:	2.5 ±1.5 mm (0.1 ±0.06")
How:	SP41 changes the erase lamp off timing.

SP41: Lead Edge Erase
0 - 15 (8 = default, – 4.0 mm to +3.5 mm), 0.5 mm per step

9.18 SIDE-TO-SIDE REGISTRATION ADJUSTMENT

9.18.1 Lens Position Adjustment

When:	If side-to-side registration is not within the adjustment standard, and image shift direction (to the front or to the rear) is the same from every paper feeding stations.
Purpose:	To maintain proper side to side registration from every feeding stations.
Adjustment standard:	0 ±2 mm (0 ±0.08")
How:	Change the lens position perpendicular to the paper travel direction. This will shift the image on the drum perpendicular to the paper travel direction.

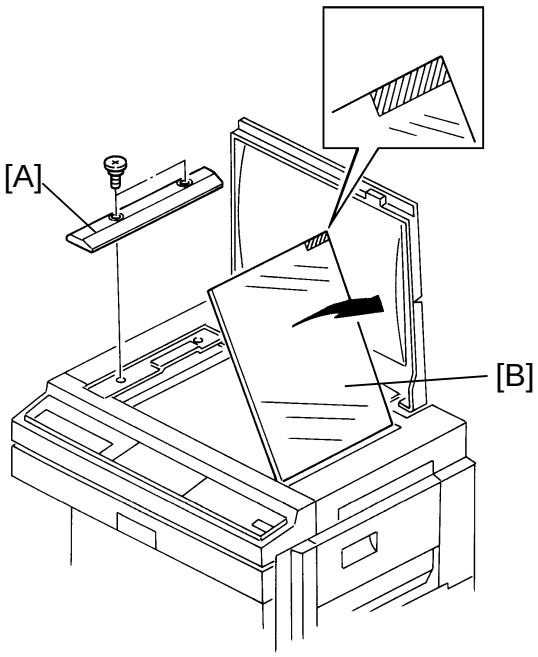

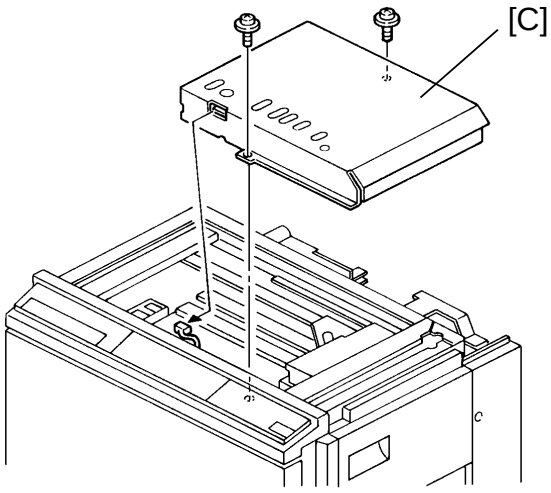

1. Turn off the main switch.
2. Remove the left scale [A] (2 stepped screws) and the exposure glass [B].
3. Remove the lens cover [C] (2 screws and 1 connector)

   NOTE: Be careful not to damage the exposure lamp harness.

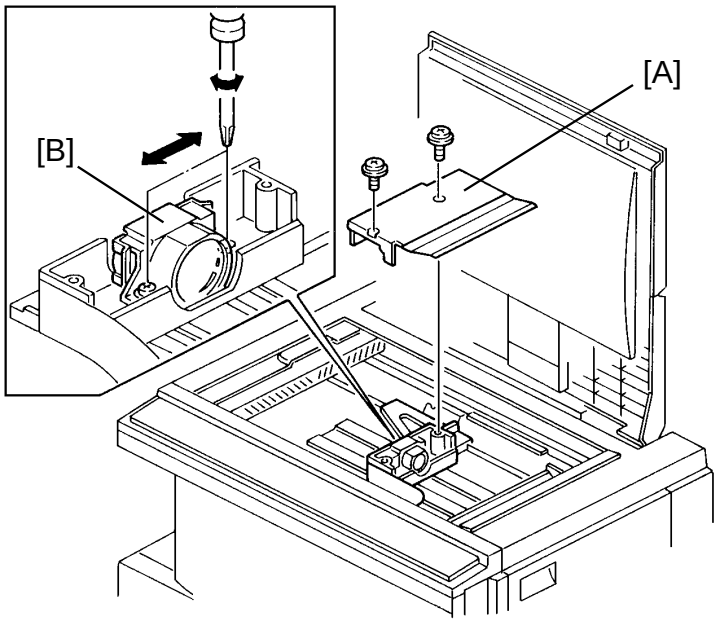

4. Remove the small lens cover [A] (2 screws).
5. Mark the original position of the lens assembly on the lens bracket.
6. Loosen the 2 screws, shift the lens assembly [B] according to the following rule, and tighten the screws.
   If the image is shifted to the rear: shift the lens assembly to the front.
   If the image is shifted to the front: shift the lens assembly to the rear.
7. Place the exposure glass and turn on the main switch.
8. Make a copy and check the results of the adjustment.
9. If the adjustment is still not correct shift the lens position again.

CAUTION: Be sure that the main switch is off when adjusting.

10. Reassemble the copier.

9.18.2 Tray Side Fence Adjustment

When:	If side-to-side registration on copies fed from a paper tray is not within the adjustment standard.
Purpose:	To maintain proper side to side registration from a paper tray.
Adjustment standard:	0 ±2 mm (0 ±0.08")
How:	Change the side fence position perpendicular to the paper travel direction. This will shift the paper position in a paper tray perpendicular to the paper travel direction.

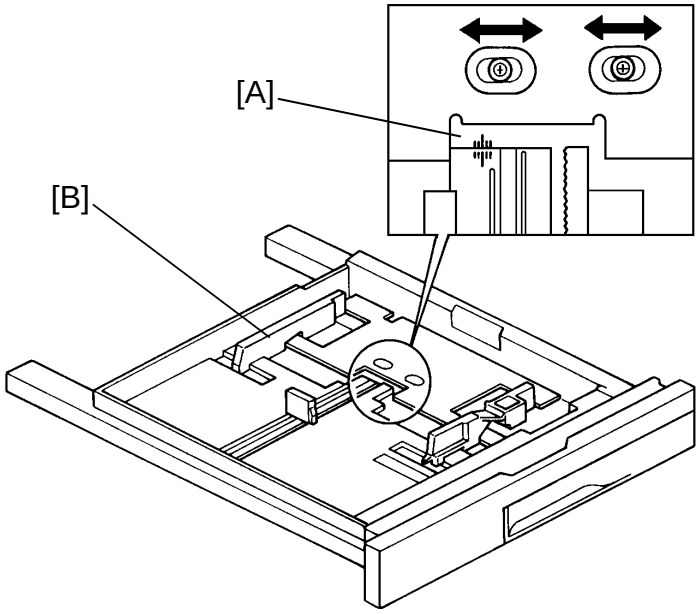

1. Pull the paper tray out.
2. Move the side fences to B4/8 1/2" x 11" paper size position to access the fixing screws through the holes of the bottom plate.
3. Loosen the 2 screws fixing the side fence positioning plate [A].
4. Move the rear side fence [B] to the desired position and tighten the screws.

9.18.3 Duplex Tray Side Fence Adjustment

When: If side-to-side registration of the second image in multiple 2-sided copying mode is not within the adjustment standard.

Purpose: To maintain proper side to side registration of the second image in 2-sided copying mode.

Adjustment standard: 0 ±2 mm (0 ± 0.08")

How: Change the duplex side fence position perpendicular to the paper travel direction. This will shift the paper position in a duplex tray perpendicular to the paper travel direction.

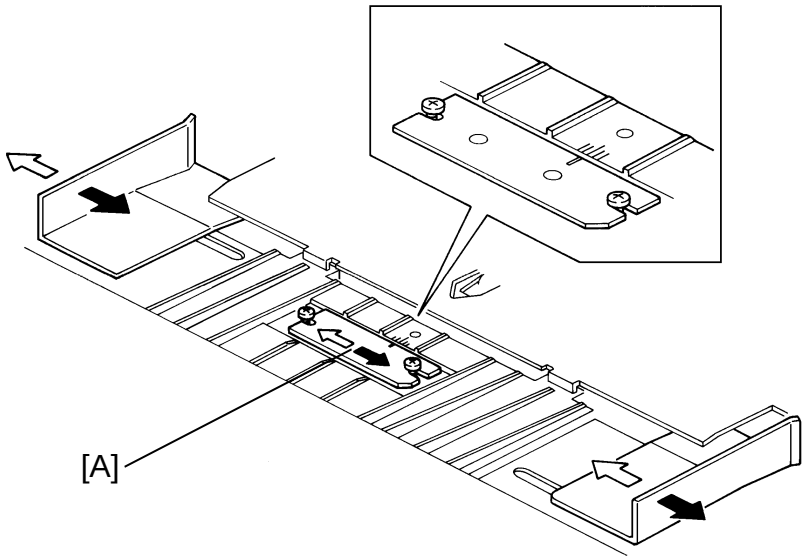

NOTE: This adjustment is not effective for copies in single 2-sided copying mode and overlay mode.

1. Pull the duplex tray out, and lift up the upper and lower paper guide plates.
2. Loosen the 2 screws fixing the side fence positioning plate [A].
3. Move the side fence positioning plate to the desired position and tighten the screws.

9.18.4 LCT Side to Side Registration Adjustment

When:	If side-to-side registration on copies fed from the large capacity tray is not within the adjustment standard
Purpose:	To maintain proper side to side registration from the large capacity tray.
Adjustment standard:	0 ±2 mm (0 ±0.08")
How:	Change the LCT unit fixing position perpendicular to the paper travel direction. This will shift the paper position perpendicular to the paper travel direction.

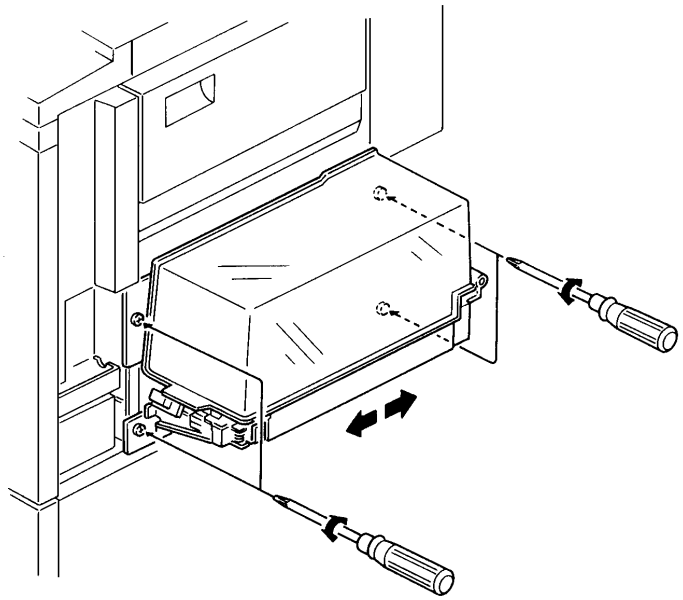

1. Remove the following covers:
   LCT front cover, LCT rear cover, right front lower cover, and right rear lower cover
2. Loosen the 4 screws fixing the LCT unit to the copier frame.
3. Move the whole LCT unit to the desired position and tighten the screws.
4. Reinstall the covers.

9.19 3RD SCANNER HEIGHT ADJUSTMENT

When:	If skewed images appear after adjusting the 1st and 2nd scanner positions.
Purpose:	To maintain proper copy image.
How:	Turn the 3rd scanner height adjustment screw. This changes the 3rd scanner's height.

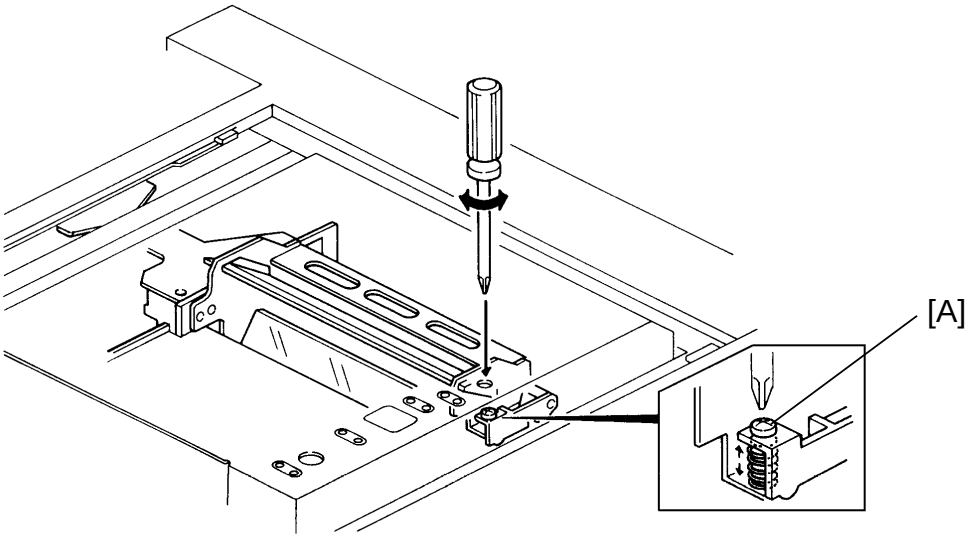

CAUTION: Never perform this adjustment unless you have positively verified that the source of the skewing of image is optical and not in the paper path.

1. Turn off the main switch and remove the exposure glass.
2. Adjust the 3rd scanner's height by turning the adjusting screw [A].

9.20 OVERLAP/WHITE MARGIN SELECTION IN OVERLAY MODE (SP24)

When: If a customer wants a white frame on the border line when using "Black-in area" and "Color-in area" mode. (This is applied only when the editor is installed.)

Purpose: To satisfy the customer’s requirement.

How: SP24 change the ON number of LED blocks of the edit erase lamp unit and the ON timing for the first and second image in "Black-in area" and "Color-in area" mode.

NOTE: The normal setting is no white frame on the border line. Color and black images may overlap by 5 mm at most because of side to side image shift between the first and second images.

SP24: Overlay Border Erase
0: NO (No border erase)
1: YES (Border erase)

10. OTHERS

10.1 OZONE FILTER REPLACEMENT

10.1.1 Fusing Exhaust Fan Filter

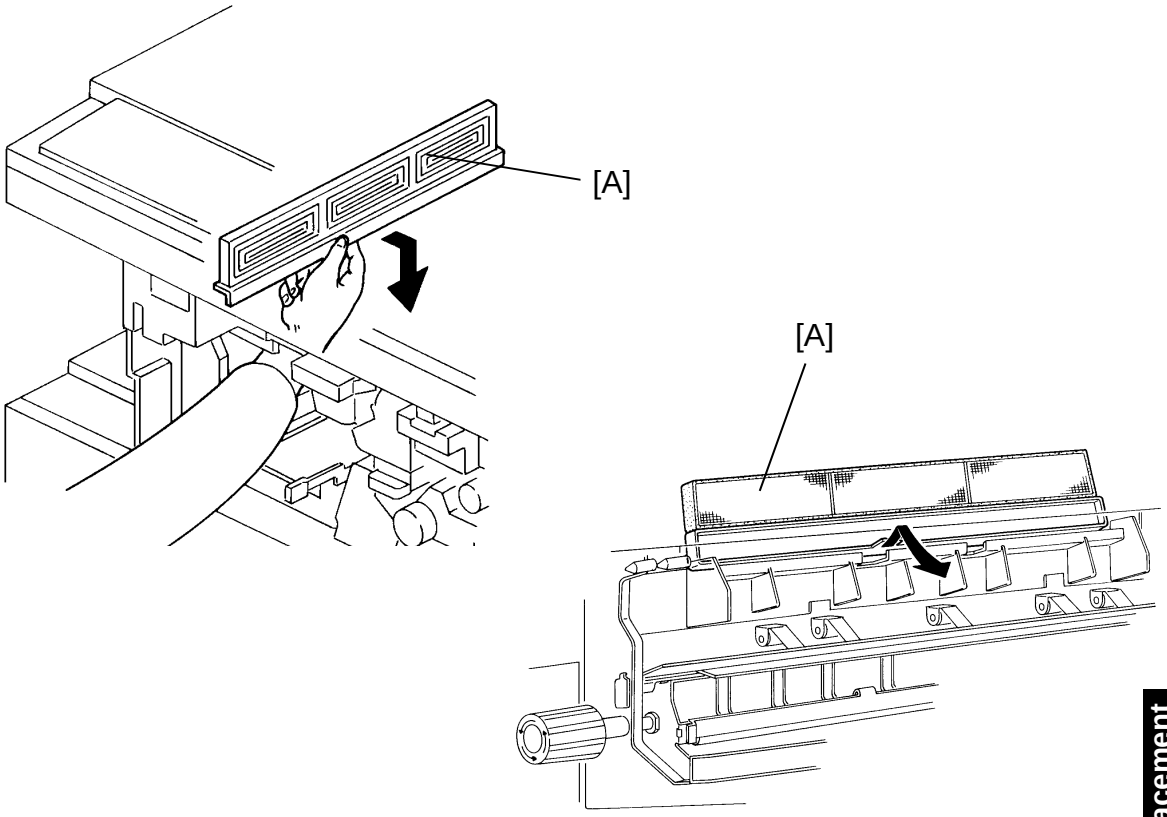

1. Turn off the main switch.
2. Open the front door and remove the fusing unit.
3. While holding up the ozone filter [A] slightly slide it out as shown.
4. Replace the ozone filter.

   NOTE: The PM interval of this ceramic ozone filter is 400K copies.

10.1.2 Vacuum Fan Filters

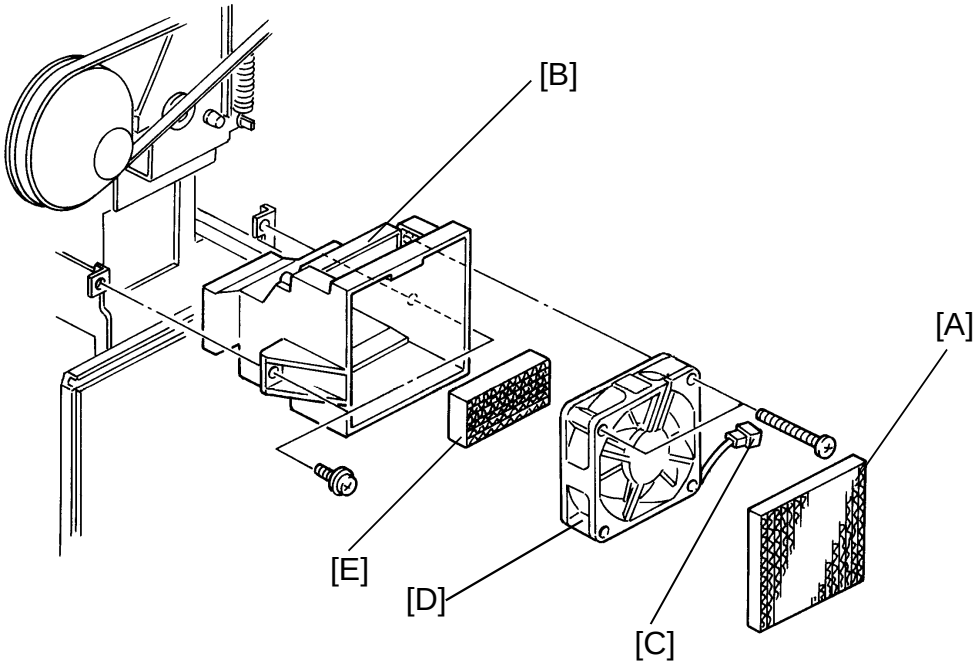

1. Turn off the main switch.
2. Remove the rear cover.
3. Remove the ozone filter [A]

   NOTE: The PM interval of this paper ozone filter is 80K copies.
4. Swing out the dc power supply board.
5. Unhook the high voltage cables from the vacuum fan bracket [B] and disconnect the vacuum fan harness [C] (1 connector).
6. Remove the vacuum fan bracket (2 screws).
7. Remove the vacuum fan [D] (2 screws).
8. Replace the ozone filter [E].

   NOTE: The PM interval of this ceramic ozone filter is 400K copies.
9. Reinstall the vacuum fan and install the new ozone filter.

10.1.3 Optics Cooling Fan Filter

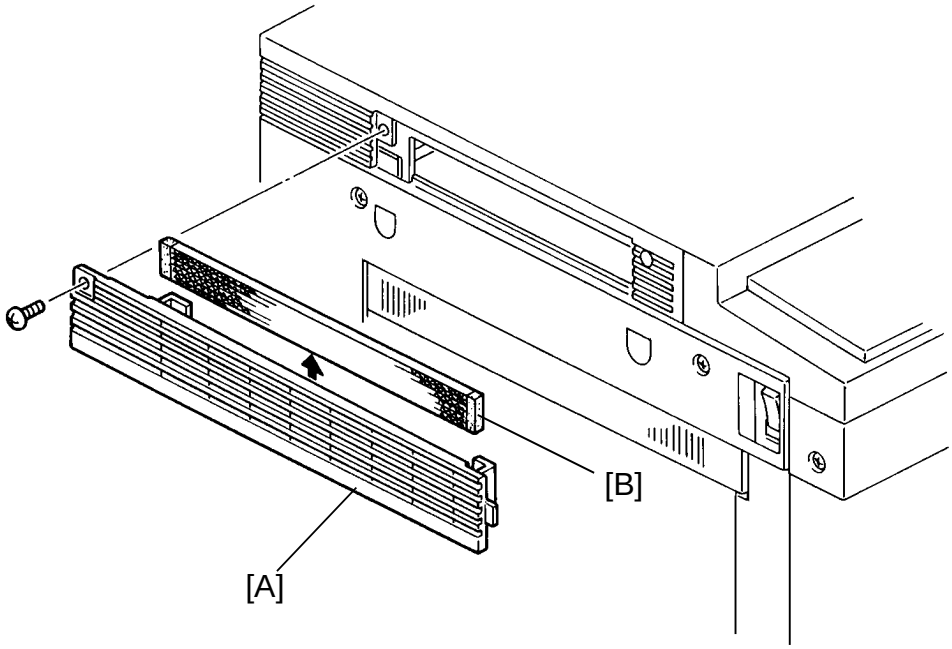

1. Remove the optics left cover [A] (1 screw).
2. Replace the ozone filter [B].

   NOTE: The PM interval of this paper ozone filter is 80 k copies.

10.2 MAIN CONTROL BOARD REPLACEMENT

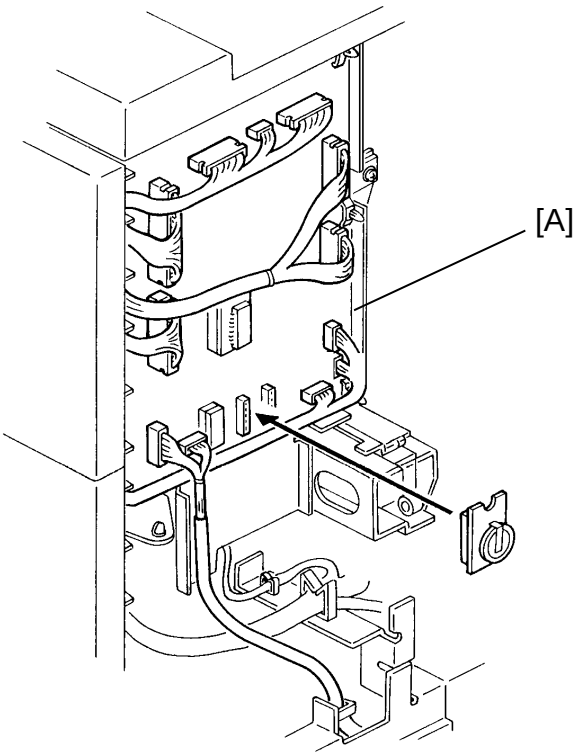

1. Turn off the main switch and unplug the power cord.
2. Remove the rear cover.
3. Disconnect the harnesses (11 connectors) from the main control board [A].
4. Replace the main control board (6 locking supports).
5. Remove the RAM board from the old main control board and install it on the new board.

10.3 RAM BOARD REPLACEMENT

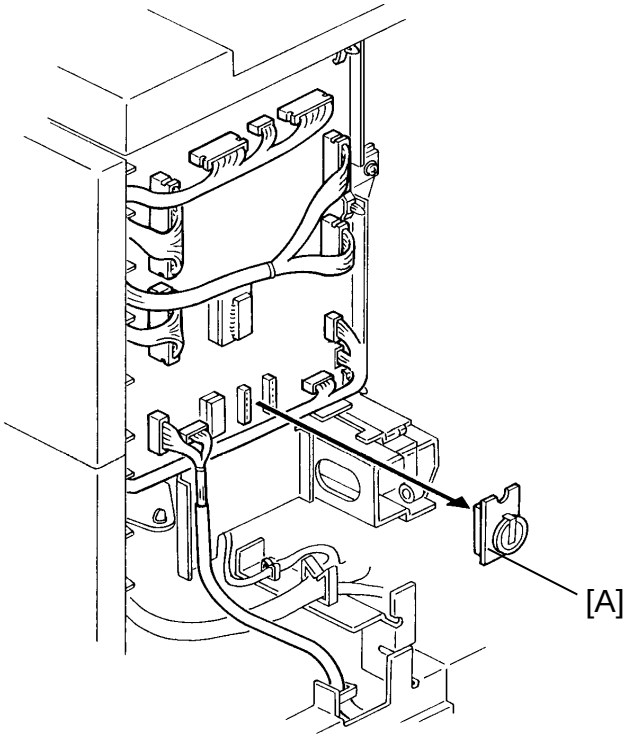

1. Turn off the main switch and unplug the power cord.
2. Remove the rear cover.
3. Replace the RAM board [A].
4. Reassemble the copier and plug it in.
5. Perform the memory all clear (SP99) and follow the necessary procedure (see Memory All Clear Procedure in Service Program Mode of Service Table section).

10.4 OPERATION PANEL REMOVAL

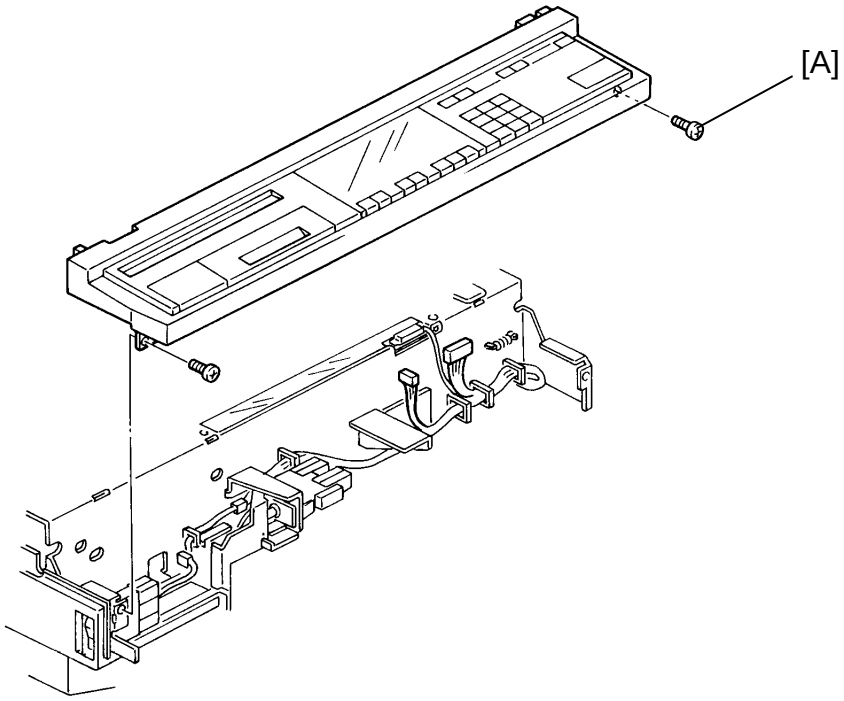

1. Turn off the main switch.
2. Remove the front door and the upper front cover.
3. Remove the operation panel [A] (4 screws, 2 connectors).

10.5 HIGH VOLTAGE SUPPLY BOARD - CTBG REPLACEMENT

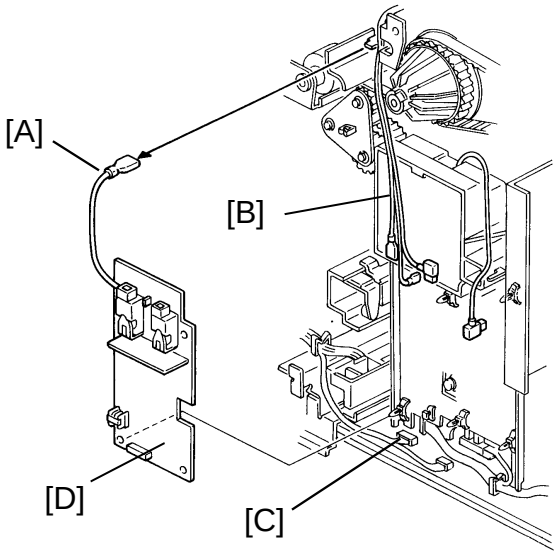

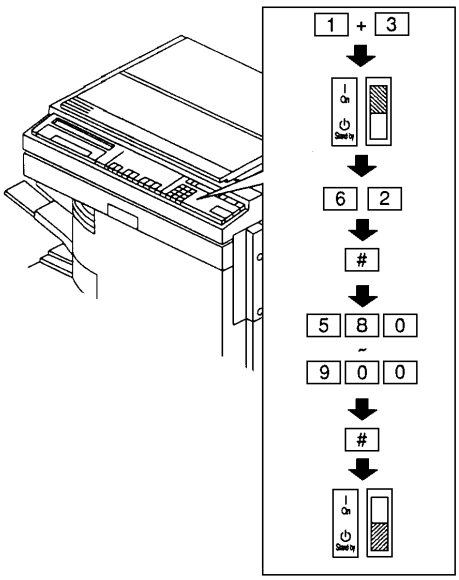

1. Turn off the main switch and unplug the power cord.
2. Remove the rear cover.
3. Swing out the main control board assembly (1 screw).
4. Disconnect the bias cable [A] (1 connector, 1 harness lamp).
5. Disconnect the 3 high-voltage cables [B] and a harness [C].
6. Replace the CTBG power pack [D] (3 locking supports).
7. Reassemble the machine.
8. Plug in the power cord.
9. While pressing both "1" and "3" on the operation panel number keys, turn on the main switch in order to access the SP mode.

   NOTE: Release the number keys after confirming that the Call Service indicator and the copy counter number "0" are blinking.
10. Enter "62" (grid voltage setting mode) using the number keys and press the enter key.
11. Enter the new grid voltage correction data labeled on the board using the number keys and press the enter key.
12. Adjust the transfer corona current.
    (See T/S corona current auto adjustment.)
13. Enter the factory set data for the separation corona current by SP163 and SP164 if the high voltage supply board – D is the original one.

10.6 HIGH VOLTAGE SUPPLY BOARD – D REPLACEMENT

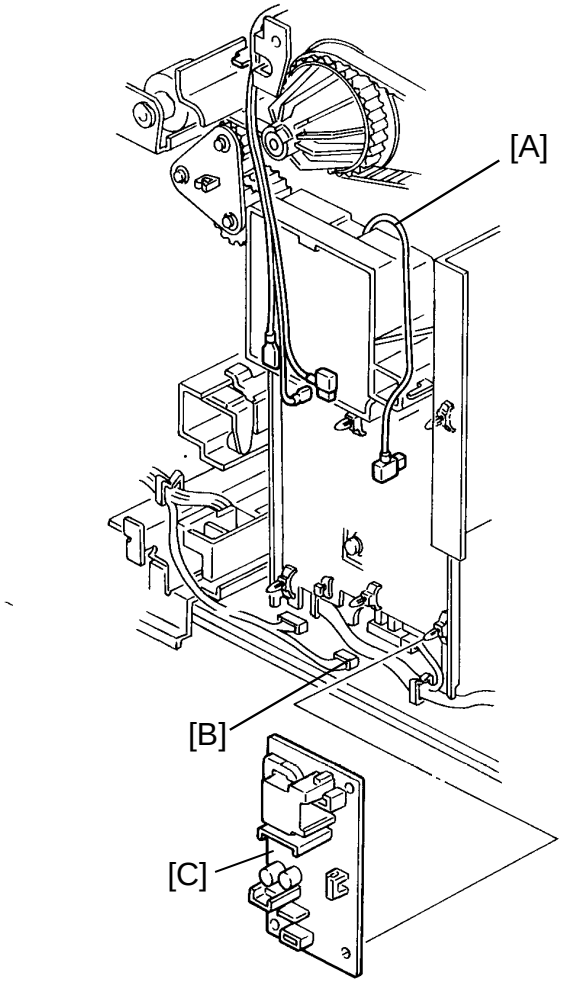

1. Turn off the main switch and unplug the power cord.
2. Remove the rear cover.
3. Disconnect the high-voltage cable [A] and a harness [B] (2 connectors).
4. Replace the high voltage supply board – D [C] (3 locking supports).
5. Adjust the separation corona current.
   (See T/S corona current auto adjustment.)
6. Enter the factory set data for the transfer corona current by SP162 if the high voltage supply board - CTBG is the original one.

10.7 T/S CORONA CURRENT AUTO ADJUSTMENT (SP57)

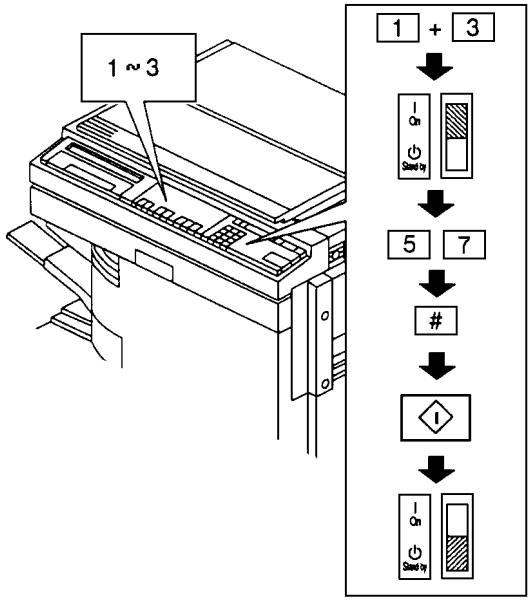

NOTE: 1. Setting data of SP62 must be done, before performing the T/S corona current auto adjustment.
2. Adjust the corona current only when a high voltage supply board is replaced.
3. When adjusting the corona current, the drum and T/S corona wires must be replaced with new ones and the T/S corona unit must be cleaned.

1. While pressing both "1" and "3" on the operation panel number keys turn on the main switch in order to access the SP mode.

   NOTE: Release the number keys after confirming that the Call Service indicator and the copy counter number "0" are blinking.

2. Enter "57" (Auto drum current adjustment) using the number keys and press the enter key.

3. Press the start key. The adjustment condition will be displayed with the following data in the magnification three digit indicator.

Data	Condition
1	Measuring and adjusting the transfer corona current
2	Measuring and adjusting the corona current
3	Finish the T/S corona current adjustment

(The copier starts the adjustment, this lasts about 10~20 seconds, and the beeper sounds twice when it is finished.)

4. Turn the main switch off.

10.8 DC POWER SUPPLY BOARD REPLACEMENT

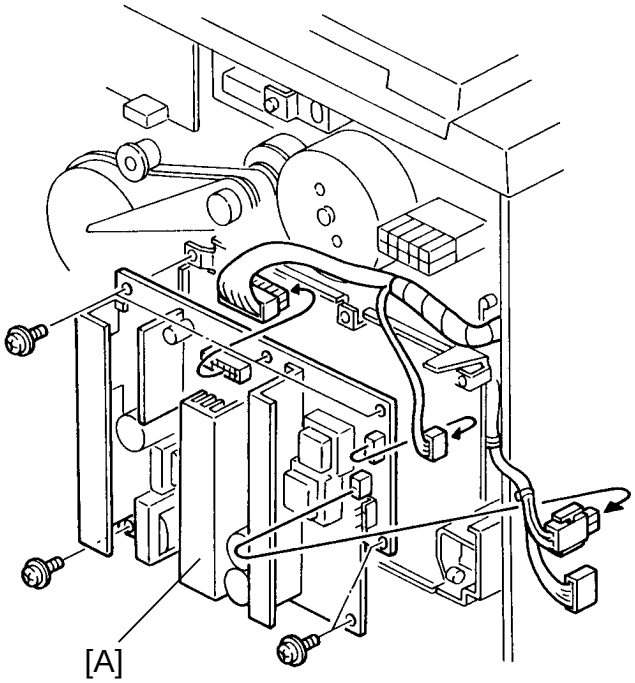

NOTE: 1. Check the fuses (F1, F2, F3, and F4) on the board before determining that the dc power supply board is defective.
2. When checking if the dc power supply board is defctive or not by installing the board on another machine, wait for 10 minutes before turning on the main switch. Because if the over voltage protection circuit functions, the dc power supply board cuts its output and it takes a maximum of 10 minutes to recover by discharging the capacitors.

1. Turn off the main switch and unplug the power cord.
2. Remove the rear cover.
3. Remove the dc power supply board [A] (5 screws and 4 connectors).

SECTION 6

TROUBLESHOOTING

1. INTRODUCTION

This troubleshooting guide is compiled to help field engineers solve some of the more common field problems. However, it does not cover all the potential problems. We request your help in improving our troubleshooting documentation. Whenever you encounter new field problems, please submit detailed reports to the nearest service support office. We will then issue additional troubleshooting information based on reports from you and other field service engineers around the world.

1. The following is a comparison table showing the area you should check first if you have image problems at periodic intervals.

Interval of Image Problem	Possible Cause
251mm/9.89"	Drum
125.5mm/4.94"	Hot roller or Pressure Roller

2. If the problem is related to electrical circuit boards, first disconnect, then reconnect the connectors before replacing the PCBs. (In case of the dc power supply board, refer to NOTE in the replacement procedure.)

2. COPY QUALITY

2.1 BLANK COPY (WHITE COPY)

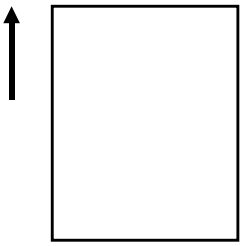

- Phenomenon -

White or almost white copy.

- Possible Causes -

1. Charge is not applied.
   - High voltage supply board - CTBG (charge or grid) failure
   - Poor contact of high voltage lead wires
   - Broken charge corona wire
   - Leak in insulator or endblock

2. Copy image is not transferred to the paper.
   - High voltage supply board - CTBG (transfer) failure
   - Poor contact of high voltage lead wires
   - Poor contact of transfer corona wire
   - broken transfer corona wire
   - Leak in insulator or endblocks

3. Development roller does not rotate.
   - Broken drive gears
   - Defective development unit drive clutch

4. Poor drum sensitivity.
   - Drum exposed to fluorescent light or direct sunlight for long period of time.
   - Drum exposed to ammonia gas or fumes for a long period of time.

5. Drum does not rotate.

- Action -

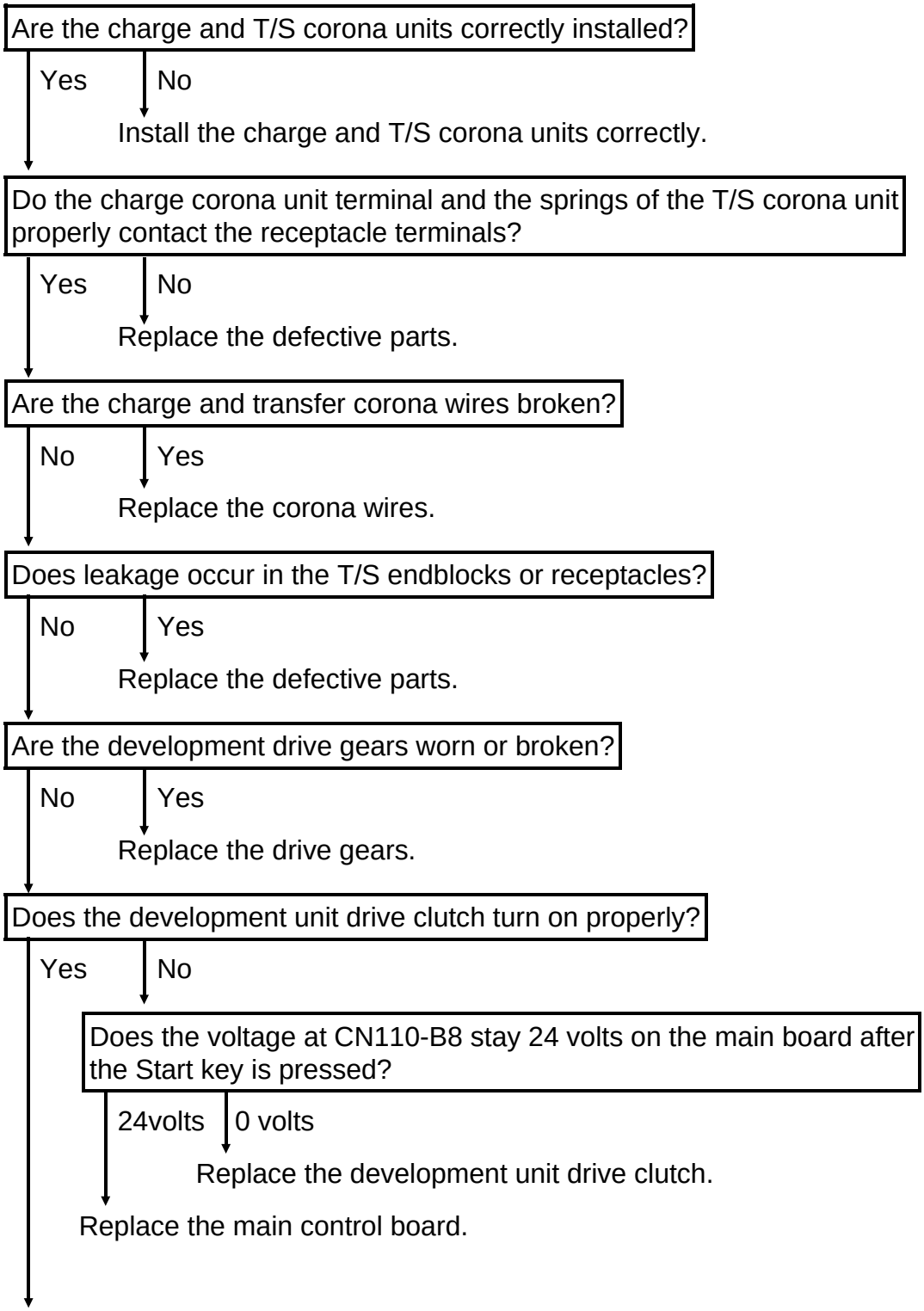
Are the charge and T/S corona units correctly installed?
Yes
No
Install the charge and T/S corona units correctly.
Do the charge corona unit terminal and the springs of the T/S corona unit properly contact the receptacle terminals?
Yes
No
Replace the defective parts.
Are the charge and transfer corona wires broken?
No
Yes
Replace the corona wires.
Does leakage occur in the T/S endblocks or receptacles?
No
Yes
Replace the defective parts.
Are the development drive gears worn or broken?
No
Yes
Replace the drive gears.
Does the development unit drive clutch turn on properly?
Yes
No
Does the voltage at CN110-B8 stay 24 volts on the main board after the Start key is pressed?
24volts
0 volts
Replace the development unit drive clutch.
Replace the main control board.

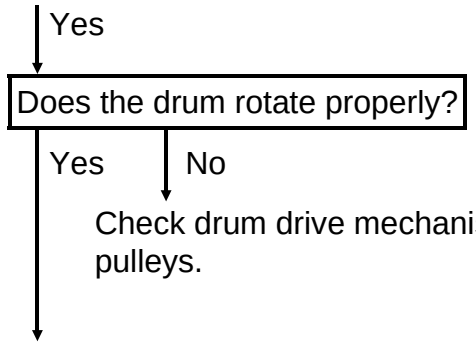

Check the following points:

- CN103-4 (Charge/grid trigger line)
  (1) If the signal stays HIGH after the Start key is pressed, replace the main control board.

  (2) If the charge corona does not turn on even if the signal changes to LOW, replace the high voltage supply board - CTBG.

- CN103-2 (Transfer trigger line)
  (1) If the signal stays HIGH after the Start key is pressed, replace the main control board.

  (2) If the transfer corona does not turn on even if the signal changes to LOW, replace the high voltage supply board - CTBG.

If there is no problem with the signal lines, replace the drum if the sensitivity does not recover even when the drum is not exposed to light.

2.2 DIRTY BACKGROUND

- Phenomenon -

1. Dirty background at image density level 4 (manual setting).

2. ADS copies have a dirty background.

- Possible Causes -

1. V_L correction failure
   - Very dirty optics (V_L correction cannot compensate).
   - Deteriorated exposure lamp (maximum output cannot give sufficient light intensity).
   - Failure of the dc power supply board.
   - Dirty erase lamp unit.

2. V_R correction failure
   - High voltage supply board - CTBG (development bias) failure.
   - Poor contact of development bias.
   - The development bias is grounded.

3. OPC drum is not grounded properly.

4. ADS mode
   - Improper ADS Density setting (SP34).
   - ADS Sensor board failure.
   - High voltage supply board - CTBG failure.
   - Incorrect adjustment of ADS sensor (SP56/SP167).

5. High toner density
   - Improper setting of grid bias correction data (SP62).
   - Improper grid bias setting (SP161).
   - Improper ID sensor pattern bias (SP33/75).
   - Dirty erase lamp unit.

- Action -

Make a copy in reduction mode at manual image density level 4.

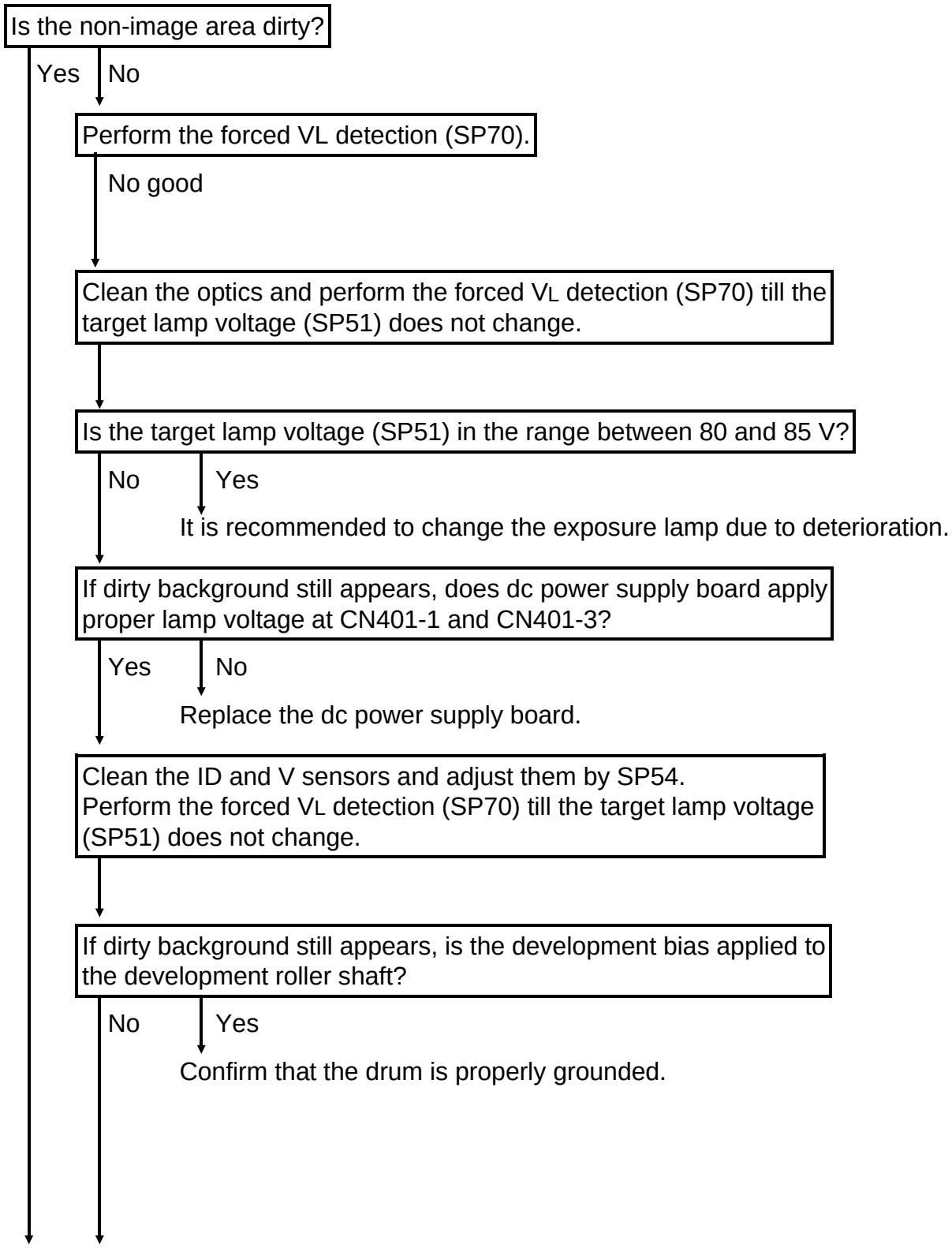

Yes No

Check the continuity between the development roller shaft and the development bias terminal

Good No good

Repair the harness or terminals.

Is the signal at CN108-3 LOW after the start key is pressed?

Yes No

Replace the main control board.

Replace the high voltage supply boar - CTBG.

Is the used toner tank full?

No Yes

Empty the used toner tank, clean the cleaning unit, and reset the toner end counter (SP83).

Is the cleaning blade or cleaning brush worn?

No Yes

Replace the cleaning blade or the cleaning brush, or both.

Are the erase lamp, quenching lamp and/or toner shield glass dirty?

No Yes

Clean the erase lamp, quenching lamp, the toner shield glass, as required.

If toner scattering occurs, see the toner scattering section.

If dirty background occurs only in ADS mode, do the following:

- If the ADS voltage (SP167) is not within 1.5 ± 0.1 volts standard voltage, readjust the ADS voltage (SP56).
- Change the setting of ADS density (SP34) from 0 (Normal) to 2 (Lighter).

2.3 UNEVEN IMAGE DENSITY

- Phenomenon -

Uneven image density appears on copies.

- Possible Cause -

1. Dirty optics
2. Improper position of exposure adjustment plates
3. Dirty corona wires or grid plate
4. Uneven height of charge corona wire
5. Improper function of cross mixing in the development unit

- Action -

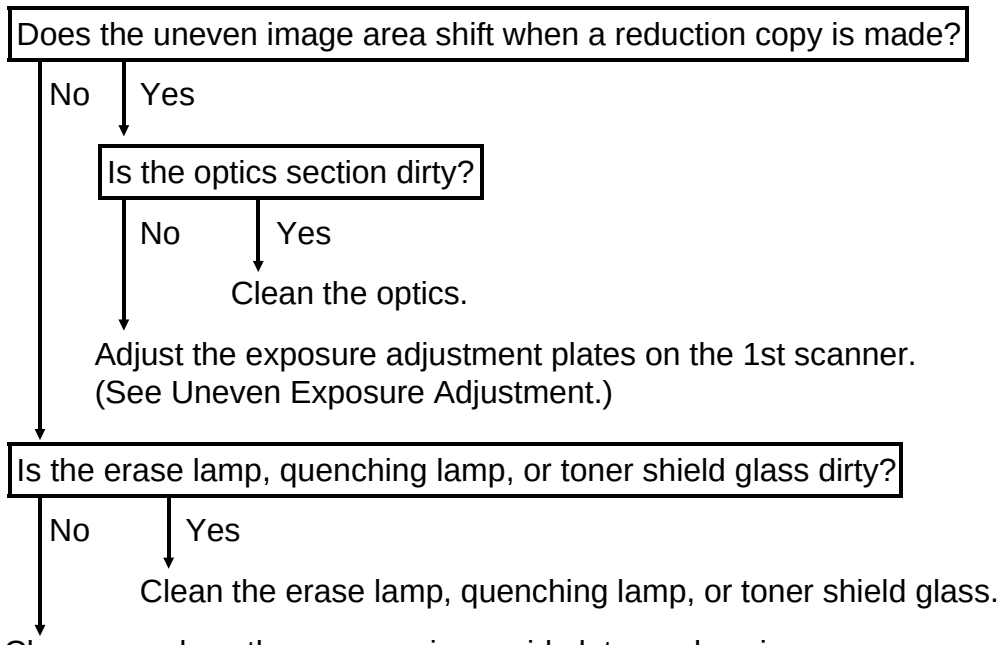

2.4 VERTICAL BLACK BANDS

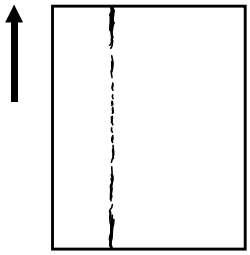

- Phenomenon -

Vertical black bands appear on the copy.

- Possible Causes -

1. Dirty optics
2. Dust between the cleaning blade and drum
3. Edge of the cleaning blade deformed
4. Deformed cleaning brush
5. Deformed inlet seal on the development unit

- Action -

Do the black bands shift when a reduction copy is made?

No ↓ Yes ↓

Check and clean the optics section (including the toner shield glass).

Press the blade release lever several times to clean the edge of the cleaning blade. If black bands still appear, go to the next step.

↓

Is the edge of the cleaning blade deformed?

No ↓ Yes ↓

Replace the cleaning blade.

Is the cleaning brush deformed?

No ↓ Yes ↓

Replace the cleaning brush.

If the inlet seal on the development unit is deformed, replace the inlet seal plate and the seal as a set.

2.5 VERTICAL BLACK LINES

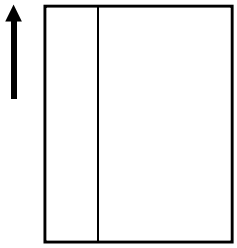

- Phenomenon -

Thin black lines appear on the copy.

- Possible Causes -

1. Scratched cleaning blade
2. Dirty or scratched mirrors
3. Scratched or dirty drum
4. Scratched hot roller

- Action -

Do the black lines shift when a reduction copy is made?

No

Yes

Clean or replace the exposure glass or mirrors.

Is the toner shield glass or green filter scratched?

No

Yes

Replace the toner shield glass or green filter.

Is the edge of the cleaning blade scratched?

No

Yes

Replace the cleaning blade.

Is the hot roller scratched?

No

Yes

Check whether black lines appear on the copy by stopping the copy paper in the transport section. If no black lines appear, replace the hot roller.

Check whether the drum is scratched or toner is built-up on the drum.

- If toner is built-up on the drum, clean the drum with a dry clotch or wet cotton.
- If the drum is scratched, replace the drum.

2.6 VERTICAL WHITE LINES OR BANDS—1 (DULL OR BLURRED)

- Phenomenon -

Dull or blurred white lines appear on the copy.

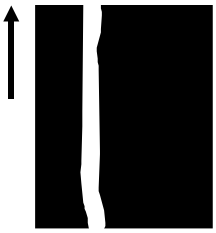

- Possible Causes -

1. Dirty or deteriorated charge corona wires
2. Dirty or deformed grid plate
3. Damp or deformed inlet seal on the development unit

- Action -

Are the charge corona wires or grid plate dirty?

No

Yes

Clean the charge corona wires or grid plate.

Is the inlet seal damp or deformed.

No

Yes

Clean the inlet seal with a dry cloth. If the problem is not corrected, replace the inlet seal plate and the seal as a set.

Is the grid plate deformed?

No

Yes

Replace the grid plate.

Replace the charge corona wire.

2.7 VERTICAL WHITE LINES OR BANDS—2 (THIN, DISTINCT)

- Phenomenon -

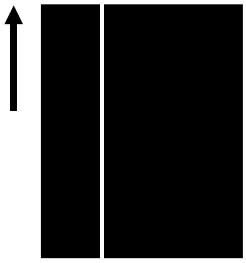

Vertical white lines appear on the copy.

- Possible Causes -

1. Paper dust on the edge of the cleaning blade
2. Scratched drum
3. Scratched hot roller

- Action -

Press the cleaning blade release lever several times. Make a copy and if white lines still appear, go to the next step.

↓

Make a copy and stop the machine when the paper reaches the transport section. Do white lines appear on the copy?

No ↓

Yes ↓

Replace the drum if it is scratched.

Replace the hot roller if it is scratched.

NOTE: If the drum is scratched, find out what caused the scratches on the drum and correct the problem.

- Paper Misfeed
- Incorrect positioning of the pick-off pawls
- Foreign substances on the cleaning brush or blade
- Carrier leakage

2.8 HORIZONTAL BLACK/WHITE LINES

- Phenomenon -

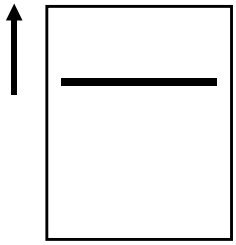

Black or white lines perpendicular to the paper feed direction appear on the copy image.

- Possible Causes -

1. Drum is scratched.
   If black lines appear at 251 mm (9.89") intervals, the cause is a scratched drum or toner build up.
2. Hot roller is scratched.
   If black lines appear at 125.5 mm (4.94") intervals, the cause is a scratched hot roller.
3. Toner adheres to the drum surface.
   Due to insufficient cleaning, foreign matter may accumulate on the blade, causing toner to stick to the drum surface when the drum stops.

- Action -

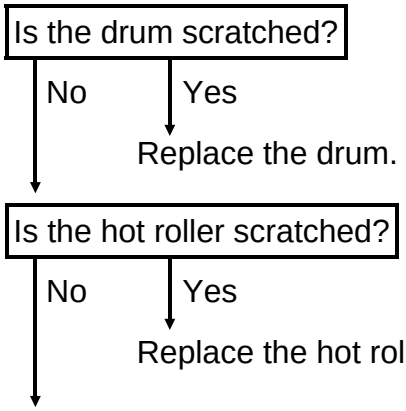

If toner adheres to the drum surface, clean the drum with wet cotton. Also clean or replace the cleaning blade and/or cleaning brush.

2.9 BLACK SPOTS ON THE COPY IMAGE

- Phenomenon -

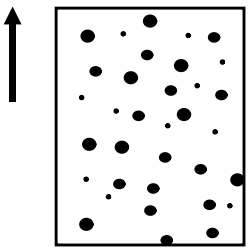

The grid voltage is not applied correctly.

- Poor contact between the charge corona casing and grid plate
- High voltage supply board - CTBG defective
- Main control board defective

- Action -

Is there good electrical contact between the charge corona casing and the grid plate?

Yes

No

Repair the poor contact and replace any parts if needed.

Check the voltage at CN103-4 on the main control board.

0 volt

Not 0 volt

Replace the main control board.

Replace the high voltage supply board - CTBG.

2.10 SKEWED (OPTICAL) COPY IMAGE

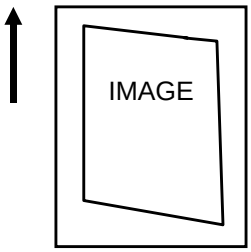

- Phenomenon -

The copy image is skewed (parallelogram shape).

The sides of the copy image are straight, but the leading and trailing edges are skewed.
(This differs from skewing originating in the paper path type of skewing.)

- Possible Causes -

1. 1st and 2nd scanners are positioned improperly.
2. 3rd scanner is not parallel with the 1st and 2nd scanners.
3. Mirrors are in the wrong position.
4. The stubs of the 3rd scanner is off the rails.

- Action -

Are the 1st and 2nd scanners properly positioned ?

Yes

No → Reposition the scanners correctly.

Is each mirror positioned correctly on its scanner?

Yes

No → Reposition the mirror correctly. If the spring plates are defective, replace them.

Are the stubs of the 3rd scanner assembly off the rails?

No

Yes → Put the mirror assembly stubs back on the rails.

Readjust the height of the 3rd scanner by turning the adjusting screw.

Trouble-shooting

2.11 TONER DENSITY TOO HIGH

- Phenomenon -

1. Dirty background appears on the copy.
2. The image density of black solid areas is too high.
3. Toner has built up on the endblock cover of the T/S corona unit and also on the PTL top mylar.

- Possible Causes -

1. Toner supply clutch keeps on turning continuously.
2. Copier is in abnormal fixed toner supply mode.
3. Main Control board is defective.
4. ID sensor pattern bias is too low.
5. ID sensor grid bias voltage is too low.

- Action -

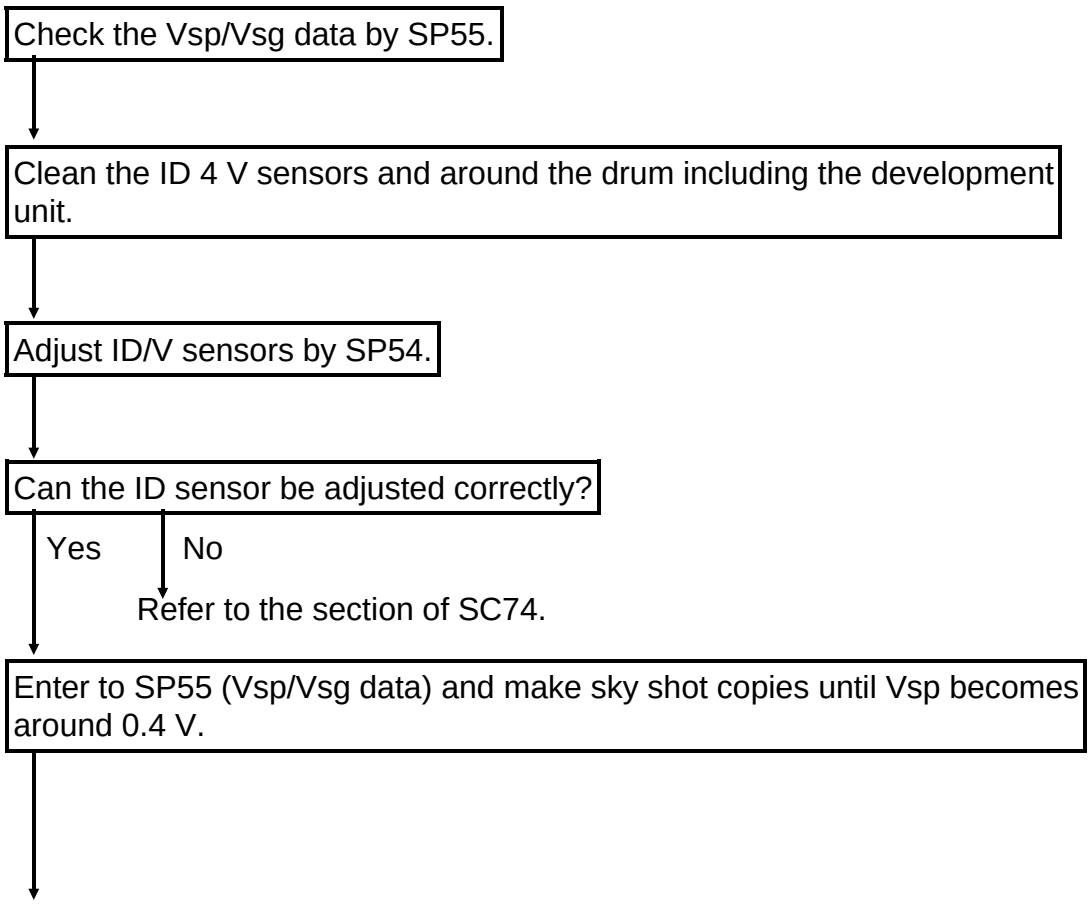

Make copies with a test chart and monitor the Vsp value and the toner supply clutch function.

Is the toner supply clutch controlled properly?

Yes

No

Is the voltage at CN110-B9 alway LOW?

Yes

No

Replace the toner supply clutch.

Replace the main control board.

Is the grid reference voltage (SP62) correctly set?

Yes

No

Set the correct data in SP62, refering to the label on the high voltage supply board - CTBG.

Is the grid voltage data (SP161) correctly set?

Yes

No

Set the factory set data in SP161 if the high voltage supply board - CTBG is the original one. If not, set 500.

Is the copier in fixed supply mode?

No

Yes

Change data of SP30 to "0".

Change the setting of ID sensor pattern bias (SP33 for black and SP75 for color) to the lighter one.

2.12 TONER DENSITY TOO LOW

- Phenomenon -

1. Light copy
2. Carrier is on the copy.
3. Light spots appear in black solid areas.

- Possible Causes -

1. Toner supply clutch does not rotate.
2. Copier is in the (abnormal) fixed toner supply mode.
3. Main control board is defective.
4. ID sensor pattern bias is too high.
5. ID sensor grid bias voltage is too high.

- Action -

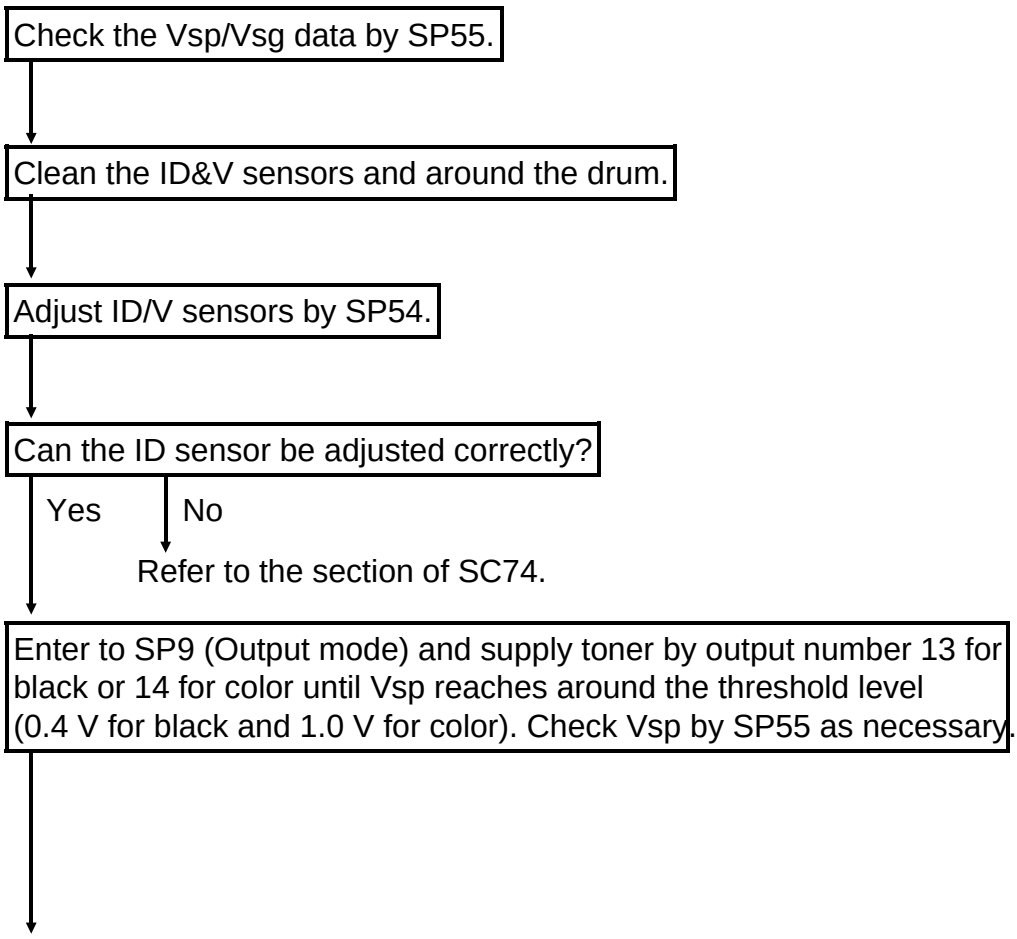

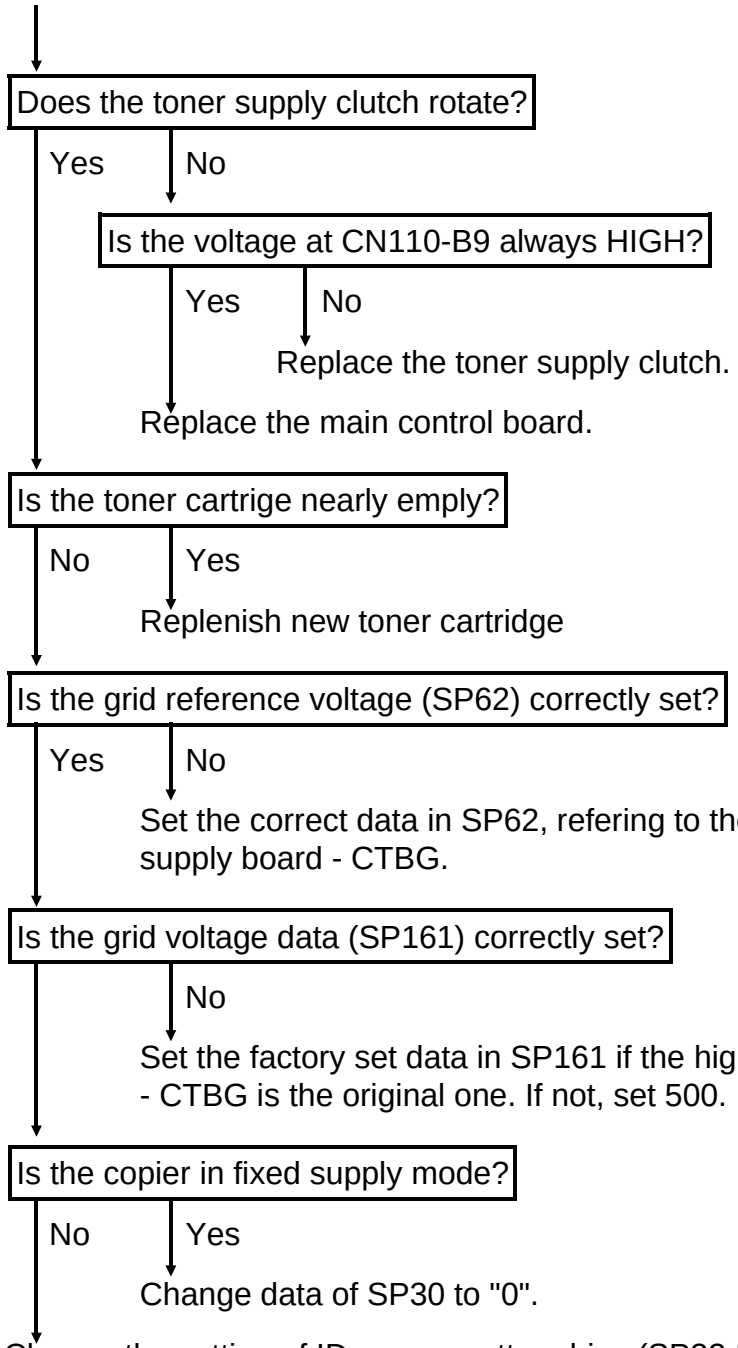

Change the setting of ID sensor pattern bias (SP33 for black and SP75 for color) to the darker one.

2.13 TONER SCATTERING

- Phenomenon -

Toner scatters from the development unit.

- Possible Causes -

1. Toner density is too high.
2. Inlet seal on the development unit is out of position.
3. Developer has deteriorated.

- Action -

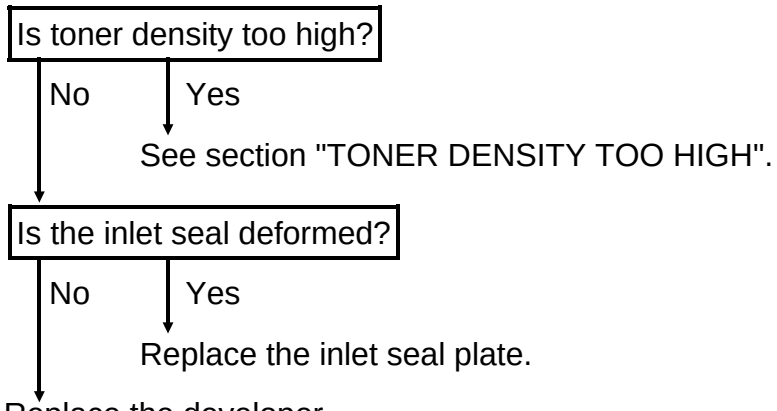

2.14 UNFUSED COPY IMAGE

- Phenomenon -

Solid image rubs off easily.

- Possible Causes -

1. Fusing pressure is too weak.
2. Fusing temperature is too low.
3. Thermistor is malfunctioning.

- Action -

Adjust the position of the pressure springs to increase the fusing pressure.

↓ No good

Increase fusing temperature using SP49.

↓ No good

Check the thermistor. If the thermistor is malfunctioning, replace it.

2.15 A HORIZONTAL THIN LINE APPEARING CLOSE TO THE LEADING EDGE

- Phenomenon -

When an original has black solid areas at the trailing edge, toner transferred from the trailing edge onto the hot roller will appear on the next copy paper.

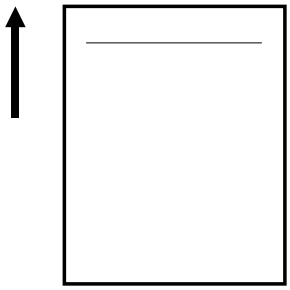

- Action -

Set SP157 (trail edge erase) to leave a blank margin on the trailing edge of copies.
(The blank margin can be adjusted from 0 to 4 mm in 0.5 mm steps when the lead edge registration is adjusted to 0 mm.)

2.16 CREASING AFTER FUSING

- Phenomenon -

Under high humidity conditions, humidified copy paper creases as it comes out of the fusing unit.

- Action -

Install an optional tray heater on each paper feeding station. Refer to "Tray heater installation" in section 3.
(The tray heater is available as a service part.)

2.17 Z-FOLDED COPY OR LEAD EDGE REGISTRATION VARIES

- Phenomenon -

Copies are folded like "Z" shape at the leading part.
The variation of lead edge registration is too big.

- Action -

Adjust the paper buckle amount between the registration rollers and the upper relay rollers (or feed & separation rollers) by SP mode for each paper feeding station.
SP150:By-pass feed/LCT
SP151:Upper paper tray
SP152:Lower paper tray and paper tray unit

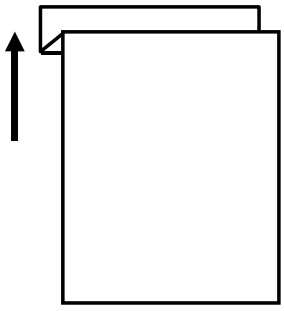

3. SERVICE CALL CONDITIONS

3.1 CODE #11 - EXPOSURE LAMP ERROR 1 (STAND-BY)

- Definition -

The exposure lamp turns on or opens during stand-by condition.

- Possible Cause -

- Exposure lamp open
- Optics thermoswitch open
- Main power relay defective
- Defective dc power supply board (triac or lamp voltage detection circuit)

NOTE: To reset this service call condition, enter to the SP mode, then turn the main switch off and on.

3.2 CODE #12 - EXPOSURE LAMP ERROR 2 (COPYING)

- Definition -

The exposure lamp circuit stays open longer than 20 seconds during a copy cycle.
The exposure lamp stays on longer than 20 seconds during a copy cycle.

- Possible Cause -

- Exposure lamp open
- Optics thermoswitch open
- Main power relay defective
- Defective dc power supply board (triac or lamp voltage detection circuit) defective

NOTE: To reset this service call condition, enter to the SP mode, then turn the main switch off and on.

3.3 CODE #20 - SCANNER MOTOR ERROR

- Definition -

The difference of pulse numbers for the scanner drive motor between the number of pulses in forward and reverse exceeds a certain number. (When initializing and copying.)

- Possible Cause -

- Scanner movement too heavy
- Scanner drive motor defective
- Scanner drive motor control board defective
- Main control board defective

3.4 CODE #21 - SCANNER HOME POSITION ERROR 1

- Definition -

The scanner home position sensor remains deactivated (photo-transistor. stays on) 4 seconds after the main switch is turned on.

- Possible Cause -

- Scanner H.P. sensor defective
- Scanner movement too heavy
- Scanner drive motor defective
- Scanner motor control board defective
- Scanner drive belt out of position

3.5 CODE #22 - SCANNER HOME POSITION ERROR 2

- Definition -

The scanner home position sensor remains activated (photo-transistor. stays off) 0.1 seconds after the main switch is turned on.

- Possible Cause -

- Scanner H.P. sensor defective
- Scanner movement too heavy
- Scanner drive motor defective
- Scanner motor control board defective
- Scanner drive belt out of position

3.6 CODE #23 - LEAD EDGE SIGNAL ERROR

- Definitions -

The main CPU does not receive a scan lead edge signal from the I/O CPU on the main control board from when the scanner starts going forward till it starts returning.

- Possible Cause -

- Main control board defective]
- Electrical noise resulting in a communication error between the CPU's on the main control board.

3.7 CODE #24 - SCANNER HOME POSITION SIGNAL ERROR

- Definition -

The main CPU does not receive a scanner H.P. signal from the I/O CPU on the main control board 20 seconds after the magnification ratio is changed or 20 seconds after the scanner starts from the H.P.

- Possible Cause -

- Main control board defective
- Electrical noise resulting in a communication error between the CPU's on the main control board.

3.8 CODE #28 - LENS HOME POSITION ERROR 1

-Definition -

The lens H.P. sensor remains activated (photo-transistor. stays off) 2.4 seconds after the reduction mode is selected or the main switch is turned on.

- Possible Cause -

- Lens H.P. sensor defective
- Lens drive motor defective
- Lens movement too heavy
- Main control board defective

3.9 CODE #29 - LENS HOME POSITION ERROR 2

-Definition -

The lens H.P. sensor remains deactivated (photo-transistor stays on) 2.4 seconds after the reduction mode is selected or the main switch is turned on.

- Possible Cause -

- Lens H.P. sensor defective
- Lens drive motor defective
- Lens movement too heavy
- Main control board defective

3.10 CODE #2A - 3RD SCANNER HOME POSITION ERROR 1

- Definition -

The 3rd scanner H.P. sensor remains deactivated (photo-transistor stays on) 2.4 seconds after the 3rd scanner moves to the left in enlargement/reduction mode, or the main switch is turned on.

- Possible Cause -

- 3rd scanner H.P. sensor defective
- 3rd scanner drive motor defective
- 3rd scanner movement too heavy
- Main control board defective

3.11 CODE #2B - 3RD SCANNER HOME POSITION ERROR 2

- Definition -

The 3rd scanner H.P. sensor remains activated (photo-transistor stays off) 2.4 seconds after the 3rd scanner moves to the right in enlargement/reduction mode or the main switch is turned on.

- Possible Cause -

- 3rd scanner H.P. sensor defective
- 3rd scanner drive motor defective
- 3rd scanner movement too heavy
- Main control board defective

3.12 CODE #41 TO #45 - PAPER TRAY LIFT MOTOR ERROR

- Definition -

The tray lift motor stays on over 15 seconds for lifting or lowering.
#41: Copier upper tray lift motor (non-duplex machine only)—
#42: Copier lower tray lift motor
#43: Tray lift motor 1 (paper tray unit)
#44: Tray lift motor 2 (paper tray unit)
#45: Tray lift motor 3 (paper tray unit)

- Possible Cause -

- Tray lift motor defective
- Tray upper limit sensor defective
- Paper end sensor defective
- Tray bottom plate movement too heavy

3.13 CODE #46 - LCT LIFT MOTOR ERROR

- Definition -

The LCT lift motor stays on over 30 seconds for lifting or lowering.

- Possible Cause -

- LCT cover-2 switch (SW15) is not activated or the switch it self is defective.
- LCT lift motor defective
- LCT upper limit sensor defective
- LCT lower limit sensor defective
- LCT bottom plate movement too heavy
- LCT drive belt out of position

3.14 CODE #53 - FUSING THERMISTOR OPEN

- Definition -

The CPU detects the fusing thermistor open condition for over 10 seconds.

- Possible Cause -

- Fusing thermistor open
- Fusing unit not in position
- Main control board defective

NOTE: To reset this SC condition, enter to the SP mode then turn the main switch off and on.

3.15 CODE #54 - FUSING WARM-UP ERROR

- Definition -

The fusing temperature does not reach 175°C 4 minutes after the main switch is turned on.

- Possible Cause -

- Fusing lamp open
- Fusing thermofuse open
- Fusing thermistor not in position
- Main power relay (RA1) defective
- Defective dc power supply board (triac or fusing lamp drive circuit)
- Main control board defective

NOTE: To reset this SC condition, enter to the SP mode then turn the main switch off and on.

3.16 CODE #55 - FUSING OVERHEAT

- Definition -

The fusing temperature reaches over 220°C.

- Possible Cause -

- Fusing thermistor short
- Defective dc power supply board (triac of fusing lamp drive circuit)
- Main control board defective

NOTE: To reset this SC condition, enter to the SP mode then turn the main switch off and on.

3.17 CODE #61 - MAIN DRIVE MOTOR ERROR

- Definition -

The main motor does not start rotating within 2 seconds after the CPU sends the main motor on signal.

The CPU detects this condition by the lock signal "L" from the main motor control board. During a copy cycle, the paper jam signal is detected prior to this lock signal.

- Possible Cause -

- Main motor defective
- Main motor control board defective
- Mechanical components driven by main motor too heavy

3.18 CODE #62 - TRANSPORT FAN MOTOR ERROR

- Definition -

The transport fan motor does not start rotating within 2 seconds after the CPU sends the transport fan motor on signal.
The CPU detects this condition through the lock signal "L" of the fan motor.

- Possible Cause -

- Transport fan motor poorly connected
- Transport fan motor defective]
- Main control board defective

3.19 CODE #63 - EXHAUST BLOWER MOTOR ERROR

- Definition -

The exhaust blower motor does not start rotating within 2 seconds after the CPU sends the exhaust blower motor on signal.
The CPU detects this condition through the lock signal "L" of the fan motor.

- Possible Cause -

- Exhaust blower motor poorly connected
- Exhaust blower motor defective
- Main control board defective

3.20 CODE #64 - FUSING EXHAUST FAN MOTOR ERROR

- Definition -

The fusing exhaust fan motor does not start rotating within 2 seconds after the CPU sends the fusing exhaust fan motor on signal.
The CPU detects this condition through the lock signal "L" of the fan motor.

- Possible Cause -

- Fusing exhaust fan motor poorly connected
- Fusing exhaust fan motor defective
- Main control board defective

3.21 CODE #72 - TRANSFER CORONA CURRENT ADJUSTMENT ERROR

- Definition -

When performing SP57 (auto drum current adjustment):

1. Transfer drum current is lower than the adjustment standard at the maximum output from the high voltage power supply board -T.
2. Transfer drum current is higher than the adjustment standard at the minimum output from the high voltage power supply board - T.

- Possible Cause -

- Transfer corona wire broken
- T/S corona unit not in position
- Drum unit poorly connected
- High voltage power supply board - CTBG defective
- Main control board defective

3.22 CODE #73 - SEPARATION CORONA CURRENT ADJUSTMENT ERROR

- Definition -

When performing SP57 (auto drum current adjustment):

1. Separation drum current is lower than the adjustment standard at the maximum output from the high voltage power supply board - D.
2. Separation drum current is higher than the adjustment standard at the minimum output from the high voltage power supply board - D.

- Possible Cause -

- Separation corona wire broken
- T/S corona unit not in position
- Drum unit poorly connected
- High voltage power supply board - D defective
- Main control board defective

3.23 CODE #74 - ID SENSOR ADJUSTMENT ERROR

- Definition -

When performing SP54 (auto Vsg/Vlg adjustment):

1. ID sensor output (Vsg) is lower than the adjustment target (4.0 V) at the maximum output of the ID sensor's LED.
2. ID sensor output (Vsg) is higher than the adjustment target (4.0 V) at the minimum output of the ID sensor's LED.

- Possible Cause -

- ID sensor board defective
- ID sensor board poorly connected
- Main control board defective

3.24 CODE #75 - V SENSOR ADJUSTMENT ERROR

- Definition -

When performing SP54 (auto Vsg/Vlg adjustment):

1. V sensor output (Vlg) is lower than the adjustment target (4.0 V) at the maximum output of the V sensor's LED.
2. V sensor output (Vlg) is higher than the adjustment target (4.0 V) at the minimum output of the V sensor's LED.

- Possible Cause -

- V sensor board defective
- V sensor board poorly connected
- Main control board defective
-

3.25 CODE #76 - ADS SENSOR ADJUSTMENT ERROR

- Definition -

When performing SP56 (auto ADS gain adjustment):

1. ADS sensor output is lower than the adjustment target (1.5 V) at the maximum gain data of the ADS sensor.
2. ADS sensor output is higher than the adjustment target (1.5 V) at the minimum gain data of the ADS sensor.

- Possible Cause -

- ADS sensor board defective
- ADS sensor board poorly connected
- Main control board defective
- Lens housing cover improperly installed

3.26 CODE #81 - JOGGER HOME POSITION ERROR 1

- Definition -

The jogger H.P. sensor remains deactivated (photo-transistor stays on) 0.8 seconds after the jogger fence started the returning.

- Possible Cause -

- Jogger motor defective
- Jogger H.P. sensor defective
- Jogger fence movement too heavy
- Main control board defective

3.27 CODE #82 - JOGGER HOME POSITION ERROR 2

- Definition -

The jogger H.P. sensor remains activated (photo-transistor stays off) 0.16 seconds after the jogger fence started going forward.

- Possible Cause -

- Jogger motor defective
- Jogger H.P. sensor defective
- Jogger fence movement too heavy
- Main control board defective

3.28 CODE #91 - TOTAL COUNTER ERROR

- Definition -

During a copy cycle the CPU does not receive a total counter reed switch on signal.

- Possible Cause -

- Total counter poorly connected
- Total counter defective

3.29 CODE #92 - TOTAL COUNTER SHORT

- Definition -

The CPU always receives a total counter reed switch on signal.

- Possible Cause -

- Total counter defective

3.30 CODE #93 - INTERFACE SIGNAL ERROR

- Definition -

Main CPU does not receive a response signal from the I/O CPU.

- Possible Cause -

- Main control board defective
- Electrical noise resulting in a communication error between the CPU's on the main control board

3.31 CODE #94 - EDITOR SIGNAL ERROR

- Definition -

An interface communication error occurs between the main CPU and the editor board.

- Possible Cause -

- Editor board defective
- Main control board defective

3.32 CODE #95 - AREA CODE DETECTION ERROR

- Definition -

The CPU cannot recognize the area code from the diode matrix signal from the operation panel.

- Possible Cause -

- Operation panel board defective
- Main control board defective

3.33 CODE #dE - VL INITIAL DETECTION ERROR

- Definition -

The CPU cannot detect the proper Vref setting at the initial V_L pattern detection after performing SP66 (drum initialization).

- Possible Cause -

- SP54 (auto Vsg/Vlg adjustment) not performed
- Toner density too high
- Toner density too low
- Development unit not set
- OPC drum not set
- OPC drum with a large heavy scratch at V sensor detection area
- Cleaning unit not set
- Exposure Lamp voltage (SP48) is not adjusted properly (too high or too low).

3.34 BLINKING "CALL SERVICE" INDICATOR (WITHOUT ANY SC CODE #)

- Definition -

The possible problems are listed below. Check the actual causes through the data of SP7.

1: The PM counter (SP88) has reached the set PM interval (SP87).

2: The copier is operating under ID sensor abnormal condition.
Vsg abnormal: Vsg=0.00
Vsp abnormal: Vsg=5.00

3: The used toner tank is nearly full. (The copier will stop within 250 copies.)

NOTE: A combination of causes is possible. The three digit indicator will show 1, 2, 3, 12, 13, 23, or 123.

- Possible Cause -

- The PM counter (SP88) has reached the set PM interval (SP87).
- Main control board defective.
- Incorrect Vsg voltage.
- Dirty ID sensor.
- Low toner density.
- Incorrect setting for SP84 (Editing eraser).
- ID sensor defective.
- Main control board defective.
- Toner supply clutch defective.
- The used toner tank is nearly full.
- Toner end counter (SP58) was not reset by SP83 the last time the used toner tank was emptied.

4. ELECTRICAL COMPONENT DEFECTS

4.1 SENSORS

Component (Symbol)		CN	Condition	Symptom	
				Main SW turns on	Ready condition
By-pass feed table (S1)	 ≥0.9 Vcc ≤0.5 V	104-B9	Open	"By-pass feed" indicator lights even if the by-pass feed table is closed.	By-pass feed mode is selected and "paper end" indicator lights.
			Shorted	By-pass feed mode cannot be selected even if the by-pass feed table is opened.	
Upper tray set (non-duplex machine only) (S2)	 ≥0.9 Vcc ≤0.5 V	104-B18	Open	After loading paper, "Paper end" indicator lights when the upper tray is selected.	
			Shorted	"Paper size" indicator does not light and upper tray cannot be selected, even if the paper tray is set.	
Lower tray set (S3)	 ≥0.9 Vcc ≤0.5 V	104-B20	Open	After loading paper, "Paper end" indicator lights when the lower tray is selected.	
			Shorted	"Paper size" indicator does not light and lower tray cannot be selected, even if the paper tray is set.	
By-pass feed paper end (S4)	 ≥0.9 Vcc ≤0.5 V	105-B11	Open	"Paper end" indicator does not light even if there is no paper on the by-pass feed table.	
			Shorted	"Paper end" indicator still lights even if paper is set on the by-pass feed table.	
Upper tray paper end (non-duplex machine only) (S5)	 ≥0.9 Vcc ≤0.5 V	104-B5	Open	When upper tray is selected "Paper end" indicator still lights, even if paper is added.	
			Shorted	when upper tray is selected"Paper end" indicator does not light, even though paper there is no in the upper tray.	
Lower tray paper end (S6)	 ≥0.9 Vcc ≤0.5 V	104-B14	Open	when lower tray is selected, "Paper end" indicator still lights even if paper is added.	
			Shorted	When lower tray is selected, "Paper end" indicator does not light, even though there is no paper in the lower tray.	
Upper tray upper limit (non-duplex machine only) (S7)	 ≥0.9 Vcc ≤0.5 V	104-B8	Open	When the last paper has fed out from the upper tray, "Paper end" indicator lights for an instant. The upper tray lift motor does not rotate.	
			Shorted	After drinking the paper size indicator, "SC#41" is displayed.	

Component (Symbol)		CN	Condition	Symptom	
				Main SW turns on	Ready condition
Lower tray upper limit (S8)	≥0.9 Vcc ≤0.5 V	104-B17	Open	When the last paper was fed out from the lower tray, "Paper end" indicator lights for an instant. The lower tray lift motor does not rotate.	
			Shorted	After blinking, the paper size indicator "SC#42" is displayed.	
Lower relay (S9)	≥0.9 Vcc ≤0.4 V	104-B15	Open	—	"Paper jam **A**" indicator starts blinking when copies are made from the lower tray.
			Shorted	"Paper jam **A**" indicator starts blinking even if there is no paper.	
Upper relay (S10)	≥0.9 Vcc ≤0.4 V	104-B7	Open	—	"Paper jam **A**" indicator starts blinking when copies are made from the trays or in duplex mode.
			Shorted	"Paper jam **A**" indicator starts blinking even if there is no paper.	
Registration (S11)	≥0.9 Vcc ≤0.4 V	105-A6	Open	—	"Paper jam **A**" indicator starts blinking when copies are made.
			Shorted	"Paper jam **A**" indicator starts blinking even if there is no paper.	
Image density (ID) (S12)		110-B27	Open	"SC#74" is displayed when SP#54 is performed.	
			Shorted		
(S13)		110-A27	Open	"SC#75" is displayed when SP#54 is performed.	
			Shorted		
Fusing exit (S14)	≥2.4 Vcc ≤0.5 V	110-B8	Open	—	"Paper jam **B**" indicator starts blinking when copies are made.
			Shorted	"Paper jam **B**" indicator starts blinking even if there is no paper.	

Component (Symbol)		CN	Condition	Symptom	
				Main SW turns on	Ready condition
Junction gate (duplex machine only) (S15)	≥2.5 Vcc ≤0.5 V	111-B9	Open	—	"Paper jam **C**" indicator starts blinking when copies are made in duplex mode.
			Shorted	"Paper jam **C**" indicator starts blinking even if there is no paper.	
Scanner H.P. (S16)	≥0.9 Vcc ≤0.5 V	109-A11	Open	"SC#22" is displayed	"SC#22" is displayed when copies are made.
			Shorted	"SC#21" is displayed	"SC#21" is displayed when copies are made.
Lens H.P. (S17)	≥0.9 Vcc ≤0.5 V	109-B10	Open	"SC#29" is displayed	"SC#29" is displayed when the magnification ratio is changed.
			Shorted	"SC#20" is displayed	"SC#20" is displayed when the magnification ratio is changed.
Platen position (S18)	≥0.9 Vcc ≤0.5 V	111-B11	Open	Original size "*****" is indicated.	Original size indicator does not change even if a different size original placed on the exposure glass.
			Shorted	When the platen cover is closed, the original size is indicated "*****" or A3/11" x 17".	
3rd scanner H.P. (S19)	≥0.9 Vcc ≤0.5 V	109-A10	Open	"SC2b" is displayed.	"SC#2b" is displayed when the magnification ratio is changed.
			Shorted	"SC2a" is displayed.	"SC#2A" is displayed when the magnification ratio is changed.
Original length (S20)		111-B21 111-B22 111-B23 111-B24 111-B25	Open	The CPU cannot properly detect original size. APS and AMS do not function correctly.	
			Shorted		
Original width (S21)		111-B19 111-B20	Open	The CPU cannot properly detect original size. APS and AMS do not function correctly.	
			Shorted		

Trouble-shooting

Component (Symbol)		CN	Condition	Symptom	
				Main SW turns on	Ready condition
Duplex entrance (duplex machine only) (S22)	≥2.4 V ≤0.8 V	111-A5	Open	— —	"Paper jam **E**" indicator starts blinking when copies are made in duplex mode.
			Shorted	—	
Duplex turn gate (duplex machine only) (S23)	≥2.4 V ≤0.8 V	111-B5	Open	"Paper jam E" indicator starts blinking.	—
			Shorted	"Paper jam E" indicator starts blinking.	
Duplex paper end (duplex machine only) (S24)	≥2.4 V ≤0.8 V	111-B4	Open	—	When multi duplex copies are made, paper jam should be accused in duplex tray.
			Shorted	—	
Jogger H.P. (duplex machine only) (S25)	≥2.4 V ≤0.8 V	111-B6	Open	—	"SC#82" is displayed when copies are made in duplex mode.
			Shorted	—	
LCT paper end (LCT machine only) (S26)	≥0.9 Vcc ≤0.5 V	105-B12	Open	When LCT is selected "Paper end" indicator does not light even though paper is empty	
			Shorted	Tray goes down even if paper is not empty.	
LCT lower limit (LCT machine only) (S27)	≥0.9 Vcc ≤0.5 V	105-B17	Open	Tray does not go down even if tray down switch is pressed.	Tray does not go down even though paper is empty in the LCT.
			Shorted	"SC#46" is displayed after tray goes down.	
LCT upper limit (LCT machine only) (S28)	≥0.9 Vcc ≤0.5 V	105-B18	Open	After tray goes down, tray does not lift up.	
			Shorted	"SC#46" is displayed after tray lifts up.	

4.2 SWITCHES

Component	CN No.	Condition	Symptom
Upper paper size (SW1) (SW2) (SW3) (SW4)	104-B1 104-B2 104-B3 104-B4	Open	The CPU cannot detect proper paper size, and misfeeds may occur when copies are made.
		Shorted	
Lower paper size (SW5) (SW6) (SW7) (SW8)	104-B 9 104-B10 104-B11 104-B12	Open	The CPU cannot detect proper paper size, and misfeeds may occur when copies are made.
		Shorted	
Color detection (SW9)	111-A6 111-B7	Open	The CPU cannot detect proper color development unit, and cannot properly control the copy process system for the development unit. This may cause an abnormal image.
		Shorted	
Exit cover (SW10)	111-B10	Open	"C-2" is displayed even if the exit cover is closed.
		Shorted	"C-2" is not displayed even if exit cover is opened.
Platen cover (SW11)	111-B12	Open	The CPU cannot detect proper original size correctly.
		Shorted	
Front door safety (SW12)	—	Open	"C-1" is displayed even if the front door is closed.
	—	Shorted	"C-1" is not displayed even if the front door is opened.
Main SW (SW13)	—	Open	The copier does not turns on.
	—	Shorted	The copier does not turns off.
LCT cover -1 (SW14)	105-B14	Open	When LCT is selected, "C-4" is displayed even if LCt cover is closed.
		Shorted	When LCT is selected, "C-4" is not displayed even if LCT cover is opened.

Component	CN No.	Condition	Symptom
LCT cover -2 (SW15)	105-A5	Open	The tray does not go down even if the tray down switch is pressed. After 30 seconds, "SC#46" is displayed.
		Shorted	The tray goes down continuously.
	105-B6	Open	• During the copier runs, the "Paper end" indicator lights and the tray goes down even if paper there is still. • After loading paper, the tray does not go up and "SC#46" is displayed.
		Shorted	The tray goes up continuously.
Tray down (SW16)	105-A8	Open	The tray does not go down and LED does not light even if the tray down switch is pressed.
		Shorted	

4.3 FUSES

Component	Condition	Symptom
F1 (125V/10A) (DC Power Supply Board)	Open	The copier does not turn on when the main switch is turned on.
F2 (125V/6.3A) (DC Power Supply Board)	Open	"C-5" is displayed first then "SC#2A" is displayed depending on the 3rd scanner position when the main switch is turned on.
F3 (125V/6.3A) (DC Power Supply Board)	Open	"Paper jam **A**" indicator starts blinking when copies are made. "SC#61" is displayed when copier starts idling or during the copy cycle.
F4 (125V/6.3A) (DC Power Supply Board)	Open	"SC#21" or "SC#22" is displayed depending on the 1st scanner position.
F1 (125V/10A) (Main Motor Control Board)	Open	"SC#61" is displayed when copier starts idling or during the copy cycle. "Paper jam **A**" indicator starts blinking when copies are made.
F1 (125V/15A) (Power Code Terminal)	Open	The copier does not turn on when the main switch is turned on.

COPIER ELECTRICAL COMPONENTS

Symbol	Name	Index No.	P to P
Motors			
M1	Main	1	C8-C9
M2	Exhaust blower	6	CD3-CD4
M3	Upper tray lift (non-duplex machine only)	31	F14
M4	Lower tray lift	28	F14
M5	Transport fan	65	CD4
M6	Fusing exhaust fan	66	CD4
M7	Scanner drive	67	F5
M8	3rd scanner drive	75	G7-G8
M9	Optics cooling fan	77	CD3
M10	Lens drive	100	G8
M11	Duplex feed (duplex machine only)	103	HI7
M12	Jogger (duplex machine only)	107	IJ4
M13	LCT lift	79	J11
Circuit Board			
PCB1	dc power supply	44	C7
PCB2	Main control	10	E8
PCB3	Scanner motor control	69	G6
PCB4	Main motor control	71	D8
PCB5	Operation panel	93	F1
PCB6	ADS sensor	90	CD6
PCB7	High voltage supply - CTBG	9	A10-A11
PCB8	High voltage supply - D	8	B10-B11
PCB9	PTL/QL stabilizer	73	C12
PCB10	Duplex control (duplex machine only)	106	HI6
PCB11	LCT interface (LCT machine only)	80	IJ11
PCB12	Guidance display control (duplex machine only)	92	DE1
PCB13	Guidance display (duplex machine only)	94	D1
PCB14	Interface - type G (option for sorter stapler and menu reader)	16	F9
PCB15	Nose filter (230 V machine only)	35	AB6
Switches			
SW1	Upper paper size - 1 (non-duplex machine only)	2	F14
SW2	Upper paper size - 2 (non-duplex machine only)	3	FG14
SW3	Upper paper size - 3 (non-duplex machine only)	4	G14
SW4	Upper paper size - 4 (non-duplex machine only)	5	G14
SW5	Lower paper size - 1	36	G14
SW6	Lower paper size - 2	34	G14
SW7	Lower paper size - 3	33	GH14
SW8	Lower paper size - 4	32	H14
SW9	Color detection	13	CD11
SW10	Exit cover (Duplex machine only)	64	H6
SW11	Platen cover	88	CD11-CD12
SW12	Front door safety	91	D10, G5-G6

Symbol	Name	Index No.	P to P
SW13	Main	95	AB3
SW14	LCT cover - 1 (LCT machine only)	83	J10
SW15	LCT cover - 2 (LCT machine only)	84	J11
SW16	LCT down (LCT machine only)	85	IJ10
Lamps			
L1	Quenching	47	BC12
L2	Pre-transfer	49	BC12
L3	Fusing	60	C5
L4	Exposure	99	B7
L5	Erase	48	H1
Magnetic Clutches			
MC1	Development drive	11	C5
MC2	Toner supply	14	C4
MC3	By-pass feed	17	I9
MC4	Feed relay	19	D14
MC5	Registration	20	HI9
MC6	Upper paper feed (non-duplex machine only)	22	DE14
MC7	Lower paper feed	24	E14
Solenoids			
SOL1	Development unit change	12	CD4-CD5
SOL2	Pick-up roller	18	H9
SOL3	Duplex tray lock (duplex machine only)	29	EF14
SOL4	Upper tray lock (non-duplex machine only)	39	E14
SOL5	Lower tray lock	37	E14
SOL6	Junction gate (duplex machine only)	43	J3
SOL7	Duplex turn gate (duplex machine only)	105	J3
Sensors			
S1	By-pass feed table	15	H9
S2	Upper tray set (non-duplex machine only)	21	J14
S3	By-pass feed	26	IJ13
S4	Lower tray set paper end	53	GH9
S5	Upper tray paper end (non-duplex machine only)	23	H14
S6	Lower tray paper end	25	I14
S7	Upper tray upper limit (non-duplex machine only)	30	HI14
S8	Lower tray upper limit	27	I14
S9	Lower relay	51	I14
S10	Upper relay	50	H14
S11	Registration	52	G9
S12	Image density (ID)	57	I2
S13	V	58	HI2
S14	Fusing exit	62	CD12
S15	Junction gate (duplex machine only)	63	H6
S16	Scanner H.P.	68	G9
S17	Lens H.P.	72	G9
S18	Platen position	74	CD11
S19	3rd scanner H.P.	76	G8

Symbol	Name	Index No.	P to P
S20	Original length	89	CD5-CD6
S21	Original width	96	CD6
S22	Duplex entrance (duplex machine only)	109	IJ4-IJ5
S23	Duplex turn gate (duplex machine only)	101	IJ4
S24	Duplex paper end (duplex machine only)	102	IJ4
S25	Jogger H.P. (duplex machine only)	108	IJ5
S26	LCT paper end (LCT machine only)	82	J14
S27	LCT lower limit (LCT machine only)	81	IJ10
S28	LCT upper limit (LCT machine only)	78	IJ14
Heaters			
H1	Drum	54	A3
H2	Optics anti-condensation (option)	97	A4
H3	Upper tray (option)	55	A4
H4	Lower tray (option)	87	A5
Thermistor			
TH1	Drum	56	CD10
TH2	Fusing	59	CD11
TH3	Optics	98	CD3
TH4	Duplex motor (duplex machine only)	104	I6
Thermofuse			
TF1	Fusing	61	C4
Thermoswitch			
TS1	Optics	70	B7
Noise filter			
NF1		40	AB2
Fuse			
FU1	Main (115 V machine only)	42	AB2
FU2	Sorter line (115 V machine only)	46	B4
FU3	DF line (115 V machine only)	7	B5
Circuit Breaker			
CB1	(230 V machine only)	41	AB2
Relay			
RA1	Main power	45	CD10
Transformer			
TR1	Main	38	AB3
Counter			
CO1	Total	86	CD9

PAPER TRAY UNIT ELECTRICAL COMPONENTS

Symbol	Name	Index No	P to P
Motors			
M1	Tray lift - 1	8	B7
M2	Tray lift - 2	30	F4-F5
M3	Tray lift - 3	28	F9
Circuit Board			
PCB1	Tray control	17	D5-D6
Switches			
SW1	Tray 1 : Paper size - 1	1	B3
SW2	Tray 1 : Paper size - 2	3	B3-B4
SW3	Tray 1 : Paper size - 3	6	B4
SW4	Tray 1 : Paper size - 4	9	B4
SW5	Tray 2 : Paper size - 1	38	F1
SW6	Tray 2 : Paper size - 2	4	F1
SW7	Tray 2 : Paper size - 3	7	F2
SW8	Tray 2 : Paper size - 4	11	F2
SW9	Tray 3 : Paper size - 1	2	F5
SW10	Tray 3 : Paper size - 2	5	F5-F6
SW11	Tray 3 : Paper size - 3	31	F6
SW12	Tray 3 : Paper size - 4	27	F6
SW13	Tray unit door – 1	32	F8
SW14	Tray unit door – 2	34	C7
Magnetic clutches			
MC1	Paper feed - 1	14	B6
MC2	Paper feed - 2	16	F4
MC3	Paper feed - 3	18	F8
MC4	Tray unit drive	13	B7
Solenoids			
SOL1	Tray lock - 1	40	B6-B7
SOL2	Tray lock - 2	39	F4
SOL3	Tray lock - 3	37	F8
Sensors			
S1	Tray set - 1	15	B9
S2	Tray set - 2	21	B9
S3	Tray set - 3	22	B10
S4	Tray upper limit - 1	10	B5-B6
S5	Tray upper limit - 2	29	F3
S6	Tray upper limit - 3	26	F7-F8
S7	Paper end - 1	12	B5
S8	Paper end - 2	19	F2--F3
S9	Paper end - 3	20	F7
S10	Tray relay - 1	25	B5
S11	Tray relay - 2	24	F3
S12	Tray relay - 3	23	F7
Heaters			
H1	Tray - 1 (option)	36	—
H2	Tray - 2 (option)	35	—

Symbol	Name	Index No	P to P
H3	Tray - 3 (option)	33	—

TABLES & SP MODES FOR PROCESS CONTROL

EXPOSURE

Table 1: Manual ID Correction

ID Level	Lamp Voltage
1	Vexp –2V
2	Vexp –2V
3	Vexp –1V
4	Vexp ±0V
5	Vexp +1V
6	Vexp +1V
7	Vexp +2V

SP48: Lamp Voltage
0~75 V=Vexp
(63V=Default)

Table 2: Reproduction Ratio Correction

Reproduction Ratio (%)	Lamp Correction Voltage
50~120	±0V
121~140	+1V
141~160	+2V
161~180	+4V
181~200	+6V

Table 3: V_L Correction

VL level (%)	Lamp Correction Voltage
151~	–1V
101~150	±0V
~100	+1V

NOTE: Lamp correction voltage is added to the previous correction voltage.

Table 4: Low Temp. Correction

Drum Temperature	Lamp Correction Voltage
Over 25°C	±0V
25°C or lower	+1V

DRUM CHARGE

Table 5: Manual ID Correction

ID Level	Grid Bias Voltage
1	Vgi ±0V
2	Vgi ±0V
3	Vgi ±0V
4	Vgi ±0V
5	Vgi ±0V
6	Vgi +50V
7	Vgi +50V

NOTE: Vgi (Grid bias voltage for image)= –745V

Table 6: V_R Correction

V_R Level	Vrp/Vrg x 100 (%)	Grid Bias Correction Voltage
0	100~84	±0V
1	83~58	–40V
2	57~41	–80V
3	40~28	–120V
4	27~0	–160V

Table 7: V_R Data Correction

Drum Temperature	Grid Bias V_R Correction
Over 25°C	No correction
25°C or lower	V_R level +1

NOTE: V_R level (max.)=4

Table 8: V_G Correction

SP100: Drum Rotation Time (H)	Grid Bias Correction Voltage
0~1	±0V
2~36	–20V
37~62	–40V
63~87	–60V
88~	–80V

SP34: ADS Density

Data	Density	Grid Bias Correction Voltage
0	Normal	±0V
1	Darker	–50V
2	Lighter	±0V

DEVELOPMENT

Table 9:
Manual ID Correction

ID Level	Development Bias voltage
1	–120V
2	–160V
3	–160V
4	–160V
5	–160V
6	–200V
7	SP46

SP46: Highlight Bias

Data	Density	Development Bias Correction Voltage
0	Normal	–240V
1	Darker	–200V
2	Lighter	–280V
3	Lightest	–320V

Tabel 10:
ADS Data Correction

Original Background Ratio (%)	Development Bias Voltage	
	SP34: ADS Density	
	0: Normal 1: Darker	2: Lighter
80~	–160V	–200V
75~79	–200V	–240V
70~74	–240V	–280V
60~69	–280V	–320V
45~59	–320V	–360V
0~44	–360V	–400V

Table 11:
VR Correction

VR Level	Vrp/Vrg x 100 (%)	Development Bias Correction Voltage
0	100~84	±0V
1	83~58	–40V
2	57~41	–80V
3	40~28	–120V
4	27~0	–160V

Table 12:
VR Data Correction

Drum Temperature	Development Bias VR Correction
Over 25°C	No correction
25°C or lower	VR level +1

NOTE: VR level (max.)=4

SP37: Black Bias
SP79: Color Bias

Data	Density	Develpment Bias Correction Voltage
0	Normal	±0V
1	Darkest	+40V
2	Darker	+20V
3	Lighter	–20V
4	Lightest	–40V

SP33: Black Pattern Bias

Data	Black Toner Density	Development Bias Voltage for ID sensor Pattern	
		0~500	501~
0	Normal	–220V	–200V
1	Lighter	–180V	–160V
2	Darker	–240V	–220V
3	Darkest	–260V	–240V

Table 13: Color Data

Color	Color Detection SW	
	SW-1	SW-2
Red	ON	ON
Blue	ON	OFF
Green	OFF	ON
No Color Dev. Unit	OFF	OFF

SP75: Red/Blue/Green Pattern Bias

Data	Color Toner Density	Development Bias Voltage for ID sensor Pattern			
		0~500		501~	
		Red/Blue	Green	Red/Blue	Green
0	Normal	–200V	–240V	–180V	–220V
1	Lighter	–160V	–200V	–140V	–180V
2	Darker	–220V	–260V	–200V	–240V
3	Darkest	–240V	–280V	–220V	–260V

TONER

SP30: Black Toner Supply Mode
0: Detect Mode
1: Fixed Mode

SP35: Black ID Detection
0: Every 10 copies
1: Every 5 copies

SP74: Color ID Detection
0: Every 10 copies
1: Every 5 copies

Table 14: ID Sensor Data (Detect Mode)

ID Sensor Level	Vsp/Vsg x 100 (%)		ID Sensor Level Parameter
	Black	Color	
No Toner Supply	0~9.9	0~24.9	0
Toner Supply 1	10.0~10.4	25.0~26.9	1/4
Toner Supply 2	10.5~11.9	27.0~28.9	1/2
Toner Supply 3	12.0~14.9	29.0~30.9	1
Toner End	15.0~49.9	31.0~49.9	2
ID Sensor Abnormal	50.0~	50.0~	1/2

SP31: Black Toner Supply Ratio (Detect Mode)

Data	0	1	2	3
Supply Ratio	15%	7.5%	30%	60%
Toner Supply Ratio Parameter	2	1	4	8

SP81: Red/Blue/Green Toner Supply Ratio (Detect Mode)

Data	0	1	2	3
Supply Ratio	14%	7%	21%	28%
Toner Supply Ratio Parameter	2	1	3	4

Table 15:
ID Sensor Data (Fixed Mode)

ID Sensor Level	Vsp/Vsg x 100 (%)	ID Sensor Level Parameter
No Toner Supply	0~9.9	0
Toner Supply	10.0~24.9	1/2
Toner End	25.0~49.9	1/2
ID Sensor Abnormal	50.0~	1/2

SP32: Black Toner Supply Ratio
(Fixed Mode)

Data	0	1	2	3
Supply Ratio	7%	3.5%	10.5%	14.0%
Toner Supply Ratio Parameter	2	1	3	4

Table 16:
Paper Size Data

Paper Size	A3	A4	B4	B5	F4	DLT	LG	LT	By-pass Feed
Paper Size Parameter	49	24	37	18	29	48	42	24	50

Table 17:
Color Data

Color	Black	Red	Blue	Green
Color Parameter	24	52	40	40

Toner Supply Clutch ON Time:

ON time (msec.)= 2.777 x 1/20 x [Toner Supply Ratio Parameter]
x [ID Sensor Level Parameter] x [Paper Size parameter]
x [Color Parameter]