RICOH®

CUSTOMER SERVICE

FT5050/5070
FIELD SERVICE MANUAL

REV. NO.	DATE	COMMENTS
*	5/91	Original Printing

PN: RCFM5050

WARNING

The Field Service Manual contains information regarding service techniques, procedures, processes and spare parts of office equipment distributed by Ricoh Corporation. Users of this manual should be either service trained or certified by successfully completing a Ricoh Technical Training Program.

Untrained and uncertified users utilizing information contained in this service manual to repair or modify Ricoh equipment risk personal injury, damage to property, or loss of warranty protection.

Ricoh Corporation

Table of Contents

SECTION 1. INSTALLATION REQUIREMENTS

1-1 Environment 1-1-1
1-2 Machine Level 1-2-1
1-3 Minimum Space Requirements 1-3-1
1-4 Power Source 1-4-1

SECTION 2. UNPACKING AND INSTALLATION

Installation-Setup Checklist
2-1 Unpacking Procedure 2-1-1
2-2 Accessory Checklist 2-2-1
2-3 Installation Procedure 2-3-1
2-4 Cassette Modification 2-4-1
2-5 Key Counter Holder Installation 2-5-1
2-6 Main Transformer Conversion 2-6-1

SECTION 3. PREPARATION FOR TRANSPORTING COPIER

Preparation for Transporting the Copier 3-1-1

SECTION 4. REMARKS

4-1 Points to Remember 4-1-1
4-2 Handling the Drum 4-2-1

SECTION 5. REPLACEMENT AND ADJUSTMENT

1-1 Exposure Glass Removal 5-1-1
1-2 Original Size Indicator Board Removal 5-1-2
1-3 2nd Mirror Removal 5-1-3
1-4 Exposure Lamp Replacement 5-1-5
1-5 Exposure Lamp Position 5-1-7
1-6 Scanner Drive Wire Replacement 5-1-9
1-7 Scanner Drive Motor Replacement 5-1-15
1-8 Lens Drive and 2nd Scanner Drive Motor Replacement 5-1-17

SECTION 6. SERVICE TABLES

6-1 Adjustment Table 6-1-1
6-2 Dip Switch Table 6-2-1
6-3 Defective Sensor Table 6-3-1
6-4 Self-Diagnostic Codes 6-4-1
Preventive Maintenance Schedule
6-6 Special Tools 6-6-1

SECTION 7. TROUBLESHOOTING

1-1	White Copy	7-1-1
1-2	Dirty Background	7-1-2
1-3	Uneven Image Density	7-1-4
1-4	Vertical Black Line	7-1-6
1-5	Vertical White Line	7-1-7
1-6	Horizontal Black Line	7-1-9
1-7	Jitter	7-1-10
1-8	Copy Image is Scraped Off by the Finger Due to Unfused Copy	7-1-11
1-9	Scanner Movement is Out of Control	7-1-12
1-10	Toner Density is Too High	7-1-13
1-11	Toner Density is Too Low	7-1-15
1-12	Distorted Copy Image	7-1-17
1-13	Miscellaneous	7-1-18
7-2	Electrical and Mechanical	
2-1	Exposure Lamp Malfunction	7-2-1
2-2	Lamp Relay Open	7-2-2
2-3	Scanner Not in H.P., Delayed H.P. Signal	7-2-3
2-4	Overrun Switch ON	7-2-4
2-5	No Regist Start Signal	7-2-5
2-7	Lens H.P. Not ON, Lens H.P. Not OFF	7-2-6
2-8	2nd Scanner H.P. Not ON, 2nd Scanner H.P. Not OFF	7-2-7
2-9	High Frequency Encoder Output	7-2-8
2-10	Low Frequency Encoder Output	7-2-9
2-11	Upper Lift Sensor Not ON, Lower Lift Sensor Not ON	7-2-10
2-12	Thermofuse Blown	7-2-11
2-13	Thermistor Blown	7-2-11
2-14	Ready Signal Not ON	7-2-12
2-15	Functional Drive Malfunction	7-2-13
2-16	Jogger H.P. Not ON, Jogger H.P. Not OFF	7-2-14
2-17	Total Counter Malfunction	7-2-15
2-18	Optics/Main Board Interface Malfunction	7-2-15

SECTION 8. DOCUMENT FEEDER DF32

8-1	Unpacking	8-1-1
8-2	DF Installation Procedure	8-2-1

SECTION 9. SORTER CS1510

9-1	Unpacking Procedure	9-1-1
2-1	Installation Procedure	9-2-1

SECTION 10. LARGE CAPACITY TRAY RT11

10-1	Unpacking Procedure	10-1-1
10-2	Installation Procedure	10-2-1
3-1	Tray Down Sensor and Positioning Switch Replacement	10-3-1
3-2	Paper Size Sensor Replacement	10-3-3
3-3	Tray Wire Replacement	10-3-4
3-4	Paper Volume Cord Replacement	10-3-7

SECTION 11. ELECTRICAL DATA FT 5050/5070

11-1 Point-to-Point Wiring Diagram
Component and Connector Layout
Reference Voltage Chart
11-4 Schematics
11-5 Timing Chart
11-6 Board Pattern

SECTION 12. ELECTRICAL DATA DF32

12-1 DF Point-to-Point/Component and Connector Layout
12-2 DF Timing Chart
12-3 DF Main Board Schematic
12-4 DF Main Board Pattern

SECTION 13. ELECTRICAL DATA CS1510

13-1 Sorter Point-to-Point/Component and Connector Layout
13-2 Sorter Timing Chart (A3 Mode)
13-3 Sorter Main Board Schematic
13-4 Sorter Main Board Pattern

SECTION 14. ELECTRICAL DATA RT11

14-1 Point-to-Point Wiring Diagram
14-2 Electrical Component and Connector Layout
14-3 Tray Main Board Schematic
14-4 Tray Main Board Pattern

RETROFIT INFORMATION

Retrofit Information

SECTION 1

INSTALLATION REQUIREMENTS

1-1. Environment

1. Temperature Range : $10^{\circ}C$ to $30^{\circ}C$ ($50^{\circ}F$ to $86^{\circ}F$)

2. Humidity Range : 15% to 90% RH

3. Ambient Illumination: Less than 1,500 luxs (Do not expose to direct sunlight)

4. Ventilation : Room air should turn over at least 3 times/hour.

5. Ambient Dust : Less than $0.15mg/m^3$ ($4 \times 10^{-3}Oz/yd^3$)

6. Room Size : More than $10m^3$ ($13.4yd^3$)

7. If the installation place is air-conditioned or heated, place the machine:

   a. Where it will not be subjected to sudden temperature changes from low to high, or vice versa.

   b. Where it will not be directly exposed to cool air from an air conditioner in the summer.

   c. Where it will not be directly exposed to reflected heat from a space heater in winter.

8. Avoid placing the copier in an area filled with corrosive gas.

9. Avoid any area higher than 2,000m (6,500 feet) above sea level.

10. Place the copier on a strong and level base.

11. Avoid any area where the copier may be subjected to frequent strong vibration.

1-2. Machine Level

1. Front to back:

   Within 5mm (0.2") of level

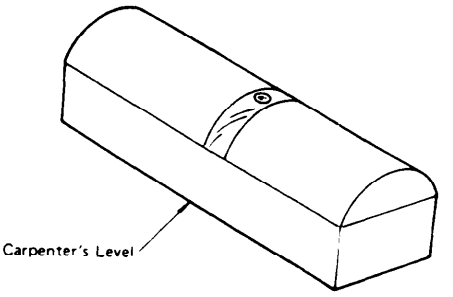

2. Right to left:

   Within 5mm (0.2") of level
   (Legs may be screwed up or down to level the machine. Set a carpenter's level on the exposure glass.)

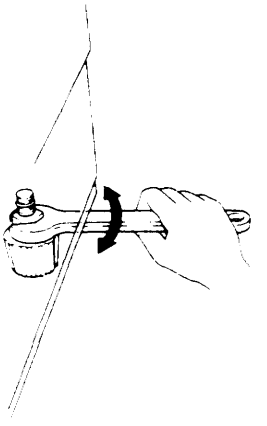

1-3. Minimum Space Requirements

1. Front : 70cm (27.6")
2. Back : 10cm (3.9")
3. Right : 80cm (31.5")
4. Left : 10cm (3.9")

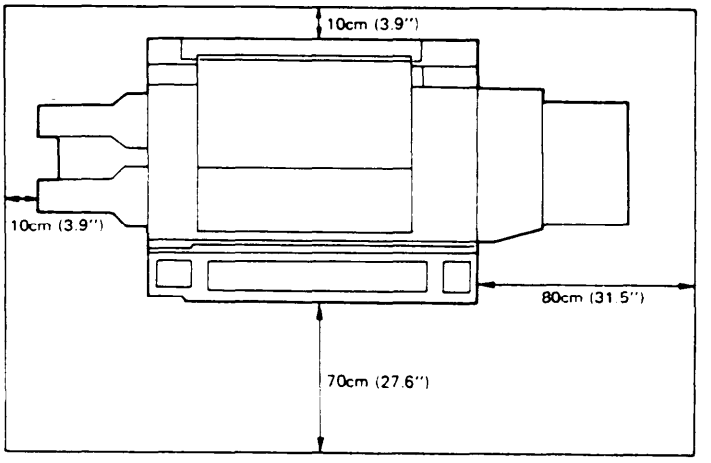

1-4. Power Source

1. Input voltage level

   115V/60Hz : More than 15A
   220V/50Hz : More than 7A
   240V/50Hz : More than 7A

2. Permissible voltage fluctuation : ±10%

3. Permissible extension cord :

   At least 300V, 30A capacity and less than 5m (16.4") long.

   NOTE: 1. Be sure to ground the machine. (Do not connect the grounding wire to a gas pipe.)

   2. Make sure the plug is firmly inserted in the outlet.

   3. Avoid multi-wiring.

   4. Do not set anything on the power cord.

SECTION 2

UNPACKING AND INSTALLATION

INSTALLATION-SETUP CHECKLIST
RICOH FT-5050/5070

√ *Initial Setup & Visual Check*

OK	ADJ.	
☐	☐	CHECK SHIPPING CARTON FOR EXTERNAL DAMAGE.
☐	☐	REMOVE COPIER FROM SHIPPING CARTON. Ref: RICOH FT5050/5070 Field Service Manual, pg. 2-1-1.
☐	☐	REMOVE ALL PACKING TAPE AND PANELS. Ref: RICOH FT5050/5070 Field Service Manual, pg. 2-1-2.
☐	☐	REMOVE ALL SHIPPING RETAINERS. Ref: RICOH FT5050/5070 Field Service Manual, pg. 2-1-3.
☐	☐	CHECK QUANTITY AND CONDITION OF ACCESSORIES. Ref: RICOH FT5050/5070 Field Service Manual, pg. 2-2-1.
☐	☐	CHECK FOR LOOSE OR BROKEN CORONA WIRES.

√ *Mechanical Adjustments*

OK	ADJ	
☐	☐	INSTALL MACHINE ON SUITABLE TABLE AND LEVEL.
☐	☐	CHECK SCANNER AND LENS DRIVE SYSTEMS FOR CLEANLINESS AND LUBRICATION. Ref: RICOH FT5050/5070 P.M. schedule.
☐	☐	SET CASSETTE FOR APPROPRIATE PAPER SIZE. Ref: RICOH FT5050/5070 Field Service Manual, pg. 2-4-1.
☐	☐	INSTALL RECEIVING TRAY.

√ *Voltage & Current Check*

OK	ADJ	
☐	☐	CHECK WALL OUTLET FOR PROPER PHASING AND GROUNDING (USE OF WALL OUTLET TESTER IS RECOMMENDED).
☐	☐	CHECK LINE VOLTAGE FROM WALL OUTLET - 115VAC ± 10%.
☐	☐	CHECK CORONA CURRENTS. Ref: RICOH FT5050/5070 Field Service Manual, pg. 5-10-5.
☐	☐	CHECK FUSING TEMPERATURE. Ref: RICOH FT5050/5070 Field Service Manual, pg. 5-7-13.
☐	☐	CHECK IMAGE DENSITY SENSOR AND ADJUST IF NECESSARY. Ref: RICOH FT5050/5070 Field Service Manual, pg. 5-2-14 & 16.

√ *Supplies Installation*

OK	ADJ	
☐	☐	INSTALL SILICONE OIL AND PRIME OIL SUPPLY SYSTEM. Ref: RICOH FT5050/5070 Field Service Manual, pg. 2-3-1&2.
☐	☐	INSTALL DEVELOPER (1 KG). Ref: RICOH FT5050/5070 Field Service Manual, pg. 2-3-4.
☐	☐	PRIME DRUM CLEANING BLADE AND BRUSH WITH SETTING POWDER. Ref: RICOH FT5050/5070 Field Service Manual, pg. 2-3-5.
☐	☐	INSTALL ONE BOTTLE OF TONER. Ref: RICOH FT5050/5070 Field Service Manual, pg. 2-3-7.
☐	☐	CHECK DIP SWITCHES FOR PROPER POSITIONING. Ref: RICOH FT5050/5070 Field Service Manual, pg. 6-2-1.
☐	☐	INSTALL ALL COVERS.

CONTINUED...

√ Drum Conditioning

OK	ADJ	
☐	☐	CONDITION THE DRUM FOR 99 COPIES. Ref: RICOH FT5050/5070 Field Service Manual, pg. 2-3-8.

√ Final Check

OK	ADJ	
☐	☐	CHECK LEAD EDGE REGISTRATION. Ref: RICOH FT5050/5070 Field Service Manual, pg. 5-11-1.
☐	☐	CHECK LEAD EDGE ERASE. Ref: RICOH FT5050/5070 Field Service Manual, pg. 5-11-1.
☐	☐	CHECK UNEVEN EXPOSURE. Ref: RICOH FT5050/5070 Field Service Manual, pg. 5-11-4.
☐	☐	CHECK LIGHT INTENSITY. Ref: RICOH FT5050/5070 Field Service Manual, pg. 5-11-5.
☐	☐	CHECK ALL MODES OF OPERATION.

√ Warranty Card & New Equipment Condition Report

☐	☐	FILL OUT AND SEND IN WARRANTY CARD, N.E.C.R., WITH CUSTOMER AND DEALER NAMES AND INSTALLATION DATE.
☐	☐	INSTALL ALL RETROFIT AND P.M. LABELS.
☐	☐	INSTALL ALL COVERS.

√ Supplies Data

DEVELOPER LOT NO. _____

TONER LOT NO. _____

PHOTOCONDUCTOR LOT NO. _____

CUSTOMER'S NAME _____ DATE _____

ADDRESS _____

MACHINE S/N _____ METER READING _____

TECHNICAL REPRESENTATIVE _____

CUSTOMER'S SIGNATURE _____

2-1. Unpacking Procedure

1. Remove the four (4) box joiners and the top box as shown in the figure.
2. Take out the accessories.
3. Remove the cushion blocks.
4. Open the vinyl bag.
5. Remove the machine from the box by lifting it out by the handles on either side.

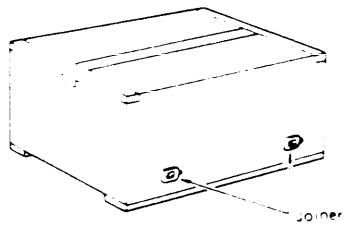

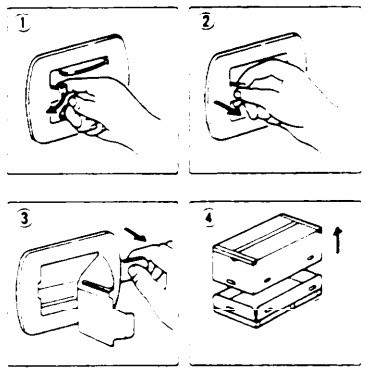

6. Remove the 7 strips of tape (A) shown in the figure.

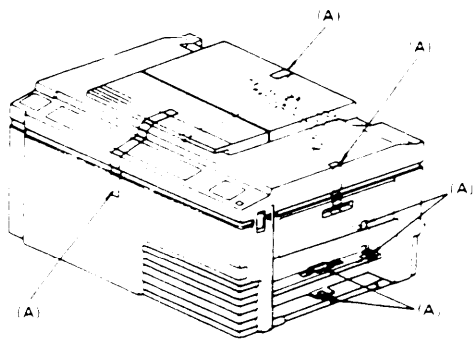

7. Open the front cover.
8. Remove the strips of tape shown in the figure.

   3 strips (B)

   5 strips (B + C)(duplex model)
9. Remove the fork gate unit support cushion (D) (duplex model only).

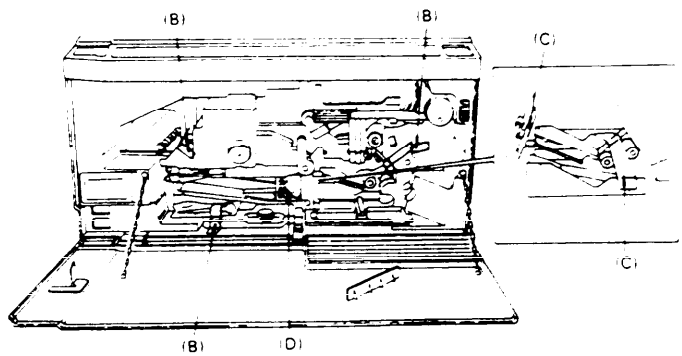

10. Remove the fork gate unit lock plate (A) (2 screws) (duplex model only).

11. Remove the transport unit lock plate (B) (2 screws) and the wedge (C) from between the registration rollers.

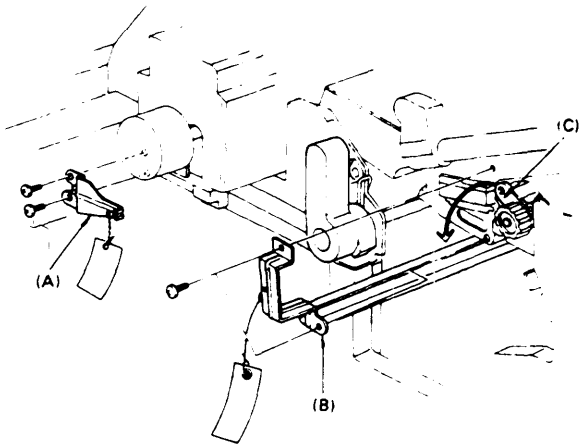

12. Remove the left cover (4 screws).

13. Remove the scanner lock plate (D) (1 screw).

NOTE: Reinstall the screw for future use. Do not throw away the scanner lock plate. It is necessary to reinstall it if the copier is to be transported to another place.

14. Reinstall the left cover.

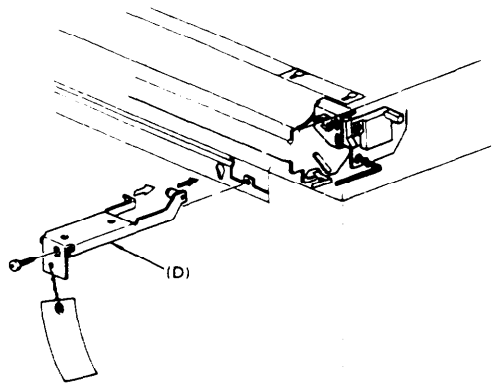

2-2. Accessory Check List

Check the quantity and condition of the accessories in the box according to the New Equipment Condition Report.

1. Installation procedure ---------- 1
   (115V-English only/220V-five languages)
2. NECR ---------- 1
3. Envelope-NECR (115V only) ---------- 1

4. Cassette - large ---------- 1
5. Cassette - small ---------- 2
6. Paper size actuator plates ----------
7. Paper size decals ----------
8. Copy tray ---------- 1
9. Original table ---------- 1
10. Original holder ---------- 1
11. Spacer-original table ---------- 2
12. Toner catch pan-A ---------- 1
13. Toner catch pan-C (duplex model only) ----- 1

14. Operating instructions ---------- 1
    (115V-English only/220V-five languages)
15. Operating instructions holder ---------- 1
16. Multilingual decals (220/240V only) ------- 1 set

2-3. Installation Procedure

1. Check and adjust the machine level.
2. Open the front cover and pull out the fusing unit.

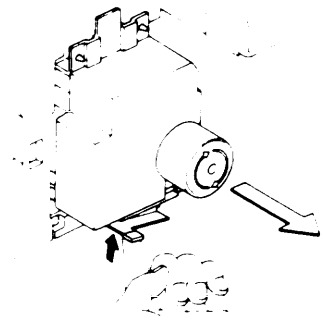

3. Remove the fusing unit cover (A) (2 screws) and the oil pad pressure plate (B).
4. Remove the oil supply pad (C) and confirm that the oil blade is free from foreign matter.
5. Saturate the oil supply pad with silicone oil (D).
6. Reassemble and return the fusing unit to its original position.

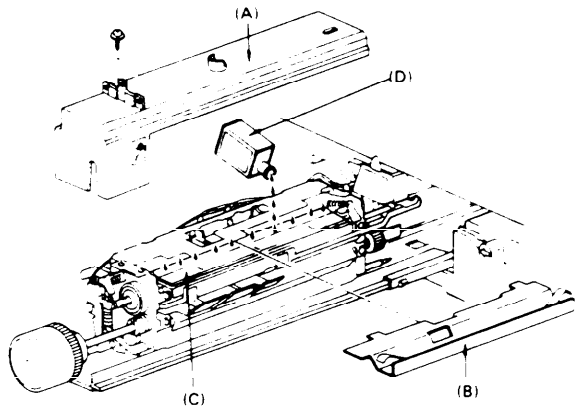

7. Fill the oil tank (A) with silicone oil (B)(maximum capacity 1.6 liters).

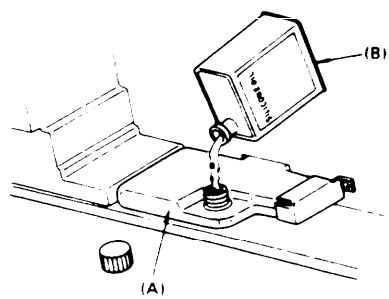

8. Remove the rear cover (2 screws)
9. Remove the cooling fan (C)(2 screws and 1 connector) and swing the optics board (D) out to the right (1 screw). Take care not to damage any harnesses or connectors.
10. Manually operate the oil pump solenoid (E) and confirm proper operation and condition of silicone oil supply system.
11. Return the optics board and reinstall the cooling fan and the rear cover. The wire harness must be returned to its original position.

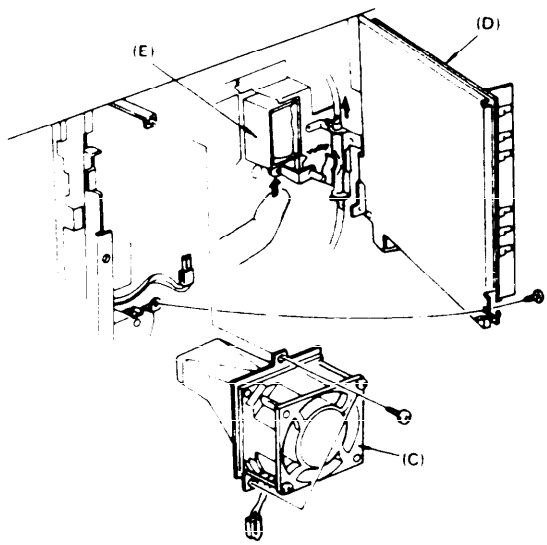

12. Lower the transport unit (A).

13. Pull down the toner bottle holder (B).

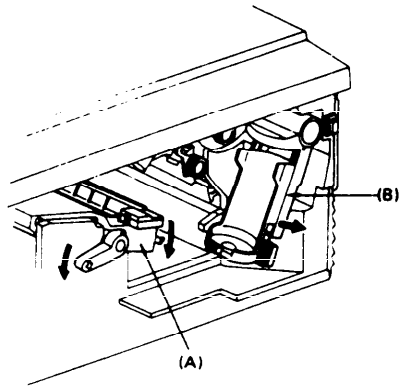

14. Put a sheet of paper (C) on the T/S corona unit (D).

15. Remove the charge corona unit (E) together with the wire cleaner (F)(1 screw).

16. Remove the drum stay (G)(1 brass screw).

NOTE: It is important to keep a sheet of paper underneath the drum stay whenever you remove it to catch the falling toner.

17. Place a sheet of paper on the floor. Pull out the development unit and put it on the paper.

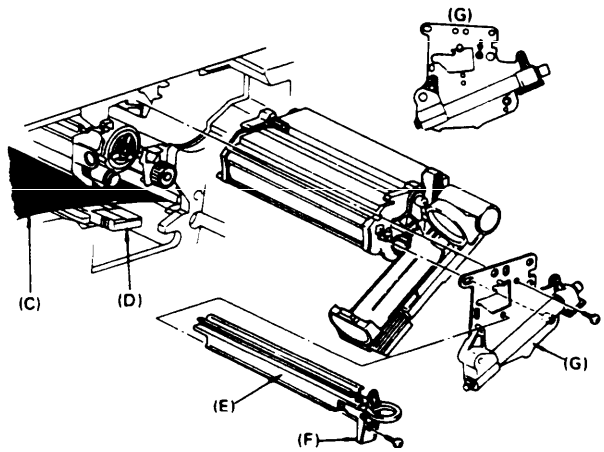

18. Separate the toner tank (A) from the development unit (B) (2 screws).

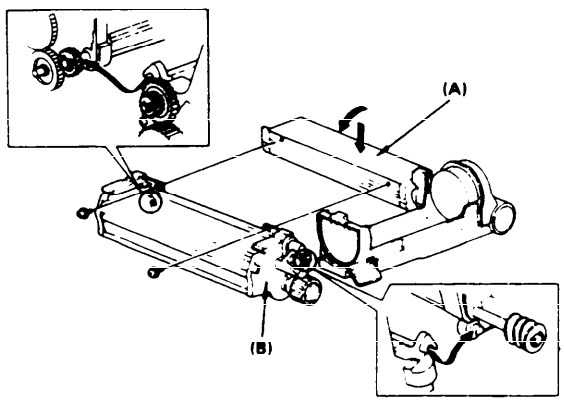

19. Pour one bottle of developer (C)(1kg RICOH TYPE 4000) into the development unit turning the knob (D) counterclockwise to distribute the developer.

20. Reassemble the toner tank on the development unit.

CAUTION: When reinstalling the toner tank, make sure that the flat surface (E) of the toner agitator gear is on the opposite side of the toner end sensor actuator.

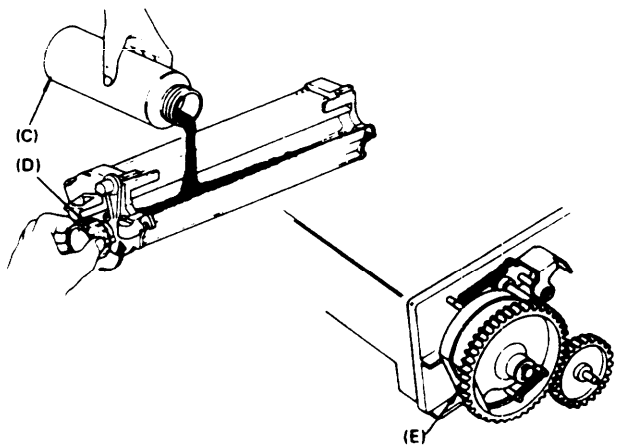

21. Remove the cleaning unit (A) and prime the cleaning blade (B), and the cleaning brush (C) with the setting powder (D) (P/N 54429101).

22. Reinstall the cleaning unit.

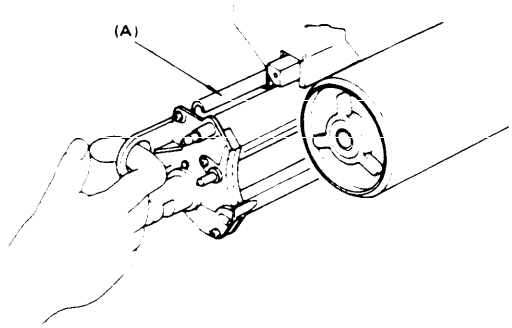

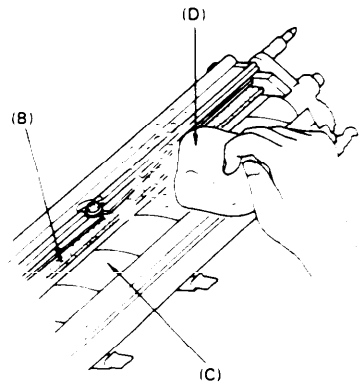

23. Pull out the protective sleeve (A) on the drum (B).

NOTE: Save the drum protective sleeve for future use when servicing the copier.

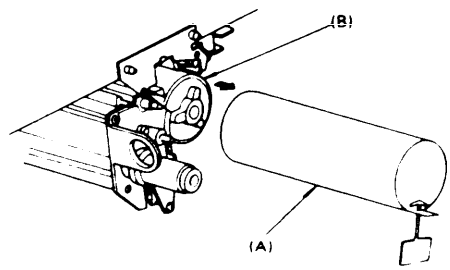

24. Reinstall the development (C) unit.

NOTE: Confirm that the development unit and cleaning unit (D) are properly installed.

25. Reinstall the drum stay and the charge corona unit.

NOTE: When reinstalling the charge corona unit, make sure that the wire cleaner (E) is properly positioned.

26. Remove the paper on the T/S corona unit and return the transport unit to its original position.

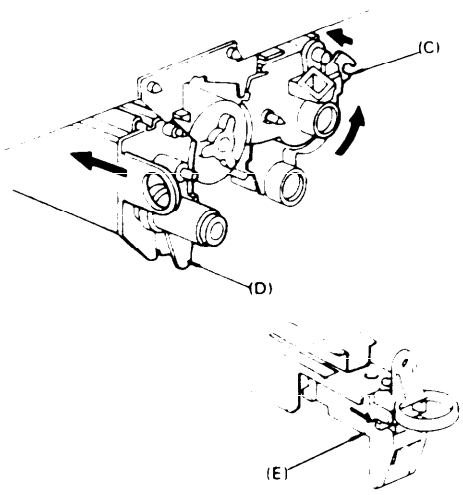

27. Remove the toner tank plug (A) and load the toner bottle onto the bottle holder and raise the holder (B) up to the bracket.

NOTE 1: For loading the toner bottle (C), refer to the decal attached on the inside front cover.

NOTE 2: Confirm that the toner bottle gear is properly engaged by trying to rotate it. When the toner bottle gear is properly engaged, the toner bottle does not rotate freely.

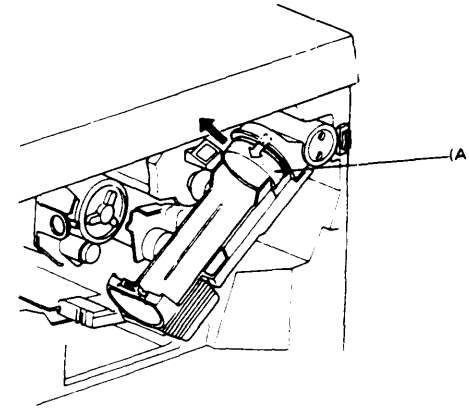

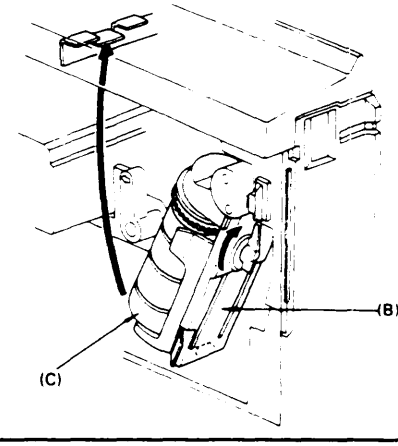

28. Remove the misfeed location indicator panel (A)(1 screw).

29. Turn on SW1 of DIP switch and close the front cover.

NOTE: In 240V areas, the 220/240V transformer modification must be done at this time.

30. Lower the platen cover.

31. Plug in the machine and turn on the main switch.

32. After warm up period is completed, enter 99 and press the Print key for drum conditioning.

33. After the machine stops, turn off the main switch.

34. Turn off SW1 of DIP switch and reinstall the misfeed location indicator panel.

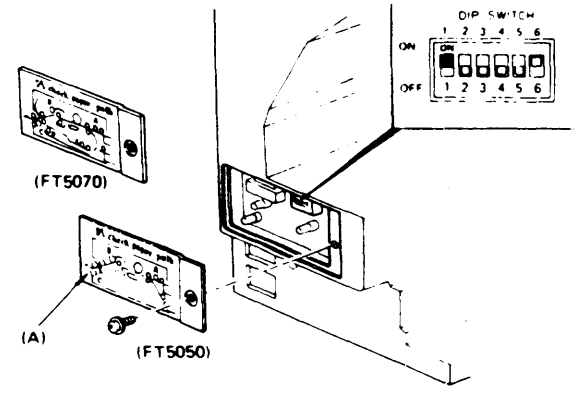

DIP SWITCH (LEFT INNER COVER)		
NO	ON (1)	OFF (0)
1	DRUM CONDITION	NORMAL MODE
2	AUTO RESET DISABLE	AUTO RESET
3	AUTO RESET 3MIN.	AUTO RESET 1 MIN
4	COUNT DOWN	COWNT UP
5	NOT USED	
6	BEEPER ON	BEEPER OFF

35. Install toner catch pan-C (A) on the transport unit (B) (1 screw)(duplex model only).

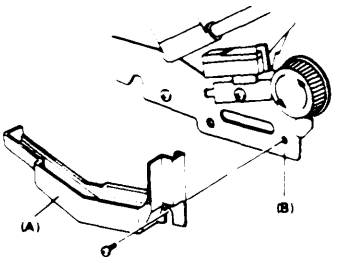

36. Install toner catch pan-A (C) on the drum stay (1 screw).

NOTE: This catch pan is optional because it hinders drum stay removal. To remove a drum stay fitted with this catch pan: remove the toner bottle, lift up the bottle holder (D), and then remove the drum stay.

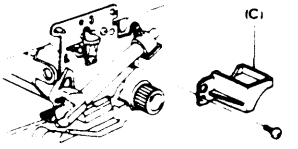

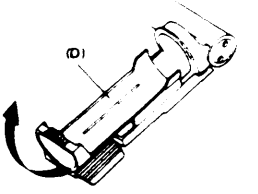

37. Close the front cover.

38. Install the original table (A) using the spacers (B) provided.

39. Install the original holder (C) on the platen cover as shown.

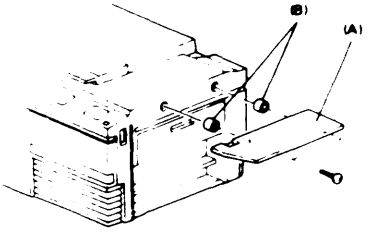

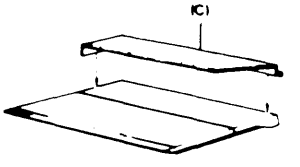

40. Install the copy tray and load paper into the cassettes.

41. Check machine operation and copy quality.

42. Fill out the New Equipment Condition Report (NECR).

2-4. Cassette Modification

1. Take off the cassette cover.
2. Remove the side fences (A) (1 screw each) and the bottom plate (B).
3. Reposition the rear fence (C) in the desired paper size position (1 screw).

   NOTE: Paper size positions are shown on the inside of the cassette.
4. Reinstall the bottom plate.
5. Reinstall the side fences in the desired paper size position.
6. Attach the proper paper size decals (D) on the cassette at the positions shown.
7. Insert the desired actuator plate (E) in the slot on the front of the cassette as shown.

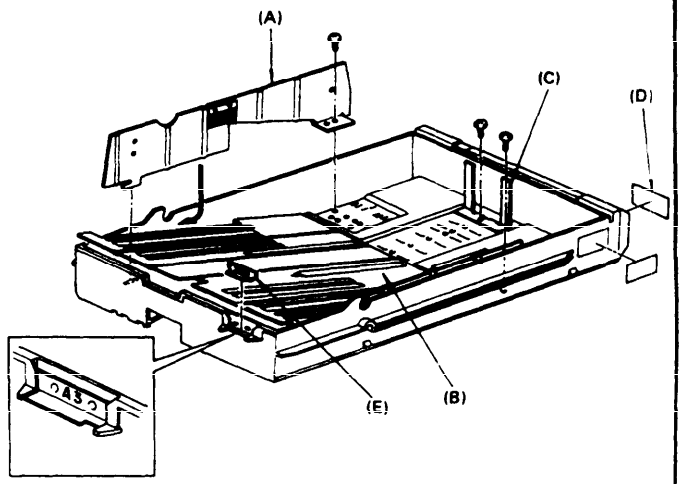

2-5. Key Counter Holder Installation

NOTE: Three types of counters are recommended for this copier (Ricoh, Hecon, and Hengstler key counters). When installing the Hecon, or Hengstler counters, it is required to make wiring by referring to the figure at the right.

1. Lower the front cover (2 thumb screws).
2. Remove the right front cover (2 screws) and right inner cover (3 screws).
3. Remove the cover plate (A) and fixing plate (B) from the key counter bracket (C).
4. Hold the fixing plate on the inside of the key counter bracket and insert the key counter holder (D).

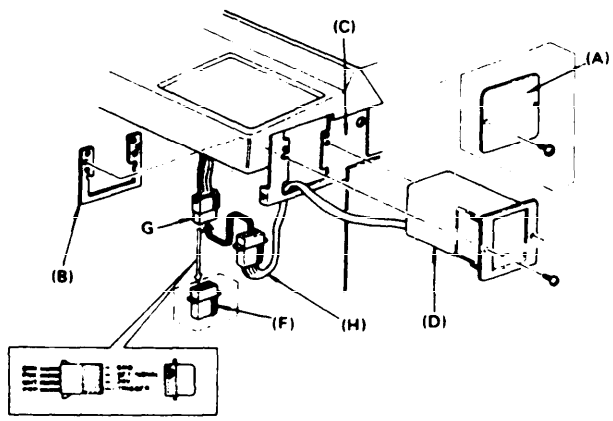

5. Align the holes in the fixing plate with the mounting holes of the key counter holder and secure the key counter holder.

   NOTE: The fixing plate has three sets of holes. Make sure to use the holes that match the type of counter when installing.

6. Remove the shorting plug (F) from the key counter connector (G).

   NOTE: This shorting plug is usually on the harness.

7. Plug in the key counter harness (H).

8. Reassemble the copier. Insert the key counter and check its operation.

2-6. Main Transformer Conversion (220 to 240V only)

1. Remove the rear cover (2 screws).

2. Disconnect the black wire from 220V terminal.

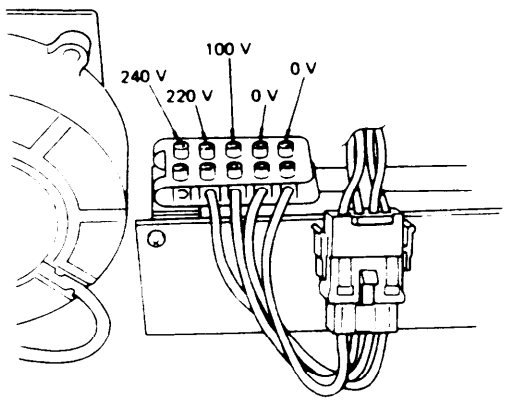

SECTION 3

PREPARATION FOR TRANSPORTING COPIER

PREPARATION FOR TRANSPORTING THE COPIER

Before moving the copier from its place of installation, be sure to prepare it for transportation as follows below.

The copier may be badly damaged if it is moved without proper preparation.

1. Remove the developer from the development unit.
2. Insert the drum protective sleeve.
3. Reinstall the development unit.
4. Reinstall the drum stay and the charge corona unit.
5. Place a wedge between the registration rollers.
6. Install the transport unit lock plate and the release lever lock plate.
7. Install the fork gate unit lock plate. (FT5070 only)

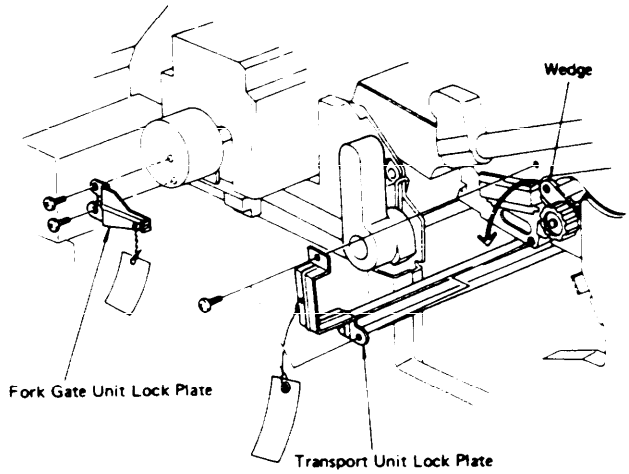

8. Remove the left cover and insert the scanner lock plate.

   NOTE: Confirm that the scanner is at the home position.

9. Secure the front cover, platen cover and by-pass table with tape.

   CAUTION: While transporting the copier by car, always cover the copier to avoid direct sunshine. Do not leave it in the car or expose it to extreme hot or cold conditions.

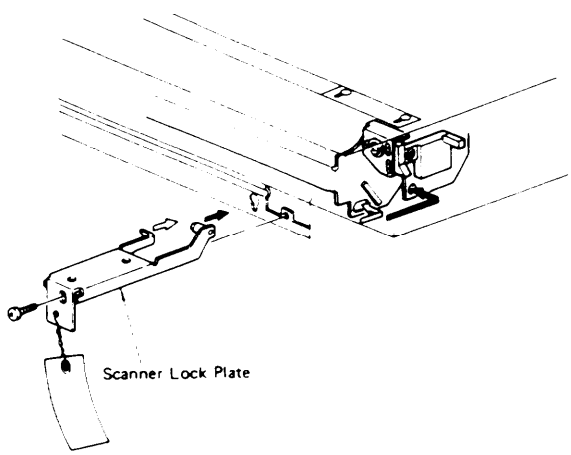

SECTION 4

REMARKS

4-1. Points to Remember

CAUTION: Keep hands away from mechanical drive components when the copier is warming up.

* This is to avoid possible injury when the copier starts idling at the end of warm up.

* The beeper sounds five times just before starting idling.

Drum Charge

1. The corona wires should be cleaned at every service call by sliding the corona unit or with dry cloth. Do not use emery paper or any solvent for wire cleaning.

2. Do not touch the corona wires with oily hands.

3. Make sure that the corona wires are correctly positioned between the cleaner pads.

4. After cleaning the charge corona unit, make sure that there are no threads on the casing to avoid white lines on the copy.

Exposure

1. Do not adjust the following parts:

   a: First and second scanner height adjusting cams (1 screw each)
   b: Scanner Guide Plate (3 screws)
   c: Lens Axis Adjusting Cam (1 screw)
   d: Lens Position Adjusting Screws
   e: Fourth Mirror Angle Adjusting Screw
   f: Lens Home Position Sensor (1 screw)

2. Lens home position sensor does not have a convenient adjusting procedure. When replacing the sensor, mark the position of the sensor bracket before removing it, and adjust the fine position of the sensor by checking the copy image (horizontal magnification and focus).

3. Do not bend or damage the lens support plate or the mylar strip.

4. Launa oil or an equivalent oil should be used to lubricate or clean the following:

   a. Scanner Guide Rod (cleaning)
   b. Scanner Guide Rod Pads (Lubrication)
   c. Scanner Guide Plate (Lubrication/Cleaning)

   CAUTION: Do not use silicone oil or any other kind of oil.

5. Clean the exposure glass with alcohol and water.

6. Clean the mirrors only with alcohol and/or water and a soft cloth.

7. Do not touch the following parts with bare hands:

   a. Reflectors
   b. Exposure Lamp
   c. Mirros and Lens

8. Do not adjust the VR on the optics board.

9. When adjusting the light intensity, make ten copies before proceeding to check copy image if the main switch has just been turned on.

Development

1. Be careful not to nick or scratch the development roller sleeve.
2. Place a sheet of paper under the development unit when it is out of the copier.
3. Clean the suction duct at every EM or PM.
4. Clean the development unit guide plate before reinstalling the unit.
5. When reinstalling the toner tank to the development unit, make sure that the flat surface of the toner agitator gear is on the opposite side of the toner end sensor actuator.

Toner

1. Image density sensor should be cleaned at every EM or PM with a blower brush.
2. Do not touch the sensor pattern with bare hands.
3. Image density sensor adjustment is required when:

   a: The ID sensor board is replaced.
   b: The main board is replaced.
   c: The drum has been replaced and Vsg is out of standard.
   d: Problems with toner supply have occurred and ID sensor check shows the Vsg to be out of standard.

4. Grease the toner supply clutch with Mobil Temp 78 periodically to avoid noise and bad operation.

Transfer and Separation

1. The corona wires should be cleaned with a dry cloth at every EM or PM.
2. While the drum stay is out, do not lift up the corona unit. (The corona casing hits against the drum.)

Cleaning

1. Do not damage the edge of the cleaning blade.
2. Do not touch the cleaning brush with oily hands.
3. Before pulling out the cleaning unit, place a sheet of paper under it.
4. Be careful not to damage the drum with the pick-off pawls when pulling out or inserting the unit.
5. When a new cleaning blade and/or a new cleaning brush is installed, dust them with setting powder before reinstalling the unit.

Fusing

1. When removing the fusing unit, keep it in an up-right position so that the silicone oil does not spill.
2. After replacement of the oil blade, oil supply pad, and the hot roller, prime with silicone oil to the top of the oil blade.
3. Be careful not to damage the edge of the hot roller strippers or their tension springs.
4. Be careful not to bend the pressure roller strippers.
5. Do not touch the fusing lamp with bare hands.
6. Be sure that the fusing lamp is not in contact with the inner surface of the hot roller.
7. Be sure that the oil end sensor contacts the bottom of the oil tank.
8. When replacing a fusing temperature control board, make sure that the DIP switch on the board is set for the correct frequency (50/60Hz).

Paper Feed and Duplex

1. Grease the following parts with Mobil Temp 78 periodically to avoid noise and bad operation:
   a. Slip clutches in upper, lower, and duplex separation rollers.
   b. Worm Gears and Worm Wheels of upper and lower lift motors.
2. Be careful not to damage the forks when removing the fork gate unit.
3. The rollers and slip clutch for duplex and cassette feed are not interchangeable.
4. Be sure that the duplex transport belts are matte-side out when replacing them.
5. When reinstalling the support bracket, make sure that the bracket is properly engaged with the groove of the registration clutch stopper.

Optional Equipments

1. When servicing the document feeder and/or sorter, make sure that the Main switch of the copier is off.
2. Before servicing the large capacity tray, unplug the power supply cord of the tray.

4-2. Handling the Drum

1. Never touch the drum surface with bare hands.
2. Store the drum in a cool dry place away from heat.
3. When cleaning the drum, always use a pair of gloves. Do not throw away cotton used for cleaning. Bring it back to the service depot for disposal according to local regulations.
4. Always prime the drum with setting powder after cleaning the drum, and when installing a new drum. This should be done within one minute in a location not exposed to room light.
5. To protect the drum, always applly setting powder to a new cleaning blade and/or a new cleaning brush before installing them.
6. Drum conditioning is necessary when a new drum is installed. In addition, it should be done at the following times:
   1) When image density is reduced due to over-exposure of the drum.
   2) After cleaning the drum.
   3) When the drum is lightly scratched.
7. Always keep the drum in the protective sleeve when inserting or pulling the drum out of the copier (except when applying setting powder).
8. Before inserting or pulling out the drum, the cleaning unit should be pulled slightly out to avoid drum damage by the pick-off pawls.
9. Before inserting the protective sleeve on the drum while it is in the copier, always take out the development unit. If the sleeve is inserted while the development unit is in the copier, the edge of the sleeve will scrape off developer from the development roller.
10. Send used drums to the distributor according to standard procedure.

SECTION 5

REPLACEMENT AND ADJUSTMENT

1-1. Exposure Glass Removal

1. Take off the left scale (2 short screws).
2. Grasp the left edge of the exposure glass and lift it up slightly. Slide the other edge out from under the right glass holder. Remove the exposure glass.

NOTE: When reinstalling the exposure glass:

* Make sure that the left edge of the glass is flush with the sensor pattern plate.
* Make sure that the right glass holder firmly secures the exposure glass.

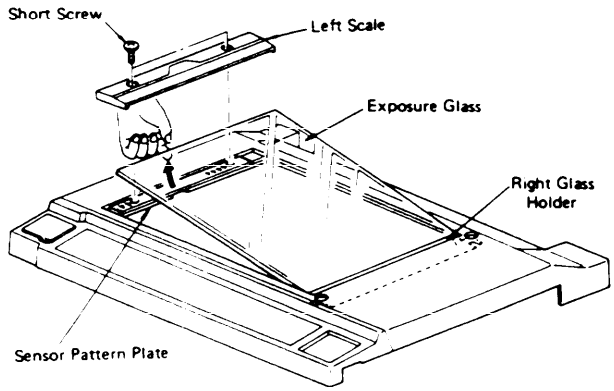

1-2. Original Size Indicator Board Removal

1. Turn off the main switch.
2. Take off the left scale (2 short screws).
3. Remove the platen cover and the mounting studs.
4. Remove the upper cover (2 long and 6 standard screws).
5. Open the front cover and remove the left inner cover (4 screws and 1 thumb screw).
6. Remove the original size indicator board (1 connector).

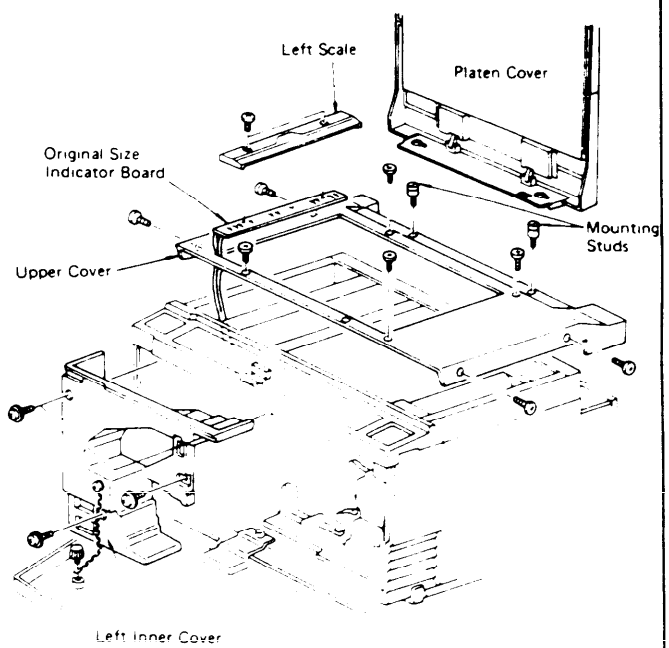

1-3. 2nd Mirror Removal

NOTE: This procedure is usually performed in order to make cleaning the 3rd mirror easier.

1. Turn off the main switch.
2. Remove the exposure glass. (See Exposure Glass Removal.)
3. Move the 1st scanner 2/3 to the right by pushing it at the rear side.
4. Remove the front spring plate by depressing the top of the spring and moving the plate towards the front side of the machine.
5. Carefully pull the 2nd mirror towards the front side of the machine to remove the rear spring plate.
6. Lift the mirror out of the machine rear side first.
7. Clean mirrors with alcohol followed by water, and then dry.

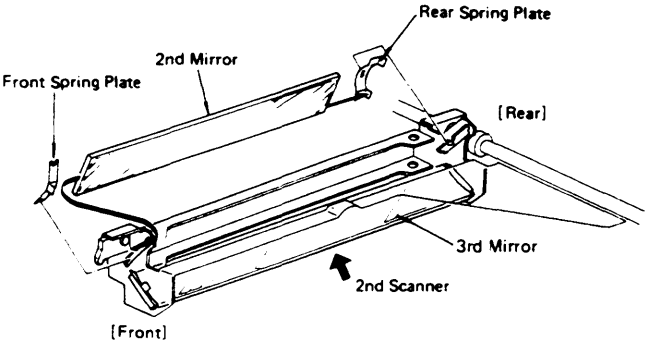

- To Reinstall -

8. Place the rear spring plate in place and hold it with your finger.
9. Insert the 2nd mirror into the front side plate cut out.
10. Insert the rear side of the mirror into the rear spring plate.
11. Locate the bottom of the front spring plate and rotate the top of the spring into position.

NOTE: Make sure that you install the mirrors with the 1st surface facing the lens as shown.

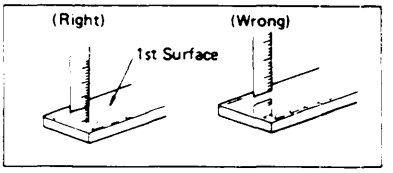

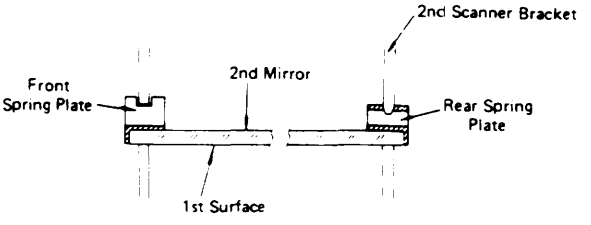

1-4. Exposure Lamp Replacement

1. Turn off the main switch.
2. Remove the exposure glass. (See Exposure Glass Removal.)
3. Move the first scanner to the position where the rear frame is cut out.
4. Remove the reflector cover (2 screws).
5. Wrap a strip of paper around the exposure lamp as shown.

   CAUTION: Do not touch the reflector or the new exposure lamp with your bare hands. Use a strip of paper as shown. (Finger oil marks on the lamp or reflectors will be affected by the heat and will result in discoloration.)

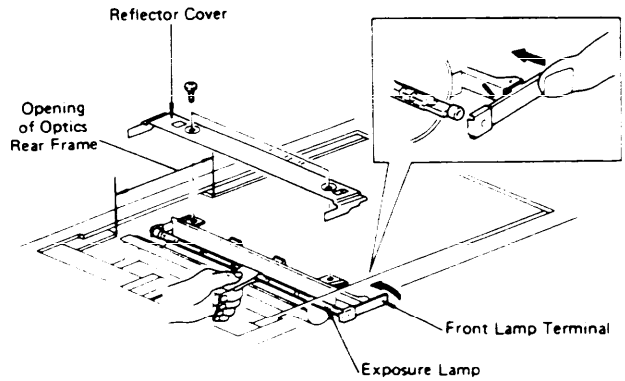

6. Press the release lever on the front lamp terminal as shown and take out the lamp.
7. Install a new lamp using a strip of paper. (Set the rear terminal first.)

   NOTE: The blister on the lamp must point toward the mouth of the reflector as shown.

8. Check the exposure lamp position and the light intensity (See Exposure Lamp Position and Light Intensity Adjustment.)

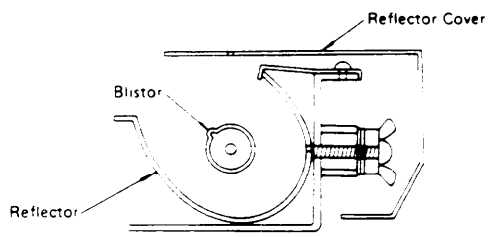

1-5. Exposure Lamp Position

1. Remove the exposure glass. (See Exposure Glass Removal.)

-Horizontal Adjustment-

2. Move the exposure lamp to the center of the copier.
3. View the lamp filament through the sight holes on the top of the reflector cover. The filament should be directly beneath the sight holes.
4. To correct the position of the filament, turn adjusting screws.

-Vertical Adjustment-

5. Move the exposure lamp fully to the right.
6. View the lamp filament through the ventilation slits on the right side of the upper cover. The filament should be level with the sight holes on the side of the reflector.
7. To correct the position of the filament, remove the platen cover and the upper cover (8 screws and 2 mounting studs).

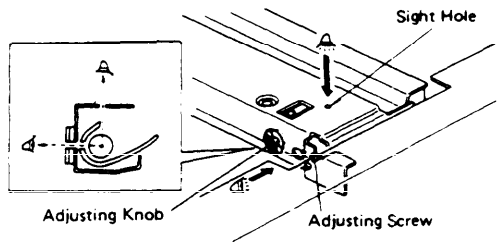

8. Remove the reflector cover (2 screws) and turn the adjusting knobs until the correct position is achieved.

NOTE: Be sure to tighten the adjusting knob screws after adjusting the lamp position.

9. Check uneven exposure and light intensity. (See Copy Image Section.)

1-6. Scanner Drive Wire Replacement

1. Turn off the main switch.
2. Remove the platen cover, the mounting studs, and the upper cover (8 screws).
3. Remove the left scale (2 short screws) and the exposure glass.
4. Remove the rear cover (2 screws) and the cooling fan (2 screws and 1 connector).
5. Move the harnesses out of the way of the bottom of the optics board (1 twist clamp). Swing the optics board to the right (1 screw) and the main board to the left (2 screws).
6. Loosen the wire clamp screw.
7. Move the 2nd scanner to the return position.
8. Unhook the tension spring and take off the wire hook. Take out the old wire.

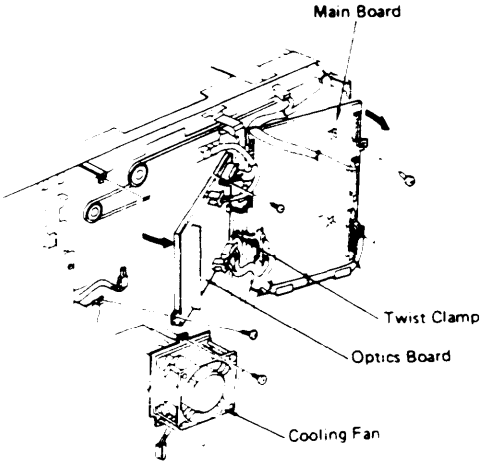

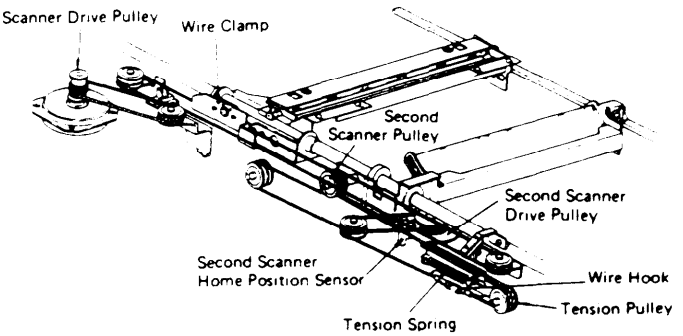

9. Remove the 2nd scanner drive pulley (1 Allen screw) by aligning the notch of the pulley disk with the 2nd scanner home position sensor.
10. Position the bead of the new wire on the groove of the 2nd scanner drive pulley and wrap the wire around the pulley with two and half turns as shown.
11. Secure the turns of the wire on the pulley with the Ω clamp (or with tape).
12. Set the 2nd scanner drive pulley on the drive motor shaft as shown and tighten the Allen screw on the flat side of the shaft.

NOTE: * The end of the second scanner drive pulley should be flush with the end of the motor shaft.

* The 2nd scanner home position sensor should be positioned between the short and long ends of the wire.

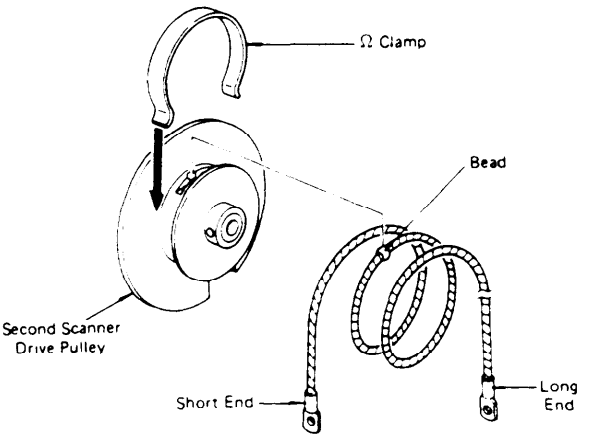

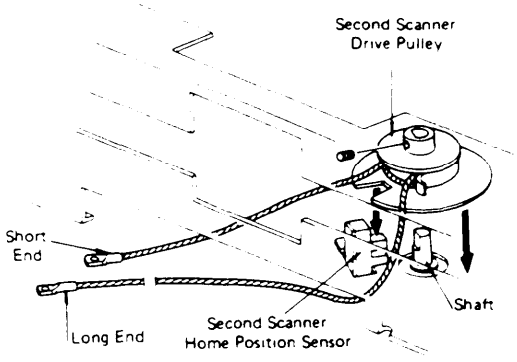

13. Run the scanner drive wire over the pulleys in the following order:

    1 Short end should be in lower track (WP1). (Tape the wire on the bracket.)
    2 Long end should be in upper track (WP1)
    3 Outer track (WP2)
    4 Outer track (WP3)
    5 Lower side (Wire Clamp)
    6 Lower track (WP4)
    7 Lower track (WP5)
    8 Three and half turns from lower to upper (Scanner Drive Pulley)
    9 Upper track (WP5)
    10 Lower track (WP6)
    11 Inner track (WP3)
    12 Inner track (WP7)

14. Remove the tape and pull the ends of the wire together and join them with the wire hook.

15. Push the tension pulley to the right. Take the wire off of the pulleys in figures 2 (WP1) and 9 (WP5) of step 12, so that you can hook the tension spring easily.

16. Hook the tension spring and reposition the wire on the pulleys in steps 2 and 9 .

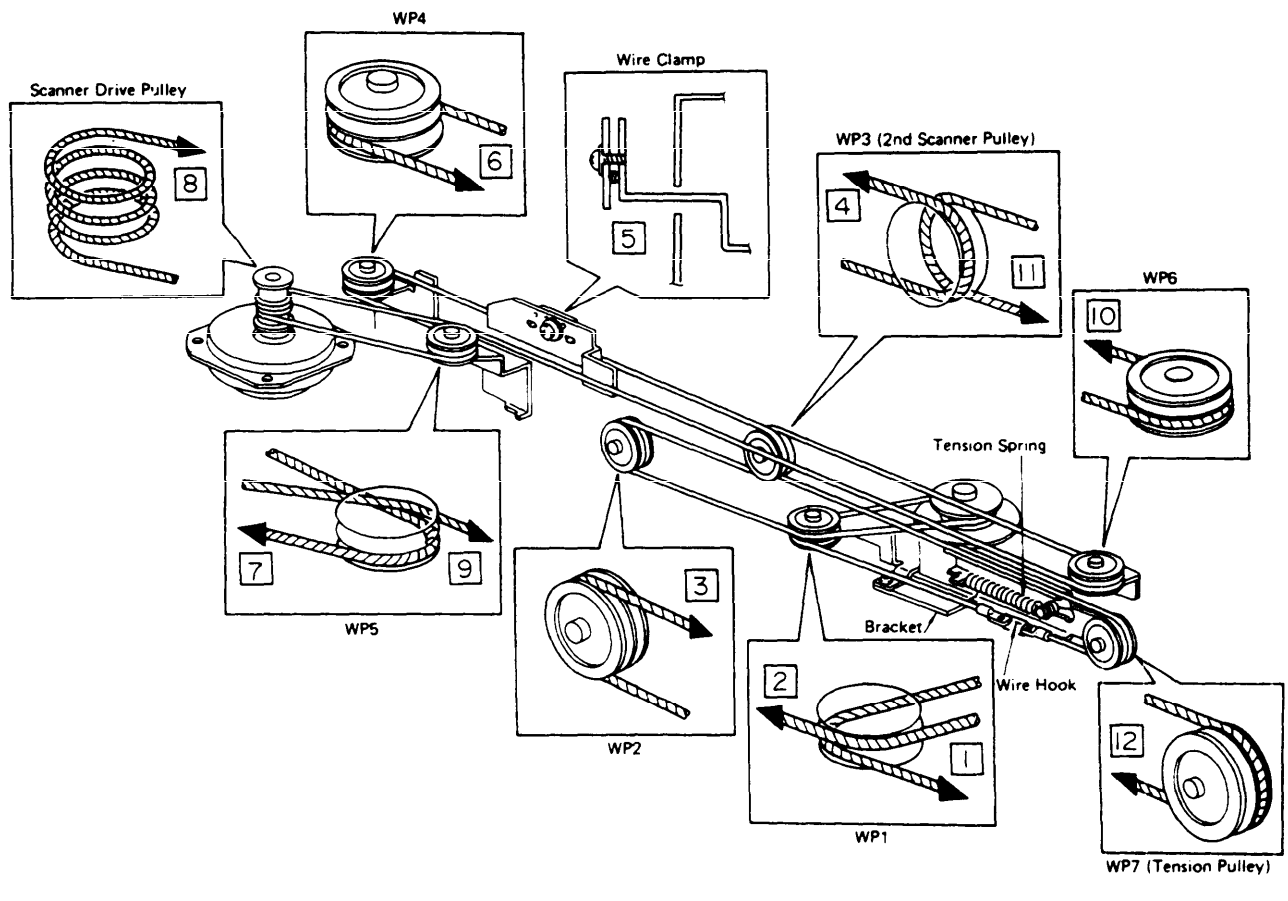

17. Remove the Ω clamp.

18. Rotate the scanner drive pulley and make sure that the scanner drive wire moves smoothly and there is no overlapping around the scanner drive pulley.

    NOTE: Step 18 is important! If overlapping of the scanner drive wire occurs, then the trail edge of A3 (11" x 17") copies may be reduced.

- Rough Adjustment of Wire Clamp Position -

19. Move the 2nd scanner to the right (rear view) and position it so that the distance between the 2nd scanner bracket and the inner surface of the optical frame is 52mm (2.05").

20. Move the first scanner to the home position and make the right edge of the wire clamp flush with the right side of the home position sensor.

21. Tighten the screw of the clamp temporarily.

22. Adjust the horizontal magnification by changing the wire clamp position. (See Horizontal Magnification Adjustment.)

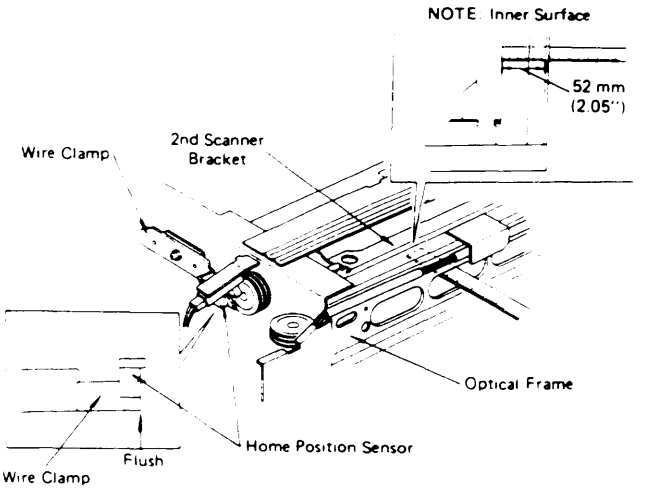

1-7. Scanner Drive Motor Replacement

1. Remove the platen cover and the mounting studs.

2. Remove the upper cover (8 screws) and the rear cover (2 screws).

3. Fix the three scanner pulleys with tape, as shown, to hold the scanner drive wire on the pulleys.

4. Lift up the scanner drive pulley vertically and take it off from the shaft of the scanner drive motor (2 Allen screws).

5. Disconnect the two scanner motor connectors and free them from the scanner motor bracket.

6. Remove the scanner drive motor (4 screws).

7. Install a new scanner drive motor.

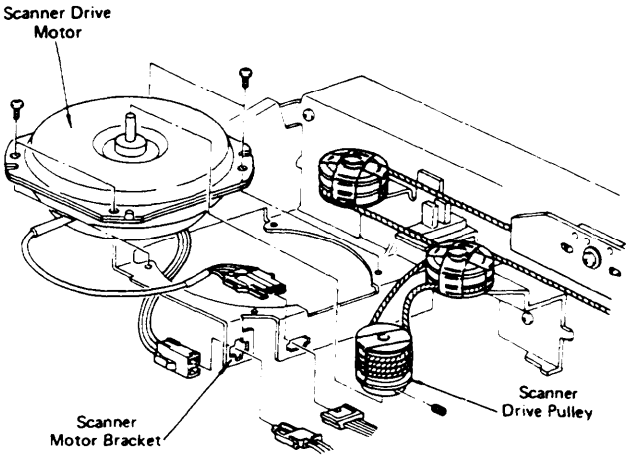

NOTE: When installing the scanner drive pulley on the motor shaft:

* Make sure that one of the allen screws is secured squarely on the flat side of the motor shaft.

* The scanner drive pulley should be flush with the end of the motor shaft.

8. Remove tapes and make sure that the scanner drive wire is correctly positioned on the pulleys.

1-8. Lens Drive and 2nd Scanner Drive Motor Replacement

1. Remove the platen cover and the mounting studs.
2. Remove the upper cover (8 screws) and the rear cover (2 screws).
3. Remove the left scale (2 short screws) and the exposure glass.
4. Remove the cooling fan (2 screws and 1 connector).
5. Move the harnesses out of the way of the bottom of the optics board (1 twist clamp). Swing the optics board to the right (1 screw).
6. Disconnect the two connectors of the motors and remove the nylon clamp (1 screw).
7. Move the scanner to the return position and put the Ω clamp (or tape) on the 2nd scanner drive pulley.
8. Fix the pulley (WP1) with tape as shown.

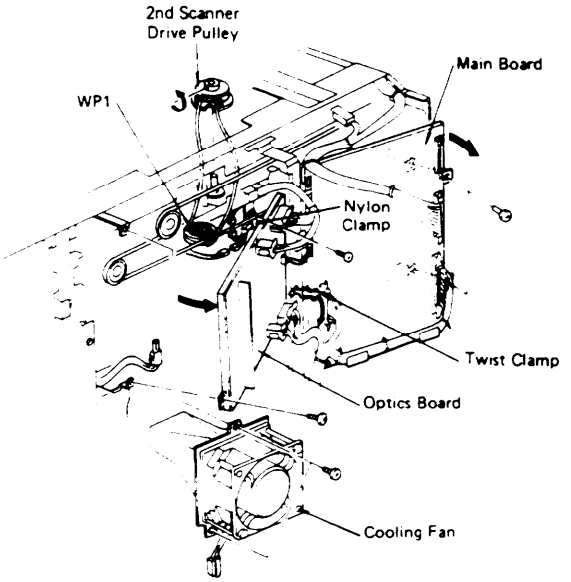

9. Loosen the Allen screw on the 2nd scanner drive pulley and align the notch of the disk with the 2nd scanner home position sensor.
10. Take off the 2nd scanner drive pulley from the motor shaft.
11. Open the front cover and take out the fusing unit (1 lock pin - orange).
12. Take out the motor assembly (3 screws).
13. Remove the motor cover (1 screw) from the motor assembly.
14. Loosen the Allen screw of the motor gear on the motor shaft. Remove the motors from the assembly --- lens drive motor and/or 2nd scanner drive motor --- (2 screws each).

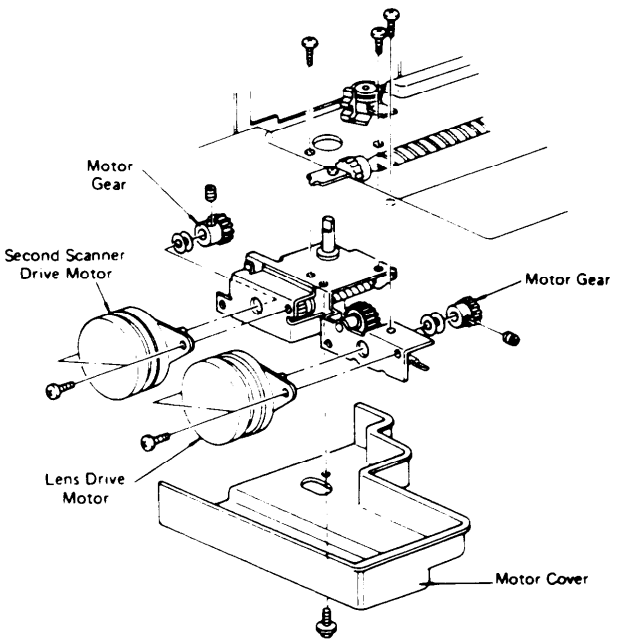

15. Install the new motor in the motor assembly.

CAUTION: * Make sure that the harnesses are properly positioned.

* When installing the motor gear, push the gear against the motor and then secure the Allen screw on the flat surface of the motor shaft.

* When installing the 2nd scanner motor, rotate the drive gear so that the flat side of the shaft faces the rear of the copier.

16. Reinstall the motor assembly and reassemble the copier.

CAUTION: When installing the 2nd scanner drive pulley, make sure that the notch of the 2nd scanner drive pulley faces the right rear corner of the copier.

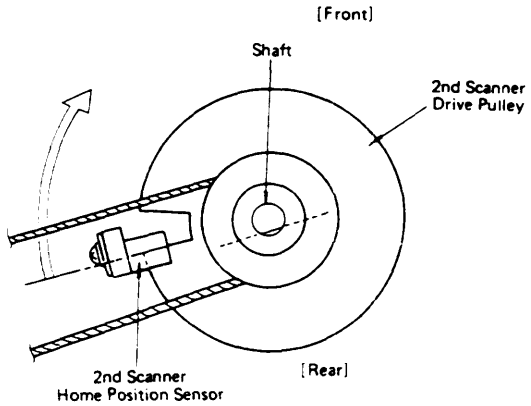

SECTION 6

SERVICE TABLES

6-1. ADJUSTMENT TABLE
[COPIER]

No.	Adjustment Item	Adjustment Standard	Note
1	Development Roller Magnet Angle	1 line right of center (Move the plate to the left and then move it back.)	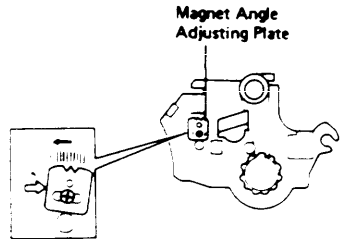 1 line Right of Center
2	Doctor Gap	1.26 ± 0.1 mm (0.050" ± 0.004")	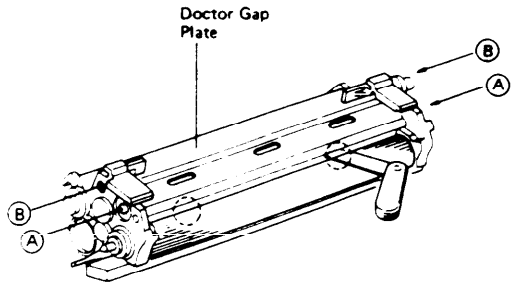

No.	Adjustment Item	Adjustment Standard	Note
3	Toner Supply Clutch	0.1 mm (0.004") Use gap gauge (P/N 52059101). Grease with Mobil Temp 78 (P/N 54479078).	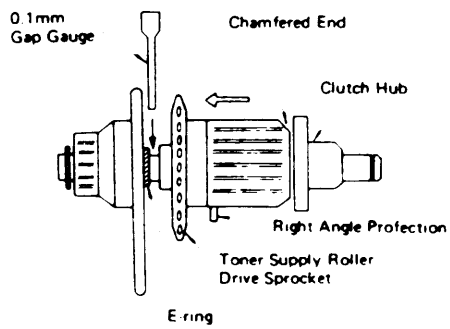
4	Image Density Sensor	+4 ± 0.2 V	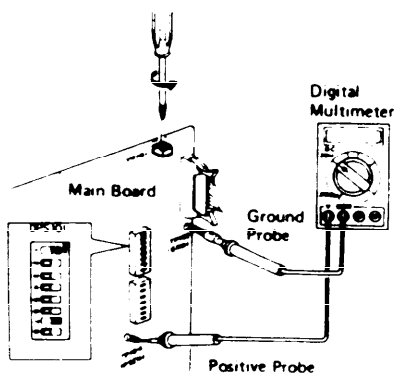

No.	Adjustment Item	Adjustment Standard	Note
5	Feed Clutches	0.1 mm (0.004") Use gap gauge (P/N 52059101).	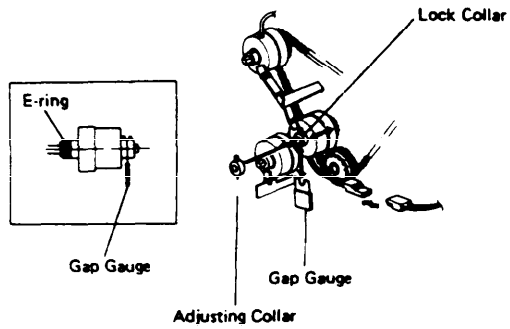
6	Pressure Springs (Fusing Unit)	Lock nut should be flush with the end of the adjusting screw. [Nip Band Width] Center: 5.6 ± 0.4 mm (0.22" ± 0.02") Side to Side: Less than 0.4 mm (0.02")	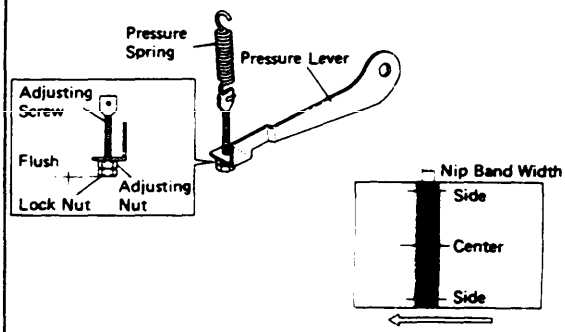

No.	Adjustment Item	Adjustment Standard	Note
7	Thermistor Gap	0.5 ± 0.15 mm (0.02" ± 0.006")	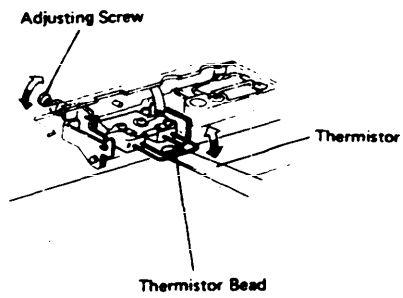
8	Thermofuse Position	As far away from the hot roller as possible.	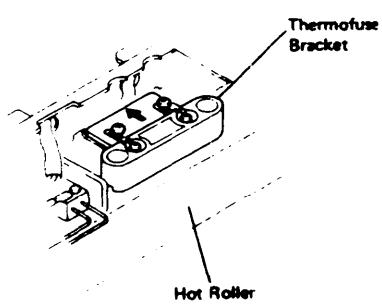

No.	Adjustment Item	Adjustment Standard	Note
9	Oil End Sensor	Contacts the bottom of the oil thank.	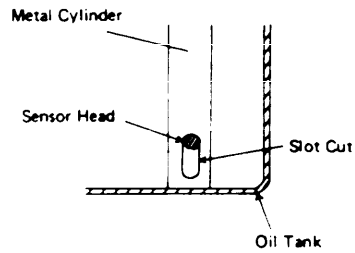
10	Pressure Roller Stripper	Pull each stripper down against the guide bracket.	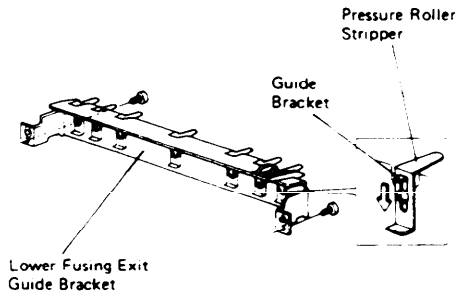

No.	Adjustment Item	Adjustment Standard	Note
11	Inverter Return Solenoid	– Solenoid Lever Gap – 1.5 ± 0.2 mm (0.059" ± 0.008") – Solenoid Stroke Gap – 2.2 ± 0.3 mm (0.047" ± 0.012")	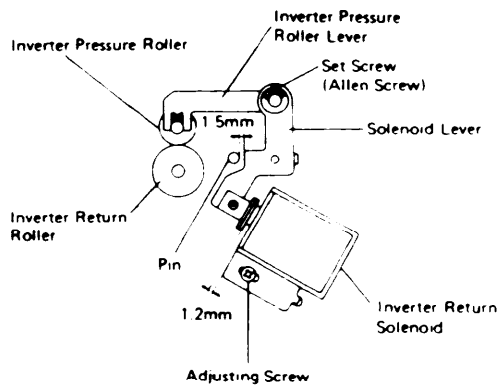
12	Inverter Support Roller Clutch	0.1 mm (0.004") Use gap gauge (P/N 52059101).	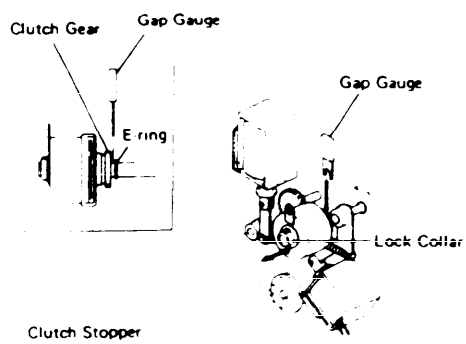

No.	Adjustment Item	Adjustment Standard	Note
13	Duplex Pick-up Solenoid	1.8 ± 0.5 mm (0.07" ± 0.02") Unhook the spring on the duplex stopper solenoid plunger and insert the plunger into the solenoid. Then adjust.	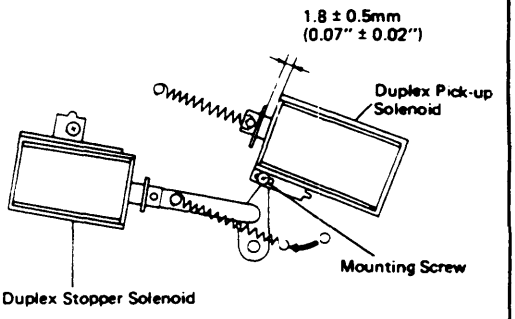
14	Duplex Stopper Solenoid	Press the solenoid fully to the left.	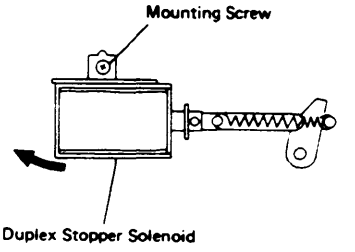

No.	Adjustment Item	Adjustment Standard	Note
15	Duplex Positioning Solenoid	5.0 ± 0.5 mm (0.20" ± 0.02")	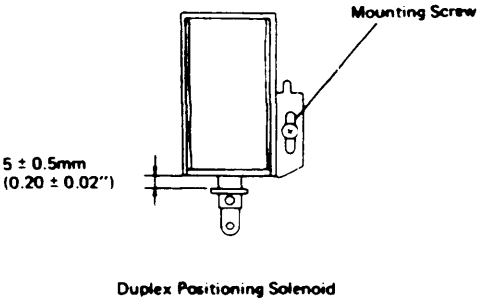
16	Jogger Home Position	Position the rear and front jogger fences as shown in the figure. Move the sensor toward the actuator plate until the LED on the sensor checker turns off. Move the sensor away from the actuator plate until the LED just lights. At this point tighten the adjusting screw.	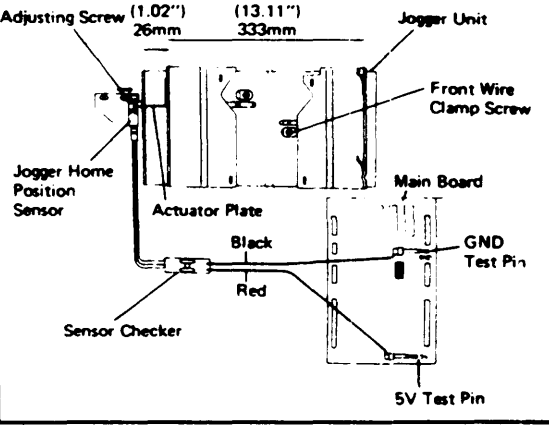

No.	Adjustment Item	Optimum Adjusting Value	Note
17	Charge Corona Current	DC + 57.7 ± 0.1 μA (Turn on SW8 on the switching board.)	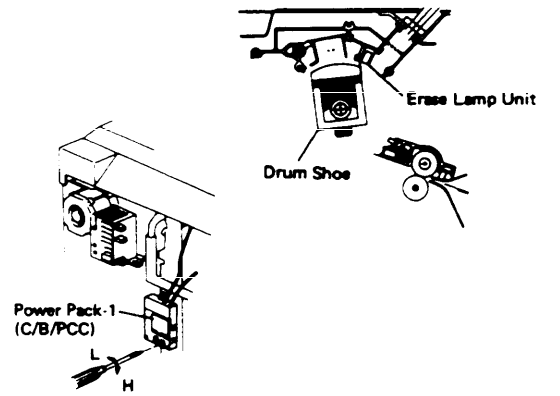
18	Transfer Corona Current	DC + 17.7 ± 0.3 μA (Turn on SW3 on the switching board.)	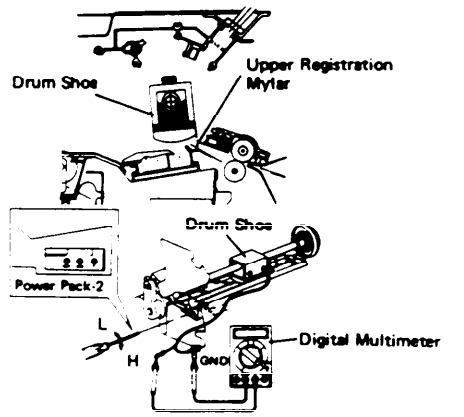

No.	Adjustment Item	Optimum Adjusting Value	Note
19	Separation Corona Current	AC 43.1 ± 0.4 μA DC −2.2 ± 0.3 μA (Turn on SW 4 on the switching board.)	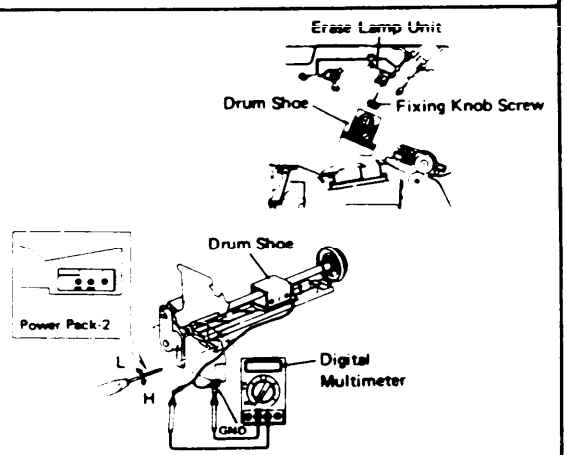
20	Pre-Cleaning Corona Current	DC + 17.5 ± 0.3 μA (Turn on SW5 on the switching board.)	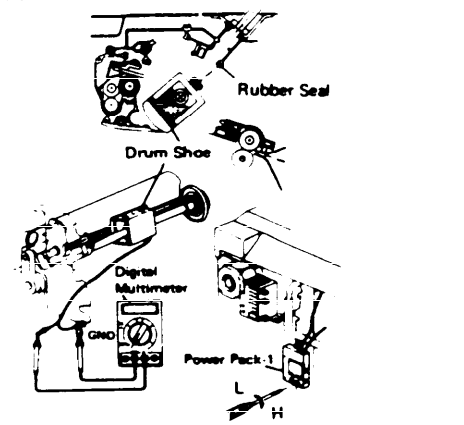

No.	Adjustment Item	Adjustment Standard	Note
21	Horizontal Magnification (ROUGH Adjustment)	Distance between the 2nd scanner bracket and the inner surface of the optical frame: 52 mm (2.05") The right edge of the wire clamp should be flush with the right side of the home position sensor.	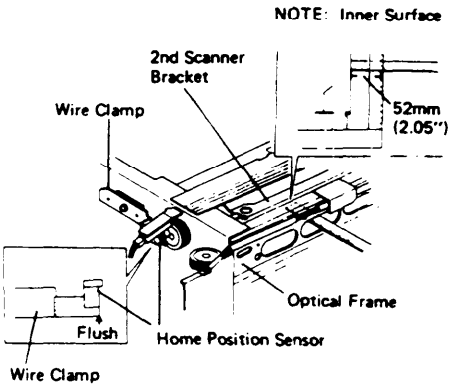
22	Horizontal Magnification (FINE Adjustment)	± 0.5% (Full size) Move the wire clamp position with checking copy image.	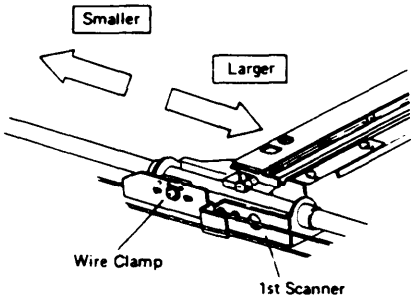

May 7, 1984

No.	Adjustment Item	Adjustment Standard	Note
23	Light Intensity	1. Level 2 of the gray scale on the OS-A3 chart should be lightly visible on the copy when 2nd level of the density control is selected. 2. Background of the copy should be slightly dirty when the 1st level of the density control is selected. * Make a test copy without the repeat compensation of the bias voltage.	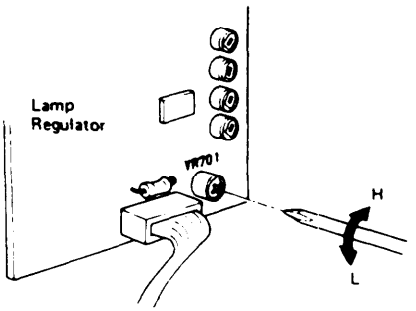

[DOCUMENT FEEDER]

No.	Adjustment Item	Adjustment Standard	Note
1	Belt Unit Level	* Front Side Gap between the nylon spacer and the exposure glass: 0.16 mm (0.006") * Rear Side Distance between the pressure support bracket and the exposure glass: 15.5 ± 0.5 mm (0.61" ± 0.02")	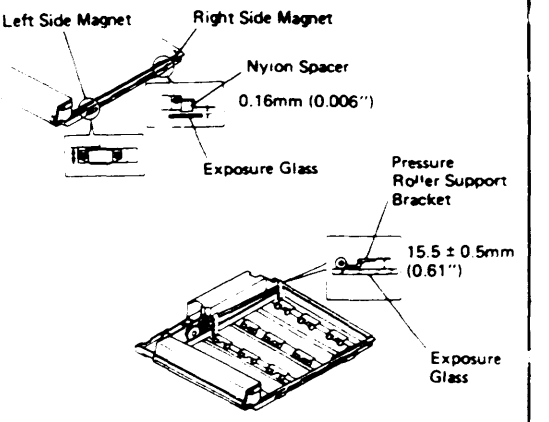
2	Original Stopper Solenoid	* Height above the original feed table: 8 mm – 12 mm (0.31" – 0.47") * Depth below the original feed table: 3 mm – 6 mm (0.12" – 0.24")	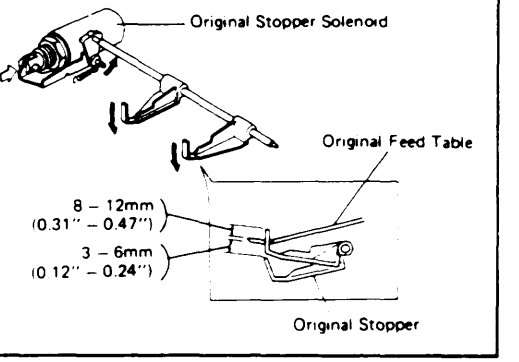

No.	Adjustment Item	Adjustment Standard	Note
3	Break Pressure Spring	14 mm – 15 mm (0.55" – 0.59")	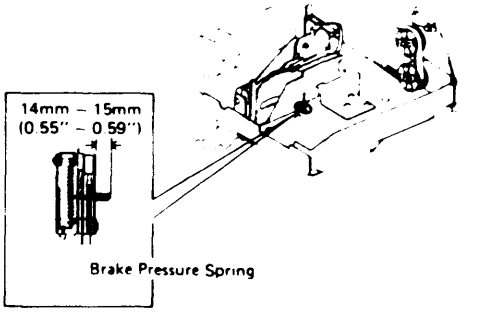
4	Lift Switch	Lift switch is deactuated when the distance between the exposure glass and the feed belt (front side) is 16 mm – 30 mm (0.63" – 1.18").	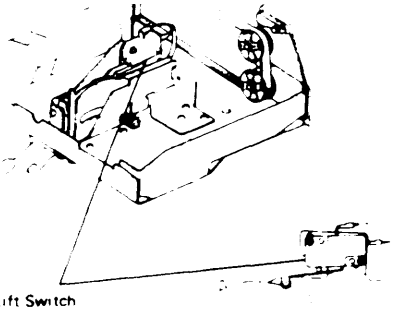

DF Registration Adjustment

No.	Procedure	Chart/Copy	Adjustment Standard/Note
1	– Preadjustment for A3 Original –	———	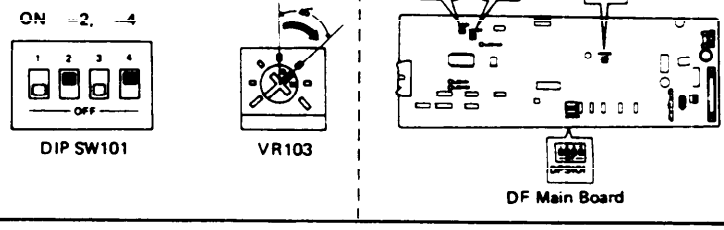
2	To feed in, depress "Auto Reduce/Enlarge" key. To feed out, depress "Auto Paper Select" key.	A3 Heavy Chart	[Original Counter] 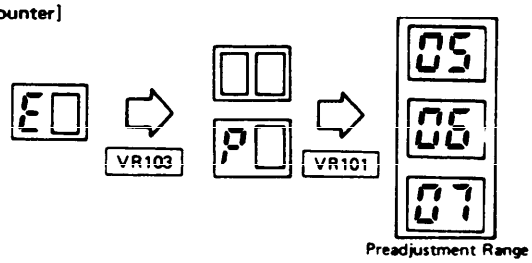
3	– Adjustment for Heavy/Light Originals –	A3 Heavy Chart A3 Light Chart	[Original Counter] 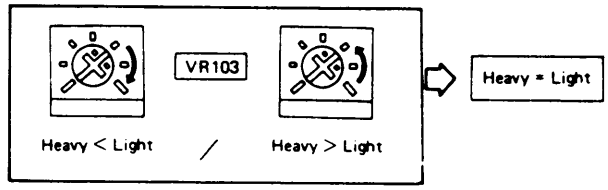

No.	Procedure	Chart/Copy	Adjustment Standard/Note
4	– Adjustment for Large/Small Originals – Make copies using the DF.	A3 Test Chart (Either heavy or light) A5 Test Chart	ON: 1 OFF: 2, 3, 4 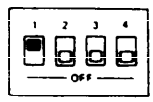 [Lead Edge Registration] 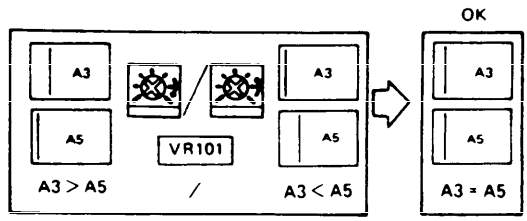
5	– Adjustment for Platen/DF Mode – Make copies in platen mode with flip scale and in DF mode.	Any Test Chart	[Lead Edge Registration] 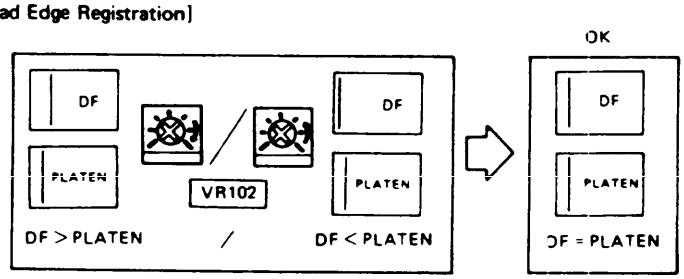

6-2. DIP SWITCH TABLE

DIP SWITCH (LEFT INNER COVER)

No.	On/Off	Name	Function	Usage	Note
1	On	Drum Conditioning	To prepare the drum surface for copying.	• After installation of a new drum. • Occurrence of a light copy image. • Occurrence of vertical black lines.	
	Off	Normal Mode			
2	On	Auto Reset Disable	To turn off Auto reset.		
	Off	Auto Reset	To enable the copier to automatically reset all its settings and modes to normal status after a specified time.		Normal Status Reproduction Ratio ..... Full Size Quantity Entered ..... "1" Quantity Completed ..... OFF Sorter ..... OFF Document Feeder ..... OFF Special Functions ..... OFF
3	On	Auto Reset 3 Min.	To specify 3 minutes as the automatic reset time.		
	Off	Auto Reset 1 Min.	To specify 1 minute as the automatic reset time.		
4	On	Count Down	To enable quantity completed counter to count down to zero.		Enter 5 copies. Press the Print key. Quantity Completed displays. 5, 4, 3, 2, 1, 0.
	Off	Count Up	To enable quantity completed counter to count up from zero.		Enter 5 copies. Press the Print key. Quantity Completed displays. 0, 1, 2, 3, 4, 5.
5	On	No Auto Cassette Shift			
	Off	Auto Cassette Shift	When the selected cassette runs out of paper, the copier will shift to the other cassette if the other cassette has the same paper size and direction.		
6	On	Beeper On	To turn on beeper.		
	Off	Beeper Off	To turn off beeper.		

DIP SWITCH 101 (MAIN BOARD)

No.	On/Off	Name	Function	Usage	Note
1	On	Free Run	To enable the copier to run without paper.	• To check and adjust ID sensor. • To check operation without paper.	
	Off	Normal Mode			
2	On	No Misfeed Detection	To clear misfeed detection.	• To judge whether a misfeed is caused by a defective misfeed sensor.	Misfeed Sensor Registration Sensor Fusing Sensor Paper Exit Sensor Inverter Sensor Fork Gate Sensor Duplex Entrance Sensor
	Off	Normal Mode			
3	On	Idle Run Off	To disable warm up cycle.	• To check the drum current.	
	Off	Idle Run On	To idle machine for 30 seconds at 170°C to warm up fusing ass'y. To enable warm up cycle.		
4	On	Coin Lock	To select coin lock operation.	• After installation of the coin lock unit.	
	Off	Normal Mode	To disable coin lock operation.		
5	Must be Off				
6					
7	On	ID Sensor LED On	The ID sensor LED continues to light.	• To adjust the ID sensor.	
	Off	Normal Mode			
8	On	Image Density Auto Reset	To return the image density to setting (4) during automatic reset.		
	Off	No Image Density Auto Reset	To clear image density auto reset.		

DIP SWITCH 102 (MAIN BOARD)

No.	On/Off	Name	Function	Usage	Note
1	On	Fixed Supply Mode	To add a fixed amount of toner at every copy cycle which is determined by the combination of DIP SW 102-3 and 4.	• When supply system fails.	
	Off	Detect Supply Mode	To enable automatic toner density supply. Amount is determined by the combination of DIP SW 102-3 and 4.		
2	On	ID Sensor Monitor	To display the potentials of V_{SG} and V_{SP} via hexadecimals in the Quantity Entered and the Quantity Completed counter respectively.	• To judge whether abnormal toner density has been caused by V_{SG} and V_{SP} or not. (See Image Density Sensor Check Section.)	
	Off	Normal Mode			
3 4	See chart for combination required	Fixed Supply Mode / Detect Supply Mode (see table below)			Detect Supply Mode 20% is factory setting.
5	On	Lighter (Toner Density)	To decrease the toner density on the copies during the image density check cycle, the sensor pattern is developed at the 2nd setting (lower bias).		If Both 5 and 6 are ON or OFF together, 4th setting will be selected.
	Off				
6	On	Darker (Toner Density)	To increase the toner density on the copies during the image density check cycle, the sensor parttern is developed at the 5th setting (higher bias).		
	Off				
7 8	Most be Off				

Fixed Supply Mode				Detect Supply Mode			
0	1	0	1	0	1	0	1
0	0	1	1	0	0	1	1
0%	3.5%	7%	10.5%	0%	20%	40%	60%

DIP SWITCH 301 (OPTICS BOARD)

No.	On/Off	Name	Function	Usage	Note
1 2 3 4	See chart for combination required	Lead Edge Registration	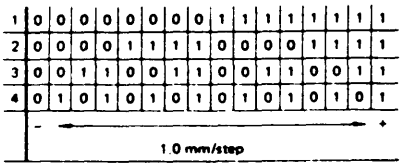 To adjust the leading edge registration as shown in above table.	• Lead edge registration is out of standard. • After replaceing optics board.	Adjustment standard (0 ± 2 mm) (0' ± 0.08")
5 6	See chart for combination required.	Vertical Magnification	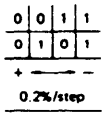 To adjust the vertical magnification.	• Vertical magnification is out of standard. • After replacing optics board.	Adjustment standard (±1%)
7 8	Must be Off				

DIP SWITCH 302 (OPTICS BOARD)

No.	On/Off	Name	Function	Usage	Note
1	On Off	Optics Free Run Normal Mode	To drive scanner drive motor only.	• To check scanner operation (after replacing the scanner wire).	
2 3 4 5	Must be Off				
6 7 8	Please see chart for combination required.	Leading Edge Erase	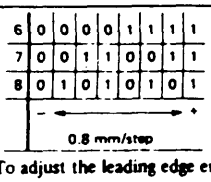 • To adjust the leading edge erase.	• Leading edge erase is out of standard. • After replacing optics board.	Adjustment standard 4 ± 1 mm (0.16" ± 0.04") (full size).

6-3. DEFECTIVE SENSOR TABLE

No.	Name	Machine Symptoms	
		Opened	Shorted
1	Scanner Home Position	"2d" is displayed during copy cycle.	"2d" is displayed after power on.
2	Overrun	"22" is displayed.	No effect
3	Lens Home Position	Lens drives to reduction and "28" is displayed.	Lens drives to enlargement and "29" is displayed.
4	2nd Scanner H.P.	2nd scanner drive pulley rotates clockwise for 0.3 sec and "2A" is displayed.	2nd scanner drive pulley overshoots H.P. counterclockwise and "2b" is displayed.
5	Toner End	No toner end detection and poor copy quality are observed.	Frequent toner end
6	Upper/Lower Lift	Lift motor overdrives feed height for 20 sec and "41" is displayed.	No lift motor
7	Upper/Lower Paper Size	Wrong paper size is displayed. Lift motor on, when no cassette is inserted.	Wrong paper size is displayed and if all five are shorted, lift motor is always off.
8	Upper/Lower Paper Volume	Segment of volume display is blank.	Segment of volume display is always on.
9	Upper/Lower Paper End	Add Paper indicator is constantly displayed.	No paper end detection
10	By-pass	By-pass mode is always selected.	No by-pass mode
11	Paper Feed	Misfeeds occur after paper feed.	Misfeeds occur at power on.
12	Image Density	No toner supplied (abnormal).	No toner is supplied (abnormal).
13	Fusing	Constant false misfeeds occur during copy cycle.	Misfeeds occur at power on.
14	Paper Exit	Constant false misfeeds occur during copy cycle.	Misfeeds occur at power on.
15	Inverter	False misfeeds occur during duplex.	Misfeeds occur at power on.
16	Fork Gate	False misfeeds occur during duplex.	Misfeeds occur at power on.
17	Duplex Entrance	False misfeeds occur during duplex.	False misfeeds occur during duplex.
18	Jogger Home Position	Jogger fences move to center and "81" is displayed at power on.	Jogger fences move to outside and "81" is displayed at power on.
19	Duplex Paper	Machine will not register the entrance of paper to the duplex tray and it will not feed the second side.	Second original blinks at power on.
20	Oil End Sensor	Will not detect low oil condition. Damage to hot roller.	Add Oil indicator is displayed constantly.

6-4. SELF-DIAGNOSTIC CODES

Code	Definition	Observation	Points to Check
11	Malfunction in the exposure lamp circuit: Lights if the lamp filament opens or if the lamp turns on during stand-by.	When the main switch is turned on, "11" dispalys within 1 second.	Exposure lamp, CN62, CN702, lamp regulator, CN701-3 constant low, CN701-5 constant low, main board.
12	Lamp Safety Relay opened: Lights if the lamp stays on longer than 10 seconds in copy cycle.	The lamp remains lit when the scanner returns to the home position.	Lamp Regulator
21	Mechanical malfunction in the scanner drive: At power up, lights if the servomotor rotates for more than 1024 encoder pulses but the home position sensor is not actuated. Also in copy cycle, if the scanner motor is turning and the home position sensor is de-actuated and stays de-actuated.	At power up – the scanner is out of home position. During copy cycle – the scanner left home and then stops. **NOTE:** In this case it can be assumed that the home sensor and the servomotor are working properly. See "2d".	Mechanical – scanner cable, scanner drive pulley Allen screws.
22	Scanner overrun: Lights if the overrun sensor is actuated.	The scanner is at the extreme right end of its travel or "22" is displayed at power up when the scanner is home.	Optics board, main board – CN102-A10 always +5V DC, shorted overrun sensor.
23	No Regist Start Signal: Lights when the main board does not receive the registration start signal from the optics board 2.7 seconds after the 1st scanner has started to move.	Scanner moves approx. 1/2 of the way then "23" displays.	Optics board, main board CN304 and CN106.
24	No Home Position Signal to Main Board: Lights if the main board does not receive H.P. signal from optics board 20sec after the servomotor starts.	Scanner operates normally. But "24" displays in 20 seconds.	CN106 and CN304, main board, optics board.
28	Lens H.P. sensor not actuated: Lights if when the lens is moving toward reduction, the H.P. sensor stays at a low signal level longer than 3.7 seconds.	1) The lens always moves toward enlargement at power up and, if at ready condition, when reproduction ratio is changed. 2) The lens is to the right of the H.P. sensor and the lens motor does not turn on.	Mechanical bind or loose set screw, shorted H.P. sensor, short at CN84A, 84, 302, optics control board, lens drive motor, CN302, 88.

Code	Definition	Observation	Points to Check
29	Lens H.P. sensor stays actuated: Lights if the lens H.P. sensor stays at a high signal level longer than 3 seconds when the lens is moving towards enlargement.	1) The lens always moves toward reduction at power up and, if at ready condition, when reproduction ratio is changed. 2) The lens is to the left of the H.P. sensor and the lens motor does not turn on.	Mechanical bind or loose set screw, opened H.P. sensor or circuit – CN 84A, 84, 302, optics board, lens drive motor, CN302, 88.
2A	2nd Scanner H.P. sensor not actuated: Lights when the 2nd scanner H.P. sensor is not actuated within 0.3 seconds after the 2nd scanner motor is turned on.	1) The 2nd scanner drive pulley has rotated clockwise out of home position at power up. If main switch is turned off and on, the drive pulley continues in the clockwise direction. 2) The 2nd scanner drive pulley has rotated counterclockwise so that the notch is under the home sensor and when main switch on, the pulley does not move.	Shorted H.P. sensor or circuit, drive motor failure, optics board.
2b	2nd Scanner H.P. sensor stays actuated: Lights when the 2nd scanner H.P. sensor remains actuated for 3 seconds after the 2nd scanner motor seeks home position.	1) At power up, the 2nd scanner drive pulley has rotated C.C.W. past the H.P. sensor. If main sw. off/on, the 2nd scanner motor makes noise for 3 seconds, or the pulley is home but does not move at power up. 2) Reduction or enlargement can be selected but when full size is selected the drive pulley over shoots the home sensor or does not move C.C.W. at all.	Opened H.P. sensor or circuit, drive motor failure, optics board.
2c	Scanner drive encoder output too high: Lights if the encoder output is faster than 0.25m seconds.	The scanner moves faster than normal (this may be difficult to observe but any copies made will be reduced)	Optics Board.

Code	Definition	Observation	Points to Check
2d	Scanner drive encoder output is too slow: Lights when the output of the encoder is slower than 123m seconds.	1) At power up, the scanner overdrives home position. 2) During copy cycle, the scanner starts a little and stops. 3) The scanner leaves home but overdrives home in return. 4) The scanner does not move at all.	Mechanical bind in scanner drive system, scanner H.P. sensor shorted or opened, servomotor encoder shorts or open circuits, optics board.
41	Upper paper lift sensor stays actuated: Lights if the lift sensor fails to go low within 20 seconds after the upper lift motor turns on.	With power on, when the upper cassette is inserted: a) The lift motor turns on but the paper does not lift. b) The lift motor, does not turn on but a paper size is displayed on the control panel.	Mechanical bind in cassette or lift mechanism, lift gear does not engage sector gear, open lift sensor or circuit, bad lift motor, paper feed board.
43	Lower paper lift sensor stays actuated: Lights if the lift sensor fails to go low within 20 seconds after the lower lift motor turns on.	See Code "41".	See Code "41"
52	Thermofuse Blown: Lights if the thermofuse circuit opens.	Immediate "52" at power on.	Opened at CN14, CN68, thermofuse, CN102-A4 main board.
53	Thermistor Failure: Lights if the Drum Thermistor opens or the Fusing Thermistor opens/shorts.	Immediate "53" at power on or. "53" after 10 to 15 minutes – overheat.	Resistance across thermistor for open, open CN14, 68, 502-3, 5, 6 or 7, CN22, erase lamp P.C.B., temp control board, temp control board CN501-3 constand high, AC drive board – triac shorted.

Code	Definition	Observation	Points to Check
54	No Ready Signal: Lights if the ready signal is not received within 8 minutes of power up.	Fusing lamp not on or fusing lamp lights but 8 minutes later – no ready beeper and "54" displays.	Opened fusing lamp, AC drive board, temp control board, main board, open at CN68, RA-1 terminal, CN602, CN604, CN601, CN501, CN502-9 does not go low, CN102-A14 does not go low.
61	Functional Drive: Lights if the CPU does not receive a timing pulse for 1.5 seconds during copy cycle.	When Print Key is depressed there is no machine activity except scanner, or when print is pressed, the main motor turns but "61" is displayed.	RA-1 contacts opened, main motor or capacitor, AC drive board, main board, pulse generator, opened CN71, 603, 601, CN19, CN102-A22/23/B23, CN101-B17.
81	Jogger H.P. sensor stays actuated or de-actuated: Lights if the jogger home sensor does not go low or high 6.2sec after the jogger motor turns on. (5070 only)	1) At power on, the jogger fences do not vibrate (check H.P.). 2) When "81" is displayed, the jogger fences are either all the way in or all the way out.	Jogger H.P. sensor opened or shorted CN33 opened jogger motor CN32 opened, CN101 main board problem (FT5050 main board installed in FT5070 will cause this display).
91	Total Counter Malfunction: Lights if the total counter fails.	Total counter does not click during copy cycle.	Total counter, CN47, CN102-A3/B13.
93	Optics/Main Board Malfunction	"93" displays during copy cycle.	Change main or optics board.

PREVENTIVE MAINTENANCE SCHEDULE
RICOH FT5050/5070/DF32

P.M. SERVICE KEY

CK = CHECK LUB = LUBRICATE ADJ = ADJUST
CLN = CLEAN REPL = REPLACE

1. Corona Units

	IM	60K	120K	SERVICE MANUAL REF. & SPECIAL NOTES
A. Corona wires	( ) CK/CLN	( ) REPL.		Pg.5-10-1 clean w/alcohol & soft cloth.
B. End blocks & casings	( ) CLN	( ) CLN		Pg.5-10-1 clean w/soft dry cloth.
C. Wire cleaner		( ) REPL.		Pg.5-10-1

2. Optics

	IM	60K	120K	SERVICE MANUAL REF. & SPECIAL NOTES
A. Mirrors, lens reflectors, toner shield glass, sensor pattern	( ) CLN	( ) CLN		Clean w/soft cloth, alcohol then water.
B. Exposure lamp			( ) REPL.	Pg.5-1-5 check lamp position adjustment. Do not touch w/fingers
C. Exposure glass	( ) CLN	( ) CLN		Clean with alcohol then water.
D. Scanner guide rod and plate		( ) CLN/LUB		Lubricate w/launa or equivalent oil.
E. Guide rod felt		( ) LUB.		Lubricate w/launa or equivalent oil.
F. Lens drive screw shaft		( ) CLN		Clean w/dry cloth. DO NOT lubricate.

3. Development Unit

	IM	60K	120K	SERVICE MANUAL REF. & SPECIAL NOTES
A. Developer		( ) REPL.		Pg.5-2-2 dispose of developer in accordance w/local regulations.
B. Seals	( ) CLN	( ) CLN		Vacuum
C. Development unit guide	( ) CLN	( ) CLN		Clean w/soft dry cloth
D. Suction duct	( ) CLN	( ) CLN		Pg.5-2-7 vacuum or clean w/soft dry cloth.
E. Development filter		( ) REPL.		Pg.5-2-7
F. Toner supply clutch			( ) CLN/LUB	Pg.5-2-10 lubricate w/mobil temp. 78.

4. Cleaning Unit

	IM	60K	120K	SERVICE MANUAL REF. & SPECIAL NOTES
A. Cleaning brush		( ) REPL.		Pg.5-3-2 dust w/setting powder.
B. Cleaning seals		( ) CLN		Vacuum
C. Cleaning unit housing		( ) CLN		Vacuum thoroughly.
D. Pick-off pawls	( ) CLN	( ) CLN		Pg.5-3-5 replace if necessary.
E. Blade scraper		( ) CLN		Pg.5-3-3 replace if necessary.

5. Paper Transport

	IM	60K	120K	SERVICE MANUAL REF. & SPECIAL NOTES
A. Paper feed roller	( ) CLN	( ) REPL.		Pg.5-5-1 clean w/water.
B. Pick-up roller	( ) CLN	( ) REPL.		Pg.5-5-1 clean w/water.
C. Separation roller	( ) CLN	( ) REPL.		Pg.5-5-2 clean w/water, lube the 3 holes of clutch hub w/mobil temp. 78.
D. Slip clutch		( ) CLN/LUB		Pg.5-5-2 lubricate w/mobil temp. 78.
E. Registration roller		( ) CLN		Clean w/alcohol.
F. Lift motor worm gear and wheel		( ) CLN/LUB		Pg.5-5-4 lubricate w/mobil temp. 78.
G. Paper feed sensor		( ) CLN		Pg.5-5-8 clean w/soft cloth or blower brush.
H. Cassette bottom plate pad		( ) CLN		Clean w/alcohol and water.
I. Transport rollers	( ) CLN	( ) CLN		Clean w/alcohol and water

6. Fusing Unit

	IM	60K	120K	SERVICE MANUAL REF. & SPECIAL NOTES
A. Hot roller		( ) CLN	( ) REPL.	Pg.5-7-5 be careful not to damage thermistor.
B. Pressure roller		( ) CLN	( ) REPL.	Pg.5-7-7 check pressure spring adjustment Pg.5-7-6.
C. Stripper pawls	( ) CLN	( ) CLN		Pg.5-7-8 replace if necessary.
D. Oil supply pad		( ) REPL.		Pg.5-7-3 prime with silicone oil.

CONTINUED...

	IM	60K	120K	SERVICE MANUAL REF. & SPECIAL NOTES
E. Cleaning pad		( ) REPL.		Pg.5-7-2
F. Oil blade		( ) CLN	( ) REPL.	Pg.5-7-3 after cleaning or replacement, prime w/silicone oil.
G. Oil sump		( ) CLN		
H. Oil tank			( ) CLN	Clean w/pipette.
I. Fusing entrance and exit guide		( ) CLN		Clean w/alcohol or water.

7. Duplex (FT5070 only)

	IM	60K	120K	SERVICE MANUAL REF. & SPECIAL NOTES
A. Duplex transport belts		( ) CLN	( ) REPL.	Pg.5-8-8 clean w/water.
B. Inverter support roller		( ) REPL.		Pg.5-8-3 adjust support roller clutch Pg.5-8-4.
C. Positioning roller drive belt	( ) CLN		( ) REPL.	Pg.5-9-1 clean w/water.
D. Positioning roller		( ) REPL.		Pg.5-9-1
E. Duplex slip clutch		( ) CLN/LUB		Pg.5-9-3 lubricate w/mobil temp 78.
F. Pick-up roller	( ) CLN	( ) REPL.		Pg.5-9-2 clean w/water.
G. Separation roller	( ) CLN	( ) REPL.		Pg.5-9-3 clean w/water; lube the 3 holes of clutch hub w/mobil temp 78.
H. Feed roller	( ) CLN	( ) REPL.		Pg.5-9-2 clean w/water.

8. Miscellaneous

	IM	60K	120K	SERVICE MANUAL REF. & SPECIAL NOTES
A. S. drum & cleaning blade		( ) CK/CLN		Pg. 5-3-1 replace as necessary as a set and dust w/ setting powder (suggested Ricoh Drum Care Procedure).
B. Pre-transfer lamp		( ) CLN		Pg.5-4-2 clean w/soft dry cloth. Discharge before installation & replace when necessary.
C. Quenching lamp		( ) CLN		Pg.5-4-3 clean w/soft dry cloth. Discharge before installation & replace when necessary.
D. Erase lamp unit		( ) CLN		Clean with soft dry cloth.
E. Lamp filters	( ) CLN	( ) CLN		Pg.5-4-1 clean w/soft dry cloth.
F. Development drive chain			( ) LUB	Lubricate w/launa or equiv. oil.
G. Main drive chain			( ) LUB	Lubricate w/launa or equiv. oil.
H. Vacuum fan filter		( ) REPL.		
I. Exit relay rollers			( ) CLN	Clean w/alcohol or water.
J. Bushings			( ) CLN/LUB	Lubricate w/launa or equiv. oil.
K. Image density sensor	( ) CK/CLN	( ) CK/CLN		Pg. 5-2-14 & 16 clean w/soft, dry cloth or blower brush; adjust if necessary.

9. DF-32

	IM	60K	120K	SERVICE MANUAL REF. & SPECIAL NOTES
A. Belt	( ) CLN	( ) CLN		Clean w/Ricoh belt cleaner.
B. Pick-up-roller	( ) CLN	( ) CLN		Clean w/water.
C. Feed roller	( ) CLN	( ) CLN		Clean w/water.
D. Friction roller	( ) CLN	( ) CLN		Clean w/water.
E. Sensors	( ) CLN	( ) CLN		Clean w/soft dry cloth or blower brush.

10. Final Check

( ) Machine operation (all modes)
( ) Copy quality
( ) Registration (machine & D.F.) Pg. 5-11-1 & 8-3-1

11. P.M. Completion

( ) Install all covers and clean exterior of copier
( ) Update P.M. label
( ) Complete information below

CUSTOMER NAME _____ DATE _____

CUSTOMER ADDRESS _____

_____

MACHINE S/N _____ METER READING _____

TECHNICAL REPRESENTATIVE _____

CUSTOMER'S SIGNATURE _____

6-6. SPECIAL TOOLS

No.	PART NUMBER	DESCRIPTION	REMARKS
1	52059601	Switching Board	
2	52059101	Gap Gauge – 0.1 mm	Exclusively used for FT5050/5070
3	52059111	Omega Clamp	
4	52069600	Sensor Checker	
5	54429101	Setting Powder	
6	54429106	Drum Shoe	
7	54209504	Thermo Meter	
8	54209505	Probe	
9	54209507	Digital Multimeter	Common with previous models
10	54209508	Test Lead Kit	
11	54209550	Silicone Oil	
12	54479078	Heat Resisting Grease MT-78	
13	54209502	Test Chart OS-A3	
14	54429103	Launa Oil	

* Regarding Item No. 1 ,2 ,3 , and 4 detailed explanation is given on the following table.

Special Tools Exclusively Used for FT for FT5050/5070

No.	PART NUMBER	DESCRIPTION	NOTE
1	52059601	Switching Board . . . . . Used for measuring corona current This board must be used with drum shoe (P/N 54429106) which was used for FT4000 series and FT3000 series. However, it is not necessary to use adapter.	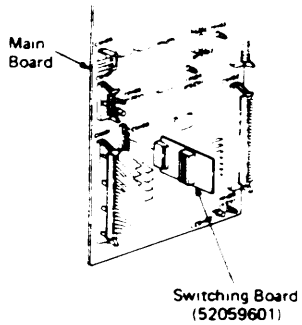

No.	PART NUMBER	DESCRIPTION	NOTE
2	52059101	Gap Gauge – 0.1 mm Used for adjusting clearance between magnetic clutch and collar.	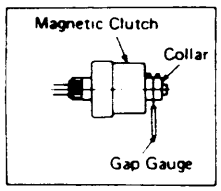 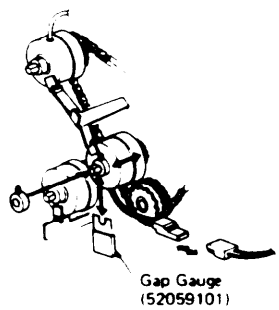
3	52059111	Ω (Omega) Clamp Used for holding scanner wire on 2nd scanner drive pulley when removing or installing pulley when removing or installing pulley on its original position.	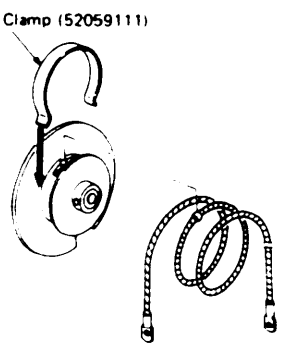

SECTION 7

TROUBLESHOOTING

1-1. White Copy

1. Charge current is not induced.

   Due to BCP P.P. failure, poor contact of H.V. Lead Wire, or broken wire, charge current is not applied on the Drum surface.

2. Copy image is not transfered to the paper.

   Due to T/S P.P. failure, poor contact of H.V. Lead Wire, or broken wire copy image is not transfered to the paper.

   * When T/S P.P. is failed, slightly visible image will appear on the copy paper. However, when BCP P.P. is failed, no image will appear.

3. Development Roller is not turning.

   Due to slipping of roller or broken Drive Gear caused by overload, Development Roller is not turning.

   * Lead edge may be dirty.

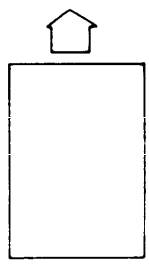

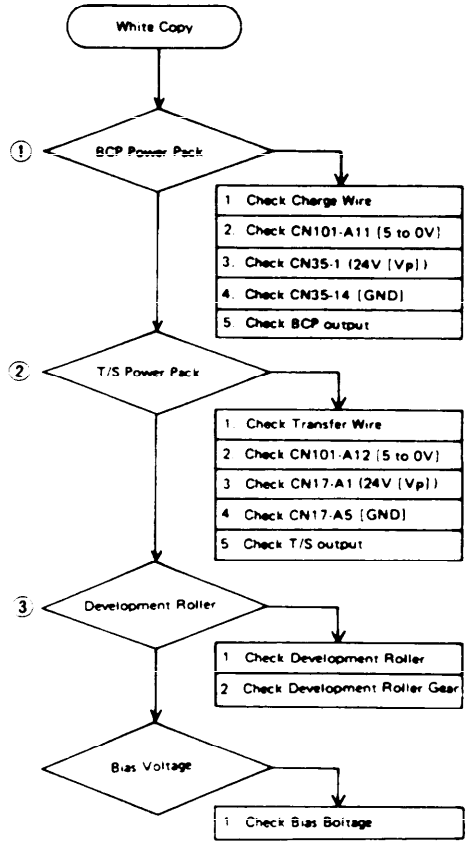

1-2. Dirty Background - 1

1. Charge Wire becomes dirty.

   If charge wire is contaminated, Drum current is increased due to thick diameter of wire. Contrary to the previous models, the dirty Background will appear. Same with FT-4000 series.

2. Dirty mirrors and toner shield glass.

   If mirrors and shield glass are contaminated, image pattern will be changed by shifting reproduction ratio.

   2-1. Toner shield glass is contaminated by too high image density or scattered toner when inlet seal is deformed.

   2-2. Mirrors and Exposure Glass are contaminated by oil.

3. Image Density is too high.

   If image density is too high, toner will be scattered inside the copier, causing contamination of toner shield glass, PTL, ID sensor and transfer charge wire.

4. Seals are stripped off from Dev. Unit.

   If seals are stripped off, or toner is accummlated developer filter due to insufficient absorption, toner will be scattered.

5. Intensity of exposure light is too weak.

   Due to deterioration of Exposure Lamp or too low output voltage of Lamp Regulator, intensity of exposure light becomes weak, causing dirty background.

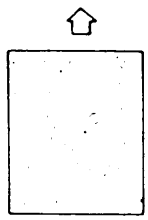

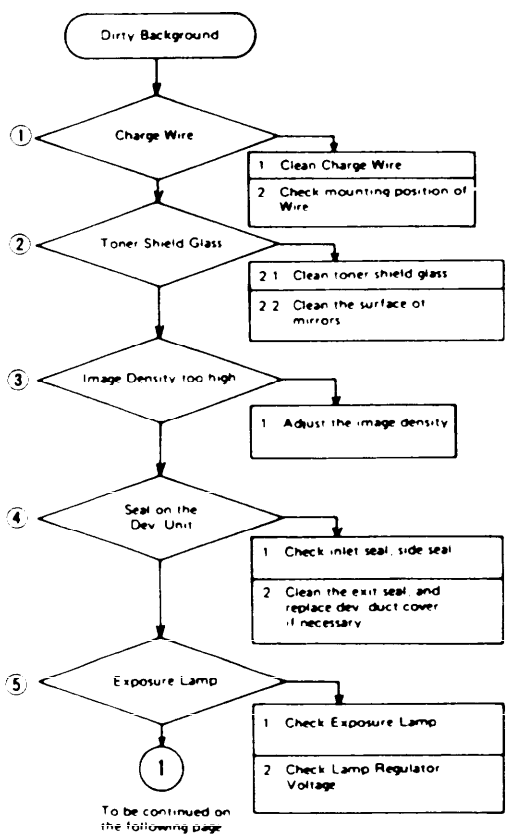

Dirty Background - 2

6. Doctor Gap is too wide.

   If Doctor Gap is too wide, dirty background will appear. And also when making black solid copy, carrier of developer will be transfered to the Drum.

7. Deterioration of the Drum

   If the Drum has deteriorated, image density will increase, causing dirty background.

8. Deterioration of the Developer

   If the Developer has deteriorated, image density will decrease, causing dirty background.

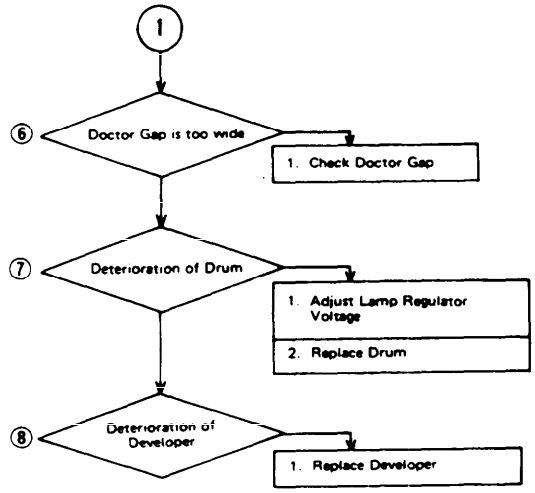

1-3. Uneven Image Density

1. Uneven Charge current

   When making black solid copy, uneven image density will appear on the copy due to the contaminated wire, or uneven mounting height of wire. Copied pattern will not be changed regardless of reproduction ratio.

2. Contaminated Mirrors and Exposure Glass

   Uneven image will appear on the non image area due to the contaminated mirrors and glass. Copied pattern will be changed according to reproduction ratio.

3. Deterioration of lamp or not incorrectly aligned filament.

   * If image pattern is not changed in any reproduction ratio, there will be another reason for that.

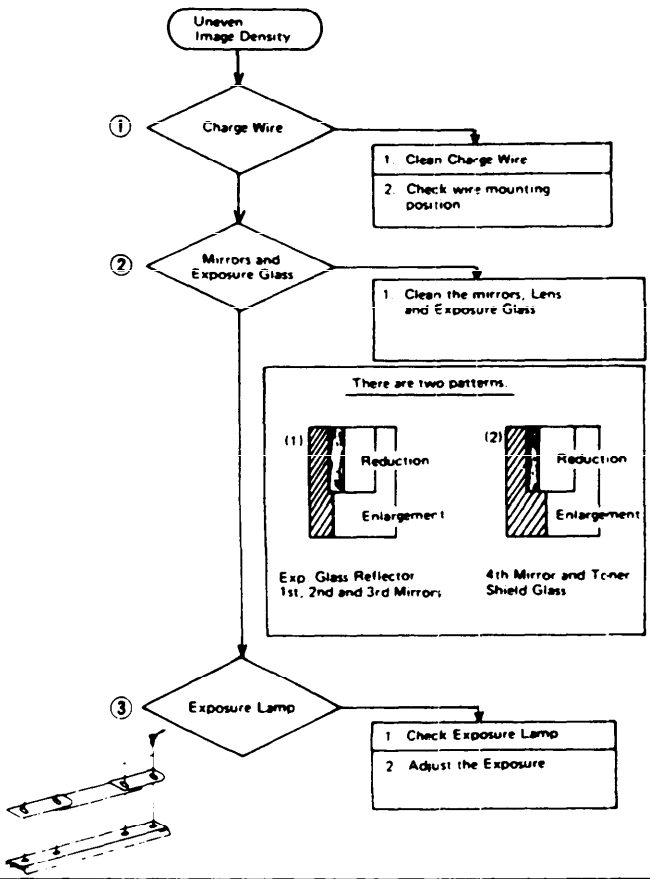

1-4. Vertical Black Line - 1

1. Black stripe appears at the rear side of copy.

   When pulling out Dev. Unit, mounting position of Toner Shield Glass moves out of position due to contact of Dev. Unit.

2. Vertical black line will appear on the copy.

   2-1. Toner Shield Glass is stained with toner due to defective Inlet seal on the Dev. Unit.

   2-2. Lens and Mirrors dirty.

   2-3. Damaged edge of the Cleaning Blade
   Possible causes are:

   * Carrier on the Drum
   * Small projections on the Drum surface
   * Paper dust accumulated on the edge of the Cleaning Blade

   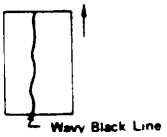

   2-4. Too much toner causes black stripe.

3. Black stripe appears sharply on the copy.

   3-1. Scratches of Drum

   3-2. Scratches of Hot Roller

   3-3. Stained or broken Exposure Glass

   3-4. When using mailing label, glue on the reverse side of label is sticking and being left on the Drum surface, resulting in toner build up.

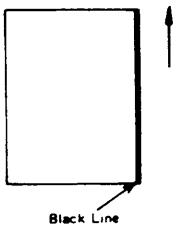

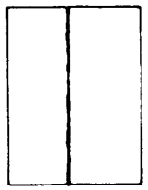

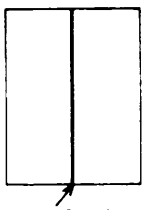

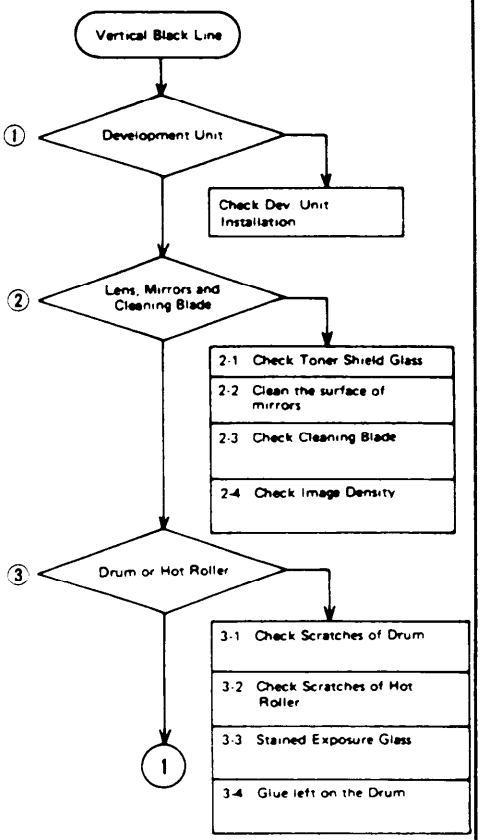

Vertical Black Line - 2

4. Black stripe or band of heavy background

   4-1. Toner pile-up on top of the Dev. Unit.

   This may result from overtoning due to dirty ID sensor or ID sensor out of adjustment. Another possible cause could be gaps in the brush seal.

   4-2. Check and adjust the Exposure Adjusting Plates.

   4-3. Exposure Lamp is discolored or the Filament of Exposure Lamp is deformed due to deterioration or failure.

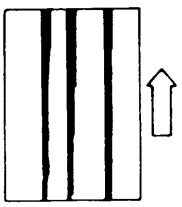

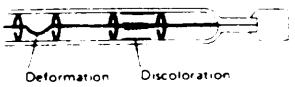

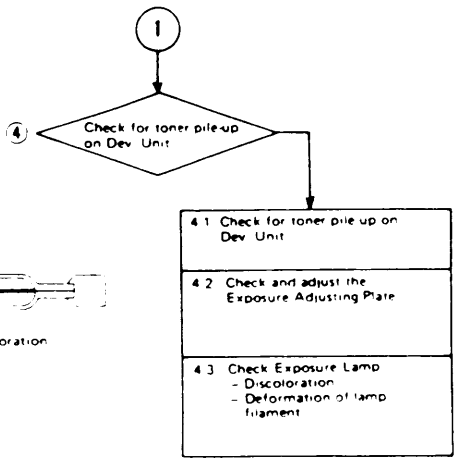

1-5. Vertical White Lines - 1

1. Due to the contamination of charge wire, Vertical White Line will appear on the copy.

   Clean the charge wire with the wire cleaner, if that does not work try with dry cloth.

   Check the charge corona unit, Dev. Unit and Cleaning Unit for hanging thread or fiber that may discharge the drum.

   Clean the Dev. Unit seals.

2. Due to the insufficient cleaning caused by accumulated paper dust on the edge of Cleaning Blade.

3. Toner on the Drum is scraped off by the unknown foreign substance.

   Check the deformation of PTL.

   Check the deformation of ID sensor Board

   Check the carrier or toner pile-up.

   Check the deformation of Transfer/Separation guide plate.

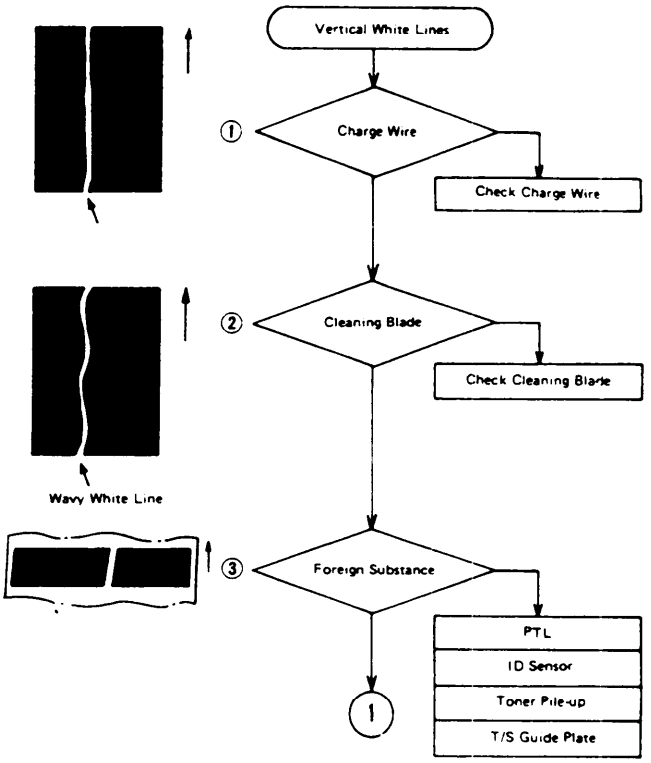

Vertical White Line - 2

4. Non sharp white line appears on the copy.

   4-1. Inlet seal on the Dev. Unit is contaminated with oily dust or condensation.

5. Scratches on the Drum will cause sharp white line, to appear on the copy.

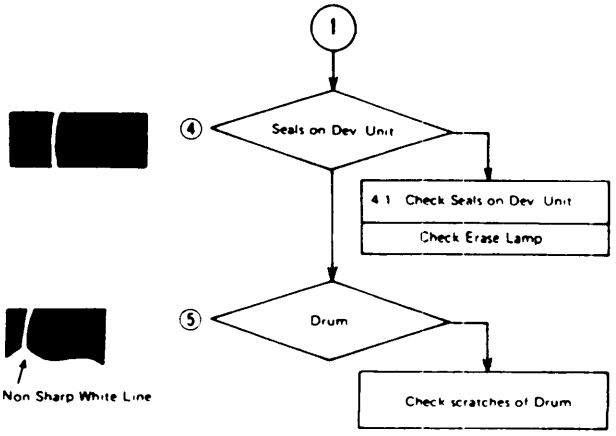

1-6. Horizontal Black Line

1. Check the Drum. It may be either scratched or have a line of toner stuck on it. Replace the Drum if it is scratched.

   Check the Drum if it has toner lines on it (Use clean soft cloth).

2. If Black line appears at every 126mm interval, check the Hot Roller for scratches.

   And replace if necessary.

3. Black line appears about 250mm (9.84") from the leading edge on A3 paper.

   When using A4 sidewise paper, Black Line will appear on the 2nd copy onwards.

   Dust the Cleaning Blade with setting powder.

   Replace the Cleaning Blade if it is too worn.

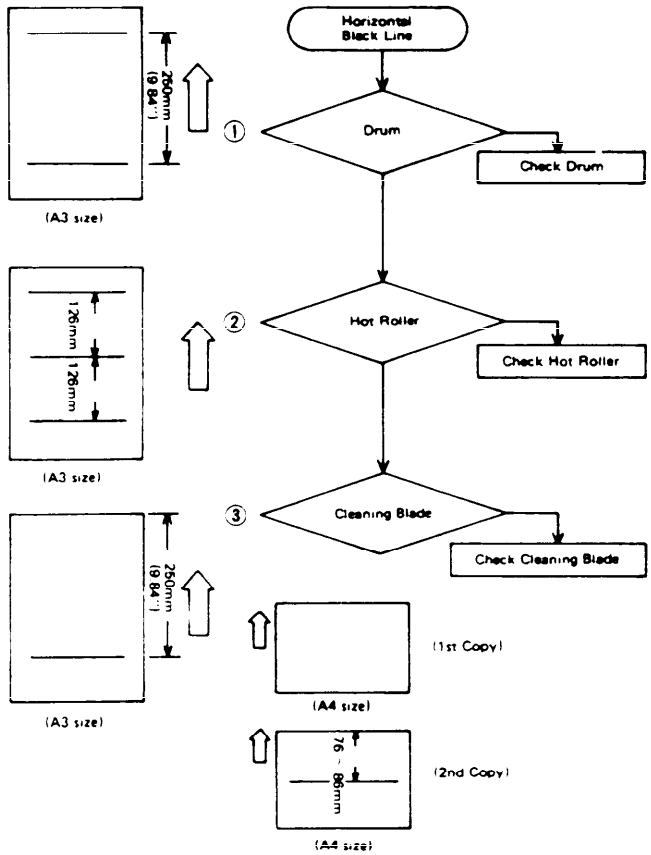

1-7. Jitter

1. Jitter appears at every 80mm interval on the copy.

   1-1. Irregular revolution of scanner drive motor.

   1-2. Pulley has burr or scratches on its surface.

2. Irregular jitter appears on the copy, especially noticeable in enlargement mode.

   Due to incorrect voltage being supplied from power supply unit.

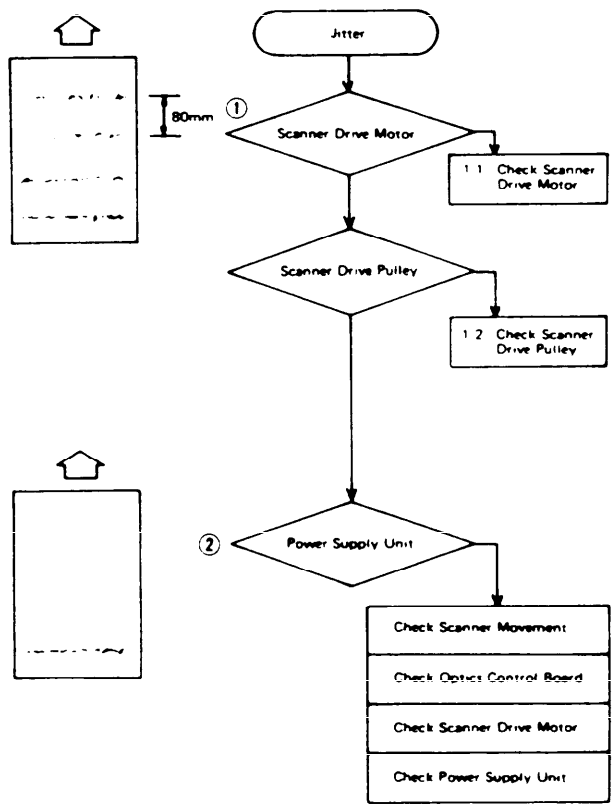

1-8. Copy image is scraped off by the finger due to unfused copy

1. Nip width is too narrow.

   Specification is as follows:

   Front: 5.4mm to 5.8mm

   Rear: 5.4mm to 5.8mm

   Center:

2. Fusing Temperature is too low.

3. Check thermistor gap.

   This gap should be adjusted to 0.4 - 0.6mm.

4. Frequency exchange switch on Temperature Control Board is not set correctly.

   Care must be taken when replacing the this board (specially in 60Hz area) since every spare part is adjusted to 50Hz version.

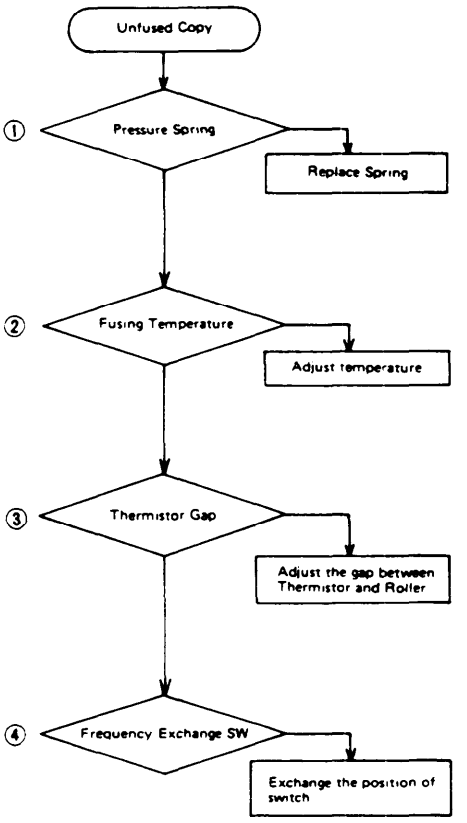

May 7, 1984

1-9. Scanner movement is out of control

1. When the main power switch is turned on, scanner drives into return position.

   Cause: When the power becomes too low (approximately 20% lower than standard voltage), reset signal can not be transmitted to Optics Control Board, causing the scanner to drive into the return position.

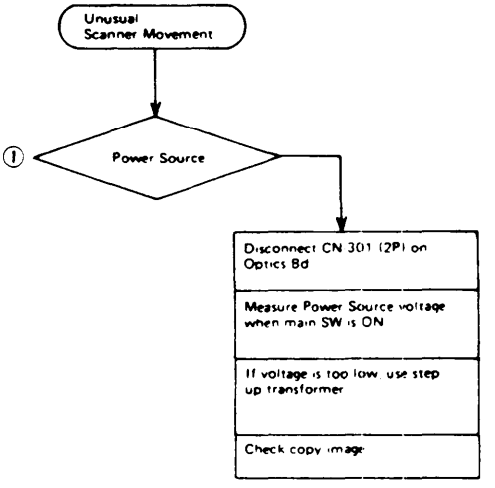

1-10. Toner Density is too high - 1

When the toner density is too high, following symptoms may be observed:

SYMPTOM:

1. Dirty background may appear on the copy. And also 1mm pitch horizontal black line may appear:
2. Toner density on the black solid area is too high.
3. Toner is piled-up on the end block cover of Transfer/Separating Corona Unit and also on the upper cover of Dev. Unit.

CAUSE:

1. Lamp Regulator output voltage is too high.
2. Bias voltage is too high.
3. Charge current is too low.
4. Fixed toner supply mode is selected. When copier is used in fixed toner supply mode, excessive toner is supplied regardless of the actual usage depending on the original used.
5. Toner supply clutch is revolving always.
6. Toner supply ratio is greater than the actual usage.

   If the 40% supply in detect supply mode is selected while 20% black solid original is used, amount of toner supplied at one time is twice the actual toner consumption, thus causing toner scattering inside the copier.

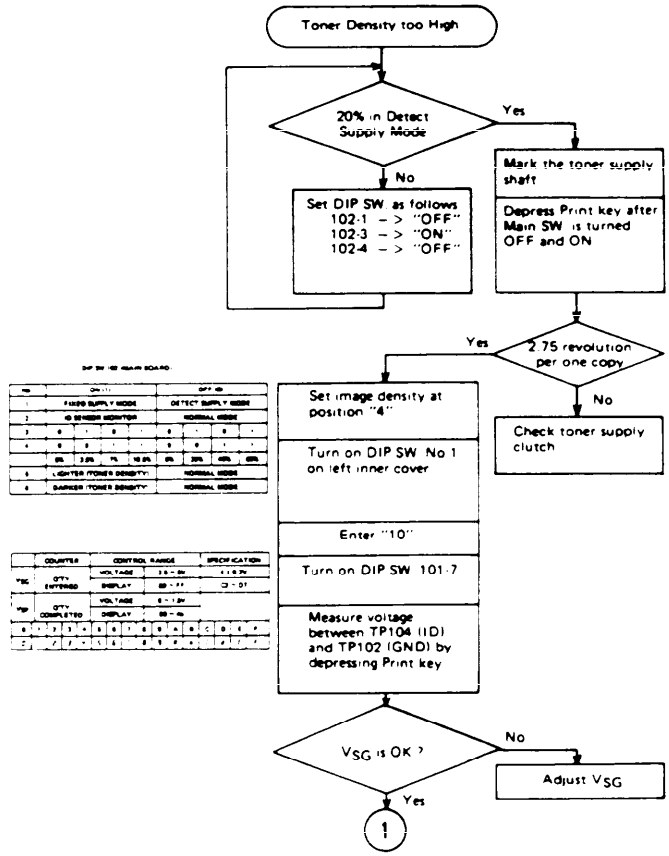

Toner Density is too high - 2

7. If the DIP SWITCH 102-6 is turned on (Darker), toner scattering is anticipated in normal copying operation.

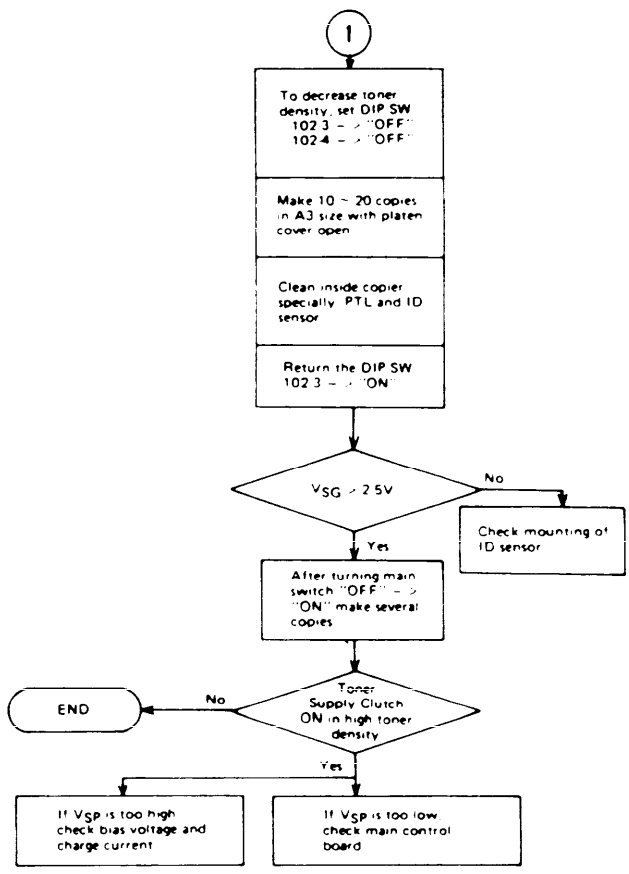

1-11. Toner Density is too low - 1

If the toner density is too low, following symptoms will be observed.

SYPTOM:

1. Toner density on black solid area will be too low.
2. Black solid area feels rough to the touch.
3. Carrier will be present on the copy.
4. When making black solid copies, fire fly spots will appear.

CAUSE:

1. Vsg is out of adjustment.

   When Vsg is lower than 2.5V, toner supply is inhibited by CPU.

2. Vsg is out of adjustment.

   When Vsp is higher than 1.5V, toner supply is inhibited by CPU.

3. Charge current is too high.

   If the charge current is increased in order to improve black solid image, Vsp is decreased, lowering the toner density.

4. Bias Voltage is too low.
5. Lamp Regulator outputis too low.
6. Toner supply clutch failure.
7. Toner end sensor is not operating.
   Since the toner end sensor is not working, no toner is supplied although the toner supply shaft is revolving.

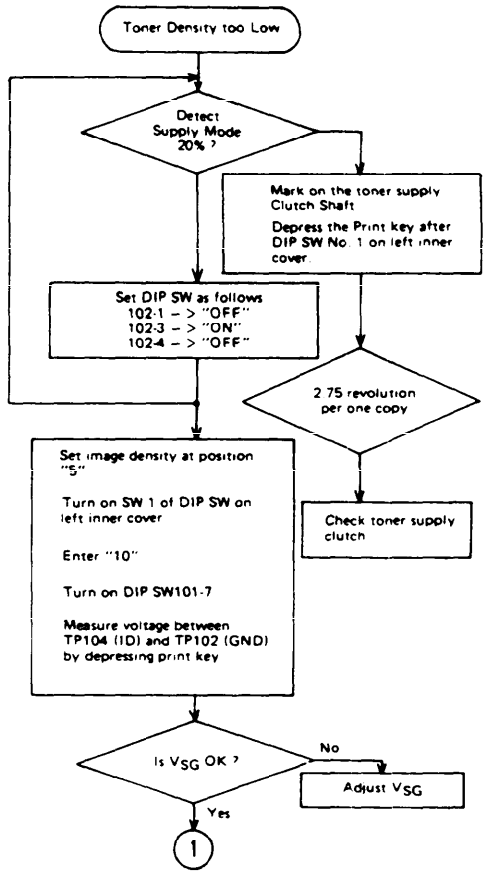

Toner Density is too low - 2

8. Too many black solid originals are being copied.

   There is a possibility that toner supply can not keep up with the required amounts of toner.

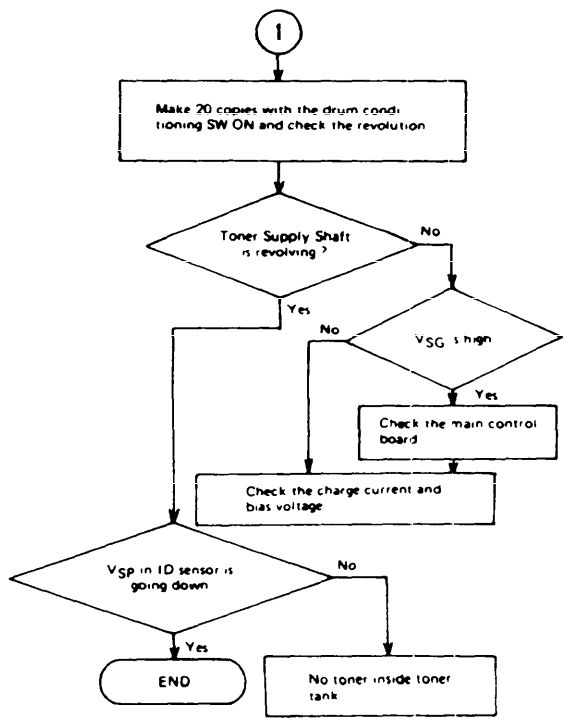

1-12. Distorted Copy Image

Copied image is parallelogram

1st scanner and 2nd scanner are not parallel.

* This problem may occur if the scanner lock plate is not mounted when transporting the copier.

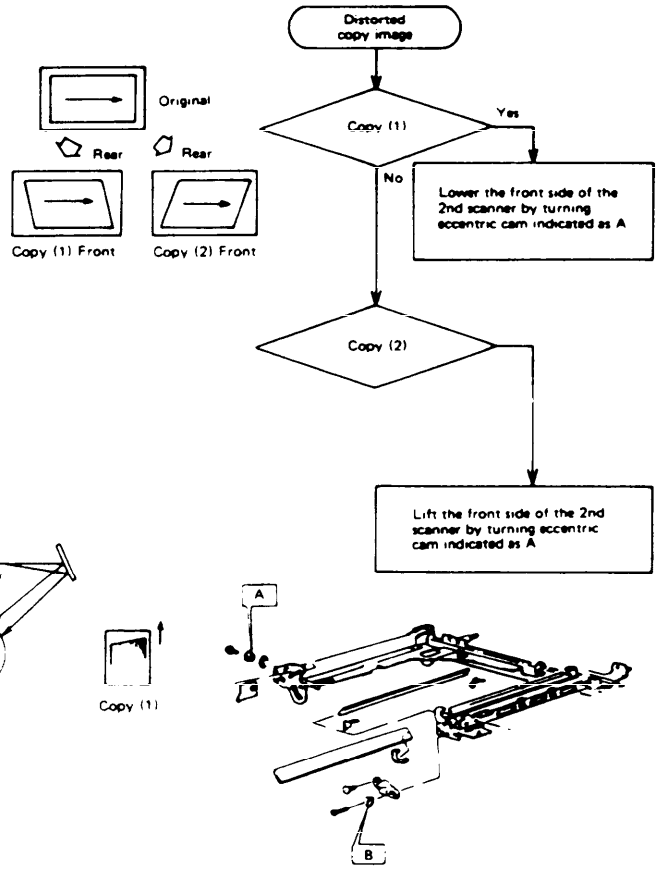

1-13. Miscellaneous

1. Lighter image will appear at 10mm intervals.

   Due to poor contact of the transfer voltage terminal, light image bands will appear.

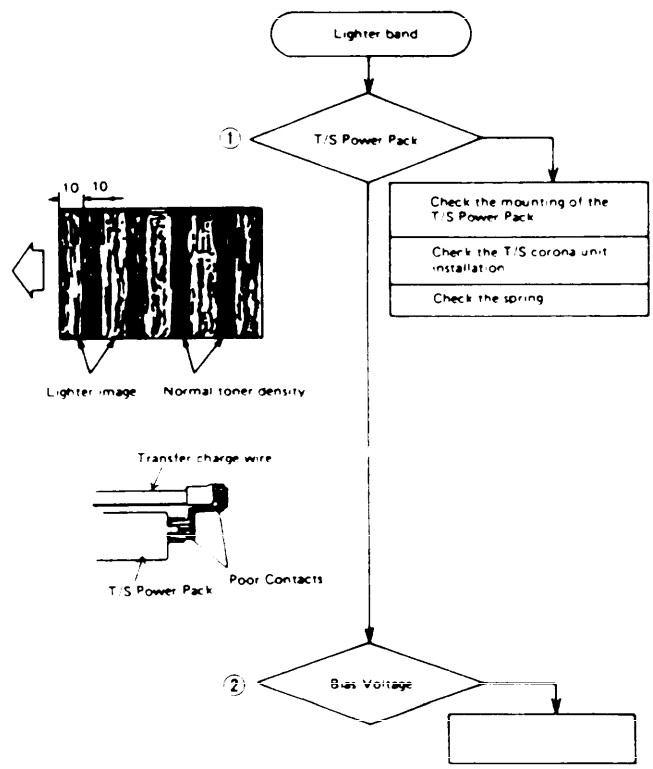

2. Bias Voltage is not applied.

   Light copy image

7-2. Electrical and Mechanical

2-1. Exposure Lamp Malfunction ---------- 7-2-1
2-2. Lamp Relay Open ---------- 7-2-2
2-3. Scanner not in H.P. ---------- 7-2-3
2-4. Overrun SW ON ---------- 7-2-4
2-5. No Regist Start Signal ---------- 7-2-5
2-6. No H.P. Signal ---------- 7-2-5
2-7. Lens H.P. Not ON or OFF ---------- 7-2-6
2-8. 2nd Scan H.P. Not ON or OFF ---------- 7-2-7
2-9. High Frequency Encoder Output ---------- 7-2-8
2-10. Low Frequency Encoder Output ---------- 7-2-9
2-11. Upper or Lower Lift Sensor Not ON ---------- 7-2-10
2-12. Thermofuse Blown ---------- 7-2-11
2-13. Thermistor Blown ---------- 7-2-11
2-14. Ready Signal Not ON ---------- 7-2-12
2-15. Functional Drive Malfunction ---------- 7-2-13
2-16. Jogger H.P. Not ON or OFF ---------- 7-2-14
2-17. Total Counter Malfunction ---------- 7-2-15
2-18. Optics/Main Board Interface Malfunction ---------- 7-2-15

2-1. 11 : Exposure Lamp Malfunction

Possible Cause:

1. Lamp Regulator Board is defective.
2. Main Control Board is defective.
3. Exposure Lamp is broken.

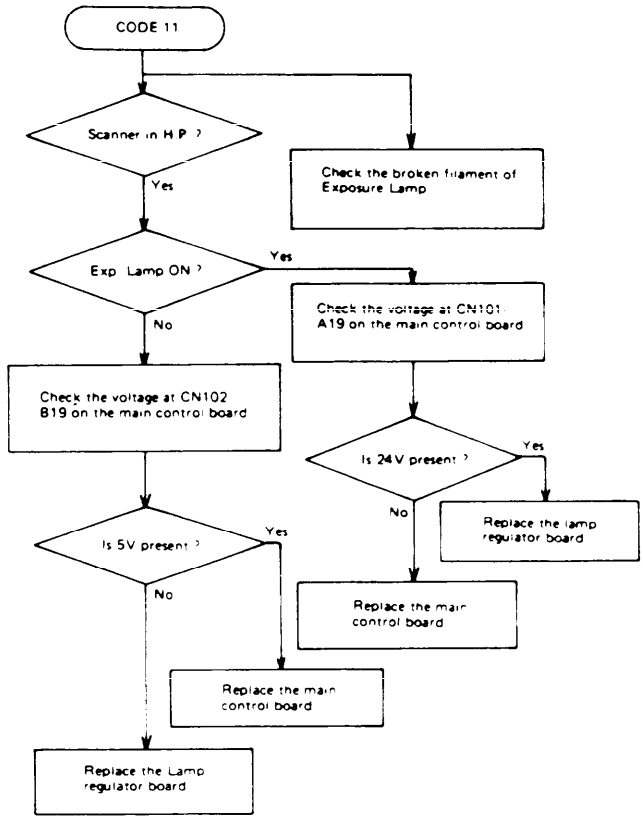

May 7, 1984

2-2. 12 : Lamp Relay Open

Possible Cause:

1. Lamp Regulator Board is defective.
2. Main Control Board is defective.

* When making A3 size copy, the exposure lamp turns on for approx. 2.3sec.

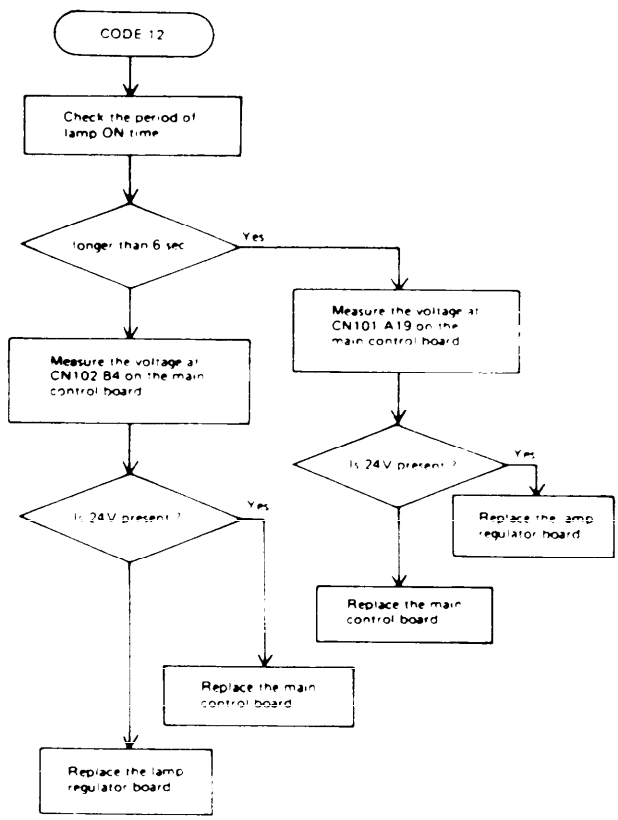

2-3. 21 : Scanner not in H.P. Delayed H.P. Signal

Symptom:

Scanner does not return to home position.

Cause:

1. Scanner drive malfunction.
   - 1-1. The scanner drive pulley set screw is not tight.
   - 1-2. The scanner drive wire is broken.
2. The optics control board is defective.

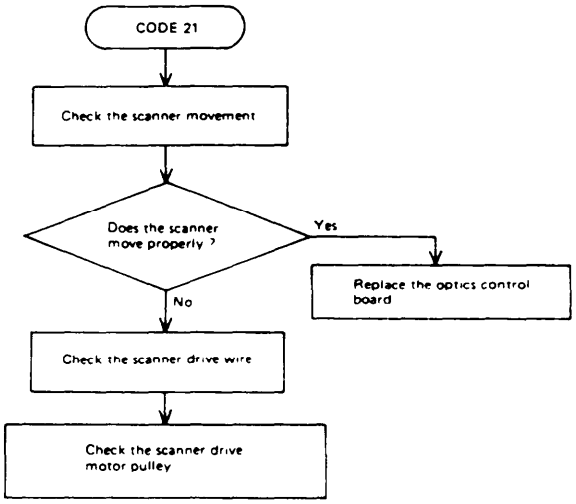

2-4. 22 : Overrun SW ON

Symptom:

When the scanner fails to return, it reaches the overrun sensor position.

Cause:

1. The overrun sensor is defective.
2. The optics control board is defective.
3. The main control board is defective.

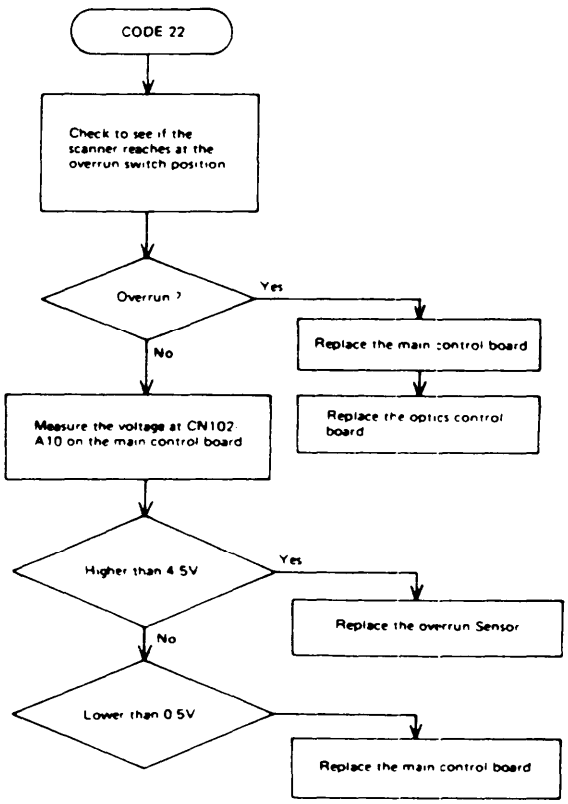

2-5. 23 No Regist Start Signal

Symptom:

2.7sec after the scanner starts to move, no regist start signal is transmitted from the optics control board.

Cause:

1. The optics control board is defective.
2. The main control board is defective.
3. Scanner drive motor malfunction.

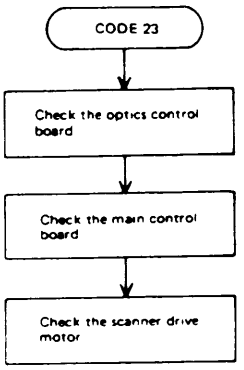

2-6. 24 No H.P. Signal

Symptom:

20sec after the scanner return signal is ON, no home position signal is transmitted.

Cause:

1. The optics control board is defective.
2. The main control board is defective.

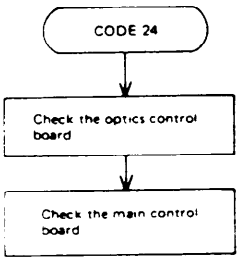

2-7. 28 Lens H.P. Not ON

29 Lens H.P. Not OPP

Possible Cause:

1. Lens Home Position sensor failure
2. Lens Drive Malfunction
3. Optics Control Board
4. Lens Drive Motor failure

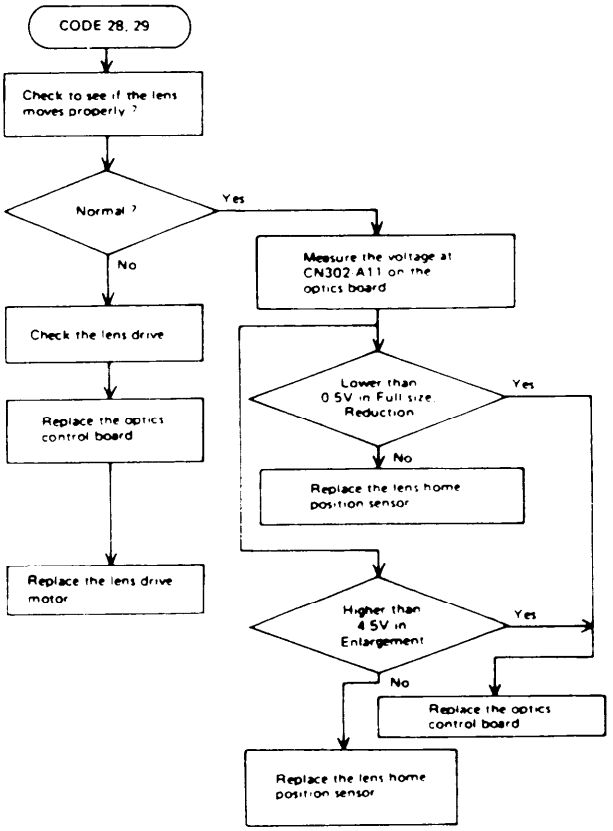

2-8. 2A, 2B : 2nd Scan. H.P. Not ON / 2nd Scan. H.P. Not OFF

Possible Cause:

1. 2nd Scanner Home Position failure
2. 2nd Scanner Drive malfunction
3. Optics Control Board is defective
4. 2nd scanner drive motor failure

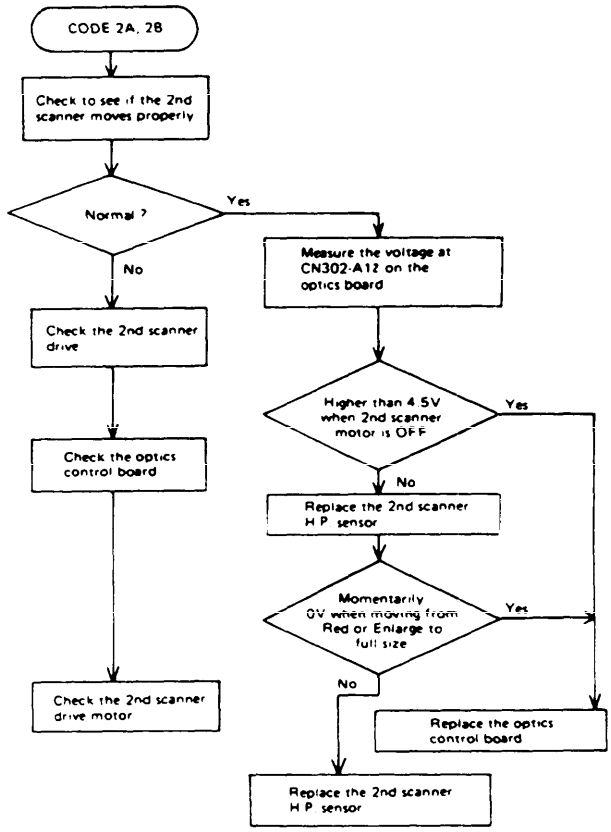

2-9. 2C : Hi Freq. Encoder Output

Symptom:

The scanner drive motor is driving the scanner faster than normal speed.

Possible Cause:

1. The scanner drive motor is malfunctioning.
2. The optics control board is defective.
3. Power supply failure

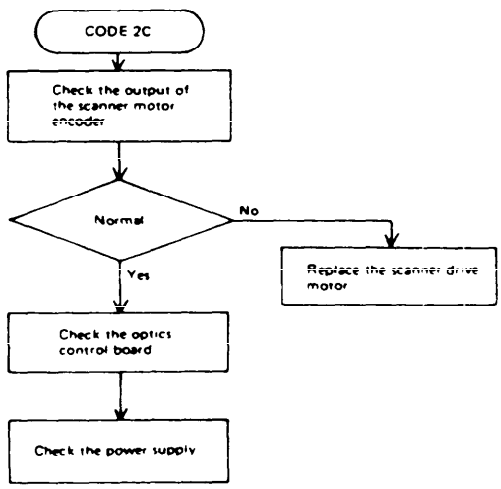

2-10. 20 Lo Freq. Encoder Output

Symptom:

The scanner drive motor is driving the scanner slower than normal speed.

Possible Cause:

1. Scanner home position failure
2. Vm is out of adjustment
3. Ve is out of adjustment
4. Scanner drive motor malfunction
5. The optics control board is defective.

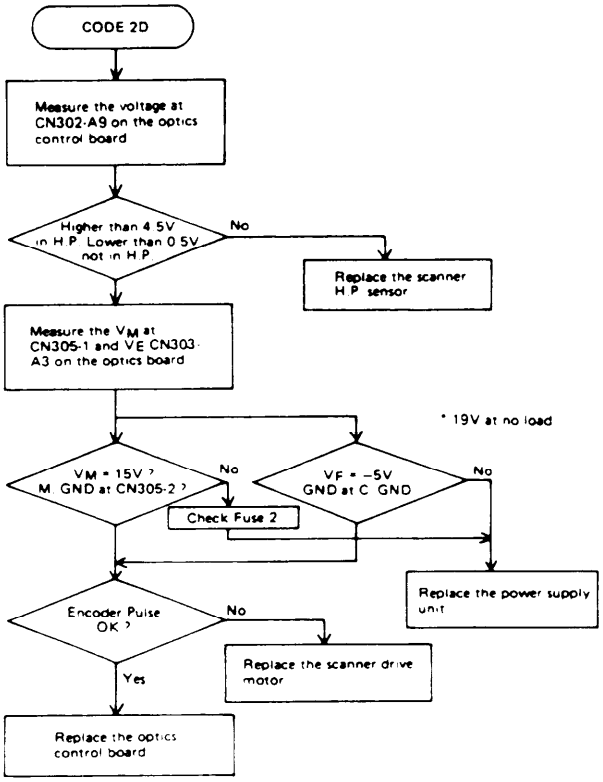

2-11. 41 Upper Lift Sensor Not ON

43 Lower Lift Sensor Not ON

Symptom:

20sec after the paper lift motor is turned on, lift sensor is not activated (high signal).

Possible Cause:

1. Misloading of the cassette.
2. Lift sensor is defective.
3. Lift motor is defective.
4. Main control board is defective.
5. Feed control board is defective.

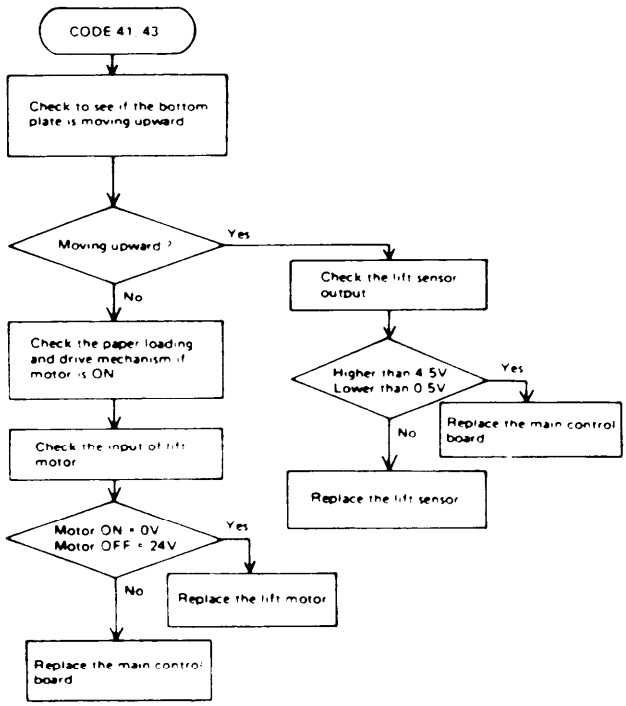

2-12. 52 : Thermofuse Blown

Symptom:

Fusing lamp is not ON.

Possible Cause:

1. Fusing unit is not installed properly.
2. Main control board is defective.
3. Thermofuse has blown.

2-13. 53 : Thermistor Blown

Possible Cause:

1. Drum thermistor is broken.
2. Fusing thermistor has open or shorted circuit.
3. Temperature control board is defective.
4. Main control board is defective.

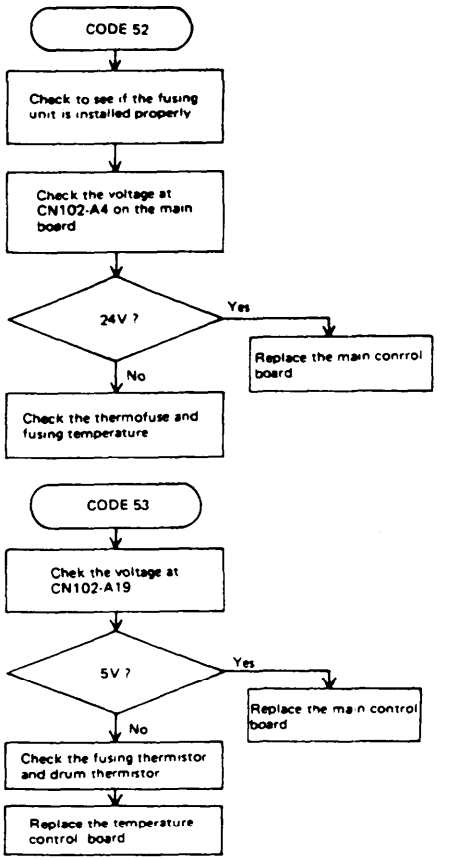

2-14. 54 : Ready Signal Not ON

Syptom:

Ready signal does not come on 8 minutes after the power relay is energized.

Possible Cause:

1. Contact failure of power relay
2. Fusing lamp is broken.
3. Triac failure
4. Temperature control board is defective.
5. Contact failure of fusing unit connector

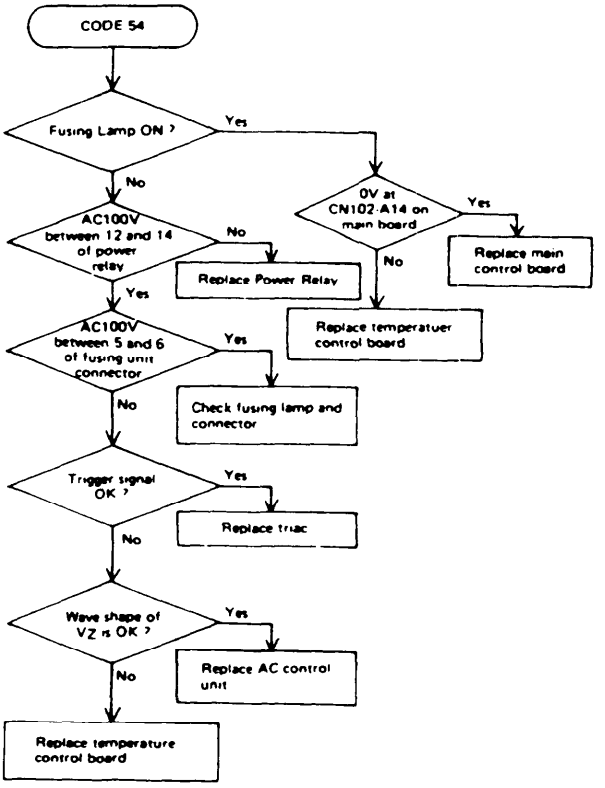

2-15. 61 Functional Drive Malfunc.

Symptom:

Copier operation will stop 2-3 seconds after the print key is depressed.

Possible Cause:

1. Pulse generator board is defective. No pulse for longer than 2-3 seconds.
2. Contact failure of power relay.
3. AC control unit is defective.
4. Main control board is defective.
5. Main motor is defective.
6. Main drive chain is disengaged.

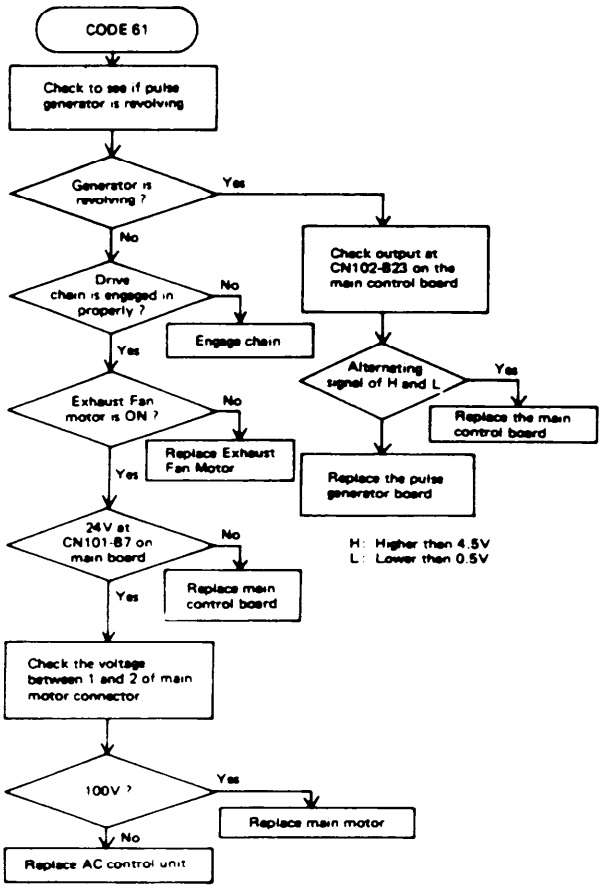

2-16. 81 Jogger H.P. Not ON
Jogger H.P. Not OFF

Symptom:

The jogger fences do not return to its home position.

Possible Cause:

1. Jogger drive malfunction
2. Jogger home position sensor is defective.
3. Jogger motor is defective.
4. Main control board is defective.

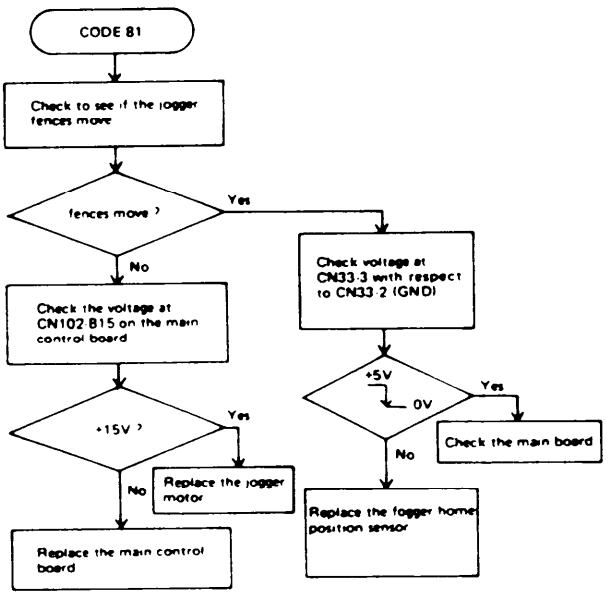

2-17. 91 : Total Counter Malfunc.

Symptom:

Total counter is not working.

Possible Cause:

1. Total counter failure
2. Main control board is defective.

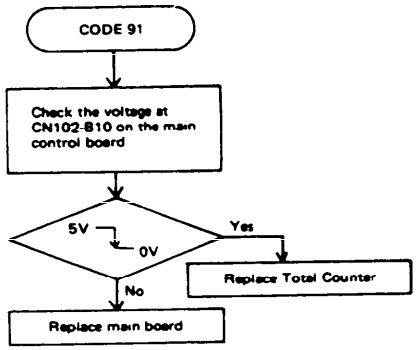

2-18. 93 : Optics/Main Board Interface Malfunction

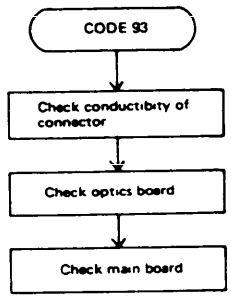

SECTION 8

DOCUMENT FEEDER DF32

DF32 UNPACKING

8-1. Unpacking Procedure

1. Open the shipping box (A).
2. Take out the accessory box (B).
3. Take out the belt unit (C) and the feed-in unit (D).

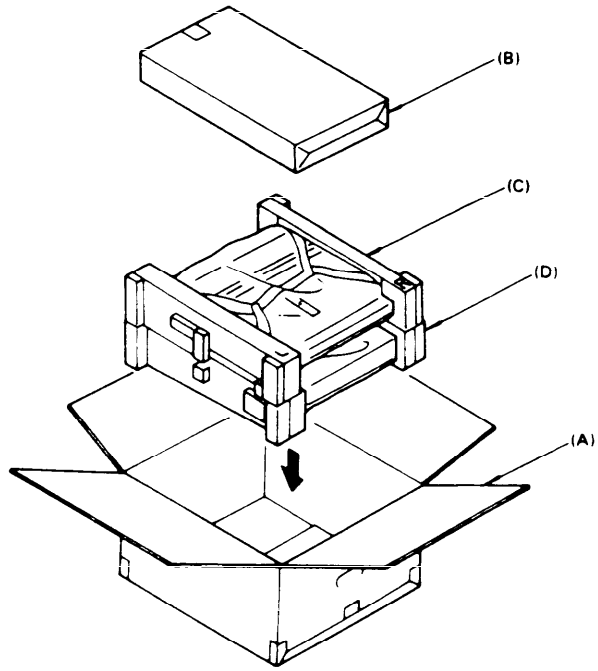

4. Check the parts and the accessories according to the New Equipment Condition Report (NECR).

Installation procedure	1
NECR	1
Original exit guide	1
Flip scale	1
Flip scale spring	1
Original stacker	1
Entrance mylar	1
Seal	1
Harness cover	1
Test chart A3[for registration adj]	2
Test chart A5[for registration adj]	1
Clamp	2
Pan head screw M5 x 10	4
Pan head screw M4 x 10	2
Pan head screw M4 x 6	3
Truss screw M4 x 10	1
Sunk screw M4 x 4	2
Shoulder screw M4 x 8	2
Grounding screw M4	1
Bolt M4	2
Nut M4	2

5. Remove the tape which holds the exit cover (A) to the belt unit (B).

6. Remove the strips of tape on the feed-in unit (C) as shown.

7. Remove the tape which holds the signal harness (D).

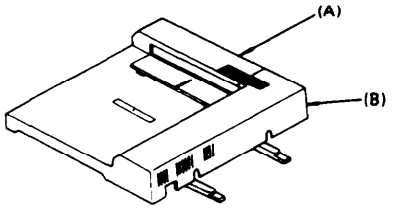

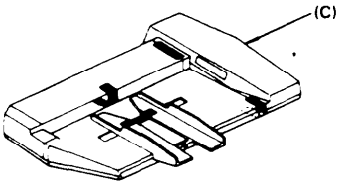

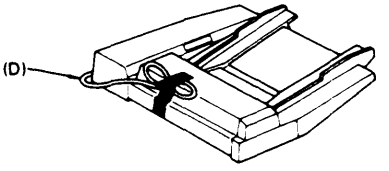

8. Remove the tape holding the pick-up roller bracket (A).

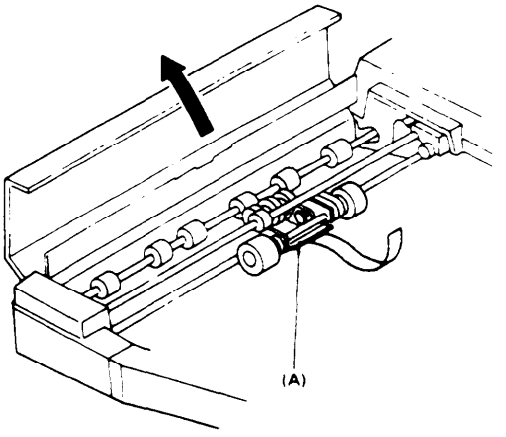

DF32 INSTALLATION PROCEDURE

8-2. DF Installation Procedure

1. Turn off the main swtich of the copier.

2. Remove the following parts :

Platen cover (A)	
Rear cover (B)	(2 screws)
Upper cover (C)	(6 screws, 2 mounting studs)
ADF docking hole caps (D)	(3 pcs)
Plastic screw (E)	
Left scale (F)	(2 screws)

NOTE: Following parts should be kept for further use:

1) Platen cover (A)
2) ADF docking hole caps (D)
3) Plastic screw (E)
4) Left scale (F)
5) Mounting stud

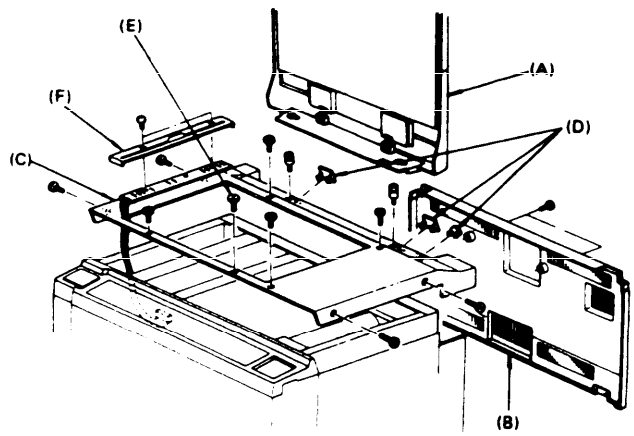

3. Open the front cover (A) and remove the inner left cover (B)(4 screws).

4. Remove the Original Size indicator PCB (C) by disconnecting the harness from the operation board (D).

5. Remount the inner left cover (B).

6. Remount the upper cover (E)(3screws)(F).

NOTE: Following parts should be kept for further use:

1) original size indicator PCB

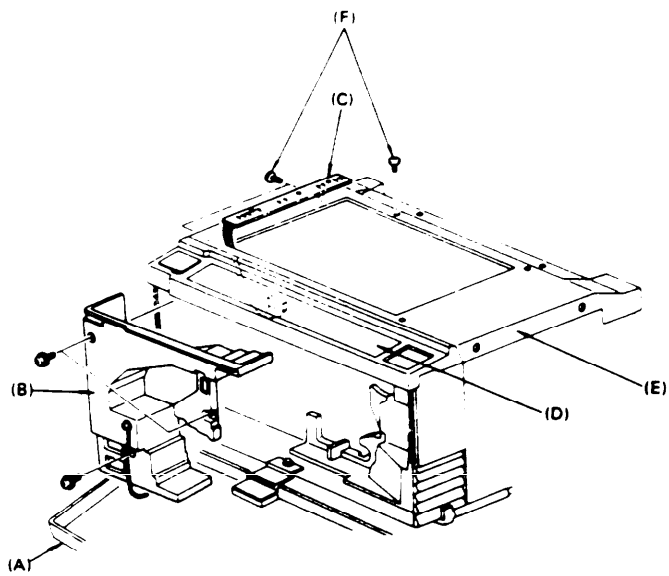

7. Mount the flip scale (A) and spring (B) on the original exit guide (C) then mount as shown (2 sunk screws (D)).

   NOTE: Make sure that the end of the spring is in the projection on the flip scale.

8. Mount the entrance mylar (E).

   NOTE: The stainless steel part of the entrance mylar should be flush with the edge of the right glass holder (F). Position the end of the mylar so that it is approximately 7mm (0.28") from the inside edge of the upper cover (G).

9. Secure two shoulder screws (H) as shown figure.

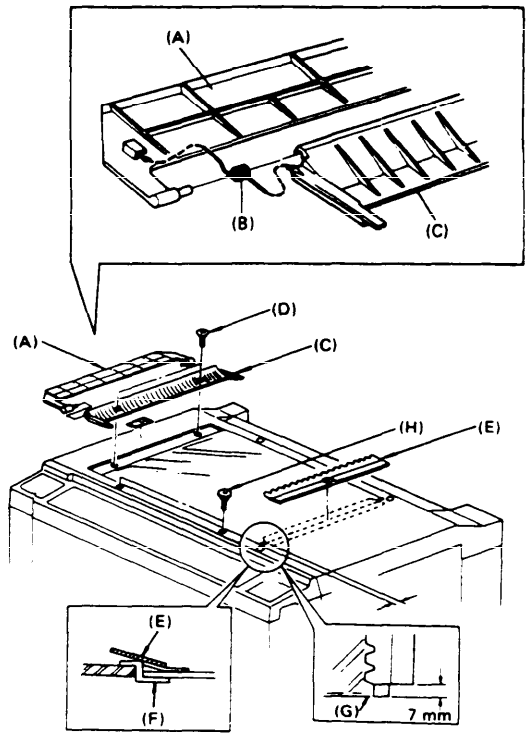

10. Stick the registration sensor seal(A), to the upper cover(B) as shown in the figure.

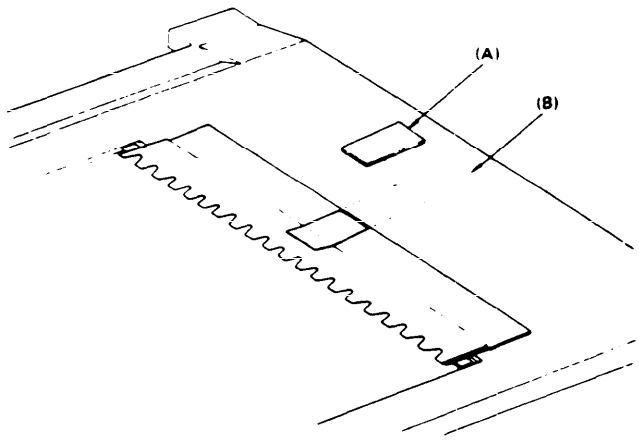

11. Install the harness cover(C) to the base plate of the feed-in unit(D) (1 screw).

(E) Entrance mylar

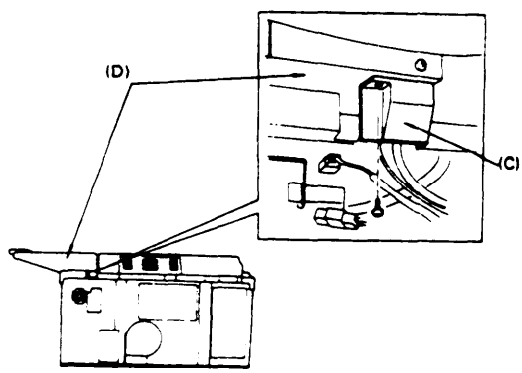

12. Mount the feed-in unit and secure with 2 long screws (A) (M4 x 20).

13. Lower the DF main board plate (B) (3 screws).

14. Remove the front (C) and rear (D) covers of the feed-in unit (5 screws).

15. Secure feed-in unit to top of copier (2 screws - M4 x 10) (E).

16. Remount the front and rear covers.

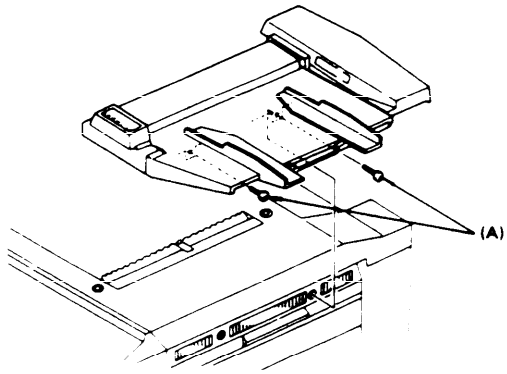

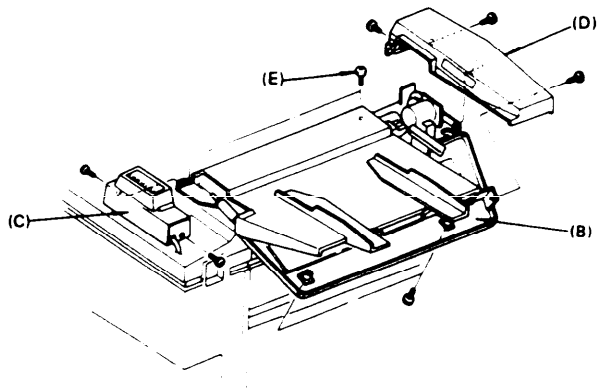

17. Mount the height adjusting bolts (A) and nuts (B) on the post bracket (C).

    NOTE: Before mounting, the nuts should be threaded half way down the shaft of the bolt as shown figure.

18. Install the belt unit by inserting the posts into the post bracket(C).

19. Lower the belt unit (D).

20. Temporarily install the 4 screws(E) into the belt unit posts (4 screws).

21. Remove the belt unit cover (F) (4 screws) and grip plate (G) (3 screws).

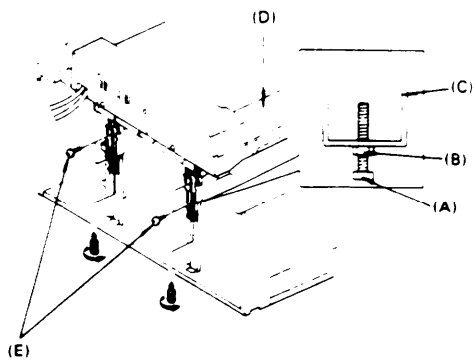

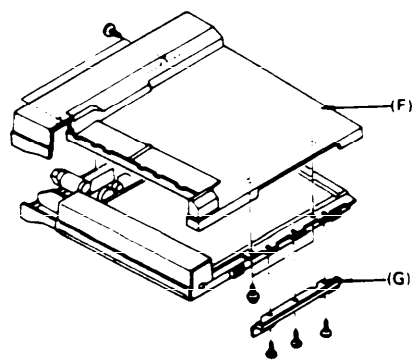

22. Connect the ac power line (A) from the feed-in unit to the copier.

23. Secure the ground wire from the feed-in unit and the ground wire from power pack-1 to the post bracket (1 screw).

24. Connect the harness from feed-in unit to CN104 (B) on the main board.

25. Mount the harness clamps (C) on the post brackets. Place both the harness and ground wire from the feed-in unit in the clamps as shown.

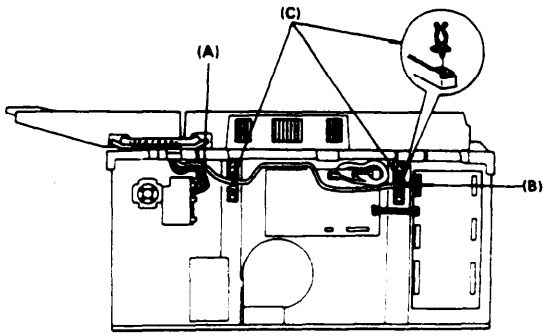

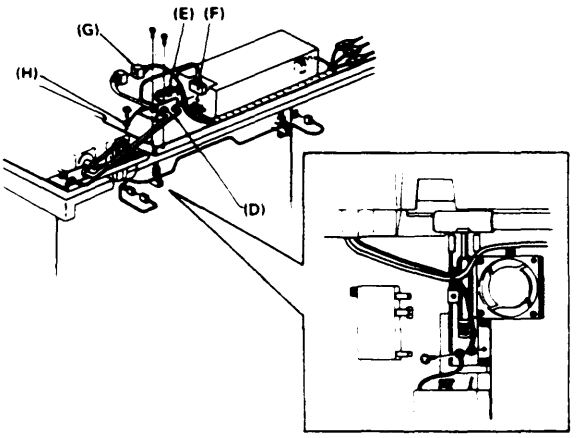

26. Mount the harness bracket (D) on the belt unit (2 screws) and connect the harnesses from the feed-in unit to the belt unit (3 connectors).
    2P(E) 6P(F) 15P(G)

27. Secure one end of the ground wire (H) to the belt unit (1 grounding screw).

May 7, 1984

28. Level the belt unit as follows:

1) Remove the belt unit cover (A) (4 screws).

2) Remove right locking plate (B) (1 flat head screw, 1 screw).

3) Remove left locking plate (C) (2 screws).

4) Rotate the belt release bracket (D) clockwise and slide off the feed belt (E).

5) Reposition and tighten the left and right locking plates (4 screws).

6) Loosen the mounting screws (F) of magnetic catches (G and H). Close the belt unit and hold it down.
   First push down the right side of the belt unit and tighten the screw of right magnetic catch (G). Then push down the left side of the belt unit and tighten the screw of left magnetic catch (H).

7) Check the clearance between the mylar spacer (I) and exposure glass (J) with two (2) sheets of paper.

   Adjust the clearance if necessary.

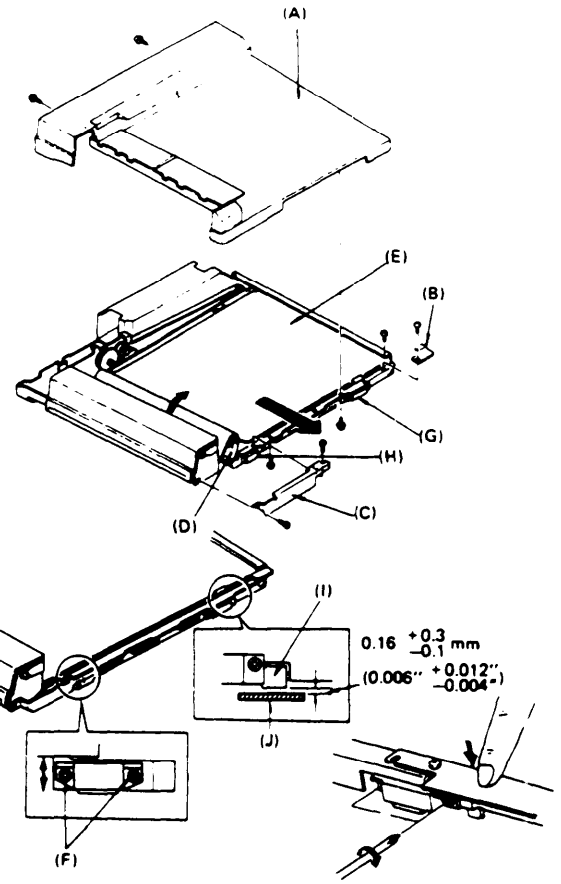

8) Adjust height of rear side of belt unit to 15.5 ± 0.5mm (0.61") measure between top of pressure roller support bracket (A) and exposure glass (B). Use height adjusting bolts (C) on belt unit posts (D). Tighten four (4) screws (E)(M5 x 8) on belt unit posts. Lock height adjusting bolts (2 lock nuts) (C).

9) Replace feed belt.

10) Check that the belt unit is closed properly.

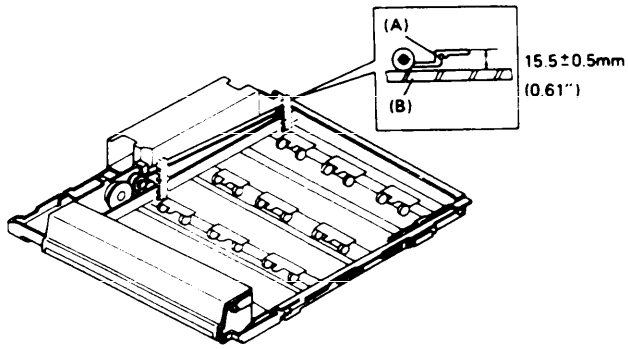

29. Remount the grip and belt unit cover.

NOTE: When remounting the belt unit cover, first tighten the screws on the front side of the belt unit. Then tighten the screws on the rear side.

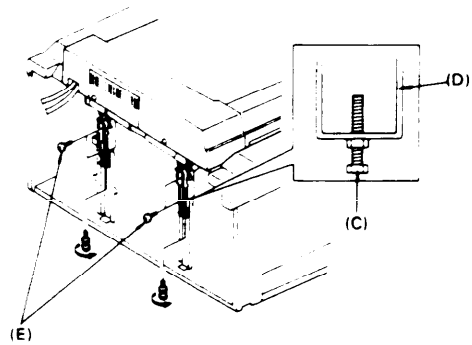

30. Install the original stacker (A) (1 screw).

31. Stick the flip scale decal (B),as shown in the figure.

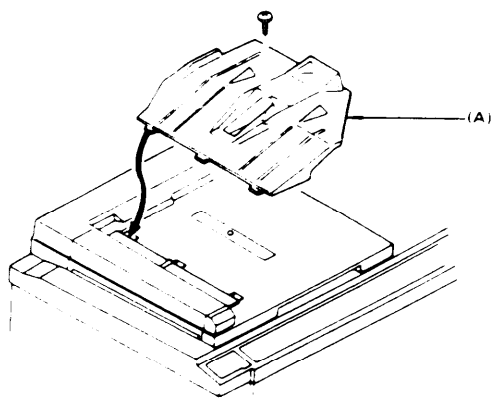

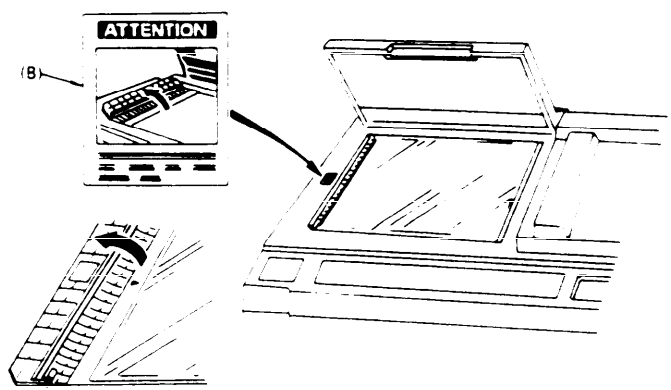

SECTION 9

SORTER CS1510

CS1510 SORTER UNPACKING PROCEDURE

9-1. Unpacking Procedure

1. Open the shipping box (A).

2. Take out the cushion blocks (B) and the accessory box (C). Then, take out the sorter (D).

3. Check the parts and the accessories in the box according to the New Equipment Condition Report (NECR).

Installation procedure	1
NECR	1
Bin	15
Interrupt bin	1
Stud	2
Knob screw	2
Screw	1
Toothed washer	3

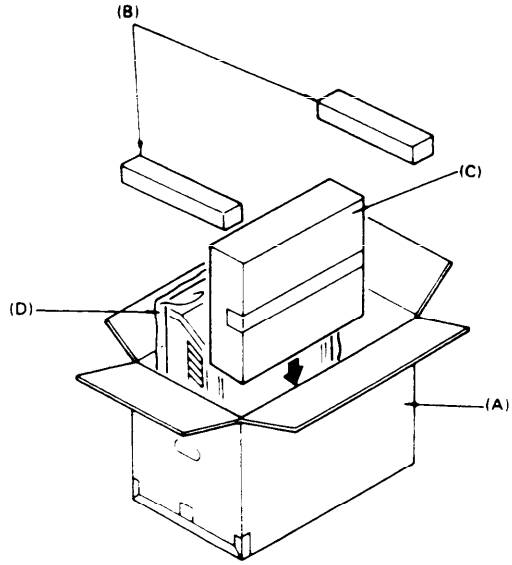

4. Remove the tape holding the upper cover (A).

5. Remove the two strips of tape holding the relay guide plates (B) and take out the cushion block (C).

6. Remove the shipping retainer (D) from the bottom of the vertical guide unit (E) (1 screw).

7. Open the upper cover and remove the tape holding the vertical guide unit (E).

8. Take out the two cushion blocks (F) holding vertical guide unit and the shipping retainer (G).

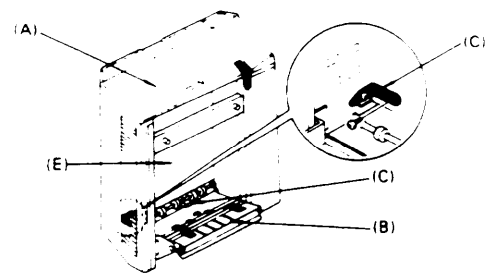

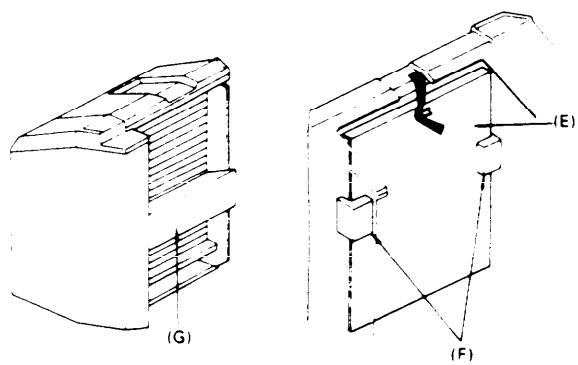

CS1510 SORTER INSTALLATION PROCEDURE

2-1. Installation Procedure

1. Turn off the main switch of the copier.
2. Remove the rear (A) and left cover (B) of the copier (6 screws).
3. Remove the 5 plastic caps (C) from the docking holes.
4. Remount the left cover.

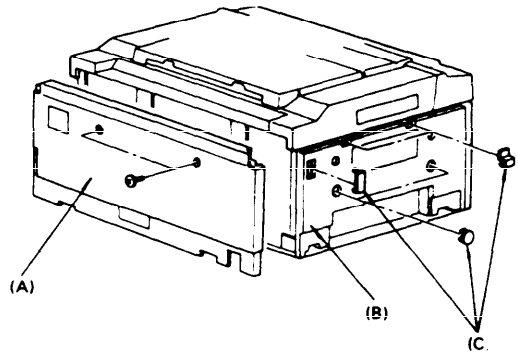

5. Screw in the two (2) mounting studs (A).
6. Remove the upper cover (B)(3 screws).
7. Remove the front (C) and rear covers (D) of the sorter (6 screws).

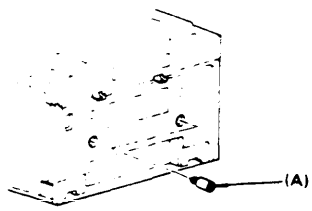

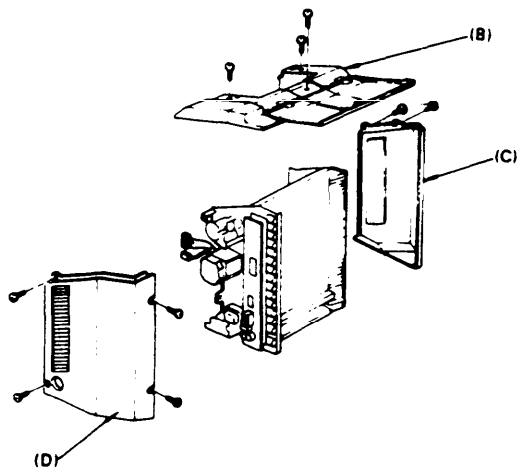

8. Mount the sorter on the copier through the docking holes (A).

9. Pass the sorter's harnesses through the rectangular docking hole (B).

10. Swing the main board (C) to the left (2 screws) and connect the ac power line (D) from sorter to the copier.

11. Connect the harness from sorter to CN 103 (E) on the main board. Secure the ground wire (F) as shown.

12. Secure the sorter to the studs with knob screws (G) and the toothed washer (H).

13. Remount the upper, front, and rear covers.

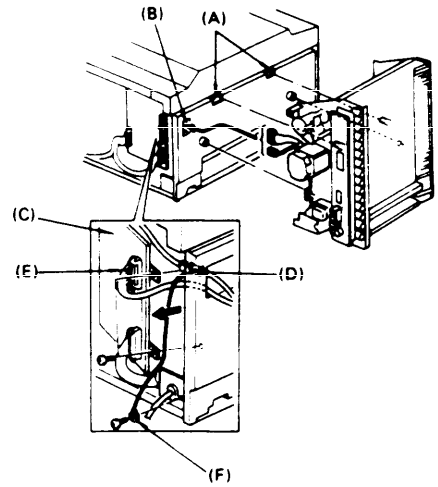

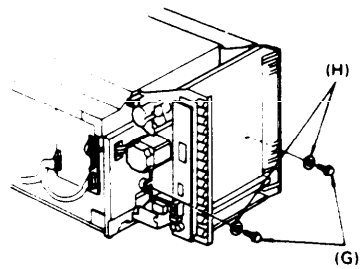

14. Install the interrupt bin (A). Then starting from bottom to top, install the other bins (B) as shown.

NOTE: Make sure that the bins lock in place when they are installed.

15. Check the sorter's operation and complete the NECR.

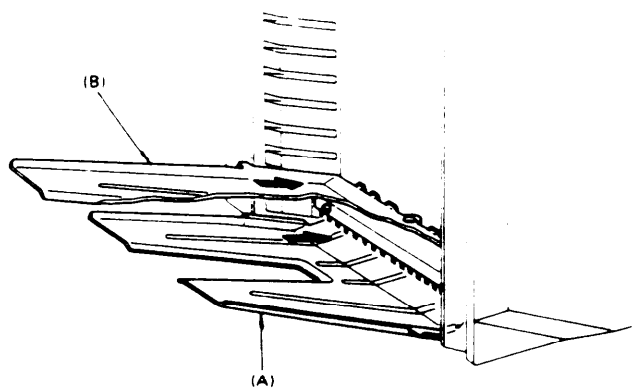

SECTION 10

LARGE CAPACITY TRAY RT11

10-1. Unpacking Procedure

1. Open the shipping box and remove the upper cushion (A).
2. Take out two bags of accessories (B) and the large capacity tray (C).
3. Check the parts and accessories according to the New Equipment Conditioning Report (NECR).

Installation Procedure	1
NECR	1
Leveling Foot Guide	4
Foot Guide Stopper	4
Bolt – M4 x 12	1
Bolt – M4 x 22	1
Nylon Clamp	1
Screw – M4 x 8	1

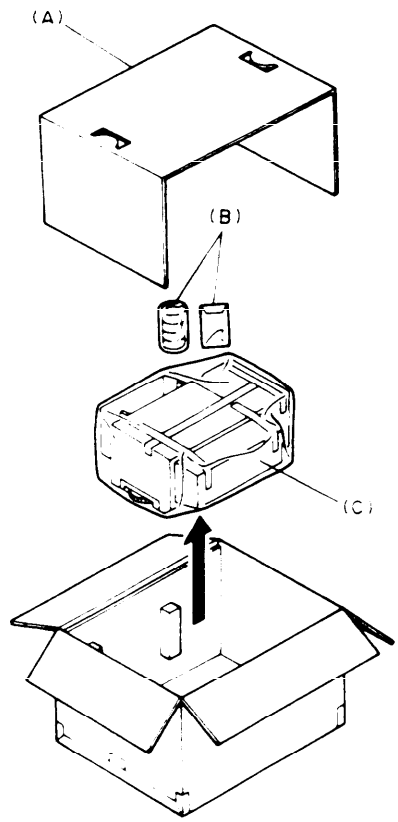

4. Remove three strips of tape (A) shown in the figure.

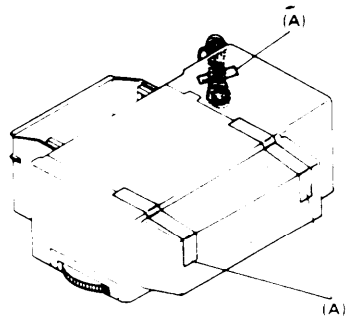

5. Open the side cover (B) and remove two strips of tape (C) on the top cover (D).
6. Open the top cover (D) and remove a strip of tape (E) holding the stopper bar (F).

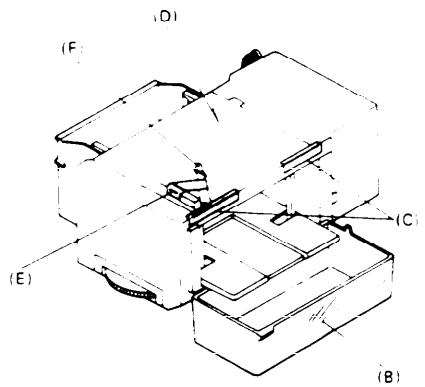

10-2. Installation Procedure

1. Turn off the main switch of the copier and unplug the power supply cord.
2. Remove the upper and lower cassettes from the copier.
3. Put the copier up on four leveling foot guides (A).

   NOTE: If the copier slides easily on the copier table, stick the four foot guide stoppers (B) on the table and put the foot guides as shown.
4. Open the front cover (C) and remove the right inner cover (D) (1 thumb screw and 3 screws).
5. Remove the rear cover (E) (2 screws).
6. Remove the handle (F) on the bottom right side of the copier (2 stud screws) and remove the lower cassette lift arm (G) (2 screws).

   NOTE: Save the handle (F) for future use when transporting the copier.
7. Reinstall the right inner cover (D).

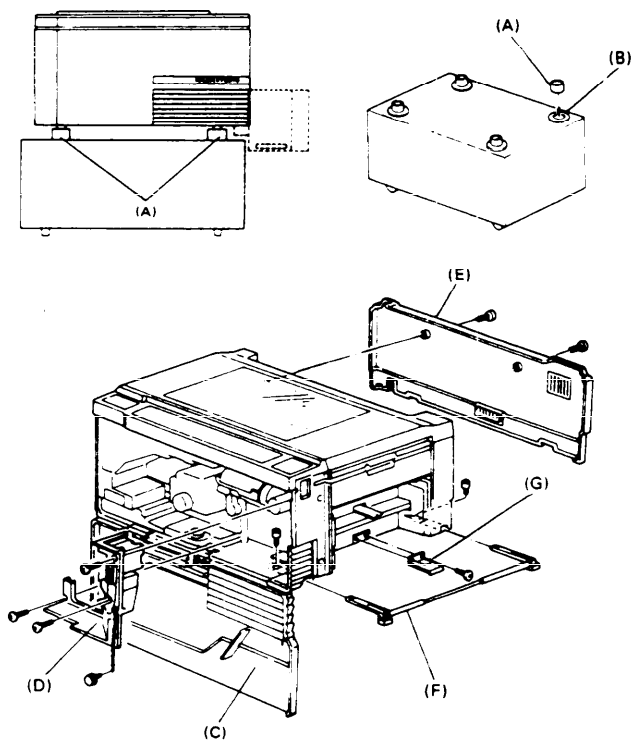

8. Insert the tray into the lower cassette position.

   NOTE: Make sure that the rib (A) fits into the groove (B).
9. Open the side and top covers and secure the tray with two bolts (C). Use the longer bolt for the rear side and the shorter bolt for the front side.

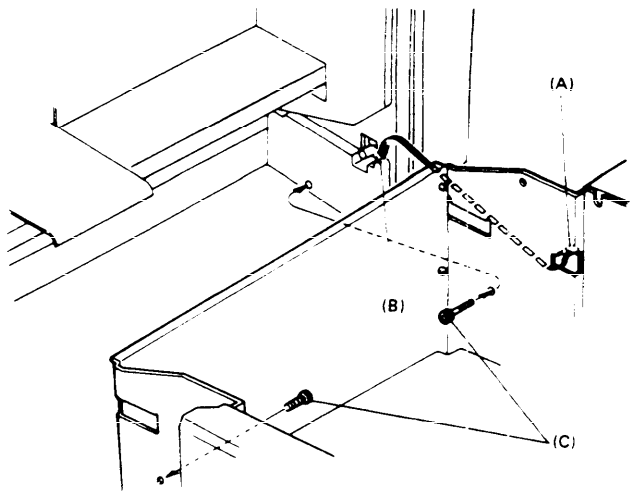

10. Disconnect CN 5(A), CN 6(B), and CN 9(C) on the feed control board (right rear corner of the copier).

11. Connect the tray harnesses to the free harnesses and the feed control board.

TRAY		CONTROL BOARD
Female 4P (D)	– – – – – – – –	CN 5
Female 10P (E)	– – – – – – – –	CN 6
Female 12P (F)	– – – – – – – –	CN 9

TRAY		FREE
Male 4P (G)	– – – – – – – –	4P (A)
Male 10P (H)	– – – – – – – –	10P (B)
Male 12P (I)	– – – – – – – –	12P (C)

12. Secure the harnesses with a nylon clamp (J) on the bottom plate (1 screw).

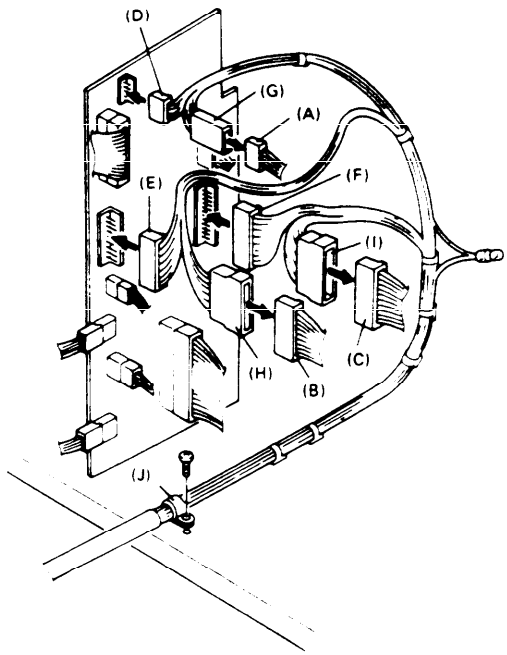

July 20, 1984

13. Remove the docking plate (A) on the rear cover by using a cutting pliers.

14. Reinstall the rear cover.

15. Plug in the power supply cords of both the large capacity tray and the copier.

16. Load paper into the tray.

17. Turn on the main switch of the copier and check the tray operation.

18. Fill out the New Equipment Condition Report.

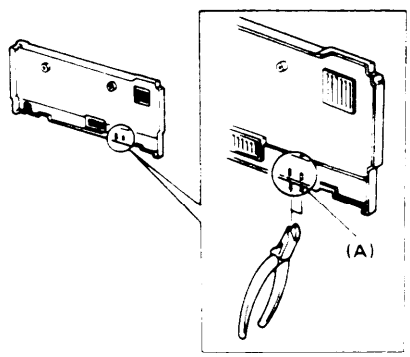

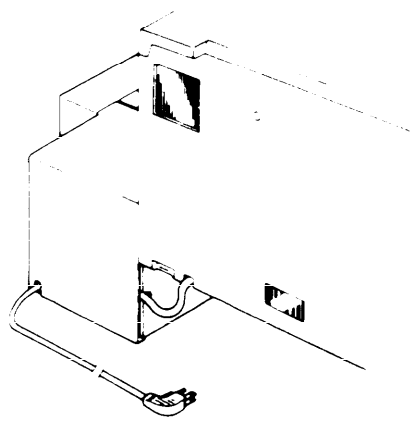

3-1. Tray Down Sensor and Positioning Switch Replacement

1. Open the side cover and remove the front cover (2 screws and 1 connector).
2. Remove the top cover and rear cover (4 screws).
3. Remove the stopper bar ass'y (2 screws).
4. Remove the two post tops and two paper guides (1 long and 2 short screws each).
5. Remove the tray bottom plate (4 screws).
6. Move the tray drive motor ass'y (2 screws) to the rear to disengage the tray drive shaft from the wire drive pulley.

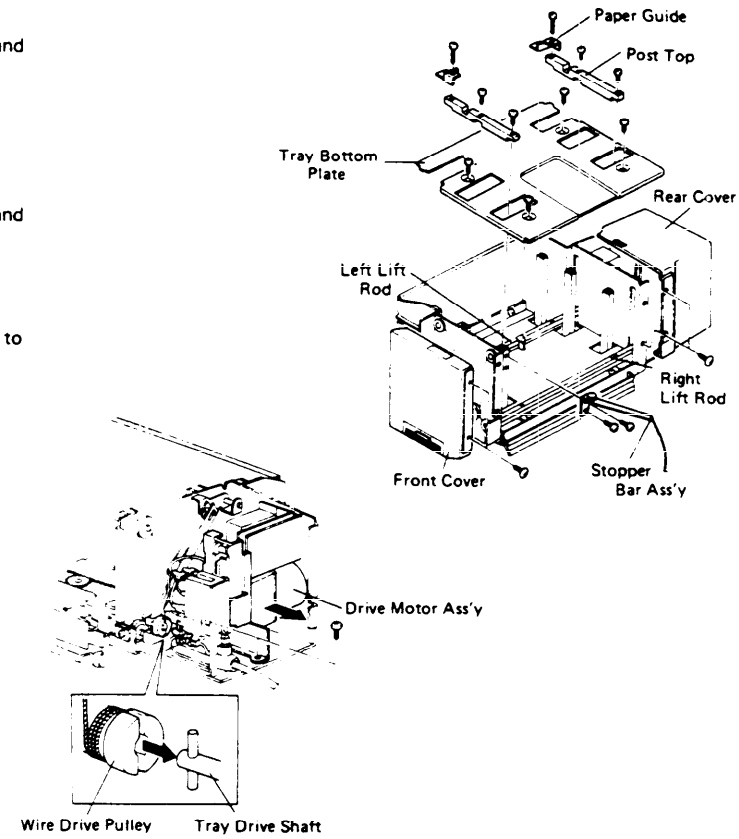

July 20, 1984

7. Loosen the front wire tightener (1 screw).
8. Remove the right lift rod from the braces (front side first).
9. Disengage the front end of the left lift rod by raising it midway; then, lift it out from the top.
10. Remove the inner cover (2 short and 2 long screws).
11. Replace the tray down sensor (1 screw and 1 connector).
12. Rotate the paper size dial to a smaller size, such as A4R, and remove the positioning switch bracket (1 screw).
13. Replace the positioning switch (2 screws).

NOTE: When reassembling, make sure that the hole-marked ends of the lift rod are front side.

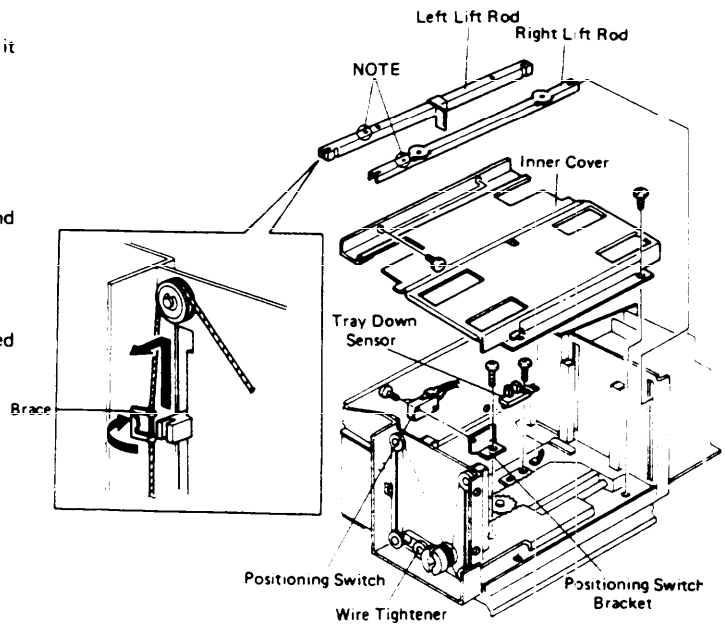

3-2. Paper Size Sensor Replacement

1. Do the steps from 1 to 10 of tray down sensor and positioning switch replacement.
2. Remove the front guide post (1 screw).
3. Remove the paper size sensor bracket (1 screw).
4. Replace the paper size sensor (1 screw).

   NOTE: When reinstalling the sensor bracket, make sure that the harness is positioned inside the sensor bracket.

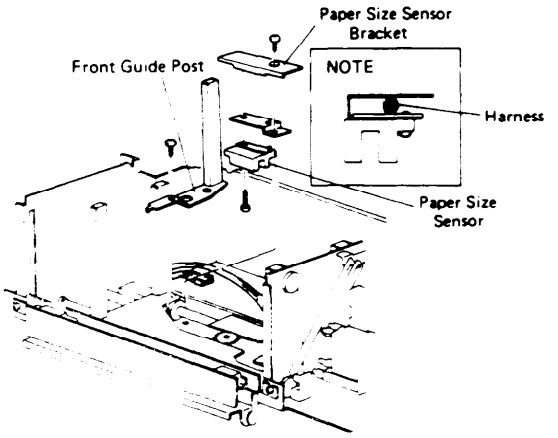

July 20, 1984

3-3. Tray Wire Replacement

Unplug the tray power supply cord.

– Front Wire –

Remove the following parts:

- Front cover (2 screws and 1 connector)
- Nylon clamp holding the operation board harness (1 screw)

– Rear Wire –

Remove the following parts:

- Rear cover (4 screws)
- Transformer assembly with tray main board (1 screw, 5 connectors, and 1 nylon clamp)
- Drive motor assembly (2 screws and 2 connectors)
- Ac power terminal (2 screws) and safety switch assembly (2 short screws)
- Safety switch actuator assembly (2 E-rings)

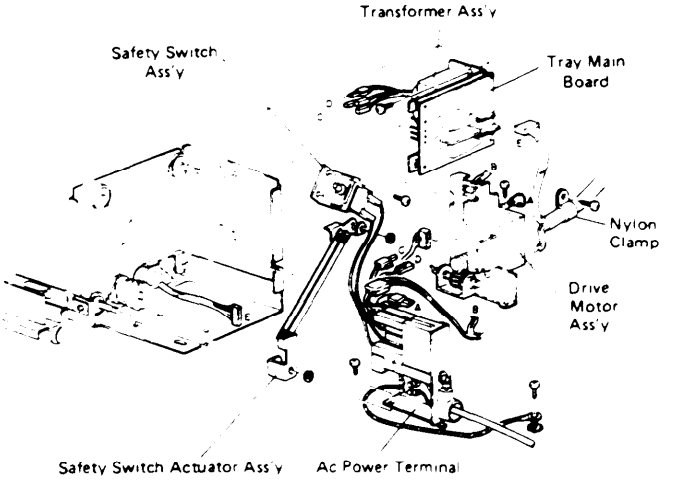

(Rear Wire)

– Common Procedure for Front and Rear Wire –

NOTE: The running directions for front and rear wire are opposite.

1. Loosen the wire tightener (1 screw).
2. Insert the bead (A) (unmarked) into a slot of the drive pulley.
3. Loop the wire around the drive pulley, as shown (one and a half turns).
4. Run the wire over WP1, WP2, WP3, and WP4 in turn while also placing the lift rod's ends in the braces.
5. Insert the bead (B) (red marked) into a slot of the drive pulley.
6. Loop the wire around the drive pulley, as shown (two and a half turns).
7. Hang the wire on the tightener pulley.

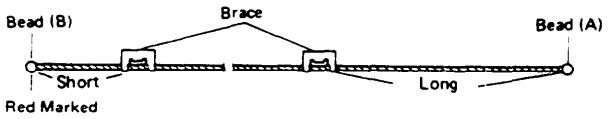

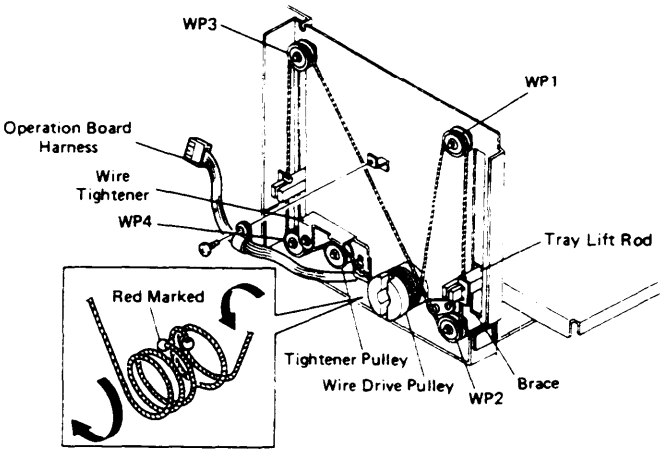

[FRONT WIRE]

8. Move the rods up and down manually to ensure that the drive wire does not overlap on the pulley.
9. Tighten the wire via the tightener (1 screw).
10. Reassemble.

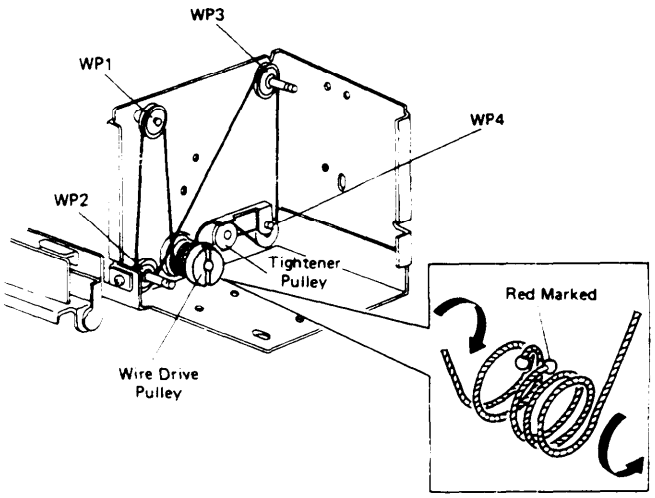

[Rear Wire]

3-4. Paper Volume Cord Replacement.

1. Unplug the tray and remove the rear cover (4 screws).
2. Remove the transformer assembly with the tray main board (1 screw, 5 connectors, and 1 nylon clamp). (See the 1st figure of Tray Wire Replacement.)
3. Remove the drive motor assembly with the paper volume detection assembly (2 screws and 2 connectors).
4. Remove the drive motor worm gear (1 Allen screw).
5. Remove the washer and the paper volume cord pulley (1 screw).
6. Rotate the drive shaft so that the slot is vertical, then secure the shaft with tape.
7. Insert the both ends of the paper volume cord into the slot of the paper volume cord pulley and run the cord as shown in the figure.
8. Insert the paper volume cord pulley and washer. Partially tighten the screw.

   NOTE: Align the slot of the paper volume cord pulley with the slot of the drive shaft.

9. Pull the ends of the cord to stretch it before tightening the screw and cutting off the excess cord.

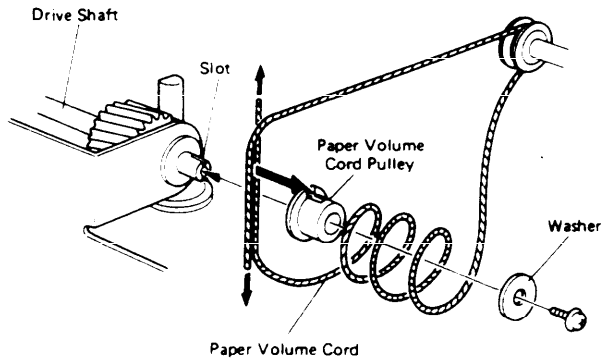

10. Remove the tape on the drive shaft and turn the drive pin approximately once in the direction shown in the figure (A).
11. Set the drive motor worm gear on the motor shaft and make sure the angle of the drive pin is as shown in the figure (B).
12. Align the edge of the paper volume actuator plate with the bracket as shown and secure the actuator plate with tape.

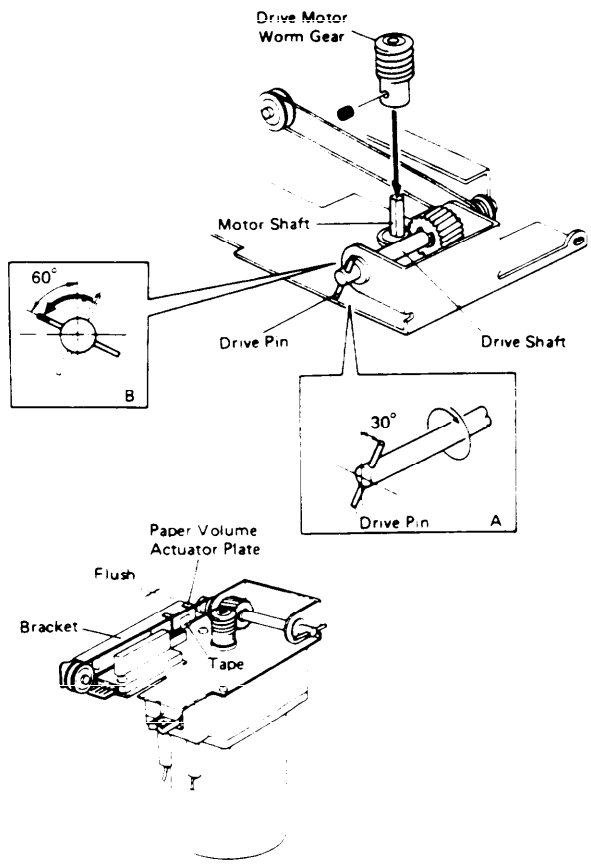

SECTION 11

ELECTRICAL DATA FT5050/5070

COMPONENT AND CONNECTOR LAYOUT

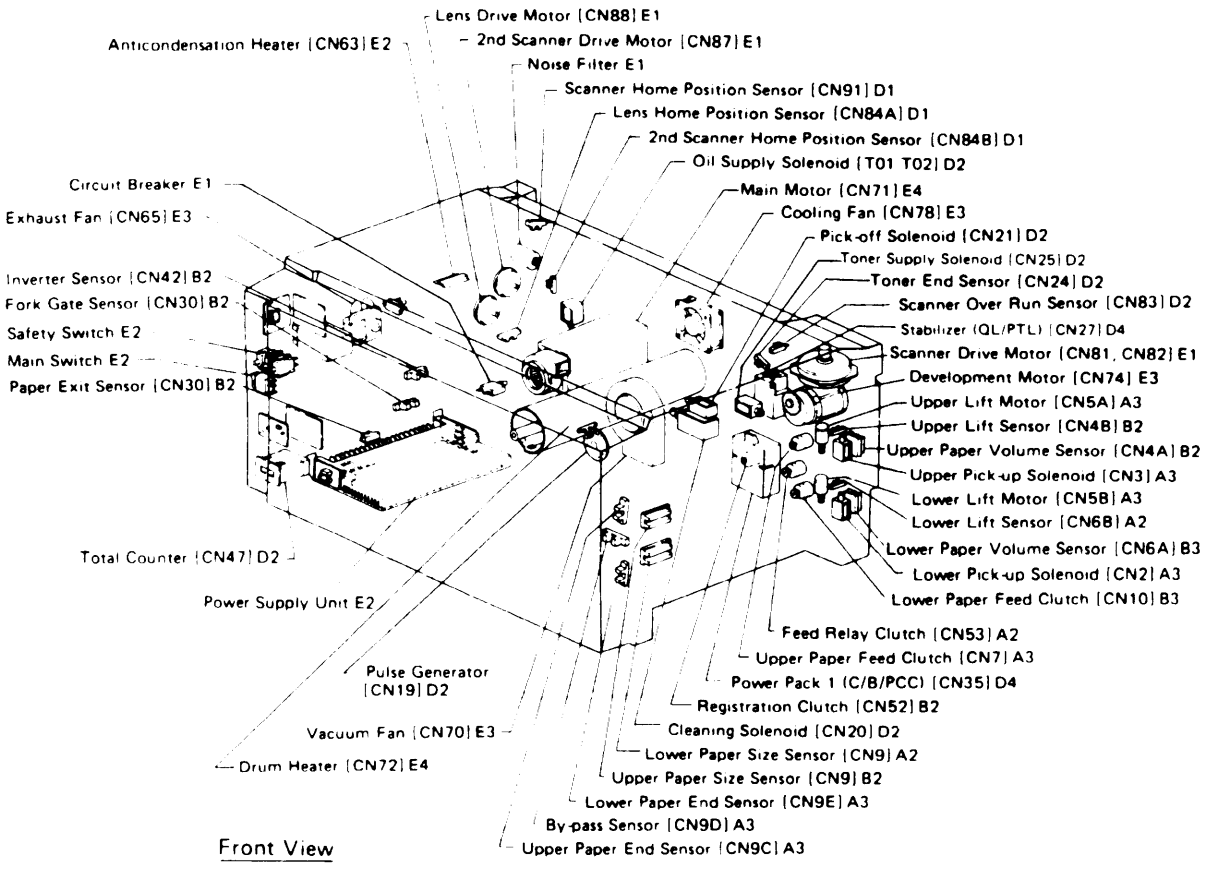

Front View

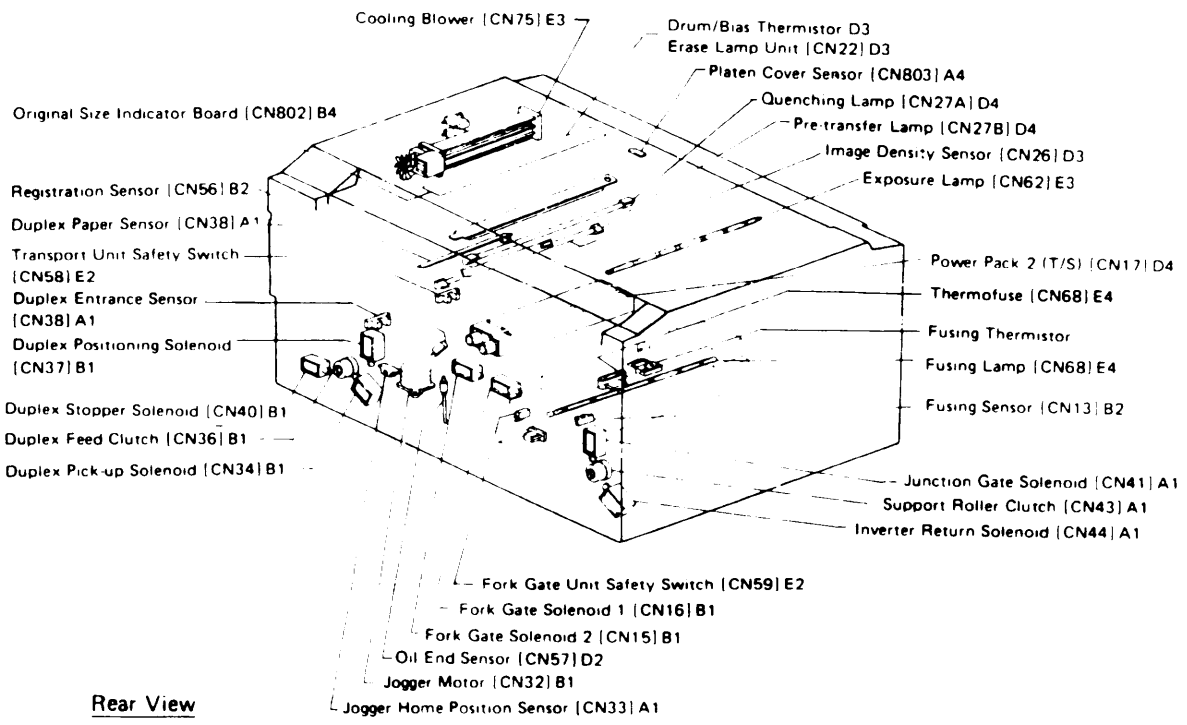

Rear View

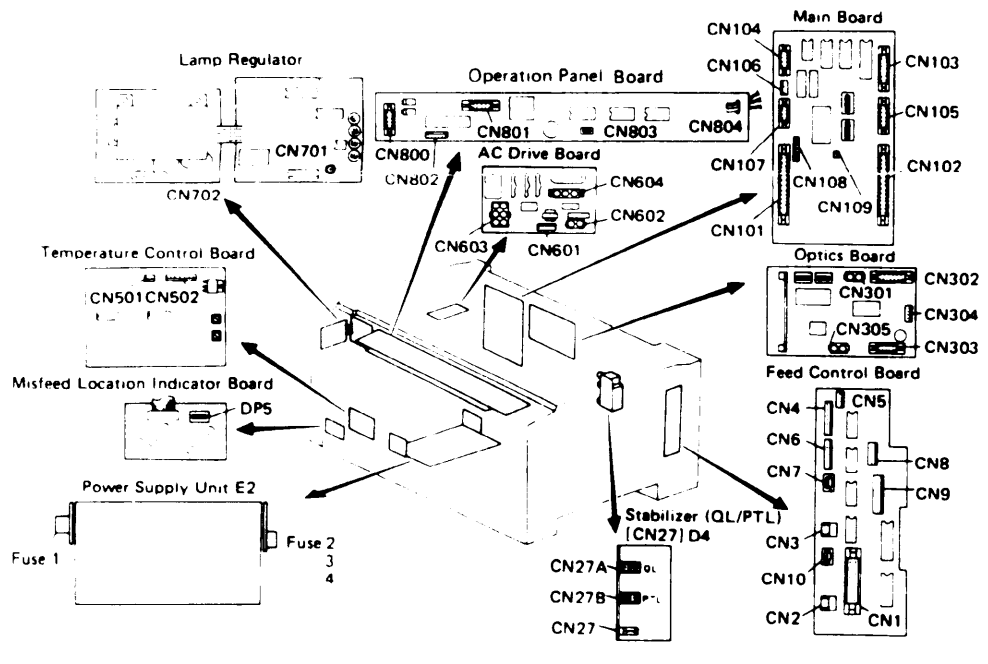

Front View

CONNECTOR LAYOUT

	Usage	
CN1	Feed Control Board – 30P (B)	40
CN2	Lower Pick-up SOL – 2P (B/G)	39
CN3	Upper Pick-up SOL – 2P (G)	35
CN4	Upper Paper Volume/Upper Lift Sensor – 10P (W)	27
CN4A	Upper Paper Volume Sensor – 7P (W)	34
CN4B	Upper Lift Sensor – 3P (B)	33
CN5	Upper/Lower Lift Motor – 4P (B)	26
CN5A	Upper Lift Motor – 2P (G)	31
CN5B	Lower Lift Motor – 2P (G/B)	32
CN6	Lower Paper Volume/Lower Lift Sensor – 10P (B)	28
CN6A	Lower Paper Volume Sensor – 7P (B)	37
CN6B	Lower Lift Sensor – 3P (B)	38
CN7	Upper Paper Feed CL – 2P (B)	29
CN8	Upper Paper Size Sensor – 7P (B)	30
CN8A	Upper Paper Size Sensor – 7P (W)	50
CN9	Feed Control Board – 12P (B)	41
CN9A	Lower Paper Size Sensor – 6P (W)	60
CN9B	Paper End/By-pass Sensor – 6P (B)	61
CN9C	Upper Paper End Sensor – 3P (W)	59
CN9D	By-pass Sensor – 3P (C)	58
CN9E	Lower Paper End Sensor – 3P (W)	57
CN9F	Lower Paper Size Sensor – 7P (W)	51
CN10	Lower Paper Feed CL. – 2P (B)	36
CN13	Fusing Sensor – 3P (W)	6
CN14	Fusing Unit – 4P (W)	10
CN15	Fork Gate SOL 2 – 2P (B)	14
CN16	Fork Gate SOL 1 – 2P (G)	12
CN17	Power Pack 2 – 5P (W)	67
CN17A	Power Pack 2 – 5P (W)	69
CN19	Pulse Generator – 3P (W)	15
CN20	Cleaning SOL – 2P (W)	48
CN21	Pick-off SOL – 2P (B)	42
CN22	Erase Lamp Unit – 6P (W)	20
CN23	Scanner Over Run – 3P (W)	19
CN24	Toner End Sensor – 3P (B)	17
CN24A	Toner End Sensor – 3P (W)	18
CN25	Toner Supply SOL – 2P (G)	16
CN26	Image Density Sensor – 3P (W)	21
CN27	Stabilizer – 4P (G)	25
CN27A	Quenching Lamp – 2P (R)	23
CN27B	Pre Transfer Lamp – 2P (B)	24
CN30	Paper Exit/Fork Gate Sensor – 6P (W)	73
CN30A	Paper Exit Sensor – 3P (W)	75
CN30B	Fork Gate Sensor – 3P (W)	74
CN31	Power Supply Unit – 11P (W)	70
CN32	Jogger Motor – 6P (W)	64
CN33	Jogger Home Position Sensor – 3P (B)	63
CN33A	Jogger Home Position Sensor – 3P (B)	62
CN34	Duplex Pick-up SOL – 2P (B/W)	45
CN35	Power Pack 1 – 13P (G)	43
CN36	Duplex Feed CL – 2P (B)	44
CN37	Duplex Positioning SOL – 2P (B)	
CN38	Duplex Entrance Connector – 6P (W)	47
CN38A	Duplex Paper Sensor – 3P (W)	56
CN38B	Duplex Entrance Sensor – 3P (W)	52
CN40	Duplex Stopper SOL – 2P (G)	46
CN41	Junction Gate SOL – 2P (B)	5
CN42	Inverter Sensor – 3P (B)	7
CN42A	Inverter Sensor – 3P (W)	4
CN43	Support Roller CL – 2P (G)	2
CN44	Inverter Return SOL – 2P (G)	1
CN47	Total Counter – 4P (W)	78
CN48	A3 Counter – 2P (W)	79
CN52	Registration CL. – 3P (G)	54
CN53	Feed Relay CL. – 3P (B)	53
CN56	Registration Sensor – 3P (W)	49
CN57	Oil End Sensor – 3P (W)	55
CN58	Transport Unit Safety SW	65
CN59	Fork Gate Unit Safety SW	72
CN60	Safety Switch – 1P (W)	68
CN61	Power Supply Unit – 3P (W)	115
CN62	Exposure Lamp – 2P (W)	120
CN63	Anticondensation Heater – 2P (R)	114
CN65	Exhaust Fan – 2P (W)	117
CN68	Fusing Unit – 8P (C)	108
CN70	Vacuum Fan – 2P (W)	107
CN71	Main Motor – 3P (W)	106
CN72	Drum Heater – 2P (R)	94
CN73	Auto Document Feeder – 2P (G)	101
CN74	Development Motor – 3P (W)	98
CN75	Cooling Blower – 2P (W)	102
CN76	Capacitor – 2P (R)	97
CN77	Sorter – 2P (G)	128
CN78	Cooling Fan – 2P (G)	91
CN81	Encoder – 5P (W)	100
CN82	Scanner Drive – 2P (W)	99
CN83	Scanner Over Run – 3P (W)	96
CN84	Lens/2nd Scanner Home Position – 6P (W)	95
CN84A	Lens Home Position Sensor – 3P (W)	87
CN84B	2nd Scanner Home Position Sensor – 3P (W)	88
CN87	2nd Scanner Drive Motor – 6P (G/B)	93
CN88	Lens Drive Motor – 6P (G)	92
CN91	Scanner Home Position – 3P (W)	85
CN101	Main Board – 60P (B)	8
CN102	Main Board – 60P (B)	3
CN105	Main Board – 30P (B)	86
CN301	Optics Board – 2P (W)	90
CN302	Optics Board – 26P (B)	89
CN303	Optics Board – 10P (B)	11
CN305	Optics Board – 2P (W)	13
CN501	Temperature Control Board – 4P (W)	77
CN502	Temperature Control Board – 12P (W)	76
CN601	AC Drive Board – 8P (W)	84
CN602	AC Drive Board – 2P (W)	124
CN603	AC Drive Board – 6P (W)	126
CN604	AC Drive Board – 3P (W)	123
CN701	Lamp Regulator – 8P (W)	82
CN702	Lamp Regulator – 4P (W)	119
CN800	Operation Control Board – 30P (B)	121
CN801	Misfeed Location Indicator –20 P (B)	113
CN802	Original Size Indicator – 10P (W)	112
CN803	Platen Cover – 2P (G)	111
CN804A	Key Counter – 4P (W)	109
	Oil Supply SOL	9
	Front Cover Safety SW	81
	Main SW	118
	Triac (Fusing Lamp)	125
	Noise Filter	127
	Circuit Breaker	110

COMPONENT AND CONNECTOR LAYOUT

Connector Layout

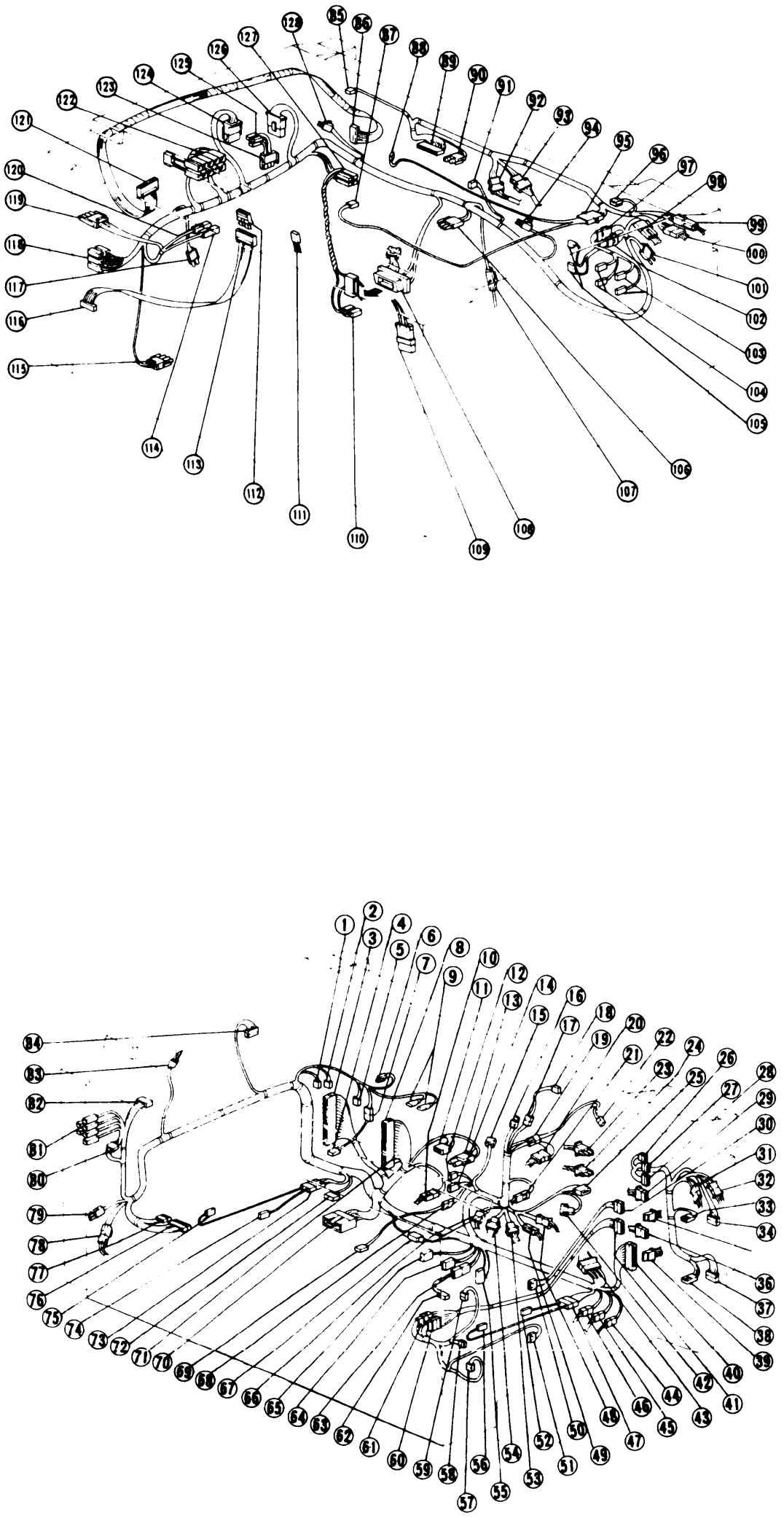

CONNECTOR LAYOUT

	Usage	
CN1	Feed Control Board – 30P (B)	40
CN2	Lower Pick-up SOL – 2P (B/G)	39
CN3	Upper Pick-up SOL – 2P (G)	35
CN4	Upper Paper Volume/Upper Lift Sensor – 10P (W)	27
CN4A	Upper Paper Volume Sensor – 7P (W)	34
CN4B	Upper Lift Sensor – 3P (B)	33
CN5	Upper/Lower Lift Motor – 4P (B)	26
CN5A	Upper Lift Motor – 2P (G)	31
CN5B	Lower Lift Motor – 2P (G/B)	32
CN6	Lower Paper Volume/Lower Lift Sensor – 10P (B)	28
CN6A	Lower Paper Volume Sensor – 7P (B)	37
CN6B	Lower Lift Sensor – 3P (B)	38
CN7	Upper Paper Feed CL – 2P (B)	29
CN8	Upper Paper Size Sensor – 7P (B)	30
CN8A	Upper Paper Size Sensor – 7P (W)	50
CN9	Feed Control Board – 12P (B)	41
CN9A	Lower Paper Size Sensor – 6P (W)	60
CN9B	Paper End/By-pass Sensor – 6P (B)	61
CN9C	Upper Paper End Sensor – 3P (W)	59
CN9D	By-pass Sensor – 3P (C)	58
CN9E	Lower Paper End Sensor – 3P (W)	57
CN9F	Lower Paper Size Sensor – 7P (W)	51
CN10	Lower Paper Feed CL. – 2P (B)	36
CN13	Fusing Sensor – 3P (W)	6
CN14	Fusing Unit – 4P (W)	10
CN15	Fork Gate SOL 2 – 2P (B)	14
CN16	Fork Gate SOL 1 – 2P (G)	12
CN17	Power Pack 2 – 5P (W)	67
CN17A	Power Pack 2 – 5P (W)	69
CN19	Pulse Generator – 3P (W)	15
CN20	Cleaning SOL – 2P (W)	48
CN21	Pick-off SOL – 2P (B)	42
CN22	Erase Lamp Unit – 6P (W)	20
CN23	Scanner Over Run – 3P (W)	19
CN24	Toner End Sensor – 3P (B)	17
CN24A	Toner End Sensor – 3P (W)	18
CN25	Toner Supply SOL – 2P (G)	16
CN26	Image Density Sensor – 3P (W)	21
CN27	Stabilizer – 4P (G)	25
CN27A	Quenching Lamp – 2P (R)	23
CN27B	Pre Transfer Lamp – 2P (B)	24
CN30	Paper Exit/Fork Gate Sensor – 6P (W)	73
CN30A	Paper Exit Sensor – 3P (W)	75
CN30B	Fork Gate Sensor – 3P (W)	74
CN31	Power Supply Unit – 11P (W)	70
CN32	Jogger Motor – 6P (W)	64
CN33	Jogger Home Position Sensor – 3P (B)	63
CN33A	Jogger Home Position Sensor – 3P (B)	62
CN34	Duplex Pick-up SOL – 2P (B/W)	45
CN35	Power Pack 1 – 13P (G)	43
CN36	Duplex Feed CL – 2P (B)	44
CN37	Duplex Positioning SOL – 2P (B)	
CN38	Duplex Entrance Connector – 6P (W)	47
CN38A	Duplex Paper Sensor – 3P (W)	56
CN38B	Duplex Entrance Sensor – 3P (W)	52
CN40	Duplex Stopper SOL – 2P (G)	46
CN41	Junction Gate SOL – 2P (B)	5
CN42	Inverter Sensor – 3P (B)	7
CN42A	Inverter Sensor – 3P (W)	4
CN43	Support Roller CL. – 2P (G)	2
CN44	Inverter Return SOL – 2P (G)	1
CN47	Total Counter – 4P (W)	78
CN48	A3 Counter – 2P (W)	79
CN52	Registration CL. – 3P (G)	54
CN53	Feed Relay CL. – 3P (B)	53
CN56	Registration Sensor – 3P (W)	49
CN57	Oil End Sensor – 3P (W)	55
CN58	Transport Unit Safety SW	65
CN59	Fork Gate Unit Safety SW	72
CN60	Safety Switch – 1P (W)	68
CN61	Power Supply Unit – 3P (W)	115
CN62	Exposure Lamp – 2P (W)	120
CN63	Anticondensation Heater – 2P (R)	114
CN65	Exhaust Fan – 2P (W)	117
CN68	Fusing Unit – 8P (C)	108
CN70	Vacuum Fan – 2P (W)	107
CN71	Main Motor – 3P (W)	106
CN72	Drum Heater – 2P (R)	94
CN73	Auto Document Feeder – 2P (G)	101
CN74	Development Motor – 3P (W)	98
CN75	Cooling Blower – 2P (W	102
CN76	Capacitor – 2P (R)	97
CN77	Sorter – 2P (G)	128
CN78	Cooling Fan – 2P (G)	91
CN81	Encoder – 5P (W)	100
CN82	Scanner Drive – 2P (W)	99
CN83	Scanner Over Run – 3P (W)	96
CN84	Lens/2nd Scanner Home Position – 6P (W)	95
CN84A	Lens Home Position Sensor – 3P (W)	87
CN84B	2nd Scanner Home Position Sensor – 3P (W)	88
CN87	2nd Scanner Drive Motor – 6P (G/B)	93
CN88	Lens Drive Motor – 5P (G)	92
CN91	Scanner Home Position – 3P (W)	85
CN101	Main Board – 60P (B)	8
CN102	Main Board – 60P (B)	3
CN105	Main Board – 30P (B)	86
CN301	Optics Board – 2P (W)	90
CN302	Optics Board – 26P (B)	89
CN303	Optics Board – 10P (B)	11
CN305	Optics Board – 2P (W)	13
CN501	Temperature Control Board – 4P (W)	77
CN502	Temperature Control Board – 12P (W)	76
CN601	AC Drive Board – 8P (W)	84
CN602	AC Drive Board – 2P (W)	124
CN603	AC Drive Board – 6P (W)	126
CN604	AC Drive Board – 3P (W)	123
CN701	Lamp Regulator – 8P (W)	82
CN702	Lamp Regulator – 4P (W)	119
CN800	Operation Control Board – 30P (B)	121
CN801	Misfeed Location Indicator – 20 P (B)	113
CN802	Original Size Indicator – 10P (W)	112
CN803	Platen Cover – 2P (G)	111
CN804A	Key Counter – 4P (W)	109
	Oil Supply SOL	9
	Front Cover Safety SW	81
	Main SW	118
	Triac (Fusing Lamp)	125
	Noise Filter	127
	Circuit Breaker	110

11-1. POINT TO POINT WIRING DIAGRAM

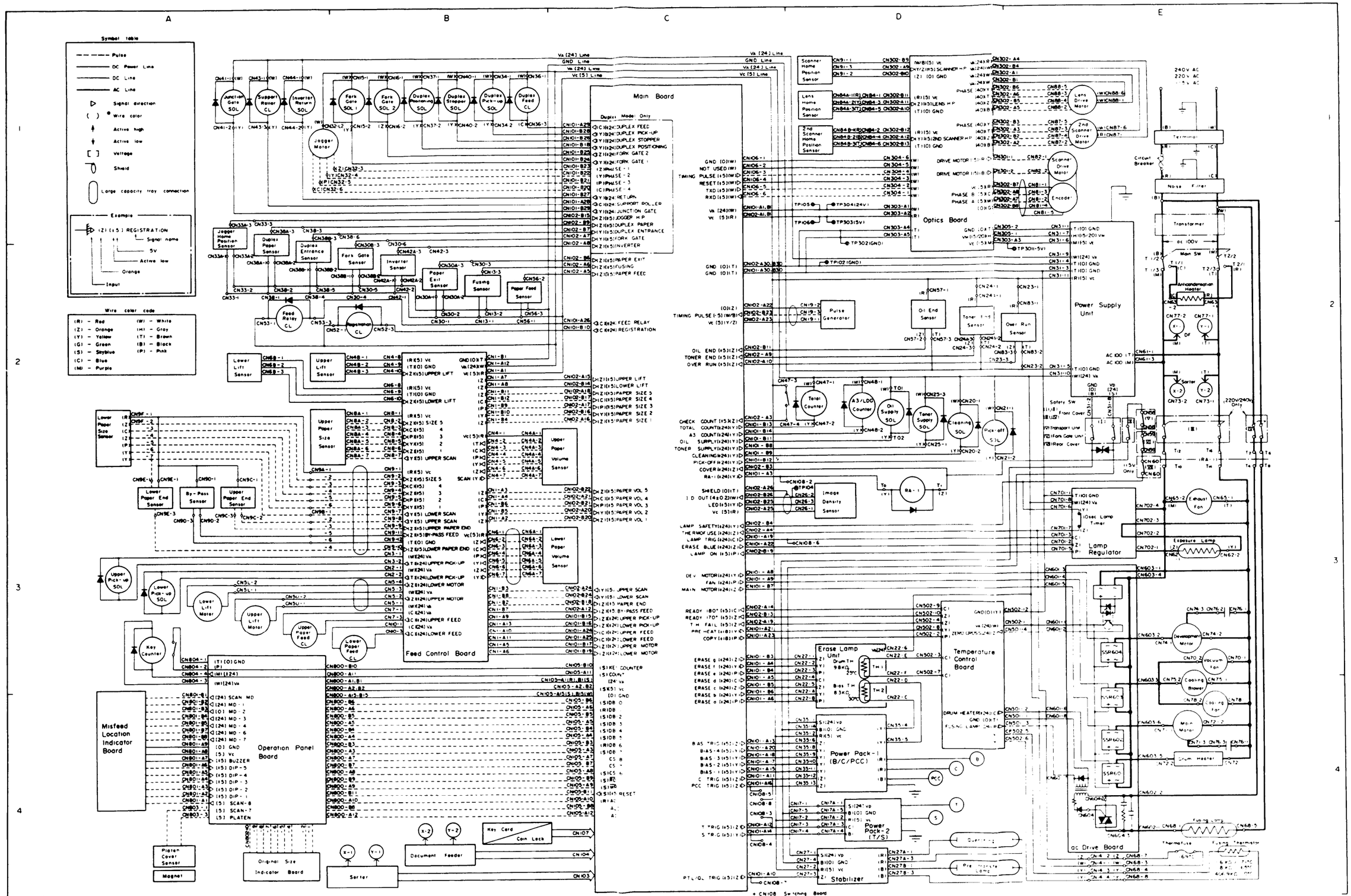

REFERENCE VOLTAGE CHART

CN101 (Main Board)

Pin No.	Color	Passive	Active	Component	Pin No.	Color	Passive	Active	Component
A 1	(W)	[24]		VA (Optics Board)	B 1	(W)	[24]		VA (Optics Board)
2					2				
3	(Y)	[24]	24 — 0	Relay-1	3	(Z)	[24]	24 — 0	Erase Lamp Unit (Erase-g)
4	(Y)	[24]	24 — 0	Erase Lamp Unit (Erase-f)	4	(P)	[24]	24 — 0	Erase Lamp Unit (Erase-e)
5	(C)	[24]	24 — 0	Erase Lamp Unit (Erase-d)	5	(Z)	[24]	24 — 0	Erase Lamp Unit (Erase-c)
6	(P)	[24]	24 — 0	Erase Lamp Unit (Erase-e)	6	(Y)	[24]	24 — 0	Erase Lamp Unit (Erase-b)
7					7	(Z)	[24]	24 — 0	AC Drive Board (SSR602 Main Motor)
8	(Y)	[24]	24 — 0	Development Motor	8	(Y)	[24]	24 — 0	Toner Supply Solenoid
9	(P)	[24]	24 — 0	AC Drive Board (SSR603 Fans)	9	(Y)	[24]	24 — 0	Cleaning Solenoid
10	(Z)	[5]	5 — 0	Stabilizer (QL, PTL)	10	(C)	[24]	24 — 0	Registration Clutch
11	(Z)	[5]	5 — 0	Power Pack-1 (Charge Corona)	11	(Y)	[24]	24 — 0	Oil Supply Solenoid
12	(Z)	[5]	5 — 0	Power Pack-2 (Transfer Corona)	12	(Y)	[24]	24 — 0	Pick-off Solenoid
13	(Z)	[5]	5 — 0	Power Pack-1 (Development Bias)	13	(Y)	[24]	24 — 0	Total Counter
14	(Y)	[5]	5 — 0	Power Pack-2 (Separation Corona)	14	(Y)	[24]	24 — 0	A3/LDG Counter
15	(Y)	[5]	5 — 0	Power Pack-1 (Development Bias-1)	15	(Z)	[24]	24 — 0	Upper Pick-up Solenoid
16	(Z)	[5]	5 — 0	Power Pack-1 (Pre Cleaning Charge Corona)	16	(Z)	[24]	24 — 0	Lower Pick-up Solenoid
17	(Y)	[5]	5 — 0	Power Pack-1 (Development Bias-2)	17	(Z)	[24]	24 — 0	Upper Lift Motor
18	(Y)	[5]	5 — 0	Power Pack-1 (Development Bias-3)	18	(Y)	[24]	24 — 0	Duplex Positioning Solenoid
19	(C)	[24]	24 — 0	Lamp Regulator (Exposure Lamp)	19	(Z)	[24]	24 — 0	Lower Lift Motor
20	(Y)	[5]	5 — 0	Power Pack-1 (Development Bias-4)	20	(C)	Pulse	40V	Jogger Motor (Phase-4)
21	(Y)	[18]	18 — 0	Temperature Control Board (Drum Heater)	21	(P)	Pulse	40V	Jogger Motor (Phase-3)
22	(Z)	[24]	24 — 0	Lamp Regulator (Erase Blue)	22	(Y)	Pulse	40V	Jogger Motor (Phase-2)
23	(P)	[18]	18 — 0	Temperature Control Board	23	(Z)	Pulse	40V	Jogger Motor (Phase-1)
24	(C)	[24]	24 — 0	Upper Paper Feed Clutch	24	(Y)	[24]	24 — 0	Fork Gate Solenoid 1
25	(C)	[24]	24 — 0	Lower Paper Feed Clutch	25	(Z)	[24]	24 — 0	Fork Gate Solenoid 2
26	(C)	[24]	24 — 0	Feed Relay Clutch	26	(Y)	[24]	24 — 0	Duplex Stopper Solenoid
27					27	(Y)	[24]	24 — 0	Inverter Return Solenoid
28	(C)	[24]	24 — 0	Support Roller Clutch	28	(Y)	[24]	24 — 0	Duplex Pick up Solenoid
29	(C)	[24]	24 — 0	Duplex Feed Clutch	29	(Y)	[24]		Junction Gate Solenoid
30	(T)	[0]		GND (Power Supply Unit)	30	(T)	[0]		

CN102 (Main Board)

Pin No	Color	Passive	Active	Component	Pin No	Color	Passive	Active	Component
A 1	(R)	[5]		Vc (Optics Board)	B 1	(R)	[5]		Vc (Optics Board)
2					2				
3	(Z)	[5]	0 — 5	Total Counter (Check Count)	3	(Z)	[24]	24 — 0	Relay 1 (Door)
4	(Z)	[24]	24 — 0	Thermofuse	4	(Y)	[24]	24 — 0	Safety Switch (Lamp Safety)
5	(Z)	[5]	5 — 0	Registration Sensor	5				
6	(Z)	[5]	5 — 0	Fusing Sensor	6	(Z)	[5]	5 — 0	Paper Exit Sensor
7	(Y)	[5]	5 — 0	Fork Gate Sensor	7	(Y)	[5]	5 — 0	Duplex Entrance Sensor
8	(Z)	[5]	5 — 0	Inverter Sensor	8				
9	(Z)	[5]	5 — 0	Toner End Sensor	9	(Z)	[5]	5 — 0	Duplex Paper Sensor
10	(Z)	[5]	0 — 5	Over Run Sensor	10				
11					11	(Z)	[5]	5 — 0	Oil End Sensor
12	(Z)	[5]	0 — 5	By pass Feed Sensor	12				
13					13	(Z)	[5]	5 — 0	Temperature Control Board (170 C)
14	(C)	[5]	5 — 0	Temperature Control Board (180 C)	14	(Z)	[5]	5 — 0	Lower Lift Sensor
15	(Z)	[5]	5 — 0	Upper Lift Sensor	15	(Z)	[5]	0 — 5	Jogger Home Position Sensor
16	(Z)	Pulse	5V	Paper Size Sensor (Size 1)	16	(Y)	Pulse	5V	Paper Size Sensor (Size 2)
17	(P)	Pulse	5V	Paper Size Sensor (Size 3)	17	(C)	Pulse	5V	Paper Size Sensor (Size 4)
18	(Z)	Pulse	5V	Paper Size Sensor (Size 5)	18	(Z)	Pulse	5V	Paper End Sensor
19	(Z)	[5]	5 — 0	Temperature Control Board (Thermistor Failure)	19	(P)	[5]	5 — 0	Lamp Regulator (Exposure Lamp)
20	(Y)	Pulse	5V	Paper Volume Sensor (Volume 2)	20	(Z)	Pulse	5V	Paper Volume Sensor (Volume 1)
21	(C)	Pulse	5V	Paper Volume Sensor (Volume 4)	21	(P)	Pulse	5V	Paper Volume Sensor (Volume 3)
22	(Z)	[0]		GND (Pulse Generator)	22	(Z)	Pulse	5V	Paper Volume Sensor (Volume 5)
23	(Y Z)	[5]		Vc (Pulse Generator)	23	(W B)	Pulse	-5V	Pulse Generator
24	(Y)	Pulse	5V	Feed Control Board (Upper Scan)	24	(Y)	Pulse	5	Feed Control Board (Lower Scan)
25	(R)	[5]		Vc (Image Density Sensor)	25	(Y)	[5]	5 — 0	Image Density Sensor LED
26	(T)	[0]		Shield (Image Density Sensor)	26	(W)	4.0 V		Image Density Sensor Output
27					27				
28					28				
29					29				
30	(T)	[0]		GND	30	(T)	[0]		(GND)

CN105 (Main Board)

Pin No.	Color	Passive	Active	Component	Pin No.	Color	Passive	Active	Component
A 1	(R)	[24]		V_A (Operation Control Board)	B 1	(S)	[24]		V_A (Operation Control Board)
2	(S)	[5]		V_C (Operation Control Board)	2	(S)	[5]		V_C (Operation Control Board)
3	(S)	Pulse		Operation Control Board (DB-7)	3	(R)	Pulse		Operation Control Board (DB-6)
4	(S)	Pulse		Operation Control Board (DB-5)	4	(S)	Pulse		Operation Control Board (DB-4)
5	(S)	Pulse		Operation Control Board (DB-3)	5	(S)	Pulse		Operation Control Board (DB-2)
6	(R)	Pulse		Operation Control Board (DB-1)	6	(S)	Pulse		Operation Control Board (DB-0)
7					7				
8	(S)	Pulse		Operation Control Board (CS-6)	8				
9	(S)	Pulse		Operation Control Board ($\overline{WR}$)	9	(S)	Pulse		Operation Control Board ($\overline{RD}$)
10	(R)	Pulse		Operation Control Board (A0)	10	(S)	Pulse		Operation Control Board (Key Counter)
11	(S)	Pulse		Operation Control Board (Key Counter)	11	(S)	Pulse		Operation Control Board (Reset)
12					12				
13					13				
14					14				
15	(S)	[0]		GND (Operation Control Board)	15	(W)	[0]		GND

CN31 (Power Supply Unit)

Pin No.	Color	Passive	Active	Component
1	(T)			GND
2	(B)			GND
3	(T)			GND (Lamp Regulator, Temperature Control Board)
4	(T)			GND (Main Board)
5	(T)			GND
6	(M)	[−5]		V_E (Optics Board)
7	(H)			V_M (Optics Board)
8	(S)	[24]		V_P (Power Pack)
9	(W)	[24]		V_A
10	(W)	[24]		V_A
11	(R)	[5]		V_C

(CN61 (Power Supply Unit)

Pin No.	Color	Passive	Active	Component
1	(T)		115/220	
2				
3	(M)		0	

CN302 (Optics Board)

Pin No.	Color	Passive	Active	Component	Pin No.	Color	Passive	Active	Component
A 1	(W)	[24]		V_A (Lens Drive Motor)	B 1	(W)	[24]		V_A (Lens Drive Motor)
2	(B)	Pulse		2nd Scanner Drive Motor (Phase	2	(Z)	Pulse		2nd Scanner Drive Motor
3	(T)	Pulse		2nd Scanner Drive Motor (Phase	3	(Y)	Pulse		2nd Scanner Drive Motor
4	(R)	[24]		V_A (2nd Scanner Drive Motor)	4	(W)	[24]		V_A (2nd Scanner Drive Motor)
5	(B)	Pulse		Lens Drive Motor (Phase	5	(Z)	Pulse		Lens Drive Motor
6	(T)	Pulse		Lens Drive Motor (Phase	6	(Y)	Pulse		Lens Drive Motor
7	(W)	Pulse		Scanner Drive Motor (Encoder Phase	7	(R)	[5]		V_C (Scanner Drive Motor)
8	(C)	Pulse		Scanner Drive Motor (Encoder Phase	8	(G)	[0]		GND (Scanner Drive Motor, Encoder)
9	(Y/Z)	[5]		Scanner Home Position Sensor	9	(W/B)	[5]		V_C (Scanner Home Position Sensor)
10	(T)	[0]		GND (Lens Home Position Sensor)	10	(Z)	[0]		GND (Scanner Home Position Sensor)
11	(Z)	[5]		Lens Home Position Sensor	11	(R)	[5]		V_C (Lens Home Position Sensor)
12	(Y)	[5]		2nd Scanner Home Position Sensor	12	(R)	[5]		V_C (2nd Scanner Home Position Sensor)
13	(T)	[0]		GND	13	(T)	[0]		GND (2nd Scanner Home Position Sensor)

CN303 (Optics Board)

Pin No.	Color	Passive	Active	Component	Pin No.	Color	Passive	Active	Component
A 1	(W)	[24]		V_A (from Main Board)	B 1				
2	(R)	[5]		V_C (from Main Board)	2				
3	(M)	[−5]		V_E (Power Supply Unit)	3				
4	(T)	[0]		GND (Main Board, Power Supply Unit)	4				
5	(T)	[0]		GND	5				

CN301 (Optics Board)

Pin No.	Color	Passive	Active	Component
1	(R)	Pulse		Scanner Drive Motor
2	(B)	Pulse		Scanner Drive Motor

CN305 (Optics Board)

Pin No.	Color	Passive	Active	Component
1	(H)	[15 - 20]		V_M (Power Supply Unit)
2	(T)	[0]		GND (Power Supply Unit)

11-4. SCHEMATICS
– Optics Board Schematic –

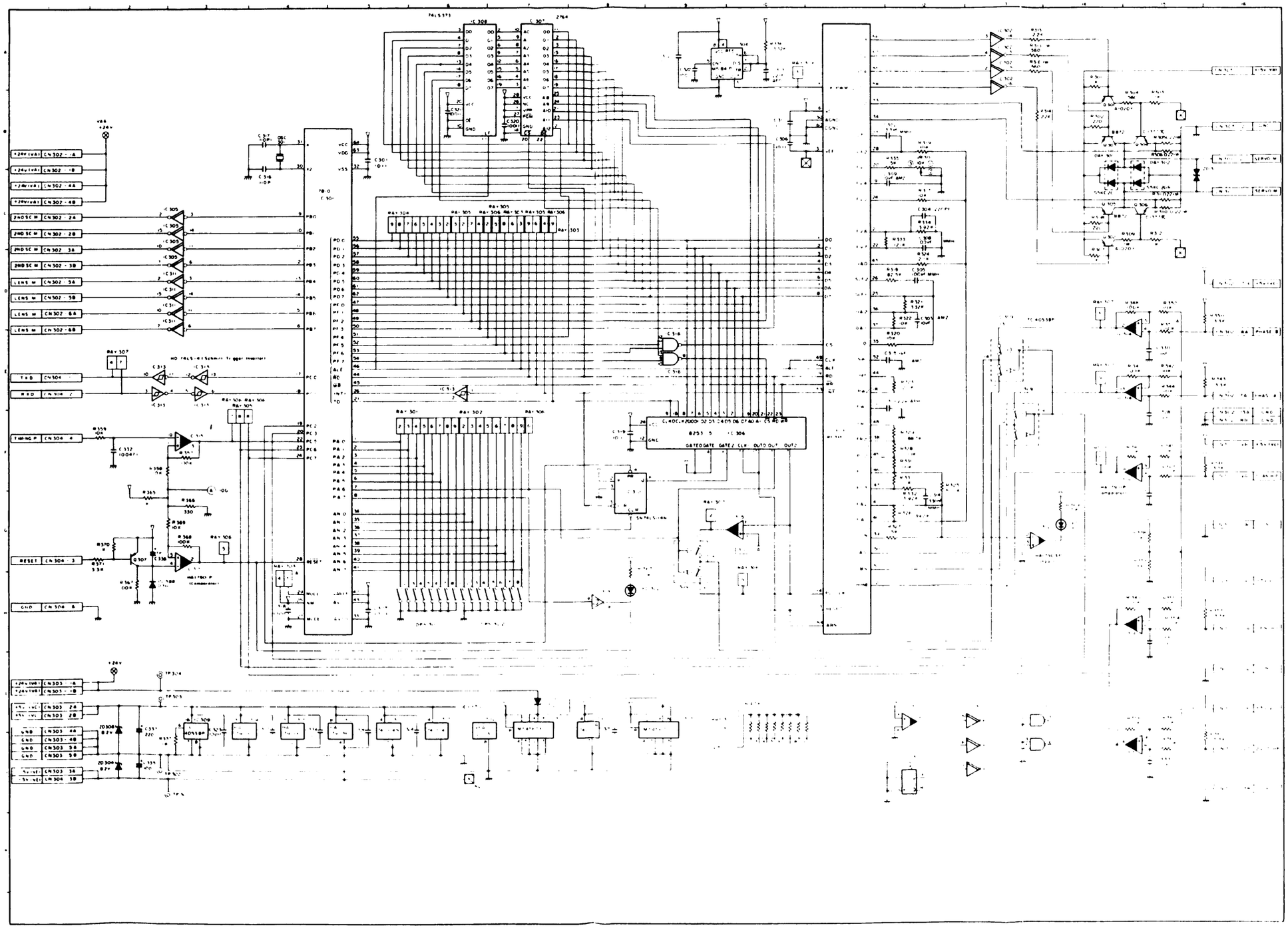

11-4. SCHEMATICS

— Main Board Schematic —

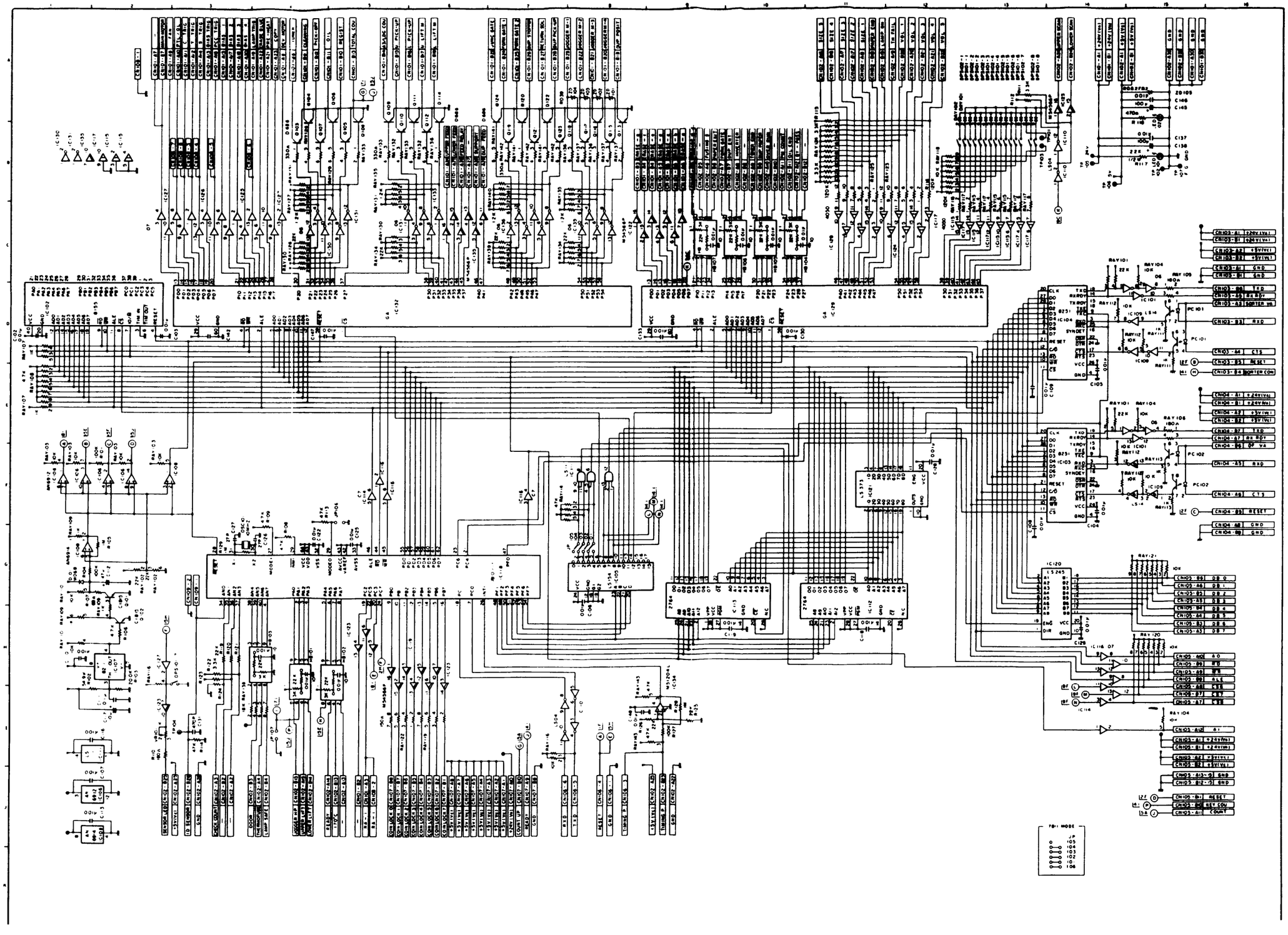

11-4. SCHEMATICS

– Operation Panel Board Schematic –

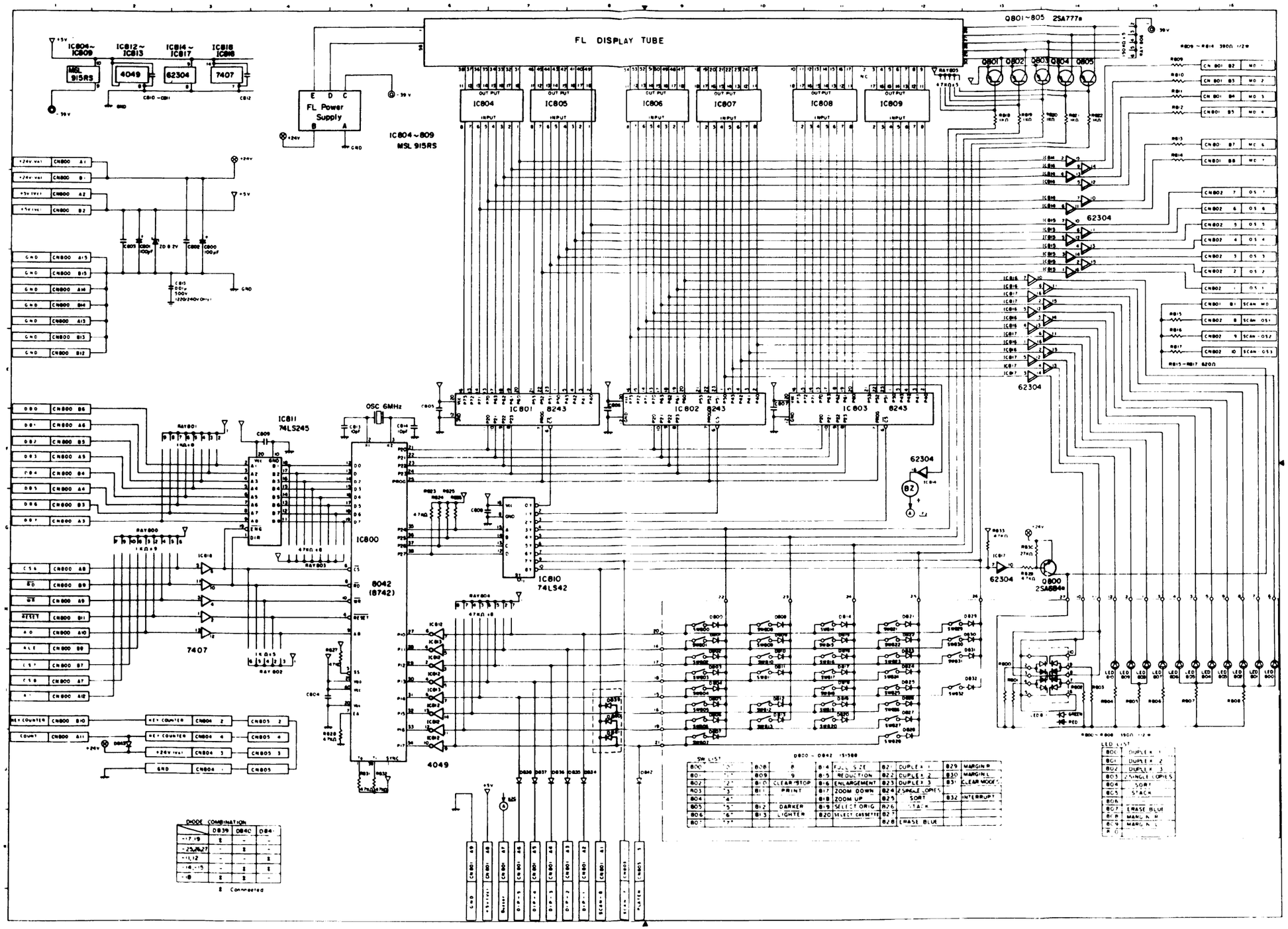

11-4. SCHEMATICS

– Feed Control Board Schematic –

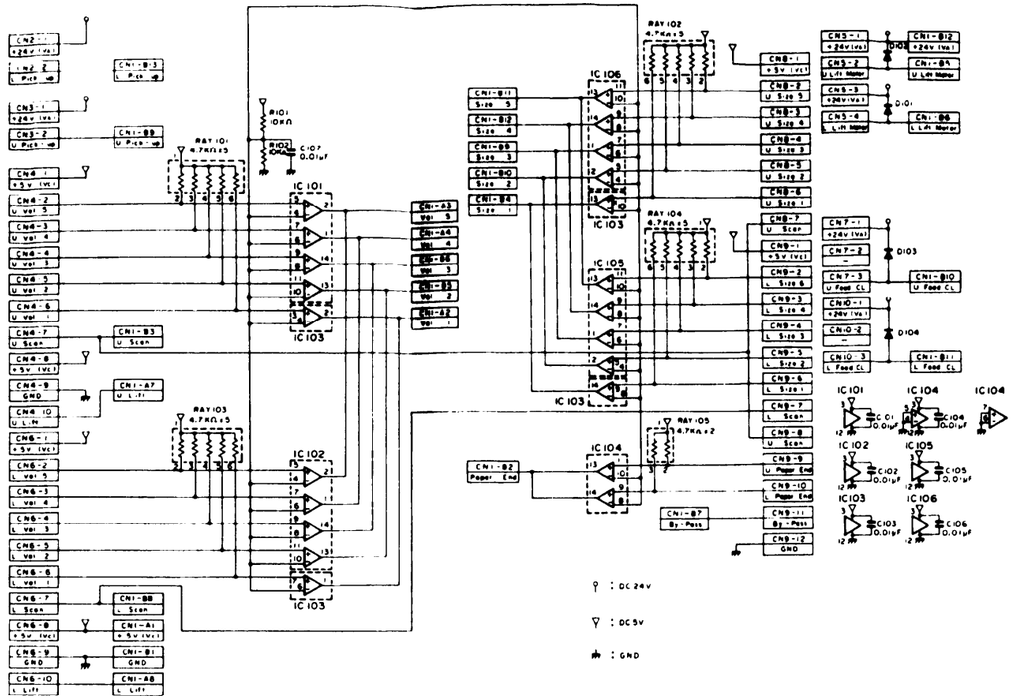

– AC Drive Board Schematic –

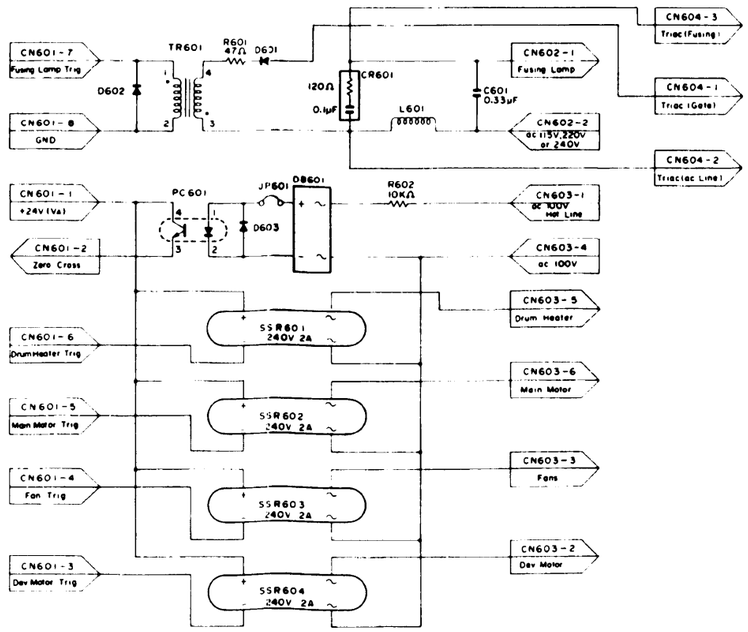

– Temperature Control Board Schematic –

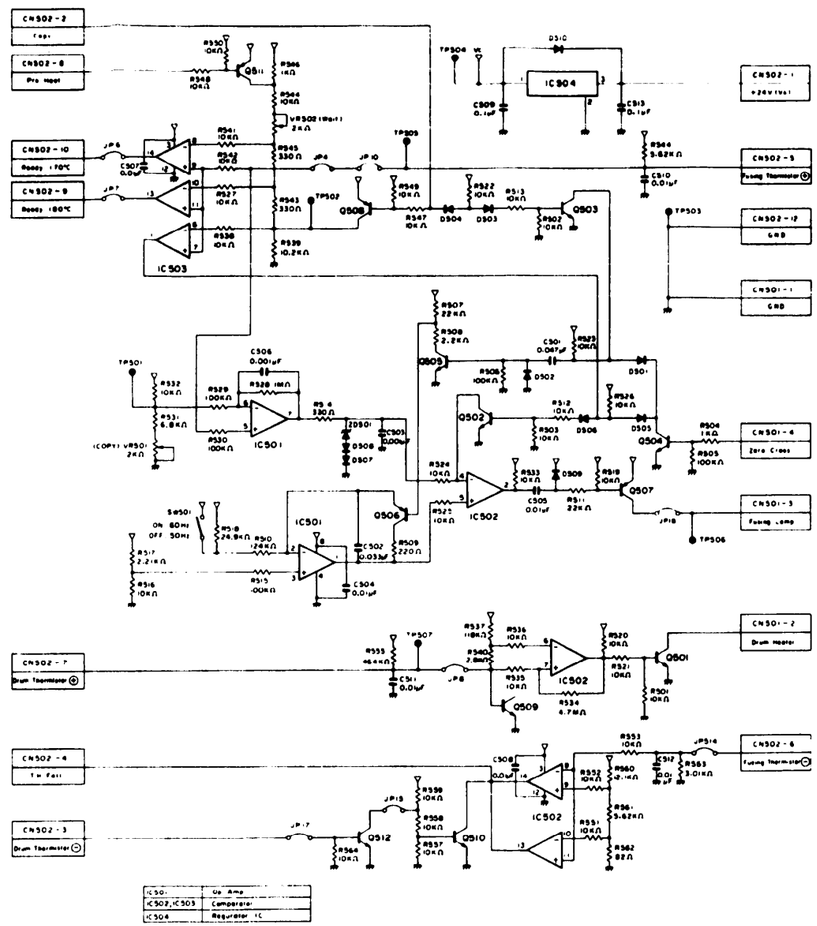

IC501	Op Amp
IC502, IC503	Comparator
IC504	Regulator IC

11-5. TIMING CHART 1(A3, Lower Paper Feed Mode)

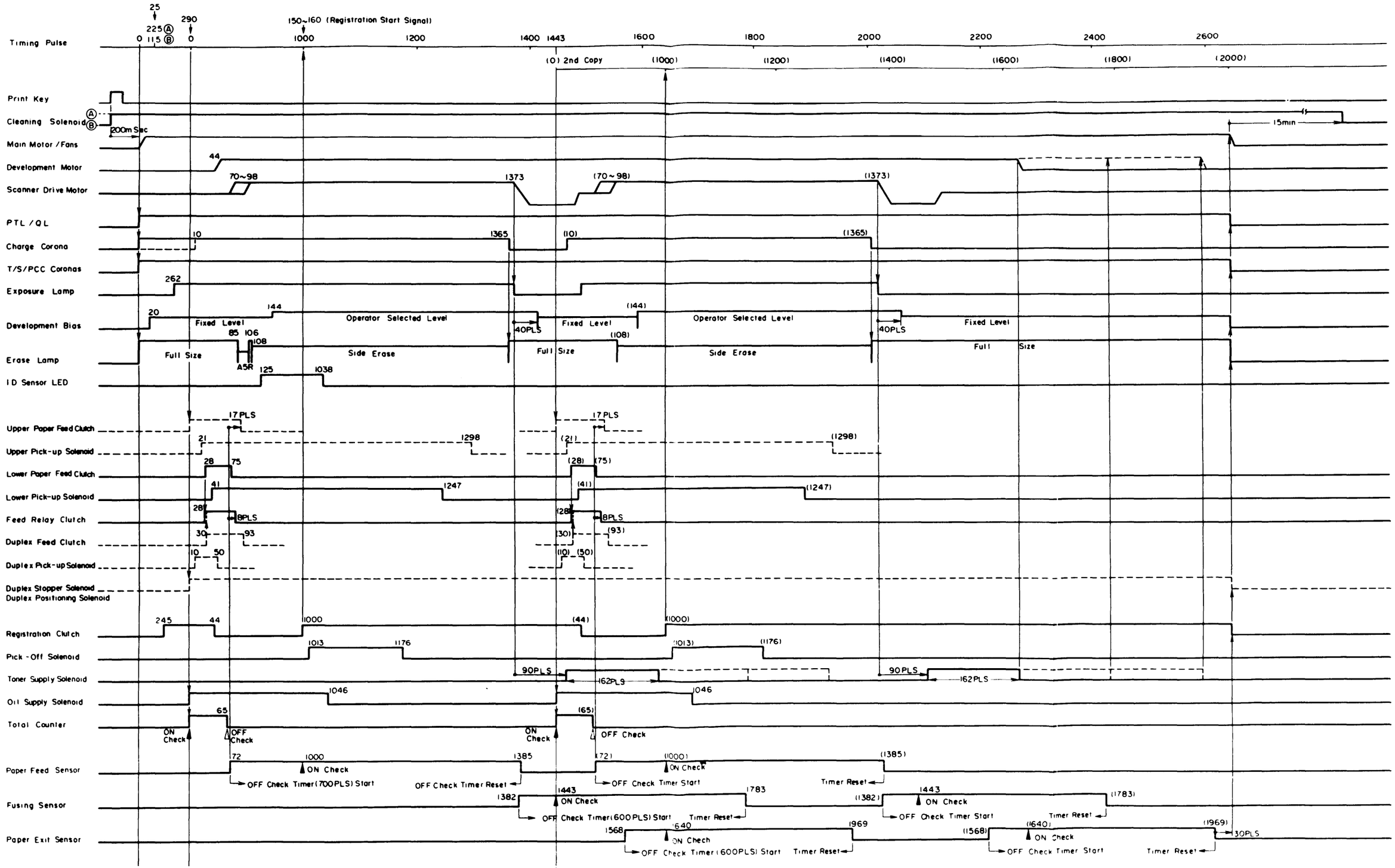

TIMING CHART 2 (A3, Duplex – 1st Original, Lower Paper Feed Mode)

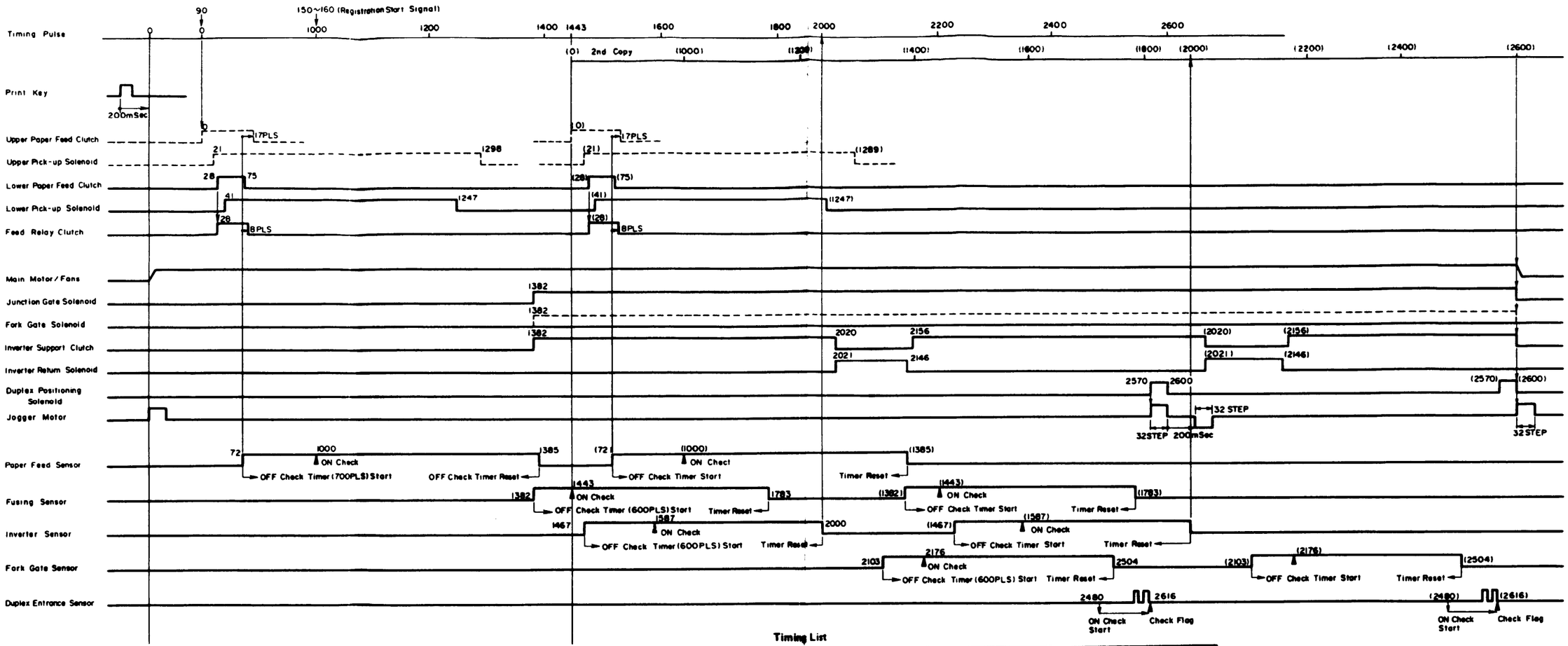

Reproduction Ratio	Scanner Start Timing
141%	70
129% – 140%	74
122% – 128%	76
121%	77
115% – 120%	78
94% – 114%	83
88% – 93%	85
86% – 87%	87
83% – 85%	88
79% – 82%	89
76% – 78%	90
72% – 75%	91
68% – 71%	92
66% – 67%	93
62% – 65%	94
51% – 61%	95
50%	98

Timing List

Paper Size	Charge Corona OFF	Scanner Return	Pick-up SOL. OFF		Next Paper Feed	CPM
			Upper	Lower		
By-Pass Feed	1376PLS	1384PLS	1310PLS	1258PLS	1443PLS	20
A3	1365	1373	1298	1247	1443	20
*	1376	1384	1310	1258	1443	20
B4	1311	1319	1245	1193	1364	23
A4	1164	1172	1098	1046	1183	35
A4R	1247	1255	1181	1129	1303	26
B5	1137	1145	1071	1000	1155	38
B5R	1209	1217	1143	1091	1240	30
A5	1105	1113	1039	1000	1155	38
A5R	1164	1172	1098	1046	1183	35
B6	1086	1094	1000	1000	1155	38
B6R	1137	1145	1071	1000	1155	38
11" x 17"	1376	1384	1310	1258	1443	20
11" x 8½"	1170	1178	1104	1052	1183	35
10" x 15"	1327	1335	1261	1210	1388	22
10" x 14"	1303	1311	1237	1186	1364	23
8½" x 14"	1303	1311	1237	1186	1364	23
8½" x 13"	1279	1287	1213	1161	1342	24
8½" x 11"	1230	1238	1181	1130	1285	27
8½" x 5½"	1097	1105	1031	1000	1155	38
8½" x 14"	1303	1311	1237	1186	1364	23
8" x 13"	1279	1287	1213	1161	1342	24
8" x 10½"	1218	1226	1152	1100	1269	28
8" x 10"	1206	1214	1140	1088	1240	30
5½" x 8½"	1170	1178	1104	1052	1183	35

Note: 1 Pulse = 1.05 mm
1 Pulse = 4.94 m Sec

CN304 (Optics Board)

Pin No.	Color	Passive	Active	Component
1	(W)	Pulse	5V	Main Board (R x D)
2	(W)	Pulse	5V	from Main Board (T x D)
3	(W)	Pulse	5 → 0	from Main Board (Reset)
4	(W)	Pulse	5V	from Main Board (Timing Pulse)
5	(W)			
6	(W)	[0]		GND (from Main Board)

CN501 (Temperature Control Board)

Pin No.	Color	Passive	Active	Component
1	(T)	[0]		GND (AC Drive Board)
2	(C)	[24]		AC Drive Board (Drum Heater)
3	(P)			AC Drive Board (Fusing Lamp)
4	(Z)	[24]		AC Drive Board (Zero Cross)

CN502 (Temperature Control Board)

Pin No.	Color	Passive	Active	Component
1	(W)	[24]		V_A (Thermofuse, AC Drive Board)
2	(P)	[18]	18 → 0	from Main Board (Copy Signal)
3	(C)			Drum Thermistor (TH1)
4	(Z)	[5]	5 → 0	Thermistor Failure
5	(Y)	[10]		Fusing Thermistor
6	(Y)	[4]		Fusing Thermistor
7	(C)	[4]		Drum Thermistor (TH2)
8	(Y)	[18]	18 → 0	from Main Board (Pre Heat)
9	(C)	[5]	5 → 0	from Main Board (Ready)
10	(Z)	[5]	5 → 0	from Main Board (170°C)
11				
12	(T)	[0]		GND (Lamp Regulator, Power Supply Unit)

CN601 (AC Drive Board)

Pin No.	Color	Passive	Active	Component
1	(W)	[24]		V_A
2	(Z)	Pulse		from Temperature Control Board
3	(Y)	[24]	24 → 0	from Main Board (Development Motor)
4	(P)	[24]	24 → 0	from Main Board (Fans)
5	(Z)	[24]	24 → 0	from Main Baord (Main Motor)
6	(C)			
7	(P)	Pulse		from Temperature Control Board (Fusing Lamp)
8	(T)	[0]		GND

CN603 (AC Drive Board)

Pin No.	Color	Passive	Active	Component
1	(R)			ac 100V
2	(H)			Development Motor
3	(Z)			Vacuum Fan, Cooling Fan, Cooling Blower
4	(C)			ac 100V
5	(Y)			Drum Heater
6	(P)			Main Motor

CN604 (AC Drive Board)

Pin No.	Color	Passive	Active	Component
1	(Y)			Triac (Fusing Lamp)
2	(C)			Triac (Fusing Lamp)
3	(W)			Triac (Fusing Lamp)

CN701 (Lamp Regulator)

Pin No.	Color	Passive	Active	Component
1	(T)	[0]		GND (from Power Supply Unit)
2	(P)	[24]	24 → 0	from Main Board (Erase Blue)
3	(C)	[24]	24 → 0	from Main Board (Exposure Lamp Trigger)
4				
5	(P)	[5]	5 → 0	Main Board (Exposure Lamp ON Signal)
6	(Y)	[24]	24 → 0	Main Board (Lamp Safety)
7	(Z)	[24]	24 → 0	Thermofuse
8	(W)	[24]		V_A

CN702 (Lamp Regulator)

Pin No.	Color	Passive	Active	Component
1	(Z)			Exposure Lamp
2	(Y)			Exposure Lamp
3	(R)			ac 100V
4	(C)			ac 100V

11-6. BOARD PATTERN

Main Board Pattern

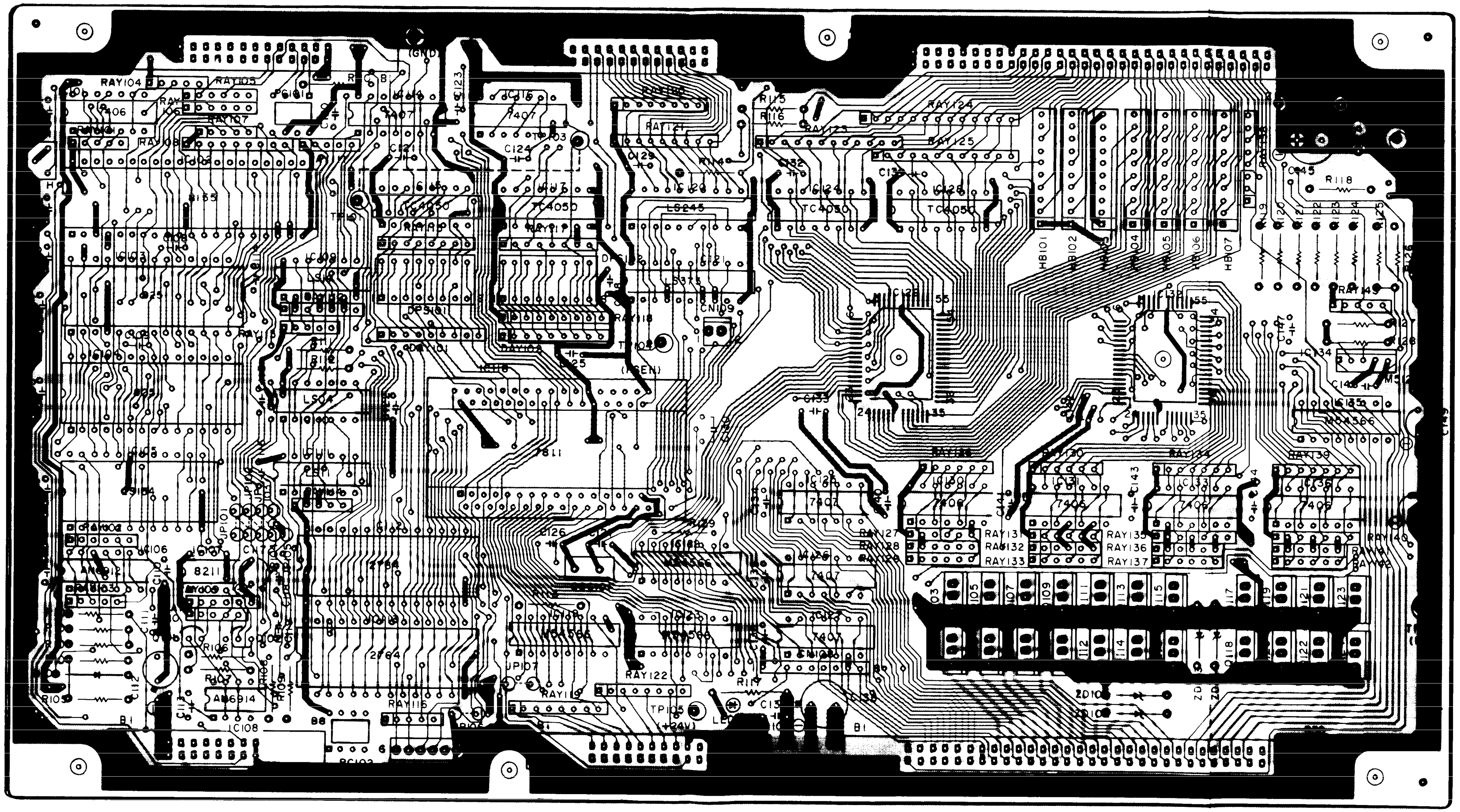

BOARD PATTERN
Optics Board Pattern

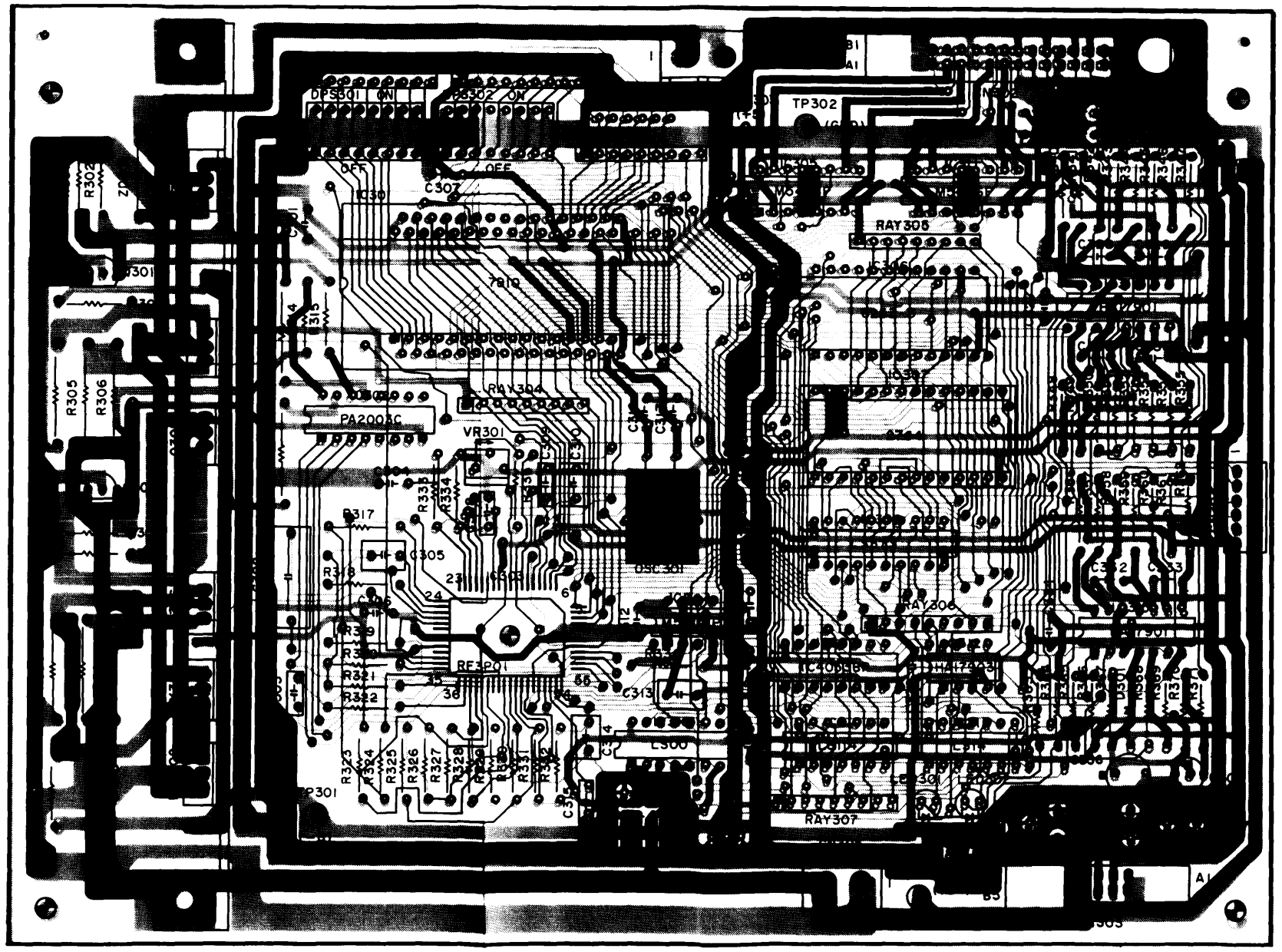

SECTION 12

ELECTRICAL DATA DF32

12-1. DF P TO P / COMPONENT AND CONNECTOR LAYOUT

– DF Electrical Component Layout –

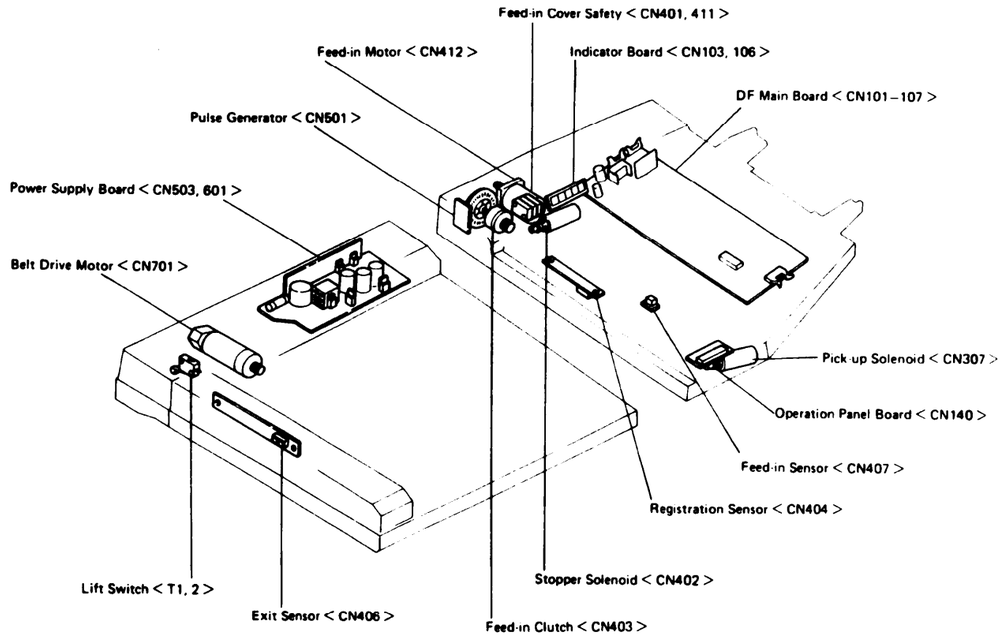

– DF Connector Layout –

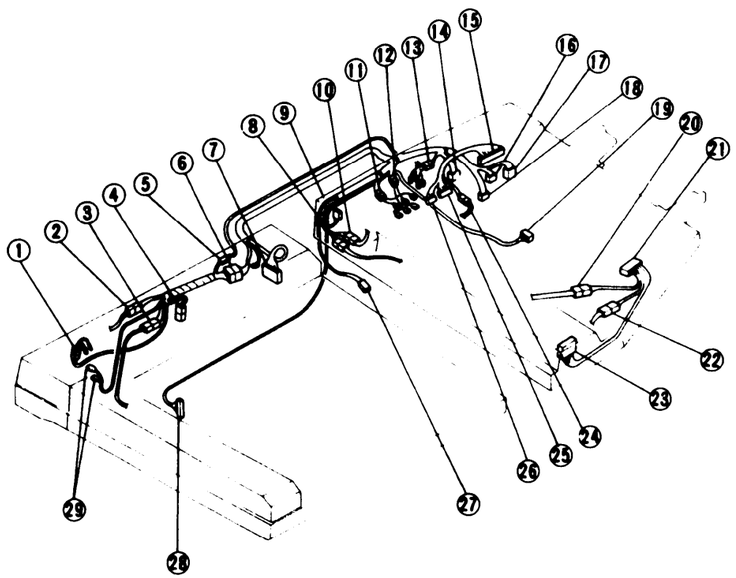

CN No	Usage	Index No	Type
CN101	DF Main Board	18	4P (W)
CN102	DF Main Board	17	2P (W)
CN103	DF Main Board	15	40P (B)
CN104	Copier Interface	19	8P (W)
CN105	DF Main Board	16	3P (W)
CN106	DF Main Board	14	4P (W)
CN107	DF Main Board	21	20P (B)
CN104	Operation Panel	23	15P (W)
CN201	Belt Unit Interface	6	15P (W)
CN301	Original Counter	25	15P (W)
CN302	Indicator LED s	26	6P (W)
CN307	Pick-up Sol	22	2P (W)
CN401	dc Cover Safety	12	2P (W)
CN402	Stopper Sol	24	2P (W)
CN403	Feed-in Clutch	10	2P (R)
CN404	Registration Sensor	8	3P (W)
CN406	Exit Sensor	3	3P (W)
CN407	Feed-in Sensor	20	3P (W)
CN411	ac Cover Safety	11	2P (G)
CN412	Feed-in Motor	13	3P (C)
CN413	ac 100V	5	2P (W)
CN501	Pulse Generator	9	4P (W)
CN502	Encoder	2	3P (W)
CN513	Power Supply Board	4	2P (W)
CN601	Power Supply Board	7	6P (W)
CN701	Belt Drive Motor	1	2P (W)
T1 2	Lift Switch	29	– (–)
Copier CN 73	ac 100V	27	2P (G)
CN104	Copier Interface	28	16P (B)

– DF Point to Point Wiring Diagram –

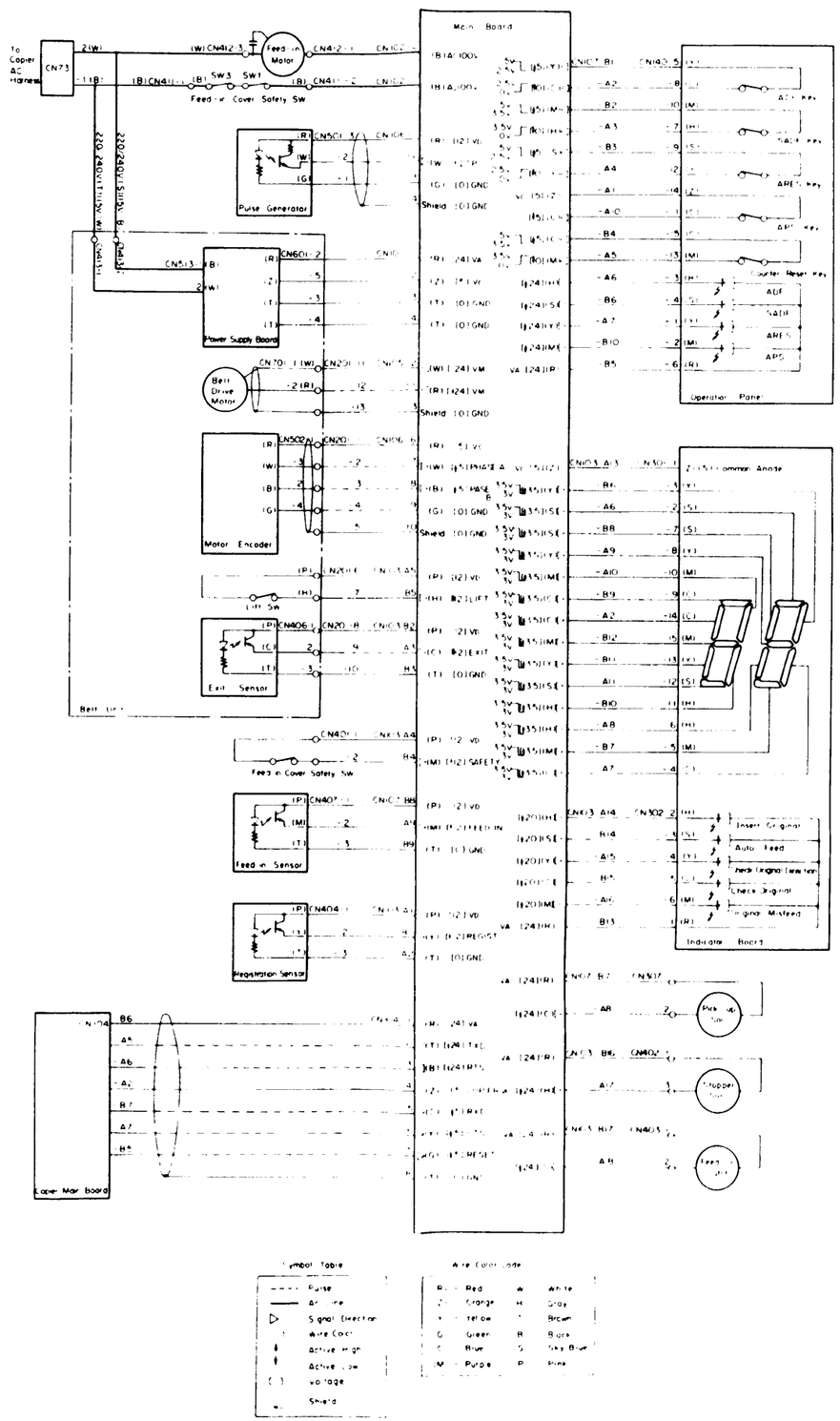

12-2. DF TIMING CHART

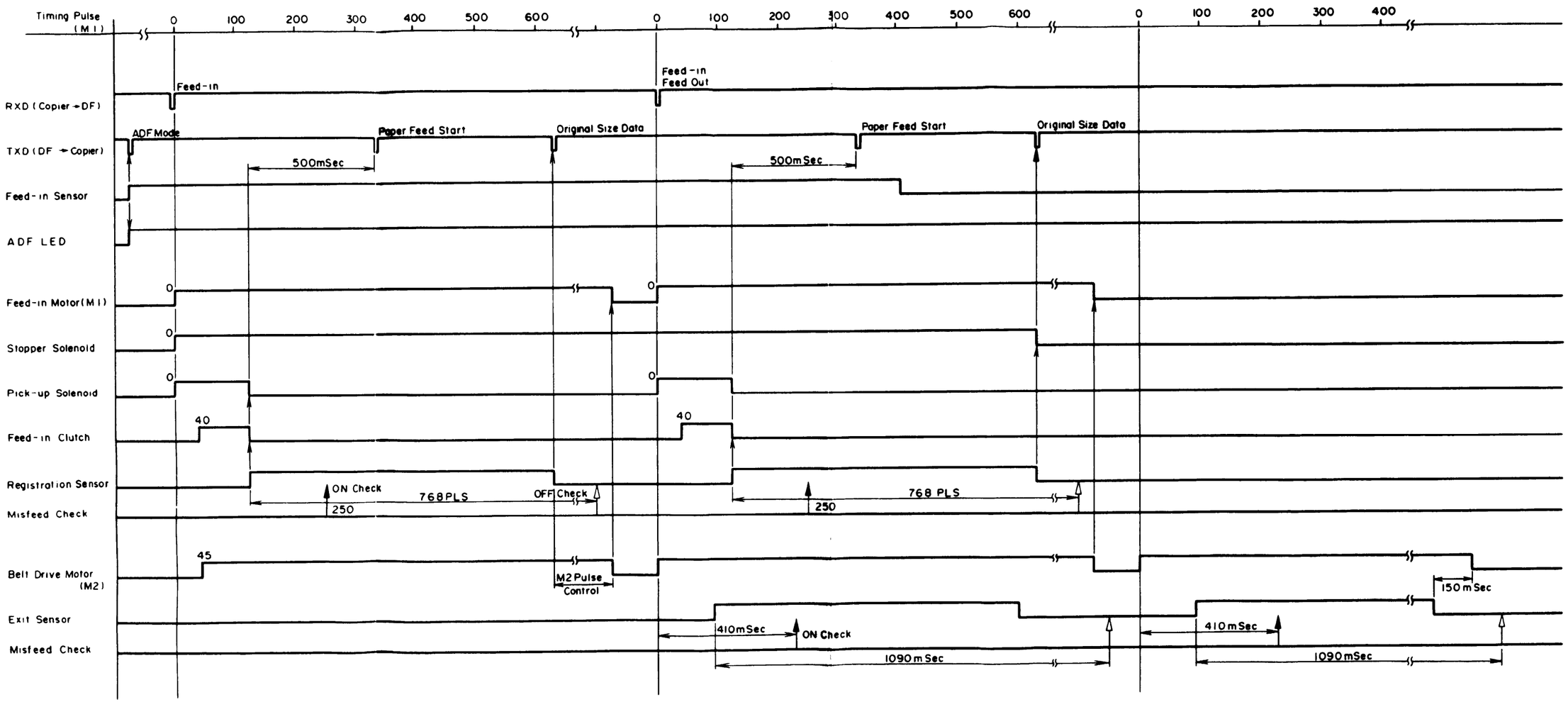

Note: 1 Pulse = 1.2mm
1 Pulse = 2.4mSec

BOARD PATTERN

Operation Panel Board Pattern

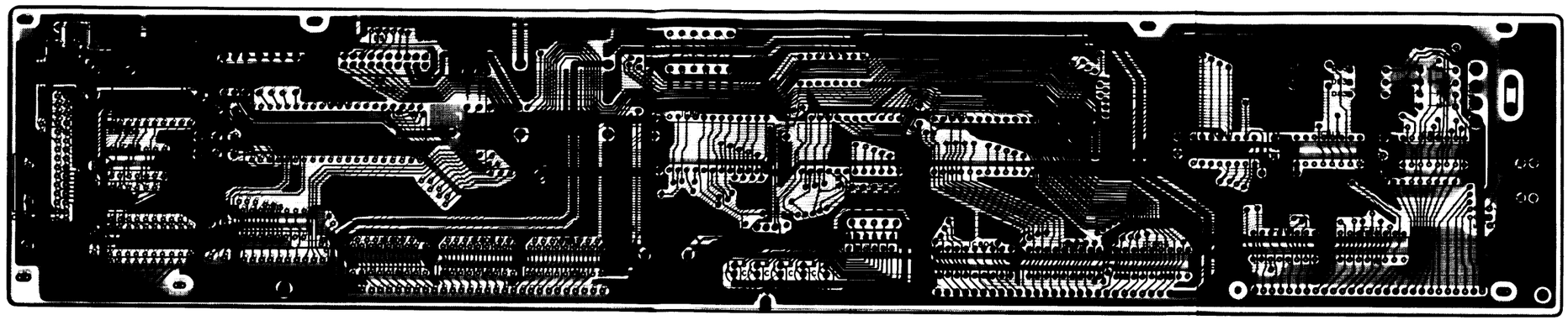

Operation Board Pattern

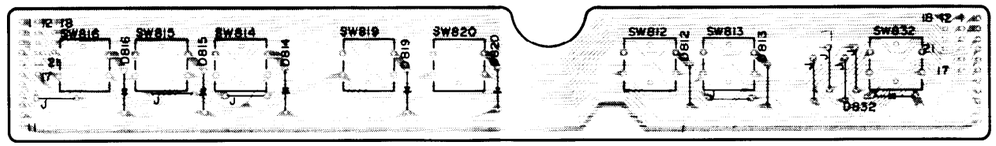

Center

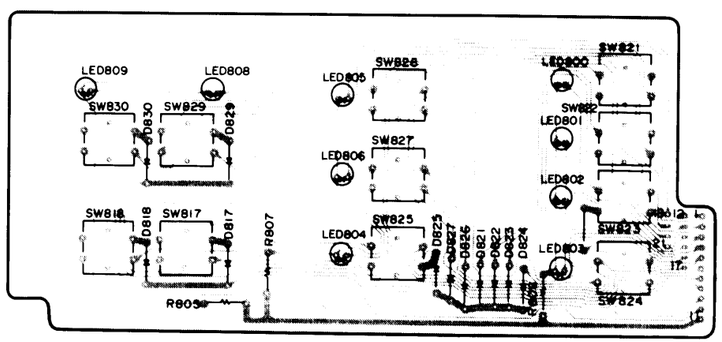

Left

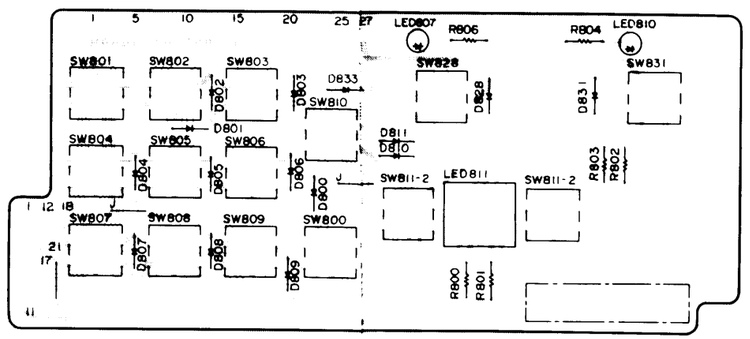

Right

BOARD PATTERN

Power Supply Unit Board Pattern

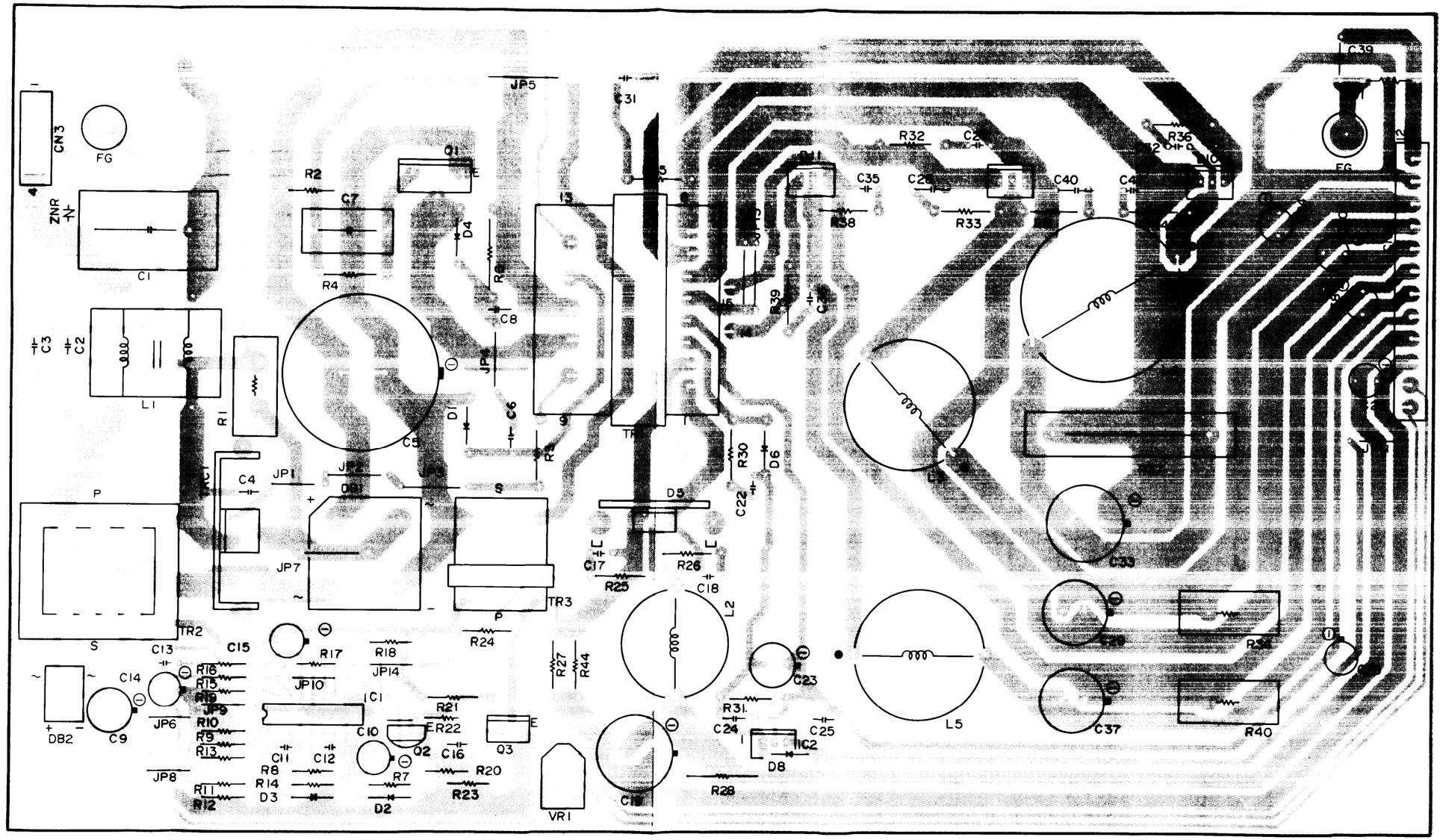

AC Drive Board Pattern

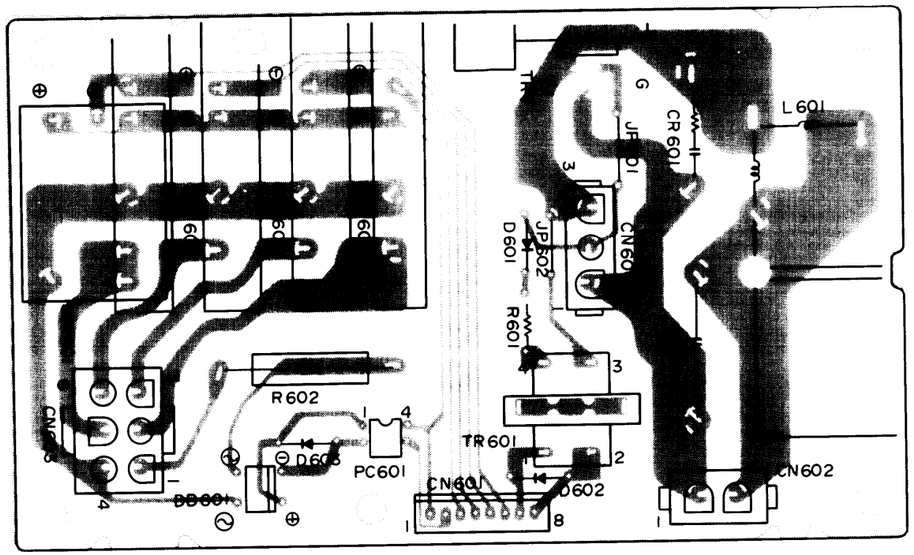

Temperature Control Board Pattern

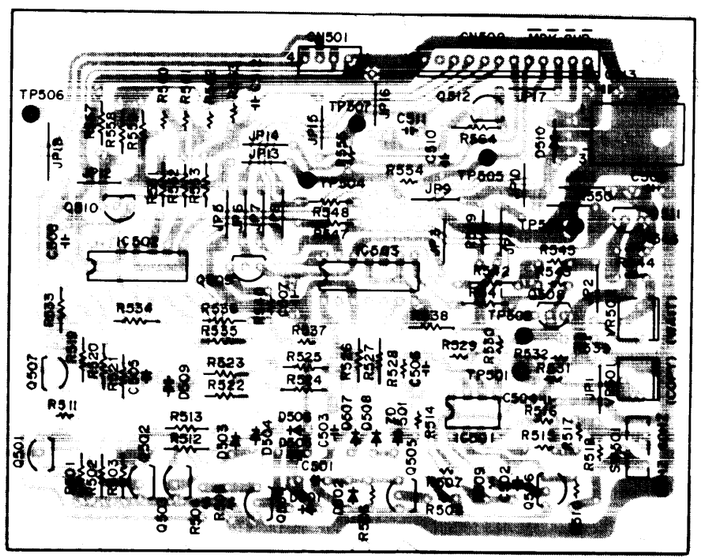

Feed Control Board Pattern

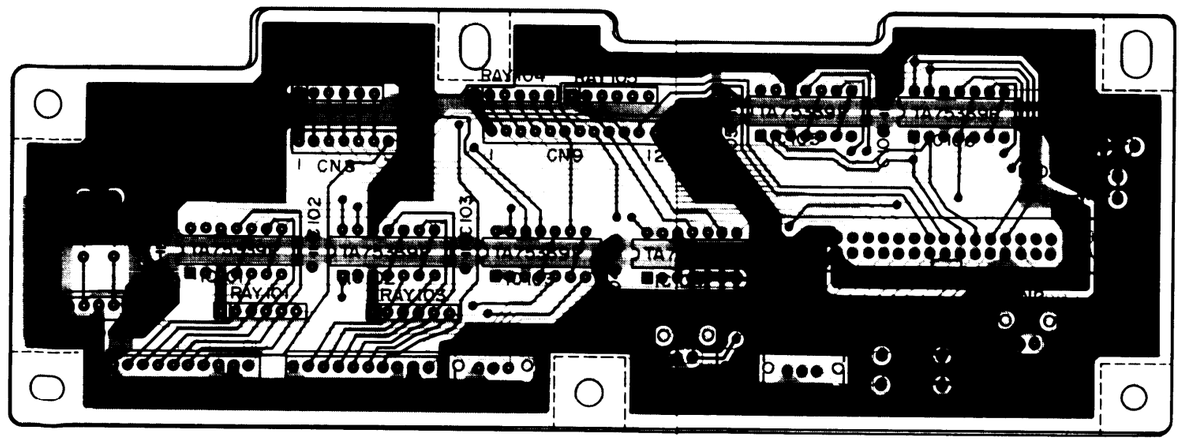

12-3. DF MAIN BOARD SCHEMATIC

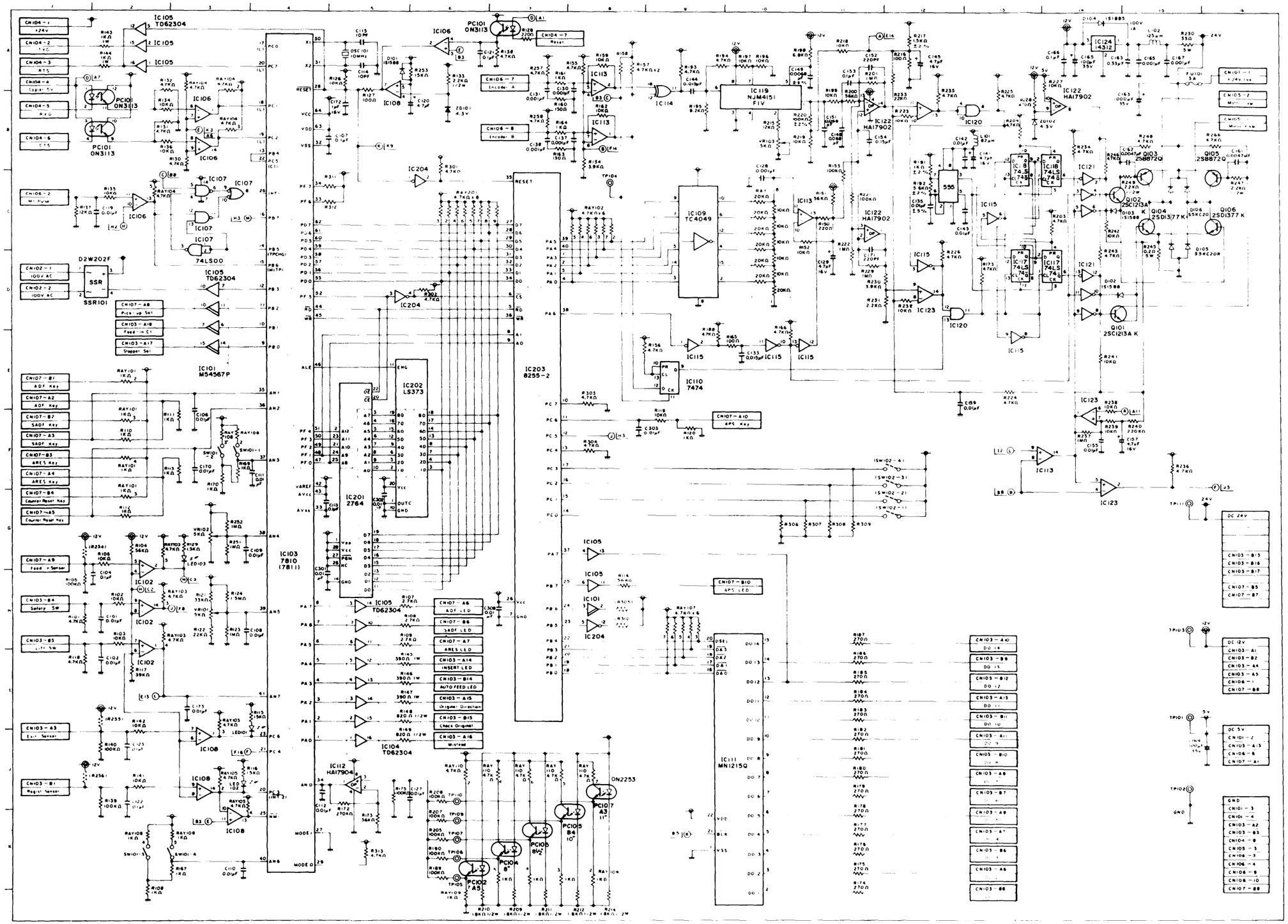

12-4. DF MAIN BOARD PATTERN

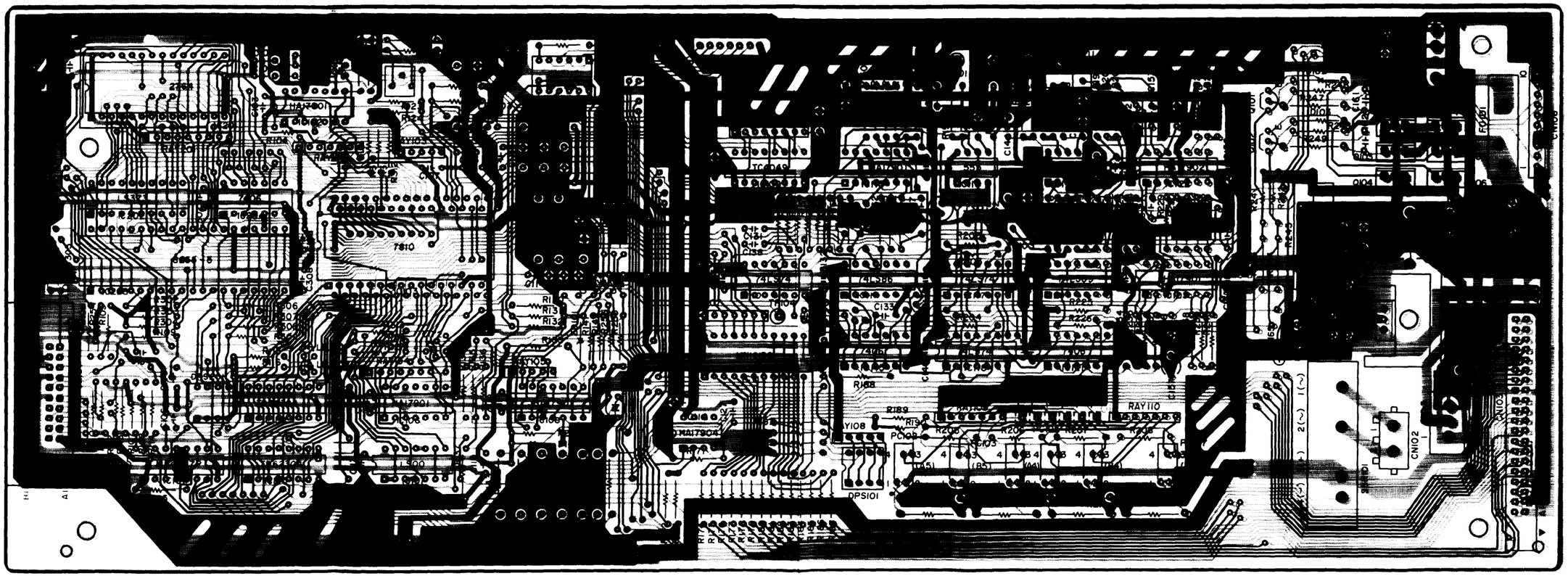

SECTION 13

ELECTRICAL DATA CS1510

13-1. SORTER P TO P / COMPONENT AND CONNECTOR LAYOUT

– Sorter Electrical Component Layout –

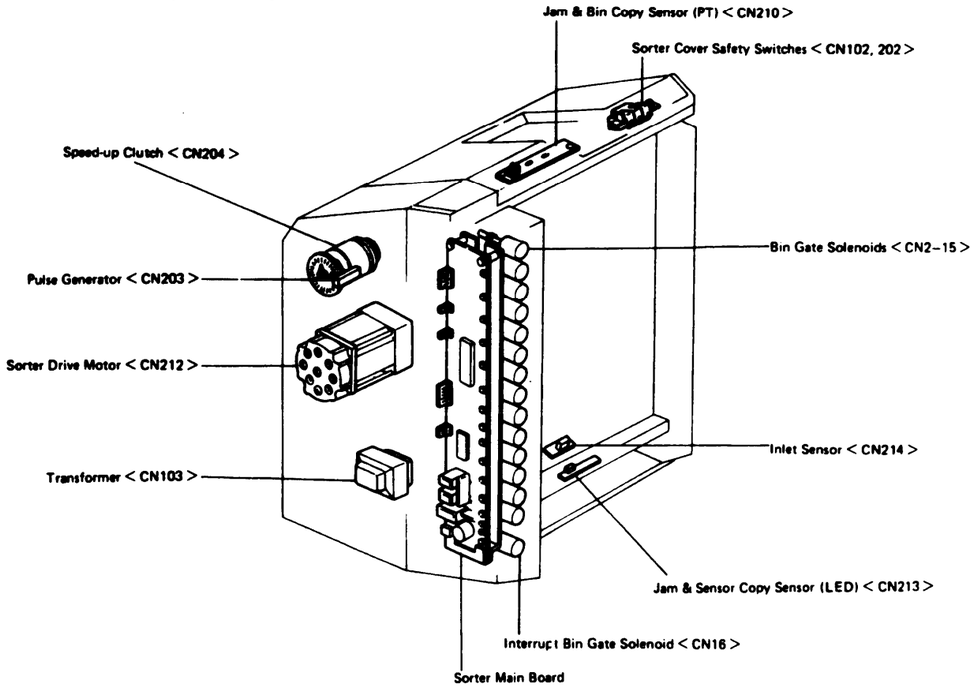

– Sorter Connector Layout –

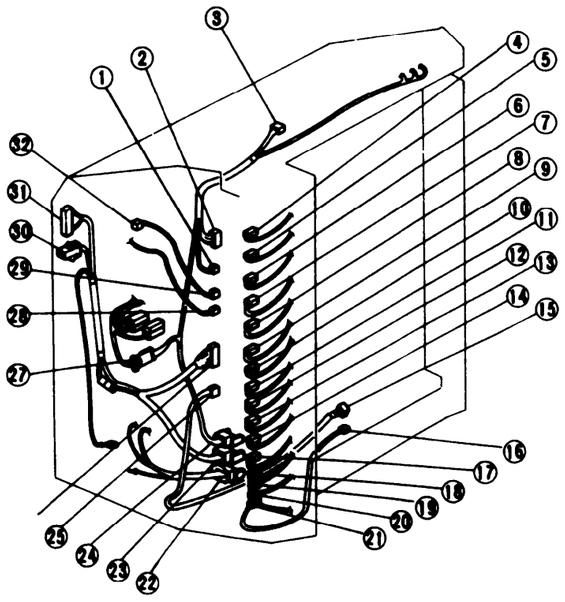

CN No.	Usage	Index No.	Type
CN 2	Bin No. 2 Sol.	4	2P
CN 3	Bin No. 3 Sol.	5	2P
CN 4	Bin No. 4 Sol.	6	2P
CN 5	Bin No. 5 Sol.	7	2P
CN 6	Bin No. 6 Sol.	8	2P
CN 7	Bin No. 7 Sol.	9	2P
CN 8	Bin No. 8 Sol.	10	2P
CN 9	Bin No. 9 Sol.	11	2P
CN 10	Bin No. 10 Sol.	12	2P
CN 11	Bin No. 11 Sol.	13	2P
CN 12	Bin No. 12 Sol.	14	2P
CN 13	Bin No. 13 Sol.	17	2P
CN 14	Bin No. 14 Sol.	18	2P
CN 15	Bin No. 15 Sol.	19	2P
CN 16	Interrupt Bin Sol.	20	2P
CN101	ac 100V	23	2P
CN102	ac Safety	24	2P
CN103	Transformer	22	4P
CN201	Jam & Bin Copy	2	5P
CN202	dc Safety	1	2P
CN203	Pulse Generator	29	3P
CN204	Speed-up Clutch	28	2P
CN205	Copier Interface	26	8P
CN206	Inlet Sensor	25	3P
CN207	Jam & Bin Copy Sensor	21	2P
CN210	Jam & Bin Copy Sensor	3	5P
CN211	Pulse Generator	32	3P
CN212	Drive Motor	27	2P
CN213	Jam & Bin Copy Sensor	16	2P
CN214	Inlet Sensor	15	3P
Copier			
CN 77	ac 100V	30	2P
CN103	Copier Interface	31	26P

– Sorter Point to Point Wiring Diagram –

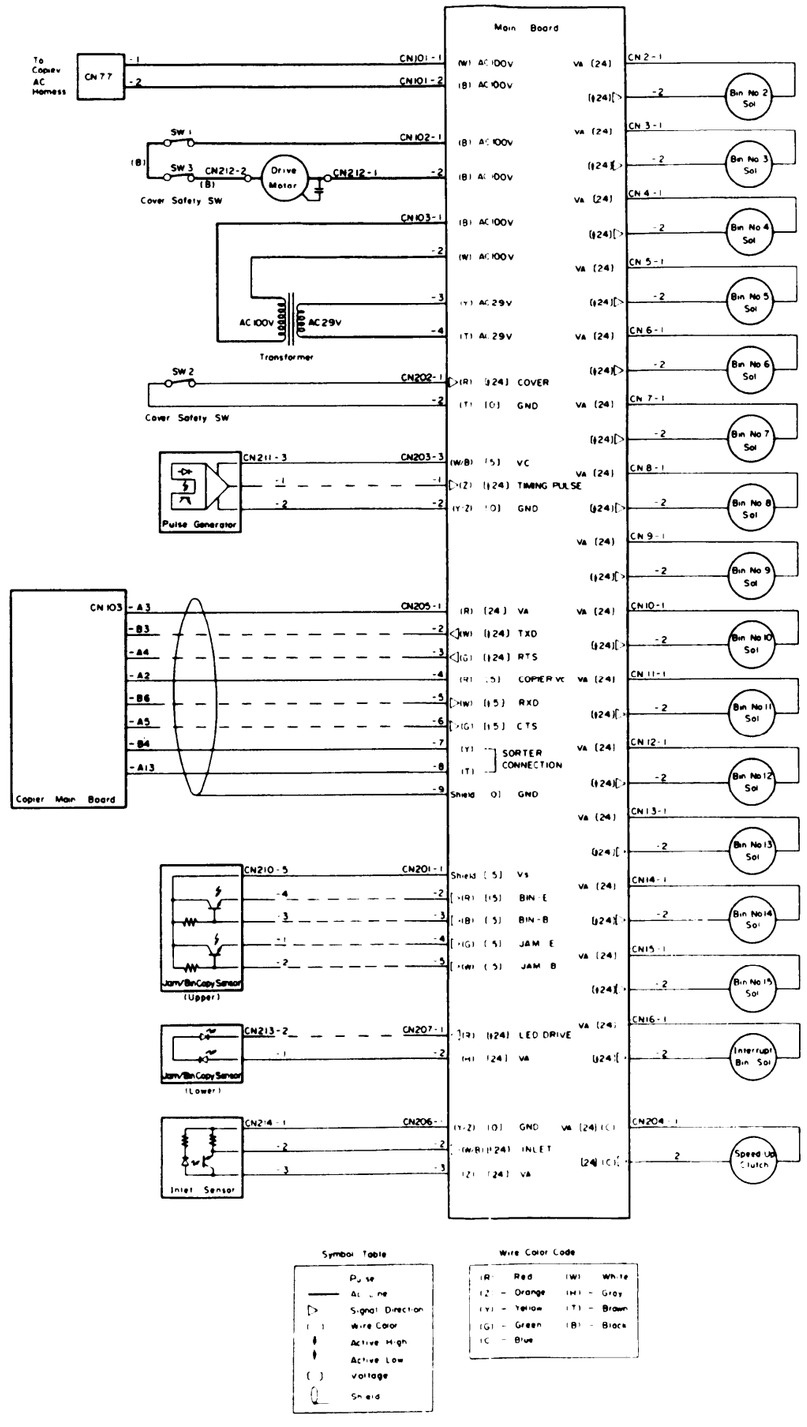

13-2. SORTER TIMING CHART (A3 Mode)

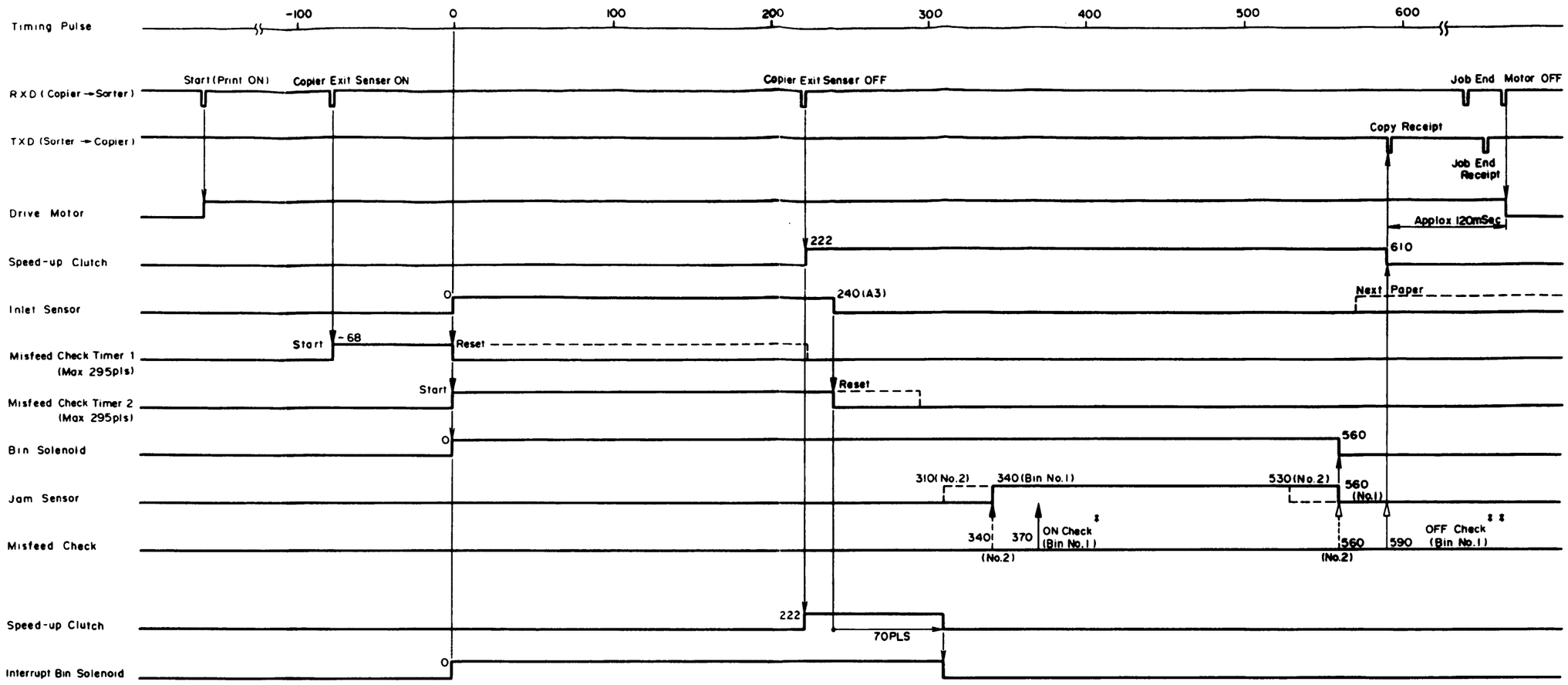

* Misfeed Check Timing (ON Check)

Bin No.	Pulse Count
1	370
2	340
3	325
4	310
5	295
6	280
7	265
8	250
9	235
10	220
11	205
12	190
13	175
14	160
15	145

** Misfeed OFF Check Timing = ON Check Pulse + Paper Length Pulse

Paper Length

Paper Size	Pulse Count
A3	240
B4	208
F4/F	189
A4R	170
A4	120
A5	85
11" X 17"	247
11" X 15"	218
8½" X 13"	189
8½" X 11"	160
11" X 8½	123

Note: 1 Pulse = 1.75 mm
1 Pulse = 3.09 msec
7.32 msec

13-3. SORTER MAIN BOARD SCHEMATIC

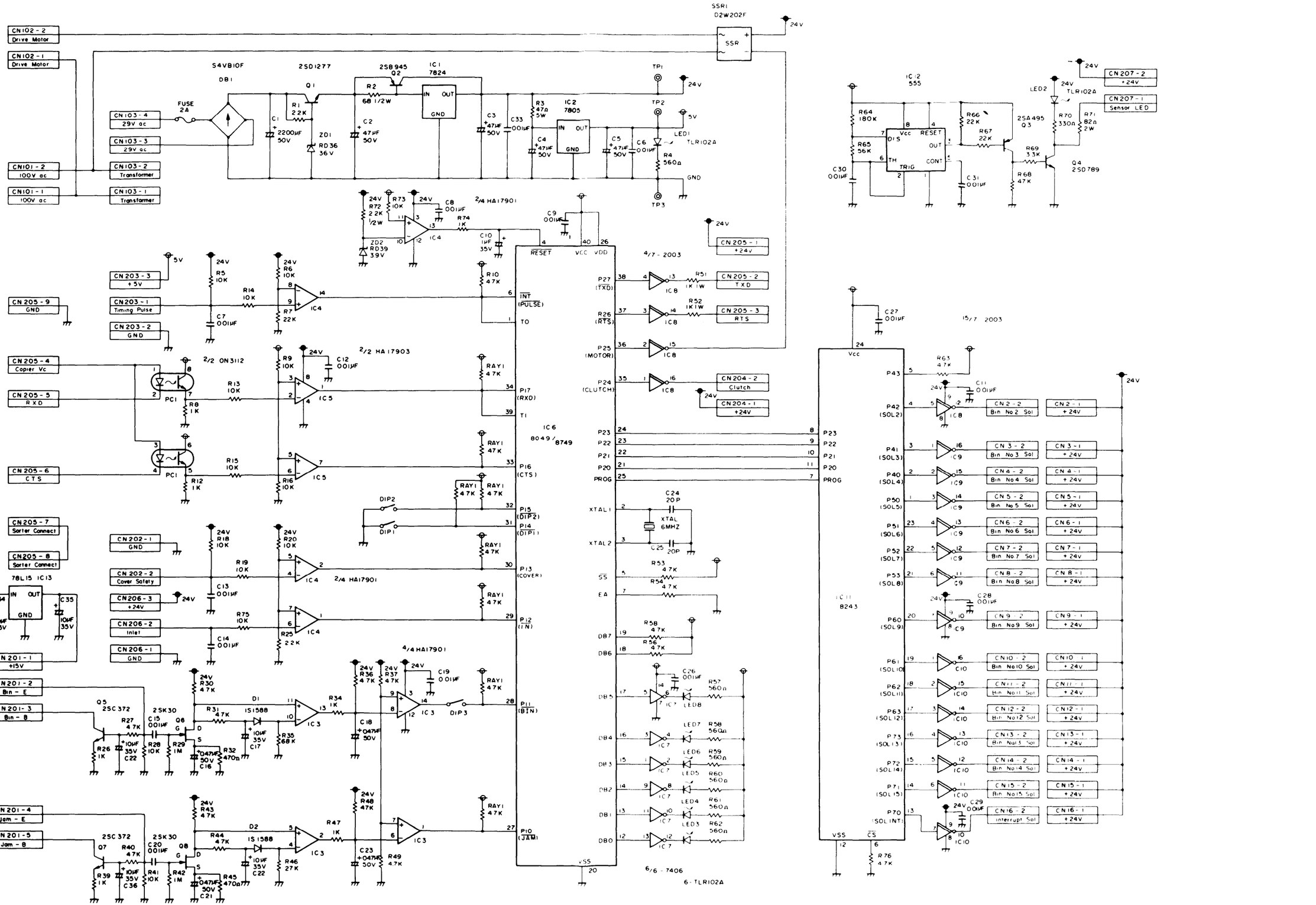

13-4. SORTER MAIN BOARD PATTERN

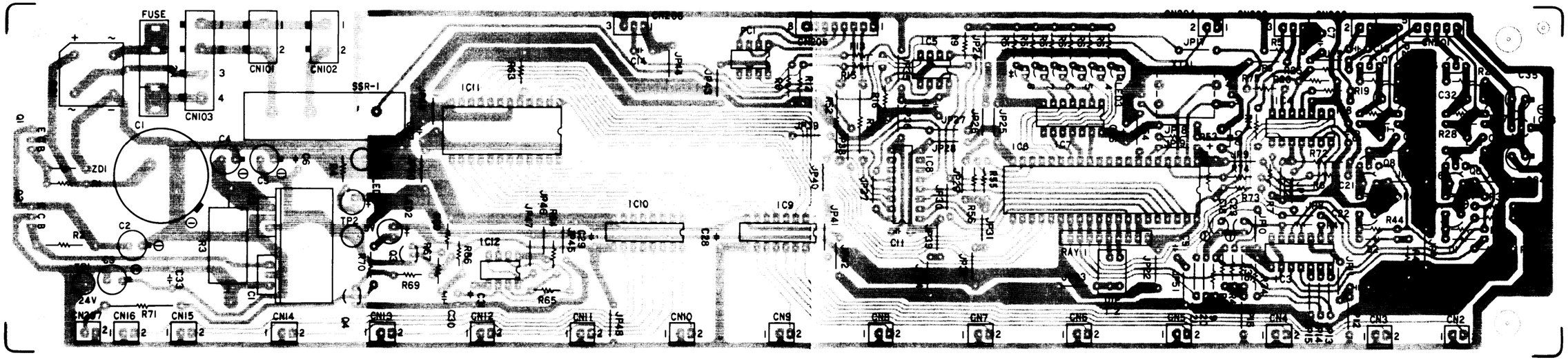

SECTION 14

ELECTRICAL DATA RT11

14-1. POINT TO POINT WIRING DIAGRAM

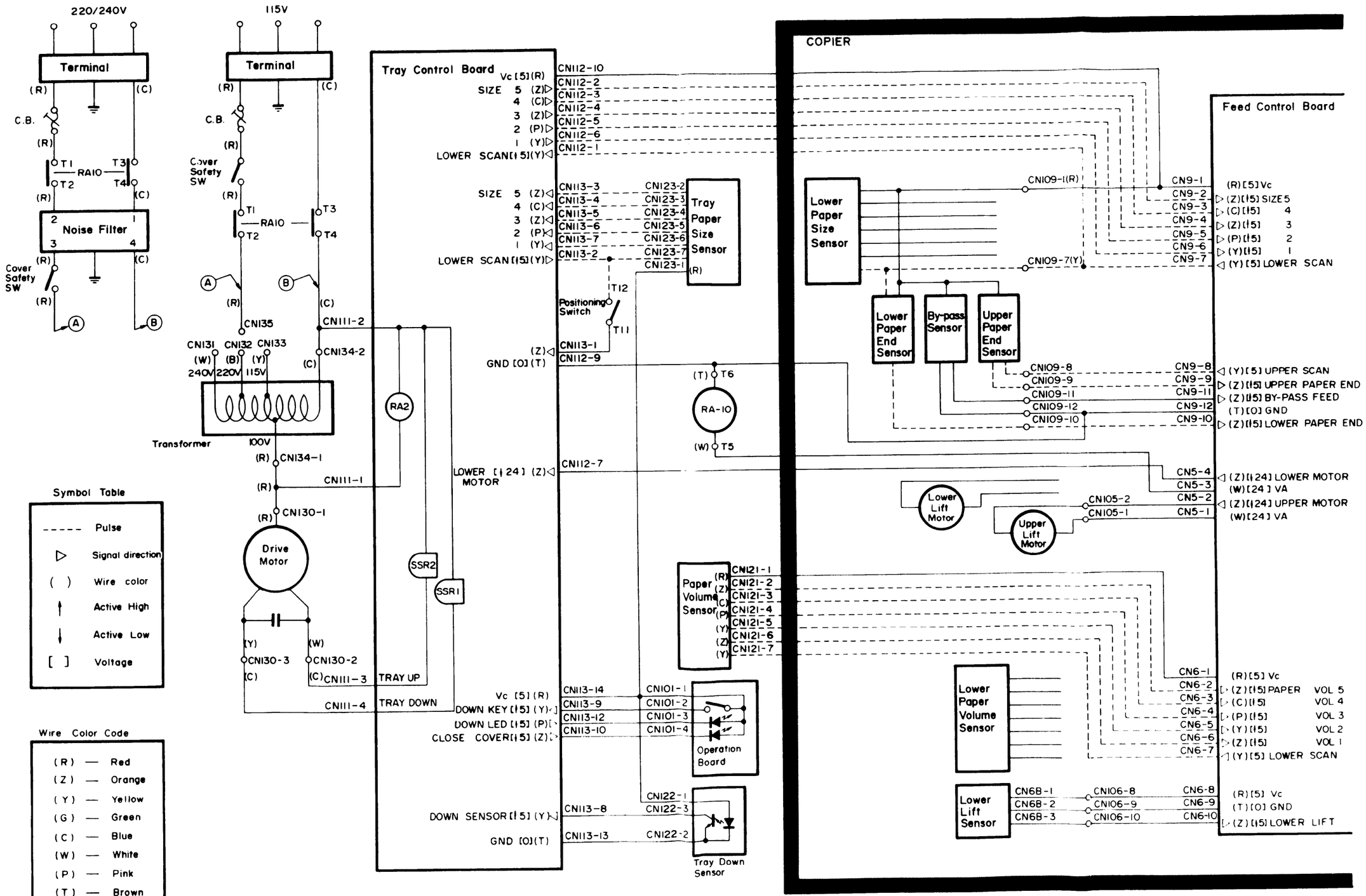

14-2. ELECTRICAL COMPONENT AND CONNECTOR LAYOUT

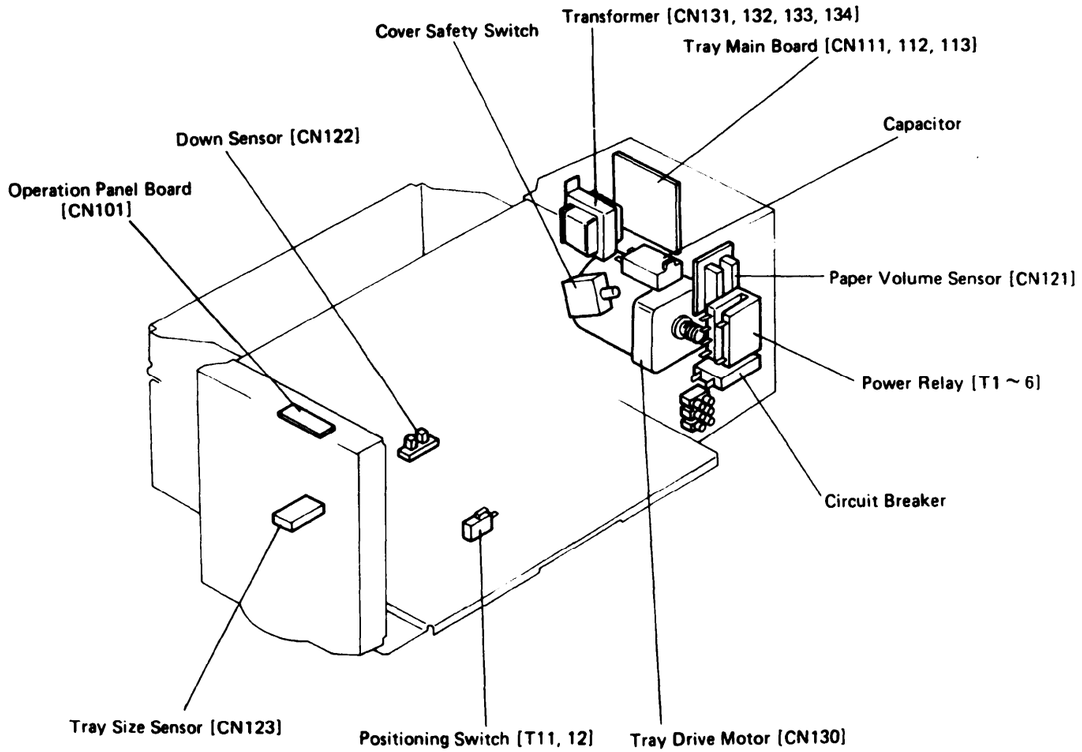

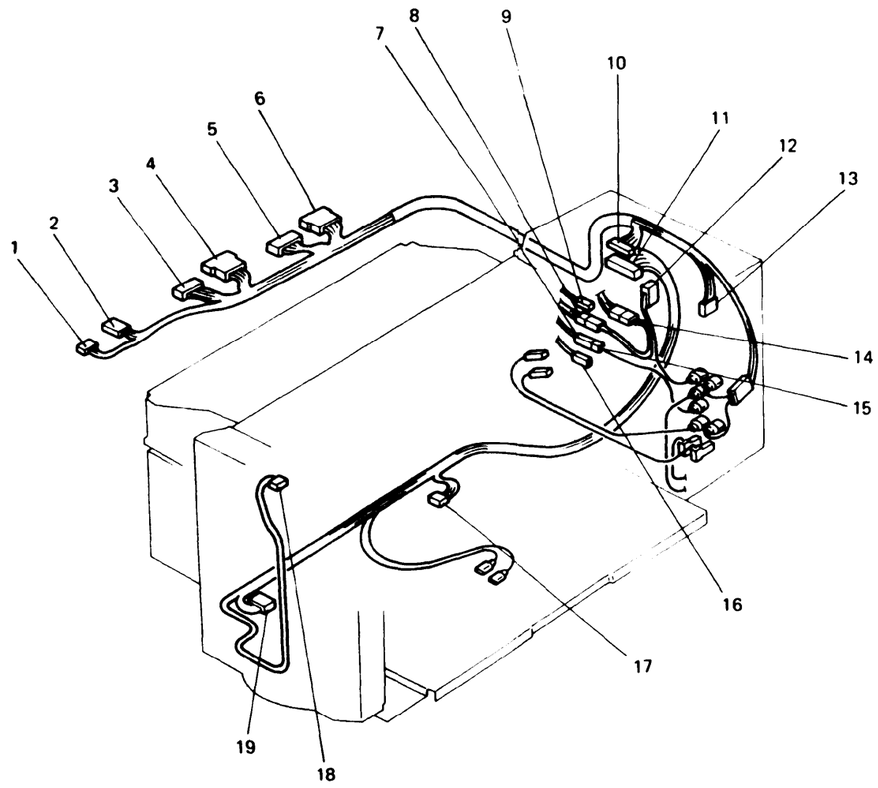

CN No.	Usage	Index No.	Type
CN5	Feed Control Board	1	4P
CN6	Feed Control Board	3	10P
CN9	Feed Control Board	5	12P
CN101	Operation Board	18	4P
CN105	Upper Lift Motor	2	4P
CN106	Lower Lift Sensor	4	10P
CN109	Upper Paper End/By-pass Sensor	6	12P
CN111	Tray Main Board	12	4P
CN112	Tray Main Board	10	10P
CN113	Tray Main Board	11	14P
CN121	Paper Volume Sensor	13	7P
CN122	Down Sensor	17	3P
CN123	Tray Paper Size Sensor	19	7P
CN130	Tray Drive Motor	14	3P
CN131	Transformer (240V)	16	1P
CN132	Transformer (220V)	7	1P
CN133	Transformer (115V)	9	1P
CN134	Transformer (Output)	8	2P
CN135	Transformer (Input)	15	1P

14-3. TRAY MAIN BOARD SCHEMATIC

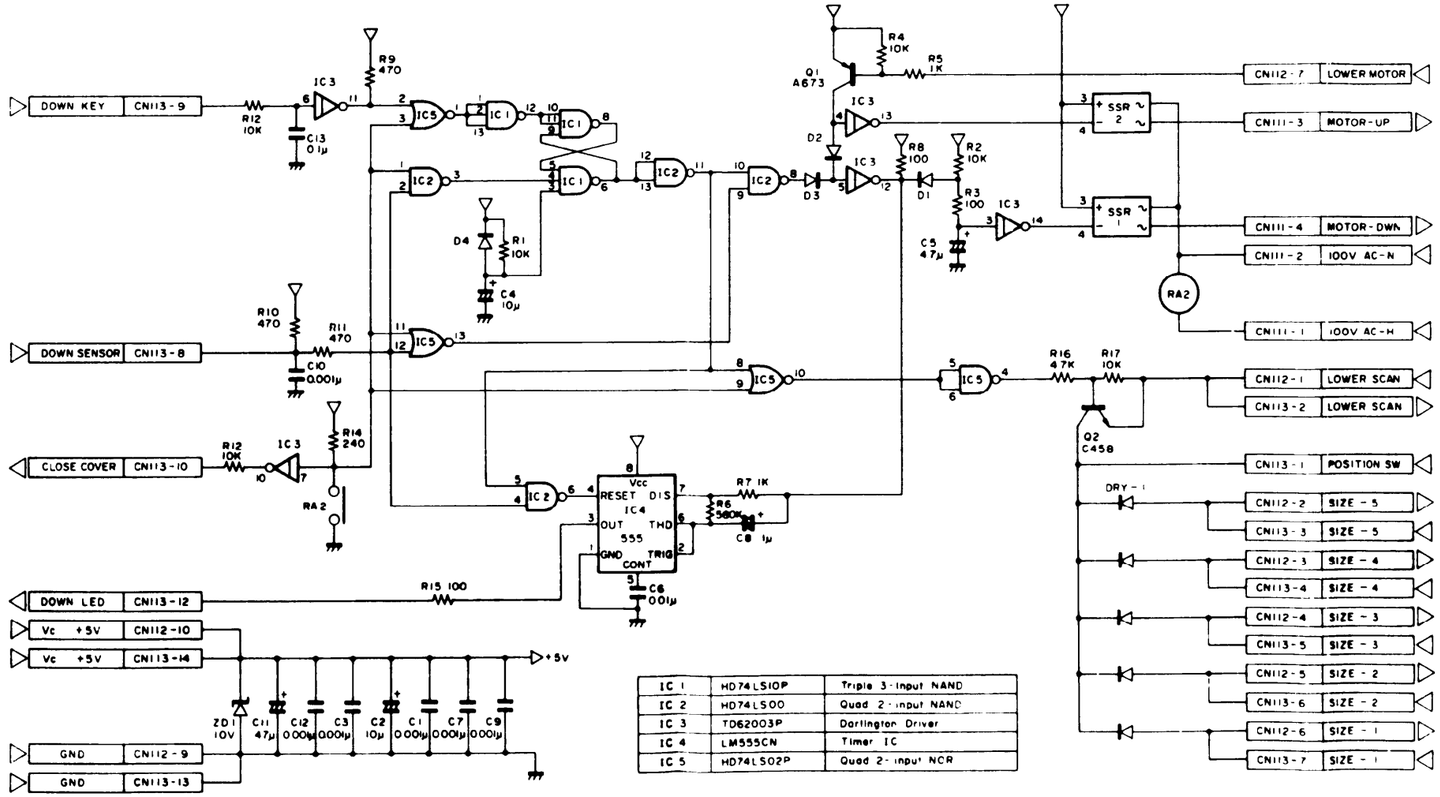

IC 1	HD74LS10P	Triple 3-Input NAND
IC 2	HD74LS00	Quad 2-Input NAND
IC 3	TD62003P	Darlington Driver
IC 4	LM555CN	Timer IC
IC 5	HD74LS02P	Quad 2-Input NOR

14-4. TRAY MAIN BOARD PATTERN

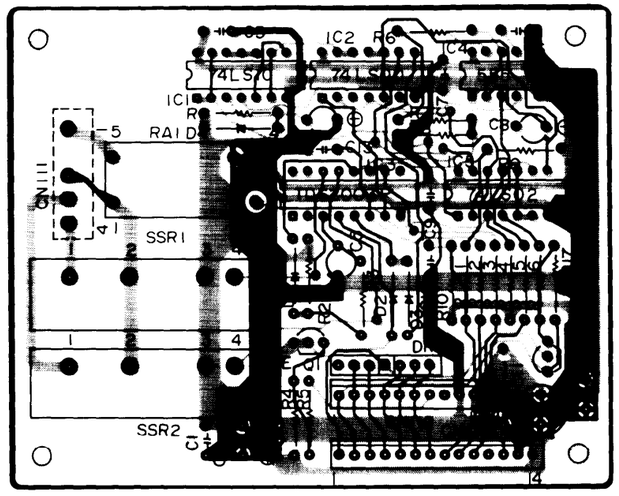

RETROFIT INFORMATION

✱ *SUPERSEDES MOD-002 Dated 11-1-83*

RICOH CORPORATION

PARTS MODIFICATION BULLETIN

BULLETIN NO. MOD-002 **DATE** 10-8-84

PRODUCT RICOH COPIERS-ALL MODELS

SUBJECT: MANDATORY RETROFIT NO. 1, RETROFIT & P.M. LABEL INSTALLATION

GENERAL: To facilitate the monitoring of Preventive Maintenance Calls and tracking of Parts Retrofits (Convenience & Mandatory), it is required that the following two (2) Labels be installed on ALL RICOH Copiers.

1) RETROFIT LABEL
2) P.M. LABEL

These Labels should be installed at the time of all NEW COPIER INSTALLATIONS or at the next Service Call for previously installed machines.

Each RETROFIT will be assigned a NUMBER. This number MUST BE recorded on the RETROFIT LABEL at the time of the retrofit installation.

INSTALLATION INSTRUCTIONS:

FT5050/5070 ... Install both Labels on the inside of Front Cover.
REFERENCE: RICOH FT5050/5070 PARTS CATALOG, Pp. 1-6, 1-7; Index No. 26.

