RICOH

CUSTOMER SERVICE GROUP

FT5050/5070
PARTS CATALOG

REV. NO.	DATE	COMMENTS
•	3/92	Original Printing

PN: RCPC5050

TABLE OF CONTENTS

SECTION 1 FT5050/5070 PARTS LOCATION AND LIST

Location of Unit 1- 2
1. Exterior (FT5050/5070) 1- 6
2. Platen Cover and Cassette 1- 8
3. Paper Feed Unit I 1-10
4. Paper Feed Unit II 1-12
5. Paper Drive Section 1-14
6. Toner Drive Section 1-16
7. Development Unit 1-18
8. Cleaning Unit 1-20
9. Development Drive Section 1-22
10. Drum Section 1-24
11. Transport Section 1-26
12. Fusing Section I 1-28
13. Fusing Section II 1-30
14. Oil Supply Section 1-32
15. Paper Exit Section 1-34
16. Optics Section I 1-36
17. Optics Section II 1-38
18. Main Motor 1-40
19. Power Supply Unit 1-42
20. Electrical Component I 1-44
21. Electrical Component II 1-46
22. Main Control Board (FT5050/5070) 1-48
23. Optics Control Board (FT5050/5070) 1-50
24. Operation Board I (FT5050/5070) 1-52
25. Operation Board II (FT5050) 1-54
26. DC Power Supply Board (FT5050/5070) 1-56
27. Temperature Control Board (FT5050/5070) 1-58
28. AC Power Supply Board (FT5050/5070) 1-60
29. Paper Feed Board (FT5050/5070) 1-62
30. DC Harness (FT5050) 1-64
31. AC Harness — 115V (FT5050/5070) 1-66
32. AC Harness — 220V (FT5050/5070) 1-68
33. Harness — Paper Feed 1-70
    Harness — Fusing 1-71
34. Decal and Document 1-72

SECTION 2 FT5070 PARTS LOCATION AND LIST

Location of Unit 2- 3
1. Inverter Gate Section 2- 4
2. Fork Gates Section 2- 6
3. Duplex Section 2- 8
4. Operation Board II 2-10
5. DC Harness 2-12
6. Decal and Document 2-14
7. Special Tool 2-16

SECTION 3 FT5050/5070 PARTS INDEX

Parts Index 3- 2

This section instructs you as to the numbers and names of the parts of this machine.

LOCATION OF UNIT

July 20,'84

1. EXTERIOR (FT5050/5070)

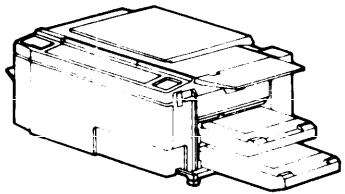

See page 1–6

2. PLATEN COVER AND CASSETTE

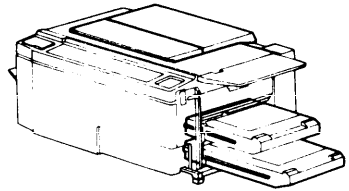

See page 1–8

3. PAPER FEED UNIT (I)

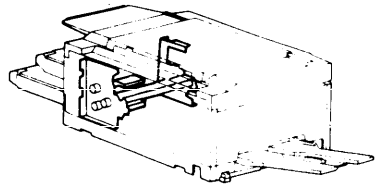

See page 1–10

4. PAPER FEED UNIT (II)

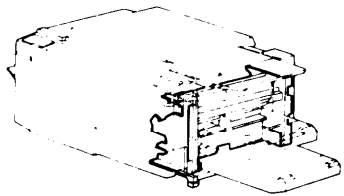

See page 1–12

5. PAPER DRIVE SECTION

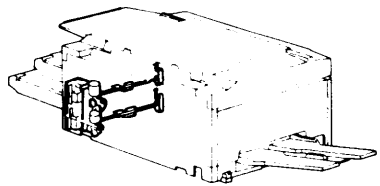

See page 1–14

6. TONER DRIVE SECTION

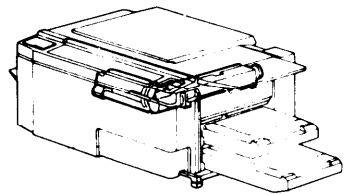

See page 1–16

LOCATION OF UNIT

7. DEVELOPMENT UNIT

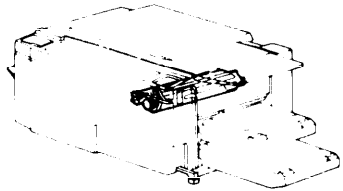

See page 1–18

8. CLEANING UNIT

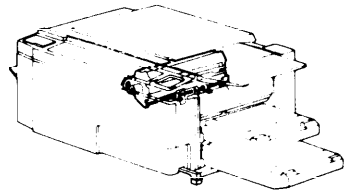

See page 1–20

9. DEVELOPMENT DRIVE SECTION

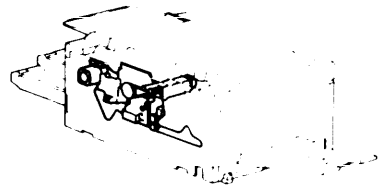

See page 1–22

10. DRUM SECTION

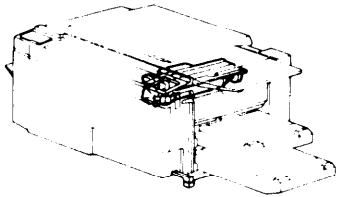

See page 1–24

11. TRANSPORT SECTION

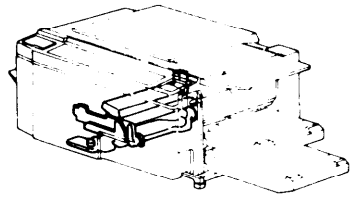

See page 1–26

12. FUSING SECTION (I)

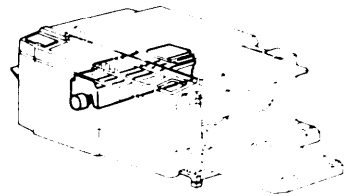

See page 1–28

13. FUSING SECTION (II)

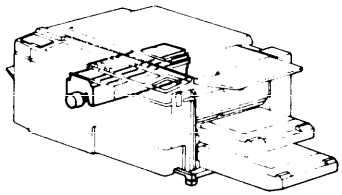

See page 1–30

14. OIL SUPPLY SECTION

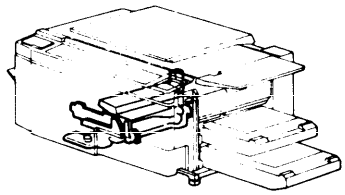

See page 1–32

15. PAPER EXIT SECTION

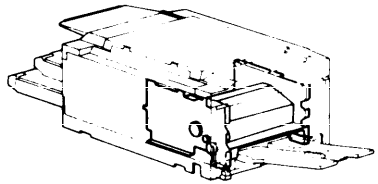

See page 1–34

16. OPTICS SECTION (I)

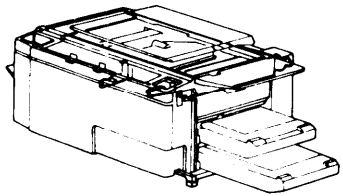

See page 1–36

17. OPTICS SECTION (II)

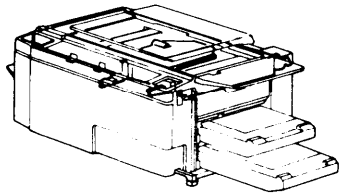

See page 1–38

18. MAIN MOTOR

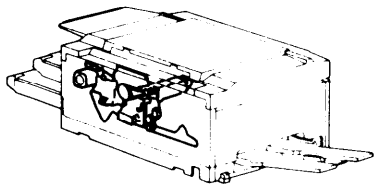

See page 1–40

19. POWER SUPPLY UNIT

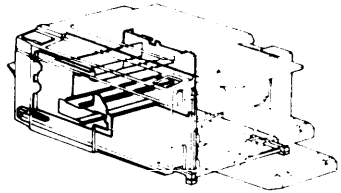

See page 1–42

20. ELECTRICAL COMPONENT-I

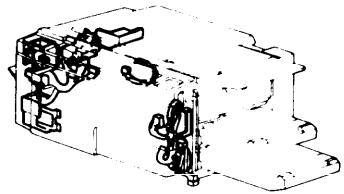

See page 1–44

21. ELECTRICAL COMPONENT-II

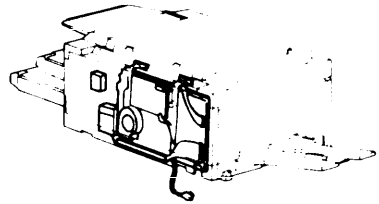

See page 1–46

1. EXTERIOR (FT5050/5070)

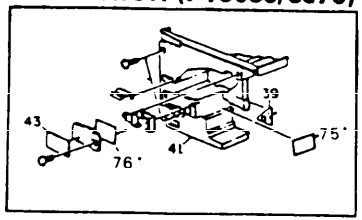

1. EXTERIOR (FT5050/5070)

Index No.	Part No.	Description	Q'ty Per Assembly
1	52061398	Rear Upper Cover	1
2	52051296	Sensor Cover	1
3	52051331	ADF Foot Cover	2
4	52051332	Harness ADF Cover	1
5	52051333	ADF Screw	1
6	54291629	Spacer	1
7	54421299	Original Holder	1
8	52051916	Main Scale - 115V	1
	52051917	Main Scale - 220V	1
9	52055208	Indicator - Main Scale - 115V	1
	52055213	Indicator - Main Scale - 220V/240V	1
10	54421921	Right Scale	1
11	54421982	Exposure Glass - LT, LDG	1
	54421983	Exposure Glass - A4, A3	1
12	52051911	Scale Mounting Bracket	1
13	52055112	Operation Control Board - 115V (FT5050)	1
	52055113	Operation Control Board - 220V/240V	1
	52055114	Operation Control Board - CANADA	1
	52065112	Operation Control Board - 115V (FT5070)	1
	52065113	Operation Control Board - 220V/240V	1
	52065114	Operation Control Board - CANADA	1
14	52051262	Instruction Cards Shaft	1
15	52051268	Instructions Cover	1
16	54243581	Shaft - Stopper	1
17	52051341	English Instruction Cards - 115V	1
	52051470	English Instruction Cards - CANADA	1
	52051450	English Instruction Cards - 220V/240V	1
	52058120	German Instruction Cards	1
	52058140	French Instruction Cards	1
	52058160	Spanish Instruction Cards	1
	52058180	Italian Instruction Cards	1
	52061341	English Instruction Cards - 115V	1
	52061470	English Instruction Cards - CANADA	1
	52061450	English Instruction Cards - 220V/240V	1
	52068120	German Instruction Cards	1
	52068210	French Instruction Cards - Canada	
	52088210	French Instruction Cards - Canada	

Index No.	Part No.	Description	Q'ty Per Assembly
17	52068140	French Instruction Cards	1
	52068160	Spanish Instruction Cards	1
	52068180	Italian Instruction Cards	1
18	52051263	Instructions Spring Plate	1
19	52051340	Front Upper Cover Ass'y	1
20	52051297	Harness Hole Cap - Sorter	1
21	52051334	Sorter Foot Cover	2
22	52051380	Left Cover	1
23	54424501	Copy Tray	1
24	54421375	Cap - Left Cover - S	2
25	52051365	Decal - Misfeed FT5050	1
	52061365	Decal - Misfeed FT5070	1
26	52051397	Front Cover Ass'y - FT5050	1
	52061397	Front Cover Ass'y - FT5070	1
27	52051291	Hinge - Front Cover Right	1
28	52051362	Name Plate - FT5050	1
	52061362	Name Plate - FT5070	1
29	52051363	Front Small Cover	1
30	52051366	Decal - Adding Toner	1
31	52051290	Left Hinge - Front Cover	1
32	52051336	Front Cover Chain	2
33	52051313	Decal - A1, B1	1
34	52051275	Middle Inner Cover	1
35	50540536	Magnet Catch Ass'y	1
36	52051384	Right Inner Cover	1
37	52051311	Decal - B2	1
38	52051312	Decal - Guide Plate	1
39	52051314	Decal - C1	1
40	52051292	Front Cover Hinge	1
41	52051372	Left Inner Cover - FT5050	1
	52061372	Left Inner Cover - FT5070	1
42	50540536	Magnet Catch Ass'y	1
43	52051376	Decal - Misfeed Indicator FT5050	1
	52061376	Decal - Misfeed Indicator FT5070	1
44	52051375	Panel - Misfeed Indicator FT5050	1
	52061375	Panel - Misfeed Indicator FT5070	1

Rev. 6/88

Index No.	Part No.	Description	Q'ty Per Assembly
45	52052052	Absorb Duct Bracket	1
46	52051289	Bracket - Front Small Cover	1
47	52051385	Front Small Cover	1
48	52051383	Right Front Cover	1
49	54421372	Decal - VOLTAGE 220V/240V	1
50	54031145	Cover - Key Counter	1
51	54201515	Plate - Key Counter	1
52	52051261	Bracket - Key Counter	1
53	52052724	By-Pass Link	1
54	52052738	Front Side Fence	1
55	52052741	Side Fence Guide	2
56	52052740	Rear Side Fence	1
57	52052735	By Pass Table	1
58	52052831	Rear By-Pass Arm	1
59	54432711	Gear Plate - By Pass Table	2
60	54432712	Guck Pad	1
61	52052730	Front By-Pass Arm	1
62	54432657	Gear - 28T	1
63	54432713	Wave Washer	1
64	54432660	Spacer - 6x22x0.5mm	1
65	52052731	By-Pass Cover	1
66	52051387	Right Rear Cover	1
67	52052822	Decal - By-Pass Scale 115V	1
	52052825	Decal - By-Pass Scale 220V/240V	1
68	54432706	Plate - 12x220x1T	1
69	52051388	Rear Cover - 115V	1
	52051394	Rear Cover - 220V/240V	1
70	52055754	Filter - Cooling Fan	1
71	52051392	Decal - DIP SW	1
72	52058761	English Operating Instructions	1
	52058763	German Operating Instructions	1
	52058764	French Operating Instructions	1
	52058765	Italian Operating Instructions	1
	52058766	Spanish Operating Instructions	1
	52068761	English Operating Instructions	1

Index No.	Part No.	Description	Q'ty Per Assembly
72	52068763	German Operating Instructions	1
	52068764	French Operating Instructions	1
	52068765	Italian Operating Instructions	1
	52068766	Spanish Operating Instructions	1
73	54421296	Operating Instruction Holder	1
74	52061388	Toner Catch Pan - D	1
75	52064482	Decal D2	1
76	52051377	Decal - Monitor Dip Switch	1
77*	52095825	Right Operation Panel	
78*	52095826	Center Operation Panel	
79*	52095827	Left Operation Panel/FT5050	
79*	52065827	Left Operation Panel/FT5070	
80*	52095830	Small Operation Panel	
81*	52095831	Long Operation Panel	
82	54425071	Operation Key - Print	1
101	08025094	Tapping Screw - M4x8	15
102	03440200D	Philips Truss Head Screw - M4x20	2
103	03140080W	Philips Pan Head Screw - M4x8	4
104	07200030E	Retaining Ring - M3	4
105	03440080D	Philips Truss Head Screw - M4x8	2
106	09653006W	Tapping Screw with Flat Washer - M3x6	5
107	03130060W	Philips Pan Head Screw - M3x6	2
108	09654008W	Tapping Screw with Flat Washer - M4x8	3
109	08030017	Knob Screw	1
110	09514008W	Philips Screw with Flat Washer - M4x8	5
111	09644008W	Tapping Screw with Flat Washer - M4x8	4
112	08025085	Tapping Screw	4
113	04340080W	Tapping Screw - M4x8	4
114	03140060W	Philips Pan Head Screw - M4x6	2
115	07200040E	Retaining Ring - M6	1
116	03440060D	Philips Truss Head Screw - M4x6	2

** Reference Technical Service Bulletin #002

*Reference Technical Service Bulletin #026

2. PLATEN COVER AND CASSETTE

July 20,'84

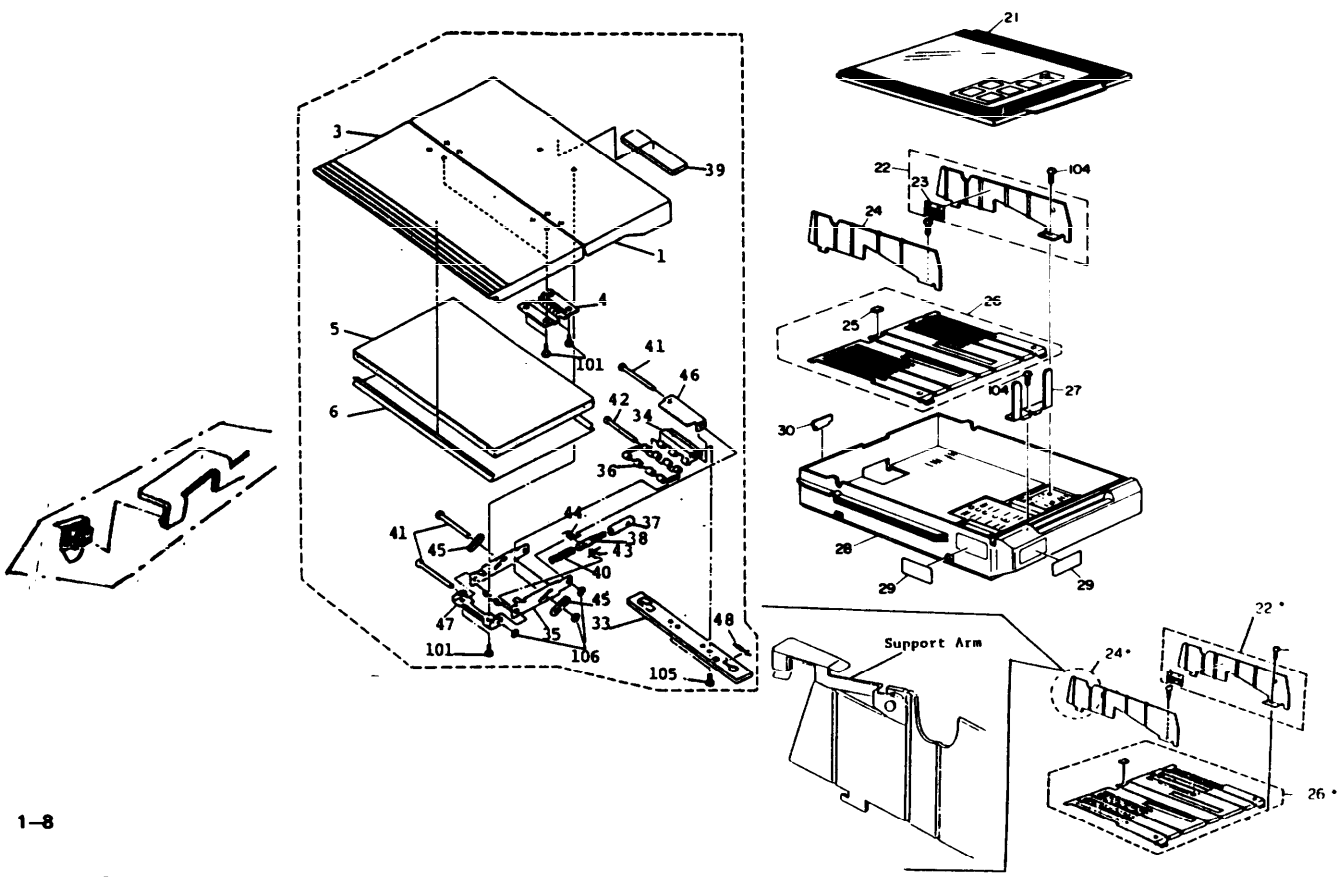

2. PLATEN COVER AND CASSETTE

Rev. 6/94

Index No.	Part No.	Description	Q'ty Per Assembly
1	54482802	Rear Platen Cover	1
2	54241955	Lock - Platen Cover	1
3	52051660	Front Pressure Plate	1
4	54482824	Flex Hinge - Platen Cover	2
5	54482803	Platen Cover Pad	1
6	54482804	Platen Cover Sheet	1
7	54482806	Platen Cover Arm	2
8	54201779	Arm Holder - Platen Cover	2
9	54196244	Left Spring - Platen Cover	1
10	54196245	Right Spring - Platen Cover	1
11	54482813	Platen Cover Hinge	2
12	54482810	Hinge Bracket - Platen Cover	1
13	54203768	Spring - Release	1
14	54482811	Mounting Bracket - Platen Cover	1
15	54421657	Seal - 15x214x13	1
16	54421667	Stud - Platen Cover Mounting	2
21	52052955	Cassette Cover - Large	1
	52052957	Cassette Cover - Small	1
•22	52056491	Rear Side Fence	1
	52052913	Rear Side Fence - Small	
23	54134835	Decal - Paper Level	1
•24	52056493	Front Side Fence	1
	52052925	Front Side Fence - Small	
25	54472927	Friction Pad - B	1
26	52052937	Bottom Plate - Large Cassette	1
	52052931	Bottom Plate - Small Cassette	
31	52056573*	Side Fence Mylar - Rear	
32	52056575*	Side Fence Mylar - Front	
27	52052953	Rear Fence	1
28	52052990	Cassette Body - Large	1
	52052991	Cassette - Body - Small	1
29	52052939	Decal - Large Size Cassette - 220V/240V	1
	52052940	Decal - Small Size Cassette - 220V/240V	1

Index No.	Part No.	Description	Q'ty Per Assembly
	52052941	Decal - Large Size Cassette - 115V	1
	52052942	Decal - Small Size Cassette - 115V	1
30	52052960	Actuator - A3	1
	52052961	Actuator - B4	1
	52052971	Actuator - 11" x 17"	1
	52052972	Actuator - 11" x 15"	1
	52052973	Actuator - 11" x 14"	1
	52052974	Actuator - 8-1/2" x 13"	1
	52052975	Actuator - 8-1/4" x 13"	1
	52052976	Actuator - 8" x 13"	1
	52052977	Actuator - 8" x 10-1/2"	1
	52052978	Actuator - 8" x 10"	1
	52052979	Actuator - 11" x 8-1/2"	1
	52052992	Actuator - 5-1/2" x 8-1/2"	1
	52052993	Actuator - 8-1/2" x 5"	1
	52052996	Actuator - 8-1/2" x 11R"	1
	52052997	Actuator - 8-1/2" x 14"	1
	52052962	Actuator - A4R	1
	52052964	Actuator - A4	1
	52052966	Actuator - A5	
	52052967	Actuator - A5R	
33	52152819	Mounting Bracket - Platen Cover	1
34	52152833	Base Holder	1
35	A0691972	Arm Holder	1
36	52152835	Crank	1
37	52152836	Sleeve 8 x 34 mm	1
38	52152837	Shaft 7 x 40 mm	1
39	52152838	Rubber Magnet	1
40	52152839	Balance Spring	1
41	52152840	Pin 4 x 115 mm	3
42	52152841	Pin 4 x 100 mm	1
43	52152842	Right Spring - Platen Cover	1
44	52152843	Left Spring - Platen Cover	1
45	52152844	Slide Supporter	2
46	52152845	Plate - Magnet	1
47	52152846	Platen Base	1

*Reference Technical Service Bulletin #021

•NOTE: Refer to last frame on last sheet of Parts Catalog fiche

Index No.	Part No.	Description	Q'ty Per Assembly
48	52152830	Spring - Release	1
49	52051622	Platen Cover Assembly	1
101	09654008W	Tapping Screw with Flat Washer - M4x8	12
102	03540080W	Philips Truss Head Screw - M4x8	4
103	03130100W	Philips Pan Head Screw - M3x10	4
104	08025085W	Tapping Screw - M4x8	3
105	04140102B	Tapping Screw - m4 x 10	2
106	08050083	Retaining Ring - m4	3

3. PAPER FEED UNIT (I)

July 20,'84

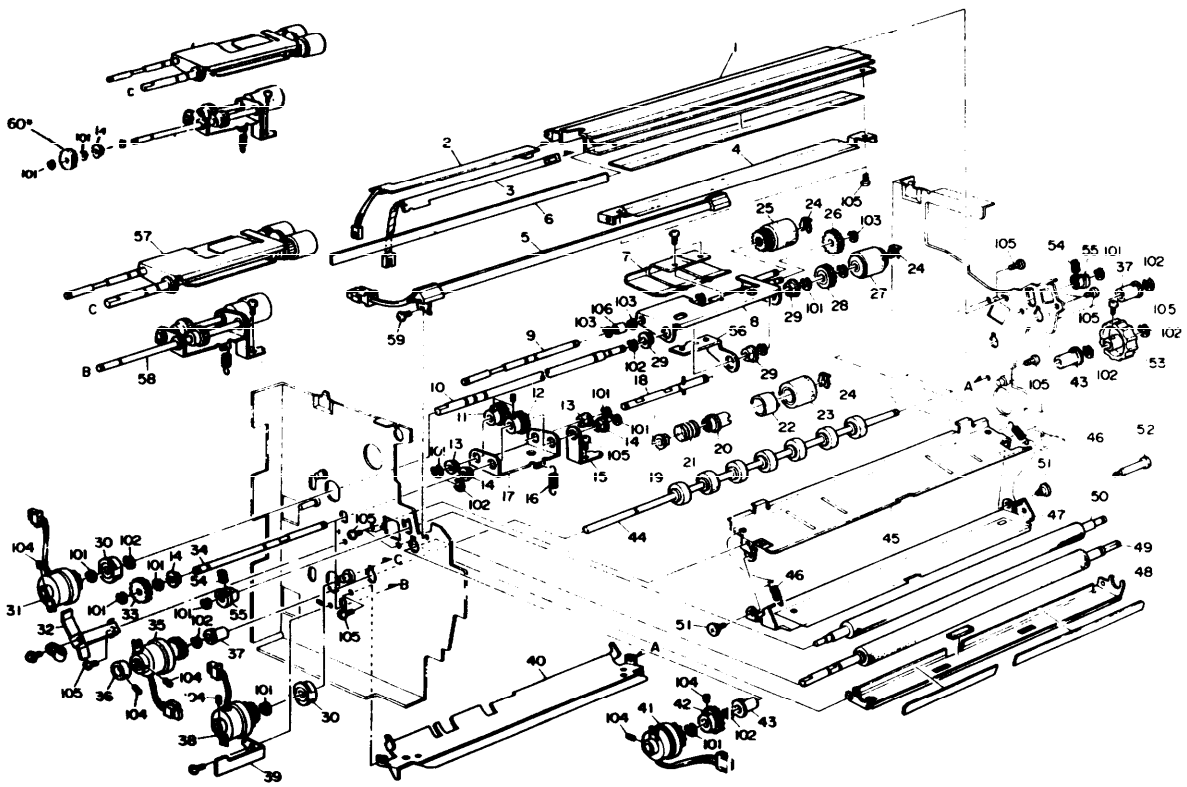

3. PAPER FEED UNIT (I)

Index No.	Part No.	Description	Q'ty Per Assembly
1	52053895	PTL Guide	1
2	52055228	Paper Feed Sensor Board	1
3	52055245	Sensor Board, ID	1
4	52053896	Paper Guide	1
5	52055425	Pre-Transfer Lamp (Cold Cathode)	1
6	52052141	PTL Filter	1
7	52052599	Feed Shaft Guide	1
8	52052590	Pick-Up Arm	1
9	52052596	Pick-Up Shaft	1
10	52052585	Paper Feed Shaft	1
11	52052608	Gear - 23T	1
12	52052781	Gear - 17T	1
13	08053042	Ball Bearing - 6mm	2
14	50530447	Bushing - 6x10x6mm	3
15	52052605	Separation Holding Bracket	1
16	52052613	Spring - Separation	1
17	52052604	Separation Arm	1
18	52052633	Separation Drive Shaft	1
19	54472695	Input Hub	1
20	54472676	Output Hub	1
21	54472697	Spring - Separate	1
22	54472678	Slip Clutch Cover	1
23	54472693	Separation Roller	1
24	54472681	Roller Retainer	3
25	54472723	Pick-Up Roller	1
26	52052612	Gear - 19T	1
27	54472717	Paper Feed Roller	1
28	52052594	Gear - 18T	1
29	50530223	Bushing - 8mm	3
30	52052865	Bushing - Paper Feed Roller	2
31	52055314	Upper Feed Clutch	1
32	52052583	Harness Stopper Bracket	1
33	54473331	Gear - 18T	1
34	52052614	Separation Drive Shaft - Upper	1
35	52055318	Middle Magnetic Clutch	1

Index No.	Part No.	Description	Q'ty Per Assembly
36	52052866	Collar - Magnetic Clutch	1
37	54422752	Bushing - Lower Registration Roller	2
38	52055315	Lower Feed Clutch	1
39	52052707	Magnetic Clutch Stopper	1
40	52052630	Lower Separation Guide	1
41	52055313	Registration Clutch	1
42	52052610	Gear - 23T	1
43	54422752	Bushing - Lower Registration Roller	2
44	52052763	Upper Relay Roller	1
45	52052636	Upper Registration Guide	1
46	52052579	Spring - Guide	2
47	52052637	Middle Guide	1
48	52052588	Lower Registration Guide	1
49	52052762	Lower Registration Roller	1
50	52052571	Upper Registration Roller	1
51	54032075	Stepped Screw	2
52	52052773	Knob - Paper Guide Plate Lower	1
53	52052540	Registration Roller Knob	1
54	54422754	Spring - Registration Roller	2
55	52052697	Bushing - Upper Registration Roller	2
56	52052860	Bracket - Paper Feed Roller Upper	1
57	052862	Bracket - Paper Feed Roller Lower	1
58	52052625	Separation Drive Shaft	1
59	54131882	Stepped Screw	1
60	52052627	Gear - 22T	
101	07200050E	Retaining Ring - M5	8
102	07200060E	Retaining Ring - M6	4
103	07200040E	Retaining Ring - M4	3
104	05740060E	Hexagon Headless Set Screw - M4x6	4
105	04340080W	Tapping Screw - M4x8	11
106	08053296	Spacer - M6	1

4. PAPER FEED UNIT (II)

July 20,'84

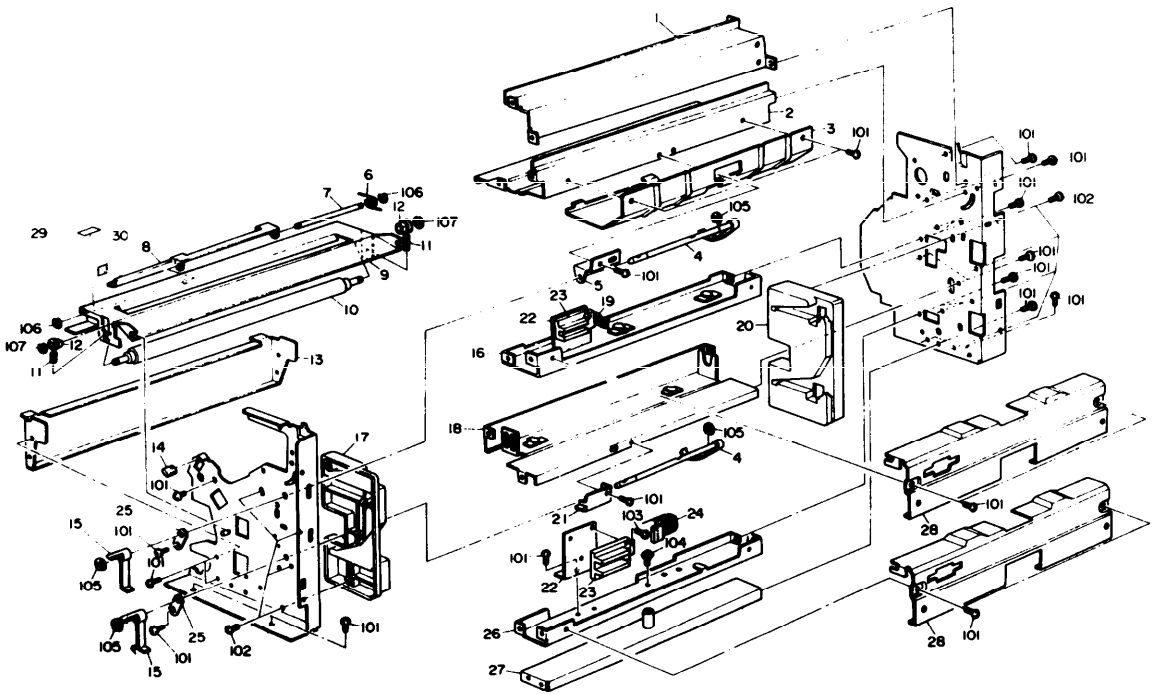

APER FEED UNIT (II)

Index No.	Part No.	Description	Q'ty Per Assembly
1	52052755	Support Stay - Upper Paper Feed	1
2	52052580	Paper Feed Stay	1
3	52052600	Upper Feed Guide	1
4	52052642	Paper End Feeler	2
5	52052640	Paper End Bracket - Upper	1
6	52052694	Spring - Paper Guide Plate	1
7	52052691	Shaft - Paper Guide Plate	1
8	52052690	Release Lever	1
9	52052687	Relay Roller Guide - Lower	1
10	52052685	Lower Relay Roller	1
11	52052698	Relay Roller Spring	2
12	52052697	Bushing - Upper Registration Roller	2
13	52052746	Feed Inner Cover	1
14	52052748	Protective Cap	1
15	52052644	Paper End Actuator	2
16	52052751	Paper Feed Stay - Upper	1
17	52052700	Front Side Guide - Cassette Holder	1
18	52052771	Guide Plate - Lower Paper Feed	1
19	52055496	Harness - Upper Paper Size	1
20	52052701	Rear Side Guide - Cassette Holder	1
21	52052641	Paper End Bracket - Lower	1
22	52052611	Bracket - Size Detector Board	2
23	52055253	Photointerruptor Pack	2
24	52055497	Harness - Charge	1
25	52052850	Paper End Bushing	2
26	52052761	Paper Feed Stay - Lower	1
27	52052702	Duplex Feed Stay	1
28	52052609	Separation Guide	2
29	52052695	Decal - A4	1
30	52052696	Decal - A2	1

Index No.	Part No.	Description	Q'ty Per Assembly
101	04340080W	Tapping Screw - M4x8	1
102	03140080W	Philips Pan Head Screw - M4x8	1
103	03140100W	Philips Pan Head Screw - M4x10	1
104	09514008W	Philips Screw with Flat Washer - M4x8	1
105	07200030E	Retaining Ring - M3	1
106	07200040E	Retaining Ring - M4	1
107	07200050E	Retaining Ring - M5	1

5. PAPER DRIVE SECTION

July 20,'84

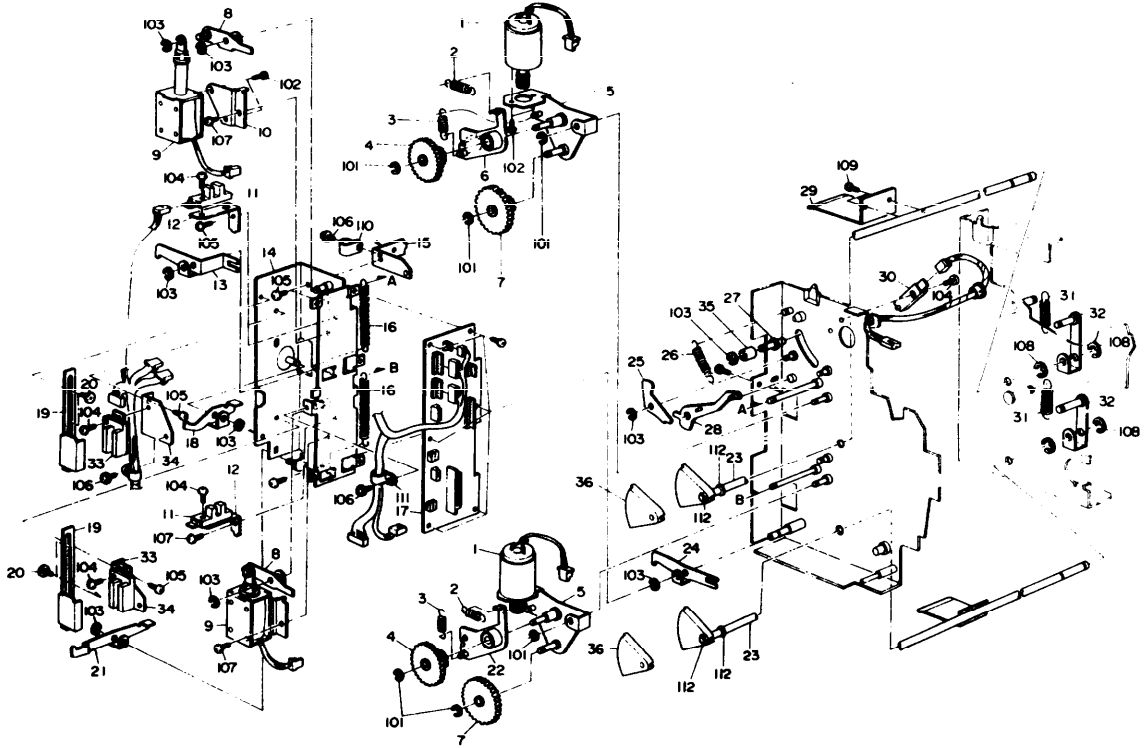

5. PAPER DRIVE SECTION

Index No.	Part No.	Description	Q'ty Per Assembly
1	52015420	Paper Detect Motor - DC 1.69W	2
2	52052674	Spring	2
3	52052678	Spring	2
4	52052681	Coupled Gear - 17T/50T	2
5	52052667	Bracket - Paper Lift Motor	2
6	52052788	Cassette Sensor Arm - Upper	1
7	52052680	Coupled Gear - 16T/53T	2
8	52052811	Lift Sensor Actuator	1
9	52052813	Pressure Link Solenoid	2
10	52052659	Pick-Up Solenoid Bracket	1
11	52055250	L.E.D. Sensor Type S	2
12	52052658	Lift Sensor Bracket	2
13	52052648	Volume Sensor Bracket - Upper	1
14	52052651	Bracket - Lift Sensor Arm	1
15	52052647	Volume Sensor Supporter	1
16	52052598	Spring - Pick-Up	2
17	52055240	Feed Control Board	1
18	52052649	Volume Sensor Arm - Upper	1
19	52052650	Volume Sensor Actuator	2
20	54032075	Stepped Screw	2
21	52052656	Volume Sensor Arm - Lower	1
22	52052670	Cassette Sensor Arm	1
23	52052661	Volume Sensor Bracket	2
24	52052655	Volume Sensor Bracket - Lower	1
25	52052720	By-Pass Stopper	1
26	52052795	Spring - By-Pass	1
27	52052742*	By-Pass Pin	1
28	52052721	Release Lever - Bottom Plate	1
29	52052663	Lever - Bottom Plate Lift	1
30	52055251	LED Sensor Type - T	1
31	52052677	Spring	2
32	52052679	Arm - Paper Lift Bracket	2
33	52055253	Photointerruptor Pack	2
34	52052657	Volume Sensor Bracket	2
35	52052832*	Collar - Bypass Pin	1
36	52052664	Sector Gear	2
37	52052743*	Pin - Bypass Feed Guide	1
38	52052833*	Collar - Bypass Feed Guide	
101	07200040E	Retaining Ring - M4	6
102	03130060E	Philips Pan Head Screw - M3x6	4
103	07200050E	Retaining Ring - M5	7
104	03140100W	Philips Pan Head Screw - M4x10	4
105	03140060W	Philips Pan Head Screw - M4x6	3
106	09644008W	Tapping Screw with Flat Washer - M4x8	3
107	03140060W	Philips Pan Head Screw - M4x6	2
108	07200070E	Retaining Ring - M7	4
109	04340080W	Tapping Screw - M4x8	4
110	11050008	Nylon Clip - 2N	1
111	11050016	Nylon Clip - 4N	1
112	07200080E	Retaining Ring - M8	2

*Reference Technical Service Bulletin #020

6. TONER DRIVE SECTION

Rev. 4/86

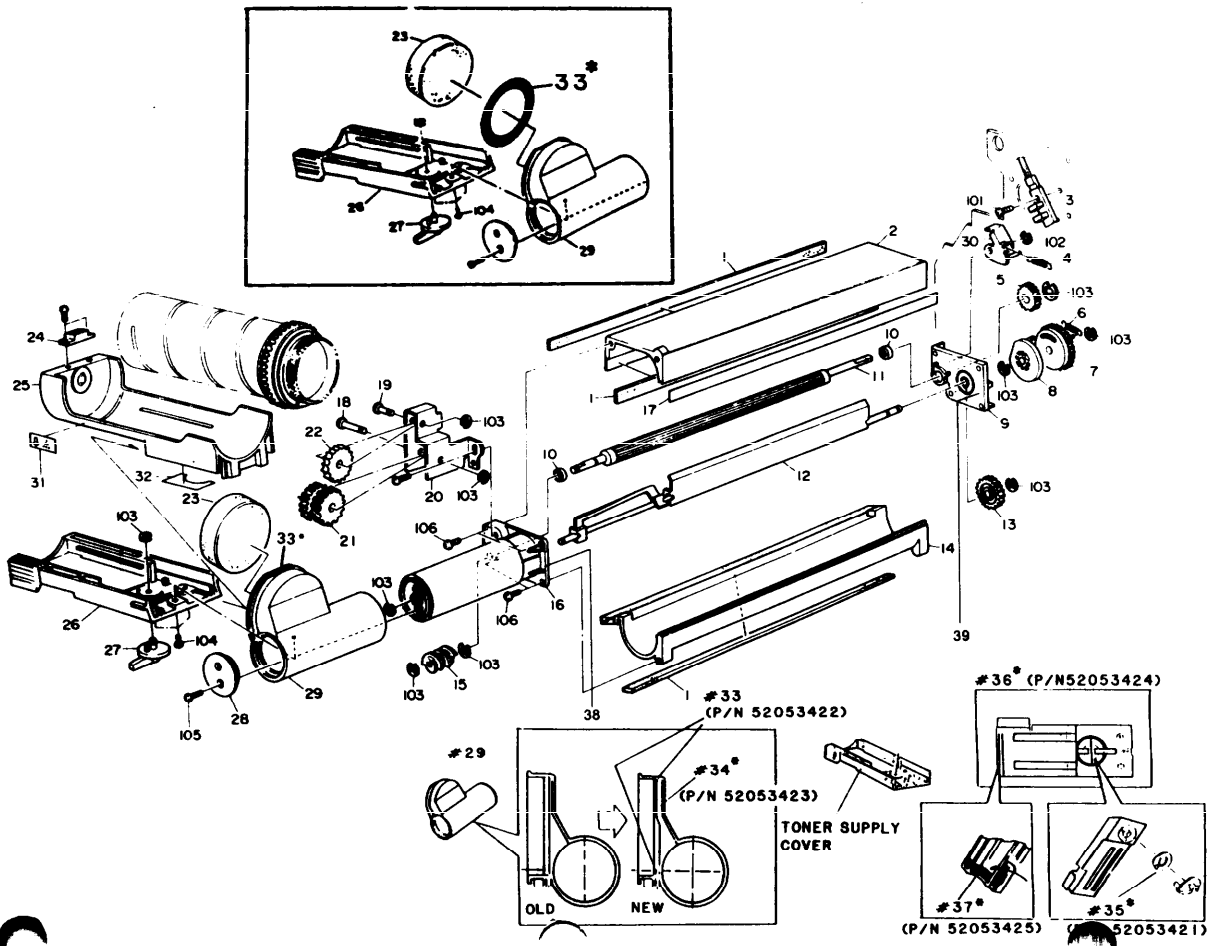

6. TONER DRIVE SECTION

Index No.	Part No.	Description	Q'ty Per Assembly
1	52053270	Sponge Seal - Toner Tank	4
2	52053250	Upper Hopper Case	1
3	52055251	LED Sensor Type - T	1
4	54423233	Spring - Drive Wheel	1
5	52053306	Gear - 18T	1
6	54423233	Spring - Drive Wheel	1
7	52053493	Gear - 49Z	1
8	54423226	Drive Wheel - Toner Agitator	1
9	52053278	Hopper Side Plate - Rear	1
10	54423214	Seal - Toner Agitator	2
11	52053301	Toner Supply Shaft	1
12	52053325	Toner Agitator	1
13	52053299	Gear - 27T	1
14	52053260	Lower Hopper Case	1
15	52053310	Worm Gear	1
16	52053288	Front Side Plate - Toner Tank	1
17	52053335	Mylar Seal - Toner Tank	1
18	52053317	Lower Shaft	1
19	52053316	Upper Shaft	1
20	52053312	Cartridge Drive Bracket	1
21	52053315	Coupled Gear - 15T/20T	1
22	52053314	Gear - 20T	1
23	52054810	Toner Plug	1
24	50540536	Magnet Catch Ass'y	1
25	52053371	Toner Supply Bracket	1
26	52053353	Toner Supply Cover	1
27	52053354	Bottle Release Lever	1
28	52053350	Toner Supply Retainer	1
29	52053342	Toner Hopper Pipe	1
30	52053404	Actuator	1
31	52053375	Decal - Toner Bottle Holder	1
32	52053376	Decal - Bottle Loading	1
33	52053422**	Seal - Toner Hopper Pipe	
34	52054523	Seal - Toner Hopper Inlet	1
35	52053421	Seal Bottle Release Lever	1
36	52053424	Mylar Seal 105x12mm	1
37	52053425	Mylar Seal 74x10mm	1

**Reference Tech Service Bulletin 5000-032

Index No.	Part No.	Description	Q'ty Per Assembly
38	52053294	Front Seal - Hopper Side Plate	1
39	52053286	Rear Seal - Hopper Side Plate	1
101	03140100W	Philips Pan Head Screw - M4x10	1
102	07200030E	Retaining Ring - M3	1
103	07200050E	Retaining Ring - M5	9
104	03140080W	Philips Pan Head Screw - M4x8	3
105	09514008W	Philips Screw with Flat Washer - M4x8	1
106	09654010W	Tapping Screw with Flat Washer - M4x10	4
*	52053249	Toner Supply Unit	

7. DEVELOPMENT UNIT

Rev. 4/86

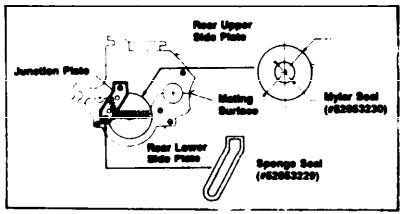

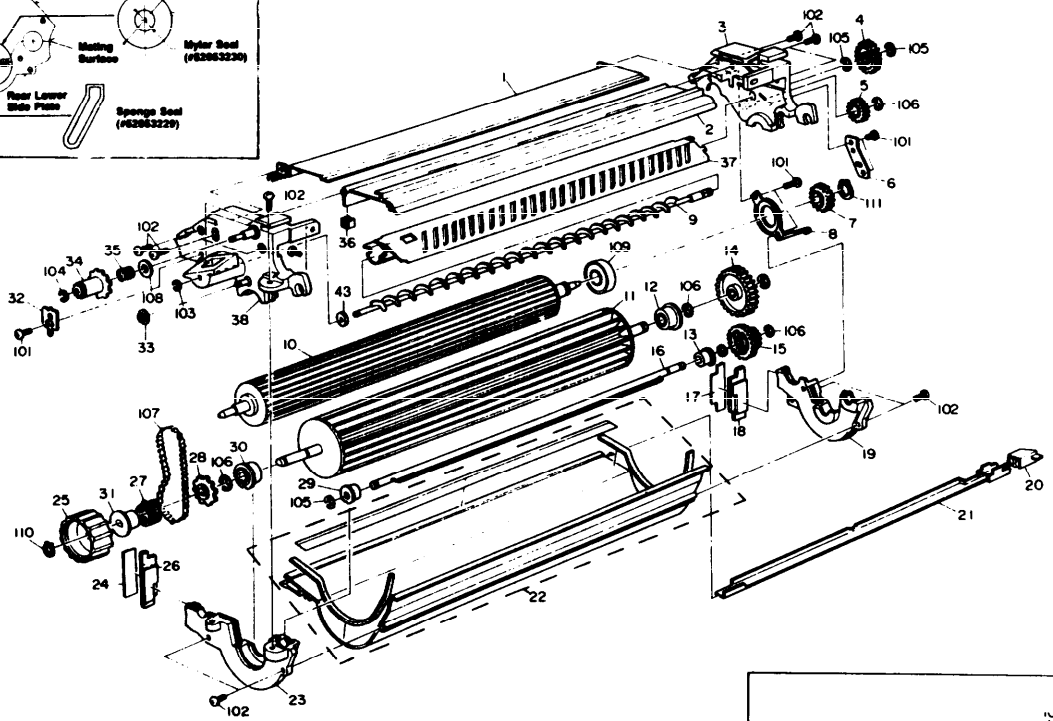

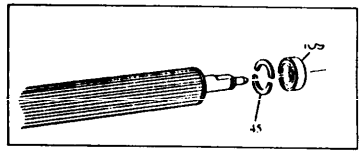

7. DEVELOPMENT UNIT

Rev. 4/86

Index No.	Part No.	Description	Q'ty Per Assembly
1	52053189	Development Upper Cover	1
2	52053160	Doctor Blade	1
3	52053140	Upper Side Plate - Rear	1
4	54422799	Lower Registration Roller Gear	1
5	54423077	Idle Gear - 18T	1
6	52053220	Junction Plate	1
7	54423112	Gear - 25T	1
8	52053110	Bearing Retainer	1
9	52053165	Development Auger	1
10	54423100	Development Roller	1
11	52053081	Paddle Roller	1
12	52053093	Bushing - 8mm	1
13	52053103	Bushing - 6mm	1
14	52053102	Gear - 39T	1
15	52053491	Development Unit Agitator Gear	1
16	52053120	Toner Agitator - Development	1
17	52053236	Rear Rubber Blade - Development	1
18	52053232	Rear Rubber Seal - Development	1
19	52053069	Lower Side Plate - Rear	1
20	52053209	Development Filter	1
21	52053210	Duct - Development	1
22	52053060	Development Bottom Plate	1
23	52053074	Lower Side Plate - Front	1
24	52053235	Front Rubber Blade - Development	1
25	52053090	Developer Knob	1
26	52053231	Front Rubber Seal - Development	1
27	54203239	Spring - Conveyer Roller	1
28	52053100	Sprocket - 12T	1
29	52053103	Bushing - 6mm	1
30	52053093	Bushing - 8mm	1
31	54423097	Clutch Drum - Developer Knob	1
32	54423114	Adjusting Plate - Magnet Angle	1
33	52053196	Idler - 4mm	1
34	52053193	Sprocket - 14T	1
35	52053195	Spring - Gear	1

Index No.	Part No.	Description	Q'ty Per Assembly
36	52053162	Rubber Seal - Doctor Blade	1
37	52053169	Backspill Plate	1
38	52053149	Upper Side Plate - Front	1
40	52053240	Supporting Plate	1
41	52053229	Sponge Seal	1
42	52053230	Mylar Seal	1
43	52053180	Felt Seal - Screw	1
44	52053180	Felt Seal	
45	54423109	Development Roller Seal	1
101	03140060W	Philips Pan Head Screw - M4x6	5
102	03140100W	Philips Pan Head Screw - M4x10	7
103	07200025E	Retaining Ring - M2.5	1
104	07200030E	Retaining Ring - M3	1
105	07200050E	Retaining Ring - M5	2
106	07200070E	Retaining Ring - M7	4
107	09100044	Hook Link Chain - 44P	1
108	08074040	Washer - 6.5mm	1
109	08053235	Ball Bearing - 15x32x9mm	1
110	07270080E	Retaining Ring - M8	1
111	07250140E	Retaining Ring C - M14	1
*	52053051	Development Unit	

8. CLEANING UNIT

July 20,'84

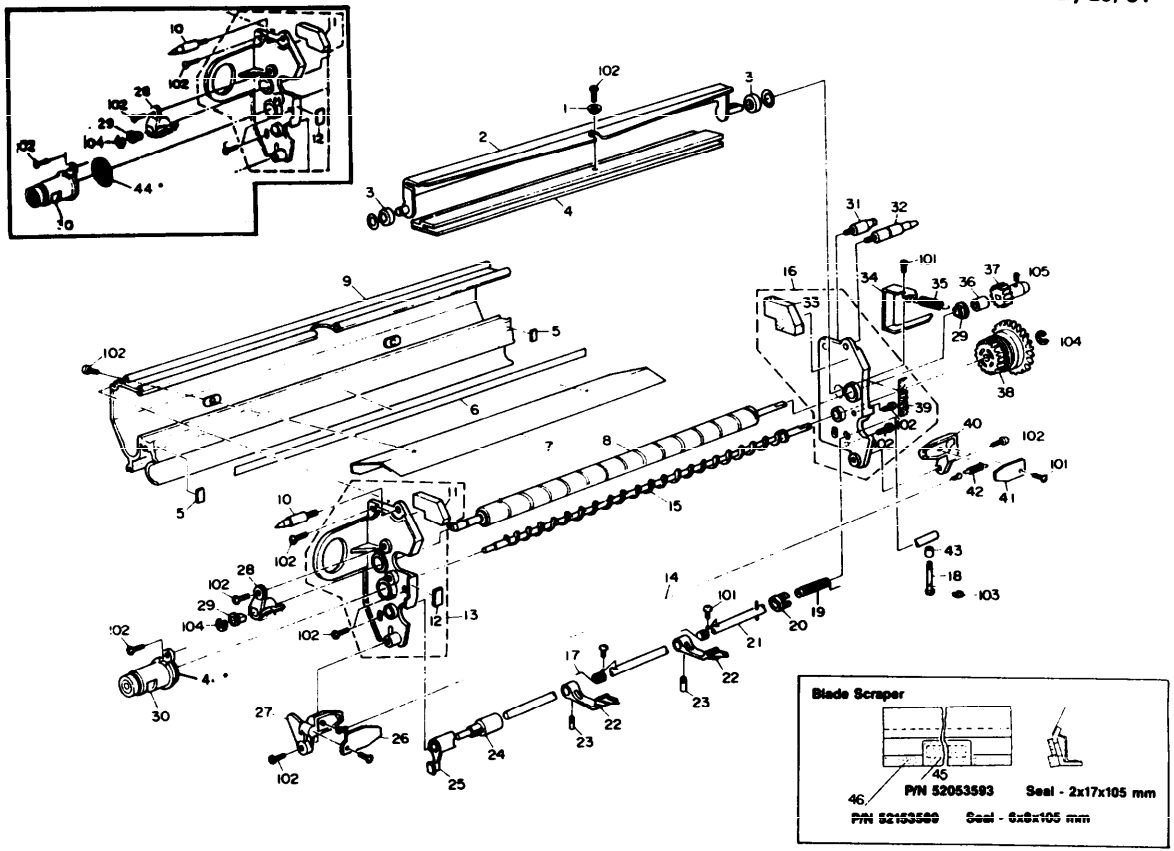

Index No.	Part No.	Description	Q'ty Per Assembly
1	54423570	Shoulder Sleeve	1
2	52053575	Cleaning Blade Holder	1
3	54423593	Seal - Cleaning Balde Sahft	2
4	52053565	Cleaning Blade	1
5	52053595	Rubber Seal - Holder	2
6	52053590	Entrance Seal	1
7	52053585	Blade Scraper	1
8	52153581	Cleaning Brush	1
9	52053551	Cleaning Unit Casing	1
10	52053673	Setting Pin	1
11	52153600	Seal - Blade Front	1
12	52153555	Rubber Seal - Cleaning	1
13	52153552	Front Side Plate - Cleaning	1
14	52059001	PCC Corona Wire	1
15	52153606	Left Agitator	1
16	52153553	Rear Side Plate - Cleaning	1
17	52053965	Spring	1
18	52053968	Set Screw - Separator Shaft	1
19	54423904	Spring - Pick-Off Pawl Slide	1
20	52053981	Collar	1
21	52053958	Pick-Off Pawl Shaft	1
22	52153596	Pick-Off Pawl	2
23	52053966	Set Screw	2
24	52053975	Cam	1
25	52053950	Cam	1
26	52053651	Front Endblock Cover - PCC	1
27	52053647	Front Endblock - PCC	1
28	52053561	Holder	1
29	54463707	Bushing - 6x10x6mm	1
30	52053663	Plastic Pipe	1
31	52053671	Spring - Anchor	1
32	52053583	Rear Guide Pin - Cleaning	1
33	52153601	Seal - Blade Rear	1
34	52053617	Pressure Arm	1
35	54182859	Spring -Resist Roller (Front)	1

Index No.	Part No.	Description	Q'ty Per Assembly
36	54204193	Collar - Release Cam	1
37	52053582	Gear - 15T	1
38	52053612	Cam Gear - 35T	1
39	52053599	Side Seal - Cleaning Rear	1
40	52053649	Rear Endblock - PCC	1
41	52053653	Rear Endblock Cover - PCC	1
42	54422108	Spring - Corona Wire	1
43	54182116	Spacer - Guard	1
44	52053180	Felt Seal	
45	52053593	Seal 2 x 17 x 105 mm	1
46	52153589	Seal 6 x 8 x 105 mm	2
101	03130060W	Philips Pan Head Screw - M3x6	5
102	03140080W	Philips Pan Head Screw - M4x8	6
103	07200025E	Retaining Ring - M2.5	1
104	07200040E	Retaining Ring - M4	2
105	05740100E	Hexagon Headless Set Screw - M4x10	1
*	52053550	Cleaning Unit	

9. DEVELOPMENT DRIVE SECTION

July 20,'84

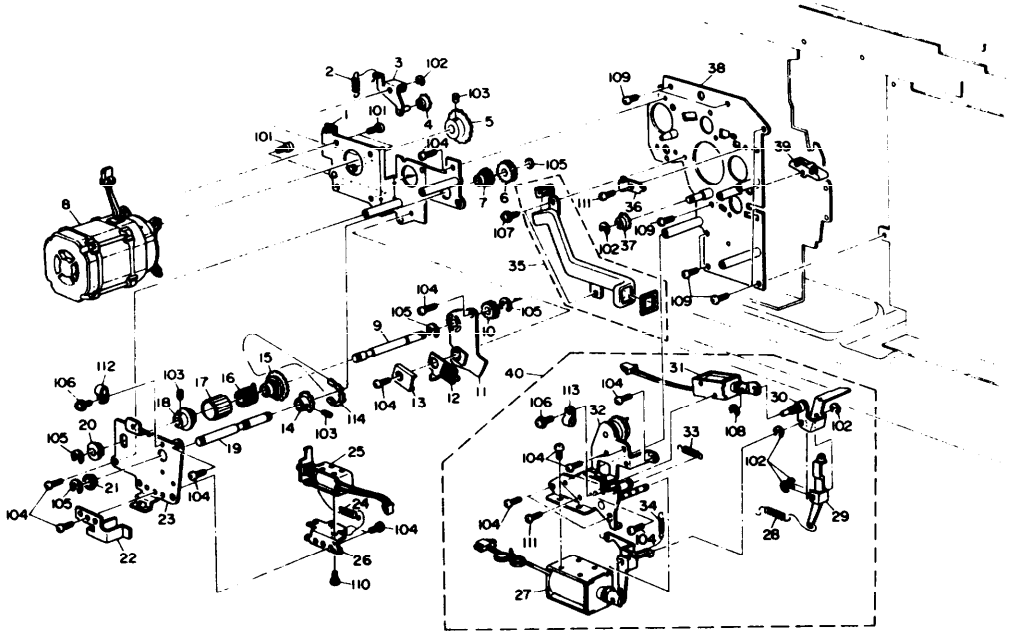

Index No.	Part No.	Description	Q'ty Per Assembly
1	52053450	Development Drive Bracket	1
2	54424121	Spring - Oil Blade	1
3	52053475	Development Tightener	1
4	52051101	Sprocket - 12T	1
5	52053456	Motor Sprocket - 30T/50Hz	1
	52053457	Motor Sprocket - 25T/60Hz	1
6	52053492	Gear - 30T	1
7	52053481	Bushing - Development Drive	1
8	52055411	Developer Motor (AC, 25W)	1
9	52053468	Shaft - Toner Supply Drive	1
10	52053306	Gear - 18T	1
11	52053462	Bracket - Toner Supply	1
12	52053485	Bias Terminal	1
13	52053486	Terminal Holder	1
14	54164335	Sprocket - 17T	1
15	52053465	Sprocket - 22T	1
16	55016555	Spring - Clutch	1
17	54032106	Ratchet Sleeve - Paper Feed	1
18	52053467	Boss - Toner Supply Clutch	1
19	52053472	Development Drive Shaft	1
20	50530223	Bushing - 8mm	1
21	08053346	Ball Bearing - 8x12x3.5mm	1
22	52053870	PTL Stopper	1
23	52053484	Holder Bracket - Development Drive	1
24	54423233	Spring - Drive Wheel	1
25	54473361	Toner Supply Solenoid	1
26	52053480	Bracket - Toner Supply Solenoid	1
27	52053639	Blade Solenoid	1
28	52053637	Spring - Cleaning Blade	1
29	52053635	Pressure Lever	1
30	52053971	Pick-Off Pawl Lever	1
31	52053964	Pick-Off Solenoid	1
32	52052104	Solenoid Bracket	1
33	54131812	Spring - Drum Return Arm	1
34	58753026	Spring - Original Feed Arm	1

Index No.	Part No.	Description	Q'ty Per Assembly
35	52053212	Support Duct	1
36	52052121	Spring Plate	1
37	52051101	Sprocket - 12T	1
38	52052251	Rear Side Plate - Drum	1
39	52053872	Rear Bracket - T & S Corona	1
40	52052101	Cleaning Solenoid Ass'y	1
101	03150080W	Philips Pan Head Screw - M5x8	4
102	07200050E	Retaining Ring - M5	5
103	05750050E	Hexagon Headless Set Screw - M5x5	3
104	04340080W	Tapping Screw - M4x8	5
105	07200060E	Retaining Ring - M6	4
106	09644008W	Tapping Screw With Flat Washer - M4x8	2
107	09514008W	Philips Screw With Flat Washer - M4x8	2
108	07200040E	Retaining Ring - M4	1
109	04340060W	Tapping Screw - M4x6	5
110	03130050W	Philips Pan Head Screw - M3x5	1
111	03130060W	Philips Pan Head Screw - M3x6	3
112	11050016	Nylon Clip - 4M	1
113	11050010	Nylon Clip - 6M	1
114	09160082	Bushed Roller Chain	1

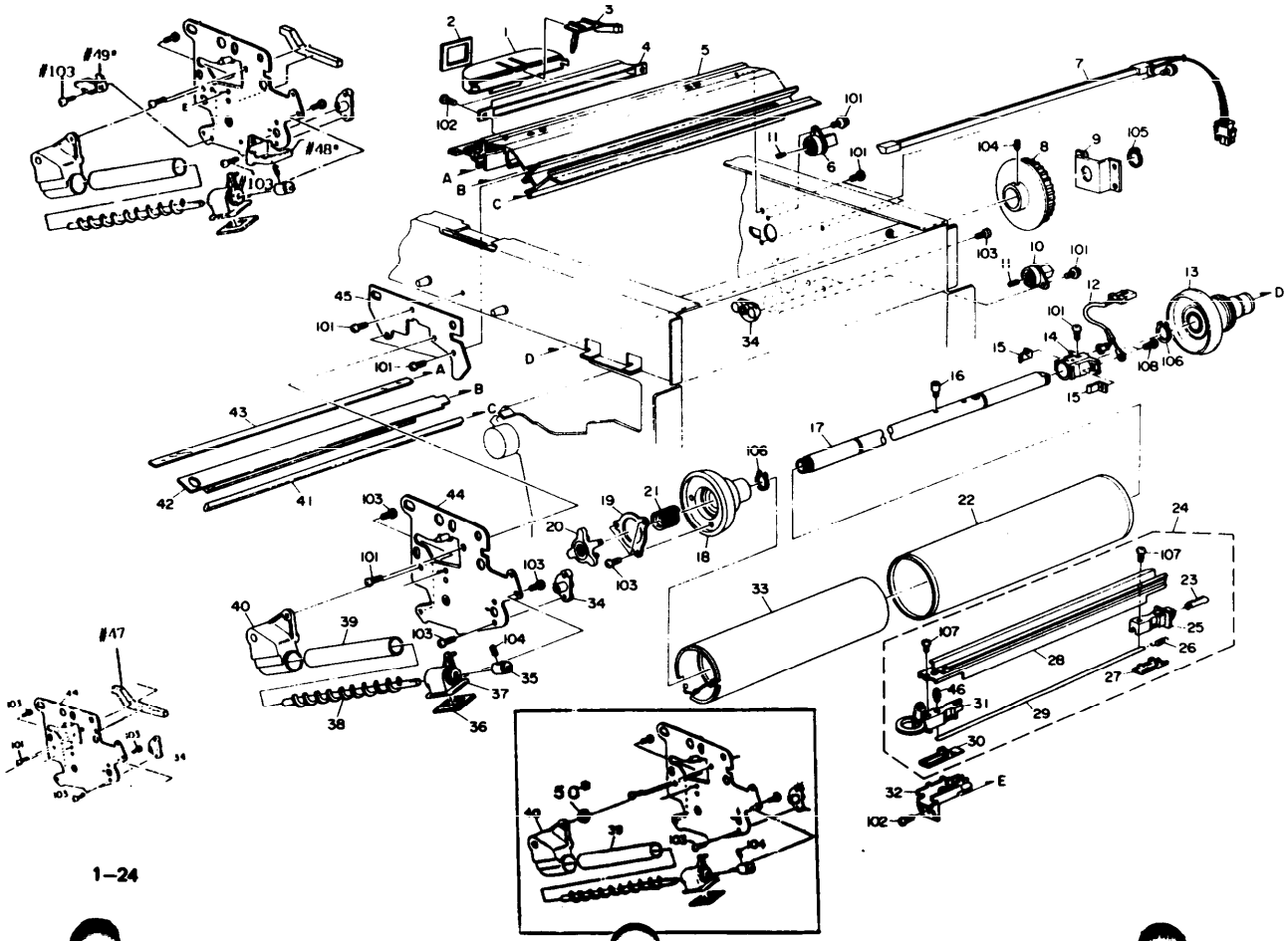
#49*
#103
#48*
#103
#47
1
2
3
4
5
6
7
8
9
10
11
12
13
14
15
16
17
18
19
20
21
22
23
24
25
26
27
28
29
30
31
32
33
34
35
36
37
38
39
40
41
42
43
44
45
46
50*
101
102
103
104
105
106
107
108
A
B
C
D
E

Index No.	Part No.	Description	Q'ty Per Assembly
1	52052058	Exhaust Duct	1
2	52052063	Duct Seal - Exhaust	1
3	52052055	Air Flow Plate	1
4	52053873	Main Corona Duct	1
5	52052059	T & S Corona Rail	1
6	54422165	Receptacle Housing Main Corona	1
7	52055426	Quenching Lamp (Cold Cathode)	1
8	54422258	Drum Drive Pulley	1
9	52052261	Drum Shaft Channel	1
10	54422165	Releptacle Housing - Main Corona	1
11	54422107	Hookless Spring	1
12	54425317	Harness - Drum Heater	1
13	54422285	Rear Drum Flange	1
14	54422272	Terminal Holder - Drum Heater	1
15	54422273	Terminal - Drum Heater	2
16	54131875	Knob Screw	1
17	52052271	Drum Shaft	1
18	52052276	Front Flange	1
19	52052279	Flange Plate	1
20	52052267	Drum Flange Knob	1
21	54422278	Spring - Drum Flange	1
22	52059510	Drum	1
23	54422110	Plug - Corona Unit	1
24	52052174	Main Corona Unit	1
25	A0002109	Rear Endblock - Main Corona	1
26	54422108	Spring - Corona Wire	1
27	54422068	Rear Cover - Main Corona	1
28	52052064	Transfer Corona Casing	1
29	54429003	Main Corona Wire (10pcs/set)	1
30	54422066	Front Cover - Main Corna	1
31	54422065	Front End Block - Main Corona	1
32	54422123	Cleaner - Main Corona Wire	1
33	52056375	Drum Heater	1
34	54423154	Holder - Development Unit	2
35	54463712	Bevel Gear - 14T	1

Index No.	Part No.	Description	Q'ty Per Assembly
36	52053677	Rubber Seal - Joint Development	1
37	52053667	Development Joint	1
38	52053668	Toner Recycle Coil	1
39	52053657	Toner Recycle Pipe	1
40	52053660	Toner Recycle Joint	1
41	54422111	Rubber Shield - Quenching	1
42	52055221	Erase Lamp 115V	1
	52055222	Erase Lamp 220/240V	1
43	52052112	QL Filter	1
44	52052310	Drum Stay Support Plate	1
45	52052245	Drum Stay	1
46	52052069	Adjusting Screw	1
47	52053676	Rubber Seal - Drum Support	1
48	52052308 *	Toner Catch Pan A	1
49	52052307 *	Toner Catch Pan B	1
50	52053659	Rubber Seal - Left Joint	
101	04340080W	Tapping Screw - M4x8	7
102	09514006W	Philips Screw with Flat Washer - M4x6	3
103	03140060W	Philips Pan Head Screw - M4x6	
104	05750060E	Hexagon Headless Set Screw - M5x6	1
105	07250150E	Retaining Ring C - M15	1
106	07250170E	Retaining Ring C - M17	2
107	03140050W	Philips Pan Head Screw - M4x5	2
108	03130080M	Philips Pan Head Screw - M3x8	2

*Reference Technical Service Bulletin #002

11. TRANSPORT SECTION

July 20,'84

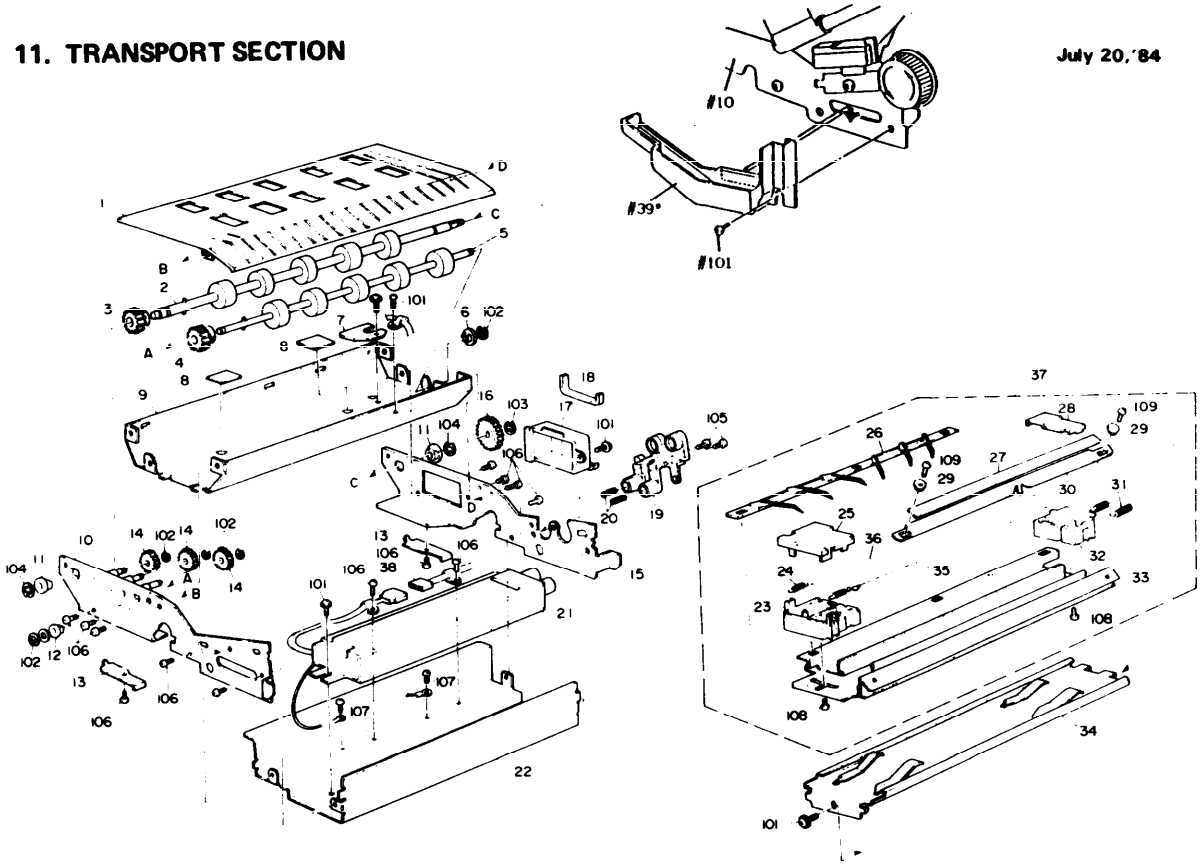

11. TRANSPORT SECTION

Rev. 1 96

Index No.	Part No.	Description	Q'ty Per Assembly
1	52053916	Transport Guide Plate	1
2	52053913	Left Transport Roller	1
3	52053921	Gear - 16T	1
4	52053923	Gear - 16T	1
5	52053924	Right Transport Roller	1
6	50530447	Bushing - 6x10x6mm	1
7	52053925	Harness Clamp - Plate	1
8	54421855	Seal	2
9	52053909	Transport Chamber	1
10	52053902	Transport Side Plate - Front	1
11	50530419	Bushing - 10mm	2
12	50530447	Bushing - 6x10x6mm	1
13	52053912	Transport Spring Plate - Front	2
14	52053922	Gear - 16T	3
15	52053907	Transport Side Plate - Rear	1
16	52053920	Gear - 24T	1
17	52053927	Transport Duct	1
18	52053947	Rubber Seal - Duct Transport	1
19	52053858	T & S Corona Receptacle	1
20	54422107	Hookless Spring	2
21	52055367	Power Pack - T/S	1
22	52053914	Transport Stay	1
23	52053851	Front Endblock - T & S Corona	1
24	54422108	Spring - Corona Wire	1
25	52053850	Front Endblock Cover - T & S Corona	1
26	52053860	Paper Guide - T & S Corona	1
27	52053871	Guide Mylar - T & S Corona	1
28	52053852	Rear Endblock Cover T & S Corona	1
29	52053815	Variation Sleeve	2
30	52053811	Guide Plate - T & S Corona	1
31	52053821	Terminal Spring	2
32	52053853	Rear Endblock - T & S Corona	1
33	52053854	T & S Corona Casing	1
34	52053861	T & S Corona Guide	1
35	54429004	T & S Corona Wire (10pcs/set)	1

Reference Tech Service Bulletin 5000024

Index No.	Part No.	Description	Q'ty Per Assembly
36	54429003	Main Corona Wire (10pcs/set)	1
37	52053802	Corona Unit - T & S	1
38	52055483	Harness - Power Pack	1
39	52063960 *	Toner Catch Pan C	1
101	096440080W	Tapping Screw With Flat Washer - M4x8	3
102	07200050E	Retaining Ring - M5	5
103	07200070E	Retaining Ring - M7	1
104	07200080E	Retaining Ring - M8	1
105	09654010W	Tapping Screw with Flat Washer - M4x10	2
106	04340080W	Tapping Screw - M4x8	12
107	03140080H	Philips Pan Head Screw - M4x8	2
108	03140050W	Philips Pan Head Screw - M4x5	2
109	03130060W	Philips pan Head Screw - M3x6	2

* Reference Technical Service Bulletin #002

12. FUSING SECTION (I)

REV. 7/85

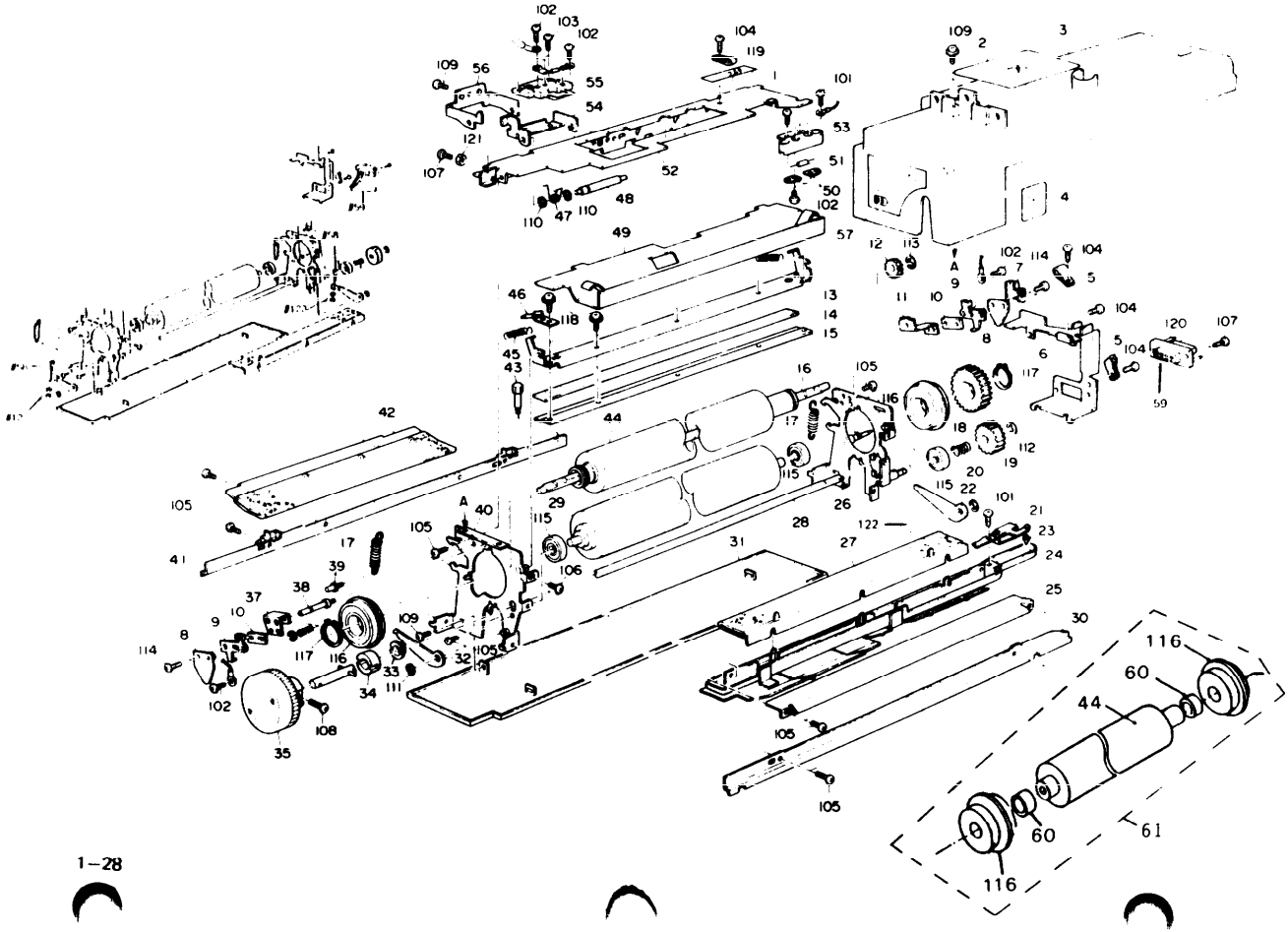

12. FUSING SECTION (I)

Rev. 4/86

Index No.	Part No.	Description	Q'ty Per Assembly
1	54204867	Decal - Thermofuse 169°C	1
2	54427042	Large Decal - High Temperature	1
3	52054140	Fusing Unit Cover	1
4	54426126	Small Decal - High Temperature	1
5	54154125	Nylon Clip	2
6	52054148	Fusing Connector Bracket	1
7	54324119	Terminal Cover	1
8	54324117	Insulator - A	2
9	54154097	Lamp Terminal	2
10	54324118	Insulator - B	2
11	54424201	Rear Bracket - Lamp Terminal	1
12	52054101**	Gear - 18T	1
13	52054116	Oil Blade Bracket	1
14	54424117	Oil Blade	1
15	52054121	Lower Holder - Oil Blade	1
16	52059506	Fusing Lamp - 115V	1
	54425752	Heater - 220/240V 960W	1
17	52054298	Pressure Spring	2
18	54424086	Gear - 40T	1
19	54424151	Gear - 30T	1
20	54424152	Spring - Fusing Drive	1
21	52054108	Actuator Spring Plate	1
22	52054296	Rear Pressure Lever	1
23	54154258	Valve - Oil Sump	1
24	52054101	Oil Sump	1
25	52054098	Entrance Guide Plate - Fusing	1
26	52054064	Fusing Side Frame - Rear	1
27	52054113	Oil Supply Pad	1
28	52054138	Fusing Shaft	1
29	52054280	Pressure Roller	1
30	52054079	Right Fusing Rail	1
31	52054143	Oil Pan	1
32	52054295	Front Pressure Lever	1
33	50530223	Bushing - 8mm	1
34	52054135	Fusing Shaft Collar	1

**Reference Tech Service Bulletin 5000-029

Index No.	Part No.	Description	Q'ty Per Assembly
35	52054139	Fusing Unit Knob	1
36	54424203	Spring - Lamp Holder	1
37	54424196	Front Bracket - Lamp Terminal	1
38	54154093	Shaft - Fusing Lamp Terminal	1
39	54154094	Stud - Fusing Lamp Terminal	1
40	52054060	Fusing Side Frame - Front	1
41	52054073	Left Fusing Rail	1
43	52054230	Stopper - Fusing Unit	1
44	52054320*	Hot Roller	1
45	54424121	Spring - Oil Blade	1
46	54424119	Oil Skimmer	1
47	54424414	Spring - Thermistor	1
48	54424413	Shaft - Thermistor	1
49	52054110	Shielding Plate	1
50	54245802	Termianl - Temperature Fuse	2
51	54395520	Temperature Fuse - 169 C	1
52	52054093	Thermistor Mounting Frame	1
53	54425820	Terminal Block - Thermofuse	1
54	54424411	Thermistor Bracket	1
55	54425368	Thermistor - Fusing	1
56	52054226	Fusing Thermister Bracket	1
57	52054245	Decal - B3	1
58	52054297	Adjusting Screw - M3 x 12.5	2
59	52055463	Fusing Harness	1
60	52054321	Bushing 20x25x15mm	
61	54429810	Teflon Hot Roller Kit	

*Reference Technical Service Bulletin #017

July 20,'84

Index No.	Part No.	Description	Q'ty Per Assembly
101	03130060W	Philips Pan Head Screw - M3x6	1
102	03130060N	Philips Pan Head Screw - M3x6	1
103	03140060W	Philips Pan Head Screw - M4x6	1
104	04340060W	Tapping Screw - M4x6	1
105	04340080W	Tapping Screw - M4x8	1
106	03140060W	Philips Pan Head Screw - M4x6	1
107	03140100W	Philips Pan Head Screw - M4x10	1
108	03140120W	Philips Pan Head Screw - M4x12	1
109	09644008W	Tapping Screw With flat Washer - M4x8	1
110	07200030E	Retaining Ring - M3	1
111	07200050E	Retaining Ring - M5	1
112	07200060E	Retaining Ring - M6	1
113	07200070E	Retaining Ring - M7	1
114	03130120W	Philips Pan Head Screw - M3x12	1
115	08053104	Ball Bearing - 8x22x7mm	1
116	08053377*	Ball Bearing - 20x42x12mm	2
117	07230300E	Retaining Ring C - R30	1
118	09514006W	Philips Screw with Flat Washer - M4x6	1
119	11050152	Heatproof Nylon Clip	1
120	11021341	Connector - 8P	1
121	07100040W	Hexagon Nut - M4	1
122	07100030B	Hexagon Nut - M3	4

*Fusing Unit 115V

13. FUSING SECTION (II)

July 20,'84

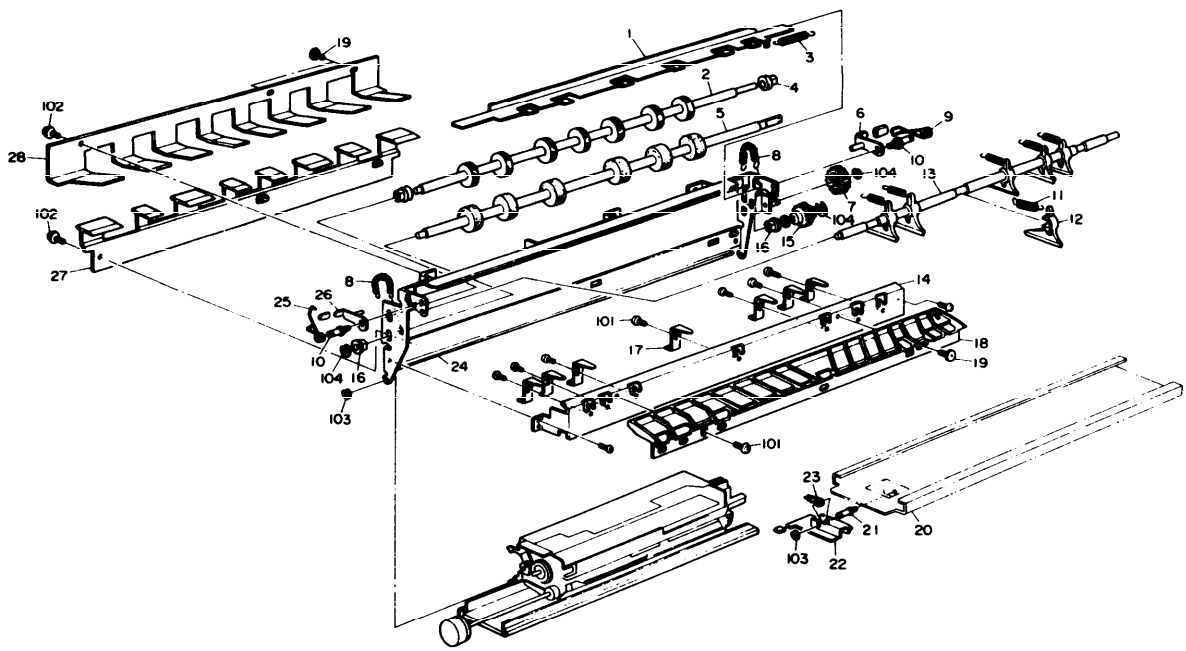

Index No.	Part No.	Description	Q'ty Per Assembly
1	54424465	Stripper Pawl Plate	1
2	52054184	Upper Exit Roller	1
3	54424467	Spring - Stripper Pawl Plate	1
4	53041608	Bushing - 6mm	1
5	52054186	Lower Exit Roller	1
6	54424442	Rear Release Lever - Exit Ass'y	1
7	54424492	Gear - 20T	1
8	54154457	Spring - Exit	2
9	54424464	Spring - Rear Release Leve	1
10	54424444	Stud - Exit Ass'y Release Lever	2
11	52054305	Spring - Hot Roller Stripper	1
12	54429006	Hot Roller Stipper (6pcs/set)	1
13	52054220	Shaft - Hot Roller Stripper	1
14	52054180	Transport Guide Plate	1
15	52054187	Gear - 19T	1
16	50530447	Bushing - 6x10x6mm	2
17	52054299	Pressure Roller Stripper	1
18	52054179	Exit Guide Plate - Fusing	1
19	58401632	Stepped Screw - Guide Plate	1
20	52051161	Fusing Unit Rail	1
21	52051176	Right Inner Cover	1
22	52051164	Release Lever - Fusing Unit	1
23	52051170	Spring	1
24	52054173	Fusing Exit Frame	1
25	54424463	Spring - Front Release Lever	1
26	54424440	Front Release Lever - Exit Ass'y	1
27	52054183	Lower Exit Guide	1
28	52054182	Upper Exit Guide	1

Index No.	Part No.	Description	Q'ty Per Assembly
101	04340060W	Tapping Screw - M4x6	8
102	09644008W	Tapping Screw With Flat Washer - M4x8	2
103	07200040Z	Retaining Ring - M4	2
104	07200050Z	Retaining Ring - M5	2
*	52054058	Fusing Unit 115V	

14. OIL SUPPLY SECTION

July 20,'84

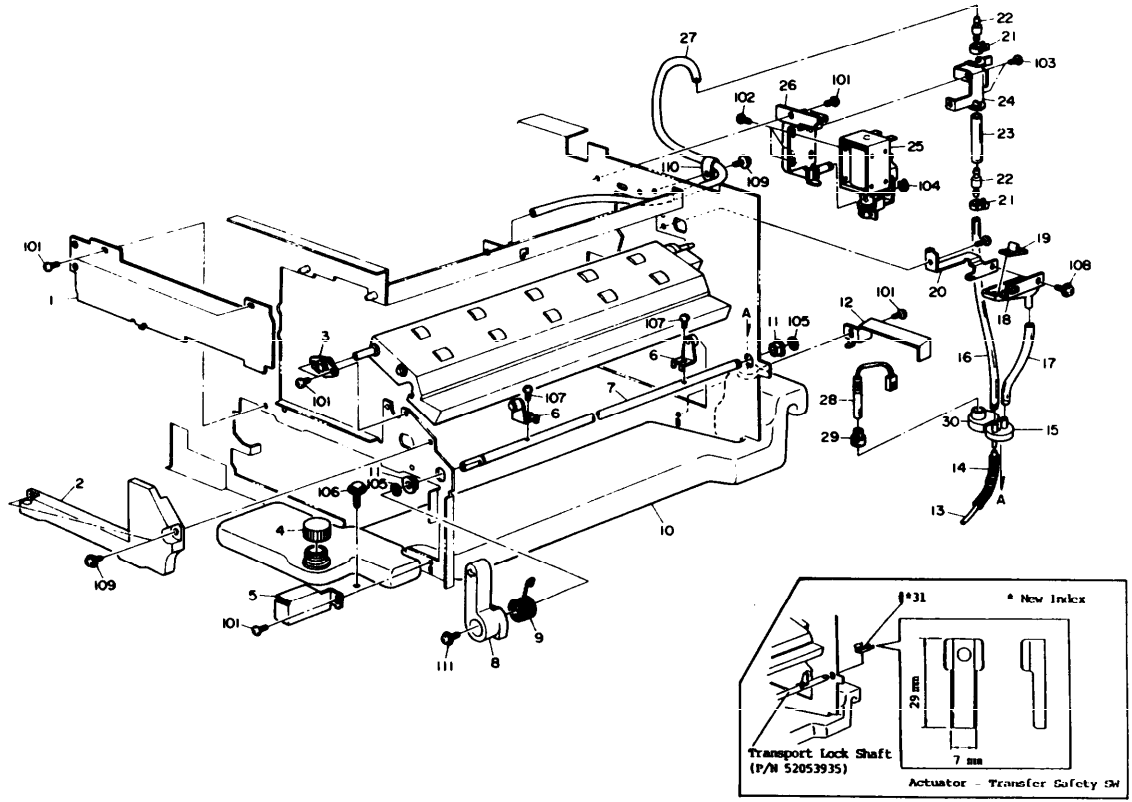

14. OIL SUPPLY SECTION

Index No.	Part No.	Description	Q'ty Per Assembly
1	52051065	Side Plate Cover - Front	1
2	52051273	Middle Inner Cover	1
3	52053919	Transport Roller Bushing	1
4	54474242	Oil bottle Cap	1
5	52054301	Front Bracket - Oil Tank	1
6	52053936	Transport Lock Lever	2
7	52053935	Transport Lock Shaft	1
8	52053939	Release lever	1
9	52053938	Spring	1
10	52054169	Oil Tank	1
11	50530223	Bushing - 8mm	2
12	52054300	Rear Bracket - Oil Tank	1
13	52054198	Lower Oil Tube	1
14	52054195	Spring	1
15	52054166	Oil Cap	1
16	52054197	Oil Pump Sleeve	1
17	52054199	Recycle Oil Tube	1
18	52054155	Oil Funnel	1
19	54204062	Oil Breaker - Funnel	1
20	52054154	Funnel Bracket	1
21	54474241	Tube Clamp	2
22	54154310	Valve Oil Pump	2
23	52054331	Sleeve Oil Pump	1
24	52054235	Oil Pump Bracket	1
25	54204051	Oil Supply Solenoid	1
26	52054161	Oil Supply Bracket	1
27	52054196	Upper Oil Tube	1
28	52055258	Silicon Oil Sensor	1
29	52054253	Rubber Seal - Oil Cap Sensor	1
30	52054252	Sensor Oil Cap	1
31	52053988	Actuator - Transfer Safety Switch	1

Index No.	Part No.	Description	Q'ty Per Assembly
101	04340080W	Tapping Screw - M4x8	4
102	03130060W	Philips Pan Head Screw - M3x6	3
103	03140060W	Philips Pan Head Screw - M4x6	2
104	07200040E	Retaining Ring - M4	1
105	07200050E	Retaining Ring - M5	2
106	08030017	Knob Screw	1
107	03140080W	Philips Pan Head Screw - M4x8	2
108	09514006W	Tapping Screw with Flat Washer - M4x6	1
109	09644008W	Tapping Screw with Flat Washer - M4x8	1
110	11050016	Nylon Clip - 4N	1
111	09514008W	Tapping Screw with Flat Washer - M4x8	1

15. PAPER EXIT SECTION

July 20,'84

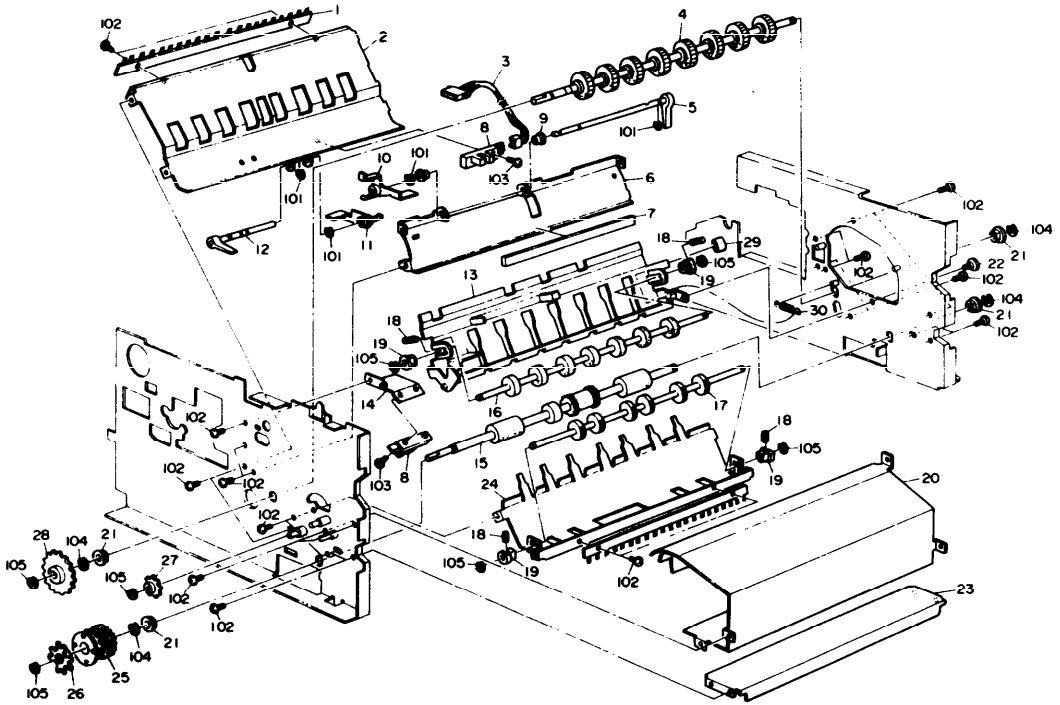

Index No.	Part No.	Description	Q'ty Per Assembly
1	52062808	Anti-Static Brush - Duplex Transport	2
2	52054524	Lower Guide Plate - Exit	1
3	52055474	Harness - Exit	1
4	52054475	Exit Relay Roller - Middle	1
5	52054202	Exit Misfeed Sensor Feeler	1
6	52054451	Upper Guide Plate - Fusing	1
7	54432684	Magnet - By-pass Table	1
8	52055250	L.E.D. Sensor Type S	2
9	54432668	Bushing	1
10	52054212	Actuator Fusing Exit Sensor	1
11	52054515	Actuator - Exit Sensor	1
12	52054517	Paper Exit Feeler	1
13	52054460	Fusing Release Lever	1
14	52054205	Sensor Bracket	1
15	52054511	Lower Exit Roller	1
16	52054476	Exit Relay Roller - Upper	1
17	52054518	Upper Exit Roller	1
18	52054527	Spring - Exit	4
19	54422751	Bushing - Upper Registration Roller	4
20	52051064	Inner Cover - Reverse	1
21	53041639	Bushing - 8mm	4
22	54032075	Stepped Screw	1
23	52054520	Exit Stay	1
24	52054522	Upper Guide Plate - Exit	1
25	52054507	Drive Sprocket - Exit Roller	1
26	54424495	Slip Clutch	1
27	52051101	Sprocket - 12T	1
28	52051100	Sprocket - 24T	1
29	52054468	Fusing Unit Release Lever	1
30	52054473	Lock Spring	1

Index No.	Part No.	Description	Q'ty Per Assembly
101	07200030E	Retaining Ring - M3	4
102	04340080W	Tapping Screw - M4x8	14
103	03140100W	Philips Pan Head Screw - M4x10	2
104	07200060E	Retaining Ring - M6	4
105	07200050E	Retaining Ring - M5	8

16. OPTICS SECTION (I)

July 20,'84

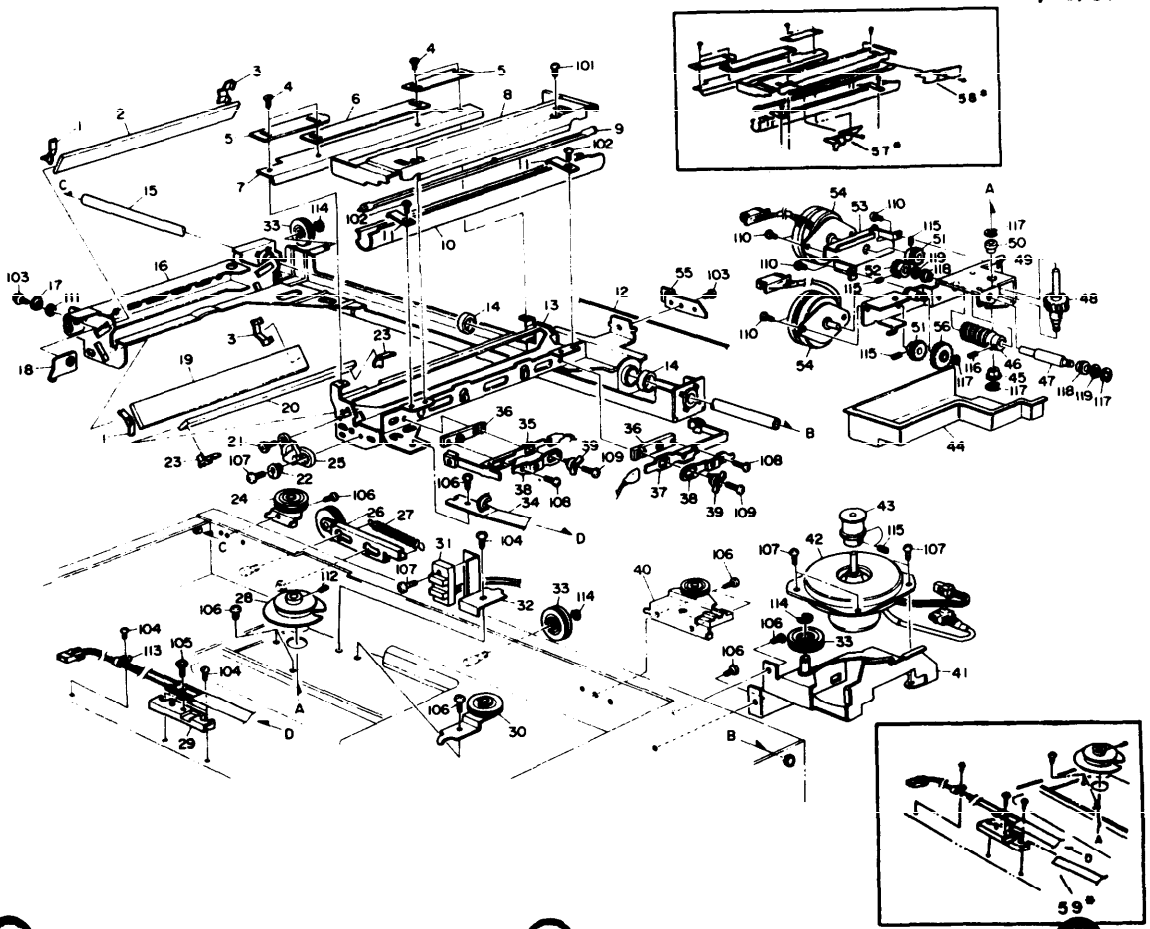

16. OPTICS SECTION (I)

Index No.	Part No.	Description	Q'ty Per Assembly
1	54421742	Front Spring Plate - 2nd and 3rd Mirror	2
2	54421740	2nd and 3rd Mirror	1
3	54421741	Rear Spring Plate - 2nd and 3rd Mirror	2
4	54421702	Small Screw - M3	2
5	54421704	Wing - Side	2
6	54421703	Wing - Center	1
7	54421698 *	Reflector - Aid	1
8	54421961	Cover - Main Reflector	1
9	54425308	Exposure Lamp - 85V/250W	1
10	52051696	Main - Reflector	1
11	54091705	Clamp - Reflector	2
12	52051981	Scanner Drive Wire	1
13	52051681 *	Bracket - 1st Scanner	1
14	54421748	Cleaner - Guide Rod	2
15	52051862	Scanner Guide Rod	1
16	52051720 *	Bracket - 2nd Scanner	1
17	52051694 *	Adjusting Cam - Start Lever	1
18	52051730 *	Scanner Slide Shoe	1
19	54421740	2nd and 3rd Mirror	1
20	54421710	1st Mirror	1
21	54032075	Stepped Screw	1
22	54421770	Cam - Optics Axis	1
23	54421711	Spring Plate - 1st Mirror	2
24	54421870	Left Pulley	1
25	54421692	Slide Shoe - 1st Scanner	1
26	52151886	Pulley Tightener	1
27	54421890	Spring - Wire Tightner	1
28	52051990	Pulley	1
29	54421941	Clamp Block - Exposure Lamp Harness	1
30	52151975	Pulley - Scanner	1
31	52055251	LED Sensor Type - T	1
32	52051980	Actuator - Lens H.P. Sensor	1
33	54421735	Pulley	3
34	54425266	Harness - Exposure Lamp	1
35	54421705	Rear Terminal - Exposure Lamp	1

Index No.	Part No.	Description	Q'ty Per Assembly
36	54201675	Insulator - Lamp Terminal	2
37	54421700	Front Terminal - Exposure Lamp	1
38	54201682	Supporter - Lamp Terminal	2
39	54201676	Spacer - Lamp Terminal	2
40	52051875	Bracket - Wire Turn Pulley	1
41	52051866	Bracket - Scanner Drive Motor	1
42	52055300	Scanner Drive Motor - DC 60W	1
43	52051869	Scanner Drive Pulley	1
44	52051988	Motor Cover	1
45	50530447	Bushing - 6x10x6mm	1
46	54292665	Worm Gear	1
47	52051975	Worn Gear Shaft	1
48	52051989	Gear - 20T	1
49	52051967	Motor Bracket	1
50	50530447	Bushing - 6x10x6mm	1
51	54421819	Gear 18T - Lens Drive Motor	2
52	54421782	Gear 18T - Lens Drive	1
53	52051972	Scanner Motor Bracket	1
54	54485376	Lens Drive Motor	2
55	52151697	Wire Clamp	1
56	54421784	Idle Grar 24T - Lens Drive	1
57	54421962	Front Cover - Terminal	1
58	54421963	Rear Cover - Terminal	1
59	54471967	Sheet Harness Guide	1
60	52091694	Guide Roller - 1st Seammer	1

*Reference Technical Service Bulletin #020

July 20,'84

Index No.	Part No.	Description	Q'ty Per Assembly
101	03430040D	Philips Pan Head Screw - M3x4	1
102	03130040W	Philips Pan Head Screw - M3x4	1
103	09514008W *	Philips Screw with Flat Washer - M4x8	1
104	09644008W	Tapping Screw with Flat Washer - M4x8	1
105	09654008W	Tapping Screw with Flat Washer - M4x8	1
106	04340060W	Tapping Screw - M4x6	1
107	03140100W	Philips Pan Head Screw - M4x10	1
108	03130080W	Philips Pan Head Screw - M3x8	1
109	03130120W	Philips Pan Head Screw - M3x12	1
110	03140060W	Philips Pan Head Screw - M4x6	1
111	08077016	Washer - 13x10.3x0.3mm	1
112	05740050E	Hexagon Headless Set Screw - M4x5	1
113	11050008	Nylon Clip - 2M	1
114	07200070E	Retaining Ring - M7	1
115	05740060E	Hexagon Headless Set Screw - M4x6	1
116	05750050E	Hexagon Headless Set Screw - M5x5	1
117	07200050E	Retaining Ring - M5	1
118	08053145	Ball Bearing - 6x12x4mm	1
119	08074025	Washer - 8x6.2x0.4mm	1
120	07200040E	Retaining Ring - M4	1

17. OPTICS SECTION (II)

Rev. 4/86

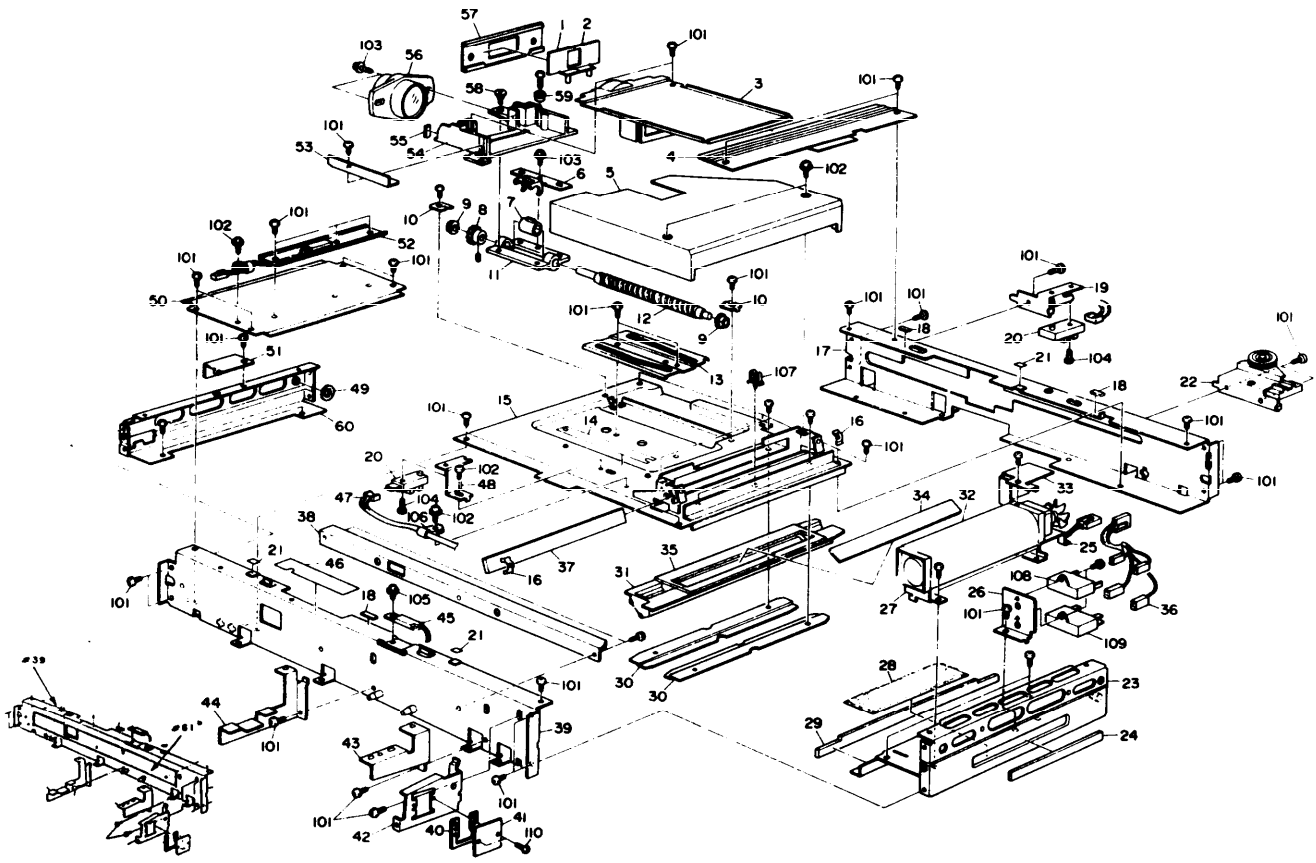

17. OPTICS SECTION (II)

Rev. 4/86

Index No.	Part No.	Description	Q'ty Per Assembly
1	52051794	Left Shield	1
2	52051797	Right Shield	1
3	52051772	Cover - Lens	1
4	52051911	Scale Mounting Bracket	1
5	52051835	4th Mirror Cover	1
6	52051976	Lens Housing Bracket	1
7	54421781	Nut - Lens Drive	1
8	54421782	Gear 18T - Lens Drive	1
9	50530447	Bushing - 6x10x6mm	2
10	52051781	Bushing Clamp - Lens Drive Screw	2
11	52051766	Bracket - Lens Housing	1
12	52051780	Lens Drive Screw	1
13	52051814	Complete - Lens Shield	1
14	52051823	Lens Support Plate Mylar	1
15	52051960	Lens Unit Base	1
16	52051847	Spring Plate	2
17	52051855	Rear Side Plate - Optics	1
18	54421924	Cushion - Exposure Glass	3
19	52151893	H.P. Sensor Bracket	1
20	52055251	LED Sensor Type - T	3
21	52051918	Mylar Seal - Glass Protection	3
22	52051875	Bracket - Wire Turn Pulley	1
23	52051926	Right Stay	1
24	52052734	Magnet - By-pass Table	1
25	52051934	Rear Bracket	1
26	52051931	Capacitor Bracket - 115V	1
	52051947	Bracket - Capacitor - 220V/240V	1
27	52051932	Front Bracket	1
28	52051930	Filter - Cooling Blower	1
29	52051929	Rubber Seal - Development	1
30	52051830	Toner Shield Rail	2
31	52051827	Frame - Toner Shield Glass	1
32	52055422	Cooling Blower - AC 20.5W	1
33	52051937	Motor Cover Bracket	1
34	52151829	Toner Shield Plastic	1

Index No.	Part No.	Description	Q'ty Per Assembly
35	52051831	Seal - Toner Shield Upper	1
36	52055459	Harness - Capacitor - 115V	1
37	52051845	4th Mirror	1
38	52151859	Scanner Guide	1
39	52051851	Front Side Plate - Optics	1
40	54201515	Plate - Key Counter	1
41	54031145	Cover - Key Counter	1
42	52051261	Bracket - Key Counter	1
43	52051260	Bracket - Upper Front Cover	1
44	52051259	Middle Bracket - Upper Front Cover	1
45	54225131	Reed Switch	1
46	52151926	Mylar Seal - Glass	1
47	52055468	Harness - Home Sensor Ass'y	1
48	52051828	H.P. Bracket	1
49	52051923	Spacer - 12.5x19x1mm	1
50	52051840	Optics Base Plate (Small)	1
51	52051914	Harness Holder	1
52	54425315	Anti-Condensation Heater - 10W	1
53	52051777	Actuator - Lens H.P. Switch	1
54	52051765	Lens Bracket	1
55	52051768	Rubber Seal - Mirror	1
56	52051751	Lens - F8/180	1
57	52051793	Shielding - Guide	1
58	54036118	Stepped Screw - Transformer	1
59	54421770	Cam - Optics Axis	1
60	52051910	Left Stay	1
61	52051966**	Mylar Sheet Terminal	1
36A	52055462	Harness - Capacitor 220/240	1

**Reference Tech Service Bulletin 5000-032

July 20,'84

Index No.	Part No.	Description	Q'ty Per Assembly
101	04340060W	Tapping Screw - M4x6	28
102	09644008W	Tapping Screw with Flat Washer - M4x8	2
103	09514008W	Philips Screw with Flat Washer - M4x8	2
104	03140100W	Philips Pan Head Screw - M4x10	3
105	09514006W	Philips Screw with Flat Washer - M4x6	1
106	11050008	Nylon Clip - 2N	1
107	11050106	Harness Clamp	1
108	16061173	Capacitor - 18uF AC220V	1
	16061217	Capacitor - 18uF AC240V 220/240V	1
109	16061172	Capacitor - 10uF AC220V	1
	16061219	Capacitor - 10uF AC240V 220/240V	1

18. MAIN MOTOR

July 20,'84

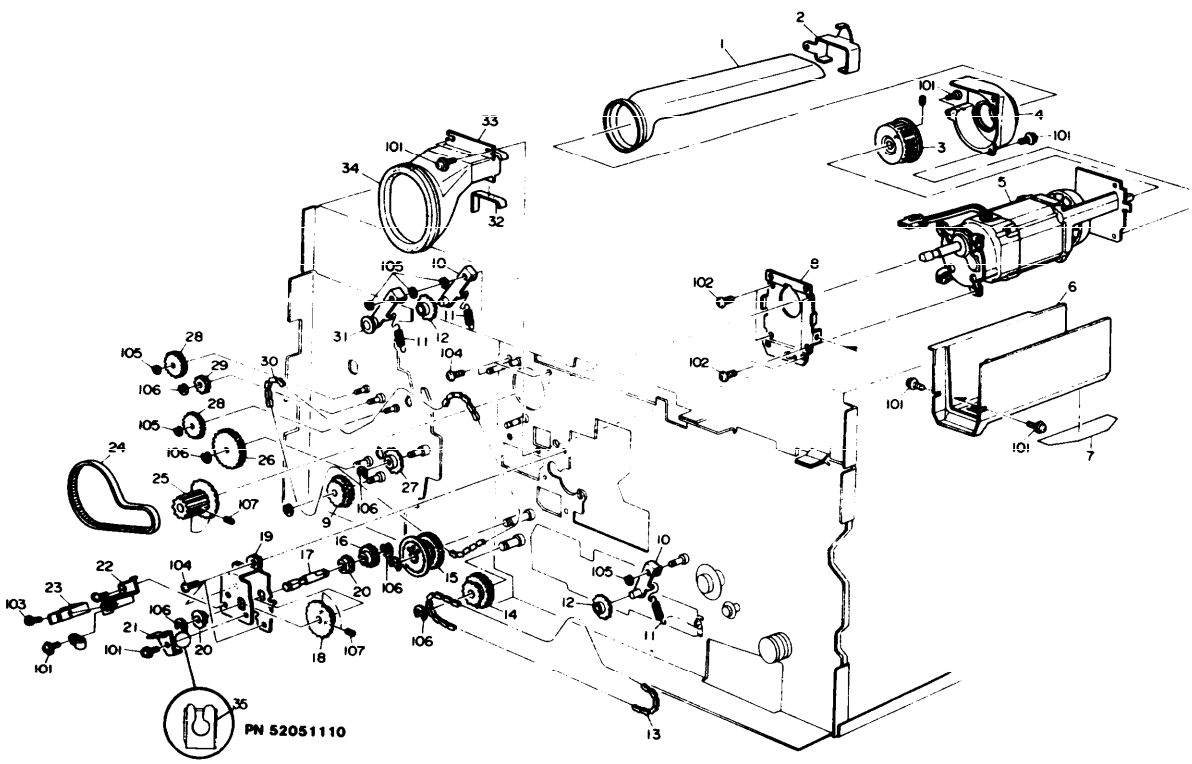

Index No.	Part No.	Description	Q'ty Per Assembly
1	52052053	Charge Corona Duct	1
2	52052052	Absorb Duct Bracket	1
3	54422143	Fan - Main Corona	1
4	52052040	Fan Casing	1
5	52055410	Main Drive Motor Ass'y - AC 45W	1
6	52051085	Cover - Main Drive Motor	1
7	52053948	Transport Guide Plate - Upper	1
8	52051082	Bracket - Main Drive Motor	1
9	52052634	Gear & Sprocket - 30T/20T	1
10	52051105	Tightener - Chain	2
11	54421111	Spring - Main Drive Tightener	3
12	54421110	Sprocket 20T	2
13	09160176	Bushed Roller Chain	1
14	52051102	Gear & Sprocket - 16T/40T	1
15	52051090	Perforated Disk	1
16	54421099	Gear - 24T	1
17	52051099	Shaft - Fusing Drive	1
18	54421100	Coupled Sprocket and Gear	1
19	52051096	Bracket - Fusing Drive	1
20	50530223	Bushing - 8mm	2
21	52051109	Chain Stopper	1
22	52051116	Bracket - Photointerrupter	1
23	52055251	LED Sensor Type - T	1
24	52051127	Timing Belt	1
25	52051083	Sprocket - 30T/50Hz	1
	52051084	Sprocket - 27T/60Hz	1
26	52052629	Gear - 44T	1
27	54421110	Sprocket 20T	1
28	AB013126	Gear - 30T	2
29	54473216	Gear - 18T	1
30	09160228	Bushed Roller Chain	1
31	52051121	Belt Tightener	1
32	52053947	Rubber Seal - Duct Transport	1
33	52053928	Vacuum Fan Duct	1
34	52053946	Rubber Seal - Fan Transport	1

Index No.	Part No.	Description	Q'ty Per Assembly
35	52051110	Clip - Chain Stopper	1
101	09644008W	Tapping Screw with Flat Washer - M4x8	7
102	03150080W	Philips Pan Head Screw - M5x8	4
103	03140100W	Philips Pan Head Screw - M4x10	1
104	03150080W	Philips Pan Head Screw - M5x8	2
105	07200050E	Retaining Ring - M5	4
106	07200060E	Retaining Ring - M6	5
107	05750060E	Hexagon Headless Set Screw - M5x6	4

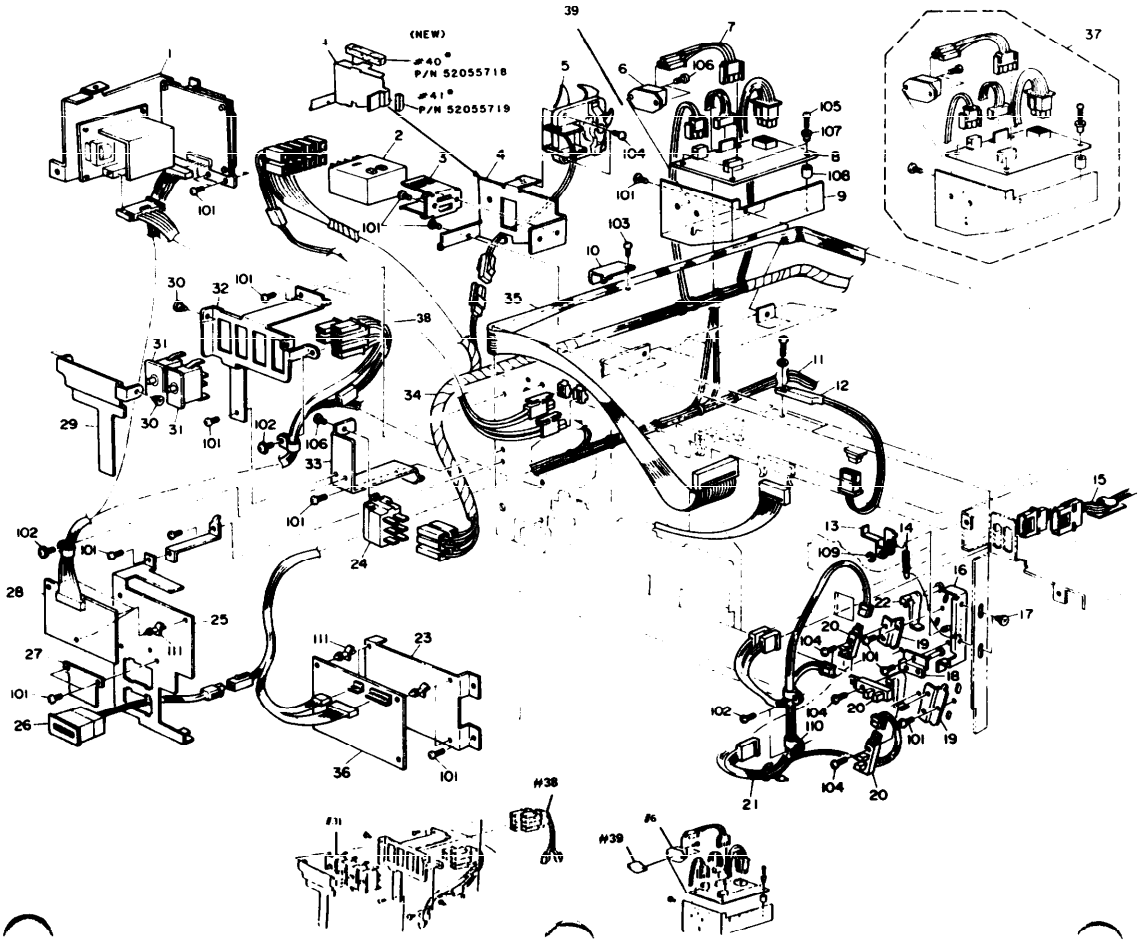
(NEW)
#40
P/N 52055718
#41
P/N 52055719
#38
#39

20. ELECTRICAL COMPONENT-I

Index No.	Part No.	Description	Q'ty Per Assembly
1	52055401	Lamp Regulator - 115V	1
	52055402	Lamp Regulator - 220V/240V	1
	52055560	Lamp Regulator - CANADA	1
2	12081029	Power Relay	1
3	11040224	Relay Bracket	1
4	52055717	Exhaust Fan Bracket	1
5	52055419	Exhaust Fan Motor - AC 13W	1
6	14050141	Triac - 600V/20A	1
7	54425270	Harness - Noise Filter	1
8	52055216	AC Drive Board	1
9	52055708	Bracket - AC Control	1
10	52051914	Harness Holder	1
11	52055452	DC Harness - FT5050	1
	52065450	DC Harness - FT5070	1
12	54225131	Reed Switch	1
13	52052838	Sensor Actuator Stopper	1
14	52052839	Spring - Sensor	1
15	52055497	Harness - Charge	1
16	52052837	Actuator - By-Pass Sensor	1
17	54032075	Stepped Screw	1
18	52052730	Bracket - By-Pass Feed Sensor	1
19	52052645	Bracket - Paper End Sensor	2
20	52055250	L.E.D. Sensor Type S	3
21	52055498	Harness - Paper Feed	1
22	52052644	Paper End Actuator	1
23	52055706	Bracket - Temperature Control	1
24	18230024	Switch	1
25	52055705	Bracket - Misfeed Location Board	1
26	54395246	Total Counter	1
27	54425856	Cover - Counter	1
28	52065210	Monitor Display Board - FT5070	1
	52055210	Moniter Display Board - FT5050	1
29	52055740	Safety Switch Actuator	1
30	54422117	Stepped Screw - Rail	2
31	12041280	Push Switch	2
32	52055707	Safety Switch Bracket	1

Index No.	Part No.	Description	Q'ty Per Assembly
	52055236	AC Drive Board - 220/240V	1
	52055238	Triac - 500V/16A (220/240)	
33	52055703	Main Switch Bracket	1
34	52055456	AC Harness - 115V	1
	52055486	AC Harness - 220/240V	1
35	52055480	Harness - Operation Panel	1
36	52055201	Temperature Control Board	1
37	52055215	AC Control Board - 115V	1
	52055235	AC Control Board - 220V/240V	1
38	52055499	Harness - Interlock (220/240)	1
39	10040143	Insulating Sheet (115V)	1
	52055239	Insulating Sheet (220/240)	1
40	52055718**	Seal 5x10x112mm	1
41	52055719	Seal 5x10x50mm	1
101	04340080W	Tapping Screw - M4x8	11
102	09644008W	Tapping Screw with Flat Washer - M4x8	4
103	04340060W	Tapping Screw - M4x6	1
104	03140100W	Philips Pan Head Screw - M4x10	3
105	03130140B	Philips Pan Head Screw - M3x14	4
106	03130060W	Philips Pan Head Screw - M3x6	2
107	10050600	Bushing	4
108	10050759	Collar -7.5mm	4
109	07200040E	Retaining Ring - M4	1
110	11050016	Nylon Clip - 4M	2
111	11060395	Clamp	7

**Reference Tech Service Bulletin 5000-032

21. ELECTRICAL COMPONENT-II

REV. 7/85

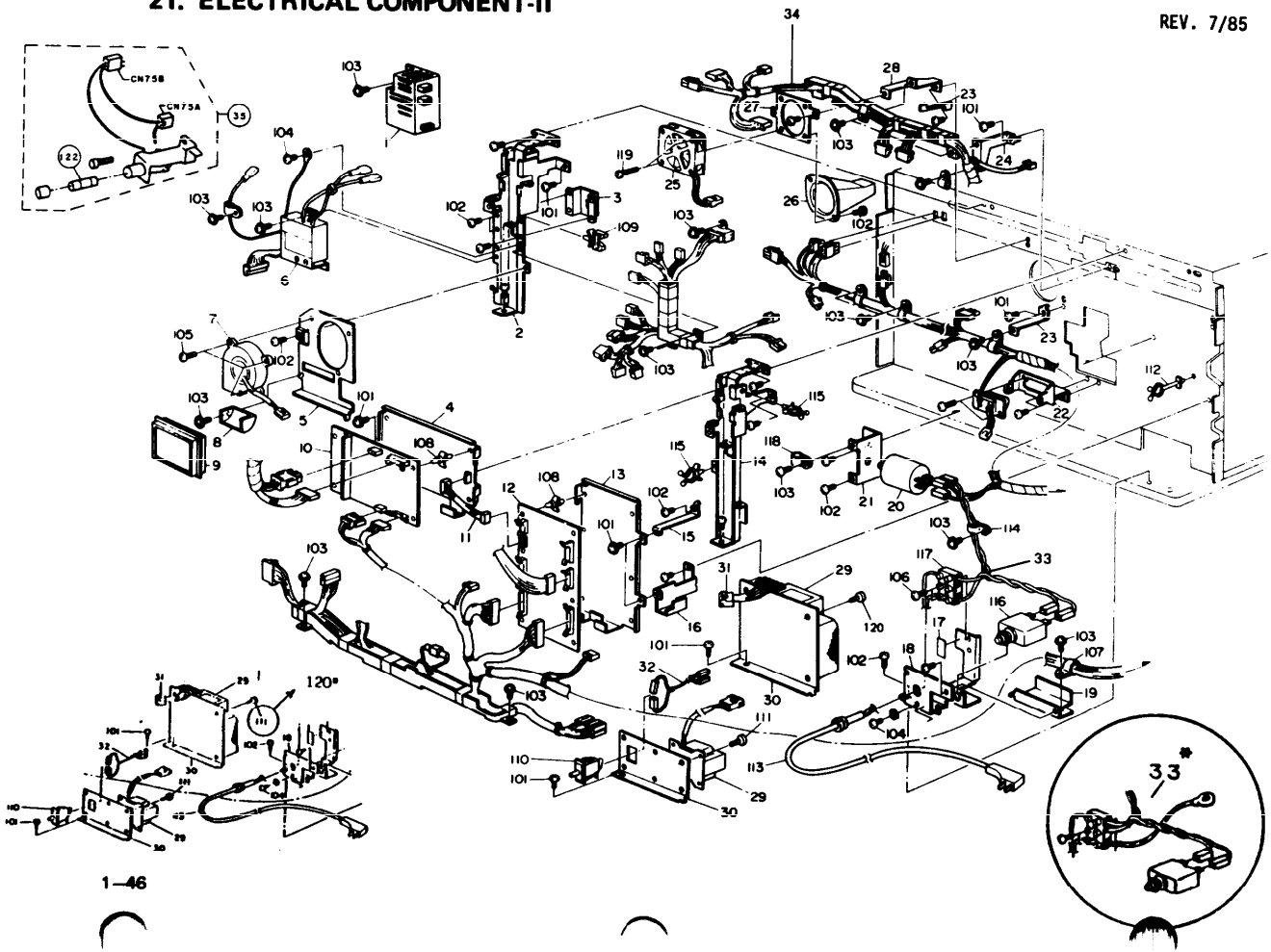

Index No.	Part No.	Description	Q'ty Per Assembly
1	52055358	Stabilizer	1
2	52051155	DF Mounting Bracket - Right	1
3	52052261	Drum Shaft Channel	1
4	52055721	Optics Board Bracket	1
5	52053932	Vacuum Fan Bracket	1
6	52055361	Power Pack - B/C/PCC	1
7	52055414	Vacuum Fan Motor Ass'y (AC 19W)	1
8	52053930	Exhaust Duct - Vacuum Fan	1
9	52053931	Ozone Filter	1
10	52055186	Optics Board	1
11	52055469	Interface Harness	1
12	52065651	Main Control Board - 115V	1
	52065661	Main Control Board - 220V/240V	1
13	52055720	Main Board Bracket	1
14	52051150	DF Mounting Bracket - Left	1
15	52055702	Angle - Main Board Bracket	1
16	52055712	Harness Guide Angle	1
17	54034335	Decal - Terminal 115V	1
	54474980	Decal - Terminal 220V/240V	1
18	52055727	Power Cord Bracket - 220V/240V	1
	52055728	Power Cord Bracket - 115V	1
19	52055711	Harness Guide Bracket	1
20	16020921	Noise Filter - 115V	1
	54425757	Noise Filter - 220V/240V	1
21	52055725	Noise Filter Bracket - 115V	1
	52055726	Noise Filter Bracket - 220/240V	1
22	52055715	Bracket - Fusing Harness	1
23	54425838	Angle - Cord Clamp 50	1
24	52051880	Clamp	1
25	54465403	Cooling Fan Motor - AC 12W	1
26	52055755	Duct - Cooling Fan	1
27	52055753	Bracket - Cooling Fan	1
28	52055752	Stay - Cooling Fan	1
29	52055405	Transformer - 115V	1
	52055407	Transformer - 220V/240V	1

Index No.	Part No.	Description	Q'ty Per Assembly
30	52055729	Transformer Bracket	1
31	52055494	Harness - Transformer 220V/240V	1
32	52055500	Harness - Safety Switch 115V	1
33	52055458	Harness - Terminal Block	1
34	52055470	Harness - Optics Board	1
35*	52055386	BLOWER FUSE ASSEMBLY	
101	04340060W	Tapping Screw - M4x6	4
102	04340080W	Tapping Screw - M4x8	8
103	09644006W	Tapping Screw with Flat Washer - M4x8	11
104	03140080M	Philips Pan Head Screw - M4x8	2
105	04340100W	Tapping Screw - M4x10	3
106	03130160W	Philips Pan Head Screw - M3x16	2
107	11050011	Nylon Clip - 8M	1
108	11060395	Clamp	8
109	11050106	Harness Clamp	1
110	12041241	Push Switch	1
111	03150060W	Philips Pan Head Screw M5 x 6	4
112	11050120	Harness Clamp	1
113	28010020	Power Supply Cord - 115V	1
	28010025	Power Supply Cord - 115V CANADA	1
	28010027	Power Supply Cord - 220V/240V	1
114	11050016	Nylon Clip - 4M	2
115	11050089	Cable Clip - 11.5mm	1
116	11070358	Circuit Breaker - 115V	1
	11070364	Circuit Breaker - 220V/240V	1
117	11010359	Terminal - 3P	1
118	11050010	Nylon Clip - 6M	1
119	03140450W	Philips Pan Head Screw - M4x45	2
120	09515008W	Philips Screw With Flat Washer - M5 x 8	
122*	11070497	Fuse - 0.5A	1

*Reference Tech Service Bulletin No. FT5000-026

22. MAIN CONTROL BOARD (FT5050/5070)

July 20,'84

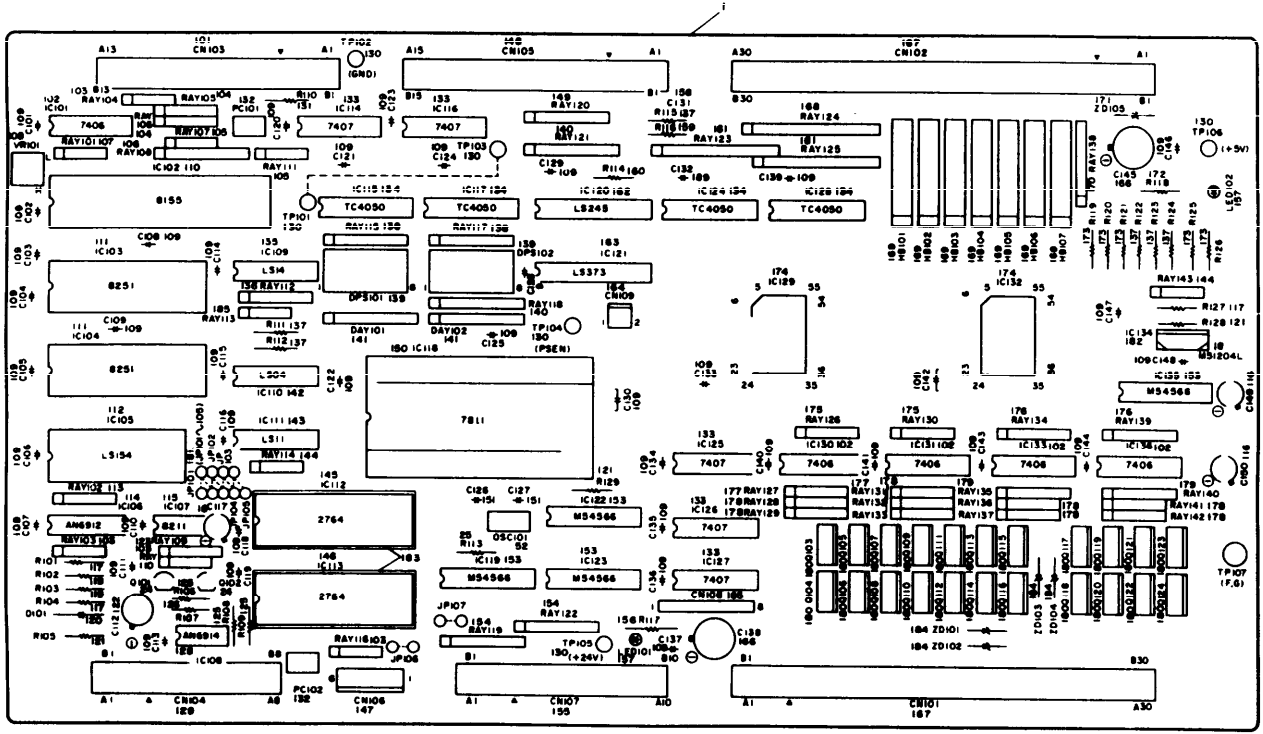

22. MAIN CONTROL BOARD (FT5050/5070)

Index No.	Part No.	Description	Q'ty Per Assembly
1	52065651	Main Control Board - 115V	1
	52065661	Main Control Board - 220V/240V	1
101	11030653	Connector - 34P	1
102	14071081	IC - MD7406P	5
103	16017256	Resistor Array - 10KΩ 1/8W	4
104	16017324	Resistor Array - 180Ω 1/4W	2
105	16017252	Resistor Array - 1KΩ 1/8W	3
106	16017271	Resistor Array - 4.7KΩ 1/8W	1
107	16017235	Resistor Array - 22KΩ 1/8W	1
108	16018150	Variable Resistor - 1KΩ 0.5W	1
109	16060998	Capacitor - 0.01uF 50V	40
110	14071259	IC - μPD8155C-2	1
111	14071015	IC - μPD8251AC	2
112	14071331	IC - μD74LS154	1
113	16017288	Resistor Array - 22KΩ 1/8W	1
114	14080256	IC - AN6912	1
115	14080188	IC - ICL8211CPA	1
116	16041197	Capacitor - 10uF 50V	3
117	16114104	Resistor - 100KΩ 1/4T ±5%	3
118	16225492	Resistor - 54.9KΩ 1/4T ±1%	1

Index No.	Part No.	Description	Q'ty Per Assembly
119	16222002	Resistor - 20KΩ 1/4T ±1%	1
120	14020247	Diode - W06B	1
121	16114105	Resistor - 1MΩ 1/4T ±5%	3
122	16060999	Capacitor - 0.1uF 25V	1
123	16017225	Resistor Array - 1KΩ 1/8W	1
124	14000305	Transistor - 2SC1815	2
125	16114472	Resistor - 4.7KΩ 1/4T ±5%	4
126	16114680	Resistor - 68Ω 1/4T ±5%	1
127	16040931	Capacitor - 47uF 50V	1
128	14080258	IC - AN6914	1
129	11030655	Connector - 16P	1
130	11010328	Connector Pin Contact	6
131	16114181	Resistor - 180Ω 1/4T ±5%	1
132	14030209	Photocoupler - PC627	2
133	14070975	IC - MD7407P	5
134	14070605	IC - TC4050BP	4
135	14071023	IC - MD74LS14	1
136	16017265	Resistor Array - 10KΩ 1/8W	1
137	16114332	Resistor - 3.3KΩ 1/4T ±5%	6
138	16017178	Resistor Array - 120KΩ 1/4W ±5%	2
139	12041283	Dip-Switch	2
140	16017272	Resistor Array - 10KΩ 1/8W	2
141	14010818	Diode Array - MA425	2
142	14070508	IC - MD74LS04M	1
143	14071332	IC - MD74LS11	1
144	16017255	Resistor Array - 4.7KΩ 1/8W	2
145	52055654	IC - MD74LS107FP - 115V	1
	52055664	IC - MD74LS107FP - 220/240V	1
146	52055653	IC - MD74LS107FP - 115V	1
	52055663	IC - MD74LS107FP - 220/240V	1
147	11001093	Connector - 6P	1
148	11030652	Connector - 30P	1
149	16017285	Resistor Array - 10KΩ 1/8W ±5%	1
150	14071334	IC - μPD7810G	1
151	160..1184	Capacitor - 27PF 50V	2

July 20,'84

Index No.	Part No.	Description	Q'ty Per Assembly
152	15030070	Ceramic Oscillator - 10MHz	1
153	14010302	IC - M54566P	4
154	16017282	Resistor Array - 150Ω 1/4W	2
155	11030347	Connector - 8P	1
156	16116222	Resistor - 2.2MΩ 1/2T ±5%	1
157	14030255	LED-GL-3AR2	2
158	16060996	Capacitor - 470PF 25V	1
159	16114124	Resistor - 120KΩ 1/4T ±5%	1
160	16114473	Resistor - 47KΩ 1/4T ±5%	1
161	16017323	Resistor Array - 120KΩ 1/4W	2
162	14070794	IC - SN74LS245N	1
163	14071026	IC - SN74LS373N	1
164	11021567	Connector - 2P	1
165	11030367	Connector - 8P	1
166	16040931	Capacitor - 47uF 50V	2
167	11030648	Connector - 60P	2
168	16017380	Resistor Array - 3.3KΩ 1/8W	1
169	16020911	RC Array - RKR82	7
170	16017325	Resistor Array - 18KΩ 1/4W ±5%	1
171	14020429	Zener Diode - RD8.2FB2	1
172	16114471	Resistor - 470KΩ 1/4T ±5%	1
173	16114223	Resistor - 22KΩ 1/4T ±5%	5
174	14071335	IC - BP5002-005	2
175	16017318	Resistor Array - 22KΩ 1/8W	2
176	16017236	Resistor Array - 22KΩ 1/8W	2
177	16017319	Resistor Array - 1.2KΩ 1/4W	2
178	16017321	Resistor Array - 330Ω 1/8W	8
179	16017317	Resistor Array - 1.2KΩ 1/8W	2
180	14010234	Transistor - 2SB686	22
181	10020307	Jumper Wire	5
182	11040271	LSI Socket - 28P	2
184	14020264	Zener Diode - 1N751-1	4

23. OPTICS CONTROL BOARD (FT5050/5070)

July 20,'84

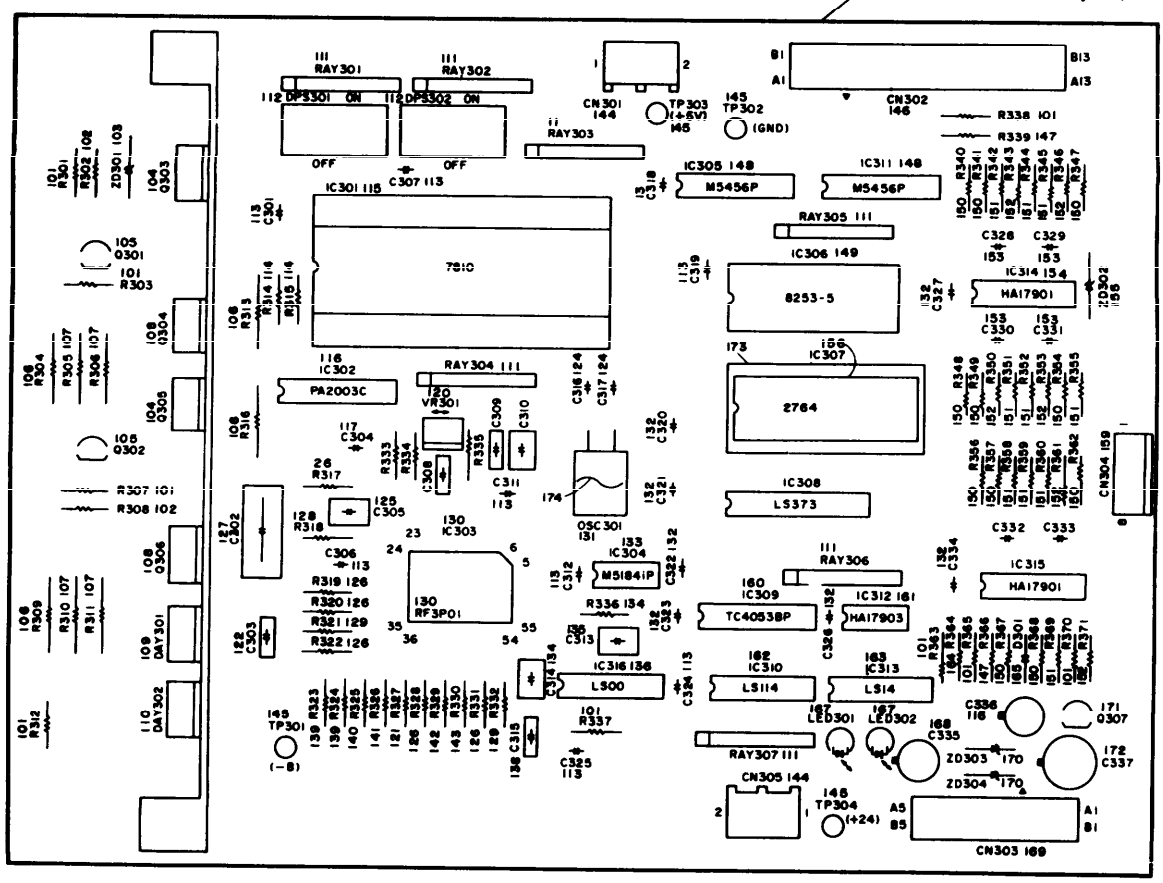

23. OPTICS CONTROL BOARD (FT5050/5070)

Index No.	Part No.	Description	Q'ty Per Assembly
1	52055186	Optics Control Board	1
101	16114102	Resistor - 1KΩ 1/4T	9
102	16114221	Resistor - 220Ω 1/4T ±5%	2
103	14020428	Varistor - Z1039	1
104	14010255	Transistor - 2SB872Q	2
105	14000291	Transistor - 2SA1020	2
106	16000462	Resistor - 560Ω 1W ±5%	4
107	16000463	Resistor - 0.22Ω 1W ±5%	4
108	14010263	Transistor - 2SD1377K	2
109	14020385	Diode Array - S5KC20	1
110	14020364	Diode Array - S5KC20R	1
111	16017271	Resistor Array - 4.7KΩ 1/8W	7
112	12041283	Dip-Switch	2
113	16060999	Capacitor - 0.1uF 25V	8
114	16114222	Resistor - 2.2KΩ 1/4T ±5%	2
115	14071334	IC - uPD7810G	1
116	14010192	IC - uPA2003C	1
117	16040891	Capacitor - 33uF 35V	1
118	16221213	Resistor - 121KΩ 1/4W ±1%	1
119	16223921	Resistor - 3.92KΩ 1/4W ±1%	1
120	16018147	Variable Resistor - 10KΩ 0.5W	1
121	16221502	Resistor - 15KΩ 1/4T ±1%	2
122	16061178	Capacitor - 0.01uF 50V	2
123	16061176	Capacitor - 0.0022uF 100V	1
124	16060995	Capacitor - 10PF 50V	2
125	16061179	Capacitor - 0.1uF 63V	2
126	16221002	Resistor - 10KΩ 1/4T ±5%	6
127	16061181	Capacitor - 3.3uF 63V	1
128	16228252	Resistor - 82.5KΩ 1/4W ±1%	1
129	16223322	Resistor - 33.2KΩ 1/4W ±1%	1
130	14080299	LSI - RF3P01	1
131	15030049	X-tal Oscillator - 10MHz	1
132	16060689	Capacitor - 0.01uF 50V	8
133	14080052	IC - M51841P	1
134	16223321	Resistor - 3.32KΩ 1/4W ±1%	1
135	16061175	Capacitor - 0.022uF 100V	1
136	14070520	IC - MD74LS00	1
137	16061180	Capacitor - 0.33uF 63V	1
138	16061177	Capacitor - 0.001uF 50V	1
139	16221212	Resistor - 12.1KΩ 1/4W ±1%	2
140	16225112	Resistor - 51.1KΩ 1/4T ±1%	1
141	16223922	Resistor - 39.2KΩ 1/4T ±1%	1
142	16228872	Resistor - 88.7KΩ 1/4T ±1%	1
143	16221003	Resistor - 100KΩ 1/4T ±1%	1
144	11020995	Connector - 2P	2
145	11010328	Connector Pin Contact	4
146	11030653	Connector - 34P	2
147	16114221	Resistor - 220Ω 1/4T ±5%	2
148	14010303	IC - M54567P	2
149	14071190	IC - uPD82533C-5	1
150	16114104	Resistor - 100KΩ 1/4T ±5%	11
151	16114103	Resistor - 10KΩ 1/4T ±5%	10
152	16114332	Resistor - 3.3KΩ 1/4T ±5%	6
153	16060916	Capacitor - 0.01uF 50V	5

July 20,'84

Index No.	Part No.	Description	Q'ty Per Assembly
154	14080099	IC - HA17901P	1
155	14020277	Zener Diode - 1Z12	1
156	52055184	IC - Intel 2764-25ROM	1
157	14071026	IC - SN74LS373N	1
158	16060686	Capacitor - 0.07uF 50V	1
159	11001093	Connector - 6P	1
160	14070660	IC - TC4053BP	1
161	14080233	IC - HA17903PS	1
162	14070841	IC - SN74LS114N	1
163	14071023	IC - MD74LS14P	1
164	16114152	Resistor - 1.5KΩ 1/4T ±5%	1
165	14010611	Diode - 1S1588	1
166	16041166	Capacitor - 1uF 50V	1
167	14030255	LED - GL-3AR2	2
168	16041164	Capacitor - 100uF 16V	1
169	11030654	Connector - 10P	1
170	14020428	Varistor - Z1039	2
171	14082068	Transistor - 2SA733	1
172	16041168	Capacitor - 220uF 35V	1
173	11040271	LSI Socket: 28P	1
174	10020307	Jumper Wire	1

24. OPERATION BOARD-I (FT5050/5070)

July 20,'84

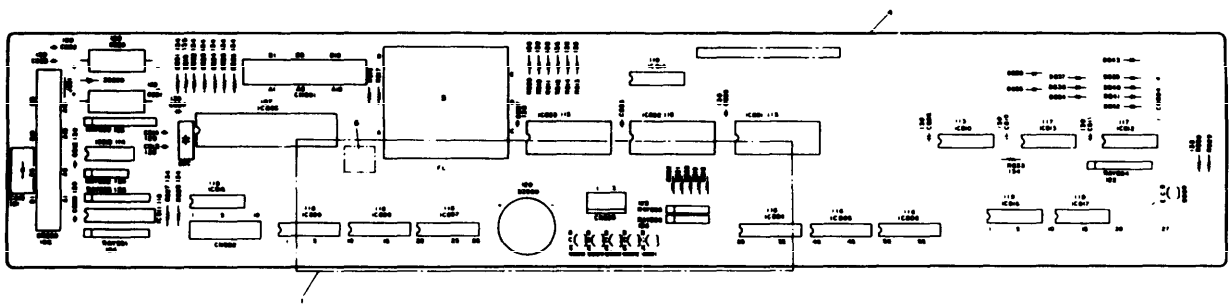

Index No.	Part No.	Description	Q'ty Per Assembly
1	52055132	Indicator Tube - 115V	1
	52055133	Indicator Tube - 220/240V	1
	52055134	Indicator Tube - CANADA	1
2	52055140	Grounding Wire - Operation	1
3	52055142	IC - Intel 8742 - 115V	1
	52055143	IC - Intel 8742 - 220/240V	1
4	52055122	Operation Board - 1 115V FT5050, FT5070	1
	52055123	Operation Board - 1 220/240V FT5050, FT5070	1
5	52055355	FL Converter - 115V	1
6	52055846	Indicator Tube Cushion	3
7	54085160	Short Connector	1
5A	52056356	FL Converter - 220 240V	1
101	11000844	Socket - MATE-N-LOCK	4
102	11001095	Connector - 10P	1
103	11020185	Connector - 4P	1
104	11030428	Connector - 20P	1
105	11030622	Connector - 3P	1
106	11030652	Connector - 30P	1
107	11040338	IC Socket - 40P	1
108	14000180	Transistor - 2SA777	5
109	14010305	Transistor - 2SA684R	1
110	14010611	Diode - 1S1588	7

Index No.	Part No.	Description	Q'ty Per Assembly
111	14020353	Zener Diode - RD8.2F-B	1
112	14020423	Diode - S5500G	1
113	14070972	IC - HD74LS42P	1
114	14070975	IC - HD7407P	1
115	14070988	IC - uPD8243C	3
116	14071003	IC - MSL915RS	6
117	14071084	IC - uPD4049C	2
118	14071198	IC - SN74LS245N	1
119	14071348	IC - TD62304P	4
120	15020010	Buzzer - PB2130B03	1
121	15030028	Ceramic Oscillator - 6MHz	1
122	16017056	Resistor Array - 4.7KΩ	2
123	16017167	Resistor Array - 4.7KΩ 1/8W	1
124	16017327	Resistor Array - 1KΩ 1/8W	1
125	16017328	Resistor Array - 1KΩ 1/8W	1
126	16017329	Resistor Array - 1KΩ 1/8W	1
127	16017330	Resistor Array - 150KΩ 1/8W	1
128	16040930	Capacitor - 100uF 50V	2
129	16060345	Capacitor - 10pF 50V	2
130	16060689	Capacitor - 0.01uF 50V	11
131	16060762	Capacitor - 0.01uF 500V	1
132	16114102	Resistor - 1KΩ 1/4T	5
133	16114273	Resistor - 27KΩ 1/4T ±5%	1
134	16114472	Resistor - 4.7KΩ 1/4T ±5%	10
135	16114621	Resistor - 620Ω 1/4T	3
136	16116391	Resistor - 390Ω 1/2T ±5%	5

25. OPERATION BOARD-II (FT5050)

July 20,'84

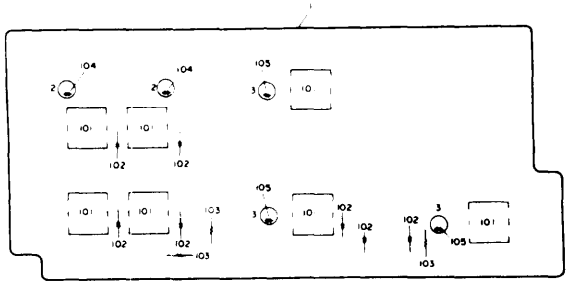

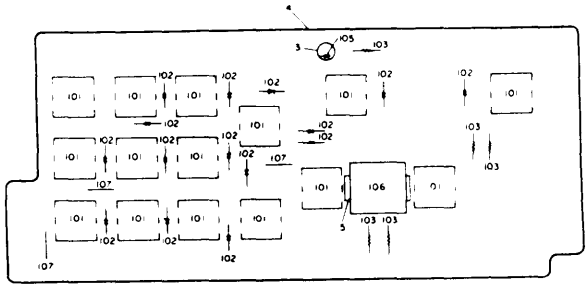

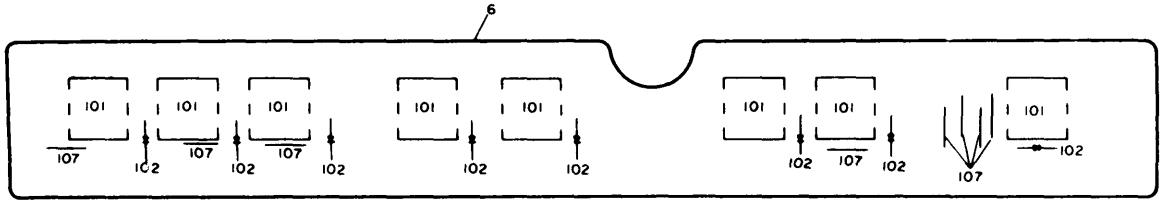

25. OPERATION BOARD-II (FT5050)

Index No.	Part No.	Description	Q'ty Per Assembly
1	52055157	Operation Board - Left	1
2	52055840	Spacer - LED	2
3	54425120	Spacer - LED	4
4	52055158	Operation Board - Right	1
5	52055839	Spacer - LED	1
6	52055156	Operation Board - Center	1

Index No.	Part No.	Description	Q'ty Per Assembly
101	12041190	Switch	30
102	14010611	Diode - 1S1588	30
103	16116391	Resistor - 390Ω 1/2T ±5%	8
104	14030326	LED - EPY5638S	2
105	14030262	LED - EPY5534S	4
106	14030334	LED - MU08-9301	1
107	10020307	Jumper Wire	11

26. DC POWER SUPPLY BOARD (FT5050/5070)

July 20,'84

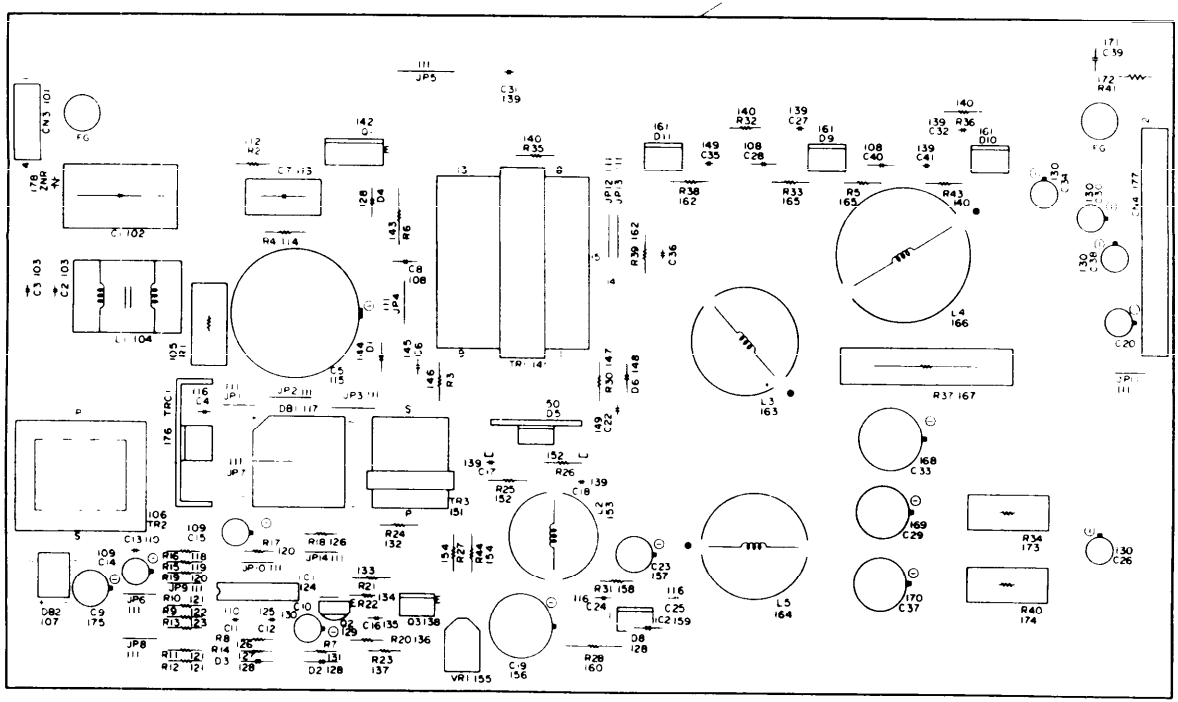

26. DC POWER SUPPLY BOARD (FT5050/5070)

Index No.	Part No.	Description	Q'ty Per Assembly
1	52055530	Power Supply Unit - 115V	1
	52055520	Power Supply Unit - 220/240V	1
101	11031408	Connector - 4P	1
102	16061162	Capacitor - 0.22uF AC 250V	1
103	16061207	Capacitor - 2200pF AC 250V 220/240V	2
	16061121	Capacitor - 0.1uF 25V	2
104	12010069	SN Coil - 220/240V	1
	12010061	SN Coil - 115V	1
105	16000586	Resistor - 10Ω 5T ±10%	1
106	52055546	Transformer	1
107	14050129	Rectifier - 1B4B42	1
108	16061168	Capacitor - 4700pF 1KV	1
109	16041199	Capacitor - 47uF 35V	2
110	16061165	Capacitor - 0.001uF 100V	2
111	10020307	Jumper Wire	14
112	16000584	Resistor - 68Ω 1T ±10%	1
113	16061163	Capacitor - 0.47uF DC 250V	1
114	16000471	Resistor - 4.7Ω 1T ±10%	1
115	16041313	Capacitor - 100uF DC 200V	1
116	16060472	Capacitor - 0.1uF 50WV	1

Index No.	Part No.	Description	Q'ty Per Assembly
117	14020328	Diode - S5VB40	1
118	16114162	Resistor - 1.6KΩ 1/4T ±5%	1
119	16114331	Resistor - 330Ω 1/4T ±5%	1
120	16114101	Resistor - 100Ω 1/4T ±5%	2
121	16114222	Resistor - 2.2KΩ 1/4T ±5%	3
122	16114182	Resistor - 1.8KΩ 1/4T	1
123	16114473	Resistor - 47KΩ 1/4T ±5%	1
124	14080245	IC - MB3759	1
125	16061164	Capacitor - 0.0022uF 100V	1
126	16114123	Resistor - 12KΩ 1/4T ±5%	2
127	16221372	Resistor - 13.7KΩ 1/4T ±5%	1
128	14020423	Diode - S5500G	5
129	14000266	Transistor - 2SC1213AC	1
130	16041197	Capacitor - 10uF 50V	6
131	16114223	Resistor - 22KΩ 1/4T ±5%	1
132	16000476	Resistor - 220Ω 1T ±10%	1
133	16000512	Resistor - 270Ω 1T ±10%	1
134	16114102	Resistor - 1KΩ 1/4T	1
135	16061166	Capacitor - 0.01uF 50V	1
136	16114472	Resistor - 4.7KΩ 1/4T ±5%	1
137	16114331	Resistor - 330Ω 1/4T ±5%	1
138	14010254	Transistor - 2SC1827Y	1
139	16061103	Capacitor - 2200pF 1KV	6
140	16000471	Resistor - 4.7Ω 1T ±10%	4
141	52055545	Transformer	1
142	14010245	IC - M54523P	1
143	16000578	Resistor - 30KΩ 1T ±10%	1
144	14010780	Diode - 1S1834	1
145	16061167	Capacitor - 1000PF 2kV	1
146	16000475	Resistor - 100Ω 1T ±10%	1
147	16000580	Resistor - 1Ω 1T ±10%	1
148	14010813	Diode - S52950	1
149	16060974	Capacitor - 680uF 1KV	1
150	14020479	Diode - G8P04Q	1
151	68440160	Transformer - TR3	1

July 20,'84

Index No.	Part No.	Description	Q'ty Per Assembly
152	16000581	Resistor - 3.3Ω 1T ±10%	2
153	52055541	Choke Coil - L2	1
154	16000579	Resistor - 0.1Ω 1T ±10%	2
155	16018234	Variable Resistor - 1KΩ 0.2W	1
156	16041317	Capacitor - 220u DC 10V	1
157	16041244	Capacitor - 47uF 25V	1
158	16000583	Resistor - 150Ω 1T ±10%	1
159	14080266	IC - μPC78M05H	1
160	16000577	Resistor - 27Ω 1T ±10%	1
161	14020480	Diode - 5CL2C41	1
162	16000473	Resistor - 47Ω 1T ±10%	2
163	52055542	Choke Coil - L3	1
164	52055544	Choke Coil - L5	1
165	16000582	Resistor - 68Ω 1T ±10%	2
166	52055543	Choke Coil - L4	1
167	16000585	Resistor - 100Ω 10T ±10%	1
168	16041314	Capacitor - 470uF DC 50V	1
169	16041198	Capacitor - 470uF DC 35V	1
170	16041315	Capacitor - 220uF DC 50V	1
171	16060931	Capacitor - 10000pF DC 500V	1
172	16114104	Resistor - 100KΩ 1/4T ±5%	1
173	16000587	Resistor - 130Ω 5T ±10%	1
174	16000588	Resistor - 200Ω 5T ±10%	1
175	16041316	Capacitor - 220uF DC 35V	1
176	14050137	Triac - BCR8AM-8	1
177	11031409	Connector - 12P	1
178	14040106	Varistor - Z15L221	1
179	11070377	Thermofuse (220/240)	1
180	11050138	Wire Band (220/240)	

27. TEMPERATURE CONTROL BOARD (FT5050/5070)

July 20,'84

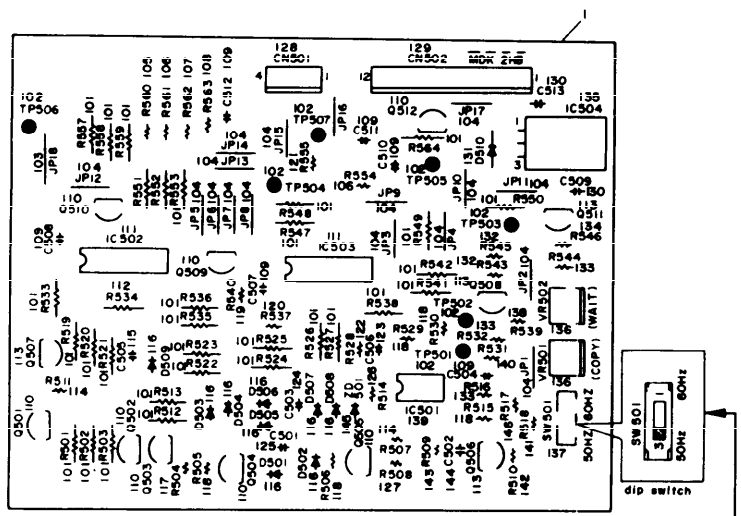

CAUTION: Make sure that the dip switch on the board is set for the correct frequency (50Hz/60Hz). In general service parts are shipped as 50Hz.

2[illegible] EMPERATURE CONTROL BOARD (FT50[illegible]5070)

Index No.	Part No.	Description	Q'ty Per Assembly
1	52055201	Temperature Control Board	1
101	16114103	Resistor - 10KΩ 1/4T ±5%	31
102	11010328	Connector Pin Contact	7
103	10050792	Jumper Wire	1
104	68431222	Jumper Wire	17
105	16221212V	Resistor - 12.1KΩ 1/4V ±5%	1
106	16225621V	Resistor - 5.62KΩ 1/4W ±1%	2
107	16114820V	Resistor - 82Ω 1/4V ±5%	1
108	16223011V	Resistor - 3.01KΩ 1/4V ±1%	1
109	16060689	Capacitor - 0.01μF 50V	6
110	14000082	Transistor - 2SC945	8
111	14080099	IC - HA17901P	2
112	16114475	Resistor - 4.7MΩ 1/4T ±5%	1
113	14000234	Transistor - 2SA673A	4
114	16114223V	Resistor - 22KΩ 1/4V ±5%	2
115	16060988	Capacitor - 0.01μF 50V	1
116	14010611	Diode - 1S1588	9
117	16114102V	Resistor - 1KΩ 1/4V ±5%	1
118	16114104V	Resistor - 100KΩ 1/4T ±5%	5
119	16222801V	Resistor - 2.8KΩ 1/4V ±1%	1
120	16221182V	Resistor - 11.8KΩ 1/4V ±1%	1
121	16224642V	Resistor - 46.4KΩ 1/4W ±1%	1
122	16114105V	Resistor - 1MΩ 1/4V ±5%	1
123	16060987	Capacitor - 4μF	1
124	16060684	Capacitor - 0.001μF 50V	1
125	16060990	Capacitor - 0.047μF 50V	1
126	16114331V	Resistor - 330Ω 1/4V ±5%	1
127	16114222V	Resistor - 2.2KΩ 1/4V ±5%	1
128	11001092	Connector - 4P	1
129	11001096	Connector - 12P	1
130	16060613	Capacitor - 0.1μF 50V	2
131	14020467	Diode - S5566G	1
132	16223300V	Resistor - 330Ω 1/4T ±1%	2
133	16221002V	Resistor - 10KΩ 1/4V ±1%	3
134	16221001V	Resistor - 1KΩ 1/4V ±1%	1
135	14080260	IC - HA7818P	1
136	16018156	Variable Resistor - 2KΩ 0.5W	2
137	12041184	Switch - SSS21200	1
138	16221022V	Resistor - 10.2KΩ 1/4V ±1%	1
139	14080098	IC - HA17458PS	1
140	16226801V	Resistor - 6.8KΩ 1/4V ±1%	1
141	16222492V	Resistor - 24.9KΩ 1/4V ±1%	1
142	16221243V	Resistor - 124KΩ 1/4W ±1%	1
143	16114221V	Resistor - 220Ω 1/4V ±5%	1
144	16060989	Capacitor - 0.03μF 50V	1
145	14020384	Zener Diode - HZ12C-1	1
146	16222211V	Resistor - 2.21KΩ 1/4V ±1%	1

28. AC POWER SUPPLY BOARD (FT5050/5070)

July 20,'84

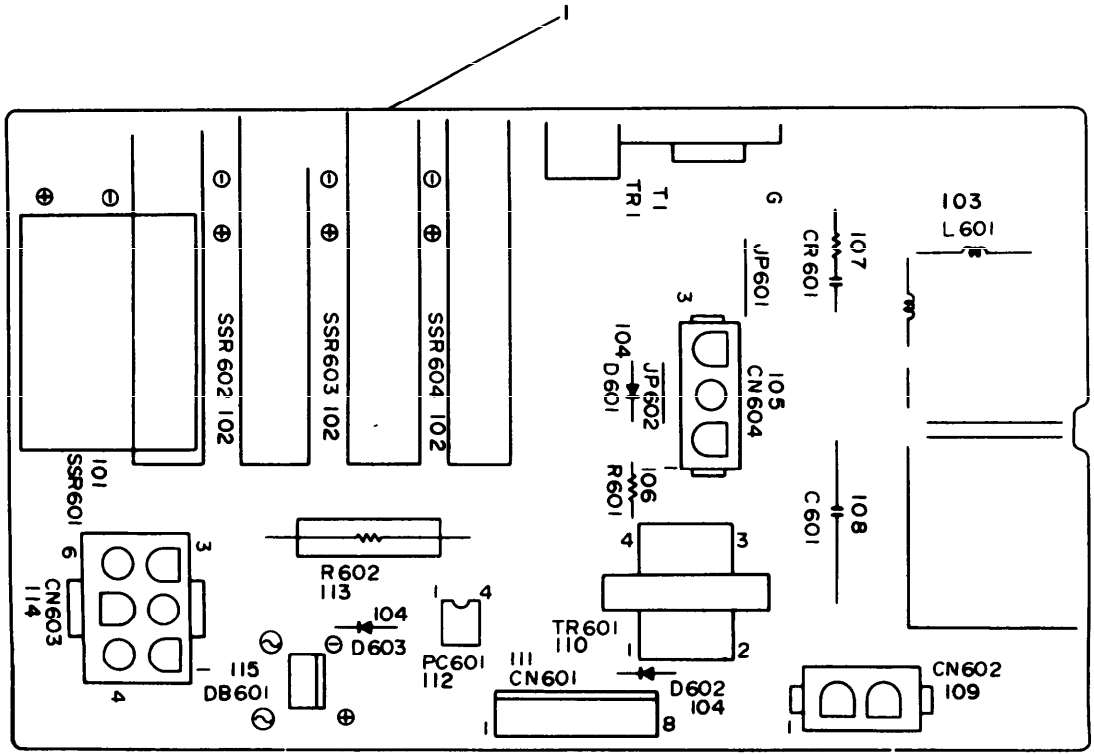

2 .C POWER SUPPLY BOARD (FT5050/507

REV.

Index No.	Part No.	Description	Q'ty Per Assembly
1	52055216	AC Drive Board	1
	52055236	AC Drive Board - 220/240V	1

Index No.	Part No.	Description	Q'ty Per Assembly
101	12080480	Solid State Relay (115V)	1
102	12081024	Solid State Relay - 220/240V	3
103	16070039	SF Coil - 60μF	1
	16070053	SF Coil - 220/240V	1
104	14020467	Diode - S5566G	3
105	11021194	Connector - 3P	1
106	16114101	Resistor - 100Ω 1/4T ±5%	1
107	16020895	Noise Killer - 0.1μF 120Ω	1
	16020920	Noise Killer - 0.1μF 120Ω 220/240V	1
108	16060919	Capacitor - 0.33μF 630V - 115V	1
	16060993	Capacitor - 0.47μF (220/240V)	1
109	11020995	Connector - 2P	1
110	12010080	Transformer 115V	1
111	11030773	Connector - 8P	1
112	14030238	Photocoupler - TLP521-1	1
113	52059107	Resistor - 33kΩ 3W	1
114	11020997	Connector - 6P	1
115	14050130	Rectifier - 1G4B42	1
110A	12010084	Transformer 220/240V	1

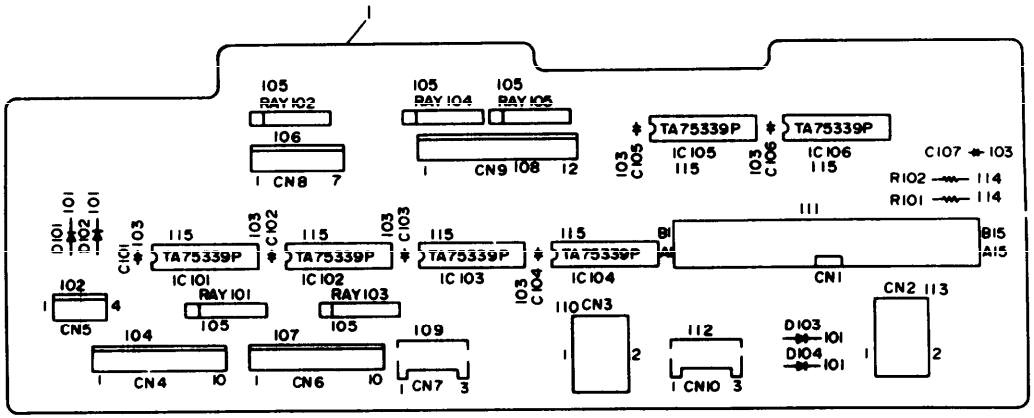
1
105
RAY 102
106
1 CN8 7
105
RAY 104
105
RAY 105
1 CN9 108 12
TA75339P
IC 105
115
TA75339P
IC 106
115
103
C105
103
C106
C107 103
R102 114
R101 114
111
B1
A1
B15
A15
CN1
D101 101
D102 101
C101 103
115
TA75339P
IC 101
103
C102
115
TA75339P
IC 102
103
C103
115
TA75339P
IC 103
103
C104
115
TA75339P
IC 104
102
1 4
CN5
RAY 101
105
RAY 103
105
104
1 CN4 10
107
1 CN6 10
109
1 CN7 3
110 CN3
1 2
112
1 CN10 3
D103 101
D104 101
CN2 113
1 2

Index No.	Part No.	Description	Q'ty Per Assembly
1	52055240	Feed Control Board	1

Index No.	Part No.	Description	Q'ty Per Assembly
101	14020423	Diode - S5500G	4
102	11030814	Connector - 4P	1
103	16060998	Capacitor - 0.01uF 50V	7
104	11001095	Connector - 10P	1
105	16017167	Resistor Array - 4.7KΩ 1/8W ±5%	5
106	11031401	Connector - 7P	1
107	11031402	Connector - 10P	1
108	11031403	Connector - 12P	1
109	11030622	Connector - 3P	1
110	11031400	Connector - 2P	1
111	11030652	Connector - 30P	1
112	11031399	Connector - 3P	1
113	11031398	Connector - 2P	1
114	16114103	Resistor - 10KΩ 1/4W ±5%	2
115	14080200	IC - TA75339P	6

30. DC HARNESS (FT5050)

July 20,'84

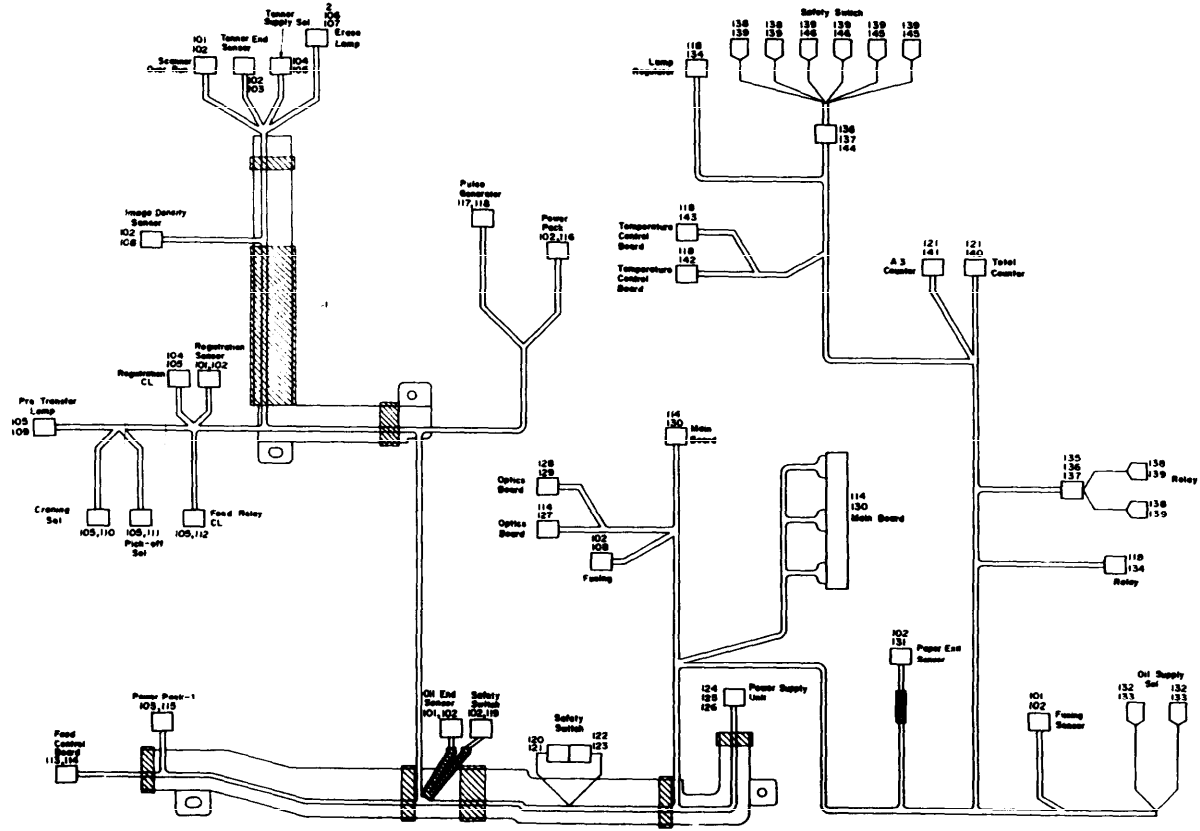

Index No.	Part No.	Description	Q'ty Per Assembly
1	52055452	DC Harness - FT5050	1
2	52052070	Holder	1
101	11021089	Connector - 3P	4
102	11001089	Socket - MATE-N-LOCK	33
103	11021423	Housing - 3P Block	1
104	11021306	Connector - 3P	2
105	11001159	Socket - MATE-N-LOCK	26
106	11021683	Connector - 12P	1
107	11001254	Socket - MATE-N-LOCK	12
108	11021090	Connector - 4P	2
109	11021307	Connector - 4P	1
110	11021397	Connector - 2P	1
111	11021396	Connector - 2P	1
112	11021326	Connector - 3P	1
113	11030660	Connector - 16P	1
114	11001182	Socket - MATE-N-LOCK	114
115	11021312	Connector - 14P	1
116	11021178	Socket Housing - EI Connector - 5P	1
117	11021620	Connector - 3P	1
118	11001249	Receptacle Terminal	34

Index No.	Part No.	Description	Q'ty Per Assembly
119	11021412	Connector - 2P	1
120	11021514	Connector - 1P	1
121	11001240	Socket - MATE-N-LOCK	7
122	11021506	Connector - 1P	1
123	11001238	Pin - MATE-N-LOCK	1
124	11021785	Connector - 11P	1
125	11001301	Fastening Receptacle	5
126	11001300	Fastening Receptacle	6
127	11030664	Connector - HIF3C-10D-2.54C-3	1
128	11020983	Connector - 2P	1
129	11001042	Socket - MATE-N-LOCK	2
130	11030656	Connector - 16P	2
131	11021091	Connector - 6P	1
132	11020687	Fastening Receptacle	2
133	11000309	Fastening Receptacle	2
134	11021642	Receptacle Housing - 8P	2
135	14020388	Diode - W03C	1
136	11021286	Connector	2
137	11001155	Noise Filter	4
138	11021404	Receptacle Housing - 1P	4
139	11001172	Fastening Receptacle	8
140	11021509	Connector - 4P	1
141	11021515	Connector - 2P	1
142	11021621	Connector - 4P	1
143	11021784	Receptacle Terminal	1
144	14020379	Varistor - 1ZM50C	1
145	11021402	Connector - 1P	2
146	11021403	Receptacle Housing	2

31. AC HARNESS–115V (FT5050/5070)

July 20,'84

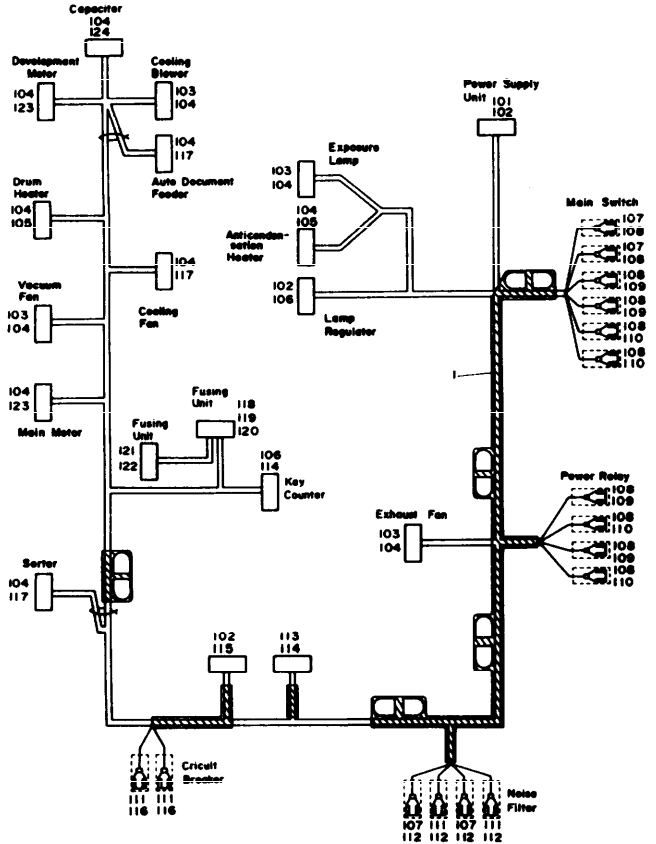

31. AC HARNESS – 115V (FT5050/5070)

July 20, '84

Index No.	Part No.	Description	Q'ty Per Assembly
1	52055456	AC Harness - 115V	1

Index No.	Part No.	Description	Q'ty Per Assembly
101	11020512	Connector - 3P	1
102	11001042	Socket - MATE-N-LOCK	12
103	11021515	Connector - 2P	4
104	11001241	Socket - MATE-N-LOCK	28
105	11021532	Connector - 2P	2
106	11020782	Connector - 4P	2
107	11021404	Receptacle Housing - 1P	4
108	11001172	Fastening Receptacle	10
109	11021401	Connector - 1P	4
110	11021402	Connector - 1P	4
111	11021403	Receptacle Housing	4
112	11001171	Fastening Receptacle	4
113	11020983	Connector - 2P	1
114	11000916	Pin - MATE-N-LOCK	6
115	11020987	Connector - 6P	1
116	11001170	Fastening Receptacle	2
117	11021543	Connector - 2P Green	3
118	11021342	Connector - 8P	1
119	11001188	Pin - MATE-N-LOCK	2
120	11001187	Pin - MATE-N-LOCK	4
121	11021661	EI Cap Housing - 4P	1
122	11001253	Pin Connector - EI Cap Housing	4
123	11021516	Connector - 3P	2
124	11021533	Connector - 3P	1

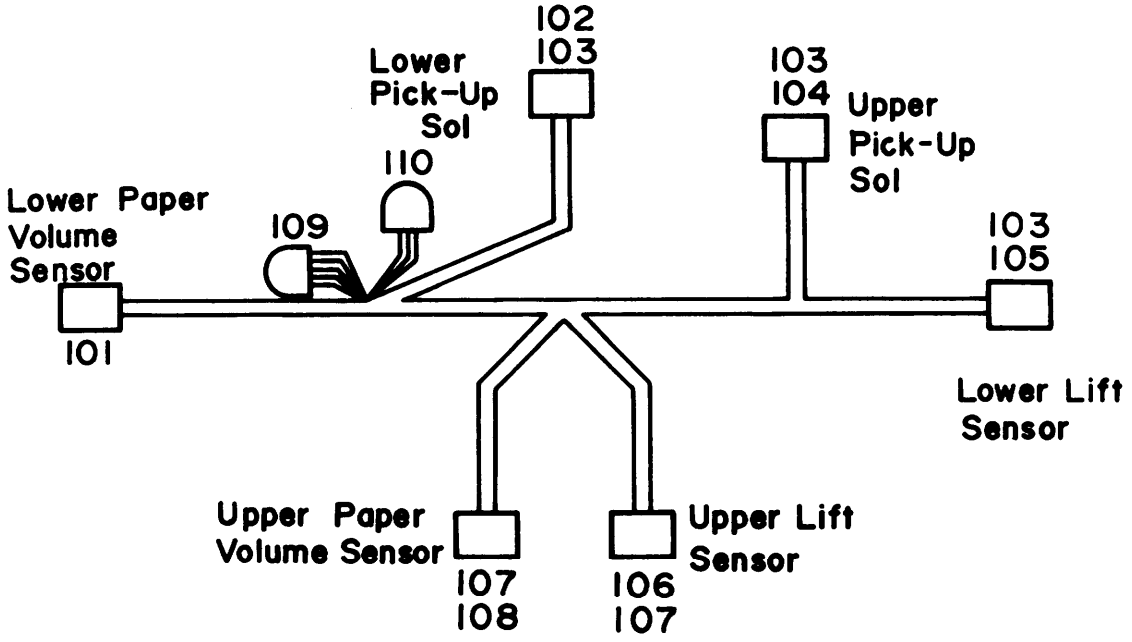
102
103
Lower
Pick-Up
Sol
110
103
104
Upper
Pick-Up
Sol
Lower Paper
Volume
Sensor
109
103
105
101
Lower Lift
Sensor
Upper Paper
Volume Sensor
107
108
106
107
Upper Lift
Sensor

Index No.	Part No.	Description	Q'ty Per Assembly
1	32055498	Harness - Fusing	1

Index No.	Part No.	Description	Q'ty Per Assembly
101	11031340	Insulating Sleeve	1
102	11021786	Connector - 3P	1
103	11001249	Receptacle Terminal	9
104	11021787	Connector - 3P	1
105	11021620	Receptacle Housing - 3P	1
106	11021422	Housing - 6P Black	1
107	11001089	Socket - MATE-N-LOCK	12
108	11021091	Connector - 6P	1
109	11000853	Closed Terminal	1
110	11000350	Closed Terminal	1

34. DECAL AND DOCUMENT

July 20,'84

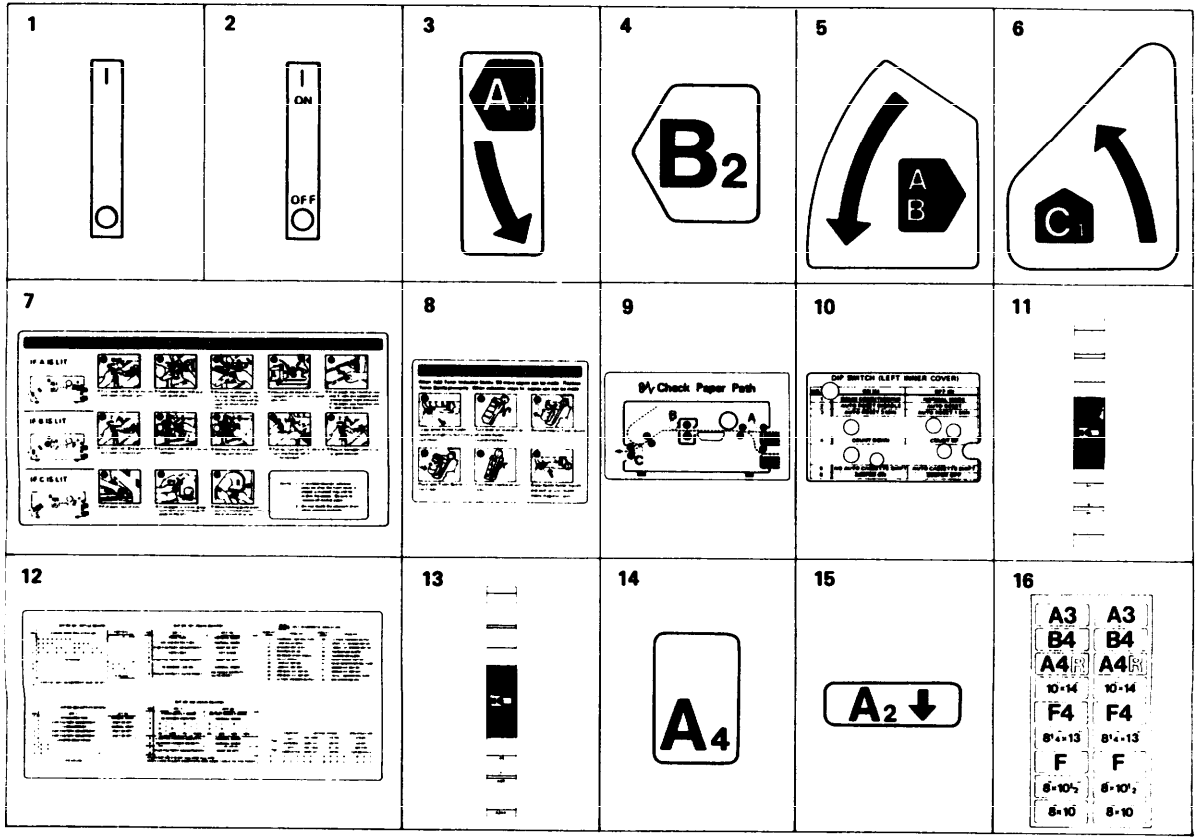

34. DECAL AND DOCUMENT

17	18	19	20	21	22
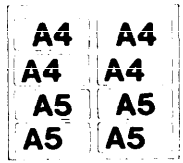	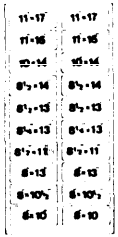	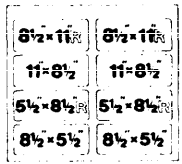	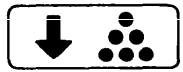	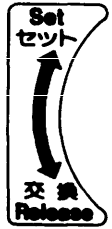	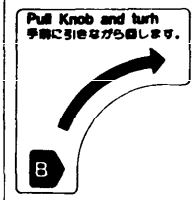
23	**24**	**25**	**26**	**27**	
				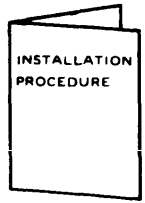	

Index No.	Part No.	Description	Q'ty Per Assembly
1	54221277	Decal - Main Switch	1
2	54421372	Decal - VOLTAGE 220V/240V	1
3	52051311	Decal - B2	1
4	52051312	Decal - Guide Plate	1
5	52051313	Decal - A1, B1	1
6	52051314	Decal - C1	1
7	52051365	Decal - Misfeed FT5050	1
8	52051366	Decal - Adding Toner	1
9	52051376	Decal - Misfeed Indicator FT5050	1
10	52051377	Decal - Monitor Dip Switch	1
11	52051392	Decal - Dip SW	1
12	52052822	Decal - By-Pass Scale 115V	1
13	52052825	Decal - By-Pass Scale 220V/240V	1
14	52052695	Decal - A4	1
15	52052696	Decal - A2	1
16	52052939	Decal - Large Size Cassette-220V/240V	1
17	52052940	Decal - Small Size Cassette-220V/240V	1
18	52052941	Decal - Large Size Cassette - 115V	1
19	52052942	Decal - Small Size Cassette - 115V	1
20	52053375	Decal - Toner Bottle Holder	1
21	52053376	Decal - Bottle Loading	1
22	52054245	Decal - B3	1
23	54034335	Decal - Terminal 115V	1
24	54427042	Large Decal - High Temperature	1
25	54427043	Small Decal - High Temperature	1
26	54474980	Decal - Terminal 220V/240V	1
27	52058751	Installation Procedure - English	1
	52058752	Installation Procedure - 5 Languages	1

This section instructs you as to the numbers and names of the parts of this machine.

1. INVERTER GATE SECTION

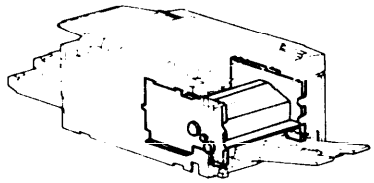

See page 2–4

2. FORK GATES SECTION

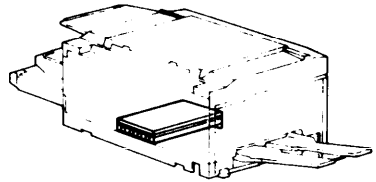

See page 2–6

3. DUPLEX SECTION

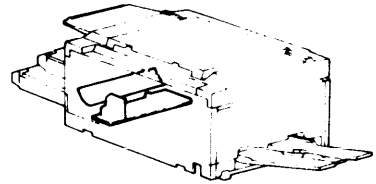

See page 2–8

1. INVERTER GATE SECTION

July 20,'84

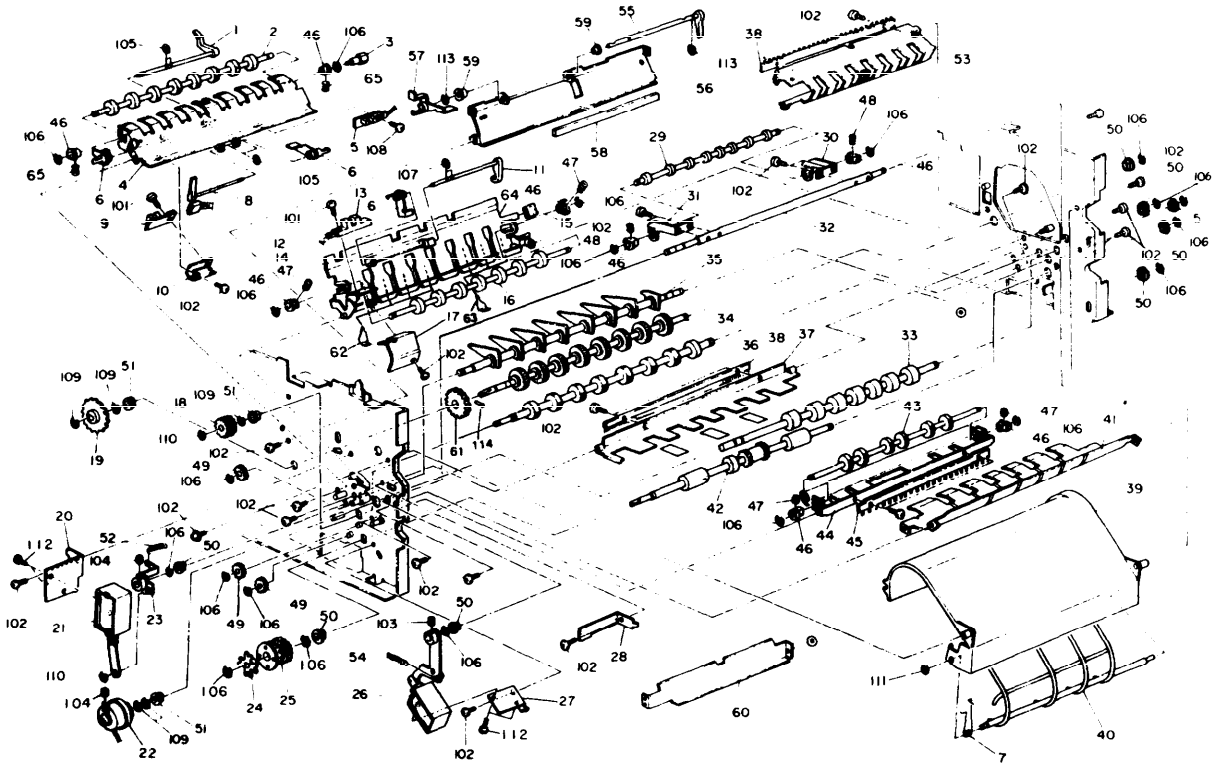

1. INVERTER GATE SECTION

Rev. 4/86

Index No.	Part No.	Description	Q'ty Per Assembly
1	52064495	Entrance Gate Feeler	1
2	52064477	Lower Exit Relay Roller	1
3	52064480	Release Knob	1
4	52064490	Lower Exit Guide Plate	1
5	52055250	L.E.D. Sensor Type S	1
6	52054515	Actuator - Exit Sensor	2
7	52064388	Spring - Inverter Guide	1
8	52054517	Paper Exit Feeler	1
9	52055250	L.E.D. Sensor Type S	1
10	52064497	Exit Sensor Bracket	1
11	52064470	Inverter Sensor Feeler	1
12	52055471	Harness - Toner End	1
13	52055250	L.E.D. Sensor Type S	1
14	52054460	Fusing Release Lever	1
15	52054468	Fusing Unit Release Lever	1
16	52054476	Exit Relay Roller - Upper	1
17	52064469	Inverter Sensor Cover	1
18	52064391	Gear - 24T	1
19	52051100	Sprocket - 24T	1
20	52064500	Bracket - Junction Gate Solenoid	1
21	52064501	Junction Gate Solenoid	1
22	52065317	Inverter Magnetic Clutch	1
23	52064505	Junction Gate Shaft Arm	1
24	54424495	Slip Clutch	1
25	52054507	Drive Sprocket - Exit Roller	1
26	52064395	Inverter Return Solenoid	1
27	52064394	Bracket - Inverter Return Solenoid	1
28	52052707	Magnetic Clutch Stopper	1
29	52064360	Inverter Roller Pressure	1
30	52064362	Inverter Arm - Front Pressure	1
31	52064363	Inverter Arm - Rear Pressure	1
32	52064361	Inverter Shaft Pressure	1
33	52064351	Inverter Support Roller	1
34	52054475	Exit Relay Roller - Middle	1
35	52064485	Junction Gate	1

Index No.	Part No.	Description	Q'ty Per Assembly
36	52064355	Inverter Return Roller	1
37	52064368	Inverter Return Guide	1
38	52062808	Anti-Static Brush - Duplex Transport	2
39	52064381	Upper Inverter Slide	1
40	52064382	Inverter Guide	1
41	52064370	Lower Inverter Slide	1
42	52054511	Lower Exit Roller	1
43	52054518	Upper Exit Roller	1
44	52064522	Upper Exit Guide Plate	1
45	52062808	Anti-Static Brush - Duplex Transport	1
46	54422751	Bushing - Upper Registration Roller	6
47	52054527	Spring - Exit	4
48	52064478	Spring Driven Roller	2
49	52064390	Gear - 20T	3
50	50530447	Bushing - 6x10x6mm	4
51	53041639	Bushing - 8mm	4
52	52064508	Spring - Junction Gate	1
53	52064455	Lower Exit Relay Guide Plate	1
54	52064398	Spring - Inverter Solenoid	1
55	52054202	Exit Misfeed Sensor Feeler	1
56	52054451	Upper Guide Plate - Fusing	1
57	52054212	Actuator Fusing Exit Sensor	1
58	54432684	Magnet - Bypass Table	1
59	54432668	Bushing	2
60	52064488	Exit Sensor Stay	1
61	54031078	Drum Drive Gear - 30T	1
62	52064465	Inverter Guide Mylar - Front	5
63	52064466	Inverter Guide Mylar - Rear	3
64	52054473	Lock Spring	1
65	52052693	Relay Roller Spring	2

July 20,'84

Index No.	Part No.	Description	Q'ty Per Assembly
101	03140100W	Philips Pan Head Screw - M4x10	3
102	04340080W	Tapping Screw - M4x8	13
103	05740060E	Hexagon Headless Set Screw - M4x6	1
104	05740060E	Hexagon Headless Set Screw - M4x6	1
105	07200030E	Retaining Ring - M3	4
106	07200050E	Retaining Ring - M5	14
107	07200030W	Retaining Ring - M3	2
108	03140100W	Philips Pan Head Screw - M4x10	1
109	07200060E	Retaining Ring - M6	5
110	07200050E	Retaining Ring - M5	1
111	07200025E	Retaining Ring - M2.5	1
112	03130060W	Philips Pan Head Screw - M3x6	2
113	07200030W	Retaining Ring - M3	4
114	05780080E	Hexagon Headless Set Screw M8 x 8	1

2. FORK GATES SECTION

July 20,'84

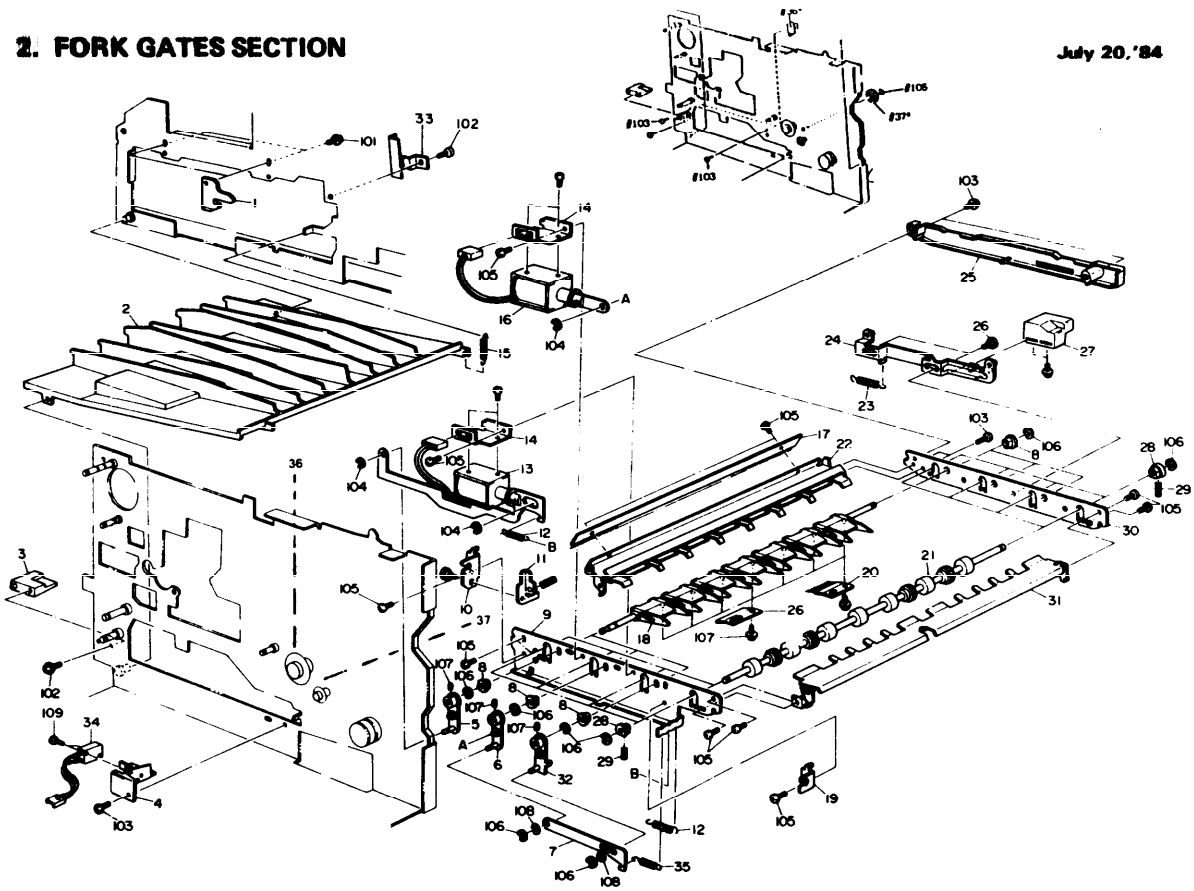

2. FORK GATES SECTION

July 20,'84

Index No.	Part No.	Description	Q'ty Per Assembly
1	52062854	Duplex Transport Holder	1
2	52062780	Inner Paper Tray	1
3	52062851	Fork Gate Guide - Right	1
4	52062850	Bracket - Transfer Safety Switch	1
5	52062824	3rd Gate Arm	1
6	52062820	2nd Gate Arm	1
7	52062838	Small Gate Link	1
8	50530447	Bushing - 6x10x6mm	2
9	52062790	Rear Side Frame - Fork Gate	1
10	52062842	Bracket - Fork Gate Setting Plate	1
11	52062843	Fork Gate Setting Plate	1
12	52062827	Spring - Gate Arm	2
13	52062831	Gate Solenoid	1
14	52062830	Gate Solenoid Bracket	3
15	52062781	Spring - Inner Paper Tray	1
16	52062836	Gate Arm Solenoid	1
17	52062808	Anti-static Brush - Duplex Transport	1
18	52062810	Fork Gate Pawl	3
19	52062840	Fork Gate Holder	1
20	52062813	Anti-static Brush - Fork Gate	1
21	52062795	Fork Gate Roller	4
22	52062805	Exit Guide Plate - Fork Gate	1
23	52062858	Spring - Fork Gate Stopper	1
24	52062855	Fork Gate Stopper	1
25	52062857	Fork Gate Cover	1
26	54131882	Stepped Screw	1
27	52062859	Fork Gate Knob	1
28	54422751	Bushing - Upper Registration Roller	5
29	52054527	Spring - Exit	5
30	52062785	Front Side Frame - Fork Gate	1
31	52062800	Entrance Guide Plate - Fork Gate	1
32	52062815	1st Gate Arm	1
33	52062860	Front Fork Gate Guide	1
34	52055260	Transfer Safety Switch	1
35	52052826	Spring - Gate Arm	1

Index No.	Part No.	Description	Q'ty Per Assembly
36	52062847	Mounting Bracket - Forkgate - M4x8	2
37	52062776	Gear - 30T - M4x8	1
38	52064478	Spring Driven Roller	1
39	54131882	Stepped Screw	1
101	09654008W	Tapping Screw with Flat Washer - M4x8	2
102	09654008W	Tapping Screw with Flat Washer - M4x8	1
103	04340080W	Tapping Screw - M4x8	4
104	07200040E	Retaining Ring - M4	3
105	04340080W	Tapping Screw - M4x8	11
106	07200050E	Retaining Ring - M5	12
107	05740050E	Hexagon Headless Set Screw - M4x5	3
108	07000050W	Flat Washer - M5	2
109	02130120W	Philips Pan Head Screw - M3x12	2

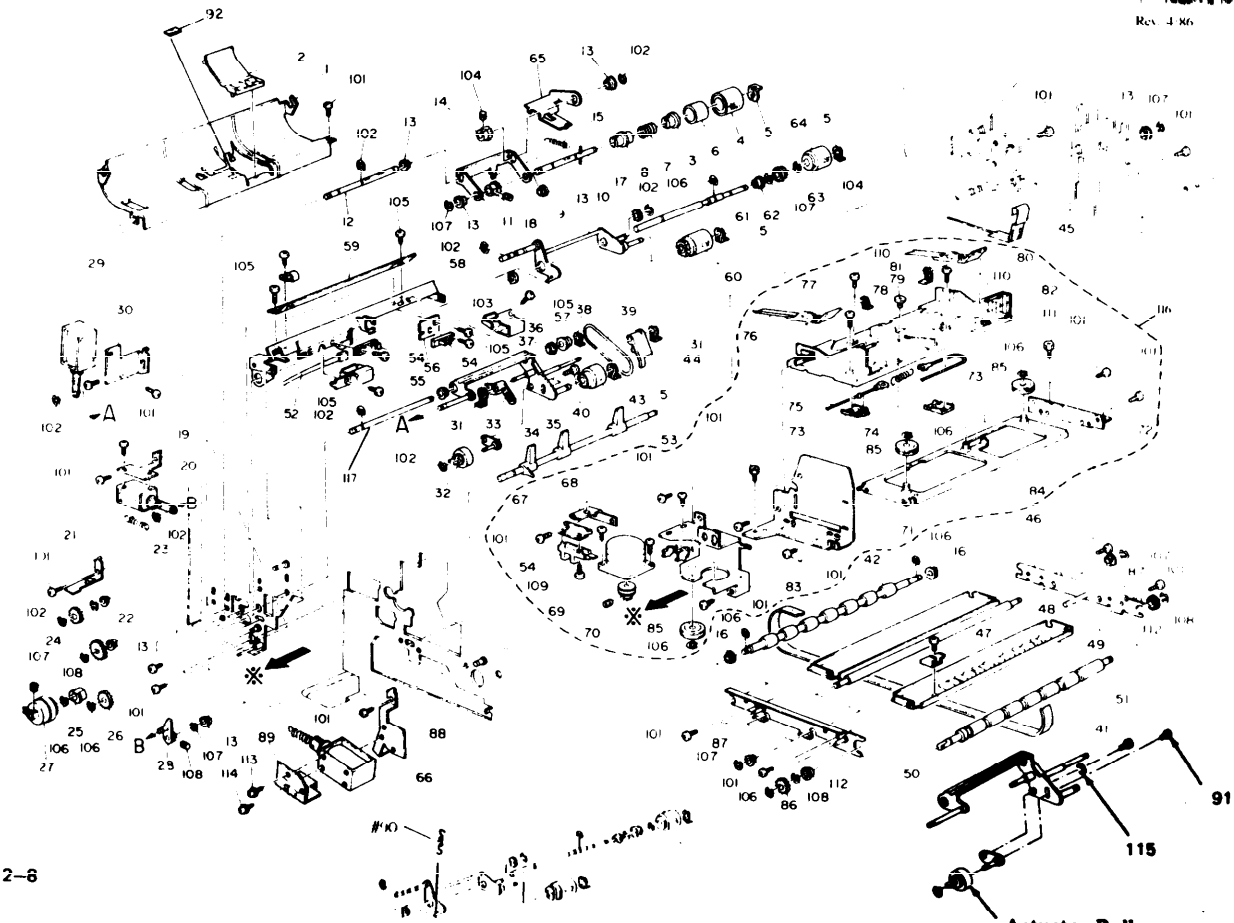
91
115
Actuator Roller

3. DUPLEX SECTION

Index No.	Part No.	Description	Q'ty Per Assembly
1	52062556	Duplex Guide Plate	1
2	52062558	Duplex Guide Plate - Middle	1
3	54472695	Input Hub	1
4	52062605	Separation Roller	2
5	54472681	Roller Retainer	4
6	54472678	Slip Clutch Cover	1
7	52062607	Spring - Separation	2
8	54472676	Output Hub	1
9	52062631	Pick-Up Arm	1
10	54472706	Gear - 15T	1
11	52062602	Duplex Separation Arm	1
12	52057625	Seapration Drive Shaft	1
13	50530447	Bushing - 6x10x6mm	8
14	52062609	Gear - 22T	1
15	52062610	Spring - Separation Roller	1
16	50530223	Bushing - 8mm	2
17	52062603	Separation Driven Shaft	1
18	52052608	Gear - 23T	1
19	52062711	Bracket - Duplex Stopper Solenoid	1
20	52062712	Duplex Stopper Solenoid	1
21	52062735	Magnetic Clutch Stopper	1
22	52062615	Gear - 31T	1
23	52062718	Spring - Paper Stopper	1
24	52062705	Gear - 30T	1
25	52062651	Ball Bearing - 8x20x13mm	1
26	52062776	Gear - 30T	1
27	52055315	Lower Feed Clutch	1
28	52062715	Paper Stopper Arm	1
29	52062732	Duplex Positioning Solenoid	1
30	52062731	Bracket - Duplex Positioning Solenoid	1
31	52062686	Snap Ring	2
32	52062680	Entrance Actuator Roller	1
33	52062685	Entrance Actuator Plate	1
34	52062681	Axle Plate	1
35	52062661	Feed Roller Arm	1

Index No.	Part No.	Description	Q'ty Per Assembly
36	52062676	Feed Roller Pulley	1
37	52062677	Bushing - 6x10x7mm	1
38	52062681	Axle Plate	1
39	52062675	Feed Drive Belt	1
40	52062684	Shoulder Screw - M3	1
41	52069500	Duplex Transport Belt	1
42	52062761	Duplex Transport Drive Roller	1
43	52062671	Duplex Feed Roller	1
44	52062690	Duplex Paper Actuator	1
45	52064510	Paper Settler Bar	1
46	52062750	Front Side Plate - Duplex Transport	1
47	52062768	Duplex Transport Guide Pawl	1
48	52062764	Duplex Transport Guide Roller	1
49	52062766	Transport Unit Stay	1
50	52062755	Rear Side Plate - Duplex Transport	1
51	52062760	Duplex Transport Drive Roller	1
52	52065473	Harness - Duplex Entrance	1
53	52062550	Duplex Stopper	1
54	52055250	L.E.D. Sensor Type S	3
55	52062696	Cover - Entrance Actuator Sensor	1
56	52062626	Sensor Bracket - Duplex Paper End	1
57	52062695	Cover - Duplex Paper Sensor	1
58	52062621	Duplex Stay	1
59	52062697	Sensor Harness Cover	1
60	52062647	Pick-Up Roller	1
61	52062641	Duplex Feed Shaft	1
62	52062650	Bushing - 8x12x7mm	1
63	52062642	Gear - 18T	1
64	52062645	Feed Roller	1
65	52062601	Separation Drive Bracket	1
66	52062724	Duplex Pick-up Solenoid	1
67	52062885	H.P. Bracket	1
68	52062884	H.P. Adjusting Plate	1
69	52065309	Jogger Motor	1
70	52062879	Wire Drive Pulley	1

Rev. 4/86

Index No.	Part No.	Description	Q'ty Per Assembly
71	52062866	Rear Side Plate - Jogger Unit	1
72	52062863	Front Side Plate - Jogger Unit	1
73	52062877	Wire Clamp Plate	2
74	52062876	Spring - Wire	1
75	52062875	Jogger Fence Drive Wire	1
76	52062930	Duplex Settler Mylar - Rear	1
77	52062686	Snap Ring	1
78	52062900	Jogger Unit Base	1
79	54422117	Shoulder Screw - Rail	1
80	52062924	Duplex Settler Mylar - Front	1
81	52062686	Snap Ring	1
82	52062935	Jogger Fence Guide	2
83	52062881	Jogger Motor Bracket	1
84	52062870	Jogger Stay	1
85	54421735	Pulley	3
86	54442836	Gear - 20T	1
87	50530447	Bushing - 6x10x6mm	4
88	52062721	Bracket - Duplex Pick-Up Solenoid	1
89	52062722	Adjusting Plate - Duplex	1
90	52062700	AC Drive Board - 220/240V	1
91	52062687	Stud Screw - M3	1
92	52062557	Friction Pad - Duplex Guideplate	1
101	04340080W	Tapping Screw - M4x8	14
102	07200040E	Retaining Ring - M4	8
103	08053307	Ball Bearing - 8x14x4mm	1
104	05740050E	Hexagon Headless Set Screw - M5x5	1
105	04340060E	Tapping Screw - M4x6	4
106	07200060E	Retaining Ring - M6	3
107	07200050E	Retaining Ring - M5	7
108	05740060E	Hexagon Headless Set Screw - M6x6	2
109	03140100W	Philips Pan Head Screw - M4x10	2
110	03140060W	Philips Pan Head Screw - M4x6	2
111	09603006W	Philips Pan Head Screw - M3x6	2
112	08053204	Ball Bearing - 8x16x5mm	2
113	03130050W	Philips Pan Head Screw - M3x5	2
114	09644008W	Tapping Screw with Flat Washer - M4x8	1
115	08074025	Washer - 8 x 6.2 x 0. umm	1
116	52062527	Jogger Unit	
117	52062670	Feed Roller Shaft	1

4. OPERATION BOARD-II

July 20,'84

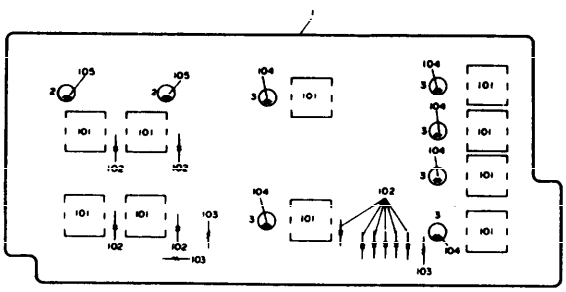

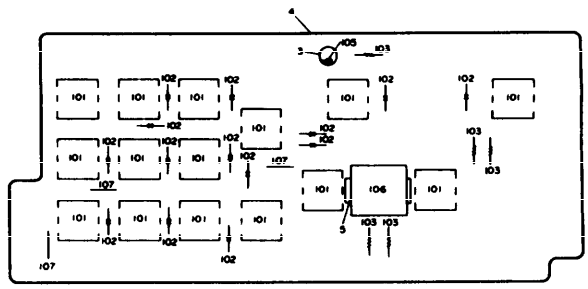

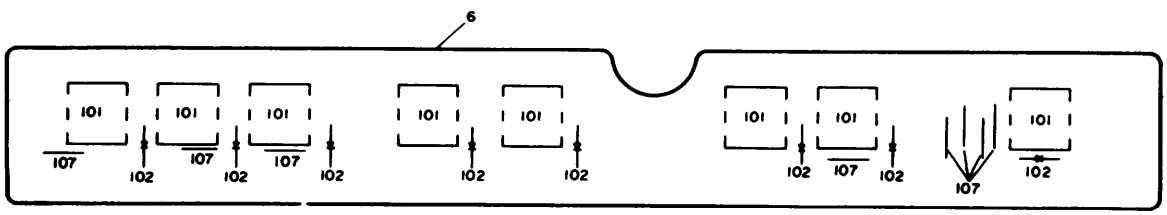

Index No.	Part No.	Description	Q'ty Per Assembly
1	52065157	Keyboard - C	1
2	52055840	Spacer - LED	2
3	54425120	Spacer - LED	7
4	52065158	Operation Board - Right	1
5	52055839	Spacer - LED	1
6	52055156	Operation Board - Center	1

Index No.	Part No.	Description	Q'ty Per Assembly
101	12041190	Switch	33
102	14010611	Diode - 1S1588	32
103	16116391	Resistor - 390Ω 1/2T ±5%	8
104	14030262	LED - EPY5638S	6
105	14030326	LED - EPY55348	3
106	14030334	LED - MD08-9301	1
107	10020307	Jumper Wire	11

5. DC HARNESS

July 20,'84

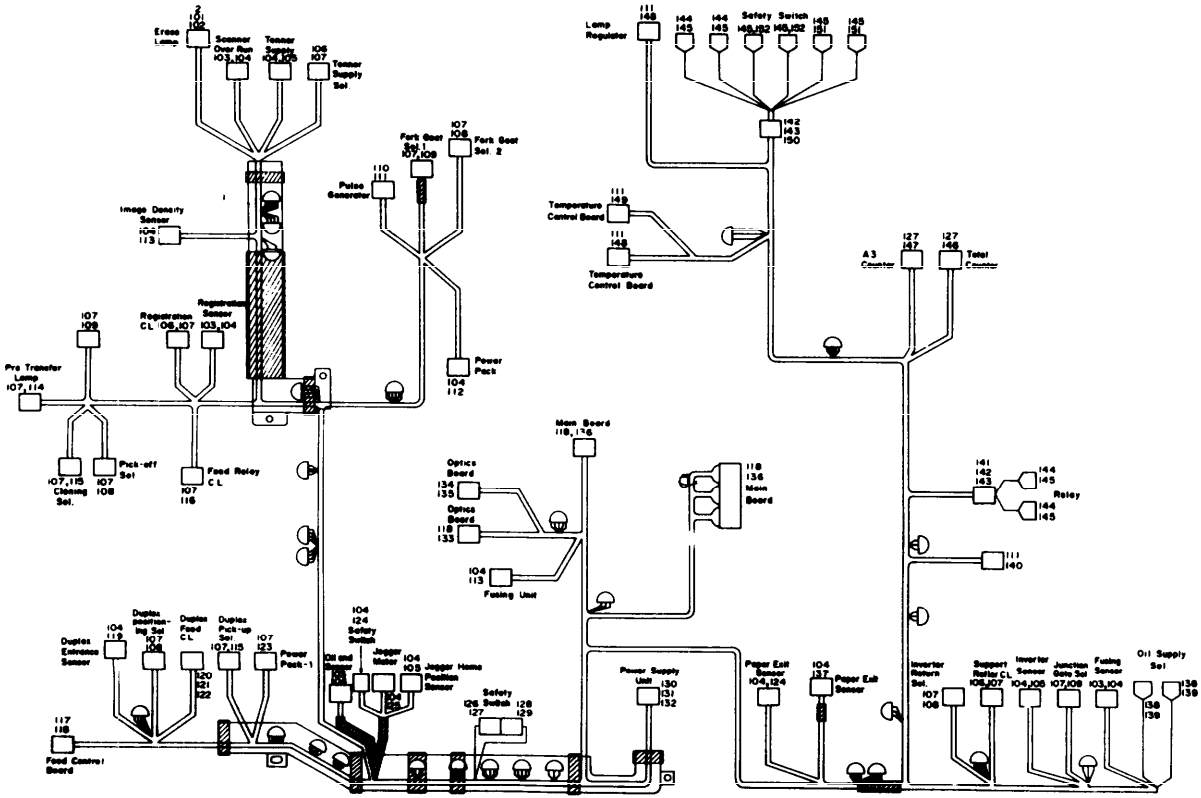

Index No.	Part No.	Description	Q'ty Per Assembly
1	52065450	DC Harness - FT5070	1
2	52052070	Holder	1
101	11021683	Connector - 12P	1
102	11001254	Socket - MATE-N-LOCK	12
103	11021089	Connector - 3P	4
104	11001089	Socket - MATE-N-LOCK	56
105	11021423	Housing - 3P Black	3
106	11021306	Connector - 3P	3
107	11001159	Socket - MATE-N-LOCK	42
108	11021396	Connector - 2P	4
109	11021398	Connector - 2P	3
110	11021620	Connector - 3P	1
111	11001249	Receptacle Terminal	33
112	11021178	Socket Housing - EI Connector - 5P	1
113	11021090	Connector - 4P	2
114	11021307	Connector - 4P	1
115	11021397	Connector - 2P	2
116	11021326	Connector - 3P	1
117	11030660	Connector - 16P	1

Index No.	Part No.	Description	Q'ty Per Assembly
118	11001182	Socket - MATE-N-LOCK	132
119	11021422	Housing - 6P Black	1
120	14020423	Diode - S5500G	1
121	11021797	Connector - 3P	1
122	11001166	Socket - MATE-N-LOCK	2
123	11021312	Connector - 14P	1
124	11021412	Connector - 2P	2
125	11021091	Connector - 6P	1
126	11021514	Connector - 1P	1
127	11001240	Socket - MATE-N-LOCK	7
128	11021506	Connector - 1P	1
129	11001238	Pin - MATE-N-LOCK	1
130	11021785	Connector - 11P	1
131	11001300	Fastening Receptacle	5
132	11001301	Fastening Receptacle	6
133	11030664	Connector - 10P	1
134	11020983	Connector - 2P	1
135	11001042	Socket - MATE-N-LOCK	2
136	11030656	Connector - 16P	2
137	11021091	Connector - 6P	1
138	11020693	Insulating Sleeve	2
139	11000309	Fastening Receptacle	2
140	11021642	Receptacle Housing - 8P	2
141	14020388	Diode - W03C	1
142	11021286	Connector	2
143	11001155	Noise Filter	3
144	11021404	Receptacle Housing - 1P	4
145	11001172	Fastening Receptacle	8
146	11021509	Connector - 4P	1
147	11021515	Connector - 2P	1
148	11021621	Connector - 4P	1
149	11021784	Connector - 12P	1
150	14020379	Varistor - 1ZM50C	1
151	11021402	Connector - 1P	2
152	11021403	Receptacle Housing	2

1

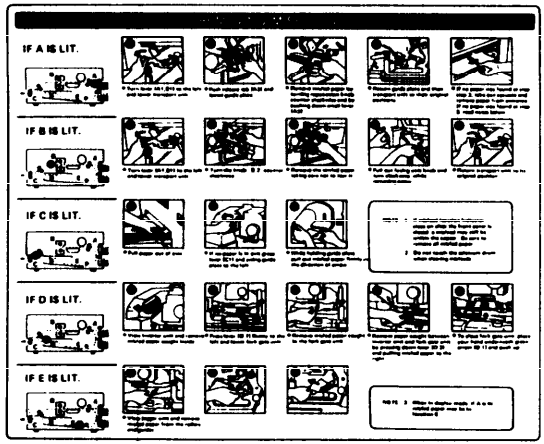
IF A IS LIT.
IF B IS LIT.
IF C IS LIT.
IF D IS LIT.
IF E IS LIT.

2

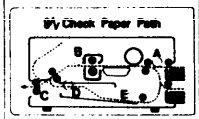
Dry Check Paper Path

3

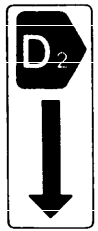
D2

4

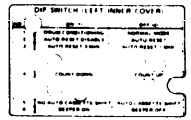

Index No.	Part No.	Description	Q'ty Per Assembly
1	52061365	Decal - Misfeed FT5070	1
2	52061376	Decal - Misfeed Indicator FT5070	1
3	52064482	Decal - D2	1
4	52051377	Decal - Misfeed Indicator FT5070	1

Index No.	Part No.	Description	Q'ty Per Assembly

7. SPECIAL TOOL

July 20,'84

1	2	3	4	5	6
	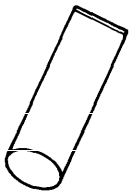	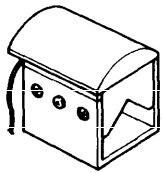	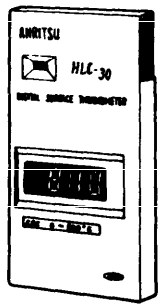		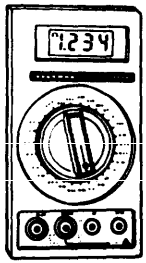
7	8	9	10	11	12
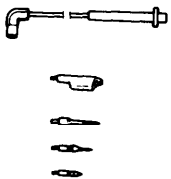			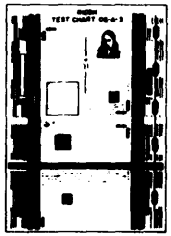		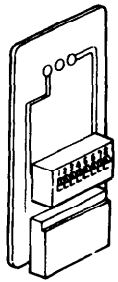

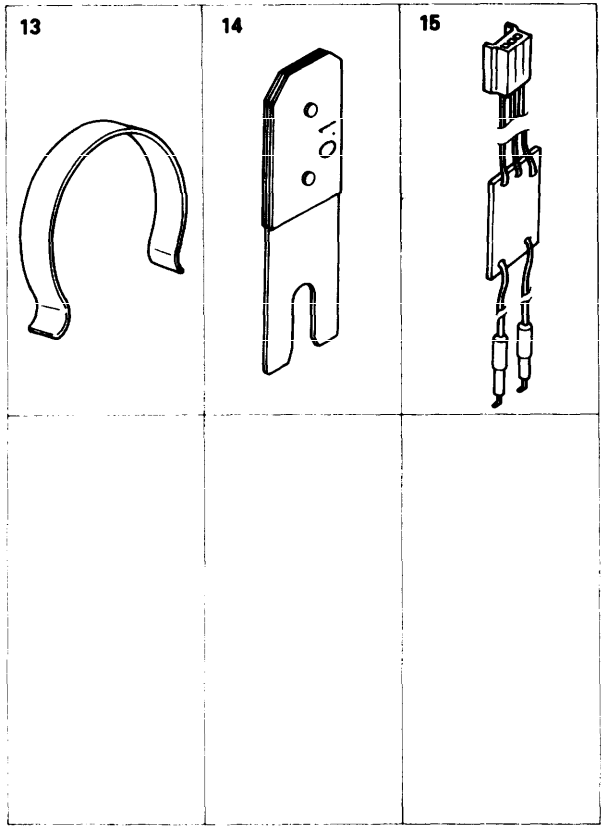

Index No.	Part No.	Description	Q'ty Per Assembly
1	54429101	Setting Powder	1
2	54429102	Light Shielding Bag	1
3	54429106	Drum Shoe	1
4	54209504	Thermo Meter - HLC60-E	1
5	54209505	Probe - HLC30	1
6	~~54209507~~	~~Degital Multimeter - BECKMAN RM3030~~	1
7	54209508	Delux Test Lead Accessory Kit	1
8	54209550	Silicon Oil	1
9	54429103	Launa Oil	1
10	54209516	Test Chart - OS - A3 (10 pac/set)	1
11	54479078	Heat Resisting Grease MT-78	1
12	52059601	Switching Board	1
13	52059111	Omega Clamp	1
14	52059101	Gap Gauge	1
15	52069600	Sensor Checker	1

This section instructs you as to the numbers and names of the parts of this machine.

Parts No.	Description	Page and Index No.
50555463	Fusing Harness	29-59
52024475	Exit Relay Roller Middle	5-34
52051054	Transport Handle Rod	43-10
52051055	Transport Handle Foot	43-9
52051056	Plate - Transport Handle	43-5
52051057	Leaf Spring - Transport Handle	43-7
52051064	Inner Cover - Reverse	35-20
52051065	Side Plate Cover - Front	33-1
52051082	Bracket - Main Drive Motor	41-8
52051083	Sprocket - 30T/50Hz	41-25
52051084	Sprocket - 27T/60Hz	41-25
52051085	Cover - Main Drive Motor	41-6
52051090	Perforated Disk	41-15
52051096	Bracket - Fusing Drive	41-19
52051099	Shaft - Fusing Drive	41-17
52051100	Sprocket - 24T	5-19
52051100	Sprocket - 24T	35-28
52051101	Sprocket - 12T	23-4
52051101	Sprocket - 12T	23-37
52051101	Sprocket - 12T	35-27
52051102	Gear & Sprocket - 16T/40T	41-14
52051105	Tightener - Chain	41-10
52051109	Chain Stopper	41-21
52051116	Bracket - Photointerrupter	41-22
52051121	Belt Tightener	41-31
52051127	Timing Belt	41-24
52051134	Stay - Side Plate	43-12
52051138	Guide Plate - Fork Gate Entrance	43-16
52051150	DF Mounting Bracket - Left	47-14
52051155	DF Mounting Bracket - Right	47-2
52051161	Fusing Unit Rail	31-20
52051161	Fusing Unit Rail	43-13
52051164	Release Lever - Fusing Unit	31-22
52051165	Bracket - Oil Sump	43-15
52051170	Spring	31-23
52051176	Right Inner Cover	31-21
52051259	Middle Bracket - Upper Front Cover	39-44

Parts No.	Description	Page and Index No.
52051260	Bracket - Upper Front Cover	39-43
52051261	Bracket - Key Counter	7-52
52051261	Bracket - Key Counter	39-42
52051262	Instruction Cards Shaft	7-14
52051263	Instructions Spring Plate	7-18
52051268	Instructions Cover	7-15
52051273	Middle Inner Cover	33-2
52051275	Middle Inner Cover	7-34
52051289	Bracket - Front Small Cover	7-46
52051290	Left Hinge - Front Cover	7-31
52051291	Hinge - Front Cover Right	7-27
52051292	Front Cover Hinge	7-40
52051292	Front Cover Hinge	43-17
52051296	Sensor Cover	7-2
52051297	Harness Hole Cap - Sorter	7-20
52051311	Decal - B2	7-37
52051311	Decal - B2	73-3
52051312	Decal - Guide Plate	7-38
52051312	Decal - Guide Plate	73-4
52051313	Decal - A1, B1	7-33
52051313	Decal - A1, B1	73-5
52051314	Decal - C1	7-39
52051314	Decal - C1	73-6
52051331	ADF Foot Cover	7-3
52051332	Harness ADF Cover	7-4
52051333	ADF Screw	7-5
52051334	Sorter Foot Cover	7-21
52051336	Front Cover Chain	7-32
52051340	Front Upper Cover Ass'y	7-19
52051341	English Instruction Cards - 115V	7-17
52051355	Rear Upper Cover	7-1
52051362	Name Plate - FT5050	7-28
52051363	Front Small Cover	7-29
52051365	Decal - Misfeed FT5050	7-25
52051365	Decal - Misfeed FT5050	73-7

Parts No.	Description	Page and Index No.
52051366	Decal - Adding Toner	7-30
52051366	Decal - Adding Toner	73-8
52051372	Left Inner Cover - FT5050	7-41
52051375	Panel - Misfeed Indicator FT5050	7-44
52051376	Decal - Misfeed Indicator FT5050	7-43
52051376	Decal - Misfeed Indicator FT5050	73-9
52051377	Decal Monitor Dip Switch	7-76
		73-10
52051377	Decal - Misfeed Indicator FT5070	73-10
52051380	Left Cover	7-22
52051383	Right Front Cover	7-48
52051384	Right Inner Cover	7-36
52051385	Front Small Cover	7-47
52051387	Right Rear Cover	7-66
52051388	Rear Cover - 115V	7-69
52051392	Decal - DIP SW	7-71
52051392	Decal - Dip SW	73-11
52051394	Rear Cover - 220V/240V	7-69
52051397	Front Cover Ass'y - FT5050	7-26
52051450	English Instruction Cards - 220V/240V	7-17
52051470	English Instruction Cards - CANADA	7-17
52051622	Platen Cover Assembly	9-49
52051660	Front Pressure Plate	9-3
52051680	Bracket - 1st Scanner	37-13
52051694	Adjusting Cam - Start Lever	37-17
52051696	Main - Reflector	37-10
52051697	Wire Clamp	37-55
52051698	Reflector Aid	37-7
52051720	Bracket - 2nd Scanner	37-16
52051745	Scanner Slide Shoe	37-18
52051751	Lens - F8/180	39-56
52051765	Lens Bracket	39-54
52051766	Bracket - Lens Housing	39-11
52051768	Rubber Seal - Mirror	39-55
52051772	Cover - Lens	39-3
52051777	Actuator - Lens H.P. Switch	39-53
52051780	Lens Drive Screw	39-12
52051781	Bushing Clamp - Lens Drive Screw	39-10

Parts No.	Description	Page and Index No.
52051793	Shielding - Guide	39-57
52051794	Left Shield	39-1
52051797	Right Shield	39-2
52051814	Cam Plate Lens Shield	39-13
52051823	Lens Support Plate Mylar	39-14
52051826	Toner Shield Glass	39-34
52051827	Frame - Toner Shield Glass	39-31
52051828	H.P. Bracket	39-19
52051828	H.P. Bracket	39-48
52051830	Toner Shield Rail	39-30
52051831	Seal - Toner Shield Upper	39-35
52051835	4th Mirror Cover	39-5
52051840	Optics Base Plate (Small)	39-50
52051845	4th Mirror	39-37
52051847	Spring Plate	39-16
52051851	Front Side Plate - Optics	39-39
52051855	Rear Side Plate - Optics	39-17
52051862	Scanner Guide Rod	37-15
52051864	Scanner Guide	39-38
52051866	Bracket - Scanner Drive Motor	37-41
52051869	Scanner Drive Pulley	37-43
52051872	Pulley - Scanner	37-30
52051875	Bracket - Wire Turn Pulley	37-40
52051875	Bracket - Wire Turn Pulley	39-22
52051880	Clamp	47-24
52051886	Pulley Tightener	37-26
52051910	Left Stay	39-60
52051911	Scale Mounting Bracket	7-12
52051911	Scale Mounting Bracket	39-4
52051914	Harness Holder	39-51
52051914	Harness Holder	45-10
52051916	Main Scale - 115V	7-8
52051917	Main Scale - 220V	7-8
52051918	Mylar Seal - Glass Protection	39-21
52051923	Spacer - 12.5x19x1mm	39-49

Parts No.	Description	Page and Index No.
52051924	Mylar Seal - Glass	39-46
52051926	Right Stay	39-23
52051929	Rubber Seal - Development	39-29
52051930	Filter - Cooling Blower	39-28
52051931	Capacitor Bracket - 115V	39-26
52051932	Front Bracket	39-27
52051934	Rear Bracket	39-25
52051937	Motor Cover Bracket	39-33
52051947	Bracket - Capacitor - 220V/240V	39-26
52051960	Lens Unit Base	39-15
52051967	Motor Bracket	37-49
52051972	Scanner Motor Bracket	37-53
52051975	Worn Gear Shaft	37-47
52051976	Lens Housing Bracket	39-6
52051980	Actuator - Lens H.P. Sensor	37-32
52051981	Scanner Drive Wire	37-12
52051988	Motor Cover	37-44
52051989	Gear - 20T	37-48
52051990	Pulley	37-28
52052040	Fan Casing	41-4
52052050	Rear Endblock - Main Corona	25-25
52052052	Absorb Duct Bracket	7-45
52052053	Charge Corona Duct	41-1
52052055	Air Flow Plate	25-3
52052058	Exhaust Duct	25-1
52052059	T & S Corona Rail	25-5
52052063	Duct Seal - Exhaust	25-2
52052064	Transfer Corona Casing	25-28
52052069	Adjusting Screw	25-46
52052070	Holder	13-2
52052070	Holder	65-2
52052101	Cleaning Solenoid Ass'y	23-40
52052104	Solenoid Bracket	23-32
52052121	Spring Plate	23-36
52052132	QL Filter	25-43
52052135	QL Filter	11-6

Parts No.	Description	Page and Index No.
52052141	PTL Filter	11-6
52052174	Main Corona Unit	25-24
52052245	Drum Stay	25-45
52052251	Rear Side Plate - Drum	23-38
52052261	Drum Shaft Channel	25-9
52052261	Drum Shaft Channel	47-3
52052267	Drum Flange Knob	25-20
52052271	Drum Shaft	25-17
52052276	Front Flange	25-18
52052279	Flange Plate	25-19
52052307	Toner Catch Pan B	25-49
52052308	Toner Catch Pan A	25-48
52052310	Drum Stay Support Plate	25-44
52052540	Registration Roller Knob	11-53
52052571	Upper Registration Roller	11-50
52052572	Lower Registration Roller	11-49
52052579	Spring - Guide	11-46
52052580	Paper Feed Stay	13-2
52052583	Harness Stopper Bracket	11-32
52052585	Paper Feed Shaft	11-10
52052588	Lower Registration Guide	11-48
52052590	Pick-Up Arm	11-8
52052594	Gear - 18T	11-28
52052596	Pick-Up Shaft	11-9
52052598	Spring - Pick-Up	15-16
52052599	Feed Shaft Guide	11-7
52052600	Upper Feed Guide	13-3
52052604	Separation Arm	11-17
52052605	Separation Holding Bracket	11-15
52052608	Gear - 23T	9-18
52052608	Gear - 23T	11-11
52052609	Separation Guide	13-28
52052610	Gear - 23T	11-42
52052611	Bracket - Size Detector Board	13-22
52052612	Gear - 19T	11-26
52052613	Spring - Separation	11-16
52052614	Separation Drive Shaft - Upper	11-34

Parts No.	Description	Page and Index No.
52052615	Gear - 30T	41-28
52052625	Seapration Drive Shaft	9-12
52052625	Separation Drive Shaft	11-58
52052627	Gear 22T	11 60
52052629	Gear - 44T	41-26
52052630	Lower Separation Guide	11-40
52052633	Separation Drive Shaft	11-18
52052634	Gear & Sprocket - 30T/20T	41-9
52052636	Upper Registration Guide	11-45
52052637	Middle Guide	11-47
52052640	Paper End Bracket - Upper	13-5
52052641	Paper End Bracket - Lower	13-21
52052642	Paper End Feeler	13-4
52052644	Paper End Actuator	13-15
52052644	Paper End Actuator	45-22
52052645	Bracket - Paper End Sensor	45-19
52052647	Volume Sensor Supporter	15-15
52052648	Volume Sensor Bracket - Upper	15-13
52052649	Volume Sensor Arm - Upper	15-18
52052650	Volume Sensor Actuator	15-19
52052651	Bracket - Lift Sensor Arm	15-14
52052655	Volume Sensor Bracket - Lower	15-24
52052656	Volume Sensor Arm - Lower	15-21
52052657	Volume Sensor Bracket	15-34
52052658	Lift Sensor Bracket	15-12
52052659	Pick-Up Solenoid Bracket	15-10
52052661	Volume Sensor Bracket	15-23
52052663	Lever - Bottom Plate Lift	15-29
52052664	Sector Gear	15-36
52052667	Bracket - Paper Lift Motor	15-5
52052670	Cassette Sensor Arm	15-22
52052674	Spring	15-2
52052677	Spring	15-31
52052678	Spring	15-3
52052679	Arm - Paper Lift Bracket	15-32

Parts No.	Description	Page and Index No.
52052680	Coupled Gear - 16T/53T	15-7
52052681	Coupled Gear - 17T/50T	15-4
52052685	Lower Relay Roller	13-10
52052686	Upper Relay Roller	11-44
52052687	Relay Roller Guide - Lower	13-9
52052690	Release Lever	13-8
52052691	Shaft - Paper Guide Plate	13-7
52052693	Relay Roller Spring	5 65
52052694	Spring - Paper Guide Plate	13-6
52052695	Decal - A4	13-29
52052695	Decal - A4	73-14
52052696	Decal - A2	13-30
52052696	Decal - A2	73-15
52052697	Bushing - Upper Registration Roller	11-55
52052697	Bushing - Upper Registration Roller	13-12
52052698	Relay Roller Spring	13-11
52052700	Front Side Guide - Cassette Holder	13-17
52052701	Rear Side Guide - Cassette Holder	13-20
52052702	Duplex Feed Stay	13-27
52052707	Magnetic Clutch Stopper	5-28
52052707	Magnetic Clutch Stopper	11-39
52052720	By-Pass Stopper	15-25
52052721	Release Lever - Bottom Plate	15-28
52052724	By-Pass Link	7-53
52052730	Bracket - By-Pass Feed Sensor	45-18
52052731	By-Pass Cover	7-65
52052734	Magnet - By-pass Table	39-24
52052735	By Pass Table	7-57
52052738	Front Side Fence	7-54
52052740	Rear Side Fence	7-56
52052741	Side Fence Guide	7-55
52052742	Bypass Pin	15 27
52052743	Pin Bypass Feed Guide	15 27
52052746	Feed Inner Cover	13-13
52052748	Protective Cap	13-14
52052751	Paper Feed Stay - Upper	13-16
52052755	Support Stay - Upper Paper Feed	13-1

Parts No.	Description	Page and Index No.
52052761	Paper Feed Stay - Lower	13-26
52052771	Guide Plate - Lower Paper Feed	13-18
52052773	Knob - Paper Guide Plate Lower	11-52
52052781	Gear - 17T	11-12
52052788	Cassette Sensor Arm - Upper	15-6
52052795	Spring - By-Pass	15-26
52052811	Lift Sensor Actuator	15-8
52052813	Pressure Link Solenoid	15-9
52052822	Decal - By-Pass Scale 115V	7-67
52052822	Decal - By-Pass Scale 115V	73-12
52052825	Decal - By-Pass Scale 220V/240V	7-67
52052825	Decal - By-Pass Scale 220V/240V	73-13
52052830	Front By-Pass Arm	7-61
52052831	Rear By-Pass Arm	7-58
52052832	Collar Bypass Pin	15-35
52052833	Collar Bypass Feed Guide	15-38
52052837	Actuator - By-Pass Sensor	45-16
52052838	Sensor Actuator Stopper	45-13
52052839	Spring - Sensor	45-14
52052850	Paper End Bushing	13-25
52052860	Bracket - Paper Feed Roller Upper	11-56
52052862	Bracket - Paper Feed Roller Lower	11-57
52052865	Bushing - Paper Feed Roller	11-30
52052866	Collar - Magnetic Clutch	11-36
52052913	Rear Side Fence small	9 -
52052925	Front Side Fence Small	9 -
52052931	Bottom Plate Small	9 -
52052937	Bottom Plate	9-26
52052939	Decal-Large Size Cassette-220V/240V	9-29
52052939	Decal-Large Size Cassette-220V/240V	73-16
52052940	Decal-Small Size Cassette-220V/240V	9-29
52052940	Decal-Small Size Cassette-220V/240V	73-17
52052941	Decal - Large Size Cassette - 115V	9-29
52052941	Decal - Large Size Cassette - 115V	73-18
52052942	Decal - Small Size Cassette - 115V	9-29
52052942	Decal - Small Size Cassette - 115V	73-19
52052946	Front Side Fence	9-24
52052947	Rear Side Fence	9-22

Parts No.	Description	Page and Index No.
52052953	Rear Fence	9-27
52052955	Cassette Cover - Large	9-21
52052957	Cassette Cover - Small	9-21
52052960	Actuator - A3	9-30
52052961	Actuator - B4	9-30
52052962	Actuator - A4R	9-30
52052964	Actuator - A4	9-30
52052966	Actuator - A5	9-30
52052967	Actuator - A5R	9-30
52052971	Actuator - 11" x 17"	9-30
52052972	Actuator - 11" x 15"	9-30
52052973	Actuator - 11" x 14"	9-30
52052974	Actuator - 8-1/2" x 13"	9-30
52052975	Actuator - 8-1/4" x 13"	9-30
52052976	Actuator - 8" x 13"	9-30
52052977	Actuator - 8" x 10-1/2"	9-30
52052978	Actuator - 8" x 10"	9-30
52052979	Actuator - 11" x 8-1/2"	9-30
52052990	Cassette Body - Large	9-28
52052991	Cassette - Body - Small	9-28
52052992	Actuator - 5-1/2" x 8-1/2"	9-30
52052993	Actuator - 8-1/2" x 5"	9-30
52052996	Actuator - 8-1/2" x 11R"	9-30
52052997	Actuator - 8-1/2" x 14"	9-30
52053051	Development Unit	19-*
52053060	Development Bottom Plate	19-22
52053069	Lower Side Plate - Rear	19-19
52053074	Lower Side Plate - Front	19-23
52053081	Paddle Roller	19-11
52053090	Developer Knob	19-25
52053093	Bushing - 8mm	19-12
52053093	Bushing - 8mm	19-30
52053100	Sprocket - 12T	19-28
52053102	Gear - 39T	19-14
52053103	Bushing - 6mm	19-13
52053103	Bushing - 6mm	19-29

Parts No.	Description	Page and Index No.
52053110	Bearing Retainer	19-8
52053120	Toner Agitator - Development	19-16
52053140	Upper Side Plate - Rear	19-3
52053149	Upper Side Plate - Front	19-38
52053160	Doctor Blade	19-2
52053162	Rubber Seal - Doctor Blade	19-36
52053165	Development Auger	19-9
52053169	Backspill Plate	19-37
52053180	Felt Seal	21 44
52053189	Development Upper Cover	19-1
52053193	Sprocket - 14T	19-34
52053195	Spring - Gear	19-35
52053196	Idler - 4mm	19-33
52053209	Development Filter	19-20
52053210	Duct - Development	19-21
52053212	Support Duct	23-35
52053220	Junction Plate	19-6
52053229	Sponge Seal	19-41
52053230	Mylar Seal	19-42
52053231	Front Rubber Seal - Development	19-26
52053232	Rear Rubber Seal - Development	19-18
52053235	Front Rubber Blade - Development	19-24
52053236	Rear Rubber Blade - Development	19-17
52053240	Supporting Plate	19-40
52053249	Toner Supply Unit	17 *
52053250	Upper Hopper Case	17-2
52053260	Lower Hopper Case	17-14
52053270	Sponge Seal - Toner Tank	17-1
52053278	Hopper Side Plate - Rear	17-9
52053288	Front Side Plate - Toner Tank	17-16
52053299	Gear - 26T	17-13
52053301	Toner Supply Shaft	17-11
52053306	Gear - 18T	17-5
52053306	Gear - 18T	23-10
52053310	Worm Gear	17-15
52053312	Cartridge Drive Bracket	17-20
52053314	Gear - 20T	17-22
52053315	Coupled Gear - 15T/20T	17-21

Parts No.	Description	Page and Index No.
52053316	Upper Shaft	17-19
52053317	Lower Shaft	17-18
52053325	Toner Agitator	17-12
52053335	Mylar Seal - Toner Tank	17-17
52053349	Toner Hopper Pipe	17-29
52053350	Toner Supply Retainer	17-28
52053353	Toner Supply Cover	17-26
52053354	Bottle Release Lever	17-27
52053363	Seal Toner Hopper Pipe	17 33
52053371	Toner Supply Bracket	17-25
52053375	Decal - Toner Bottle Holder	17-31
52053375	Decal - Toner Bottle Holder	73-20
52053376	Decal - Bottle Loading	17-32
52053376	Decal - Bottle Loading	73-21
52053404	Actuator	17-30
52053421	Seal Bottle Release Lever	17
52053423	Seal - Toner Hopper Inlet	17
52053424	Mylar Seal 305x12mm	17
52053425	Mylar Seal 74x10mm	17
52053450	Development Drive Bracket	23-1
52053456	Motor Sprocket - 30T/50Hz	23-5
52053457	Motor Sprocket - 25T/60Hz	23-5
52053462	Bracket - Toner Supply	23-11
52053465	Sprocket - 22T	23-15
52053467	Boss - Toner Supply Clutch	23-18
52053468	Shaft - Toner Supply Drive	23-9
52053470	Gear - 30T	23-6
52053472	Development Drive Shaft	23-19
52053475	Development Tightener	23-3
52053480	Bracket - Toner Supply Solenoid	23-26
52053481	Bushing - Development Drive	23-7
52053484	Holder Bracket - Development Drive	23-23
52053485	Bias Terminal	23-12
52053486	Terminal Holder	23-13
52053491	Development Unit Agitator Gear	19-15
52053492	Gear 30T	23-6
52053493	Gear 49T	16-7
52053550	Cleaning Unit	21 *
52053551	Cleaning Unit Casing	21-9
52053552	Front Side Plate Cleaning	21-13
52053557	Rear Side Plate - Cleaning	21-16
52053561	Holder	21-28

Parts No.	Description	Page and Index No.
52053565	Cleaning Blade	21-4
52053575	Cleaning Blade Holder	21-2
52053580	Cleaning Brush	21-8
52053582	Gear - 15T	21-37
52053583	Rear Guide Pin - Cleaning	21-32
52053585	Blade Scraper	21-7
52053590	Entrance Seal	21-6
52053593	Seal 2 x 17 x 105 mm	21-45
52053595	Rubber Seal - Holder	21-5
52053597	Rubber Seal - Cleaning Small	21-12
52053599	Side Seal - Cleaning Rear	21-39
52053600	Seal - Blade Front	21-11
52053601	Seal - Blade Rear	21-33
52053606	Left Agitator	21-15
52053612	Cam Gear - 35T	21-38
52053617	Pressure Arm	21-34
52053635	Pressure Lever	23-29
52053637	Spring - Cleaning Blade	23-28
52053639	Blade Solenoid	23-27
52053647	Front Endblock - PCC	21-27
52053649	Rear Endblock - PCC	21-40
52053651	Front Endblock Cover - PCC	21-26
52053653	Rear Endblock Cover - PCC	21-41
52053657	Toner Recycle Pipe	25-39
52053659	Rubber Seal Left Joint	25-50
52053660	Toner Recycle Joint	25-40
52053663	Plastic Pipe	21-30
52053667	Development Joint	25-37
52053668	Toner Recycle Coil	25-38
52053671	Spring - Anchor	21-31
52053672	Plastic Pipe	21-30
52053673	Setting Pin	21-10
52053676	Rubber Seal Drum Support	25-47
52053677	Rubber Seal - Joint Development	25-36
52053802	Corona Unit - T & S	27-37
52053811	Guide Plate - T & S Corona	27-30
52053815	Variation Sleeve	27-29
52053821	Terminal Spring	27-31

Parts No.	Description	Page and Index No.
52053850	Front Endblock Cover - T & S Corona	27-25
52053851	Front Endblock - T & S Corona	27-23
52053852	Rear Endblock Cover T & S Corona	27-28
52053853	Rear Endblock - T & S Corona	27-32
52053854	T & S Corona Casing	27-33
52053858	T & S Corona Receptacle	27-19
52053860	Paper Guide - T & S Corona	27-26
52053861	T & S Corona Guide	27-34
52053870	PTL Stopper	23-22
52053871	Guide Mylar - T & S Corona	27-27
52053872	Rear Bracket - T & S Corona	23-39
52053873	Main Corona Duct	25-4
52053895	PTL Guide	11-1
52053896	Paper Guide	11-4
52053902	Transport Side Plate - Front	27-10
52053907	Transport Side Plate - Rear	27-15
52053909	Transport Chamber	27-9
52053912	Transport Spring Plate - Front	27-13
52053913	Left Transport Roller	27-2
52053914	Transport Stay	27-22
52053916	Transport Guide Plate	27-1
52053919	Transport Roller Bushing	33-3
52053920	Gear - 24T	27-16
52053921	Gear - 16T	27-3
52053922	Gear - 16T	27-14
52053923	Gear - 16T	27-4
52053924	Right Transport Roller	27-5
52053925	Harness Clamp - Plate	27-7
52053927	Transport Duct	27-17
52053928	Vacuum Fan Duct	41-33
52053930	Exhaust Duct - Vacuum Fan	47-8
52053931	Ozone Filter	47-9
52053932	Vacuum Fan Bracket	47-5
52053935	Transport Lock Shaft	33-7
52053936	Transport Lock Lever	33-6
52053938	Spring	33-9

Parts No.	Description	Page and Index No.
52053939	Release lever	33-8
52053946	Rubber Seal - Fan Transport	41-34
52053947	Rubber Seal - Duct Transport	27-18
52053947	Rubber Seal - Duct Transport	41-32
52053948	Transport Guide Plate - Upper	41-7
52053950	Cam	21-25
52053956	Pick-Off Pawl	21-22
52053958	Pick-Off Pawl Shaft	21-21
52053964	Pick-Off Solenoid	23-31
52053965	Spring	21-17
52053966	Set Screw	21-23
52053968	Set Screw - Separator Shaft	21-18
52053971	Pick-Off Pawl Lever	23-30
52053975	Cam	21-24
52053981	Collar	21-20
52053988	Actuator - Transfer Safety Switch	33-31
52054058	Fusing Unit 115V	31 *
52054060	Fusing Side Frame - Front	29-40
52054064	Fusing Side Frame - Rear	29-26
52054073	Left Fusing Rail	29-41
52054079	Right Fusing Rail	29-30
52054093	Thermistor Mounting Frame	29-52
52054098	Entrance Guide Plate - Fusing	29-25
52054101	Oil Sump	29-24
52054108	Actuator Spring Plate	29-21
52054110	Shielding Plate	29-49
52054113	Oil Supply Pad	29-27
52054116	Oil Blade Bracket	29-13
52054121	Lower Holder Oil Blade	29 15
52054135	Fusing Shaft Collar	29-34
52054138	Fusing Shaft	29-28
52054139	Fusing Unit Knob	29-35
52054140	Fusing Unit Cover	29-3
52054143	Oil Pan	29-31
52054148	Fusing Connector Bracket	29-6
52054154	Funnel Bracket	33-20
52054155	Oil Funnel	33-18
52054161	Oil Supply Bracket	33-26

Parts No.	Description	Page and Index No.
52054166	Oil Cap	33-15
52054169	Oil Tank	33-10
52054173	Fusing Exit Frame	31-24
52054179	Exit Guide Plate - Fusing	31-18
52054180	Transport Guide Plate	31-14
52054182	Upper Exit Guide	31-28
52054183	Lower Exit Guide	31-27
52054184	Upper Exit Roller	31-2
52054186	Lower Exit Roller	31-5
52054187	Gear - 19T	31-15
52054188	Gear - 18T	29-12
52054195	Spring	33-14
52054196	Upper Oil Tube	33-27
52054197	Oil Pump Sleeve	33-16
52054198	Lower Oil Tube	33-13
52054199	Recycle Oil Tube	33-17
52054202	Exit Misfeed Sensor Feeler	5-55
52054205	Sensor Bracket	35-14
52054212	Actuator Fusing Exit Sensor	5-57
52054212	Actuator Fusing Exit Sensor	35-10
52054220	Shaft - Hot Roller Stripper	31-13
52054226	Fusing Thermister Bracket	29-56
52054230	Stopper - Fusing Unit	29-43
52054235	Oil Pump Bracket	33 24
52054245	Decal - B3	29-57
52054245	Decal - B3	33-22
52054252	Sensor Oil Cap	33-30
52054253	Rubber Seal - Oil Cap Sensor	33-29
52054275	Hot Roller	29-44
52054280	Pressure Roller	29-29
52054295	Front Pressure Lever	29-32
52054296	Rear Pressure Lever	29-22
52054297	Adjusting Screw M3x12 5	29 58
52054298	Pressure Spring	29-17
52054299	Pressure Roller Stripper	31-17
52054300	Rear Bracket - Oil Tank	33-12
52054301	Front Bracket - Oil Tank	33-5
52054305	Spring - Hot Roller Stripper	31-11
52054321	Bushing 20x25x15mm	29 60

Parts No.	Description	Page and Index No.
52054320	Hot Roller	29-44
52054331	Sleeve Oil Pump	33-23
52054451	Upper Guide Plate - Fusing	5-56
52054451	Upper Guide Plate - Fusing	35-6
52054460	Fusing Release Lever	5-14
52054460	Fusing Release Lever	35-13
52054468	Fusing Unit Release Lever	5-15
52054468	Fusing Unit Release Lever	35-29
52054473	Lock Spring	35-30
52054473	Lock Spring	5-64
52054475	Exit Relay Roller - Middle	35-4
52054476	Exit Relay Roller - Upper	5-16
52054476	Exit Relay Roller - Upper	35-16
52054507	Drive Sprocket - Exit Roller	5-25
52054507	Drive Sprocket - Exit Roller	35-25
52054511	Lower Exit Roller	5-42
52054511	Lower Exit Roller	35-15
52054515	Actuator - Exit Sensor	5-6
52054515	Actuator - Exit Sensor	35-11
52054517	Paper Exit Feeler	5-8
52054517	Paper Exit Feeler	35-12
52054518	Upper Exit Roller	5-43
52054518	Upper Exit Roller	35-17
52054519	Exit Cover	43-1
52054520	Exit Stay	35-23
52054522	Upper Guide Plate - Exit	35-24
52054526	Lower Guide Plate - Exit	35-2
52054527	Spring - Exit	5-47
52054527	Spring - Exit	7-29
52054527	Spring - Exit	35-18
52054810	Toner Plug	17-23
52055112	Operation Control Board - 115V (FT 5050)	7-13
52065112	Operation Control Board - 115V (FT 5070)	7-13
52055113	Operation Control Board - 220V/240V	7-13
52055114	Operation Control Board - CANADA	7-13
52055122	Operation Board - 1 115V FT5050, FT5	53-4
52055123	Operation Board-1 115V FT5050, FT5070	
	FT5070	53-4
52055132	Indicator Tube - 115V	53-1

Parts No.	Description	Page and Index No.
52055133	Indicator Tube - 220/240V	53-1
52055134	Indicator Tube - CANADA	53-1
52055140	Grounding Wire - Operation	53-2
52055142	IC - Intel 8742 - 115V	53-3
52055143	IC - Intel 8742 - 220/240V	53-3
52055156	Operation Board - Center	11-6
52055156	Operation Board - Center	55-6
52055157	Operation Board - Left	55-1
52055158	Operation Board - Right	55-4
52055184	IC - Intel 2764-25ROM	51-156
52055186	Optics Board	47-10
		51-1
52055201	Temperature Control Board	45-36
52055201	Temperature Control Board	59-1
52055208	Indicator - Main Scale - 115V	7-9
52055210	Moniter Display Board - FT5050	45-28
52055213	Indicator - Main Scale - 220V/240V	7-9
52055215	AC Control Board - 115V	45-37
52055216	AC Drive Board	45-8
52055216	AC Drive Board	61-1
52055221	Erase Lamp 115V	25-42
52055222	Erase Lamp 220/240V	25-42
52055225	Photosensor Board	11-3
52055228	Paper Feed Sensor Board	11-2
52055235	AC Control Board - 220V/240V	45-37
52055240	Feed Control Board	15-17
52055240	Feed Control Board	63-1
52055245	ID Sensor.	11-3
52055250	L.E.D. Sensor Type S	5-5
52055250	L.E.D. Sensor Type S	5-9
52055250	L.E.D. Sensor Type S	5-13
52055250	L.E.D. Sensor Type S	9-54
52055250	L.E.D. Sensor Type S	15-11
52055250	L.E.D. Sensor Type S	35-8
52055250	L.E.D. Sensor Type S	45-20
52055251	LED Sensor Type - T	15-30
52055251	LED Sensor Type - T	17-3

Parts No.	Description	Page and Index No.
52055251	LED Sensor Type - T	37-31
52055251	LED Sensor Type - T	39-20
52055251	LED Sensor Type - T	41-23
52055253	Photointerruptor Pack	13-23
52055253	Photointerruptor Pack	15-33
52055258	Silicon Oil Sensor	33-28
52055260	Transfer Safety Switch	7-34
52055263	AC Drive Board - 220/240V	61-1
52055300	Scanner Drive Motor - DC 60W	37-42
52055313	Registration Clutch	11-41
52055314	Upper Feed Clutch	11-31
52055315	Lower Feed Clutch	9-27
52055315	Lower Feed Clutch	11-38
52055318	Middle Magnetic Clutch	11-35
52055355	FL Converter 115V	53-5
52055358	Stabilizer	47-1
52055361	Power Pack - B/C/PCC	47-6
52055367	Power Pack - T/S	27-21
52055375	Drum Heater	25-33
52055386	Blower Fuse Assembly	147-35
52055401	Lamp Regulator - 115V	45-1
52055402	Lamp Regulator - 220V/240V	45-1
52055405	Transformer - 115V	47-29
52055408	Transformer - 220V/240V	47-29
52055410	Main Drive Motor Ass'y - AC 45W	41-5
52055411	Developer Motor (AC, 25W)	23-8
52055414	Vacuum Fan Motor Ass'y (AC 19W)	47-7
52055419	Exhaust Fan Motor - AC 13W	45-5
52055422	Cooling Blower - AC 20.5W	39-32
52055425	Pre-Transfer Lamp (Cold Cathode)	11-5
52055426	Quenching Lamp (Cold Cathode)	25-7
52055428	Cooling Fan Motor - AC 12W	47-25
52055452	DC Harness - FT5050	45-11
52055452	DC Harness - FT5050	65-1
52055456	AC Harness - 115V	45-34
52055456	AC Harness - 115V	67-1
52055458	Harness Terminal Block	47 33

Parts No.	Description	Page and Index No.
52055459	Harness - Capacitor - 115V	39-36
52055461	Harness - Operation Panel	45-35
52055468	Harness - Home Sensor Ass'y	39-47
52055469	Interface Harness	47-11
52055471	Harness - Toner End	5-12
52055474	Harness - Exit	35-3
52055483	Harness - Power Pack	27-38
52055486	AC Harness - 220/240V	45-34
52055486	AC Harness - 220/240V	69-1
52055494	Harness - Transformer 220V/240V	47-31
52055496	Harness - Upper Paper Size	13-19
52055497	Harness - Charge	13-24
52055497	Harness - Charge	45-15
52055498	Harness Paper Feed	45-21
		71-1
52055500	Harness - Safety Switch 115V	47-32
52055520	Power Supply Unit - 220V/240V	43-2
52055520	Power Supply Unit - 220/240V	57-1
52055530	Power Supply Unit - 115V	43-2
52055530	Power Supply Unit - 115V	57-1
52055541	Chorke Coil - L2	57-153
52055542	Chorke Coil - L3	57-163
52055543	Chorke Coil - L4	57-166
52055544	Chorke Coil - L5	57-164
52055545	Transformer	57-141
52055546	Transformer	57-106
52055560	Lamp Regulator - CANADA	45-1
52055653	IC - HD74LS107FP - 115V	49-146
52055654	IC - HD74LS107FP - 115V	49-145
52055663	IC - HD74LS107FP - 220/240V	49-146
52055664	IC - HD74LS107FP - 220/240V	49-145
52055701	Exhaust Fan Bracket	45-4
52055702	Angle - Main Board Bracket	47-15
52055703	Main Switch Bracket	45-33
52055704	Safety Switch Actuator	45-29

Parts No.	Description	Page and Index No.
52055705	Bracket - Misfeed Location Board	45-25
52055706	Bracket - Temperature Control	45-23
52055707	Safety Switch Bracket	45-32
52055708	Bracket - AC Control	45-9
52055711	Harness Guide Bracket	47-19
52055712	Harness Guide Angle	47-16
52055715	Bracket - Fusing Harness	47-22
52055718	Seal 5x80x112mm	3-5
52055719	Seal 5x80x50mm	3-12
52055720	Main Board Bracket	47-13
52055721	Optics Board Bracket	47-4
52055725	Noise Filter Bracket - 115V	47-21
52055726	Noise Filter Bracket - 220/240V	47-21
52055727	Power Cord Bracket - 220V/240V	47-18
52055728	Power Cord Bracket - 115V	47-18
52055729	Transformer Bracket	47-30
52055740	Safety Switch Actuator	44-29
52055750	Front Bracket - Power Supply Unit	43-6
52055751	Rear Bracket - Power Supply Unit	43-19
52055752	Stay - Cooling Fan	47-28
52055753	Bracket - Cooling Fan	47-27
52055754	Filter - Cooling Fan	7-70
52055755	Duct - Cooling Fan	47-26
52055839	Spacer - LED	11-5
52055839	Spacer - LED	55-5
52055840	Spacer - LED	11-2
52055840	Spacer - LED	55-2
52055846	Indicator Tube Cushion	53-6
52055880	Fuse Holder - 3P	43-4
52055881	Fuse Holder - 1P	43-3
52056491	Rear Side Fence	9-22
52056493	Front Side Fence	9-24
52056573	Side Fence Mylar - Rear	9 -
52056575	Side Fence Mylar - Front	9 -
52058120	German Instruction Cards	7-17
52058140	French Instruction Cards	7-17
52058160	Spanish Instruction Cards	7-17
52058180	Italian Instruction Cards	7-17
52058761	English Operating Instructions	7-72
52058763	German Operating Instructions	7-72
52058764	French Operating Instructions	7-72
52058765	Italian Operating Instructions	7-72
52058766	Spanish Operating Instructions	7-72
52059001	PCC Corona Wire	21-14
52059101	Gap Gauge	17-14
52059111	Omega Clamp	17-13
52059506	Fusing Lamp - 115V	29-16
52059510	Drum	25-22
52059601	Switching Board	17-12
52061288	Toner Catch Pan D	7 74
52061341	English Instruction Cards - 115V	7-17
52061362	Name Plate - FT5070	7-28
52061365	Decal - Misfeed FT5070	15-1
52061365	Decal - Misfeed FT5070	7-25
52061372	Left Inner Cover - FT5070	7-41
52061375	Panel - Misfeed Indicator FT5070	7-44
52061376	Decal - Misfeed Indicator FT5070	15-2
52061376	Decal - Misfeed Indicator FT5070	7-43
52061397	Front Cover Ass'y - FT5070	7-26
52061450	English Instruction Cards - 220V/240V	7-17
52061470	English Instruction Cards - CANADA	7-17
52062527	Jogger Unit	9 *
52062550	Duplex Stopper	9-53
52062556	Duplex Guide Plate	9-1
52062557	Friction Pad - Duplex Guide Plate	9-92
52062558	Duplex Guide Plate - Middle	9-2
52062601	Separation Drive Bracket	9-65
52062602	Duplex Separation Arm	9-11
52062603	Separation Driven Shaft	9-17
52062605	Separation Roller	9-4
52062607	Spring - Separation	9-7
52062609	Gear - 22T	9-14
52062610	Spring - Separation Roller	9-15
52062615	Gear - 31T	9-22
52062621	Duplex Stay	9-58
52062626	Sensor Bracket - Duplex Paper End	9-56
52062631	Pick-Up Arm	9-9
52062641	Duplex Feed Shaft	9-61
52062642	Gear - 18T	9-63
52062645	Feed Roller	9-64
52062647	Pick-Up Roller	9-60

Parts No.	Description	Page and Index No.
52062650	Bushing - 8x12x7mm	9-62
52062651	Ball Bearing - 8x20x13mm	9-25
52062661	Feed Roller Arm	9-35
52062671	Duplex Feed Roller	9-43
52062675	Feed Drive Belt	9-39
52062676	Feed Roller Pulley	9-36
52062677	Bushing - 6x10x7mm	9-37
52062680	Entrance Actuator Roller	9-32
52062681	Axle Plate	9-34
52062681	Axle Plate	9-38
52062684	Shoulder Screw - M3	9-40
52062685	Entrance Actuator Plate	9-33
52062686	Snap Ring	9-31
52062686	Snap Ring	9-77
52062686	Snap Ring	9-81
52062687	Stud Screw M3	9-91
52062690	Duplex Paper Actuator	9-44
52062695	Cover - Duplex Paper Sensor	9-57
52062696	Cover - Entrance Actuator Sensor	9-55
52062697	Sensor Harness Cover	9-59
52062700	Spring Pick-up Roller	9-90
52062705	Gear - 30T	9-24
52062711	Bracket - Duplex Stopper Solenoid	9-19
52062712	Duplex Stopper Solenoid	9-20
52062715	Paper Stopper Arm	9-28
52062718	Spring - Paper Stopper	9-23
52062721	Bracket - Duplex Pick-Up Solenoid	9-88
52062722	Adjusting Plate - Duplex	9-89
52062724	Duplex Pick-up Solenoid	9-66
52062731	Bracket - Duplex Positioning Solenoid	9-30
52062732	Duplex Positioning Solenoid	9-29
52062735	Magnetic Clutch Stopper	9-21
52062750	Front Side Plate - Duplex Transport	9-46
52062755	Rear Side Plate - Duplex Transport	9-50
52062760	Duplex Transport Drive Roller	9-51
52062761	Duplex Transport Drive Roller	9-42
52062764	Duplex Transport Guide Roller	9-48
52062766	Transport Unit Stay	9-49

Parts No.	Description	Page and Index No.
52062768	Duplex Transport Guide Pawl	9-47
52062776	Gear - 30T	9-26
52062776	Gear 30T	7 37
52062780	Inner Paper Tray	7-2
52062781	Spring - Inner Paper Tray	7-35
52062785	Front Side Frame - Fork Gate	7-30
52062790	Rear Side Frame - Fork Gate	7-9
52062795	Fork Gate Roller	7-21
52062800	Entrance Guide Plate - Fork Gate	7-31
52062805	Exit Guide Plate - Fork Gate	7 22
52062808	Anti-Static Brush - Duplex Transport	5-38
52062808	Anti-Static Brush - Duplex Transport	5-45
52062808	Anti-static Brush - Duplex Transport	7-17
52062808	Anti-Static Brush - Duplex Transport	35-1
52062810	Fork Gate Pawl	7-18
52062813	Anti-static Brush - Fork Gate	7-20
52062815	1st Gate Arm	7-32
52062820	2nd Gate Arm	7-6
52062824	3rd Gate Arm	7-5
52062826	Spring Gate Arm	7 35
52062827	Spring - Gate Arm	7-12
52062830	Gate Solenoid Bracket	7-14
52062831	Gate Solenoid	7-13
52062836	Gate Arm Solenoid	7-16
52062838	Small Gate Link	7-7
52062840	Fork Gate Holder	7-19
52062842	Bracket - Fork Gate Setting Plate	7-10
52062843	Fork Gate Setting Plate	7-11
52062847	Mounting Bracket - Fork Gate	7 36
52062850	Bracket - Transfer Safety Switch	7-4
52062851	Fork Gate Guide - Right	7-3
52062854	Duplex Transport Holder	7-1
52062855	Fork Gate Stopper	7-24
52062857	Fork Gate Cover	7-25
52062858	Spring - Fork Gate Stopper	7-23
52062859	Fork Gate Knob	7-27
52062860	Front Fork Gate Guide	7-33
52062863	Front Side Plate - Jogger Unit	9-72
52062866	Rear Side Plate - Jogger Unit	9-71

Parts No.	Description	Page and Index No.
52062870	Jogger Stay	9-84
52062875	Jogger Fence Drive Wire	9-75
52062876	Spring - Wire	9-74
52062877	Wire Clamp Plate	9-73
52062879	Wire Drive Pulley	9-70
52062881	Jogger Motor Bracket	9-83
52062884	H.P. Adjusting Plate	9-68
52062885	H.P. Bracket	9-67
52062900	Jogger Unit Base	9-78
52062922	Shoulder Screw - M4	9-79
52062924	Duplex Settler Mylar - Front	9-80
52062930	Duplex Settler Mylar - Rear	9-76
52062935	Jogger Fence Guide	9-82
52063950	Toner Catch Pan C	27-39
52064351	Inverter Support Roller	5-33
52064355	Inverter Return Roller	5-36
52064360	Inverter Pressure Roller	5-29
52064361	Inverter Pressure Shaft	5-32
52064362	Inverter Pressure Arm Front	5-30
52064363	Inverter Pressure Arm Rear	5-31
52064368	Inverter Return Guide	5-37
52064370	Lower Inverter Slide	5-41
52064381	Upper Inverter Slide	5-39
52064382	Inverter Guide	5-40
52064388	Spring - Inverter Guide	5-7
52064390	Gear - 20T	5-49
52064391	Gear - 24T	5-18
52064394	Bracket - Inverter Return Solenoid	5-27
52064395	Inverter Return Solenoid	5-26
52064398	Spring - Inverter Solenoid	5-54
52064455	Lower Exit Relay Guide Plate	5-53
52064465	Inverter Guide Mylar Front	5-62
52064466	Inverter Guide Mylar Rear	5-63
52064469	Inverter Sensor Cover	5-17
52064470	Inverter Sensor Feeler	5-11
52064474	Inverter Roller	5-34
52064477	Lower Exit Relay Roller	5-2
52064478	Spring Driven Roller	5-48
52064478	Spring Driven Roller	7-38

Parts No.	Description	Page and Index No.
52064480	Release Knob	5-3
52064482	Decal - D2	7-75
52064485	Junction Gate	5-35
52064488	Exit Sensor Stay	5-60
52064488	Exit Sensor Cover	43-14
52064490	Lower Exit Guide Plate	5-4
52064495	Entrance Gate Feeler	5-1
52064497	Exit Sensor Bracket	5-10
52064500	Bracket - Junction Gate Solenoid	5-20
52064501	Junction Gate Solenoid	5-21
52064505	Junction Gate Shaft Arm	5-23
52064508	Spring - Junction Gate	5-52
52064510	Paper Settler Bar	9-45
52064522	Upper Exit Guide Plate	5-44
52065112	Operation Control Board - 115V	7-13
52065113	Operation Control Board - 220V/240V	7-13
52065114	Operation Control Board - CANADA	7-13
52065157	Keyboard - C	11-1
52065158	Operation Board - Right	11-4
52065210	Monitor Display Board - FT5070	45-28
52065309	Jogger Motor	9-69
52065317	Inverter Magnetic Clutch	5-22
52065450	DC Harness - FT5070	13-1
52065450	DC Harness - FT5070	45-11
52065473	Harness - Duplex Entrance	9-52
52065651	Main Control Board - 115V	47-12
52065651	Main Control Board - 115V	49-1
52065661	Main Control Board - 220V/240V	47-12
52065661	Main Control Board - 220V/240V	49-1
52068120	German Instruction Cards	7-17
52068140	French Instruction Cards	7-17
52068160	Spanish Instruction Cards	7-17
52068180	Italian Instruction Cards	7-17
52068761	English Operating Instructions	7-72
52068763	German Operating Instructions	7-72

Parts No.	Description	Page and Index No.
50530223	Bushing - 8mm	11-29
50530223	Bushing - 8mm	23-20
50530223	Bushing - 8mm	29-33
50530223	Bushing - 8mm	33-11
50530223	Bushing - 8mm	41-20
50530223	Bushing - 8mm	9-16
50530419	Bushing - 10mm	27-11
50530447	Bushing - 6x10x6mm	11-14
50530447	Bushing - 6x10x6mm	27-6
50530447	Bushing - 6x10x6mm	27-12
50530447	Bushing - 6x10x6mm	31-16
50530447	Bushing - 6x10x6mm	37-45
50530447	Bushing - 6x10x6mm	37-50
50530447	Bushing - 6x10x6mm	39-9
50530447	Bushing - 6x10x6mm	5-50
50530447	Bushing - 6x10x6mm	7-8
50530447	Bushing - 6x10x6mm	9-13
50530447	Bushing - 6x10x6mm	9-87
50530833	Decal - DANGER Cover	7-49
50540536	Magnet Catch Ass'y	7-35
50540536	Magnet Catch Ass'y	7-42
50540536	Magnet Catch Ass'y	17-24
52015420	Paper Detect Motor - DC 1.69W	15-1

Parts No.	Description	Page and Index No.
52068764	French Operating Instructions	7-72
52068765	Italian Operating Instructions	7-72
52068766	Spanish Operating Instructions	7-72
52069500	Duplex Transport Belt	9-41
52069600	Sensor Checker	17-15
52091694	Guide Roller - 1st Scanner	37 60
52095196	Optics Control Board	51-1
52095825	Right Operation Panel	7-77
52095826	Center Operation Panel	7-78
52095827	Left Operation Panel/FT5050	7-79
52065827	Left Operation Panel/FT5070	
52095830	Small Operation Panel	7-80
52095831	Long Operation Panel	7-81
52151697	Wire Clamp	17-55
52151829	Toner Shield Plastic	39-14
52151859	Scanner Guide	39-38
52151886	Pulley Tightener	37-26
52151893	H.P. Sensor Bracket	39-19
52151926	Mylar Seal - Glass	39-46
52151975	Pulley Scanner	37-30
52152819	Mounting Bracket - Platen Cover	9-33
52152830	Spring Release	9-48
52152833	Base Holder	9-34
52152834	Arm Holder	9-35
52152835	Crank	9-36

Parts No.	Description	Page and Index No.
52152836	Sleeve 8 x 34 mm	9-37
52152837	Shaft 7 x 40 mm	9-38
52152838	Rubber Magnet	9-39
52152839	Balance Spring	9-40
52152840	Pin 4 x 115 mm	9-41
52152841	Pin 4 x 100 mm	9-42
52152842	Right Spring - Platen Cover	9-43
52152843	Left Spring - Platen Cover	9-44
52152844	Slide Supporter	9-45
52152845	Plate - Magnet	9-46
52152846	Platen Base	9-47
52153552	Front Side Plate - Cleaning	21-13
52153553	Rear Side Plate - Cleaning	21-16
52153555	Rubber Seal - Cleaning	21-12
52153581	Cleaning Brush	21-8
52153589	Seal 6 x 8 x 105 mm	21-46
52153596	Pick-off Pawl	21-22
52153600	Seal - Blade, Front	21-11
52153601	Seal - Blade, Rear	21-33
52153606	Left Agitator	21-15
53041608	Bushing - 6mm	31-4
53041639	Bushing - 8mm	35-21
53041639	Bushing - 8mm	5-51
54031078	Drum Drive Gear 30T	5-61
54031145	Cover - Key Counter	7-50
54031145	Cover - Key Counter	39-41
54032075	Stepped Screw	11-51
54032075	Stepped Screw	15-20
54032075	Stepped Screw	35-22
54032075	Stepped Screw	37-21
54032075	Stepped Screw	45-17
54032106	Ratchet Sleeve - Paper Feed	23-17

Parts No.	Description	Page and Index No.
54034335	Decal - Terminal 115V	47-17
54034335	Decal - Terminal 115V	73-23
54036118	Stepped Screw - Transformer	39-58
54085160	Short Connector	53-7
54091705	Clamp - Reflector	37-11
54131812	Spring - Drum Return Arm	23-33
54131875	Knob Screw	25-16
54131875	Knob Screw	43-18
54131882	Stepped Screw	11-59
54131882	Stepped Screw	7-26
54131882	Stepped Screw	7-39
54134835	Decal - Paper Level	9-23
54154093	Shaft - Fusing Lamp Terminal	29-38
54154094	Stud - Fusing Lamp Terminal	29-39
54154097	Lamp Terminal	29-9
54154125	Nylon Clip	29-5
54154258	Valve - Oil Sump	29-23
54154310	Valve Oil Pump	33-22
54154457	Spring - Exit	31-8
54164335	Sprocket - 17T	23-14
54182116	Spacer - Guard	21-43
54182859	Spring -Resist Roller (Front)	21-35
54191057	Rubber Foot	43-8
54196244	Left Spring - Platen Cover	9-9
54196245	Right Spring - Platen Cover	9-10
54201515	Plate - Key Counter	7-51
54201515	Plate - Key Counter	39-40
54201675	Insulator - Lamp Terminal	37-36
54201676	Spacer - Lamp Terminal	37-39
54201682	Supporter - Lamp Terminal	37-38
54201779	Arm Holder - Platen Cover	9-8
54203239	Spring - Conveyer Roller	19-27
54203768	Spring - Release	9-13
54204051	Oil Supply Solenoid	33-25
54204062	Oil Breaker - Funnel	33-19

Parts No.	Description	Page and Index No.
54204193	Collar - Release Cam	21-36
54204867	Decal - Thermofuse 169°C	29-1
54209504	Thermo Meter - HLC60-E	17-4
54209505	Probe - HLC30	17-5
54209507	Degital Multimeter - BECKMAN RMS3030	17-6
54209508	Delux Test Lead Accessory Kit	17-7
54209516	Test Chart - OS - A3 (10 psc/set)	17-10
54209550	Silicon Oil	17-8
54225131	Reed Switch	39-45
54225131	Reed Switch	45-12
54241955	Lock - Platen Cover	9-2
54243581	Shaft - Stopper	7-16
54245802	Terminal - Temperature Fuse	29-50
54291629	Spacer	7-6
54292665	Worm Gear	37-46
54324117	Insulator - A	29-8
54324118	Insulator - B	29-10
54324119	Terminal Cover	29-7
54395246	Total Counter	45-26
54395520	Temperature Fuse 169°C	29-51
54421099	Gear - 24T	41-16
54421100	Sprocket 20T	41-18
54421110	Sprocket 20T	41-12
54421110	Coupled Sprocket and Gear	41-27
54421111	Spring - Main Drive Tightener	41-11
54421270	Right Supporting Plate - Rear Cover	43-11
54421277	Decal - Main Switch	73-1
54421296	Operating Instruction Holder	7-73
54421299	Original Holder	7-7
54421372	Decal - VOLTAGE 220V/240V	7-49
54421372	Decal - VOLTAGE 220V/240V	73-2
54421375	Cap - Left Cover - S	7-24
54421657	Seal - 15x214x13	9-15
54421667	Stud - Platen Cover Mounting	9-16

Parts No.	Description	Page and Index No.
54421692	Slide Shoe - 1st Scanner	37-25
54421700	Front Terminal - Exposure Lamp	37-37
54421702	Small Screw - M3	37-4
54421703	Wing - Center	37-6
54421704	Wing - Side	37-5
54421705	Rear Terminal - Exposure Lamp	37-35
54421710	1st Mirror	37-20
54421711	Spring Plate - 1st Mirror	37-23
54421735	Pulley	37-33
54421735	Pulley	9-85
54421740	2nd and 3rd Mirror	37-2
54421740	2nd and 3rd Mirror	37-19
54421741	Rear Spring Plate-2nd and 3rd Mirror	37-3
54421742	Front Spring Plate-2nd and 3rd Mirror	37-1
54421748	Cleaner - Guide Rod	37-14
54421770	Cam - Optics Axis	37-22
54421770	Cam - Optics Axis	39-59
54421781	Nut - Lens Drive	39-7
54421782	Gear 18T - Lens Drive	37-52
54421782	Gear 18T - Lens Drive	39-8
54421784	Idle Grar 24T - Lens Drive	37-56
54421819	Gear 18T - Lens Drive Motor	37-51
54421855	Seal	27-8
54421870	Left Pulley	37-24
54421890	Spring - Wire Tightner	37-27
54421921	Right Scale	7-10
54421924	Cushion - Exposure Glass	39-18
54421941	Clamp Block - Exposure Lamp Harness	37-29
54421961	Cover - Main Reflector	37-8
54421962	Front Cover Terminal	37 57
54421963	Rear Cover Terminal	37 58
54421982	Exposure Glass - LT, LDC	7-11
54421983	Exposure Glass - A4, A3	7-11
54422065	Front End Block - Main Corona	25-31
54422066	Front Cover - Main Corna	25-30
54422068	Rear Cover - Main Corona	25-27

Parts No.	Description	Page and Index No.
54422107	Hookless Spring	25-11
54422107	Hookless Spring	27-20
54422108	Spring - Corona Wire	21-42
54422108	Spring - Corona Wire	25-26
54422108	Spring - Corona Wire	27-24
54422110	Plug - Corona Unit	25-23
54422111	Rubber Shield - Quenching	25-41
54422117	Shoulder Screw Rail	45-30
54422123	Cleaner - Main Corona Wire	25-32
54422143	Fan - Main Corona	41-3
54422165	Receptacle Housing Main Corona	25-6
54422165	Releptacle Housing - Main Corona	25-10
54422258	Drum Drive Pulley	25-8
54422272	Terminal Holder - Drum Heater	25-14
54422273	Terminal - Drum Heater	25-15
54422278	Spring - Drum Flange	25-21
54422285	Rear Drum Flange	25-13
54422751	Bushing - Upper Registration Roller	35-19
54422751	Bushing - Upper Registration Roller	5-46
54422751	Bushing - Upper Registration Roller	7-28
54422752	Bushing - Lower Registration Roller	11-37
54422752	Bushing - Lower Registration Roller	11-43
54422754	Spring - Registration Roller	11-54
54422799	Lower Registration Roller Gear	19-4
54423077	Idle Gear - 18T	19-5
54423097	Clutch Drum - Developer Knob	19-31
54423100	Development Roller	19-10
54423100	Development Roller Seal	19
54423112	Gear - 25T	19-7
54423114	Adjusting Plate - Magnet Angle	19-32
54423154	Holder - Development Unit	25-34
54423214	Seal - Toner Agitator	17-10
54423226	Drive Wheel - Toner Agitator	17-8
54423229	Gear - 49T	17-7
54423233	Spring - Drive Wheel	17-4
54423233	Spring - Drive Wheel	17-6

Parts No.	Description	Page and Index No.
54423233	Spring - Drive Wheel	23-24
54423570	Shoulder Sleeve	21-1
54423593	Seal - Cleaning Balde Sahft	21-3
54423904	Spring - Pick-Off Pawl Slide	21-19
54424086	Gear - 40T	29-18
54424117	Oil Blade	29-14
54424119	Oil Skimmer	29-46
54424121	Spring - Oil Blade	23-2
54424121	Spring - Oil Blade	29-45
54424151	Gear - 30T	29-19
54424152	Spring - Fusing Drive	29-20
54424196	Front Bracket - Lamp Terminal	29-37
54424201	Rear Bracket - Lamp Terminal	29-11
54424203	Spring - Lamp Holder	29-36
54424332	Lower Holder - Oil Blade	29-15
54424411	Thermistor Bracket	29-54
54424413	Shaft - Thermistor	29-48
54424414	Spring - Thermistor	29-47
54424440	Front Release Lever - Exit Ass'y	31-26
54424442	Rear Release Lever - Exit Ass'y	31-6
54424444	Stud - Exit Ass'y Release Lever	31-10
54424463	Spring - Front Release Lever	31-25
54424464	Spring - Rear Release Leve	31-9
54424465	Stripper Pawl Plate	31-1
54424467	Spring - Stripper Pawl Plate	31-3
54424492	Gear - 20T	31-7
54424495	Slip Clutch	35-26
54424495	Slip Clutch	5-24
54424501	Copy Tray	7-23
54425120	Spacer - LED	55-3
54425120	Spacer - LED	11-3
54425266	Harness - Exposure Lamp	37-34
54425270	Harness - Noise Filter	45-7
54425308	Exposure Lamp - 85V/250W	37-9
54425315	Anti-Condensation Heater - 10W	39-52

Parts No.	Description	Page and Index No.
54425317	Harness - Drum Heater	25-12
54425368	Thermistor - Fusing	29-55
54425722	Heater - 115V, 960W	29-16
54425752	Heater - 220/240V 960W	29-16
54425757	Noise Filter - 220V/240V	47-20
54425820	Terminal Block - Thermofuse	29-53
54425838	Angle - Cord Clamp 50	47-23
54425856	Cover - Counter	45-27
54425901	Operation Key Print	1/A
54426126	Small Decal High Temperature	29-4
54427042	Large Decal - High Temperature	29-2
54427042	Large Decal - High Temperature	73-24
54427043	Small Decal - High Temperature	29-4
54427043	Small Decal - High Temperature	73-25
54429003	Main Corona Wire (10pcs/set)	25-29
54429003	Main Corona Wire (10pcs/set)	27-36
54429004	T & S Corona Wire (10pcs/set)	27-35
54429006	Hot Roller Stripper (6pcs/set)	31-12
54429101	Setting Powder	17-1
54429102	Light Shielding Bag	17-2
54429103	Launa Oil	17-9
54429106	Drum Shoe	17-3
54429810	Teflon Hot Roller Kit	29-61
54432657	Gear - 28T	7-62
54432660	Spacer - 6x22x0.5mm	7-64
54432668	Bushing	35-9
54432668	Bushing	5-59
54432684	Magnet - By-pass Table	35-7
54432684	Magnet - Bypass Table	5-58
54432706	Plate - 12x220x1T	7-68
54432711	Gear Plate - By Pass Table	7-59
54432712	Cork Pad	7-60
54432713	Wave Washer	7-63
54442836	Gear - 20T	9-86
54463707	Bushing - 6x10x6mm	21-29
54463712	Bevel Gear - 14T	25-35
54465403	Cooling Fan Motor AC 12W	47 25
54471967	Sheet Harness Guide	37 59
54472676	Output Hub	11-20
54472676	Output Hub	9-8

Parts No.	Description	Page and Index No.
54472678	Slip Clutch Cover	11-22
54472678	Slip Clutch Cover	9-6
54472681	Roller Retainer	11-24
54472681	Roller Retainer	9-5
54472693	Separation Roller	11-23
54472695	Input Hub	11-19
54472695	Input Hub	9-3
54472697	Spring - Separate	11-21
54472706	Gear - 15T	9-10
54472717	Paper Feed Roller	11-27
54472723	Pick-Up Roller	11-25
54472927	Friction Pad - B	9-25
54473216	Gear - 18T	41-29
54473331	Gear-18T	11-33
54473361	Toner Supply Solenoid	23-25
54474241	Tube Clamp	33-21
54474241	Tube Clamp	33-24
54474242	Oil bottle Cap	33-4
54474980	Decal - Terminal 220V/240V	47-17
54474980	Decal - Terminal 220V/240V	73-26
54479078	Heat Resisting Grease MT-78	17-11
54482802	Rear Platen Cover	9-1
54482803	Platen Cover Pad	9-5
54482804	Platen Cover Sheet	9-6
54482806	Platen Cover Arm	9-7
54482810	Hinge Bracket - Platen Cover	9-12
54482811	Mounting Bracket - Platen Cover	9-14
54482813	Platen Cover Hinge	9-11
54482824	Flex Hinge - Platen Cover	9-4
54485376	Lens Drive Motor	37-54
55016555	Spring - Clutch	23-16
58401632	Stepped Screw - Guide Plate	31-14
58753026	Spring - Original Feed Arm	23-34
64431222	Jumper Wire	59-104
68440160	Transformer - TR3	57-151

Parts No.	Description	Page and Index No.
03130040W	Philips Pan Head Screw - M3x4	37-102
03130050W	Philips Pan Head Screw - M3x5	23-110
03130050W	Philips Pan Head Screw - M3x5	9-113
03130060E	Philips Pan Head Screw - M3x6	15-102
03130060M	Philips Pan Head Screw - M3x6	29-102
03130060W	Philips Pan Head Screw - M3x6	7-107
03130060W	Philips Pan Head Screw - M3x6	21-101
03130060W	Philips Pan Head Screw - M3x6	23-111
03130060W	Philips pan Head Screw - M3x6	27-109
03130060W	Philips Pan Head Screw - M3x6	29-101
03130060W	Philips Pan Head Screw - M3x6	33-102
03130060W	Philips Pan Head Screw - M3x6	45-106
03130060W	Philips Pan Head Screw - M3x6	5-112
03130060W	Philips Pan Head Screw - M3x6	9-111
03130080M	Philips Pan Head Screw - M3x8	25-108
03130080W	Philips Pan Head Screw - M3x8	37-108
03130100W	Philips Pan Head Screw - M3x10	9-103
03130120W	Philips Pan Head Screw - M3x12	29-114
03130120W	Philips Pan Head Screw - M3x12	37-109
03130120W	Philips Pan Head Screw - M3x12	7-109
03130140B	Philips Pan Head Screw - M3x14	45-105
03130160W	Philips Pan Head Screw - M3x16	47-106
03140050W	Philips Pan Head Screw - M4x5	25-107
03140050W	Philips Pan Head Screw - M4x5	27-108
03140060W	Philips Pan Head Screw - M4x6	7-114
03140060W	Philips Pan Head Screw - M4x6	15-105
03140060W	Philips Pan Head Screw - M4x6	15-107
03140060W	Philips Pan Head Screw - M4x6	19-101
03140060W	Philips Pan Head Screw - M4x6	25-103
03140060W	Philips Pan Head Screw - M4x6	29-103
03140060W	Philips Pan Head Screw - M4x6	29-104
03140060W	Philips Pan Head Screw - M4x6	33-103
03140060W	Philips Pan Head Screw - M4x6	37-110
03140060W	Philips Pan Head Screw - M4x6	9-110
03140080M	Philips Pan Head Screw - M4x8	27-107

Parts No.	Description	Page and Index No.
03140080M	Philips Pan Head Screw - M4x8	47-104
03140080W	Philips Pan Head Screw - M4x8	7-103
03140080W	Philips Pan Head Screw - M4x8	13-102
03140080W	Philips Pan Head Screw - M4x8	17-104
03140080W	Philips Pan Head Screw - M4x8	21-102
03140080W	Philips Pan Head Screw - M4x8	33-107
03140100W	Philips Pan Head Screw - M4x10	13-103
03140100W	Philips Pan Head Screw - M4x10	15-104
03140100W	Philips Pan Head Screw - M4x10	17-101
03140100W	Philips Pan Head Screw - M4x10	19-102
03140100W	Philips Pan Head Screw - M4x10	29-107
03140100W	Philips Pan Head Screw - M4x10	35-103
03140100W	Philips Pan Head Screw - M4x10	37-107
03140100W	Philips Pan Head Screw - M4x10	39-104
03140100W	Philips Pan Head Screw - M4x10	41-103
03140100W	Philips Pan Head Screw - M4x10	45-104
03140100W	Philips Pan Head Screw - M4x10	5-101
03140100W	Philips Pan Head Screw - M4x10	5-108
03140100W	Philips Pan Head Screw - M4x10	9-109
03140120W	Philips Pan Head Screw - M4x12	29-108
03140450W	Philips Pan Head Screw - M4x45	47-119
03150060W	Philips Pan Head Screw - M5x6	47-111
03150080W	Philips Pan Head Screw - M5x8	23-101
03150080W	Philips Pan Head Screw - M5x8	41-102
03150080W	Philips Pan Head Screw - M5x8	41-104
03430040D	Philips Pan Head Screw - M3x4	37-101
03440060D	Philips Truss Head Screw - M4x6	7-116
03440080D	Philips Truss Head Screw - M4x8	7-105
03440200D	Philips Truss Head Screw - M4x20	7-102
03540080W	Philips Truss Head Screw - M4x8	9-102
04140102B	Tapping Screw - M4 x 10	9-105
04340060E	Tapping Screw - M4x6	9-105
04340060W	Tapping Screw - M4x6	23-109
04340060W	Tapping Screw - M4x6	29-104
04340060W	Tapping Screw - M4x6	31-101
04340060W	Tapping Screw - M4x6	37-106

Parts No.	Description	Page and Index No.
04340060W	Tapping Screw - M4x6	39-101
04340060W	Tapping Screw - M4x6	45-103
04340060W	Tapping Screw - M4x6	47-101
04340080W	Tapping Screw - M4x8	7-113
04340080W	Tapping Screw - M4x8	11-105
04340080W	Tapping Screw - M4x8	13-101
04340080W	Tapping Screw - M4x8	15-109
04340080W	Tapping Screw - M4x8	23-104
04340080W	Tapping Screw - M4x8	25-101
04340080W	Tapping Screw - M4x8	27-106
04340080W	Tapping Screw - M4x8	29-105
04340080W	Tapping Screw - M4x8	33-101
04340080W	Tapping Screw - M4x8	35-102
04340080W	Tapping Screw - M4x8	43-101
04340080W	Tapping Screw - M4x8	45-101
04340080W	Tapping Screw - M4x8	47-102
04340080W	Tapping Screw - M4x8	5-102
04340080W	Tapping Screw - M4x8	7-103
04340080W	Tapping Screw - M4x8	7-105
04340080W	Tapping Screw - M4x8	9-101
04340100W	Tapping Screw - M4x10	47-105
05740050E	Hexagon Headless Set Screw - M4x5	37-112
05740050E	Hexagon Headless Set Screw - M4x5	7-107
05740050E	Hexagon Headless Set Screw - M4x5	9-104
05740060E	Hexagon Headless Set Screw - M4x6	11-104
05740060E	Hexagon Headless Set Screw - M4x6	37-115
05740060E	Hexagon Headless Set Screw - M4x6	5-103
05740060E	Hexagon Headless Set Screw - M4x6	5-104
05740060E	Hexagon Headless Set Screw - M4x6	9-108
05740100E	Hexagon Headless Set Screw - M4x10	21-105
05750050E	Hexagon Headless Set Screw - M5x5	23-103
05750050E	Hexagon Headless Set Screw - M5x5	37-116
05750050E	Hexagon Headless Set Screw - M5x5	5-114
05750060E	Hexagon Headless Set Screw - M5x6	25-104
05750060E	Hexagon Headless Set Screw - M5x6	41-107
07000050W	Flat Washer - M5	7-108
07100030B	Hexagon Nut M 3	29-122

Parts No.	Description	Page and Index No.
07100040W	Hexagon Nut - M4	29-121
07200025E	Retaining Ring - M2.5	19-103
07200025E	Retaining Ring - M2.5	21-103
07200025E	Retaining Ring - M2.5	5-111
07200030E	Retaining Ring - M3	7-104
07200030E	Retaining Ring - M3	13-105
07200030E	Retaining Ring - M3	17-102
07200030E	Retaining Ring - M3	19-104
07200030E	Retaining Ring - M3	29-110
07200030E	Retaining Ring - M3	35-101
07200030E	Retaining Ring - M3	5-105
07200030W	Retaining Ring - M3	5-107
07200030W	Retaining Ring - M3	5-113
07200040E	Retaining Ring - M4	7-115
07200040E	Retaining Ring - M4	11-103
07200040E	Retaining Ring - M4	13-106
07200040E	Retaining Ring - M4	15-101
07200040E	Retaining Ring - M4	21-104
07200040E	Retaining Ring - M4	23-108
07200040E	Retaining Ring - M4	31-103
07200040E	Retaining Ring - M4	33-104
07200040E	Retaining Ring - M4	45-109
07200040E	Retaining Ring - M4	7-104
07200040E	Retaining Ring - M4	9-102
07200050E	Retaining Ring - M5	11-101
07200050E	Retaining Ring - M5	13-107
07200050E	Retaining Ring - M5	15-103
07200050E	Retaining Ring - M5	17-103
07200050E	Retaining Ring - M5	19-105
07200050E	Retaining Ring - M5	23-102
07200050E	Retaining Ring - M5	27-102
07200050E	Retaining Ring - M5	29-111
07200050E	Retaining Ring - M5	31-104
07200050E	Retaining Ring - M5	33-105
07200050E	Retaining Ring - M5	35-105

Parts No.	Description	Page and Index No.
07200050E	Retaining Ring - M5	37-117
07200050E	Retaining Ring - M5	41-105
07200050E	Retaining Ring - M5	5-106
07200050E	Retaining Ring - M5	5-110
07200050E	Retaining Ring - M5	7-106
07200050E	Retaining Ring - M5	9-107
07200060E	Retaining Ring - M6	11-102
07200060F	Retaining Ring - M6	23-105
07200060E	Retaining Ring - M6	29-112
07200060E	Retaining Ring - M6	35-104
07200060E	Retaining Ring - M6	41-106
07200060E	Retaining Ring - M6	5-109
07200060E	Retaining Ring - M6	9-106
07200070E	Retaining Ring - M7	15-108
07200070E	Retaining Ring - M7	19-106
07200070E	Retaining Ring - M7	27-103
07200070E	Retaining Ring - M7	29-113
07200070E	Retaining Ring - M7	37-114
07200080E	Retaining Ring - M8	15-112
07200080E	Retaining Ring - M8	27-104
07250140E	Retaining Ring C - M14	19-111
07250150E	Retaining Ring C - M15	25-105
07250170E	Retaining Ring C - M17	25-106
07250200E	Retaining Ring C - M20	29-117
07270080E	Retaining Ring - M8	19-110
08025085	Tapping Screw	7-112
08025085W	Tapping Screw - M4x8	9-104
08025094	Tapping Screw - M4x8	7-101
08030017	Knob Screw	7-109
08030017	Knob Screw	33-106
08050083	Retaining Ring - M4	9-106
08053042	Ball Bearing - 6mm	11-13
08053104	Ball Bearing - 8x22x7mm	29-115
08053145	Ball Bearing - 6x12x4mm	37-118
08053204	Ball Bearing - 8x16x5mm	9-112
08053235	Ball Bearing - 15x32x9mm	19-109

Parts No.	Description	Page and Index No.
08053296	Spacer - M6	11-106
08053307	Ball Bearing - 8x14x4mm	9-103
08053346	Ball Bearing - 8x12x3.5mm	23-21
08053367	Ball Bearing - 20x42x12mm	29-116
08074025	Washer - 8x6.2x0.4mm	37-119
08074025	Washer 8x6.2x0.4mm	9 115
08074040	Washer - 6.5mm	19-108
08077016	Washer - 13x10.3x0.3mm	37-111
09100044	Hook Link Chain - 44P	19-107
09160082	Bushed Roller Chain	23-114
09160176	Bushed Roller Chain	41-13
09160228	Bushed Roller Chain	41-30
09514006W	Philips Screw with Flat Washer - M4x6	25-102
09514006W	Philips Screw with Flat Washer - M4x6	29-118
09514006W	Tapping Screw with Flat Washer - M4x6	33-108
09514006W	Philips Screw with Flat Washer - M4x6	39-105
09514008W	Philips Screw with Flat Washer - M4x8	7-110
09514008W	Philips Screw with Flat Washer - M4x8	13-104
09514008W	Philips Screw with Flat Washer - M4x8	17-105
09514008W	Philips Screw With Flat Washer - M4x8	23-107
09514008W	Tapping Screw with Flat Washer - M4x8	33-111
09514008W	Philips Screw with Flat Washer - M4x8	37-103
09514008W	Philips Screw with Flat Washer - M4x8	39-103
09515008W	Phillips Screw With Flat Washer - M4x8	47 120
09603006W	Phillips Pan Head Screw M3x6	9 11
09644008W	Tapping Screw with Flat Washer - M4x8	7-111
09644008W	Tapping Screw with Flat Washer - M4x8	15-106
09644008W	Tapping Screw With Flat Washer - M4x8	23-106
09644008W	Tapping Screw With Flat Washer - M4x8	27-101
09644008W	Tapping Screw With flat Washer - M4x8	29-109
09644008W	Tapping Screw With Flat Washer - M4x8	31-102
09644008W	Tapping Screw with Flat Washer - M4x8	33-109
09644008W	Tapping Screw with Flat Washer - M4x8	37-104
09644008W	Tapping Screw with Flat Washer - M4x8	39-102
09644008W	Tapping Screw with Flat Washer - M4x8	41-101
09644008W	Tapping Screw with Flat Washer - M4x8	43-102
09644008W	Tapping Screw with Flat Washer - M4x8	45-102
09644008W	Tapping Screw with Flat Washer - M4x8	47-103

Parts No.	Description	Page and Index No.
09644008W	Tapping Screw with Flat Washer - M4x8	9-114
09653006W	Tapping Screw with Flat Washer - M3x6	7-106
09654008W	Tapping Screw with Flat Washer - M4x8	7-108
09654008W	Tapping Screw with Flat Washer - M4x8	9-101
09654008W	Tapping Screw with Flat Washer - M4x8	37-105
09654008W	Tapping Screw with Flat Washer - M4x8	7-101
09654008W	Tapping Screw with Flat Washer - M4x8	7-102
09654010W	Tapping Screw with Flat Washer - M4x10	17-106
09654010W	Tapping Screw with Flat Washer - M4x10	27-105
10020307	Jumper Wire	49-181
10020307	Jumper Wire	51-174
10020307	Jumper Wire	55-107
10020307	Jumper Wire	57-111
10020307	Jumper Wire	11-107
10040143	Insulating Sheet (115V)	45 39
10050600	Bushing	45-107
10050759	Collar -7.5mm	45-108
10050792	Jumper Wire	59-103
11000309	Fastening Receptacle	65-133
11000309	Fastening Receptacle	13-139
11000350	Closed Terminal	71-110
11000844	Socket - MATE-N-LOCK	53-101
11000853	Closed Terminal	71-109
11000916	Pin - MATE-N-LOCK	67-114
11000916	Pin - MATE-N-LOCK	69-107
11001042	Socket - MATE-N-LOCK	65-129
11001042	Socket - MATE-N-LOCK	67-102
11001042	Socket - MATE-N-LOCK	69-102
11001042	Socket - MATE-N-LOCK	13-135
11001089	Socket - MATE-N-LOCK	65-102
11001089	Socket - MATE-N-LOCK	71-107
11001089	Socket - MATE-N-LOCK	13-104
11001092	Connector - 4P	59-128
11001093	Connector - 6P	49-147
11001093	Connector - 6P	51-159
11001095	Connector - 10P	53-102

Parts No.	Description	Page and Index No.
11001095	Connector - 10P	63-104
11001096	Connector - 12P	59-129
11001155	Noise Filter	65-137
11001155	Noise Filter	13-143
11001159	Socket - MATE-N-LOCK	65-105
11001159	Socket - MATE-N-LOCK	13-107
11001166	Socket - MATE-N-LOCK	13-122
11001170	Fastening Receptacle	67-116
11001170	Fastening Receptacle	69-117
11001171	Fastening Receptacle	67-112
11001171	Fastening Receptacle	69-113
11001172	Fastening Receptacle	65-139
11001172	Fastening Receptacle	67-108
11001172	Fastening Receptacle	69-109
11001172	Fastening Receptacle	13-145
11001182	Socket - MATE-N-LOCK	65-114
11001182	Socket - MATE-N-LOCK	13-118
11001187	Pin - MATE-N-LOCK	67-120
11001187	Pin - MATE-N-LOCK	69-121
11001188	Pin - MATE-N-LOCK	67-119
11001188	Pin - MATE-N-LOCK	69-120
11001238	Pin - MATE-N-LOCK	65-123
11001238	Pin - MATE-N-LOCK	13-129
11001240	Socket - MATE-N-LOCK	65-121
11001240	Socket - MATE-N-LOCK	13-127
11001241	Socket - MATE-N-LOCK	67-104
11001241	Socket - MATE-N-LOCK	69-104
11001249	Receptacle Terminal	65-118
11001249	Receptacle Terminal	71-103
11001249	Receptacle Terminal	13-111
11001253	Pin Connector - EI Cap Housing	67-122
11001253	Pin Connector - Housing	69-123
11001254	Socket - MATE-N-LOCK	65-107
11001254	Socket - MATE-N-LOCK	13-102
11001300	Fastening Receptacle	65-126

Parts No.	Description	Page and Index No.
11001300	Fastening Receptacle	13-131
11001301	Fastening Receptacle	65-125
11001301	Fastening Receptacle	13-132
11010328	Connector Pin Contact	49-130
11010328	Connector Pin Contact	51-145
11010328	Connector Pin Contact	59-102
11010359	Terminal - 3P	47-117
11020185	Connector - 4P	53-103
11020512	Connector - 3P	67-101
11020512	Connector - 3P	69-101
11020687	Fastening Receptacle	65-132
11020693	Insulating Sleeve	13-138
11020777	Connector - 4P	69-114
11020782	Connector - 4P	67-106
11020782	Connector - 4P	69-106
11020983	Connector - 2P	65-128
11020983	Connector - 2P	67-113
11020983	Connector - 2P	69-115
11020983	Connector - 2P	13-134
11020987	Connector - 6P	67-115
11020987	Connector - 6P	69-116
11020995	Connector - 2P	51-144
11020995	Connector - 2P	61-109
11020997	Connector - 6P	61-114
11021089	Connector - 3P	65-101
11021089	Connector - 3P	13-103
11021090	Connector - 4P	65-108
11021090	Connector - 4P	13-113
11021091	Connector - 6P	65-131
11021091	Connector - 6P	71-108
11021091	Connector - 6P	13-125
11021091	Connector - 6P	13-137
11021178	Socket Housing - EI Connector - 5P	65-116
11021178	Socket Housing - EI Connector - 5P	13-112
11021194	Connector - 3P	61-105

Parts No.	Description	Page and Index No.
11021286	Connector	65-136
11021286	Connector	13-142
11021306	Connector - 3P	65-104
11021306	Connector - 3P	13-106
11021307	Connector - 4P	65-109
11021307	Connector - 4P	13-114
11021312	Connector - 14P	65-115
11021312	Connector - 14P	13-123
11021326	Connector - 3P	65-112
11021326	Connector - 3P	13-116
11021341	Connector - 8P	29-120
11021342	Connector - 8P	67-118
11021342	Connector - 8P	69-119
11021396	Connector - 2P	65-111
11021396	Connector - 2P	13-108
11021397	Connector - 2P	65-110
11021397	Connector - 2P	13-115
11021398	Connector - 2P	13-109
11021401	Connector - 1P	67-109
11021401	Connector - 1P	69-110
11021402	Connector - 1P	65-145
11021402	Connector - 1P	67-110
11021402	Connector - 1P	69-111
11021402	Connector - 1P	13-151
11021403	Receptacle Housing	65-146
11021403	Receptacle Housing	67-111
11021403	Receptacle Housing	69-112
11021403	Receptacle Housing	13-152
11021404	Receptacle Housing - 1P	65-138
11021404	Receptacle Housing - 1P	67-107
11021404	Receptacle Housing - 1P	69-108
11021404	Receptacle Housing - 1P	13-144
11021412	Connector - 2P	65-119
11021412	Connector - 2P	13-124
11021422	Housing - 6P Black	71-106

Parts No.	Description	Page and Index No.
11021422	Housing - 6P Black	13-119
11021423	Housing - 3P Block	65-103
11021423	Housing - 3P Black	13-105
11021506	Connector - 1P	65-122
11021506	Connector - 1P	13-128
11021509	Connector - 4P	65-140
11021509	Connector - 4P	13-146
11021514	Connector - 1P	65-120
11021514	Connector - 1P	13-126
11021515	Connector - 2P	65-141
11021515	Connector - 2P	67-103
11021515	Connector - 2P	69-103
11021515	Connector - 2P	13-147
11021516	Connector - 3P	67-123
11021516	Connector - 3P	69-124
11021532	Connector - 2P	67-105
11021532	Connector - 2P	69-105
11021533	Connector - 3P	67-124
11021533	Connector - 3P	69-125
11021543	Connector - 2P Green	67-117
11021543	Connector - 2P Green	69-118
11021567	Connector - 2P	49-164
11021620	Connector - 3P	65-117
11021620	Receptacle Housing - 3P	71-105
11021620	Connector - 3P	13-110
11021621	Connector - 4P	65-142
11021621	Connector - 4P	13-148
11021642	Receptacle Housing - 8P	65-134
11021642	Receptacle Housing - 8P	13-140
11021661	El Cap Housing - 4P	67-121
11021661	El Cap Housing - 4P	69-122
11021683	Connector - 12P	65-106
11021683	Connector - 12P	13-101
11021784	Receptacle Terminal	65-143
11021784	Connector - 12P	13-149

Parts No.	Description	Page and Index No.
11021785	Connector - 11P	65-124
11021785	Connector - 11P	13-130
11021786	Connector - 3P	71-102
11021787	Connector - 3P	71-104
11021797	Connector - 3P	13-121
11030347	Connector - 8P	49-155
11030347	Connector - 8P	49-165
11030428	Connector - 20P	53-104
11030622	Connector - 3P	53-105
11030622	Connector - 3P	63-109
11030648	Connector - 60P	49-167
11030652	Connector - 30P	49-148
11030652	Connector - 30P	53-106
11030652	Connector - 30P	63-111
11030653	Connector - 34P	49-101
11030653	Connector - 34P	51-146
11030654	Connector - 10P	51-169
11030655	Connector - 16P	49-129
11030656	Connector - 16P	65-130
11030656	Connector - 16P	13-136
11030660	Connector - 16P	65-113
11030660	Connector - 16P	13-117
11030664	Connector - HIF3C-10D-2.54C-3	65-127
11030664	Connector - 10P	13-133
11030773	Connector - 8P	61-111
11030814	Connector - 4P	63-102
11031340	Connector 7 P	71-101
11031398	Connector - 2P	63-113
11031399	Connector - 3P	63-112
11031400	Connector - 2P	63-110
11031401	Connector - 7P	63-106
11031402	Connector - 10P	63-107
11031403	Connector - 12P	63-108
11031408	Connector - 4P	57-101
11031409	Connector - 12P	57-177

Parts No.	Description	Page and Index No.
11040224	Relay Bracket	45-3
11040271	LSI Socket - 28P	49-182
11040271	LSI Socket: 28P	51-173
11040338	IC Socket - 40P	53-107
11050008	Nylon Clip - 2N	15-110
11050008	Nylon Clip - 2N	37-113
11050008	Nylon Clip - 2N	39-106
11050010	Nylon Clip - 6N	23-113
11050010	Nylon Clip - 6N	47-118
11050011	Nylon Clip - 8N	47-107
11050016	Nylon Clip - 4N	15-111
11050016	Nylon Clip - 4N	23-112
11050016	Nylon Clip - 4N	33-110
11050016	Nylon Clip - 4N	45-110
11050016	Nylon Clip - 4N	47-114
11050089	Cable Clip - 11.5mm	47-115
11050106	Harness Clamp	39-107
11050106	Harness Clamp	47-109
11050120	Harness Clamp	47-112
11050152	Heatproof Nylon Clip	29-119
11060395	Clamp	45-111
11060395	Clamp	47-108
11070356	Circuit Breaker - 115V	47-116
11070364	Circuit Breaker - 220V/240V	47-116
11070415	Fuse 5A	43-103
11070497	Fuse 0.5A	14/-122
12010061	SN Coil - 115V	57-104
12010069	SN Coil - 220/240V	57-104
12010080	Transformer	61-110
12041184	Switch - SSS21200	59-137
12041190	Switch	55-101
12041190	Switch	11-101
12041241	Push Switch	47-110
12041280	Push Switch	45-31
12041283	Dip-Switch	49-139
12041283	Dip-Switch	51-112

Parts No.	Description	Page and Index No.
12080480	Solid State Relay (115V)	61-101
12081024	Solid State Relay - 220/240V	61-102
12081029	Power Relay	45-2
14000082	Transistor - 2SC945	59-110
14000180	Transistor - 2SA777	53-108
14000234	Transistor - 2SA673A	59-113
14000266	Transistor - 2SC1213AC	37-129
14000291	Transistor - 2SA1020	51-105
14000305	Transistor - 2SC1815	49-124
14002068	Transistor - 2SA733	51-171
14010192	IC - μPA2003C	51-116
14010234	Transistor - 2SD686	49-180
14010245	IC - M54523P	57-142
14010254	Transistor - 2SC1827Y	57-138
14010255	Rransistor - 2SB872Q	51-104
14010263	Transistor - 2SD1377K	51-108
14010302	IC - M54566P	49-153
14010303	IC - M54567P	51-148
14010305	Transistor - 2SA684R	53-109
14010611	Diode - 1S1588	51-165
14010611	Diode - 1S1588	53-110
14010611	Diode - 1S1588	55-102
14010611	Diode - 1S1588	59-116
14010611	Diode - 1S1588	11-102
14010780	Diode - 1S1834	57-144
14010813	Diode - S52950	57-148
14010818	Diode Array - MA425	49-141
14020247	Diode - W06B	49-120
14020264	Zener Diode - 1N751-1	49-184
14020277	Zener Diode - 1Z12	51-155
14020328	Diode - S5VB40	57-117
14020353	Zener Diode - RD8.2F-B	53-111
14020364	Diode Array - S5KC20R	51-110
14020379	Varistor - 1ZM50C	65-144
14020379	Varistor - 1ZM50C	13-150

Parts No.	Description	Page and Index No.
14020384	Zener Diode - HZ12C-1	59-145
14020385	Diode Array - S5KC20	51-109
14020388	Diode - W03C	65-135
14020388	Diode - W03C	13-141
14020423	Diode - S5500G	53-112
14020423	Diode - S5500G	57-128
14020423	Diode - S5500G	63-101
14020423	Diode - S5500G	13-120
14020428	Varistor - Z1039	51-103
14020428	Varistor - Z1039	51-170
14020429	Zener Diode - RD8.2FB2	49-171
14020467	Diode - S5566G	59-131
14020467	Diode - S5500G	61-104
14020479	Diode - C8P04Q	57-150
14020480	Diode - SCL2C41	57-161
14030209	Photocoupler - PC627	49-132
14030238	Photocoupler - TLP521-1	61-112
14030255	LED-GL-3AR2	49-157
14030255	LED - GL-3AR2	51-167
14030262	LED - EPY5534S	55-105
14030262	LED - EPY5638S	11-104
14030326	LED - EPY5638S	55-104
14030326	LED - EPY5534S	11-105
14030334	LED - MU08-9301	55-106
14030334	LED - MU08-9301	11-106
14040106	Varistor - Z15L221	57-178
14050129	Rectifier - 1B4B42	57-107
14050130	Rectifier - 1G4B42	61-115
14050137	Triac - BCR6AM-8	57-176
14050141	Triac - 600V/20A	45-6
14070508	IC - HD74LS04N	49-142
14070520	IC - HD74LS00	51-136
14070605	IC - TC4050BP	49-134
14070660	IC - TC4053BP	51-160
14070794	IC - SN74LS245N	49-162

Parts No.	Description	Page and Index No.
14070841	IC - SN74LS114N	51-162
14070972	IC - HD74LS42P	53-113
14070975	IC - HD7407P	49-133
14070975	IC - HD7407P	53-114
14070988	IC - uPD8243C	53-115
14071003	IC - MSL915RS	53-116
14071015	IC - uPD8251AC	49-111
14071023	IC - HD74LS14	49-135
14071023	IC - HD74LS14P	51-163
14071026	IC - SN74LS373N	49-163
14071026	IC - SN74LS373N	51-157
14071081	IC - HD7406P	49-102
14071084	IC - uPD4049C	53-117
14071190	IC - uPD82533C-5	51-149
14071198	IC - SN74LS245N	53-118
14071259	IC - uPD8155C-2	49-110
14071331	IC - uD74LS154	49-112
14071332	IC - HD74LS11	49-143
14071334	IC - uPD7810G	49-150
14071334	IC - uPD7810G	51-115
14071335	IC - RF5G02-005	49-174
14071348	IC - TD62304P	53-119
14080052	IC - M51841P	51-133
14080098	IC - HA17458PS	59-139
14080099	IC - HA17901P	51-154
14080099	IC - HA17901P	59-111
14080188	IC - ICL8211CPA	49-115
14080200	IC - TA75339P	63-115
14080233	IC - HA17903PS	51-161
14080245	IC - MB3759	57-124
14080256	IC - AN6912	49-114
14080258	IC - AN6914	49-128
14080260	IC - HA7818P	59-135
14080266	IC - uPC78M05H	57-159
14080299	LSI - RF3P01	51-130

Parts No.	Description	Page and Index No.
15020010	Buzzer - PB2130B03	53-120
15030028	Ceramic Oscillator - 6MHz	53-121
15030049	X-tal Oscillator - 10MHz	51-131
15030070	Ceramic Oscillator - 10MHz	49-152
16000462	Resistor - 560Ω 1W ±5%	51-106
16000463	Resistor - 0.22Ω 1W ±5%	51-107
16000471	Resistor - 4.7Ω 1T ±10%	57-114
16000471	Resistor - 4.7Ω 1T ±10%	57-140
16000473	Resistor - 47Ω 1T ±10%	57-162
16000475	Resistor - 100Ω 1T ±10%	57-146
16000476	Resistor - 220Ω 1T ±10%	57-132
16000512	Resistor - 270Ω 1T ±10%	57-133
16000577	Resistor - 27Ω 1T ±10%	57-160
16000578	Resistor - 30KΩ 1T ±10%	57-143
16000579	Resistor - 0.1Ω 1T ±10%	57-154
16000580	Resistor - 1Ω 1T ±10%	57-147
16000581	Resistor - 3.3Ω 1T ±10%	57-152
16000582	Resistor - 68Ω 1T ±10%	57-165
16000583	Resistor - 150Ω 1T ±10%	57-158
16000584	Resistor - 68Ω 1T ±10%	57-112
16000585	Resistor - 100Ω 10T ±10%	57-167
16000586	Resistor - 10Ω 5T ±10%	57-105
16000587	Resistor - 130Ω 5T ±10%	57-173
16000588	Resistor - 200Ω 5T ±10%	57-174
52059107	Resistor - 10KΩ 33kΩ 3W	61-113
16017056	Resistor Array - 4.7KΩ	53-122
16017167	Resistor Array - 4.7KΩ 1/8W	53-123
16017167	Resistor Array - 4.7KΩ 1/8W	63-105
16017178	Resistor Array - 120KΩ 1/4W ±5%	49-138
16017225	Resistor Array - 1KΩ 1/8W	49-123
16017235	Resistor Array - 22KΩ 1/8W	49-107
16017236	Resistor Array - 22KΩ 1/8W	49-176
16017252	Resistor Array - 1KΩ 1/8W	49-105
16017255	Resistor Array - 4.7KΩ 1/8W	49-144
16017256	Resistor Array - 10KΩ 1/8W	49-103

Parts No.	Description	Page and Index No.
16017265	Resistor Array - 10KΩ 1/8W	49-136
16017271	Resistor Array - 4.7KΩ 1/8W	49-106
16017271	Resistor Array - 4.7KΩ 1/8W	51-111
16017272	Resistor Array - 10KΩ 1/8W	49-140
16017282	Resistor Array - 150Ω 1/4W	49-154
16017285	Resistor Array - 10KΩ 1/8W ±5%	49-149
16017288	Resistor Array - 22KΩ 1/8W	49-113
16017317	Resistor Array - 1.2KΩ 1/8W	49-179
16017318	Resistor Array - 22KΩ 1/8W	49-175
16017319	Resistor Array - 1.2KΩ 1/4W	49-177
16017320	Resistor Array - 3.3KΩ 1/8W	49-168
16017321	Resistor Array - 330Ω 1/8W	49-178
16017323	Resistor Array - 120KΩ 1/4W	49-161
16017324	Resistor Array - 180Ω 1/4W	49-104
16017325	Resistor Array - 18KΩ 1/4W ±5%	49-170
16017327	Resistor Array - 1KΩ 1/8W	53-124
16017328	Resistor Array - 1KΩ 1/8W	53-125
16017329	Resistor Array - 1KΩ 1/8W	53-126
16017330	Resistor Array - 150KΩ 1/8W	53-127
16018147	Variable Resistor - 10KΩ 0.5W	51-120
16018150	Variable Resistor - 1KΩ 0.5W	49-108
16018156	Variable Resistor - 2KΩ 0.5W	59-136
16018234	Variable Resistor - 1KΩ 0.2W	57-155
16020895	Noise Killer - 0.1μF 120Ω	61-107
16020911	RC Array - RC082	49-169
16020920	Noise Killer - 0.1μF 120Ω 220/240V	61-107
16020921	Noise Filter - 115V	47-20
16040891	Capacitor - 33μF 35V	51-117
16040930	Capacitor - 100μF 50V	53-128
16040931	Capacitor - 47μF 50V	49-127
16040931	Capacitor - 47μF 50V	49-166
16041164	Capacitor - 100μF 16V	51-168
16041166	Capacitor - 1μF 50V	51-166
16041168	Capacitor - 220μF 35V	51-172
16041197	Capacitor - 10μF 50V	49-116

Parts No.	Description	Page and Index No.
16041197	Capacitor - 10uF 50V	57-130
16041198	Capacitor - 470uF DC 35V	57-169
16041199	Capacitor - 47uF 35V	57-109
16041244	Capacitor - 47uF 25V	57-157
16041313	Capacitor - 100uF DC 200V	57-115
16041314	Capacitor - 470uF DC 50V	57-168
16041315	Capacitor - 220uF DC 50V	57-170
16041316	Capacitor - 220uF DC 35V	57-175
16041317	Capacitor - 220u DC 10V	57-156
16060345	Capacitor - 10pF 50V	53-129
16060472	Capacitor - 0.1uF 50WV	57-116
16060613	Capacitor - 0.1uF 50V	59-130
16360684	Capacitor - 0.001uF 50V	59-124
16060686	Capacitor - 0.07uF 50V	51-158
16060689	Capacitor - 0.01uF 50V	51-132
16060689	Capacitor - 0.01uF 50V	53-130
16060689	Capacitor - 0.01uF 50V	59-109
16060762	Capacitor - 0.01uF 500V	53-131
16060916	Capacitor - 0.01uF 50V	51-153
16060919	Capacitor - 0.33uF 630V - 115V	61-108
16060931	Capacitor - 10000pF DC 500V	57-171
16060974	Capacitor - 680uF 1KV	57-149
16060987	Capacitor - 4uF	59-123
16060988	Capacitor - 0.01uF 50V	59-115
16060989	Capacitor - 0.03uF 50V	59-144
16060990	Capacitor - 0.047uF 50V	59-125
16060993	Capacitor - 0.47uF (220/240V)	61-108
16060995	Capacitor - 10PF 50V	51-124
16060996	Capacitor - 470PF 25V	49-158
16060998	Capacitor - 0.01uF 50V	49-109
16060998	Capacitor - 0.01uF 50V	63-103
16060999	Capacitor - 0.1uF 25V	49-122
16060999	Capacitor - 0.1uF 25V	51-113
16061103	Capacitor - 2200pF 1KV	57-139
16061121	Capacitor - 0.1uF 25V	57-103

Parts No.	Description	Page and Index No.
16061162	Capacitor - 0.22uF AC 250V	57-102
16061163	Capacitor - 0.47uF DC 250V	57-113
16061164	Capacitor - 0.0022uF 100V	57-125
16061165	Capacitor - 0.001uF 100V	57-110
16061166	Capacitor - 0.01uF 50V	57-135
16061167	Capacitor - 1000PF 2kV	57-145
16061168	Capacitor - 4700pF 1KV	57-108
16061172	Capacitor - 10uF AC220V	39-109
16061173	Capacitor - 18uF AC220V	39-108
16061175	Capacitor - 0.022uF 100V	51-135
16061176	Capacitor - 0.0022uF 100V	51-123
16061177	Capacitor - 0.001uF 50V	51-138
16061178	Capacitor - 0.01uF 50V	51-122
16061179	Capacitor - 0.1uF 63V	51-125
16061180	Capacitor - 0.33uF 63V	51-137
16061181	Capacitor - 3.3uF 63V	51-127
16061184	Capacitor - 27PF 50V	49-151
16061207	Capacitor - 2200pF AC 250V 220/240V	57-103
16061217	Capacitor - 18uF AC240V 220/240V	39-108
16061219	Capacitor - 10uF AC240V 220/240V	39-109
16070039	SF Coil - 60uF	61-103
16070053	SF Coil - 220/240V	61-103
16114101	Resistor - 100Ω 1/4T ±5%	57-120
16114101	Resistor - 100Ω 1/4T ±5%	61-106
16114102	Resistor - 1KΩ 1/4T	51-101
16114102	Resistor - 1KΩ 1/4T	53-132
16114102	Resistor - 1KΩ 1/4T	57-134
16114102V	Resistor - 1KΩ 1/4V ±5%	59-117
16114103	Resistor - 10KΩ 1/4T ±5%	51-151
16114103	Resistor - 10KΩ 1/4T ±5%	59-101
16114103	Resistor - 10KΩ 1/4T ±5%	63-114
16114104	Resistor - 100KΩ 1/4T ±5%	49-117
16114104	Resistor - 100KΩ 1/4T ±5%	51-150
16114104	Resistor - 100KΩ 1/4T ±5%	57-122
16114104V	Resistor - 100KΩ 1/4T ±5%	59-118

Parts No.	Description	Page and Index No.
16114105	Resistor - 1MΩ 1/4T ±5%	49-121
16114105V	Resistor - 1MΩ 1/4W ±5%	59-122
16114123	Resistor - 12KΩ 1/4T ±5%	57-126
16114124	Resistor - 120KΩ 1/4T ±5%	49-159
16114152	Resistor - 1.5KΩ 1/4T ±5%	51-164
16114162	Resistor - 1.6KΩ 1/4T ±5%	57-118
16114181	Resistor - 180Ω 1/4T ±5%	49-131
16114182	Resistor - 1.8KΩ 1/4T	57-122
16114221	Resistor - 220Ω 1/4T ±5%	51-102
16114221	Resistor - 220Ω 1/4T ±5%	51-147
16114221V	Resistor - 220Ω 1/4W ±5%	59-143
16114222	Resistor - 2.2KΩ 1/4T ±5%	51-114
16114222	Resistor - 2.2KΩ 1/4T ±5%	57-121
16114222V	Resistor - 2.2KΩ 1/4W ±5%	59-127
16114223	Resistor - 22KΩ 1/4T ±5%	49-173
16114223	Resistor - 22KΩ 1/4T ±5%	57-131
16114223V	Resistor - 22KΩ 1/4W ±5%	59-114
16114273	Resistor - 27KΩ 1/4T ±5%	53-133
16114331	Resistor - 330Ω 1/4T ±5%	57-119
16114331	Resistor - 330Ω 1/4T ±5%	57-137
16114331V	Resistor - 330Ω 1/4W ±5%	59-126
16114332	Resistor - 3.3KΩ 1/4T ±5%	49-137
16114332	Resistor - 3.3KΩ 1/4T ±5%	51-152
16114471	Resistor - 470KΩ 1/4T ±5%	49-172
16114472	Resistor - 4.7KΩ 1/4T ±5%	49-125
16114472	Resistor - 4.7KΩ 1/4T ±5%	53-134
16114472	Resistor - 4.7KΩ 1/4T ±5%	57-136
16114473	Resistor - 47KΩ 1/4T ±5%	49-160
16114473	Resistor - 47KΩ 1/4T ±5%	57-123
16114475	Resistor - 4.7MΩ 1/4T ±5%	59-112
16114621	Resistor - 620Ω 1/4T	53-135
16114680	Resistor - 68Ω 1/4T ±5%	49-126
16114820V	Resistor - 82Ω 1/4W ±5%	59-107
16116222	Resistor - 2.2KΩ 1/2T ±5%	49-156
16116391	Resistor - 390Ω 1/2T ±5%	53-136
16116391	Resistor - 390Ω 1/2T ±5%	55-103

Parts No.	Description	Page and Index No.
16116391	Resistor - 390Ω 1/2T ±5%	11-103
16221001V	Resistor - 1KΩ 1/4W ±1%	59-134
16221002	Resistor - 10KΩ 1/4T ±5%	51-126
16221002V	Resistor - 10KΩ 1/4W ±1%	59-133
16221003	Resistor - 100KΩ 1/4T ±1%	51-143
16221022V	Resistor - 10.2KΩ 1/4W ±1%	59-138
16221182V	Resistor - 11.8KΩ 1/4W ±1%	59-120
16221212	Resistor - 12.1KΩ 1/4W ±1%	51-139
16221212V	Resistor - 12.1KΩ 1/4W ±5%	59-105
16221213	Resistor - 121KΩ 1/4W ±1%	51-118
16221243V	Resistor - 124KΩ 1/4W ±1%	59-142
16221372	Resistor - 13.7KΩ 1/4T ±5%	57-127
16221502	Resistor - 15KΩ 1/4T ±1%	51-121
16222002	Resistor - 20KΩ 1/4T ±1%	49-119
16222211V	Resistor - 2.21KΩ 1/4W ±1%	59-146
16222492V	Resistor - 24.9KΩ 1/4W ±1%	59-141
16222801V	Resistor - 2.8KΩ 1/4W ±1%	59-119
16223011V	Resistor - 3.01KΩ 1/4W ±1%	59-108
16223300V	Resistor - 330Ω 1/4T ±1%	59-132
16223321	Resistor - 3.32KΩ 1/4W ±1%	51-134
16223322	Resistor - 33.2KΩ 1/4W ±1%	51-129
16223921	Resistor - 3.92KΩ 1/4W ±1%	51-119
16223922	Resistor - 39.2KΩ 1/4T ±1%	51-141
16224642V	Resistor - 46.4KΩ 1/4W ±1%	59-121
16225112	Resistor - 51.1KΩ 1/4T ±1%	51-140
16225492	Resistor - 54.9KΩ 1/4T ±1%	49-118
16225621V	Resistor - 5.62KΩ 1/4W ±1%	59-106
16226801V	Resistor - 6.8KΩ 1/4W ±1%	59-140
16228252	Resistor - 82.5KΩ 1/4W ±1%	51-128
16228872	Resistor - 88.7KΩ 1/4T ±1%	51-142
18230024	Switch	45-24
28010020	Power Supply Cord - 115V	47-113
28010025	Power Supply Cord - 115V CANADA	47-113
28010027	Power Supply Cord - 220V/240V	47-113
A0002109	Rear End Block - Main Corona	25-25
AB013126	Gear - 30T	41-28

This section instructs you as to the numbers and names of the parts of this machine.

1. EXTERIOR

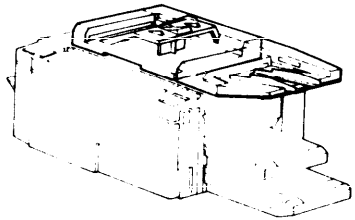

See page 4–4

2. PAPER FEED SECTION

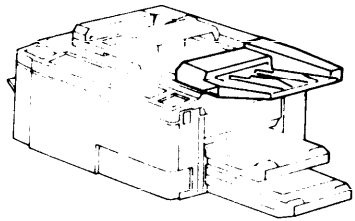

See page 4–6

3. DRIVE SECTION

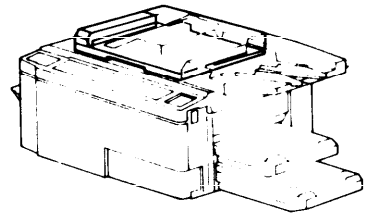

See page 4–8

1. EXTERIOR

July 20,'84

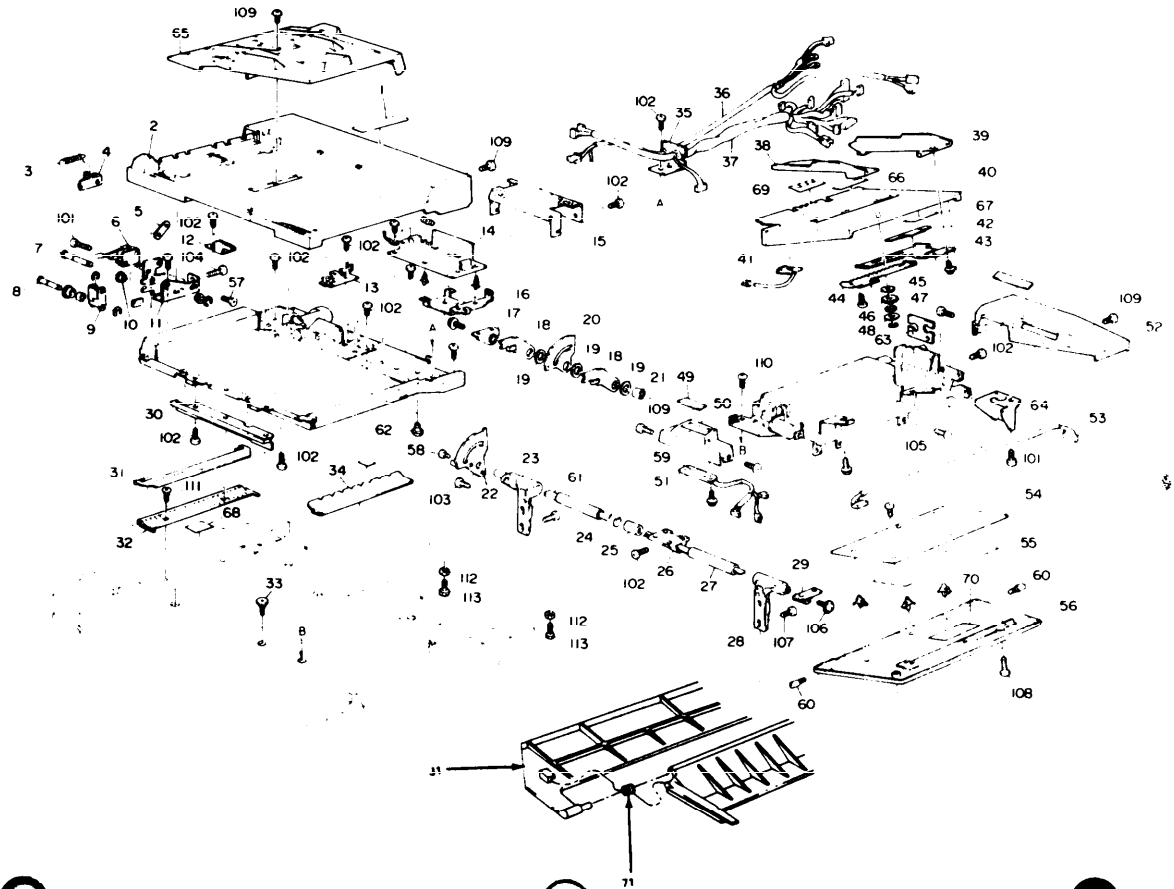

1. EXTERIOR

Index No.	Part No.	Description	Q'ty Per Assembly
1	58942899	Decal - DF Misfeed	1
2	58943751	Belt Unit Cover	1
3	58753269	Spring - Detent Arm	1
4	58753280	Adjusting Plate - Detent Arm Spring	1
5	50560509	Nut Plate - Microswitch	1
6	12041300	Microswitch	1
7	58753276	Shaft - Detent Arm	1
8	58943255	Click Shaft	1
9	58753265	Detent Arm	1
10	58752067	Bushing - 6x10x6mm	1
11	58943251	Click Bracket	1
12	58943261	Brake Support Plate	1
13	58943653	Left Mounting Plate - Power Supply	1
14	58945371	Power Supply Board - 115V	1
	58945376	Power Supply Board - 220V	1
15	58943655	Power Supply Shield Cover	1
16	58943651	Power Supply Mounting Plate	1
17	58751130	Left Mounting Bracket	1
18	58943225	Brake Plate	2
19	58943218	Aid Pad	3
20	58943217	Brake Stopper	1
21	58943219	Leaf Spring Holder	1
22	58943210	Brake Cam	1
23	58943230	Left Mounting Post	1
24	58753553	Ring - Holder	1
25	58943245	Spring Holder	1
26	58943246	Bracket	1
27	58943243	Spring Pipe	2
28	58943235	Right Mounting Post	1
29	58751135	Right Mounting Bracket	1
30	58943761	Grip	1
31	58943853	Flip Scale - 115V	1
	58943854	Flip Scale - 220V	1
32	58943861	Original Exit Guide	1
33	58755510	Shoulder Screw - M5	2
34	58942830	Mylar - Entrance	1

Index No.	Part No.	Description	Q'ty Per Assembly
35	58943661	Power Cord Mounting Plate	1
36	58945212	Power Supply Harness - 115V	1
37	58945202	Main Harness	1
38	58942730	Front Side Fence	1
39	58942740	Rear Side Fence	1
40	58942721	Original Feed Table - 115V	1
	58942722	Original Feed Table - 220V	1
41	58945115	Original Senser Board	1
42	58942780	Reflective Plate	1
43	58754146	Rack - Rear Original Guide - Kalle & P.B.	1
44	58754141	Rack - Front Original Guide	1
45	54432712	Cork Pad	1
46	54432657	Gear - 28T	1
47	54432713	Wave Washer	1
48	54432660	Spacer - 6x22x0.5mm	1
49	58942643	Operation Panel - 115V	1
	58942644	Operation Panel - 220V	1
50	58942630	Front Cover	1
51	58945141	Operation Board	1
52	58942656	Rear Cover - 115V	1
	58942657	Rear Cover - 220V	1
53	58945221	Control Harness	1
54	58945108	Main Control Board	1
55	58942758	Protective Sheet	1
56	58942755	DF Main Board Plate	1
57	54181813	Stepped Screw - M4	1
58	58943215	Brake Stopper	1
59	58942645	Operation Panel Key Top	1
60	54101291	Pin - Return Lever	2
61	58943241	Torsion Spring - T=1	1
	58943242	Torsion Spring - T=1.2	1
62	58943121	Base Damper	2
63	58942821	Mounting Plate - Feed Unit	1
64	58942822	Harness Cover	1
36A	58945213	P/S Unit Harness - 220V	1

July 20,'84

Index No.	Part No.	Description	Q'ty Per Assembly
65	58943771	Original Stacker	1
66	58942747	Mylar - Original Guides	1
67	58942785	Antireflector Cushion	1
68	58942902	Decal - Attention	1
69	58942748	Mylar - Feed In	1
70	58942912	Decal - DIP Switch	1
71	58943865	Flip Scale Spring	1
101	03130140W	Philips Pan Head Screw - M3x14	2
102	03140060W	Philips Pan Head Screw - M4x6	10
103	03140080W	Philips Pan Head Screw - M4x8	1
104	03140120W	Philips Pan Head Screw - M4x12	1
105	03140140W	Philips Pan Head Screw - M4x14	1
106	09515008W	Philips Screw with Flat Washer - M5x8	1
107	03150100W	Philips Pan Head Screw - M5x10	1
108	09554008W	Philips Screw with Flat Washer - M4x8	1
109	03440080D	Philips Truss Head Screw - M4x8	4
110	03440100W	Philips Pan Head Screw - M4x10	1
111	03240060W	Philips Sunken Head Screw - M4x6	1
112	07010040C	Washer - M4	2
113	05840120B	Bolt - M4x12	2

2. PAPER FEED SECTION

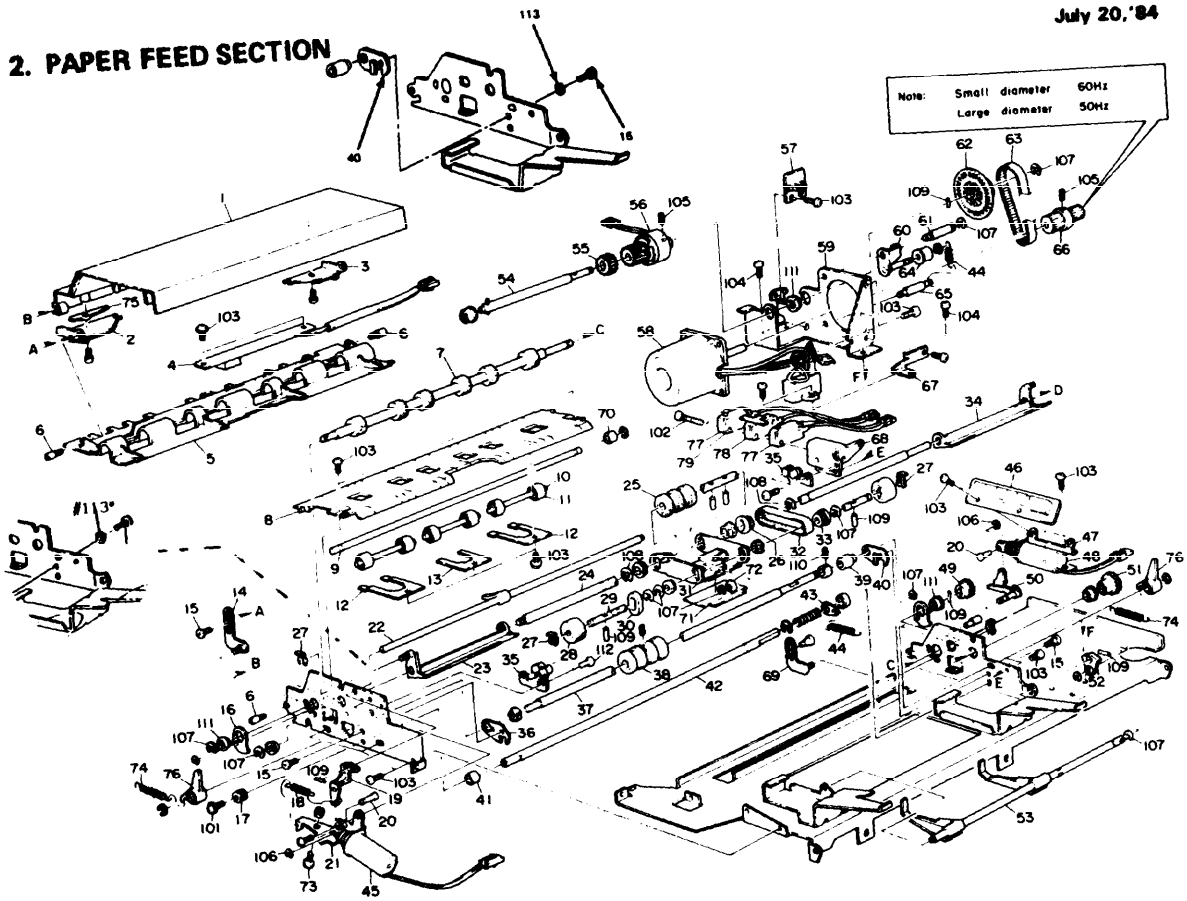

2. PAPER FEED SECTION

Index No.	Part No.	Description	Q'ty Per Assembly
1	58942601	Feed-In Unit Cover	1
2	58942522	Arm Mounting Plate - Front	1
3	58942525	Arm Mounting Plate - Rear	1
4	58945121	Registration Sensor Board	1
5	58942520	Original Feed Guide - Upper	1
6	54101291	Pin - Return Lever	3
7	58942455	Original Relay Roller	1
8	58942411	Lower Original Guide	1
9	58942416	Roller Shaft	1
10	58942413	Relay Roller Shaft	3
11	58942412	Roller	6
12	58942414	Roller Spring Plate	2
13	58942415	Roller Spring Plate - Middle	1
14	58942530	Front Arm	1
15	58942540	Arm Screw	3
16	58942457	Cam Plate	1
17	58942273	Separation Roller Adjusting Knob	1
18	58942176	Spring - Detent Arm	1
19	58942228	Separation Roller Solenoid Lever	1
20	58942229	Solenoid Pin	2
21	58942234	Pick-Up Solenoid Bracket	1
22	58942226	Lever Shaft	1
23	58942188	Left Guide Plate	1
24	58942185	Separation Roller Shaft	1
25	58942181	Upper Separation Roller	1
26	58942186	Separation Roller Pulley	1
27	54472681	Roller Retainer	4
28	58942171	Original Feed Roller	2
29	58942170	Pick-Up Roller Shaft	2
30	58942178	Collar - Guide Aid	1
31	58942155	Detent Arm Holder Bracket	1
32	58942174	Timing Belt	1
33	58942173	Pick-Up Roller Pulley	1
34	58942189	Right Guide Plate	2
35	54091238	Rotary Catch	2

Index No.	Part No.	Description	Q'ty Per Assembly
36	58942263	Adjusting Plate	1
37	58942261	Separation Roller Shaft	1
38	58942183	Lower Separation Roller	4
39	58942264	Collar	1
40	58942262	Separation Roller Adjusting Plate	1
41	58942272	Separation Roller Eccentric Cam	2
42	58942271	Eccentric Cam Shaft	1
43	58942274	Spring Plate	1
44*	58942176	Spring - Original Stopper	2
45	58945341	Pick-Up Solenoid	1
46	58945161	Display Board	1
47	58942282	Display Bracket	1
48	58945351	Stopper Solenoid	1
49	58942456	Gear - 25T	1
50	58942290	Solenoid Relay Lever	1
51	58942190	Gear - 35T	1
52	58942285	Original Stopper Lever	1
53	58942283	Original Stopper	1
54	58942070	Feed-In Clutch Shaft	1
55	58942073	Gear - 26T	1
56	58945361	Clutch - Feed-In	1
57	58945151	Pulse Generator Board	1
58	58945391	Main Motor (AC 5.5W)	1
	58945395	Main Motor (AC 5.5W) - 220/240V	1
59	58942061	Feed-In Motor Bracket	1
60	58942081	Feed-In Motor Tension	1
61	58942085	Tightener Screw	1
62	58942072	Pulse Generator Pulley	1
63	58942090	Timing Belt	1
64	58942084	Tightener Roller	1
65	58942091	Spring Anchor	1
66	58942062	Feed-In Motor Pulley	1
67	58942096	Capacitor Support Plate	1
68	58942820	Safety Switch Mounting Plate	1
69	58942535	Rear Arm	1

*Reference Tech Service Bulletin No. FT5000-023

July 20,'84

Index No.	Part No.	Description	Q'ty Per Assembly
70	58942417	Collar	1
71	58942177	Sensor Seal	1
72	58942163	Center Roller	1
73	58942266	Separation Roller Adjusting Screw	1
74	58942267	Spring	2
75	58942541	Spring Plate	1
76	58942265	Lever	2
77	12041126	Microswitch - 115V	2
	12041311	Microswitch - 220/240V	2
78	12041285	Microswitch	1
79	58955732	Insulating Mylar	2
101	09513006W	Philips Screw with Flat Washer - M3x6	1
102	03130350W	Philips Pan Head Screw - M3x35 - 220V	2
103	03140060W	Philips Pan Head Screw - M4x6	19
104	03140080W	Philips Pan Head Screw - M4x8	3
105	05740060W	Hexagon Headless Set Screw - M4x6	2
106	07200025E	Retaining Ring - M2.5	3
107	07200040B	Retaining Ring - M4	10
108	07200060B	Retaining Ring - M6	2
109	06320100E	Pin - M2x10	4
110	05730060W	Hexagon Headless Set screw - M	1
111	08053145	BaM Bearing - 6x12x4mm	2
112	03130060W	Philips Pan Head Screw - M3x6	4
113	08073002	Spacer - 4mm x 6mm x .1	1

3. DRIVE SECTION

July 20,'84

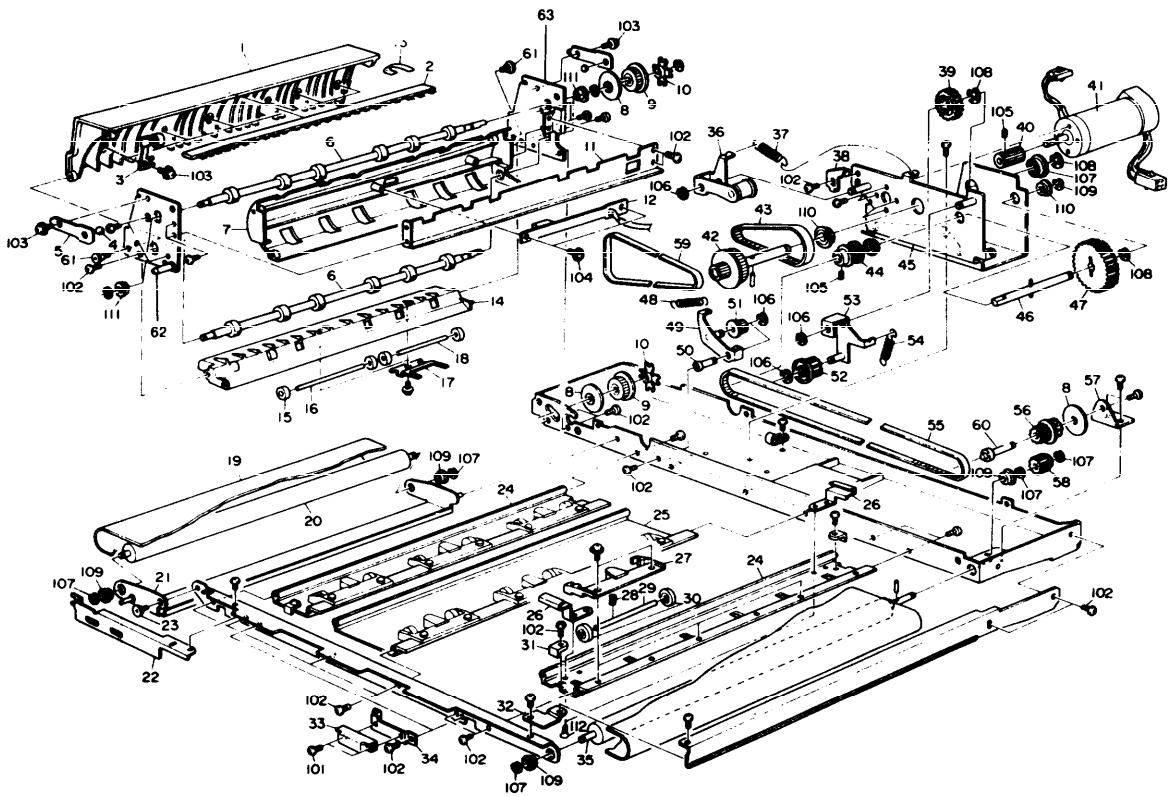

3. DRIVE SECTION

Rev. 9/90

Index No.	Part No.	Description	Q'ty Per Assembly
1	58943571	Exit Cover	1
2	58943587	Antistatic Brush	1
3	58943580	Upper Exit Roller	1
4	58943520	Click	2
5	58943521	Click Spring Plate	2
6	58943535	Exit Roller	2
7	58943556	Exit Turn Guide - Upper	1
8	58943190	Transfer Shaft Spacer	3
9	58943542	Exit Pulley - 35T	2
10	54424495	Slip Clutch	2
11	58943595	Exit Support Plate	1
12	58945131	Exit Sensor Board	1
13	58943591	Antistatic Brush Support Plate	1
14	58943525	Exit Turn Guide - Lower	1
15	58754557	Lower Exit Roller	4
16	58754018	Shaft (Long) - Lower Feed/Exit Roller	1
17	58943532	Exit Roller Spring - Lower	1
18	58754019	Shaft (Short) - Lower Feed/Exit Roller	1
19	58751590	Original Feed Belt	1
20	58943370	Driven Belt Roller	1
21	58943365	Release Bracket	1
22	58943373	Left Locking Plate	1
23	54131882	Stepped Screw	1
24	58751536	End Stay	2
25	58751556	Middle Stay	1
26	58751545	Guide Bracket - Original Feed Belt	2
27	58751537	Holder - Floating Roller	1
*28	59183380	Spring - Floating Roller	1
29	58751540	Shaft - Floating Roller	1
*30	59183381	Floating Roller	2
31	58751546	Stopper - Belt Unit	2
32	58943357	Joint Plate	1
33	50540440	Magnet Catch Ass'y	1
34	58943361	Magnetic Catch Mounting Plate	1
35	58943353	Drive Belt Roller	1

Index No.	Part No.	Description	Q'ty Per Assembly
36	58943160	Drive Motor Tension	1
37	58943175	Spring - Drive Motor Tension	1
38	58943165	Stopper - Drive Motor Tension	1
39	58943145	Gear - 24T	1
40	58682250	Pulley - 18T	1
41	AX060027	Transport Drive Motor - DC21W	1
42	58943140	Drive Pulley	1
43	58943177	Belt - A	1
44	67694182	Pulley - 10T	1
45	58943130	Belt Drive Motor Bracket	1
46	58943150	Belt Drive Shaft	1
47	58943155	Gear - 39T	1
48	58943205	Exit Tension Spring	1
49	58943195	Exit Tension	1
50	58943201	Exit Shaft	1
51	5P943202	Exit Pulley	1
52	58752597	Timing Pulley - 10T	1
53	58943170	Transfer Tension Plate	1
54	58943176	Transfer Tension Spring	1
55	58943178	Belt - B	1
56	58752580	Coupled Pulley & Gear	1
57	58943185	Transfer Shaft Support Plate	1
58	58751512	Gear - 20T	1
59	58943545	Belt - C	1
60	58943186	Transfer Shaft	1
61	54471778	Stepped Screw - M4	2
62	58943510	Front Side Plate	1
63	58943515	Rear Side Plate	1

*NOTE Refer to last frame on last sheet of Parts Catalog fiche

July 20,'84

Index No.	Part No.	Description	Q'ty Per Assembly
101	03430060W	Philips Pan Head Screw - M3x6	2
102	03140060W	Philips Pan Head Screw - M4x6	18
103	09514006W	Philips Screw with Flat Washer - M4x6	8
104	09654008W	Tapping Screw with Flat Washer - M4x8	2
105	05740040W	Hexagon Headless Set Screw - M4x4	2
106	07200040B	Retaining Ring - M4	4
107	07200050B	Retaining Ring - M5	5
108	07200070B	Retaining Ring - M7	3
109	08053145	Ball Bearing - 6x12x4mm	5
110	08053039	Ball Bearing - 8x16x5mm	2
111	50530447	Bushing - 6x10x6mm	2
112	03240060W	Philips Sunken Head Screw - M4x6	2

4. MAIN CONTROL BOARD

July 20,'84

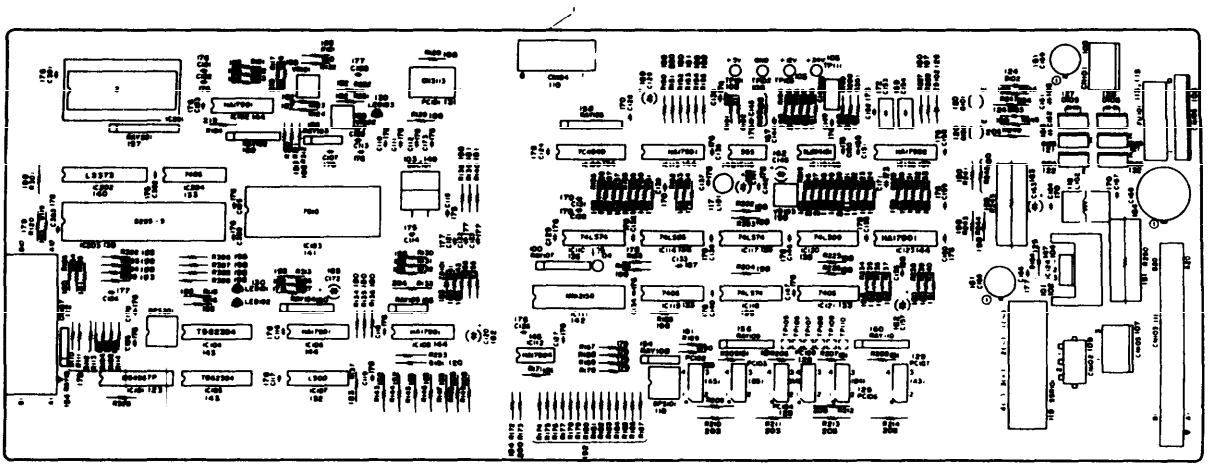

4. MAIN CONTROL BOARD

Index No.	Part No.	Description	Q'ty Per Assembly
1	58945108	Main Control Board	1
2	58945385	IC - HMA8276AC-3	1
101	03130060W	Philips Pan Head Screw - M3x6	1
102	03230060W	Philips Sunken Head Screw - M3x6	1
103	10020307	Jumper Wire	1
104	10050767	Heat Sink	1
105	11010328	Connector Pin Contact	5
106	11020915	Connector - 10P	1
107	11020959	Terminal - 3P	1
108	11020960	Connector - 4P	1
109	11020995	Connector - 2P	1
110	11030509	Connector - 8P	1
111	11030650	Connector - 40P	1
112	11031317	Connector	1
113	11040273	Fuse Holder	2
114	11040319	LSI Socket - 28P	1
115	11070413	Fuse - 3A - 220V	1
116	12010051	Induction Coil - 125uH	1
117	12010057	Induction Coil - 82uH	1

Index No.	Part No.	Description	Q'ty Per Assembly
118	12040883	DIP Switch	1
119	12081024	Solid State Relay	1
120	14000301	Transistor - 2SC1213AK	2
121	14010255	Transistor - 2SB872Q	2
122	14010263	Transistor - 2SD1377K	2
123	14010303	IC - M54567	1
124	14010611	Diode - 1S1588	3
125	14010668	Diode - 1S1885	1
126	14010809	Zener Diode - RD4.3EB3	2
127	14020364	Diode Array - S5KC20R	1
128	14020385	Diode Array - S5KC20	1
129	14030210	Photosensor	5
130	14030308	LED - TLR-102A	3
131	14030318	Photocoupler - ON3113	1
132	14070542	IC - SN74LS00	1
133	14070577	IC - SN7406N	3
134	14070604	IC - TC4049P	1
135	14070614	IC - SN74LS74N	3
136	14070697	IC - SN74LS86N	1
137	14070758	IC - HA17902P	1
138	14070836	IC - SN74LS09N	1
139	14071016	IC - UPD8255AC-5	1
140	14071026	IC - SN74LS373N	1
141	14071334	IC - uPD7810G	1
142	14071337	IC - MN1215Q	1
143	14071348	IC - TD62304P	2
144	14080099	IC - HA17901P	5
145	14080237	IC - HA17904PS	1
146	14080254	IC - HA17555PS	1
147	14080306	IC - TA78012AP	1
148	14080330	IC - MJM4151D	1
149	15030049	X-tal Oscillator - 10MHz	1
150	16000257	Resistor - 0.2Ω 5T ±1%	1
151	16000266	Resistor - 33Ω 5T ±1%	1
152	16000544	Resistor - 1KΩ 1T ±10%	2

July 20,'84

Index No.	Part No.	Description	Q'ty Per Assembly
153	16011732	Resistor - 390Ω 1T ±5%	3
154	16017142	Resistor Array - 1KΩ	2
155	16017166	Resistor Array - 4.7KΩ 1/8W	2
156	16017197	Resistor Array - 1KΩ 1/8W	1
157	16017271	Resistor Array - 4.7KΩ 1/8W	1
158	16017326	Resistor Array - 10KΩ	1
159	16018145	Variable Resistor - 5KΩ	3
160	16022620	Resistor Array - 4.7KΩ	4
161	16040491	Capacitor - 100uF 35V	2
162	16040776	Capacitor - 4.7uF 35V	5
163	16040892	Capacitor - 33MF 50V	1
164	16041234	Capacitor - 1000uF 35V	1
165	16041270	Capacitor - 1uF 35V	1
166	16060395	Capacitor - 4700pF 50V	2
167	16060454	Capacitor - 0.015uF 50V	2
168	16060456	Capacitor - 0.068uF 50V	2
169	16060457	Capacitor - 0.15uF 50V	1
170	16060539	Capacitor - 0.001uF 50V	7
171	16060599	Capacitor - 0.0068u 100V	1
172	16060790	Capacitor - 0.1uF 50V	1
173	16060891	Capacitor - 2200pF 50V	2
174	16060982	Capacitor - 0.01uF 50V	1
175	16060995	Capacitor - 10pF 50V	2
176	16060998	Capacitor - 0.01MF 50V	39
177	16060999	Capacitor - 0.01MF 25V	7
178	16114101	Resistor - 100Ω 1/4T ±5%	2
179	16114102	Resistor - 1KΩ 1/4T	11
180	16114103	Resistor - 10KΩ 1/4T ±5%	25
181	16114104	Resistor - 100KΩ 1/4T ±5%	11
182	16114105	Resistor - 1MΩ 1/4T ±5%	7
183	16114123	Resistor - 12KΩ 1/4T ±5%	2
184	16114151	Resistor - 150Ω 1/4T	2
185	16114152	Resistor - 1.5KΩ 1/4T ±5%	3
186	16114153	Resistor - 15KΩ 1/4T ±5%	1
187	16114155	Resistor - 1.5MΩ 1/4T ±5%	1

Index No.	Part No.	Description	Q'ty Per Assembly
188	16114221	Resistor - 220Ω 1/4T ±5%	2
189	16114222	Resistor - 2.2KΩ 1/4T ±5%	3
190	16114223	Resistor - 22KΩ 1/4T ±5%	2
191	16114224	Resistor - 220KΩ 1/4T ±5%	1
192	16114271	Resistor - 270Ω 1/4T ±5%	14
193	16114272	Resistor - 2.7KΩ 1/4T ±5%	3
194	16114274	Resistor - 270KΩ 1/4T ±5%	1
195	16114333	Resistor - 33KΩ 1/4T ±5%	1
196	16114392	Resistor - 3.9KΩ 1/4T ±5%	2
197	16114471	Resistor - 470Ω 1/4T ±5%	4
198	16114472	Resistor - 4.7KΩ 1/4T ±5%	39
199	16114562	Resistor - 5.6KΩ	1
200	16114563	Resistor - 56KΩ 1/4T ±5%	3
201	16114682	Resistor - 6.8KΩ 1/4T ±5%	1
202	16114822	Resistor - 8.2KΩ 1/4T ±5%	1
203	16116182	Resistor - 1.8KΩ 1/2T ±5%	5
204	16116222	Resistor - 2.2KΩ 1/2T ±5%	3
205	16116821	Resistor - 820Ω 1/2T ±5%	2
206	16221000	Resistor - 100Ω 1/4T ±1%	1
207	16221001	Resistor - 1KΩ 1/4T ±1%	1
208	16221003	Resistor - 100KΩ 1/4T ±1%	1
209	16221501	Resistor - 1.5KΩ 1/4T ±1%	1
210	16223902	Resistor - 39KΩ 1/4T ±1%	1
211	16225601	Resistor - 5.6KΩ 1/4T ±1%	1
212	16225602	Resistor - 56KΩ 1/4T ±1%	1

5. MAIN HARNESS

July 20,'84

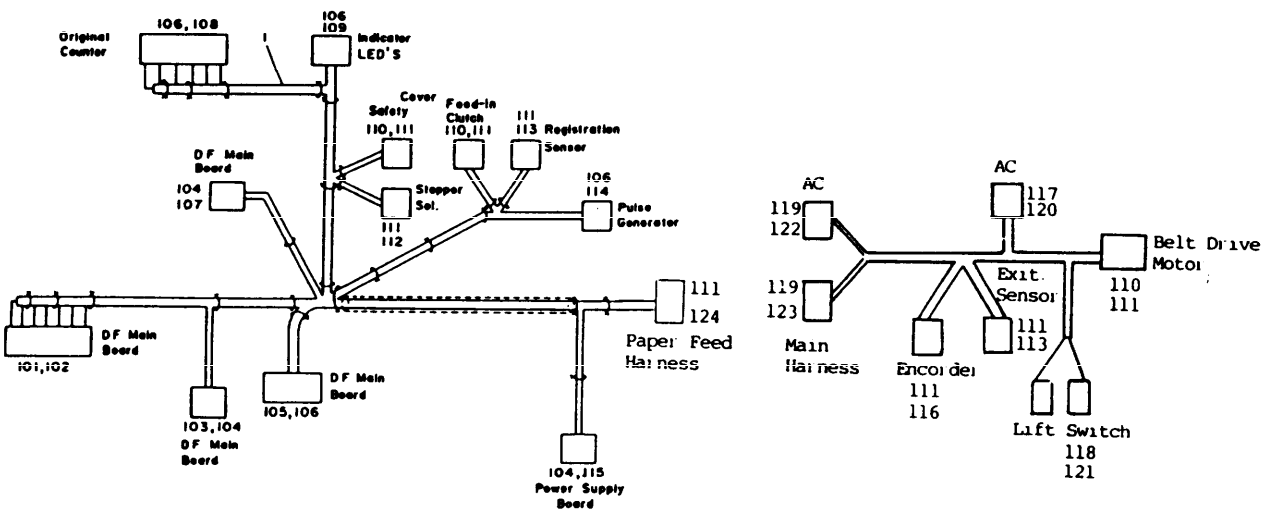

5. MAIN HARNESS

July 20,'84

Index No.	Part No.	Description	Q'ty Per Assembly
1	58945202	Main Harness	1
2	58945231	Harness - Paper Feed	1

Index No.	Part No.	Description	Q'ty Per Assembly
101	11030658	Connector - 40P	1
102	11001182	Socket - MATE-N-LOCK	35
103	11021351	Connector - 3P	1
104	11001190	Socket - MATE-N-LOCK	11
105	11021293	Connector - 10P	1
106	11001147	Socket - MATE-N-LOCK	1
107	11021352	Connector - 4P	1
108	11021244	Connector - 15P	1
109	11021289	Connector - 6P	1
110	11021515	Connector - 2P	4
111	11001240	Socket - MATE-N-LOCK	20
112	11021533	Connector - 3P	1
113	11021516	Connector - 3P	2
114	11030600	Connector - 3P	1
115	11021046	Connector - 4P	1
116	11021517	Connector - 4P	1
117	11001042	Socket - MATE-N-LOCK	1
118	11001169	Fastening Receptacle	1
119	11001239	Pin - MATE-N-LOCK	1
120	11020983	Connector - 2P	1
121	11021408	Connector - 11P	1
122	11021507	Connector - 2P	1
123	11021513	Connector - 15P	1
124	11021521	Connector - 15P	1

6. AC HARNESS

July 20,'84

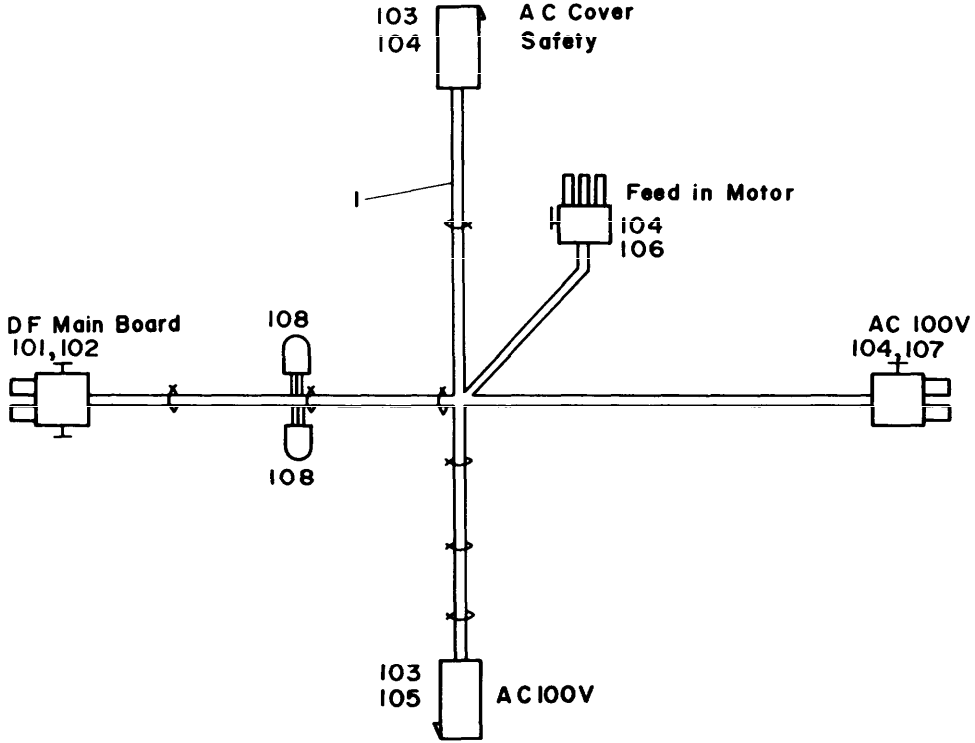

Index No.	Part No.	Description	Q'ty Per Assembly
1	58945212	AC Harness - 115V	1
	58945213	AC Harness - 220/240V	1

Index No.	Part No.	Description	Q'ty Per Assembly
101	11020983	Connector - 2P	1
102	11001042	Socket - MATE-N-LOCK	2
103	11021539	Connector - 2P	2
104	11001241	Socket - MATE-N-LOCK	4
105	11001239	Pin - MATE-N-LOCK	2
106	11021552	Connector - 3P	1
107	11021515	Connector - 2P	1
108	11000342	Closed Terminal	2

7. DECAL AND DOCUMENT

July 20,'84

1



2

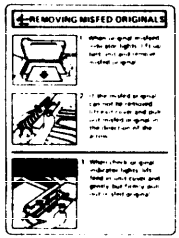

3

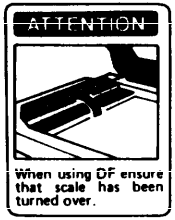

4

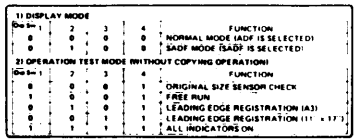

5



7. DECAL AND DOCUMENT

Index No.	Part No.	Description	Q'ty Per Assembly
1	58942898	Decal - Adjust Separation Roller	1
2	58942899	Decal - DF Misfeed	1
3	58942902	Decal - Attention	1
4	58942912	Decal - DIP Switch	1
5	58948713	Installation Procedure - Eng.	
	58948723	Installation Procedure - Slang.	

Index No.	Part No.	Description	Q'ty Per Assembly

This section instructs you as to the numbers and names of the parts of this machine.

Parts No.	Description	Page and Index No.
58942061	Feed-In Motor Bracket	7-59
58942062	Feed-In Motor Pulley	7-66
58942070	Feed-In Clutch Shaft	7-54
58942072	Pulse Generator Pulley	7-62
58942073	Gear - 26T	7-55
58942081	Feed-In Motor Tension	7-60
58942084	Tightener Roller	7-64
58942085	Tightener Screw	7-61
58942090	Timing Belt	7-63
58942091	Spring Anchor	7-65
58942096	Capacitor Support Plate	7-67
58942155	Detent Arm Holder Bracket	7-31
58942163	Center Roller	7-72
58942170	Pick-Up Roller Shaft	7-29
58942171	Original Feed Roller	7-28
58942173	Pick-Up Roller Pulley	7-33
58942174	Timing Belt	7-32
58942176	Spring - Detent Arm	7-18
58942177	Sensor Seal	7-71
58942178	Collar - Guide Aid	7-30
58942181	Upper Separation Roller	7-25
58942183	Lower Separation Roller	7-38
58942185	Separation Roller Shaft	7-24
58942186	Separation Roller Pulley	7-26
58942188	Left Guide Plate	7-23
58942189	Right Guide Plate	7-34
58942190	Gear - 35T	7-51
58942226	Lever Shaft	7-22
58942228	Separation Roller Solenoid Lever	7-19
58942229	Solenoid Pin	7-20
58942234	Pick-Up Solenoid Bracket	7-21
58942261	Separation Roller Shaft	7-37
58942262	Separation Roller Adjusting Plate	7-40
58942263	Adjusting Plate	7-36
58942264	Collar	7-39

Parts No.	Description	Page and Index No.
58942265	Lever	7-76
58942266	Separation Roller Adjusting Screw	7-73
58942267	Spring	7-74
58942271	Eccentric Cam Shaft	7-42
58942272	Separation Roller Eccentric Cam	7-41
58942273	Separation Roller Adjusting Knob	7-17
58942274	Spring Plate	7-43
58942282	Display Bracket	7-47
58942283	Original Stopper	7-53
58942285	Original Stopper Lever	7-52
58942290	Solenoid Relay Lever	7-50
58942176	Spring - Original Stopper	7-44
58942411	Lower Original Guide	7-8
58942412	Roller	7-11
58942413	Relay Roller Shaft	7-10
58942414	Roller Spring Plate	7-12
58942415	Roller Spring Plate - Middle	7-13
58942416	Roller Shaft	7-9
58942417	Collar	7-70
58942455	Original Relay Roller	7-7
58942456	Gear - 25T	7-49
58942457	Cam Plate	7-16
58942520	Original Feed Guide - Upper	7-5
58942522	Arm Mounting Plate - Front	7-2
58942525	Arm Mounting Plate - Rear	7-3
58942530	Front Arm	7-14
58942535	Rear Arm	7-69
58942540	Arm Screw	7-15
58942541	Spring Plate	7-75
58942601	Feed-In Unit Cover	7-1
58942630	Front Cover	5-50
58942643	Operation Panel - 115V	5-49
58942644	Operation Panel - 220V	5-49
58942645	Operation Panel Key Top	5-59
58942656	Rear Cover - 115V	5-52

Parts No.	Description	Page and Index No.
58942657	Rear Cover - 220V	5-52
58942721	Original Feed Table - 115V	5-40
58942722	Original Feed Table - 220V	5-40
58942730	Front Side Fence	5-38
58942740	Rear Side Fence	5-39
58942747	Mylar - Original Guides	5-66
58942748	Mylar - Feed In	5-69
58942755	DF Main Board Plate	5-56
58942768	Protective Sheet	5-55
58942780	Reflective Plate	5-42
58942785	Antireflector Cushion	5-67
58942820	Safety Switch Mounting Plate	7-68
58942821	Mounting Plate - Feed Unit	5-63
58942822	Harness Cover	5-64
58942830	Mylar - Entrance	5-34
58942898	Decal - Adjust Separation Roller	17-1
58942899	Decal - DF Misfeed	5-1
58942899	Decal - DF Misfeed	17-2
58942902	Decal - Attention	5-68
58942902	Decal - Attention	17-3
58942911	Decal - DIP Switch	17-4
58943121	Base Damper	5-62
58943130	Belt Drive Motor Bracket	9-45
58943140	Drive Pulley	9-42
58943145	Gear - 24T	9-39
58943150	Belt Drive Shaft	9-46
58943155	Gear - 39T	9-47
58943160	Drive Motor Tension	9-36
58943165	Stopper - Drive Motor Tension	9-38
58943170	Transfer Tension Plate	9-53
58943175	Spring - Drive Motor Tension	9-37
58943176	Transfer Tension Spring	9-54
58943177	Belt - A	9-43
58943178	Belt - B	9-55
58943185	Transfer Shaft Support Plate	9-57

Parts No.	Description	Page and Index No.
58943186	Transfer Shaft	9-60
58943190	Transfer Shaft Spacer	9-8
58943195	Exit Tension	9-49
58943201	Exit Shaft	9-50
58943202	Exit Pulley	9-51
58943205	Exit Tension Spring	9-48
58943210	Brake Cam	5-22
58943215	Brake Stopper	5-58
58943217	Brake Stopper	5-20
58943218	Aid Pad	5-19
58943219	Leaf Spring Holder	5-21
58943225	Brake Plate	5-18
58943230	Left Mounting Post	5-23
58943235	Right Mounting Post	5-28
58943241	Torsion Spring - T=1	5-61
58943242	Torsion Spring - T=1.2	5-61
58943243	Spring Pipe	5-27
58943245	Spring Holder	5-25
58943246	Bracket	5-26
58943251	Click Bracket	5-11
58943255	Click Shaft	5-8
58943261	Brake Support Plate	5-12
58943353	Drive Belt Roller	9-35
58943357	Joint Plate	9-32
58943361	Magnetic Catch Mounting Plate	9-34
58943365	Release Bracket	9-21
58943370	Driven Belt Roller	9-20
58943373	Left Locking Plate	9-22
58943510	Front Side Plate	9-62
58943515	Rear Side Plate	9-63
58943520	Click	9-4
58943521	Click Spring Plate	9-5
58943525	Exit Turn Guide - Lower	9-14
58943532	Exit Roller Spring - Lower	9-17
58943535	Exit Roller	9-6
58943542	Exit Pulley - 35T	9-9

Parts No.	Description	Page and Index No.
58942912	Decal - Dip Switch	5-70
58943545	Belt - C	9-59
58943556	Exit Turn Guide - Upper	9-7
58943571	Exit Cover	9-1
58943580	Upper Exit Roller	9-3
58943587	Antistatic Brush	9-2
58943591	Antistatic Brush Support Plate	9-13
58943595	Exit Support Plate	9-11
58943651	Power Supply Mounting Plate	5-16
58943653	Left Mounting Plate - Power Supply	5-13
58943655	Power Supply Shield Cover	5-15
58943661	Power Cord Mounting Plate	5-35
58943751	Belt Unit Cover	5-2
58943761	Grip	5-30
58943771	Original Stacker	5-65
58943853	Flip Scale - 115V	5-31
58943854	Flip Scale - 220V	5-31
58943855	Flip Scale Spring	5-71
58943861	Original Exit Guide	5-32
58945108	Main Control Board	5-54
58945108	Main Control Board	11-1
58945115	Original Senser Board	5-41
58945121	Registration Sensor Board	7-4
58945131	Exit Sensor board	9-12
58945141	Operation Board	5-51
58945151	Pulse Generator Board	7-57
58945161	Display Board	7-46
58945201	Main Harness	13-1
58945202	Main Harness	13-1
58945212	Power Supply Harness - 115V	5-36
58945212	AC Harness - 115V	15-1
58945213	AC Harness - 220/240V	15-1
58945221	Control Harness	5-53
58945231	Harness - Paper Feed	13-2
58945341	Pick-Up Solenoid	7-45
58945351	Stopper Solenoid	7-48
58945361	Clutch - Feed-In	7-56
58945371	Power Supply Board - 115V	5-14

Parts No.	Description	Page and Index No.
58945376	Power Supply Board - 220V	5-14
58945385	IC - HN482764G-3	11-2
58945391	Main Motor (AC 5.5W)	7-58
58945395	Main Motor (AC 5.5W) - 220/240V	7-58
58948713	Installation Procedure English	17-5
59183380	Spring - Floating Roller	9-28
59183381	Floating Roller	9-30

Parts No.	Description	Page and Index No.
50530447	Bushing - 6x10x6mm	9-111
50540440	Magnet Catch Ass'y	9-33
50560509	Nut Plate - Microswitch	5-5
54091238	Rotary Catch	7-35
54101291	Pin - Return Lever	5-60
54101291	Pin - Return Lever	7-6
54131882	Stepped Screw	9-23
54181813	Stepped Screw - M4	5-57
54424495	Slip Clutch	9-10
54432657	Gear - 28T	5-46
54432660	Spacer - 6x22x0.5mm	5-48
54432712	Cork Pad	5-45
54432713	Wave Washer	5-47
54471778	Stepped Screw - M4	9-61
54472681	Roller Retainer	7-27
58751130	Left Mounting Bracket	5-17
58751135	Right Mounting Bracket	5-29
58751512	Gear - 20T	9-58
58751536	End Stay	9-24
58751537	Holder - Floating Roller	9-27
58751538	Floating Roller	9-30
58751540	Shaft - Floating Roller	9-29
58751541	Spring - Floating Roller	9-28
58751545	Guide Bracket - Original Feed Belt	9-26
58751546	Stopper - Belt Unit	9-31
58751556	Middle Stay	9-25
58751590	Original Feed Belt	9-19
58752067	Bushing - 6x10x6mm	5-10
58752580	Coupled Pulley & Gear	9-56
58752597	Timing Pulley - 10T	9-52
58753265	Detent Arm	5-9
58753269	Spring - Detent Arm	5-3
58753276	Shaft - Detent Arm	5-7
58753280	Adjusting Plate - Detent Arm Spring	5-4
58753553	Ring - Holder	5-24

Parts No.	Description	Page and Index No.
58754018	Shaft (Long) - Lower Feed/Exit Roller	9-16
58754019	Shaft (Short) - Lower Feed/Exit Rolle	9-18
58754141	Rack - Front Original Guide	5-44
58754146	Rack-Rear Original Guide-Kalle & P.B.	5-43
58754557	Lower Exit Roller	9-15
58755522	Shoulder Screw - M5	5-33
58862202	Pulley - 18T	9-40
58865480	Separation Motor - DC 21W	9-41
58955732	Insulating Mylar	7-79
67694182	Pulley - 10T	9-44

Parts No.	Description	Page and Index No.
03130060W	Philips Pan Head Screw - M3x6	7-112
03130060W	Philips Pan Head Screw - M3x6	11-101
03130140W	Philips Pan Head Screw - M3x14	5-101
03130350W	Philips Pan Head Screw - M3x35 - 220V	7-102
03140060W	Philips Pan Head Screw - M4x6	5-102
03140060W	Philips Pan Head Screw - M4x6	7-103
03140060W	Philips Pan Head Screw - M4x6	9-102
03140080W	Philips Pan Head Screw - M4x8	5-103
03140080W	Philips Pan Head Screw - M4x8	7-104
03140120W	Philips Pan Head Screw - M4x12	5-104
03140140W	Philips Pan Head Screw - M4x14	5-105
03150100W	Philips Pan Head Screw - M5x10	5-107
03230060W	Philips Sunken Head Screw - M3x6	11-102
03240060W	Philips Sunken Head Screw - M4x6	4-111
03430060W	Philips Pan Head Screw - M3x6	9-101
03440050W	Philips Truss Head Screw - M4x5	5-111
03440080D	Philips Truss Head Screw - M4x8	5-109
03440100W	Philips Pan Head Screw - M4x10	5-110
05730060W	Hexagon Headless Set screw - M	7-110
05740040W	Hexagon Headless Set Screw - M4x4	9-105
05740060W	Hexagon Headless Set Screw - M4x6	7-105
05840120B	Bolt - M4x12	5-113
06320100E	Pin - M2x10	7-109
07010040C	Washer - M4	5-112
07200025E	Retaining Ring - M2.5	7-106
07200040B	Retaining Ring - M4	7-107
07200040B	Retaining Ring - M4	9-106
07200050B	Retaining Ring - M5	9-107
07200060B	Retaining Ring - M6	7-108
07200070B	Retaining Ring - M7	9-108
08053039	Ball Bearing - 8x16x5mm	9-110
08053145	Ball Bearing - 6x12x4mm	7-111
08053145	Ball Bearing - 6x12x4mm	9-109
08073002	Spacer 4x6 mmx0.1	7-113
09513006W	Philips Screw with Flat Washer - M3x6	7-101
09514006W	Philips Screw with Flat Washer - M4x6	9-103

Parts No.	Description	Page and Index No.
09515008W	Philips Screw with Flat Washer - M5x8	5-106
09554008W	Philips Screw with Flat Washer - M4x8	5-108
09654008W	Tapping Screw with Flat Washer - M4x8	9-104
10020307	Jumper Wire	11-103
10050767	Heat Sink	11-104
11000342	Closed Terminal	15-108
11001042	Socket - MATE-N-LOCK	15-102
11001142	Socket - MATE-N-LOCK	13-117
11001143	Socket - MATE-N-LOCK	13-106
11001147	Socket - MATE-N-LOCK	13-106
11001169	Fastening Receptacle	13-118
11001182	Socket - MATE-N-LOCK	13-102
11001190	Socket - MATE-N-LOCK	13-104
11001239	Pin - MATE-N-LOCK	13-119
11001240	Socket - MATE-N-LOCK	13-111
11001241	Socket - MATE-N-LOCK	15-104
11010328	Connector Pin Contact	11-105
11020915	Connector - 10P	11-106
11020959	Terminal - 3P	11-107
11020960	Connector - 4P	11-108
11020983	Connector - 2P	13-120
11020995	Connector - 2P	11-109
11021046	Connector - 4P	13-115
11021244	Connector - 15P	13-108
11021289	Connector - 6P	13-109
11021293	Connector - 10P	13-105
11021351	Connector - 3P	13-103
11021352	Connector - 4P	13-107
11021408	Connector - 1P	13-121
11021507	Connector - 2P	13-122
11021513	Connector - 15P	13-123
11021515	Connector - 2P	13-110
11021515	Connector - 2P	15-107
11021516	Connector - 3P	13-113
11021517	Connector - 4P	13-116
11021521	Connector - 15P	13-124

Parts No.	Description	Page and Index No.
11021533	Connector - 3P	13-112
11021539	Connector - 2P	15-103
11021552	Connector - 3P	15-106
11030509	Connector - 8P	11-110
11030600	Connector - 3P	13-114
11030650	Connector - 40P	11-111
11030658	Connector - 40P	13-101
11031317	Connector	11-112
11040273	Fuse Holder	11-113
11040319	LSI Socket - 28P	11-114
11070413	Fuse - 3A - 220V	11-115
12010051	Induction Coil - 125uH	11-116
12010057	Induction Coil - 82uH	11-117
12040883	DIP Switch	11-118
12041126	Microswitch - 115V	7-77
12041285	Microswitch	7-78
12041300	Microswitch	5-6
12041311	Microswitch - 220/240V	7-77
12081024	Solid State Relay	11-119
14000301	Transistor - 2SC1213AK	11-120
14010255	Transistor - 2SB872Q	11-121
14010263	Transistor - 2SD1377K	11-122
14010303	IC - M54567	11-123
14010611	Diode - 1S1588	11-124
14010668	Diode - 1S1885	11-125
14010809	Zener Diode - RD4.3EB3	11-126
14020364	Diode Array - S5KC20R	11-127
14020385	Diode Array - S5KC20	11-128
14030210	Photosensor	11-129
14030308	LED - TLR-102A	11-130
14030318	Photocoupler - ON3113	11-131
14070542	IC - SN74LS00	11-132
14070577	IC - SN7406N	11-133
14070604	IC - TC4049P	11-134
14070614	IC - SN74LS74N	11-135
14070697	IC - SN74LS86N	11-136

Parts No.	Description	Page and Index No.
14070758	IC - HA17902P	11-137
14070836	IC - SN74LS09N	11-138
14071016	IC - uPD8255AC-5	11-139
14071026	IC - SN74LS373N	11-140
14071334	IC - uPD7810G	11-141
14071337	IC - MN1215Q	11-142
14071348	IC - TD62304P	11-143
14080099	IC - HA17901P	11-144
14080237	IC - HA17904PS	11-145
14080254	IC - HA17555PS	11-146
14080306	IC - TA78012AP	11-147
14080330	IC - NJM4151D	11-148
15030049	X-tal Oscillator - 10MHz	11-149
16000257	Resistor - 0.2Ω 5T ±1%	11-150
16000266	Resistor - 33Ω 5T ±1%	11-151
16000544	Resistor - 1KΩ 1T ±10%	11-152
16011732	Resistor - 390Ω 1T ±5%	11-153
16017142	Resistor Array - 1KΩ	11-154
16017166	Resistor Array - 4.7KΩ 1/8W	11-155
16017197	Resistor Array - 1KΩ 1/8W	11-156
16017271	Resistor Array - 4.7KΩ 1/8W	11-157
16017326	Resistor Array - 10KΩ	11-158
16018145	Variable Resistor - 5KΩ	11-159
16022620	Resistor Array - 4.7KΩ	11-160
16040491	Capacitor - 100uF 35V	11-161
16040776	Capacitor - 4.7uF 35V	11-162
16040892	Capacitor - 33MF 50V	11-163
16041234	Capacitor - 1000uF 35V	11-164
16041270	Capacitor - 1uF 35V	11-165
16060395	Capacitor - 4700pF 50V	11-166
16060454	Capacitor - 0.015uF 50V	11-167
16060456	Capacitor - 0.068uF 50V	11-168
16060457	Capacitor - 0.15uF 50V	11-169
16060529	Capacitor - 0.001uF 50V	11-170
16060599	Capacitor - 0.0068u 100V	11-171
16060790	Capacitor - 0.1uF 50V	11-172

Parts No.	Description	Page and Index No.
16060891	Capacitor - 2200pF 50V	11-173
16060982	Capacitor - 0.01uF 50V	11-174
16060995	Capacitor - 10pF 50V	11-175
16060998	Capacitor - 0.01MF 50V	11-176
16060999	Capacitor - 0.01MF 25V	11-177
16114101	Resistor - 100Ω 1/4T ±5%	11-178
16114102	Resistor - 1KΩ 1/4T	11-179
16114103	Resistor - 10KΩ 1/4T ±5%	11-180
16114104	Resistor - 100KΩ 1/4T ±5%	11-181
16114105	Resistor - 1MΩ 1/4T ±5%	11-182
16114123	Resistor - 12KΩ 1/4T ±5%	11-183
16114151	Resistor - 150Ω 1/4T	11-184
16114152	Resistor - 1.5KΩ 1/4T ±5%	11-185
16114153	Resistor - 15KΩ 1/4T ±5%	11-186
16114155	Resistor - 1.5MΩ 1/4T ±5%	11-187
16114221	Resistor - 220Ω 1/4T ±5%	11-188
16114222	Resistor - 2.2KΩ 1/4T ±5%	11-189
16114223	Resistor - 22KΩ 1/4T ±5%	11-190
16114224	Resistor - 220KΩ 1/4T ±5%	11-191
16114271	Resistor - 270Ω 1/4T ±5%	11-192
16114272	Resistor - 2.7KΩ 1/4T ±5%	11-193
16114274	Resistor - 270KΩ 1/4T ±5%	11-194
16114333	Resistor - 33KΩ 1/4T ±5%	11-195
16114392	Resistor - 3.9KΩ 1/4T ±5%	11-196
16114471	Resistor - 470Ω 1/4T ±5%	11-197
16114472	Resistor - 4.7KΩ 1/4T ±5%	11-198
16114562	Resistor - 5.6KΩ	11-199
16114563	Resistor - 56KΩ 1/4T ±5%	11-200
16114682	Resistor - 6.8KΩ 1/4T ±5%	11-201
16114822	Resistor - 8.2KΩ 1/4T ±5%	11-202
16116182	Resistor - 1.8KΩ 1/2T ±5%	11-203
16116222	Resistor - 2.2KΩ 1/2T ±5%	11-204
16116821	Resistor - 820Ω 1/2T ±5%	11-205
16221000	Resistor - 100Ω 1/4T ±1%	11-206
16221001	Resistor - 1KΩ 1/4T ±1%	11-207
16221003	Resistor - 100KΩ 1/4T ±1%	11-208

Parts No.	Description	Page and Index No.
16221501	Resistor - 1.5KΩ 1/4T ±1%	11-209
16223902	Resistor - 39KΩ 1/4T ±1%	11-210
16225601	Resistor - 5.6KΩ 1/4T ±1%	11-211
16225602	Resistor - 56KΩ 1/4T ±1%	11-212

This section instructs you as to the numbers and names of the parts of this machine.

1. EXTERIOR

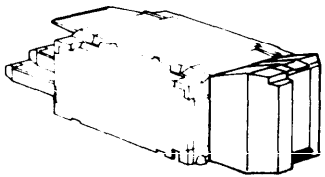

See page 6–4

2. TRANSPORT SECTION

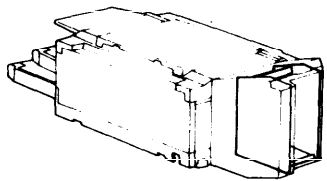

See page 6–6

3. ELECTRICAL COMPONENT

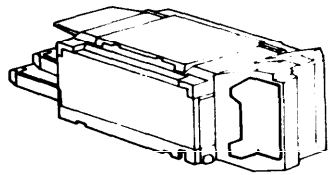

See page 6–8

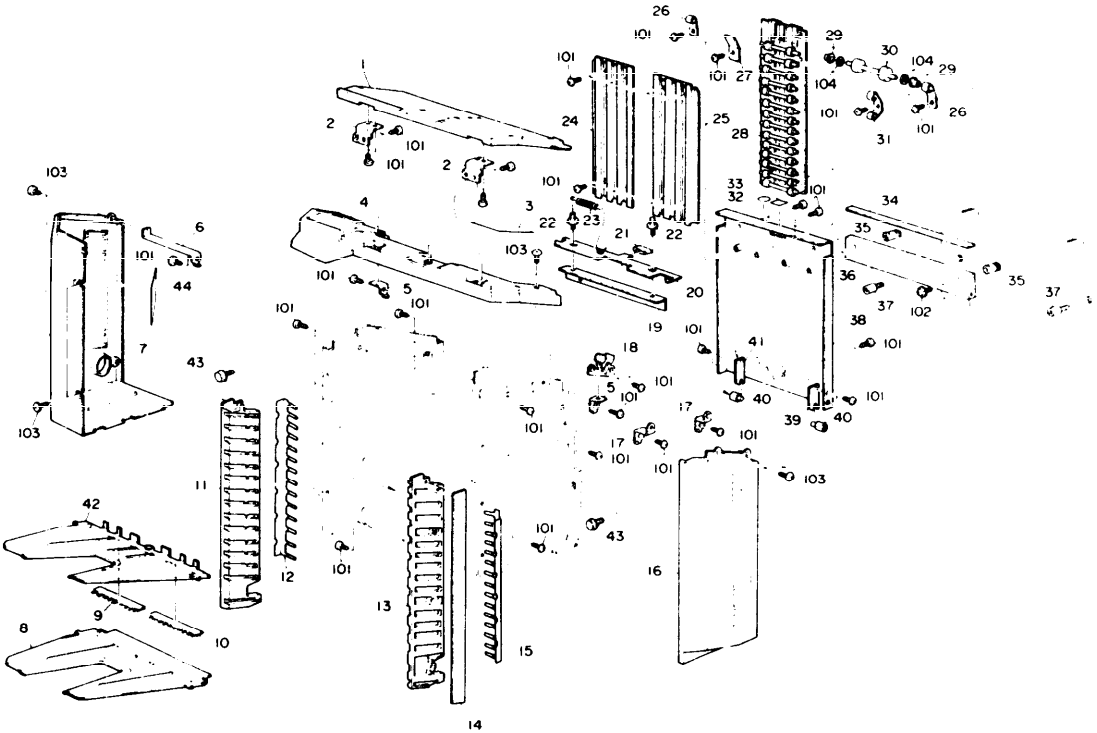

Index No.	Part No.	Description	Q'ty Per Assembly
1	58956141	Jam Clearance Cover	1
2	67696142	Hinge - Jam Clearance Cover	2
3	67696200	Decal - Misfeed	1
4	58956131	Upper Cover	1
5	67696136	Bracket - Top Cover	2
6	58956103	Rear Cover Mounting Bracket	1
7	58956121	Rear Cover	1
8	67692522	Interrupt Bin	1
9	67692519	Antistatic Brush	1
10	67692525	Antistatic Brush	1
11	58956171	Rear Bin Holder	1
12	58956152	Rear Grounding Plate	1
13	58956161	Front Bin Holder	1
14	58956181	Decal - Bin Number	1
15	58956151	Front Grounding Plate	1
16	58956111	Front Cover	1
17	58956101	Front Cover Mounting Bracket	2
18	54091238	Rotary Catch	1
19	67693614	Angle - Latch	1
20	67693611	Latch - Transport Bracket	1
21	67541242	Knob Cap	1
22	67693612	Stud - Latch	2
23	67693613	Spring - Latch	1
24	58953235	Driven Guide Plate - Rear	1
25	58953231	Driven Guide Plate - Front	1
26	58953225	Spring Plate - Upper Drive Roller	2
27	58953238	Driven Guide Plate - Upper	1
28	58953221	Driven Roller Bracket	1
29	58402416	Bushing - Pinch Roller	2
30	58953211	Exit Drive Roller	1
31	67693226	Small Plate Spring - Guide Roller	1
32	54422769	Decal - A	1
33	67696201	Decal - Lock Rerease - CS1020	1
34	67691128	Rubber Magnet	1
35	67691126	Upper Mounting Stud	2

Index No.	Part No.	Description	Q'ty Per Assembly
36	58951125	Mounting Stay	1
37	67691127	Lower Mounting Stud	2
38	58953251	Bracket	1
39	58953261	Front Hinge Plate	1
40	58953263	Paper Transport Hinge Shaft	2
41	58953262	Rear Hinge Plate	1
42	67692521	Sorter Bin	14
43	08030017	Knob Screw	2
44	58955852	Decal - Instructions	1
101	03140060W	Philips Pan Head Screw - M4x6	49
102	03140080W	Philips Pan Head Screw - M4x8	2
103	03440080D	Philips Truss Head Screw - M4x8	9
104	07000408	Flat Washer - M4	2

3. ELECTRICAL COMPONENT

July 20,'84

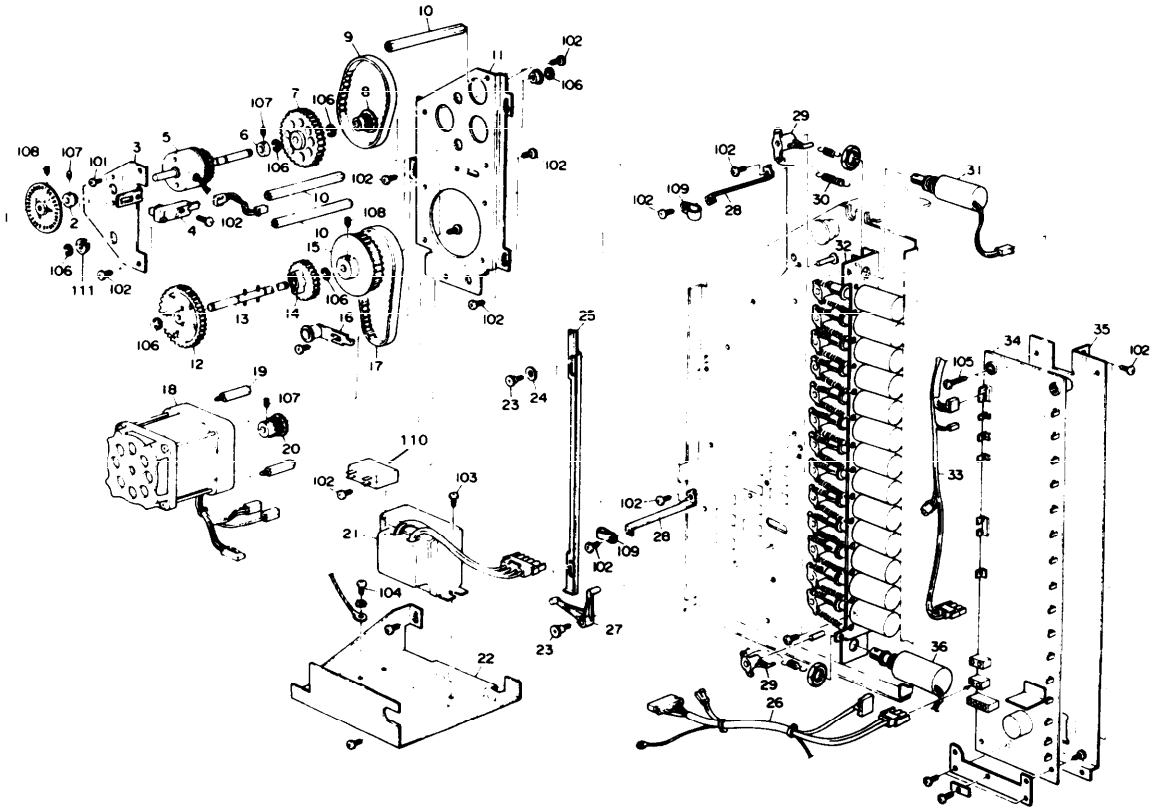

Index No.	Part No.	Description	Q'ty Per Assembly
1	54201087	Perforation Disk	1
2	67694197	Collar - Speed-up Clutch	1
3	58954126	Clutch Mounting Bracket	1
4	54425379	Photo Sensor	1
5	67694135	Speed-up Clutch	1
6	67694196	Collar - 6x15x7mm	1
7	58954191	Gear - 49T	1
8	67694181	Timing Pulley 10T	1
9	67694156	Timing Belt - 104L	1
10	67694125	Stud - Speed-up Clutch	3
11	58954121	Drive Components Mounting Bracket	1
12	67694177	Gear - 48Z	1
13	58954175	Gear Shaft	1
14	58954178	Gear - 31T	1
15	67694171	Timing Pulley - 30T	1
16	67694161	Tightener - Timing Belt	1
17	67694156	Timing Belt - 104L	1
18	58955400	Main Drive Motor (AC 24W)	1
19	67694124	Stud - Main Motor	2
20	67694153	Timing Pulley - 12T (50Hz)	1
	67694181	Timing Pulley - 10T (60Hz)	1
21	58955450	Transformer - 100V	1
22	58955801	AC Power Supply Bracket	1
23	54181813	Stepped Screw - M4	2
24	58952165	Washer - 6x12	1
25	58952161	Lever - Transport Guide Plate	1
26	58955701	Harness - Interface	1
27	58952163	Arm - Transport Guide Plate	1
28	67695655	Angle - Cord Clamp (70)	2
29	67693131	Lever - Bin Gate	2
30	67693132	Spring - Bin Gate	1
31	67693140	Bin Gate Solenoid	1
32	58953137	Solenoid Bracket	1
33	58955720	Safety Switch Harness	1
34 *	58955611	Main Control Board	1
18A	58955403	Main Drive Motor - 220V	1

*Reference Tech Service Bulletin No. FT5000-022.

Index No.	Part No.	Description	Q'ty Per Assembly
35	58955604	Main Control Board Bracket	1
36	67693150	Turn Gate Solenoid	1
101	03130040W	Philips Pan Head Screw - M3x4	2
102	03140060W	Philips Pan Head Screw - M4x6	19
103	03140080W	Philips Pan Head Screw - M4x8	2
104	08011185	Philips Truss Head Screw - M4x8	1
105	03140160W	Philips Pan Head Screw - M4x16	2
106	07200040B	Retaining Ring - M4	5
107	05740040E	Hexagon Headless Set Screw - M4x4	2
108	05750050E	Hexagon Headless Set Screw - M5x5	2
109	11050009	Nylon Clip - 5M	2
110	16061375	Capacitor - 6uf (220V)	1
111	08051145	Ball Bearing 6 x 12 x 4 mm	1

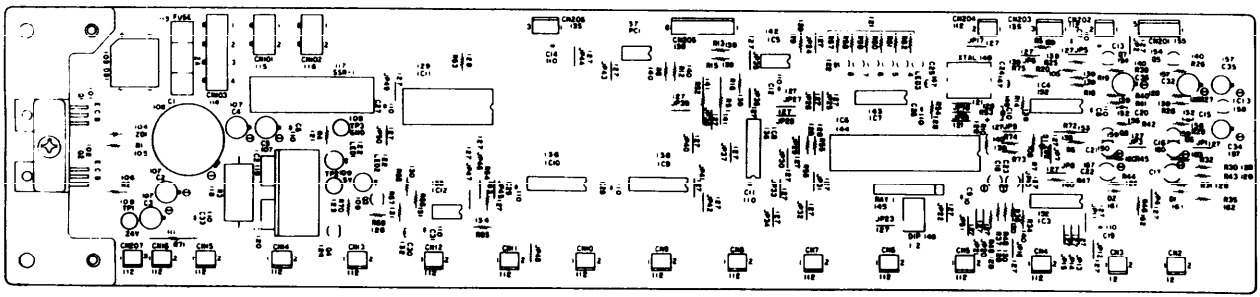

4. MAIN CONTROL BOARD

Index No.	Part No.	Description	Q'ty Per Assembly
1 *	58955611	Main Control Board	1
101	14010277	Transistor - 2SD1277	1
102	14010275	Transistor - 2SB945	1
103	14050120	Rectifier - S4VB10	1
104	14020415	Zener Diode - 36V	1
105	16114222	Resistor - 2.2KΩ 1/4T ±5%	3
106	16116680	Resistor - 68Ω 1/2T	1
107	16041254	Capacitor - 47uF 50V	4
108	16041130	Capacitor - 2200uF 50V	1
109	11010328	Connector Pin Contact	3
110	16060533	Capacitor - 0.01uF 50V	15
111	16000549	Resistor - 82Ω 2T ±10%	1
112	11021567	Connector - 2P	18
113	11070411	Fuse - 2A	1
114	11021039	Connector - 4P	1
115	11020995	Connector - 2P	1
116	11020996	Connector - 2P	1
117	12081024	Solid State Relay - 240V	1
118	16000360	Resistor - 47Ω 5T ±5%	1

*Reference Tech Service Bulletin No. FT5000-022

Index No.	Part No.	Description	Q'ty Per Assembly
119	14080300	IC - AN7805	1
120	14080301	IC - AN7824	1
121	16114561	Resistor - 560Ω 1/4T ±5%	7
122	14030308	LED - TLR-102A	8
123	16114331	Resistor - 330Ω 1/4T ±5%	1
124	14000284	Transistor - 2SD789D	1
125	14000113	Transistor - 2SA495GTMY	1
126	16114332	Resistor - 3.3KΩ 1/4T ±5%	1
127	10020207	Jumper Wire	51
128	16114472	Resistor - 4.7KΩ 1/4T ±5%	15
129	14070988	IC - uPD8243C	1
130	16114473	Resistor - 47KΩ 1/4T ±5%	3
131	16114223	Resistor - 22KΩ 1/4T ±5%	2
132	16060531	Capacitor - 0.01uF 50V	3
133	14080124	IC - LM555CM	1
134	16114563	Resistor - 56KΩ 1/4T ±5%	1
135	11020845	Terminal - 3P	2
136	14010192	IC - uPA2003C	3
137	14030317	Photocoupler - ON3112	1
138	11020913	Connector - 9P	1
139	16114472	Resistor - 4.7KΩ 1/4T ±5%	14
140	16114102	Resistor - 1KΩ 1/4T	7
141	16000371	Resistor - 1KΩ 1T ±5%	2
142	14080233	IC - HA17903PS	1
143	14071081	IC - HD7406P	1
144	58955609	IC - TM8049	1
145	16017122	Resistor Array - 4.7KΩ 1/8W	1
146	12040790	Dip Switch	1
147	16060576	Capacitor - 20pF 50V	2
148	15030050	X-tal Oscillator - 6MHz	1
149	16040547	Capacitor - 1uF 35V	1
150	16041173	Capacitor - 0.47uF 50V	4
151	14020279	Diode - RD3.9EB	1
152	14080099	IC - HA17901P	2
153	16116222	Resistor - 2.2KΩ 1/2T ±5%	1

July 20,'84

Index No.	Part No.	Description	Q'ty Per Assembly
154	14000045	Transistor - 2SC372	2
155	11020905	Terminal - 5P	1
156	16114105	Resistor - 1MΩ 1/4T ±5%	2
157	16041191	Capacitor - 10uF 35V	6
158	14080310	IC - TA78L015AP	1
159	14000236	Transistor - 2SK30A - GR	2
160	16114471	Resistor - 470Ω 1/4T ±5%	2
161	14010611	Diode - 1S1588	2
162	16114683	Resistor - 68KΩ 1/4T ±5%	1
163	16114184	Resistor - 180KΩ 1/4T ±5%	1
164	16018139	Variable Resistor 50kΩ 0.5W	1

5. AC HARNESS

July 20,'84

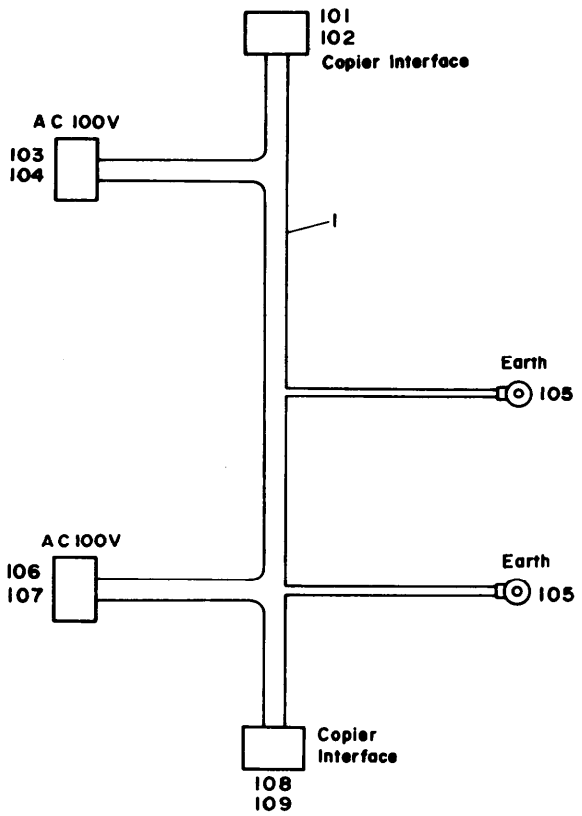

Index No.	Part No.	Description	Q'ty Per Assembly
1	58955701	Harness - Interface	1

Index No.	Part No.	Description	Q'ty Per Assembly
101	11021292	Connector - 9P	1
102	11001147	Socket - MATE-N-LOCK	9
103	11020983	Connector - 2P	1
104	11001042	Socket - MATE-N-LOCK	2
105	11000092	Solid Strand	2
106	11021539	Connector - 2P	1
107	11001239	Pin - MATE-N-LOCK	2
108	11030661	Connector	1
109	11001182	Socket - MATE-N-LOCK	9

6. SAFETY SWITCH HARNESS

July 20,'84

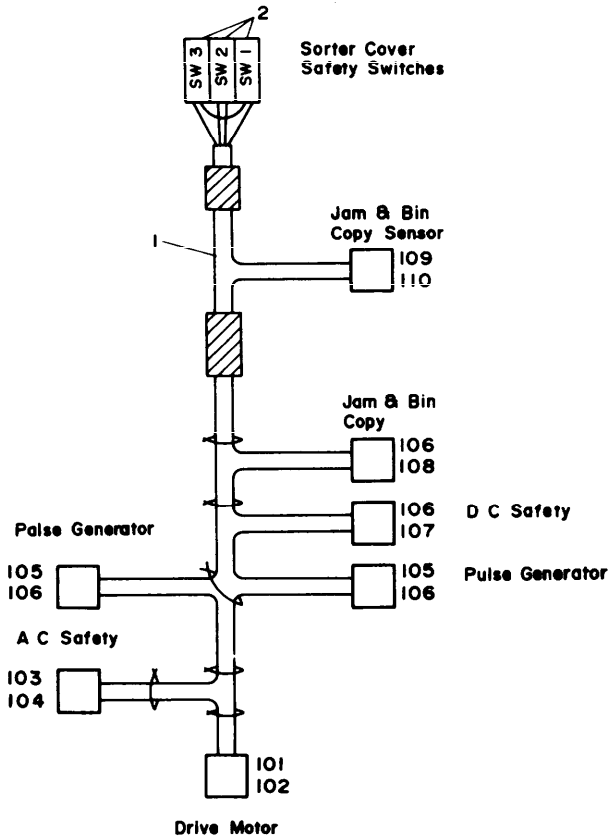

6. SAFETY SWITCH HARNESS

Index No.	Part No.	Description	Q'ty Per Assembly
1	58955720	Safety Switch Harness	1
	58955730	Safety Switch Harness - 220/240V	1
2	58955721	Safety Switch - 115V	1
	58955731	Safety Switch - 220/240V	3

Index No.	Part No.	Description	Q'ty Per Assembly
101	11021515	Connector - 2P	1
102	11001241	Socket - MATE-N-LOCK	2
103	11020983	Connector - 2P	1
104	11001041	Pin - MATE-N-LOCK	2
105	11030600	Connector - 3P	2
106	11001147	Socket - MATE-N-LOCK	13
107	11021329	Connector - 2P	1
108	11030601	Housing - 10P	1
109	11030601	Housing - 10P	1
	11021743	Connector - 5P	1
110	11001147	Socket - MATE-N-LOCK	5
	11001274	Terminal	5

7. DECAL AND DOCUMENT LIST

July 20,'84

1	2	3	4		
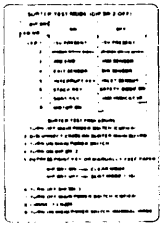			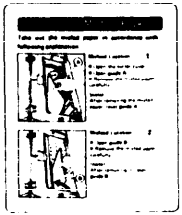		

7. DECAL AND DOCUMENT LIST

Index No.	Part No.	Description	Q'ty Per Assembly
1	58955852	Decal - Instructions	1
2	58956181	Decal - Bin Number	1
3	67696201	Decal - Lock Rerease - CS1020	1
4	67696210	Decal - Jam Clearance	1
5	58958713	Installation Procedure - English	1
	58958723	Installation Procedure - 5 Languages	1

Index No.	Part No.	Description	Q'ty Per Assembly

This section instructs you as to the numbers and names of the parts of this machine.

Parts No.	Description	Page and Index No.
58951125	Mounting Stay	5-36
58951131	Sensor Bracket - Upper	7-4
58952101	Entrance Side Plate - Front	7-39
58952102	Entrance Side Plate - Rear	7-42
58952106	Entrance Guide Plate	7-33
58952111	Upper Transport Guide Plate	7-34
58952115	Seal - Inlet Sensor	7-37
58952121	Lower Transport Guide Plate	7-40
58952124	Anti Vibration Rubber	7-41
58952141	Spring - Turn Feed Roller	7-18
58952153	Lower Exit Roller	7-14
58952161	Lever - Transport Guide Plate	9-25
58952163	Arm - Transport Guide Plate	9-27
58952165	Washer - 6x12	9-24
58952255	Upper Turn Guide	7-9
58952256	Turn Guide Shaft	7-6
58952511	Standard Bin Bracket	7-11
58952524	Interrupt Bin Bracket	7-25
58953137	Solenoid Bracket	9-32
58953211	Exit Drive Roller	5-30
58953221	Driven Roller Bracket	5-28
58953225	Spring Plate - Upper Drive Roller	5-26
58953231	Driven Guide Plate - Front	5-25
58953235	Driven Guide Plate - Rear	5-24
58953238	Driven Guide Plate - Upper	5-27
58953251	Bracket	5-38
58953261	Front Hinge Plate	5-39
58953262	Rear Hinge Plate	5-41
58953263	Paper Transport Hinge Shaft	5-40
58954121	Drive Components Mounting Bracket	9-11
58954126	Clutch Mounting Bracket	9-3
58954172	Timing Belt	7-48
58954175	Gear Shaft	9-13
58954178	Gear - 31T	9-14
58954181	Pulley - 10T	7-30

Parts No.	Description	Page and Index No.
58954191	Gear - 49T	9-7
58955400	Main Drive Motor (AC 24W)	9-18
58955450	Transformer - 100V	9-21
58955604	Main Control Board Bracket	9-35
58955609	IC - TMB049	11-144
58955611	Main Control Board	9-34
58955611	Main Control Board	11-1
58955620	Upper Sensor Board	7-2
58955630	Lower Sensor Board	7-21
58955701	Harness - Interface	9-26
58955701	Harness - Interface	13-1
58955720	Safety Switch Harness	9-33
58955720	Safety Switch Harness	15-1
58955721	Safety Switch - 115V	15-2
58955730	Safety Switch Harness - 220/240V	15-1
58955731	Safety Switch - 220/240V	15-2
58955801	AC Power Supply Bracket	9-22
58955811	Safety Switch Cover	7-1
58955813	Mylar - Jam Sensor	7-52
58955821	Lower Sensor Cover	7-23
58955852	Decal - Instructions	5-44
58955852	Decal - Instructions	17-1
58956101	Front Cover Mounting Bracket	5-17
58956103	Rear Cover Mounting Bracket	5-6
58956111	Front Cover	5-16
58956121	Rear Cover	5-7
58956131	Upper Cover	5-4
58956141	Jam Clearance Cover	5-1
58956151	Front Grounding Plate	5-15
58956152	Rear Grounding Plate	5-12
58956155	Grounding Plate Angle	7-54
58956161	Front Bin Holder	5-13
58956171	Rear Bin Holder	5-11
58956181	Decal - Bin Number	5-14
		17-2

Parts No.	Description	Page and Index No.
53041608	Bushing - 6mm	7-19
53041608	Bushing - 6mm	7-50
54091238	Rotary Catch	5-18
54181813	Stepped Screw - M4	9-23
54201087	Perforation Disk	9-1
54422317	Decal - B	7-36
54422769	Decal - A	5-32
54425379	Photo Sensor	9-4
58402416	Bushing - Pinch Roller	5-29
58402416	Bushing - Pinch Roller	7-32
58402416	Bushing - Pinch Roller	7-51
58966181	Decal - Bin Number	17-2
67541242	Knob Cap	5-21
67541242	Knob Cap	7-35
67691126	Upper Mounting Stud	5-35
67691127	Lower Mounting Stud	5-37
67691128	Rubber Magnet	5-34
67692131	Entrance Rollers	7-45
67692133	Upper Turn Feed Rollers	7-46
67692135	Lower Turn Feed Rollers	7-47
67692155	Exit Roller - First Bin	7-10
67692252	Upper Turn Guide	7-7
67692257	Guide Plate	7-5
67692261	Lower Turn Guide	7-15
67692272	Antistatic Brush	7-8
67692272	Antistatic Brush	7-24
67692272	Antistatic Brush	7-38
67692284	Shaft - Turn Gate	7-17
67692286	Cushion - Turn Gate	7-55
67692312	Lower Support Bracket	7-22
67692314	Mylar - Jam Sensor	7-53
67692519	Antistatic Brush	5-9
67692521	Sorter Bin	5-42
67692522	Interrupt Bin	5-8
67692525	Antistatic Brush	5-10

Parts No.	Description	Page and Index No.
67693111	Bin Gate	7-13
67693131	Lever - Bin Gate	9-29
67693132	Spring - Bin Gate	9-30
67693140	Bin Gate Solenoid	9-31
67693150	Turn Gate Solenoid	9-36
67693226	Small Plate Spring - Guide Rol..r	5-31
67693611	Latch - Transport Bracket	5-20
67693612	Stud - Latch	5-22
67693613	Spring - Latch	5-23
67693614	Angle - Latch	5-19
67694124	Stud - Main Motor	9-19
67694125	Stud - Speed-up Clutch	9-10
67694135	Speed-up Clutch	9-5
67694153	Timing Pulley - 12T 50 Hz	7-12
67694153	Timing Pulley - 12T 50 Hz	9-20
67694156	Timing Belt - 104L	9-9
67694156	Timing Belt - 104L	9-17
67694161	Tightener - Timing Belt	7-27
67694161	Tightener - Timing Belt	9-16
67694166	Tension Pulley - Timing Belt	7-28
67694168	Stud - Tension Pulley	7-29
67694171	Timing Pulley - 30T	9-15
67694177	Gear - 48Z	9-12
67694181	Timing Pulley 10T 60 Hz	9-8
67694181	Timing Pulley - 10T 60 Hz	9-20
67694182	Pulley - 10T	7-31
67694196	Collar - 6x15x7mm	9-6
67694197	Collar - Speed-up Clutch	9-2
67695631	Front Bracket - Sorter Cover SW	7-3
67695632	Rear Bracket - Sorter Cover SW	7-49
67695655	Angle - Cord Clamp (70)	9-28
67696136	Bracket - Top Cover	5-5
67696142	Hinge - Jam Clearance Cover	5-2
67696200	Decal - Misfeed	5-3
67696201	Decal - Lock Release - CS1020	5-33

Parts No.	Description	Page and Index No.
67696201	Decal - Lock Rerease - CS1020	17-3
67696210	Decal - Jam Clearance	17-4
67697730	Inlet Sensor	7-44
67697901	Harness - Sensor - Low	7-20
67697902	Harness - Sensor - Entrance	7-43
67692281	Turn Gate	7-16

Parts No.	Description	Page and Index No.
03130040W	Philips Pan Head Screw - M3x4	9-101
03130160W	Philips Pan Head Screw - M3x16	7-103
03140060W	Philips Pan Head Screw - M4x6	5-101
03140060W	Philips Pan Head Screw - M4x6	7-101
03140060W	Philips Pan Head Screw - M4x6	9-102
03140080W	Philips Pan Head Screw - M4x8	5-102
03140080W	Philips Pan Head Screw - M4x8	7-102
03140080W	Philips Pan Head Screw - M4x8	9-103
03140160W	Philips Pan Head Screw - M4x16	9-105
03440080D	Philips Truss Head Screw - M4x8	5-103
05740040E	Hexagon Headless Set Screw - M4x4	7-106
05740040E	Hexagon Headless Set Screw - M4x4	9-107
05750050E	Hexagon Headless Set Screw - M5x5	9-108
07000040B	Flat Washer - M4	5-104
07200030B	Retaining Ring - M3	7-104
07200040B	Retaining Ring - M4	7-105
07200040B	Retaining Ring - M4	9-106
07700322	Rubber Foot	7-26
08011185	Philips Truss Head Screw - M4x8	9-104
08030017	Knob Screw	5-43
08053145	Ball Bearing 6 x 12 x 4 mm	9-111
10020307	Jumper Wire	11-127
11000092	Solid Strand	13-105
11001041	Pin - MATE-N-LOCK	15-104
11001042	Socket - MATE-N-LOCK	13-104
11001147	Socket - MATE-N-LOCK	13-102
11001147	Socket - MATE-N-LOCK	15-106
11001147	Socket - MATE-N-LOCK	15-110
11001182	Socket - MATE-N-LOCK	13-109
11001239	Pin - MATE-N-LOCK	13-107
11001241	Socket - MATE-N-LOCK	15-102
11001274	Terminal	15-110
11010328	Connector Pin Contact	11-109
11020845	Terminal - 3P	11-135
11020905	Terminal - 5P	11-155
11020913	Connector - 9P	11-138

Parts No.	Description	Page and Index No.
11020983	Connector - 2P	13-103
11020983	Connector - 2P	15-103
11020995	Connector - 2P	11-115
11020996	Connector - 2P	11-116
11021039	Connector - 4P	11-114
11021292	Connector - 9P	13-101
11021329	Connector - 2P	15-107
11021515	Connector - 2P	15-101
11021539	Connector - 2P	13-106
11021567	Connector - 2P	11-112
11021743	Connector - 5P	15-109
11030600	Connector - 3P	15-105
11030601	Housing - 10P	15-108
11030601	Housing - 10P	15-109
11030661	Connector	13-108
11050008	Nylon Clip - 2N	7-107
11050009	Nylon Clip - 5N	7-108
11050009	Nylon Clip - 5N	9-109
11070411	Fuse - 2A	11-113
12040790	Dip Switch	11-146
12041126	Microswitch - 115V	7-56
12041285	Microswitch	7-57
12081024	Solid State Relay - 240V	11-117
14000045	Transistor - 2SC372	11-154
14000113	Transistor - 2SA495GTMY	11-125
14000236	Transistor - 2SK30A - GR	11-159
14000284	Transistor - 2SD789D	11-124
14010192	IC - uPA2003C	11-136
14010275	Transistor - 2SB945	11-102
14010277	Transistor - 2SD1277	11-101
14010611	Diode - 1S1588	11-161
14020279	Diode - RD3.9EB	11-151
14020415	Zener Diode - 36V	11-104
14030308	LED - TLR-102A	11-122
14030317	Photocoupler - OM3112	11-137

Parts No.	Description	Page and Index No.
14050120	Rectifier - S4VB10	11-103
14070988	IC - uPD8243C	11-129
14071081	IC - MB7406P	11-143
14080099	IC - HA17901P	11-152
14080124	IC - LM555CN	11-133
14080233	IC - HA17903PS	11-142
14080300	IC - AN7805	11-119
14080301	IC - AN7824	11-120
14080310	IC - TA78L015AP	11-158
15030050	X-tal Oscillator - 6MHz	11-148
16000360	Resistor - 47Ω 5T ±5%	11-118
16000371	Resistor - 1KΩ 1T ±5%	11-141
16000549	Resistor - 82Ω 2T ±10%	11-111
16017122	Resistor Array - 4.7KΩ 1/8W	11-145
16018139	Variable Resistor 50kΩ 0.5W	11A-164
16040547	Capacitor - 1uF 35V	11-149
16041130	Capacitor - 2200uF 50V	11-108
16041173	Capacitor - 0.47uF 50V	11-150
16041191	Capacitor - 10uF 35V	11-157
16041254	Capacitor - 47uF 50V	11-107
16060531	Capacitor - 0.01uF 50V	11-132
16060533	Capacitor - 0.01uF 50V	11-110
16060576	Capacitor - 20pF 50V	11-147
16060749	Capacitor 6 μ f	9-110
16114102	Resistor - 1KΩ 1/4T	11-140
16114105	Resistor - 1MΩ 1/4T ±5%	11-156
16114184	Resistor - 180KΩ 1/4T ±5%	11-163
16114222	Resistor - 2.2KΩ 1/4T ±5%	11-105
16114223	Resistor - 22KΩ 1/4T ±5%	11-131
16114331	Resistor - 330Ω 1/4T ±5%	11-123
16114332	Resistor - 3.3KΩ 1/4T ±5%	11-126
16114471	Resistor - 470Ω 1/4T ±5%	11-160
16114472	Resistor - 4.7KΩ 1/4T ±5%	11-128
16114472	Resistor - 4.7KΩ 1/4T ±5%	11-139
16114473	Resistor - 47KΩ 1/4T ±5%	11-130
16114561	Resistor - 560Ω 1/4T ±5%	11-121
16114563	Resistor - 56KΩ 1/4T ±5%	11-134

Parts No.	Description	Page and Index No.
16114683	Resistor - 68KΩ 1/4T ±5%	11-162
16116222	Resistor - 2.2KΩ 1/2T ±5%	11-153
16116680	Resistor - 68Ω 1/2T	11-106

Parts No.	Description	Page and Index No.

This section instructs you as to the numbers and names of the parts of this machine.

1. EXTERIOR

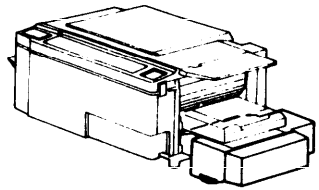

See page 8–4

2. PAPER STOCK SECTION

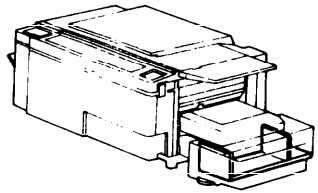

See page 8–6

3. DRIVE SECTION

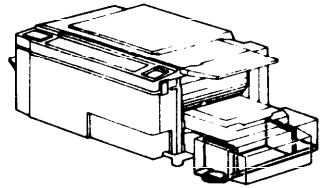

See page 8–8

1. EXTERIOR

Rev. 4/86

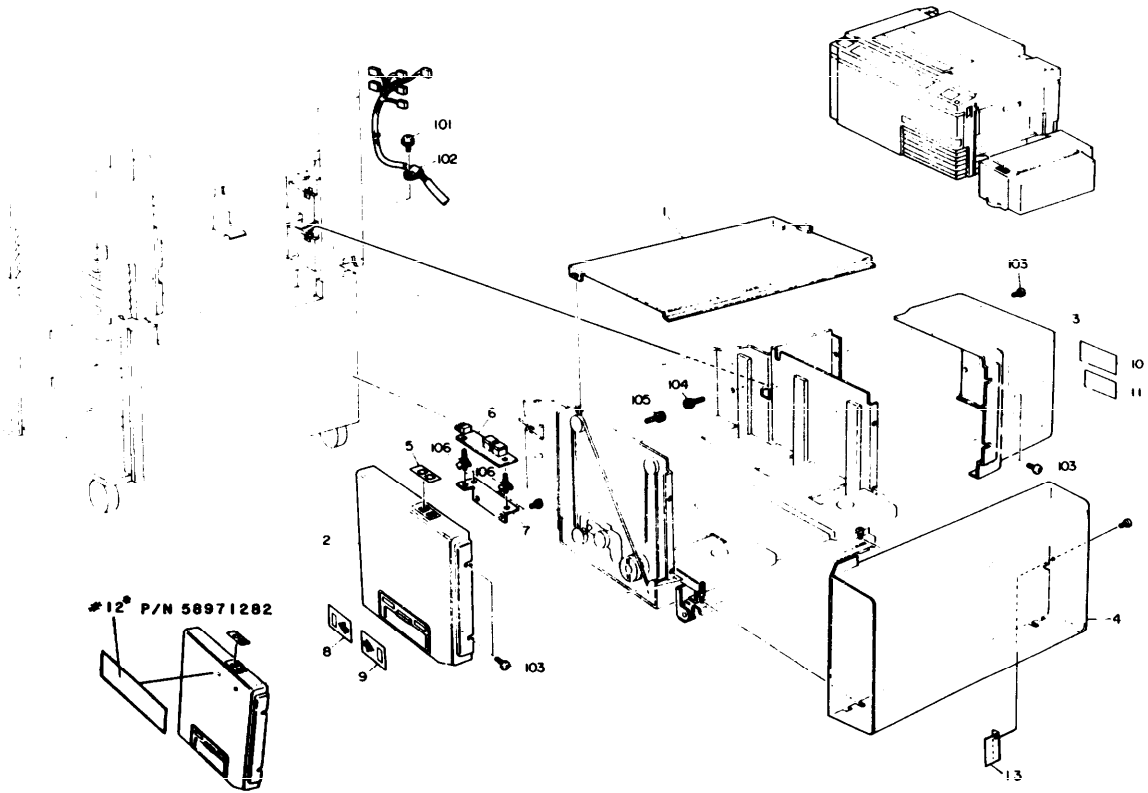

Index No.	Part No.	Description	Q'ty Per Assembly
1	58971251	Top Cover	1
2	58971256	Front Cover	1
•3	59251265	Rear Cover	1
•4	59252234	Side Cover	1
5	58971264	Operation Skin	1
6	58975515	Operation Board	1
7	58971272	Operation Board Mounting Bracket	1
8	58971257	Decal - Increase Size	1
9	58971258	Decal - Decrease Size	1
10	11050740	Decal - FCC 115V	1
11	54468905	Decal - English, French - 115V (CANADA)	1
	54421372	Decal - Warning 220V	1
12	58971262	Decal - Instruction	1
•13	59252334	Magnet Catch Plate	1

Index No.	Part No.	Description	Q'ty Per Assembly
101	09644008W	Tapping Screw with Flat Washer - M4x8	1
102	11050034	Nylon Clip - 7W	1
•103	08025094	Tapping Truss Head Screw - M4 x 8	7
104	05940220W	Hexagon Bolt - M4x22	1
105	05940120W	Hexagon Bolt - M4x12	1
106	11020895	Nylon Stud	2

• NOTE: Refer to last frame on last sheet of Parts Catalog fiche

2. PAPER STOCK SECTION

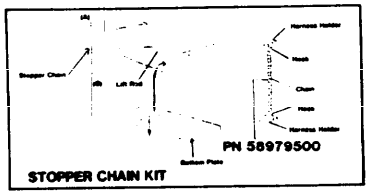

Index No.	Part No.	Description	Q'ty Per Assembly
1	58971115	Front Plate	1
2	58971467	Rack Shaft Stopper	1
3	58971489	Stopper Bar Mounting Stud	1
4	58971487	Stopper Bar Mounting Bracket	1
5	58971490	Stopper Chain	1
6	58971488	Hook	1
7	58971493	Microswitch Mounting Bracket	1
8	58971267	Side Cover Bracket	1
9	58971266	Side Cover Hinge	1
10	58971477	Click Spring	1
11	58971473	Size Lever	1
12	52055253	Photointerruptor Pack	1
13	58975530	DC Harness	1
14	52055251	LED Sensor Type - T	1
15	58971101	Bottom Plate	1
16	58971485*	Stopper Bar	1
17	58971451	Front Post Rack	1
18	58971496	Sensor Mounting Bracket	1
19	54432657	Gear - 28T	1
20	58971455	Bushing	6
21	58971457	Rear Post Rack	1
22	58971463	Rear Guide Post	2
23	58971460	Front Guide Post	1
24	58971372	Right Lift Rod	1
25	58971371	Left Lift Rod	1
26	58971375	Actuator Plate	1
27	58971459	Side Post Grip	2
28	58971369	Tray Bottom Plate	1
29	58971129	Left Cover	1
30	58971121	Rear Plate	1
31	58971466	Rack Shaft	2
32	58971458	Side Post Spring Plate	1
33	58971462	Front Paper Guide	1
34	58971465	Rear Paper Guide	1
35	58971134	Inner Cover	1

Index No.	Part No.	Description	Q'ty Per Assembly
36	58971109	Front Bracket	1
37	58971106	Rear Bracket	1
38	54472927	Friction Pad - B	1
39	58971374	Decal - Paper Size	1
*40	59252331	Side Cover Holder	1
*	58979500	Stopper Chain Kit	1
101	03130060W	Philips Pan Head Screw - M3x6	8
102	04340060W	Tapping Screw - M4x6	11
103	03140040W	Philips Pan Head Screw - M4x4	5
104	03130120W	Philips Pan Head Screw - M3x12	1
105	07200060E	Retaining Ring - M6	1
106	07040040C	Toothed Washer - M4	1
107	03140100W	Philips Pan Head Screw - M4x10	1
108	12040192	Microswitch - UL	1
109	11050106	Harness Clamp	1
110	04340080W	Tapping Screw - M4x8	1
111	03130200W	Philips Pan Head Screw - M3x20	2

*Reference Technical Service Bulletin #016

*NOTE: Refer to last frame on last sheet of Parts Catalog fiche

*Reference Technical Service Bulletin #044

3. DRIVE SECTION

Rev. 4/86

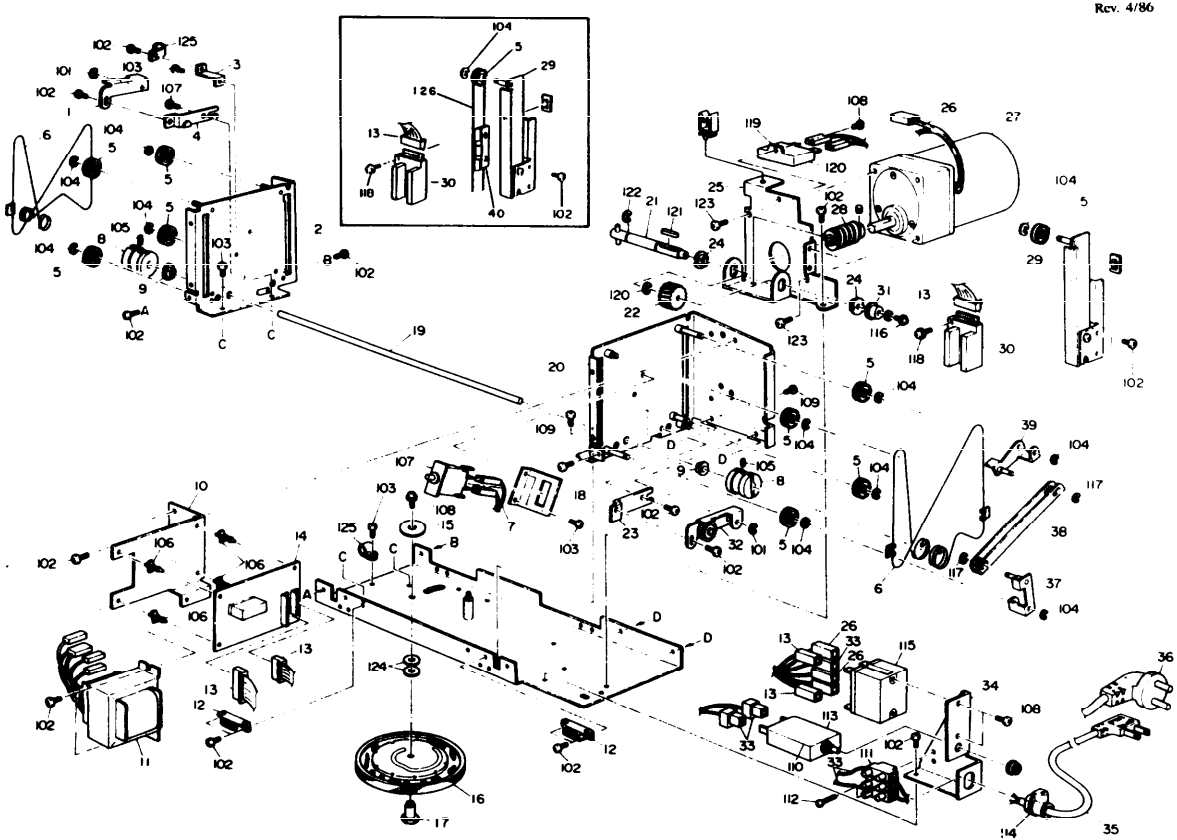

Index No.	Part No.	Description	Q'ty Per Assembly
1	54462630	Front Wire Tightener	1
2	58971115	Front Plate	1
3	58971125	Nylon Clamp Stay	1
4	58971366	Front Wire Bracket	1
5	54462620	Idler Pulley - 20	6
6	58971363	Wire Ass'y	2
7	58975534	Safety Switch Harness	1
8	58971377	Paper Tray Drive Pulley	2
9	50530419	Bushing - 10mm	2
10	58971133	Control Board Mounting Bracket	1
11	58975520	Transformer - 30W	1
12	50540536	Magnet Catch Ass'y	2
13	58975531	DC Connector Harness	1
14	58975500	Control Board	1
15	58971472	Washer 4x5x24x2mm	1
16	58971470	Paper Size Dial	1
17	58971471	Paper Size Dial Stopper	1
18	58971126	Safety Switch Bracket	1
19	58971373	Drive Shaft	1
20	59252218	Rear Side Plate	1
21	58971353	Drive Shaft	1
22	54462702	Gear - 22T	1
23	58971367	Rear Wire Bracket	1
24	50530223	Bushing - 8mm	2
25	58971351	Drive Motor Bracket	1
26	58975532	Motor Harness	1
27	54465411	Tray Drive Motor - AC 7/8W/115V	1
	54465412	Tray Drive Motor - AC 7/8W/220V	1
28	58971352	Worm Gear	1
29	58971355	Paper Volume Detection Guide	1
30	52055253	Photointerruptor Pack	1
31	58971361	Pulley	1
32	54462645	Rear Wire Tightener	1
33	58975535	Circuit Breaker Harness	1
34	58971132	AC Terminal Bracket	1

Index No.	Part No.	Description	Q'ty Per Assembly
35	67697930	Power Cord - 115V	1
36	54087968	Power Supply Cord - 220V	1
37	58971277	Bottom Actuator Lever	1
38	58971279	Safety Switch Actuator	1
39	58971274	Top Actuator Lever	1
40	58971359	Shutter	1
101	07040040C	Toothed Washer - M4	2
102	04340060W	Tapping Screw - M4x6	15
103	03140040W	Philips Pan Head Screw - M4x4	4
104	07200040E	Retaining Ring - M4	11
105	05550050E	Hexagon Headless Set Screw - M5x5	2
106	11060336	Nylon Stud	2
107	12041226	Push Switch	1
108	03140060W	Philips Pan Head Screw - M4x6	3
109	04340040W	Tapping Screw - M4x4	2
110	11070365	Circuit Breaker - 220/240V	1
111	11010359	Terminal - 3P	1
112	03130140W	Philips Pan Head Screw - M3x14	1
113	11070368	Circuit Breaker - 115V	1
114	11060442	Cord Clamp - 220/240V	1
115	12081049	Power Relay - 220V/240V	1
	12081025	Relay - 115V	1
116	03130040W	Philips Pan Head Screw - M3x4	1
117	07200030E	Retaining Ring - M3	2
118	03140100W	Philips Pan Head Screw - M4x10	1
119	16061020	Capacitor - 4.5uF 250V	1
120	16061278	Capacitor - 4.5uF 250V	1
121	09300400	Parallel Key	1
122	07200060E	Retaining Ring - M6	2
123	03150080E	Philips Pan Head Screw - M5x8	2
124	08075009	Washer - 8.1x14x0.1mm	2
125	11050008	Nylon Clip - 2W	2
126	10050016	String	1

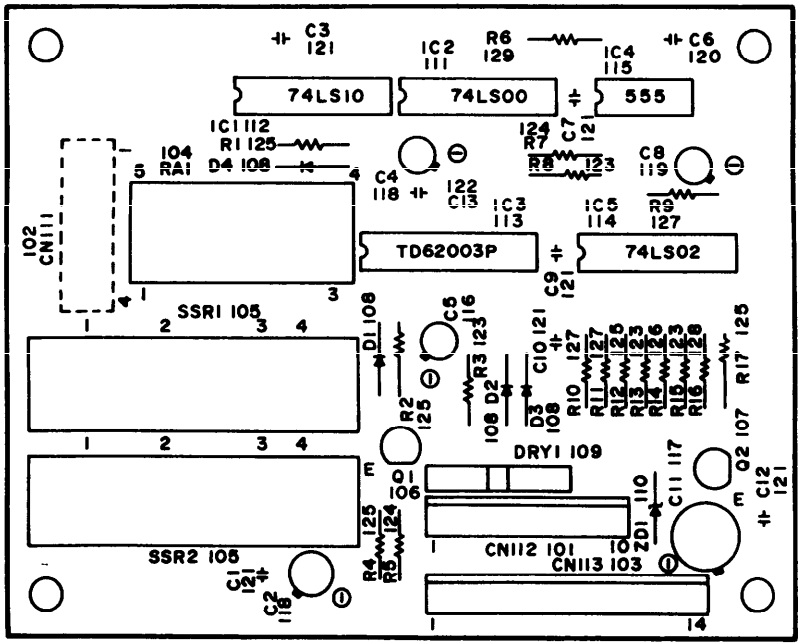
C3
121
IC2
111
R6
129
IC4
115
C6
120
74LS10
74LS00
555
IC1 112
R1 125
104
RA1
D4 108
5
4
C4
118
122
C13
IC3
113
IC5
114
R9
127
C8
119
R8
123
124
R7
C7
121
102
CN111
TD62003P
74LS02
C9
121
1
3
SSR1 105
1
2
3
4
D1 108
C5
116
R2
125
R3
123
C10 121
R10 127
R11 127
R12 126
R13 123
R14 126
R15 123
R16 126
R17 125
108 D2
D3
108
DRY1 109
101
106
C11 117
110
ZD1
C12
121
02 107
SSR2 105
R4
125
R5
124
CN112 101
CN113 103
C1
121
C2
118
1
14

4. MAIN CONTROL BOARD

Index No.	Part No.	Description	Q'ty Per Assembly
1	58975500	Main Control Board	1

Index No.	Part No.	Description	Q'ty Per Assembly
101	11001095	Connector - 10P	1
102	11030441	Connector - 3P	1
103	11031349	Connector - 14P	1
104	12081006	Power Relay - AC 100V	1
105	12081024	Solid State Relay - 240V	2
106	14000257	Transistor - 2SA673	1
107	14000324	Transistor - 2SC458	1
108	14010611	Diode - 1S1588	4
109	14010787	Diode - Array - UAP54H	1
110	14020080	Zener Diode - AW01-10	1
111	14070520	IC - HD74LS00	1
112	14070622	IC - 74LS510P	1
113	14071002	IC - TD62003P	1
114	14071091	IC - HD74LS02P	1
115	14080124	IC - LM555CN	1
116	16040087	Capacitor - 4.7uF 25V	1
117	16040288	Capacitor - 47uF 25V	1
118	16040903	Capacitor - 10uF 35V	2
119	16040909	Capacitor - 1uF 50V	1
120	16060689	Capacitor - 0.01uF 50V	1
121	16060916	Capacitor - 0.01uF 50V	6
122	16060999	Capacitor - 0.01MF 25V	1
123	16114101	Resistor - 100Ω 1/4T ±5%	4
124	16114102	Resistor - 1KΩ 1/4T	2
125	16114103	Resistor - 10KΩ 1/4T ±5%	5
126	16114241	Resistor - 240Ω 1/4T ±5%	1
127	16114471	Resistor - 470Ω 1/4T ±5%	3
128	16114472	Resistor - 4.7KΩ 1/4T ±5%	1
129	16114564	Resistor - 560KΩ 1/4T	1

5. DC HARNESS

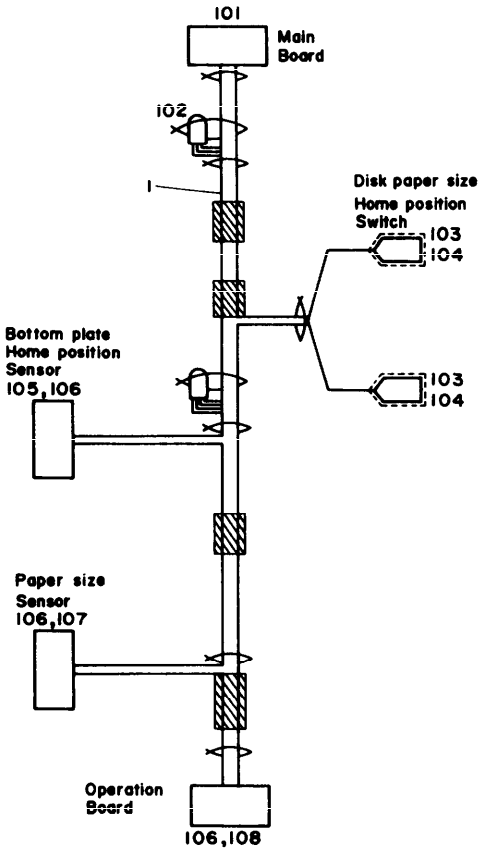
101
Main Board
102
1
Disk paper size Home position Switch
103
104
103
104
Bottom plate Home position Sensor
105,106
Paper size Sensor
106,107
Operation Board
106,108

5. DC HARNESS

Index No.	Part No.	Description	Q'ty Per Assembly
1	58975530	DC Harness	1

Index No.	Part No.	Description	Q'ty Per Assembly
101	11031345	Connector - 16P	1
102	11000340	Closed Terminal	2
103	11020796	Insulating Sleeve	2
104	11000277	Fastening Receptacle	2
105	11021620	Connector - 3P	1
106	11001249	Receptacle Terminal	14
107	11021623	Connector - 7P	1
108	11021621	Connector - 4P	1

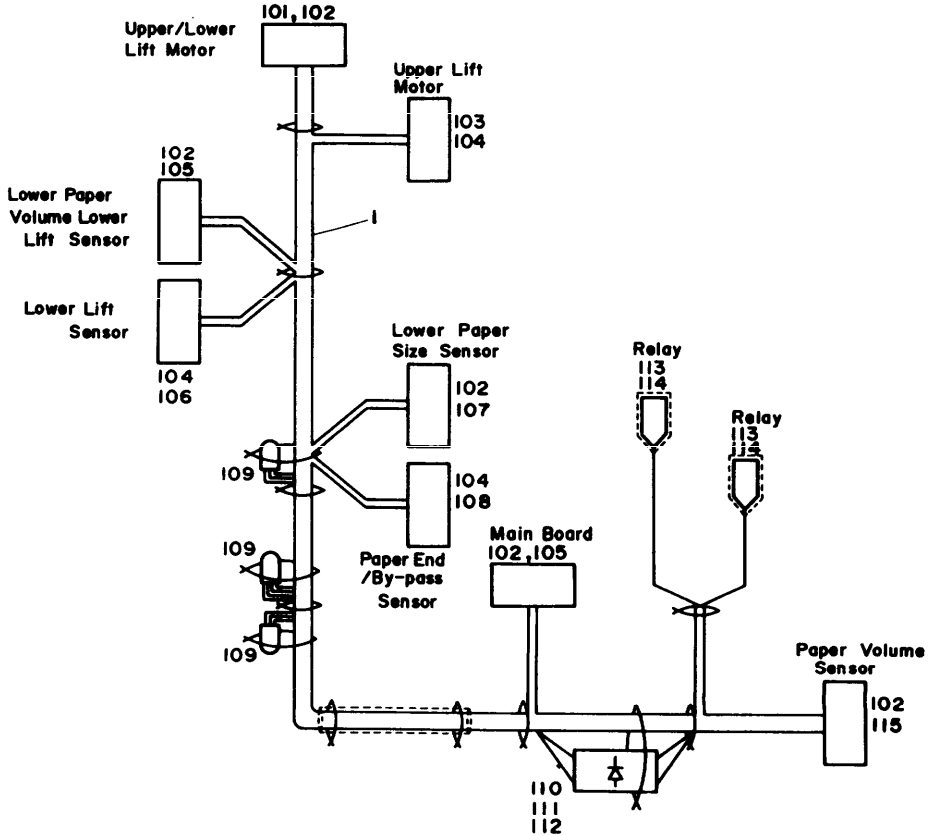
101, 102
Upper/Lower Lift Motor
Upper Lift Motor
103
104
102
105
Lower Paper Volume Lower Lift Sensor
1
Lower Lift Sensor
104
106
Lower Paper Size Sensor
102
107
Relay
113
114
Relay
113
115
109
104
108
109
Main Board
102, 105
Paper End /By-pass Sensor
109
Paper Volume Sensor
102
115
110
111
112

6. MAIN CONTROL HARNESS

Index No.	Part No.	Description	Q'ty Per Assembly
1	58975531	DC Connector Harness	1

Index No.	Part No.	Description	Q'ty Per Assembly
101	11021621	Connector - 4P	1
102	11001269	Receptacle Terminal	42
103	11021661	Connector - 4P	1
104	11001253	Receptacle Terminal	12
105	11021625	Connector - 10P	2
106	11021778	Connector - 4P	1
107	11021784	Connector - 12P	1
108	11021779	Connector - 12P	1
109	11000340	Closed Terminal	3
110	11021286	Connector	1
111	11001156	Contact Pin	2
112	14020388	Diode - WO3C	3
113	11020687	Fastening Receptacle	2
114	11000309	Fastening Receptacle	2
115	11021623	Connector - 7P	1

7. MOTOR HARNESS

July 20,'84

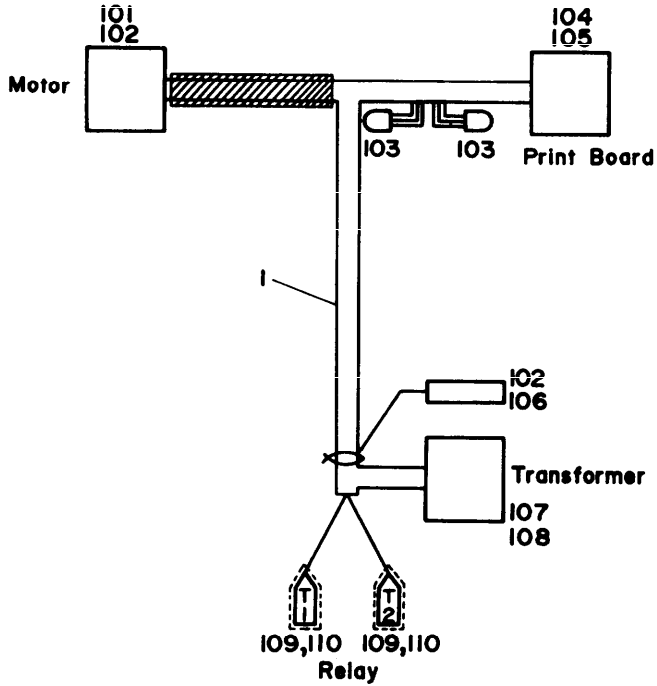

7. MOTOR HARNESS

July 20, 84

Index No.	Part No.	Description	Q'ty Per Assembly
1	58975532	Motor Harness	1

Index No.	Part No.	Description	Q'ty Per Assembly
101	11021516	Connector - 3P	1
102	11001241	Socket - MATE-N-LOCK	4
103	11000340	Closed Terminal	2
104	11021374	Connector - 5265-4P	1
105	11001190	Socket - MATE-N-LOCK	4
106	11021514	Connector - 1P	1
107	11021507	Connector - 2P	1
108	11001239	Pin - MATE-N-LOCK	2
109	11020687	Fastening Receptacle	2
110	11000309	Fastening Receptacle	2

1	2	3			
					

Index No.	Part No.	Description	Q'ty Per Assembly
1	50971258	Decal - Decrease Size	1
2	50971257	Decal - Increase Size	1
3	50971264	Operation Skin	1

Index No.	Part No.	Description	Q'ty Per Assembly

This section instructs you as to the numbers and names of the parts of this machine.

Parts No.	Description	Page and Index No.
58971101	Bottom Plate	7-15
58971106	Rear Bracket	7-37
58971109	Front Bracket	7-36
58971115	Front Plate	7-1
58971115	Front Plate	9-2
58971121	Rear Plate	7-30
58971121	Rear Plate	9-20
58971125	Nylon Clamp Stay	9-3
58971126	Safety Switch Bracket	9-18
58971129	Left Cover	7-29
58971132	AC Terminal Bracket	9-34
58971133	Control Board Mounting Bracket	9-10
58971134	Inner Cover	7-35
58971251	Top Cover	5-1
58971257	Decal - Increase Size	5-8
58971257	Decal - Increase Size	19-2
58971258	Decal - Decrease Size	5-9
58971258	Decal - Decrease Size	19-1
58971262	Side Cover	5-4
58971264	Operation Skin	5-5
58971264	Operation Skin	19-3
58971265	Rear Cover	5-3
58971266	Side Cover Hinge	7-9
58971267	Side Cover Bracket	7-8
58971272	Operation Board Mounting Bracket	5-7
58971274	Top Actuator Lever	9-39
58971277	Bottom Actuator Lever	9-37
58971279	Safety Switch Actuator	9-38
58971282	Decal - Instruction	9-2
58971286	Front Cover	5-2
58971351	Drive Motor Bracket	9-25
58971352	Worm Gear	9-28
58971353	Drive Shaft	9-21
58971355	Paper Volume Detection Guide	9-29
58971359	Shutter	9-2
58971361	Pulley	9-31
58971363	Wire Ass'y	9-6

Parts No.	Description	Page and Index No.
58971366	Front Wire Bracket	9-4
58971367	Rear Wire Bracket	9-23
58971369	Tray Bottom Plate	7-28
58971371	Left Lift Rod	7-25
58971372	Right Lift Rod	7-24
58971373	Drive Shafe	9-19
58971374	Decal - Paper Size	9-2
58971375	Actuator Plate	7-26
58971377	Paper Tray Drive Pulley	9-8
58971451	Front Post Rack	7-17
58971455	Bushing	7-20
58971457	Rear Post Rack	7-21
58971458	Side Post Spring Plate	7-32
58971459	Side Post Grip	7-27
58971460	Front Guide Post	7-23
58971462	Front Paper Guide	7-33
58971463	Rear Guide Post	7-22
58971465	Rear Paper Guide	7-34
58971466	Rack Shaft	7-31
58971467	Rack Shaft Stopper	7-2
58971470	Paper Size Dial	9-16
58971471	Paper Size Dial Stopper	9-17
58971472	Washer 4x5x24x2mm	9-15
58971473	Size Lever	7-11
58971477	Click Spring	7-10
58971485	Stopper Bar	7-16
58971487	Stopper Bar Mounting Bracket	7-4
58971488	Hook	7-6
58971489	Stopper Bar Mounting Stud	7-3
58971490	Stopper Chain	7-5
58971493	Microswitch Mounting Bracket	7-7
58971496	Sensor Mounting Bracket	7-18
58975500	Control Board	9-1
58975500	Main Control Board	11-1
58975510	Operation Board	5-6
58975520	Transformer - 30W	9-11

Parts No.	Description	Page and Index No.
58975530	DC Harness	7-13
58975530	DC Harness	13-1
58975531	DC Connector Harness	9-13
58975531	DC Control Harness	15-1
58975532	Motor Harness	9-26
58975532	Motor Harness	17-1
58975534	Safety Switch Harness	9-7
58975535	Circuit Breaker Harness	9-33
58979500	Stopper Chain Kit	9-*
59252234	Side Cover	5-4
59252334	Magnet Catch Plate	5-13
59251265	Rear Cover	5-3
59252331	Side Cover Holder	7-40
59252218	Rear Side Plate	9-20

Parts No.	Description	Page and Index No.
50530223	Bushing - 8mm	9-24
50530419	Bushing - 10mm	9-9
50540536	Magnet Catch Ass'y	9-12
52055251	LED Sensor Type - T	7-14
52055253	Photointerruptor Pack	7-12
52055253	Photointerruptor Pack	9-30
54087968	Power Supply Cord - 220V	9-36
54421372	Decal - Warning 220V	5-11
54432657	Gear - 28T	7-19
54462620	Idler Pulley - 20	9-5
54462630	Front Wire Tightener	9-1
54462645	Rear Wire Tightener	9-32
54462702	Gear - 22T	9-22
54465411	Tray Drive Motor - AC 7/8W/115V	9-27
54465412	Tray Drive Motor - AC 7/8W/220V	9-27
54468905	Decal - English, French-115V (CANADA)	5-11
54472927	Friction Pad - B	7-38
67697930	Power Cord - 115V	9-35

Parts No.	Description	Page and Index No.
03130040W	Philips Pan Head Screw - M3x4	9-116
03130060W	Philips Pan Head Screw - M3x6	7-101
03130120W	Philips Pan Head Screw - M3x12	7-104
03130140W	Philips Pan Head Screw - M3x14	9-112
03130200W	Philips Pan Head Screw - M3x20	7-111
03140040W	Philips Pan Head Screw - M4x4	7-103
03140040W	Philips Pan Head Screw - M4x4	9-103
03140060W	Philips Pan Head Screw - M4x6	9-108
03140100W	Philips Pan Head Screw - M4x10	7-107
03140100W	Philips Pan Head Screw - M4x10	9-118
03150080E	Philips Pan Head Screw - M5x8	9-123
04340040W	Tapping Screw - M4x4	9-109
04340060W	Tapping Screw - M4x6	7-102
04340060W	Tapping Screw - M4x6	9-102
04340080W	Tapping Screw - M4x8	7-110
05550050E	Hexagon Headless Set Screw - M5x5	9-105
05940120W	Hexagon Bolt - M4x12	5-105
05940220W	Hexagon Bolt - M4x22	5-104
07040040C	Toothed Washer - M4	7-106
07040040C	Toothed Washer - M4	9-101
07200030E	Retaining Ring - M3	9-117
07200040E	Retaining Ring - M4	9-104
07200060E	Retaining Ring - M6	7-105
07200060E	Retaining Ring - M6	9-122
08025094	Tapping Screw - M4x8	5-103
08075009	Washer - 8.1x14x0.1mm	9-124
09300400D	Parallel Key	9-121
09644008W	Tapping Screw with Flat Washer - M4x8	5-101
10050006 String		9-4
11000277	Fastening Receptacle	13-104
11000309	Fastening Receptacle	15-114
11000309	Fastening Receptacle	17-110
11000340	Closed Terminal	13-102
11000340	Closed Terminal	15-109
11000340	Closed Terminal	17-103
11001095	Connector - 10P	11-101

Parts No.	Description	Page and Index No.
11001156	Contact Pin	15-111
11001190	Socket - MATE-N-LOCK	17-105
11001239	Pin - MATE-N-LOCK	17-108
11001241	Socket - MATE-N-LOCK	17-102
11001249	Receptacle Terminal	13-106
11001249	Receptacle Terminal	15-102
11001253	Receptacle Terminal	15-104
11010359	Terminal - 3P	9-111
11020687	Fastening Receptacle	15-113
11020687	Fastening Receptacle	17-109
11020796	Insulating Sleeve	13-103
11020895	Nylon Stud	5-106
11021286	Connector	15-110
11021374	Connector - 5265-4P	17-104
11021507	Connector - 2P	17-107
11021514	Connector - 1P	17-106
11021516	Connector - 3P	17-101
11021620	Connector - 3P	13-105
11021621	Connector - 4P	13-108
11021621	Connector - 4P	15-101
11021623	Connector - 7P	13-107
11021623	Connector - 7P	15-115
11021625	Connector - 10P	15-105
11021661	Connector - 4P	15-103
11021778	Connector - 4P	15-106
11021779	Connector - 12P	15-108
11021784	Connector - 12P	15-107
11030441	Connector - 3P	11-102
11031345	Connector - 14P	13-101
11031349	Connector - 14P	11-103
11050008	Nylon Clip - 2M	9-125
11050034	Nylon Clip - 7M	5-102
11050106	Harness Clamp	7-109
11050740	Decal - FCC 115V	5-10
11060336	Nylon Stud	9-106

Parts No.	Description	Page and Index No.
11060442	Cord Clamp - 220/240V	9-114
11070365	Circuit Breaker - 220/240V	9-110
11070368	Circuit Breaker - 115V	9-113
12040192	Microswitch - UL	7-108
12041226	Push Switch	9-107
12081006	Power Relay - AC 100V	11-104
12081024	Solid State Relay - 240V	11-105
12081025	Relay - 115V	9-115
12081049	Power Relay - 220V/240V	9-115
14000257	Transistor - 2SA673	11-106
14000324	Transistor - 2SC458	11-107
14010611	Diode - 1S1588	11-108
14010787	Diode - Array - UAF54H	11-109
14020080	Zener Diode - AW01-10	11-110
14020388	Diode - W03C	15-112
14070520	IC - HD74LS00	11-111
14070622	IC - 74LS510P	11-112
14071002	IC - TD62003P	11-113
14071091	IC - HD74LS02P	11-114
14080124	IC - LM555CN	11-115
16040087	Capacitor - 4.7uF 25V	11-116
16040288	Capacitor - 47uF 25V	11-117
16040903	Capacitor - 10uF 35V	11-118
16040909	Capacitor - 1uF 50V	11-119
16060689	Capacitor - 0.01uF 50V	11-120
16060916	Capacitor - 0.01uF 50V	11-121
16060999	Capacitor - 0.01MF 25V	11-122
16061020	Capacitor - 4.5uF 250V	9-119
16061278	Capacitor - 4.5uF 250V	9-120
16114101	Resistor - 100Ω 1/4T ±5%	11-123
16114102	Resistor - 1KΩ 1/4T	11-124
16114103	Resistor - 10KΩ 1/4T ±5%	11-125
16114241	Resistor - 240Ω 1/4T ±5%	11-126
16114471	Resistor - 470Ω 1/4T ±5%	11-127
16114472	Resistor - 4.7KΩ 1/4T ±5%	11-128

Parts No.	Description	Page and Index No.
16114564	Resistor - 560KΩ 1/4T	11-129

MODIFIED PARTS REFERENCE

New Part Number	Old Part Number	Bulletin Reference
52056491	52052913	TSB 5000-034
52056493	52052925	TSB 5000-034
59252234	59252232	TSB 5000-043
59252334		TSB 5000-043
59251265	58971265	TSB 5000-043
59252331		TSB 5000-043
59252218	59252216	TSB 5000-043
08025094		TSB 5000-043

New Part Number	Old Part Number	Bulletin Reference