

FT5050/5070

Self-Pace Training Program

SERVICE TRAINING MANUAL

First Printing — August 1987
Second Printing — July 1988

Customer Service Group
Ricoh Corporation
West Caldwell, NJ 07006
©1987 Ricoh Corporation

CONTENTS

INTRODUCTION VII

PRE-TRAINING EXAMINATION VIII

MATERIALS/EQUIPMENT/FACILITIES REQUIREMENTS XI

SELF-PACE PROGRAM INVENTORY REQUIREMENTS XII

HOW TO USE THE SERVICE TRAINING MANUAL XIII

EXPLANATION OF THE VIDEOTAPE XIII

SPECIFICATIONS 1-1

UNPACKING AND INSTALLATION 2-1

OPERATOR TRAINING 3-1
- Operational Panel 3-2
- Indicator Screen 3-4
- Operator Training Worksheet 3-7

COPY PROCESS AND COMPONENT LAYOUT 4-1
- Functional Operation 4-2
- Copy Process Around the Drum 4-3
- Drive Layout 4-4
- Mechanical Component Layout 4-5
- Electrical Component Layout 4-7
- Component Identification Worksheet 4-14

COMPONENT OPERATION 5-1

POINT-TO-POINT ILLUSTRATION 6-1
- Point-to-Point Wiring Diagram Worksheet 6-3

POWER DISTRIBUTION 7-1
- Basic Operation 7-2
- Power Supply 7-3
- Safety Switches 7-5
- AC Components Drive 7-6
- Point-to-Point Worksheet 7-7
- Review Guide — 1 7-9

PREVENTIVE MAINTENANCE SCHEDULE 8-1

DRUM 9-1
- Selenium Drum 9-2
- Drum Heater 9-3
- Drum Heater Control 9-4
- Handling the Drum 9-5

DRUM CHARGE 10-1
- Overview 10-2
- Corona Wire Cleaner 10-3
- Charge Corona Power Pack 10-4

ERASE 11-1
Overview 11-2
Erase Operation 11-4
Erase Lamp Circuit 11-6
Drum, Drum Charge, and Erase Worksheet 11-7

EXPOSURE 12-1
Overview 12-2
Lamp Regulator 12-3

SCANNER DRIVE 13-1
Overview 13-2
Scanner Drive Motor 13-4
Second Scanner Drive 13-5
Second Scanner Positioning 13-6
Abnormal Conditions 13-7

LENS DRIVE 14-1
Lens Theory 14-2
Lens Drive 14-4
Light Shading Mechanism 14-5
Lens Positioning 14-6
Lens and Second Scanner Drive Motors 14-7
Abnormal Conditions 14-9
Exposure/Optics Worksheet 14-10
Fault Isolation Worksheet — 1 14-12

DEVELOPMENT 15-1
Overview 15-2
Drive Mechanism 15-3
Seals and Ducts 15-4
Toner Recycling 15-5
Cross-Mixing 15-6
Development Bias 15-7
Bias Level 15-9
Development Worksheet 15-11

TONER DENSITY DETECTION AND TONER SUPPLY 16-1
Toner Density Detection 16-2
Toner Density Control 16-3
Hexadecimal Codes 16-4
Toner Supply 16-5
Toner Supply Amount 16-7
Toner End Detection 16-8
Image Density Worksheet 16-10
Review Guide — 2 16-11

PRE-TRANSFER LAMP 17-1
Overview 17-2
Pre-Transfer Lamp Circuit 17-3

IMAGE TRANSFER AND PAPER SEPARATION 18-1
Overview 18-2
Corona Circuit 18-3
Pick-Off Mechanism 18-4
Pick-Off Circuit 18-6
Fault Isolation Worksheet — 2 18-7

PRE-CLEANING CORONA AND DRUM CLEANING 19-1
Overview 19-2
Pre-Cleaning Corona 19-3
Drive Mechanism 19-4
Cleaning Blade 19-5
PCC and Cleaning Circuit 19-6
Quenching Lamp 19-7
Cleaning Worksheet 19-8

PAPER FEED 20-1
Overview 20-2
Lift Mechanism and Paper End Detection 20-3
Paper Size and Volume Detection 20-5
Roller Function 20-8
Slip Clutch Mechanism 20-9
Paper Feed Drive 20-10
By-Pass Feed 20-13
Relay Feed and Registration 20-15
Paper Feed Worksheet 20-17

PAPER TRANSPORT 21-1
Overview 21-2
Transport Roller Drive Mechanism 21-3
Transport Unit Release Mechanism 21-4
Fault Isolation Worksheet — 3 21-5

FUSING AND PAPER EXIT 22-1
Overview 22-2
Fusing Roller Drive Mechanism 22-3
Oil Supply and Cleaning 22-4
Oil End Sensor 22-5
Fusing Roller Strippers 22-8
Fusing Control 22-9
Paper Exit Overview 22-14
Exit Rollers Drive Mechanism 22-15
Fusing Worksheet 22-16

INVERSION AND DUPLEX 23-1
Inversion Overview 23-2
Forward Drive 23-3
Reverse Drive 23-4
Duplex Transport Overview 23-5
Fork Gate Mechanism 23-6
Duplex Transport Drive 23-7
Duplex Stacking Overview 23-8
Jogger Drive Mechanism 23-9
Duplex Positioning Roller 23-10
Jogger Motor 23-11
Duplex Tray Sensors 23-12
Duplex Paper Feed Overview 23-13
Duplex Feed Drive Mechanism 23-14
Duplex Stopper and Pick-Up Roller Mechanism 23-15
Inverter/Duplex Worksheet 23-16
Review Guide — 3 23-17

OTHERS 24-1
Pulse Generator 24-2
Operation Panel Board 24-3
Misfeed Check 24-5
Cold Cathode Tube 24-6
Key Card and Coin Lock 24-8
Fault Isolation Workseet — 4 24-9

DOCUMENT FEEDER (DF32) 25-1
Specifications 25-2
Mechanical Component 25-4
Drive Layout 25-5
Electrical Component Layout 25-6
Operation Panel 25-7
Basic Operation 25-8
Power Supply 25-9
Interface with Copier 25-10
Feed-In Unit
Feed-In Drive Mechanism 25-11
Original Insertion 25-12
Original Stopper Solenoid 25-13
Pick-Up Roller Solenoid 25-14
Separation Mechanism 25-15
Separation Theory 25-16
Misfeed Prevention 25-17
Wear Prevention 25-18
Overlap Adjustment Mechanism 25-19
Original Relay Roller Release Mechanism 25-20
Original Feed-In Circuit 25-21
Original Size Dtection 25-22
Belt Unit
Belt Drive Mechanism 25-23
Lifting Mechanism 25-24
Lift Switch 25-25
Exit Drive Mechanism 25-26
Others
Registration and Transportation 25-27
Operation Panel Board 25-28
Indicator Board 25-29
Misfeed Check 25-30
Document Feeder Worksheet 25-31

SORTER (CS1510) 26-1
Specifications 26-2
Mechanical Component Layout 26-3
Drive Layout 26-4
Electrical Component Layout 26-5
Basic Operation 26-6

Functional and Electrical Description
Power Supply 26-9
Bin Gate Operation 26-10
Speed Change Mechanism 26-11
Relay Guide Plate Reset Mechanism 26-12
Interface with the Copier 26-13
Jam and Bin Copy Sensors 26-14
Misfeed Check 26-15
Sorter Worksheet 26-16
Review Guide — 4 26-17

LARGE CAPACITY TRAY (RT11) 27-1
Specifications 27-2
Mechanical Component Layout 27-3
Drive Layout and Drive Mechanism 27-4
Electrical Component Layout 27-5
Functional and Electrical Descriptions
Tray Operation 27-6
Paper Size Change and Detection 27-9
Paper Volume Detection 27-10
Cover Safety Switch 27-11

SUMMARY 28-1
Final Machine Check 28-2
Review 28-2
Preparing for the Written Exam 28-3

INTRODUCTION

Welcome to the Ricoh FT5050/5070 Series Self-Pace Training Program. The program you are about to begin has been designed by Ricoh's highly qualified, award winning instructional staff with you in mind. All the material that is needed for the successful completion of the program has been included in this self-pace package.

The Service Training Manual will guide you through the entire course. Read through the manual as you would read a textbook. Follow all instructions as they appear in the manual. The pace at which you go through the course will depend on your particular ability and experience. The course should take from 28 to 40 hours to complete. The approximate times given at the beginning of each section are meant to be used as a guideline for planning your own particular schedule.

For the purpose of correcting and updating the Service Training Manual, a yellow Errata Sheet has been enclosed.

Finally, a Feedback Sheet, found in the Forms Package, is designed so that you can inform Ricoh of any deficiencies found in the course.

If you have any questions or problems about the material in the program, please ask your Service Manager. Your manager will be helping you throughout the program, monitoring your understanding of the material and checking your answers to the review sections and fault isolation exercises.

The following guide symbols are used throughout the Service Training Manual:



This symbol indicates that a section has video support.



This symbol indicates that the material to be covered is contained in the Field Service Manual.



This symbol is used when it is necessary for you to perform a special job, to reference the Field Service Manual and so forth.



This symbol tells you that you should stop and follow instructions before going on to the next section.

Note: Whenever an adjustment or test copies are to be made, use a Ricoh OS-A-3 or S-A original test chart.

STOP

Before continuing with the program, please complete the Pre-Training Examination that follows. Your knowledge of Ricoh's Office Automation Series manual — Volume I/Volume II is necessary.

The exam is designed to measure your understanding of Basic Office Automation technology.

You may write your answer directly on this manual. (Write in pencil so you can erase or change your answers.)

Pre-Training Examination

Questions 1-10 are related to General Copier Knowledge:

1. What step in the copy process follows development?
   A. Charge
   B. Fusing
   C. Exposure
   D. Transfer

2. The combination of Toner and Developer is called Carrier?
   A. True
   B. False

3. What can dirty optics cause?
   A. Misfeeds
   B. Light (Low Contrast) copies
   C. Dirty copies containing background
   D. Wrinkled copies

4. Which section of the copier properly aligns the copy paper with the developed image on the drum?
   A. Transport
   B. Registration
   C. Fusing
   D. Duplex

5. When the bias voltage in the development unit is increased, (MORE/LESS) toner will be attracted to the charged Selenium Drum.

6. Identify the following major steps in the copy process (See Illustration).
   A. Cleaning
   B. Development
   C. Fusing
   D. Charge

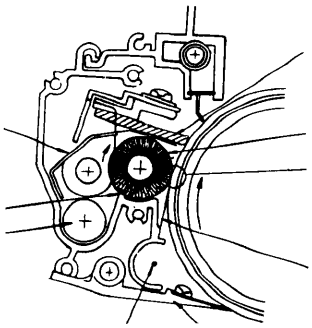

7. Silicone Oil is used in most fusing units to help prevent toner from sticking to the fusing rollers.
   A. True
   B. False

8. During exposure, the charge on the drum surface dissipates in direct proportion to the light intensity reflected from the original.
   A. True
   B. False

9. Which of the following assists in paper separation?
   A. Pick off Pawls
   B. Stiffness of the paper
   C. Separation Corona
   D. All of the above

10. A lamp can be used to neutralize the remaining latent image prior to drum charge.
    A. True
    B. False

Questions 11-20 are related to Basic Electronics:

11. Which of the following is the hot terminal of the A.C. power outlet?
    Check one:
    A. _____
    B. _____
    C. _____

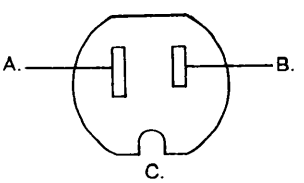

12. When measuring A.C. voltages, it is acceptable to use Test Point Ground (TPG) on the main board.
    A. True
    B. False

Identify the following Components (Questions 13-16):

13. A. Solenoid
    B. Magnetic Clutch
    C. Sensor
    D. Relay

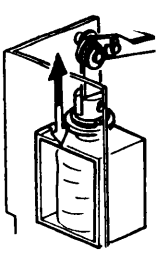

14. A. Solenoid
    B. Magnetic Clutch
    C. Sensor
    D. Relay

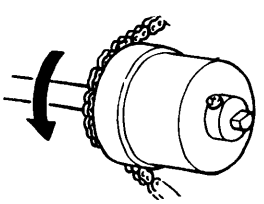

15. A. Solenoid
    B. Magnetic Clutch
    C. Sensor
    D. Relay

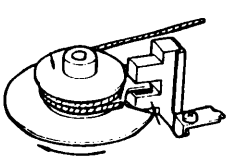

16 Identify the sensor illustrated:
   A. Reflective Photosensor
   B. Photo Interruptor
   C. Reed
   D. Ultra Violet

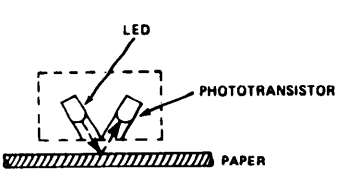

17. When a thermistor is subject to temperature changes, which of the following is affected?
    A. Voltage
    B. Amperage
    C. Resistance
    D. All of the above

18. If the solenoid was open (defective) and you are monitoring its operation, what voltage reading do you expect to see during the copier operation?
    A. 24 VDC constantly
    B. 24 VDC to less than 1 volt
    C. 0 VDC constantly
    D. Less than 1 volt to 24 VDC

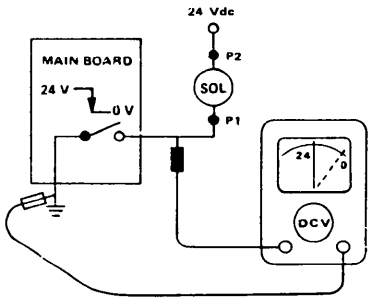

19. You are monitoring the trigger voltage of this relay (See Illustration). Which of the following voltage sequences represent an inactive to active state?

	Inactive		Active
A.	24 Volts d.c.	to	1 Volt d.c.
B.	1 Volt d.c.	to	24 Volts d.c.
C.	15 Volts d.c.	to	24 Volts d.c.
D.	24 Volts d.c.	to	15 Volts d.c.

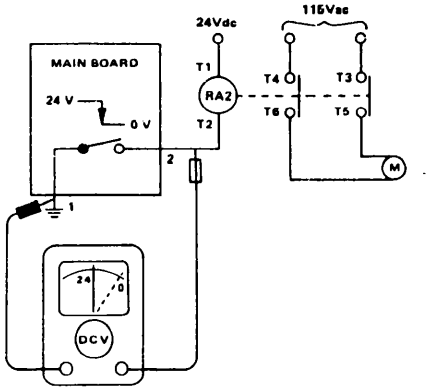

20. If a component is not operating properly and it is found there is a constant voltage of 24 VDC at the component's main board trigger connection, what is at fault?
    A. The component
    B. The main board
    C. The meter
    D. None of the above



Prior to continuing any further with the program, contact your Service Manager who will grade your exam. You will then be notified.

Materials/Equipment/Facilities Requirements

The final step before actually beginning the program is to ensure that *all* the necessary materials and equipment requirements are met.

Please review the following text and make sure you have everything. If you are missing something, contact your Service Manager immediately.

FT5050/5070 SERIES
Self-Pace Program
Inventory Requirements

The following must be available prior to starting the course.

Supplied by Ricoh in Self-Pace Package

Training Material

☐ Self-Pace Video Tapes 1 and 2
☐ Service Training Manual

Microfiche Package

☐ Binder
☐ Panel
☐ Hardcopy
☐ Fiche Cards (Field and Parts)

Supplied by Dealer

Training Hardware

☐ ½" Video Cassette Recorder (VHS) with TV
☐ 1 - FT5070 with Auto Document Feeder and Sorter (Setup and Operating Properly)
☐ FT5070 Operating Instructions Manual
☐ Multimeter with test leads
☐ Complete set of tools
☐ Drum Current Measuring Shoe (P/N 54429106)
☐ Switching Board (P/N 52059601)
☐ OSA-3 Test Chart (P/N 54209516)
☐ SA Test Chart (P/N RAJT0013)
☐ Microfiche Viewer (EDP 090MIU)
☐ Vacuum Cleaner

Supplies

☐ 1 - Cartridge — 5000 Series Toner (EDP 887141)
☐ 1 Bottle — 4000 Series Developer (EDP 141MIU)
☐ 1 Bottle Ricoh Silicone Oil (EDP 028MIU)
☐ 1 Can — Mobil Temp. 78 Grease (P/N 54479078)
☐ Setting Powder (P/N 54429101)
☐ Launa Oil (P/N 54429103)

Copy Paper

☐ 8½" x 11"
☐ 11" x 17"

Training Area

Training Room
☐ Quiet
☐ Properly ventilated
☐ Sufficient in size
☐ Proper electrical requirements
☐ Adequate lighting

HOW TO USE THE SERVICE TRAINING MANUAL

A Service Training Manual is issued to each technician in the self-pace program, so feel free to highlight important information or to make notes in the margins. This Service Training Manual is used for technical training on the FT5050/5070 Series copiers. The sorter and document feeder are each covered in separate sections, immediately after the copier section.

Each section covers a particular topic or function of the machine. Here, you will learn the theory of operation and familiarize yourself with the components and functions in preparation for field procedures. At the end of each group of several sections, you will find a review and a fault isolation worksheet. After completing the review pages, do not go any further without first having your Service Manager check your answers. This is to ensure that you have a good understanding of the material.

As we mentioned, at the beginning of each section, you will find an approximate completion time. This time reflects the total time needed to read the material, watch the video support and complete any other instructions that are given. The time needed to answer reviews is also included as applicable. Remember, the time stated is only an approximation of how long a section may take. Work at a pace that is comfortable for you.

Follow the course as instructed. Do not skip any sections or procedures.

EXPLANATION OF THE VIDEOTAPE

When directed by the Service Training Manual, turn on the VCR and view the appropriate section. The videotape is based on the FT5070 copier and the FT5050 is similar enough that no separate explanation is needed. Just be sure to read all material as directed at the end of each Service Training Manual section.

CAUTION

Whenever working in the copier, remember that there are areas within the machine which are potentially hazardous or easily damaged if mishandled. Be aware of components which utilize high voltage, become particularly hot, are made from chemicals that require special handling, and so forth. Also, under many circumstances, delicate electronic components can be damaged if grounds are improperly applied or switches are thrown with power on.



Turn on the VCR for more information on the program.

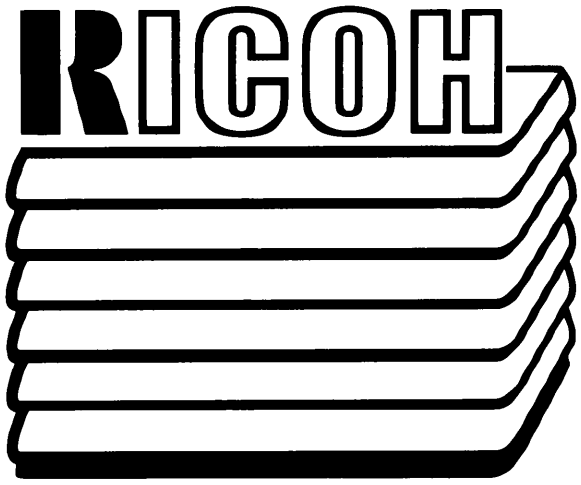

Specifications

Approximate Time: 30 Minutes

SPECIFICATIONS

Configuration : Desk top

Copying Process : Dry electrostatic transfer system

Original : Book/Sheet

Original Size : Max. A3, Ledger (11" x 17")

Copy Paper Size : Max. Ledger or A3
Min. 5½" x 8½"
or A6 (105mm x 148mm)

[Large Cassette]
Ledger (L) (11" x 17")
Legal (L) (8½" x 14")
Letter (L) (8½" x 11")
Computer Print-out Size
(10" x 14" or 15")
Government Legal (L)
(8", 8¼", or 8½ x 10")
Government Letter (L)
(8", or 8-½" x 10")
A3 (L) (297mm x 420mm)
B4 (L) (257mm x 364mm)
A4 (L) (210mm x 297mm)

[Small Cassette]
Letter (S) (8½" x 11")
Statement Size (L)
(5½" x 8½")
A4 (210mm x 297mm)
B5 (182mm x 257mm)
A5 (148mm x 210mm)
B6 (128mm x 182mm)
A6 (L) (105mm x 148mm)
(L) --- Lengthwise Feed
(S) --- Sidewise Feed

Copy Paper Weight : 52g to 105g (14 lbs to 28 lbs)
64g to 105g (17 lbs to 28 lbs) (duplex mode only)

Reproduction Ratios :

- A4 Version (220V) -		- Letter Version (115V)	
1:1.414	Enlargement	1:1.414	Enlargement
1:1.224		1:1.294	
1:1.154		1:1.214	
1:1	Full Size	1:1	Full Size
1:0.93	Reduction	1:0.93	Reduction
1:0.816		1:0.85	
1:0.752		1:0.773	
1:0.707		1:0.739	
1:0.647		1:0.647	
1:0.5		1:0.5	

Zoom : From 50% to 141% (1% per step)

Reproduction Ratio Change :

Full size <---> Enlargement or Reduction
less than 4.5s

Enlargement or Reduction <---> Enlargement or Reduction
less than 7.0s

Copying Speed : The copy speed (in cpm) is shown in the following tables.

- A4 Version (220V) -

	A3	B4	A4	B5	A4R	A5R
Full Size	20	23	35	38	26	30
Reduction (x0.5)	-	-	-	-	26	30
Enlargement (x1.41)	20	23	-	-	26	-

- Letter Version (115V) -

	LDG	LG	LT	HLT	LT/Reduction
Full Size	20	23	35	38	26
Reduction (x0.5)	-	-	-	-	26
Enlargement (x1.41)	20	20	-	-	26

When used with document feeder.
A4 (LT) ------ 22cpm (sidewise)

First Copy Time : 5.1 sec. (A4 or 8½" x 11")

Warm Up Time : Approx. 3 min. (room temp. 20°C)

Copy Number Input : Ten flat keys, 1 to 99, (count up or count down)

Auto Duplexing : Three modes (duplex 1, 2, and 3) (FT-5070 only)

Series Copying : 2 single copies with one stroke of Print key.

Margin Adjustment : Right and left edges
Adjustable from 0mm to 16mm in 1mm steps.

Image Density Selection : 7 Steps (development bias control)

Automatic Reset : 1 min standard setting; Can also be set to 3min. or no auto reset.

- All functions canceled except image density and cassette selection. Quantity Entered counter returns to "1", and reproduction ratio returns to full size.
- Image density auto reset can be selected by DIP SWITCH.

Paper Feed : Dual Universal Cassette Feed,
500 sheets each, and By-pass table
Large Capacity Tray (1000 sheets) RT-11 (Option)

Paper Feed System : Feed and reverse roller system

Exposure System :	Slit exposure, Moving optics
Lens :	Through lens, F8, f=180mm
Light Source :	Halogen lamp (85V 250W)
Photoconductor :	Selenium drum (F type)
Charge System :	Dual wire dc corotron
Erase :	LED lamp unit
Development System :	Magnetic brush roller
Toner Density Control :	Automatic
Development Bias System :	Automatic voltage change (Monitors the selected image density level, drum temperature, and rest time.
Toner Replenishment :	Bottle exchange
Toner Consumption :	10,000 copies/bottle (7%/A4)
Cleaning System :	Blade and brush, pre-cleaning corotron
Quenching System :	Photo-quenching (cold cathode tube)
Image Transfer :	Single wire dc corotron, pre-transfer lamp
Paper Separation :	Dual wire ac corotron and pick-off pawls
Image Fusing :	Heat/pressure - roll type
Electronic Control : System	8 bit microprocessor
Copy Tray Capacity :	250 sheets (all sizes)
Self-diagnostic : Codes	21 kinds
Power Source :	115V/60Hz....15A 220V/50Hz....7A 240V/50Hz....7A
Power Consumption :	Warm Up : 1.1kW Stand-by : 0.25kW Copying : 1.3kW/A4 sidewise Max. : 1.5kW

ons :

	Width	Depth	Height
Copier only	847 (33.3")	673 (26.5")	460 (18.1")
With DF-32	1060 (41.7")	673 (26.5")	590 (23.2")
With CS-1510	1346 (53.1")	673 (26.5")	600 (23.6")
With CS-1510 and DF-32	1559 (61.4")	673 (26.5")	600 (23.6")

:

FT-5050 ----- 103kg (220V), 220 lbs (100kg) (115V)
FT-5070 ----- 114kg (220V), 244.2 lbs (111kg) (115V)

ories:

1. Installation procedure ---------- 1
   (115V-English only/220V-five languages)
2. NECR ---------- 1
3. Envelope-NECR (115V only) ---------- 1

4. Cassette-large ---------- 1
5. Cassette-small ---------- 2
6. Paper size actuator plates ----------
7. Paper size decals ----------
8. Copy tray ---------- 1
9. Original table ---------- 1
10. Original holder ---------- 1
11. Spacers-original table ---------- 2
12. Toner catch pan-A ---------- 1
13. Toner catch pan-C (duplex model only) - 1

14. Operating instructions ---------- 1
    (115V-English only/220V-five languages)
15. Operating instructions holder --------- 1
16. Multilingual decals (220/240V only) --- 1 set

al Equipment :

Document feeder (DF32)

15 bin sorter (CS1510)

Large capacity tray (RT11)

Turn on the VCR for a lecture on the FT5050/5070 specifications.



Unpacking and Installation

Approximate Time: 45 Minutes

UNPACKING AND INSTALLATION



Read the Installation Requirements in the FT5050/5070 Field Service Manual



Read the Unpacking Procedure in the FT5050/5070 Field Service Manual.



Read the Installation Procedure in the FT5050/5070 Field Service Manual.



If required, perform each of the above procedures.

Continue to the next section.



Operator Training

Approximate Time: 1 Hour 45 Minutes

OPERATOR TRAINING

Operation Panel

FT–5070 (115V)

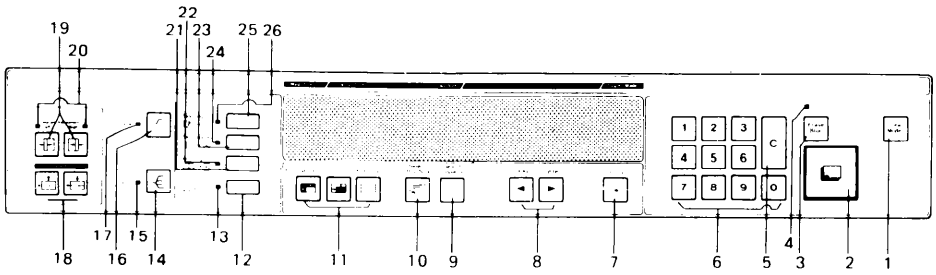

Keys and Indicators	Description
1. Clear Modes Key 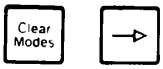	Depress to clear the copier of previously entered settings and modes.
2. Print Key 	Depress to make copies. Green indicates that the copier is ready to copy; red means not ready.
3. Erase Blue Key 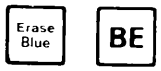	Depress to stop the reproduction of blue lines in the original document.
4. Erase Blue Indicator	Lights when the erase blue is in use.
5. Clear/Stop Key 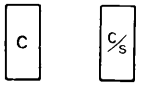	Depress to cancel the number entered in the Quantity Entered counter. While copying, depress to stop copy operation.
6. Numeric Keys	Depress to enter the desired number of copies.
7. Interrupt Key 	Depress to make interrupt copies during a copy run. Then, depress again to resume the copy run.
8. Image Density Keys 	Depress the left key to make darker copies. Depress the right key to make lighter copies.
9. Select Cassette Key 	Depress to select the upper or lower paper cassette.
10. Select Original Key 	Depress to enter the size of the original. When copying onto different sized paper, copier will automatically select the reproduction ratio.

Keys and Indicators	Description
11. Reproduction Ratio Keys 	Depress to select the desired enlargement or reduction magnifications.
12. 2 Single Copies Key 	Depress to make separate single sided copies from bound originals.
13. 2 Single Copies Indicator	Lights when series copying is in use.
14. Sort Key 	Depress to assemble sets of copies in order.
15. Sort Indicator	Lights when the sort mode is in use.
16. Stack Key 	Depress to group copies from different copy runs into individual stacks.
17. Stack Indicator	Lights when the stack mode is in use.
18. Zoom keys 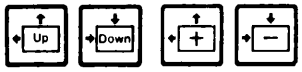	Depress to alter the reproduction ratio (1% per step).
19. Margin Adjustment Keys 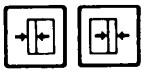	Depress to shift the margin width either left or right to create a margin.
20. Margin Indicators	Indicates that either a left or right margin is being added.
21. Duplex 3 key 	Depress to make duplex copies from bound originals.
22. Duplex 3 Indicator	Lights when duplex 3 is in use.
23. Duplex 2 Key 	Depress to make duplex copies from double-sided originals.
24. Duplex 2 Indicator	Lights when duplex 2 is in use.
25. Duplex 1 Key 	Depress to make duplex copies from two separate originals.
26. Duplex 1 Indicator	Lights when duplex 1 is in use.

Indicator Screen

(115V)

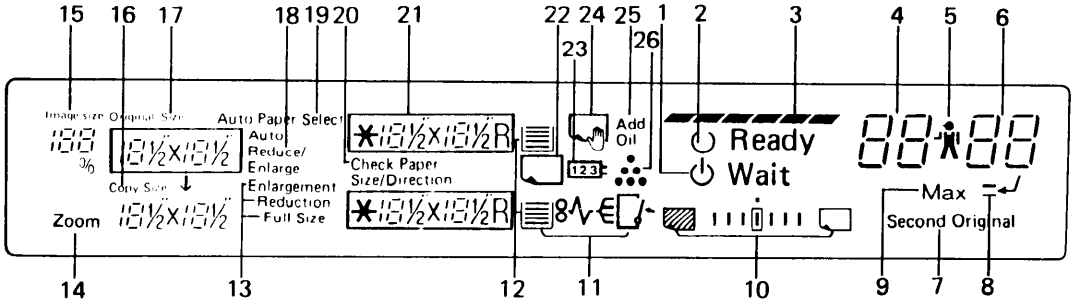

Indicator	Description
1. Wait ⏻ Wait	Indicates that the copier is warming up.
2. Ready ○ Ready	Indicates that the copier is ready to copy.
3. Copy Cycle	Displays the stage of copying which is in process.
4. Quantity Entered	Displays the number of copies selected.
5. Call Service	Indicates that a functional problem is within the copier.
6. Quantity Made	While copying, this counter continuously displays the number of copies made.
7. Second Original Second Original	Lights when the second original needs to be positioned on the exposure glass, when duplex copying.
8. Interrupt	Lights when the interrupt mode is selected.
9. Max Max	Blinks when the number entered is greater than allowed: • Margin width up to 16 mm • Sort mode up to 15 copies • Stack mode up to 40 copies • Duplex modes up to 50 copies The maximum number will be automatically entered.
10. Image Density	Indicates exposure level selected.

	Indicator	Description
11.	Check Copier Paper Path 	Indicates that a misfeed has occurred within the copier.
	Check Sorter 	Lights when the sorter has not been emptied of previously made copies.
	Check Sorter Paper Path 	Indicates that a misfeed has occurred within the sorter.
	Close Cover 	Indicates that the front cover, transport unit, or fork gate unit is open. The machine will not operate when lit.
	Close Sorter Cover 	Indicates that the sorter cover is open.
12.	Paper Volume 	Displays how much paper is in the cassettes.
13.	Enlargement Reduction, Full Size 	Indicates which reproduction mode is in use.
14.	Zoom 	Indicates that the zoom is in use.
15.	Image Size  %	Displays the relative size of the copy to the original in a percentage form.
16.	Copy Size	Displays the paper size of the copy.
17.	Original Size 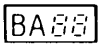	Displays the size of the original that was entered by the operator (only in the original selection mode).
18.	Auto Reduce/Enlarge 	Lights when automatic reduction/enlargement is in use.
19.	Auto Paper Select 	Lights when automatic paper selection is in use.

Indicator	Description
20. Check Paper 	Blinks: In the series copy mode when the paper size is larger than A4; in the duplex modes when the paper size is smaller than B5; in the select original size, auto paper select, and auto reduce/enlarge modes when the paper size is not standard. The Print key turns red, disabling the operation of the copier.
21. Paper Size	Displays the paper size in the upper and lower cassettes. The border of the indicator corresponding to the selected cassette lights up.
22. Load Paper 	Lights when the cassette in use runs out of paper.
23 Set Key Counter 	Indicates that the key counter is not set correctly.
24. By-pass Feed 	Lights when the by-pass feed table is open. Insert paper manually until it stops.
25. Add Oil 	Lights when the silicone oil level gets too low. Add silicone oil to oil tank.
26. Add Toner 	Blinks when the copier needs toner.

 Read the entire FT5070 Operating Instructions Manual.

 Continue to the Operator Training Worksheet.

Operator Training Worksheet

The FT5050/5070 has some exciting features that this worksheet will direct you through. By completing the worksheet below, you will be able to perform basic operator tasks.

Originals Required:

— OSA-3 Test Chart (11 x 17)
— 6 one-sided originals (8½ x 11)
— 1 - 8½ x 14
— 2 Duplex Originals (8½ x 11)
— Book or Magazine

COPIER KEYS:

— Refer to the Service Training Manual pages 3-2 to 3-3.

1. **CLEAR MODES KEY:**

— Using the OSA-3 Test Chart, make a copy at the lightest and darkest settings.

— How many image density settings are there? _____

— Notice the change in the solid area.

— Enter 99 copies, darkest setting, Duplex I, and Sort, now press the Clear Modes Key.

— Did all settings reset? _____

2. **ERASE BLUE KEY:**

— Using the OSA-3 Test Chart, make copies with and without Erase Blue.

— What happened? _____

3. **REDUCTION KEY:**

— Using the reduction key, reduce the 11 x 17 original to an 8½ x 11R copy.

— What key(s) will return the copier to a 100% mode? _____

4. **ENLARGEMENT KEY:**

— What are the preset enlargement percentages? _____

— What percentage is used to make an 8½ x 11R original fit onto an 11 x 17 copy? _____

5. **SELECT ORIGINAL SIZE KEY:**

— Use the Select Original Size Key to make an 11 x 17 original (B) fit onto an 8½ x 11R copy.

— Now use the 11 x 8½ cassette and try again.

— What indicators are now blinking on the operation panel? _____

— Why? _____

— Can a copy be made? _____

— At what magnification ratio? _____

6. **ZOOM KEY:**

— Make a copy of the OSA-3 Test Chart at 90%.

7. **MARGIN ADJUSTMENT KEY:**

— Run a copy using the Margin Shift (Hold down the Margin Left Key and press 16mm on the key pad).

— Which way did the image move? _____

— Now press the Right Margin Key, and enter 20mm.

— What indicator(s) blink? _____

— Can a copy be made? _____

DOCUMENT FEEDER KEYS:

8. **ADF KEY:**

— Run 1 set of 6 single-sided originals.

— How are the originals inserted? *Face Up* or *Face Down*.

— Which page is copied first? _____

— What page number is on top of the finished job? _____

9. **SADF KEY:**

— Run 1 set of 6 single-sided originals. Insert one at a time into the Document Feeder.

— What indicators on the Document Feeder are lit after the first sheet is fed in? _____

— What happens if all the originals are placed into the feed in unit at once and the Print Key is pressed? _____

— In order for the job to have page 1 on top, what page should be fed first? _____

10. **AUTO REDUCE/ENLARGE KEY:**

— Using the Auto Reduce and Enlarge Key, run copies on 8½ x 11R paper with different sized originals. An 8½ x 14, an 11 x 17, and an 8½ x 11R.

— Which DF mode is used? *SADF* or *ADF*.

— Repeat using the 11 x 8½ cassette.

— Explain what happens on the copier. _____

11. **AUTO PAPER SELECT KEY:**

— Load the copier with an 11 x 8½ and an 11 x 17 cassette.

— Press the Auto Paper Select Key and run copies of both 11 x 17 and 11 x 8½ originals.

— What DF mode is used? *SADF* or *ADF*.

— What happens if an 8½ x 11R original is used? _____

SORTER KEYS:

12. **SORT KEY:**

— Run 3 sets of 4 single-sided originals.

— What does the Operation panel display if you enter 20 copies? _____

13. **STACK KEY:**

— Run 3 copies of 4 single-sided originals.

— What is displayed if you enter 50 copies? _____

DUPLEX KEYS:

14. **DUPLEX I KEY:**

— Make duplex copies of 6 single-sided originals.

— Which page is copied first? _____

— Why? _____

— Which DF mode should you use? *SADF* or *ADF*.

— Next use 5 originals.

— What needs to be done to copy the job in correct sequence? _____

— What is displayed if you enter 99 copies? _____

15. **DUPLEX II KEY:**

— Make duplex copies of two-sided originals using SADF mode.

— Now use the ADF mode.

— Which DF mode should you use? *SADF* or *ADF*.

— Why? _____

16. **DUPLEX III KEY:**

— Make a duplex copy of two facing pages of a magazine.

— Which page should be copied first? _____

— Make a copy using the 8½ x 11R cassette.

— What does the operation panel display? _____

— Can you make a copy? _____ Why? _____

17. **TWO SINGLE COPIES KEY:**

— Using the same magazine, how does this feature differ from Duplex III? _____

18. **INTERRUPT KEY:**

— Sort five copies of the OSA-3 Test Chart. Before the run ends, press the Interrupt Key. Remove the original.

— List the keys that can *not* be used while in interrupt mode: _____

— Make a copy while in interrupt mode. Where is the copy delivered? _____

— Press the Interrupt Key, replace the first original and finish the job.

— Open the by-pass tray. What does the operation panel display? _____

— List the keys that can *not be used.* _____



Before continuing the program, have your Service Manager review your answers to the Operator Training Worksheet.

I have reviewed the work performance to this point.

_____

Service Manager's Signature

Continue to the next section. 



Copy Process and Component Identification

Approximate Time: 1 Hour 45 Minutes

COPY PROCESS AND COMPONENT IDENTIFICATION

FUNCTIONAL OPERATION

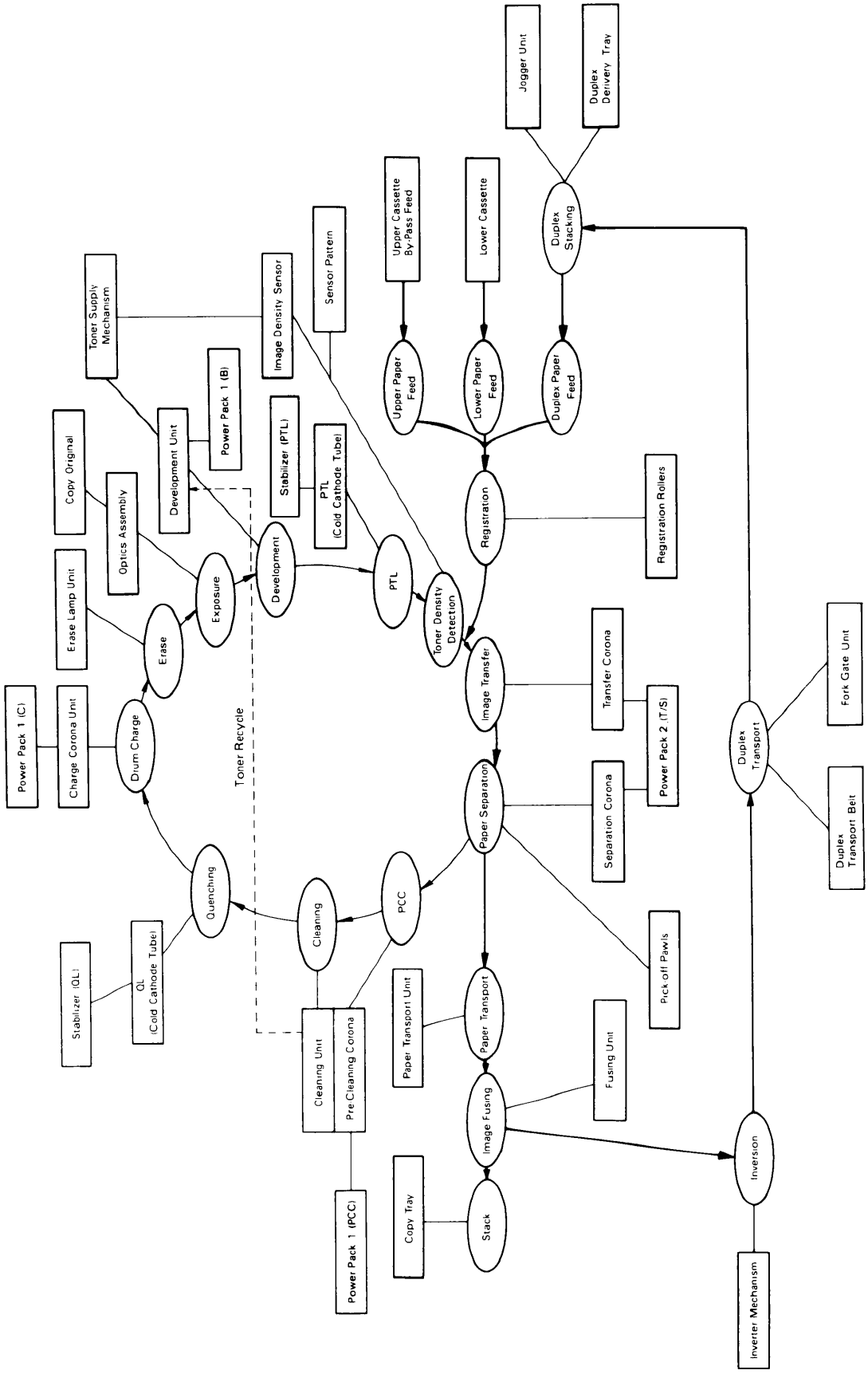

Fig. 2

1. DRUM CHARGE
In the dark the charge corona unit gives a uniform positive charge to the selenium drum. The charge remains on the surface of the drum because the photoconductive selenium has high electrical resistance in the dark.

2. ERASE
The erase lamp illuminates the areas of the charged drum surface that will not be used for the copy image. The resistance of the drum in the illuminated areas drops and the charge on those areas dissipates.

3. EXPOSURE
An image of the original is reflected to the selenium drum surface via the optics assembly. The charge on the drum surface is dissipated in direct proportion to the intensity of the reflected light, thus producing an electrical latent image on the drum surface.

4. DEVELOPMENT
Negatively charged toner is attracted to the positively charged areas of the drum, thus developing the latent image. (The negative triboelectric charge is caused by rubbing action between the carrier and toner particles.)

5. PRE-TRANSFER LAMP (PTL)
The PTL illuminates the drum to remove all positive charge from the exposed areas of the drum. This prevents the toner particles from being reattracted to the drum surface during paper separation and makes paper separation easier.

6. IMAGE TRANSFER
Paper is fed to the drum surface at the proper time so as to align the copy paper and the developed image on the drum surface. Then, a strong positive charge is applied to the reverse side of the copy paper, providing the electrical force to pull the toner particles from the drum surface to the copy paper. At the same time, the copy paper is electrically attracted to the drum surface.

7. PAPER SEPARATION
A strong ac corona discharge is applied to the reverse side of the copy paper, gradually reducing the positive charge on the copy paper and breaking the electrical attraction between the paper and the drum. Then, the stiffness of the copy paper causes it to separate from the drum surface. The pick-off pawls help to separate paper which has low stiffness.

8. PRE-CLEANING CORONA (PCC)
The PCC applies a positive charge to any toner remaining on the drum after image transfer. This causes repulsion between the toner particles and the drum and thereby makes cleaning more effective.

9. CLEANING
The cleaning brush removes part of the toner on the drum and loosens the remainder. The cleaning blade then scrapes off the loosened toner.

10. QUENCHING
The light from the cold cathode tube electrically neutralizes the surface of the selenium drum.

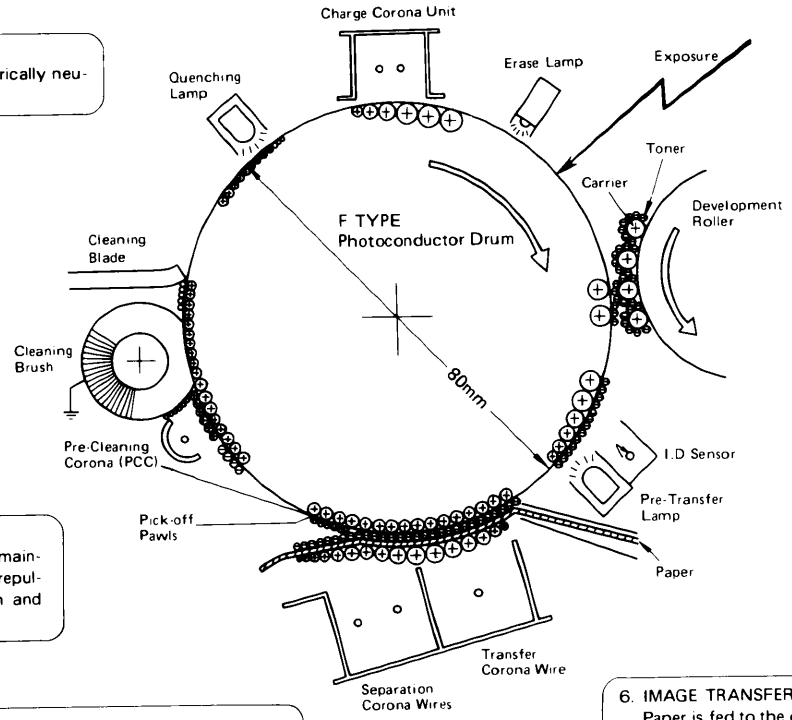

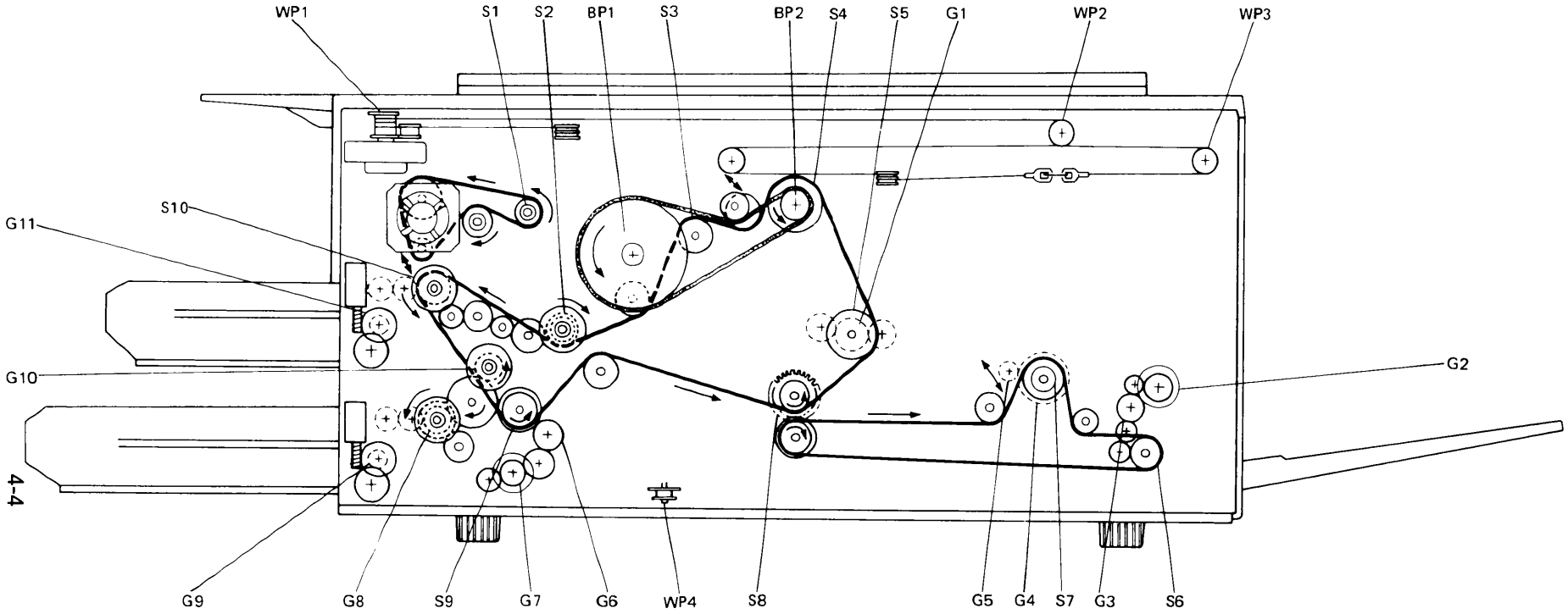

Sprockets

S1: Development Drive Sprocket
S2: Registration Roller Drive Sprocket
S3: Cleaning Drive Sprocket
S4: Main Drive Sprocket
S5: Transport/Fusing Unit Drive Sprocket
S6: Exit Roller Drive Sprocket
S7: Exit Relay Roller/Transport Belt Unit Drive Sprocket
S8: Pulse Generator Sprocket
S9: Lower/Duplex Paper Feed Drive Sprocket
S10: Upper Paper Feed Drive Sprocket

Gears

G1: Transport/Fusing Unit Drive Gear
G2: Inverter Support Roller Drive Gear
G3: Inverter Return Roller Drive Gear
G4: Exit Relay Roller Gear
G5: Transport Belt Unit Gear
G6: Duplex Positioning Roller Drive Gear
G7: Duplex Paper Feed Drive Gear
G8: Lower Paper Feed Drive Gear
G9: Lower Paper Lift Gear
G10: Relay Roller Drive Gear
G11: Upper Paper Lift Gear

Wire Pulleys

WP1: Scanner Drive Pulley
WP2: Second Scanner Pulley
WP3: Tension Pulley
WP4: Jogger Drive Pulley

Timing Belt Pulley

BP1: Drum Drive Pulley
BP2: Main Drive Pulley

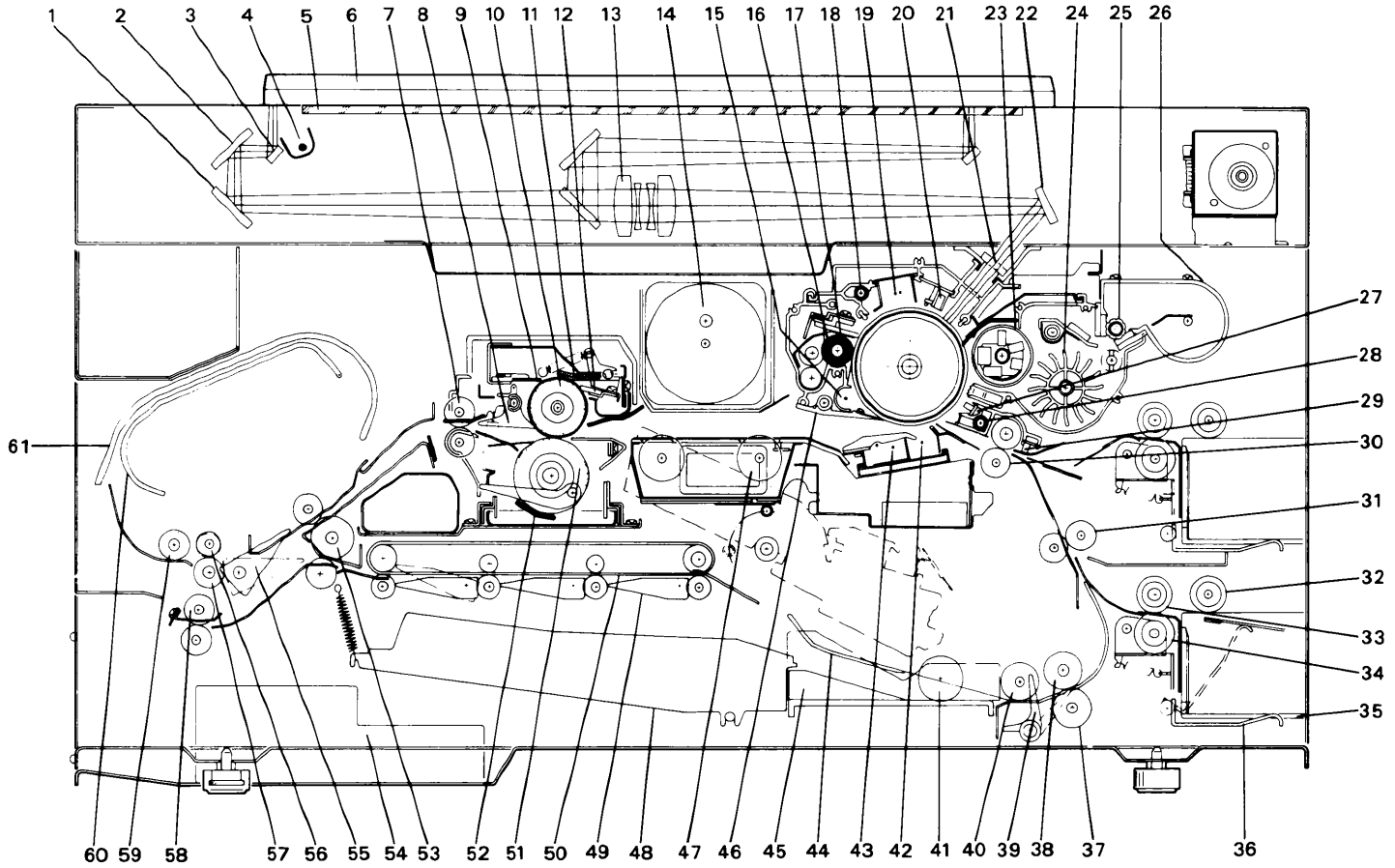

1. 3rd Mirror
2. 2nd Mirror
3. 1st Mirror
4. Exposure Lamp
5. Exposure Glass
6. Platen Cover
7. Fusing Exit Rollers
8. Hot Roller Strippers
9. Fusing Thermistor
10. Hot Roller
11. Oil Supply Pad
12. Oil Blade
13. Lens
14. Main (Drive) Motor
15. Pre-Cleaning Corona
16. Cleaning Brush
17. Cleaning Blade
18. Quenching Lamp
19. Charge Corona Wire
20. Erase Lamp Unit
21. Toner Shield Glass
22. 4th Mirror
23. Development Roller
24. Paddle Roller
25. Toner Supply Roller
26. Toner Tank
27. Image Density Sensor
28. Pre-Transfer Lamp
29. Paper Feed Sensor
30. Registration Rollers
31. Feed Relay Rollers
32. Pick-up Roller
33. Feed Roller
34. Separation Roller
35. Cassette
36. Cassette Lift Arm
37. Duplex Separation Roller
38. Duplex Feed Roller
39. Duplex Stopper
40. Duplex Pick-up Roller
41. Duplex Positioning Roller
42. Transfer Corona Wire
43. Separation Corona Wire
44. Duplex Settler
45. Jogger Fences
46. Pick-off Pawls
47. Transport Rollers
48. Delivery Tray
49. Fork Gates
50. Duplex Transport Belts
51. Pressure Roller
52. Oil Cleaning Pad
53. Exit Relay Rollers
54. Power Supply Unit
55. Junction Gate
56. Inverter Pressure Roller
57. Inverter Return Roller
58. Exit Roller
59. Inverter Support Roller
60. Inverter Guide
61. Inverter Slide

ELECTRICAL COMPONENT LAYOUT

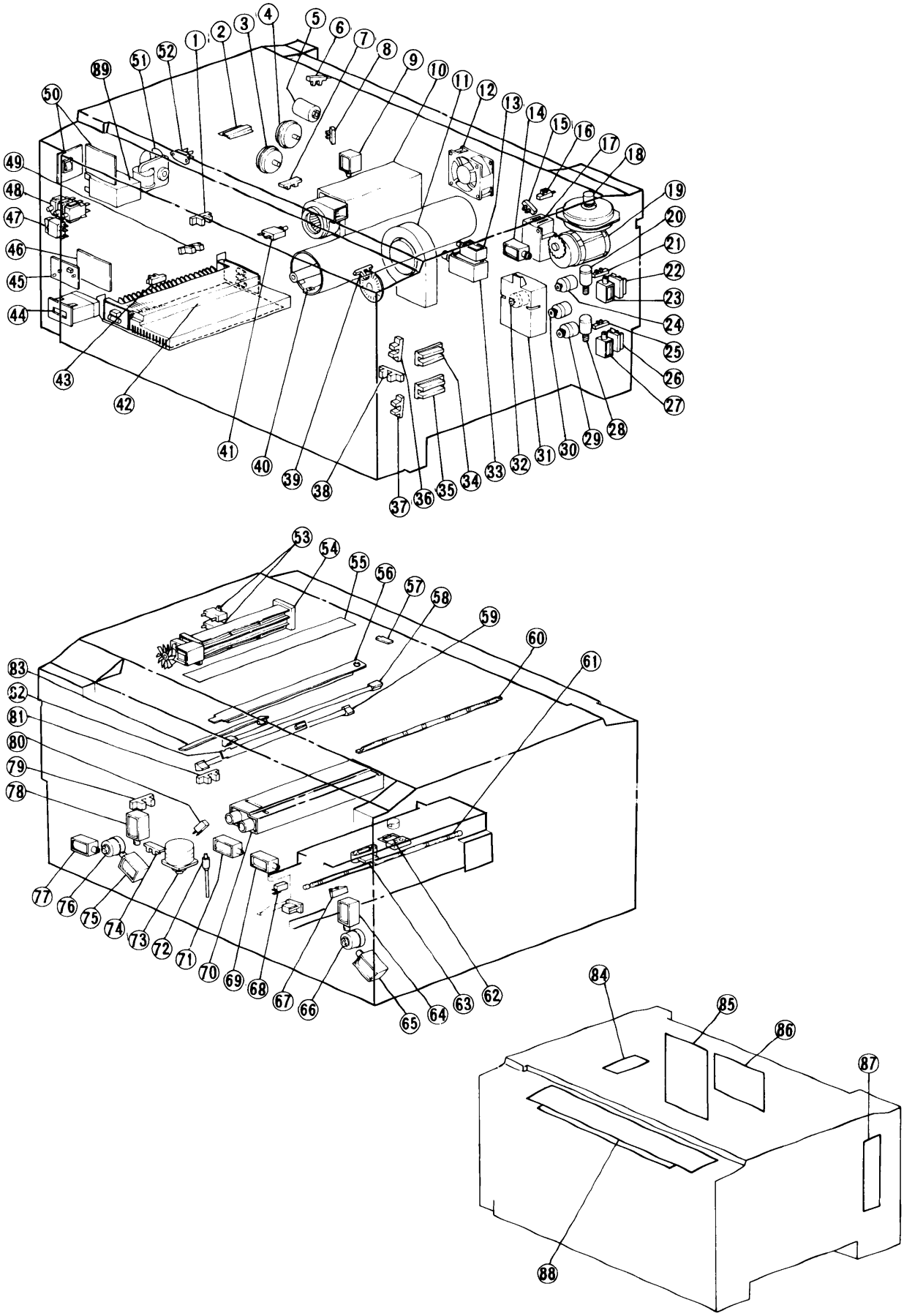

Sensors

* Inverter Sensor 1
Scanner Home Position Sensor 6
Lens Home Position Sensor 7
2nd Scanner Home Position Sensor 8
Toner End Sensor 15
Scanner overrun Sensor 16
Upper Lift Sensor 21
Upper Paper Volume Sensor 22
Lower Lift Sensor 25
Lower Paper Volume Sensor 26
Upper Paper Size Sensor 34
Lower Paper Size Sensor 35
Upper Paper End Sensor 36
Lower Paper End Sensor 37
By-pass Sensor 38
Paper Exit Sensor 43
* Fork Gate Sensor 49
Platen Cover Sensor 57
Fusing Sensor 67
Oil End Sensor 72
* Jogger Home Position Sensor 74
* Duplex Entrance Sensor 79
* Duplex Paper Sensor 81
Image Density Sensor 82
Paper Feed Sensor 83

Solenoids

Oil Supply Solenoid 9
Pick-off Solenoid 13
Toner Supply Solenoid 14
Upper Pick-up Solenoid 23
Lower Pick-up Solenoid 27
Cleaning Solenoid 33
* Junction Gate Solenoid 64
* Inverter Return Solenoid 65
* Fork Gate Solenoid 1 69
* Fork Gate Solenoid 2 71
* Duplex Pick-up Solenoid 75
* Duplex Stopper Solenoid 77
* Duplex Positioning Solenoid 78

Motors

Lens Drive Motor 3
2nd Scanner Drive Motor 4
Main Motor 10
Scanner Drive Motor 18
Development Motor 19
Upper Lift Motor 20
Lower Lift Motor 28
* Jogger Motor 73

Boards

Misfeed Location Indicator Board 45
Temperature Control Board 46
Lamp Regulator 50
Original Size Indicator Board 55
Ac Drive Board 84
Main Board 85
Optics Board 86
Feed Control Board 87
Operation Panel Board 88

Clutches

Upper paper Feed Clutch 24
Lower Paper Feed Clutch 29
Feed Relay Clutch 30
Registration Clutch 32
* Support Roller Clutch 66
* Duplex Feed Clutch 76

Fans

Vacuum Fan 11
Cooling Fan 12
Exhaust Fan 51
Cooling Blower 54

Lamps

Erase Lamp Unit 56
Quenching Lamp 58
Pre-transfer Lamp 59
Exposure Lamp 60
Fusing Lamp 61

Switches

Main Switch 47
Front Cover Safety Switch 48
* Fork Gate Unit Safety Switch 68
Transport Unit Safety Switch 80

Heaters

Anticondensation Heater 2
Drum Heater 40

Others

Noise Filter 5
Stabilizer (QL/PTL) 17
Power Pack 1 (C/B/PCC) 31
Pulse Generator 39
Circuit Breaker 41
Power Supply Unit 42
Total Counter 44
Triac (Fusing Lamp) 52
Capacitor 53
Fusing Thermistor 62
Thermofuse 63
Power Pack 2 (T/S) 70
Power Relay 89

(* Duplex Only)

Electrical Components

Component	Description	Location Side/Vertical/Horizon
Motors		
Main Motor	Ac motor for main drive	Rear center
Development Motor	Ac motor for development drive	Rear upper left
Upper Lift Motor	Dc motor – raises upper paper cassette to correct feed height.	Rear center left
Lower Lift Motor	Dc motor – raises lower paper supply to correct feed height.	Rear lower left
Scanner Drive Motor	Dc servomotor – controls scanner.	Rear upper left
Lens Drive Motor	Dc stepping motor – moves lens to various magnification positions.	Top rear left
2nd Scanner Drive Motor	Dc stepping motor – positions 2nd scanner in different magnification modes to achieve proper focal distance of light path.	Top rear left
Jogger Motor (Duplex only)	Dc stepping motor – controls jogger fences to straighten paper stack in duplex tray.	Rear lower center (behind vacuum fan)
Solenoids		
Cleaning Solenoid	24V dc – operates cleaning blade into and out of contact with the drum.	Rear center (behind vacuum fan)
Pick-off Solenoid	24V dc – operates pick-off pawl mechanism to ensure copy paper separates from the drum.	Rear center (on top of cleaning solenoid)
Toner Supply Solenoid	24V dc – operates toner supply system; energizes when necessary to add toner to developer.	Rear upper left (behind stabilizer)
Oil Supply Solenoid	24V dc – operates oil pump lever once every copy cycle to supply silicone oil to fusing unit.	Rear center tight (behind optics board)
Upper Pick-up Solenoid	24V dc – operates upper paper feed pick-up roller to advance copy paper to upper feed rollers.	Rear center left
Lower Pick-up Solenoid	24V dc – operates lower paper feed pick-up roller to advance copy paper to lower feed rollers.	Rear lower left
Junction Gate Solenoid (Duplex only)	24V dc – operates junction gate to direct copy to exit or, inverter unit (during duplex operation).	Rear lower right (behind main board)
Inverter Return Solenoid (Duplex only)	24V dc – operates inverter pressure roller to contact inverter return roller reversing the direction of the copy when duplexing.	Rear lower right (behind main board)
Fork Gate Solenoid (Duplex only)	24V dc – operates fork gate to direct different size copy paper into duplex tray.	Rear lower center

Component	Description	Location Side/Vertical/Horizon
Duplex Pick-up Solenoid (Duplex only)	24V dc – operates duplex pick-up roller to advance copy paper to duplex feed rollers.	Rear lower left
Duplex Stopper Solenoid (Duplex only)	24V dc – operates duplex stopper assembly, which aligns lead edge of incoming duplex copies.	Rear lower left
Duplex Positioning Solenoid (Duplex only)	24V dc – operates duplex positioning roller to lift roller out of the way during jogger motor operation.	Rear lower left
Clutches		
Upper Paper Feed Clutch	24V dc – drives upper paper feed roller to advance copy paper to registration roller.	Rear center left
Lower Paper Feed Clutch	24V dc – drives lower paper feed rollers to advance copy paper to relay roller.	Rear lower left
Feed Relay Clutch	24V dc – drives relay rollers to advance copy paper through lower feed section to registration rollers.	Rear lower left
Support Roller Clutch (Duplex only)	24V dc – drives duplex support roller to guide copies into inverter unit.	Rear lower right (behind main board)
Duplex Feed Clutch (Duplex only)	24V dc – drives duplex feed roller to advance duplex copies to relay roller.	Rear lower right (behind main board)
Registration Clutch	24V dc – drives registration rollers, to align the lead edge with the image. **NOTE:** (All clutches are magnetic armature plate type)	Rear lower left
Sensors		
Scanner Home Position Sensor	5V dc – actuated by the scanner wire clamp. Determines scanner start and stop positions.	Rear upper right
Scanner Overrun Sensor	5V dc – actuated by scanner wire clamp if the scanner drive system fails.	Rear upper left
2nd Scanner Home Sensor	5V dc – actuated by 2nd scanner drive pulley. Ensures 2nd scanner is in correct position for full size copies.	Top rear left
Lens Home Position Sensor	5V dc – actuated by lens housing. Ensures lens is in correct position for full size copies; also, references home position when moving to different magnification to ensure correct positioning.	Top front center
Toner End Sensor	5V dc – actuated by toner agitator gear; detects a low toner condition.	Rear upper left (inside rear side plate)
Image Density Sensor	5V dc – activated by reflected light from drum. Detects image density.	Front drum right
Upper Lift Sensor	5V dc – actuated by pick-up roller mechanism. Turns lift motor off to ensure correct height of paper.	Rear center left

Component	Description	Location Side/Vertical/Horizon
Lower Lift Sensor	5V dc – same as above for lower feed.	Rear lower left
Upper Paper Volume Sensor	5V dc timing pulse – actuated by cassette lift mechanism detects quantity of paper in cassette.	Rear center left
Lower Paper Volume Sensor	5V dc timing pulse – same as above for lower cassette.	Rear lower left
Upper Paper Size Sensor	5V dc timing pulse – actuated by cassette actuator plate. Informs CPU what paper size is inserted.	Rear center left
Lower Paper Size Sensor	5V dc timing pulse – same as above for lower cassette.	Right lower left
Upper Paper End Sensor	5V dc timing pulse – actuated by paper end feeler. Informs CPU that there is no paper in the cassette.	Front center right
Lower Paper End Sensor	5V dc timing pulse – same as above for lower cassette.	Front lower right
By-pass Sensor	5V dc – actuated by by-pass feed table. Informs CPU when by-pass feed table is opened.	Front center right
Oil End Sensor	5V dc – activated by reflected light. Detects an oil end condition.	Rear lower center
Paper Feed Sensor	5V dc – activated by lead edge of paper. Used for proper registration of copy paper against registration roller. Also used for jam timing.	Front drum right
Fusing Sensor	5V dc – actuated by copy paper. Used for jam timing.	Front center
Inverter Sensor (Duplex only)	5V dc – actuated by copy paper lead edge for jam timing in duplex mode. Copy paper trail edge deactuates it to start reverse drive in duplex.	Front center left
Paper Exit Sensor	5V dc – actuated by copy paper. Used for jam timing.	Left exit area
Fork Gate Sensor (Duplex only)	5V dc – actuated by copy paper. Used for jam timing.	Front lower left
Duplex Entrance Sensor (Duplex only)	5V dc – actuated by duplex entrance roller. Detects when paper successfully arrives in duplex tray.	Front lower center
Duplex Paper Sensor (Duplex only)	5V dc – actuated by copy paper. Informs CPU of the presence of copy paper in the duplex tray.	Front lower center
Jogger Home Position Sensor (Duplex only)	5V dc – actuated by jogger side fence. Ensures that jogger motor is in home position before moving side fences to corresponding to paper size used.	Rear lower center
Platen Cover Sensor	5V dc – actuated by platen cover. Informs CPU that operator left original under platen cover. **NOTE:** (All sensors are photosensors consisting of a phototransistor and an LED.)	Front upper center

Component	Description	Location Side/Vertical/Horizon
Switches		
Main Switch	220/115V dc – turned on by operator. Supplies 220/115 to machine.	Left upper right
Front Cover Safety Switch	24V dc – actuated by the front cover. Removes 24V dc from main power relay when cover is opened.	Front upper left
Rear Cover Safety Switch (115V only)	24V dc – actuated by rear cover. Removes 24V dc from main power relay when rear cover is removed.	Rear lower center
Transport Unit Safety Switch	24V dc – actuated by the transport unit. Removes 24V dc from main power relay when transport unit is lowered.	Rear lower center
Fork Gate Safety Switch (Duplex only)	24V dc – actuated by fork gate unit. Removes 24V dc from main power relay when fork gate unit is lowered.	Rear lower right
P.C. Boards		
Main PCB	Controls most machine functions.	Rear center right
Optics PCB	Controls scanners and lens movements.	Rear center center
Feed Control PCB	Controls paper feed operations.	Rear lower left
AC Drive PCB	Controls all ac components.	Left upper left
Lamp Regulator PCB	Controls the exposure lamp.	Front upper left
Temperature Control PCB	Controls the fusing lamp and drum heater.	Front lower left
Misfeed Location PCB	Displays location of misfed paper. Also contains DIP switches for some special features.	Front lower left
Operation Panel PCB	Illuminates displays to communicate with operator regarding machine condition.	Top front center
Original Size Indicator	Lights LED's to inform operator what size original to use for the selected reproduction ratio.	Top left
Lamps		
Exposure Lamp	85V ac – controlled by lamp regulator. Used for illuminating original for reflection to the drum.	On 1st scanner
Fusing Lamp	115/220V ac – controlled by temperature control board. Provides heat to fusing rollers.	Fusing unit (inside hot roller)
Erase Lamp Unit	24V dc LEDs – controlled by main board. Used to discharge areas of the drum that are not used in copying.	Front drum area
Pre-transfer Lamp	430V dc – controlled by the stabilizer. Used to discharge the drum in preparation for transfer process.	Front drum right

Component	Description	Location Side/Vertical/Horizon
Quenching Lamp	430V dc – controlled by the stabilizer. Used to discharge drum surface in preparation for copy cycle.	Front drum left
Fans		
Vacuum Fan	Provides vacuum to transport unit. Keeps copies against transport rollers and control toner cloud around development unit.	Rear lower center
Cooling Fan	Cools drum cavity and provides air to charge corotron.	Rear upper center
Exhaust Fan	Exhausts warm air from optics unit.	Left upper center
Cooling Blower	Provides optics unit with cool air. **NOTE:** (All fans are controlled by ac)	Left upper center
Others		
Main Power Relay (RA-1)	24V dc – controlled by main board and safety devices. Provides ac power to machine.	Left upper right
Transformer (115V machine only)	115V ac – steps 115V ac down to 100V ac.	Rear lower center
Noise Filter	Filters electrical noise going into copier.	Rear middle right
Stabilizer	24V dc – controlled by main board. Steps up voltage to light PTL/quenching lamp.	Rear upper left
Power Pack 1 C/B/PPC	24V dc – controlled by main board. Steps up voltage to charge corotron, developer bias, and pre-cleaning corotron.	Rear lower left
Power Pack 2 T/S	24V dc – controlled by main board. Steps up voltege to transfer and separation corotrons.	Front lower center
Pulse Generator	5V dc – supplies electrical pulses to main board for control of machine activity.	Rear center center
Circuit Breaker	115V/220V, 15A – removes all power to machine in the event of an electrical surge.	Rear lower right
Power Supply Unit	Provides working voltages to copier. Also contains all of the fuses for the copier.	Left lower center
Total Counter	24V dc – controlled by main board. Counts the number of copies that the machine makes.	Front lower left
Fusing Thermistor	Monitors the temperature of the fusing rollers.	In fusing unit
Drum Bias Thermistor	Monitors the drum cavity temperature to control the drum heater and bias output, thus providing consistent copy quality.	Erase lamp unit
Thermofuse	Interrupts the circuit to the fusing lamp in the event of an overheat condition.	Inside fusing unit

Component Identification Worksheet

This exercise is designed to familiarize you with the location of major components within the FT5050/5070.

Let's begin by removing the following covers:

1. Front cover
2. Front inner left cover
3. Front inner right cover
4. Sorter (if attached)
5. Left side cover
6. Rear cover

Locate the "electrical component layout" and "electrical component description" in the FT5050/5070 Service Training Manual. Use these as an aid to guide you in locating the following components:

COMPONENT	LAYOUT LOCATION
SCANNER DRIVE MOTOR	18
DEVELOPMENT MOTOR	19
TONER SUPPLY SOLENOID	14
CHARGE, BIAS, AND PRE-CLEANING CORONA POWER PACK	31
UPPER AND LOWER PAPER FEED CLUTCHES	24 & 29
RELAY FEED CLUTCH	30
REGISTRATION ROLLER CLUTCH	32
PAPER FEED SENSOR	83
PAPER VOLUME SENSORS	22 & 26
UPPER LIFT MOTOR	20
UPPER LIFT SENSOR	21
FEED CONTROL BOARD	87
OPTICS BOARD	86
MAIN BOARD	85
MISFEED LOCATION INDICATOR BOARD	45
TEMPERATURE CONTROL BOARD	46
LAMP REGULATOR BOARD	50
FRONT COVER SAFETY SWITCHES	48
OPERATION PANEL BOARD	88
PAPER EXIT SENSOR	43
AC DRIVE BOARD	84
POWER SUPPLY UNIT	42
FUSING SENSOR	67

— Continued —

JUNCTION GATE SOLENOID 64
INVERTER SOLENOID 65
SUPPORT ROLLER CLUTCH 66

JOGGER MOTOR 73
JOGGER HOME SENSOR 74

INVERTER SENSOR 1
INVERTER SUPPORT ROLLER 59

DUPLEX ENTRANCE SENSOR 79
DUPLEX PAPER SENSOR 81
JOGGER FENCES 45
DUPLEX PICKUP ROLLER 40
DUPLEX FEED ROLLER 38
DUPLEX SEPARATION ROLLER 37



Turn on the VCR for a lecture on Component Identification.

Note: Stop the tape at any time if you need to review the material that is being covered.

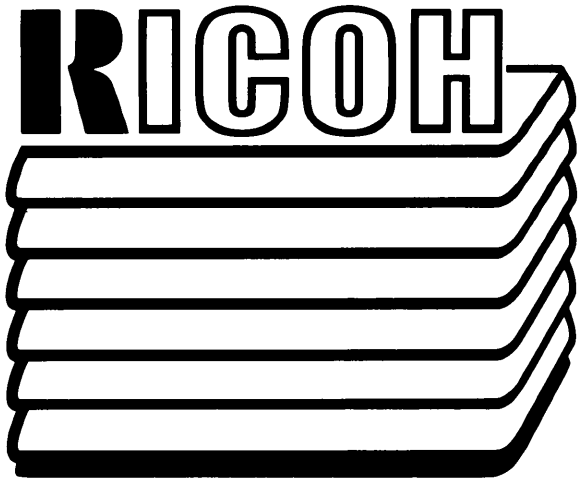

Component Operation

Approximate Time: 45 Minutes

COMPONENT OPERATION

Before we review the point-to-point and power distribution descriptions, we will learn how components like sensors, motors, clutches, and solenoids turn on. This will be beneficial to you during the upcoming point-to-point and power distribution sections.

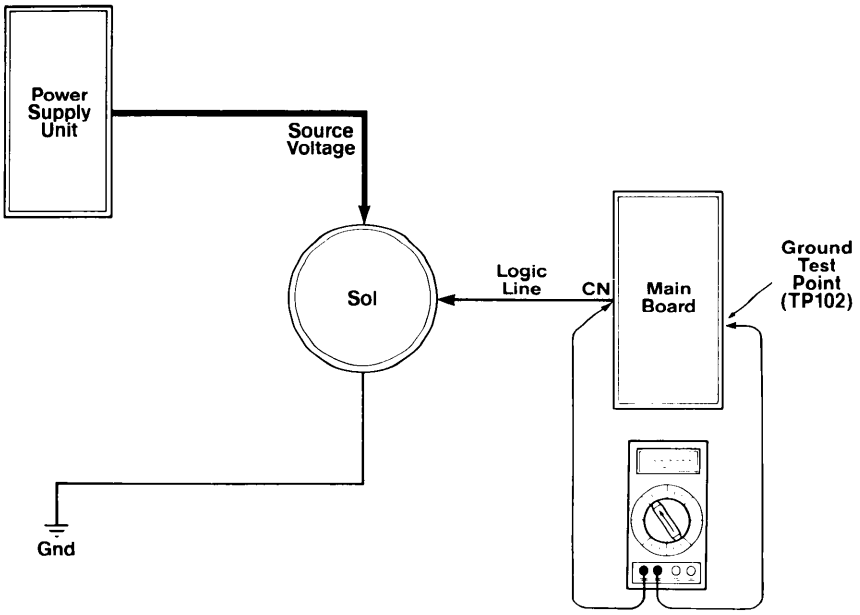

SOLENOID OPERATION

We will begin our lesson with a simple circuit like a solenoid. All DC circuits like the one here are supplied a source voltage from the power supply unit. From this point, voltage is supplied to the main board. The main board controls the ON and OFF timing of these devices. For the solenoid to be energized, the circuit for the solenoid must be complete. This is achieved by the main board supplying a LOW signal or ground potential which causes the solenoid to energize.

With a multimeter, we are able to check the main board and solenoid operation by placing the negative probe (-) at the main board ground test point which in the case of the FT5050 and FT5070 is TP102 and the positive (+) probe at the appropriate main board connection. With the solenoid de-energized, 24 volts DC can be measured at the main board connection. This indicates that the power supply unit is supplying the proper source voltage to the component. When the main board supplies a LOW signal, or ground potential, a voltage of less than one volt will be measured at the main board connection. In this case, this LOW signal will energize the solenoid. This appears on a multimeter as a quick change in condition where the voltage reading turns from 24 volts to less than 1 volt and then returning to the 24 volt level.

Now we will look at how to troubleshoot a problem with a solenoid. If the component's trigger line never drops to less than one volt and the source voltage is constantly read at the 24 volt level, the fault is with the main board not sending a low signal to the component. If a constant 0 volts is measured at the main board, the fault is an electrical open in the coil or the supply line for the solenoid. In the event that a LOW signal is read at the component's trigger line, the fault is with the mechanical function of the component or its linkage.

Now that you have some familiarization with the operation of a solenoid, the operation of clutches and DC relays work in almost the same fashion. A source voltage from the power supply unit is necessary along with a trigger signal from the main board. The trigger signal will cause the component to activate.

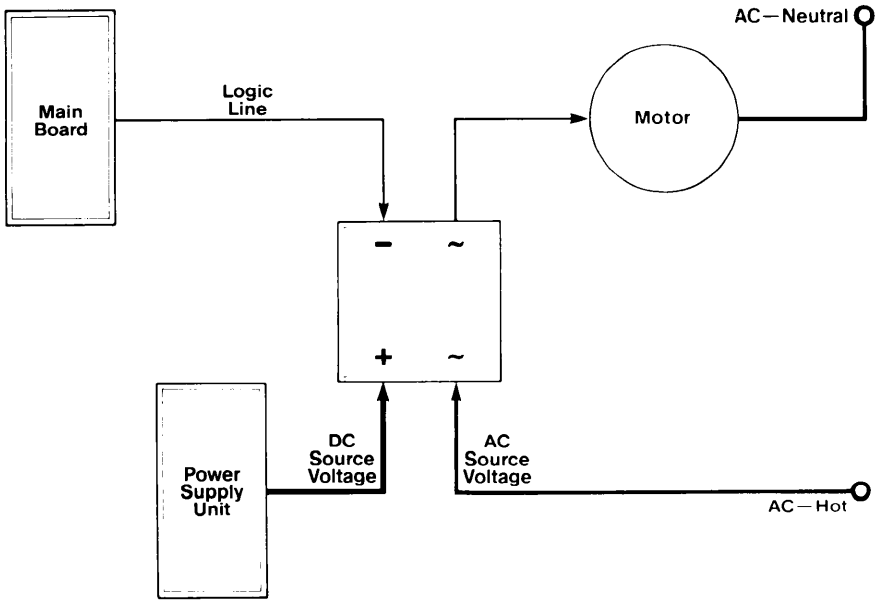

SOLID STATE RELAY OPERATION

Now we will learn the AC components in this copier, like the motors. Motors work in a slightly different fashion, but basically have the same 2 requirements, a source voltage and a trigger or switching circuit. In this case, Solid State Relays, or SSRs, are the link between the AC source voltage used to power the component and the DC trigger voltage used to turn the component ON and OFF. In the case of the FT5050/5070, 100 volts AC is applied to the solid state relay which will supply the source voltage to the motor. 24 volts DC is applied to the solid state relay and will also be applied to the main board for a trigger signal. At the appropriate time, the main board will supply a LOW signal which will cause the solid state relay to energize and complete the 100 volt AC circuit.

We will now see how to troubleshoot this circuit. Check the supply voltage on the input side of the solid state relay. If the voltages are not present, the power supply or its linkages will be at fault. If there is no LOW signal read at the trigger line, the fault is with the main board. If there is a LOW trigger signal and 100 volts AC is not present at the output side of the solid state relay, the fault is with the solid state relay. If there is a LOW trigger signal and 100 volts AC at the output side of the solid state relay and the component still does not energize, the fault is with the component.

NOTE: Always remember that when measuring AC voltage, measure between the Hot and the Neutral. Never measure AC using DC board or logic ground.

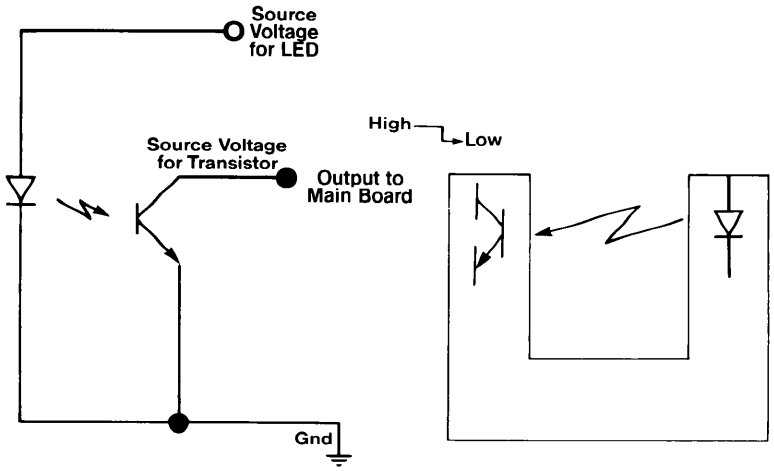

SENSOR OPERATION

Sensors operate differently in that they provide input data to the C.P.U. as to the condition of certain components. The sensors used in this copier are photointerruptors. They consist of an L.E.D. and a phototransistor. The phototransistor in the sensor is supplied a source voltage to its collector. When the light from the L.E.D. is blocked, the phototransistor is non-conductive and the main board will read a HIGH signal. By monitoring the change of state (HIGH to LOW signals), the main board is able to recognize whether the sensor is blocked or unblocked. This type of sensor is used to determine scanner position, paper position, and other conditions throughout the copier.

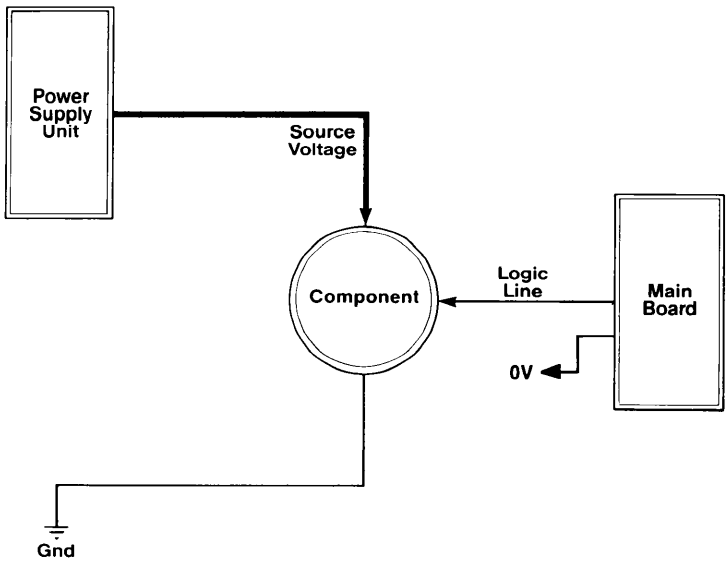

ELEMENTS NECESSARY TO ENERGIZE A COMPONENT

The important thing to remember when troubleshooting these components is that 2 things must exist to energize the component, a source voltage and a switching action or trigger from the main board. By monitoring the trigger signal line, the source voltage and switching action can be read by the multimeter. Now that you are familiar with how common components in a copier operate, your understanding of the operation of these components described in the upcoming power distribution and point-to-point sections will be more comprehensive and thorough.

Turn on the VCR for a lecture on Component Operation.



Point-to-Point Illustration

Approximate Time: 45 Minutes

POINT-TO-POINT ILLUSTRATION



Remove the FT5050/5070 Point-to-Point Diagram from your Field Service Manual and locate the Symbol Table and Wire Color Code Table.



Turn on the VCR for a lecture on the Point-to-Point Illustration.



Continue to the Point-to-Point Wiring Diagram Worksheet.

Point-to-Point Wiring Diagram Worksheet

This worksheet will enable you to identify the different symbols and the general layout of the Point-to-Point Wiring Diagram.

I. SYMBOLS

Identify the following symbols:

▷ _____

↑ _____

↓ _____

[↓5] _____

(W) _____

II. CONNECTOR REFERENCES

Label the components of the following connector:

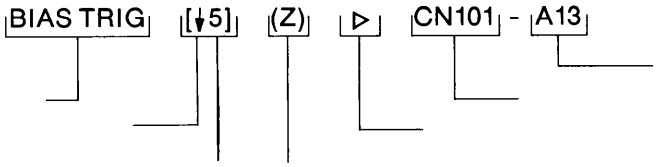

On what board is the above connector found? _____

SUMMARY

Knowledge Check:

Do you know? . . .

1. The different symbols used on the Point-to-Point Diagram
2. How to read the Point-to-Point Diagram

Continue to the next section ⇨



Power Distribution

Approximate Time: 2 Hours

POWER DISTRIBUTION

BASIC OPERATION

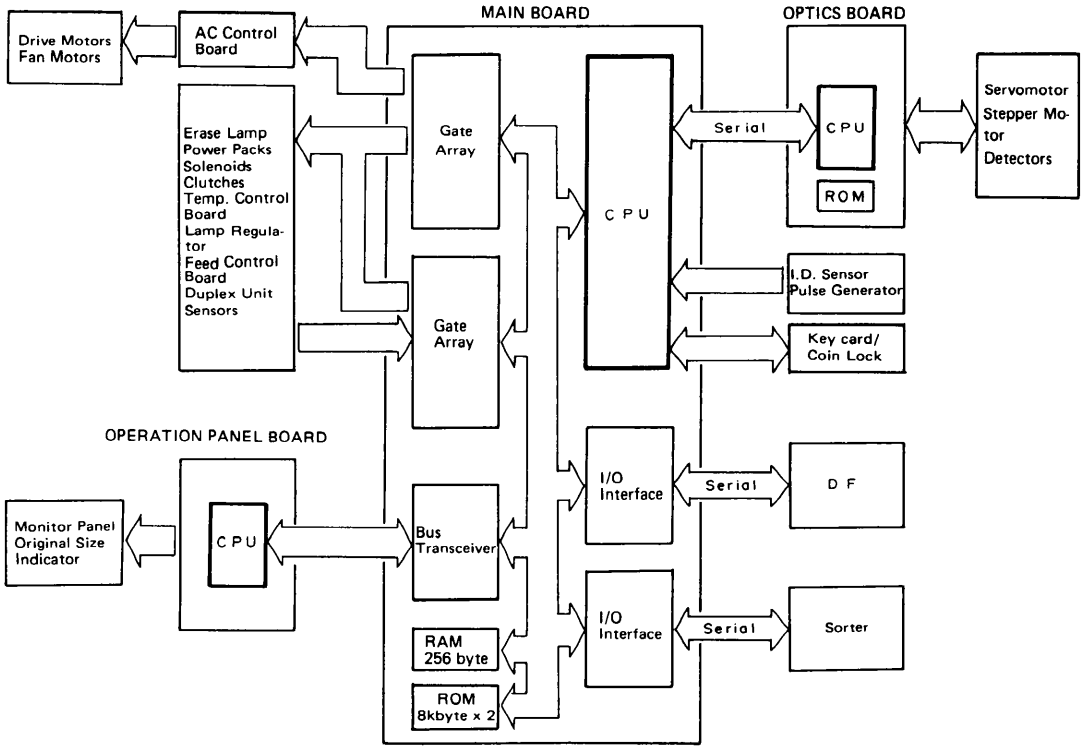

This machine has three CPUs for controlling all machine operations.

The CPU on the main board is the main controller of this copier. It monitors the input signals from the sensors and controls the electrical devices through the gate arrays. The second CPU is on the optics board. The optics board also has a dc motor controller which controls the servomotor and the stepper motors for the optics section. The third CPU is on the operation panel board. The CPU controls the keys and indicators of the copier.

A serial interface system is used for the interface between the main board and the optics board, the main board and the document feeder, as well as the main board and the sorter. This system reduces the number of the interface lines and makes the input/output (I/O) circuitry easier.

WER SUPPLY

Ac and Dc Power Distribution

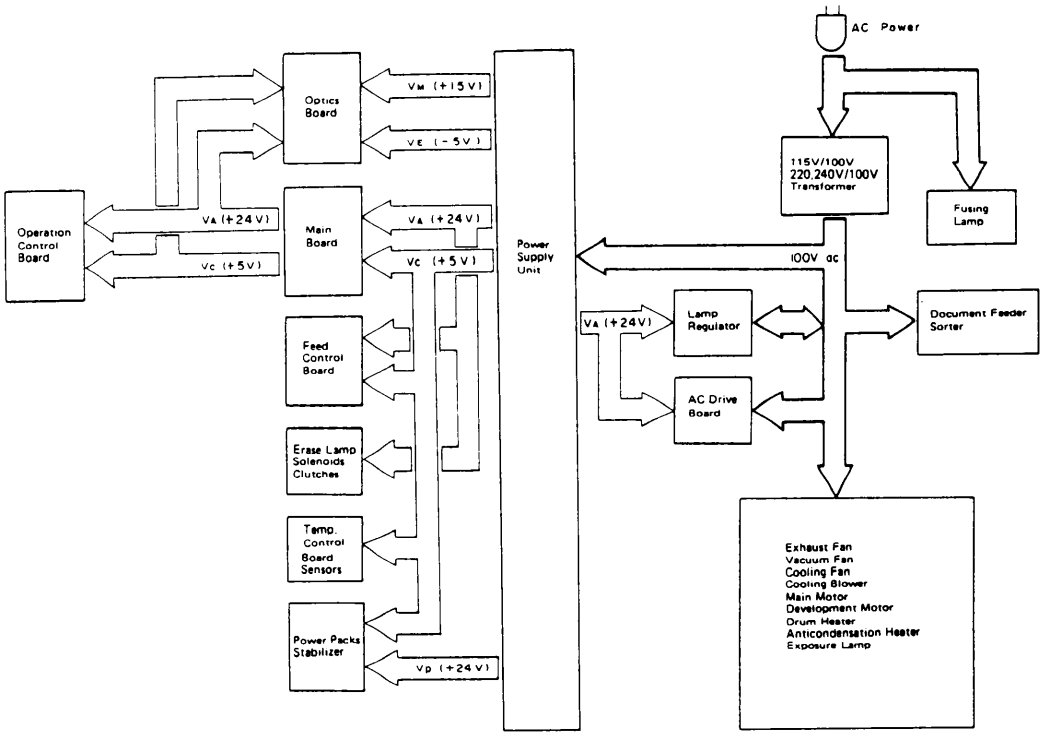

e illustration on this page shows the electrical power distribution in block rm. Only the actual working power is illustrated in this figure.

power is supplied from the wall outlet directly to the fusing lamp and the ep down transformer. The transformer will supply 100Vac to the power supply it, lamp regulator, ac drive board, and one side of the fans, motors, aters, and exposure lamp. Ac supply for the feeder and sorter also comes om the transformer.

e power supply unit takes 100Vac and supplies the working voltages to the rious components, as shown in the diagram above and the following table:

Voltage	Name	Destination	Fused		Fuse Name
			Y	N	
+24V	V_A	Main Board, Optics Board, Operation Control Board, Feed Control Board, Lamp Regulator, ac Drive Board, Erase Lamp, Solenoids, Clutches (working voltage)	*		FU3 (5A)
+24V	V_P	Power Packs, Stabilizer (working voltage)	*		FU4 (5A)
+5V	V_C	Feed Control Board, Sensors, Power Packs, Stabilizer (power to LED and phototransistors)		*	
+15V	V_M	Optics Board (Servomotor) (working voltage)	*		FU2 (5A)
-5V	V_E	Optics Board (Powers LSI)		*	
100Vac	-	Power Supply Unit	*		FU1 (5A)

Safety Switches

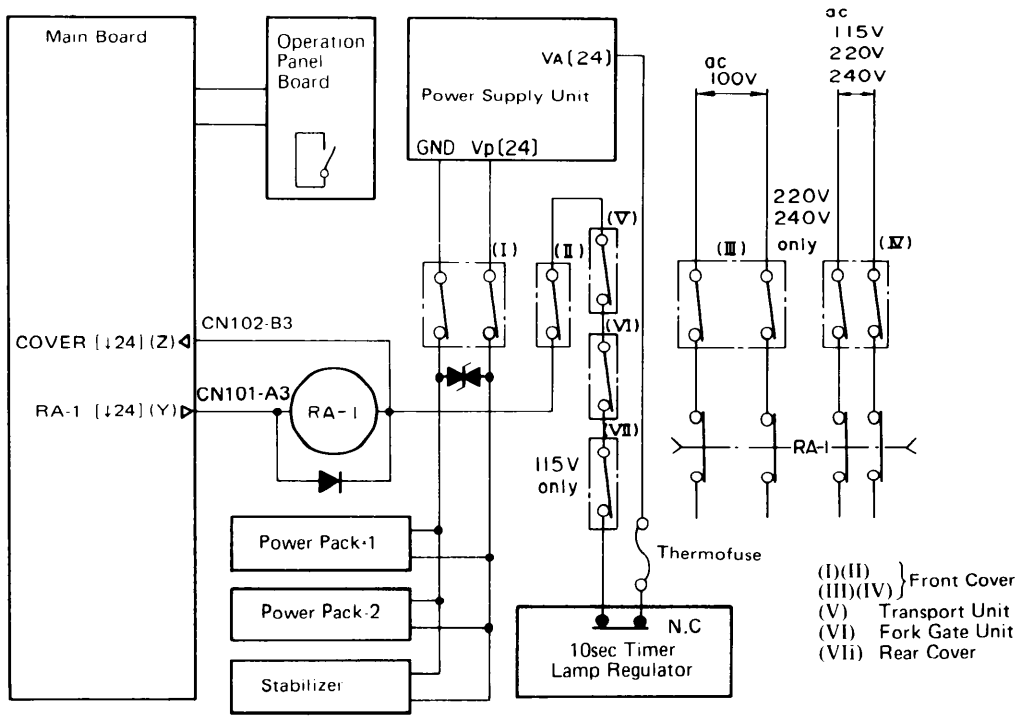

This model has either 5 or 6 safety switches depending on which version it is. The 220/240V machine has two extra front cover safety switches (III,IV) and only the 115V machine has a rear cover safety switch (VII).

Front cover safety switch (I) is for cutting the Vp lines of power pack 1, power pack 2, and the stabilizer. The safety switches of the front cover (II), transport unit (V), fork gate unit (VI), and rear cover (VII) are connected in series. These safety switches are for cutting RA-1 and the ac power line. When any of these safety switches are opened, the CN102-B3 drops from 24V to 0V and the CPU on the main board sends a signal to the operation board for the Close Cover indicator to light.

The power supply lines which are cut by opening a safety switch are shown in the following table.

Safety SW	OFF line
Front Cover	RA-1 coil, Vp line
Fork gate unit	RA-1 coil
Transport unit	RA-1 coil
Rear cover	RA-1 coil

Ac Components Drive

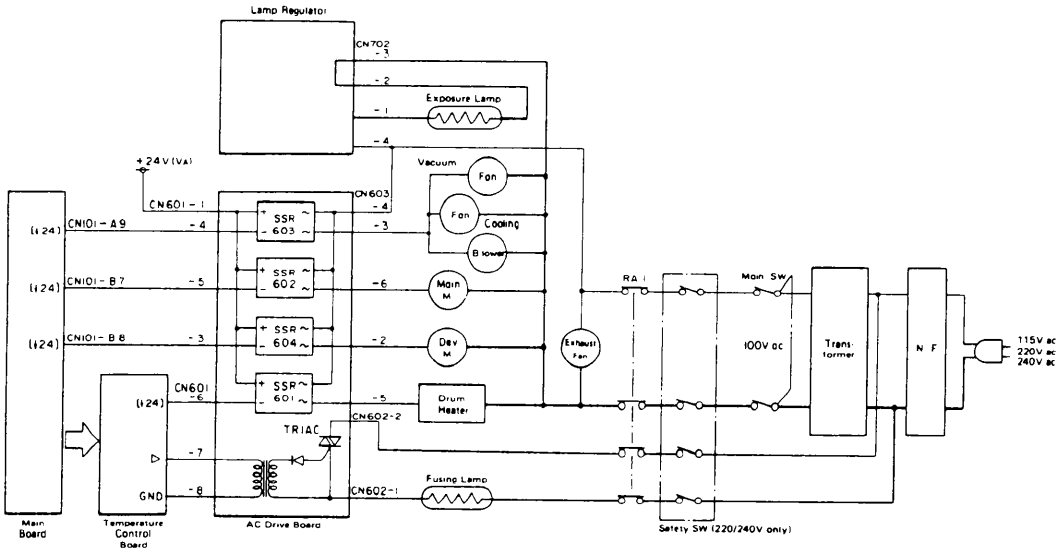

The ac drive board controls all ac motors, fans, drum heater, and the fusing lamp. The motors and drum heater receive ac neutral from RA-1. Ac hot is supplied from RA-1 to the ac drive board and to one ac terminal of each solid state relay (SSR). The other ac terminal of each SSR independently goes to its respective component.

The "+" dc terminal of each SSR is supplied with 24Vdc while the "-" terminal returns to its control device on either the main board or temperature control board. To activate an SSR the main board (or temperature control board) supplies a low signal to the SSR. This results in turning on the triac inside the SSR and allowing ac to energize the component. To de-energize the component, the main board (or temperature control board) removes the low signal to the SSR. This turns off the SSR and de-energizes the component.

The fusing lamp receives ac voltage directly from the wall. It will be controlled by a triac. The triac is energized and de-energized through the use of phase control. More detail on this subject is given in the section on fusing.

Turn on the VCR for a lecture on Power Distribution.

Note: Stop the tape at any time if you need to review the material that is being covered.

Point-to-Point Worksheet

This worksheet will enable you to verify some of the signals referred to during the power distribution lesson and to reinforce your understanding of the Point-to-Point diagram.

Note: Connector locations may be found by referring to the Connector Layout Sheet in your Field Service Manual.

Checking the Wall Outlet:

1. Select the 200 VAC scale of your meter. Connect your meter across AC hot and AC neutral.
   What voltage did you read? _____ VAC
   Acceptable voltage output is 115 VAC ± 10%.

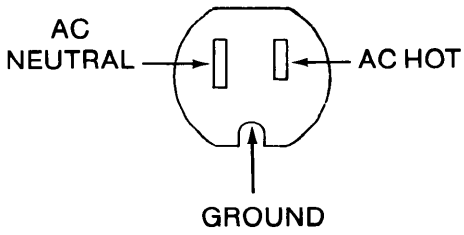

2. Connect your meter across AC neutral and ground.
   What voltage did you read? _____ VAC
   Acceptable voltage output is 3 VAC or less.

3. Connect your meter across AC hot and ground.
   What voltage did you read? _____ VAC
   Acceptable voltage output is 115 VAC ± 10%.

AC Distribution:

4. At the terminal block, connect meter across AC hot and AC neutral.
   What voltage did you read? _____ VAC

5. Measure AC into power supply at CN61-1 and -3 (E2).
   What voltage did you read? _____ VAC

DC Standing Voltages:

6. Set your meter on the highest DC voltage scale and check the 24V (VA) supply placing your black lead on TP102 (Board Ground) and your red lead to TP105.
   What voltage did you read? _____ VDC

7. Now check your 5V supply by moving your red lead to TP106.
   What voltage did you read? _____ VDC

8. Check your power pack supply voltage at CN31-8 (24VP) and CN31-2 (GND VP) (E2).
   What voltage did you read? _____ VDC

Safety Circuit:

9. Check the trigger for RA-1 with the red lead of the meter at CN101-A3 (C3) and the black lead on the board ground.
   What voltage did you read? _____ VDC
   What voltage do you see at CN102-A4 (Thermofuse) (C3)? _____ VDC
   Keeping your meter at the same place, simulate an open thermofuse by pulling out the fusing unit with the power on. Now what voltage do you see? _____ VDC
   What is on the display? _____
   What is the voltage at CN101-A3 (RA-1 Trigger)? _____ VDC

Main Board Control of RA-1:

10. Create a misfeed by holding the paper in the cassette.
    What voltage do you read at CN101-A3? _____ VDC

Triggering AC Components:

11. Monitor the DC trigger for the developer motor at CN101-A8 (C3).
    What voltage did you see in standby? _____ VDC Energized? _____ VDC
    Monitor the AC switching across CN603-4 and CN603-2 (E3) (AC Drive)
    Voltage in standby? _____ VAC Energized? _____ VAC
    Unplug developer motor (CN74) and check again.
    Voltage is standby? _____ VAC Energized? _____ VAC

Triggering DC Components:

12. Monitor the trigger for the registration clutch at CN101-B10 (C2).
    What was the voltage in standby? _____ VDC Energized? _____ VDC

Sensors:

13. Monitor the paper feed sensor CN102-A5 (C2).
    What was the voltage without paper? _____ VDC With paper? _____ VDC

14. Monitor the scanner home position sensor (CN302-A9) (D1).
    Scanner at home? _____ VDC Scanner out of home position? _____ VDC

15. Monitor the pulse generator CN-102-B23 (C2).
    Voltage in standby? _____ VDC Turning? _____ VDC

SUMMARY

Knowledge Check:

Do you know? . . .
1. What a trigger looks like with a multimeter.
2. How to make voltage checks.
3. How to troubleshoot components.

Do not stop. Continue to the next page. 

Review Guide — 1

1. Which function can be performed on the FT5070 that cannot be performed on the FT5050?

   _____

2. Identify whether ADF or SADF mode should be used:

   Auto Paper Select: _____
   Auto Reduce/Enlarge: _____
   Margin Shift: _____

   Duplex I: _____
   Duplex II: _____
   Duplex III: _____

3. Match the following keys with the description of when you should use them.

   _____ Auto Reduce/Enlarge

   _____ Auto Paper Select

   _____ Select Orig. Size

   _____ Zoom Key

   A. Use when you know the size of your original but don't know what % is required to place the image onto the copy paper size that has been selected.

   B. Use to automatically have the machine copy your originals onto your selected copy paper size.

   C. Use to fine tune the % of enlargement or reduction.

   D. Use to automatically select the correct paper for your original and the % you have selected.

4. What is the speed of the copier in the 1:1 Mode using 11 x 8½ paper? _____ cpm.

5. List the ten Pre-Programmed Magnification Modes? _____

   _____

6. What type of drum is used in the FT5050/5070? _____

7. How can the auto reset function be set to include image density? _____

   _____

8. Match the following components with the correct description.

   _____ Lift Sensor

   _____ Original Size Indicator P.C.B.

   _____ Image Density Sensor

   _____ Fork Gate Switch

   _____ Inverter Sensor

   A. Controls the inverter return solenoid.

   B. Removes 24 VDC from RA-1.

   C. Detects how much paper is in cassette.

   D. Informs operator what size original to use.

   E. Actuated by pick-up roller mechanism.

   F. Detects a toner end condition.

   G. Actuated by reflected light.

Energizing RA-1

9. To energize RA-1, a complete circuit for Va is needed between power supply and main board.

   A. Which components interrupt this circuit.

   _____ _____

   _____ _____

   _____ _____

   B. With a green Print Key, what voltages would be monitored at:

   CN101-A3 [C3] RA-1: _____
   CN102-B3 [C3] Cover: _____

10. Using the connector list, fill in the information below:

	Developer Motor	**Lens Home Pos.**
A. Connector No.	_____	_____
B. No. of Pins	_____	_____
C. Color of Connector	_____	_____
D. Index No.	_____	_____
E. Coordinate Location on Point-to-Point	_____	_____

11. The Main Board supplies a (low/high) to energize the upper paper feed clutch.



Before continuing the program, have your Service Manager review your answers to the Point-to-Point Wiring Diagram Worksheet, Point-to-Point Worksheet and Review Guide #1.

I have reviewed the work performance to this point.

_____
Service Manager's Signature

Continue to the next section. 



Preventive Maintenance Schedule

Approximate Time: 45 Minutes

PREVENTIVE MAINTENANCE SCHEDULE



Find the Preventive Maintenance Schedule in the Service Tables Section of your Field Service Manual.



Turn on the VCR for a lecture on the FT5050/5070 Preventive Maintenance Schedule.



Drum

Approximate Time: 30 Minutes

DRUM

Selenium Drum

Generally selenium has the important characteristics of:

1. Being able to accept a high positive electrical charge in the dark (where the electrical resistance of selenium is high).

2. Having the ability of dissipating the electrical charge when exposed to light. (The conductivity of selenium is greatly enhanced by exposure to light.)

3. The amount of dissipation is in direct proportion to the intensity of the light. That is, where stronger light is directed to the selenium surface a smaller voltage remains on the selenium.

The sensitivity of selenium changes slightly with variations in the temperature around the drum. (Under cool conditions, the drum may be excessively charged, this will result in background or excessive image density.) To prevent this, the drum heater ensures the drum is at operating temperature also the development bias is monitored and changed accordingly to compensate for temperature variations around the drum.

If the surface temperature of the drum changes, the conductivity will also change. There are two factors that will change the surface temperature:

a) Room temperature - usually the room is cool in the morning. This will decrease the conductivity. Low conductivity causes background on the copies. To control this, a drum heater is used. Also, a thermistor will monitor the drum cavity temperature. The thermistor will change the development bias accordingly. This maintains consistent copy quality.

b) Rest Time - during a copy run, the surface temperature of the drum increases primarily due to friction between the cleaning blade and drum. The resulting change in drum conductivity is not detected quickly. This is because the drum thermistor monitors the drum cavity temperature and not the drum temperature directly.

   Also during a copy run, the drum is fatigued by light from the exposure, pre-transfer, and quenching lamps. When the drum is fatigued, the drum potential raised by the charge corona decreases. This causes light image on copies. Drum fatigue, however, stabilies over the first few copy cycles of a copy run.

   Between copy runs, the surface of the drum cools and the drum recovers from fatigue. The amount of recovery depends on the amount of rest time. The longer the rest time, the greater the recovery. So, the development bias changes according to amount of rest time. This maintains the correct image density on copies.

The selenium drum used in this model has high sensitivity, good color reproduction, and good reproduction of low contrast originals (pencil originals etc.)

Drum Heater

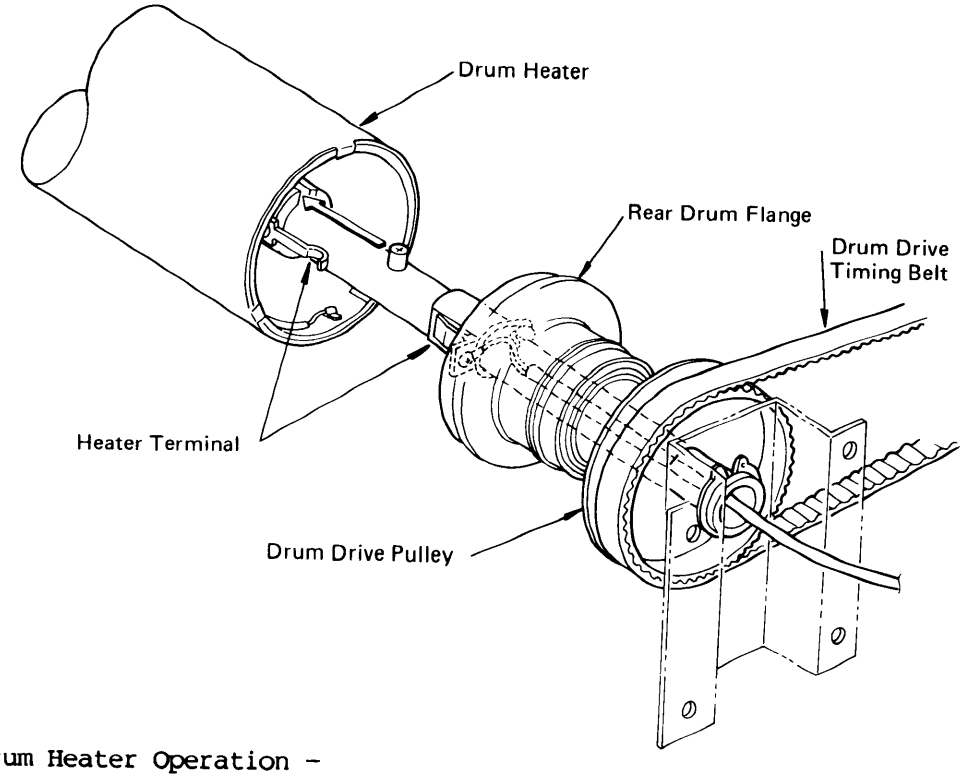

- Drum Heater Operation -

When the machine is first turned on in the morning, the drum may be cold. As previously described, if the drum is cold then the copies may have background. To prevent this, the drum heater will turn on and warm the drum to a minimum operating temperature. The heater will also become active if air-conditioning causes the temperature to drop below minimum operating level.

The temperature control board monitors drum temperature through the drum heater thermistor (TH-1) located on the erase lamp unit. The temperature control board. operates the heater in order to raise the drum surface temperature to the correct operating temperature (35°C).

To save power, the drum heater is turned off during the copy cycle.

The electrical contacts for the drum heater are located on the rear end of the drum shaft. To ensure that the drum heater will not rotate there is a pin in the drum shaft and a slot in the drum heater.

The drum heater acts as a drum guide when the drum is inserted or pulled out. After the drum is inserted, the front flange is set and tightened. Tightening the front drum flange pushes the drum and causes the drum to be held tightly between the front and rear flanges. When fully tightened the inner surface of the drum does not contact the heater.

The drum does not have a drive gear. It is driven by the drum drive timing belt. The timing belt rotates the drum drive pulley. The pulley is attached to the rear flange, therefore the drum rotates because of the friction between it and the rear flange.

- Drum Heater Control -

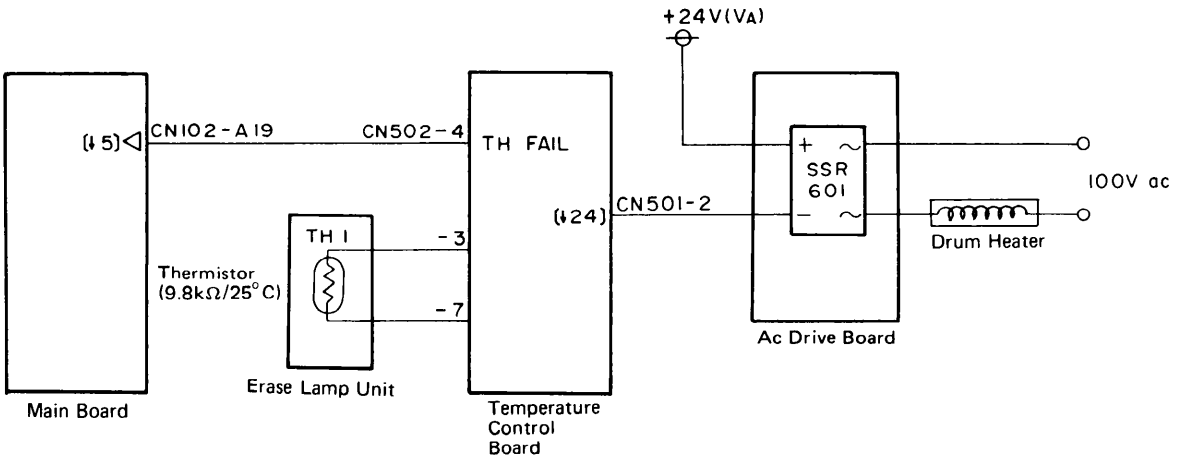

One of the thermistors (TH1) on the erase lamp unit monitors the drum temperature. When the temperature of TH-1 is below 22°C, the temperature control board supplies a low signal to the CN501-2. This low activates SSR601 on the ac drive board and turns on the drum heater. When the temperature reaches 22°C (the resistance of the thermistor becomes approximately 11KΩ), the temperature control board sends a high signal which turns the heater off.

- Thermistor Failure - ("53")

The temperature control board monitors the drum heater thermistor. If the thermistor circuit opens, the temperature control board sends a low signal to the main board (CN102-A19). This signal commands the main CPU to stop the copier, light the Call Service indicator, and display self-diagnostic code "53".

Code "53" also indicates an abnormal condition in the fusing temperature control.

Handling the Drum

1.Never touch the drum surface with bare hands.

2.Store the drum in a cool dry place away from heat.

3.When cleaning the drum, always use a pair of gloves. Do not throw away cotton used for cleaning. Bring it back to the service depot for disposal according to local regulations.

4.Always prime the drum with setting powder after cleaning the drum, and when installing a new drum. This should be done within one minute in a location not exposed to room light.

5.To protect the drum, always apply setting powder to a new cleaning blade and/or a new cleaning brush before installing them.

6.Drum conditioning is necessary when a new drum is installed. In addition, it should be done at the following times:

1) When image density is reduced due to over-exposure of the drum.

2)After cleaning the drum.

3)When the drum is lightly scratched.

7.Always keep the drum in the protective sleeve when inserting or pulling the drum out of the copier (except when applying setting powder).

8.Before inserting or pulling out the drum, the cleaning unit should be pulled slightly out to avoid drum damage by the pick-off pawls.

9.Before inserting the protective sleeve on the drum while it is in the copier, always take out the development unit. If the sleeve is inserted while the development unit is in the copier, the edge of the sleeve will scrape off developer from the development roller.

10. Send used drums to the distributor according to standard procedure.



Turn on the VCR for a lecture on the Drum.



Drum Charge

Approximate Time: 30 Minutes

DRUM CHARGE

Overview

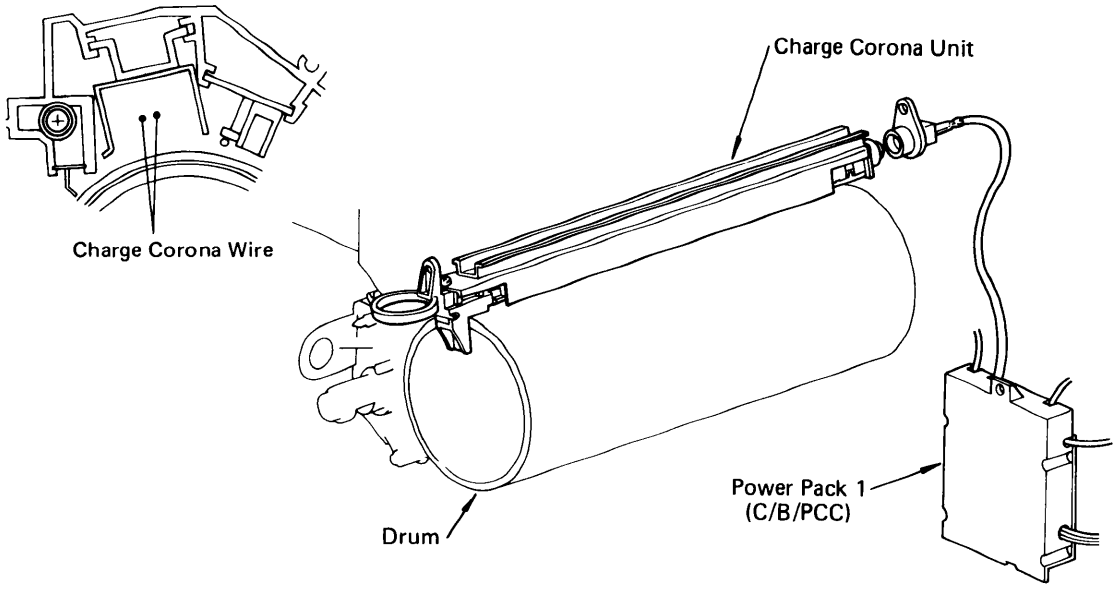

This model uses a dual wire corotron and a highly sensitive selenium drum. The corona wires generate a corona of positive ions when a high positive voltage is applied by the charge power pack. The selenium coating receives a uniform positive charge (approximately 800V) as it rotates past the corona unit.

Since the drum has high sensitivity, it is difficult to achieve a uniform surface charge. For this reason, a dual wire corotron is used as opposed to the single wire type.

The main motor fan and the cooling fan provide a smooth flow of air to the interior of the charge corona unit to prevent uneven buildup of positive ions, which could result in uneven image density.

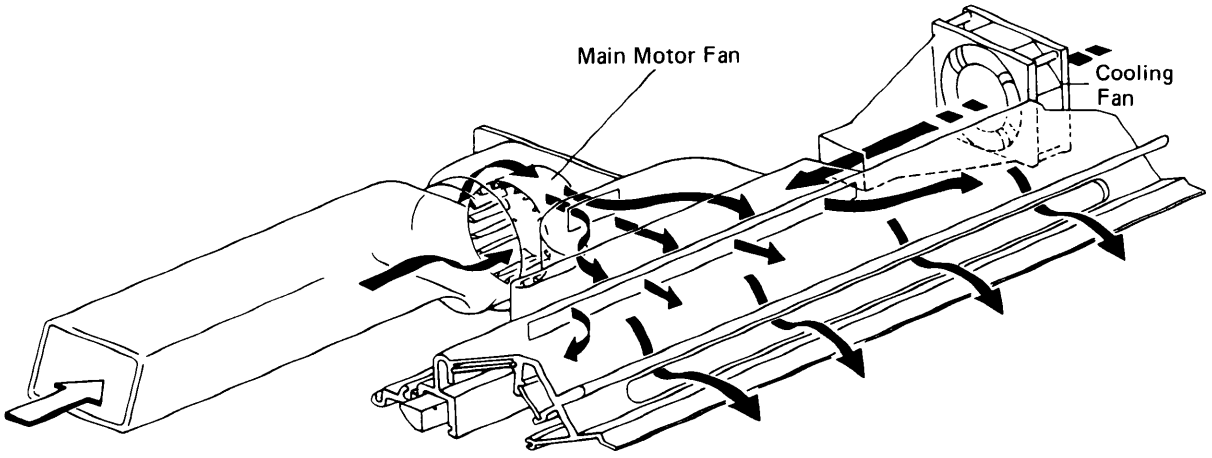

Corona Wire Cleaner

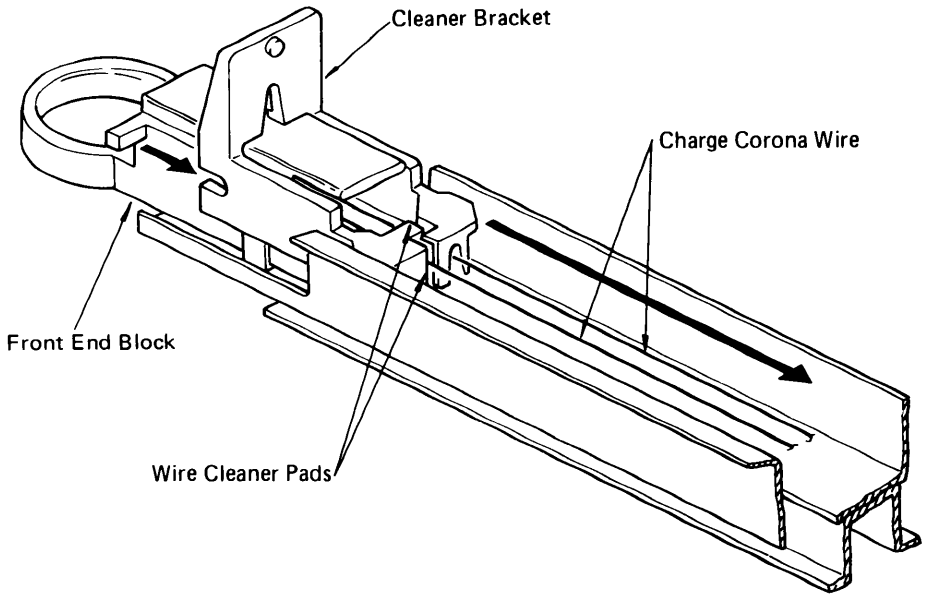

The flow of air around the charge corona wires may possibly deposit paper dust or toner particles on the corona wires. These particles may interfere with charging and cause low density bands on copies. The wire cleaner allows the operator to correct this problem by simply pulling out and pushing in the corona unit.

Each corona wire is held between two pads on the wire cleaner bracket. The wires ride between the pads when the unit is pulled out and the pads clean off any particles on the wires.

Charge Corona Power Pack

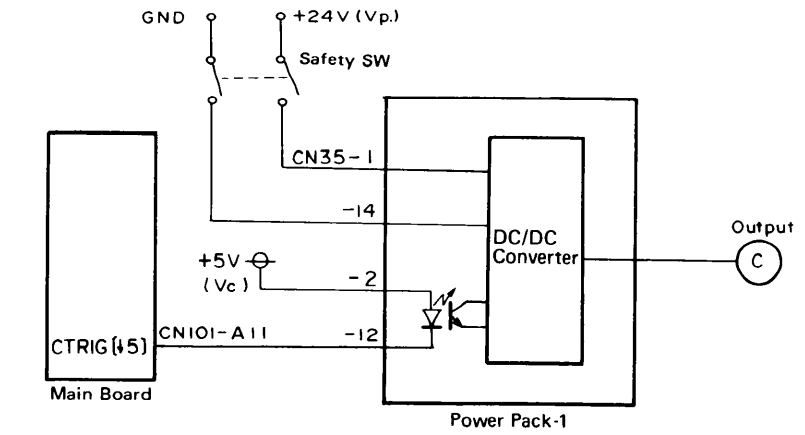

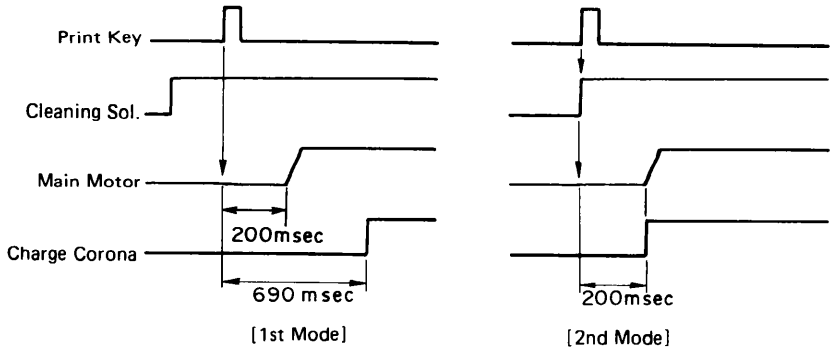

On this machine the cleaning blade remains in contact with the drum for 15 minutes after the machine is switched on or after copy run end. This results in a small amount of toner being left on the drum when the cleaning blade solenoid is de-energized. To prevent this toner from contaminating the developer seals, the ON timing of the charge corona has two modes of operation.

1st Mode

If the cleaning blade solenoid is energized when a copy cycle is initiated, then the CPU will trigger the charge power pack (low signal at CN101-A11) 690ms after the Print key is depressed.

2nd Mode

If the solenoid is de-energized when a copy cycle is initiated, the CPU will trigger the charge corona power pack (low signal at CN101-A11) 200ms after the Print key is depressed.



Referring to the Field Service Manual, read the following:

☐ Drum Current Adjustment
(Charge, Transfer, Separation, Pre-Cleaning)



Turn on the VCR for a lecture on Drum Charge and Corona Current Adjustments.



Perform the Corona Current Adjustments.

Continue to the next section. 



Erase

Approximate Time: 45 Minutes

ERASE

Overview

The erase lamp consists of a line of LEDs extending across the full width of the drum.

The erase lamp has three functions: lead edge erase, side erase, and trail edge erase. Trail edge erase begins after the trail edge of the copy image has passed the erase lamp. Therefore, it does not appear on the copy.

The erase lamp unit also has two thermistors which detect the temperature around the drum: TH-1 is used for drum heater control and TH-2 is used for development bias voltage control.

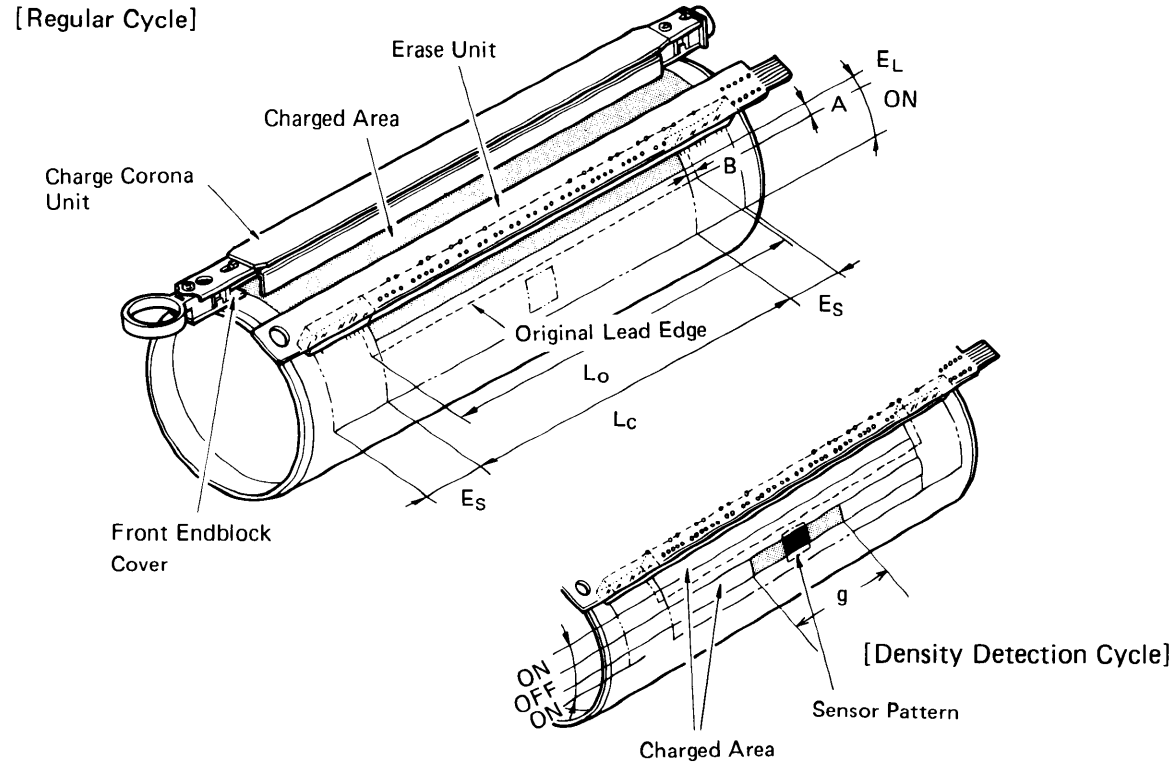

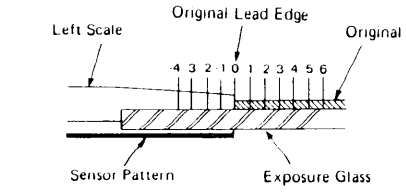

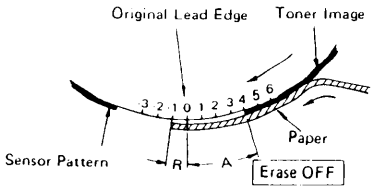

A: Lead Edge Erase Margin --- 4 ± 1mm

B: Side Margin --- 2.0 ± 2.0mm each, total of both sides margins --- less than 4.0mm

L_O: Original Image width

L_C: Charged width on the Drum

E_L: Lead Edge Erase

E_S: Side Erase

R: Paper Lead Edge Registration --- 0 ± 2mm

- Lead Edge Erase -

The entire line of LEDs turns on when the main motor turns on. It stays on until erasure slightly overlaps the lead edge of latent image on the drum (A: Lead Edge Erase Margin). This prevents the toner density sensor pattern from being developed on every copy cycle, and prevents the edge of original from appearing on copy image. The width of the lead edge erase margin can be adjusted by the DIP SWITCH (SW302-6, -7 and -8).

DIP SW302 (on the Optics Board)

6	0	0	0	0	1	1	1	1
7	0	0	1	1	0	0	1	1
8	0	1	0	1	0	1	0	1

Narrower ← → Wider

0: OFF
1: ON
One step: 0.8mm (0.03")

During image density detection cycles (once every ten cycles), the erase lamps (in block "g") turn off long enough for the sensor pattern to be developed.

- Side Erase -

Based on the paper size and on the reproduction ratio, the LEDs turn on in blocks to discharge the drum potential on both sides. This is to reduce toner consumption and drum cleaning load.

The side erase slightly overlaps the side edges of the latent image on the drum. This is to prevent the side edges of original from appearing on the copy paper as weak black lines. ("B", Side Erase Margin)

The side margins on the largest paper size (A3) produced by the front and rear corotron endblock covers instead of the erase lamps.

- Trail Edge Erase -

During normal copying process, the erase lamps turn on after the latent image has passed. Therefore, a trail edge erase margin cannot be observed on the copy. The erase ON timing is the same as charge corona OFF timing. During enlargement or reduction, the trail erase on timing changes according to the paper size and the reproduction ratio. The ON timing for the trail edge erase is pre-programmed.

Erase Operation

The table below shows which erase lamps turn on according to the paper size and reproduction ratio selected. The table also shows which display will appears on the indicator screen when a reproduction ratio is selected.

Example: Operator selects 71%, while A4 lengthwise paper is in the cassette. Indicator screen displays A3 ---> A4. In this case, erase lamps "a", "b", "c", and "d" light for side erase.

- A4/A3 Version -

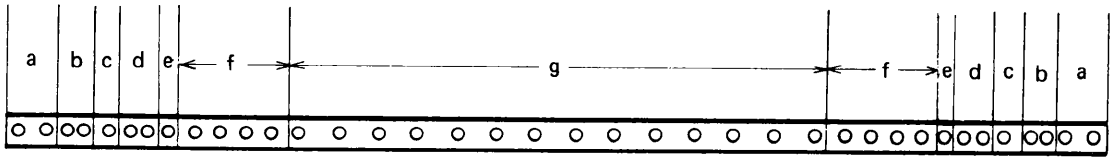

	Full Size	Reduction/Enlargement	
LED ON	Paper Size	Reproduction Ratio	Machine Displays
none	A3 A4 sidewise	141% 122% 115% 94%	A4 → A3 F → A3 B4 → A3
"a"		93% 88%	
"a" and "b"		87% 83%	
"a", "b" and "c"	B4 B5 sidewise	82% 75%	B4 → A4
"a", "b", "c" and 'd"		74% 72%	
"a", "b", "c", "d" and "e"	A4 lengthwise	71% 65% 51%	A3 → A4
"a", "b", 'c", "d", "e" and "f"	A5 lengthwise	50%	A3 → A5

- LT/LDG Version -

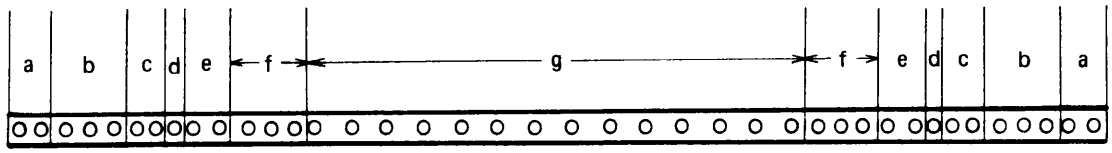

	Full Size	Reduction/Enlargement	
LED ON	Paper Size	Reproduction Ratio	Machine Displays
none	11" X 17" 11" X 8½"	141% 129% 121% 94%	8½" X 11" → 11" X 17" 8½" X 14" → 11" X 17"
"a"		93% 86%	
"a" and "b"		85% 78%	8½" X 13" → 8½" X 11"
"a", "b" and "c"	8½" X 11" 8½" X 14"	77% 75%	8½ X 14" → 8½" X 11"
"a", "b", "c" and "d"		74% 66%	11" X 15" → 8½" X 11"
"a", "b", "c", "d" and "e"		65% 51%	11" X 17" → 8½" X 11"
"a", "b", "c", "d", "e"and "f"	5½" X 8½"	50%	11" X 17" → 5½" X 8½"

Example: Operator selects 77%, while 8½" x 11" lengthwise paper is in the cassette. Indicator screen displays 8½" x 14" ---> 8½" x 11". In this case, erase lamps "a", "b", and "c", light for side erase.

The zoom function allows non-standard reproduction ratios to be obtained. With standard reproduction ratios, the side erase slightly overlaps the latent image. With non-standard ratios, however, the side erase does not always overlap the latent image. To fit the whole image on the copy, the erase lamp lights one setting larger than the latent image. At certain reproduction ratios, this results in black bands appearing on both sides of the copy between the image and side erase. These black bands are within specifications because the erase lamp has only 7 settings.

Erase Lamp Circuit

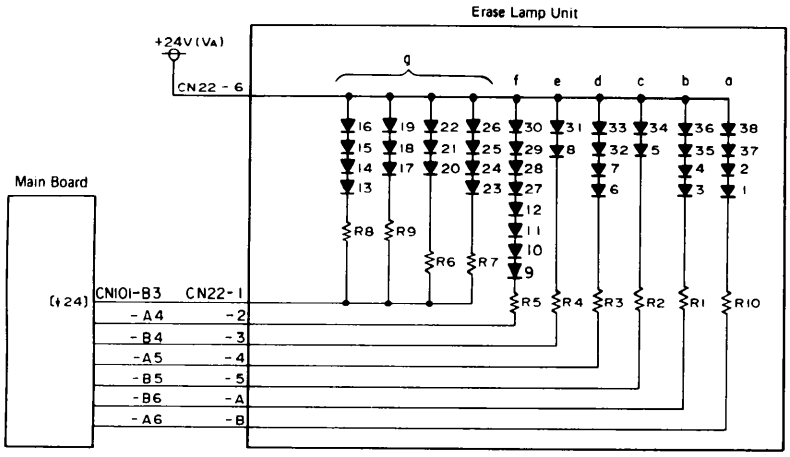

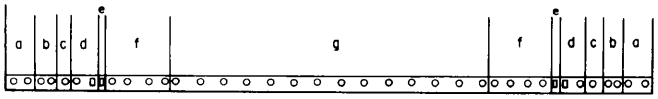

[A4/A3 Version]

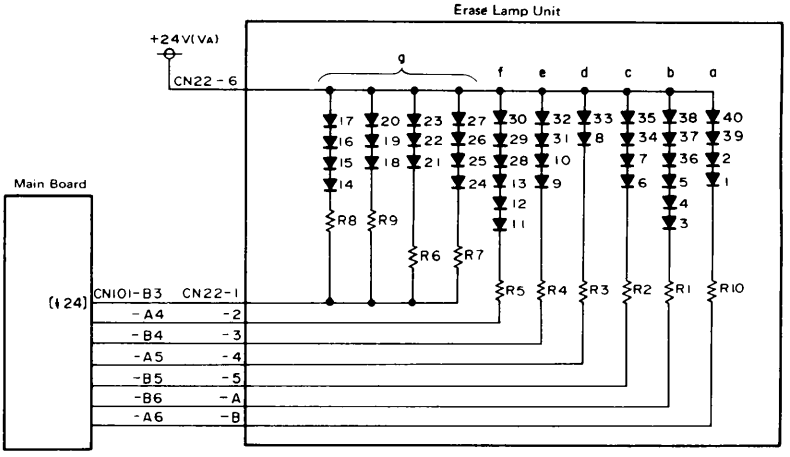

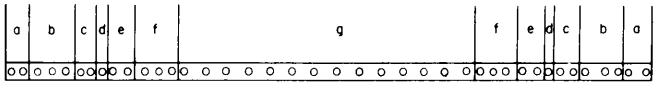

[LT/LDG Version]

Erase lamp blocks are turned on and off by the main board based on the paper size and reproduction ratio.

The CPU on the main board selects the appropriate LEDs by outputting a low signal at the correct main board pin.

Turn on the VCR for a lecture on Erase.

Drum, Drum Charge, and Erase Worksheet

This Worksheet will allow you to become more familiar with the Drum, Drum Charge, and Erase Systems.

PART I — DRUM

A. Remove the following components from the copier and place them on your bench:
   1. Photoconductor drum
   2. Charge corona unit
   3. Erase lamp unit

B. What would occur if the photoconductor drum is left exposed to light for a period of time? _____

_____

C. If the drum was overexposed, what can be done to correct this situation? _____

_____

D. Using your Service Training Manual, pages 4-5 through 4-8 (component layout), identify the following components:
   1. Main motor fan
   2. TH1 (drum temperature thermistor)
   3. TH2 (bias thermistor)
   4. Drum heater
   5. Charge corona power pack

   Reinstall the Drum, Charge Corona Unit and Erase Unit back into the copier.

PART II — DRUM CHARGE

The drum will be charged by the charge corona. The charge corona receives its high voltage from the charge corona power pack.

A. The main board will provide the power pack with a trigger. The trigger for the charge power pack can be found at CN _____ with _____ vdc being present during standby and _____ vdc when a trigger is supplied.

   ☐ **CONFIRM WITH YOUR METER!!**

B. 24 vdc with its own dedicated ground will also be applied to the power pack. This voltage can be measured across CN _____ and CN _____.

   ☐**CONFIRM WITH YOUR METER!!**

C. A loss of 24 vdc or the absence of a trigger will cause _____ copies to be produced. The 24 vdc to the power pack can be disabled, by opening SW _____.

D. Confirm your statement by opening this switch (and this switch only) and producing a copy. Did you obtain the expected result? _____

E. How often should the charge corona be replaced? _____

F. When should the charge corona power pack be adjusted? _____

PART III — ERASE

The erase lamp assembly is used to provide the borders around a copy.

A. The erase lamp unit consists of _____ LEDs. The _____ board sends erase lamp data to the _____.

SUMMARY

Knowledge Check:

Do you know? . . .
1. What type of drum is used in the FT5050/5070?
2. Why a drum heater is incorporated?
3. What is used to adjust lead edge erase margins?

If you've answered yes to all of the above, you have successfully completed this lab.

If you are unsure on any of these subjects, please see your instructor.



Before continuing the program, have your Service Manager review your answers to the Drum, Drum Heater, Charge Corona, and Lamp Removal.

I have reviewed the work performance to this point.

_____

Service Manager's Signature

Continue to the next section. 



Exposure

Approximate Time: 45 Minutes

EXPOSURE

Overview

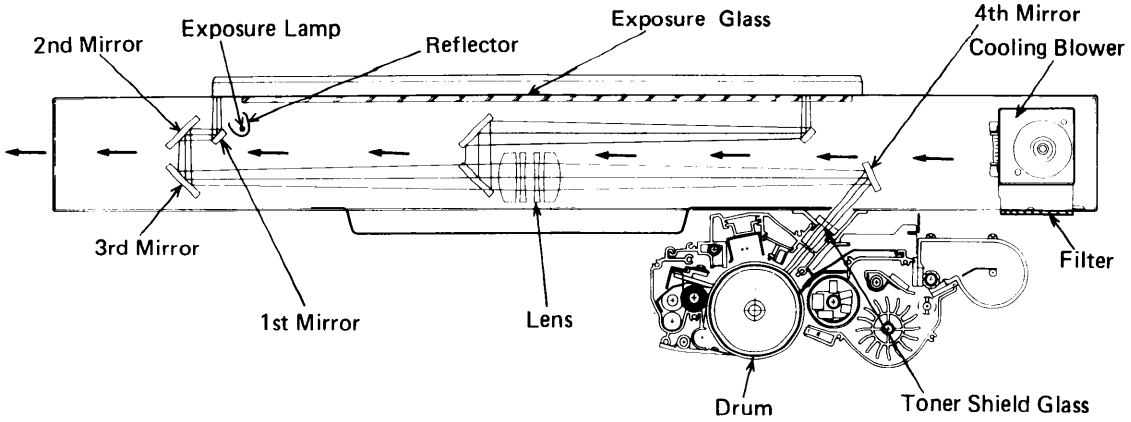

During the copy cycle, an image of the original is reflected onto the drum surface via the optics assembly. Light from the exposure lamp is concentrated by the reflector and reflected off the original to the 1st mirror. The light is then reflected to the 2nd and 3rd mirrors and goes to the through type lens. After passing through the lens, the light is reflected by the 4th mirror and passes through the toner shield glass. Then, the light from the original strikes the drum surface and forms a latent image on it. The toner shield glass prevents toner from getting into the optics cavity.

To prevent hot air from building up in the optics cavity, the cooling blower circulates cool air into the optics cavity. The air flows from the right to the left in the optics cavity and exhausts through the vents in the top cover. This blower operates during every copy cycle. A filter is installed beneath the blower to prevent dust from entering the optics cavity.

This model has ten memorized reproduction ratios — six reductions, three enlargements, and full size. In addition, this model has a zoom function to change the reproduction ratio in steps of one percent from 50% to 141%.

Two stepper motors are used to change the positions of the lens and mirrors separately because of the wide range of the reproduction ratios. The scanner is driven by the servomotor which is controlled by the optics CPU to change the scanner speed depending on the reproduction ratio.

Another special function of this model is the series copy mode which makes duplex or two single copies from a bound document or a book original with one stroke of the Print key. The first scan is for the left side of the original. The return position, for the first scan, is half of the original. The second scan is for the right side of the original, and its return position is at the right end of the original.

Lamp Regulator

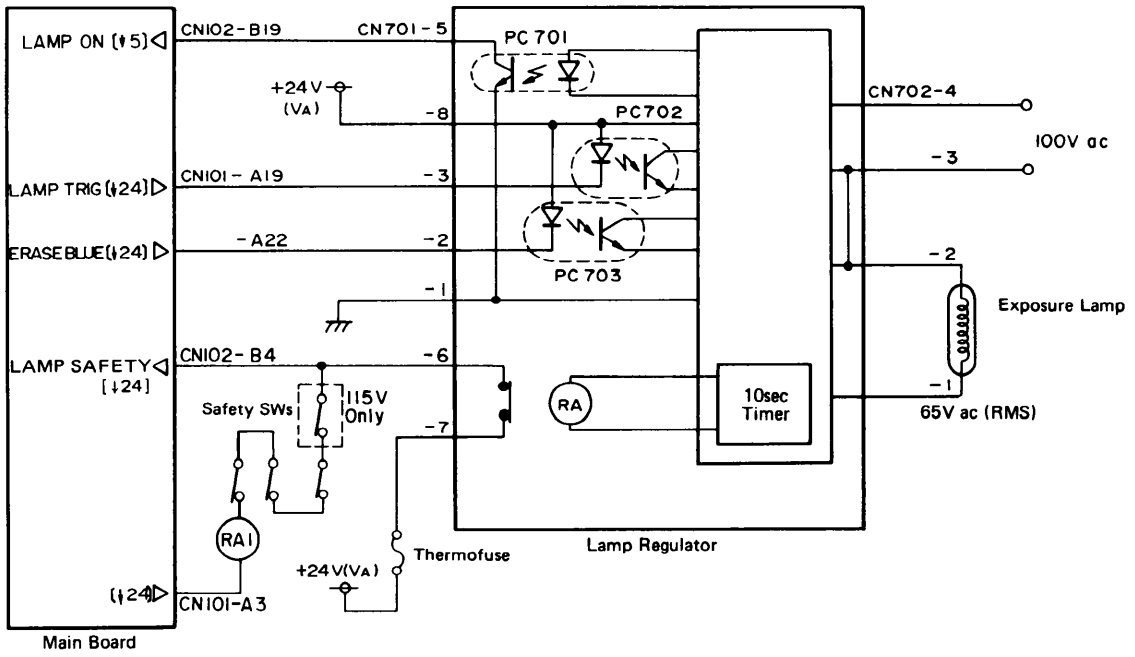

- Normal Operation -

When the Print key is depressed the main board calculates the ON timing of the exposure lamp and sends a low signal to CN101-A19. This low signal activates PC702 on the lamp regulator. The lamp regulator then turns on the exposure lamp. Also, the 10 second timer starts and a return signal (CN102-B19) is sent back to the main board. (See abnormal conditions.)

When the Erase Blue key is depressed, the CPU sends a low signal to CN101-A22. The lamp regulator output is then increased by 6.5Vac in order to erase black lines caused by the edges of paste-up or unwanted blue lines.

At the end of the forward scan (determined by the CPU) the CPU changes CN101-A19 from low to high. This causes the lamp regulator to turn off the lamp, stop the 10 second timer, and remove the return signal.

- Abnormal Conditions - "11" and "12"

The CPU monitors the return signal line (CN102-B19) to ensure that the lamp is not on during the standby condition. Any time the lamp turns on PC701 activates and CN102-B19 will be low. If a low is detected during standby, the CPU turns on the Call Service indicator, self diagnostic "11" and stops the copier. Also if the lamp filament opens, CN102-B19 will go low resulting in the same condition.

An inner timer provides hardware back-up protection. It starts when the lamp turns on. If the exposure lamp remains on for longer than 10 ± 4sec, a relay on the lamp regulator board is energized, opening the +24V line. RA-1 then turns off, the machines stops, and CN102-B4 receives a low signal. Then the CPU lights the Call Service indicator and displays the self-diagnostic code "12".

Turn on the VCR for a lecture on Exposure.

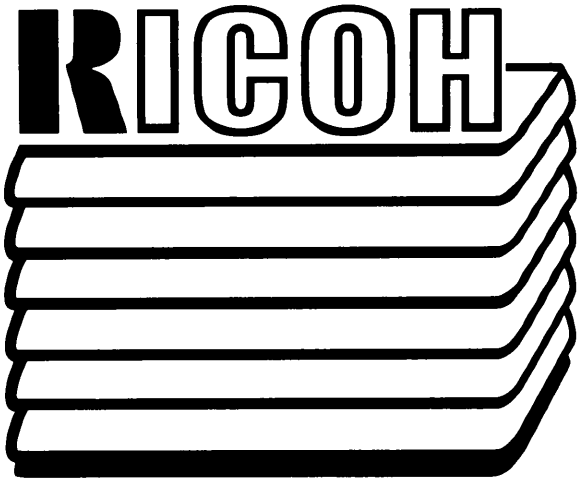

Scanner Drive

Approximate Time: 1 Hour

SCANNER DRIVE

Overview

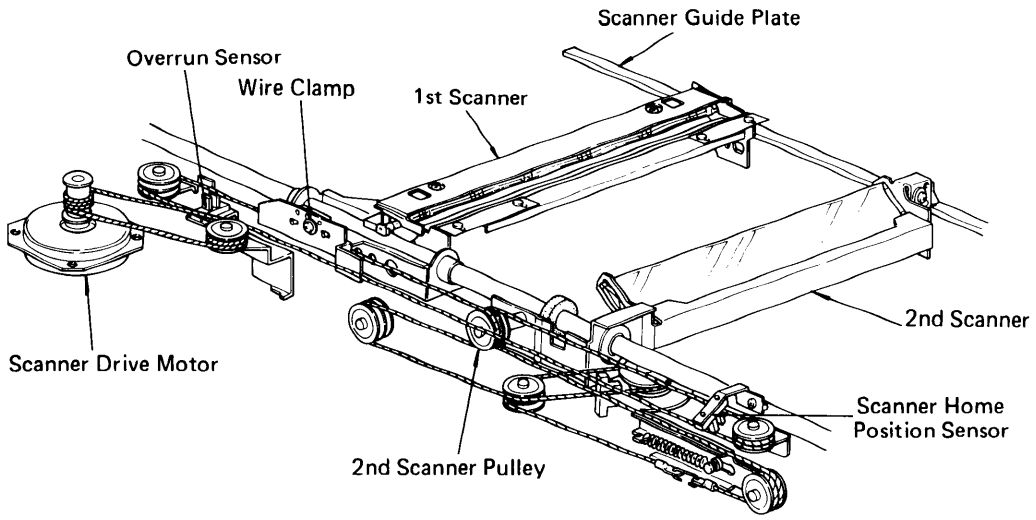

- Scanner Drive Mechanism -

This model uses a dc servomotor to drive the scanners. Since this model has a wide range of the reproduction ratios, different scanning velocities (depending on the reproduction ratios) are provided by the optics boards and scanner drive motor. The drum is driven by the main drive motor via a timing belt and its peripheral velocity is fixed regardless of the reproduction ratio.

The first scanner, which consists of the exposure lamp and the first mirror, is connected to the scanner drive wire by the wire clamp. The second scanner, which consists of the second and third mirrors, is connected to the scanner drive wire by a movable pulley (the second scanner pulley).

The pulley moves the second scanner at half the velocity of the first scanner. This is to maintain the focal distance between the copy original and the lens when the first scanner goes forward. This relationship can be expressed as:

$$V_{1r}=2V_{2r}=\frac{1}{r}V_D$$

r : Reproduction Ratio
V_{1r}: First Scanner Velocity (when the Reproduction ratio is "r")
V_{2r}: Second Scanner Velocity (when the Reproduction ratio is "r")
V_D : Drum Peripheral Velocity (210mm/sec)

The wire clamp for the first scanner also works as the actuator of the home position sensor, which controls the scanner start & stop position.

This model does not use a registration switch or return switch; registration and return timing are both controlled by the CPU.

- Scanner Overrun Sensor -

The overrun sensor is activated by the wire clamp if the scanner control system should fail. The overrun sensor protects the scanner, preventing it from slamming into other parts when the machine is in full size or reduction mode.

Scanner Drive Motor

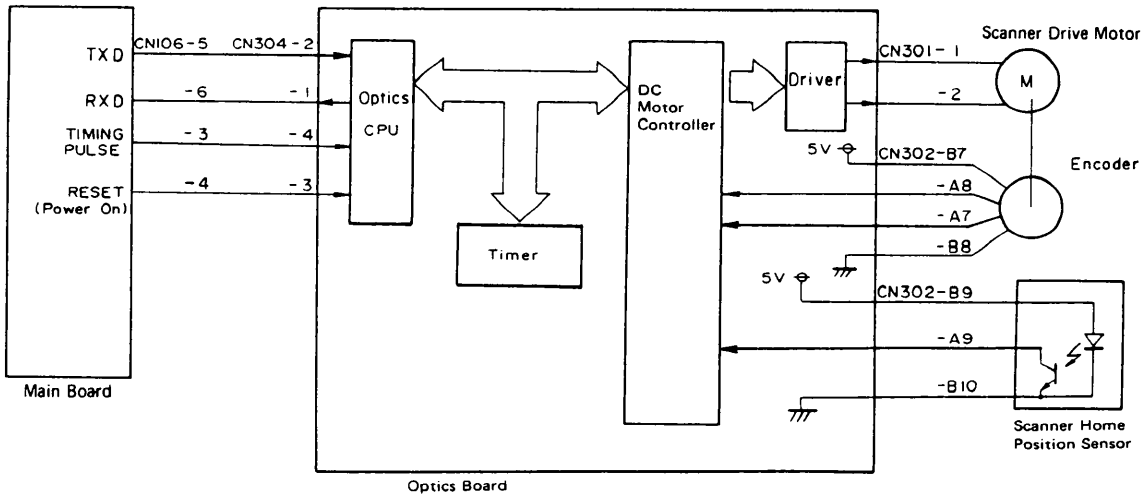

- Normal Operation -

A dc servomotor is used for the scanner drive motor. The optics board has a CPU which controls the speed of this servomotor.

The main CPU on the main board and the optics CPU communicate through a serial interface bus.

At the proper time, the main CPU sends a scanner start signal to the optics CPU. Then the optics CPU checks the drum speed by monitoring the pulses from the pulse generator. The optics CPU then determines the proper speed for the scanner drive motor. The optics CPU sends the speed data to the motor controller LSI. This controller regulates the servomotor speed by monitoring the encoder pulse.

An encoder on the servomotor has two magnetic sensors that generate two pulse trains. The optics CPU monitors the scanner speeed and direction by these pulse trains.

Second Scanner Drive

This model uses a stepper motor to change the second scanner starting position. This motor is identical to the lens drive motor. The second scanner must travel a great distance in order to accomodate the wide range in reproduction ratios.

The rotation of the second scanner drive motor is transmitted to the 2nd scanner drive pulley via a worm gear and a worm wheel.

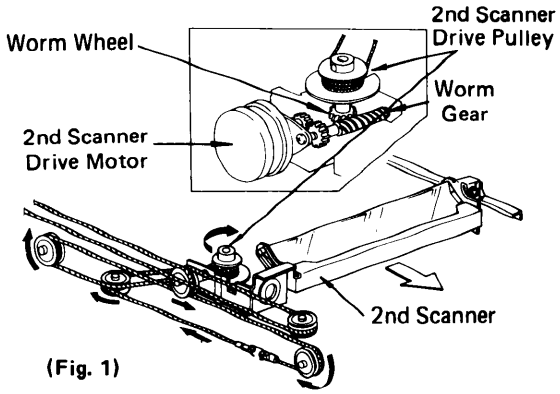

(Fig. 1)

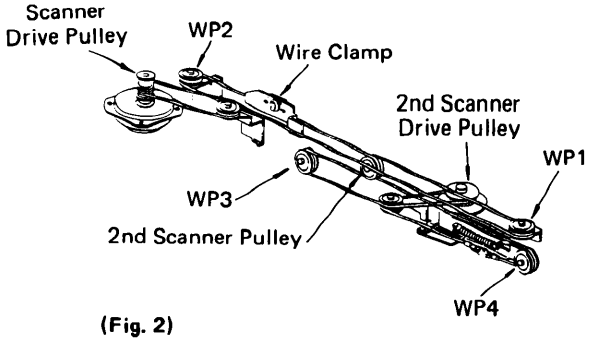

(Fig. 2)

A single scanner drive wire is used in this model. This wire controls both the second scanner starting position as well as moving the second scanner. When the second scanner drive pulley turns to change the starting position, WP1 and WP2 do not turn (Fig. 3). Thus the wire clamp stays at the same place (home position) and only the second scanner pulley moves.

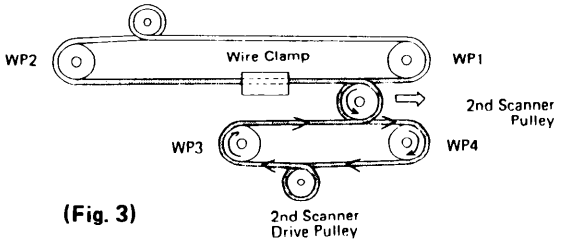

(Fig. 3)

During a copy cycle, the scanner drive pulley turns to move the second scanner. When the scanner drive pulley turns, WP3 and WP4 do not rotate (Fig. 4); however, the second scanner pulley and the wire clamp do move.

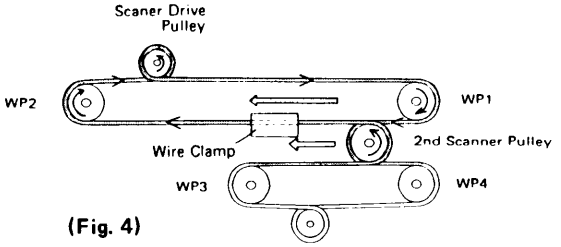

(Fig. 4)

2nd Scanner Positioning

The 2nd scanner drive pulley turns clockwise for both the reduction and enlargement modes.

To minimize stop position error, when the pulley turns counterclockwise, it always overshoots five steps and then returns to the selected position.

The 2nd scanner overshoots the stop position when turning counterclockwise. This takes out any mechanical play. The 2nd scanner will not, however, overshoot the home sensor like the lens does. The overshoot that can be seen when the 2nd scanner goes to home position is only to take out the mechanical play.

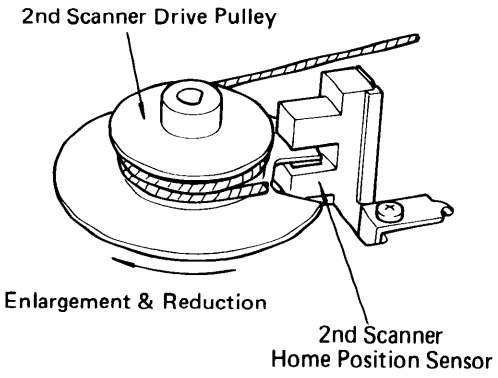

- Abnormal Condition - ("2A", "2b")

When the 2nd scanner returns to the home position, the signals will change high to low to high. The two(2) checks described below are to: first, allow no more than 3 seconds for the 2nd scanner to reach the home position sensor; second, to ensure that the motor reverses direction within 0.3 seconds.

When the scanner moves from a reduction or an enlargement position to full size position, if the optics CPU does not receive a signal change of high to low change within 3 seconds after the 2nd scanner drive motor turns on, the CPU turns on the Call Service indicator and the self-diagnostic code "2b".

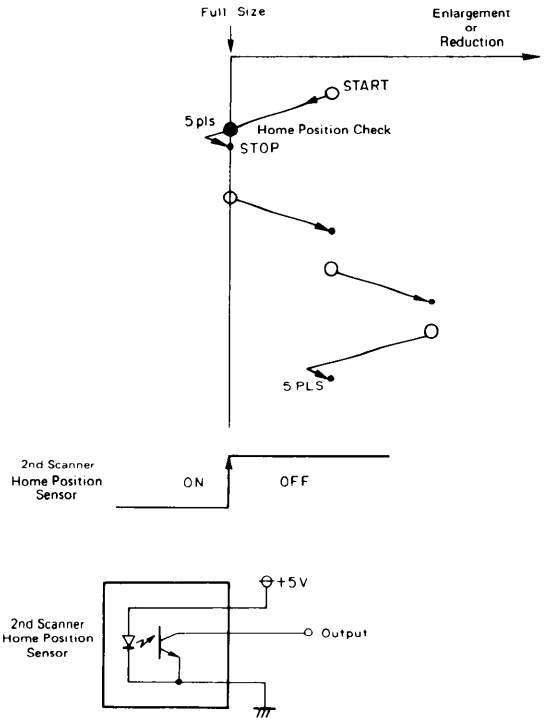

NOTE: It is important to remember that should this condition occur, the 2nd scanner pulley will overshoot the home sensor in the counterclockwise direction, causing damage to the scanner or wire.

If the signal does not change from low to high within 0.3 seconds, the CPU turns on the self-diagnostic code "2A".

- Abnormal Conditions -

The following self-diagnostic system is used for checking the scanner drive.

- Home Position Check --- Optics Board - ("21")

If the scanner is not in its home position when the main switch is turned on, then the scanner drive motor is energized until the home position sensor is activated. The CPU continually checks the pulses from the encoder. If the CPU does not receive the home position signal, 1024 pulses of the encoder after the main switch is turned on, then it lights the Call Service indicator and displays the self-diagnostic code "21". Also, if a mechanical failure occurs during copy cycle such as slipping of pulley, self diagnostic code "21" will be displayed (Loosened screw on the pulley).

- Over Run Check - ("22")

If the scanner activates the over run sensor the Call Service indicator and "22" will be displayed.

- Signal Check --- Main Board - ("23")

The optics CPU computes the registration timing after receiving the scanner start signal from the main CPU. The optics CPU then sends the registration start signal to the main board. If the main board does not receive this registration start signal, 2.7 seconds after the scanner start, the Call Service indicator and "23" will be displayed.

- Home Position Return Check --- Main Board - ("24")

In copy cycle, the home position sensor sends a scanner home signal to the optics board. The optics board will send this signal to the main board. If the main board does not receive this signal within 20 seconds from the time the scanner left home position, the Call Service indicator and "24" will be displayed. This indicates that there is a communication problem between the 2 boards.

- Encoder Pulse Check - ("2c" and "2d")

The optics CPU checks the scanner speed by monitoring two inputs: the frequency of the encoder pulses from the scanner drive motor and the signal from the scanner home position sensor. If the optics CPU detects a problem, it commands the main CPU to stop the copier, light the Call Service indicator, and display one of the self-diagnostic codes.

Self-diagnostic code "2c" is displayed when the frequency of the encoder pulses is too high (scanner speed is too high). Code "2d" is displayed when the frequency is too low (scanner speed is too slow) or when the home position sensor stays either actuated or de-actuated.



Turn on the VCR for a lecture on Scanner Drive.



Lens Drive

Approximate Time: 1 Hour 15 Minutes

LENS DRIVE

Lens Theory

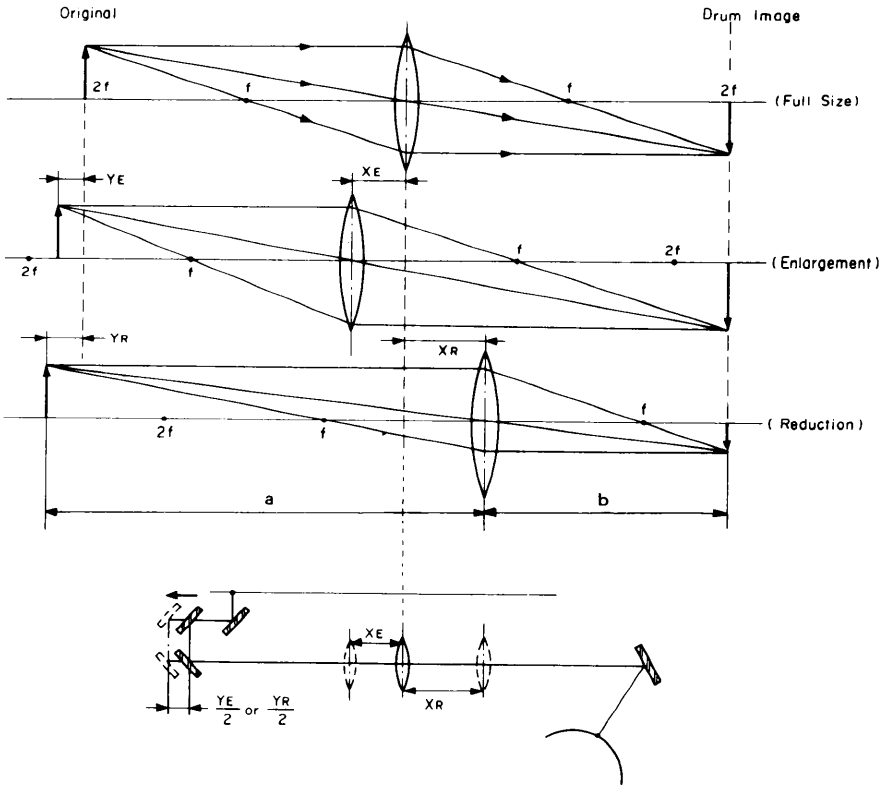

The above diagrams show the relative positions of the original, lens, and image for the full size, enlargement, and reduction positions. The exact object and image distances ("a" and "b") can be computed using the following equations.

a: The length between the original surface and the lens.

b: The length between the lens and the drum surface.

f: Focal length

m: Magnification

from equations (1), and (2);

$$a = f\left(1 + \frac{1}{m}\right) \text{ --- (3)}$$

$$b = f(1 + m) \text{ --- (4)}$$

$$a + b = f\left(2 + m + \frac{1}{m}\right) \text{ --- (5)}$$

from equations (3), (4), and (5)

m	a + b	a	b
1.414	4.121f	1.707f	2.414f
1.294	4.067f	1.773f	2.294f
1.224	4.041f	1.817f	2.224f
1.214	4.038f	1.824f	2.214f
1.154	4.021f	1.867f	2.154f
1.000	4.000f	2.000f	2.000f
0.930	4.005f	2.075f	1.930f
0.850	4.026f	2.176f	1.850f
0.816	4.041f	2.225f	1.816f
0.773	4.067f	2.294f	1.773f
0.752	4.082f	2.330f	1.752f
0.739	4.092f	2.353f	1.739f
0.707	4.121f	2.414f	1.707f
0.647	4.193f	2.546f	1.647f
0.500	4.500f	3.000f	1.500f

a + b: In the full size mode, the optical distance from the original to the drum surface is minimum. In either enlargement or reduction mode, this distance is longer.

In the full size mode,a = b = 2f

In the reduction mode,a > 2f, b < 2f a + b > 4f

In the enlargement mode,a < 2f, b > 2f a + b > 4f

Due to the mechanical component layout, the drum location can not be moved to effect a magnification change. Therefore the lens position is first of all determined for the optical distance "b". The lens drive motor moves the lens to the proper position.

The optical distances "a" and "a + b" also vary. Therefore, the second scanner drive motor moves the second scanner according to the reproduction ratio so as to provide optical distance "a".

Lens Drive

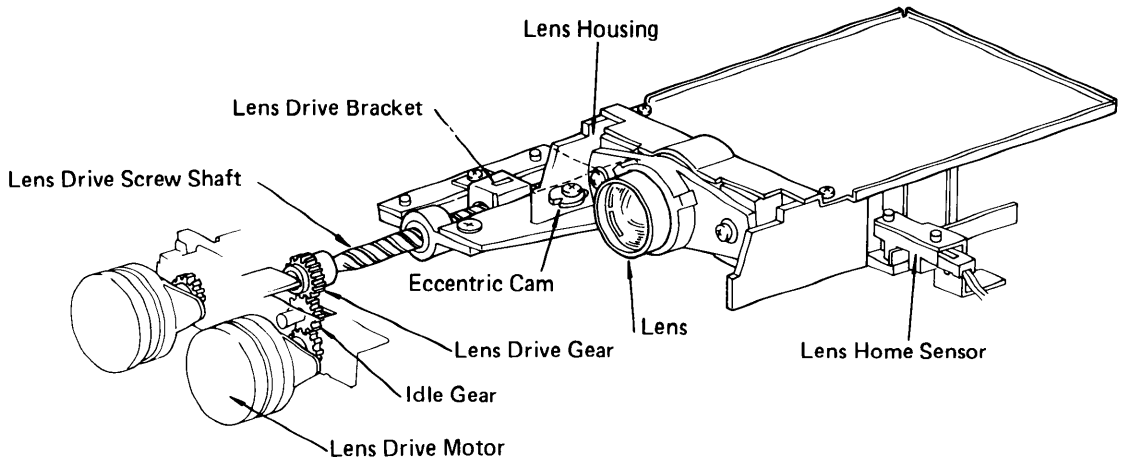

The lens drive motor (stepper motor) changes the lens position in accordance with the selected reproduction ratio so as to provide the proper optical distance between the lens and the drum surface.

The rotation of the lens drive motor is transmitted to the lens drive screw shaft, via an idle gear, to move the lens housing back and forth.

The lens home sensor informs the optics CPU when the lens is at the full size position (home position). The optics PCB determines the lens stop position in reduction and enlarge modes by counting the number of steps the motor makes. When the reproduction ratio is changed, the lens moves directly to the selected magnification position. Home position is registered only when the lens either starts from or passes through the lens home position sensor. The lens housing is connected to the lens drive bracket by an eccentric cam. This is adjusted in the factory to align the optics axis. (In the field, never adjust it.)

Light Shading Mechanism

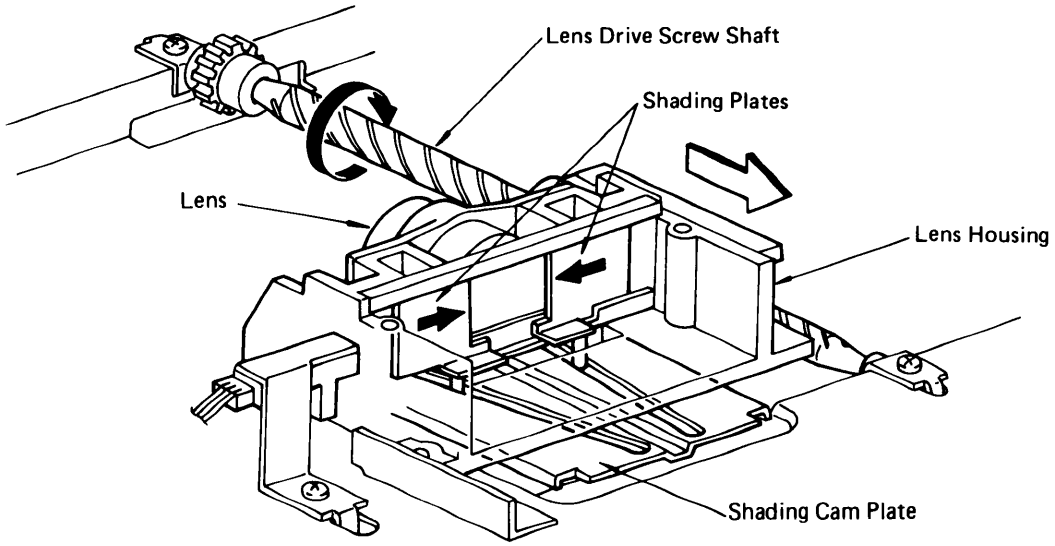

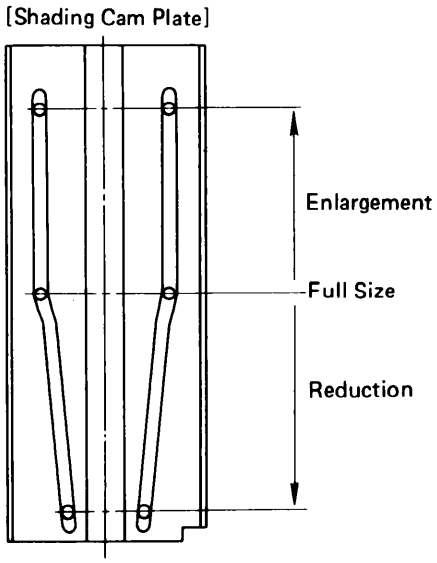

The strength of exposed light on the drum tends to increase toward the sides when the reproduction ratio is decreased in the reduction mode. This is because the image reflected light is focused through the lens. To improve the uneven illumination in the reduction mode, this model has a light shading mechanism.

Two shading plates are installed just behind the through lens. Each plate has a pin which engages with a cam groove. The cam groove on the shading cam plate is symmetrical with the lens axis.

As shown in the above figure, when the lens drive screw shaft rotates clockwise, the lens housing moves back (⇨). As the lens housing moves back, the shading plates move together according to the cam groove. The plates block the light passing through the lens to achieve an even light intensity on the drum.

Lens Positioning

In almost all cases the lens seemes to vibrate a little when it passes through the home position. This "vibration" comes even when starting from the home position. What is actually happening is that the machine is minimizing stop position error by briefly stopping and referencing the home position before going to the desired magnification position. The lens moves in discrete steps. Each step is equivalent to one drive pulse.

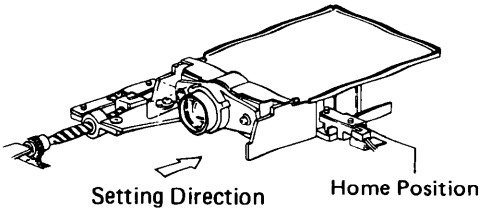

The initial home position setting is determined by the lens moving from the enlarge side toward the reduction side. This corresponds to a high to low voltage change at CN302 -All of the optics PCB when the actuator blade enters the lens home position sensor. This negative edge trigger tells the optics CPU that the lens is in the home position. Therefore, when moving from the reduction side, the lens needs to overshoot the home position (low to high voltage change) and then return to the home position (high to low change).

When moving from an enlarge position to a reduction position, the lens is already moving in the correct direction to reference the home position, so there is no "vibration".

To minimize stop position error, the lens overshoots the home position by ten steps before going back to the home position. The optics CPU monitors the lens position by counting the number of drive pulses.

The lens does not register home every time the reproduction ratio is changed. If it is moving from one reduction position to another or from one enlarge position to the other, it goes directly to the selected position. However, to reduce stop position error, the lens is always stopped while moving to the right. So when moving to a larger magnification position, the lens always overshoots five steps and then returns to the selected position. (See figure.)

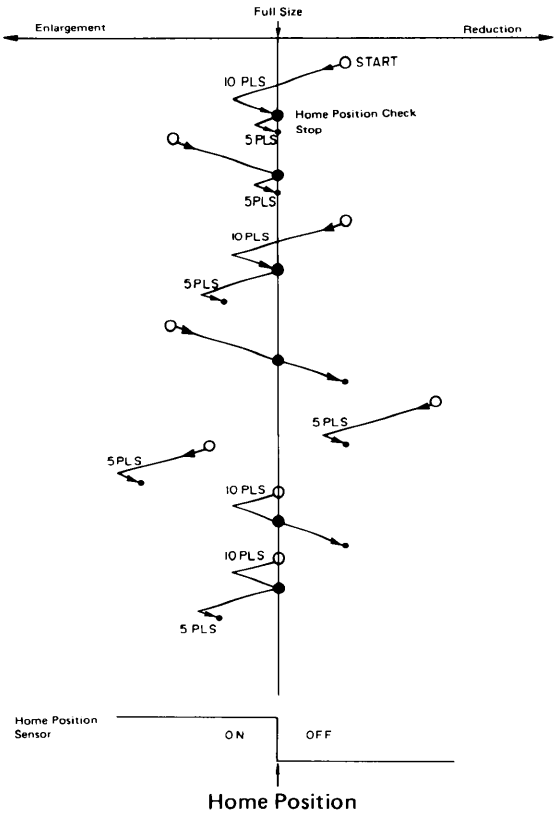

Lens and 2nd Scanner Drive Motors

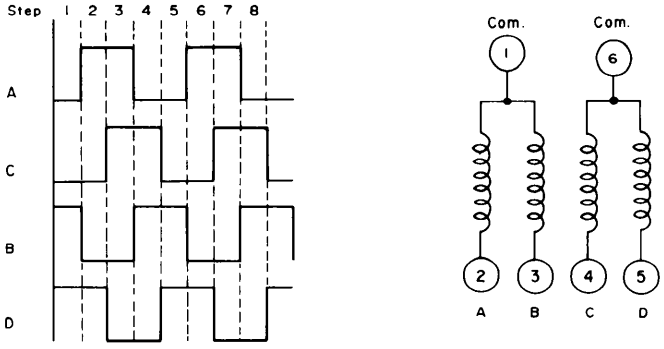

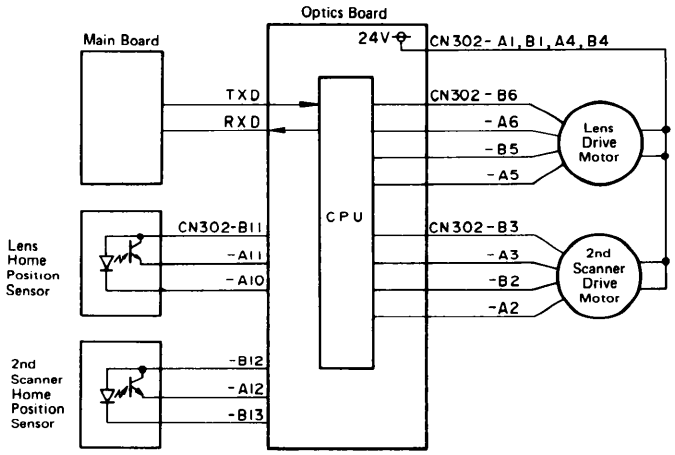

A stepper motor is used for the lens drive motor and the 2nd scanner drive motor. These stepper motors have stators, which have four coils, and have rotors which are permanent magnets.

Four coils, A, B, C and D are energized by the pulse signals as shown. At each step the rotor turns 7.5° - which works out to be 48 steps for one complete revolution. (See following page.)

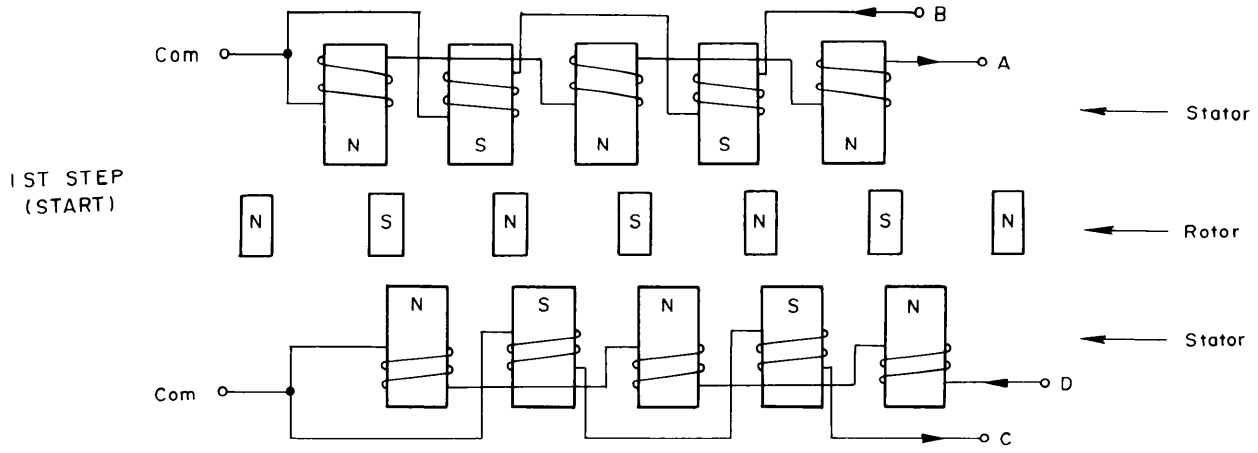
1ST STEP
(START)
Com
B
A
Stator
N
S
Rotor
D
C

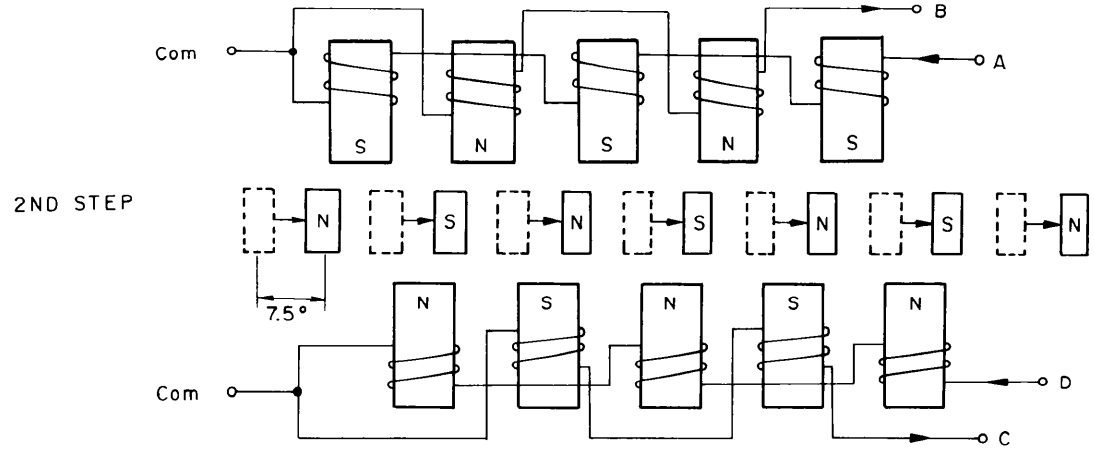
2ND STEP
Com
B
A
7.5°
D
C

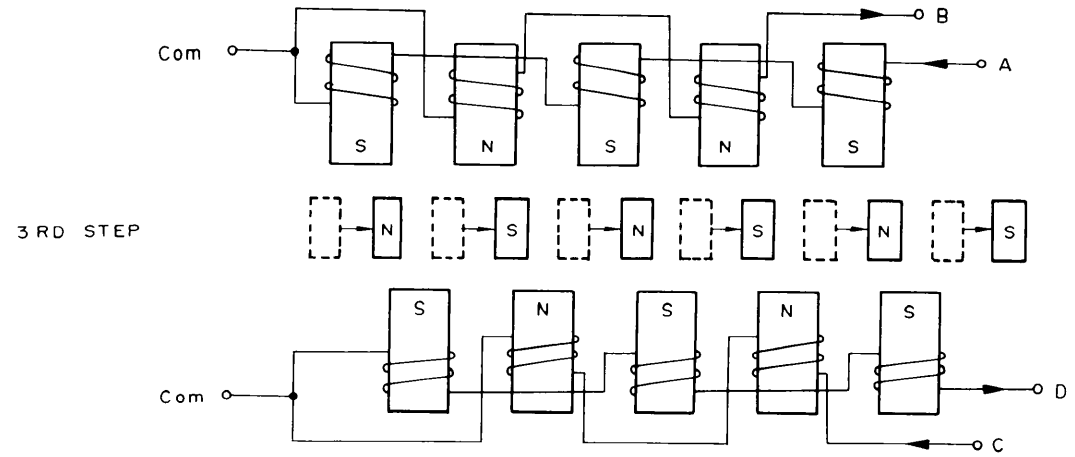
3RD STEP
Com
B
A
D
C

- Abnormal Conditions - ("28", "29")

Check, from reduction or full size to enlarge. If the optics CPU does not receive a signal of low to high voltage change 3.7 sec after the lens drive motor is on, the CPU turns on the Call Service indicator and the self-diagnostic code "28".

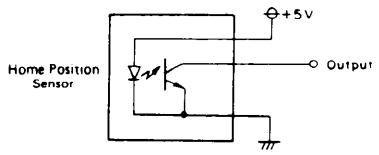

Check from enlargement to full size or reduction. If the CPU does not receive a signal of high to low voltage change 3 sec after the lens drive motor is on, the CPU turns on the Call Service indicator and the self-diagnostic code "29".

Referring to the Field Service Manual, read the following procedures:

- ☐ Exposure Glass Removal
- ☐ Exposure Lamp Replacement
- ☐ Light Intensity Adjustment
- ☐ Exposure Lamp Position (Uneven Exposure)
- ☐ Uneven Image Density Adjustment
- ☐ Second Mirror Removal
- ☐ Scanner Drive Wire Replacement
- ☐ Horizontal Magnification Adjustment
- ☐ Vertical Magnification Adjustment

Turn on the VCR for a lecture on Lens Drive and a demonstration on Uneven Image Density and Light Intensity Adjustment.

Perform the following procedures:

- ☐ Exposure Glass Removal
- ☐ Exposure Lamp Replacement
- ☐ Light Intensity Adjustment
- ☐ Exposure Lamp Adjustment (Uneven Exposure)
- ☐ Uneven Image Density Adjustment

Continue to the Exposure/Optics Worksheet and Fault Isolation Worksheet 1.

Exposure/Optics Worksheet

This Worksheet will allow you to become more familiar with the operation, removal, replacement, and adjustment of the Exposure Lamp, Scanner, and Lens Drive Mechanism. The purpose of these exercises is to allow you to remove, replace, and adjust the major components in the optics area of the FT5050/5070.

PART I — EXPOSURE LAMP

The exposure lamp will be used to illuminate the original and reflect the original's image onto the drum.

Let's investigate the exposure lamp.

A. Remove and reinstall the exposure lamp.

Caution: Before removing the exposure glass, unplug the copier from the wall outlet.

B. Check and adjust the exposure lamp position.

C. The exposure lamp trigger can be measured at the main board at CN # _____ pin _____.

CONFIRM WITH YOUR COPIER!

Now that you've replaced the exposure lamp, let's perform the light intensity adjustment.

PERFORM THE LIGHT INTENSITY ADJUSTMENT.

1. Check and adjust the light (exposure lamp) intensity.

Note: Run at least 10 copies after power up and at least 4 copies between adjustments to eliminate rest time bias compensation.

PART II — SCANNER POSITIONING

The scanner assembly in the FT5050/5070 consists of a first and second scanner driven by a servomotor.

When the scanner is positioned at home, it will be monitored by the scanner home position sensor.

LOCATE THIS SENSOR IN YOUR COPIER!

A. When the scanner is at home, _____ vdc can be measured at CN _____ of the optics board, and _____ vdc when the scanner is away.

CONFIRM WITH YOUR COPIER!

Next, we will examine the related adjustments that can be performed in the scanner area.

Horizontal magnification will allow you to "focus" the copy image, while vertical magnification will allow you to "fine" tune the magnification in the direction of paper travel.

Locate the horizontal and vertical adjustment procedure for the FT5050/5070.

PART III — MAGNIFICATION ADJUSTMENTS

1. Using the OSA-3 test chart, check and adjust the copy resolution (Horizontal Magnification).

2. Using the OSA-3 test chart, check and adjust the vertical magnification.

A. When should horizontal magnification be performed? _____

B. How often should the scanner guide rod and plate be lubricated? _____

C. With what type of lubricant? _____

Lens movement will take place when the magnification ratio is changed or when the lens home position is checked.

Remove the lens cover, locate the lens home position sensor and monitor the lens movement while changing magnification ratios.

Reinstall the lens cover.

A. How often should the lens be cleaned? _____

SUMMARY

Knowledge Check:

Do you know? . . .
1. How to adjust the exposure lamp intensity.
2. How to perform the horizontal magnification adjustment.
3. How to perform the vertical magnification adjustment.

If you've answered yes to all of the above, you have successfully completed the Exposure/Optics Worksheet.

Fault Isolation Worksheet 1

— Sections —
Drum, Drum Charge, Erase, Exposure, Scanner Drive, and Lens Drive

You have just reviewed the above sections of the copier. Now you will check your understanding of their operation. The fault isolation worksheet will help you to be familiar with actual machine operation and indications when a particular component malfunctions.

First a specific question will be asked. After you answer the question, you will be directed to create a malfunction in the copier. The machine failure that results will confirm your answer to the question that was asked. After completing each step, return the machine to the normal condition. Always turn OFF the machine before disconnecting or reconnecting connectors.

1. If the charge corona were to break, copies would appear:
   _____ A. black
   _____ B. streaked
   _____ C. blank

   Now remove the charge corona unit from the copier and make a copy.

   Was your answer confirmed? If yes, then you have a good understanding of the drum charge function.

2. If any component along the optics path were to become dirty, copies would:
   _____ A. have background
   _____ B. be undertoned
   _____ C. have white streaks
   _____ D. have dark streaks

   Now slide the toner shield glass holder out of position, place a piece of black electrical tape on the glass, replace the toner shield glass, and make a copy.

   Was your answer confirmed? If yes, then you have a good understanding of the exposure function.

3. If the Scanner Home Position Sensor were to fail while the copier was OFF, what would occur if you turned on the machine and attempted to make a copy?
   _____ A. Self Diagnostic Code "2c"
   _____ B. Self Diagnostic Code "2d"
   _____ C. Self Diagnostic Code "21"
   _____ D. Self Diagnostic Code "22"
   _____ E. None of the above

   Now disconnect the Scanner Home Position Sensor CN91. Turn ON the machine and attempt to make a copy.

   Was your answer confirmed? If yes, you have a good understanding of how the Scanner Home Position Sensor functions.

If any of your answers were incorrect, go back and review the applicable sections.

Then continue to the next page. 



Before continuing the program, have your Service Manager review your answers to the Exposure/Optics Worksheet and Fault Isolation Worksheet 1.

I have reviewed the work performance to this point.

_____

Service Manager's Signature

Continue to the next section. 



Development

Approximate Time: 1 Hour 15 Minutes

DEVELOPMENT

Overview

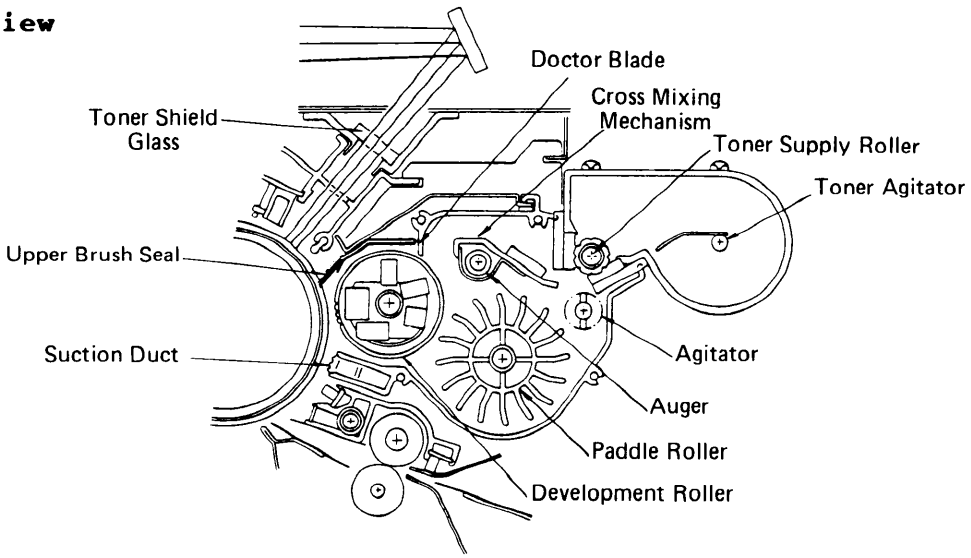

Both the development unit and the toner supply system are driven by the development motor separately from the main motor. The development unit in this model rotates at a high speed. Friction between the developer particles reduces the life of the developer. Therefore, the development motor is turned on only when required so that the friction between the developer particles is minimized.

When the development motor turns on, the paddle roller and development roller start turning. The paddle roller picks up developer in its paddles and transports it to the development roller. Internal permanent magnets in the the development roller attract the developer to the development roller sleeve.

The turning sleeve of the development roller then carries the developer past the doctor blade. The doctor blade trims the developer to the desired thickness and creates backspill to the crossmixing mechanism.

The development roller continues to turn, carrying the developer to the selenium drum. When the developer brush contacts the drum surface, the positively charged areas of the drum surface attract and hold the negatively charged toner. In this way the latent image is developed.

The development roller is given a positive bias to prevent toner from being attracted to non-image areas on the drum that may have residual positive charge. The bias also controls image density.

After turning about 100° more, the development roller releases the developer to the developer tank. A plate inhibits the magnetic field at this point so that developer releases easily.

The development unit contains one agitator. This mixes toner being added by the toner supply roller with the developer. Agitation is also provided by the paddle roller and the crossmixing mechanism.

A suction duct is installed next to the development roller to prevent loose toner from going to the ID sensor and PTL filter. Suction is created by the vacuum fan on the rear side of the machine.

Drive Mechanism

A: Development Drive Gear
B: Development Roller Gear
C: Idle Gear
D: Augar Gear
E: Paddle Roller Gear
F: Agitator Gear
G: Idle Gear
H: Toner Agitator Gear

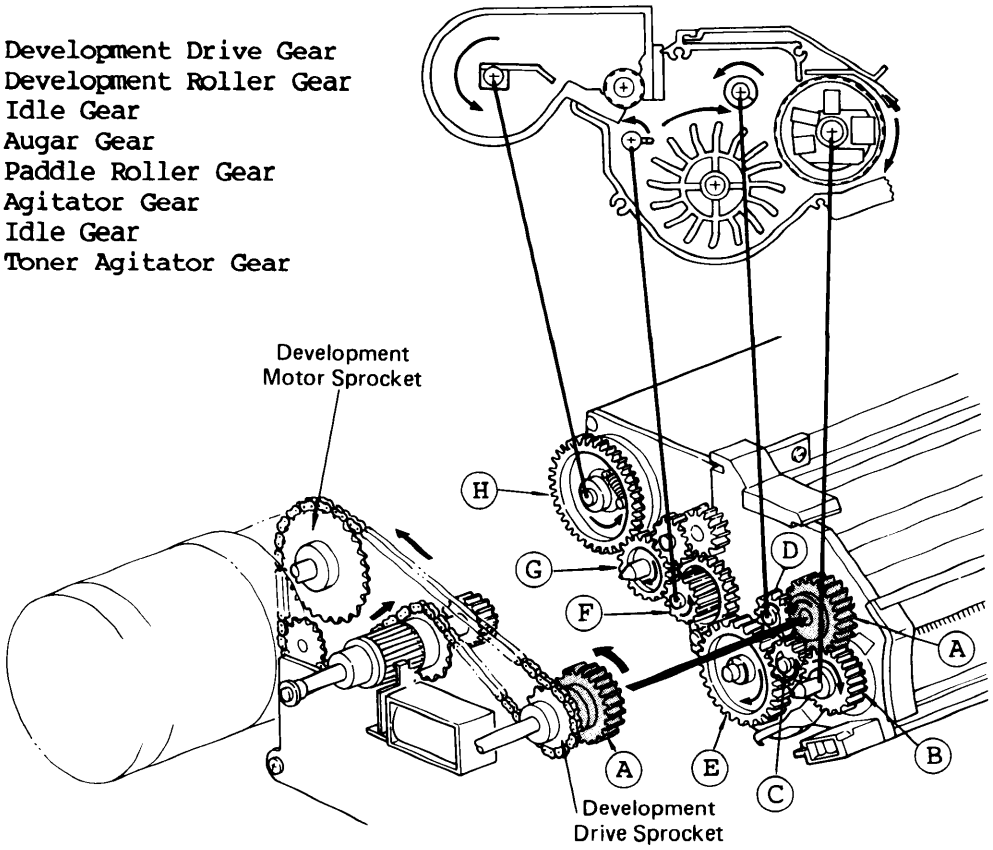

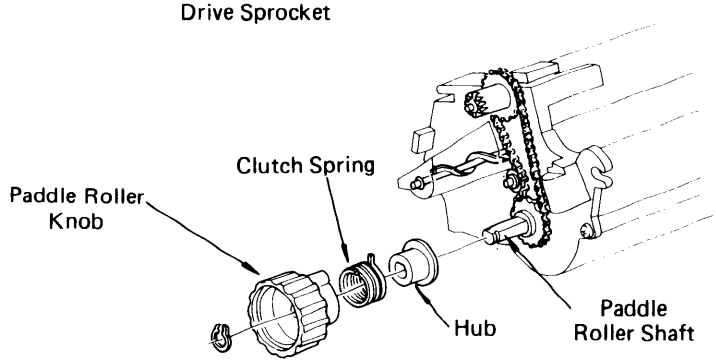

The gears of the development unit and the toner agitator gear are driven by the development drive gear (A), when the development motor is turning. The rotation is transmitted as follows:

(A) --> (B) --> (C) --> (D)
(C) --> (E) --> (F) --> (G) --> (H)

Each tooth of the development drive gear (A) is chamfered so that it can smoothly engage with the development roller gear (B) easily when the unit is installed.

The paddle roller shaft has a knob on its front end to facilitate gear engagement and to turn the rollers for the developer exchange. The paddle roller knob has a one-way clutch spring inside. It prevents the development roller from turning in the opposite direction which would cause the developer brush to damage the upper brush seal.

Seals and Duct

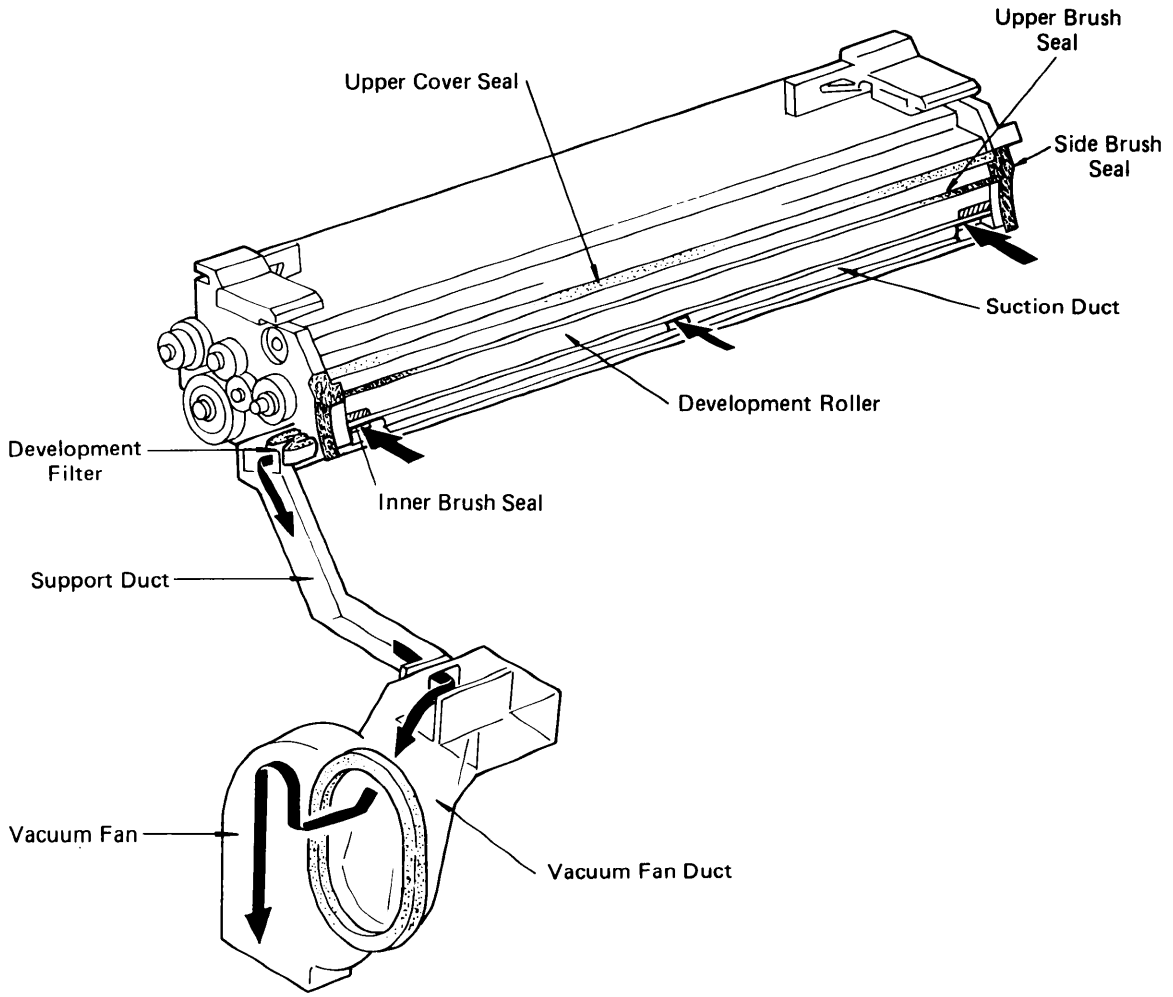

Several seals prevent toner from spilling out into the copier. The upper brush seal prevents particles from scattering upward. The brush side seals at the ends of the development unit contact the drum ends which are out of the image area.

Since the internal permanent magnets are shorter than the development roller sleeve, the toner tends to scatter from both ends. To reduce this scattering of toner, inner brush seals are stuck inside the unit at each end.

The vacuum fan on the rear side also sucks the scattering toner into the suction duct through the support duct and vacuum fan duct. The suction duct has three openings, one at the center and one at each end. The center opening keeps the ID sensor clean. The vacuum fan has a filter that will trap toner particles which have been transported through the suction duct.

Toner Recycling

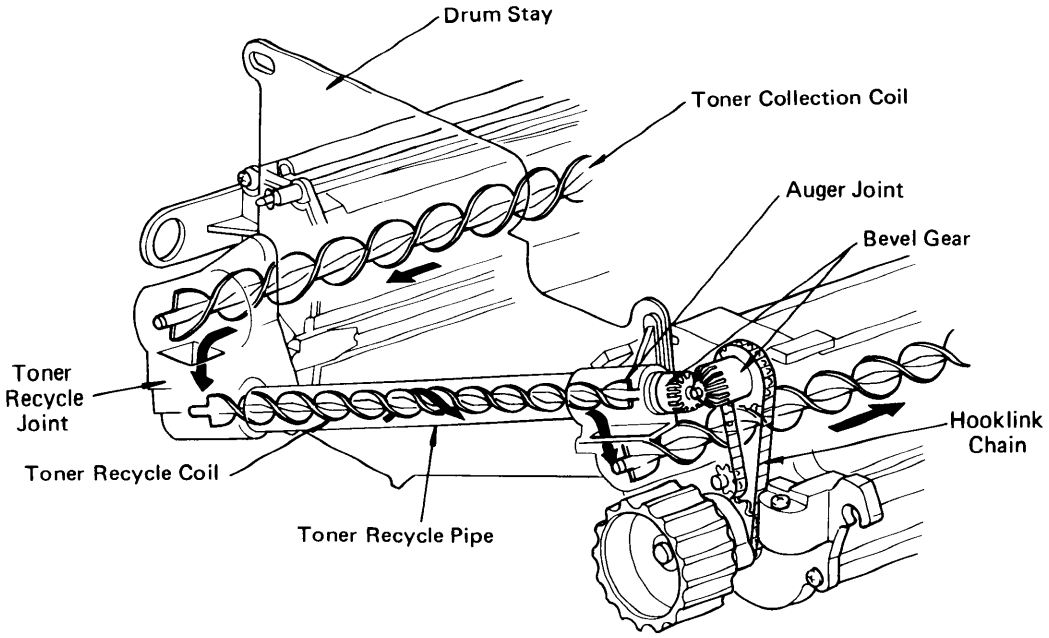

Toner is collected in the cleaning unit and is transported to the front side by the toner collection coil. Then the toner is dropped through the toner recycle joint and the toner recycle coil moves it through the toner recycle pipe up to the auger joint. Next the toner goes into the auger pipe and is transported to the rear side of the development unit, via the cross mixing mechanism, where it mixes with the developer.

The paddle roller shaft has a sprocket on its front side. The rotation of the sprocket is transmitted to the toner recycle coil by the hook link chain and two bevel gears.

Cross-Mixing

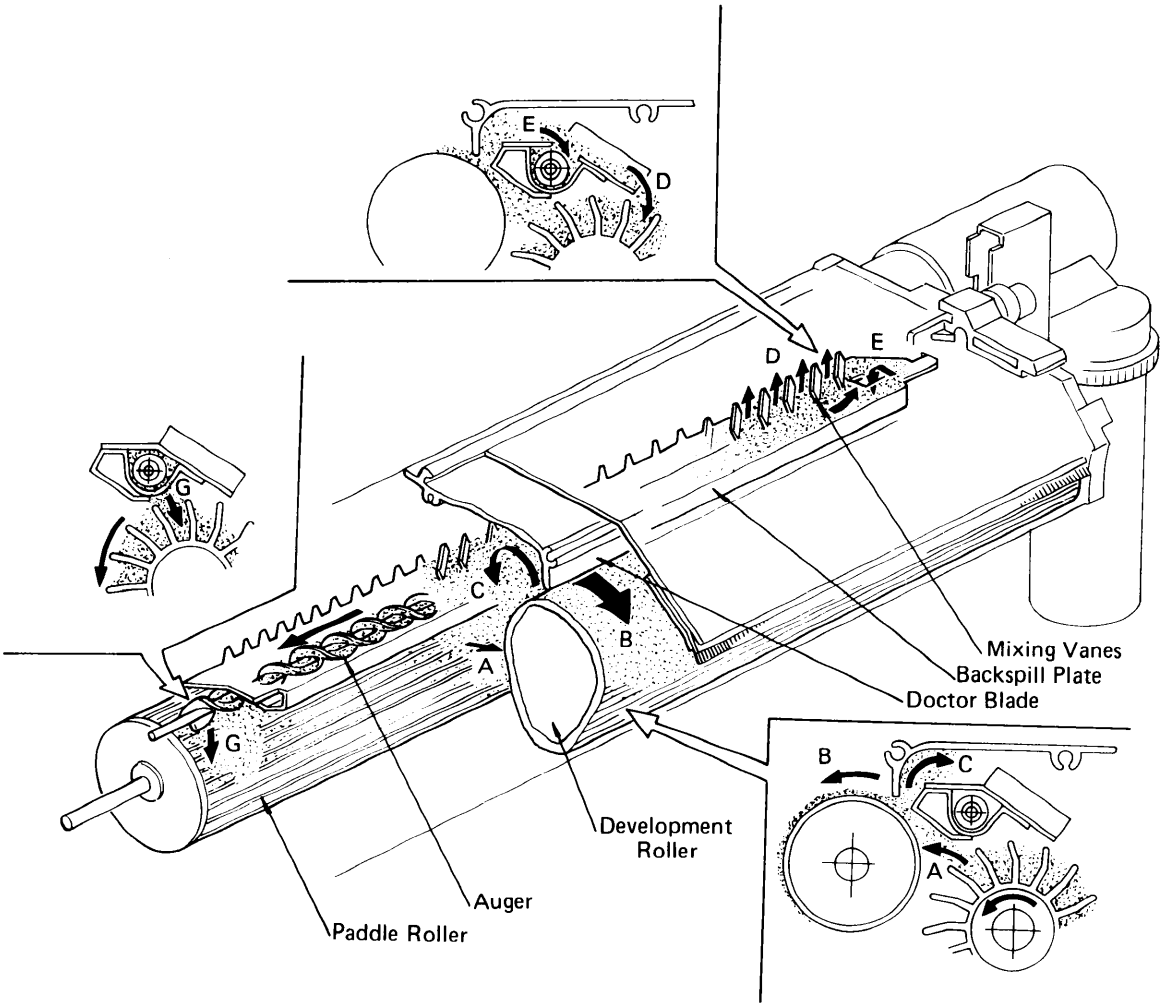

The cross mixing mechanism has two functions: it keeps the toner and developer evenly mixed and it helps to agitate the developer.

The developer that is attracted to the development roller at point A is split into two parts by the doctor blade. Part B (the magnetic brush) goes on to develop the latent image on the drum. However, part C is trimmed off by the doctor blade and directed to the backspill plate.

As the developer slides down the backspill plate to the paddle roller, it is moved slightly toward the front of the unit by the mixing vanes (D). Part of the developer falls into the auger inlet (E) and is transported to the rear of the unit by the mixing auger (F), where it drops onto the paddle roller (G). Mass movement to the front by the mixing vanes and to the rear by the mixing auger is equal.

Development Bias

Image density is controlled by changing the strength of the bias voltage that is applied to the development roller sleeve by the bias power pack. This bias has three components, which we will refer to here as V1, V2, and V3. V1 is the operator selected base level, V2 is a drum rest time compensation factor, and V3 is a drum temperature compensation factor.

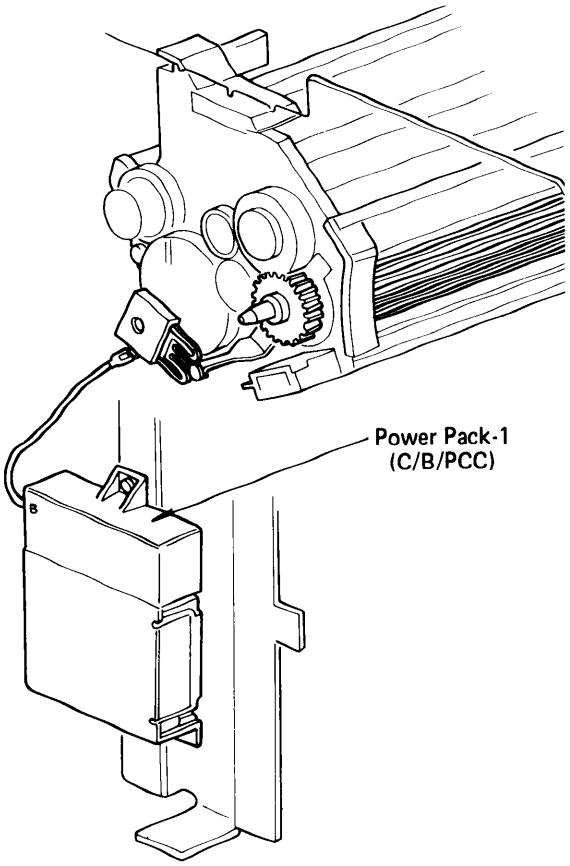

- Bias Base Level (V1) -

The operator controls the bias level through the image density selection keys on the operation panel. For example, if the operator presses the Lighter key, the development bias will increase. Since the amount of toner attracted to the drum surface depends on the electric potential between the development roller and the drum, increasing the bias causes a lighter copy image. The relationship between bias and image density is illustrated by the bottom figure. Moving the image density control one step changes the development bias by 60V.

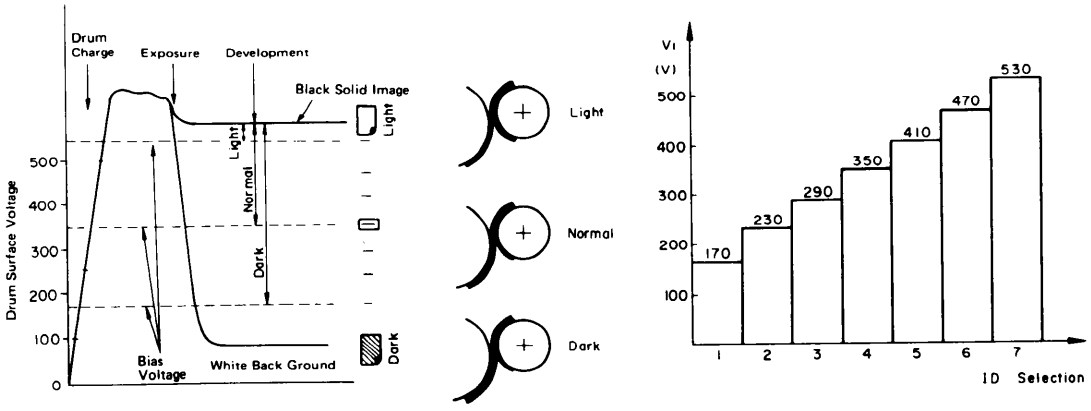

- Rest Time Compensation (V2) -

As previously mentioned the surface temperature of the drum increases during a copy run. The conductivity of the selenium will stabilize at some point. Between copy runs, the temperature and conductivity will decrease. The longer the rest time between runs, the lower the surface temperature and conductivity. As we begin the next copy run, they will begin to increase again.

To compensate for these factors this copier increases the bias a little at the beginning of each copy run. This prevents variations in image density during the first few copies. (Remember, the bias thermistor monitors only the drum cavity temperature not the surface temperature.) The amount of increase is shown in the table to the right.

When the main switch is turned on, the CPU will automatically select the greater than two hours rest time compensation level.

Rest Time \ Copy #	1	2	3	4, 5	6 ~ 10	11 ~
0 to 10 sec.	One step down from the previous states					
10 sec. to 3 min.	30	30	30	0	0	0
3 min. to 50 min.	60	60	30	30	0	0
50 min. to 2 hours	90	60	60	30	30	0
Over 2 hours	120	90	90	60	30	0

(Vdc)

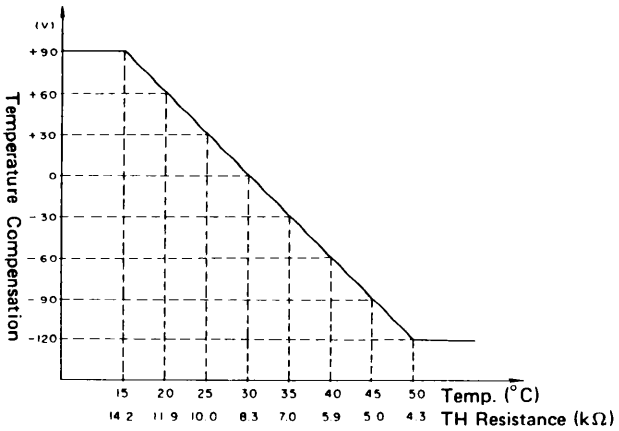

- Drum Temperature Compensation (V3) -

Power Pack I monitors drum temp. through a thermistor (TH-2), and it increases or decreases the bias voltage to compensate for variations in drum sensitivity that are induced by temperature changes in the drum cavity. The temperature compensation is effective from 15°C to 50°C.

Bias compensation = 6V/°C

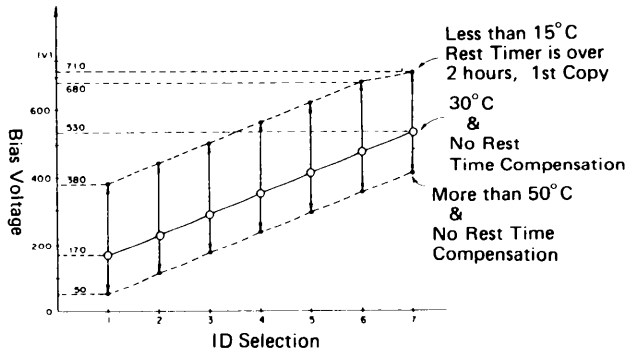

- Total Bias (VT) -

The total bias applied to the development roller sleeve is the sum:

$$VT = V1+V2+V3$$

However, when the image density is set at the lightest setting (7), the maximum total bias is 710V. This is the maximum output of the power pack.

Bias Level

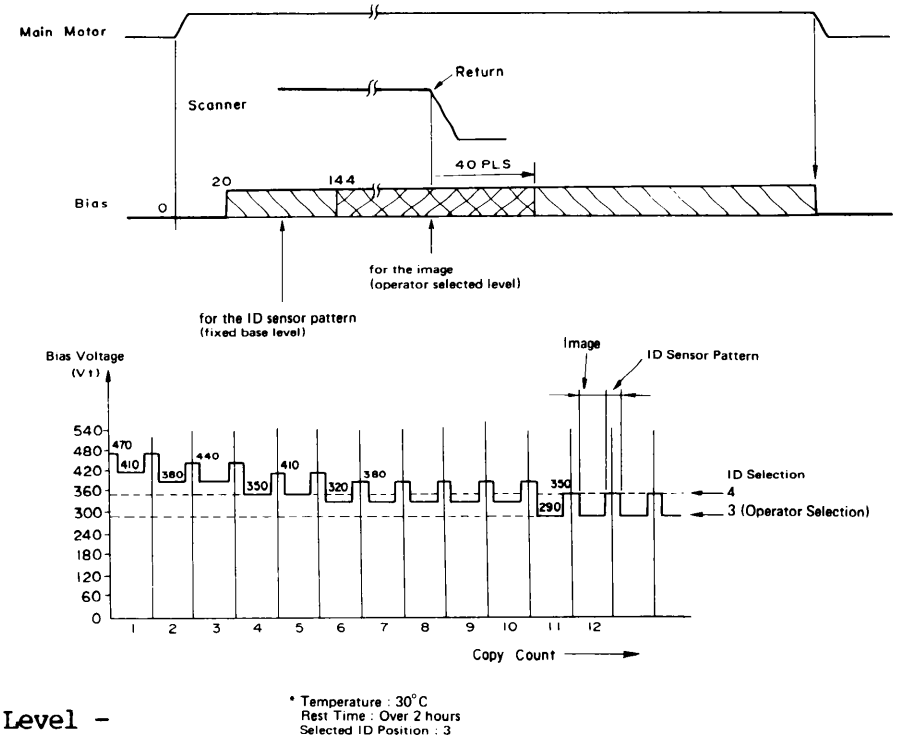

* Temperature : 30°C
Rest Time : Over 2 hours
Selected ID Position : 3

- Fixed Base Bias Level -

The ID sensor pattern is used to detect image density. Therefore, it is necessary to develop the pattern consistently. In order to accomplish this, the CPU will output a fixed base bias level to the development roller at the beginning of each copy cycle. The fixed base bias is +350Vdc (ID level 4) it is affected by drum cavity temperature and drum rest time.

The CPU will apply the fixed base bias to the development roller 20 pulse counts after the main motor is turned on. The CPU then waits an additional 124 pulses (144th pulse) and changes the bias output to the level selected by the operator. The bias output will remain at this level until 40 pulses after return signal. After that, bias level is changed to the fixed base bias until the next copy cycle is initiated or the main motor is turned off.

The fixed base bias can be changed by DIP SW102 (on the main board) as follows:

DIP SW102

	ON	OFF
5	(Fixed Base bias = Level 2) Lighter copy	Normal Mode (Level 4)
6	(Fixed Base bias = Level 5) Darker copy	Normal Mode (Level 4)

NOTE: If both switches are on or off then fixed base bias = ID level 4

Normally, DIP SW102-5 and 6 are off. SW5 should only be used when the customer's main application is Erase Blue. SW6 should only be used when the customer's main application is originals with 60% image area or greater.

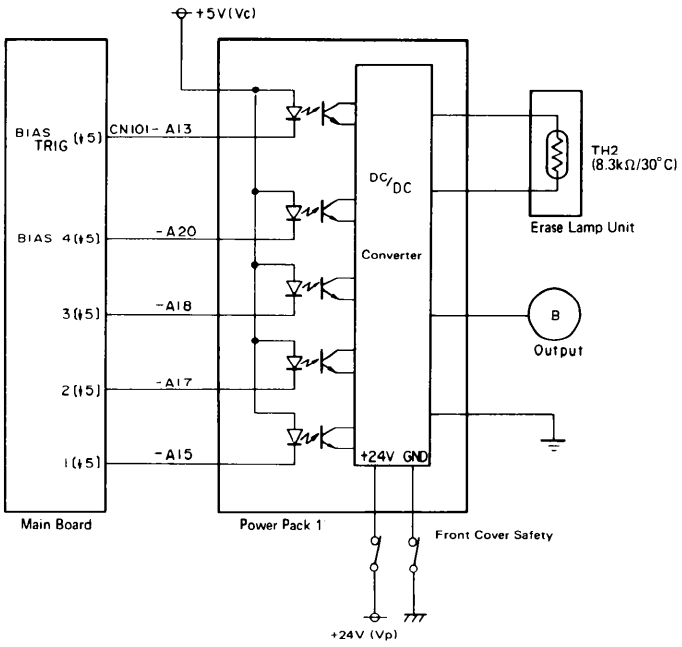

ID Selection	Bias Data				Bias Output
	Bit 4	Bit 3	Bit 2	Bit 1	
1	0	0	0	0	170
	0	0	0	1	200
2	0	0	1	0	230
	0	0	1	1	260
3	0	1	0	0	290
	0	1	0	1	320
4	0	1	1	0	350
	0	1	1	1	380
5	1	0	0	0	410
	1	0	0	1	440
6	1	0	1	0	470
	1	0	1	1	500
7	1	1	0	0	530
	1	1	0	1	560
	1	1	1	0	590
	1	1	1	1	620

- Bias Control -

The CPU sends a bias trigger signal and a 4 bit signal to turn on the development bias of the power pack. These signals depend on the Image Density level position and the copier's rest time (see table).

After receiving these signals, the power pack outputs the proper bias voltage The bias voltage is further compensated by the resistance of the bias thermistor located on the erase lamp unit.

Turn on the VCR for a lecture on Development.

Development Worksheet

This Worksheet will allow you to become more familiar with the operation of the Development and Image Density Control Systems. The purpose of this exercise is to allow you to check and adjust the major components relating to the development unit of the FT5050/5070.

PART I — DEVELOPMENT UNIT

1. Remove the development unit.

   Note: After the toner tank is removed, vacuum the toner supply roller. (If this is not done, it can lead to undertoned developer due to toner clumping in the supply roller grooves.)

2. Remove and clean the cleaning unit, quenching lamp and pre-transfer Lamp filters, and erase lamps.

3. Reinstall the units.

PART II — BIAS COMPENSATION

The development bias voltage is compensated for drum temperature variation and the elapsed time from when the last copy was made. This compensation ensures optimum copy quality any time the copier is used.

A. Drum temperature bias compensation is determined by _____, located on the _____ PCB. Drum temperature information from the thermistor is sent to the bias P.P. at CN _____ where drum temperature compensation factor is calculated.

B. Drum rest time is calculated by the _____.

C. A four bit control signal is sent to the bias P.P. at CN _____, CN _____, CN _____ and CN _____. These signals determine the bias output voltage.

PART III — BIAS CHECK

Bias voltage out of the power pack can be observed with a multimeter. Perform the following procedures to observe the changes in bias compensation:

1. Select the highest VDC scale on your meter.

2. Attach ground lead (black) to the copier frame.

3. Attach positive lead (red) to the rear terminal of the development unit.

4. Turn the copier off, then on. Run ten copies, note the voltage changes, then make a copy at each image density setting and note the voltage changes.

Summary

Knowledge Check:

Do you know? . . .
1. The 3 elements that make up the bias compensation.
2. How bias voltage is applied to the development roller.
3. How to observe bias voltage with a multimeter.



Before continuing the program, have your Service Manager review your answers to the Development Worksheet.

I have reviewed the work performance to this point.

_____
Service Manager's Signature

Continue to the next section.



Toner Density Detection and Toner Supply

Approximate Time: 1 Hour 45 Minutes

TONER DENSITY DETECTION AND TONER SUPPLY

Toner Density Detection

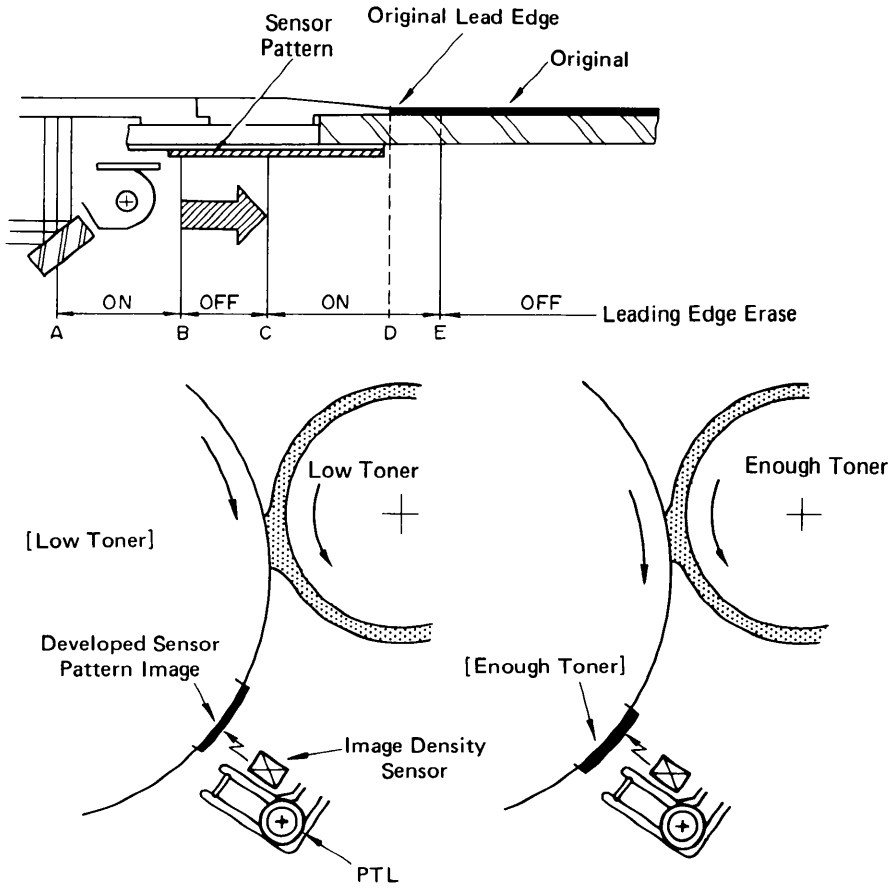

The main CPU checks toner density by directly sensing the image density at the beginning of the first copy cycle after the main switch is turned on, and at every 10th copy after that.

On the check cycle, a black sensor pattern stuck on the sensor pattern plate is exposed prior to exposure of the original. After this sensor pattern is developed its reflectivity is checked by the density sensor (photosensor).

The CPU notes the strength of reflectivity and if the reflected light is too strong, indicating a too low toner density condition, it energizes the toner supply solenoid.

Toner Density Control

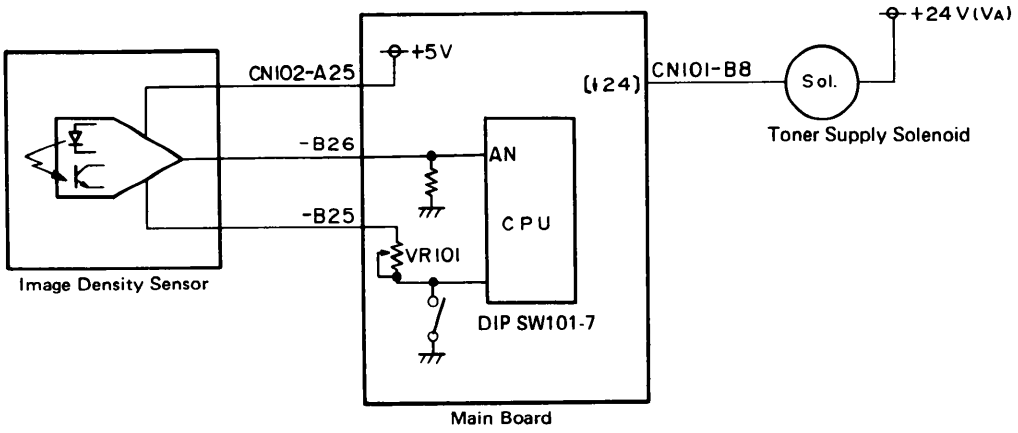

TONER DENSITY DETECTION

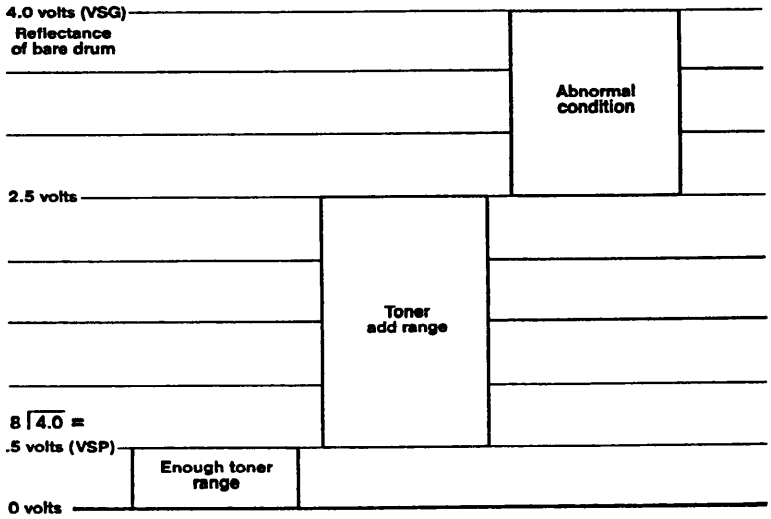

The image density sensor checks the image of the sensor pattern which is made once every 10 copy cycles on the drum. The CPU receives the sensor output directly, and checks the image density. Two values of the voltage for the bare drum (Vsg) and the sensor pattern (Vsp) are then compared to determine whether or not some more toner should be added.

1. Vsp $\leq$ 1/8 Vsg.....High image density (no toner is added)

2. Vsp > 1/8 Vsg.....Low image density (toner is added)

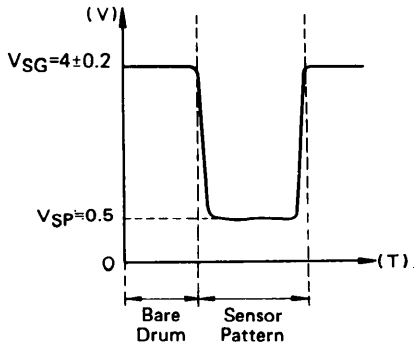

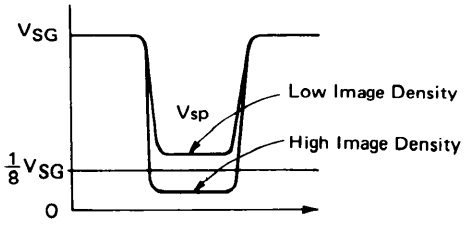

In low image density condition, the CPU activates the toner supply solenoid to add a selected amount of toner over the next 10 copy cycles.

The DIP SW 101-7 can turn on the LED of the sensor manually, and the VR101 adjusts the intensity of the sensor LED (=the voltage of Vsg).

- Abnormal Conditions -

If Vsp or Vsg becomes as follows, the CPU determines that it is abnormal and inhibits any further toner supply.

1) Vsp > 2.5V
2) Vsg < 2.5V

Hexadecimal Codes

	VSP (COPIES MADE) TONER PATCH							VSG (QUANTITY ENTERED) BARE DRUM							
00	10	20	30	40	50	60	70	80	90	A0	B0	C0	D0	E0	F0
01	11	21	31	41	51	61	71	81	91	A1	B1	C1	D1	E1	F1
02	12	22	32	42	52	62	72	82	92	A2	B2	C2	D2	E2	F2
03	13	23	33	43	53	63	73	83	93	A3	B3	C3	D3	E3	F3
04	14	24	34	44	54	64	74	84	94	A4	B4	C4	D4	E4	F4
05	15	25	35	45	55	65	75	85	95	A5	B5	C5	D5	E5	F5
06	16	26	36	46	56	66	76	86	96	A6	B6	C6	D6	E6	F6
07	17	27	37	47	57	67	77	87	97	A7	B7	C7	D7	E7	F7
08	18	28	38	48	58	68	78	88	98	A8	B8	C8	D8	E8	F8
09	**19**	29	39	49	59	69	79	89	99	A9	B9	C9	D9	E9	F9
0A	1A	2A	3A	4A	5A	6A	7A	8A	9A	AA	BA	CA	DA	EA	FA
0B	1B	2B	3B	4B	5B	6B	7B	8B	9B	AB	BB	CB	DB	EB	FB
0C	1C	2C	3C	4C	5C	6C	7C	8C	9C	AC	BC	**CC**	DC	EC	FC
0D	1D	2D	3D	4D	5D	6D	7D	8D	9D	AD	BD	CD	DD	ED	FD
0E	1E	2E	3E	4E	5E	6E	7E	8E	9E	AE	BE	CE	DE	EE	FE
0F	1F	2F	3F	4F	5F	6F	7F	8F	9F	AF	BF	CF	DF	EF	FF

THE COPIER WILL ADD TONER IF THE VALUE DISPLAYED IN THE COPIES MADE INDICATOR IS WITHIN THE ABOVE-SPECIFIED RANGE

THE VALUE DISPLAYED IN THE QUANTITY ENTERED INDICATOR MUST BE WITHIN THE ABOVE-SPECIFIED RANGE

Toner Supply

- Roller Drive Mechanism -

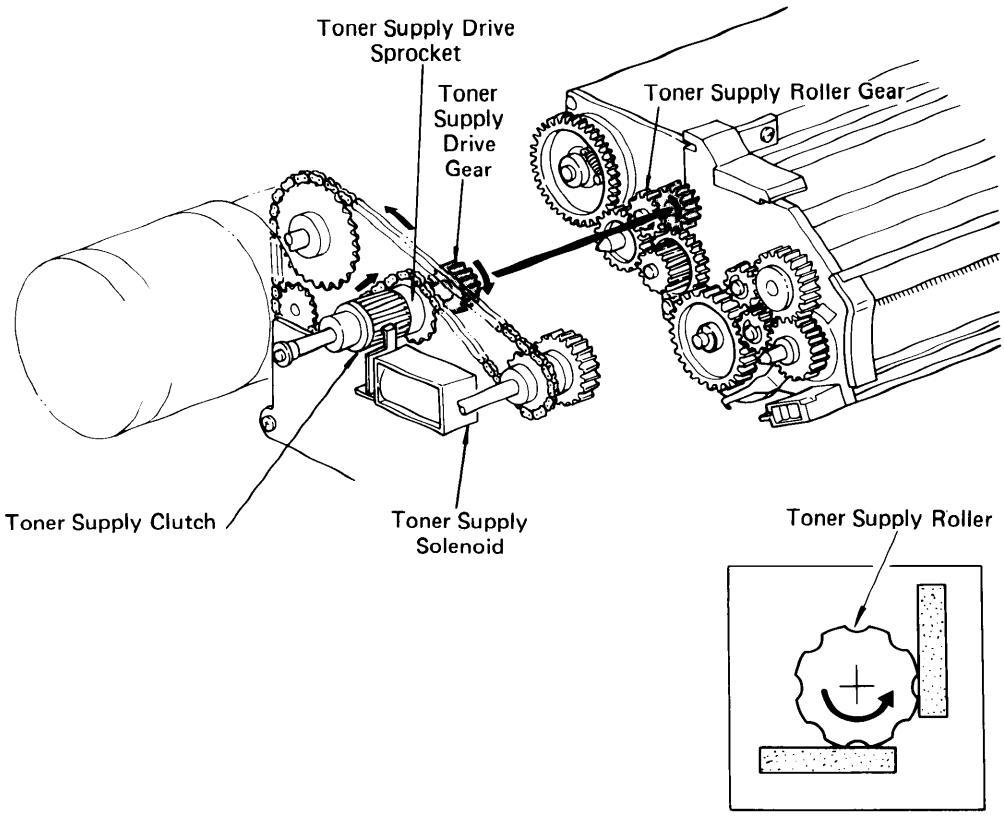

When the development motor is on, the toner supply drive sprocket is always turning. The transmission of this rotation to the toner supply drive gear is controlled by the toner supply clutch.

When the toner supply solenoid energizes, the toner supply clutch passes the rotation to the toner supply roller gear. Toner catches in the grooves on the toner supply roller. Then, as the grooves turn past the opening, the toner drops into the development unit.

Each tooth of both the toner supply drive gear and the toner supply roller gear is chamfered for the smooth engagement.

- Bottle Drive Mechanism -

The toner bottle is behind the front cover on this model so that customers can easily replenish the toner supply. The bottle is positioned horizontally due to the component layout. To transport toner from the bottle to the toner tank, the toner tank unit has a bottle drive mechanism. A worm gear is installed on the front end of the toner supply roller to drive this mechanism.

When the toner supply roller turns, the worm gear turns the toner bottle via the worm wheel, the bottle drive gear, and the bottle gear. The toner bottle has a spiral groove on its surface so that all toner is transported to the toner inlet.

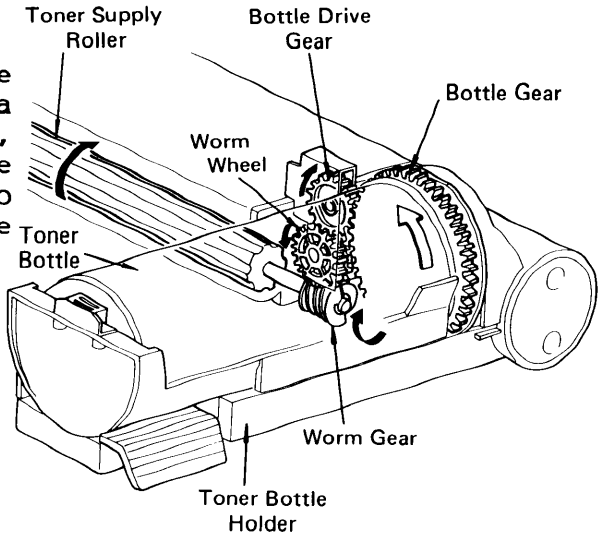

At the toner inlet section, the toner agitator has a spiral shape to move the toner to the toner tank cavity.

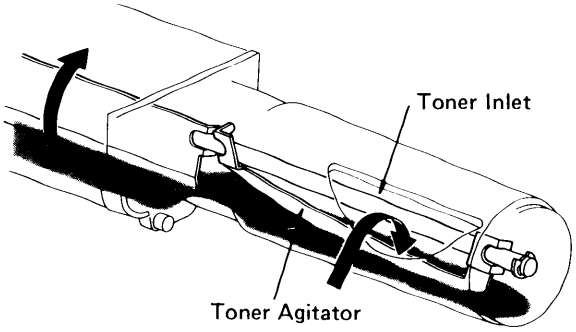

Toner Supply Amount

Dip SW	Fixed Supply Mode				Detect Supply Mode			
102-1	1 (ON)				0 (OFF)			
3	0	1	0	1	0	1	0	1
4	0	0	1	1	0	0	1	1
	0%	3.5%	7%	10.5%	0%	20%	40%	60%

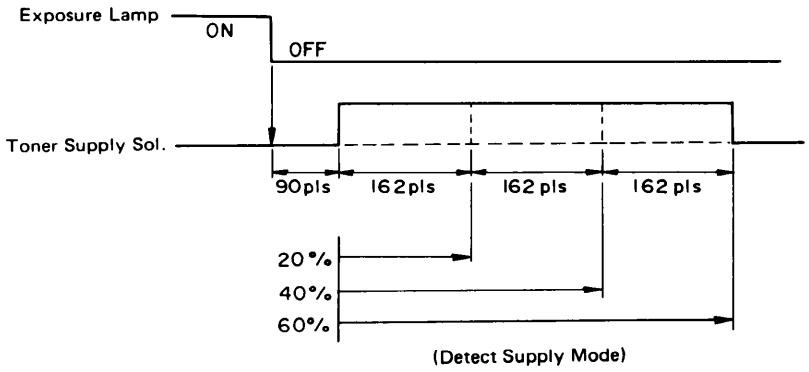

(Detect Supply Mode)

This copier has two different ways of controlling the amount of toner that is supplied. Normally, the detect supply system is used to control toner supply. However, if this system should fail, a fixed supply system can be selected.

- Detect Supply Mode -

When DIP SW 102-1 is off, the standard detect supply mode is selected. If a low image density condition is detected, a small amount of toner is supplied on each of the next 10 copy cycles as determined by the setting of DIP SW's 102-3 and 4 (See table in Field Service Manual).

Toner is supplied 90 pulses after the exposure lamp turns off (See table above).

- Fixed Supply Mode -

When DIP SW 102-1 is on, the fixed supply mode for the back-up system is selected. In this case, a fixed amount of toner is added at every copy cycle as determined by the setting of the DIP SW102-3 and 4. The energized period of the toner supply solenoid is dependent on the position of these switches and the paper size.

Toner End Detection

When the development motor is on, the toner agitator gear is always turning (Refer to the development drive mechanism). The toner agitator gear is not fixed to the toner agitator shaft, so it does not drive the agitator directly. Instead, power goes through a pin on the agitator drive cam, which is fixed to the agitator shaft.

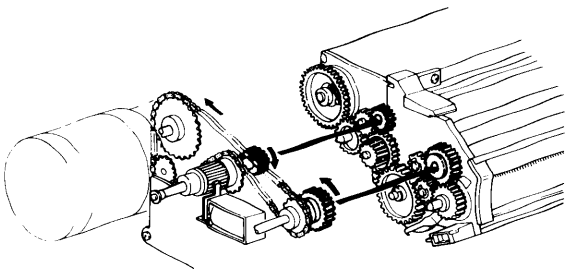

The toner end detection mechanism actuates the toner end sensor when the toner tank is almost empty (100^{+50g}_{-40g}).

The sufficient toner situation is shown in Fig. "A". The toner resists the movement of the toner agitator and the drive spring stretches. As a result the flat surface of the cam does not align with the flat section of the agitator gear, and the actuator is held in the toner end sensor slit.

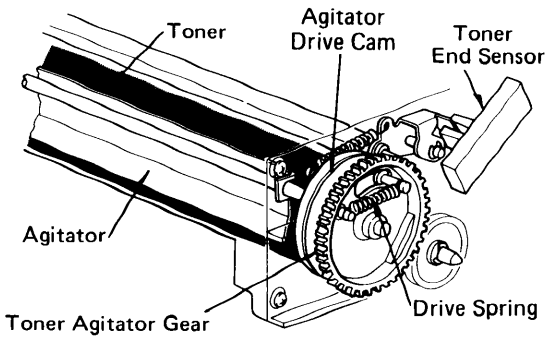

"A" Sufficient Toner Condition

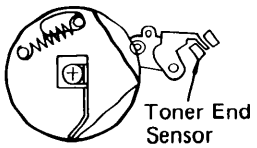

Fig. "B" shows what happens if there is not enough toner in the tank. In this case, toner is insufficient to resist the movement of the agitator, and therefore, the agitator gear spring contacts and aligns the flat surface of the agitator drive cam with that of the toner agitator gear. When the flat section comes to the actuator, a spring pulls the actuator out of the toner end sensor and the sensor sends a toner end signal to the microcomputer starting the toner end run. This allows 50 copies to be made before the Print key is inhibited.

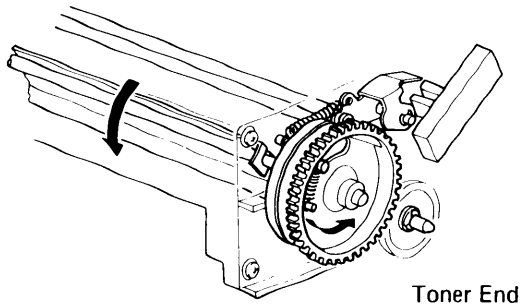

"B" Toner End Condition

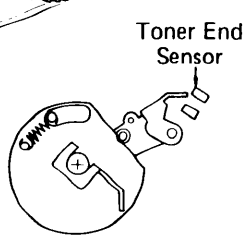

- Toner End Sensor -

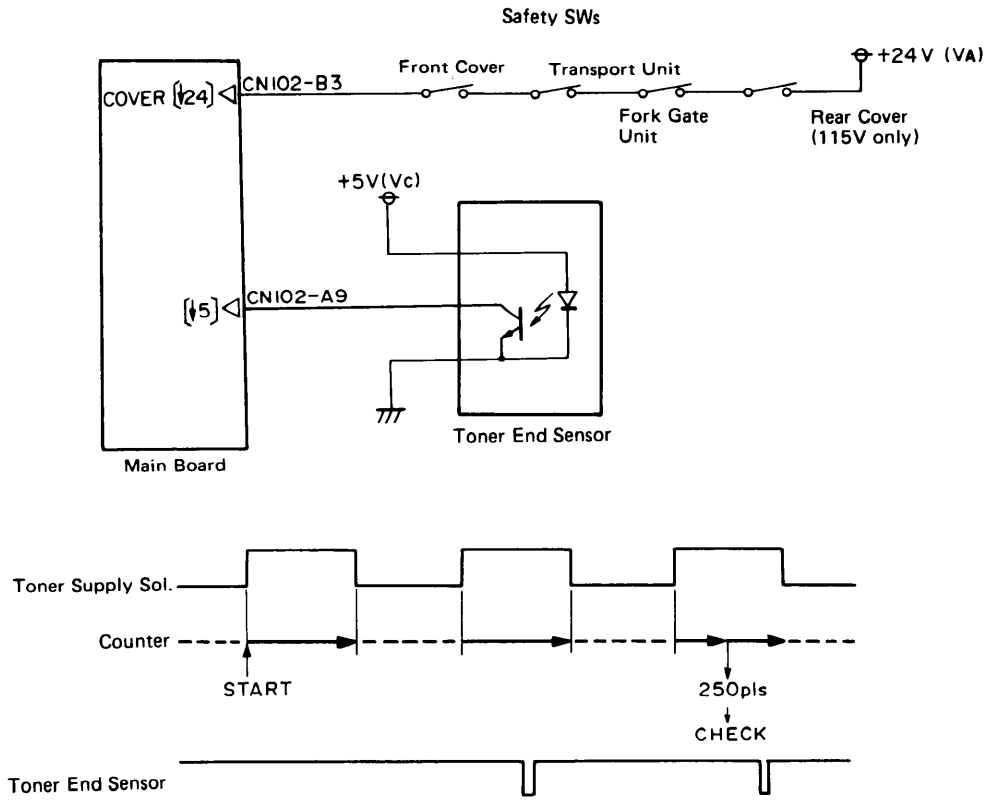

The CPU counts pulses when the toner supply solenoid is on. After the CPU counts 250 pulses in total, the CPU checks whether the toner end sensor has been actuated or not. If it was, the CPU starts to blink the Add Toner indicator.

Then the CPU starts counting the number of copies made. When it counts 50 copies, the CPU lights the Add Toner indicator, stops the machine, and turns the Print key red. If the front cover is opened or the main switch is turned off/on, this toner end condition is canceled. The CPU waits 1000 pulses for the toner supply solenoid to be turned on, and then starts the toner end detection again.

Read the following material in the FT5050/5070 Field Service Manual:
- ☐ Image Density Sensor Board Removal
- ☐ Image Density Sensor Check
- ☐ Image Density Sensor Adjustment

Turn on the VCR for a lecture on Toner Density Detection and Toner Supply and a demonstration on Image Density Checking and Adjustment.

Continue to the Image Density Worksheet.

Image Density Worksheet

This Worksheet will allow you to become more familiar with the operation, removal, replacement, and adjustment of the Image Density System.

PART I — IMAGE DENSITY DETECTION

A. The CPU controls and maintains the toner concentration of the developer by measuring the density of a pattern developed on the drum through the _____ sensor.

This pattern is developed and its density checked every _____ copies. This also occurs when the first copy is made after power up.

The CPU energizes the toner clutch to add toner when a low toner condition is detected.

B. A low toner is determined by comparing two voltages. _____ voltage represents the light reflected from the bare drum, while _____ voltage value is that of the pattern when developed.

C. The toner clutch is energized when the value of _____ becomes greater than 1/8 of the voltage value of _____.

Remove the image density sensor PCB from your copier, clean it, and replace it back into the machine.

Now, locate the adjustment procedure for the image density sensor and perform the adjustment.

SUMMARY

Knowledge Check:

Do you know? . . .
1. How the copier maintains enough toner to maintain consistent copy quality.
2. How the reflectivity of the bare drum and the I.D. patch is compared to determine when toner is to be added.
3. How the Image Density Sensor is adjusted.

Do not stop. Continue to the next page.

Review Guide — 2

1. List the components which have the voltage Vp supplied to them.
   A. _____
   B. _____
   C. _____

2. If during a copy cycle a high were measured at CN101-A12 (C4)
   A. What would the copy look like? _____
   B. What would you do to fix the problem? _____

3. If 54% reduction is selected, which erase lamps will be lit?
   A. A & B
   B. G only
   C. A, B, C, D, and E
   D. A, B, C, D, E, and F

4. When is lens home position referenced?
   A. _____
   B. _____
   C. _____

5. After replacing the scanner drive wire, what adjustments need to be checked/adjusted? _____
   _____

6. What does a low at CN102-A19 (C3) indicate, and what will be displayed? _____
   _____

7. If the doctor blade were out of adjustment (too close to the magnetic rollers), what effect would it have on copy quality? _____
   _____

8. In the toner end detection mechanism, how would the copier malfunction if the drive spring was missing? _____
   _____

9. Does the ID sensor need to be checked again after the lamp intensity? _____



Before continuing the program, have your Service Manager review your answers to the Image Density Worksheet and Review #2.

I have reviewed the work performance to this point.

_____
Service Manager's Signature

Continue to the next section. 



Pre-Transfer Lamp

Approximate Time: 15 Minutes

PRE-TRANSFER LAMP

- Overview -

The pre-transfer lamp (PTL) is mounted on a bracket just above the registration rollers. Due to the speed of the machine, a cold cathode tube is used for the PTL instead of LEDs because LEDs can not supply enough light to the drum.

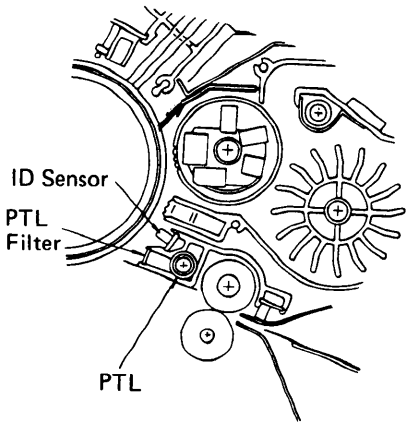

The advantages of the cold cathode tube over LEDs are:

a) It produces an even output of light from end to end.

b)It produces more light than LEDs.

c)It produces a green light which does not require any colored filters.

After the latent image is developed but before the image is transferred to the copy paper, the drum surface is illuminated by the pre-transfer lamp. This illumination reduces the positive potential on the drum surface. This is to prevent the toner particles once attracted to the paper surface from being re-attracted to the positively charged drum during the paper separation process, and also to make image transfer and paper separation easier.

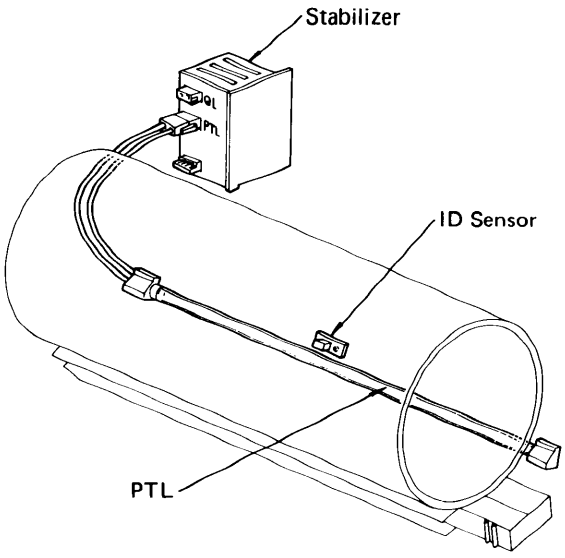

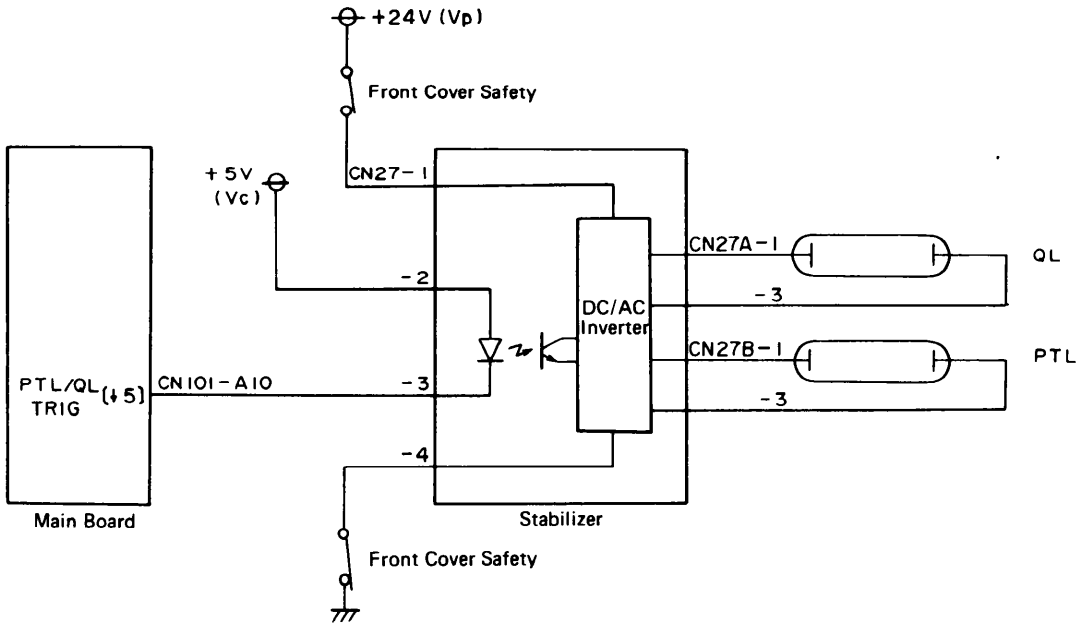

- Circuit -

When the main motor is on, the main board outputs a low signal to the stabilizer which activates it. This stabilizer has a dc to ac inverter which changes +24V to ac high voltage (approx. 430V).

To get constant illumination, this output frequency is relatively high (20kHz).

The stabilizer powers two cold cathode tubes; the pre-transfer lamp and the quenching lamp.

Turn on the VCR for a lecture on the Pre-Transfer Lamp.



Image Transfer and Paper Separation

Approximate Time: 1 Hour 15 Minutes

IMAGE TRANSFER AND PAPER SEPARATION

Overview

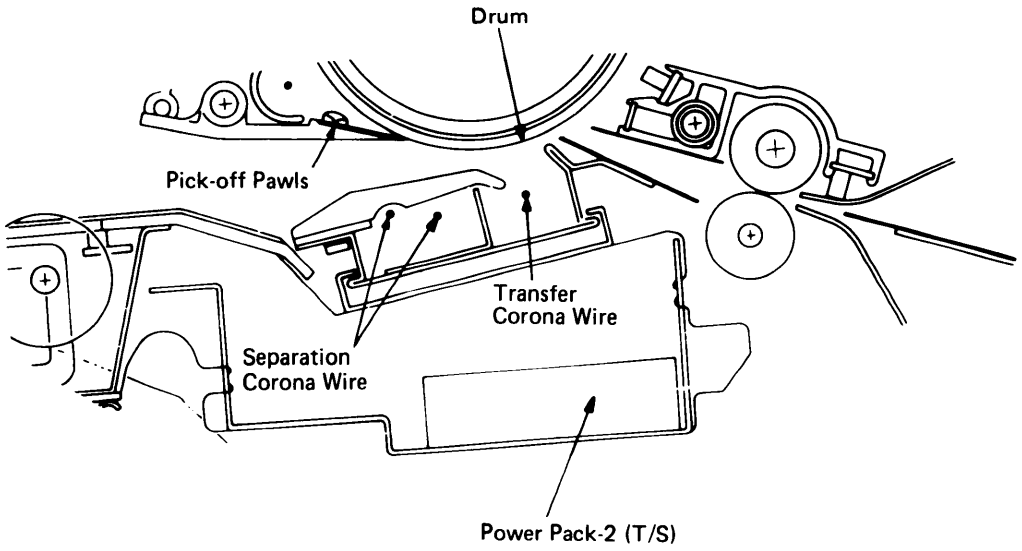

- Image Transfer -

The registration rollers feed the copy paper through the transfer entrance guides to the transfer section. A high positive voltage (aprox.+5.8KV) is applied to the transfer corona wire, and as a result the corona wire generates positive ions. These positive ions are applied to copy paper, and the positive charge attracts the negatively charged toner away from the drum and onto the paper. In addition, the paper is attached to the drum by the negative countercharge on the drum.

The reader should note the effect of damp paper on the transfer process. The electrical resistance of damp paper is lower than that of dry paper, and if used, part of the transfer corona charge will leak across the paper to the drum. This will reduce the effectiveness of the transfer process and a thin or patchy image will result.

- Paper Separation -

After image transfer the copy must be separated from the drum. To break the attraction between the paper and the drum, the separation corona wire applies an ac corona discharge (500Hz) to the paper. The stiffness and the weight of the paper then causes it to separate from the drum. Since the peripheral velocity of the drum is faster than that of the previous models, this model uses a dual wire corotron. This dual wire corona can sufficiently discharge the attraction of the drum and paper over a wide area despite the high velocity of the drum.

The separation corona has a dc bias but its affect is negligible. This is possible because the separation corona is wider and more diffuse. The positive charge on the paper is not completely discharged until the paper is far enough from the drum that the toner will not be reattracted to the drum.

The two pick-off pawls ensure that thin, low-stiffness paper or upward curled paper separates completely.

Corona Circuit

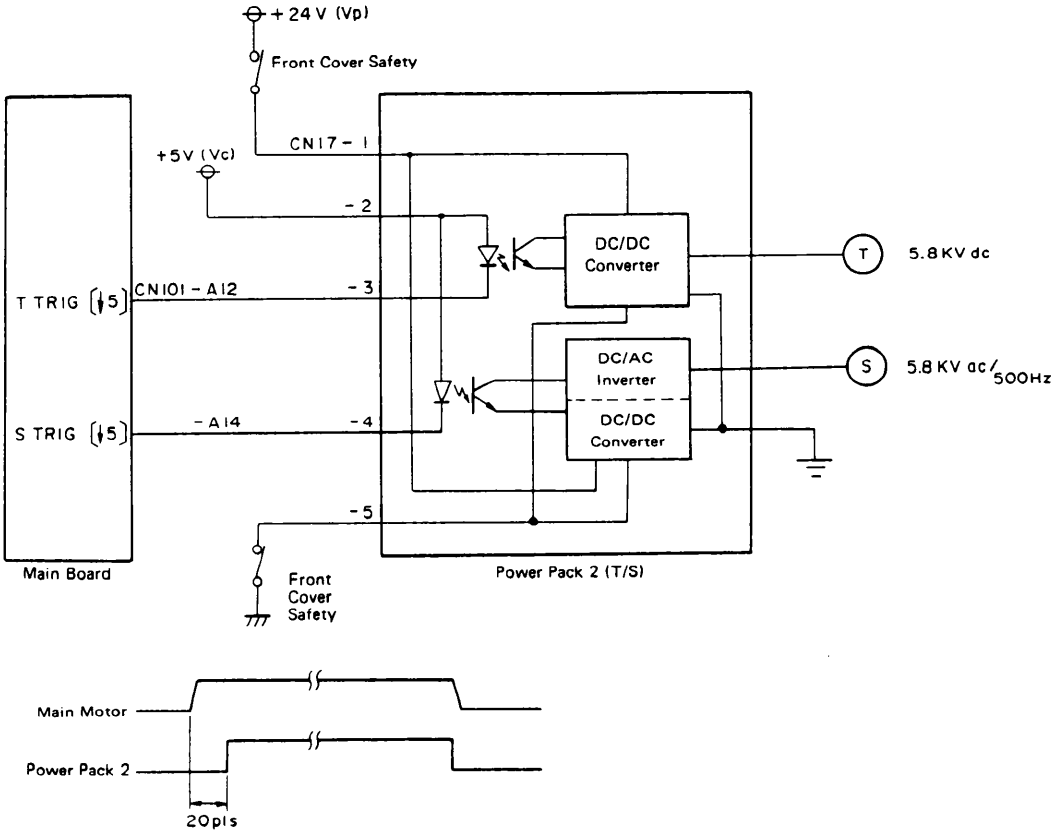

20 pulses after the main motor has turned on, the main board sends a low signal to energize the power pack for the transfer and separation corona. The power pack has two dc to dc converters and one dc to ac inverter. One of the dc to dc converters changes +24V to 5.8kV for the transfer corona. The inverter changes +24V to 5.8kVac/500Hz with a negative dc bias for the separation corona.

Pick-off Mechanism

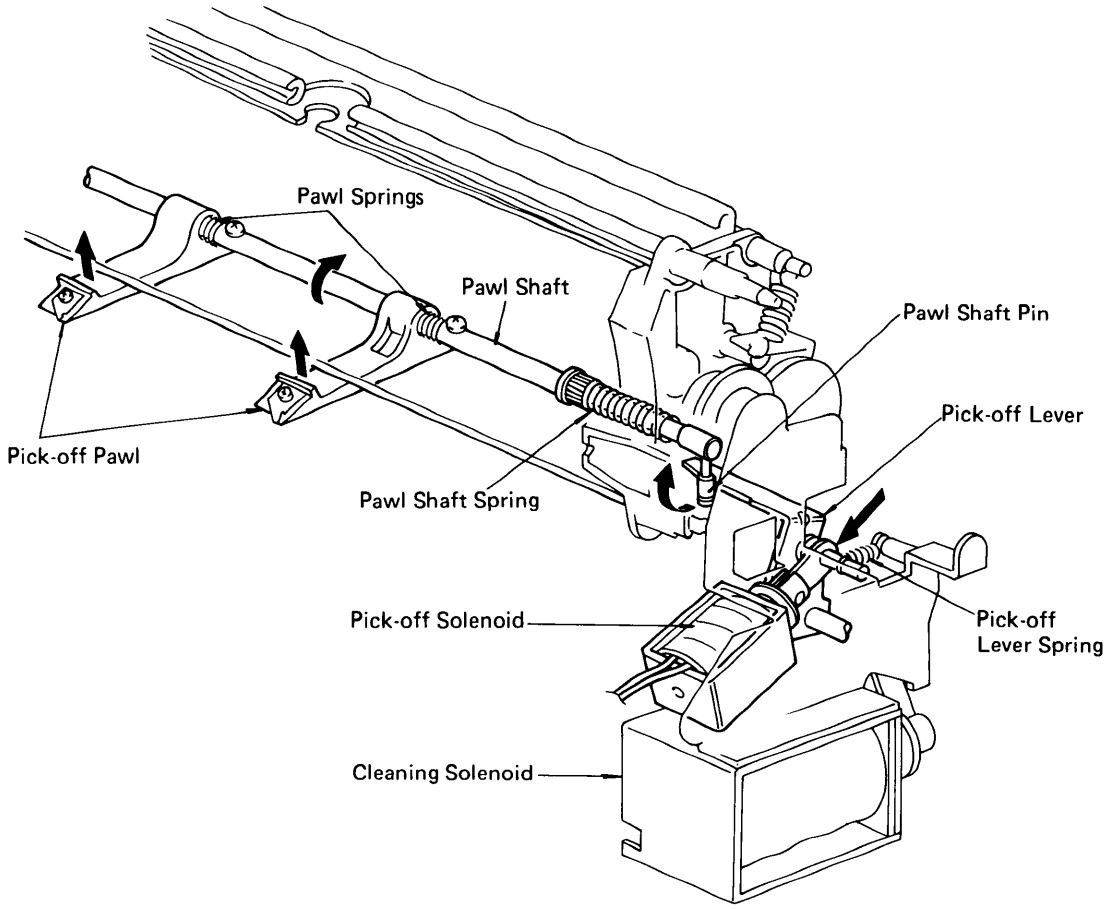

- Touch and Release Mechanism -

The pick-off solenoid energizes just after the registration rollers turn on. The pick-off lever rotates counterclockwise (rear view) and pushes the pawl shaft pin. Then the pawl shaft rotates clockwise and the pick-off pawls touch the drum. The pawl springs hold the pick-off pawls on the shaft and they prevent the pawls from touching the drum too strongly.

When the leading edge of the paper passes the pick-off area and it reaches the middle area between the first and second transport rollers, the pick-off solenoid turns off. The pick-off lever spring then rotates the pick-off lever away from the drum by the force of the pawl shaft spring.

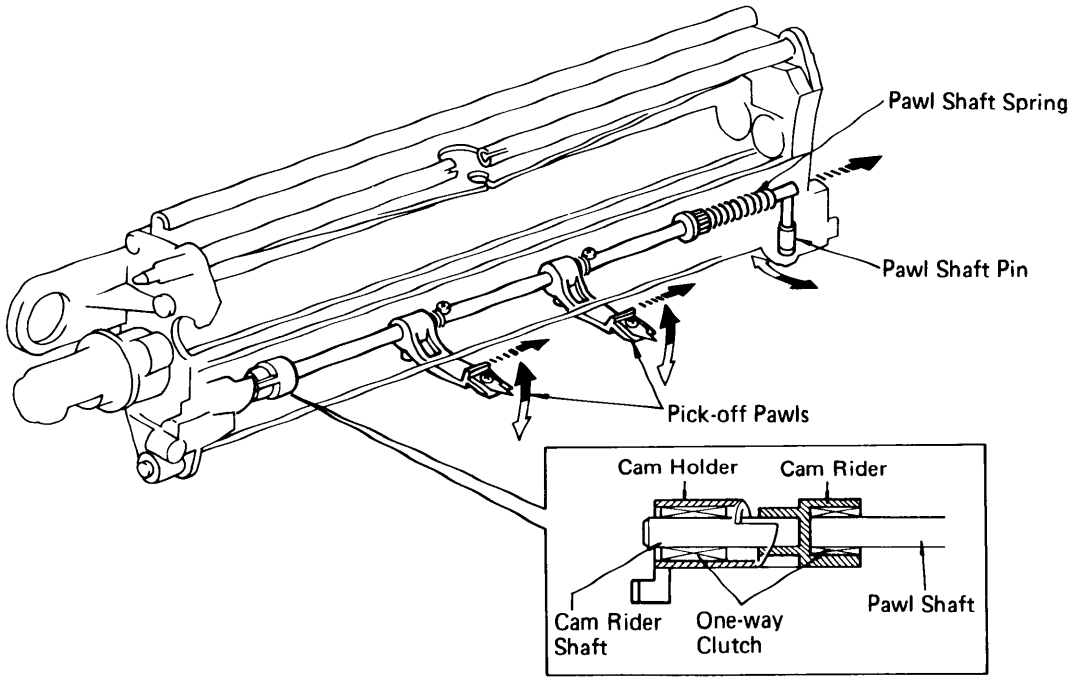

- Side to Side Movement -

The pick-off pawls do not always contact the drum in the same place but instead move slightly to the side on each copy cycle.

Each time the pick-off pawl solenoid turns on and the pawls touch the drum, pawl shaft rotation is transfered to the cam follower shaft by a one way clutch inside the cam rider. As the cam rider shaft turns, it and the pawl shaft are forced to move laterally by a cam part of the cam holder. The one-way clutch inside the cam holder prevents the cam rider shaft from moving back when the pawl shaft rotates the pawls away from the drum.

Pawl lateral movements is 0.1mm to 0.2mm per copy cycle, and after moving about 8mm the pawl shaft is returned to its original start position by the pawl shaft spring.

4. Pick-off Circuit

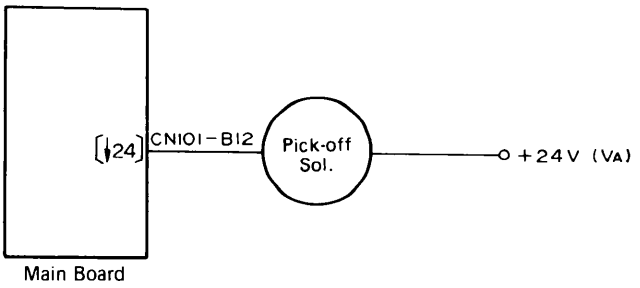

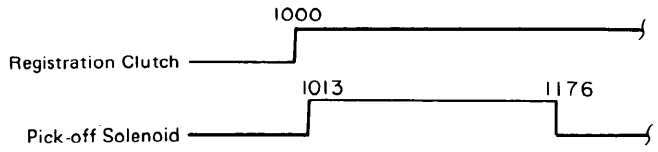

The power supply unit supplies +24V to the pick-off solenoid. The CPU waits 1003 pulses before supplying a low signal at CN101-B12. This is just after the registration rollers have started rotating again. The low signal energizes the pick-off solenoid.

The CPU waits 1176 pulses before turning off the pick-off solenoid, by supplying a high to the circuit at CN101-B12. The leading edge of the paper has just passed the pick-off area at this time.

Turn on the VCR for a lecture on Image Transfer and Paper Separation.

Fault Isolation Worksheet 2

— Sections —
Development, Toner Density Detection and Toner Supply, Pre-Transfer, Image Transfer and Paper Separation

1. If the bias terminal failed to make contact with the development roller's contact, the effect on image density control would be:
   _____ A. inability to vary image density
   _____ B. no apparent effect
   _____ C. blank copies
   _____ D. faint copies

   Now disconnect the bias voltage connector (red wire located just below contact). Make copies with the operator's image density control set at the lightest, normal and darkest settings.

   Was your answer confirmed? If yes, you have a good understanding of the development section.

2. If the transfer corona wire were to break, copies would be:
   _____ A. blank
   _____ B. produced as faint images
   _____ C. progressively lighter during a multicopy run

   Now lower the transport area, remove the transfer/separation corona unit, and carefully raise the transport unit into position. Make a copy in this condition.

   Was your answer confirmed? If yes, then you have a good understanding of transfer operation.

If any of your answers were incorrect, go back and review the applicable sections.

Then continue to the next page. 



Pre-Cleaning Corona and Drum Cleaning

Approximate Time: 1 Hour 15 Minutes

PRE-CLEANING CORONA & DRUM CLEANING

Overview

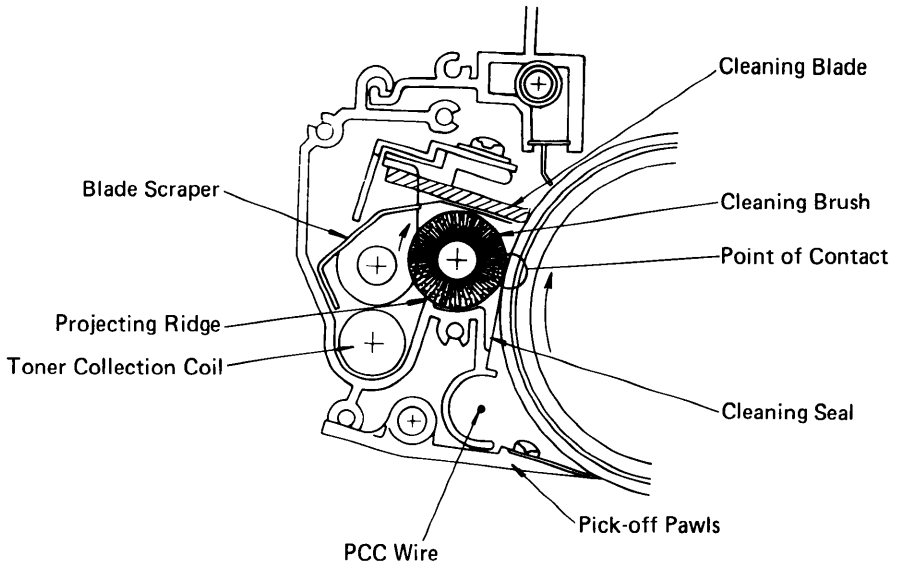

Drum cleaning is accomplished by pre-cleaning corona, cleaning brush, and cleaning blade. The pre-cleaning corona gives the positive charge to the drum to prepare the remaining toner on the drum for cleaning.

The cleaning brush and drum turn in opposite directions at their point of contact. The cleaning brush removes paper dust or carrier from the drum surface so that the cleaning blade will not be damaged. It also brushes off nearly half of the toner on the drum to reduce the cleaning load placed on the blade.

The cleaning blade then scrapes off the remaining toner. The blade moves side to side during the copy cycle in order to ensure that the blade and drum will wear evenly. When the blade moves away from the drum, the blade scraper removes the toner and paper dust from the blade's edge. The falling toner catches in the fibers of the cleaning brush and is carried inside the cleaning unit. As the brush turns inside the cleaning unit, it rubs against a projecting ridge. The toner particles are dislodged as the fibers are bent back and either fall or are flipped onto the toner collection coil.

The toner collection coil in the cleaning unit transports the used toner to the front of the machine where it falls into the toner recycle joint. Then the collected toner is transported to the auger section and is reused in the development unit.

Pre-Cleaning Corona

After image transfer and paper separation, the drum surface still has a positive charge and the remaining toner on the drum has a negative charge. The attraction between the toner and the drum is reduced by the cleaning brush due to its conductivity (The brush is grounded to the machine frame.). However, the remaining attraction makes a heavy load for the cleaning blade. The toner scraped by the blade gathers together like a wedge under the edge of the blade due to the attraction to the drum. The toner pushes up the edge of the blade which increases the tendency for insufficient cleaning. The cleaning brush normally removes 10 to 20% of the toner from the drum before blade cleaning.

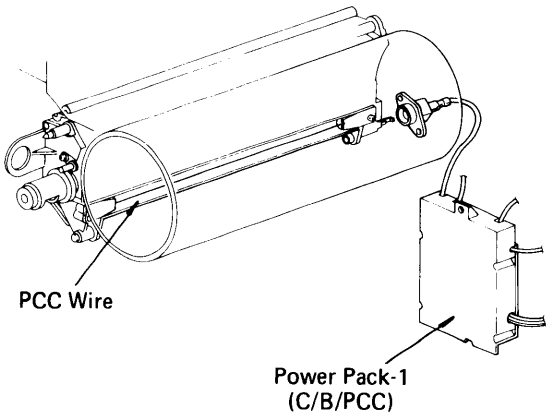

To improve this cleaning process, the pre-cleaning corona wire generates positive ions. This changes the charge of toner from negative to positive. Since the brush is grounded, each end of the brush has a negative charge due to the electrostatic induction caused by the positive charge on the drum. The negative charged brush attracts the positive charged toner, removing 50 to 70% of the toner from the drum, reducing the load on the cleaning blade.

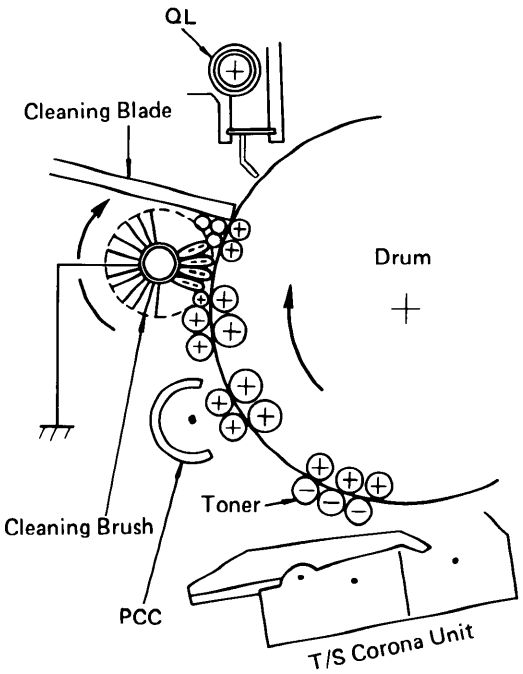

The conductivity of the brush also reduces the positive charge on the drum, helping the quenching lamp to neutralize the remaining charge on the drum. The conductivity of the brush also reduces the positive charge on the toner, however, the toner still keeps a little positive charge which reduces the attraction between the toner and the drum.

Drive Mechanism

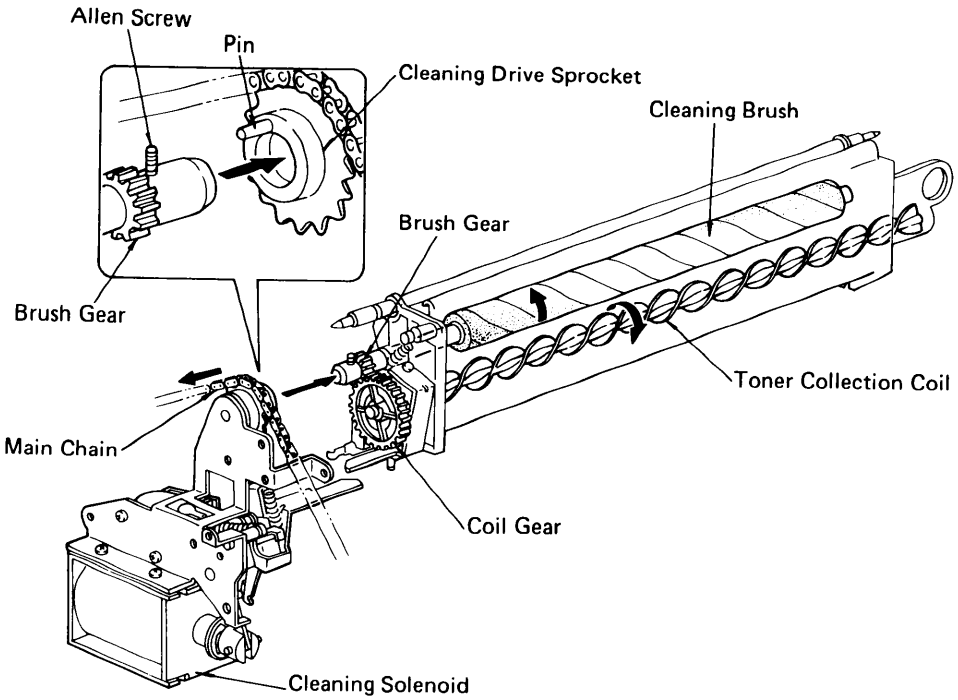

When the main motor is on, the main chain turns the cleaning drive sprocket. The sprocket has a hole and a pin as shown in the figure. The brush gear has a long end, and it is fit to the sprocket hole when the cleaning unit is installed in the copier. A long Allen screw is used to fix the brush gear on the shaft. The rotation of the sprocket is transmitted to the gear by the pin of the sprocket hooking the Allen screw. The brush gear drives the coil gear directly and the toner in the unit is transported to the toner recycle joint by the rotation of the toner collection coil.

Cleaning Blade

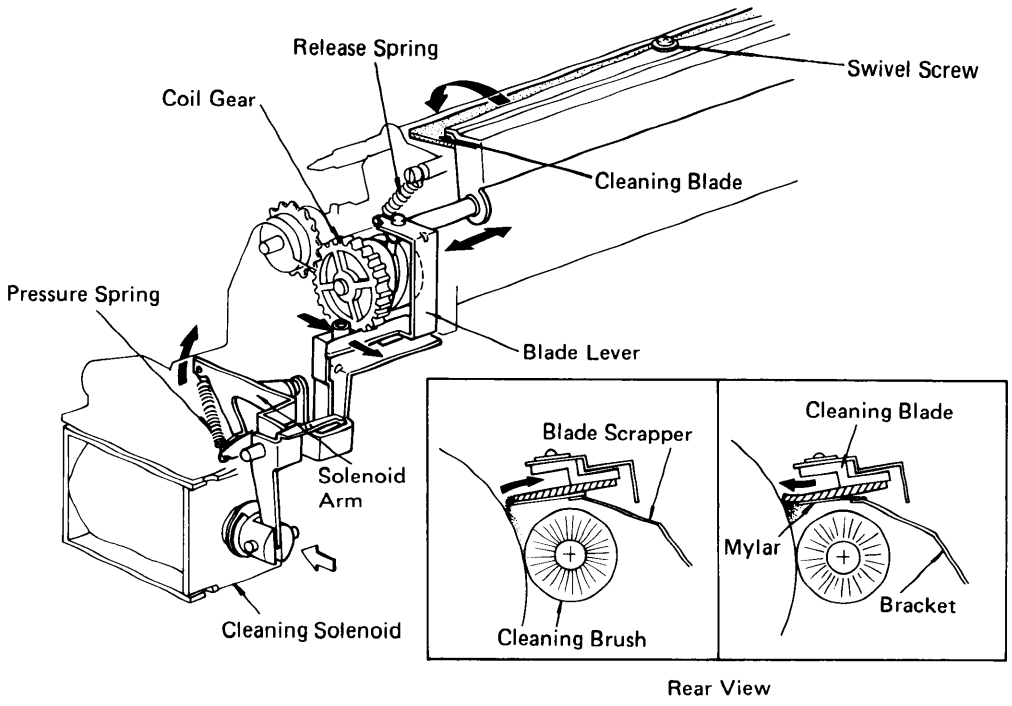

Rear View

The cleaning pressure mechanism is shown above. When the cleaning solenoid is energized, it turns the cleaning solenoid lever clockwise (rear view). Due to the pull of the cleaning blade pressure spring, the pressure arm also turns clockwise and pushes the cleaning blade lever up. The cleaning blade holder then rotates and the cleaning blade presses against the drum. Blade pressure is limited by the pressure spring.

The cleaning blade is mounted by a single swivel screw at its exact center of mass. With this type of mounting the blade sets parallel and applies even pressure automatically. Also since pressure is transmitted in the center, a single pressure spring is used.

The pin of the blade lever is engaged with a groove cam on the inside of the coil gear. When the coil gear turns, the cleaning blade is moved from side to side by the groove cam. This is to reduce damage to the blade that might result from carrier particles on the drum or from small projections on the drum surface.

The blade scraper is mounted in contact with the bottom side of the cleaning blade. When pressure is applied to the cleaning blade, it is forced forward and bends at its outer edge. When pressure is released from the blade, it snaps back to its original shape. At this time, the mylar of the blade scraper scrapes off the excess toner and paper dust from the trailing edge of the blade. This helps to maintain efficient cleaning. The blade pressure is released when there is no key input for 15 minutes, when a paper misfeed occurs, or when the safety switches are open. The blade scraper also prevents toner from scattering inside the copier by keeping toner inside the cleaning unit.

PCC and Cleaning Circuit

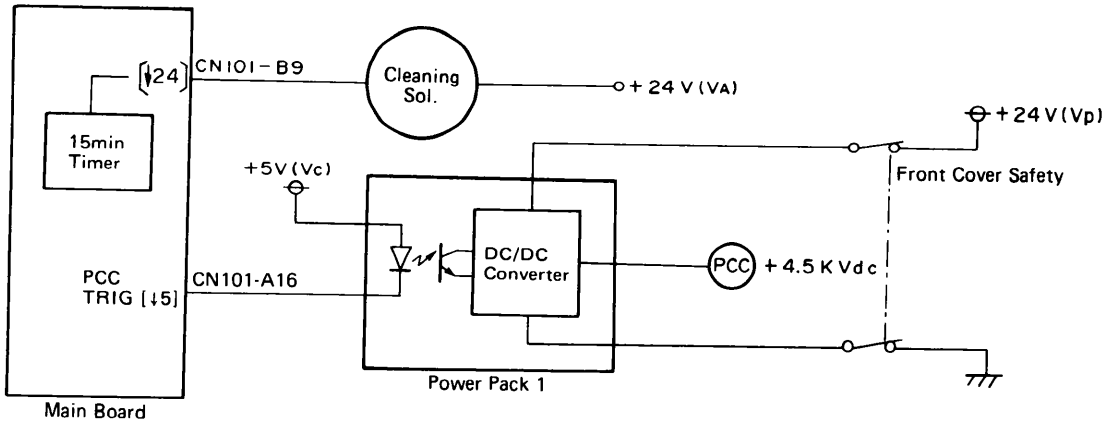

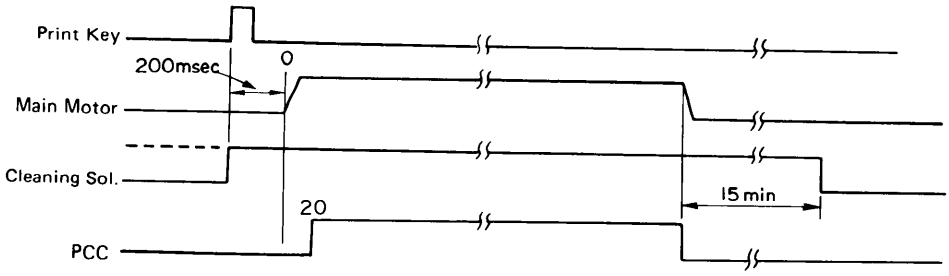

- PCC -

After the main motor starts, the CPU waits 20 pulses before sending a low trigger signal to the power pack. The power pack changes the +24V (Vp) input to high voltage output (approx. +4.5kVdc). When the main motor turns off, the PCC trigger signal becomes high again.

- Cleaning Solenoid -

When the Print key is depressed or the main switch is turned on, the CPU sends a low signal to CN101-B9 which energizes the cleaning solenoid. Fifteen minutes after the main motor turns off, this signal becomes high again, turning off the solenoid. This releases the cleaning blade from the drum. When the cleaning blade is released, the edge of the blade is cleaned.

The fifteen minute delay for the release of the cleaning blade is to avoid toner scattering. Toner scattering is increased when the cleaning blade is released too frequently.

Quenching Lamp

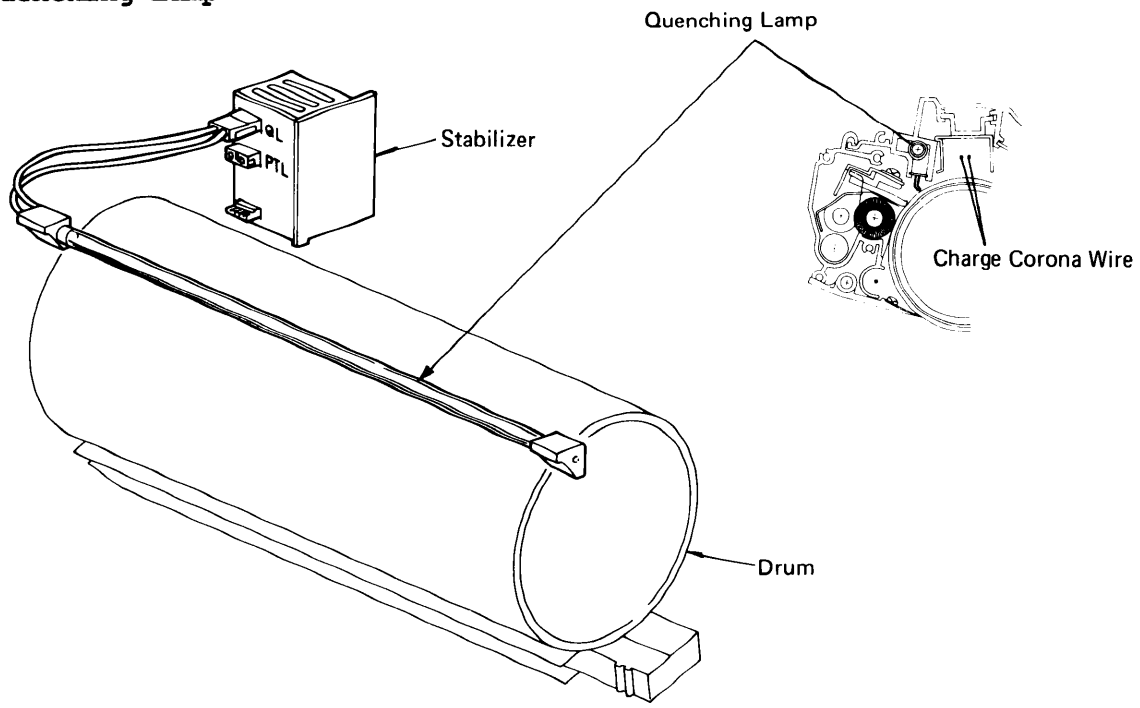

In preparation for the next copy cycle, light from the quenching lamp neutralizes any latent image charge remaining on the drum.

A cold cathode tube is used for quenching due to the high peripheral velocity of the drum. It is similar to the PTL, however, the light intensity of the QL is less than that of the PTL. The cold cathode tube provides a very even illumination on the drum. Also, all the light output from the cold cathode tube is in the sensitivity range of the drum. Therefore, no colored filters are required.

The circuit is same as the PTL but the lamps are not interchangeable. See PTL section.

Turn on the VCR for a lecture on the Pre-Cleaning Corona and Drum Cleaning.

Cleaning Worksheet

This Worksheet will allow you to become more familiar with the operation, removal, and replacement of the Cleaning Unit.

PART I — CLEANING

The function of the cleaning unit is to remove the non-transferred toner from the surface of the drum.

This cleaning process begins with the _____ corona which applies a positive charge to the toner remaining on the drum.

A. Remove the cleaning unit from your copier.

B. Locate in your FSM the cleaning blade and brush removal procedure. Remove and reinstall the cleaning blade and brush.

Note: Clean the cleaning unit with a vacuum cleaner.

C. How often should the following items be checked or replaced?
1. Cleaning blade _____
2. Cleaning brush _____
3. PCC corona wire _____

D. Reassemble and install the cleaning unit.

E. Cleaning blade pressure against the surface of the drum is provided by the _____ solenoid.

This solenoid is controlled by the _____ PCB. When it is energized, CN _____ outputs a LOW signal.

CONFIRM IT WITH YOUR METER!

Summary

Knowledge Check:

Do you know? . . .
1. How to remove and install the cleaning brush.
2. How to remove and install the cleaning blade.



Before continuing the program, have your Service Manager review your answers to the Cleaning Worksheet.

I have reviewed the work performance to this point.

_____
Service Manager's Signature

Continue to the next section. 



Paper Feed

Approximate Time: 1 Hour 45 Minutes

PAPER FEED

Overview

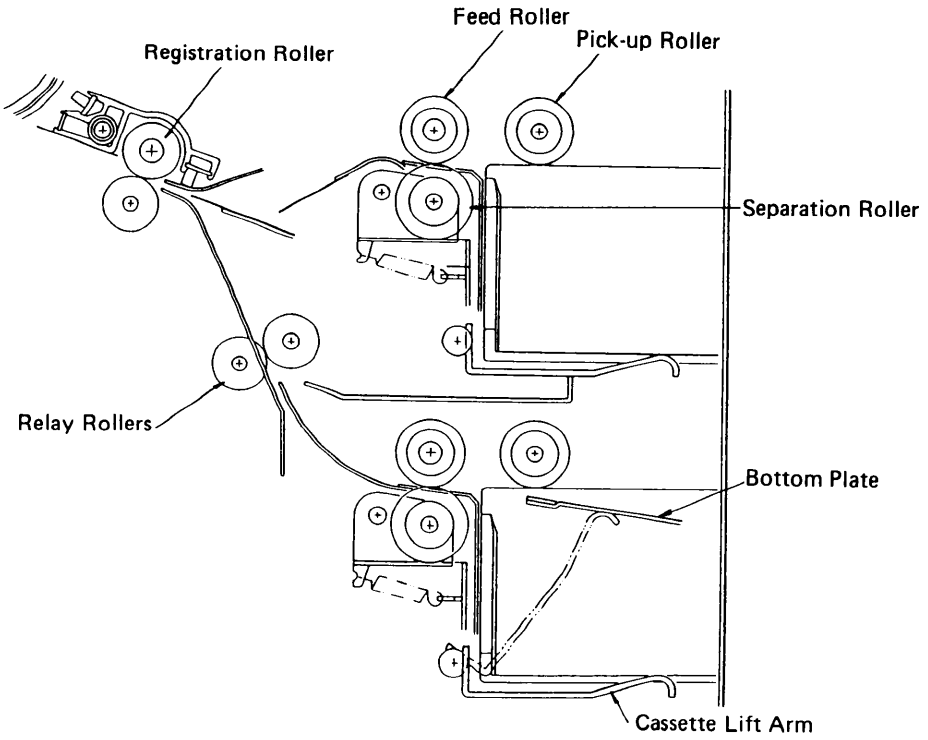

Paper can be fed from either of two cassettes or from the by-pass feed table. The capacity of each cassette is 500 sheets. This copier can use an optional paper tray (Large Capacity Tray) in the lower paper feed position. Its capacity is 1,000 sheets. Thus, a maximum total of up to 1,500 sheets can be loaded at the same time (depending on paper thickness).

This copier uses three rollers for paper feed: a pick-up roller, a feed roller, and a separation roller. The bottom plate inside the cassette is automatically lifted up when the cassette is inserted into the copier. It stops when the paper stack pushes up the pick-up roller.

Rotation of the pick-up roller drives the top sheet of paper from the cassette to the feed and the separation rollers, then the pick-up roller moves up out of the way. The feed and separation rollers take over the paper drive. If more than one sheet is fed by the pick-up roller, the separation roller counter rotates and prevents all but the top sheet from passing through.

The upper feed roller feeds the top sheet directly to the registration rollers. The lower feed roller, however, feeds the top sheet to a set of relay rollers, which then feed the sheet to the registration rollers. The distance between the lower feed roller and the registration rollers necessitates the presence of the relay rollers. Also, the lower feed speed is faster than that of the upper feed speed, to cover the extra distance. (Upper: 296.5mm/sec., Lower: 491mm/sec.)

Lift Mechanism and Paper End Detection

When the cassette is inserted into the copier, the cassette actuator pin is pushed down by the cassette. The lift motor unit then mechanically pivots clockwise at point "A" so that the lift gear can engage with the sector gear.

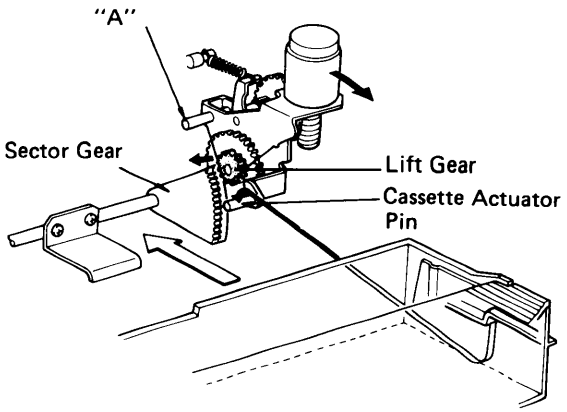

At the same time, the paper size actuator plate actuates the paper size sensor. The CPU then detects that a cassette has been inserted and turns on the lift motor. The lift motor raises the bottom plate until the top sheet pushes up the pick-up roller.

When the paper pushes up the pick-up roller, the lift sensor is de-actuated and the CPU turns off the lift motor.

As paper is fed into the copier, the level of the paper stack gets lower. If the level becomes lower, the lift sensor is actuated and the CPU energizes the lift motor until the top sheet raises the pick-up roller to de-actuate the lift sensor again. This ensures that the paper is always at the correct feed height.

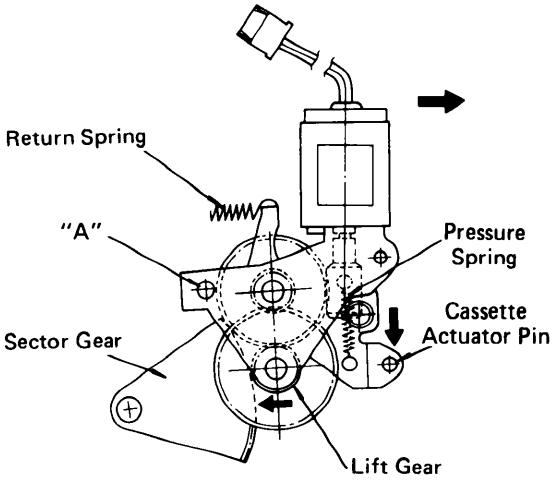

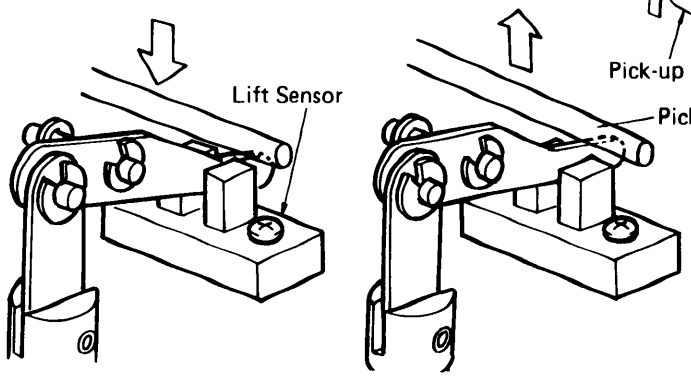

Actuated

De-actuated

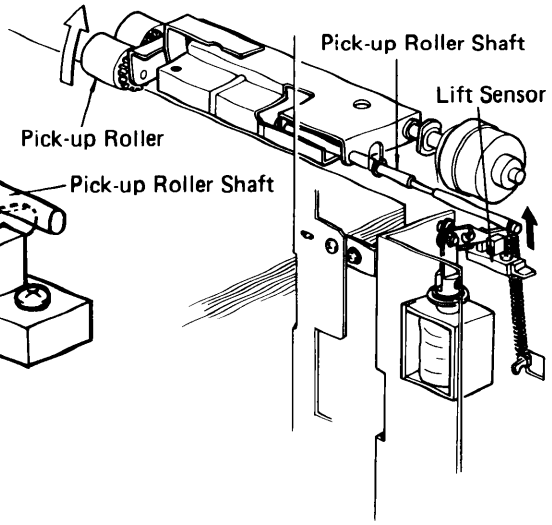

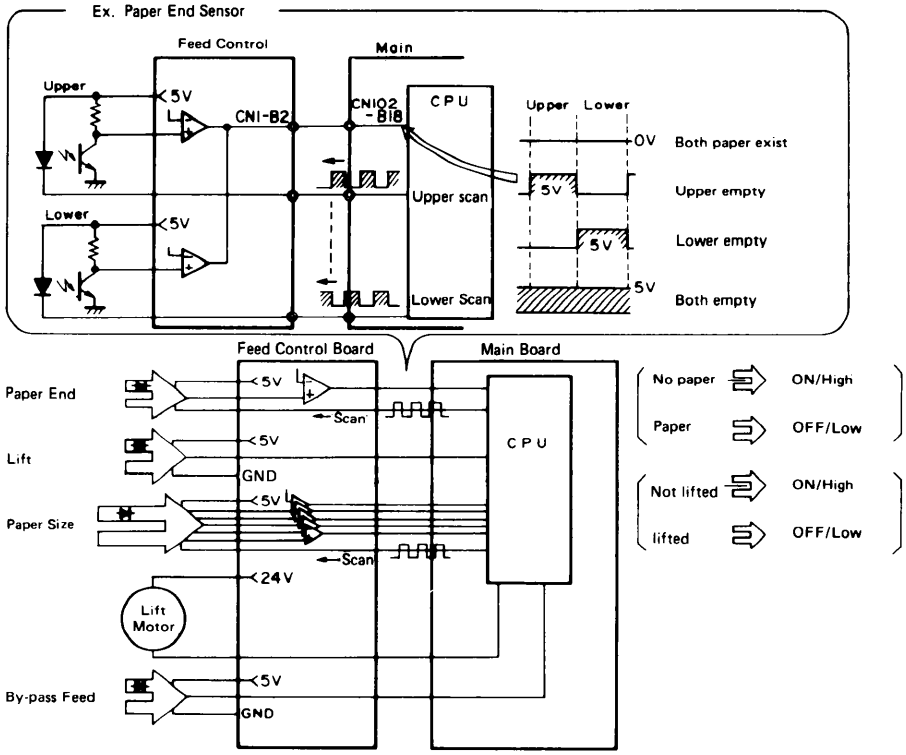

- Lift Motor Control -

The paper size sensor is also used as a cassette set sensor. When the paper size actuator plate is inserted into the paper size sensor, certain photointerruptors are de-activated [0V -> 5V]. Where there are notches in the actuator plate, the photointerruptors remain activated [at 0V]. After receiving a 5V signal through the paper size data bus, the CPU turns on the lift motor.

The CPU energizes the lift motor until the lift sensor is de-actuated. When the lift sensor is de-actuated, the photointerruptor is activated and its terminal drops from 5V to ground. After receiving the 0V signal, the CPU turns off the lift motor.

- Abnormal Condition - ("41" and "43")

If the CPU energizes the lift motor for 20 seconds without the lift sensor being de-actuated, the Call Service indicator and either self-diagnostic code "41" or "43" is displayed. Code "41" and "43" indicate upper and lower lift motor failure respectively.

- Paper End Detection -

After the last sheet of paper from a cassette has been fed, the Add Paper indicator lights. Photointerruptors are used for the upper and lower paper end sensors. When either one of the sensors is actuated, the photointerruptor is de-activated [0V -> 5V]. The CPU detects paper end by monitoring the output of these sensors.

The CPU sends two separate scan pulses to the corresponding photointerruptors in the upper and lower paper end sensors. The output of these two sensors can be monitored by one data bus because the scan pulses are inverted. See the above diagram. The first half of the waveform contains the data from the upper sensor and second half of the waveform corresponds to the lower sensor.

Paper Size and Volume Detection

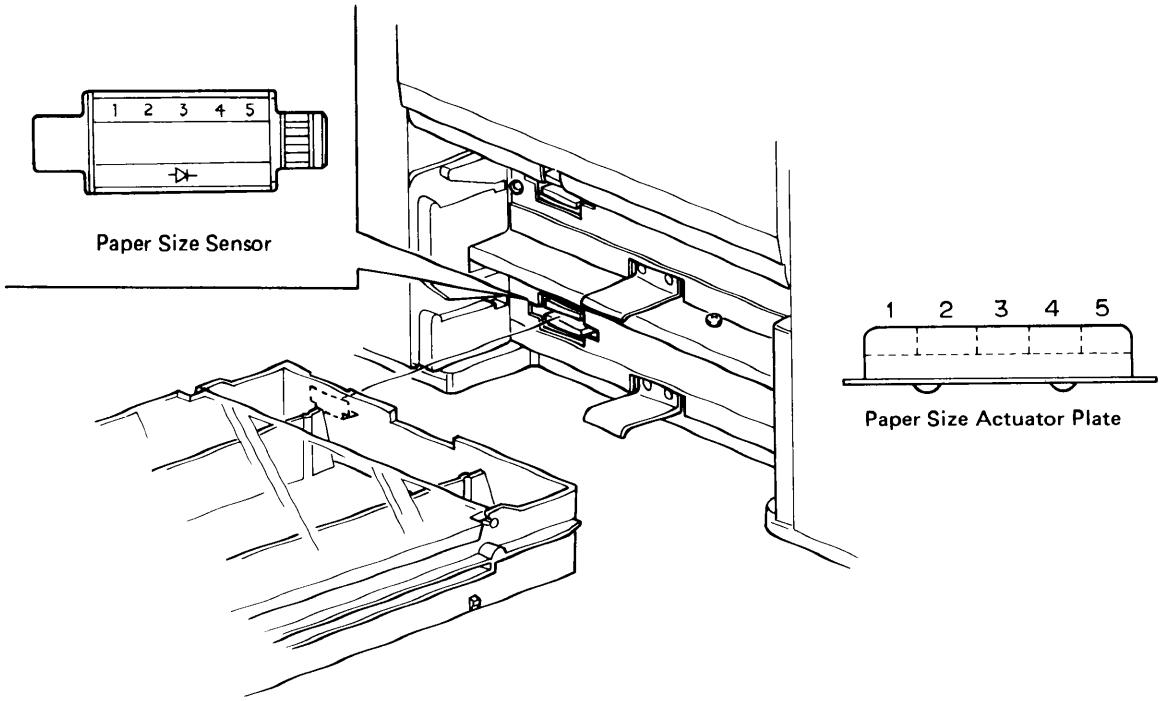

This machine uses two pairs of sensors to monitor paper. One pair of sensors detects paper size and the other pair detects paper volume. Each pair contains an upper sensor to monitor the upper cassette and a lower sensor to monitor the lower cassette. Each sensor contains five photointerruptors set in parallel formation.

- Paper Size -

The paper size sensors are actuated by the actuator plate on the front of the cassette. Each paper size has its own unique combination of notches in the actuator plate. The CPU reads which photointerruptors have been de-activated [0V -> 5V] by the actuator plate and which have not [0V]. By monitoring the output from these sensors, the CPU can figure out which paper size has been inserted.

Paper Size	Sensor No. 1 2 3 4 5	Operation Panel Indication 220 V	115 V
A3	1 0 0 0 0	A3	•
B4	1 1 0 0 0	B4	•
A4 sidewise	0 0 1 0 0	A4	•
A4 lengthwise	1 0 1 0 0	A4R	•
B5 sidewise	0 1 1 0 0	•	•
B5 lengthwise	1 1 1 0 0	•	•
A5 sidewise	0 0 0 1 0	A5	•
A5 lengthwise	1 0 0 1 0	A5R	•
B6 sidewise	0 1 0 1 0	•	•
B6 lengthwise	1 1 0 1 0	•	•
Return Post Card	0 0 1 1 0	•	•
Post Card	1 0 1 1 0	•	•
11" X 17"	0 0 0 0 1	•	11" X 17"
11" X 8½"	1 0 0 0 1	•	11" X 8½"
11" X 15"	0 1 0 0 1	•	11" X 15"
10" X 14"	1 1 0 0 1	•	•
8½" X 14"	0 0 1 0 1	•	8½" X 14"
8½" X 13"	1 0 1 0 1	F4	•
8½" X 11"	0 1 1 0 1	•	8½" X 11" R
8½" X 5½"	1 1 1 0 1	•	8½" X 5½"
8½" X 13" (14")	0 0 0 1 1	•	•
8" X 13"	1 0 0 1 1	F	•
8" X 10½"	0 1 0 1 1	•	•
8" X 10"	1 1 0 1 1	•	•
5½" X 8½"	0 0 1 1 1	•	5½" X 8½" R
No Cassette	1 1 1 1 1	•	•

1: Notch/Low (0 V)
0: No Notch/High (5 V)

[Actuator Plate Combination Table]

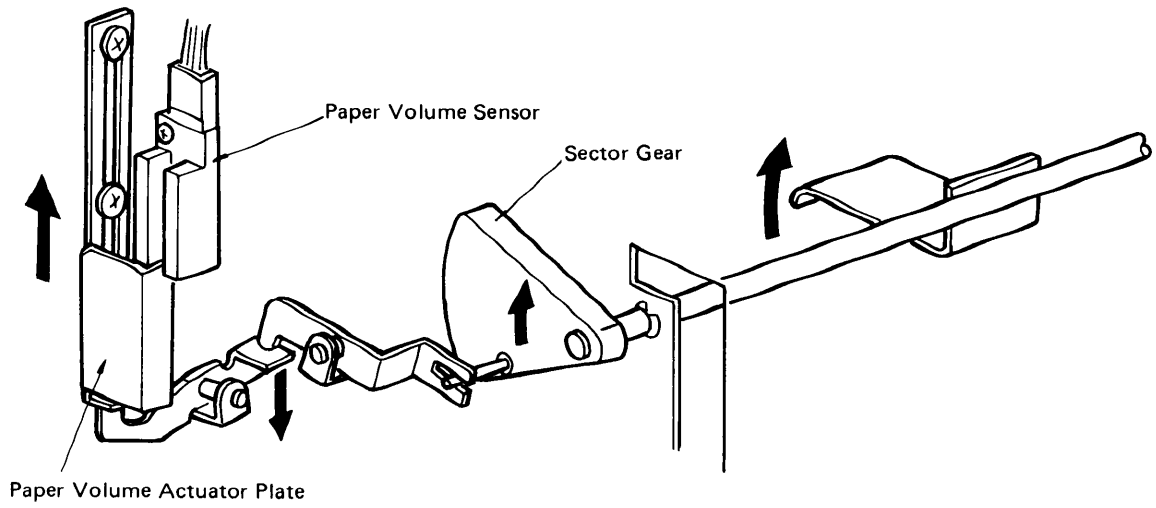

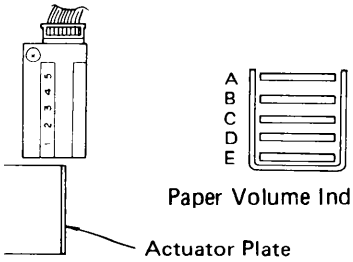

Paper Volume (Approx.)	500 ~ 400	400 ~ 300	300 ~ 200	200 ~ 100	100 ~ 1	0	No Cassette
Indicator							

- Paper Volume -

The system for paper volume detection is identical to the paper size detection system except for the display and mechanics.

Like paper size, paper volume is monitored by five photointerruptors. These sensors detect, in five increments of approximately 100 sheets each, how much paper is in the cassette. However, this volume value depends on the paper thickness.

As paper leaves the cassette, the bottom plate must rise to maintain the level of the top sheet. Any upward movement of the sector gear is transferred to an upward movement in the paper volume actuator plate. The more the bottom plate rises, the greater the number of photointerruptors that are de-activated [0V-> 5V]. As each photointerruptor is de-activated, the CPU turns off its corresponding Paper Volume indicator.

When a full cassette is inserted into the copier, the CPU turns on the first four indicators (A -> D). Then, the fifth indicator (E) stays off. As the first three photointerruptors (1, 2, 3) are de-activated, the CPU turns off the corrsponding indicators. When the fourth photointerruptor (4) is de-activated, the CPU turns off the fourth indicator (D), and turns on the fifth indicator (E). The fifth indicator stays lit until the paper end sensor is actuated. Then, the fifth indicator is turned off.

The first four indicators are displayed in a light blue color. The fifth indicator is light green.

- Paper Size and Volume Sensors -

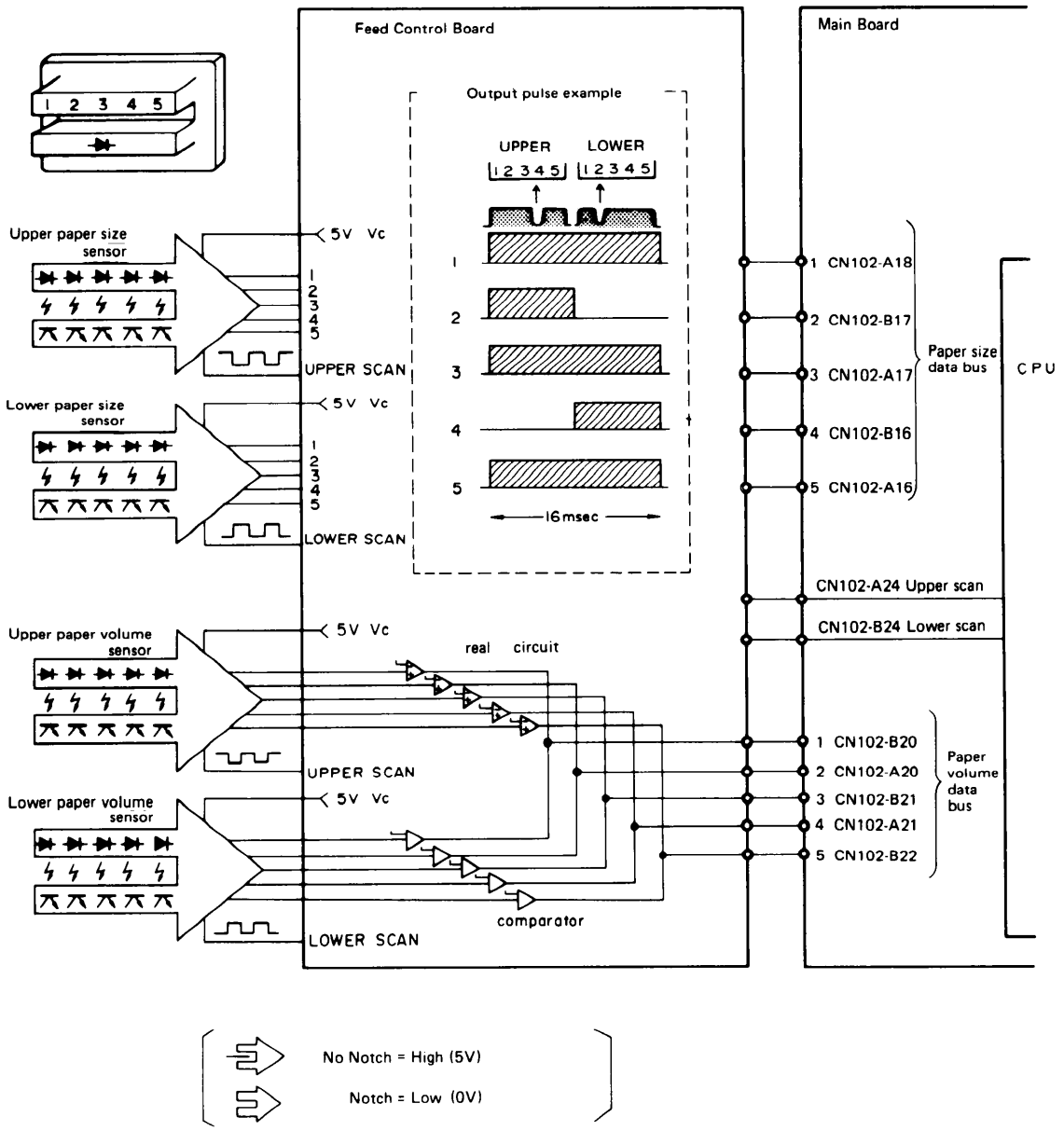

The CPU sends two separate scan pulses to the corresponding photointerruptors in the upper and lower sensors. The output of these two sensors can be monitored by one data bus because the scan pulses are inverted. The first half of the waveform corresponds to the lower sensor.

In the above diagram, two example actuator plates are shown. The actuator plates in the upper and lower paper size sensors have notches in the fourth and second positions respectively. Where the notches are, the photointerruptors remain activated (0V). Thus the first part of the fourth and the second part of second waveforms have lows. The CPU reads these five waveforms and determines the paper size in the upper and lower cassettes.

Roller Function

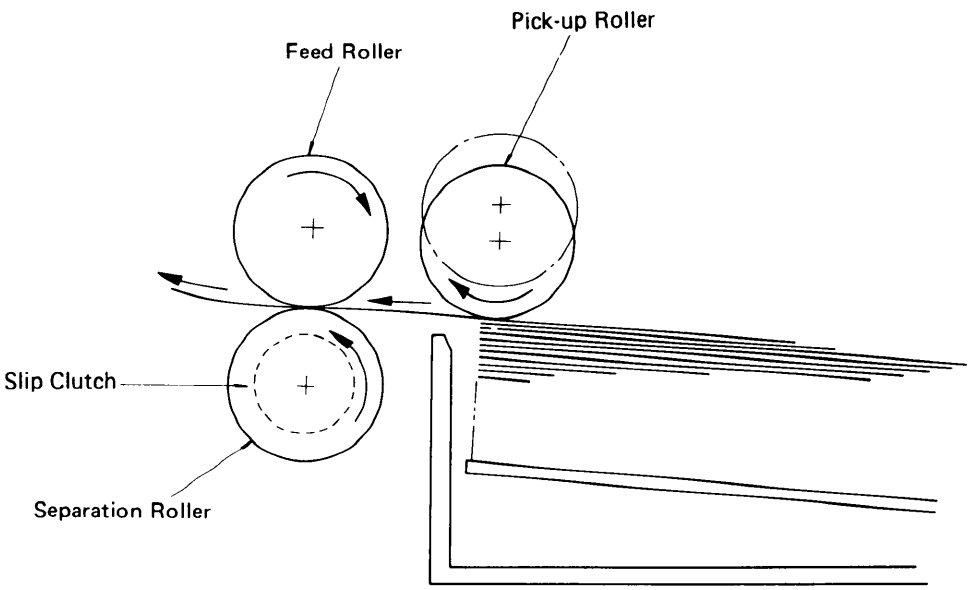

This copier uses an FRR (Feed + Reverse Roller) paper feed system which utilizes three rollers.

- Pick-up Roller -

The pick-up roller is in contact with the paper stack before it starts feeding paper. A few moments after the Print key has been depressed, the rotation of the pick-up roller feeds the top sheet between the feed and the separation rollers. At almost the same time as the paper's leading edge arrives at the feed roller, the pick-up roller lifts off of the paper stack so that it does not interfere with the operation of the feed and separation rollers. The feed and separation rollers then take over the paper feed process.

- Feed and Separation Rollers -

There is a one-way bearing inside of the feed roller so it can turn only in one direction. The separation roller is driven in an opposite direction to the feed roller. The separation roller, however, is driven through a slip clutch (torque limiter clutch) which allows it to turn in either direction depending on the friction between the rollers. The separation roller is kept in contact with the feed roller by a spring.

The direction that the separation roller turns depends on the frictional forces acting on it. The slip clutch applies a constant clockwise force (F2). When there is a single sheet of paper being driven between the rollers, the force of friction between the feed roller and the paper (F1) is greater than F2. So, the separation roller turns counterclockwise.

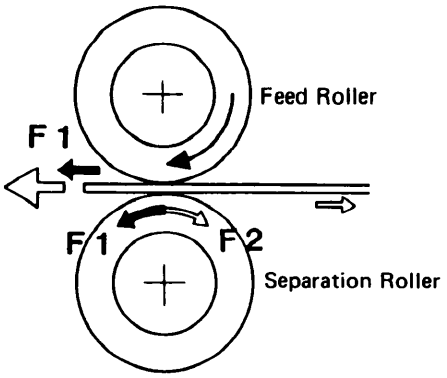

If two or more sheets are feed between the rollers, the forward force on the second sheet, F3, becomes less than F1 because the coefficient of friction between the two sheets are small. So, the separation roller starts turning clockwise and drives the second sheet back to the cassette.

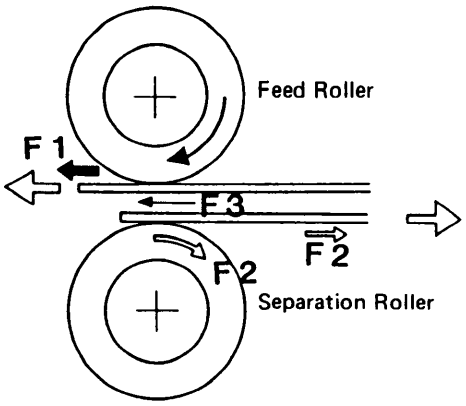

5. Slip Clutch Mechanism

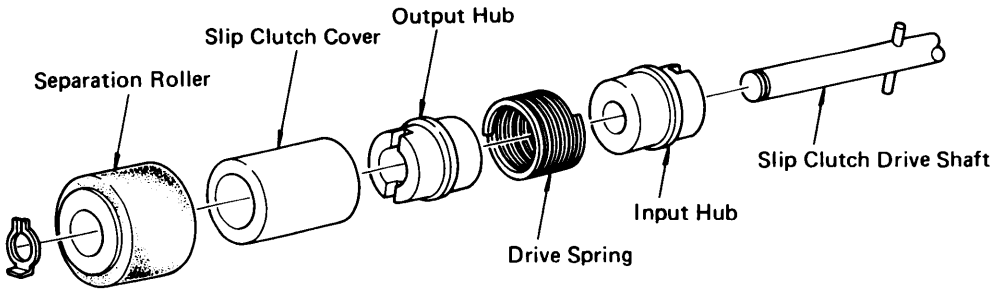

The slip clutch consists of two hubs connected by a drive spring. The spring grips the output hub tightly and grips the input hub loosely. It will slip if the resistance to rotation is too great. The hubs and spring are precisely machined and slip when resistance to rotation exceeds F1.

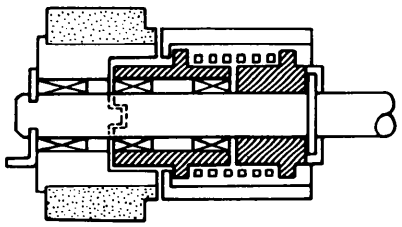

Paper Feed Drive

- Pick-up and Feed Roller Drive Mechanism -

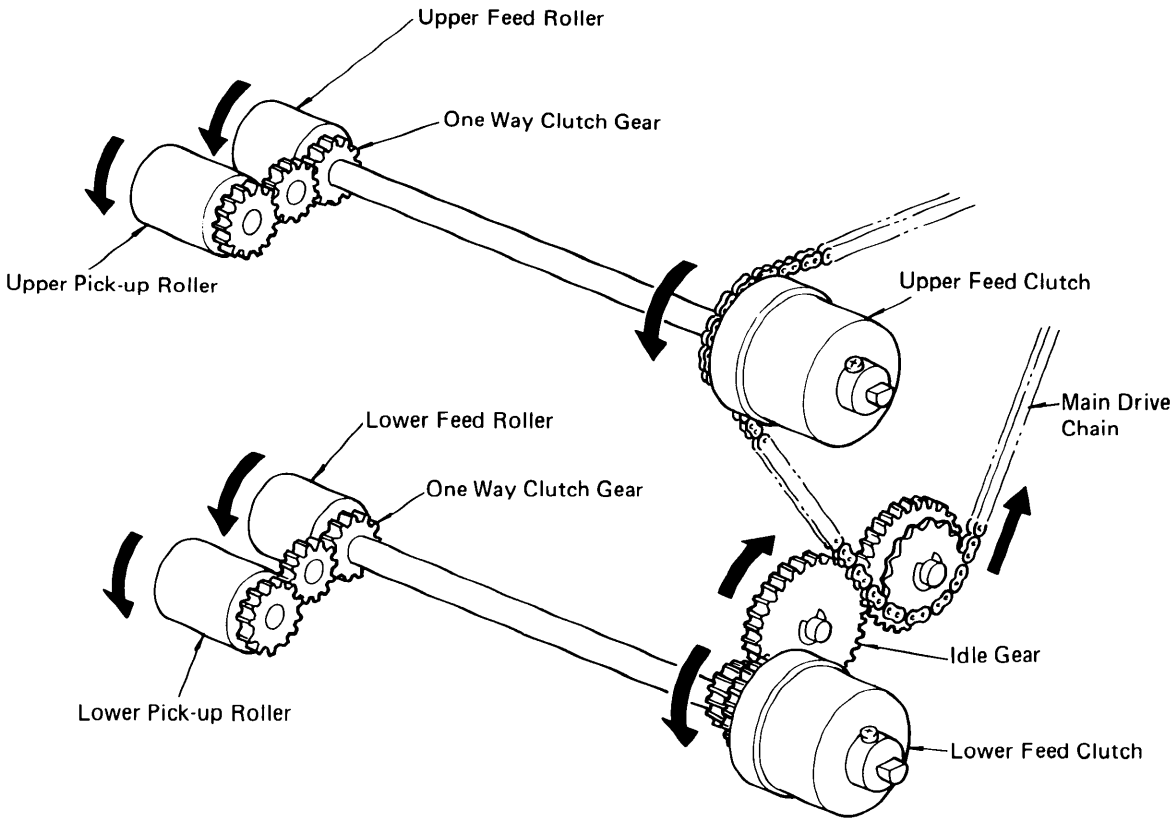

The upper feed clutch gear is directly driven by the main drive chain. The lower feed clutch gear is indirectly driven by the main drive chain through an idle gear.

When the CPU sends a paper feed signal to the feed clutch the clutch becomes energized. The clutch gear's rotation is then transfered to the feed roller shaft. This makes the feed roller rotate.

The pick-up roller rotates in the same direction as the feed roller. This is accomplished through an idle gear.

- Pick-up Roller Up/Down -

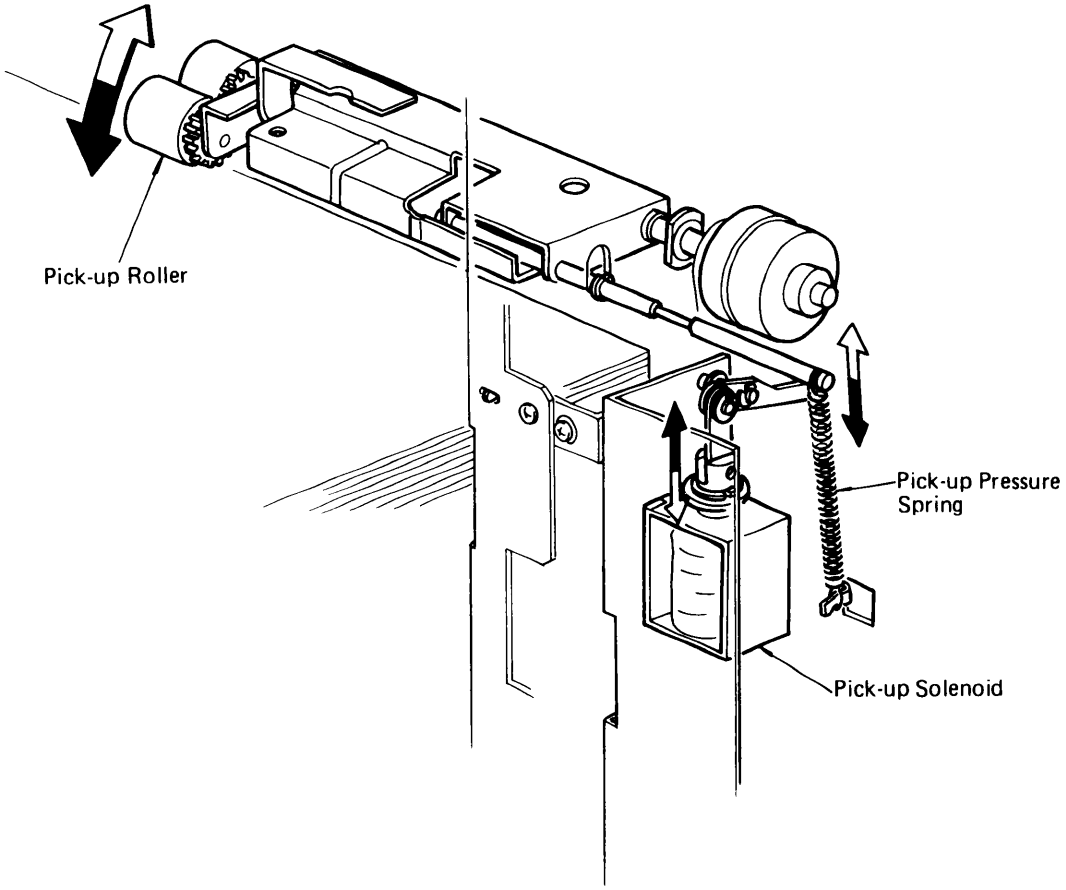

The pick-up solenoid is used for lifting up the pick-up roller. When the leading edge of the paper passes between the feed roller and separation roller, the CPU energizes the solenoid. The pick-up roller is then lifted to upper position which is out of the way of the paper feed. The lift timing between the upper and lower pick-up rollers is different. This is because the paper feed rollers have different speeds.

After the trailing edge of the paper passes under the pick-up roller, the pick-up roller drops onto the paper stack to prepare for the next copy cycle.

- Separation Roller Drive -

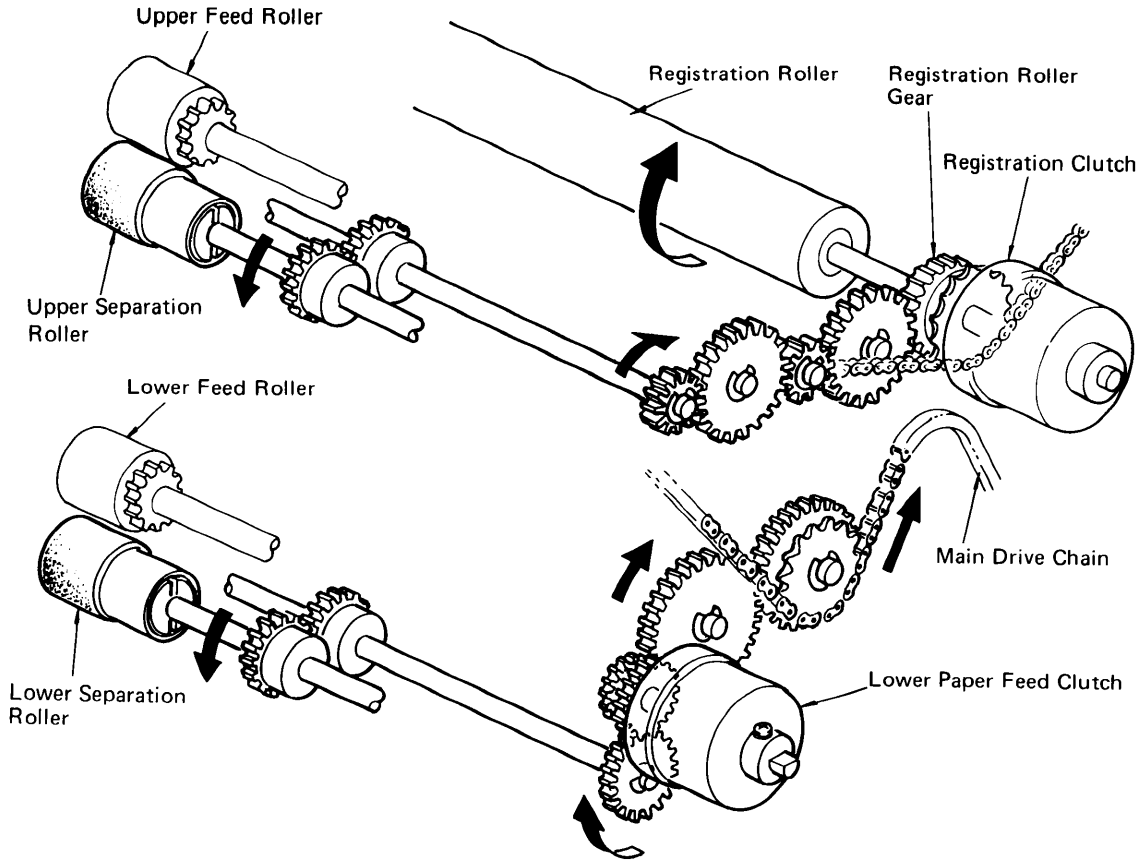

The upper separation roller drive is transmitted from the registration clutch via the registration roller gear and three idle gears. The lower separation roller drive is transmitted directly from the main drive chain via an idle gear and the lower paper feed clutch gear. The difference between the two drives is that the upper separation roller shaft stops when the registration clutch is de-energized.

When the Print key is depressed, drive is transmitted to both separation roller shafts. However, the separation rollers do not turn because of the friction from the feed rollers.

By-pass Feed

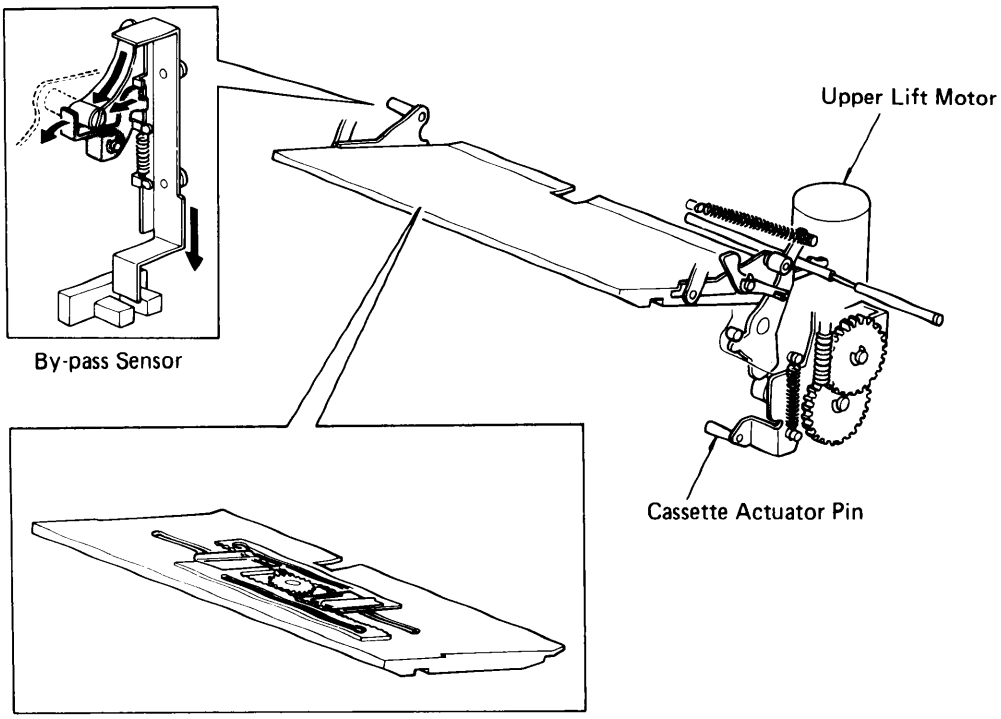

- Detection -

When the by-pass feed table is opened, an actuator plate slides down to actuate the by-pass sensor (0V -> 5V). This photointerruptor is installed behind the right inner cover. When the by-pass feed sensor has been actuated the CPU then shifts to by-pass feed mode.

By-pass feeding uses the upper cassette feed rollers. Therefore, the upper cassette paper must drop down out of the way when the by-pass feed table is opened. Opening the by-pass feed table, mechanically drops the upper cassette bottom plate and thus actuates the upper paper end sensor (0V -> 5V). The CPU detects a paper end condition and lights the Add Paper indicator.

When paper is inserted into the by-pass feed table, the upper paper end sensor is de-actuated. Since the photointerruptor is activated (5V -> 0V), the CPU turns off the Add Paper indicator.

- Mechanism -

When the by-pass feed table is closed, the lift gear (A) is engaged with the sector gear (B) because the cassette pushes down the cassette actuator pin (C).

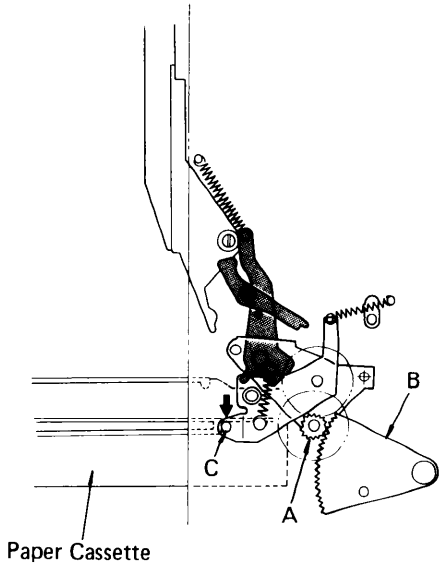

When the table is opened, the arm pin (D) pushes the by-pass lever (E) clockwise, this causes the by-pass lever (E) to turn the lift gear plate (F) clockwise by pushing up on pin (G). The lift gear (A) is then released from the sector gear (B). This drops the cassette bottom plate. The lock plate (H) rotates clockwise by its own weight and locks the by-pass lever (E).

The cassette actuator pin (C) stays in its lower position because the by-pass lever (E) prevents the cassette actuator plate (I) from moving the lift gear plate (F) by pushing down on pin (J) mounted on the cassette actuator plate (I). Furthermore, the table lever (K) lifts up the pick-up roller shaft (L), so the table can be opened smoothly.

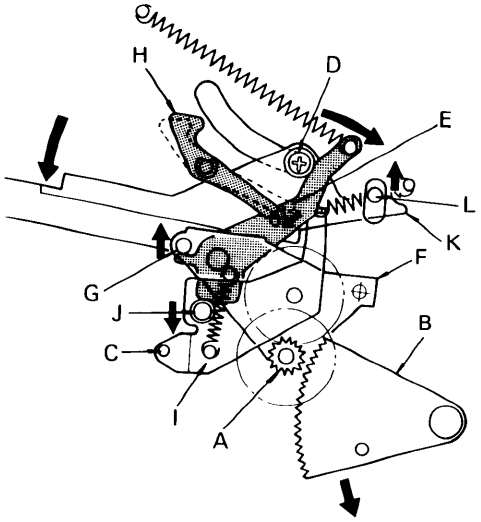

When the table is closed, the arm pin (D) kicks the lock plate (H) which rotates counterclockwise. The lock plate (H) then unlocks the by-pass lever (E) so that the by-pass lever (E) can move to its unlocked position via the by-pass release spring (M). Thus, the lift gear (A) engages with the sector gear (B) again and the cassette bottom plate is lifted via the lift motor and lift plate.

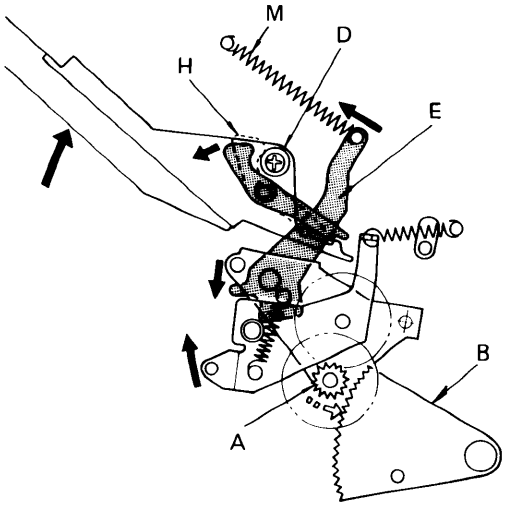

Relay Feed and Registration

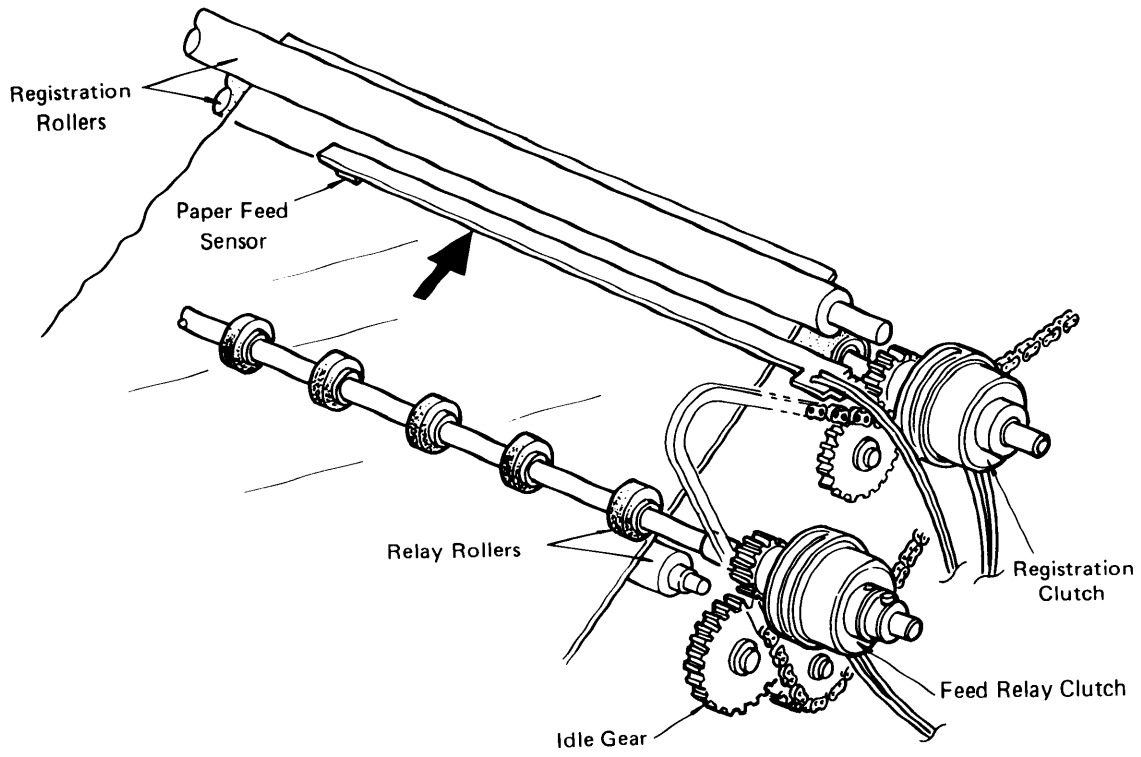

There are magnetic clutches on the shafts of the relay and registration rollers. These are similar to clutches on the paper feed roller shafts. When feeding paper from the lower cassette, the relay rollers take over the paper feed until the paper reaches the registration rollers.

The peripheral speed of the relay rollers is the same as that of the lower feed roller (491mm/sec.).

A paper feed sensor is positioned just before the registration rollers. When the sensor detects the leading edge of the copy paper a timer starts (84msec - upper feed, 40msec - lower feed). At the end of the timing period, the CPU turns off the upper feed paper clutch or the feed relay clutch (If feeding from lower cassette). This delay allows time for the paper to press against the registration rollers and buckle slightly to correct skew.

The CPU energizes the registration clutch when it receives a registration start signal from the optics board, depending on the reproduction ratio and margin value. The paper is fed at the same peripheral speed as the drum (Process speed 210mm/sec.).

- Image Shift -

If one of the margin adjustment keys has been selected, the CPU will change the on timing of the registration clutch to accomodate the operators command.



Referring to the Field Service Manual, read the following:

- ☐ Feed Clutch Adjustment
- ☐ Paper Feed Sensor Replacement
- ☐ Lead Edge Registration Adjustment
- ☐ Lead Edge Erase Adjustment



Turn on the VCR for a lecture on Paper Feed and a demonstration on Lead Edge Registration and Lead Edge Erase Adjustments.

Paper Feed Worksheet

This Worksheet will allow you to become more familiar with the operation of the Paper Feed System and their related circuits.

PART I — PAPER FEED

The Feed System consists of a pick-up roller, a feed roller, and a separation roller. To feed paper, the pick-up roller advances paper to the feed roller which then feeds one sheet of paper to the registration rollers.

1. Observe the operation of the pick-up, feed, and separation rollers.
2. Remove, clean, and replace the pick-up, feed, and separation rollers.

   Note: Clean these rollers with water ONLY.

PART II — SENSORS

Paper Size Sensor

1. Remove the cassettes. Manually activate the upper paper size sensor. What turns on? _____

   _____

   Push down on the cassette actuator pin at the rear of the upper feed station. What happens? _____

   _____

   What does the copier display if the upper paper size sensor is blocked for more than 20 seconds?

   _____

Lift Sensor

2. With the paper size sensor manually activated, raise the pick-up roller. What happens? _____

   _____

Volume Sensor

3. With both paper size and paper end sensors actuated, move the paper volume actuator up and down. What happens on the operation panel? _____

   _____

PART III — REGISTRATION AND ERASE

1. Check and adjust lead edge registration and lead edge erase using the OSA-3 test chart. Reference the procedures in the Field Service Manual.

Summary

Knowledge Check:

Do you know? . . .

1. How the paper feed system delivers a sheet of paper to the registration rollers.
2. How to remove, clean, and replace the rollers in the paper feed section.
3. How the different sensors in the paper feed section operate.



Before continuing the program, have your Service Manager review your answers to the Paper Feed Worksheet.

I have reviewed the work performance to this point.

_____

Service Manager's Signature

Continue to the next section. 



Paper Transport

Approximate Time: 30 Minutes

PAPER TRANSPORT

Overview

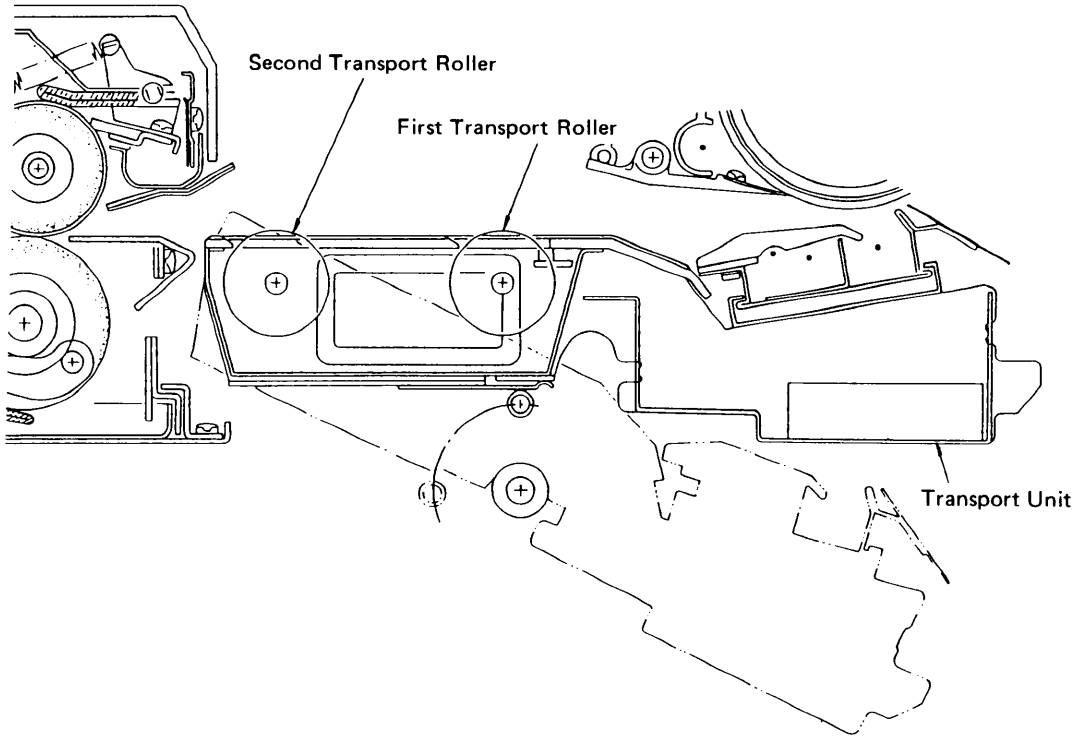

When the copy paper separates from the drum, the paper enters the transport unit and is advanced by the transport rollers to the fusing unit.

A vacuum fan holds the paper firmly against the rollers so that there is enough friction between the paper and the rollers for smooth transportation.

Transport Roller Drive Mechanism

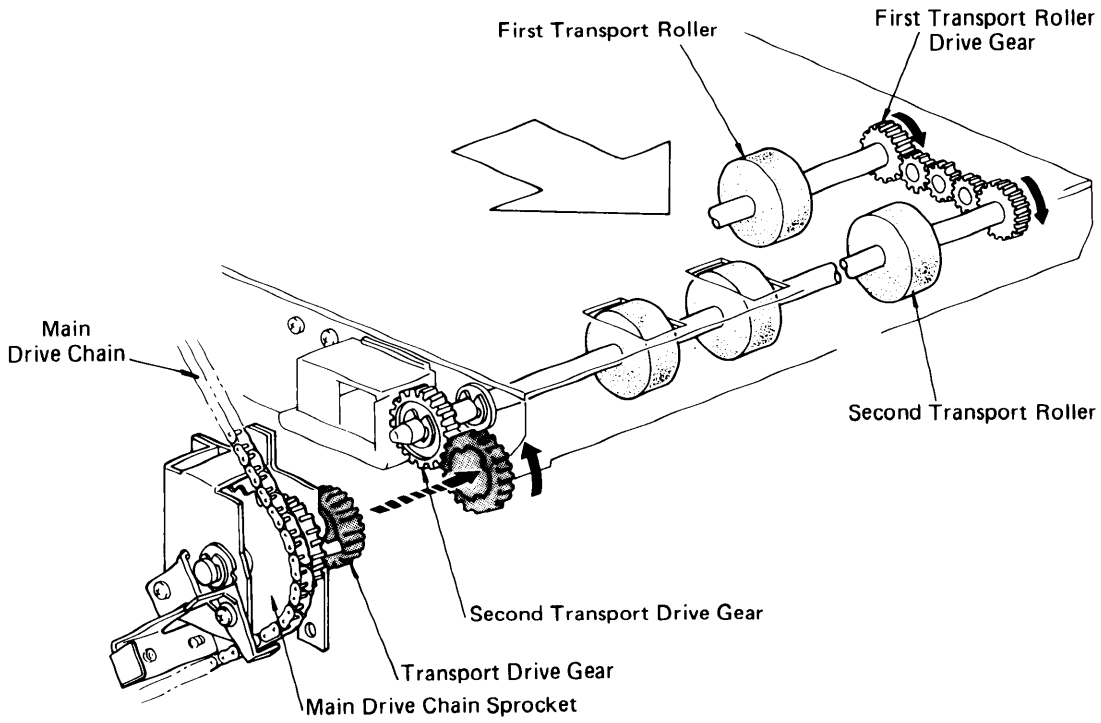

The transport roller is driven by the main drive chain. Drive is transmitted from the main drive chain sprocket to the transport drive gear. The transport drive gear engages with the second transport roller drive gear, which then drives the first transport roller drive gear, via three (3) idle gears.

Transport Unit Release Mechanism

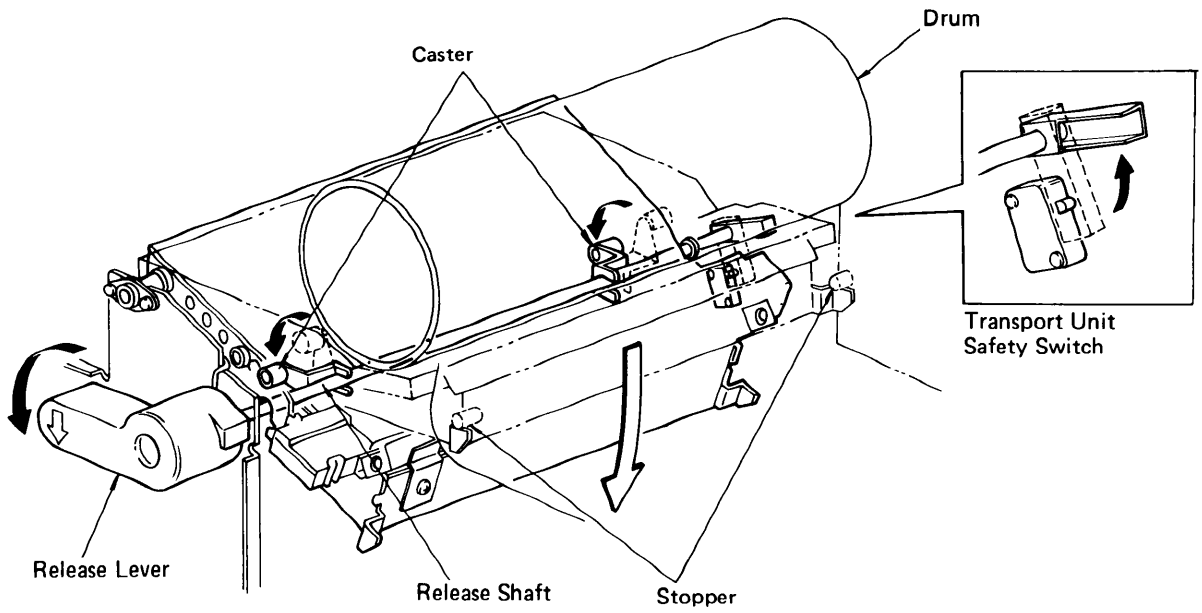

In order to remove misfed paper easily, the transport unit can be lowered from its position next to the drum.

The transport unit is supported by two casters which are mounted on the release shaft.

When the release lever is turned to the left, the casters also turn to the left and the transport unit is lowered.

In this model, it is possible to close the front cover while the transport unit is lowered. Therefore, whenever the transport unit is lowered, the transport unit safety switch is actuated, the Close Cover indicator remains lit and the Print key stays red.

Turn on the VCR for a lecture on Paper Transport.

Fault Isolation Worksheet 3

— Sections —
Pre-Cleaning Corona, Drum Cleaning, Paper Feed, and Paper Transport

1. How would copy quality be affected if the cleaning blade solenoid failed to energize?
   _____ A. Dark copies with background
   _____ B. Residual images
   _____ C. Service Call Indication, "Functional Drive"

   Now disconnect the Cleaning Solenoid Connector CN20. Run approximately 10 copies.

   Was your answer confirmed? If yes, you have a good understanding of the function of the cleaning blade.

2. If the upper lift motor were to fail at power up, how would copier operation be affected?
   _____ A. Self Diagnostic Code "41" before coming to ready condition
   _____ B. Self Diagnostic Code "43" before coming to ready condition
   _____ C. Self Diagnostic Code "41" after the start of the print cycle
   _____ D. Self Diagnostic Code "43" after the start of the print cycle
   _____ E. None of the above

   Now disconnect the upper lift motor connector CN5U. Turn the copier on and attempt to make a copy.

   Was your answer confirmed? If yes, then you have a good understanding of the paper lift mechanism.

If any of your answers were incorrect, go back and review the applicable sections.

Then continue to the next page. 



Fusing

Approximate Time: 2 Hours

FUSING AND PAPER EXIT

Overview

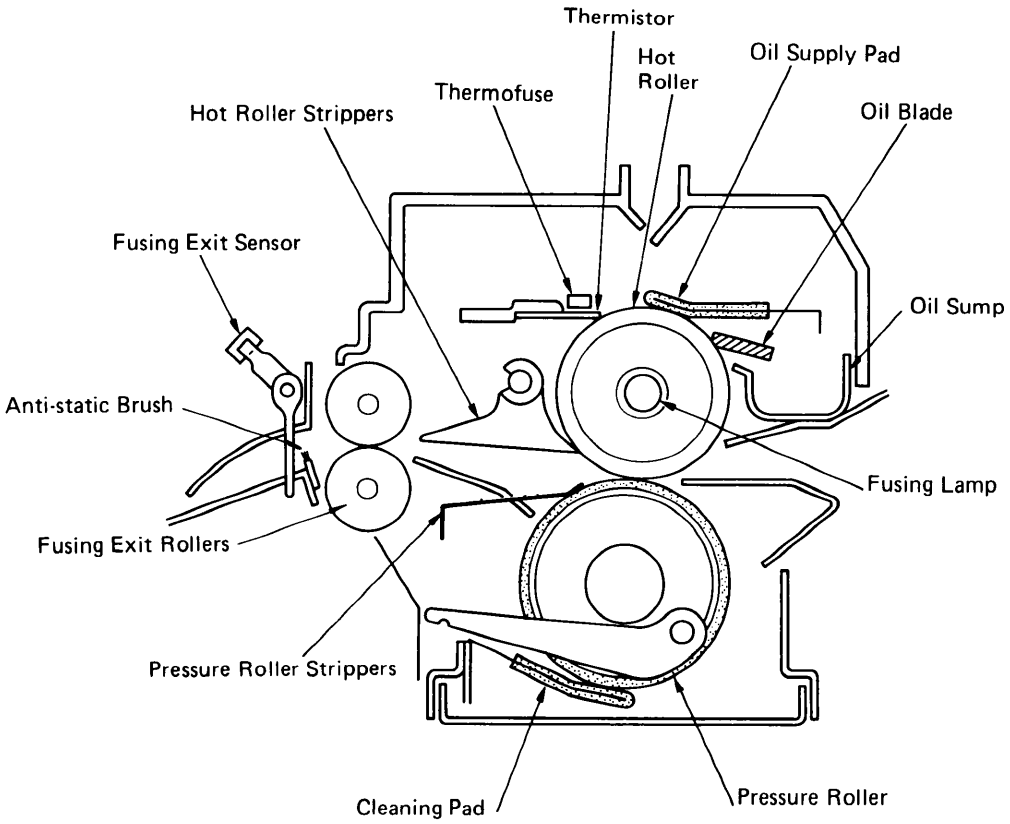

The image is fused to the copy paper by two rollers which apply heat and pressure. In this model, the hot roller is made of teflon and the pressure roller is made of silicone rubber. Pressure is constantly applied between the rollers. There is no pressure release mechanism.

The fusing lamp in this unit, which is located at the hot roller axis, is turned on and off to maintain the operating temperature. The temperature control board monitors the hot roller surface temperature through a thermistor. To reduce wear, the thermistor is not in contact with the hot roller.

Silicone oil is supplied to the hot roller in droplets which fall onto the roller just in front of the oil supply pad. This pad becomes saturated with oil. The oil blade then spreads the oil evenly across the hot roller. The oil has several purposes: it reduces the adhesion between paper and the hot roller so that there are fewer misfeeds, as well as reducing paper curl. The oil also helps to keep the roller clean by reducing the amount of toner transferred to the hot roller surface. Thus, the oil supply pad also works as the hot roller cleaning pad. The cleaning pad removes oil, toner, and dust from the pressure roller.

The hot roller strippers separate the copy from the hot roller and direct it to the fusing exit rollers. The pressure roller strippers prevent copies from wrapping around the pressure roller.

Fusing Roller Drive Mechanism

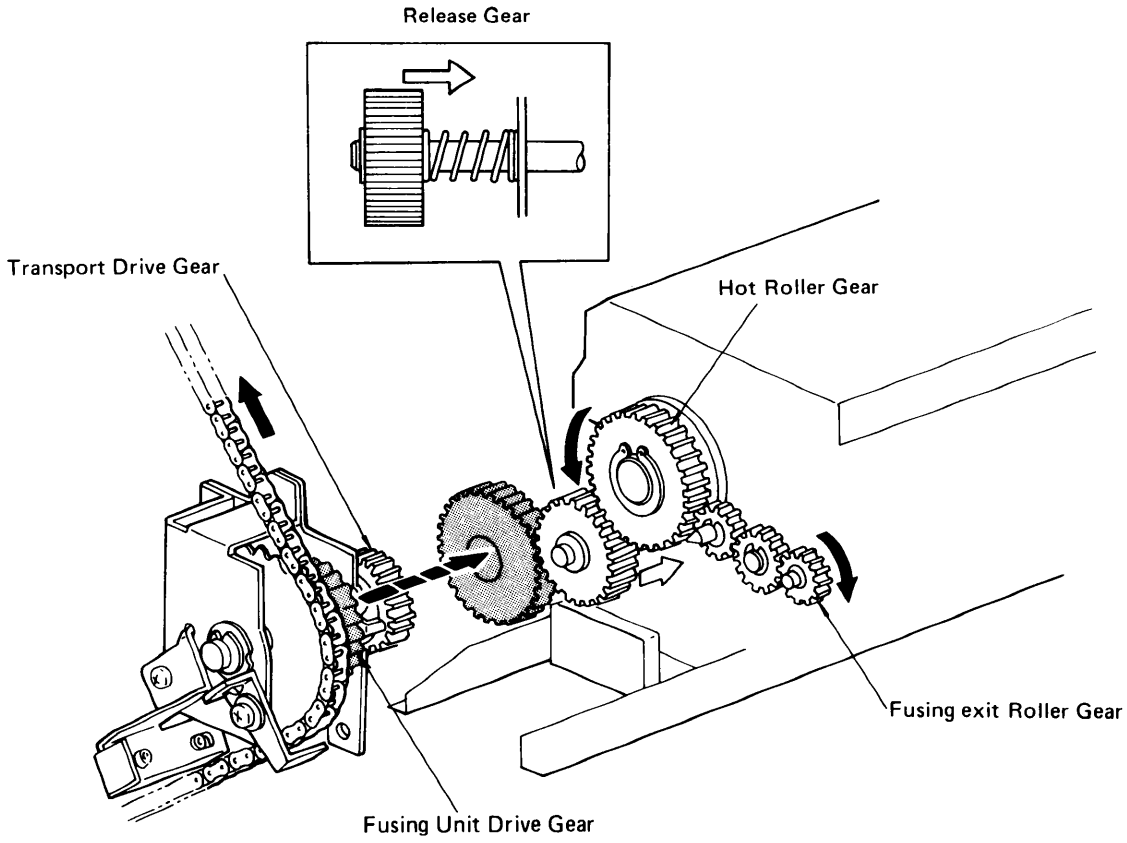

The fusing drive gear turns the release gear which drives the hot roller gear. Rotation passes from the hot roller gear through two idle gears to the exit rollers. The pressure roller is driven by the friction between two fusing rollers.

The release gear spring allows the release gear to move in and out. This prevents the gears from being damaged if they should not engage correctly when the fusing unit is set. Also, by pulling on the fusing knob, the operator can disengage the release gear and the fusing drive gear so that the fusing rollers can be turned easily for removing misfeeds.

Oil Supply and Cleaning

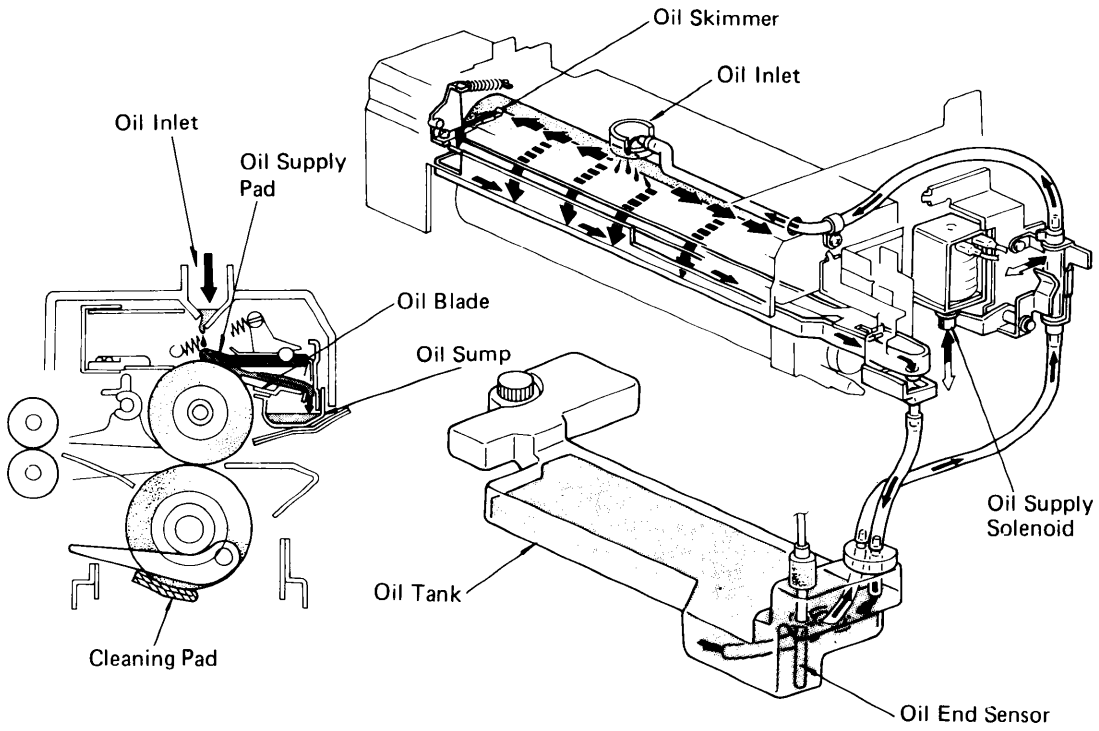

-Oil Supply-

Silicone oil is applied to the hot roller to help prevent toner and paper from sticking to the hot roller, to reduce paper curl, and to help in roller cleaning.

A small one-way valve type pump moves the oil from the oil tank (maximum capacity 1.6 liters) to the oil inlet at the top of the hot roller. On every copy cycle, the oil supply solenoid is energized one time. From the oil inlet the silicone oil falls in droplets onto the hot roller, and the oil supply pad.

The oil blade spreads and levels the oil on the hot roller. The excess oil flows along the blade toward the ends of the roller, and the oil skimmers scrape off the excess oil and return it to the oil sump.

-Cleaning-

The oil supply pad both distributes oil to the hot roller and removes toner and foreign matter from the hot roller surface.

The main function of the cleaning pad is to prevent excess oil from building up on the pressure roller. However, it also removes any toner that is transfered to the pressure roller from the hot roller or from copy paper when making duplex copies.

Oil End Sensor

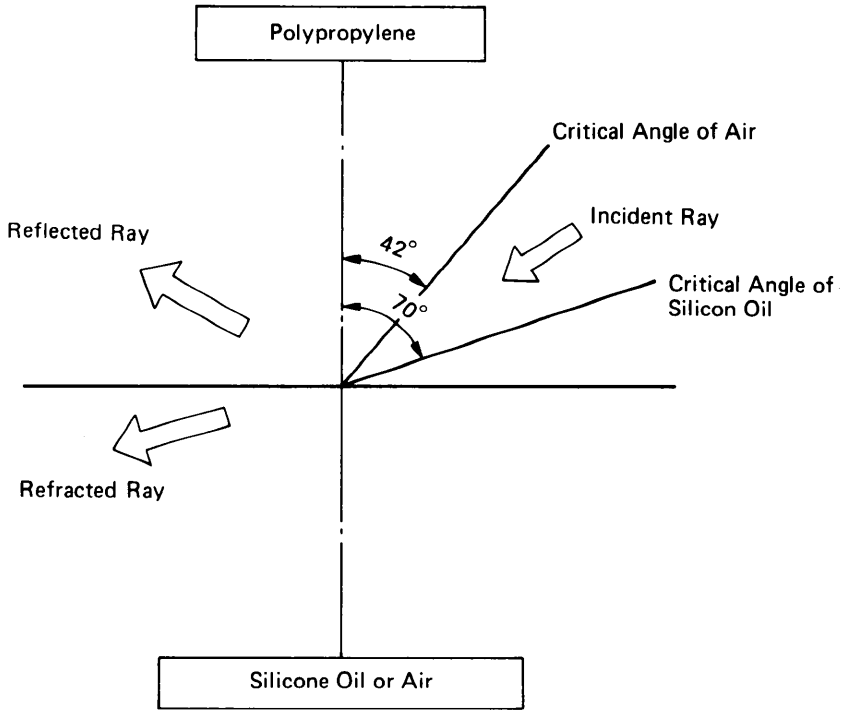

Oil end detection is based on the reflection and refraction theory.

The index of refraction of polypropylene is

$N1=1.49$

The index of refraction of silicone oil is

$N2=1.40$

1. When there is enough silicone oil, the critical angle is obtained by the following calculation.

$$\theta c=\sin^{-1}\left(\frac{N2}{N1}\right)=\sin^{-1}\left(\frac{1.40}{1.49}\right)=70^\circ$$

2. When oil tank becomes empty, oil is replaced by air, giving following calculation.

$$\theta' c=\sin^{-1}\left(\frac{1}{1.49}\right)=42^\circ$$

When the angle of incidence is between 42° and 70°, oil existence can be determined by checking whether there is a reflected ray or not.

When there is enough oil in the tank, the sensor is emersed in the oil. Light from the LED is refracted through the sensor head and the oil. The light cannot activate the sensor. In this case, the phototransistor will be off or de-activated. This will provide +5V at CN102-B11 on the main board informing the CPU that there is enough oil.

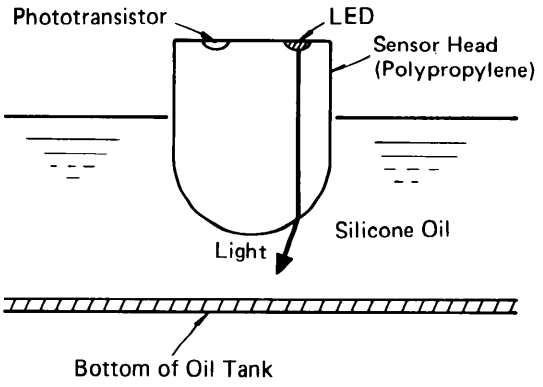

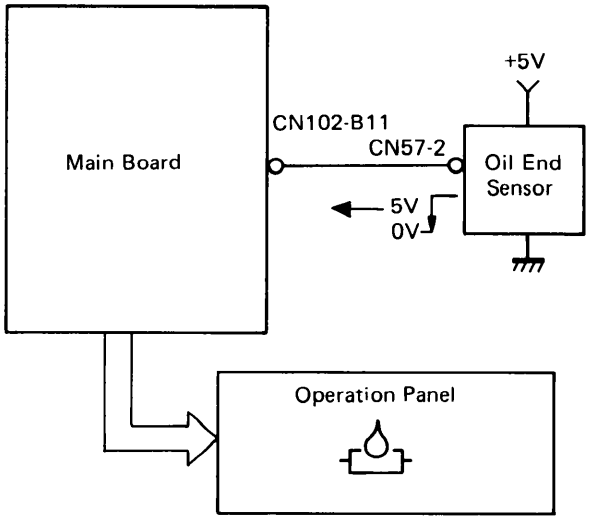

When the oil drops to a critically low level, the light rays from LED are reflected off the interphase and activate the sensor. In this case, the phototransistor will be on or activated. This will provide a low signal at CN102-B11 on the main board. The CPU will turn on the add oil indicator and turn the Print key red.

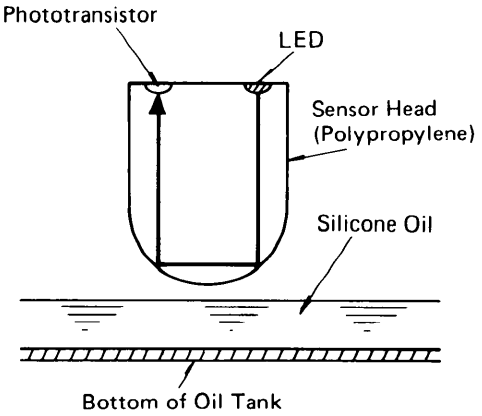

Even when the level of oil drops 2mm below the sensor, some oil will adhere to the sensor head (due to the viscosity of the oil and the shape of the sensor head). At this time, light is still refracted through the oil. When the level of oil continues to drop all oil will separate from the surface of the sensor head. The oil will not re-adhere to the sensor during the copy cycle because of the 2mm clearance. This prevents the sensor from chattering.

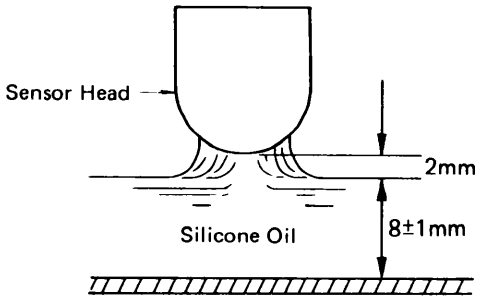

The plastic cylinder that surrounds the sensor has 2 slots cut in it. This will prevent air bubbles from forming, which otherwise could cause a false oil end signal.

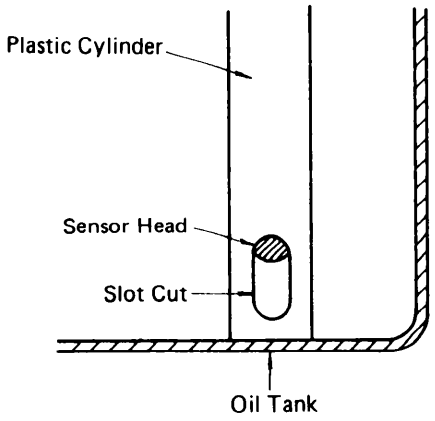

Fusing Roller Strippers

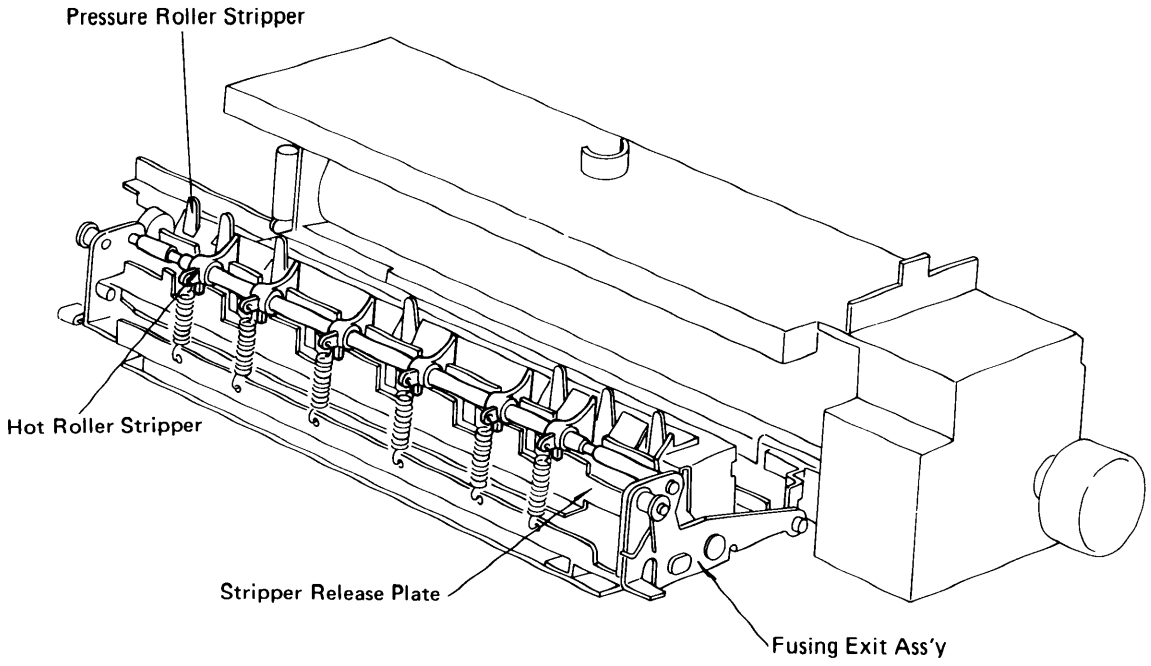

The hot roller strippers prevent copy paper from wrapping around the hot roller. They slide between the paper and the roller and then direct the paper to the fusing exit rollers.

The stripper release plate forces the strippers away from the hot roller when the fusing unit is pulled out. Therefore, when the exit assembly is opened and closed, the strippers will not hit against the roller, thus preventing the possibility of hot roller damage.

The pressure roller strippers also prevent copy paper from wrapping around the pressure roller.

Fusing Control

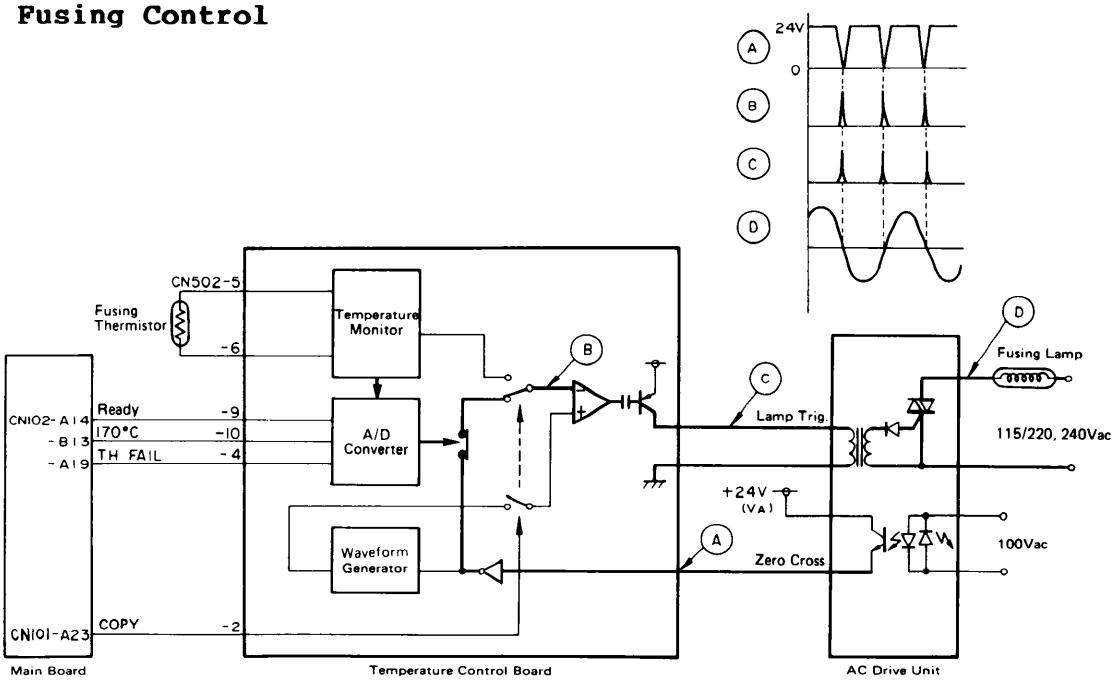

(Stand-by Condition)

The fusing lamp is controlled by the temperature control board. This board uses two systems to control fusing lamp: full waveform control (stand-by) or phase control (copy cycle).

- Stand-by Condition -

When power is applied to the ac drive unit, a zero cross signal (A) is generated and sent to the temperature control board. The temperature control board selects the stand-by mode (CN101-A23 high) unless both a ready signal and a Print signal are received. When in the stand-by mode, the lamp trigger signal (C), which has the same phase as the zero cross signal (B), is supplied to the ac drive unit.

This lamp trigger signal (C) turns on the triac in the ac drive unit, which then supplies a full ac waveform to the fusing lamp. In the stand-by mode, the thermistor indirectly controls the fusing lamp through the A/D converter.

The phase of this trigger signal is the same as the phase of the zero cross signal. Therefore, the triac is turned on by this trigger and a full waveform of the ac voltage is supplied to the fusing lamp. In this mode, the thermistor indirectly controls the fusing lamp through the A/D converter.

- Abnormal Condition - ("54")

Whenever temperature does not reach 180°C within 8min., the CPU lights the Call Service indicator and displays the self-diagnostic code "54".

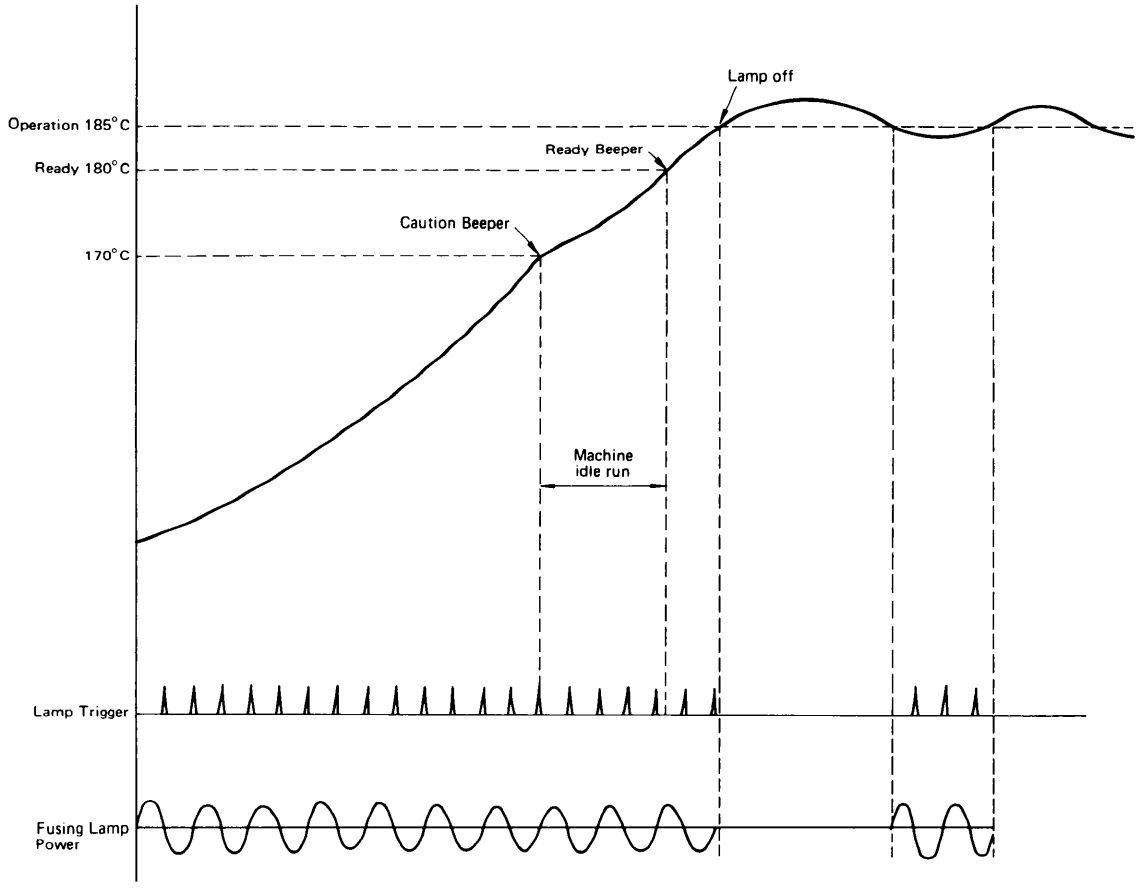

When the temperature reaches approximately 170°C, the temperature control board sends a low signal to the main board. Then the caution beeper sounds (5 beeps) and the machine cycles for approximately 30 seconds to warm-up the pressure roller and other fusing parts. During this warm up period, the fusing lamp receives full power. When the ready temperature (180°C) is achieved, a low signal is sent to the main board and the warm up period ends. Then, the ready beeper sounds (3 beeps) and the Print key turns green.

After the operating temperature (185°C) is reached the thermistor causes the A/D converter (pg 14-8) to turn off, and the temperature control board stops sending the trigger pulses. The fusing lamp is turned off. When the hot roller temperature drops below 185°C, the thermistor turns on the A/D converter and the fusing lamp is turned on by a full wave form again. During the stand-by condition, the fusing lamp is controled by this ON/OFF control system and regulated by the fusing thermistor.

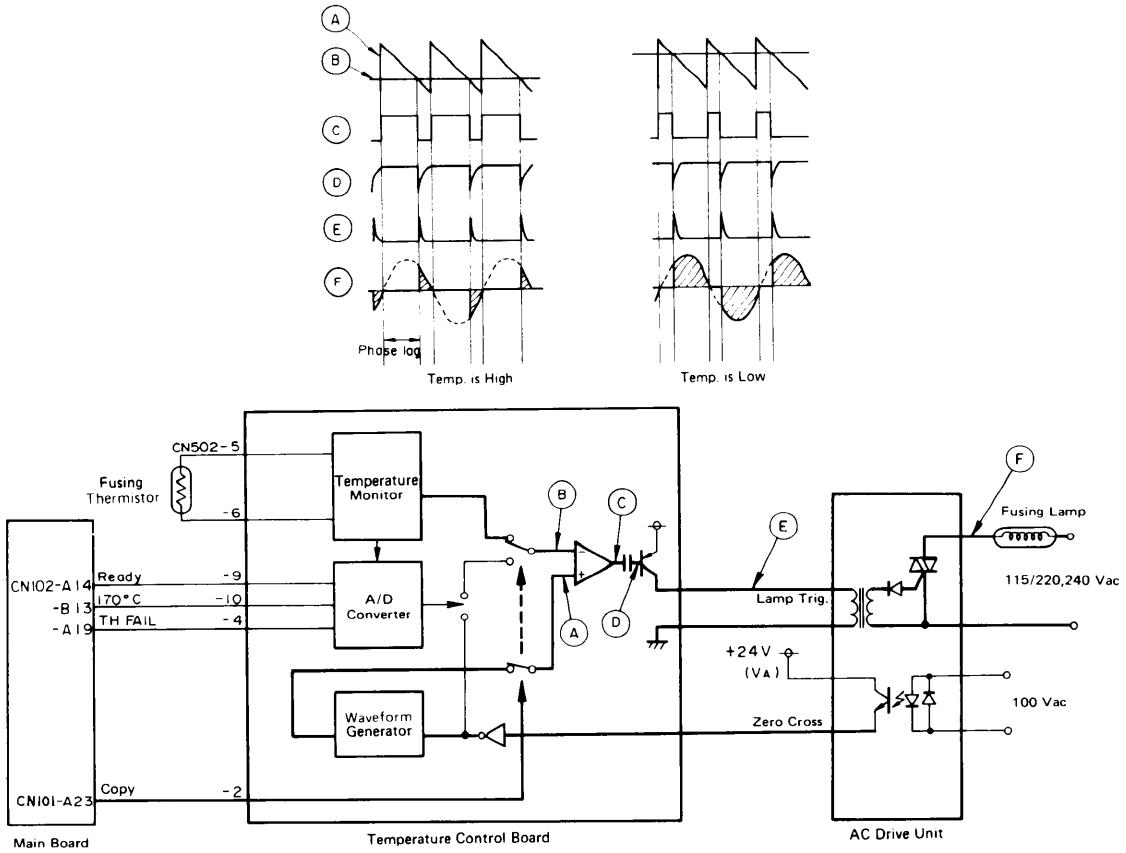

(Copy Cycle)

- Copy Cycle-

At the start of the copy cycle, the main board sends a low signal to the temperature control board (CN101-A23). This signal starts the phase control for the fusing lamp.

When the temperature drops, the potential at point (B) increases, then the pulse width of the output (C) decreases. This makes the phase lag of the trigger signal (E) smaller so that the amount of power for the fusing lamp increases.

When the temperature rises, the potential at point (B) decreases, then the pulse width of the output (C) increases. This makes the phase lag of the trigger signal bigger, so that the amount of power for the fusing lamp decreases. In this mode the thermistor directly controls the fusing lamp.

When the copy cycle is finished, the control of the fusing lamp will shift from this phase control to the ON/OFF control used in the stand-by condition.

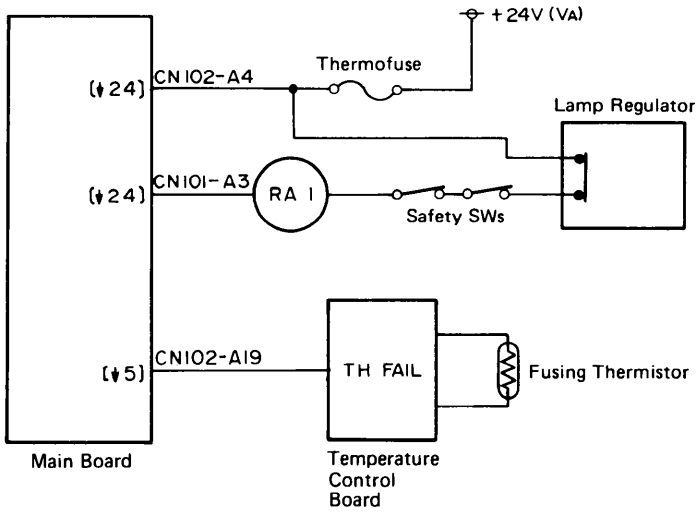

- Thermofuse Blown - ("52")

If the temperature reaches 410-420°C, the thermofuse will blow and cut the 24V line to the main board (CN102-A4). Then the CPU lights the Call Service indicator and displays the self-diagnostic code "52."

A blown thermofuse also cuts the power to the main relay (RA1) and stops the machine.

- Thermistor Failure - ("53")

If the fusing thermistor circuit opens, the temperature control board sends a low signal to the main board (CN102-A19). Also, when the temperature rises to 220-240°C, or the thermistor circuit shorts, a low signal is sent (CN102-A19). In either case, the CPU will stop the copier, light the Call Service indicator, and display the self-diagnostic code "53."

Code "53" also indicates an abnormal condition in the drum heater control.

- Hot Roller Temperature -

-- 450°C — The Ignition Point of Paper

-- 410-420°C — Thermofuse Will Blow
If temperature control should fail, the themofuse will prevent the temperature from reaching the ignition point of paper. (Call Service Code "52")

-- 250°C — Hot Roller Damage
At or above this temperature, the hot roller will be damaged.

-- 220-240°C — Upper Temperature Limit
If for any reason the hot roller temperature should get this, the fusing thermistor resistance will become so low that the CPU detects a thermistor short, resulting in a Call Service condition (Code "53"). This prevents roller damage.

--215-220°C — Silicone Oil Starts Smoking
Maximum overshoot must be less than this value.

--185°C — Operating Temperature
During the "Ready" condition, the temperature is kept at this value.

--180°C — Ready Temperature
At this temperature, the ready beeper sounds three times and the Print key turns green.

--170°C — Machine Idle Run
At this temperature, the caution beeper sounds five times and after 2 seconds, the machine cycles for approximately 30seconds.

Paper Exit Overview

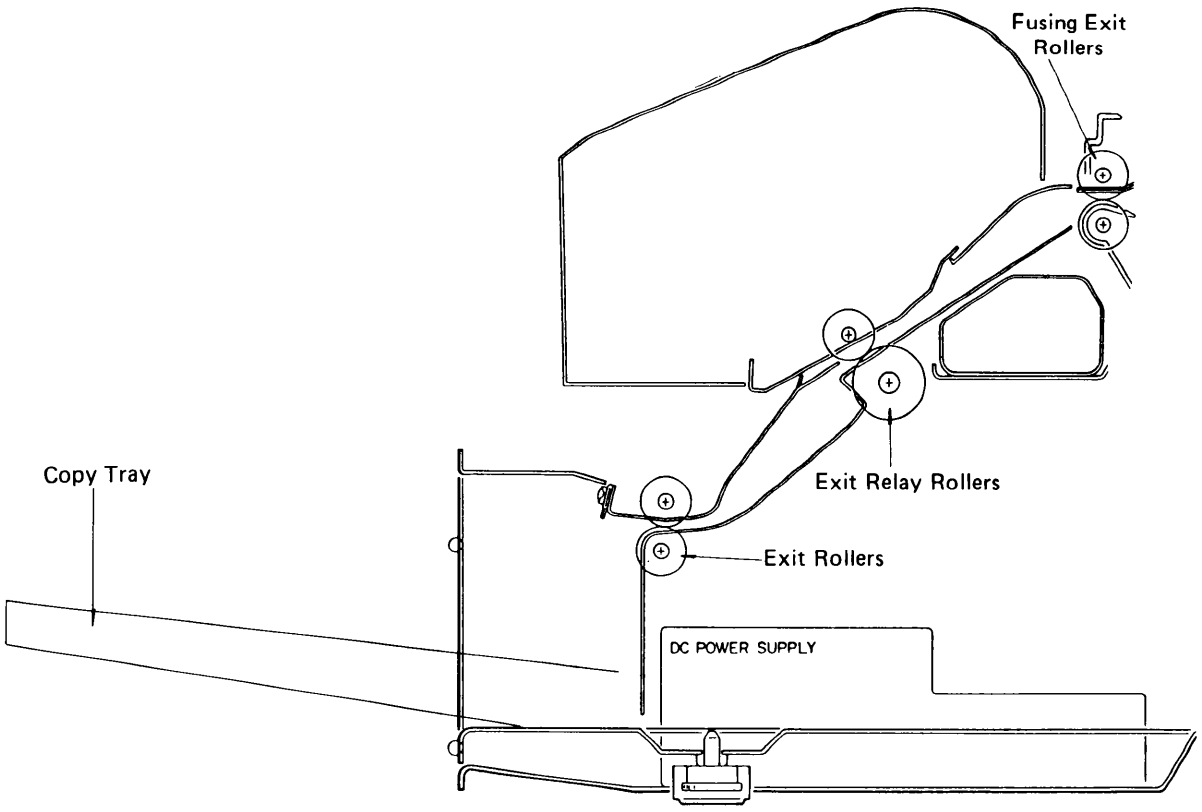

After fusing, the copies are delivered to the copy tray through the fusing exit rollers, exit relay rollers, and the exit rollers. An anti-static brush removes static electricity from the copies as they leave the paper exit area. This improves their ability to stack properly.

Exit Rollers Drive Mechanism

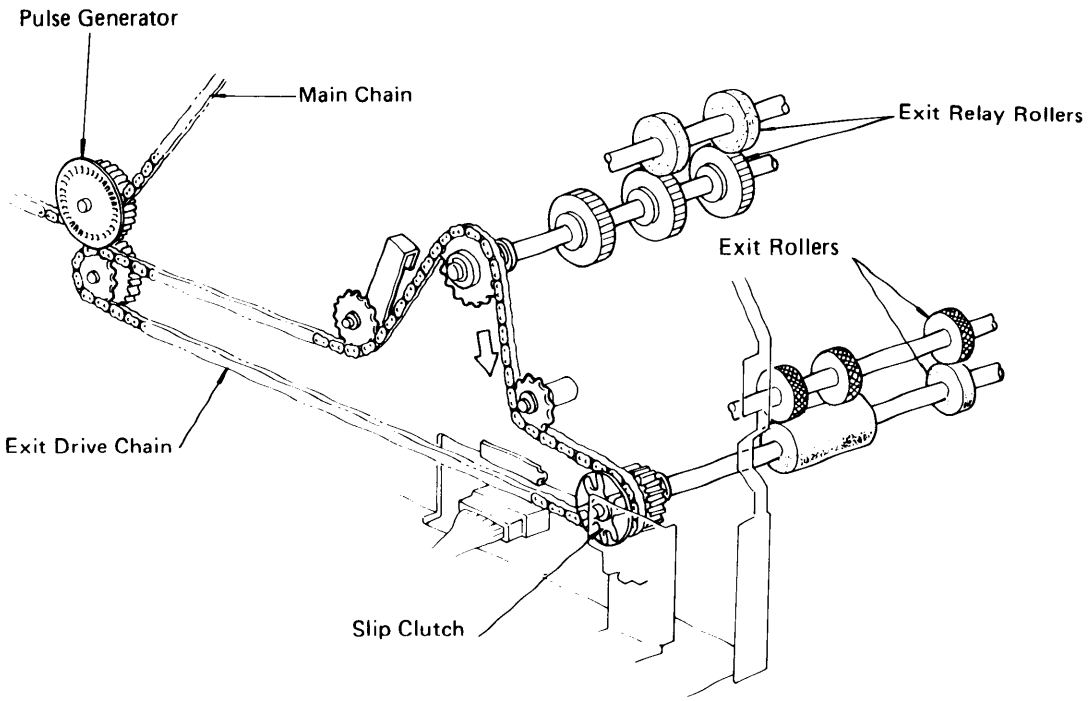

The pulse generator gear drives the chain that drives the exit relay and exit rollers.

For safety purposes, the lower exit roller is driven through a slip clutch. This slip clutch is such that the roller turns when operating normally, but it slips when excessive force exists between the lower exit roller and exit roller cover.

Important: Turn off the Main Switch of your copier, so the Fusing can cool down so the upcoming procedures can be performed.

Read the following material from the FT5050/5070 Field Service Manual:

- ☐ Oil Blade Replacement
- ☐ Hot Roller Replacement
- ☐ Pressure Roller Replacement
- ☐ Fusing Roller Strippers Replacement
- ☐ Thermistor Replacement
- ☐ Thermistor Gap Adjustment
- ☐ Checking Hot Roller Temperature

Turn on the VCR for a lecture on Fusing and a demonstration on Thermistor Gap Adjustment.

Fusing Worksheet

This Worksheet will allow you to become more familiar with the operation of the Fusing System and its electrical control. This Worksheet will allow you to remove, replace, check and adjust those components involving the fusing area.

PART I — FUSING UNIT (MECHANICAL)

The fusing unit function is to bond toner into the copy paper. This is done through heat and pressure.

Therefore, to obtain good copy quality the fuser rollers must be in good condition and its temperature adjusted accordingly to produce consistent copy quality and reduced maintenance.

A. Locate the fuser hot roller replacement procedure.

B. Remove and reinstall the hot roller in your copier.

C. Check and adjust the thermistor gap.

D. Check and adjust the hot roller temperature.

E. How often should the following items be cleaned or replaced?

	Clean	Replace
1. Hot roller	_____	_____
2. Pressure roller	_____	_____
3. Oil blade	_____	_____

PART II — FUSING UNIT (ELECTRICAL)

1. With the copier in a ready condition, monitor and list the following voltages on the Temperature Control Board:

   CN502-9 [D3] Ready 180 deg. _____
   CN502-10 [D3] Ready 170 deg. _____
   CN502-4 [D3] TH Fail _____
   CN501-4 [D3] Zero Cross _____
   CN501-3 [D4] Lamp Trigger _____

2. Slide the fusing unit partially out of the machine. What is the voltage at CN502-4 (TH Fail)? _____

3. After allowing the fusing unit to cool to below 170 degrees, slide the fusing unit back into the machine and allow the fusing unit to warm up.

   — What happens when CN502-10 [D3] goes low? _____

   — What happens when CN502-9 [D3] goes low? _____

   — Monitor the voltage at CN502-2 [D3].
   Ready: _____ Copy Cycle: _____

   — What would happen if CN501-4 [D3] read 0 volts? _____

SUMMARY

Knowledge Check:

Do you know? . . .
1. How the fusing unit operates mechanically.
2. How the fusing unit operates electrically.
3. How to monitor the voltages associated with the fusing unit.



Before continuing the program, have your Service Manager review your answers to the Fault Isolation Worksheet 3 and Fusing Worksheet.

I have reviewed the work performance to this point.

_____

Service Manager's Signature

Continue to the next section. 



Inversion and Duplex

Approximate Time: 2 Hours 30 Minutes

INVERSION AND DUPLEX

Inversion Overview

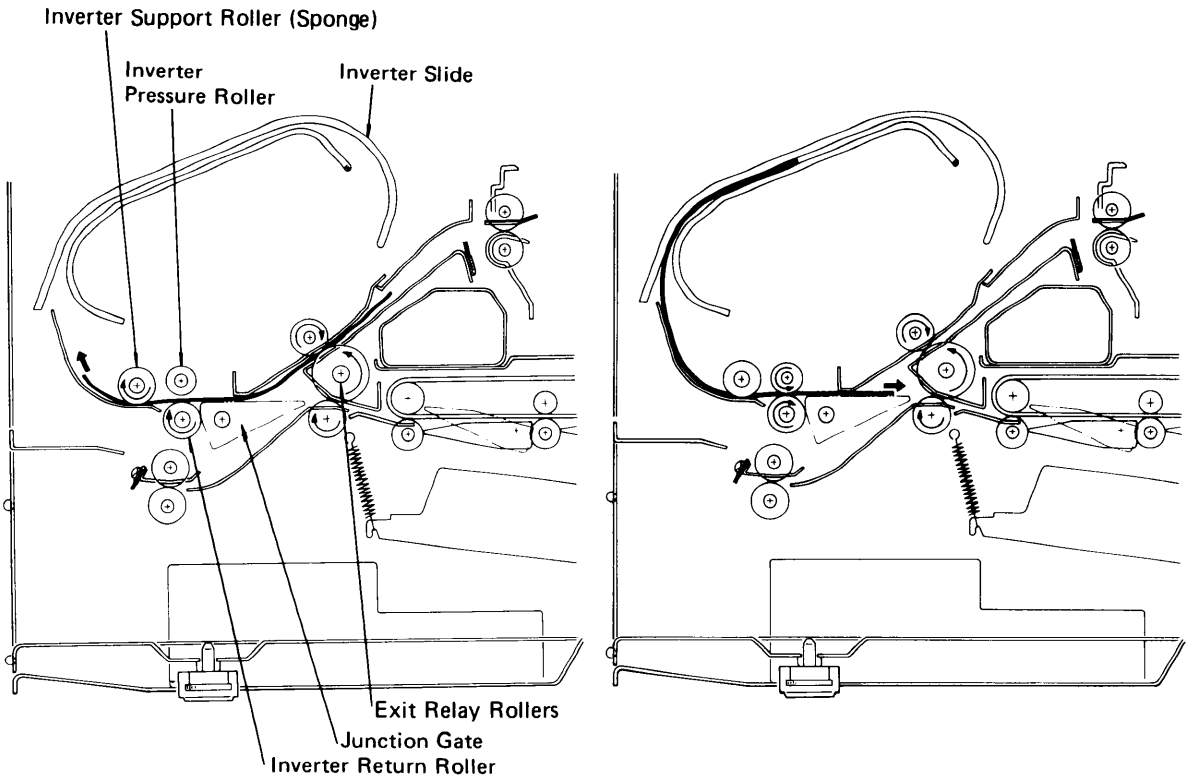

After passing through the fusing unit, copies come to the junction gate. The junction gate is controlled by the junction gate solenoid.

Single-sided copies go straight to the paper exit by passing under the junction gate. Copies to be duplexed enter the inverter unit by passing over the junction gate. Once the copy is in the inverter unit the feed direction is reversed, and the copy exits from the inverter unit via the fork gate unit to the duplex tray.

Forward Drive

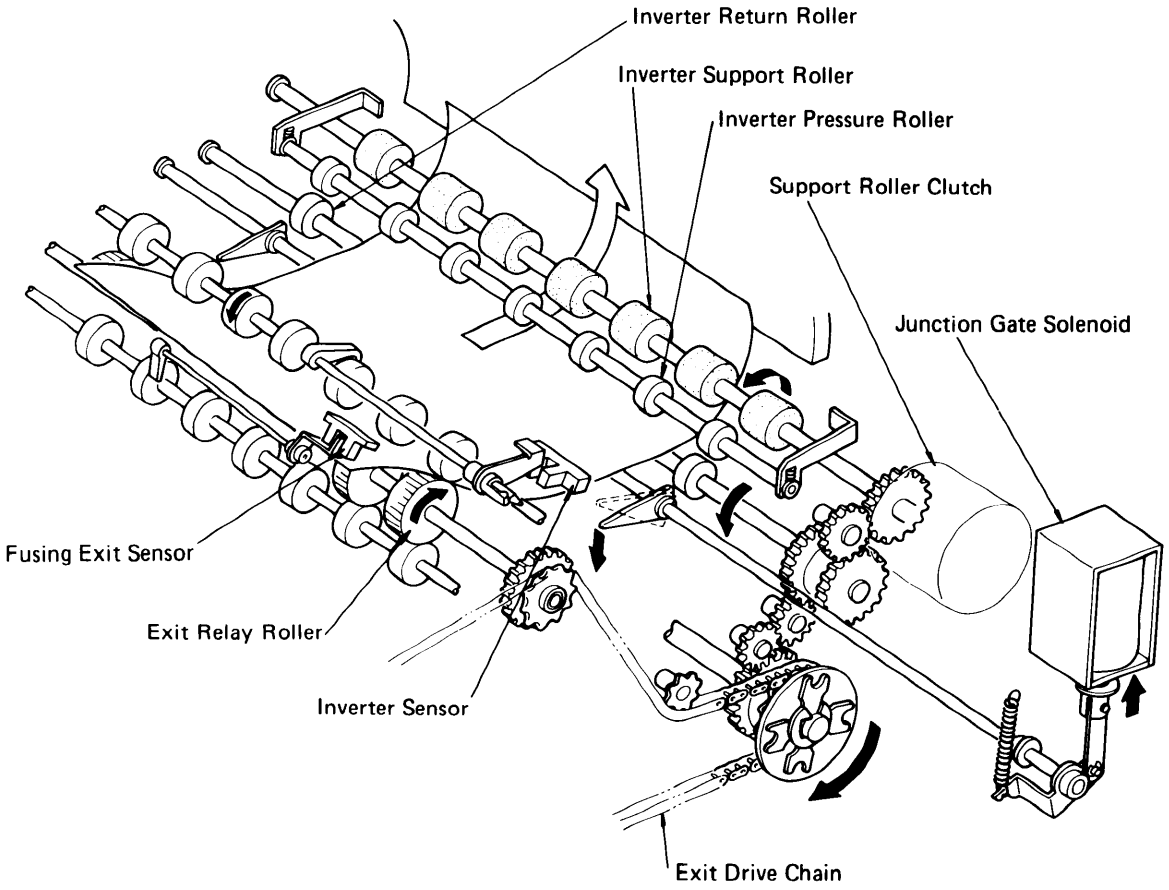

When the copy's leading edge passes the fusing exit sensor, the CPU energizes the junction gate solenoid. At the same time, the CPU energizes the support roller clutch and the inverter support roller begins rotating so as to be ready to drive the copy forward. The exit relay rollers, assisted by the inverter support roller, feed the copy into the inverter unit. The inverter pressure roller is in the upper position at this time. The forward drive is provided via a gear train from the exit drive chain.

Reverse Drive

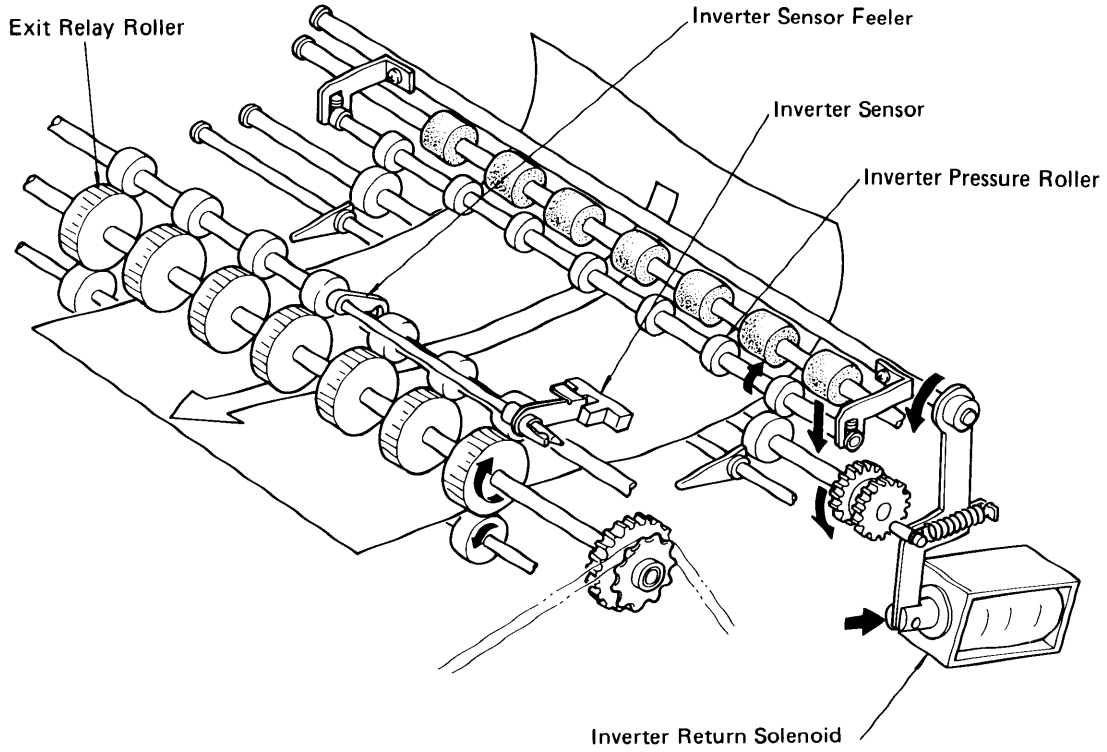

The CPU de-energizes the support roller clutch 20 pulses after the copy's trailing edge has passed the inverter sensor. De-energizing the support roller clutch stops the rotation of the inverter support roller and halts the forward drive.

The CPU energizes the inverter return solenoid 1 pulse (5 msec.) after the support roller clutch has been de-energized. Energizing the inverter return solenoid lowers the inverter pressure roller onto the inverter return roller. Since the inverter return roller is always rotating (reverse drive), the feed direction is reversed. The return roller drives the copy to the lower set of exit relay rollers which then feed the copy to the fork gate unit.

The CPU de-energizes the inverter return solenoid 125 pulses (618 msec.) after it has been energized. De-energizing the inverter return solenoid raises the inverter pressure roller. After 10 pulses (48 msec.), the CPU energizes the support roller clutch again so that the inverter support roller is rotating for the next copy.

Duplex Transport Overview

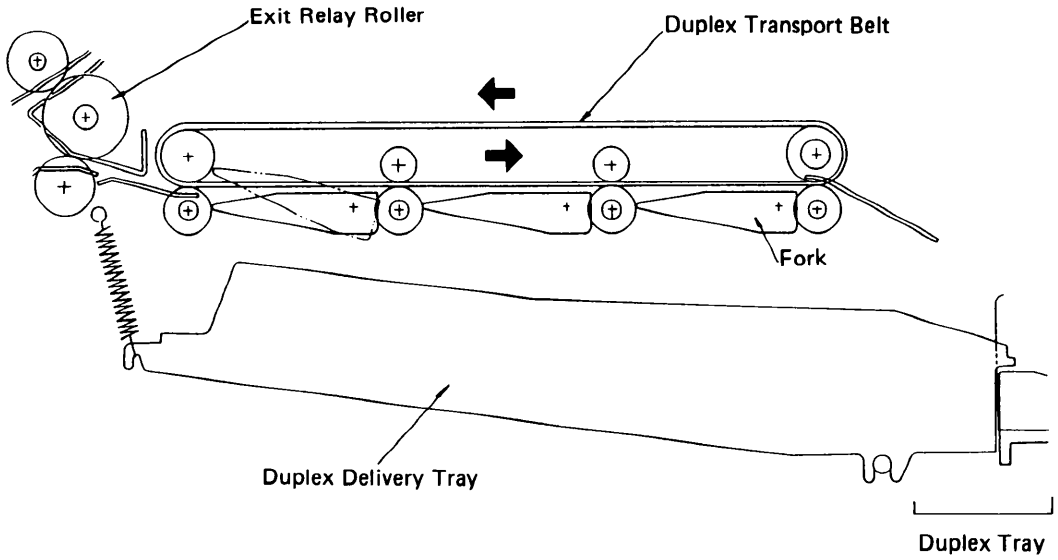

After the copy is reversed in the inverter unit, it comes to the fork gate unit. This unit acts as an entrance gate to the duplex tray.

The transport belts carry the copy towards the right. At the first open gate, the paper is driven down to duplex tray. Which gate the CPU opens will depend upon the size of the copy paper.

Fork Gate Mechanism

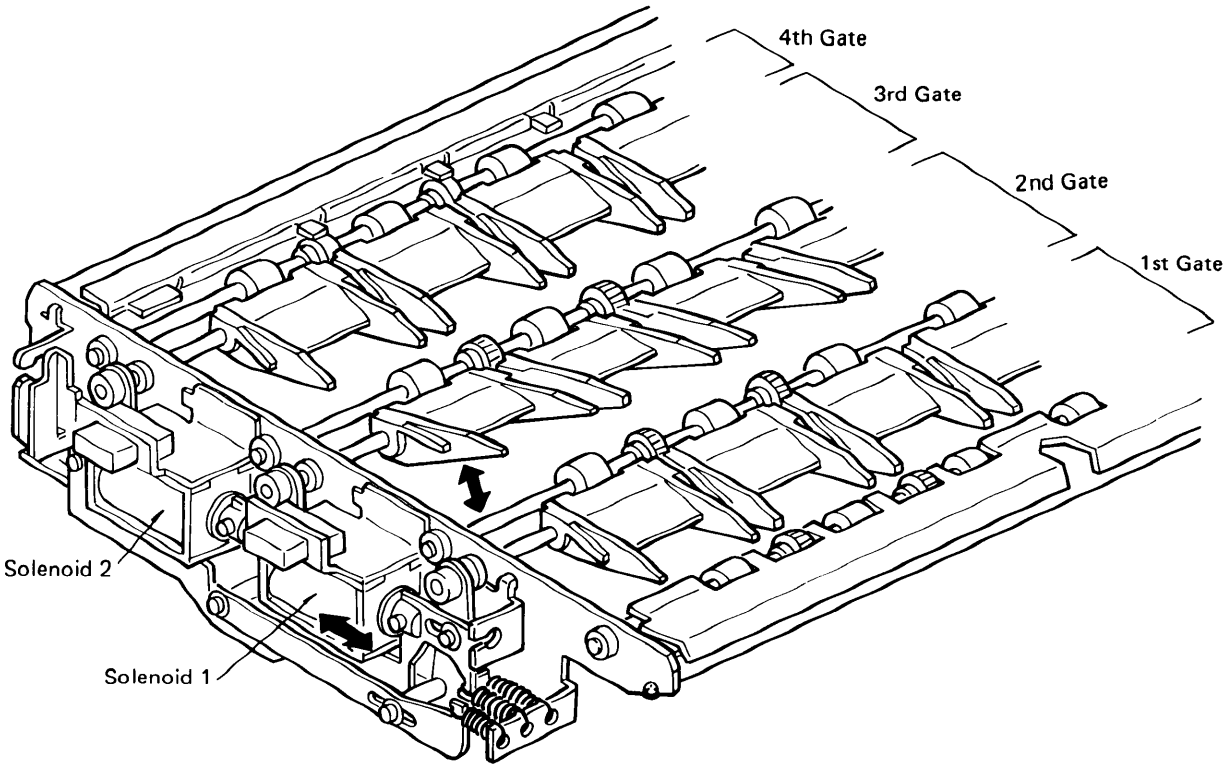

The fork gate unit has four gates through which copy paper passes to the duplex tray. Two solenoids working together, create any of four separate states for the fork gates . (See the figure to the right.)

	Sol. 1	Sol. 2	Effective Gate	Paper Size
1	OFF	OFF	1st	A3 11" X 17"
2	ON	OFF	2nd	B4 8 ½" X 14"
3	OFF	ON	3rd	A4R,B5R 8 ½" X 11"
4	ON	ON	4th	A4,B5 11" X 8 ½"

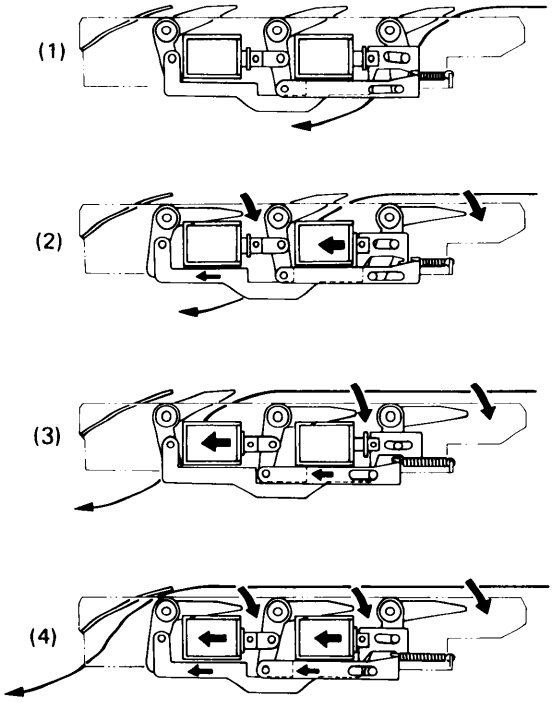

Duplex Transport Drive

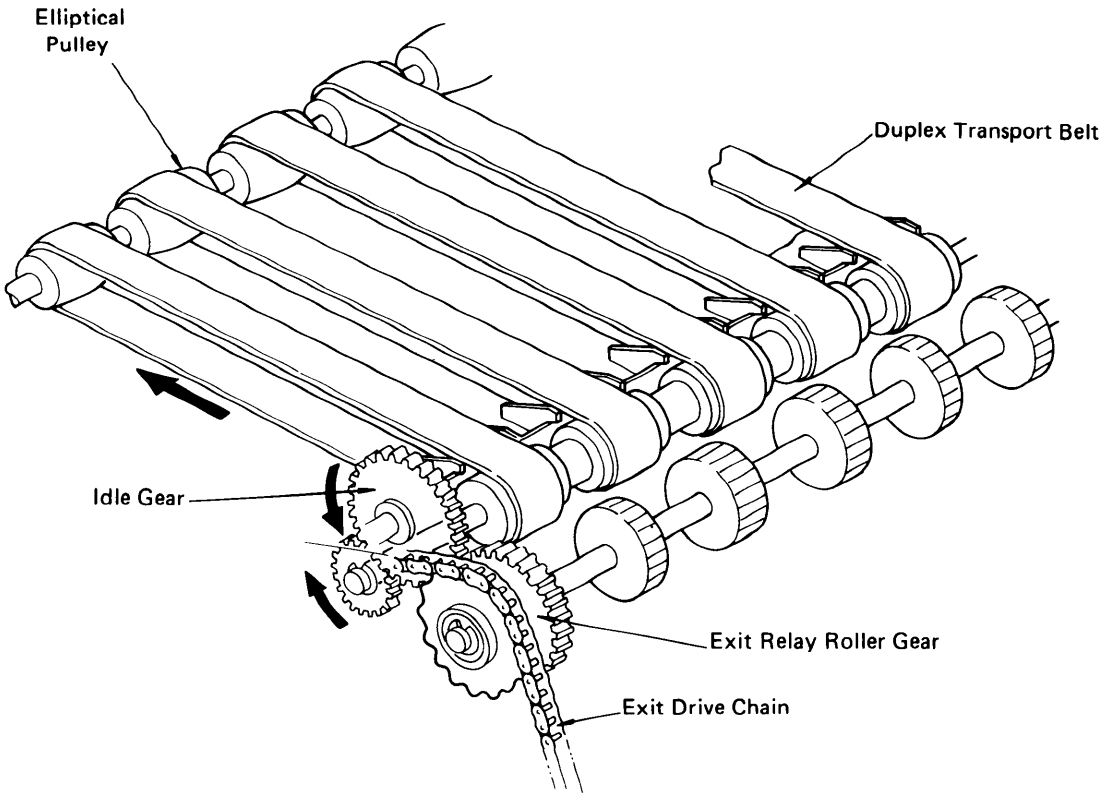

The exit drive chain powers the fork gate belt unit. Power is transferred from the chain to the exit relay roller gear, to an idle gear, to the drive gear of the left fork gate transport roller.

The transport belts are kept centered by eliptical pulleys.

Duplex Stacking Overview

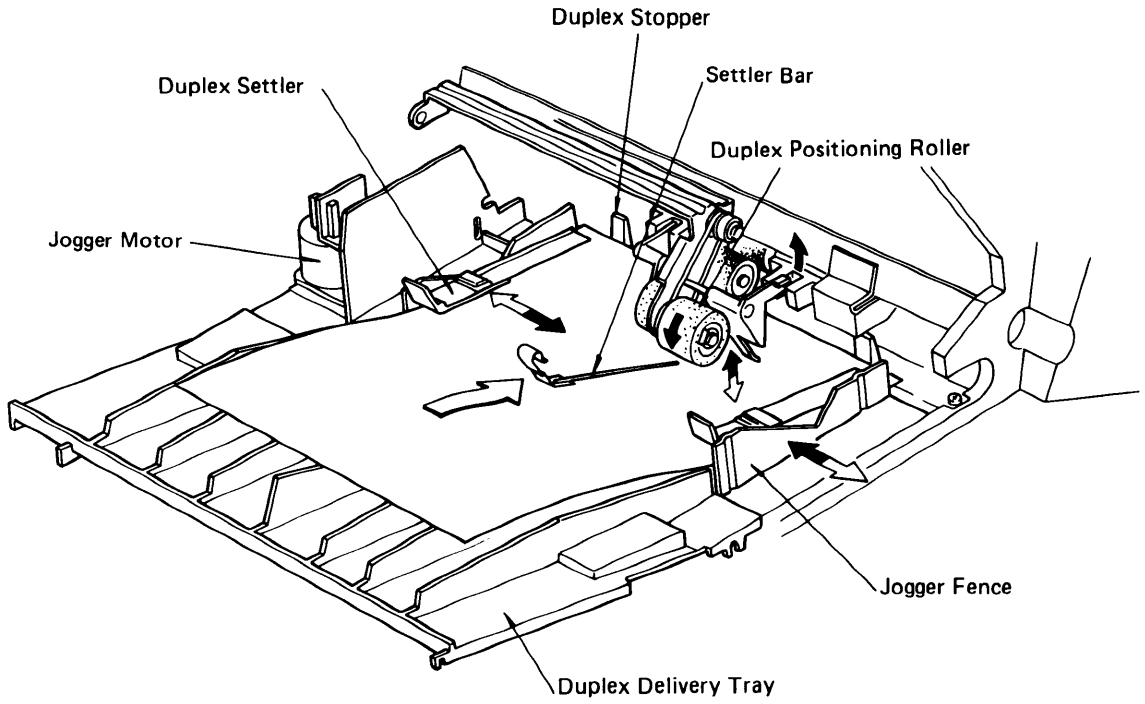

Paper is stacked in the duplex tray, which consists of two units. The duplex delivery tray and the jogger unit.

The duplex delivery tray transports paper from the fork gate unit to the duplex tray. The duplex delivery tray is ribbed so as to achieve precise stacking of paper in the duplex tray.

The jogger unit consists of a drive motor, jogger fences, duplex settlers, positioning roller, and duplex stoppers. All these components work together to achieve proper stacking of paper in the duplex tray.

When the Print key is depressed, the CPU reads the cassette coding and the jogger fences are positioned 15mm from either side of the copy paper. As paper enters the duplex tray, it is positioned under the duplex settlers. At the same time, the positioning roller (made of sponge) rotates pushing the paper up against the duplex stoppers to correct the paper skew. The positioning roller is then lifted, and the jogger fences move in together, to correct the lateral position of the paper.

Jogger Drive Mechanism

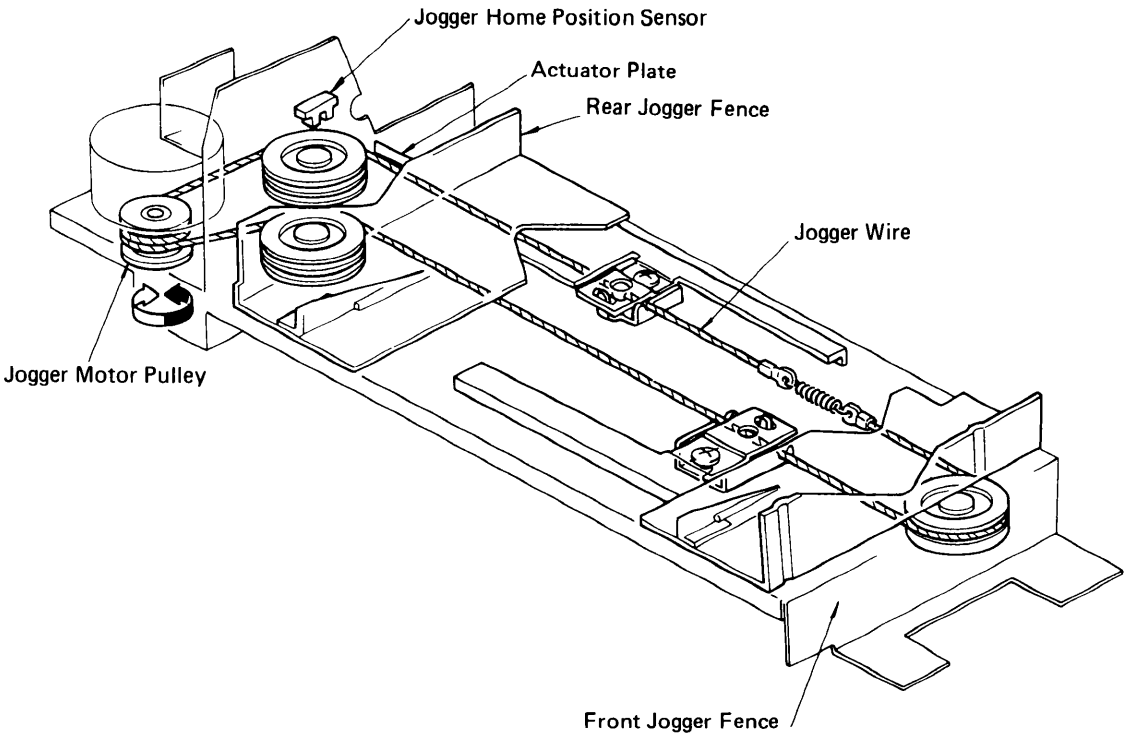

Both the front and rear fences of the jogger unit are mounted on the same wire. When the jogger drive pulley mounted on the jogger motor shaft turns, both fences move the same distance in opposite directions. The jogger home position is monitored in a similar fashion to the lens home position.

When duplex mode is selected and the Print key is depressed, the jogger fences are driven outward by the stepper motor. During this time, the actuator plate on the rear jogger fence slides through the slot of jogger home position sensor to reference home position. After the home position is referenced, the jogger fences move inward to the stop position which is determined by the paper cassette coding.

- Abnormal Condition - ("81")

When the main switch is turned on or the front cover safety switch is turned off and on, one shot (home position) pulse is transmitted to CPU, informing that the jogger fences are in home position. However, if a low to high, or a high to low signal is not transmitted to CPU 6.2sec after the jogger motor is on, the Call Service indicator and "81" will be displayed.

Duplex Positioning Roller

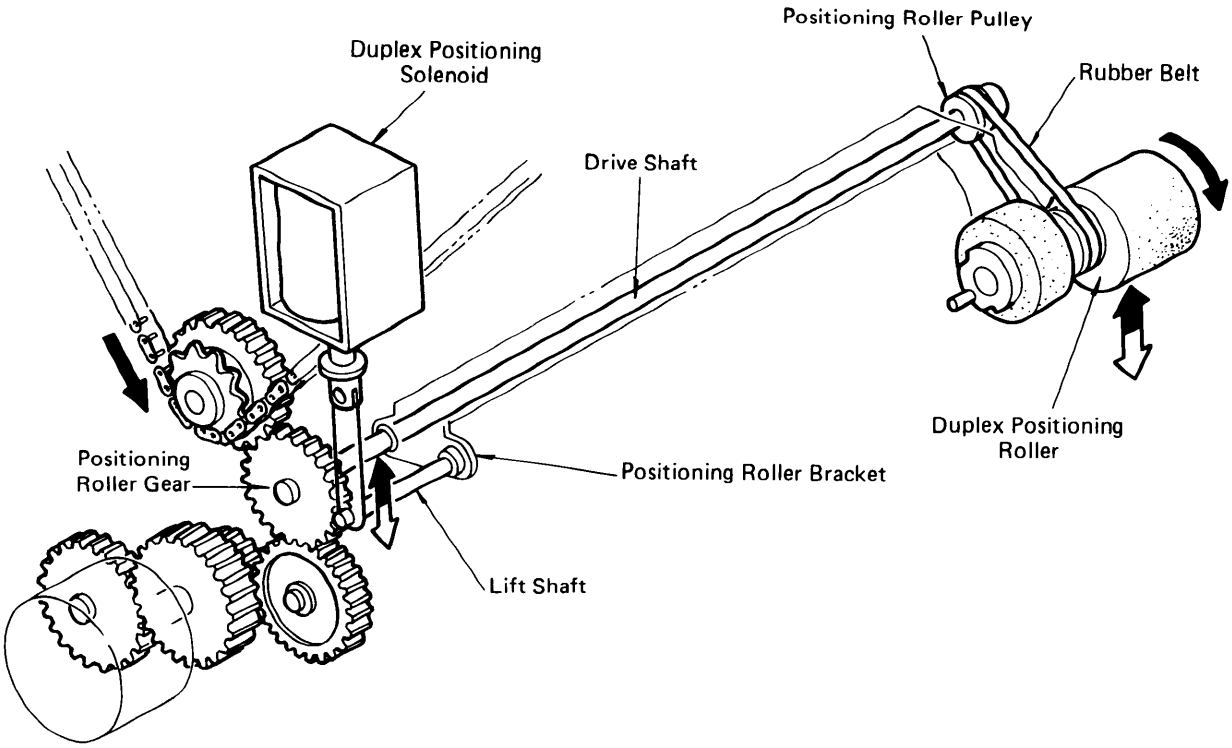

- Drive Mechanism -

The duplex positioning roller is driven by the main drive chain. Power is transferred from the main drive chain to the positioning roller gear, to the positioning drive shaft, to a pulley, to rubber belt, and finally to the positioning roller.

- Up and Down Mechanism -

The positioning solenoid when energized pulls up the duplex lift shaft which is connected to the positioning roller bracket. This lifts up the positioning roller 7mm (0.29") from the jogger bottom plate so that the lateral stacking process is not impeded.

Jogger Motor

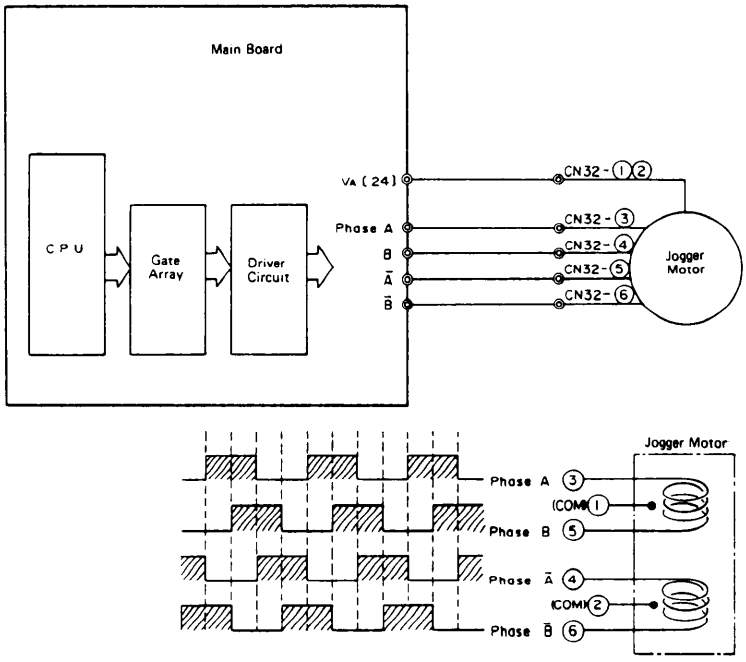

A stepper motor is used for the jogger motor. It is controlled by phase signals from the CPU on the main board as shown in the above block diagram. For this motor, each step is 1.8°, which works out to be 200 steps for one complete revolution. The drive method of the jogger motor is a two-phase excitation method. Regarding the details of this mechanism, please refer to the Lens and 2nd Scanner Drive Motor section.

Duplex Tray Sensors

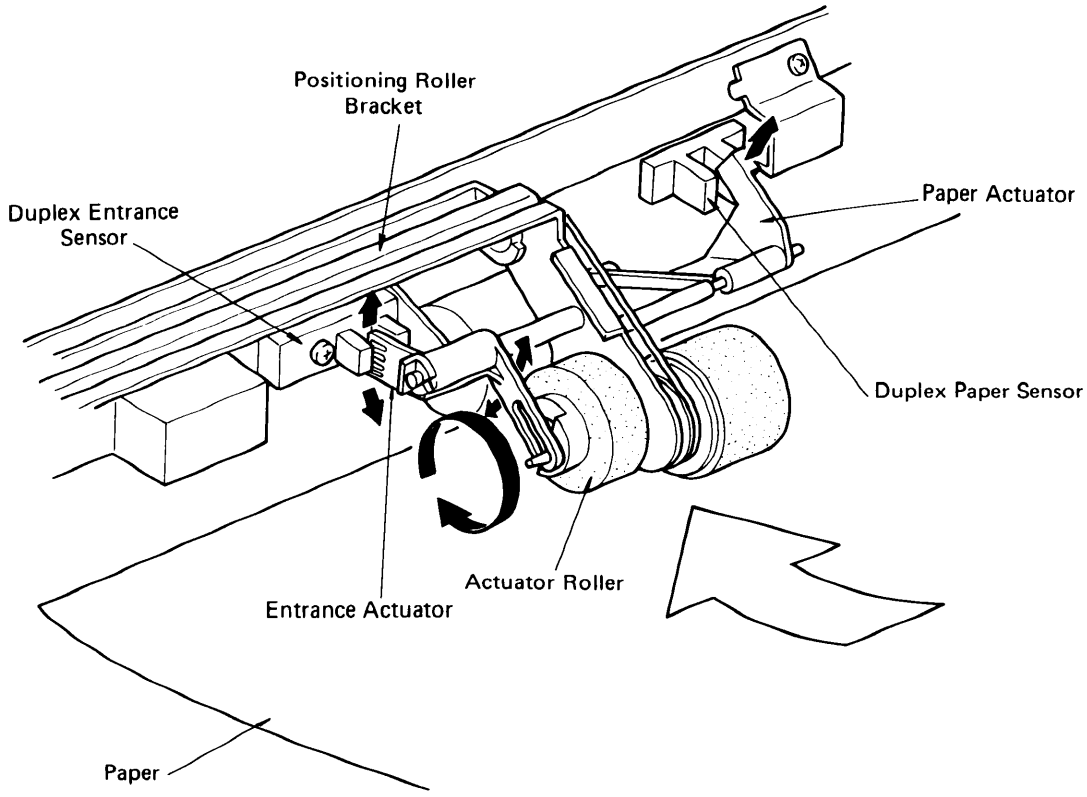

- Duplex Entrance Sensor -

When paper first enters the duplex tray, the positioning roller bracket is in its low position. The actuator roller (made of sponge) is actually in contact with the jogger bottom plate. Just when the paper goes under the actuator roller, the actuator roller is turned by the frictional force of paper. This rotation moves the entrance actuator up and down. The entrance sensor is thus actuated to confirm the arrival of paper.

The entrance actuator looks like a leaf rake. Therefore the sensor is successively actuated when the actuator roller is rotated. If there are more than two changes (ON -> OFF -> ON or OFF -> ON -> OFF) during the checking period, the CPU determines that paper has successfully arrived.

- Duplex Paper Sensor -

When there is copy paper in the duplex tray, the paper actuator is lifted out of the duplex paper sensor, which activates the photointerruptor (5 --> 0). This informs CPU that the paper is in the duplex tray.

Duplex Paper Feed Overview

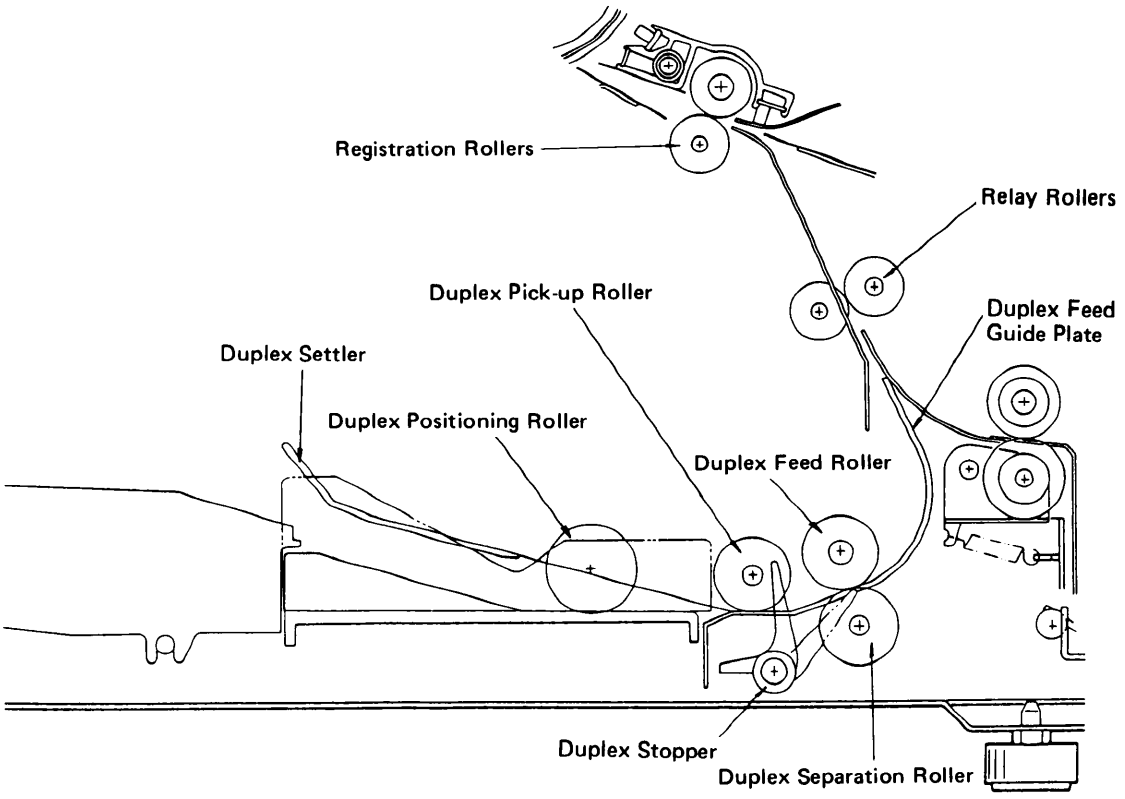

Duplex paper feed uses a FRR (Feed + Reverse Roller) paper feed system. This is similar to the feed system from the cassette, except that the duplex pick-up roller is continuously in contact with the paper after the duplex pick-up roller has fed paper to the duplex feed roller. This is unlike the pick-up roller for a cassette feed, in that pick-up roller lifts up after the paper is in contact with the feed roller. This mechanism is to prevent the next sheet below the top sheet from being pushed backward by the duplex separation roller. The pick-up roller slows down the next sheet rejected by the duplex separation roller so that it remains in position for feeding at the next copy cycle.

During duplex feed, the duplex stopper is lowered below the duplex paper feed guide plate, and duplex positioning roller is then lifted out of the way.

Duplex Feed Drive Mechanism

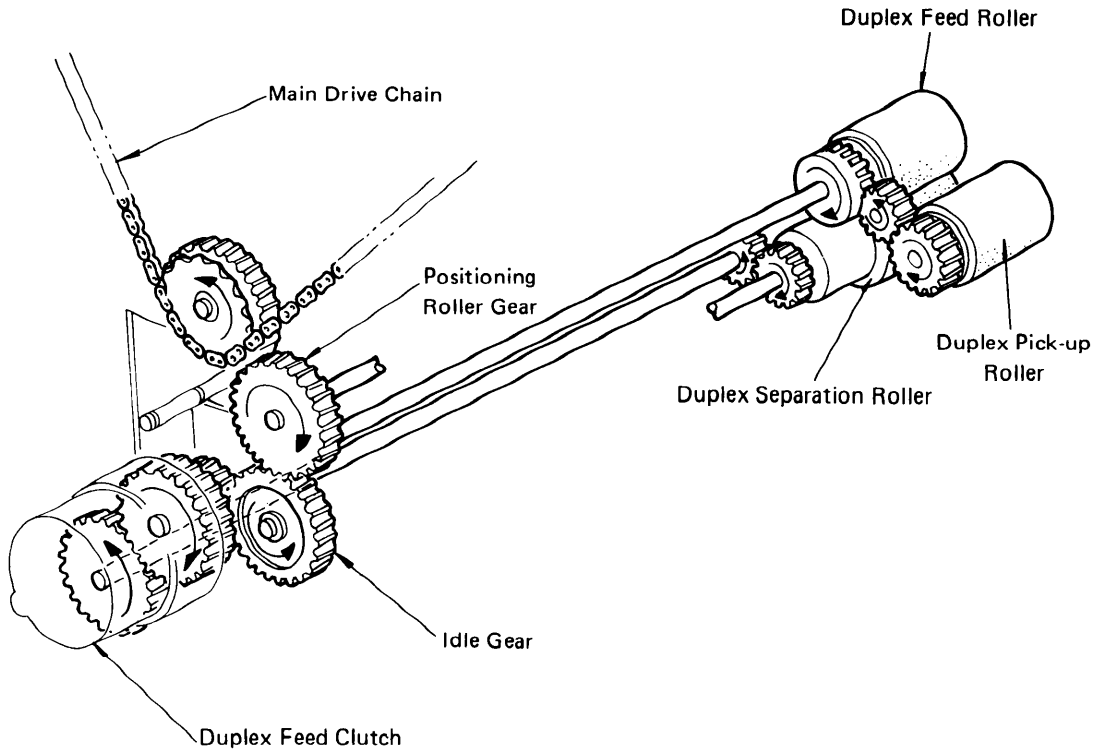

The duplex feed rollers are driven by the main drive chain. The power is transferred from the chain to the drive sprocket gear, to the positioning roller gear, to an idle gear, and finally to the gears which drive the duplex feed roller and the duplex separation roller. All these gears rotate when the main motor is on. However, only when the clutch is activated does the feed roller shaft rotate. When the feed roller rotates, the pick-up roller also rotates.

This mechanism is similar to the mechanism used for lower cassette paper feeding, except that the rollers are not interchangeable. The rotation of the one way clutches are oriented in opposite directions. Also, the roller surfaces are serrated in a set direction, so as to feed paper precisely.

Duplex Stopper and Pick-up Roller Mechanism

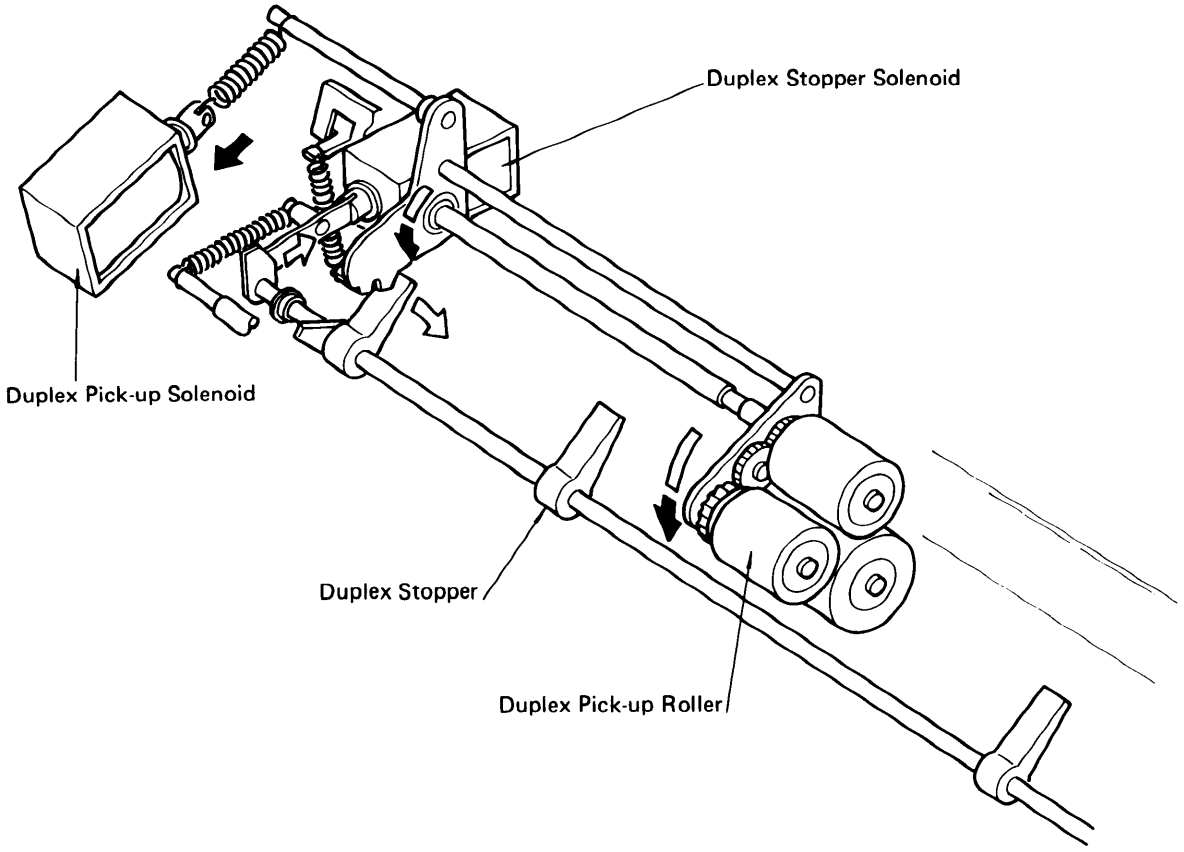

The pick-up roller bracket is lifted up by the duplex stopper furthest to the rear. The movement of both the duplex stopper and the pick-up roller are controlled by solenoids.

When paper is being fed, the duplex stopper solenoid is energized and the stoppers are lowered. At the same time, the pick-up roller drops onto the copy paper. Then, after ten pulses (50msec.), the duplex pick-up solenoid is energized ensuring positive contact with the paper and paper feed begins. The pick-up roller stays in contact with the paper during paper feed.

Read the following material in the FT5050/5070 Field Service Manual.

- ☐ Duplex Solenoids Adjustment
- ☐ Jogger Home Position Adjustment

Turn on the VCR for a lecture on Inversion and Duplex.

Inverter/Duplex Worksheet

This Worksheet will allow you to become more familiar with the operation of the Inverter and Duplex Units in the FT5070.

The Duplex option allows an operator to produce up to 50 duplexed or double sided copies from double or single sided originals.

Let's see how the Inversion and Duplex system works.

PART I — INVERSION

1. Place an OSA-3 test chart on the exposure glass.

   Select the 11 x 8½ cassette, 10 copies, and Duplex I.

   Press the print key and observe the copies as they move through the inverter section.

   Now repeat the above procedure using the 11 x 17 cassette. Notice the copies contact each other in the inverter section.

PART II — JOGGER/STACKING

2. Place an OSA-3 test chart on the exposure glass.

   Select the 11 x 8½ cassette, 10 copies, Duplex I, and press print.

   When do the jogger fences move? _____

   Where is the positioning roller as the paper enters the duplex tray? _____

   _____

   What is displayed on the operation panel after the last copy enter the duplex tray? _____

PART III — DUPLEX PAPER FEED

3. With copies in the duplex tray, press the print key.

   Does the Duplex Pickup Roller operate the same as the Cassette Pickup Roller? _____

   Where is the Duplex Pickup Roller during duplex feed? _____

   What rollers are used to transport the paper from the duplex tray to the registration rollers? _____

Summary

Knowledge Check:

1. Can you describe the basic operation of the duplex unit?
2. Do you know the function of the duplex paper sensor?

Do not stop. Continue to the next page. ⇨

Review Guide — 3

1. Why should DPSW 101-3 be turned on during corona current adjustments? _____

2. List the self-diagnostic code that will be displayed under each of the following conditions:

   CN102-A10 (D2) +5 VDC _____
   CN 68-7 (E4) 0 volts _____
   CN102-B15 (C1) 0 volts _____
   CN 5-3 (B3) 0 volts _____
   CN502-7 (D4) 0 volts _____

3. During a copy cycle, what sensor tells the CPU to turn the lift motor on? _____

4. The Bypass Feed Sensor measures 0 volts at CN9-11. What mode is the copier in?
   A. Cassette Feed
   B. Bypass Feed

5. Which 4 OP panel keys will change the *ON* timing of the Registration Clutch?

   _____ _____
   _____ _____

6. What items are replaced at the 60K PM in the Fuser? _____

7. If the Duplex Paper Sensor detects paper in the Duplex Tray, what does the Second Original indicator do under the following conditions:

   Normal Duplex Mode: _____
   If Duplex is cancelled: _____
   At power up: _____
   If Duplex is selected: _____

8. If there is a copy in the Duplex tray, and Duplex is cancelled, why does this copy come out blank?

9. If Solenoid 2 of the fork gate did not work, what length paper would have trouble getting to the Duplex tray? _____

10. In what position would you find the Jogger Fences if the Jogger Home Sensor were shorted?



Before continuing the program, have your Service Manager review your answers to the Inversion and Duplex Worksheet and Review #3.

I have reviewed the work performance to this point.

_____
Service Manager's Signature

Continue to the next section. 

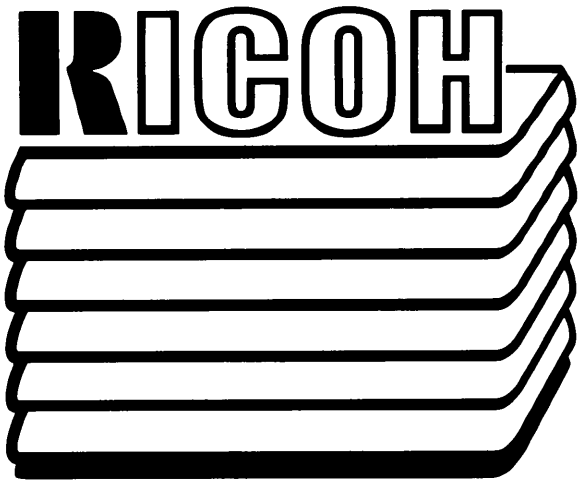

Others

Approximate Time: 1 Hour 30 Minutes

OTHERS

Pulse Generator

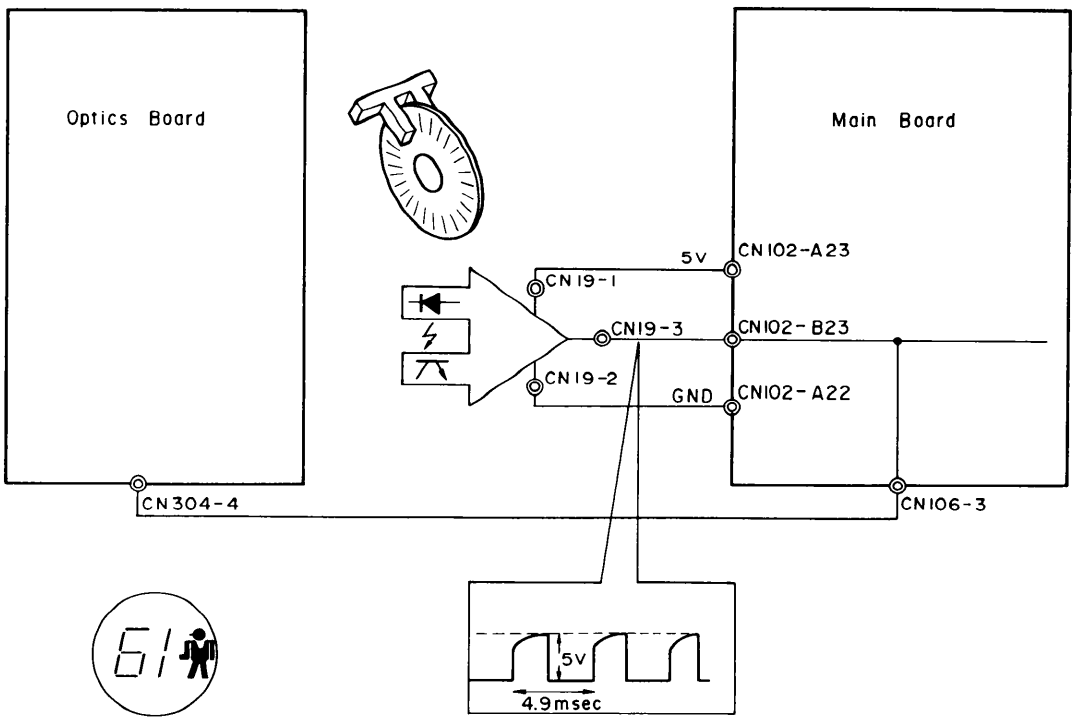

The CPUs on main board and optics board control the timing of all machine operations. The timing is based on how many pulses the CPUs receive from the pulse generator. Pulses are generated by the rotation of a notched disk within a photointerrupter. As the disk rotates, light from the LED activates the phototransistor each time a notch comes between them. The pulses generated by pulse generator are not square waves, as shown above. These pulses are then sent to the CPUs on the main board and optics board, where they are shaped into square waves.

- Abnormal Condition - ("61")

If no pulse is received for a 1.5 second interval during the copy cycle, the main CPU will stop the machine and display the Call Service indicator "61".

Operation Panel Board

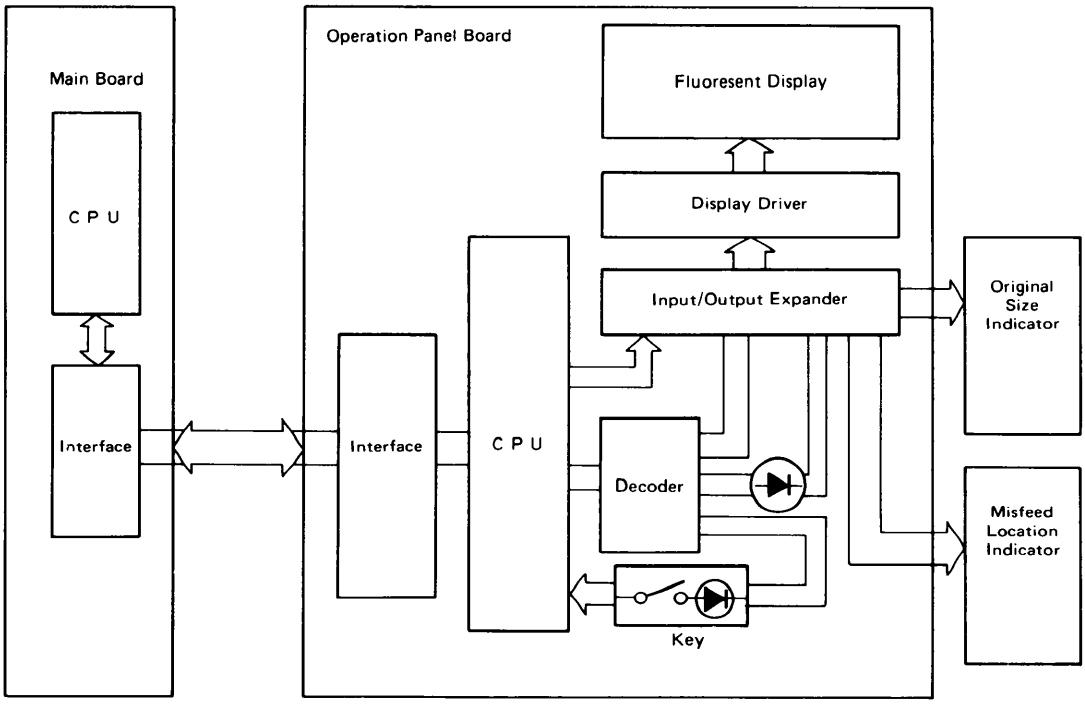

- Summary -

The basic control of the operation board is shown above. The CPU on the main board controls the CPU on the operation panel board through an interface. The CPU on the operation panel board accepts data input from the various input keys. The CPU controls the input/output expander which outputs signals to all the fluoresent displays, to the Original Size indicator, and to the Misfeed Location indicator. The CPU on the operation board controls the operation timing by using a decoder.

- Data Input -

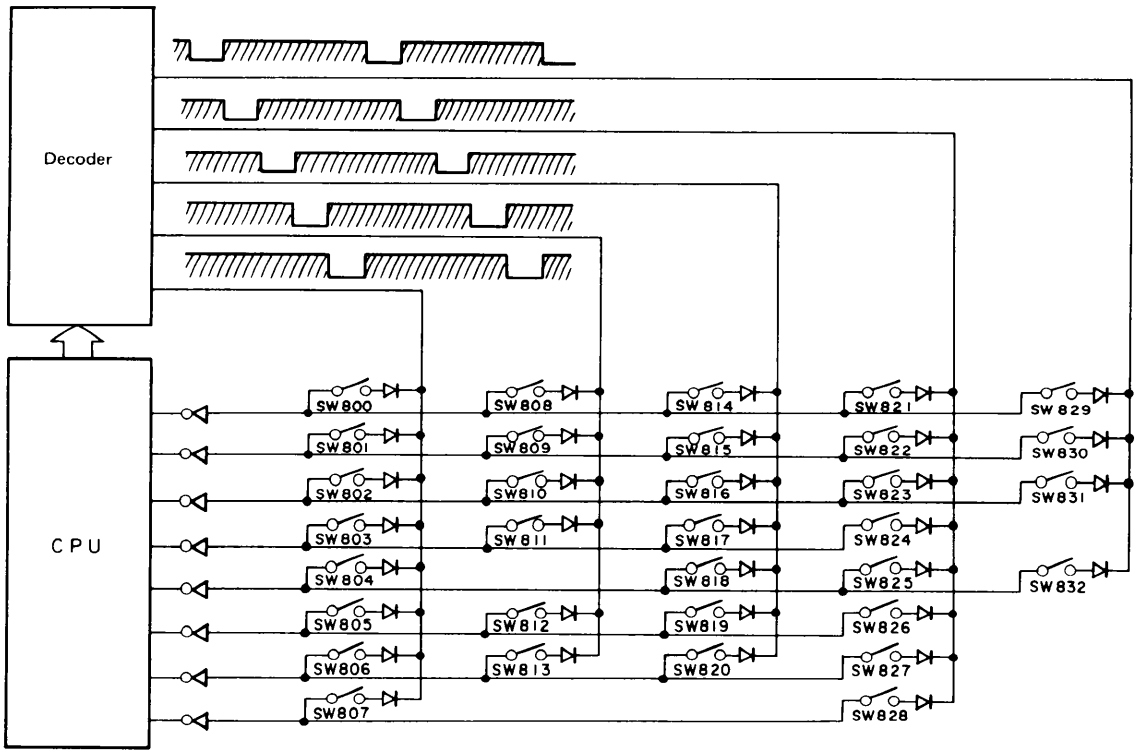

SW No.	KEY FUNCTION	SW No.	KEY FUNCTION	SW No.	KEY FUNCTION	SW No.	KEY FUNCTION	SW No.	KEY FUNCTION
800	Numeric key 0	808	Numeric key 8	814	Full Size	821	Duplex 1	829	Right margin
801	Numeric key 1	809	Numeric key 9	815	Reduction	822	Duplex 2	830	Left margin
802	Numeric key 2	810	Clear/Stop	816	Enlargement	823	Duplex 3	831	Clear Mode
803	Numeric key 3	811	Print	817	Zoom Down	824	Series		
804	Numeric key 4			818	Zoom Up	825	Sort	832	Interrupt
805	Numeric key 5	812	Dark	819	Original Selection	826	Stack		
806	Numeric key 6	813	Light	820	Paper feed	827			
807	Numeric key 7					828	Erase blue		

Operation data is input by the operator through the key switches on the operation panel board. The key switch matrix uses five scanning lines and eight output lines. The CPU energizes the scanning lines with clock pulses. At the same time that the CPU is energizing a scanning line, it observes the corresponding output lines to determine if any of the keys on that line are on.

Misfeed Check

	Sensors	ON, OFF Check Timing (↑ON Check, OFF Check Timer)	Misfeed Location Indicator
1	Paper Feed	700PLS, ON, 1000	LED A
2	Fusing	600PLS, ON, 1443	LED B
3	Paper Exit	600PLS, ON, 1640	LED C

1	Paper Feed	700PLS, ON, 1000	LED A
2	Fusing	600PLS, ON, 1443	LED B
4	Inverter	600PLS, ON, 1587	LED D
5	Fork Gate	600PLS, ON, 2176	LED D
6	Duplex Entrance	2480 2616	LED E

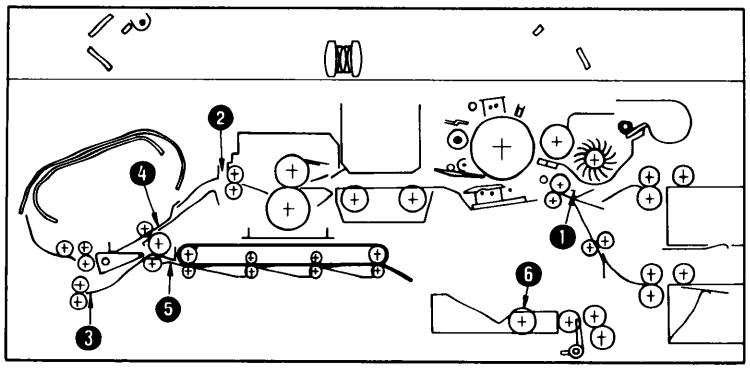

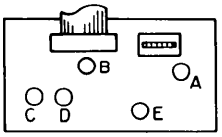

Misfeed Location Indicator

The duplex model has 6 misfeed sensors. The CPU checks that each misfeed sensor has turned on at the timing shown above. The CPU also checks that each misfeed sensor has turned off within a specified period after the leading edge of the paper has passed through the sensor. The maximum period is 700 pulses for the registration sensor. The period for fusing, paper exit, inverter, and the fork gate sensor is 600 pulses. For the duplex entrance sensor, the CPU checks whether the sensor has been actuated in the period from 2480 pulses to 2566 pulses.

If the CPU determines that a misfeed condition exists, it stops the machine, lights the Misfeed Location indicator on the operation panel, and displays the misfeed location on the misfeed location indicator board. When the misfeed has been removed and the safety switches have been actuated, the CPU cancels the misfeed condition.

Cold Cathode Tube

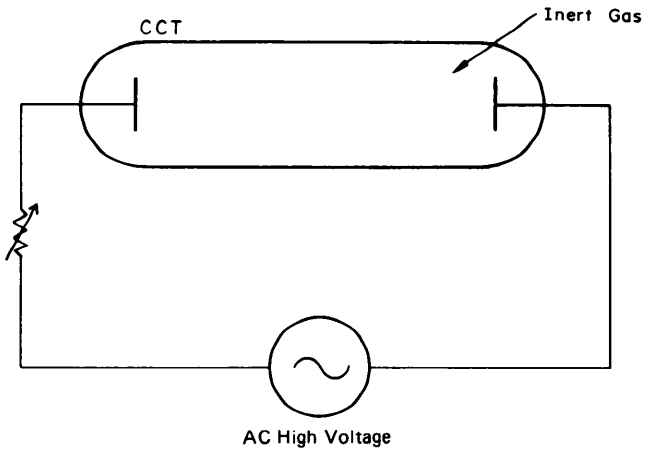

Most flourescent lamps use a heater filament to preheat them to operating temperature. The cold cathode tube does not have to be preheated. Instead, it uses special mixture of conductive inert gases. When high voltage is applied, the gas emits ultra violet rays. The ultra violet rays strike the flourescent coating on the inside of the glass tube, causing the coating to glow.

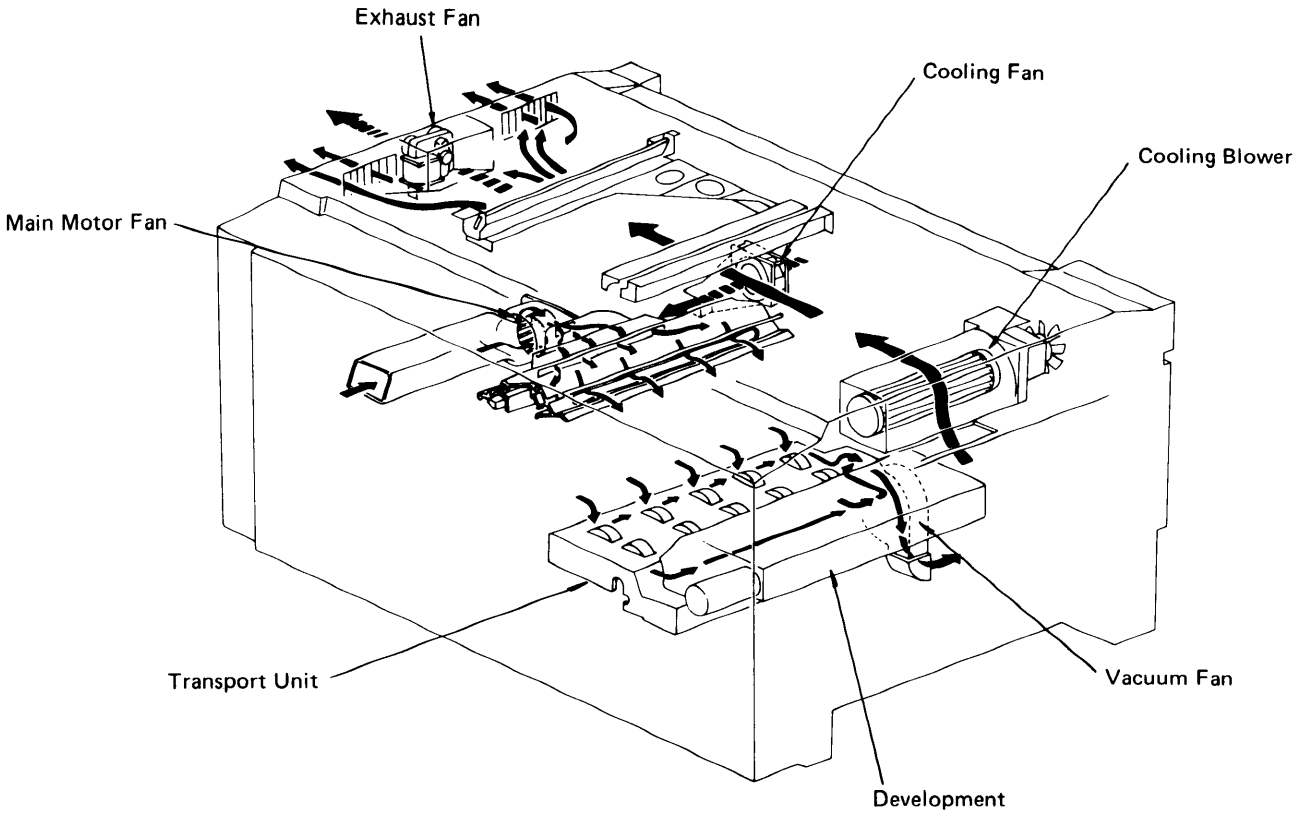

NAME	ENTRANCE	AREA	EXIT	FUNCTION
Cooling Blower	Vent on Copier right side	Optics Exposure glass	Upper vent on copier left side	To remove heat and dust from optics area.
Cooling Fan	Central upper vent on copier rear	Around the drum	All vents	To maintain even charge distribution from charge corona.
Vacuum Fan	Transport unit & development unit	Transport unit & development unit	Central lower vent on copier rear	To hold paper on transport rollers. To remove scattered toner.
Main Motor Fan	Front of copier	Charge corona unit	All vents	To maintain even charge distribution from charge corona.
Exhaust Fan	All vents	Fusing unit	Lower two vents on copier left side.	To remove excess heat from fusing unit area.

Key Card and Coin Lock

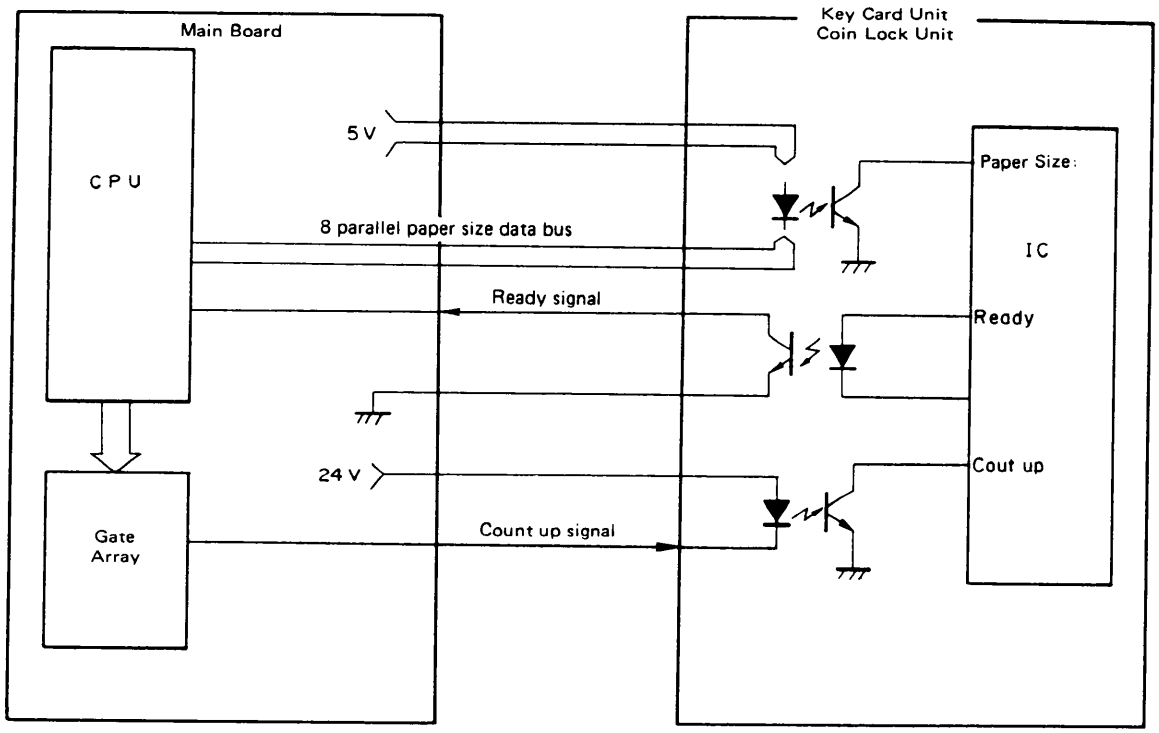

A key card or a coin lock unit can be connected to this machine using CN107.

The CPU on the main board sends the paper size data by an 8 bit signal to the attached unit. The data is received through 8 parallel photocouplers. When a paper misfeed occurs, the CPU sends the misfeed location data to the unit using the same data bus. The copies that are misfed are not charged to the key counter or the coin lock.

When a key card is loaded into the key card unit or a coin is inserted into the coin lock unit, the unit sends a read signal to the CPU. A count up signal is sent from CPU to the unit in the same way as if it was sent to the total counter. This signal decreases the coin set number in the coin lock or increases the number entered in the key counter.

Do not stop. Continue to the next page.

Fault Isolation Worksheet 4

— Sections —
Paper Transport, Image Fusing and Copy Stack, Inversion and Duplex, Miscellaneous Components (Pulse Generator)

1. What would occur if the fusing sensor failed "open" while the copier was turned off?
   _____ A. Jam indication when main switch is turned on
   _____ B. Paper jams, jam indication, paper stops just prior to entering fusing section
   _____ C. Paper jams, jam indication, paper stops in fusing unit
   _____ D. None of the above

   Turn off the copier. Now disconnect the Fusing Sensor Connector CN13 (behind the main board). Turn on the machine to make a copy.

   Was your answer confirmed? If yes, you have a good understanding of these sections.

2. What would occur if the duplex paper sensor failed?
   _____ A. Paper jams, jam indication when copying
   _____ B. Second Original indication never lights
   _____ C. Paper never enters the duplex tray
   _____ D. None of the above

   Turn off the copier. Disconnect the duplex paper sensor (CN38A) by first removing the sensor cover. Turn on the copier and make duplex copies with 2 originals.

   Was your answer confirmed? If yes, then you have a good understanding of this section.

If any of your answers were incorrect, go back and review the applicable sections.

Then continue to the next page. ⇨



Document Feeder (DF32)

Approximate Time: 1 Hour 45 Minutes

DOCUMENT FEEDER DF-32

SPECIFICATIONS

Model Name:	DF-32
Copier Models:	FT 5050, FT 5070
Original Size:	ADF mode Max. 11" x 17" or A3 Min. 8" x 10" or B5 SADF mode Max. 11" x 17" or A3 Min. 8 ½" x 5 ½" or A5
Original Weight:	ADF mode Max. 128g (34 lbs) Min. 41g (11 lbs) SADF mode Max. 128g (34 lbs) Min. 35g (9 lbs)
Original Feed	Automatic Feed (ADF mode) Manual Feed one by one (SADF mode)
Original Insertion Capacity:	50 sheets, 64g (17 lbs)
Original Stacker Capacity:	50 sheets, 64g (17 lbs)
Original Feed Speed:	ADF 22 cpm
Original Feed-in:	Fed in from top of stack

Power Consumption:	80W
Dimensions:	860mm (W) x 520mm (D) x 80mm (H) 33.85" x 20.47" x 3.15" (without original stacker)
Weight:	15kg (33 lbs)
Original Transportation:	One flat belt
Original Separation:	FFR system
Original Stop System:	Belt stopped by dc servomotor
Indicators:	Insert Original Indicator Auto Feed Indicator Check Original Direction Indicator Check Original Indicator Original Misfeed Indicator Original Counter
Nonrecommended Paper:	The following types of paper cannot be used with the DF-32. 1) Dog-eared or torn paper 2) Paper with holes larger than 3mm in diameter 3) Damp paper 4) Carbon paper 5) Curled paper 6) Paper with clips or staples 7) Adhesive label paper 8) Originals that are glued or taped together 9) Bound originals

MECHANICAL COMPONENT LAYOUT

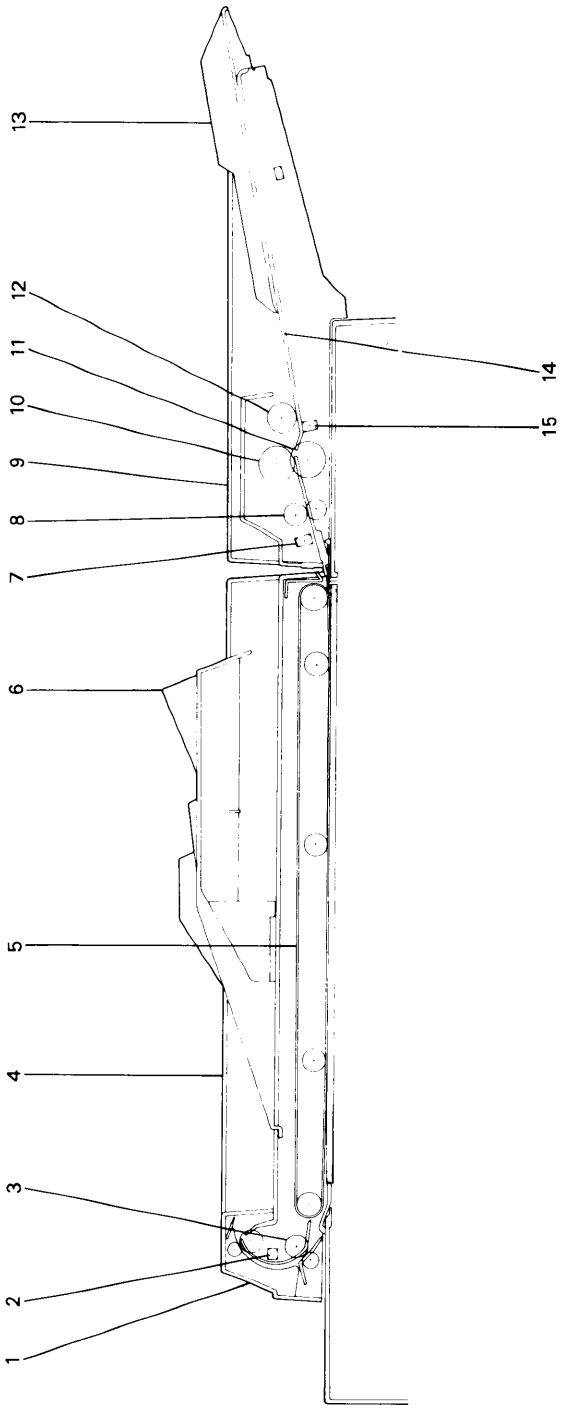

1. Exit Unit Cover
2. Exit Sensor
3. Exit Rollers
4. Belt Unit Cover
5. Feed Belt
6. Original Stacker
7. Registration Sensor
8. Original Relay Roller
9. Feed-in Unit Cover
10. Feed Roller
11. Friction Roller
12. Pick-up Roller
13. Original Guide
14. Original Feed Table
15. Feed-in Sensor

DRIVE LAYOUT

–Feed-in Unit–

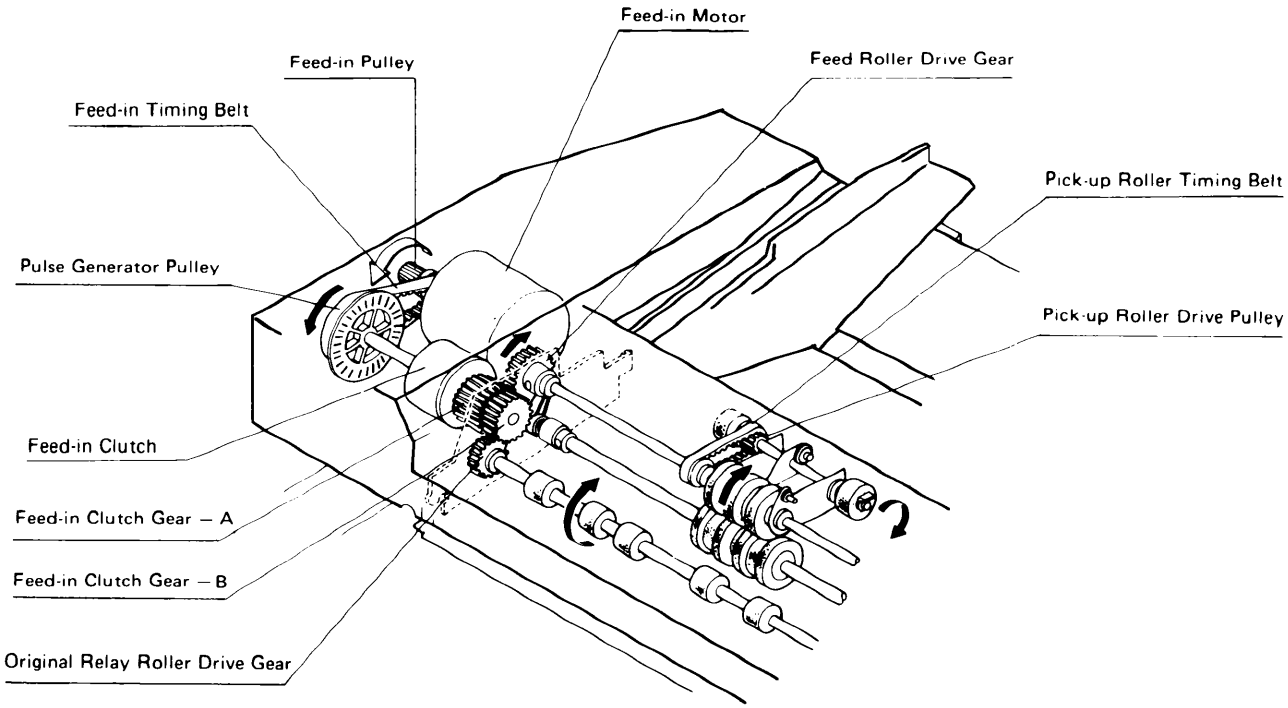

–Belt Unit–

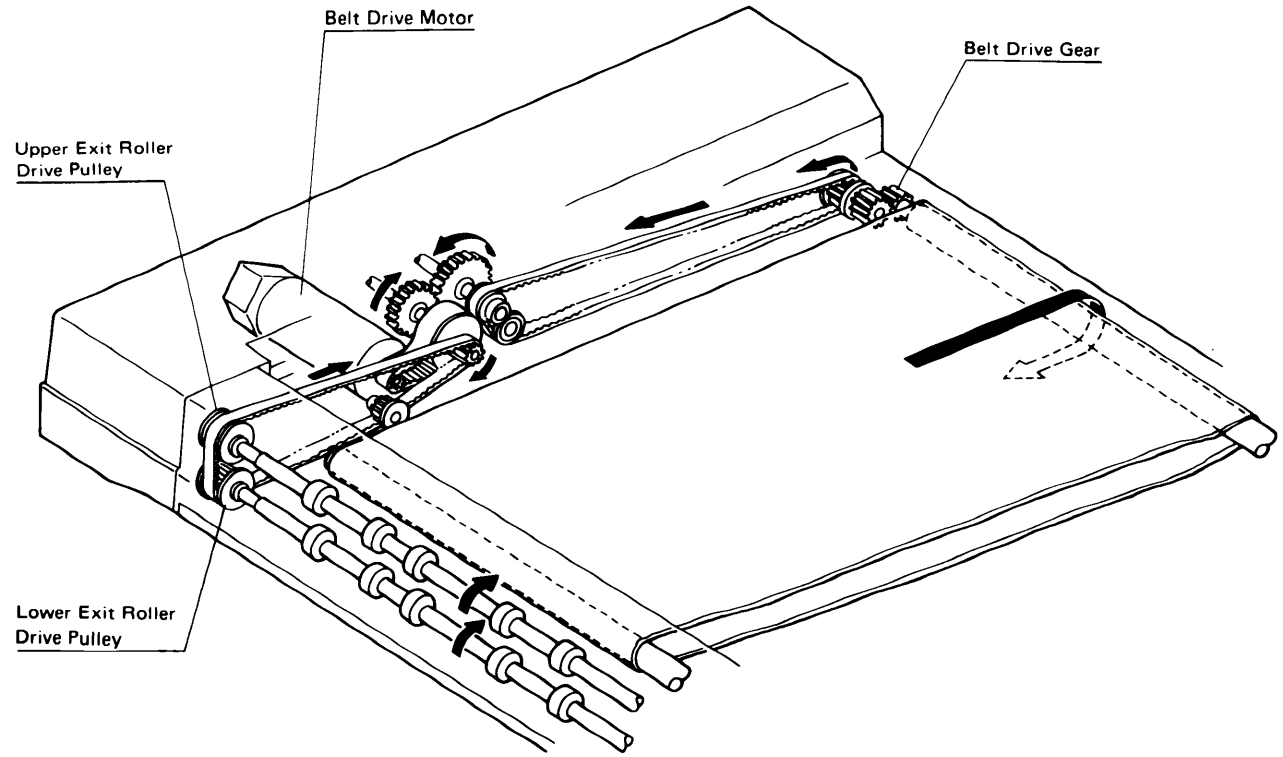

ELECTRICAL COMPONENT LAYOUT

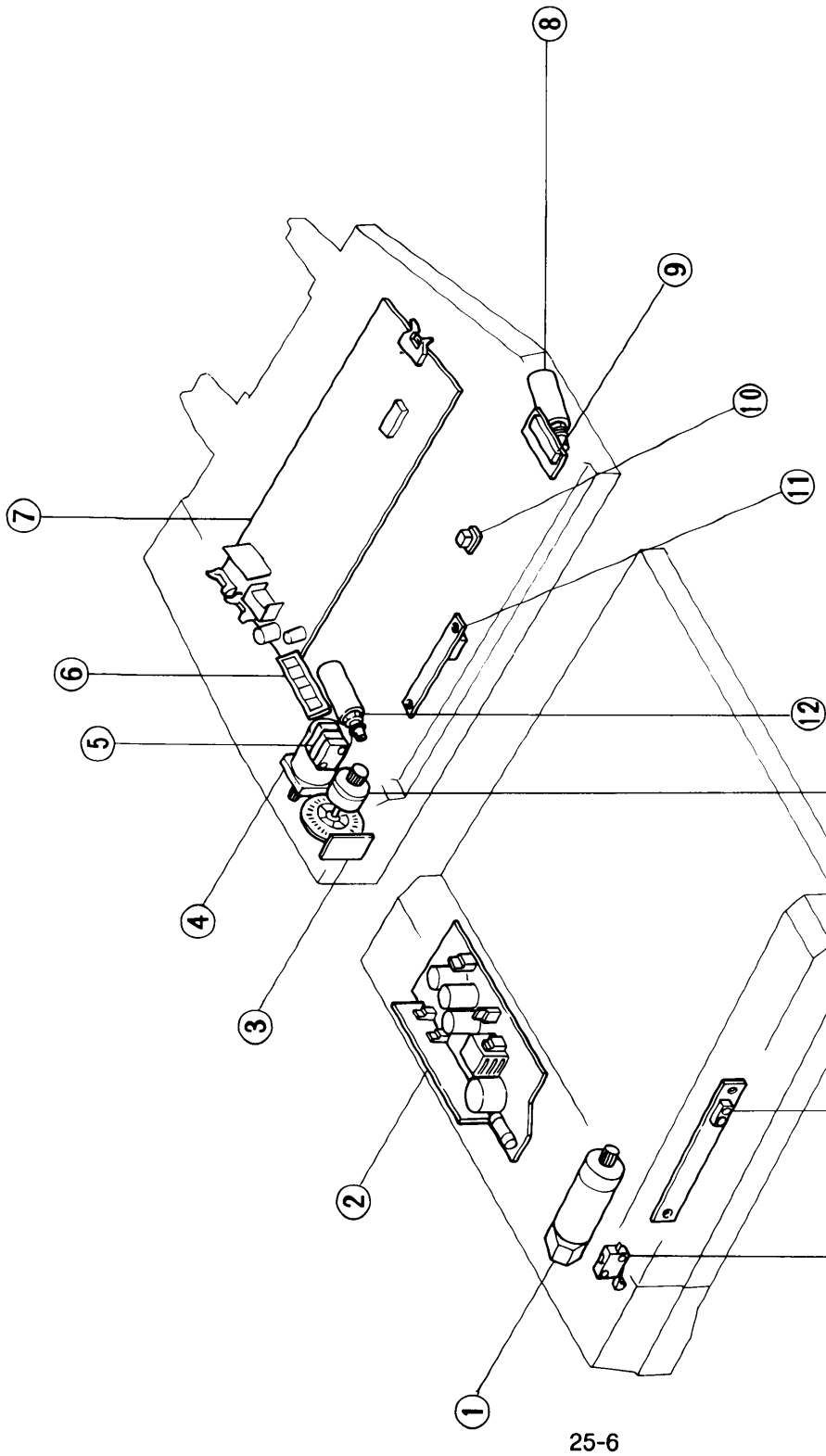

Motors
- Feed-in Motor 4
- Belt Drive Motor 1

Solenoids
- Pick-up Solenoid 8
- Stopper Solenoid 12

Clutch
- Feed-in Clutch 13

Sensors
- Pulse Generator 3
- Feed-in Sensor 10
- Registration Sensor 11
- Exit Sensor 14

Switches
- Feed-in Cover Safety 5
- Lift Switch 15

Boards
- Power Supply Board 2
- Indicator Board 6
- DF Main Board 7
- Operation Panel Board 9

OPERATION PANEL

Operation Panel

(220/240V)

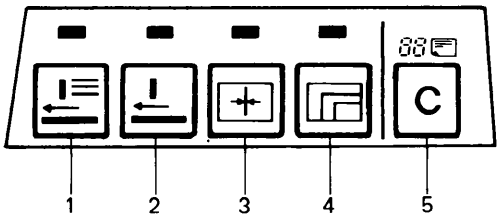

(115V)

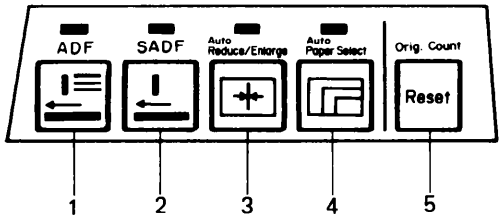

1. ADF Key
2. SADF Key
3. Auto Reduce/Enlarge Key
4. Auto Paper Select Key
5. Original Counter Reset Key

Indicator Screen

(220/240V)

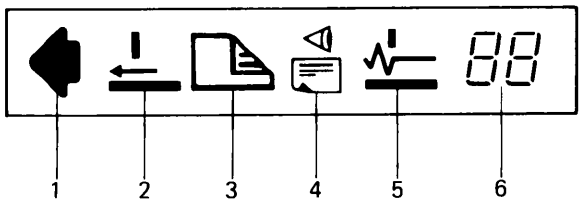

(115V)

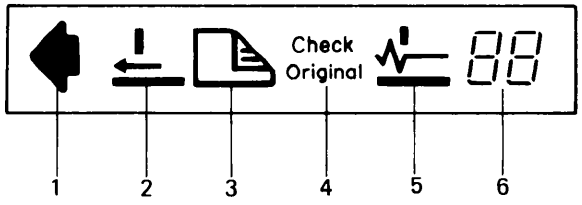

1. Insert Original Indicator
2. Auto Feed Indicator
3. Check Original Direction Indicator
4. Check Original Indicator
5. Original Misfeed Indicator
6. Original Counter

BASIC OPERATION

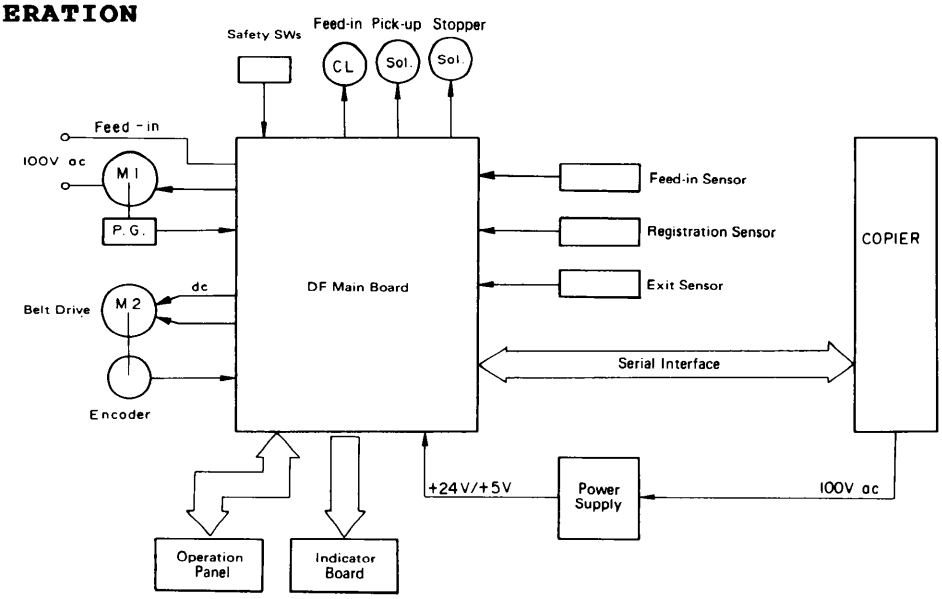

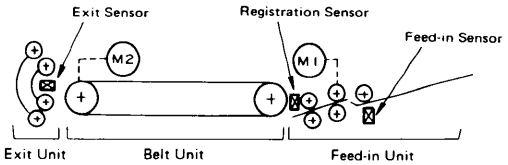

The DF has its own CPU which controls all of the DF functions. The DF CPU communicates with the copier through a serial interface bus. When an original is fed into the feed-in unit, the registration sensor checks the original length by counting the pulses from the pulse generator. The DF CPU computes the belt unit drive time in order to stop the original at the proper position. The DF CPU then signals the belt drive motor to stop at the correct time.

The DF has two motors. The feed-in motor (M1) drives the feed-in unit. The 100Vac which comes from the copier, is supplied to this motor as well as to the DF power supply unit. The feed-in motor transports the original to the belt unit.

The belt drive motor (M2) drives both the belt unit and the exit unit. This motor is a dc powered servomotor and is controlled by the DF main board. This belt drive motor transports the original from the feed-in unit to the belt unit. After copying, the original is fed out through the exit unit to the original stacker.

POWER SUPPLY

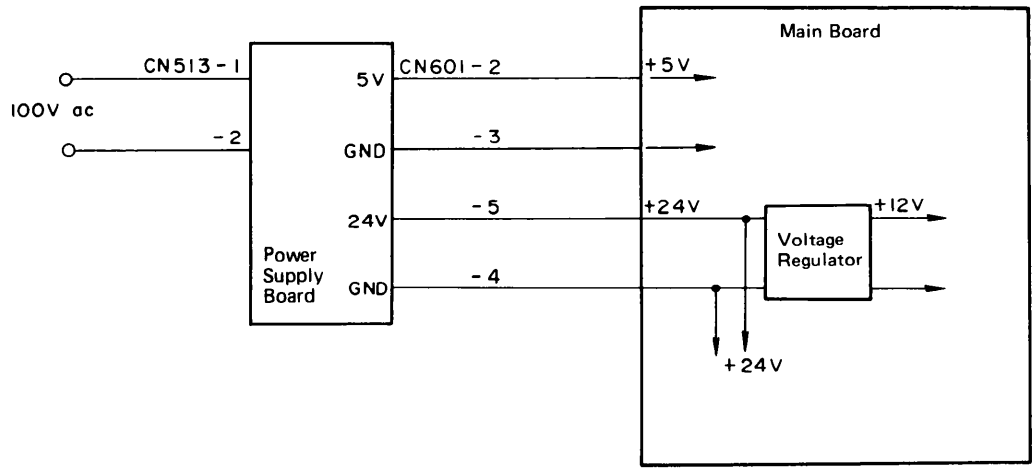

The power supply board converts 100Vac to +5V and +24V.

The +5V is supplied to the LSIs, the +24V to the comparators, SSR, and belt drive motor. The +24V is converted to +12V by the voltage regulator on the main board and then supplied to the sensors.

INTERFACE WITH COPIER

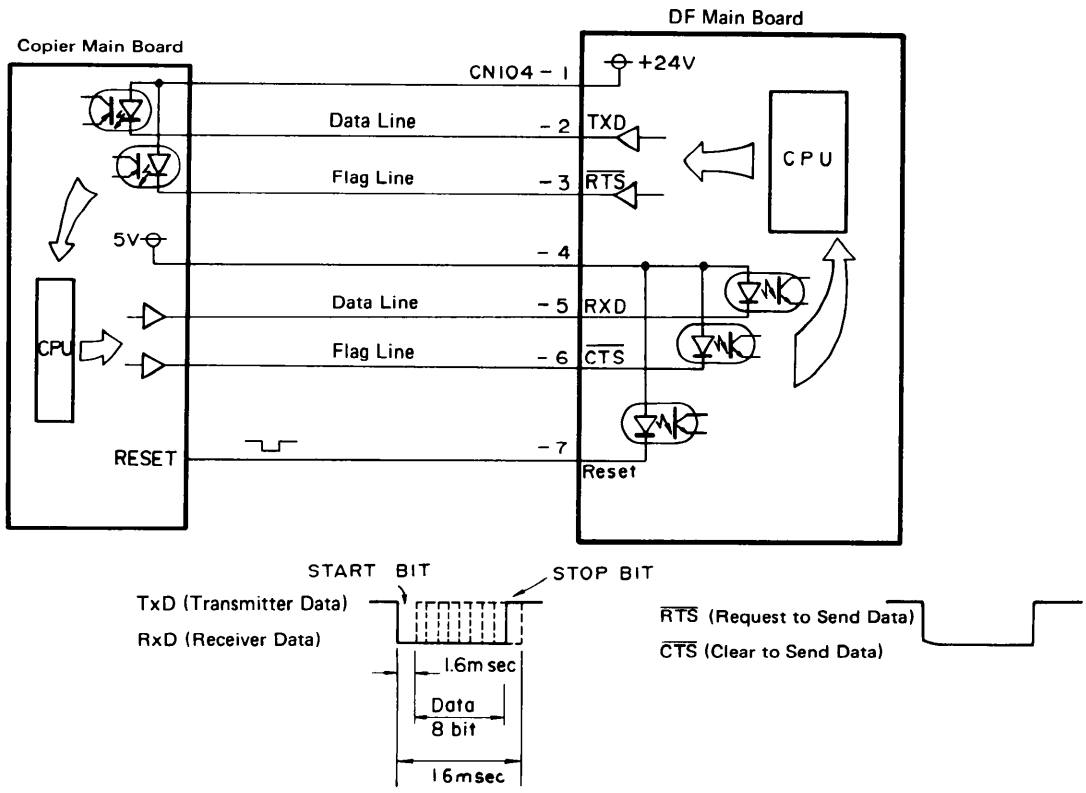

The serial interface is used for the communication between the copier and the DF. There are 2 data lines, 2 flag lines, and 1 reset signal line. 8 bits of data are transmitted sequentially on the serial data lines.

DF CPU sends data with RTS signal. When RTS is low, DF CPU cannot receive data from the copier. This RTS signal is also sent when the DF CPU does other jobs. When the main switch is turned on, the copier sends a low signal to CN104-7 (Reset) of the DF main board. This low signal resets the DF CPU.

FEED-IN UNIT

Feed-in Drive Mechanism

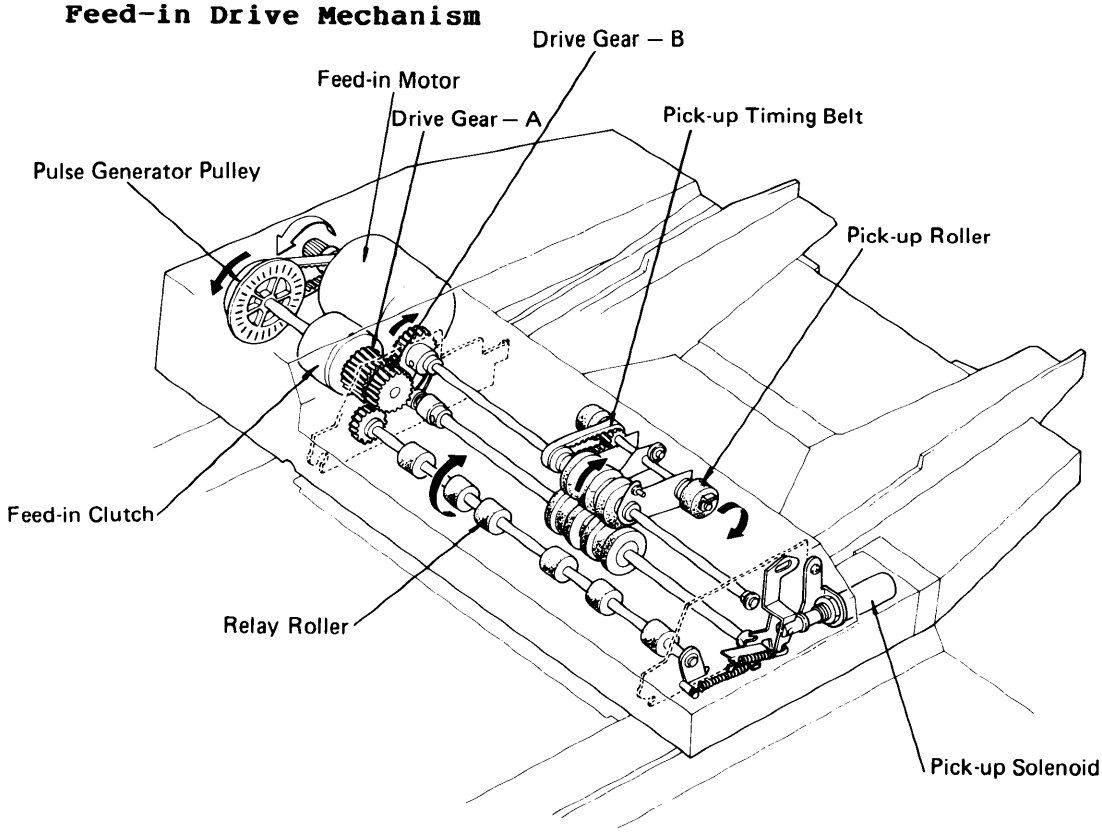

After an original is inserted into the feed-in unit and the Print key is depressed, the DF CPU energizes the feed-in motor. At the same time, the DF CPU energizes the pick-up solenoid and the pick-up roller drops onto the top of the original(s). Rotation of the feed-in motor is transmitted via a timing belt to the pulse generator pulley, feed-in clutch shaft, drive gear B and the relay roller shaft. The relay rollers always rotate whenever the feed-in motor is on.

The feed and pick-up rollers do not rotate when the feed-in motor is on, because they are controlled by the feed-in clutch. When the feed-in clutch is energized, drive will be transmitted by drive gear A to the feed-in roller shaft and by the pick-up timing belt to the pick-up rollers.

Original Insertion

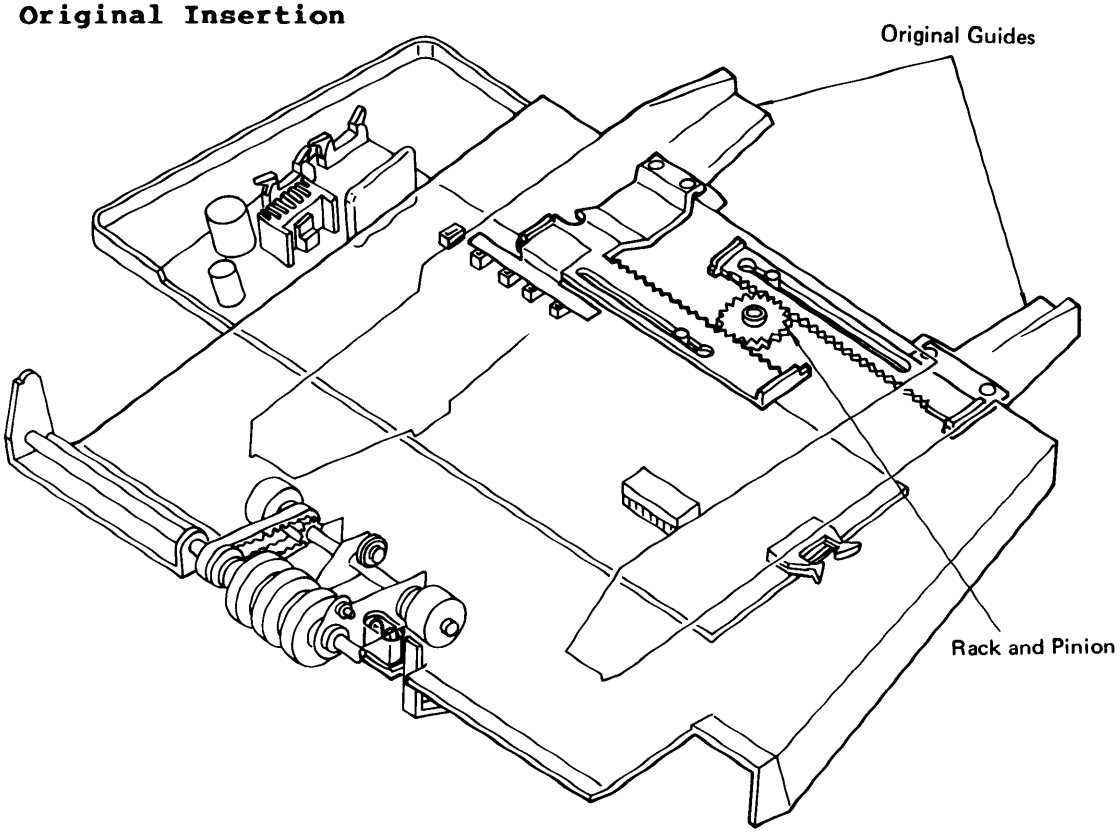

Before an original is inserted into the feed-in unit, it should be centered on the feed-in table so that the original is properly positioned on the exposure glass. To make the alignment of the original easier, original guides on the feed-in table slide to match the width of the chosen original. The original guides are connected by a rack and pinion system which keeps the guides equidistant from the center of the feed-in table.

Original Stopper Solenoid

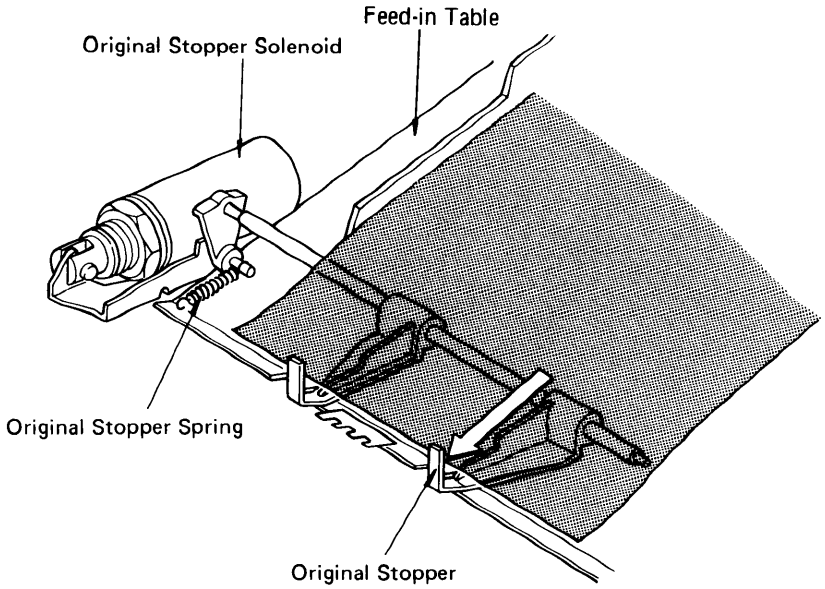

When the copier is in the ready condition, the original stopper solenoid is off. The original stopper spring ensures that the original stopper claws protrude through the holes in the feed-in table to align the stack of originals.

When the Print key is depressed, the DF CPU energizes the original stopper solenoid. This retracts the original stopper claws into the holes in the feed-in table to allow the pick-up rollers to feed-in the original.

Pick-up Roller Solenoid

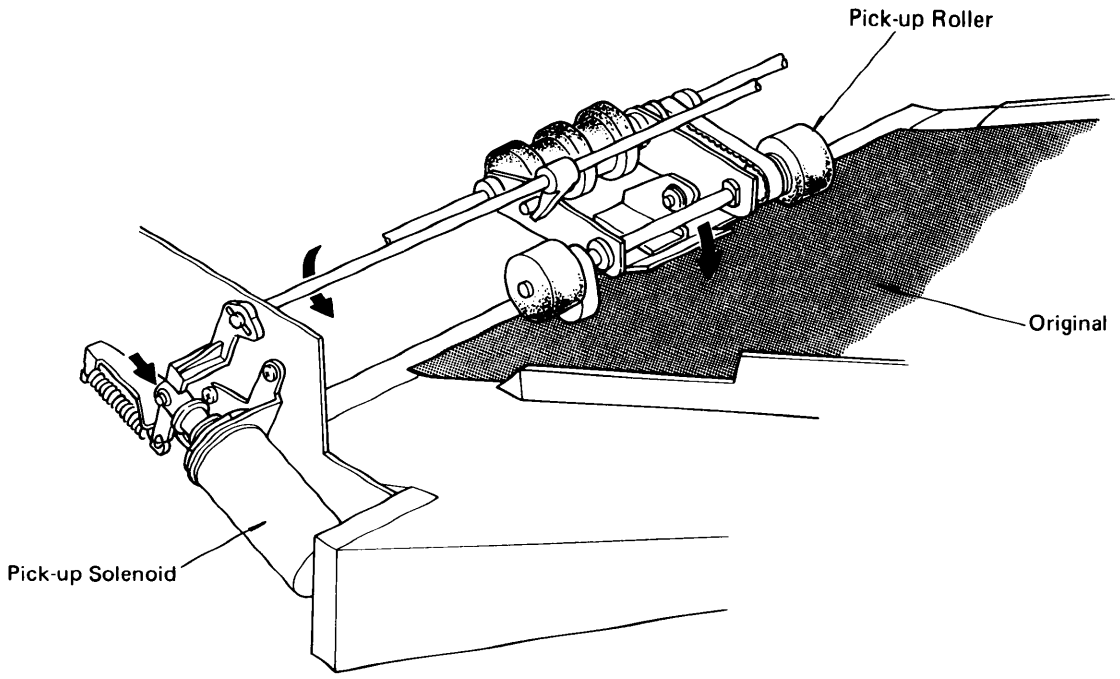

While the copier is in the ready condition, the pick-up solenoid stays off. This causes the feed-in roller to stay above the stack of originals. When the Print key is depressed, the DF CPU energizes the pick-up solenoid. This causes the pick-up roller to drop down and to make contact with the original (as shown above).

Separation Mechanism

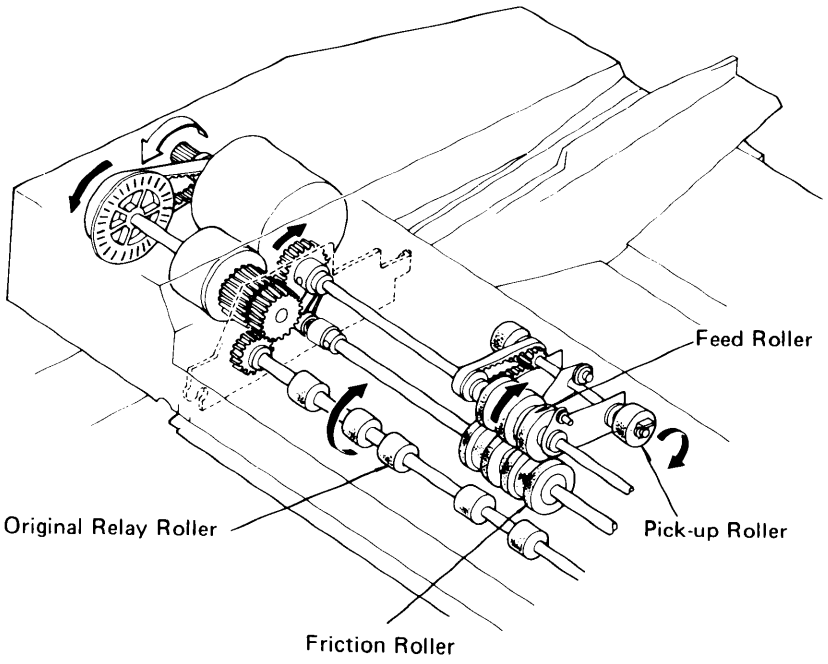

This model uses an FFR (Feed and Friction Roller) original feed system utilizing three sets of rollers (feed, friction and pick-up roller). The feed and friction rollers have grooves in them which interlock with one another. The rollers interlock so as to decrease damage to the originals -- especially pencil written originals -- from direct roller-to-roller pressure.

The pick-up rollers drive the original to the feed and friction rollers. Then, the feed roller takes over and drives the original across the friction roller to the relay rollers and into the belt unit.

Separation Theory

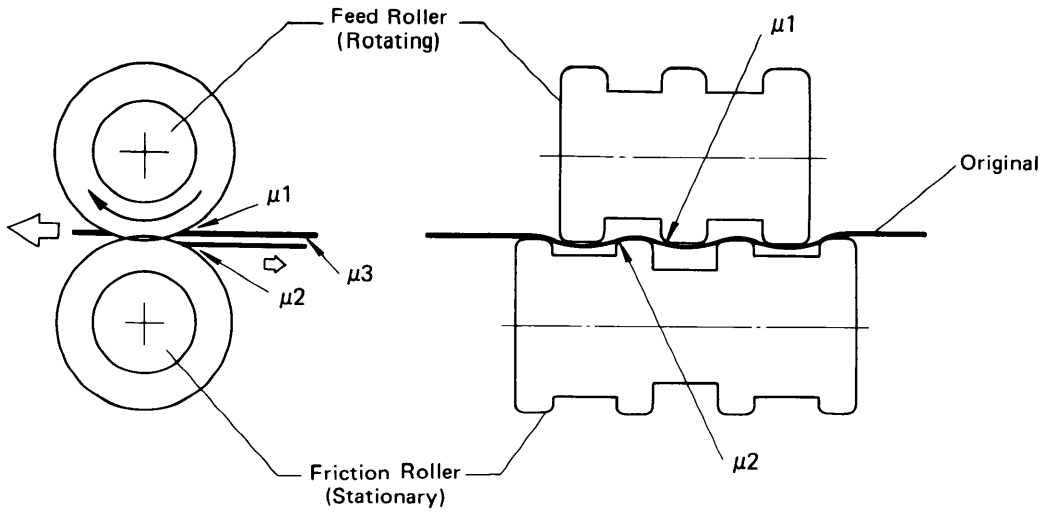

μ1 - Coefficient of friction between the feed rollers and the original.

μ2 - Coefficient of friction between the friction rollers and the original.

μ3 - Coefficient of friction between the originals.

The pick-up roller sometimes sends more than one original to the feed and friction rollers. When this happens, the extra original is stripped from the top original by the friction rollers. μ1 is greater than μ3 and because μ2 is greater than μ3, the top original will slide past the friction rollers while any lower originals are stopped.

Misfeed Prevention

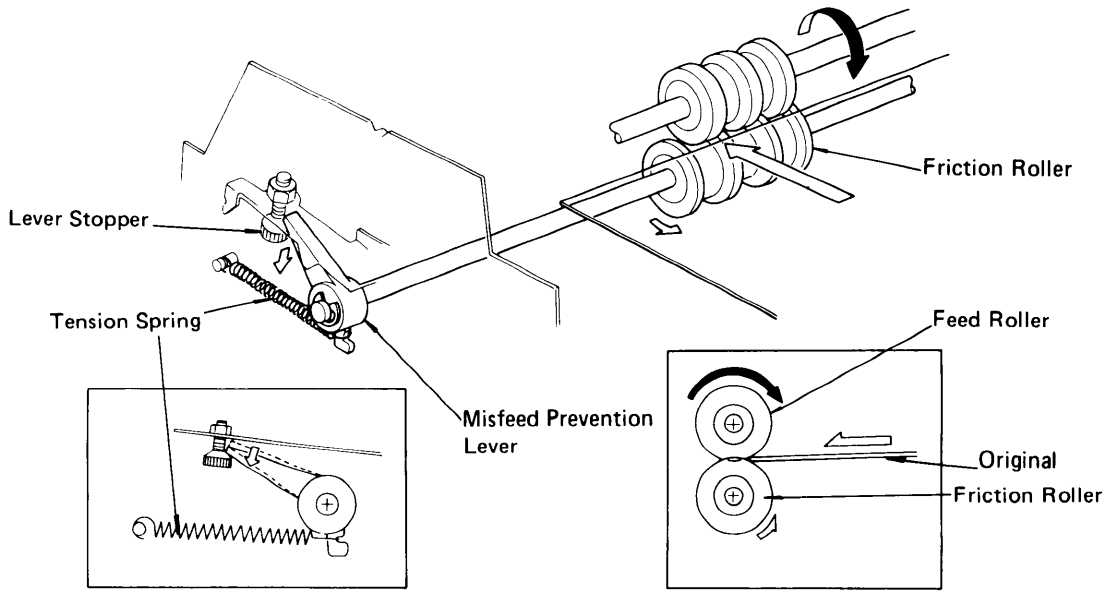

The front side of the friction roller is attached to the misfeed prevention lever via a one-way clutch.

When the leading edge of an original first contacts the feed and friction rollers, the friction roller is stationary. As the leading edge is fed between these rollers, the friction roller rotates counterclockwise a few degrees to help feed thick originals. After the friction roller rotates a few degrees the misfeed prevention lever contacts the lever stopper and the rotation of the friction roller stops. At this point the separation theory, previously explained, will be effective and double feed will be eliminated.

When the trailing edge of the original passes the friction roller, the tension spring freely returns the lever to its original position without rotating the friction roller shaft.

Wear Prevention

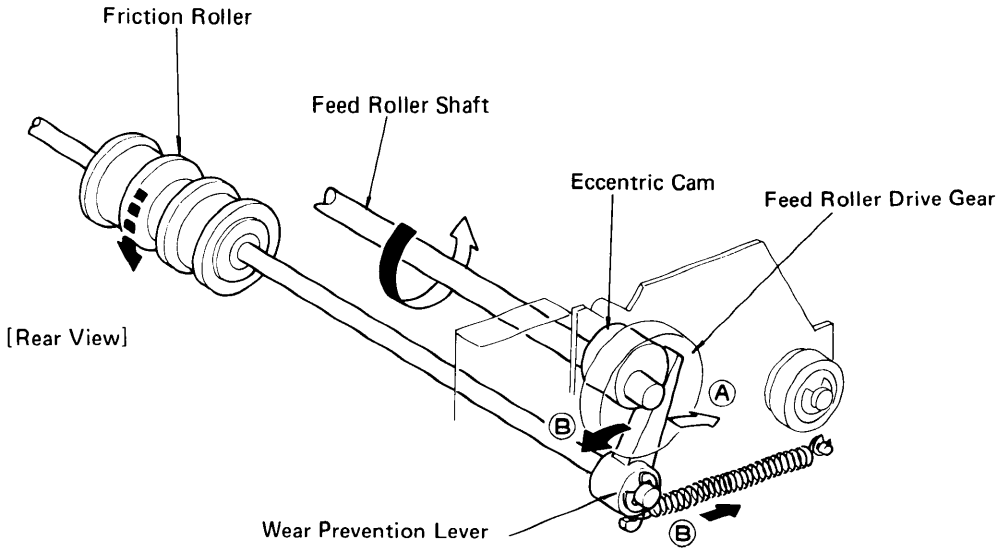

The rear side of the feed roller shaft drive gear has an eccentric cam. This cam contacts the wear prevention lever which is attached via a one-way clutch to the friction roller shaft. This lever is free to rotate in the direction of the white arrow A.

As the feed roller drive gear rotates, the high point of the cam pushes back the wear prevention lever in the direction of white arrow A. As the cam rotates to the low point, a tension spring returns the wear prevention lever to its original position (black arrow B). When the wear prevention lever returns, it rotates the friction roller shaft, because of the resistance of the one-way clutch.

Everytime the feed roller shaft rotates once, the friction roller shaft is rotated a few degrees. This prevents the friction roller from wearing out too quickly or unevenly.

Overlap Adjustment Mechanism

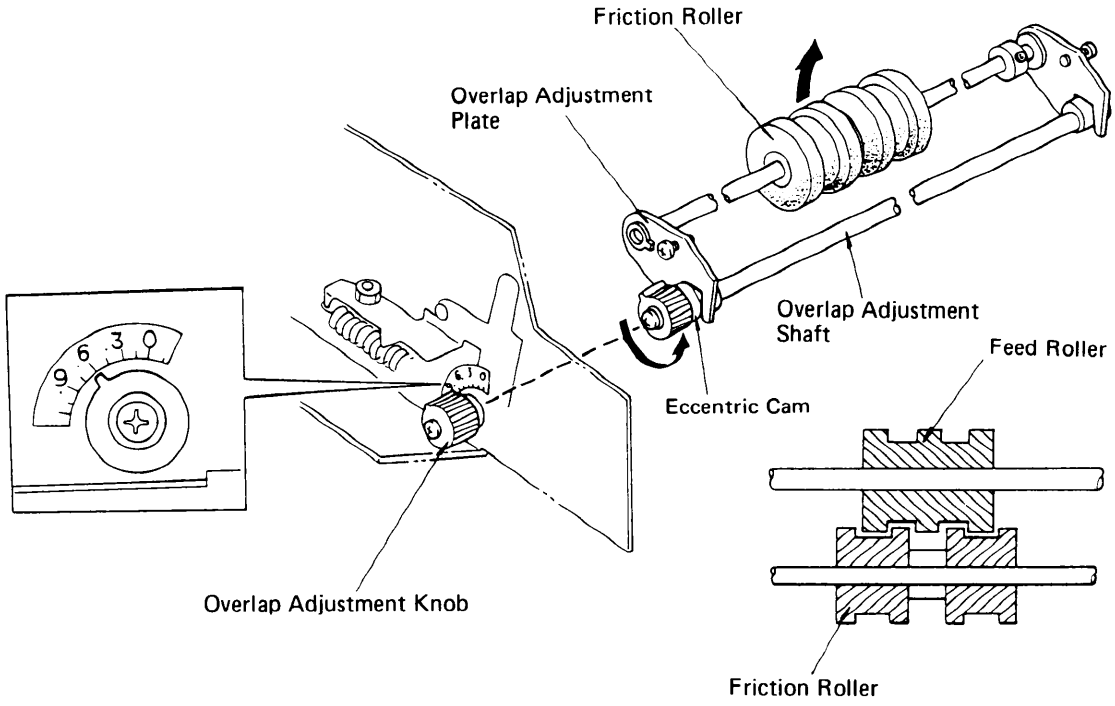

When the overlap adjustment shaft is turned via the overlap adjustment knob, the two eccentric cams attached to the front and rear ends of the overlap adjustment shaft rotate. When the cams rotate, this moves the two overlap adjustment plates.

Since two eccentric cams and the overlap adjustment plates are aligned with each other, both sides move at the same time.

Therefore, the friction roller shaft can be raised or lowered. These cams are adjusted at the factory.

Original Relay Roller Release Mechanism

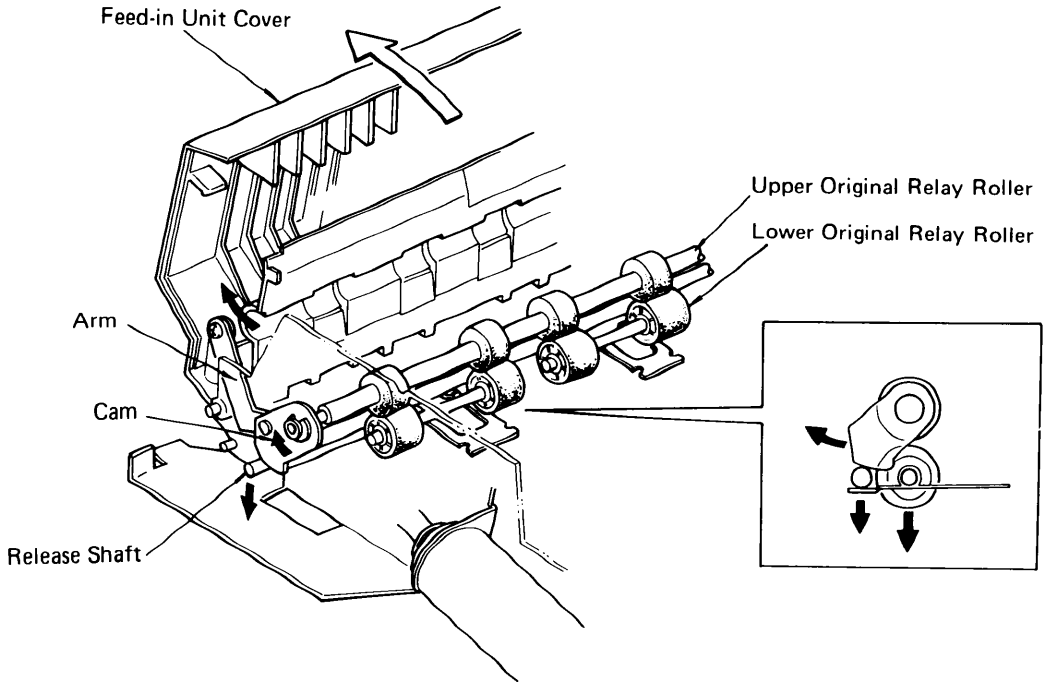

When a misfeed occurs in the feed-in unit, the operator must open the feed-in unit cover and remove the original. When opening the feed-in unit cover, the pressure between the upper and lower original relay rollers is released. This is done by an arm and cam mechanism. When the feed-in unit cover is opened, an arm is pulled back which rotates two (2) cams clockwise which push down the lower original relay roller release shaft. This mechanism makes the removal of misfed originals much easier.

Original Feed-in Circuit

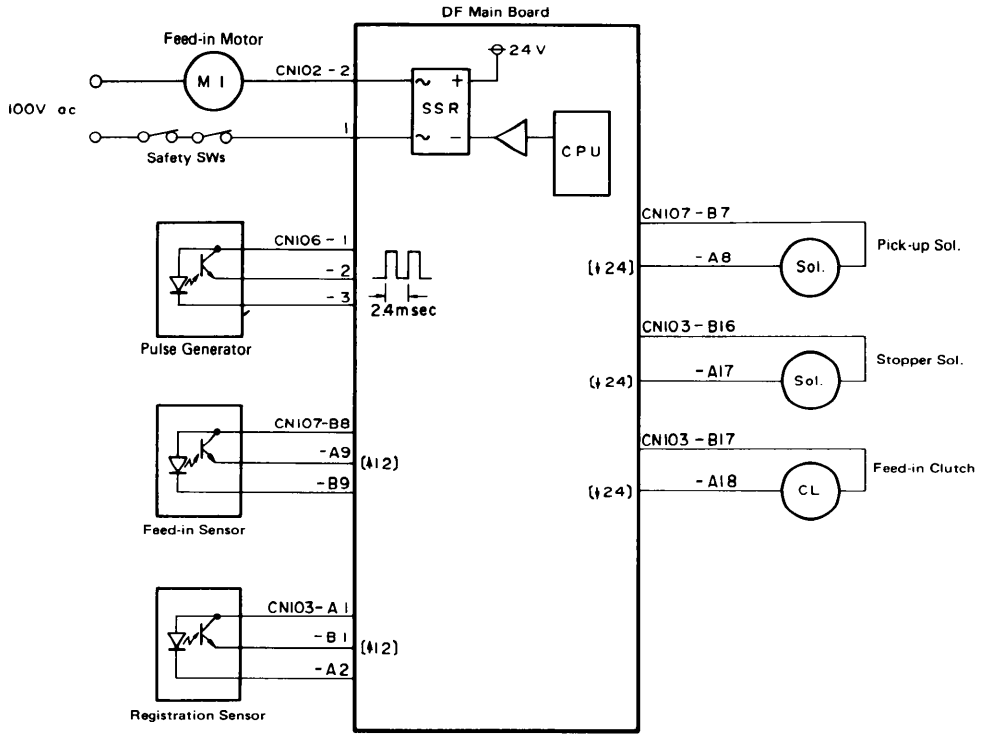

When an original is inserted, the feed-in sensor (reflective type) is activated and it then sends a high signal to CN107-A9. The DF CPU then notes that an original has been inserted and the DF CPU selects either the ADF or SADF mode (depending on the position of DIP SW 101-2).

When the Print key is depressed, the copier CPU sends a motor ON signal to the DF CPU. When this signal is received, the DF CPU energizes an SSR which turns on the feed-in motor, and also energizes the pick-up and stopper solenoids.

The DF pulse generator, which is monitoring the rotation of the feed-in motor, sends timing pulses to the DF main board.

After 40 pulses, the DF CPU sends a low signal to CN103-A18 to energize the feed-in clutch.

When the original reaches the registration sensor, CN103-B1 of the DF main board receives a high signal, and the DF CPU de-energizes the pick-up solenoid and the feed-in clutch.

When the trailing edge of the original passes the registration sensor, CN103-B1 receives a low signal.

The registration sensor is also used for jam checking.

In the SADF mode, when the trailing edge of the original passes the registration sensor, the DF CPU de-energizes the stopper solenoid pushing up the stopper for the next original. The DF CPU then selects the auto feed mode and lights the Auto Feed indicator.

Original Size Detection

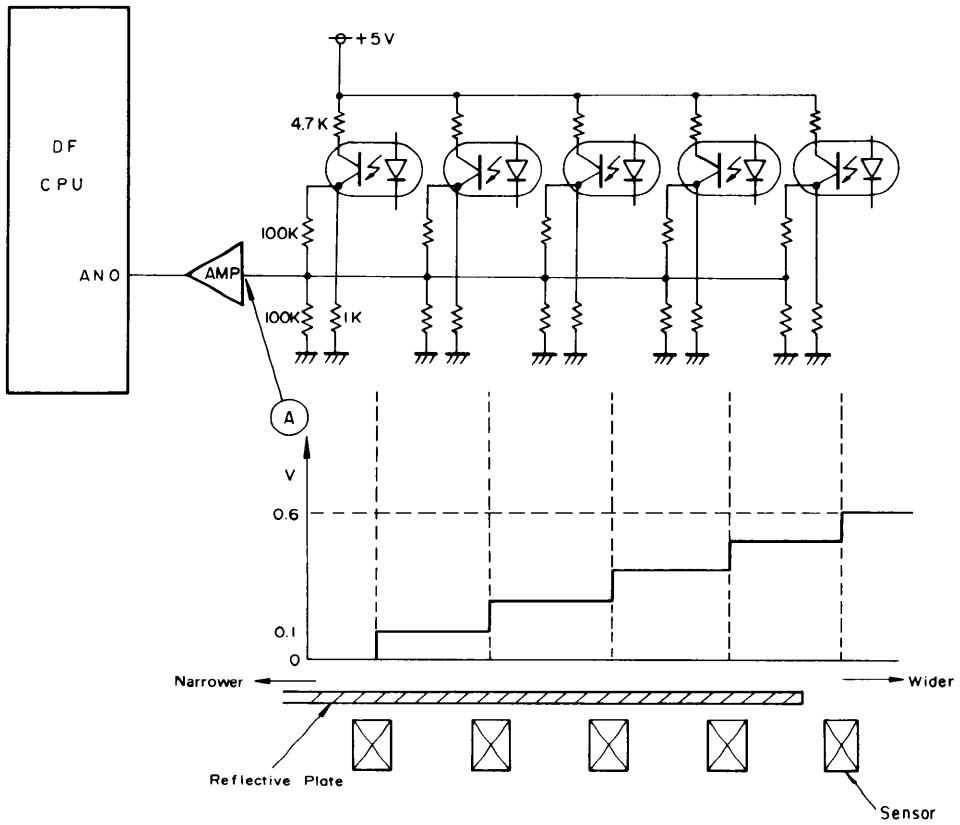

The length and width of the original is detected by two sensors. One is the original size sensor, which determines the width of the original. The other is the registration sensor which determines the length of the original.

Underneath the rear original guide, there is a reflective plate which interacts with a set of five reflective photosensors on the DF main board.

When the original guides are in their narrowest position, no photosensor is activated. Thus, the input from the original size sensor to the CPU is 0V. When the original guides are in their widest position, all the photosensors are activated. Thus, the input from the original size sensor is the maximum high.

Since the photosensors are located at the correct position for each original size, the DF CPU monitors the original width from the input to its analog port. These photosensor are used in the Auto Paper Select and Auto Reduce/Enlarge modes.

The DF CPU also monitors the original length, by counting pulses while the registration sensor is activated. The original size (width and length) is measured in the above process for each original feed into the DF.

After the original size measuring has been completed, the DF CPU sends the original size data to the copier CPU. If the Auto Reduce/Enlarge key has been depressed, the copier CPU will select the proper reproduction ratio for the original and the selected paper size. In the Auto Paper Select mode, the copier CPU selects the cassette according to the original size automatically.

BELT UNIT

Belt Drive Mechanism

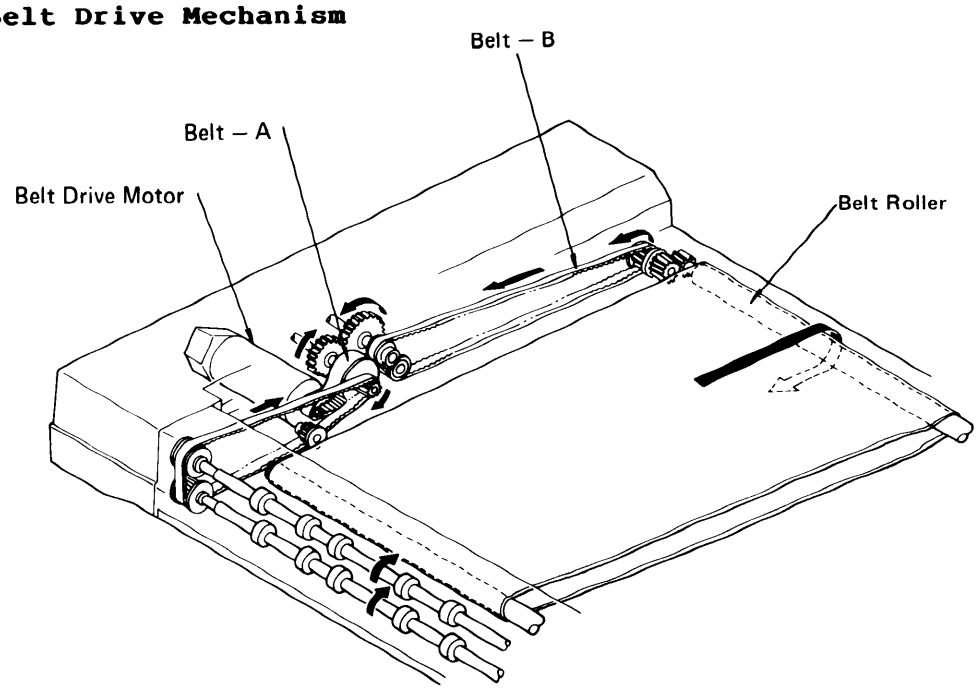

The rotation of the belt drive motor is transmitted to the belt roller via two (2) intermediate timing belts and a set of gears. Starting from the motor, power is transmitted to the timing belts A and B, to the gear assembly, and then to the belt itself.

Lifting Mechanism

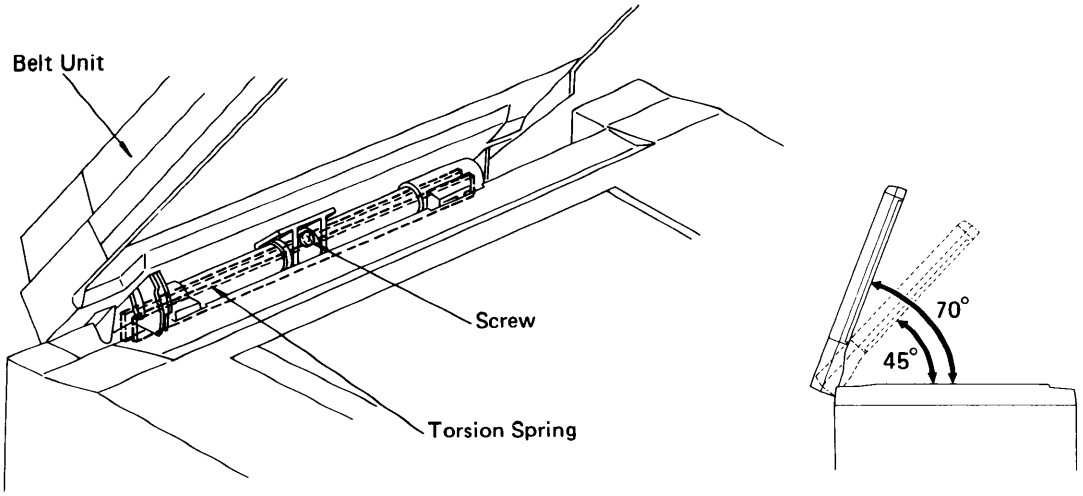

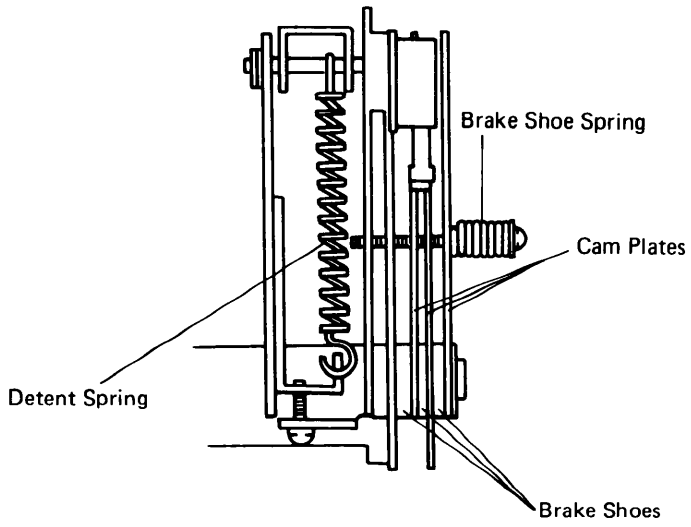

The torsion spring (3 pieces of leaf type spring) is installed inside the torsion spring collars. The center of the torsion spring is fixed with a screw, and both sides of the spring are twisted when the belt unit is lowered. The spring tension makes it easier to lift up the belt unit.

The cam plates are sandwiched between the brake shoes, which are under pressure from the brake shoe spring. This causes friction between the cam plate and the brake shoes. The cam plate has three detents on it (0°, 45°, and 70°). The cam follower on the detent arm will follow the contour of the cam plate.

The friction caused by the brake shoes and the detent portion allows the belt unit to stay firmly in place at 45° or 70° from the exposure glass.

Lift Switch

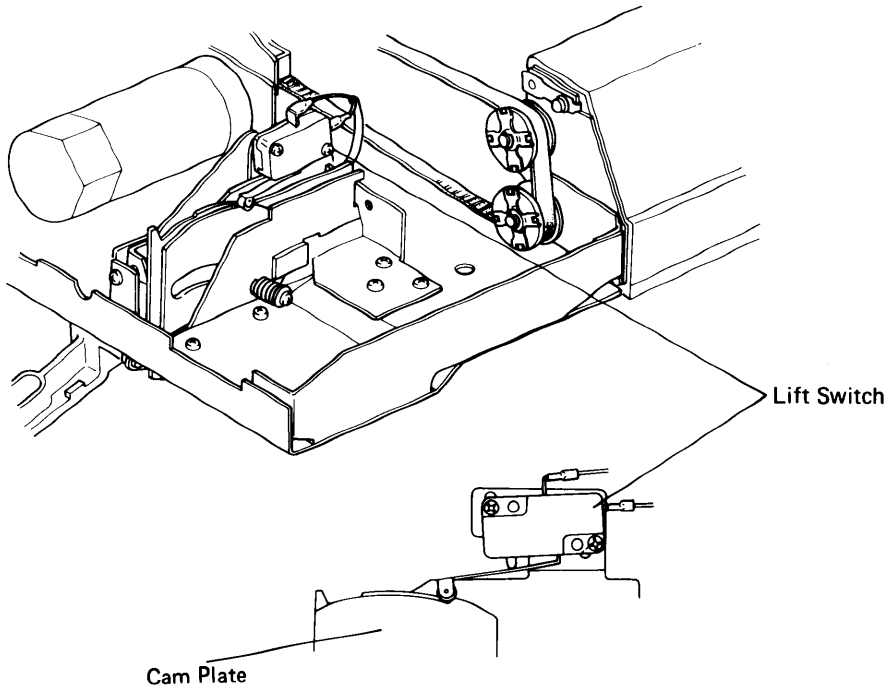

When the belt unit is lifted up, the lift switch is turned on by the detent arm as it moves along the cam plate.

When the lift switch is turned on, the DF modes are prohibited.

At the same time, the DF CPU sends a signal to the copier CPU. This signal enables the copier to operate without the DF. This same signal is used to sound the beeper twice to remind the operator not to forget to take out the original.

Exit Drive Mechanism

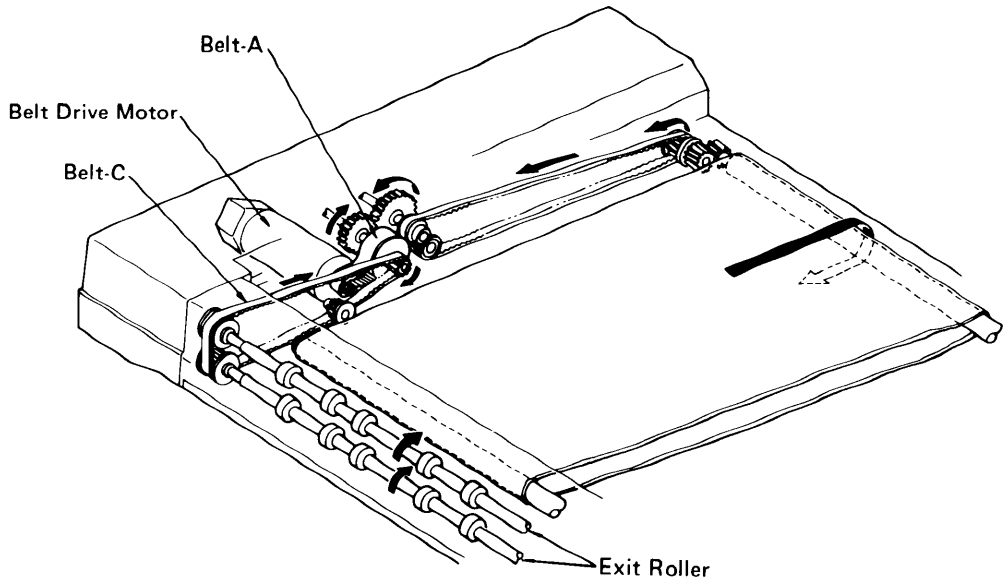

The ON/OFF timing of the belt drive motor for the original feed is different when making single or multiple copies of an original. During a single copy run, the belt drive motor turns on just when the first scanner of the copier returns to its home position. During a multicopy run, the belt drive motor turns on when the last copy is completely fed out from the copier.

The rotation of the belt drive motor is transmitted to the exit rollers via the pulley drive, belt A and belt C. These rollers transport the original from the belt unit to the original stacker.

OTHERS

1. Registration and Transportation

The DF has two motors (M1 and M2) which transport the original from the feed-in unit to the original stacker. The method by which the original is brought to the proper position is as follows:

1. When the lead edge of the original reaches the DF registration sensor, the DF CPU starts counting the pulses of the pulse generator. The DF CPU stops counting pulses when the trail edge passes the DF registration sensor.

2. The DF CPU then calculates remaining distance from the original length that is required to transport the original to its proper position on the exposure glass.

3. DF CPU then signals to M2 proper number of pulses for the remaining distance and stops M2 at the correct position.

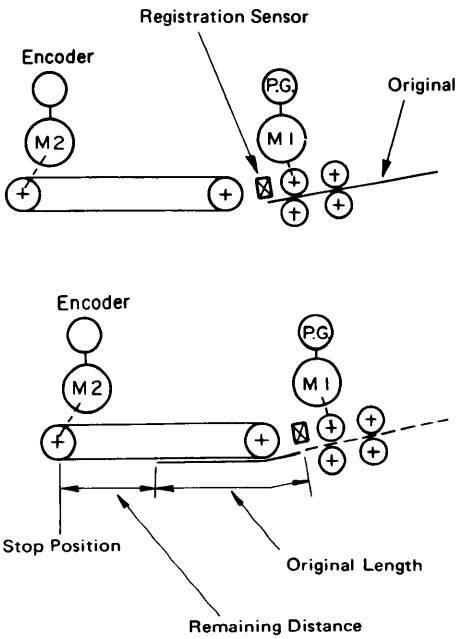

Operation Panel Board

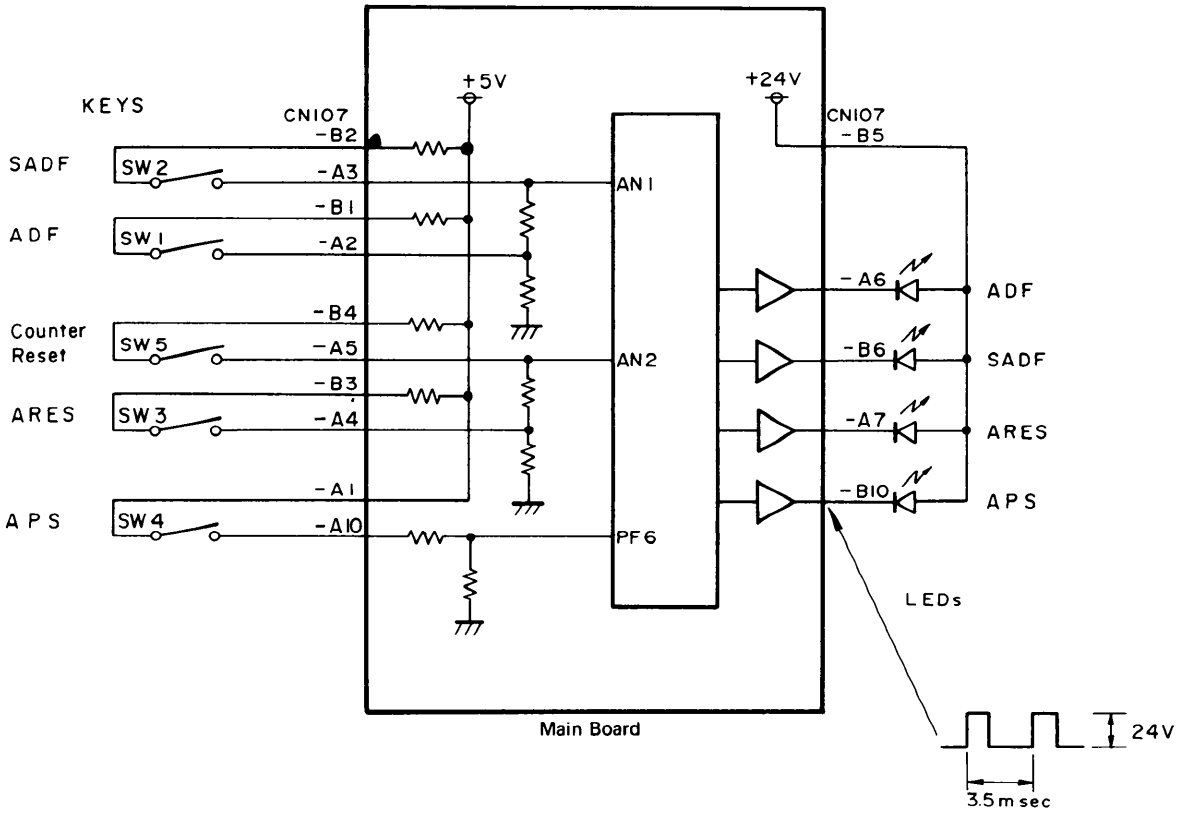

The DF CPU has a number of analog input ports. To reduce the number of input lines, operation keys are connected to the analog port. (See the above.)

The DF CPU receives analog input signals, as shown in the below table, and interprets this analog signal as three independent signals (SW1 ON, SW2 ON and BOTH OFF).

SW1	SW2	AN1
ON	OFF	2.5V
OFF	ON	3.3V
OFF	OFF	0V

When one of operation keys is depressed, the DF CPU sends a pulse signal to turn on the LED for the selected key.

Indicator Board

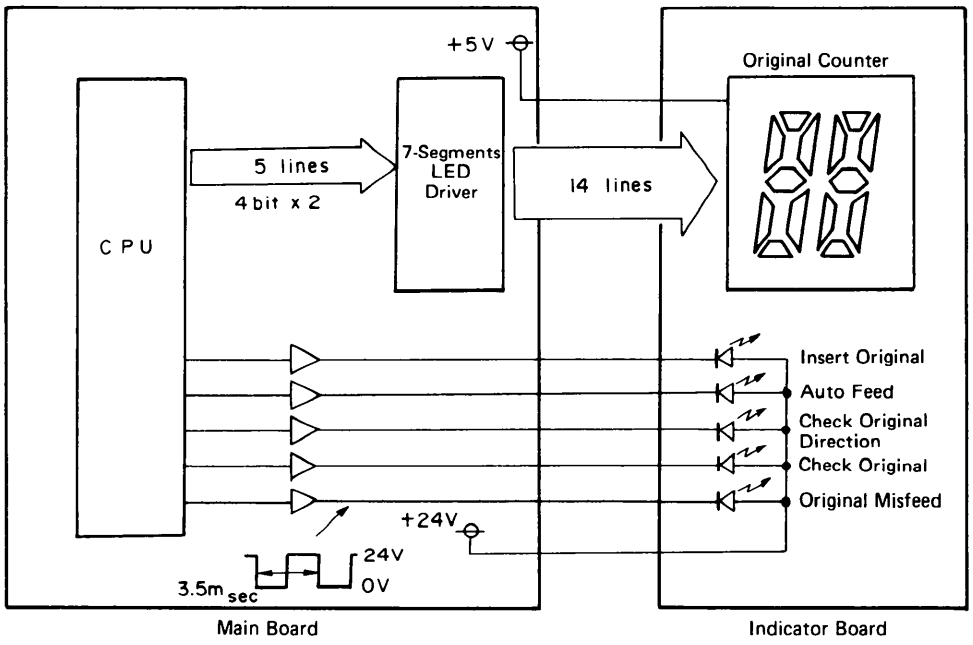

The indicator board has five LED indicators and an original counter (a double 7-segment LED). The five LED indicators are controlled by the DF CPU through pulse signals sent to the appropriate line.

A 7-segment LED drive IC on the DF main board is used to control the original counter. The DF CPU alternately sends a 4-bit signal for the first digit (1x) and then another 4-bit signal for the second digit (10x) via five signal lines to the LED drive. The LED drive IC then controls the two 7-segment LEDs via 14 signal lines.

Misfeed Check

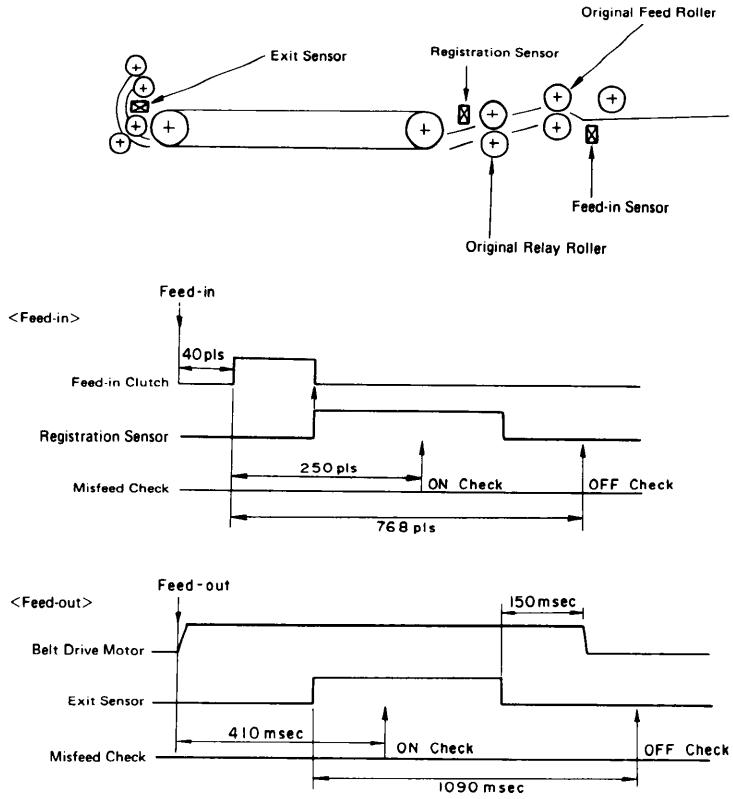

Two sensors are used for misfeed check: the registration sensor and exit sensor. After the feed-in clutch has been energized, the registration sensor is activated by the original. 250 pulses after the feed-in clutch has been energized, DF CPU checks to see if the registration sensor has been activated (registration sensor ON check). 768 pulses after the feed-in clutch has been energized the DF CPU checks to see if the registration sensor has been de-activated (registration sensor OFF check).

For checking misfeeds leaving the belt unit, the DF CPU checks the activation of the exit sensor. Unlike the feed-in unit, the belt units does not have a pulse generator. Therefore timing for the exit sensor check is done by the encoder of the belt drive motor.

Referring to the Field Service Manual, read the following:

- ☐ DF Registration Adjustment
- ☐ Brake Pressure Spring Adjustment
- ☐ Lift Switch Adjustment

Continue to the Document Feeder Worksheet.

Document Feeder Worksheet

This Worksheet will allow you to become more familiar with the operation, removal, replacement, and adjustment of the DF32 Document Feeder.

The DF32 Document Feeder is an Automatic Document Feeder (ADF). This option allows an operator to place a stack of originals up to 50 in the Document Feeder so that they can be automatically fed onto the document glass. The DF32 can also feed one original at a time onto the document glass using the Semi-Automatic (SADF) Mode.

PART I — BELT UNIT

Find the Document Feed Belt Removal Procedure in the Document Feeder Leveling Procedure. Remove and then replace the document feed belt.

PART II — BELT UNIT

Find the Document Feed Registration Procedure in the Document Feeder Installation Procedure. Using the originals provided with the document feeder, check and adjust the DF32 registration.

— Which VR adjusts for heavy/light originals? _____

— Which VR adjusts for large/small originals? _____

— Which VR adjusts the DF placement of the original onto the exposure glass? _____



Before continuing the program have your Service Manager review your answers to Fault Isolation Worksheet 4 and the Document Feeder Worksheet.

I have reviewed the work performance to this point.

_____

Service Manager's Signature

Continue to the next section. 



Sorter (CS1510)

Approximate Time: 45 Minutes

SORTER CS-1510

SPECIFICATIONS

Model Name:	CS-1510
Matching Copier:	FT 5050, FT 5070
Paper Size for Bins:	Max. 11" x 17" or A3
	Min. 8½" x 5½" or A5
Paper Size for Interrupt Bin:	Max. 11" x 17" or A3
	Min. 8½" x 5½" or A5
Copy Paper Weight:	52g to 105g (14 lbs to 28 lbs)
Number of Bins:	15 Bins + 1 Interrupt Bin
Bin Capacity:	Sort --- 50 sheets/bin
	Stack --- 40 sheets/bin
Top Bin Capacity (Clear Mode):	150 sheets
Interrupt Bin Capacity:	100 sheets
Power Source:	100V/60Hz (115V) From copier
	100V/50Hz (220/240V) From copier
Power Consumption:	80W
Dimensions:	574mm(W) x 535mm(D) x 600mm(H)
	22.6"(W) x 21.1"(D) x 23.6"(H)
Weight:	26.5 kg (58.3 lbs)

MECHANICAL COMPONENT LAYOUT

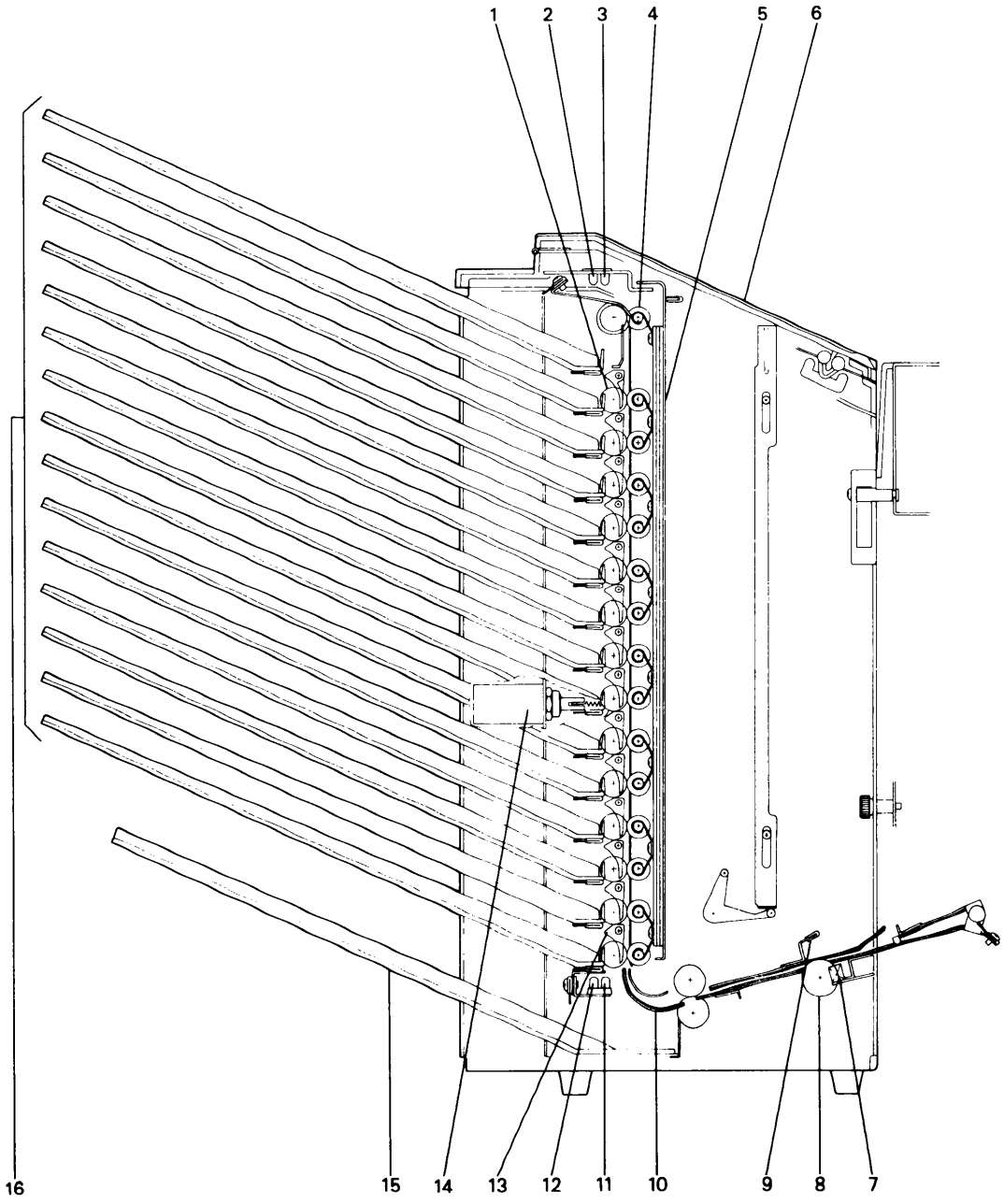

1. Vertical Drive Rollers
2. Bin Copy Sensor (Photo Tr.)
3. Jam Sensor (Photo Tr.)
4. Pressure Rollers
5. Vertical Guide Unit
6. Sorter Cover
7. Inlet Sensor
8. Sponge Roller
9. Relay Guide Unit
10. Turn Gate
11. Jam Sensor (LED)
12. Bin Copy Sensor (LED)
13. Bin Gates
14. Bin Gate Solenoid
15. Interrupt Bin
16. Standard Bin

DRIVE LAYOUT

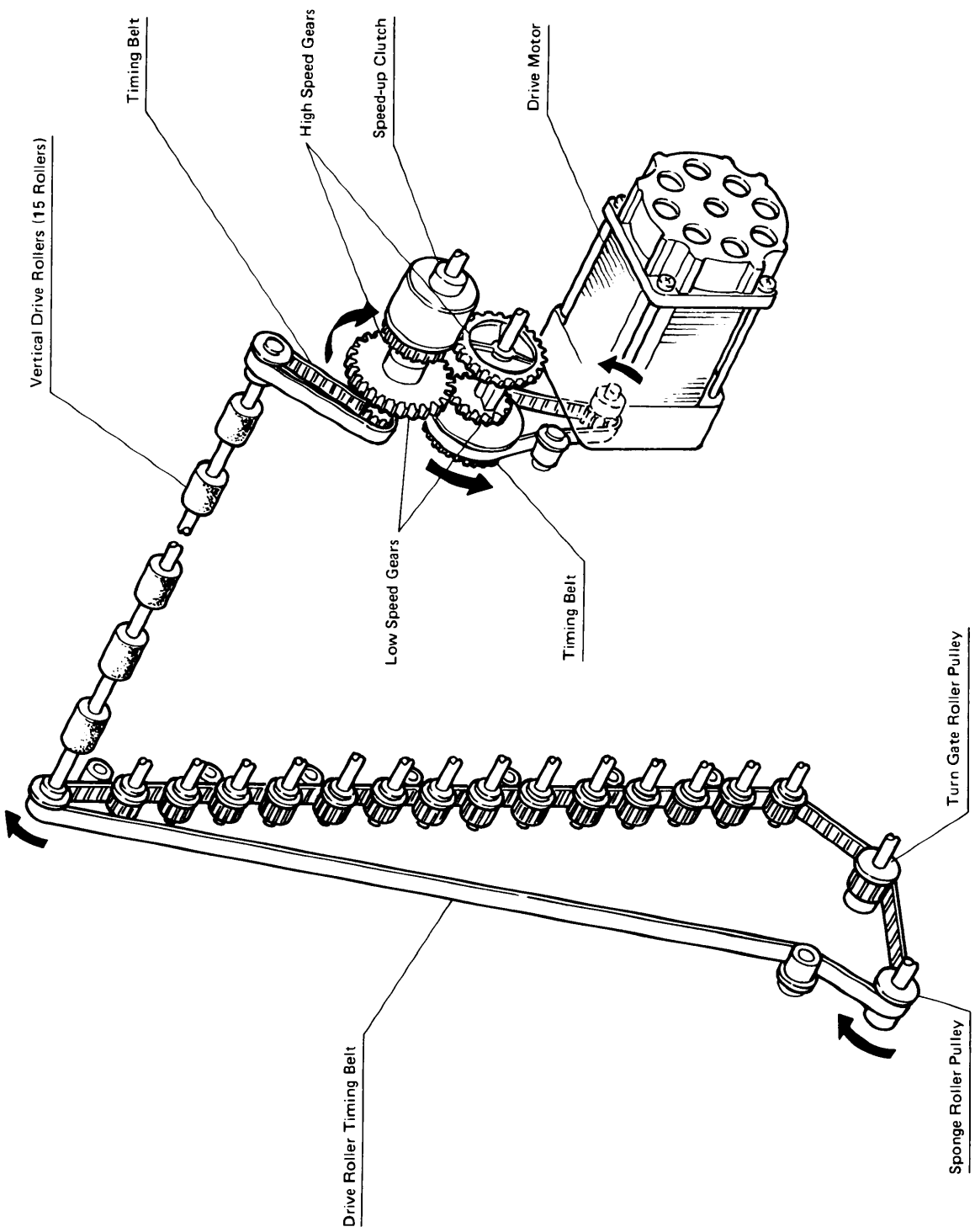

ELECTRICAL COMPONENT LAYOUT

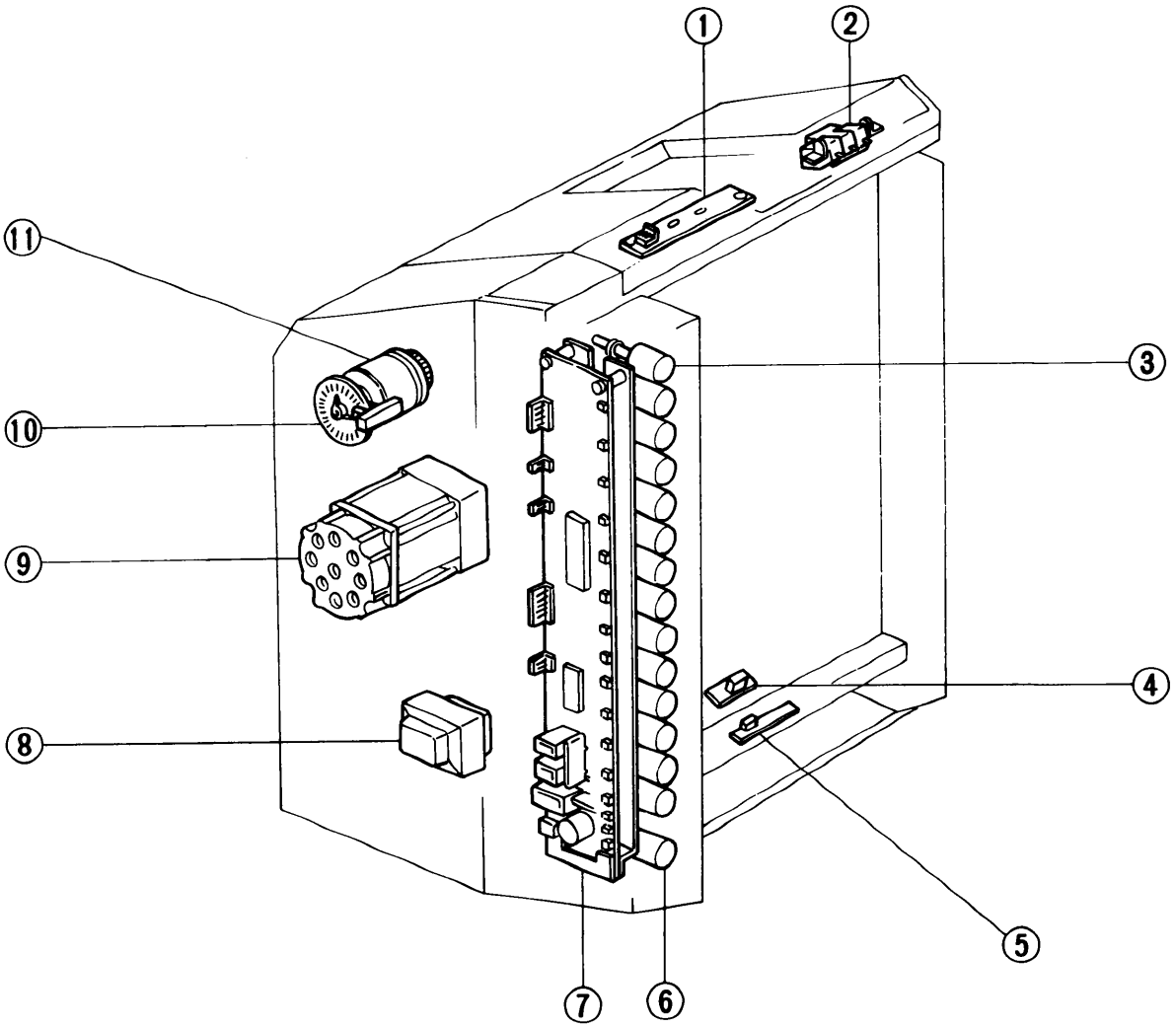

Motor
Sorter Drive Motor 9
Solenoids
Bin Gate Solenoids 3
Interrupt Bin Gate Solenoid 6
Clutch
Speed-up Clutch 11

Sensors
Jam & Bin Copy Sensor (PT) 1
Inlet Sensor 4
Jam & Bin Copy Sensor (LED) 5
Switch
Sorter Cover Safety 2
Others
Sorter Main Board 7
Transformer 8
Pulse Generator 10

BASIC OPERATION

- Introduction -

Sorter operation begins when the Print key is depressed. At that time, the sorter drive motor turns on and the rollers start turning.

The sorter has two paper transport speeds. When paper first enters the sorter it is transported at the "slow speed" of 240mm/sec. This is the slightly faster than the copier transport speed (by 30mm/sec). When the trail edge of the paper passes the exit sensor of the copier, the sorter shifts to the "high speed" which is about 2.4 times faster. The "high speed" not only increases copy delivery time, but also improves delivery to the bins, preventing jams at the bin entrance due to paper pile up.

About 0.3 second after the trailing edge of the copy passes the jam sensor, the sorter motor turns off.

- Clear Mode -

The copies pass from the copier exit through the relay guide plates to the turn gate. The turn gate directs the paper to the vertical guide unit. The vertical drive rollers then move the paper up until it reaches the turn guide. The turn guide directs the paper to the first bin. During transport of the copies in this mode, none of the bin gates are used.

- Sort Mode -

When in sort mode, the first sheet is placed in the first bin in the same way as when in clear mode.

The second and subsequent copies follow the same path but are directed to the bins in order from top to bottom (second copy to second bin, third to the third bin, and so on). The appropriate bin gate solenoid turns on when the lead edge of the paper activates the inlet sensor and turns off when the trail edge passes the jam sensor.

The maximum number of copies that can be sorted on a copy run is 15. The copier CPU will blink the Max indicator and display "15" in the Quantity Entered counter if 16 or more is entered while in sort mode.

- Stack Mode -

When in stack mode, all sheets of the first copy run go to the top bin just as in clear mode. When the Print key is depressed again, the entire second run is directed to the second bin. Similarly, the third run goes to the third bin and the fourth run to the fourth bin.

de is not changed, the sorter will continue in this way, sending all
om a single run to one bin and dropping down one bin each run until
copies in all 15 bins. Upon completion of the copy run to the 15th
CPU lights the Check Sorter indicator and turns the Print Key red.
annot be resumed until the operator removes the copies from the bins.

any single copy run, the operator enters a number greater than 40 (the
in capacity) the CPU will blink the Max indicator and display "40" on
ity Entered counter.

pt Mode -

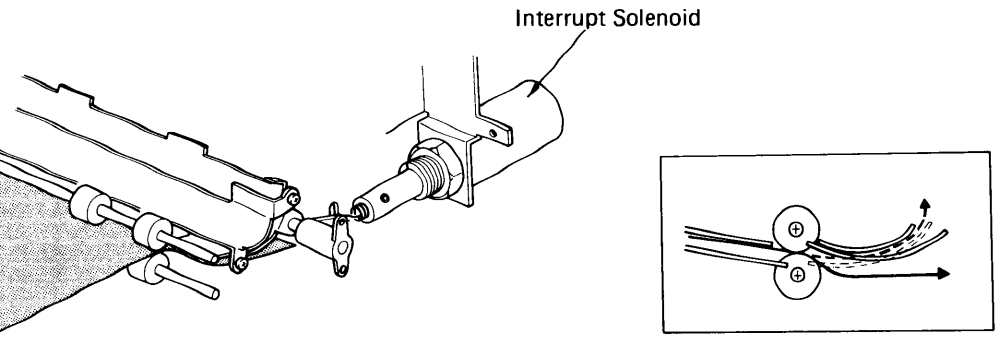

multicopy run, if the Interrupt key is depressed, the sorter
to place copies in the correct bins until that copy run is finished.
the copies go to depends on the mode: sort, stack or clear mode.

operator depresses the Print key to make interrupt copies. As each
nterrupt copies enters the sorter, the sorter CPU energizes the
solenoid and the copies are directed to the interrupt bin.

interrupt mode is cancelled, the previous settings and modes are
to resume the previous copy run that was interrupted.

Misfeed -

r CPU starts misfeed timing count when inlet sensor turns on. If the
not fed into the bin within a specified period (different for each
sorter CPU will send a misfeed signal to the copier. The copier will
nt the Sorter Misfeed indicator and stop operation. (Any copies in
path at the time will be finished first.)

er CPU directs any copies that are being processed in the copier at
of a sorter misfeed to the interrupt bin. It also corrects the
Quantity Completed counter so that it displays only the number of
ctually in the top 15 bins. After removing the misfed paper, the
ondition is automatically cleared when the sorter cover is opened and

: If the sorter mode is changed while there is paper in the sorter,
the Check Sorter indicator will light and copying will be inhibited
(Print key red). All copies must then be removed before the copier

- Control -

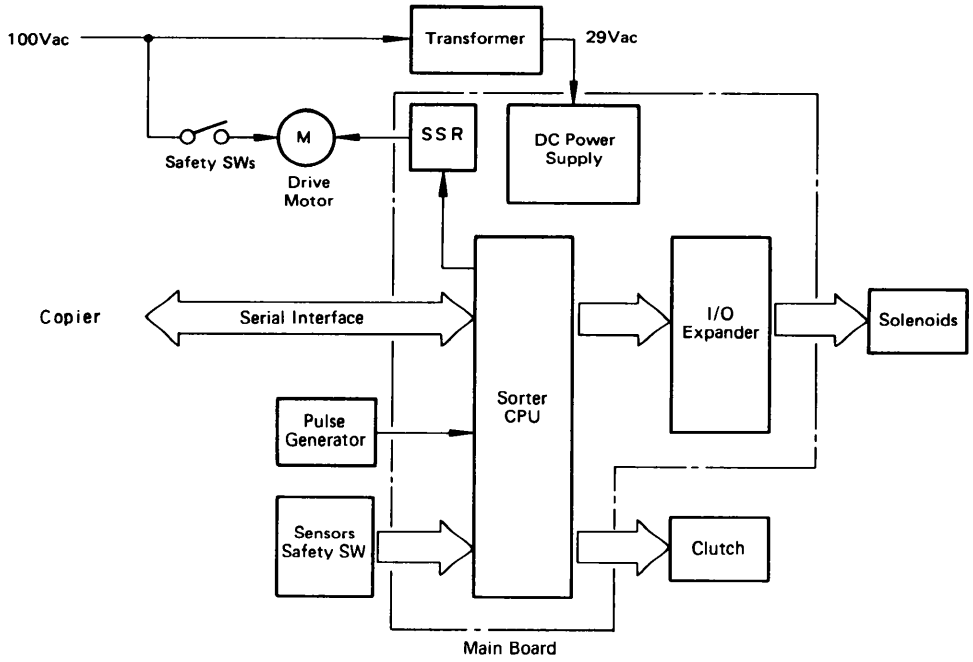

The sorter has its own CPU which controls all the functions of the sorter. The sorter CPU communicates with the copier through a serial interface bus.

The copier supplies 100Vac to the transformer and to the sorter drive motor. The transformer changes this 100Vac to 29Vac and it is then supplied to the dc power supply circuit on the main board.

Input signals from the sensors and the safety switch are sent to the sorter CPU directly. The sorter CPU operates the bin solenoids through a I/O expander. The sorter CPU also operates other active components such as the sorter motor and clutch.

FUNCTIONAL AND ELECTRICAL DESCRIPTION

Power Supply

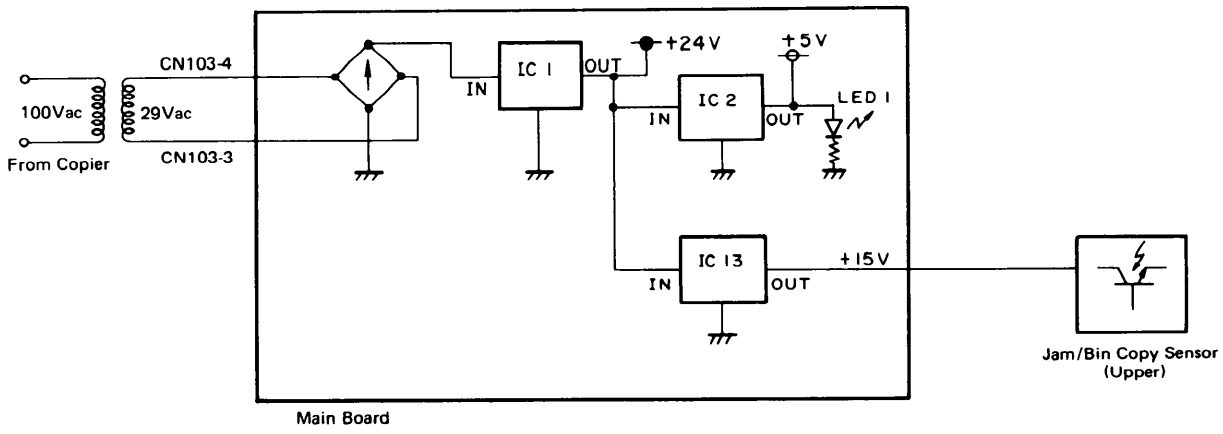

When the copier's main power switch is turned on, the copier supplies 100Vac to the sorter inner transformer. The transformer drops it to 29Vac. This 29Vac is changed to +24V through the rectifier and the voltage regulator IC (IC1). IC2 and IC13 take this +24V and drop it to +5V and +15V.

The +24V is then supplied to the clutch, SSR, solenoids and sensors, while +5V is supplied to the CPU and the other ICs.

+15V is used to supply the jam and the bin copy sensor.

Bin Gate Operation

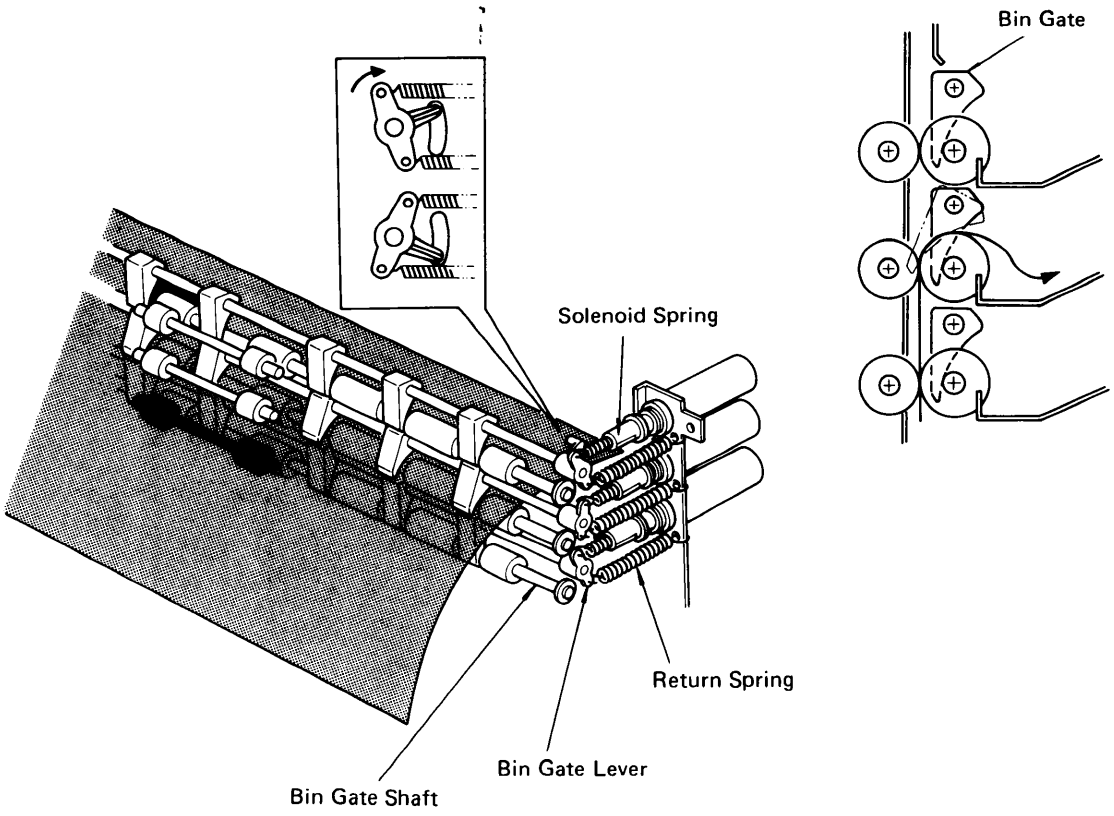

Each bin gate shaft is individually controlled by a solenoid. Normally, the bin gates are held out of the paper path by the return spring.

To feed paper into a bin, the sorter CPU energizes the appropriate solenoid. The solenoid spring then rotates the bin gate lever and opens the gate out into the paper path. The curved inner face of the gate directs the paper into the bin.

After the paper passes into the bin, the solenoid turns off and the return spring pulls the bin gate lever back to the closed position.

Speed Change Mechanism

- Low Speed -

When the Print key is depressed, the copier CPU sends a start signal to the sorter CPU. The sorter CPU then turns on the drive motor. At this time the speed-up clutch is held off, so motor drive is transmitted through the two low-speed gears as shown by the shaded sections of the figure on the right.

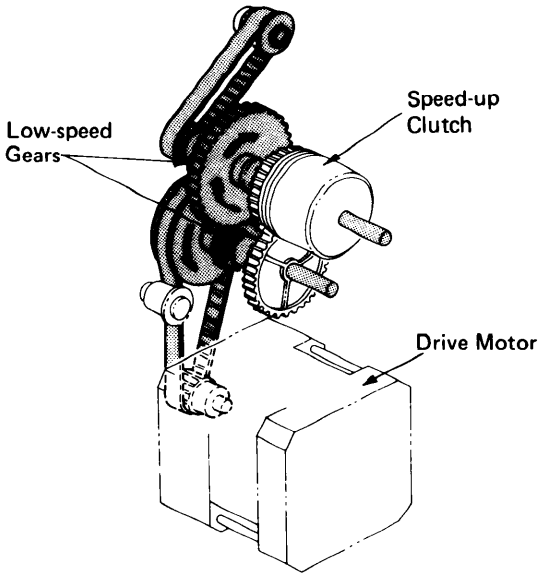

- High Speed -

The copier CPU sends the copier exit sensor OFF signal to the sorter CPU. The sorter CPU then energizes the speed-up clutch and the two high speed gears are engaged. Rotation power is then transmitted to the rollers as shown by the shading in the figure to the right. The largest of the low speed gears is mounted on a one-way clutch so it does not interfere with high speed rotation.

The speed-up clutch turns off after the paper has passed the bin jam sensor.

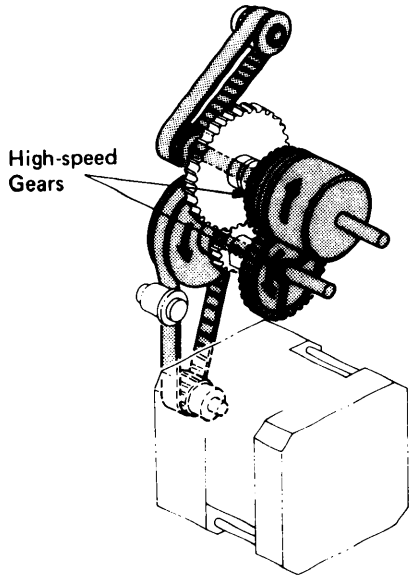

Relay Guide Plate Reset Mechanism

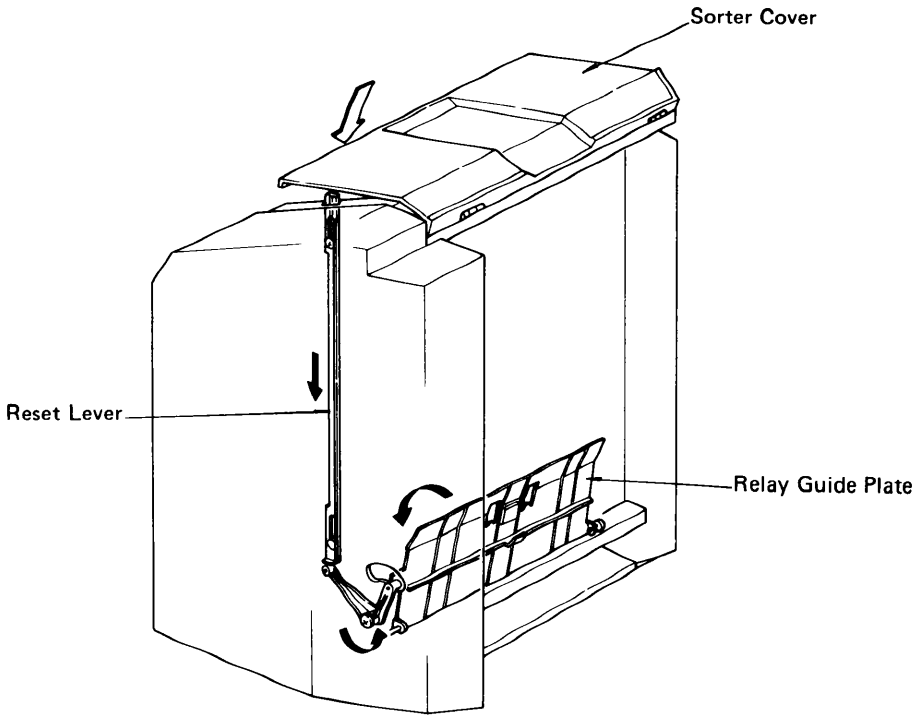

This mechanism prevents the relay guide plate from being left up after misfed paper has been removed from the sorter. When the operator closes the sorter cover, the reset lever is pushed down which returns the relay guide plate to the horizontal position.

Interface with the Copier

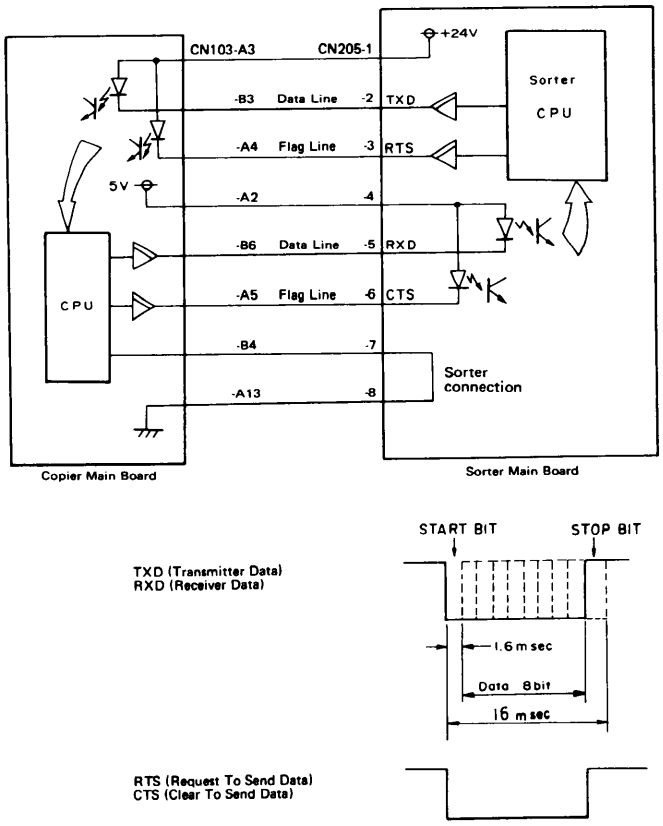

The serial interface is used for communication between the copier and the sorter. There are 2 data lines, 2 flag lines, and 2 connection check lines. 8 bit data is transmitted sequentially on the serial data lines.

The sorter CPU sends data with RTS signal. When RTS is low, the sorter CPU inhibits receiving data from the copier. This RTS signal is also sent when the sorter CPU does other jobs.

The sorter CPU receives signals from the copier through photocouplers.

The copier CPU monitors the potential of CN103-B4. When it is low, copier CPU interprets that the sorter is connected.

Jam and Bin Copy Sensors

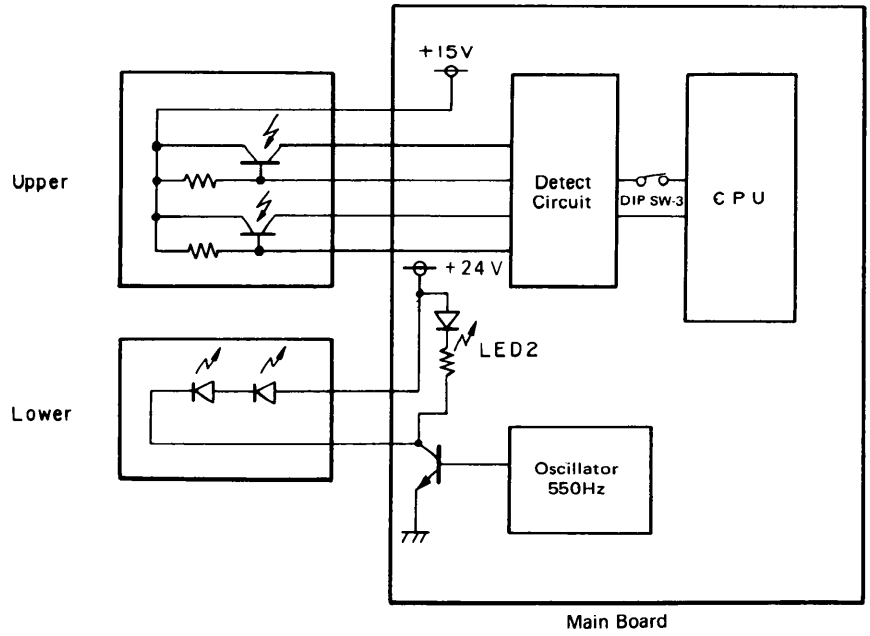

There are two sensors on the sorter upper board: the jam sensor and the bin copy sensor.

The jam sensor detects misfeed of the paper in the sorter and the bin copy sensor detects the presence or absence of paper in the bins.

Two LEDs on the sorter lower board are turned on by a pulse signal which is supplied from a oscillatory circuit.

When there is no paper between either board, this pulse light activates the phototransistors on the upper board. This activation informs the sorter CPU that there is no paper in the bins. This pulse signal detection system has an advantage over a photointerruptor system because there is no noise from external light.

The bin copy detection can be cleared by turning on SW3 on the board if required.

Misfeed Check

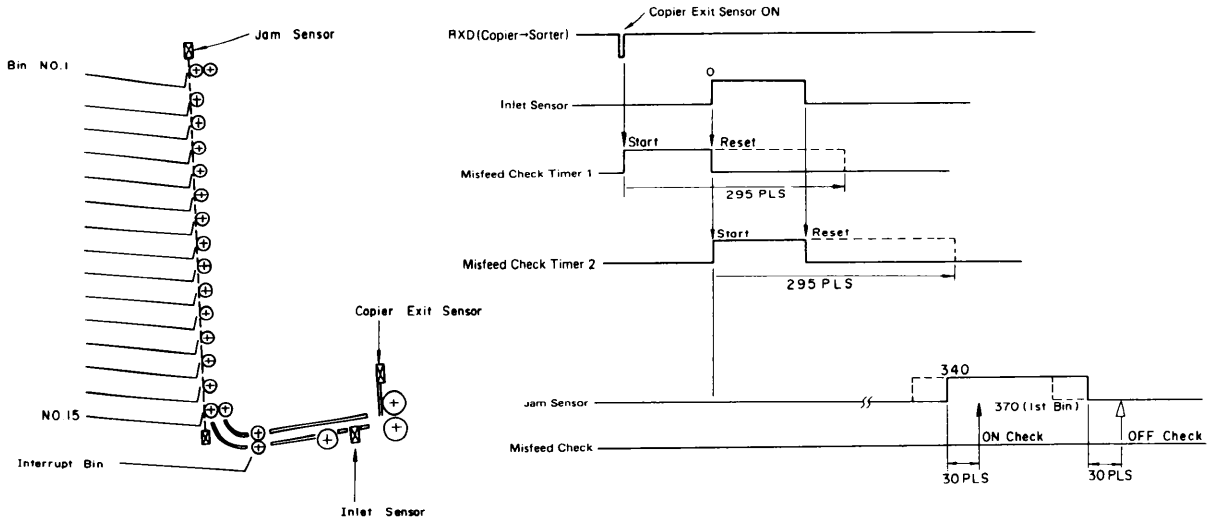

The sorter has two sensors which are used to detect misfeeds in the sorter. Also the exit sensor in the copier is used to check for misfeeds in the sorter.

After receiving the copier's exit sensor ON signal, the sorter CPU waits 295 pulses before checking to see if the inlet sensor has been actuated (inlet sensor ON check). If the inlet sensor has not been actuated by this time, the sorter CPU presumes that a misfeed has occurred.

If paper entered the inlet sensor, a inlet sensor ON signal is sent to the sorter CPU. After receiving the inlet sensor ON signal, the sorter CPU waits 295 pulses before checking to see if the inlet sensor is off (inlet sensor OFF check).

The ON and OFF timing of the jam sensor depends on the paper length and to which bin the paper is going. For the first bin, the ON check is carried out 370 pulses after the inlet sensor has been actuated. This check is carried out 30 pulses after the jam sensor has supposedly been actuated. The OFF check is carried out a certain period after the ON check has been carried out. This period depends on the length of the paper. This check is carried out 30 pulses after the jam sensor has supposedly been turned off.

If the CPU determines that a misfeed condition exists, it energizes the interrupt solenoid to allow the remaining copies to go to the interrupt bin.

Continue to the Sorter Worksheet.

Sorter Worksheet

This Worksheet will allow you to become more familiar with the operation of the CS1510 Sorter.

PART I — SORTER OPERATION

1. Reinstall the sorter to the copier.
2. Use page 5-4-1 of your Service Training Manual to locate the major components of the sorter.
3. Run 5 copies into the sorter.

   — When does the sorter motor energize? _____

   — When does the high speed clutch energize? _____

   Create a jam in the top sorter bin during a 10 copy run.

   — Where are the copies delivered? _____

PART II — TEST MODES

Follow the test mode procedure as outlined in the Field Service Manual.

SUMMARY

Knowledge Check:

Do you know? . . .
1. How the sorter operates.
2. The major components of the sorter.

Do not stop. Continue to the next page. 

Review Guide — 4

1. What is the difference between the cassette and Duplex Feed Roller? _____
   _____
2. Concerning the DF32 Feed In Motor, what voltage will be read at the following:

	De-energized	Energized
CN102-1 & 2	_____ Vac	_____ Vac

3. What is the main purpose of the Misfeed Prevention Mechanism? _____
   _____
4. When it comes to monitoring sensors or triggers on the sorter, is it O.K. to use the Copier Main Board Ground? _____
5. How many sensors are used by the DF for jam detecting? _____
6. When is the Feed In Clutch energized? _____
7. How is the Feed Belt stopped? _____
8. Where are the Original Size Sensors located? _____
9. Under what conditions are copies directed to the Interrupt Bin?
   A. _____
   B. _____
   C. _____
10. What signal turns the Sorter Motor off? _____



Before continuing the program, have your Service Manager review your answers to the Sorter Worksheet and Review #4.

I have reviewed the work performance to this point.

_____
Service Manager's Signature

Continue to the next section. 



Large Capacity Tray (RT11)

Approximate Time: 45 Minutes

LARGE CAPACITY TRAY RT11

SPECIFICATIONS

Model Name:	RT11
Copier Models:	FT5050, FT5070
Copy Paper Size:	B4 (L) (257 mm X 364 mm) A4 (L or S) (210 mm X 297 mm) B5 (L or S) (182 mm X 257 mm) Legal (L) (8½" X 14") Letter (L or S) (8½" X 11")
Copy Paper Weight:	52 g to 105 g (14 lb to 28 lb)
Tray Capacity:	Approx. 1000 sheets
Lift Time:	Max. 12 seconds (50 Hz) 10 seconds (60 Hz)
Power Source:	220 V/50 Hz 0.15 A 240 V/50 Hz 0.15 A 115 V/60 Hz 0.3 A
Power Consumption:	Max. 30 W
Dimensions:	284 mm (W) X 545 mm (D) X 227 mm (H) (11.2" X 21.5" X 8.9")
Weight:	12 kg (26.4 lbs)

MECHANICAL COMPONENT LAYOUT

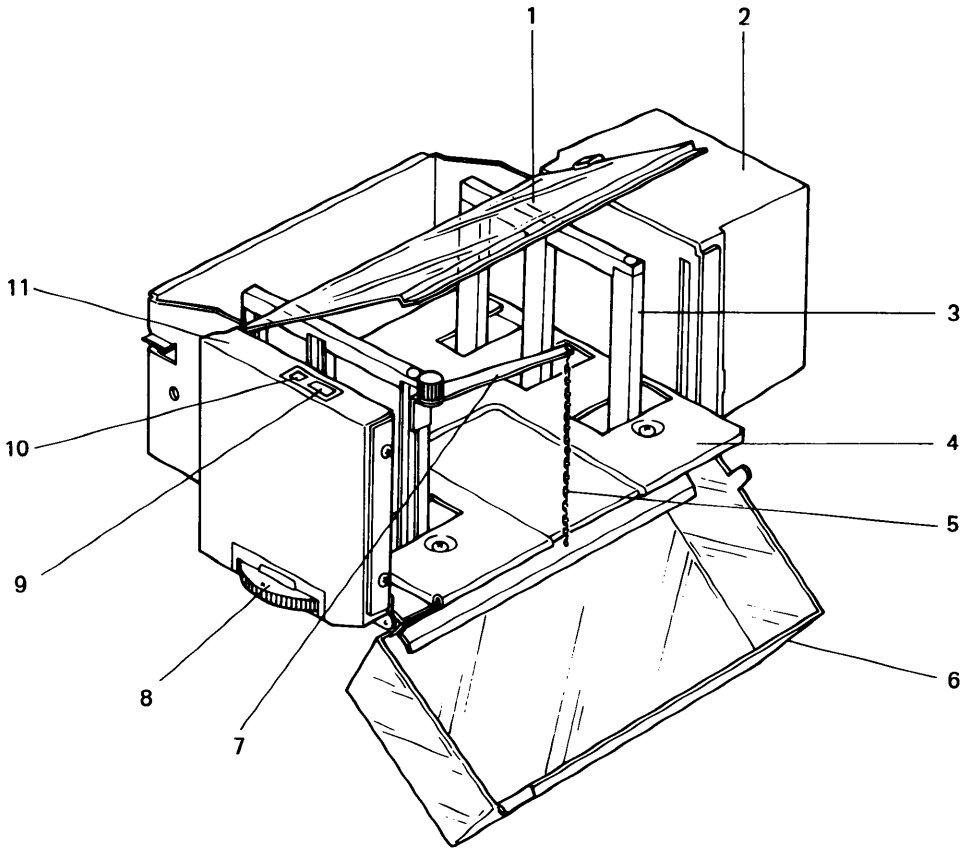

1. Top Cover
2. Rear Cover
3. Side Post
4. Tray Bottom Plate
5. Stopper Chain
6. Side Cover
7. Stopper Bar
8. Paper Size Dial
9. Close Cover Indicator
10. Down Key
11. Front Cover

DRIVE LAYOUT AND DRIVE MECHANISM

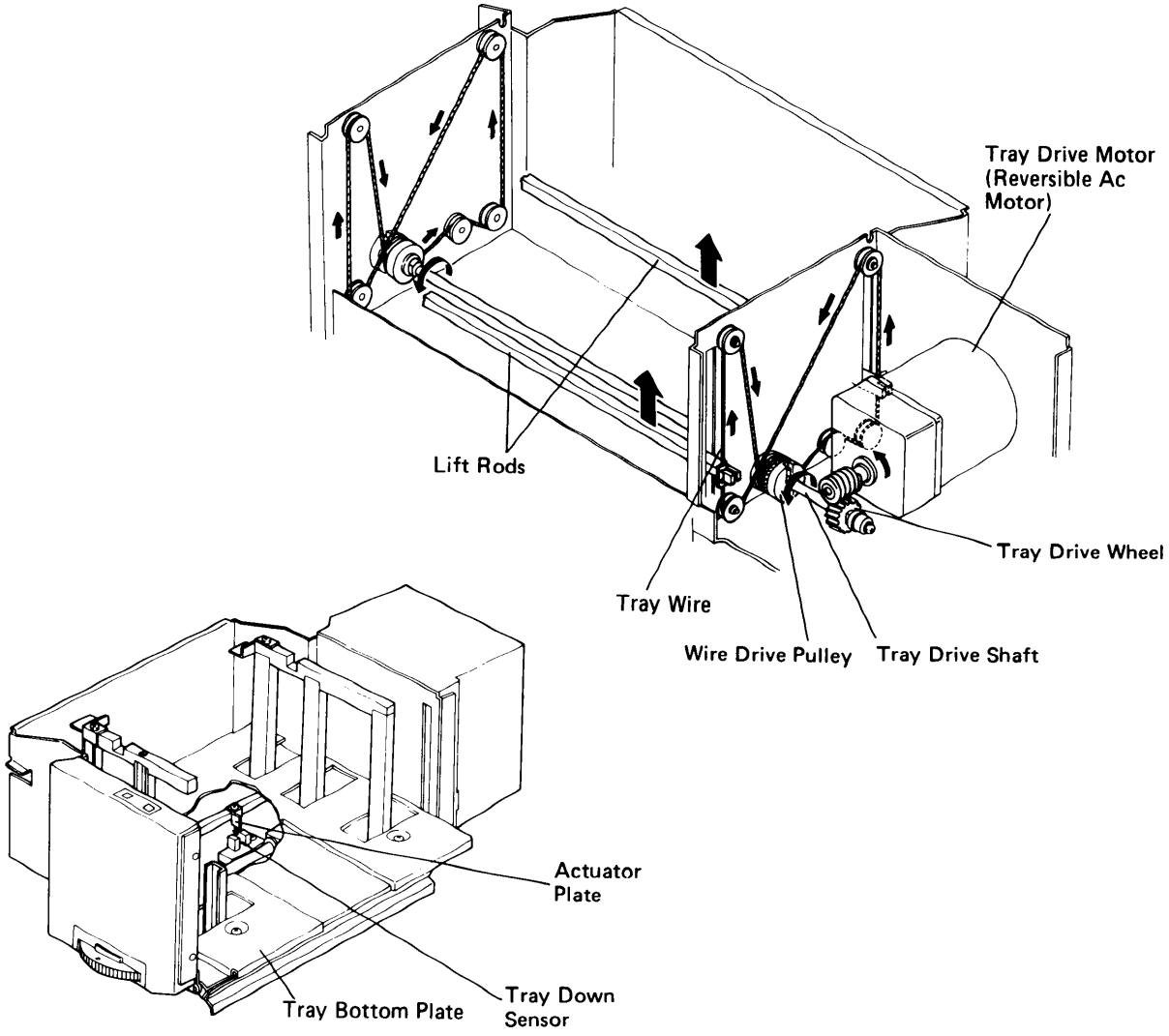

The bottom plate of the large capacity tray is raised and lowered by a wire and pulley mechanism driven by the tray drive motor.

Drive power is transmitted directly to the tray drive shaft via a worm gear and worm wheel. The tray wires have braces on them; these braces hold the ends of the two lift rods which support the tray bottom plate. So, when the wire drive pulley turns counterclockwise, the braces on the wires raise the lift rods and the tray bottom plate. The bottom plate rises until the paper in the tray pushes up the pick-up roller de-actuating the lower lift sensor.

When the Down key is depressed, the tray drive motor turns the wire drive pulley clockwise. The tray bottom plate is lowered until the actuator plate, on the left lift rod, actuates the tray down sensor. The tray bottom plate can be lowered only when the Down key is depressed. Even if a paper misfeed or paper end condition occurs, the tray stays raised.

ELECTRICAL COMPONENT LAYOUT

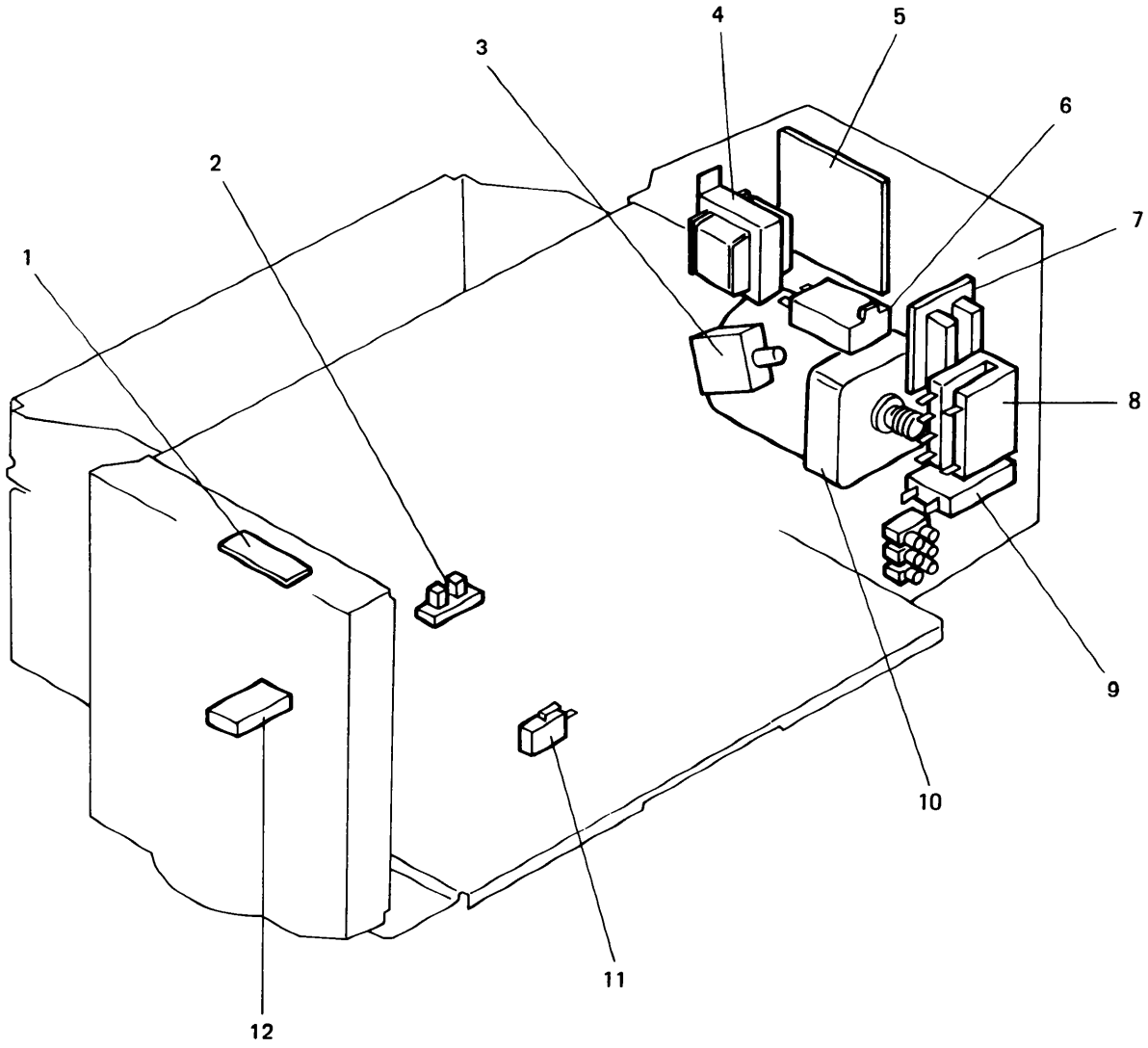

1. Operation Board
2. Down Sensor
3. Cover Safety Switch
4. Transformer
5. Tray Main Board
6. Capacitor
7. Paper Volume Sensor
8. Power Relay
9. Circuit Breaker
10. Tray Drive Motor
11. Positioning Switch
12. Tray Paper Size Sensor

FUNCTIONAL AND ELECTRICAL DESCRIPTION

Tray Operation

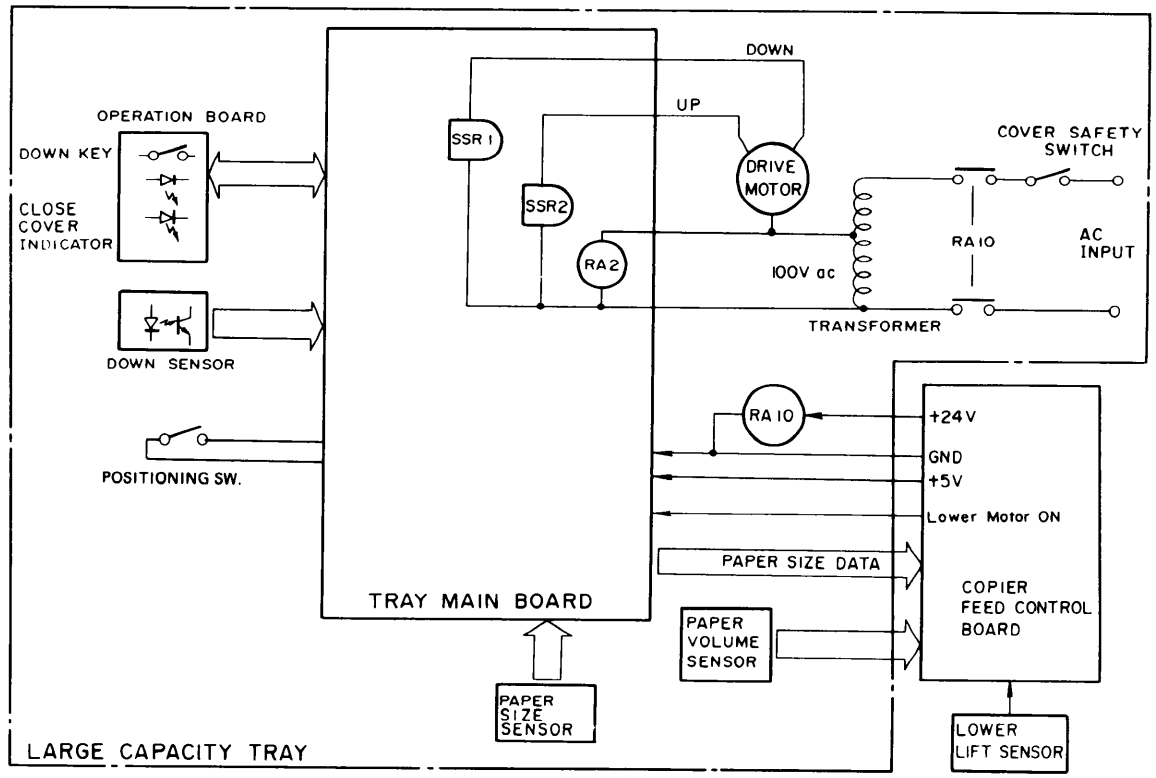

– Overview –

The large capacity tray has its own power cord. A wall outlet supplies ac power to the transformer through the cover safety switch and a relay. This relay (RA10) is energized by +24V from the copier. When the copier main switch is turned off, RA10 is de-energized and power to the tray is cut off. The transformer steps down the ac input to 100Vac which energizes RA2. This relay (RA2) is used to monitor the state of the cover safety switch.

The drive motor receives 100Vac through solid state relay 1 (SSR1) for down drive, and through SSR2 for up drive. The tray main board turns on the drive motor according to the signals from RA2, down key, positioning switch, and copier (lower motor ON signal).

The tray main board can send paper size data to the copier except when the tray is being lowered and when the positioning switch is actuated. Also, the copier directly monitors the paper volume through the volume sensor.

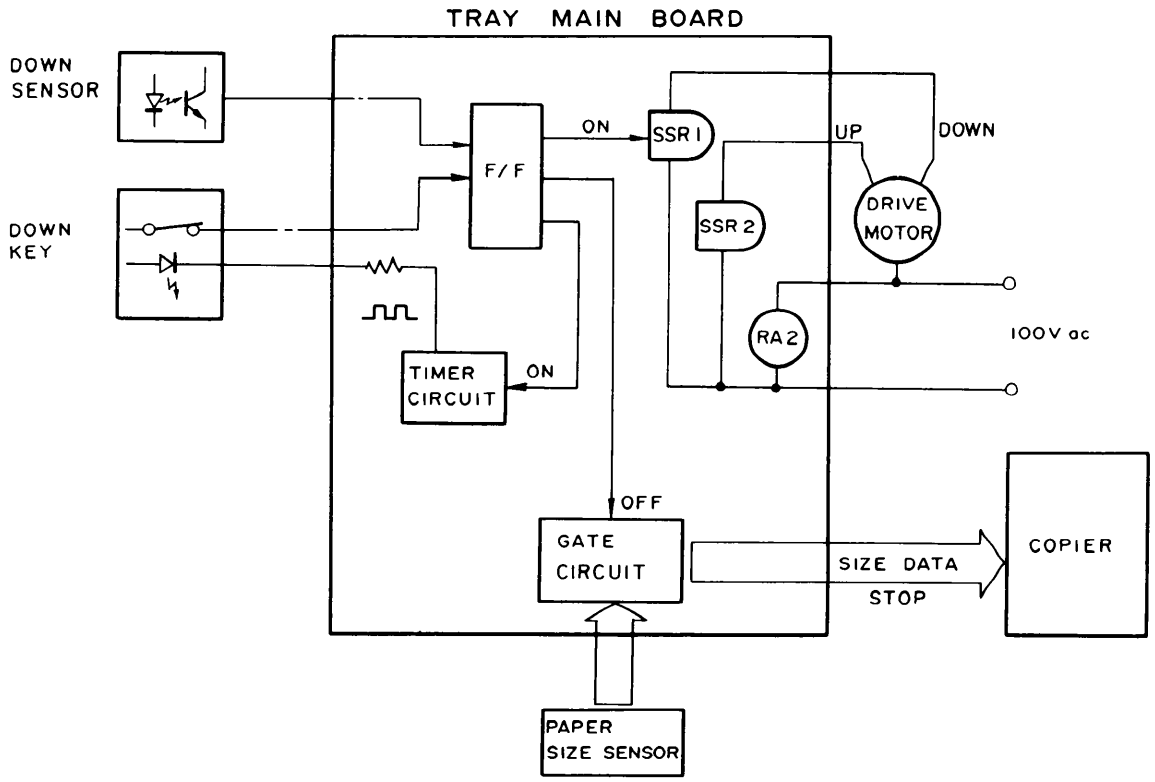

– Down Operation –

When the Down key is depressed, the flip flop (F/F) output is changed. This turns off the gate circuit so that paper size data cannot be sent to the copier. At the same time, the changed output of the F/F energizes SSR1 which lowers the tray bottom plate. During this lowering operation, the F/F energizes a timer circuit which produces a pulse signal making the LED in the Down key blink.

When the tray bottom plate has been fully lowered, the down sensor is actuated. This actuation changes the F/F output back to its original state, which then turns off SSR1 and resets the timer circuit so that the LED in the Down key is continuously on.

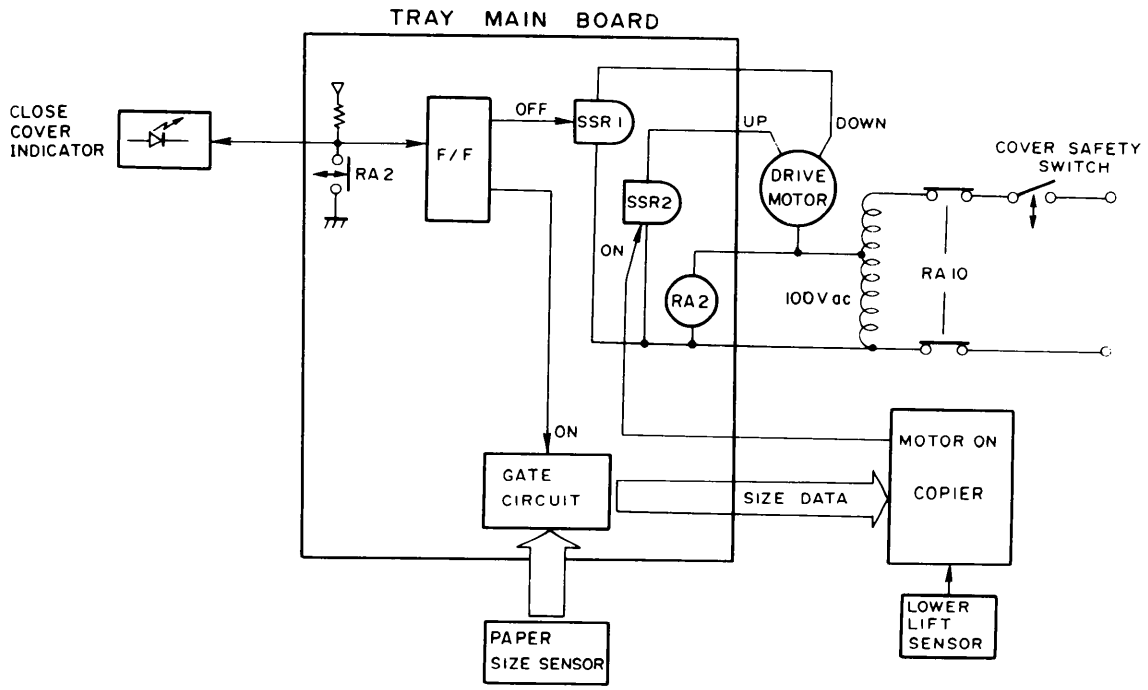

– Up Operation –

When the tray bottom plate has been fully lowered, the down sensor is actuated. At this time, if the covers are opened and closed (OFF/ON of RA2), the gate circuit is enabled. This allows the tray main board to send paper size data to the copier. The copier then sends the lower motor ON signal to the tray. This signal energizes SSR2 which raises the bottom plate.

The copier sends the lower motor ON signal until the paper in the tray pushes up the pick-up roller unit, de-actuating the lower lift sensor. When the lower motor ON signal is cut, the drive motor stops and the bottom plate stays in the raised position.

Paper Size Change and Detection

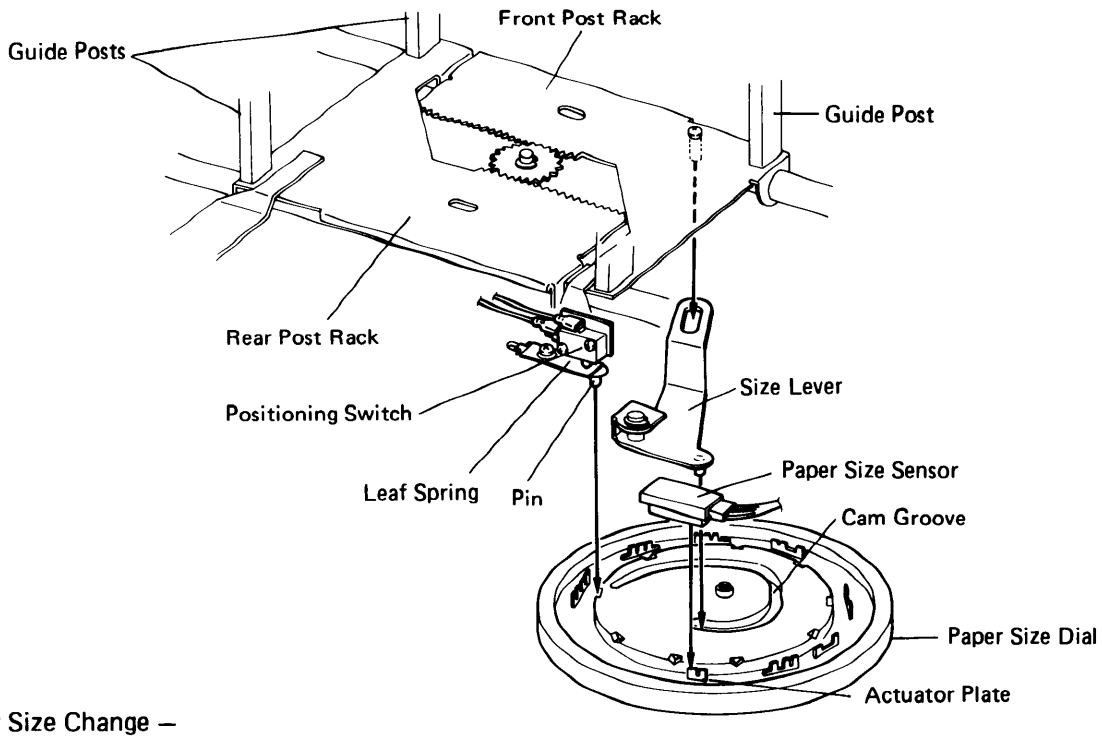

– Paper Size Change –

Alignment of paper in the large capacity tray is made by three paper guide posts at the front and rear sides of the tray. The two sets of guide posts are connected by a rack and pinion system which keeps the guide posts equidistant from the center of the tray.

Movement of the guide posts is made by turning the paper size dial. As the dial is rotated, the size lever is moved according to a cam groove in the surface of the dial. Movement of the size lever is transferred to the front post rack of the rack and pinion system. Any movement of the front post rack is transferred by the pinion to the rear post rack.

– Paper Size Detection –

The paper size detection system of the large capacity tray is similar to that of the cassette. Both systems use the same data bus, signals, and type of sensor. (See page 3-12-4.) However, the mechanism of paper size detection in the large capacity tray is different.

When the paper size dial is rotated to a standard paper size, one of the actuator plates enters the paper size sensor. At the same time, the pin on the leaf spring drops into a notch on the inside rim of the dial and the positioning switch becomes de-actuated. This signal allows the copier CPU to monitor the data from the paper size sensor. The paper size of the tray is then displayed on the indicator screen where the size of the lower cassette is usually displayed.

When the paper size dial is positioned at a non-standard paper size, the positioning switch is actuated. At this time, the Load Paper indicator is lit and no paper size is displayed on the indicator screen.

Paper Volume Detection

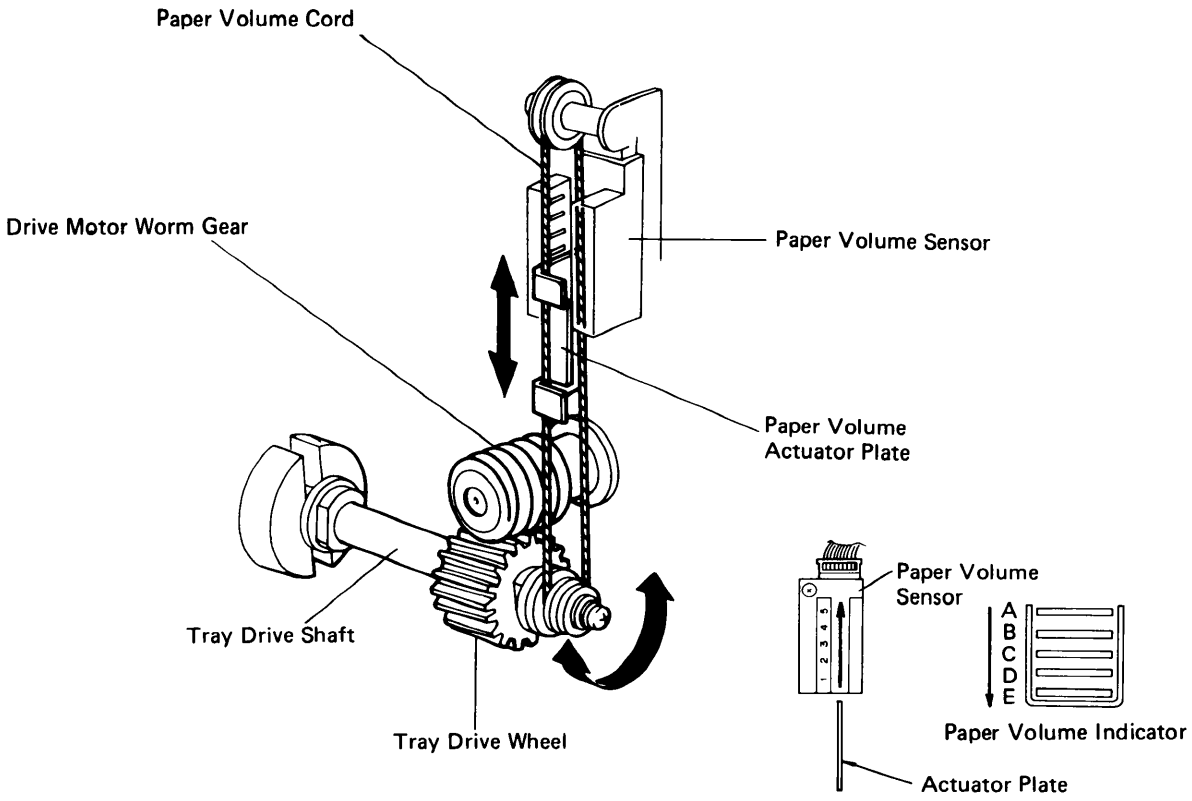

The paper volume detection system of the large capacity tray is similar to that of the cassette. Both systems use the same data bus, signals, and type of sensor. (See page 3-12-6.) However, the mechanism of detection and meaning of the display are different.

Unlike cassette volume detection, the paper volume actuator plate of the large capacity tray is not moved by the sector gear. Instead, the actuator plate is moved by the tray drive shaft through the paper volume cord.

When the large capacity tray is full (approx. 1,000 sheets), the first four indicators (A → D) are lit. Each indicator is turned off after approximately 220 sheets of paper have been fed. The last indicator (E) is lit when about 130 sheets remain in the tray. This indicator is turned off after the last sheet has been fed, and the paper end sensor of the copier has been actuated.

Cover Safety Switch

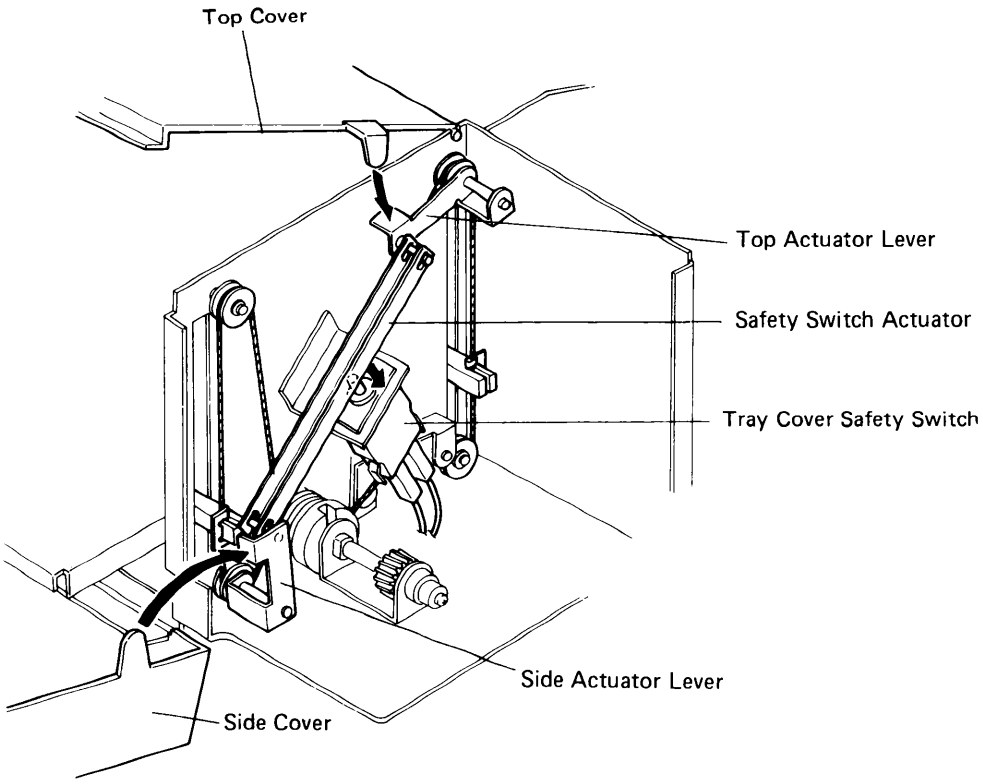

The cover safety switch monitors whether or not the top and side covers are closed. If either cover is open, the safety switch is de-actuated.

Pins on the top and side actuator levers hold the safety switch actuator. The top actuator lever is pushed down by the top cover, while the side actuator lever is pushed in by the side cover. Therefore, only when both the top and side covers are closed, is the cover safety switch actuated.

Do not stop. Continue to the next section.



Summary

SUMMARY

Final Machine Check

Perform:
- ☐ Drum Current Adjustment
  (Charge, Transfer, Separation, Pre-Cleaning)

Check and adjust (if necessary):
- ☐ Lead Edge Registration (Copier)
- ☐ Lead Edge Erase
- ☐ Lead Edge Registration (Document Feeder)
- ☐ Paper Feed from all feed stations
- ☐ Sort
- ☐ Stack
- ☐ Light Intensity
- ☐ Horizontal Magnification
- ☐ Image Density

Clean:
- ☐ All Exterior Covers
- ☐ Internal Covers
- ☐ Exposure Glass

Review

All technical portions of this Training program have been completed. We have covered all information necessary for you to maintain the machines. If there are certain sections that you feel you do not fully understand, stop and review as necessary.

Preparing for the Written Exam

The Written Exam has been designed to measure your understanding of these copiers.

Passing this exam determines certification to work on the equipment. A grade of 75% or higher is required for certification. Once certified by the training staff, you will receive full technical support through the use of the Ricoh Technical Services' Hot Line and the Regional Technical Managers.

The exam has no time parameters, so answer the questions at a pace that works for you. You are permitted to use your manuals and notes. The exam should be completed on your own, without the help of any previously trained personnel.

When you have completed the exam and Forms Package in full, have your Service Manager return them to Ricoh Training for certification.

 Inform your Service Manager that you are ready for the final examination.