Model	F90	Volt/Hz	Date of Modification	Serial Number
Modified Article	Mylar Sael - 18 x 76			
Reason for Modification	To make the machine run quieter			

A mylar seal has been added to prevent noise caused by friction between the drum stay and the drum f lange.

P/N	Description	Q'ty	Index No.	Page
AA150246	Mylar - 18 x 76	1	*95	41

* New Index

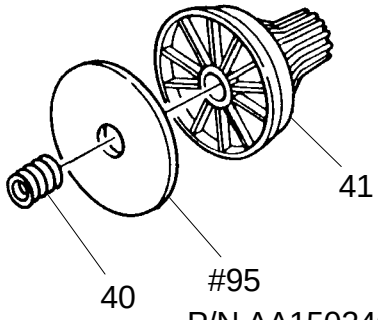

P/N AA150246

T.Ito, Manager
Copier Technical Support

MODEL NAME	V/Hz	DESTINATION	JAPAN PRODUCTION		REI PRODUCTION	
			CODE	SERIAL NUMBER	CODE	SERIAL NUMBER
P.B. D640	115/60	USA, CANADA	A008 -11	010XXXX	A008 - 07	SERVICE PART ONLY
SAVIN 7400	115/60	USA, CANADA	A008 -15		A008-08	SERVICE PART ONLY
NASHUA 7140	115/60	S. AMERICA etc.	A008 -16	020010XXXX		
RICOH FT5560	115/60	USA, CANADA	A008 -17	SERVICE PART ONLY	A008 - 06	SERVICE PART ONLY
RICOH FT5560	110/60	TAIWAN	A008 -19	26010XXXXX		
NASHUA 7140	220,240/50	EUROPE etc.	A008 -25	020010XXXX	A008 - 45	SERVICE PART ONLY
INFOTEC 9040Z	220,240/50	EUROPE	A008 -26	SERVICE PART ONLY	A008 - 46	SERVICE PART ONLY
RICOH FT5560	220,240/50	EUROPE	A008 -27	26010XXXXX	A008 - 47	SERVICE PART ONLY
RICOH FT5560	220,240/60	PHILLIPN etc.	A008 -28	26010XXXXX		
RICOH FT5560	220,240/50	ASIA	A008 -29	26010XXXXX		

Model	F90	Volt/Hz	Date of Modification	Serial Number
Modified Article	Screw			
Reason for Modification	Parts Standardization			

Due to parts standardization, the following parts have been changed. The interchangeability is O/O.

Page	Index	Old P/N	New P/N	Description
17	111	09513005	09513005B	Philips Screw With Flat Washer - M3 x 5

T. Ito, Manager
Copier Technical Support

MODEL NAME	V/Hz	DESTINATION	JAPAN PRODUCTION		REI PRODUCTION	
			CODE	SERIAL NUMBER	CODE	SERIAL NUMBER
P.B. D640	115/60	USA, CANADA	A008 -11		A008 - 07	SERVICE PART ONLY
SAVIN 7400	115/60	USA, CANADA	A008 -15		A008-08	SERVICE PART ONLY
NASHUA 7140	115/60	S. AMERICA etc.	A008 -16			
RICOH FT5560	115/60	USA, CANADA	A008 -17	SERVICE PART ONLY	A008 - 06	SERVICE PART ONLY
RICOH FT5560	110/60	TAIWAN	A008 -19			
NASHUA 7140	220,240/50	EUROPE etc.	A008 -25		A008 - 45	SERVICE PART ONLY
INFOTEC 9040Z	220,240/50	EUROPE	A008 -26	SERVICE PART ONLY	A008 - 46	SERVICE PART ONLY
RICOH FT5560	220,240/50	EUROPE	A008 -27		A008 - 47	SERVICE PART ONLY
RICOH FT5560	220,240/60	PHILLIPN etc.	A008 -28			
RICOH FT5560	220,240/50	ASIA	A008 -29			

Model	F90	Volt/Hz	Date of Modification	Serial Number
Modified Article	Cleaning Blade			
Reason for Modification	Parts standardization			

For the purpose of parts standardization, a new cleaning blade (P/N A0073565) replaces cleaning blade P/N 52053565 and P/N A0093565.
The interchangeability of the old and new blades is O/O.

Old P/N	New P/N	Description	Q'ty	interchangeability	Index No.	Page
52053565	A0073565	Cleaning Blade	1 → 1	O/O	13	23

P/N	Model in which cleaning blade is used
52053565	F3/4, F9, F30/31, F33/34, F80, F85, F90
A0093565	F12, F13, F23, F24, F25

T .Ito, Manager
Copier Technical Support

MODEL NAME	V/Hz	DESTINATION	JAPAN PRODUCTION		REI PRODUCTION	
			CODE	SERIAL NUMBER	CODE	SERIAL NUMBER
P.B. D640	115/60	USA, CANADA	A008 -11		A008 - 07	
SAVIN 7400	115/60	USA, CANADA	A008 -15		A008-08	
NASHUA 7140	115/60	S. AMERICA etc.	A008 -16			
RICOH FT5560	115/60	USA, CANADA	A008 -17		A008 - 06	
RICOH FT5560	110/60	TAIWAN	A008 -19			
NASHUA 7140	220,240/50	EUROPE etc.	A008 -25		A008 - 45	
INFOTEC 9040Z	220,240/50	EUROPE	A008 -26		A008 - 46	
RICOH FT5560	220,240/50	EUROPE	A008 -27		A008 - 47	
RICOH FT5560	220,240/60	PHILLIPN etc.	A008 -28			
RICOH FT5560	220,240/50	ASIA	A008 -29			

Model	F90	Volt/Hz	Date of Modification	Serial Number
Modified Article	Development Sleeve			
Reason for Modification	Due to vendor change			

Due to vendor change, the development sleeve has been changed. The interchangeability is O/O.

Old P/N	New P/N	Description	Page	Index
AD031007	AD031205	Development Sleeve	21	16

T. Ito, Manager
Copier Technical Support

MODEL NAME	V/Hz	DESTINATION	JAPAN PRODUCTION		REI PRODUCTION	
			CODE	SERIAL NUMBER	CODE	SERIAL NUMBER
P.B. D640	115/60	USA, CANADA	A008 -11	SERVICE PART ONLY	A008 - 07	SERVICE PART ONLY
SAVIN 7400	115/60	USA, CANADA	A008 -15		A008-08	SERVICE PART ONLY
NASHUA 7140	115/60	S. AMERICA etc.	A008 -16			
RICOH FT5560	115/60	USA, CANADA	A008 -17	SERVICE PART ONLY	A008 - 06	SERVICE PART ONLY
RICOH FT5560	110/60	TAIWAN	A008 -19			
NASHUA 7140	220,240/50	EUROPE etc.	A008 -25		A008 - 45	SERVICE PART ONLY
INFOTEC 9040Z	220,240/50	EUROPE	A008 -26	SERVICE PART ONLY	A008 - 46	SERVICE PART ONLY
RICOH FT5560	220,240/50	EUROPE	A008 -27		A008 - 47	SERVICE PART ONLY
RICOH FT5560	220,240/60	PHILLIPN etc.	A008 -28			
RICOH FT5560	220,240/50	ASIA	A008 -29			

Model	F90	Volt/Hz	Date of Modification	Serial Number
Modified Article	Bottom Plate, Cassette Cover, and Development Rail Guide			
Reason for Modification	Parts Standardization			

Due to parts standardization, the following parts have been changed. The interchangeability is O/O.

Page	Index	Old P/N	New P/N	Description
7	29	A0082710	A0302910	Bottom Plate
7	30	52152713	AF013012	Bottom Plate Pad
7	25	A0082737	A0602955	Small Cassette Cover (Ricoh)
7	25	A0082734	A0602950	Large Cassette Cover (Ricoh)
7	25	52152916	52152778	Small Cassette Cover - P.B.
7	25	52152911	52152777	Large Cassette Cover - P.B.
7	25	52156445	52156675	Large Cassette Cover (Nashua, Infotec)
7	25	52156446	52156676	Small Cassette Cover (Nashua, Infotec)
29	2	A0083495	A0083499	Rail Guide - Development
29	28	A0083098	A0083099	Development Rail Guide Ass'y

T. Ito, Manager
Copier Technical Support

MODEL NAME	V/Hz	DESTINATION	JAPAN PRODUCTION		REI PRODUCTION	
			CODE	SERIAL NUMBER	CODE	SERIAL NUMBER
P.B. D640	115/60	USA, CANADA	A008 -11	SERVICE PART ONLY	A008 - 07	SERVICE PART ONLY
SAVIN 7400	115/60	USA, CANADA	A008 -15		A008-08	SERVICE PART ONLY
NASHUA 7140	115/60	S. AMERICA etc.	A008 -16			
RICOH FT5560	115/60	USA, CANADA	A008 -17	SERVICE PART ONLY	A008 - 06	SERVICE PART ONLY
RICOH FT5560	110/60	TAIWAN	A008 -19			
NASHUA 7140	220,240/50	EUROPE etc.	A008 -25		A008 - 45	SERVICE PART ONLY
INFOTEC 9040Z	220,240/50	EUROPE	A008 -26	SERVICE PART ONLY	A008 - 46	SERVICE PART ONLY
RICOH FT5560	220,240/50	EUROPE	A008 -27		A008 - 47	SERVICE PART ONLY
RICOH FT5560	220,240/60	PHILLIPN etc.	A008 -28			
RICOH FT5560	220,240/50	ASIA	A008 -29			

Model	F90	Volt/Hz	Date of Modification	Serial Number
Modified Article	Toner collection bottle seals			
Reason for Modification	To ensure adhesion of seals			

Draw No.	Old Parts No.		New Parts No.	Description	A.B.C. Rank	Q'ty Used Old → New	Inter-change-ability	Part needed for replacement by new part: Part No.	Description	Parts Catalog: Index No.	Page
	AA151284	→		Seal - 15x26x3		1 → 0				43	15
		→	AA151700	Seal - 15x26x5		0 → 1	X/O			43	15
	52153888	→		Both Sided Tape - Holder		1 → 0				* 46	15
		→	A0073763	Adhesive Tape - Sensor Holder		0 → 1	X/O			* 46	15
									* New Index		

Rank: A : Replace with new parts immediately. B : Replace with new parts at time of repair. C : Replace with new parts at time of overhaul.
Interchangeability:
(1) When old and new parts are not mutually interchangeable, use additional parts or an assembly part as indicated in "Parts needed for replacement by new part" to install the new part.
(2) The mark to the left of the slash indicates whether the old part can be used in the new machine, and the mark to the right indicates whether the new part can be used in the old machine. x = Not interchangeable o = Interchangeable

DETAILS OF MODIFICATION

Seal - 15x26x3 ⟶ Seal - 15x26x5

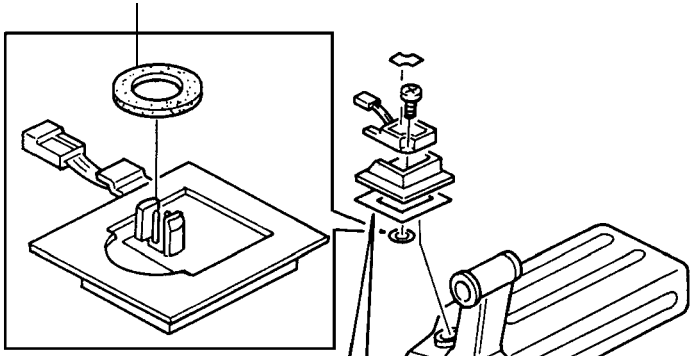

To ensure the adhesion of seal between the sensor holder and toner collection bottle, the thickness of the seals (Holder Both Side Tape and seal - 15x26x3) have been increased by around 2mm.
Also, the shape of the holder both side tape has been changed because of part standardization with other models.

Note: The holder both sided tape (# 52153888, Index No.46) is not listed in the parts catalog. Please add it to your parts catalog.

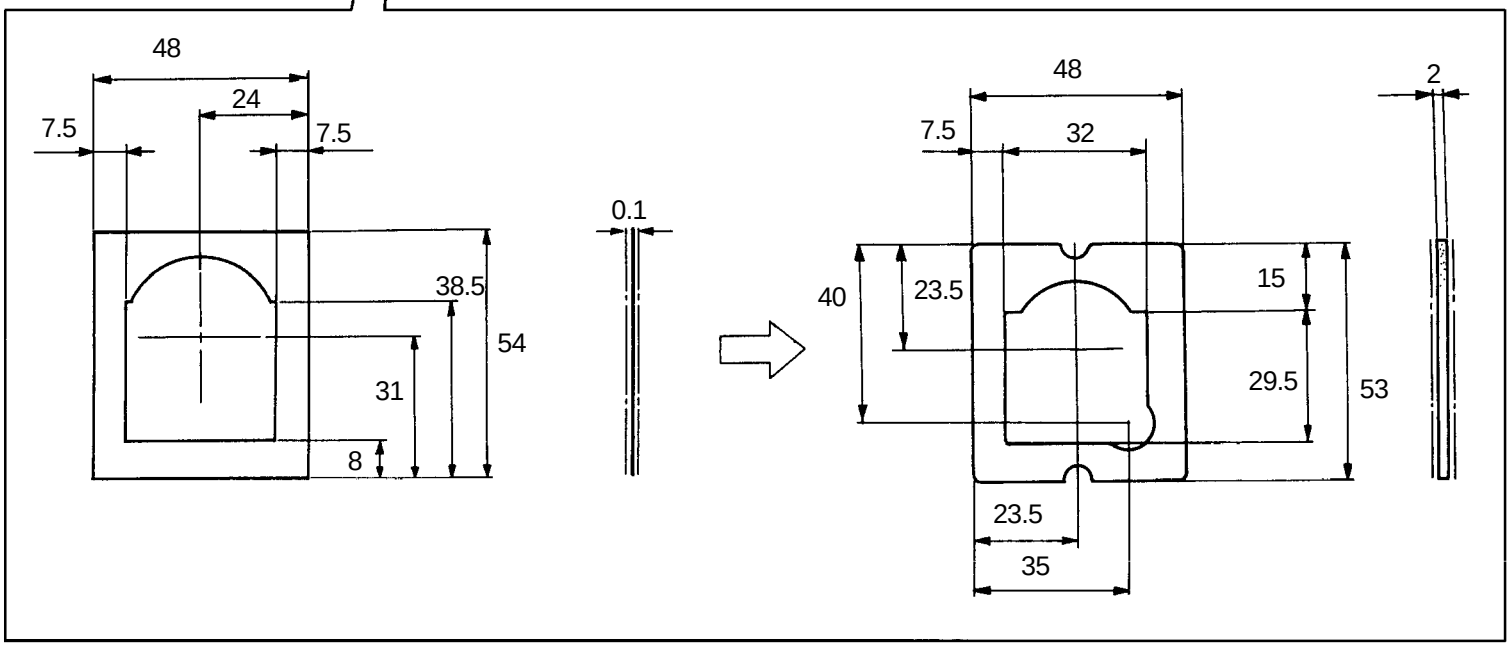

T. Ito, Manager
Copier Technical Support

MODEL NAME	V/Hz	DESTINATION	JAPAN PRODUCTION		REI PRODUCTION	
			CODE	SERIAL NUMBER	CODE	SERIAL NUMBER
P.B. D640	115/60	USA, CANADA	A008 -11	SERVICE PART ONLY	A008 - 07	SERVICE PART ONLY
SAVIN 7400	115/60	USA, CANADA	A008 -15		A008-08	SERVICE PART ONLY
NASHUA 7140	115/60	S. AMERICA etc.	A008 -16	020107XXXX		
RICOH FT5560	115/60	USA, CANADA	A008 -17	SERVICE PART ONLY	A008 - 06	SERVICE PART ONLY
RICOH FT5560	110/60	TAIWAN	A008 -19	261071XXXX		
NASHUA 7140	220,240/50	EUROPE etc.	A008 -25	020108XXXX	A008 - 45	SERVICE PART ONLY
INFOTEC 9040Z	220,240/50	EUROPE	A008 -26	SERVICE PART ONLY	A008 - 46	SERVICE PART ONLY
RICOH FT5560	220,240/50	EUROPE	A008 -27	261071XXXX	A008 - 47	SERVICE PART ONLY
RICOH FT5560	220,240/60	PHILIPPINE etc.	A008 -28	261081XXXX		
RICOH FT5560	220,240/50	ASIA	A008 -29	261071XXXX		

Model	F90	Volt/Hz	Date of Modification	Serial Number
Modified Article	Left Fusing Unit Guide			
Reason for Modification	Parts standardization			

Due to parts standardization, the following part has been changed. The interchangeability is O/O.

Page	Index	Old P/N	New P/N	Description
17	42	A0084100	A0604190	Left Fusing Unit Guide

T. Ito, Manager
Copier Technical Support

MODEL NAME	V/Hz	DESTINATION	JAPAN PRODUCTION		REI PRODUCTION	
			CODE	SERIAL NUMBER	CODE	SERIAL NUMBER
P.B. D640	115/60	USA, CANADA	A008 -11	SERVICE PART ONLY	A008 - 07	SERVICE PART ONLY
SAVIN 7400	115/60	USA, CANADA	A008 -15		A008-08	SERVICE PART ONLY
NASHUA 7140	115/60	S. AMERICA etc.	A008 -16			
RICOH FT5560	115/60	USA, CANADA	A008 -17	SERVICE PART ONLY	A008 - 06	SERVICE PART ONLY
RICOH FT5560	110/60	TAIWAN	A008 -19			
NASHUA 7140	220,240/50	EUROPE etc.	A008 -25		A008 - 45	SERVICE PART ONLY
INFOTEC 9040Z	220,240/50	EUROPE	A008 -26	SERVICE PART ONLY	A008 - 46	SERVICE PART ONLY
RICOH FT5560	220,240/50	EUROPE	A008 -27		A008 - 47	SERVICE PART ONLY
RICOH FT5560	220,240/60	PHILLIPN etc.	A008 -28			
RICOH FT5560	220,240/50	ASIA	A008 -29			

Model	F90	Volt/Hz	Date of Modification	Serial Number
Modified Article	Operating Instructions - Chinese			
Reason for Modification	Customs clearance (Taiwan)			

To clear this copier through Taiwanese customs, the Chinese operating instructions now have to be included in the machine carton box. Please add the following part number to your parts catalog.

Page	Index	P/N	Description
57	18	A0088609	Operating Instructions - Chinese

T. Ito, Manager
Copier Technical Support

MODEL NAME	V/Hz	DESTINATION	JAPAN PRODUCTION		REI PRODUCTION	
			CODE	SERIAL NUMBER	CODE	SERIAL NUMBER
~~P.B. D640~~	~~115/60~~	~~USA, CANADA~~	~~A008 -11~~		~~A008 -07~~	
~~SAVIN 7400~~	~~115/60~~	~~USA, CANADA~~	~~A008 -15~~		~~A008-08~~	
~~NASHUA 7140~~	~~115/60~~	~~S. AMERICA etc.~~	~~A008 -16~~			
~~RICOH FT5560~~	~~115/60~~	~~USA, CANADA~~	~~A008 -17~~		~~A008 - 06~~	
RICOH FT5560	110/60	TAIWAN	A008 -19	2611012457		
~~NASHUA 7140~~	~~220,240/50~~	~~EUROPE etc.~~	~~A008 -25~~		~~A008 -45~~	
~~INFOTEC 9040Z~~	~~220,240/50~~	~~EUROPE~~	~~A008 -26~~		~~A008 - 46~~	
RICOH FT5560	220,240/50	EUROPE	A008 -27		A008 - 47	
~~RICOH FT5560~~	~~220,240/60~~	~~PHILIPPINE etc.~~	~~A008 -28~~			
~~RICOH FT5560~~	~~220,240/50~~	~~ASIA~~	~~A008 -29~~			

Model	F90	**Volt/Hz**	**Date of Modification**	**Serial Number**
Modified Article	Drum			
Reason for Modification	To standardize the part number			

The part number has been changed to standardize the part number of the drum.

Old P/N	New P/N	Description	Q'ty Used	Interchangeability
52059590	52059510	Drum	1 → 1	O/O

T. Ito, Manager
Copier Technical Support

MODEL NAME	V/Hz	DESTINATION	JAPAN PRODUCTION		REI PRODUCTION	
			CODE	SERIAL NUMBER	CODE	SERIAL NUMBER
~~P.B. D640~~	~~115/60~~	~~USA, CANADA~~	~~A008 -11~~		~~A008 - 07~~	
~~SAVIN 7400~~	~~115/60~~	~~USA, CANADA~~	~~A008 -15~~		~~A008-08~~	
~~NASHUA 7140~~	~~115/60~~	~~S. AMERICA etc.~~	~~A008 -16~~			
~~RICOH FT5560~~	~~115/60~~	~~USA, CANADA~~	~~A008 -17~~		~~A008 - 06~~	
~~RICOH FT5560~~	~~110/60~~	~~TAIWAN~~	~~A008 -19~~			
NASHUA 7140	220,240/50	EUROPE etc.	A008 -25	Service Parts Only	A008 - 45	Service Parts Only
INFOTEC 9040Z	220,240/50	EUROPE	A008 -26	Service Parts Only	A008 - 46	Service Parts Only
RICOH FT5560	220,240/50	EUROPE	A008 -27	Service Parts Only	A008 - 47	Service Parts Only
~~RICOH FT5560~~	~~220,240/60~~	~~PHILLIPN etc.~~	~~A008 -28~~			
~~RICOH FT5560~~	~~220,240/50~~	~~ASIA~~	~~A008 -29~~			

Model	F90	**Volt/Hz**	**Date of Modification**	**Serial Number**
Modified Article	Decal - Paper Level (OEM only)			
Reason for Modification	Due to parts standardization			

Due to parts standardization, the following part has been changed. The interchangeability is O/O.

Page	Index	Old P/N	New P/N	Description
7	28	54134835	AA002010	Decal - Paper Level

T. Ito, Manager
Copier Technical Support

MODEL NAME	V/Hz	DESTINATION	JAPAN PRODUCTION		REI PRODUCTION	
			CODE	SERIAL NUMBER	CODE	SERIAL NUMBER
P.B. D640	115/60	USA, CANADA	A008 -11	Service Part Only	A008 - 07	Service Part Only
SAVIN 7400	115/60	USA, CANADA	A008 -15		A008-08	Service Part Only
NASHUA 7140	115/60	S. AMERICA etc.	A008 -16			
~~RICOH FT5560~~	115/60	USA, CANADA	A008 -17		A008 - 06	Service Part Only
~~RICOH FT5560~~	110/60	TAIWAN	A008 -19			
NASHUA 7140	220,240/50	EUROPE etc.	A008 -25		A008 - 45	Service Part Only
INFOTEC 9040Z	220,240/50	EUROPE	A008 -26	Service Part Only	A008 - 46	Service Part Only
~~RICOH FT5560~~	220,240/50	EUROPE	A008 -27		A008 - 47	
~~RICOH FT5560~~	220,240/60	PHILIPPINE etc.	A008 -28			
~~RICOH FT5560~~	220,240/50	ASIA	A008 -29			

Model	F90	**Volt/Hz**	**Date of Modification**	**Serial Number**
Modified Article	Rear Side Fence			
Reason for Modification	Due to parts standardization (OEM only)			

Due to parts standardization, the rear side fence of the cassette has been changed.
The interchangeability is O/O.

Old P/N	New P/N	Description	Q'ty	Index	Page
52152727	A0082727	Side Fence - Rear	1 → 1	26	7

---------- OEM only

T. Ito, Manager
Copier Technical Support

MODEL NAME	V/Hz	DESTINATION	JAPAN PRODUCTION		REI PRODUCTION	
			CODE	SERIAL NUMBER	CODE	SERIAL NUMBER
P.B. D640	115/60	USA, CANADA	A008-11	Service Parts Only	A008-07	Service Parts Only
~~SAVIN 7400~~	115/60	USA, CANADA	A008-15		A008-08	Service Parts Only
NASHUA 7140	115/60	S. AMERICA etc.	A008-16			
~~RICOH FT5560~~	115/60	USA, CANADA	A008-17	Service Parts Only	A008-06	Service Parts Only
~~RICOH FT5560~~	110/60	TAIWAN	A008-19			
NASHUA 7140	220,240/50	EUROPE etc.	A008-25		A008-45	Service Parts Only
INFOTEC 9040Z	220,240/50	EUROPE	A008-26	Service Parts Only	A008-46	Service Parts Only
~~RICOH FT5560~~	220,240/50	EUROPE	A008-27		A008-47	Service Parts Only
~~RICOH FT5560~~	220,240/60	PHILLIPN etc.	A008-28			
~~RICOH FT5560~~	220,240/50	ASIA	A008-29			

Model	F90	**Volt/Hz**	**Date of Modification**	**Serial Number**
Modified Article	Parts Catalog			
Reason for Modification	Parts Catalog Correction			

Please correct your parts catalog as follows:

1. Parts Number Correction

Incorrect P/N	Correct P/N	Description	Q'ty	Index	Page
52152716		Front Side Fence	1 → 0	31	7
	A0082715	Side Fence - Front	0 → 1	31	7

2. Illustration Correction

Please add the paper level decal (Index No. 28) to the illustration as shown.

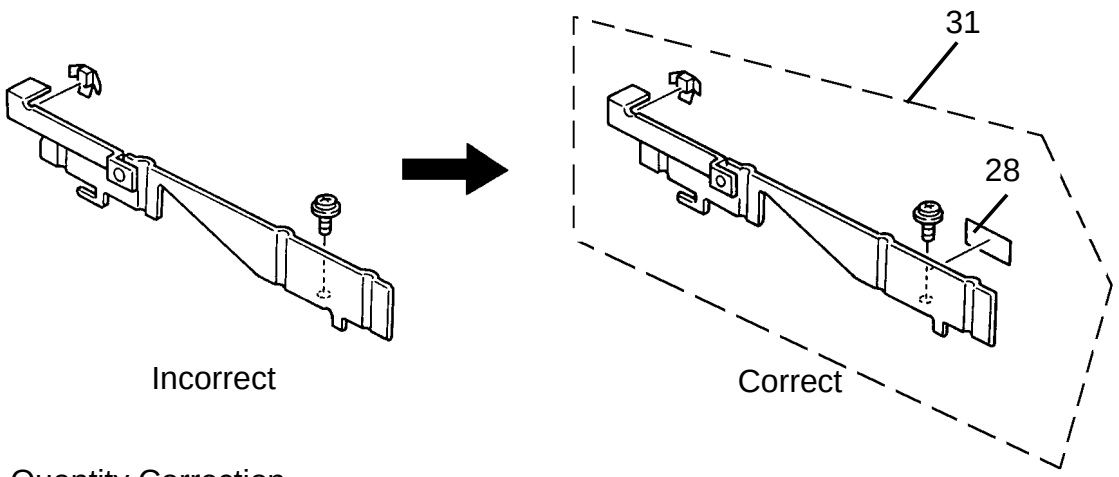

3. Quantity Correction

P/N	Description	Q'ty	Index	Page
AA002010	Decal - Paper Level	1 → **2**	28	7

T. Ito, Manager
Copier Technical Support

MODEL NAME	V/Hz	DESTINATION	JAPAN PRODUCTION		REI PRODUCTION	
			CODE	SERIAL NUMBER	CODE	SERIAL NUMBER
P.B. D640	115/60	USA, CANADA	A008 -11		A008 - 07	
SAVIN 7400	115/60	USA, CANADA	A008 -15		A008-08	
NASHUA 7140	115/60	S. AMERICA etc.	A008 -16			
RICOH FT5560	115/60	USA, CANADA	A008 -17		A008 - 06	
RICOH FT5560	110/60	TAIWAN	A008 -19			
NASHUA 7140	220,240/50	EUROPE etc.	A008 -25		A008 - 45	
INFOTEC 9040Z	220,240/50	EUROPE	A008 -26		A008 - 46	
RICOH FT5560	220,240/50	EUROPE	A008 -27		A008 - 47	
RICOH FT5560	220,240/60	PHILLIPN etc.	A008 -28			
RICOH FT5560	220,240/50	ASIA	A008 -29			

Model	F90	Volt/Hz	Date of Modification	Serial Number
Modified Article	LEDs on the Operation Panel Board			
Reason for Modification	As per field request			

Draw No.	Old Parts No.		New Parts No.	Description	A.B.C. Rank	Q'ty Used Old → New	Inter-change-ability	Part needed for replacement by new part: Part No.	Part needed for replacement by new part: Description	Parts Catalog: Index No.	Parts Catalog: Page
			A0089506	LED - LB - 203MF		0 → 1				* 58	5
			A0089507	LED - SL - 7179 - 20		0 → 3				* 59	5
									* New Index		

Rank: A : Replace with new parts immediately. B : Replace with new parts at time of repair. C : Replace with new parts at time of overhaul.
Interchangeability:
(1) When old and new parts are not mutually interchangeable, use additional parts or an assembly part as indicated in "Parts needed for replacement by new part" to install the new part.
(2) The mark to the left of the slash indicates whether the old part can be used in the new machine, and the mark to the right indicates whether the new part can be used in the old machine. x = Not interchangeable o = Interchangeable

DETAILS OF MODIFICATION

As per field request, LEDs on the operation panel board have been registered as spare parts.

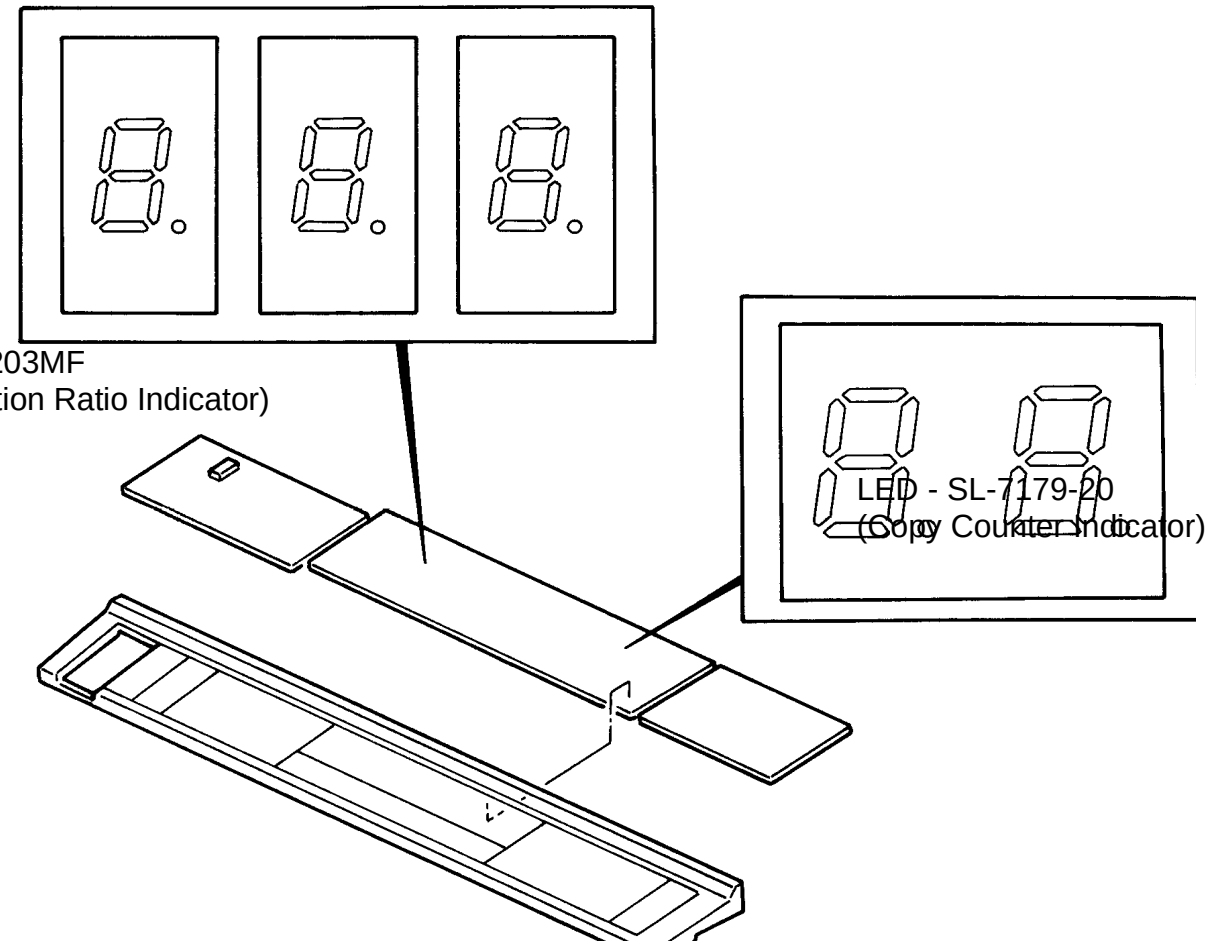

T. Ito, Manager
Copier Technical Support

MODEL NAME	V/Hz	DESTINATION	JAPAN PRODUCTION		REI PRODUCTION	
			CODE	SERIAL NUMBER	CODE	SERIAL NUMBER
P.B. D640	115/60	USA, CANADA	A008 -11	Service Parts only	A008 - 07	Service Parts only
SAVIN 7400	115/60	USA, CANADA	A008 -15		A008 - 08	Service Parts only
NASHUA 7140	115/60	S. AMERICA etc.	A008 -16			
RICOH FT5560	115/60	USA, CANADA	A008 -17	Service Parts only	A008 - 06	Service Parts only
RICOH FT5560	110/60	TAIWAN	A008 -19			
NASHUA 7140	220,240/50	EUROPE etc.	A008 -25		A008 - 45	Service Parts only
INFOTEC 9040Z	220,240/50	EUROPE	A008 -26	Service Parts only	A008 - 46	Service Parts only
RICOH FT5560	220,240/50	EUROPE	A008 -27		A008 - 47	Service Parts only
RICOH FT5560	220,240/60	PHILIPPINE etc.	A008 -28			
RICOH FT5560	220,240/50	ASIA	A008 -29			

ISSUED ON:December 31, '93

Model	F90	**Volt/Hz**	**Date of Modification**	**Serial Number**
Modified Article	Arm Holder			
Reason for Modification	Parts standardization			

Due to parts standardization with other model, the arm holder has been changed.

Old P/N	New P/N	Description	Inter-change-ability	Parts Catalog	
				Index No.	Page
52152834	A0691972	Arm Holder	O/O	7	11

S. Hamano, Assistant General Manager
Technical Support Department

MODEL NAME	V/Hz	DESTINATION	JAPAN PRODUCTION		REI PRODUCTION	
			CODE	SERIAL NUMBER	CODE	SERIAL NUMBER
P.B. D640	115/60	USA, CANADA	A008 -11	Service Parts Only	A008 - 07	Service Parts Only
SAVIN 7400	115/60	USA, CANADA	A008 -15		A008-08	Service Parts Only
NASHUA 7140	115/60	S. AMERICA etc.	A008 -16			
RICOH FT5560	115/60	USA, CANADA	A008 -17	Service Parts Only	A008 - 06	Service Parts Only
RICOH FT5560	110/60	TAIWAN	A008 -19			
NASHUA 7140	220,240/50	EUROPE etc.	A008 -25		A008 - 45	Service Parts Only
INFOTEC 9040Z	220,240/50	EUROPE	A008 -26	Service Parts Only	A008 - 46	Service Parts Only
RICOH FT5560	220,240/50	EUROPE	A008 -27	Service Parts Only	A008 - 47	Service Parts Only
RICOH FT5560	220,240/60	PHILIPPINE etc.	A008 -28			
RICOH FT5560	220,240/50	ASIA	A008 -29			

ISSUED ON: March 15, '94

Model	F90	**Volt/Hz**	**Date of Modification**	**Serial Number**
Modified Article	Photothyristor			
Reason for Modification	Due to VDE standard change			

Due to VDE standard change from VDE0883 to VDE0884, the photothyristor have been changed.

Old P/N	New P/N	Description	Inter-change-ability	Parts Catalog	
				Index No.	Page
14050127		Photothyristor - TLP545G		108	45
14050151		Photothyristor - TLP545J		111	45
	14050250	Photothyristor - TLP741J(D4)	X/O	138*	45

* New Index

S. Hamano, Assistant General Manager
Technical Support Department

MODEL NAME	V/Hz	DESTINATION	JAPAN PRODUCTION		REI PRODUCTION	
			CODE	SERIAL NUMBER	CODE	SERIAL NUMBER
P.B. D640	115/60	USA, CANADA	A008 -11		A008 - 07	
SAVIN 7400	115/60	USA, CANADA	A008 -15		A008 - 08	
NASHUA 7140	115/60	S. AMERICA etc.	A008 -16			
RICOH FT5560	115/60	USA, CANADA	A008 -17		A008 - 06	
RICOH FT5560	110/60	TAIWAN	A008 -19			
NASHUA 7140	220,240/50	EUROPE etc.	A008 -25	020403XXXX	A008 - 45	Service Parts Only
INFOTEC 9040Z	220,240/50	EUROPE	A008 -26	Service Parts Only	A008 - 46	Service Parts Only
RICOH FT5560	220,240/50	EUROPE	A008 -27	Service Parts Only	A008 - 47	Service Parts Only
RICOH FT5560	220,240/60	PHILLIPN etc.	A008 -28	2630414968		
RICOH FT5560	220,240/50	ASIA	A008 -29	26403XXXX		

ISSUED ON: April 30, '94

Model	F90	**Volt/Hz**	**Date of Modification**	**Serial Number**
Modified Article	LED Sensor Type - T			
Reason for Modification	Parts standardization			

Due to parts standardization with the other products, the following parts have been changed. The interchangeability is O/O.

Old P/N	New P/N	Description	Q'ty Used	Parts Catalog	
				Index No.	Page
52055251		LED Sensor Type - T	2 → 0 1 → 0 2 → 0 1 → 0	51 30 24 16	9 25 27 31
	AW020041	Photointerruptor	0 → 2 0 → 1 0 → 2 0 → 1	51 30 24 16	9 25 27 31

S. Hamano, Assistant General Manager
Technical Support Department

ISSUED ON: April 30, '94

MODEL NAME	V/Hz	DESTINATION	JAPAN PRODUCTION		REI PRODUCTION	
			CODE	SERIAL NUMBER	CODE	SERIAL NUMBER
~~P.B. D640~~	115/60	USA, CANADA	A008 -11		A008 - 07	
~~SAVIN 7400~~	115/60	USA, CANADA	A008 -15		A008-08	
~~NASHUA 7140~~	115/60	S. AMERICA etc.	A008 -16			
~~RICOH FT5560~~	115/60	USA, CANADA	A008 -17		A008 - 06	
~~RICOH FT5560~~	110/60	TAIWAN	A008 -19			
NASHUA 7140	220,240/50	EUROPE etc.	A008 -25		A008 - 45	Service Parts Only
INFOTEC 9040Z	220,240/50	EUROPE	A008 -26	Service Parts Only	A008 - 46	Service Parts Only
RICOH FT5560	220,240/50	EUROPE	A008 -27	Service Parts Only	A008 - 47	Service Parts Only
RICOH FT5560	220,240/60	PHILLIPN etc.	A008 -28			
RICOH FT5560	220,240/50	ASIA	A008 -29			