RICOH

# RICOH FT5560 (A008)

# PARTS CATALOG

First Edition April 1987

RICOH COMPANY, LTD.

# PARTS CATALOG

# INTRODUCTION

**This chapter instructs you the numbers and names of this parts on this machine.**

# INDEX to PARTS CATALOG


**Copier (A008)**

1. Exterior (A008) . . . . . 2
2. Operation Panel (A008) . . . . . 4
3. Platen Cover and Cassette (A008) . . . . . 6
4. 1st and 2nd Paper Feed (A008) . . . . . 8
5. Registration (A008) . . . . . 10
6. Drum (A008) . . . . . 12
7. Transport (A008) . . . . . 14
8. Fusing I (A008) . . . . . 16
9. Fusing II (A008) . . . . . 18
10. Development (A008) . . . . . 20
11. Cleaning (A008) . . . . . 22
12. Optics I (A008) . . . . . 24
13. Optics II (A008) . . . . . 26
14. Frame (A008) . . . . . 28
15. Drive (A008) . . . . . 30
16. Expansion Unit (A008) . . . . . 32
17. Copier Relay (A008) . . . . . 34
18. Electrical Component I (A008) . . . . . 36
19. Electrical Component II (A008) . . . . . 38
20. Main Board (A008) . . . . . 40
21. Optics Board (A008) . . . . . 42
22. AC Drive Board (A008) . . . . . 44
23. Paper Feed Board (A008) . . . . . 46
24. 3rd Paper Feed Board (A008) . . . . . 48
25. DC Harness (A008) . . . . . 50
26. AC Harness (A008) . . . . . 52
27. Expansion Harness (A008) . . . . . 54
28. Decal and Document (A008) . . . . . 56
29. Special Tool (A008) . . . . . 58

**Parts Index . . . . . 61**

# 1. EXTERIOR (A008)

April 1,'87

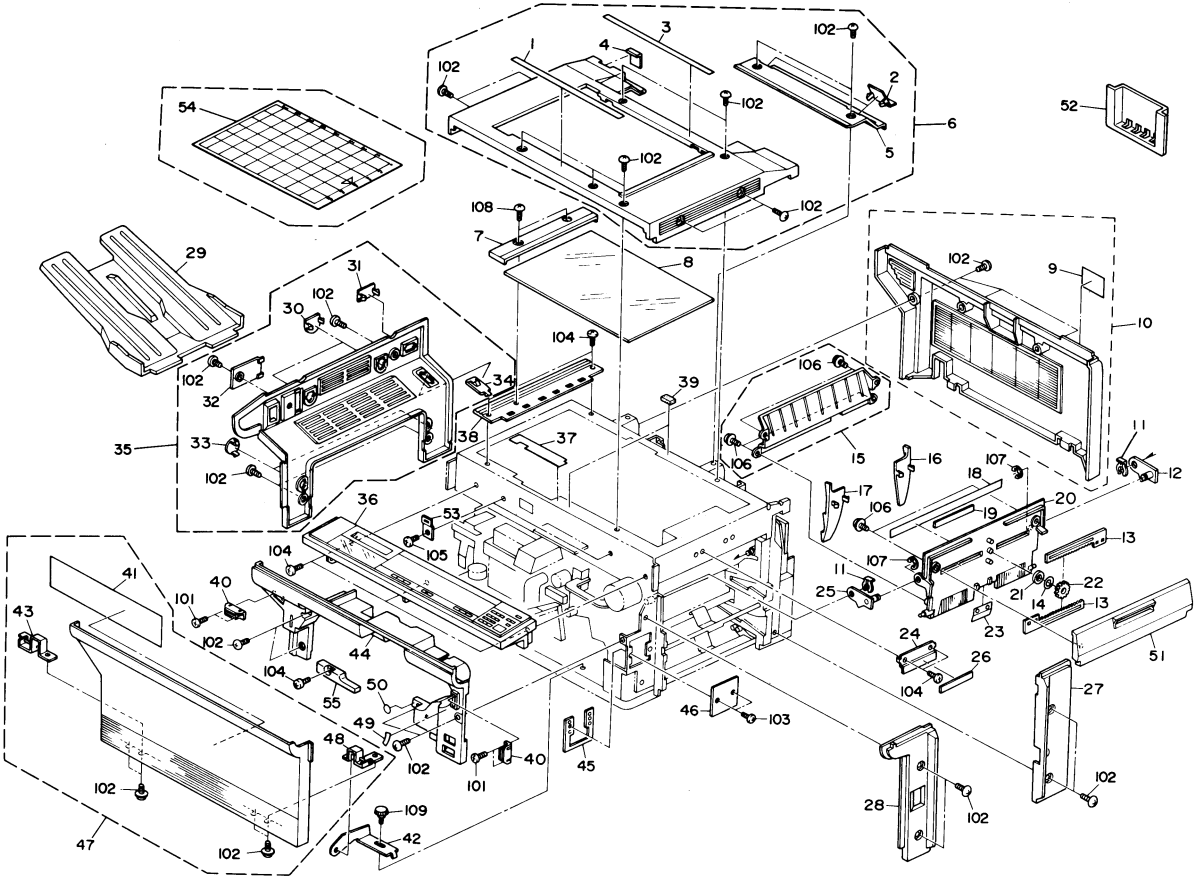

# 1. EXTERIOR (A008)

| Index No. | Parts No. | Description | Q'ty Per Assembly |
|---|---|---|---|
| * | A008 8610 | Installation Procedure - English | 1 |
| * | A008 8615 | Installation Procedure - 5 Language | 1 |
| * | A008 8600 | Operating Instructions - English | 1 |
| * | A008 8601 | Operating Instructions - German | 1 |
| * | A008 8602 | Operating Instructions - French | 1 |
| * | A008 8603 | Operating Instructions - Italian | 1 |
| * | A008 8604 | Operating Instructions - Spanish | 1 |
| * | A008 8671 | Decal Sheet - German | 1 |
| * | A008 8672 | Decal Sheet - French | 1 |
| * | A008 8673 | Decal Sheet - Italian | 1 |
| * | A008 8674 | Decal Sheet - Spanish | 1 |
| 1 | AA00 1024 | Decal - Front Scale - A3/A4 | 1 |
| 1 | AA00 1031 | Decal - Front Scale - LT/LDG | 1 |
| 2 | A008 1305 | ADF Cap - Upper Cover | 2 |
| 3 | AA00 1025 | Decal - Rear Scale - A3/A4 | 1 |
| 3 | AA00 1032 | Decal - Rear Scale - LT/LDG | 1 |
| 4 | A008 1306 | Sensor Cap - Upper Cover | 1 |
| 5 | A008 1342 | Rear Upper Cover | 1 |
| 6 | A008 1270 | Upper Cover - 220/240V | 1 |
| 6 | A008 1269 | Upper Cover - 115V | 1 |
| 7 | AC04 1035 | Left Scale - A3/A4 | 1 |
| 7 | AC04 1034 | Left Scale - LT/LDG | 1 |
| 8 | 5215 1980 | Exposure Glass | 1 |
| 9 | 5442 1372 | Decal - Power Source - 220V | 1 |
| 10 | A008 1289 | Rear Cover - 220/240V | 1 |
| 10 | A008 1288 | Rear Cover - 115V | 1 |
| 11 | 5447 2681 | Snap Ring | 1 |
| 12 | 5215 2681 | Rear Manual Feed Link | 1 |
| 13 | A008 2688 | Side Fence Gear | 2 |
| 14 | 5443 2713 | Wave Washer | 1 |
| 15 | 5215 2679 | Upper Guide - Manual Feed | 1 |
| 16 | AF01 6001 | Rear Side Fence | 1 |
| 17 | AF01 6002 | Front Side Fence | 1 |
| 18 | AA00 2013 | Decal - Manual Feed - A3/A4 | 1 |
| 18 | AA00 2012 | Decal - Manual Feed - LT/LDG | 1 |

| Index No. | Parts No. | Description | Q'ty Per Assembly |
|---|---|---|---|
| 19 | 5215 2693 | Plate | 1 |
| 20 | A008 2698 | Manual Feed Table | 1 |
| 21 | 5215 2691 | Brake | 1 |
| 22 | 5215 2687 | Gear - 16T | 1 |
| 23 | 5215 2678 | Spring Plate - Manual Feed Table | 1 |
| 24 | A008 2694 | Bracket | 1 |
| 25 | 5215 2680 | Front Manual Feed Link | 1 |
| 26 | 5215 2685 | Magnetic Rubber | 1 |
| 27 | A008 1283 | Rear Right Cover | 1 |
| 28 | A008 1276 | Front Right Cover | 1 |
| 29 | AF04 3002 | Copy Tray | 1 |
| 30 | A008 1351 | Cap - Left Cover - L | 2 |
| 31 | A008 1307 | Left Cover Cap - Sorter | 1 |
| 32 | A008 1309 | Cap - Scanner Clamp | 1 |
| 33 | A008 1352 | Cap - Left Cover - S | 2 |
| 34 | A008 1308 | Left Cover Cap - Duplex | 1 |
| 35 | A008 1278 | Left Cover | 1 |
| 36 | A008 1460 | Operation Panel Ass'y - LT/LDG | 1 |
| 36 | A008 1470 | Operation Panel Ass'y - A3/A4 | 1pcs |
| 37 | 5215 1926 | Front Frame Seal | 1 |
| 38 | A008 1922 | Mounting Plate - A3/A4 | 1 |
| 38 | A008 1921 | Mounting Plate - LT/LDG | 1 |
| 39 | 5215 1924 | Cushion | 2 |
| 40 | 5054 0536 | Magnet Catch Ass'y | 2 |
| 41 | AA00 1026 | Decal - A | 1 |
| 42 | AG06 0009 | Front Cover Angle | 1 |
| 43 | AG06 0012 | Front Cover Hinge - Left | 1 |
| 44 | A008 1268 | Inner Cover | 1 |
| 45 | 5420 1515 | Plate - Key Counter | 2 |
| 46 | 5403 1145 | Cover - Key Counter | 2 |
| 47 | A008 1257 | Front Cover | 1 |
| 48 | AG06 0010 | Front Cover Hinge - Right | 1 |
| 49 | AA00 1029 | Decal - Toner Cartridge | 1 |
| 50 | AA00 1022 | Decal - A2 | 1 |
| 51 | A008 2686 | Manual Feed Cover | 1 |

| Index No. | Parts No. | Description | Q'ty Per Assembly |
|---|---|---|---|
| 52 | AG04 0001 | Operating Instruction Holder | 1 |
| 53 | A008 1336 | Operation Panel Bracket - Center | 1 |
| 54 | A008 8999 | Editing Sheet - LT/LDG | 1 |
| 54 | A008 8998 | Editing Sheet - A3/A4 | 1 |
| 55 | A008 3883 | Harness Cover | 1 |
| 101 | 0802 5085 | Tapping Screw - M4 x 8 | |
| 102 | 0802 5094 | Tapping Truss Head Screw - M4 x 8 | |
| 103 | 0314 0080W | Philips Pan Head Screw - M4 x 8 | |
| 104 | 0434 0080W | Tapping Screw - M4 x 8 | |
| 105 | 0951 4004W | Philips Screw with Flat Washer - M4 x 4 | |
| 106 | 0965 3006W | Tapping Screw with Flat Washer - M3 x 6 | |
| 107 | 0720 0050E | Retaining Ring - M5 | |
| 108 | 0344 0060D | Philips Truss Head Screw - M4 x 6 | |

# 2. OPERATION PANEL (A008)

April 1,'87

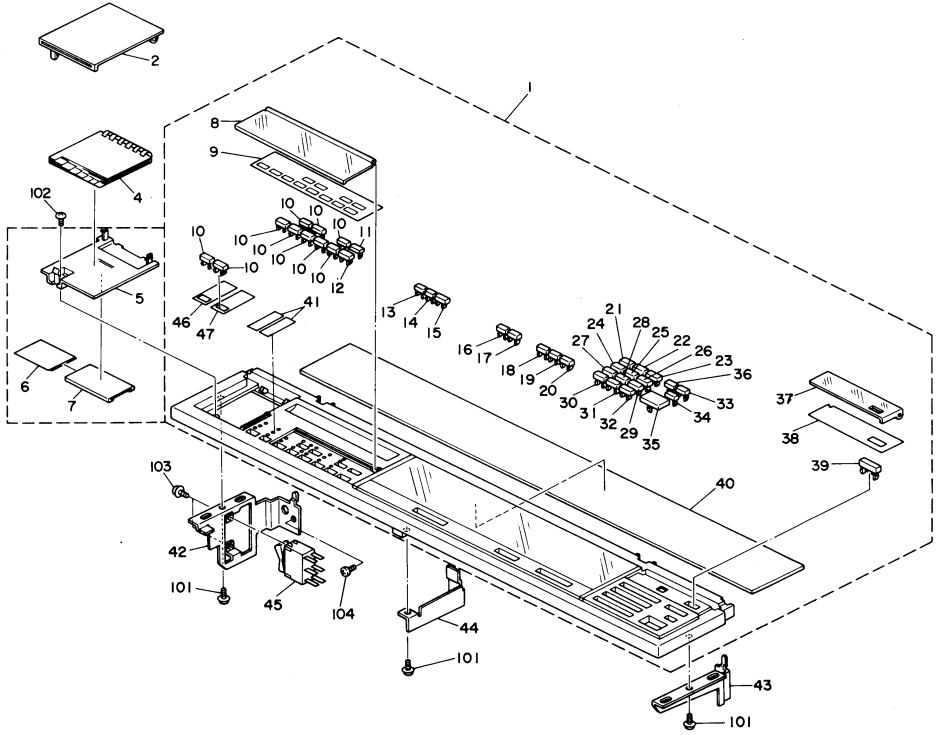

# 2. OPERATION PANEL (A008)

April 1,'87

| Index No. | Parts No. | Description | Q'ty Per Assembly |
|---|---|---|---|
| 1 | A008 1460 | Operation Panel Ass'y - LT/LDG | 1 |
| 1 | A008 1470 | Operation Panel Ass'y - A3/A4 | 1 |
| 2 | A008 5612 | Instruction Cover | 1 |
| 4 | A008 8630 | Instruction Cards - LT/LDG | 1 |
| 4 | A008 8636 | Instruction Cards - A3/A4 | 1 |
| 4 | A008 8631 | Instruction Cards - German | 1 |
| 4 | A008 8632 | Instruction Cards - French | 1 |
| 4 | A008 8633 | Instruction Cards - Italian | 1 |
| 4 | A008 8634 | Instruction Cards - Spanish | 1 |
| 5 | A008 5611 | DIP SW Cover | 1 |
| 6 | A008 5664 | Decal - S.P. Mode | 1 |
| 7 | A008 5654 | Case - S.P. Mode Decal | 1 |
| 8 | A008 5617 | Slide Cover | 1 |
| 9 | A008 5678 | Key Top Sheet - LT/LDG | 1 |
| 9 | A008 5682 | Key Top Sheet - A3/A4 | 1 |
| 10 | A008 5653 | Key Top | 10 |
| 11 | A008 5650 | Key Top - Zoom Up | 1 |
| 12 | A008 5651 | Key Top - Zoom Down | 1 |
| 13 | A008 5647 | Key Top - Reduce | 1 |
| 14 | A008 5646 | Key Top - Enlarge | 1 |
| 15 | A008 5645 | Key Top - Full Size | 1 |
| 16 | A008 5644 | Key Top - Select Cassette | 1 |
| 17 | A008 5648 | Key Top - Auto Cassette Selection | 1 |
| 18 | A008 5642 | Key Top - Lighter | 1 |
| 19 | A008 5643 | Key Top - Darker | 1 |
| 20 | A008 5641 | Key Top - ADS | 1 |
| 21 | A008 5631 | Key Top - 1 | 1 |
| 22 | A008 5632 | Key Top - 2 | 1 |
| 23 | A008 5633 | Key Top - 3 | 1 |
| 24 | A008 5634 | Key Top - 4 | 1 |
| 25 | A008 5635 | Key Top - 5 | 1 |
| 26 | A008 5636 | Key Top - 6 | 1 |
| 27 | A008 5637 | Key Top - 7 | 1 |
| 28 | A008 5638 | Key Top - 8 | 1 |
| 29 | A008 5639 | Key Top - 9 | 1 |
| 30 | A008 5630 | Key Top - 0 | 1 |
| 31 | A008 5658 | Key Top - Point | 1 |
| 32 | A008 5640 | Key Top - C/S | 1 |
| 33 | A008 5628 | Key Top - Interrupt | 1 |
| 34 | A008 5627 | Key Top - Clear Mode | 1 |
| 35 | A008 5625 | Key Top - Start | 1 |
| 36 | A008 5629 | Key Top - Recall | 1 |
| 37 | A008 5616 | Program Key Cover | 1 |
| 38 | A008 5731 | Program Sheet - A3/A4 | 1 |
| 38 | A008 5675 | Program Sheet - LT/LDG | 1 |
| 39 | A008 5626 | Key Top - Program | 1 |
| 40 | A008 5340 | Display Board - LT/LDG | 1 |
| 40 | A008 5440 | Display Board - A3/A4 | 1 |
| 41 | A008 5738 | Panel Sheet | 2 |
| 42 | A008 1329 | Operation Panel Bracket - Left | 1 |
| 43 | A008 1330 | Operation Panel Bracket - Right | 1 |
| 44 | A008 1335 | Operation Panel Bracket - Middle | 1 |
| 45 | 1204 1520 | Switch | 1 |
| 46 | A008 5677 | Sorter Sheet - LT/LDG | 1 |
| 46 | A008 5733 | Sorter Sheet - A3/A4 | 1 |
| 47 | A008 5676 | Duplex Sheet - LT/LDG | 1 |
| 47 | A008 5732 | Duplex Sheet - A3/A4 | 1 |
| 101 | 0965 4008W | Tapping Screw with Flat Washer - M4 x 8 | |
| 102 | 0802 5094 | Tapping Truss Head Screw - M4 x 8 | |
| 103 | 0951 3008W | Philips Screw with Flat Washer - M3 x 8 | |
| 104 | 0434 0060W | Tapping Screw - M4 x 6 | |

# 3. PLATEN COVER AND CASSETTE (A008)

April 1,'87

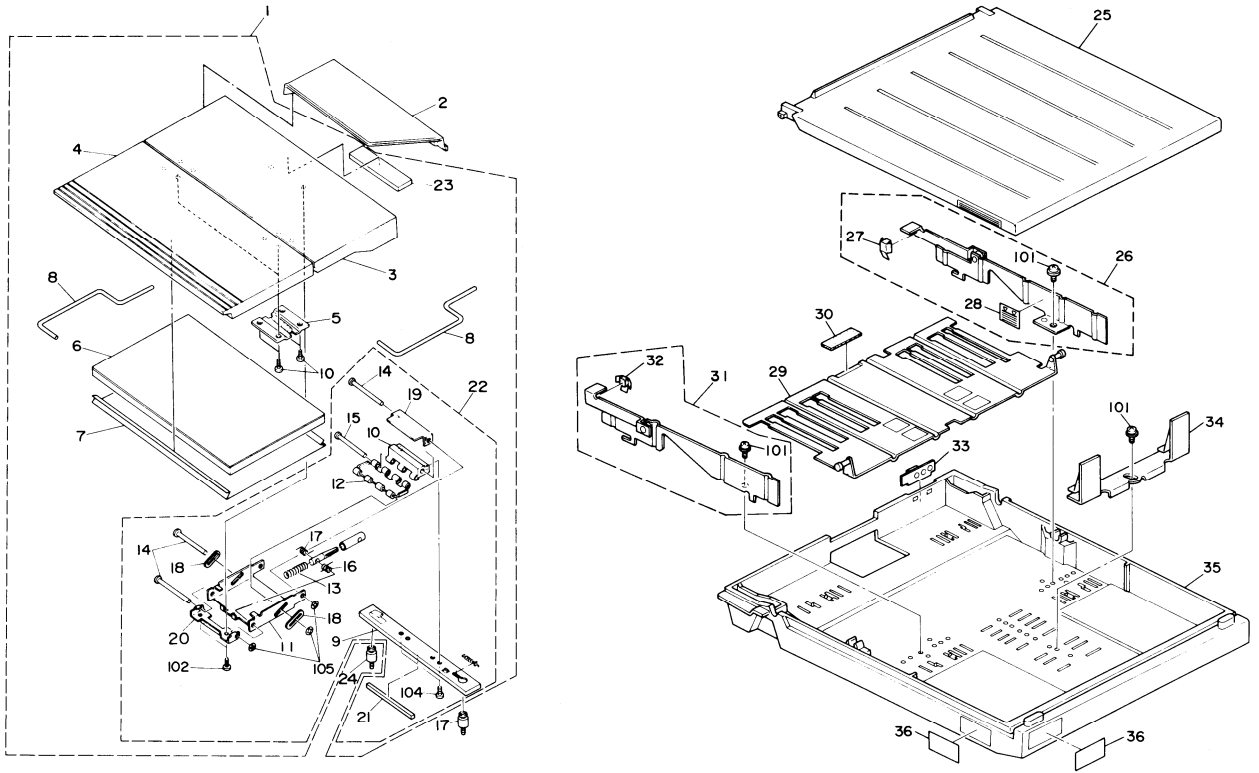

# 3. PLATEN COVER AND CASSETTE (A008)

| Index No. | Parts No. | Description | Q'ty Per Assembly |
|---|---|---|---|
| 1 | AC00 1007 | Platen Cover Ass'y | 1 |
| 2 | AG02 1001 | Original Holder | 1 |
| 3 | 5211 2800 | Rear Platen Cover | 1 |
| 4 | A008 1666 | Front Platen Cover | 1 |
| 5 | 5448 2824 | Flex Hinge - Platen Cover | 1 |
| 6 | 5448 2803 | Pad - Platen Cover | 1 |
| 7 | A008 9501 | Platen Cover Sheet - 10sheet/set | 1 |
| 8 | 5448 2806 | Platen Cover Arm | 1 |
| 9 | A008 1676 | Mounting Bracket - Platen Cover | 1 |
| 10 | 5215 2833 | Base Holder | 1 |
| 11 | 5215 2834 | Arm Holder | 1 |
| 12 | 5215 2835 | Crank | 1 |
| 13 | 5215 2839 | Balancer Spring | 1 |
| 14 | 5215 2840 | Pin - 4 x 115 mm | 1 |
| 15 | 5215 2841 | Pin - 4 x 100 mm | 1 |
| 16 | 5215 2842 | Right Spring - Platen Cover | 1 |
| 17 | 5215 2843 | Left Spring - Platen Cover | 1 |
| 18 | 5215 2844 | Slide Supporter | 2 |
| 19 | 5215 2845 | Plate Magnet | 1 |
| 20 | 5215 2846 | Platen Base | 1 |
| 21 | 5442 1657 | Seal - 15 x 214 x 13 | 1 |
| 22 | 5215 2832 | Platen Cover Hinge Ass'y | 1 |
| 23 | 5215 2838 | Rubber Magnet | 1 |
| 24 | AA14 3026 | Stud - Platen Cover Mounting | 2 |
| 25 | A008 2734 | Large Cassette Cover | 1 |
| 25 | A008 2737 | Small Cassette Cover | 1 |
| 26 | A008 2727 | Side Fence - Rear | 1 |
| 27 | 5215 2731 | Rear Side Holder | 1 |
| 28 | AA00 2010 | Decal - Paper Level | 1 |
| 29 | A008 2710 | Bottom Plate | 1 |
| 30 | 5215 2713 | Bottom Plate Pad | 1 |
| 31 | 5215 2716 | Front Side Fence | 1 |
| 32 | 5215 2720 | Front Side Holder | 1 |
| 33 | 5205 2960 | Actuator - A3 | 1 |
| 33 | 5205 2961 | Actuator - B4 | 1 |

| Index No. | Parts No. | Description | Q'ty Per Assembly |
|---|---|---|---|
| 33 | 5205 2962 | Actuator - A4R | 1 |
| 33 | 5205 2963 | Actuator - A5R | 1 |
| 33 | 5205 2964 | Actuator - A4 | 1 |
| 33 | 5205 2965 | Actuator - B5 | 1 |
| 33 | 5205 2966 | Actuator - A5 | 1 |
| 33 | 5205 2967 | Actuator - A5R | 1 |
| 33 | 5205 2968 | Actuator - B6 | 1 |
| 33 | 5205 2969 | Actuator - A6R | 1 |
| 33 | 5205 2970 | Actuator - LG | 1 |
| 33 | 5205 2971 | Actuator - 11" x 17" | 1 |
| 33 | 5205 2972 | Actuator - 11" x 15" | 1 |
| 33 | 5205 2973 | Actuator - 11" x 14" | 1 |
| 33 | 5205 2974 | Actuator - 8-1/2 x 13" | 1 |
| 33 | 5205 2975 | Actuator - 8-1/4 x 13" | 1 |
| 33 | 5205 2976 | Actuator - 8 x 13 | 1 |
| 33 | 5205 2977 | Actuator - 8 x 10-1/2 | 1 |
| 33 | 5205 2978 | Actuator - 8 x 10 | 1 |
| 33 | 5205 2979 | Actuator - 11 x 8-1/2 | 1 |
| 33 | 5205 2992 | Actuator - 5-1/2 x 8-1/2 | 1 |
| 33 | 5205 2993 | Actuator - 8-1/2 x 5 | 1 |
| 33 | 5205 2996 | Actuator - 8-1/2 x 11R | 1 |
| 33 | 5205 2997 | Actuator - 8-1/2 x 14 | 1 |
| 34 | AF01 7001 | Rear Fence | 1 |
| 35 | AF01 0001 | Large Cassette Body | 1 |
| 35 | AF01 0002 | Small Cassette Body | 1 |
| 36 | AA00 2017 | Decal Sheet - Large - LT/LDG | 1 |
| 36 | AA00 2018 | Decal Sheet - Large - A4/A3 | 1 |
| 36 | AA00 2015 | Decal Sheet - Small - LT/LDG | 1 |
| 36 | AA00 2016 | Decal Sheet - Small - A4/A3 | 1 |

| Index No. | Parts No. | Description | Q'ty Per Assembly |
|---|---|---|---|
| 101 | 0964 4010W | Philips Screw with Flat Washer - M4 x 10 | |
| 102 | 0315 0080W | Philips Pan Head Screw - M5 x 8 | |
| 103 | 0413 0202W | Tapping Screw - M3 x 20 | |
| 104 | 0414 0102B | Tapping Screw - M4 x 10 | |
| 105 | 0805 0083 | Retaining Ring - M4 | |

# 4. 1ST AND 2ND PAPER FEED (A008)

April 1,'87

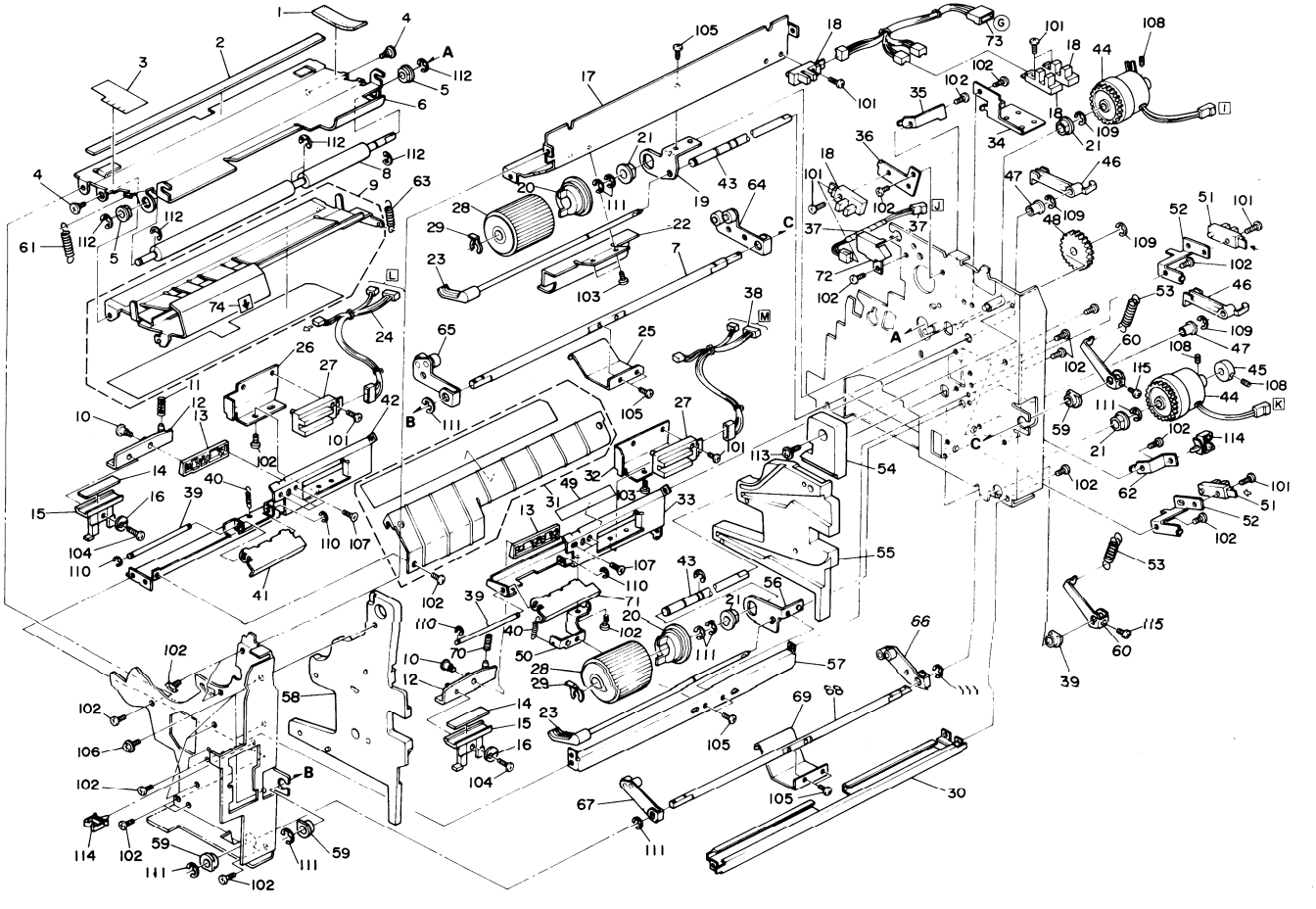

# 4. 1ST AND 2ND PAPER FEED (A008)

| Index No. | Parts No. | Description | Q'ty Per Assembly |
|---|---|---|---|
| 1 | 5215 3203 | Seal - 1 x 10 x 60 mm | 1 |
| 2 | 5215 3204 | Seal - 4 x 10 x 370 mm | 1 |
| 3 | 5215 3201 | Mylar Seal - Front Upper Guide | 1 |
| 4 | 5403 2075 | Stepped Screw | 1 |
| 5 | 5053 0447 | Bushing - 6 x 10 x 6 mm | 2 |
| 6 | A008 2602 | Upper Guide Plate | 1 |
| 7 | AA14 0041 | Shaft | 1 |
| 8 | A008 2604 | Feed Roller | 1 |
| 9 | A008 2616 | Middle Guide Plate | 1 |
| 10 | 5442 2642 | Shoulder Screw - M3 | 1 |
| 11 | 5215 2644 | Spring - Friction Pad | 1 |
| 12 | A008 2555 | Arm Pad Ass'y | 1 |
| 13 | 5215 2673 | Fixing Pad Bracket | 1 |
| 14 | AF03 3003 | Friction Pad | 2 |
| 15 | A008 2583 | Pad Holder | 2 |
| 16 | AA13 2014 | Spacer - Friction Pad Arm | 2 |
| 17 | A008 2570 | Upper Paper Feed Stay | 1 |
| 18 | 5205 5250 | L.E.D. Sensor Type - T | 3 |
| 19 | 5215 2622 | Upper Feed Shaft Bracket | 1 |
| 20 | 5215 2618 | Feed Roller Hub | 2 |
| 21 | 5053 0223 | Bushing - 8mm | 2 |
| 22 | A008 2600 | Upper Feed Guide Plate | 1 |
| 23 | 5215 2624 | Paper End Feeder | 2 |
| 24 | 5215 5496 | Lower Paper Feed Harness | 1 |
| 25 | A008 2647 | Upper Lift Arm | 1 |
| 26 | 5215 2590 | Lower Size Detection Bracket | 1 |
| 27 | 5205 5253 | Photointerruptor Pack | 2 |
| 28 | 5215 2619 | Feed Roller | 2 |
| 29 | 5215 2621 | Snap Ring - M6 | 2 |
| 30 | 5215 1134 | Lower Paper Feed Stay - Right | 1 |
| 31 | A008 2610 | Lower Guide Plate | 1 |
| 32 | 5215 2576 | Upper Size Detection Bracket | 1 |
| 33 | 5215 2629 | Upper Pad Mounting Plate | 1 |
| 34 | 5215 3381 | Sensor Bracket | 1 |
| 35 | 5215 2634 | Paper Feed Clutch Holder | 1 |

| Index No. | Parts No. | Description | Q'ty Per Assembly |
|---|---|---|---|
| 36 | 5215 3481 | Sensor Bracket | 1 |
| 37 | 5215 5453 | Toner End Harness | 1 |
| 38 | 5215 5495 | Transformer Harness - 220/240V | 1 |
| 39 | 5215 2579 | Shaft | 2 |
| 40 | 5215 2582 | Spring | 2 |
| 41 | A008 2593 | Lower Arm | 1 |
| 42 | A008 2674 | Lower Pad Mounting Plate | 1 |
| 43 | 5215 2617 | Feed Shaft | 2 |
| 44 | AX21 0002 | Magnetic Clutch | 2 |
| 45 | 5205 2866 | Magnetic Clutch Collar | 1 |
| 46 | 5215 2626 | Paper End Actuator | 2 |
| 47 | 5443 2668 | Bushing | 2 |
| 48 | 5215 2597 | Idle Gear - 30T | 1 |
| 49 | A008 2574 | Upper Guide | 1 |
| 50 | 5215 2580 | Spring Anchor | 1 |
| 51 | 5205 5251 | L.E.D. Sensor Type - T | 2 |
| 52 | 5215 2637 | Paper End Bracket | 2 |
| 53 | AA06 0080 | Spring - Lower Lift | 2 |
| 54 | A008 2642 | Manual Feed Guide | 1 |
| 55 | A008 2641 | Rear Cassette Holder | 1 |
| 56 | 5215 2630 | Lower Feed Shaft Bracket | 1 |
| 57 | A008 2559 | Lower Paper Feed Stay | 1 |
| 58 | A008 2640 | Front Cassette Holder | 1 |
| 59 | 5215 2662 | Bushing | 2 |
| 60 | A008 2664 | Pressure Arm | 2 |
| 61 | 5442 2693 | Front Spring - Middle Guide | 1 |
| 62 | A008 2638 | Harness Clamp Bracket | 1 |
| 63 | 5442 2692 | Rear Spring - Middle Guide | 1 |
| 64 | A008 2652 | Upper Rear Arm | 1 |
| 65 | A008 2648 | Upper Front Arm | 1 |
| 66 | A008 2659 | Lower Rear Arm | 1 |
| 67 | A008 2657 | Lower Front Arm | 1 |
| 68 | AA14 0081 | Shaft | 1 |
| 69 | A008 2656 | Lower Lift Arm | 1 |
| 70 | 5215 2643 | Spring - Friction Pad - Upper | 1 |

| Index No. | Parts No. | Description | Q'ty Per Assembly |
|---|---|---|---|
| 71 | A008 2578 | Upper Arm | 1 |
| 72 | 5215 3482 | Sensor Cover | 1 |
| 73 | AZ40 0002 | Relay Harness | 1 |
| 74 | AA00 1051 | Decal - Middle Guide | 1 |
| 101 | 0314 0120W | Philips Pan Head Screw - M4 x 12 | |
| 102 | 0434 0080W | Tapping Screw - M4 x 8 | |
| 103 | 0434 0060W | Tapping Screw - M4 x 6 | |
| 104 | 0313 0120W | Philips Pan Head Screw - M3 x 12 | |
| 105 | 0314 0080W | Philips Pan Head Screw - M5 x 8 | |
| 106 | 0802 5085 | Tapping Screw - M4 x 8 | |
| 107 | 0323 0080W | Philips Sunken Head Screw - M3 x 8 | |
| 108 | 0575 0060E | Hexagon Headless Set Screw - M5 x 6 | |
| 109 | 0720 0030E | Retaining Ring - M3 | |
| 110 | 0720 0025E | Retaining Ring - M2.5 | |
| 111 | 0720 0060E | Retaining Ring - M6 | |
| 112 | 0720 0050E | Retaining Ring - M5 | |
| 113 | 0965 4008W | Tapping Screw with Flat Washer - M4 x 8 | |
| 114 | 1105 0106 | Wire Saddle | |
| 115 | 0313 0100W | Philips Pan Head Screw - M3 x 10 | |

# 5. REGISTRATION (A008)

April 1,'87

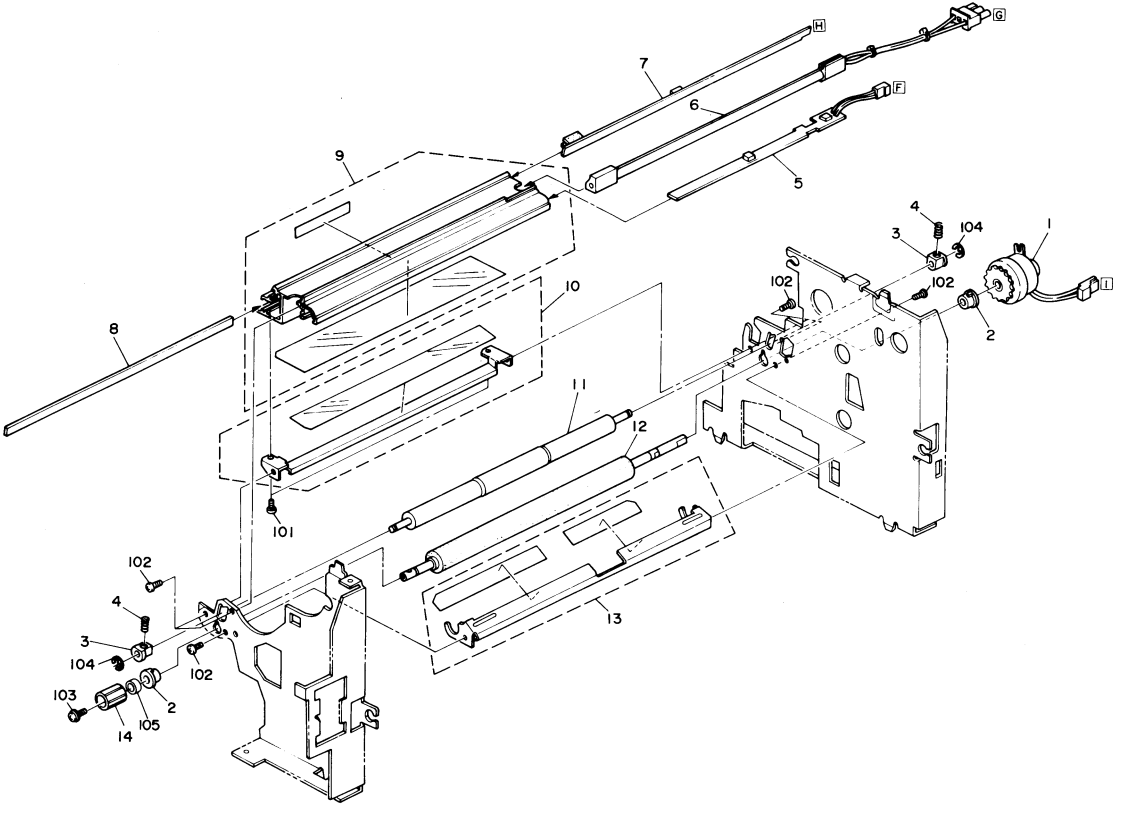

# 5. REGISTRATION (A008)



| Index No. | Parts No. | Description | Q'ty Per Assembly |
|---|---|---|---|
| 1 | 5205 5313 | Registration Clutch | 1 |
| 2 | 5215 2672 | Bushing | 2 |
| 3 | 5205 2697 | Bushing - Upper Registration Roller | 2 |
| 4 | AA06 3035 | Spring - Registration Roller | 2 |
| 5 | 5215 5228 | Regist Sensor Board | 1 |
| 6 | AX50 0008 | Pre-Transfer Lamp 430V/1.3W | 1 |
| 7 | AW40 0002 | ID Sensor Board | 1 |
| 8 | AA01 2001 | PTL Filter | 1 |
| 9 | A008 2279 | PTL Guide | 1 |
| 10 | A008 2284 | Paper Guide | 1 |
| 11 | 5215 2670 | Upper Regist Roller | 1 |
| 12 | AF02 0053 | Lower Registration Roller | 1 |
| 13 | 5215 2612 | Regist Guide Plate | 1 |
| 14 | A008 2769 | Registration Roller Knob | 1 |
| 101 | 0434 0060W | Tapping Screw - M4 x 6 | |
| 102 | 0434 0080W | Tapping Screw - M4 x 8 | |
| 103 | 0965 4008W | Tapping Screw with Flat Washer - M4 x 8 | |
| 104 | 0720 0050E | Retaining Ring - M5 | |
| 105 | 0807 5010 | Washer | |

| Index No. | Parts No. | Description | Q'ty Per Assembly |
|---|---|---|---|

# 6. DRUM (A008)

April 1,'87

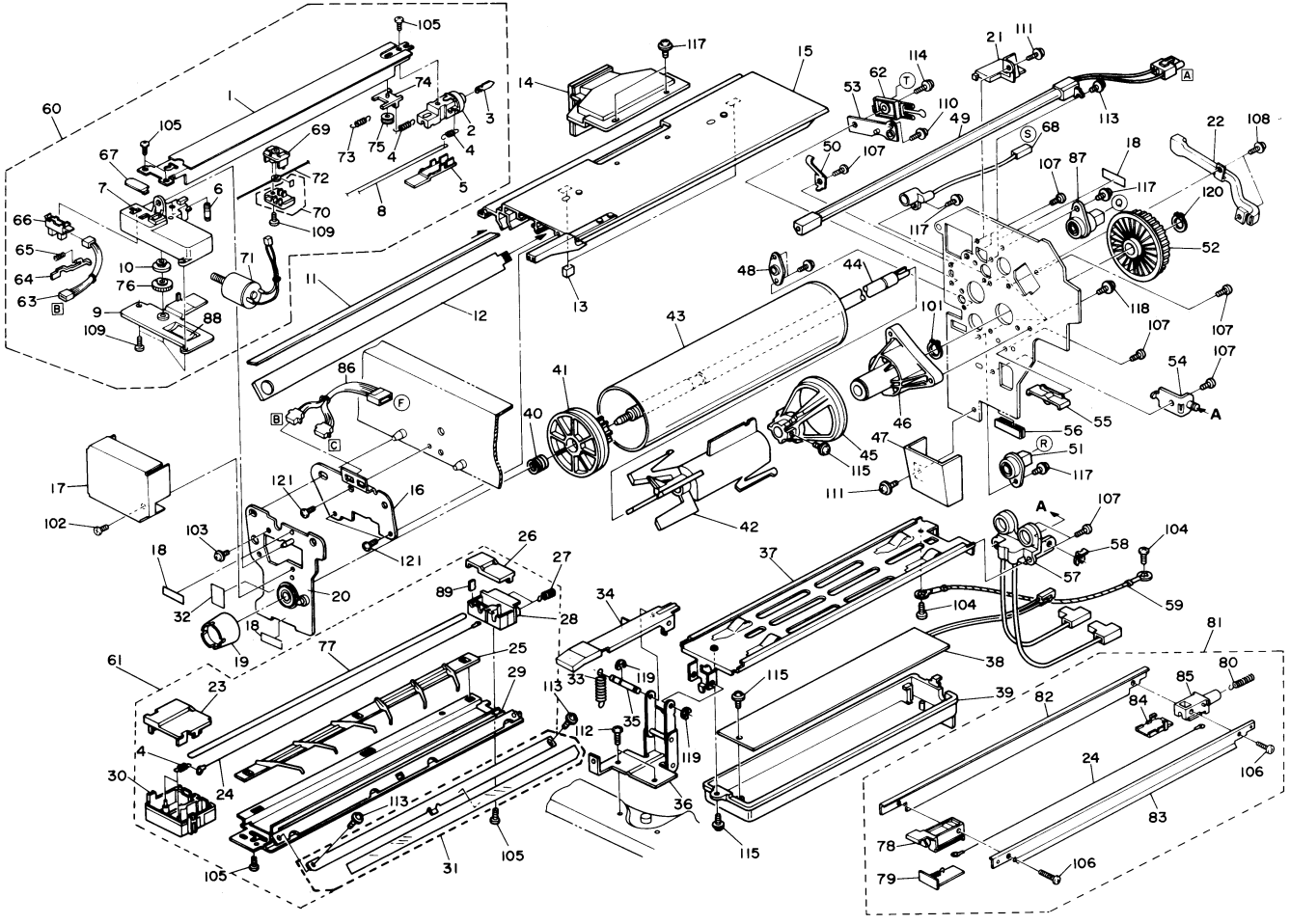

# 6. DRUM (A008)

| Index No. | Parts No. | Description | Q'ty Per Assembly |
|---|---|---|---|
| 1 | AD02 3008 | Casing - Charge Corona | 1 |
| 2 | AD02 2012 | Rear Endblock - Charge Corona | 1 |
| 3 | 5442 2110 | Plug - Corona Unit | 1 |
| 4 | 5442 2108 | Spring - Corona Wire | 1 |
| 5 | AD02 2014 | Rear Cover - Charge Corona | 1 |
| 6 | AD02 4001 | Adjusting Screw | 1 |
| 7 | AD02 2011 | Front Endblock - Charge Corona | 1 |
| 8 | A008 9001 | Main Corona Wire (10pcs/1set) | 1 |
| 9 | A008 2075 | Front Cover - Charge Corona | 1 |
| 10 | AB03 2015 | Cleaner Idler Pulley | 1 |
| 11 | AA01 1004 | QL Filter | 1 |
| 12 | AX50 0009 | Eraser | 1 |
| 13 | A008 2054 | Seal - 12 x 12 x 15 | 1 |
| 14 | A008 2063 | Duct Outlet | 1 |
| 15 | A008 2051 | C&D Corona Rail | 1 |
| 16 | A008 2255 | Front Drum Support | 1 |
| 17 | A008 2074 | Cover - Charge Corona Unit | 1 |
| 18 | 5434 7916 | High Voltage Decal | 3 |
| 19 | 5447 2268 | Drum Shaft Knob | 1 |
| 20 | A008 2310 | Drum Stay | 1 |
| 21 | A008 2270 | Inner Duct - Fan Motor | 1 |
| 22 | A008 2265 | Duct - ID Sensor | 1 |
| 23 | AD02 2041 | Front Endblock Cover - T & S Corona | 1 |
| 24 | 5442 9004 | T & S Corona Wire (10pcs/set) | 1 |
| 25 | 5215 2121 | T & S Corona Guide | 1 |
| 26 | AD02 2042 | Rear Endblock Cover - T & S Corona | 1 |
| 27 | 5205 3821 | Terminal Spring | 1 |
| 28 | AD02 2040 | Rear Endblock - T & S Corona | 1 |
| 29 | AD02 3001 | T & S Corona Casing | 1 |
| 30 | AD02 2039 | Front Endblock - T & S Corona | 1 |
| 31 | 5215 2119 | T & S Corona Guide Plate | 1 |
| 32 | 5215 2315 | Decal - Drum Knob | 1 |
| 33 | 5403 1030 | Tension Spring | 1 |
| 34 | A008 2272 | T/S Corona Lever | 1 |
| 35 | 5215 2146 | Shaft | 1 |

| Index No. | Parts No. | Description | Q'ty Per Assembly |
|---|---|---|---|
| 36 | A008 2262 | Link | 1 |
| 37 | 5215 2125 | T & S Corona Rail | 1 |
| 38 | 5215 5370 | Drum Heater - 8W | 1 |
| 39 | 5215 2270 | Heater Casing | 1 |
| 40 | AA06 3018 | Drum Flange Spring | 1 |
| 41 | 5447 2257 | Front Drum Flange | 1 |
| 42 | 5447 2286 | Drum Guide | 1 |
| 43 | 5205 9510 | Drum | 1 |
| 44 | 5215 2258 | Drum Shaft | 1 |
| 45 | 5211 2285 | Rear Flange | 1 |
| 46 | 5211 2262 | Drum Shaft Holder | 1 |
| 47 | 5215 2150 | T & S Corona Harness Cover | 1 |
| 48 | AA08 0012 | Bushing - 6 x 10 x 6 | 1 |
| 49 | AX50 0007 | Quenching Lamp - 430V/1.3W | 1 |
| 50 | A008 3617 | Spring Plate | 1 |
| 51 | 5442 2165 | Receptacle Housing - Main Corona | 1 |
| 52 | 5447 2267 | Timing Pulley - 48T | 1 |
| 53 | A008 3595 | Terminal Holder - Cleaning Bias | 1 |
| 54 | 5215 2131 | T & S Corona Holder | 1 |
| 55 | 5205 3872 | Rear Bracket - T & S Corona | 1 |
| 56 | 5215 2265 | Edging | 1 |
| 57 | 5215 2108 | T & S Corona Receptacle | 1 |
| 58 | 5447 2681 | Snap Ring | 1 |
| 59 | 5215 5371 | Grounding Wire | 1 |
| 60 | AD00 4003 | Charge Corona Unit | 1 |
| 61 | AD00 4008 | T & S Corona Unit | 1 |
| 62 | 5215 3486 | Bias Terminal | 1 |
| 63 | AZ40 0004 | Harness - Cleaner Sensor | 1 |
| 64 | AA11 1001 | Feeler - Charge Corona | 1 |
| 65 | AA06 3020 | Spring - Feeler | 1 |
| 66 | 5216 5245 | Photointerruptor - IL-G-3P-S3T2-E | 1 |
| 67 | A008 2090 | Supporter - Cleaner Sensor | 1 |
| 68 | ADO2 1004 | Receptacle Housing - Q/C | 1 |
| 69 | A008 2084 | Cleaner Slider | 1 |
| 70 | A008 2085 | Cleaner - Charge Corona | 1 |

| Index No. | Parts No. | Description | Q'ty Per Assembly |
|---|---|---|---|
| 71 | A008 5321 | Motor - DC 5V/1.3W | 1 |
| 72 | A008 2095 | Slider Drive Wire | 1 |
| 73 | AA06 0045 | Spring - Tension Cleaner | 1 |
| 74 | A008 2080 | Pulley Support - Charge Corona | 1 |
| 75 | AB03 2014 | Cleaner Drive Pulley | 1 |
| 76 | AB01 0011 | Gear - 56T | 1 |
| 77 | 5442 9003 | Main Corona Wire (10pcs/set) | 1 |
| 78 | AD02 2030 | Front Endblock - Q/C | 1 |
| 79 | AD02 2033 | Front Endblock Cover - Q/C | 1 |
| 80 | AA06 3017 | Spring - Terminal | 1 |
| 81 | AD00 4007 | Quenching Charge Unit | 1 |
| 82 | AD02 3004 | Left Casing - Q/C | 1 |
| 83 | AD02 3005 | Right Casing - Q/C | 1 |
| 84 | AD02 2034 | Rear Endblock Cover - Q/C | 1 |
| 85 | AD02 2032 | Rear Endblock - Q/C | 1 |
| 86 | AZ40 0003 | Harness - DC Motor | 1 |
| 87 | AD02 1005 | Receptacle Housing - Charge Corona | 1 |
| 88 | A008 2091 | Support Pad - Cleaner Motor | 1 |
| 89 | A009 2345 | Pad - 10 x 8 x 1 mm | 1 |

| Index No. | Parts No. | Description | Q'ty Per Assembly |
|---|---|---|---|
| 101 | 0725 0100E | Retaining Ring C - M10 | |
| 102 | 0314 0080M | Philips Pan Head Screw - M4 x 8 | |
| 103 | 0314 0060W | Philips Pan Head Screw - M4 x 6 | |
| 104 | 0314 0060M | Philips Pan Head Screw - M4 x 6 | |
| 105 | 0314 0050W | Philips Pan Head Screw - M4 x 5 | |
| 106 | 0313 0060W | Philips Pan Head Screw - M3 x 6 | |
| 107 | 0314 0080W | Philips Pan Head Screw - M4 x 8 | |
| 108 | 0434 0080W | Tapping Screw - M4 x 8 | |
| 109 | 0971 3006A | Philips Pan Head Screw - M3 x 6 | |
| 110 | 0964 4010W | Tapping Screw with Flat Washer - M4 x 10 | |
| 111 | 0964 4008W | Tapping Screw with Flat Washer - M4 x 8 | |
| 112 | 0434 0100W | Tapping Screw - M4 x 10 | |
| 113 | 0951 3006W | Philips Screw with Flat Washer - M3 x 6 | |
| 114 | 0315 0120W | Philips Pan Head Screw - M5 x 12 | |
| 115 | 0951 4012W | Philips Screw with Flat Washer - M4 x 12 | |
| 116 | 0965 4008W | Tapping Screw with Flat Washer - M4 x 8 | |
| 117 | 0951 4008W | Philips Screw with Flat Washer - M4 x 8 | |
| 118 | 0802 5060 | Tapping Screw - M4 x 12 | |
| 119 | 0720 0030E | Retaining Ring - M3 | |
| 120 | 0725 0100E | Retaining Ring C - M10 | |
| 121 | 0434 0060W | Tapping Screw - M4 x 6 | |

# 7. TRANSPORT (A008)



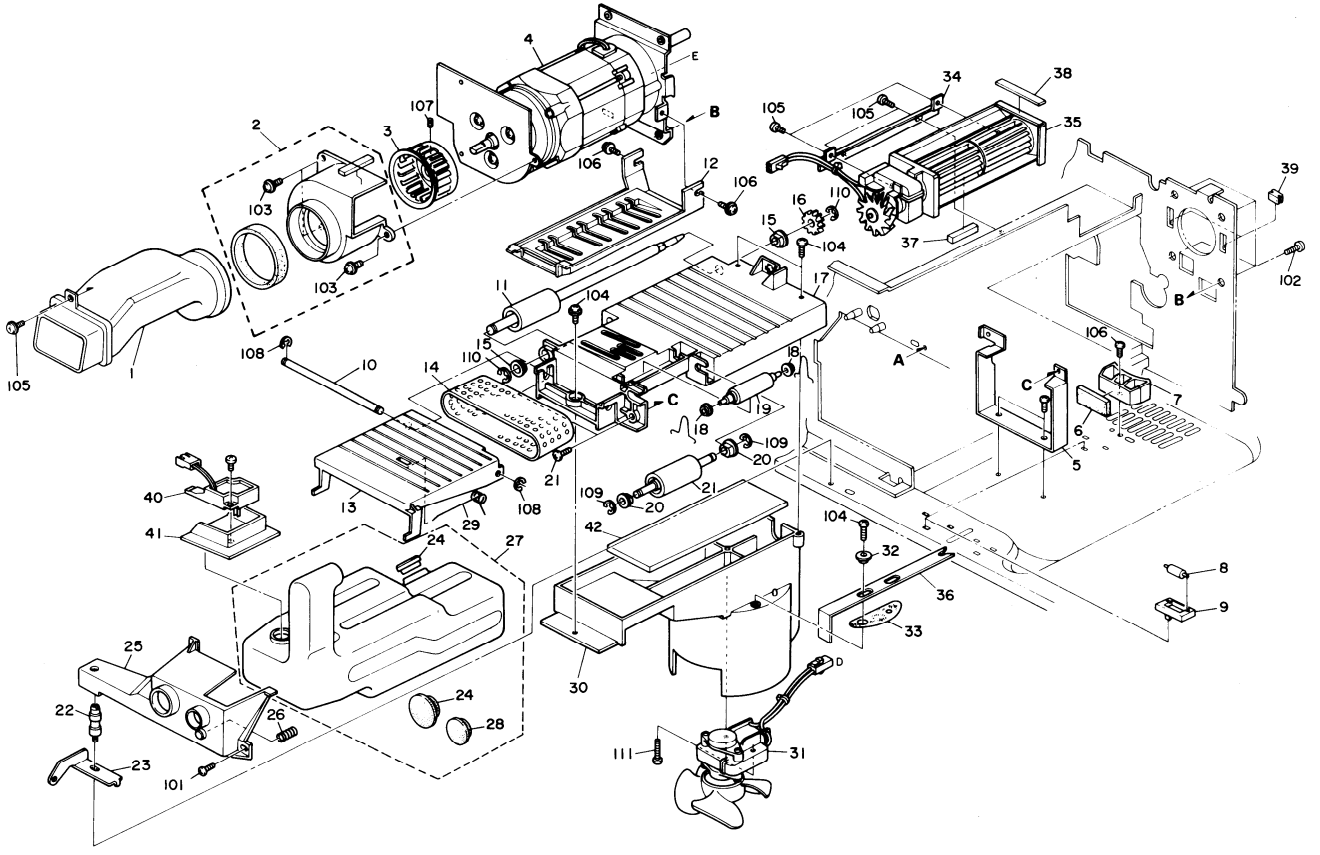

# 7. TRANSPORT (A008)



| Index No. | Parts No. | Description | Q'ty Per Assembly |
|---|---|---|---|
| 1 | A008 2060 | Duct Inlet | 1 |
| 2 | A008 2068 | Fan Casing | 1 |
| 3 | 5442 2143 | Fan - Main Corona | 1 |
| 4 | AX02 0027 | Main Motor - AC 45W | 1 |
| 5 | 5215 3897 | Transport Stay | 1 |
| 6 | 5215 3880 | Cushion | 1 |
| 7 | 5215 3935 | Toner Collection Bottle Stopper | 1 |
| 8 | 5215 3677 | Roller | 1 |
| 9 | 5215 3675 | Roller Holder | 1 |
| 10 | 5215 3855 | Guide Plate Shaft | 1 |
| 11 | 5215 3917 | Transport Drive Roller | 1 |
| 12 | A008 1089 | Motor Cover | 1 |
| 13 | 5215 3853 | Transport Guide Plate | 1 |
| 14 | 5215 3978 | Transport Belt | 1 |
| 15 | 5215 3931 | Bushing - 8mm | 2 |
| 16 | 5442 3872 | Gear - 16Z | 1 |
| 17 | 5215 3910 | Transport Frame | 1 |
| 18 | 5443 2668 | Bushing | 1 |
| 19 | 5215 3942 | Transport Guide Roller | 1 |
| 20 | 5053 0447 | Bushing - 6 x 10 x 6 mm | 2 |
| 21 | 5215 3923 | Driven Roller | 1 |
| 22 | 5215 3884 | Shaft | 1 |
| 23 | AG06 0012 | Front Cover Angle | 1 |
| 24 | A007 3785 | Toner Collection Bottle Cap | 2 |
| 25 | A008 3886 | Toner Collection Bottle Cover | 1 |
| 26 | 5215 3889 | Spring - Toner Collection Bottle | 1 |
| 27 | A008 9500 | Toner Collection Bottle | 1 |
| 28 | 5442 3664 | Toner Collection Bottle Cap - Small | 1 |
| 29 | 5215 3851 | Spring - Guide Plate | 1 |
| 30 | 5215 3928 | Duct | 1 |
| 31 | 5215 5426 | Vacuum Fan Motor - 14/12W | 1 |
| 32 | 5403 2048 | Bushing - 4mm | 1 |
| 33 | 5215 3878 | Sheet | 1 |
| 34 | 5215 1117 | Outlet Fan Bracket | 1 |
| 35 | 5215 5423 | Outlet Fan Motor - AC 24/22W | 1 |
| 36 | 5215 3877 | Plate | 1 |
| 37 | 5215 3257 | Seal | 1 |
| 38 | 5215 1136 | Seal - 12 x 65 x 2 mm | 1 |
| 39 | AA16 1002 | Rubber Pad | 1 |
| 40 | 5215 5304 | Toner Overflow Sensor | 1 |
| 41 | 5215 3887 | Sensor Holder | 1 |
| 42 | 5215 3892 | Ozone Filter | 1 |
| 101 | 0314 0060W | Philips Pan Head Screw - M4 x 6 | |
| 102 | 0315 0080W | Philips Pan Head Screw - M5 x 8 | |
| 103 | 0434 0080W | Tapping Screw - M4 x 8 | |
| 104 | 0414 0102W | Tapping Screw - M4 x 10 | |
| 105 | 0434 0060W | Tapping Screw - M4 x 6 | |
| 106 | 0964 4008W | Tapping Screw with Flat Washer - M4 x 8 | |
| 107 | 0574 0060E | Hexagon Headless Set Screw - M4 x 6 | |
| 108 | 0720 0040E | Retaining Ring - M4 | |
| 109 | 0720 0050E | Retaining Ring - M5 | |
| 110 | 0720 0060E | Retaining Ring - M6 | |
| 111 | 0413 0252W | Tapping Screw - M3 x 20 | |

# 8. FUSING I (A008)



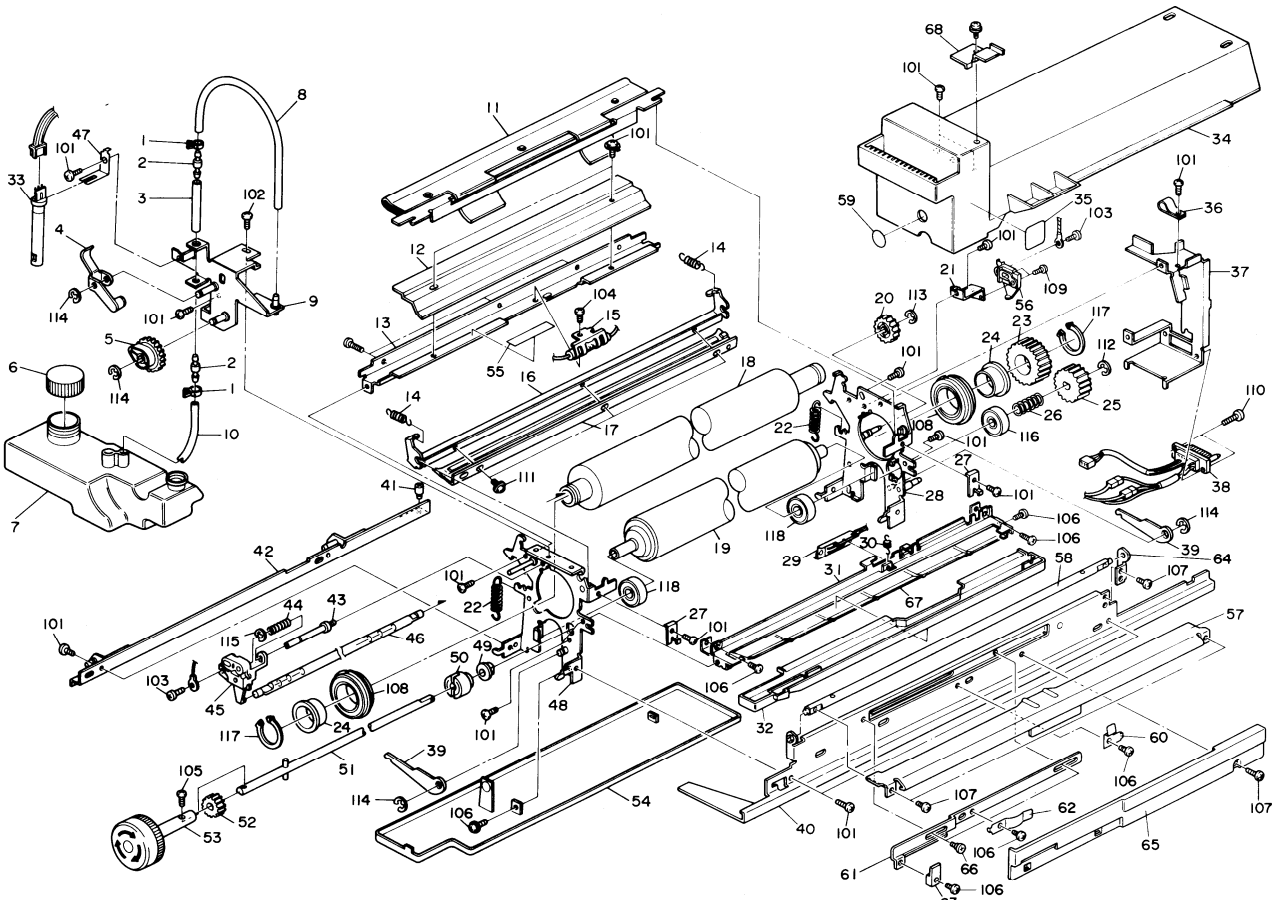

# 8. FUSING I (A008)

| Index No. | Parts No. | Description | Q'ty Per Assembly |
|---|---|---|---|
| * | A008 4008 | Fusing Unit - 115V | 1 |
| * | A008 4009 | Fusing Unit - 220V | 1 |
| 1 | 5447 4241 | Tube Clamp | 2 |
| 2 | 5415 4310 | Valve - Oil Pump | 2 |
| 3 | 5447 4229 | Sleeve - Oil Pump | 1 |
| 4 | 5209 4405 | Oil Pump Lever | 1 |
| 5 | 5209 4407 | Cam Gear - 32T | 1 |
| 6 | AA03 6001 | Oil Bottle Cap | 1 |
| 7 | 5215 4225 | Oil Tank | 1 |
| 8 | 5209 4410 | Oil Tube - 140mm | 1 |
| 9 | 5209 4400 | Oil Pump Bracket | 1 |
| 10 | 5209 4409 | Oil Tube - 105mm | 1 |
| 11 | 5215 4130 | Oil Supply Pad | 1 |
| 12 | 5215 4208 | Spring Plate - Oil Supply Pad | 1 |
| 13 | 5215 4093 | Upper Frame | 1 |
| 14 | 5215 4121 | Spring - Oil Blade | 2 |
| 15 | 5215 5390 | Thermofuse | 1 |
| 16 | 5215 4116 | Oil Blade Holder | 1 |
| 17 | 5215 4117 | Oil Blade | 1 |
| 18 | 5215 4320 | Hot Roller | 1 |
| 19 | AE02 0001 | Pressure Roller | 1 |
| 20 | AB01 3061 | Gear - 17T | 1 |
| 21 | 5442 4201 | Rear Bracket - Lamp Terminal | 1 |
| 22 | AA06 0041 | Spring - Pressure | 2 |
| 23 | AB01 3059 | Gear - 36T | 1 |
| 24 | AE03 2001 | Bushing - 20mm | 2 |
| 25 | AB01 3060 | Gear - 27T | 1 |
| 26 | 5442 4152 | Spring - Fusing Drive | 1 |
| 27 | 5215 4196 | Oil Sump Holder | 2 |
| 28 | A008 4052 | Rear Side Plate - Fusing | 1 |
| 29 | 5215 5250 | Thermistor | 1 |
| 30 | 5203 4146 | Thermistor Spring | 1 |
| 31 | A008 4178 | Bracket - Thermistor | 1 |
| 32 | 5215 4195 | Oil Sump | 1 |
| 33 | 5209 5320 | Oil End Sensor | 0 |

| Index No. | Parts No. | Description | Q'ty Per Assembly |
|---|---|---|---|
| 34 | A008 4172 | Fusing Unit Cover | 1 |
| 35 | 5442 4421 | Decal - Small | 1 |
| 36 | 5209 4126 | Wire Clamp | 1 |
| 37 | 5215 5818 | Connector Unit Bracket | 1 |
| 38 | 5215 5464 | Fusing Harness | 1 |
| 39 | A008 4097 | Pressure Lever | 2 |
| 40 | A008 4112 | Right Rail - Fusing | 1 |
| 41 | 5409 1855 | Mounting Pin | 1 |
| 42 | A008 4100 | Left Fusing Unit Slide Guide | 1 |
| 43 | 5447 4220 | Lamp Terminal Stud | 1 |
| 44 | 5447 4221 | Lamp Holder Spring | 1 |
| 45 | 5447 4216 | Front Lamp Terminal - Fusing Unit | 1 |
| 46 | 5215 5309 | Fusing Lamp - 220/240V | 1 |
| 46 | 5215 5307 | Fusing Lamp - 115V | 1 |
| 47 | 5215 4411 | Spring Plate | 1 |
| 48 | A008 4051 | Front Side Plate - Fusing | 1 |
| 49 | 5053 0223 | Bushing - 8mm | 1 |
| 50 | 5205 4135 | Collar - Fusing | 1 |
| 51 | 5209 4149 | Fusing Unit Shaft | 1 |
| 52 | 5209 4408 | Gear - 16T | 1 |
| 53 | AG05 0011 | Knob - Fusing | 1 |
| 54 | A008 4145 | Oil Pan | 1 |
| 55 | 5215 4211 | Decal - Thermofuse | 1 |
| 56 | 5216 4100 | Rear Heater Terminal | 1 |
| 57 | A008 4116 | Lower Entrance Guide | 1 |
| 58 | A008 4111 | Shaft - Fusing Entrance | 1 |
| 59 | AA00 1039 | Decal - B1 | 1 |
| 60 | A008 4120 | Spring Plate - Stopper | 1 |
| 61 | A008 4122 | Adjustment Slide - Lower Entrance | 1 |
| 62 | A008 4121 | Spring Plate - Adjustment Slide | 1 |
| 63 | A008 4123 | Knob - Adjustment Slide | 1 |
| 64 | A008 4117 | Bracket - Rear Fusing Entrance | 1 |
| 65 | A008 4124 | Fusing Entrance Cover | 1 |
| 66 | 5447 2769 | Stepped Screw | 1 |
| 67 | A008 4179 | Upper Entrance Guide | 1 |

| Index No. | Parts No. | Description | Q'ty Per Assembly |
|---|---|---|---|
| 68 | 5215 4168 | Fusing Mounting Bracket | 1 |
| 101 | 0434 0080W | Tapping Screw - M4 x 8 | |
| 102 | 0434 0060W | Tapping Screw - M4 x 6 | |
| 103 | 0950 3005M | Philips Screw with Lock Washer - M3 x 5 | |
| 104 | 0313 0060W | Philips Pan Head Screw - M3 x 6 | |
| 105 | 0314 0100W | Philips Pan Head Screw - M4 x 10 | |
| 106 | 0314 0060W | Philips Pan Head Screw - M4 x 6 | |
| 107 | 0314 0080W | Philips Pan Head Screw - M4 x 8 | |
| 108 | 0805 3377 | Ball Bearing - 25 x 42 x 9 mm | |
| 109 | 0314 0120W | Philips Pan Head Screw - M4 x 12 | |
| 110 | 0434 0100W | Tapping Screw - M4 x 10 | |
| 111 | 0951 3005 | Philips Screw with Flat Washer - M3 x 5 | |
| 112 | 0720 0060E | Retaining Ring - M6 | |
| 113 | 0720 0070E | Retaining Ring - M7 | |
| 114 | 0720 0050E | Retaining Ring - M5 | |
| 115 | 0720 0030E | Retaining Ring - M3 | |
| 116 | 0805 3291 | Ball Bearing - 8 x 16 x 5 mm | |
| 117 | 0725 0200E | Retaining Ring - M20 | |
| 118 | AE03 0001 | Ball Bearing - 10 x 22 x 5 | |

# 9. FUSING II (A008)

April 1,'87

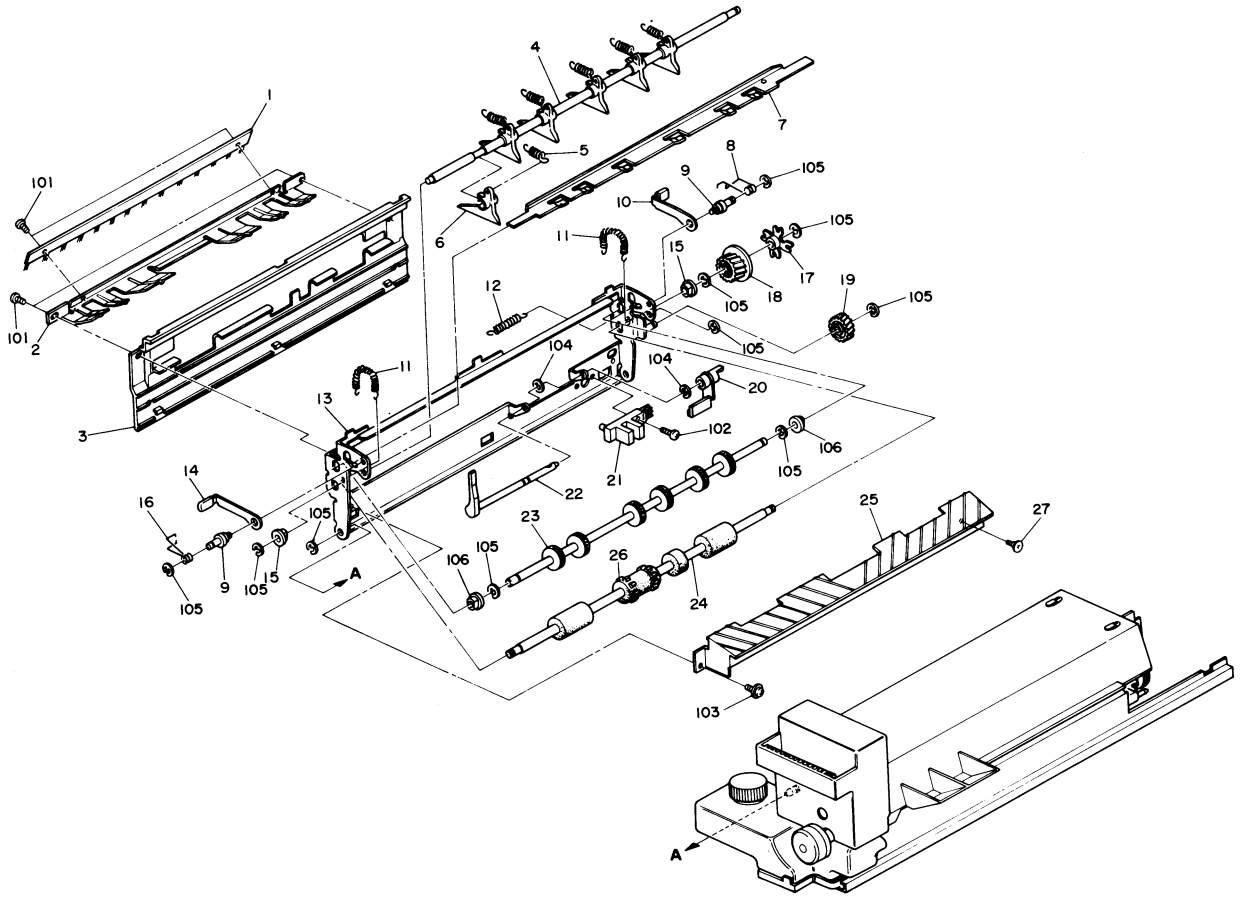

# 9. FUSING II (A008)



| Index No. | Parts No. | Description | Q'ty Per Assembly |
|---|---|---|---|
| 1 | 5215 4497 | Exit Antistatic Brush | 1 |
| 2 | A008 4482 | Upper Exit Guide | 1 |
| 3 | 5442 4500 | Cover - Exit Ass'y | 1 |
| 4 | 5205 4220 | Shaft - Hot Roller Stripper | 1 |
| 5 | 5205 4305 | Spring - Hot Roller Stripper | 1 |
| 6 | A008 9002 | Hot Roller Stripper - 6pcs/set | 1 |
| 7 | 5442 4465 | Stripper Pawl Plate | 1 |
| 8 | 5442 4464 | Spring - Rear Release Lever | 1 |
| 9 | 5442 4444 | Stud - Exit Ass'y Release Lever | 1 |
| 10 | A008 4344 | Rear Lever - Fusing Exit | 1 |
| 11 | 5415 4457 | Spring - Exit | 2 |
| 12 | 5442 4467 | Spring - Stripper Pawl Plate | 1 |
| 13 | A008 4451 | Frame - Exit | 1 |
| 14 | A008 4341 | Front Lever - Fusing Exit | 1 |
| 15 | 5053 0447 | Bushing - 6 x 10 x 6 mm | 2 |
| 16 | 5442 4463 | Spring - Front Release Lever | 1 |
| 17 | 5442 4495 | Slip Clutch | 1 |
| 18 | AB01 3063 | Gear - 17T | 1 |
| 19 | AB01 3062 | Gear - 19T | 1 |
| 20 | 5442 4491 | Actuator - Paper Exit Sensor | 1 |
| 21 | 5215 5230 | Photointerrupter - L Type | 1 |
| 22 | A008 4485 | Feeler - Paper Exit Sensor | 1 |
| 23 | 5209 4470 | Upper Exit Roller | 1 |
| 24 | 5215 4485 | Lower Exit Roller | 1 |
| 25 | A008 4063 | Lower Exit Guide | 1 |
| 26 | 5215 4488 | Exit Roller Belt | 1 |
| 27 | 5206 2684 | Shoulder Screw - M3 | 1 |

| Index No. | Parts No. | Description | Q'ty Per Assembly |
|---|---|---|---|
| 101 | 0434 0080W | Tapping Screw - M4 x 8 | |
| 102 | 0314 0100W | Philips Pan Head Screw - M4 x 10 | |
| 103 | 0964 4008W | Tapping Screw with Flat Washer - M4 x 8 | |
| 104 | 0720 0030E | Retaining Ring - M3 | |
| 105 | 0720 0050E | Retaining Ring - M5 | |
| 106 | 0805 3399 | Bushing - 6 x 10 x 8 mm | |

# 10. DEVELOPMENT (A008)



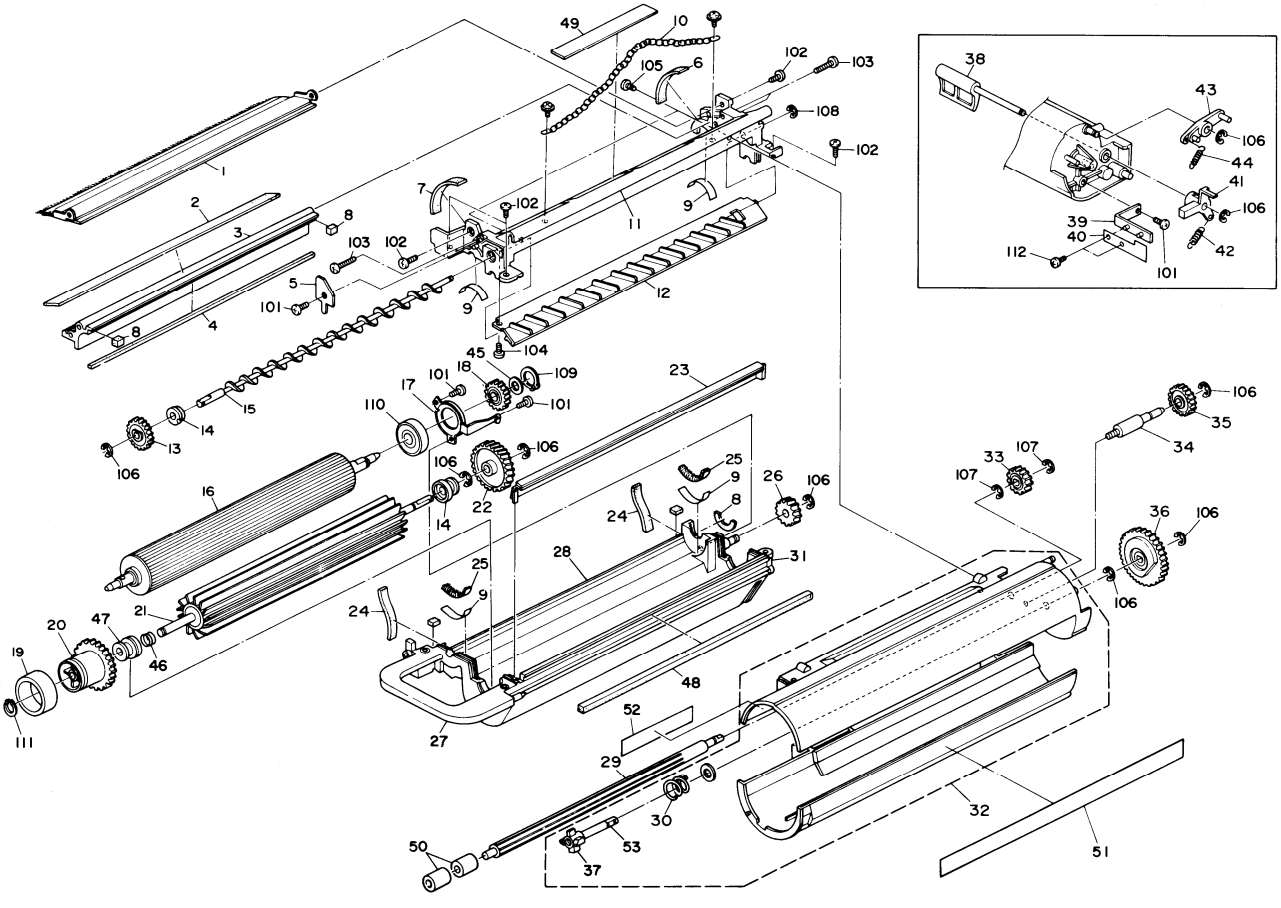

# 10. DEVELOPMENT (A008)

| Index No. | Parts No. | Description | Q'ty Per Assembly |
|---|---|---|---|
| * | AD00 1006 | Development Unit | 1 |
| 1 | 5215 3191 | Entrance Seal Ass'y | 1 |
| 2 | 5215 3154 | Seal - Upper | 1 |
| 3 | 5215 3161 | Doctor Plate | 1 |
| 4 | 5215 3155 | Seal - Doctor | 1 |
| 5 | 5215 3095 | Adjusting Plate - Magnet Angle | 1 |
| 6 | 5215 3052 | Side Seal - Left | 1 |
| 7 | 5215 3051 | Side Seal - Right | 1 |
| 8 | 5215 3162 | Side Seal - Doctor Blade | 2 |
| 9 | 5215 3097 | Sheet | 4 |
| 10 | 5205 1336 | Front Cover Chain | 1 |
| 11 | A008 3145 | Upper Casing | 1 |
| 12 | 5215 3175 | Back Spill Plate | 1 |
| 13 | 5215 3167 | Gear - 25T | 1 |
| 14 | 5205 3103 | Bushing - 6mm | 1 |
| 15 | 5215 3165 | Development Auger | 1 |
| 16 | AD03 1007 | Development Sleeve | 1 |
| 17 | 5215 3110 | Bearing Retainer | 1 |
| 18 | AB01 3064 | Gear - Development Sleeve | 1 |
| 19 | 5215 3089 | Developer Knob | 1 |
| 20 | 5215 3101 | Gear - 44T | 1 |
| 21 | AD03 8001 | Paddle Roller | 1 |
| 22 | 5215 3102 | Gear - 39T | 1 |
| 23 | 5215 3120 | Toner Supply Guide | 1 |
| 24 | 5215 3056 | Seal Development | 2 |
| 25 | 5215 3153 | Mylar - 6 x 35 mm | 2 |
| 26 | 5215 3115 | Gear - 17T | 1 |
| 27 | A008 3076 | Lower Front Side Plate - Development | 1 |
| 28 | A008 3078 | Lower Casing | 1 |
| 29 | 5215 3302 | Toner Supply Roller | 1 |
| 30 | 5215 3347 | Spring - Gear | 1 |
| 31 | A008 3077 | Lower Rear Side Plate - Development | 1 |
| 32 | 5215 3008 | Toner Supply Unit | 1 |
| 33 | 5205 3306 | Gear - 18T | 1 |
| 34 | 5215 3281 | Pin | 1 |
| 35 | 5447 3236 | Gear - 23T | 1 |
| 36 | 5215 3321 | Gear - 56T | 1 |
| 37 | 5215 3328 | Joint - Hopper | 1 |
| 38 | 5931 3337 | Color Toner End Lever | 1 |
| 39 | 5931 3386 | Actuator Bracket | 1 |
| 40 | 5931 3382 | Actuator - Red | 1 |
| 40 | 5931 3384 | Actuator - Blue | 1 |
| 40 | 5931 3385 | Actuator - Green | 1 |
| 41 | 5931 3332 | Toner End Actuator | 1 |
| 42 | 5931 3394 | Spring - Arm | 1 |
| 43 | 5931 3330 | Toner End Lever | 1 |
| 44 | 5442 3233 | Spring - Drive Wheel | 1 |
| 45 | 5215 3108 | Spacer - Development Sleeve | 1 |
| 46 | 5219 3326 | Rubber Seal - Paddle Roller | 1 |
| 47 | AA08 0010 | Bushing - 6mm | 1 |
| 48 | 5215 3133 | Seal - Right | 1 |
| 49 | A008 3150 | Filter Casing | 1 |
| 50 | 5215 3303 | Seal - Toner Supply Roller | 2 |
| 51 | 5215 3394 | Seal - 12 x 406 mm | 1 |
| 52 | 5215 3395 | Seal - 25 x 75 mm | 1 |
| 53 | 5215 3327 | Shaft - Agitator | 1 |

| Index No. | Parts No. | Description | Q'tv Per Assembly |
|---|---|---|---|
| 101 | 0314 0060W | Philips Pan Head Screw - M4 x 6 | |
| 102 | 0314 0100W | Philips Pan Head Screw - M4 x 10 | |
| 103 | 0314 0240W | Philips Pan Head Screw - M4 x 24 | |
| 104 | 0965 4008W | Tapping Screw with Flat Washer - M4 x 8 | |
| 105 | 0951 4008W | Philips Screw with Flat Washer - M4 x 8 | |
| 106 | 0720 0050E | Retaining Ring - M5 | |
| 107 | 0720 0060E | Retaining Ring - M6 | |
| 108 | 0720 0025E | Retaining Ring - M2.5 | |
| 109 | 0725 0140E | Retaining Ring (C Type) - M14 | |
| 110 | 0805 3235 | Ball Bearing - 15 x 32 x 9 mm | |
| 111 | 0727 0060E | Retaining Ring - M6 | |
| 112 | 0313 0080W | Philips Pan Head Screw - M3 x 8 | |

# 11. CLEANING (A008)

April 1,'87

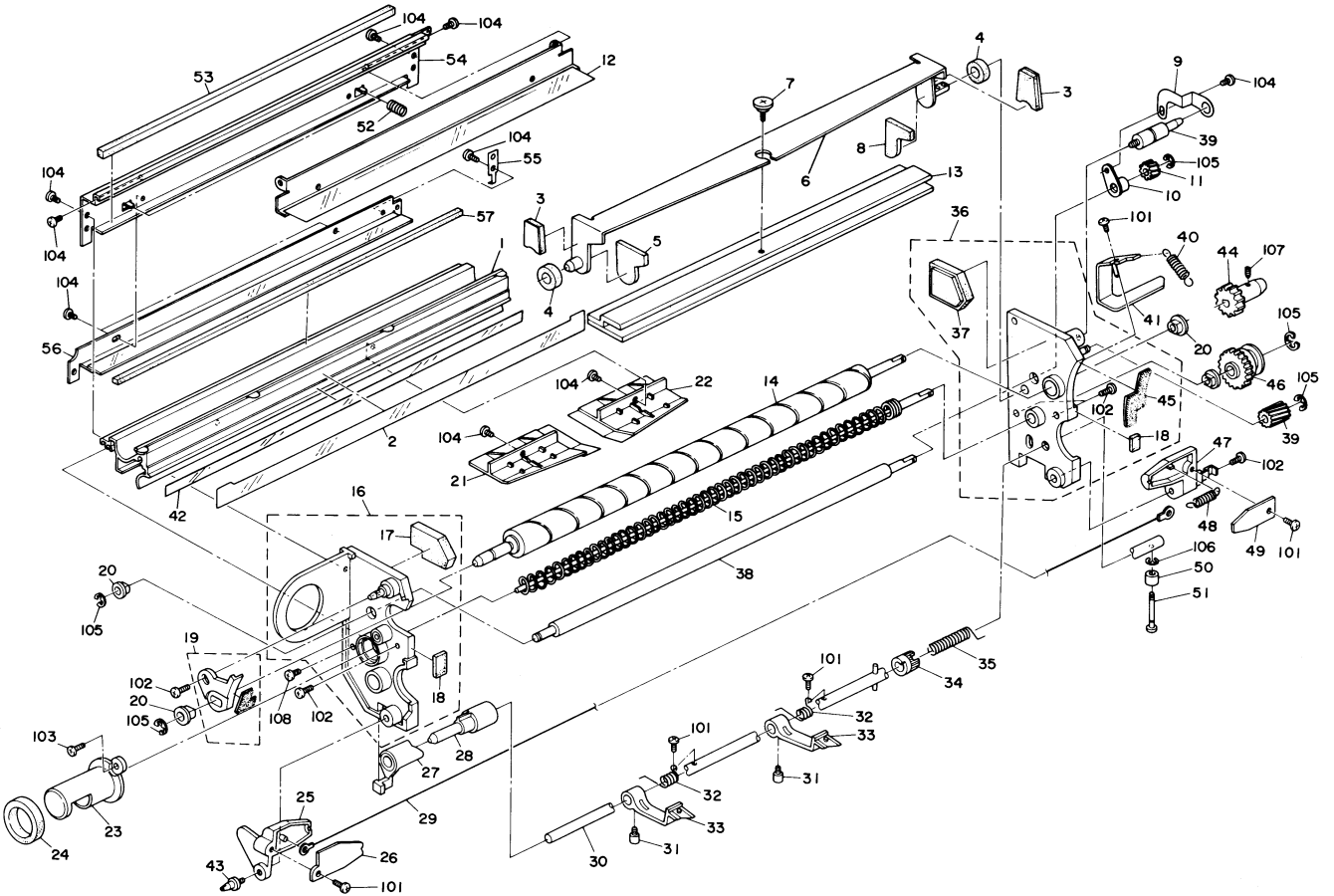

# 11. CLEANING (A008)

| Index No. | Parts No. | Description | Q'ty Per Assembly |
|---|---|---|---|
| * | AD00 2005 | Cleaning Unit | 1 |
| 1 | A008 3556 | Cleaning Unit Casing | 1 |
| 2 | AD04 7001 | Seal - Cleaning Entrance | 1 |
| 3 | A008 3602 | Seal - Outer | 1 |
| 4 | 5442 3593 | Seal - Cleaning Blade Shaft | 2 |
| 5 | A008 3604 | Seal - Front Inner | 1 |
| 6 | A008 3575 | Cleaning Blade Bracket | 1 |
| 7 | 5446 3648 | Stepped Screw - M4 | 1 |
| 8 | A008 3605 | Seal - Rear Inner | 1 |
| 9 | A008 3660 | Spring Plate - Cleaning Bias | 1 |
| 10 | AA08 2004 | Bushing - Bias Roller | 1 |
| 11 | AB01 1014 | Gear - 15T | 1 |
| 12 | A008 3589 | Blade Cleaner | 1 |
| 13 | 5205 3565 | Cleaning Blade | 1 |
| 14 | AD04 2001 | Cleaning Brush | 1 |
| 15 | AD04 3001 | Toner Collection Coil | 1 |
| 16 | A008 3552 | Front Side Plate - Cleaning | 1 |
| 17 | AA15 1017 | Seal - Blade Front | 1 |
| 18 | A008 3570 | Seal - Cleaning Small | 2 |
| 19 | A008 3565 | Cleaning Brush Holder | 1 |
| 20 | 5446 3707 | Bushing - 6 x 10 x 6 mm | 2 |
| 21 | A008 3612 | Rear Pick-off Guide Plate | 1 |
| 22 | A008 3611 | Front Pick-off Guide Plate | 1 |
| 23 | 5215 3663 | Toner Collection Joint | 1 |
| 24 | 5215 3680 | Sheel - 19 x 36 x 10 mm | 1 |
| 25 | AD02 2035 | Front Endblock - PCC | 1 |
| 26 | AD02 2037 | Front Endblock Cover - PCC | 1 |
| 27 | 5205 3950 | Cam | 1 |
| 28 | 5205 3975 | Cam | 1 |
| 29 | 5205 9001 | Charge Wire - Pre Cleaning Corona | 1 |
| 30 | 5205 3958 | Pick-off Pawl Shaft | 1 |
| 31 | 5205 3966 | Set Screw | 2 |
| 32 | 5205 3965 | Spring | 2 |
| 33 | AD02 5001 | Pick-off Pawl | 2 |
| 34 | 5205 3981 | Collar - Spring | 1 |
| 35 | 5442 3904 | Spring - Pick-off Pawl Slide | 1 |
| 36 | A008 3560 | Rear Side Plate - Cleaning | 1 |
| 37 | AA15 1016 | Seal - Blade Rear | 1 |
| 38 | AD01 0002 | Cleaning Bias Roller | 1 |
| 39 | AB01 1012 | Gear - 17T | 1 |
| 40 | AA06 0042 | Spring - Release Cleaning Blade | 1 |
| 41 | A008 3619 | Pressure Arm | 1 |
| 42 | A008 3559 | Insulation Tape - Cleaning Casing | 1 |
| 43 | AA14 3027 | Stud - Cleaning Front | 1 |
| 44 | AB01 1013 | Gear - 18T | 1 |
| 45 | 5205 3599 | Side Seal - Cleaning Rear | 1 |
| 46 | AB01 7019 | Gear - 27T | 1 |
| 47 | AD02 2036 | Rear Endblock - PCC | 1 |
| 48 | 5442 2108 | Spring - Corona Wire | 2 |
| 49 | AD02 2038 | Rear Endblock Cover - PCC | 1 |
| 50 | 5418 2116 | Spacer - Guard | 1 |
| 51 | 5205 3968 | Set Screw - Separator Shaft | 1 |
| 52 | AA06 3019 | Spring - Blade Cleaner | 1 |
| 53 | A008 3624 | Seal - Cleaning Unit Casing | 1 |
| 54 | A008 3580 | Upper Cleaning Unit Casing | 1 |
| 55 | A008 3615 | Spring Plate - Cleaning Unit Casing | 1 |
| 56 | A008 3587 | Bias Roller Blade | 1 |
| 57 | A008 3622 | Seal - Bias Blade | 1 |

| Index No. | Parts No. | Description | Q'ty Per Assembly |
|---|---|---|---|
| 101 | 0313 0060W | Philips Pan Head Screw - M3 x 6 | |
| 102 | 0314 0080W | Philips Pan Head Screw - M4 x 8 | |
| 103 | 0313 0080W | Philips Pan Head Screw - M3 x 8 | |
| 104 | 0434 0080W | Tapping Screw - M4 x 8 | |
| 105 | 0720 0040E | Retaining Ring - M4 | |
| 106 | 0720 0025E | Retaining Ring - M2.5 | |
| 107 | 0623 0140E | Spring Pin - 3 x 14 mm | |
| 108 | 0314 0100W | Philips Pan Head Screw - M4 x 10 | |

# 12. OPTICS I (A008)

April 1,'87

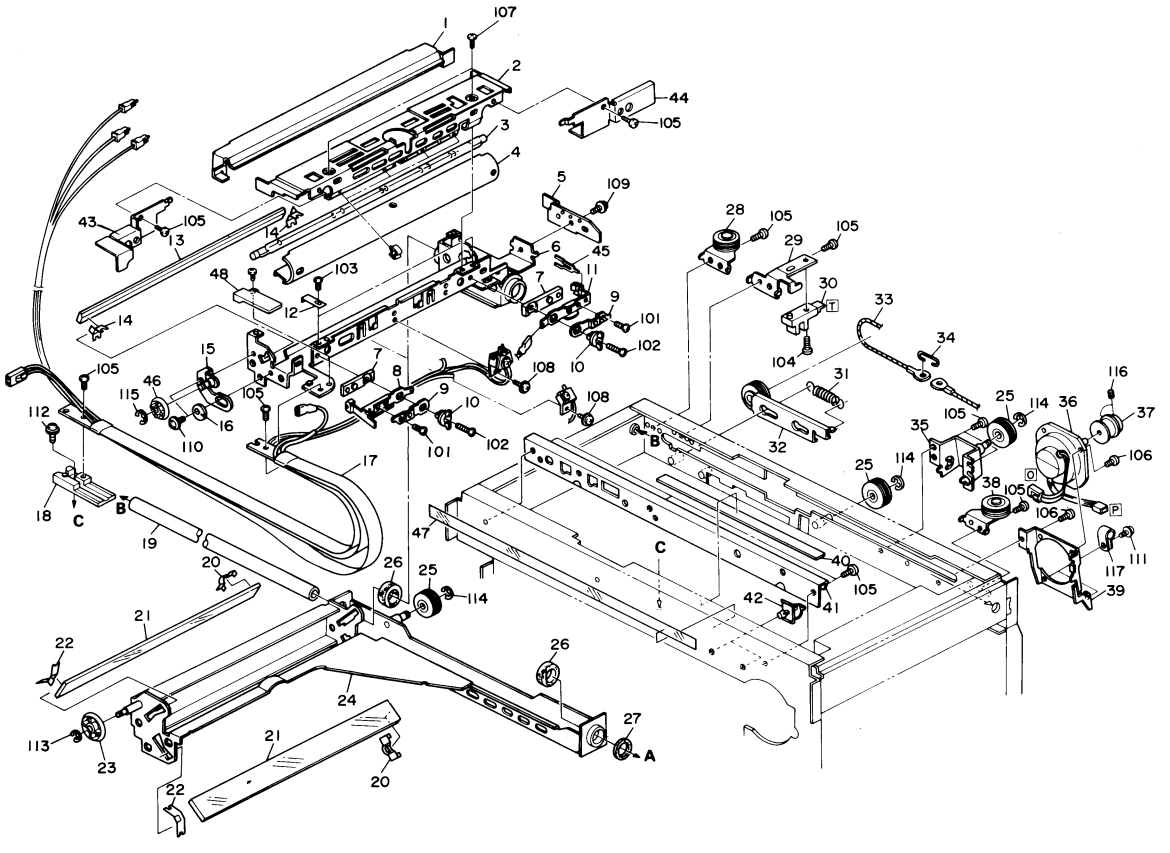

# 12. OPTICS I (A008)

| Index No. | Parts No. | Description | Q'ty Per Assembly |
|---|---|---|---|
| 1 | A008 1697 | Reflector - Aid | 1 |
| 2 | A008 1691 | Reflector Cover | 1 |
| 3 | AX52 0004 | Exposure Lamp - 85V/295W | 1 |
| 4 | 5215 1696 | Main Reflector | 1 |
| 5 | 5215 1697 | Wire Stopper Plate | 1 |
| 6 | A008 1681 | 1st Scanner Ass'y | 1 |
| 7 | 5420 1675 | Insulator - Lamp Terminal | 2 |
| 8 | 5215 1700 | Exposure Lamp Terminal - Fix | 1 |
| 9 | 5420 1682 | Supporter - Lamp Terminal | 2 |
| 10 | 5420 1676 | Spacer - Lamp Terminal | 2 |
| 11 | 5442 1705 | Rear Terminal - Exposure Lamp | 1 |
| 12 | 5409 1705 | Clamp - Reflector | 2 |
| 13 | 5211 1710 | 1st Mirror | 1 |
| 14 | 5442 1711 | Spring Plate - 1st Mirror | 2 |
| 15 | A008 1701 | Stud Bracket | 1 |
| 16 | 5205 1694 | Adjusting Cam - Start Lever | 1 |
| 17 | A008 5281 | Optics Harness | 1 |
| 18 | A008 1840 | Scanner Drive Wire Bracket | 1 |
| 19 | 5215 1864 | Rear Guide Rod | 1 |
| 20 | 5442 1741 | Rear Spring Plate - 2nd and 3rd Mirror | 2 |
| 21 | 5442 1740 | 2nd and 3rd Mirror | 2 |
| 22 | 5442 1742 | Front Spring Plate - 2nd and 3rd Mirror | 2 |
| 23 | A008 1728 | Guide Roller - 2nd Scanner | 1 |
| 24 | A008 1721 | 2nd Scanner Ass'y | 1 |
| 25 | 5442 1735 | Pulley | 1 |
| 26 | 5442 1748 | Cleaner - Guide Rod | 2 |
| 27 | 5205 1923 | Spacer - 12.5 x 19 x 1 MM | 1 |
| 28 | 5442 1870 | Left Pulley | 1 |
| 29 | 5215 1893 | H.P. Sensor Bracket | 1 |
| 30 | 5205 5251 | L.E.D. Sensor Type - T | 1 |
| 31 | 5442 1890 | Spring - Wire Tightener | 1 |
| 32 | 5215 1886 | Wire Pulley Tightener | 1 |
| 33 | AA05 0011 | Scanner Drive Wire | 1 |
| 34 | 5442 1798 | Hook - Scanner Drive Wire | 1 |
| 35 | 5215 1881 | Pulley Bracket | 1 |
| **36** | 5215 5300 | **Scanner Drive Motor - DC55W** | 1 |
| 37 | 5442 1867 | Main Pulley - Scanner Drive | 1 |
| 38 | 5442 1875 | Right Pulley | 1 |
| 39 | 5215 1866 | Lens Drive Motor Bracket | 1 |
| 40 | 5215 1853 | Mylar - 15 x 350 mm | 1 |
| 41 | A008 1860 | Scanner Guide | 1 |
| 42 | 5215 1857 | Harness Clamp | 2 |
| 43 | 5211 1711 | Front Cover - Lamp Terminal | 1 |
| 44 | 5211 1712 | Rear Cover - Lamp Terminal | 1 |
| 45 | 5215 1702 | Clip - Exposure Lamp | 1 |
| 46 | A008 1704 | Guide Roller - 1st Scanner | 1 |
| 47 | 5442 1969 | Mylar Sheet - Terminal | 1 |
| 48 | A008 1747 | Exposure Lamp Harness | 1 |

| Index No. | Parts No. | Description | Q'ty Per Assembly |
|---|---|---|---|
| 101 | 0313 0080W | Philips Pan Head Screw - M3 x 8 | |
| 102 | 0313 0120W | Philips Pan Head Screw - M3 x 12 | |
| 103 | 0313 0040W | Philips Pan Head Screw - M3 x 4 | |
| 104 | 0314 0120W | Philips Pan Head Screw - M4 x 12 | |
| 105 | 0434 0060W | Tapping Screw - M4 x 6 | |
| 106 | 0434 0080W | Tapping Screw - M4 x 8 | |
| 107 | 0951 3006W | Philips Screw with Flat Washer - M3 x 6 | |
| 108 | 0413 0202W | Tapping Screw - M3 x 20 | |
| 109 | 0951 4008W | Philips Screw with Flat Washer - M4 x 8 | |
| 110 | 0951 4004W | Philips Screw with Flat Washer - M4 x 4 | |
| 111 | 0964 4008W | Tapping Screw with Flat Washer - M4 x 8 | |
| 112 | 0964 4006W | Tapping Screw with Flat Washer - M4 x 6 | |
| 113 | 0720 0040E | Retaining Ring - M4 | |
| 114 | 0720 0070E | Retaining Ring - M7 | |
| 115 | 0720 0060E | Retaining Ring - M6 | |
| 116 | 0574 0060E | Hexagon Headless Set Screw - M4 x 6 | |
| 117 | 1105 0034 | Nylon Clip - 7N | |

# 13. OPTICS II (A008)



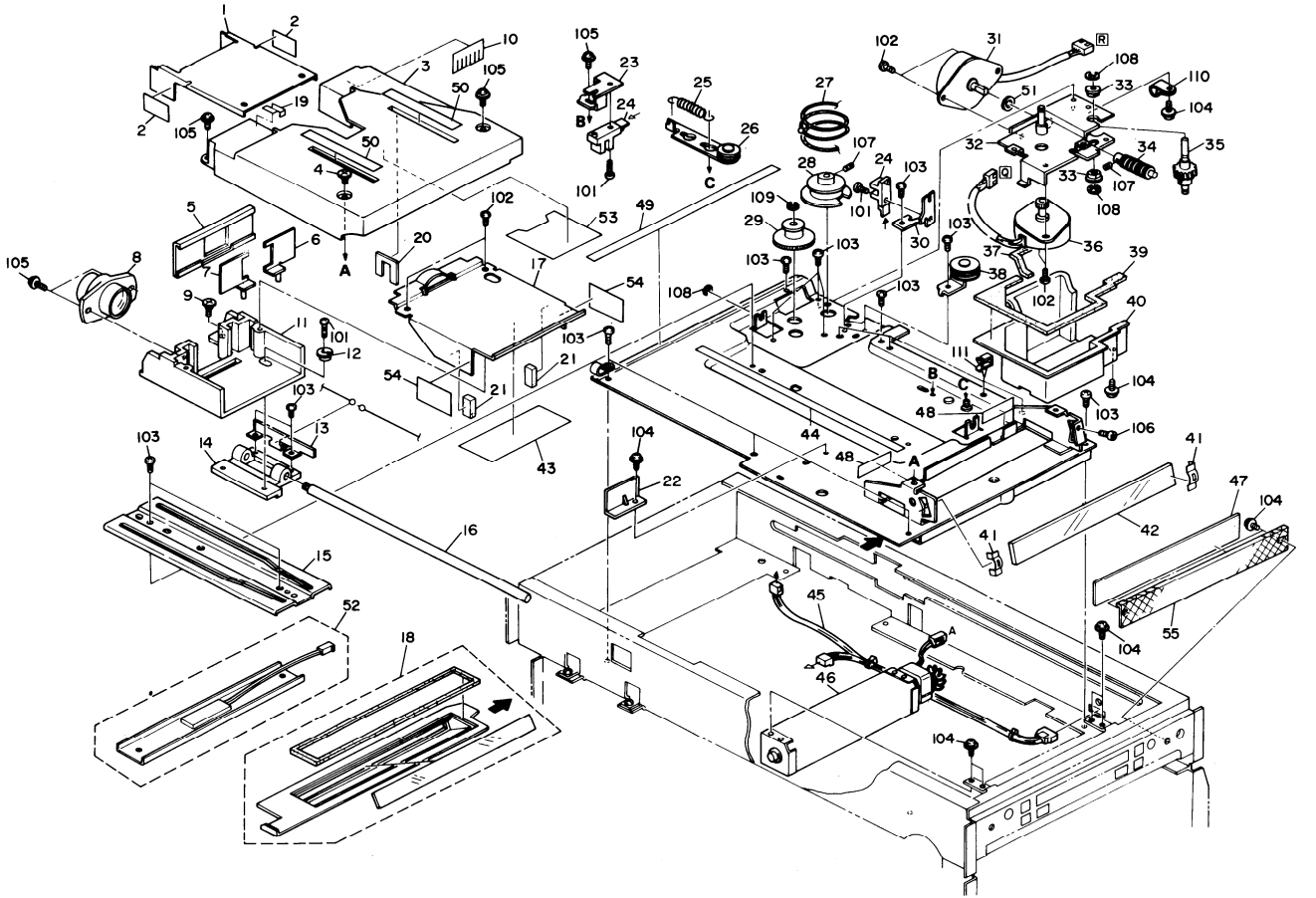

# 13. OPTICS II (A008)

| Index No. | Parts No. | Description | Q'ty Per Assembly |
|---|---|---|---|
| 1 | A008 1776 | Shielding Plate - Enlarge | 1 |
| 2 | 5215 1778 | Mylar - Shielding Plate | 2 |
| 3 | A008 1771 | 4th Mirror Cover | 1 |
| 4 | AA14 3037 | Stepped Screw | 1 |
| 5 | 5205 1793 | Shielding - Guide | 1 |
| 6 | 5205 1797 | Right Shield | 1 |
| 7 | 5215 1794 | Left Shield | 1 |
| 8 | 5205 1751 | Lens - F8/180 | 1 |
| 9 | AA14 3036 | Stepped Screw | 1 |
| 10 | 5215 1771 | Mylar - Seal 4th Mirror | 1 |
| 11 | 5215 1765 | Lens Bracket | 1 |
| 12 | 5442 1770 | Cam - Optics Axis | 1 |
| 13 | 5215 1767 | Lens H.P. Actuator | 1 |
| 14 | 5215 1766 | Lens Cartridge | 1 |
| 15 | 5215 1842 | Cam Plate - Lens Shield | 1 |
| 16 | 5215 1780 | Lens Guide Rod | 1 |
| 17 | 5215 1772 | Lens Bracket Cover | 1 |
| 18 | A008 1825 | Toner Shield Cover | 1 |
| 19 | 5215 1779 | Shield Plate Stopper | 1 |
| 20 | AA15 1019 | Seal - Shielding | 1 |
| 21 | AA15 1018 | Seal - 16 x 10 x 35 | 2 |
| 22 | 5215 1846 | Shield Plate | 1 |
| 23 | 5215 1816 | Lens H.P. Sensor Bracket | 1 |
| 24 | 5205 5251 | L.E.D. Sensor Type - T | 2 |
| 25 | 5215 1811 | Spring - Lens Drive Wire | 1 |
| 26 | 5215 1805 | Lens Tension Pulley | 1 |
| 27 | 5215 1817 | Lens Drive Wire | 1 |
| 28 | 5205 1990 | Pulley | 1 |
| 29 | 5215 1812 | Lens Drive Pulley | 1 |
| 30 | 5215 1822 | H.P. Sensor Bracket | 1 |
| 31 | 5215 5296 | Mirror Drive Motor - DC 7.5W | 1 |
| 32 | 5215 1972 | Motor Bracket | 1 |
| 33 | 5053 0447 | Bushing - 6 x 10 x 6 mm | 2 |
| 34 | 5215 1958 | Worm Gear | 1 |
| 35 | 5215 1981 | Shaft | 1 |

| Index No. | Parts No. | Description | Q'ty Per Assembly |
|---|---|---|---|
| 36 | 5215 5294 | Lens Drive Motor - DC 6W | 1 |
| 37 | 5215 1970 | Seal - B | 1 |
| 38 | 5215 1975 | Pulley Bracket | 1 |
| 39 | 5215 1969 | Seal - A | 1 |
| 40 | 5215 1968 | Motor Cover | 1 |
| 41 | 5442 1847 | Spring Plate (Front) - 4th Mirror | 2 |
| 42 | 5205 1845 | 4th Mirror | 1 |
| 43 | 5215 1775 | Mylar - 118 x 50 mm | 1 |
| 44 | A008 1844 | Lens Sheet | 1 |
| 45 | 5215 5468 | Home Position Sensor Harness | 1 |
| 46 | AX02 0032 | Cooling Blower - AC 100V | 1 |
| 47 | A008 1915 | Vacuum Fan Filter | 1 |
| 48 | AA15 0004 | Shielding Sheet - 4th Mirror | 2 |
| 49 | AA15 0002 | Seal - Left Stay | 1 |
| 50 | AA15 0005 | Seal - 4th Mirror Cover | 2 |
| 51 | 5215 1957 | Spacer | 1 |
| 52 | 5442 5315 | Anti-Condensation Heater - 10W | 1 |
| 53 | A008 1772 | Cover Shielding Sheet | 1 |
| 54 | AA15 0006 | Mylar - Lens Bracket Cover | 2 |
| 55 | A008 1916 | Filter - Cooling Blower | 1 |

| Index No. | Parts No. | Description | Q'ty Per Assembly |
|---|---|---|---|
| 101 | 0314 0120W | Philips Pan Head Screw - M4 x 12 | |
| 102 | 0314 0060W | Philips Pan Head Screw - M4 x 6 | |
| 103 | 0434 0060W | Tapping Screw - M4 x 6 | |
| 104 | 0964 4008W | Tapping Screw with Flat Washer - M4 x 8 | |
| 105 | 0951 4008W | Philips Screw with Flat Washer - M4 x 8 | |
| 106 | 0593 0120E | Hexagon Bolt - M3 x 12 | |
| 107 | 0574 0050E | Hexagon Headless Set Screw - M4 x 5 | |
| 108 | 0720 0050E | Retaining Ring - M5 | |
| 109 | 0720 0040E | Retaining Ring - M4 | |
| 110 | 1105 0010 | Nylon Clip - 6N | |
| 111 | 1105 0144 | Harness Clamp | |

# 14. FRAME (A008)

April 1,'87

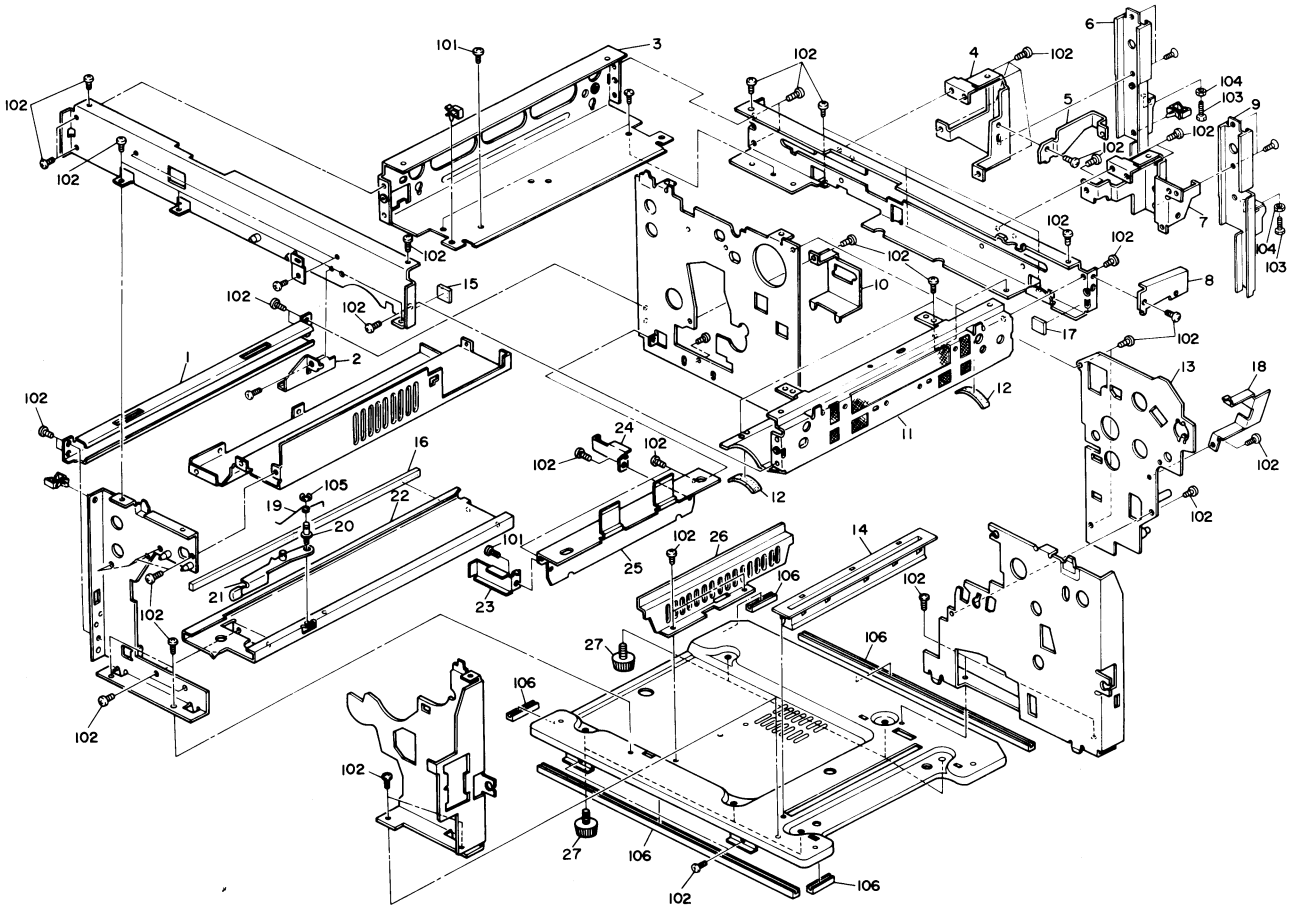

# 14. FRAME (A008)



| Index No. | Parts No. | Description | Q'ty Per Assembly |
|---|---|---|---|
| 1 | 5215 1133 | Left Stay | 1 |
| 2 | A008 3495 | Rail Guide - Development | 1 |
| 3 | A008 1905 | Left Stay - Large | 1 |
| 4 | A008 1672 | Left Bracket - Platen Cover | 1 |
| 5 | 5215 1673 | Cover Bracket | 1 |
| 6 | 5918 3881 | DF Mounting Bracket - Left | 1 |
| 7 | A008 1674 | Right Bracket - Platen Cover | 1 |
| 8 | 5215 1858 | Right Cover Holder | 1 |
| 9 | 5918 3890 | DF Mounting Bracket - Right | 1 |
| 10 | 5215 5825 | Fusing Connector Bracket | 1 |
| 11 | A008 1911 | Right Stay | 1 |
| 12 | 5215 1916 | Seal - Right Stay | 2 |
| 13 | A008 2251 | Rear Drum Support | 1 |
| 14 | 5922 2332 | Copier Relay Feed Guide | 1 |
| 15 | AA15 0003 | Mylar Seal - 42 x 56 | 1 |
| 16 | 5442 1146 | Seal - Fan Duct | 1 |
| 17 | 5215 1861 | Seal - 4.5 x 22 x 30 | 2 |
| 18 | A008 2290 | ID Sensor Bracket | 1 |
| 19 | 5442 4186 | Spring - Fusing Unit Release Lever | 1 |
| 20 | 5215 4444 | Pin | 1 |
| 21 | A008 4183 | Unit Lock Lever | 1 |
| 22 | A008 4181 | Fusing Unit Rail | 1 |
| 23 | 5215 5819 | Harness Cover Angle - Front | 1 |
| 24 | 5215 5820 | Harness Cover Angle - Rear | 1 |
| 25 | 5215 4502 | Exit Tray Bracket | 1 |
| 26 | 5215 5821 | Power Supply Unit Cover | 1 |
| 27 | 5419 1057 | Rubber Foot | 4 |

| Index No. | Parts No. | Description | Q'ty Per Assembly |
|---|---|---|---|
| 101 | 0434 0060W | Tapping Screw - M4 x 6 | |
| 102 | 0434 0080W | Tapping Screw - M4 x 8 | |
| 103 | 0584 0160B | Hexagon Bolt - M4 x 6 | |
| 104 | 0710 0040B | Hexagon Nut - M4 | |
| 105 | 0720 0040E | Retaining Ring - M4 | |
| 106 | 1005 0383 | Edging - B | |

# 15. DRIVE (A008)



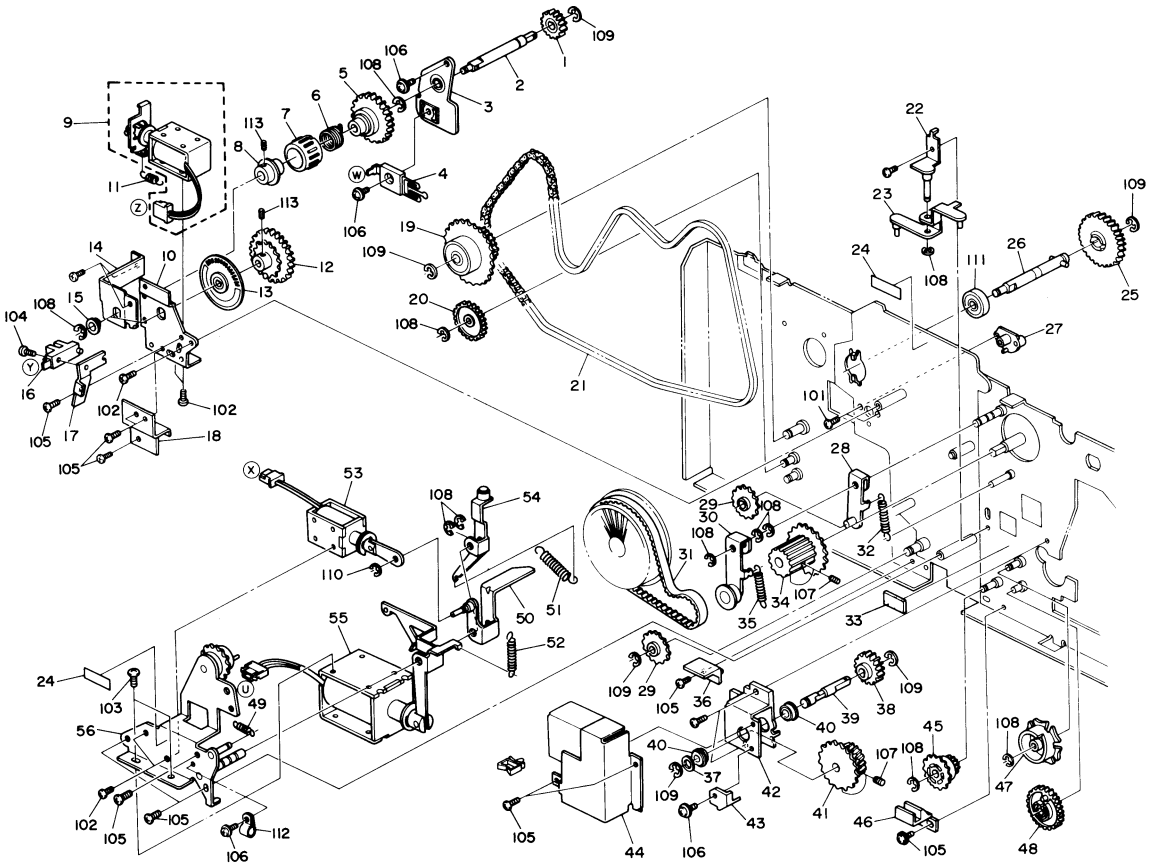

# 15. DRIVE (A008)

| Index No. | Parts No. | Description | Q'ty Per Assembly |
|---|---|---|---|
| 1 | 5205 3306 | Gear - 18T | 1 |
| 2 | 5215 3471 | Supply Shaft | 1 |
| 3 | 5215 3462 | Toner Supply Bracket | 1 |
| 4 | 5215 3486 | Bias Terminal | 1 |
| 5 | 5215 3476 | Gear - 26T | 1 |
| 6 | 5215 1104 | Spring - Clutch | 1 |
| 7 | 5215 1103 | Ratchet - Sleeve - Paper Feed | 1 |
| 8 | 5215 3469 | Boss - Toner Supply Clutch | 1 |
| 9 | 5447 3361 | Toner Supply Solenoid | 1 |
| 10 | 5215 3488 | Development Drive Holder | 1 |
| 11 | 5442 3233 | Spring - Drive Wheel | 1 |
| 12 | 5215 3475 | Sprocket - 19T | 1 |
| 13 | 5215 1090 | Pulse Generator Disk | 1 |
| 14 | 5215 3489 | Toner Supply Drive Holder | 1 |
| 15 | 5053 0447 | Bushing - 6 x 10 x 6 mm | 1 |
| 16 | 5205 5251 | L.E.D. Sensor Type - T | 1 |
| 17 | 5215 1116 | Pulse Generator Bracket | 1 |
| 18 | A008 2632 | Guide Plate | 1 |
| 19 | A008 2594 | Sprocket - 30T | 1 |
| 20 | 5215 2597 | Idle Gear - 30T | 1 |
| 21 | 0916 1222 | Bushed Roller Chain - 222P | 1 |
| 22 | 5215 3861 | Follower | 1 |
| 23 | 5215 3873 | Follower Shaft | 1 |
| 24 | 5434 7916 | High Voltage Decal | 2 |
| 25 | 5215 3470 | Gear - 42T | 1 |
| 26 | 5215 3472 | Development Shaft | 1 |
| 27 | 5442 3154 | Holder - Development Unit | 1 |
| 28 | 5205 1105 | Chain Tightener | 1 |
| 29 | 5442 1110 | Sprocket - 20T | 2 |
| 30 | 5205 1121 | Belt Tightener | 1 |
| 31 | AA04 3001 | Timing Belt - 92XL | 1 |
| 32 | 5215 1102 | Spring - Main Drive Tightener - 60Hz | 1 |
| 32 | 5442 1111 | Spring - Main Drive Tightener - 50Hz | 1 |
| 33 | 5215 3860 | Cushion | 1 |
| 34 | 5205 1083 | Sprocket - 30T/50Hz | 1 |

| Index No. | Parts No. | Description | Q'ty Per Assembly |
|---|---|---|---|
| 34 | 5205 1084 | Sprocket - 27T/60Hz | 1 |
| 35 | 5442 1111 | Spring - Main Drive Tightener | 1 |
| 36 | 5215 1106 | Idler Chain Stopper | 1 |
| 37 | AA13 2013 | Spacer - M8.2 | 1 |
| 38 | 5442 1099 | Gear - 24Z | 1 |
| 39 | 5205 1099 | Fusing Drive Shaft | 1 |
| 40 | 0805 3291 | Ball Bearing - 8 x 16 x 5 mm | 1 |
| 41 | AB01 7018 | Sprocket - 30T | 1 |
| 42 | A008 1096 | Fusing Drive Bracket | 1 |
| 43 | 5215 1105 | Fusing Chain Stopper | 1 |
| 44 | A008 1111 | Shielding Plate - Fusing | 1 |
| 45 | 5215 3865 | Sprocket - 20T | 1 |
| 46 | 5215 3951 | Chain Guide | 1 |
| 47 | 5215 3869 | Toner Collection Bottle Cam | 1 |
| 48 | 5215 3872 | Gear - 45T | 1 |
| 49 | 5413 1812 | Spring - Drum Return Arm | 1 |
| 50 | 5205 3971 | Pick-off Pawl Lever | 1 |
| 51 | AA06 0043 | Spring - Pressure Cleaning Blade | 1 |
| 52 | 5875 3026 | Spring - Original Feed Arm | 1 |
| 53 | 5205 3964 | Pick-off Solenoid | 1 |
| 54 | 5205 3635 | Pressure Lever | 1 |
| 55 | 5215 3639 | Cleaning Blade Solenoid | 1 |
| 56 | A008 2105 | Solenoid Bracket | 1 |

| Index No. | Parts No. | Description | Q'ty Per Assembly |
|---|---|---|---|
| 101 | 0314 0060W | Philips Pan Head Screw - M4 x 6 | |
| 102 | 0313 0050W | Philips Pan Head Screw - M3 x 5 | |
| 103 | 0314 0080W | Philips Pan Head Screw - M4 x 8 | |
| 104 | 0314 0120W | Philips Pan Head Screw - M4 x 12 | |
| 105 | 0434 0080W | Tapping Screw - M4 x 8 | |
| 106 | 0965 4008W | Tapping Screw with Flat Washer - M4 x 8 | |
| 107 | 0575 0060E | Hexagon Headless Set Screw - M5 x 6 | |
| 108 | 0720 0050E | Retaining Ring - M5 | |
| 109 | 0720 0060E | Retaining Ring - M6 | |
| 110 | 0720 0040E | Retaining Ring - M4 | |
| 111 | 0740 3008 | Ball Bearing | |
| 112 | 1105 0010 | Nylon Clip - 6N | |
| 113 | 0574 0060E | Hexagon Headless Set Screw - M4 x 6 | |

# 16. EXPANSION UNIT (A008)

April 1,'87

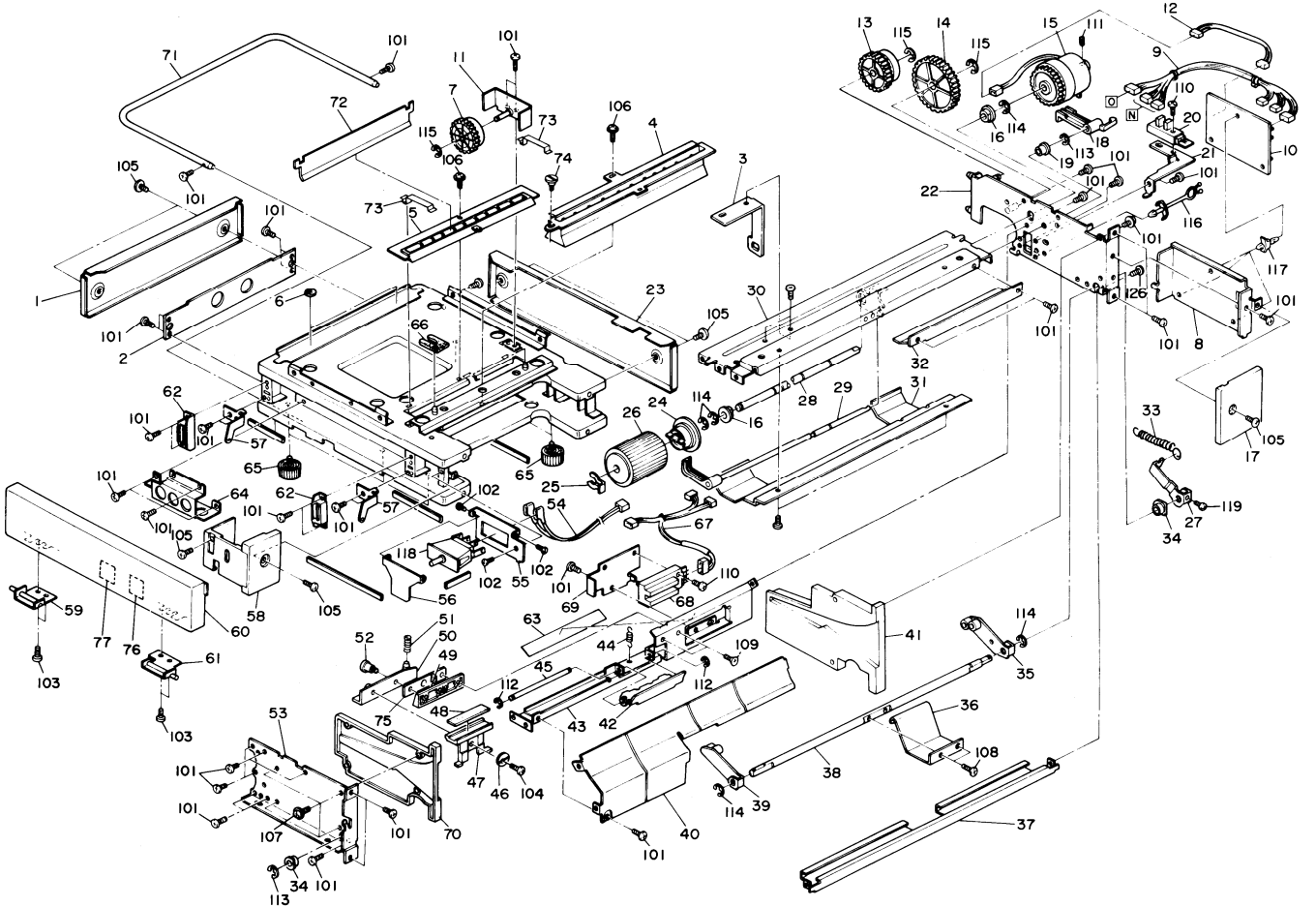

# 16. EXPANSION UNIT (A008)

| Index No. | Parts No. | Description | Q'ty Per Assembly |
|---|---|---|---|
| 1 | A008 4908 | Left Cover - Expansion Unit | 1 |
| 2 | 5922 2667 | Duplex Shipping Plate - Left | 1 |
| 3 | A008 4717 | Paper Feed Bracket | 1 |
| 4 | 5922 2336 | Expansion Guide Plate | 1 |
| 5 | 5922 2333 | Expansion Relay Feed Guide | 1 |
| 6 | 5922 2637 | Rubber Seal | 2 |
| 7 | 5922 2094 | Gear - 40T | 1 |
| 8 | 5922 2238 | PCB Bracket | 1 |
| 9 | 5922 5200 | Interface Harness | 1 |
| 10 | 5922 5101 | 3rd Paper Feed Board | 1 |
| 11 | 5922 2240 | Stud Bracket | 1 |
| 12 | 5922 5202 | Clutch Harness | 1 |
| 13 | 5922 2231 | Gear - 32T | 1 |
| 14 | 5922 2233 | Gear - 46T | 1 |
| 15 | AX21 0002 | Magnetic Clutch | 1 |
| 16 | 5053 0223 | Bushing - 8mm | 1 |
| 17 | A008 4916 | Rear Right Cover - Expansion Unit | 1 |
| 18 | 5215 2626 | Paper End Actuator | 1 |
| 19 | 5443 2668 | Bushing | 1 |
| 20 | 5205 5250 | L.E.D. Sensor Type S | 1 |
| 21 | 5922 2237 | Sensor Bracket | 1 |
| 22 | A008 4711 | Rear Side Plate | 1 |
| 23 | A008 4910 | Rear Cover - Expansion Unit | 1 |
| 24 | 5215 2618 | Feed Roller Hub | 1 |
| 25 | 5215 2621 | Snap Ring - M6 | 1 |
| 26 | 5215 2619 | Feed Roller | 1 |
| 27 | A008 2664 | Pressure Arm | 1 |
| 28 | 5922 2236 | Feed Roller Shaft | 1 |
| 29 | 5922 2340 | Paper End Feeler | 1 |
| 30 | A008 4715 | Paper Feed Guide | 1 |
| 31 | 5922 2229 | Upper Paper Guide | 1 |
| 32 | 5920 2139 | Sensor Feeler Cover | 1 |
| 33 | AA06 0080 | Spring - Lower Lift | 1 |
| 34 | 5215 2662 | Bushing | 1 |
| 35 | A008 2659 | Lower Rear Arm | 1 |

| Index No. | Parts No. | Description | Q'ty Per Assembly |
|---|---|---|---|
| 36 | A008 2656 | Lower Lift Arm | 1 |
| 37 | 5215 1134 | Lower Paper Feed Stay - Right | 1 |
| 38 | AA14 0081 | Shaft | 1 |
| 39 | A008 2657 | Lower Front Arm | 1 |
| 40 | 5922 2224 | 3rd Paper Feed Guide | 1 |
| 41 | A008 4812 | Rear Cassette Holder | 1 |
| 42 | 5215 2593 | Lower Arm | 1 |
| 43 | 5922 2346 | Pad Mounting Plate | 1 |
| 44 | 5215 2582 | Spring | 1 |
| 45 | 5215 2579 | Shaft | 1 |
| 46 | AA13 2014 | Spacer - Friction Pad Arm | 1 |
| 47 | A008 2583 | Pad Holder | 1 |
| 48 | AF03 3003 | Friction Pad | 1 |
| 49 | 5215 2673 | Fixing Pad Bracket | 1 |
| 50 | A008 2555 | Arm Pad Ass'y | 1 |
| 51 | 5215 2644 | Spring - Friction Pad | 1 |
| 52 | 5442 2642 | Shoulder Screw - M3 | 1 |
| 53 | 5922 2211 | Front Side Plate | 1 |
| 54 | 5922 5203 | Safety Switch Harness | 1 |
| 55 | 5922 2395 | Safety Switch Bracket | 1 |
| 56 | 5922 2396 | Switch Actuator | 1 |
| 57 | A008 4927 | Cover Bracket | 2 |
| 58 | A008 4915 | Front Right Cover - Expansion Unit | 1 |
| 59 | A008 4922 | Front Cover Hinge - Left | 1 |
| 60 | A008 4911 | Front Cover - Expansion Unit | 1 |
| 61 | A008 4920 | Front Cover Hinge - Right | 1 |
| 62 | 5054 0536 | Magnet Catch Ass'y | 2 |
| 63 | 5920 1511 | Mylar - 100 x 19 mm | 1 |
| 64 | A008 4650 | Duplex Shipping Plate - Front | 1 |
| 65 | 5419 1057 | Rubber Foot | 2 |
| 66 | 5922 2636 | Rubber Seal | 2 |
| 67 | 5922 5201 | 3rd Feed Sensor Harness | 1 |
| 68 | 5205 5253 | Photointerruptor Pack | 1 |
| 69 | 5922 2344 | Size Sensor Bracket | 1 |
| 70 | A008 4811 | Front Cassette Holder | 1 |

| Index No. | Parts No. | Description | Q'ty Per Assembly |
|---|---|---|---|
| 71 | 5922 2635 | Expansion Unit Handle | 1 |
| 72 | 5922 2334 | Lower Guide Plate | 1 |
| 73 | 5922 2335 | Guide Plate Holder | 1 |
| 74 | 5403 2075 | Stepped Screw | 1 |
| 75 | A008 4718 | Spacer - Paper Feed | 1 |
| 76 | A416 2456 | Decal - Removing Misfeed Paper C | 1 |
| 77 | A415 2457 | Decal Misfeed E | 1 |
| 101 | 0434 0080W | Tapping Screw - M4 x 8 | |
| 102 | 0434 0060W | Tapping Screw - M4 x 6 | |
| 103 | 0344 0060D | Philips Truss Head Screw - M4 x 6 | |
| 104 | 0313 0120W | Philips Pan Head Screw - M3 x 12 | |
| 105 | 0802 5094 | Tapping Truss Head Screw - M4 x 8 | |
| 106 | 0964 4008W | Tapping Screw with Flat Washer - M4 x 8 | |
| 107 | 0965 4008W | Tapping Screw with Flat Washer - M4 x 8 | |
| 108 | 0314 0080M | Philips Pan Head Screw - M4 x 8 | |
| 109 | 0323 0080W | Philips Sunken Head Screw - M3 x 8 | |
| 110 | 0314 0120W | Philips Pan Head Screw - M4 x 12 | |
| 111 | 0575 0060E | Hexagon Headless Set Screw - M5 x 6 | |
| 112 | 0720 0025E | Retaining Ring - M2.5 | |
| 113 | 0720 0030E | Retaining Ring - M3 | |
| 114 | 0720 0060E | Retaining Ring - M6 | |
| 115 | 0720 0050E | Retaining Ring -M5 | |
| 116 | 1105 0120 | Wire Clamp | |
| 117 | 1105 0159 | PCB Stud | |
| 118 | 1204 1226 | Push Switch | |
| 119 | 0313 0100W | Philips Pan Head Screw - M3 x 10 | |

# 17. COPIER RELAY (A008)



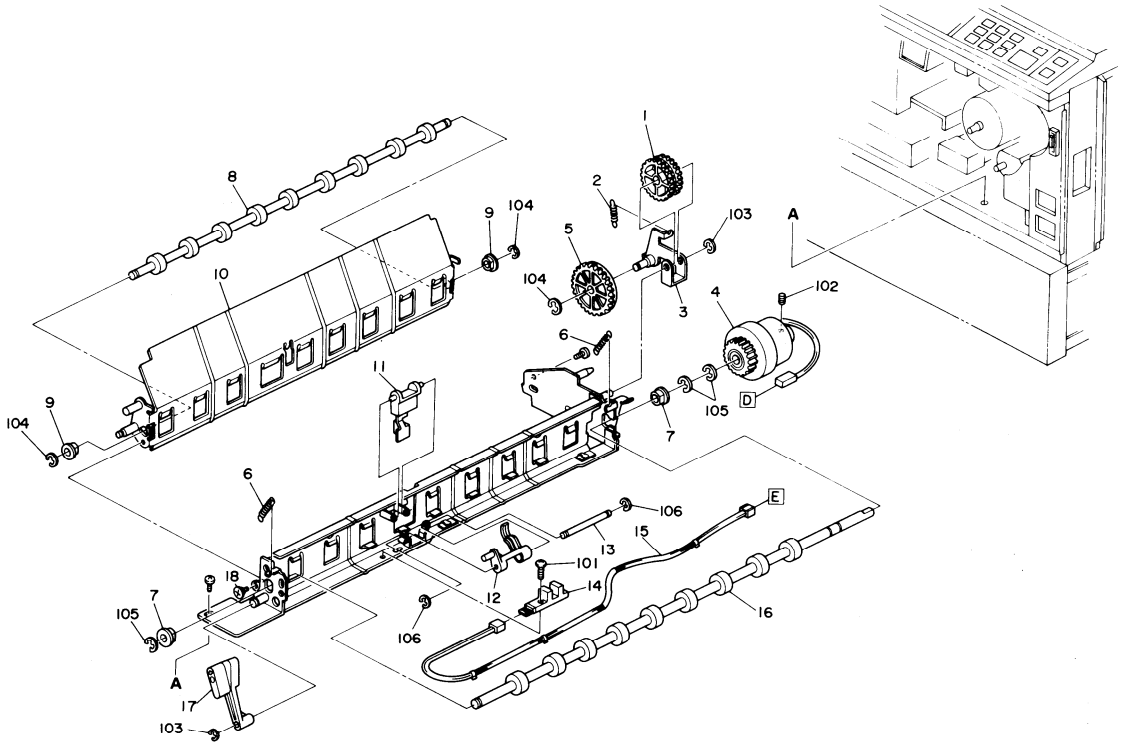

# 17. COPIER RELAY (A008)



| Index No. | Parts No. | Description | Q'ty Per Assembly |
|---|---|---|---|
| 1 | 5922 2093 | Gear - 28T | 1 |
| 2 | 5922 2095 | Spring - Gear | 1 |
| 3 | 5922 2090 | Stud Bracket | 1 |
| 4 | 5922 5300 | Relay Feed Clutch | 1 |
| 5 | 5922 2094 | Gear - 40T | 1 |
| 6 | 5922 2085 | Spring - Relay Guide | 2 |
| 7 | 5053 0223 | Bushing - 8mm | 2 |
| 8 | A008 4652 | Copier Relay Roller | 1 |
| 9 | 5053 0447 | Bushing - 6 x 10 x 6 mm | 2 |
| 10 | A008 4805 | Left Guide - Copier Relay Feed | 1 |
| 11 | 5922 2062 | Sensor Actuator | 1 |
| 12 | A008 4804 | Sensor Feeler | 1 |
| 13 | 5922 2067 | Feeler Shaft | 1 |
| 14 | 5205 5250 | L.E.D. Sensor Type S | 1 |
| 15 | 5922 5204 | Copier Relay Harness | 1 |
| 16 | 5922 2081 | Copier Relay Drive Roller | 1 |
| 17 | A008 4821 | Relay Guide Lever | 1 |
| 18 | 5206 2684 | Shoulder Screw - M3 | 1 |
| 101 | 0314 0120W | Philips Pan Head Screw - M4 x 12 | |
| 102 | 0574 0040E | Hexagon Headless Set Screw - M4 x 4 | |
| 103 | 0720 0040E | Retaining Ring - M4 | |
| 104 | 0720 0050E | Retaining Ring - M5 | |
| 105 | 0720 0060E | Retaining Ring - M6 | |
| 106 | 0720 0030E | Retaining Ring - M3 | |

| Index No. | Parts No. | Description | Q'ty Per Assembly |
|---|---|---|---|

# 18. ELECTRICAL COMPONENT I (A008)

April 1,'87

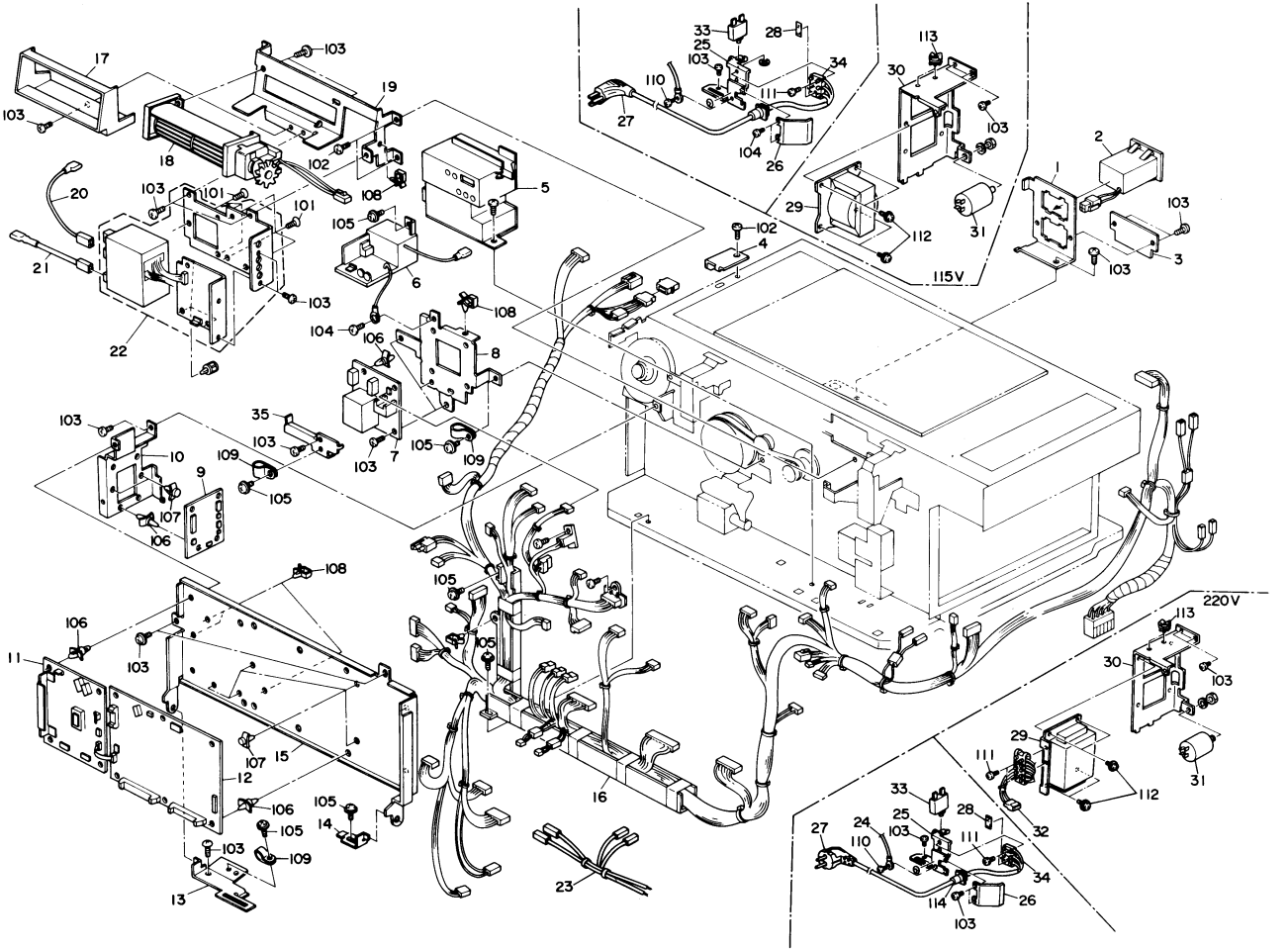

# 18. ELECTRICAL COMPONENT I (A008)



| Index No. | Parts No. | Description | Q'ty Per Assembly |
|---|---|---|---|
| 1 | 5215 5841 | Counter Bracket | 1 |
| 2 | 5439 5246 | Totalizer Ass'y | 1 |
| 3 | A008 5854 | Cover - Counter | 1 |
| 4 | 5205 1914 | Harness Holder | 1 |
| 5 | AZ32 0001 | Power Pack - T/S | 1 |
| 6 | AZ30 0010 | Power Pack - C | 1 |
| 7 | AZ50 0001 | Stabilizer | 1 |
| 8 | A008 5810 | Stabilizer Bracket | 1 |
| 9 | 5215 5240 | Feed Control Board | 1 |
| 10 | A008 5803 | Feed Control Holder | 1 |
| 11 | A008 5171 | Optics Board | 1 |
| 12 | A008 5115 | Main Board | 1 |
| 13 | A008 1290 | Support Plate - Rear Cover | 1 |
| 14 | 5215 5827 | Control Board Angle | 1 |
| 15 | A008 5814 | Main Board Bracket | 1 |
| 16 | A008 5447 | DC Harness - 220V | 1 |
| 16 | A008 5449 | DC Harness - 115V | 1 |
| 17 | A008 2269 | Outer Duct - Fan Motor | 1 |
| 18 | 5215 5423 | Outlet Fan Motor - AC 24/22W | 1 |
| 19 | A008 2268 | Bracket - Fan Motor | 1 |
| 20 | AZ43 0004 | Lead Wire - Bias Roller | 1 |
| 21 | AZ43 0003 | Lead Wire - PCC | 1 |
| 22 | AZ32 0002 | Power Pack - Q/BR/PCC | 1 |
| 23 | A008 5275 | Terminal Block Harness | 1 |
| 24 | AZ02 0001 | Ground Inductor | 1 |
| 25 | 5215 5807 | Power Cord Bracket - 115V | 1 |
| 25 | A008 5807 | Power Cord Bracket - 220/240V | 1 |
| 26 | 5215 1112 | Power Cord Bracket Cover | 1 |
| 27 | 2801 0040 | Power Supply Cord - 115V | 1 |
| 27 | 2801 0027 | Power Supply Cord - 220/240V | 1 |
| 28 | 5403 4335 | Decal - Terminal - 115V | 1 |
| 28 | 5447 4980 | Decal - Terminal - 220V | 1 |
| 29 | 5205 5405 | Transformer - 115V | 1 |
| 29 | AZ14 0002 | Transformer - 220V/240V | 1 |
| 30 | 5215 5832 | Transformer Bracket | 1 |

| Index No. | Parts No. | Description | Q'ty Per Assembly |
|---|---|---|---|
| 31 | 1602 0923 | Noise Filter - 115V | 1 |
| 31 | 5447 5690 | Noise Filter - 220/240V | 1 |
| 32 | 5205 5494 | Harness - Transformer 220/240V | 1 |
| 33 | 1107 0363 | Circuit Breaker - 115V | 1 |
| 33 | 1107 0550 | Circuit Breaker - 220/240V | 1 |
| 34 | 1101 0359 | Terminal - 3P | 1 |
| 35 | A008 2634 | Regist Holder | 1 |
| 101 | 0323 0080W | Philips Sunken Head Screw - M3 x 8 | |
| 102 | 0434 0060W | Tapping Screw - M4 x 6 | |
| 103 | 0434 0080W | Tapping Screw - M4 x 8 | |
| 104 | 0951 3006W | Philips Screw with Flat Washer - M3 x 6 | |
| 105 | 0964 4008W | Tapping Screw with Flat Washer - M4 x 8 | |
| 106 | 1105 0159 | PCB Stud | |
| 107 | 1106 0394 | Locking Support | |
| 108 | 1105 0087 | Clamp | |
| 109 | 1105 0010 | Nylon Clip - 6N | |
| 110 | 0801 1185 | Philips Truss Head Screw - M4 x 8 | |
| 111 | 0313 0160W | Philips Pan Head Screw - M3 x 16 | |
| 112 | 0315 0080W | Philips Pan Head Screw - M5 x 8 | |
| 113 | 1105 0201 | Harness Clamp | |
| 114 | 1106 0442 | Cord Stopper - 220/240V | |

# 19. ELECTRICAL COMPONENT II (A008)



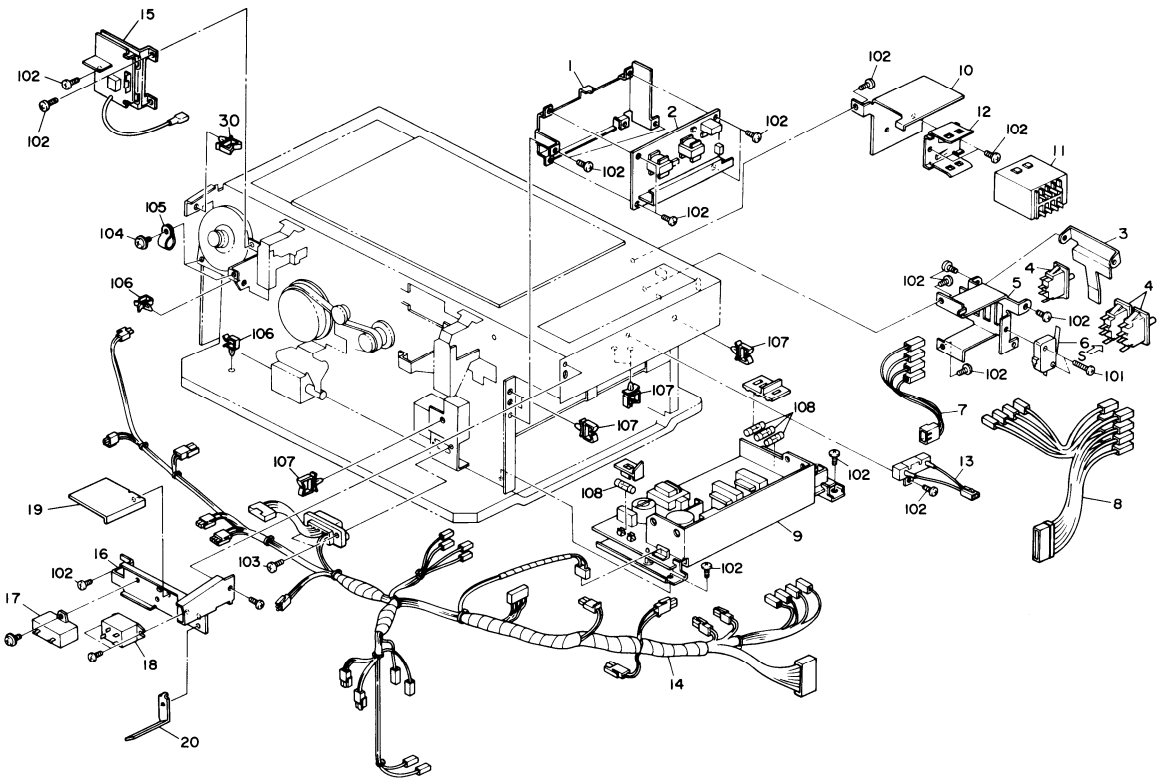

# 19. ELECTRICAL COMPONENT II (A008)



| Index No. | Parts No. | Description | Q'ty Per Assembly |
|---|---|---|---|
| 1 | A008 5804 | Bracket - AC Drive Board | 1 |
| 2 | AY11 0001 | AC Drive Board - 115V | 1 |
| 2 | AY11 0002 | AC Drive Board - 220V | 1 |
| 3 | 5215 5824 | Safety Switch Lever | 1 |
| 4 | 1204 1280 | Push Switch | 2 |
| 5 | 5215 5822 | Safety Switch Bracket | 1 |
| 6 | 1204 1078 | Microswitch | 1 |
| 7 | 5215 5454 | Front Door Harness | 1 |
| 8 | A008 5458 | Safety Switch Harness | 1 |
| 9 | AZ23 0001 | Power Supply Unit | 1 |
| 10 | A008 5813 | Power Relay Bracket | 1 |
| 11 | 1208 1029 | Power Relay | 1 |
| 12 | 1104 0224 | Relay Bracket | 1 |
| 13 | 5215 5436 | Cement Register | 1 |
| 14 | A008 5459 | AC Harness | 1 |
| 15 | AZ30 0009 | Power Pack - B | 1 |
| 16 | A008 1867 | Left Cover Holder | 1 |
| 17 | 1606 1484 | Capacitor - 16µF 220V | 1 |
| 17 | 1606 1485 | Capacitor - 16µF 220V | 1 |
| 18 | 5209 5450 | Relay - Cooling Fan Motor - 220V/240V | 1 |
| 18 | 1208 1151 | Relay - AC 250V - 115V | 1 |
| 19 | A008 1868 | Upper Cover Guide | 1 |
| 20 | A008 1869 | Left Cover Guide | 1 |

| Index No. | Parts No. | Description | Q'ty Per Assembly |
|---|---|---|---|
| 101 | 0313 0120W | Philips Pan Head Screw - M3 x 12 | |
| 102 | 0434 0080W | Tapping Screw - M4 x 8 | |
| 103 | 0802 5060 | Tapping Screw - M4 x 12 | |
| 104 | 0964 4008W | Tapping Screw with Flat Washer - M4 x 8 | |
| 105 | 1105 0010 | Nylon Clip - 6N | |
| 106 | 1105 0087 | Clamp | |
| 107 | 1105 0144 | Harness Clamp | |
| 108 | 1107 0415 | Fuse - 5A | |

# 20. MAIN BOARD (A008)

SYMBOL No. : PRINTED NUMBER ON THE BOARD
INDEX No. : REFERENCE NUMBER OF NEXT PAGE

### CAPACITOR

| SYMBOL NO. | INDEX NO. |
|---|---|
| C100 | 152 |
| C101 | 152 |
| C102 | 145 |
| C103 | 152 |
| C104 | 150 |
| C105 | 150 |
| C106 | 150 |
| C107 | 152 |
| C108 | 147 |
| C109 | 152 |
| C110 | 150 |
| C111 | 150 |
| C112 | 149 |
| C113 | 149 |
| C114 | 150 |
| C115 | 150 |
| C116 | 150 |
| C117 | 152 |
| C118 | 152 |
| C119 | 152 |
| C120 | 150 |
| C121 | 144 |
| C122 | 150 |
| C123 | 152 |
| C124 | 151 |
| C125 | 151 |
| C126 | 143 |
| C127 | 150 |
| C128 | 150 |
| C129 | 150 |
| C130 | 150 |
| C131 | 150 |
| C132 | 150 |
| C133 | 150 |
| C134 | 150 |
| C135 | 150 |
| C136 | 150 |
| C137 | 150 |
| C138 | 150 |
| C139 | 150 |
| C140 | 150 |
| C141 | 150 |
| C142 | 150 |
| C143 | 150 |
| C144 | 150 |
| C145 | 146 |
| C146 | 147 |
| C147 | 148 |

### CONNECTOR

| SYMBOL NO. | INDEX NO. |
|---|---|
| CN101 | 109 |
| CN102 | 109 |
| CN103 | 106 |
| CN104 | 110 |
| CN105 | 108 |
| CN106 | 105 |
| CN107 | 103 |
| CN108 | 102 |
| CN109 | 4 |
| CN110 | 107 |
| CN111 | 103 |
| CN112 | 105 |
| CN113 | 3 |
| CN113 | 104 |
| CN114 | 3 |
| CN114 | 104 |

| SYMBOL NO. | INDEX NO. |
|---|---|
| D100 | 114 |
| D101 | 115 |
| D102 | 115 |
| D103 | 115 |
| D104 | 115 |

| SYMBOL NO. | INDEX NO. |
|---|---|
| Q100 | 112 |

### TRANSISTOR ARRAY

| SYMBOL NO. | INDEX NO. |
|---|---|
| TA100 | 113 |

### OSCILLATOR

| SYMBOL NO. | INDEX NO. |
|---|---|
| OSC100 | 133 |

### RESISTOR

| SYMBOL NO. | INDEX NO. |
|---|---|
| R100 | 160 |
| R101 | 160 |
| R102 | 156 |
| R103 | 155 |
| R104 | 169 |
| R105 | 169 |
| R106 | 171 |
| R107 | 170 |
| R108 | 170 |
| R109 | 158 |
| R110 | 158 |
| R111 | 158 |
| R112 | 158 |
| R113 | 154 |
| R114 | 168 |
| R115 | 159 |
| R116 | 153 |
| R117 | 162 |
| R118 | 168 |
| R119 | 157 |
| R120 | 157 |
| R121 | 157 |
| R122 | 153 |
| R123 | 156 |
| R124 | 166 |
| R125 | 167 |
| R126 | 161 |
| R127 | 153 |
| R128 | 153 |
| R129 | 153 |
| R130 | 153 |
| R131 | 163 |
| R132 | 163 |
| R133 | 167 |
| R134 | 155 |
| R135 | 164 |
| R136 | 167 |
| R137 | 153 |
| R138 | 153 |
| R139 | 165 |
| C140 | 165 |

### RESISTOR ARRAY

| SYMBOL NO. | INDEX NO. |
|---|---|
| RAY100 | 134 |
| RAY101 | 134 |
| RAY102 | 137 |
| RAY103 | 137 |
| RAY104 | 136 |
| RAY105 | 137 |
| RAY106 | 137 |
| RAY107 | 138 |
| RAY108 | 135 |
| RAY109 | 140 |
| RAY110 | 139 |
| RAY111 | 138 |

### IC

| SYMBOL NO. | INDEX NO. |
|---|---|
| IC100 | 119 |
| IC101 | 119 |
| IC102 | 130 |
| IC103 | 2 |
| SOCKET | 111 |
| IC104 | 1 |
| SOCKET | 111 |
| IC105 | 128 |
| IC106 | 132 |
| IC107 | 121 |
| IC108 | 127 |
| IC109 | 123 |
| IC110 | 131 |
| IC111 | 117 |
| IC112 | 122 |
| IC113 | 118 |
| IC114 | 124 |
| IC115 | 129 |
| IC116 | 118 |
| IC117 | 125 |
| IC118 | 119 |
| IC119 | 129 |
| IC120 | 119 |
| IC121 | 120 |
| IC122 | 119 |
| IC123 | 125 |
| IC124 | 116 |
| IC125 | 117 |
| IC126 | 119 |
| IC127 | 119 |
| IC128 | 119 |
| IC129 | 126 |
| IC130 | 126 |

### RC ARRAY

| SYMBOL NO. | INDEX NO. |
|---|---|
| HB100 | 142 |
| HB101 | 142 |
| HB102 | 142 |
| HB103 | 142 |
| HB104 | 142 |
| HB105 | 142 |
| HB106 | 142 |

### POTENTIOMETER

| SYMBOL NO. | INDEX NO. |
|---|---|
| VR100 | 141 |

| SYMBOL NO. | INDEX NO. |
|---|---|
| TP101 | 101 |
| TP102 | 101 |
| TP103 | 101 |
| TP104 | 101 |
| TP105 | 101 |
| TP106 | 101 |
| TP107 | 101 |
| TP108 | 101 |

# 20. MAIN BOARD (A008)

| Index No. | Parts No. | Description | Q'ty Per Assembly |
|---|---|---|---|
| * | A008 5115 | Main Board | 1 |
| 1 | A008 5107 | IC - µPD27256D | 1 |
| 2 | A008 5108 | IC - µPD27128G | 1 |
| 3 | A008 5110 | RAM Board | 1 |
| 4 | AW00 0002 | Fiber Connector | 1 |
| 101 | 1101 0328 | Contact | |
| 102 | 1102 0903 | Terminal - 4P | |
| 103 | 1102 1567 | Connector - 2P | |
| 104 | 1102 2985 | Receptacle - 12P | |
| 105 | 1103 0347 | Connector - 8P | |
| 106 | 1103 1729 | Connector - 7P | |
| 107 | 1103 1730 | Connector - 8P | |
| 108 | 1103 3020 | Connector - 20P | |
| 109 | 1103 3025 | Connector - 50P | |
| 110 | 1103 3037 | Connector - 26P | |
| 111 | 1104 0271 | LSI Socket - 28P | |
| 112 | 1400 0072 | Transistor - 2SC372Y | |
| 113 | 1401 0391 | Transistor Array - PU4310 60V/3A | |
| 114 | 1401 0611 | Diode - 1S1588 | |
| 115 | 1402 0467 | Diode - S5566G | |
| 116 | 1407 0542 | IC - SN74LS00 | |
| 117 | 1407 0610 | IC - SN74LS32N | |
| 118 | 1407 0621 | IC - SN74LS08N | |
| 119 | 1407 0975 | IC - HD7407P | |
| 120 | 1407 1016 | IC - µPD8255AC-5 | |
| 121 | 1407 1026 | IC - SN74LS373N | |
| 121 | 1407 1083 | IC - HD74LS138P | |
| 123 | 1407 1334 | IC - µPD7810G | |
| 124 | 1407 1335 | IC - RF5G02-005 | |
| 125 | 1407 1348 | IC - TD62304P | |
| 126 | 1407 1535 | IC - TD62308AP | |
| 127 | 1407 1537 | IC - TC74HC14P | |
| 128 | 1407 1652 | IC - TD62307P | |
| 129 | 1407 2028 | IC - SN74LS06N | |
| 130 | 1408 0258 | IC - AN6914 | |
| 131 | 1408 0412 | IC - 7705CP | |
| 132 | 1408 0413 | IC - TL092CP | |
| 133 | 1503 0070 | Ceramic Oscillator - 10MHz | |
| 134 | 1601 7282 | Resistor Array - 150KOHM | |
| 135 | 1601 7348 | Resistor Array - 470OHM 1/8 ±5% | |
| 136 | 1601 7351 | Resistor Array - 3.3KOHM | |
| 137 | 1601 7352 | Resistor Array - 4.7KOHM | |
| 138 | 1601 7354 | Resistor Array - 10KOHM | |
| 139 | 1601 7360 | Resistor Array - 33KOHM 1/8W ±5% | |
| 140 | 1601 7374 | Resistor Array - 4.7KOHM ±5% 1/8W | |
| 141 | 1601 8385 | Variable Resistor - 30KOHM | |
| 142 | 1602 0934 | RC Array - CR01-R | |
| 143 | 1604 1378 | Capacitor - 1µF 50V | |
| 144 | 1604 1381 | Capacitor - 4.7µF 50V | |
| 145 | 1604 1382 | Capacitor - 10µF 50V | |
| 146 | 1604 1383 | Capacitor - 22µF 50V | |
| 147 | 1604 1386 | Capacitor - 100µF 50V | |
| 148 | 1605 0279 | Capacitor - 0.047µF 50V | |
| 149 | 1606 0996 | Capacitor - 470PF 50V | |
| 150 | 1606 0998 | Capacitor - 0.01µF 50V | |
| 151 | 1606 1184 | Capacitor - 27PF 50V | |
| 152 | 1606 1458 | Capacitor - 0.1µF 50V | |
| 153 | 1611 4102 | Resistor - 1KOHM 1/4T ±5% | |
| 154 | 1611 4103 | Resistor - 10KOHM 1/4T ±5% - 220/240V | |
| 155 | 1611 4104 | Resistor - 100KOHM 1/4T ±5% - 220/240V | |

| Index No. | Parts No. | Description | Q'ty Per Assembly |
|---|---|---|---|
| 156 | 1611 4105 | Resistor - 1MOHM 1/4T ±5% | |
| 157 | 1611 4124 | Resistor - 120KOHM 1/4T ±5% | |
| 158 | 1611 4183 | Resistor - 18KOHM 1/4T ±5% | |
| 159 | 1611 4220 | Resistor - 22OHM 1/4T ±5% | |
| 160 | 1611 4223 | Resistor - 22KOHM 1/4T ±5% | |
| 161 | 1611 4273 | Resistor - 27KOHM 1/4T ±5% | |
| 162 | 1611 4275 | Resistor - 2.7MOHM 1/4W ±5% | |
| 163 | 1611 4331 | Resistor - 330OHM 1/4T ±5% | |
| 164 | 1611 4332 | Resistor - 3.3KOHM 1/4T ±5% | |
| 165 | 1611 4431 | Resistor - 430OHM 1/4T ±5% | |
| 166 | 1611 4471 | Resistor - 470OHM 1/4T ±5% | |
| 167 | 1611 4472 | Resistor - 4.7KOHM 1/4T ±5% | |
| 168 | 1611 4562 | Resistor - 5.6KOHM 1/4T ±5% | |
| 169 | 1622 1001 | Resistor - 1KOHM 1/4T ±1% | |
| 170 | 1622 1202 | Resistor - 2KOHM 1/4T ±1% | |
| 171 | 1611 4473 | Resistor - 47KOHM 1/4 ±5% | |

# 21. OPTICS BOARD (A008)



SYMBOL No. : PRINTED NUMBER ON THE BOARD
INDEX No. : REFERFNCE NUMBER OF NEXT PAGE

RESISTOR

| SYMBOL NO. | INDEX NO. |
|---|---|
| R401 | 134 |
| R402 | 134 |
| R403 | 134 |
| R404 | 135 |
| R405 | 134 |
| R406 | 135 |
| R407 | 136 |
| R408 | 132 |
| R409 | 136 |
| R410 | 131 |
| R411 | 133 |
| R412 | 132 |
| R413 | 132 |
| R414 | 132 |
| R415 | 132 |
| R416 | 131 |
| R417 | 135 |
| R418 | 136 |
| R419 | 136 |
| R420 | 136 |
| R421 | 131 |
| R422 | 131 |
| R423 | 134 |
| R424 | 134 |
| R425 | 135 |
| R426 | 131 |
| R427 | 131 |
| R428 | 133 |
| R429 | 132 |

CAPACITOR

| SYMBOL NO. | INDEX NO. |
|---|---|
| C401 | 125 |
| C402 | 126 |
| C403 | 129 |
| C404 | 127 |
| C405 | 129 |
| C406 | 129 |
| C407 | 129 |
| C408 | 129 |
| C409 | 129 |
| C410 | 129 |
| C411 | 129 |
| C412 | 129 |
| C413 | 129 |
| C414 | 129 |
| C415 | 130 |
| C416 | 129 |
| C417 | 129 |
| C418 | 127 |
| C419 | 127 |
| C420 | 129 |
| C421 | 128 |
| C422 | 128 |
| C423 | 127 |

IC

| SYMBOL NO. | INDEX NO. |
|---|---|
| IC401 | 120 |
| IC402 | 120 |
| IC403 | 119 |
| IC404 | 1 |
| SOCKET | 108 |
| IC405 | 114 |
| IC406 | 117 |
| IC407 | 115 |
| IC408 | 116 |
| IC409 | 118 |
| IC410 | 121 |
| IC411 | 118 |

DIODE

| SYMBOL NO. | INDEX NO. |
|---|---|
| D401 | 112 |
| D402 | 112 |
| D403 | 112 |
| D404 | 112 |

TRANSISTOR

| SYMBOL NO. | INDEX NO. |
|---|---|
| Q401 | 110 |
| Q402 | 110 |
| Q403 | 109 |
| Q404 | 111 |
| Q405 | 109 |
| Q406 | 109 |
| Q407 | 111 |
| Q408 | 109 |

OSCILLATOR

| SYMBOL NO. | INDEX NO. |
|---|---|
| OSC401 | 122 |

POTENTIOMETER

| SYMBOL NO. | INDEX NO. |
|---|---|
| VR401 | 123 |
| VR402 | 123 |

ZENER DIODE

| SYMBOL NO. | INDEX NO. |
|---|---|
| ZD401 | 113 |

TEST PIN

| SYMBOL NO. | INDEX NO. |
|---|---|
| TP401 | 101 |
| TP402 | 101 |
| TP403 | 101 |
| TP404 | 101 |

RC ARRAY

| SYMBOL NO. | INDEX NO. |
|---|---|
| HB401 | 124 |

CONNECTOR

| SYMBOL NO. | INDEX NO. |
|---|---|
| CN401 | 102 |
| CN402 | 106 |
| CN403 | 107 |
| CN404 | 104 |
| CN405 | 105 |
| CN407 | 2 |
| CN408 | 3 |
| CN409 | 103 |
| CN410 | 103 |

# 21. OPTICS BOARD (A008)



| Index No. | Parts No. | Description | Q'ty Per Assembly |
|---|---|---|---|
| * | A008 5171 | Optics Board | 1 |
| 1 | A008 5193 | IC - µPD7811G | 1 |
| 2 | AW00 0003 | Fiber Connector - Red | 1 |
| 3 | AW00 0004 | Fiber Connector - White | 1 |
| 4 | A008 5175 | Heat Sink - Optics Board | 1 |
| 5 | A008 5181 | Harness - Optics Board | 1 |
| 101 | 1101 0328 | Terminal - 3P | |
| 102 | 1102 0675 | Connector - 6P | |
| 103 | 1102 1567 | Connecter - 2P | |
| 104 | 1103 0750 | Pin Housing - 2P | |
| 105 | 1103 1726 | Connector - 4P | |
| 106 | 1103 1730 | Connector - 8P | |
| 107 | 1103 1731 | Connector - 9P | |
| 108 | 1104 0339 | IC Socket - 64P | |
| 109 | 1400 0031 | Transistor - 2SC458 | |
| 110 | 1401 0392 | Transistor - 2SB1193 | |
| 111 | 1401 0393 | Transistor - 2SD1773 | |
| 112 | 1402 0110 | Diode - V06C | |
| 113 | 1402 0277 | Zener Diode - 1Z12 | |
| 114 | 1407 0508 | IC - HD74LS04N | |
| 115 | 1407 0520 | IC - HD74LS00 | |
| 116 | 1407 0605 | IC - TC4050BP | |
| 117 | 1407 1020 | IC - HD74LS02P | |
| 118 | 1407 1090 | IC - HD74LS74AP | |
| 119 | 1407 1534 | IC - µPD8253C-2 | |
| 120 | 1407 1535 | IC - TD62308AP | |
| 121 | 1408 0516 | IC - TLS2714 | |
| 122 | 1503 0181 | Oscillator - 10MHz | |
| 123 | 1601 8349 | Variable Resistor - 500Kc | |
| 124 | 1602 0934 | RC Array - CR01-R | |
| 125 | 1604 1355 | Capacitor - 220µF 10V | |
| 126 | 1604 1386 | Capacitor - 100µF 50V | |
| 127 | 1606 0867 | Capacitor - 3300PF 50V | |
| 128 | 1606 1333 | Capacitor - 2200PF 50V | |
| 129 | 1606 1336 | Capacitor - 1000PF 50V | |
| 130 | 1606 1458 | Capacitor - 0.1µF 50V | |
| 131 | 1611 4102 | Resistor - 1KOHM 1/4T ±5% | |
| 132 | 1611 4103 | Resistor - 10KOHM 1/4T ±5% | |
| 133 | 1611 4106 | Resistor - 10MOHM 1/4T ±5% | |
| 134 | 1611 4332 | Resistor - 3.3KOHM 1/4T ±5% | |
| 135 | 1611 4333 | Resistor - 33KOHM 1/4T ±5% | |
| 136 | 1611 4472 | Resistor - 4.7KOHM 1/4T ±5% | |

# 22. AC DRIVE BOARD (A008)



SYMBOL No. : PRINTED NUMBER ON THE BOARD
INDEX No. : REFERENCE NUMBER OF NEXT PAGE

### NOISE KILLER

| SYMBOL NO. | INDEX NO. |
|---|---|
| CR501 | |
| (115V) | 120 |
| (220V) | 121 |
| CR502 | |
| (115V) | 120 |
| (120V) | 121 |
| CR503 | |
| (115V) | 120 |
| (220V) | 121 |

### TRIAC

| SYMBOL NO. | INDEX NO. |
|---|---|
| TRC501 | 114 |
| TRC502 | 113 |
| TRC503 | 110 |

### DIODE

| SYMBOL NO. | INDEX NO. |
|---|---|
| D501 | 107 |

### COIL

| SYMBOL NO. | INDEX NO. |
|---|---|
| L501 | 128 |

### RESISTOR

| SYMBOL NO. | INDEX NO. |
|---|---|
| R501 | 131 |
| R502 | 129 |
| R503 | 136 |
| R504 | 137 |
| R505 | 134 |
| R506 | 129 |
| R507 | 129 |
| R508 | 129 |
| R509 | 129 |
| R510 | 117 |
| R511 | 135 |
| R512 | 133 |
| R513 | 133 |
| R514 | 133 |
| R515 | 130 |
| R516 | 130 |
| R517 | 130 |
| R518 | |
| (120V) | 118 |
| R519 | 118 |
| R520 | 118 |
| R521 | 132 |
| R522 | 132 |
| R523 | 132 |

### CONNECTOR

| SYMBOL NO. | INDEX NO. |
|---|---|
| CN501 | 104 |
| CN502 | 103 |
| CN503 | 102 |
| CN504 | 101 |

### RELAY

| SYMBOL NO. | INDEX NO. |
|---|---|
| RA501 | 105 |

### IC

| SYMBOL NO. | INDEX NO. |
|---|---|
| IC501 | 115 |

| SYMBOL NO. | INDEX NO. |
|---|---|
| DB501 | 109 |
| DB502 | 109 |
| DB503 | 109 |
| DB504 | 109 |
| DB505 | 112 |

### CAPACITOR

| SYMBOL NO. | INDEX NO. |
|---|---|
| C501 | 123 |
| C502 | 122 |
| C503 | 122 |
| C504 | 122 |
| C505 | |
| (115V) | 126 |
| (120V) | 124 |
| C506 | |
| (115V) | 125 |
| (220V) | 127 |

### PHOTO THYRISTOR

| SYMBOL NO. | INDEX NO. |
|---|---|
| PC501 | 108 |
| PC502 | 108 |
| PC503 | 111 |

### ZENER DIODE

| SYMBOL NO. | INDEX NO. |
|---|---|
| ZD501 | 106 |

### POTENTIOMETER

| SYMBOL NO. | INDEX NO. |
|---|---|
| VR101 | 119 |

# 22. AC DRIVE BOARD (A008)



| Index No. | Parts No. | Description | Q'ty Per Assembly |
|---|---|---|---|
| * | AY11 0001 | AC Drive Board - 115V | 1 |
| * | AY11 0002 | AC Drive Board - 220/240V | 1 |
| 1 | 5215 5222 | Transformer - 100/25V | 1 |
| 101 | 1102 2113 | Connector - 2P | |
| 102 | 1103 0701 | Connector | |
| 103 | 1103 1724 | Connector - 2P | |
| 104 | 1103 1731 | Connector - 9P | |
| 105 | 1208 1034 | Relay - DC24V | |
| 106 | 1402 0360 | Zener Diode - HZ20 | |
| 107 | 1402 0467 | Diode - S5566G | |
| 108 | 1405 0127 | Photothyristor - TLP541G | |
| 109 | 1405 0130 | Rectifier - 400V/10A IG4B42 | |
| 110 | 1405 0148 | Triac - 600V - 16A - BCR | |
| 111 | 1405 0151 | Photothyristor - TLP545J | |
| 112 | 1405 0152 | Rectifier - 1J4B42 | |
| 113 | 1405 0156 | Triac - 400V/8A | |
| 114 | 1405 0157 | Triac - 400V/10A | |
| 115 | 1408 0233 | IC - HA17903PS | |
| 117 | 1601 2844 | Resistor - 1.8KOHM 1/2W | |
| 118 | 1601 7468 | Resistor Array - 100OHM 1/2W | |
| 119 | 1601 8185 | Variable Resistor - 200OHM 0.5W | |
| 120 | 1602 0975 | Noise Killer - 0.1µF, 120OHM | |
| 121 | 1602 0976 | Noise Killer - 0.1µF, 120OHM | |
| 122 | 1605 0280 | Capacitor - 0.01µF 50V | |
| 123 | 1606 0689 | Capacitor - 0.01µF 50V | |
| 124 | 1606 1495 | Capacitor - 0.1µF 250V | |
| 125 | 1606 1496 | Capacitor - 0.1µF 400V | |
| 126 | 1606 1497 | Capacitor - 0.047µF 125V | |
| 127 | 1606 1542 | Capacitor - 0.22µF 250V | |
| 128 | 1607 0218 | Inductor - 6660µF | |
| 129 | 1611 4103 | Resistor - 10KOHM 1/4T ±5% | |
| 130 | 1611 4223 | Resistor - 22KOHM 1/4T ±5% | |
| 131 | 1611 4562 | Resistor - 5.6KOHM 1/4T ±5% | |
| 132 | 1611 4820 | Resistor - 82OHM 1/4T ±5% | |
| 133 | 1611 6222 | Resistor - 2.2KOHM 1/2T ±5% | |
| 134 | 1622 1203 | Resistor - 120KOHM 1/4T ±1% | |
| 135 | 1622 1800 | Resistor - 185OHM 1/4W ±1% | |
| 136 | 1622 4703 | Resistor - 470OHM 1/4W ±1% | |
| 137 | 1622 8202 | Resistor - 82KOHM 1/4W ±1% | |

# 23. PAPER FEED BOARD (A008)



SYMBOL No. : PRINTED NUMBER ON THE BOARD
INDEX No. : REFERENCE NUMBER OF NEXT PAGE

CAPACITOR

| SYMBOL NO. | INDEX NO. |
|---|---|
| C601 | 112 |
| C602 | 112 |
| C603 | 112 |
| C604 | 111 |

CONNECTOR

| SYMBOL NO. | INDEX NO. |
|---|---|
| CN601 | 104 |
| CN602 | 102 |
| CN603 | 101 |
| CN604 | 107 |
| CN605 | 106 |
| CN606 | 103 |
| CN607 | 105 |

DIODE

| SYMBOL NO. | INDEX NO. |
|---|---|
| D601 | 108 |
| D602 | 108 |
| D603 | 108 |
| D604 | 108 |
| D605 | 108 |
| D606 | 108 |
| D607 | 108 |
| D608 | 108 |
| D609 | 108 |
| D610 | 108 |
| D611 | 108 |
| D612 | 108 |
| D613 | 108 |

IC

| SYMBOL NO. | INDEX NO. |
|---|---|
| IC601 | 109 |
| IC602 | 109 |

RESISTOR

| SYMBOL NO. | INDEX NO. |
|---|---|
| R601 | 113 |
| R602 | 113 |

RESISTOR ARRAY

| SYMBOL NO. | INDEX NO. |
|---|---|
| RAY601 | 119 |

# 23. PAPER FEED BOARD (A008)



| Index No. | Parts No. | Description | Q'ty Per Assembly |
|---|---|---|---|
| * | 5215 5240 | Feed Control Board | 1 |
| 101 | 1103 1725 | Connector - 3P | |
| 102 | 1103 1729 | Connector - 7P | |
| 103 | 1103 1731 | Connector - 9P | |
| 104 | 1103 1735 | Connector - 13P | |
| 105 | 1103 1739 | Connector - 3P | |
| 106 | 1103 1753 | Connector - 3P | |
| 107 | 1103 1757 | Connector - 7P | |
| 108 | 1401 0611 | Diode - 1S1588 | |
| 109 | 1408 0200 | IC - TA75339P | |
| 110 | 1601 7374 | Resistor Array - 4.7KOHM | |
| 111 | 1604 1382 | Capacitor - 10µF 50V | |
| 112 | 1606 0998 | Capacitor - 0.01µF 50V | |
| 113 | 1611 4103 | Resistor - 10KOHM 1/4T ±5% | |

| Index No. | Parts No. | Description | Q'ty Per Assembly |
|---|---|---|---|

# 24. 3RD PAPER FEED BOARD (A008)



SYMBOL No. : PRINTED NUMBER ON THE BOARD
INDEX No. : REFERENCE NUMBER OF NEXT PAGE

CONNECTOR

| SYMBOL NO. | INDEX NO. |
|---|---|
| CN901 | 106 |
| CN902 | 101 |
| CN903 | 102 |
| CN904 | 106 |
| CN905 | 101 |
| CN906 | 102 |
| CN907 | 103 |
| CN908 | 105 |
| CN909 | 107 |
| CN910 | 109 |
| CN911 | 104 |
| CN912 | 108 |

DIODE

| SYMBOL NO. | INDEX NO. |
|---|---|
| D901 | 110 |
| D902 | 110 |
| D903 | 110 |
| D904 | 110 |
| D905 | 110 |
| D906 | 110 |
| D907 | 110 |
| D908 | 110 |
| D909 | 110 |
| D910 | 110 |
| D911 | 111 |
| D912 | 111 |

# 24. 3RD PAPER FEED BOARD (A008)



| Index No. | Parts No. | Description | Q'ty Per Assembly |
|---|---|---|---|
| * | 5922 5101 | 3rd Paper Feed Board | 1 |
| 101 | 1102 2365 | Connector - 6P | |
| 102 | 1102 2366 | Connector - 8P | |
| 103 | 1103 1724 | Connector - 2P | |
| 104 | 1103 1726 | Connector - 4P | |
| 105 | 1103 1729 | Connector - 7P | |
| 106 | 1103 1731 | Connector - 9P | |
| 107 | 1103 1739 | Connector - 3P | |
| 108 | 1103 1741 | Connector - 5P | |
| 109 | 1103 1752 | Connector - 2P | |
| 110 | 1401 0825 | Diode - 1SS176 | |
| 111 | 1401 0467 | Diode - S5566G | |

| Index No. | Parts No. | Description | Q'ty Per Assembly |
|---|---|---|---|

# 25. DC HARNESS (A008)



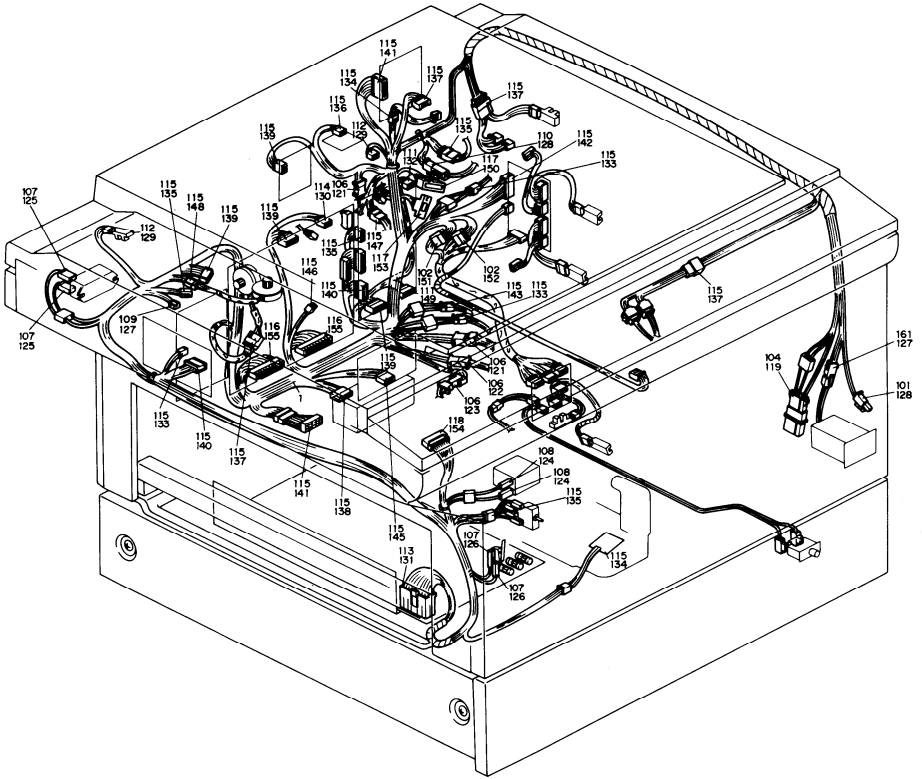

# 25. DC HARNESS (A008)



| Index No. | Parts No. | Description | Q'ty Per Assembly |
|---|---|---|---|
| 1 | A008 5447 | DC Harness - 220/240V | 0 |
| 1 | A008 5449 | DC Harness - 115V | 0 |
| 101 | 1100 1240 | Socket - MATE-N-LOCK | |
| 102 | 1100 1328 | Contact | |
| 103 | 1402 0388 | Diode - S5566G | |
| 104 | 1100 0844 | Socket - MATE-N-LOCK | |
| 105 | 1100 1155 | Contact | |
| 106 | 1100 1159 | Socket - MATE-N-LOCK | |
| 107 | 1100 1169 | Fastening Receptacle | |
| 108 | 1100 1172 | Fastening Receptacle | |
| 109 | 1100 1238 | Pin - MATE-N-LOCK | |
| 110 | 1100 1241 | Socket - MATE-N-LOCK | |
| 111 | 1100 1247 | Terminal | |
| 112 | 1100 1249 | Receptacle Terminal | |
| 113 | 1100 1270 | Fastening Receptacle | |
| 114 | 1100 1278 | Terminal | |
| 115 | 1100 1327 | Contact | |
| 116 | 1100 1348 | Pin Contact | |
| 117 | 1100 1356 | Pin Contact | |
| 118 | 1100 1421 | Contact | |
| 119 | 1102 0185 | Connector - 4P | |
| 120 | 1102 1286 | Connector | |
| 121 | 1102 1306 | Connector - 3P | |
| 122 | 1102 1396 | Connector - 2P | |
| 123 | 1102 1397 | Connector - 2P | |
| 124 | 1102 1404 | Receptacle Housing | |
| 125 | 1102 1407 | Receptacle Housing - 1P | |
| 126 | 1102 1408 | Connector - 1P | |
| 127 | 1102 1509 | Connector - 4P | |
| 128 | 1102 1515 | Connector - 2P | |

| Index No. | Parts No. | Description | Q'ty Per Assembly |
|---|---|---|---|
| 129 | 1102 1620 | Connector - 3P | |
| 130 | 1102 1632 | Connector - 4P | |
| 131 | 1102 1785 | Connector - 11P | |
| 132 | 1102 1896 | Connector - 2P | |
| 133 | 1102 1910 | Connector - 2P | |
| 134 | 1102 1911 | Connector - 3P | |
| 135 | 1102 1912 | Connector - 4P | |
| 136 | 1102 1913 | Connector - 5P | |
| 137 | 1102 1914 | Connector - 6P | |
| 138 | 1102 1915 | Connector - 7P | |
| 139 | 1102 1916 | Connector - 8P | |
| 140 | 1102 1917 | Connector - 9P | |
| 141 | 1102 1918 | Connector - 10P | |
| 142 | 1102 1921 | Connector - 13P | |
| 143 | 1102 1924 | Connector - 2P | |
| 144 | 1102 1926 | Connector - 4P | |
| 145 | 1102 1927 | Connector - 5P (Red) | |
| 146 | 1102 1938 | Connector - 2P | |
| 147 | 1102 1939 | Connector - 3P | |
| 148 | 1102 1942 | Connector - 6P | |
| 149 | 1102 2061 | Connector - 6P | |
| 150 | 1102 2278 | Connector - 18P | |
| 151 | 1102 2369 | Connector - 6P | |
| 152 | 1102 2370 | Connector - 8P | |
| 153 | 1102 2974 | Connector - 6P | |
| 154 | 1102 2999 | Receptacle Housing | |
| 155 | 1103 0657 | Connector - 50P | |

# 26. AC HARNESS (A008)

April 1,'87

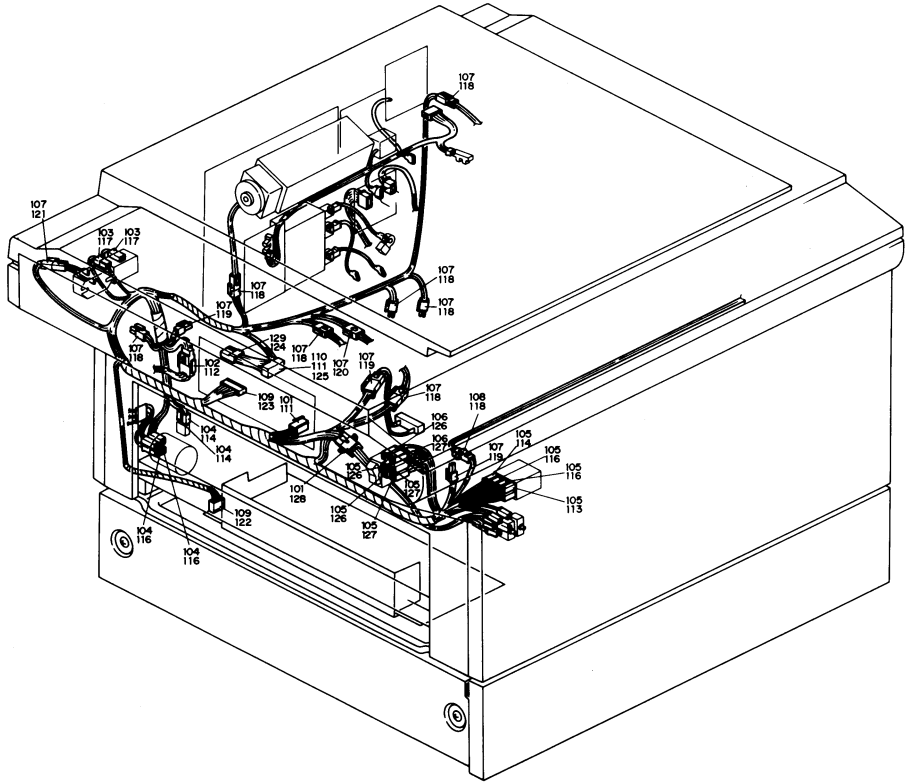

# 26. AC HARNESS (A008)



| Index No. | Parts No. | Description | Q'ty Per Assembly |
|---|---|---|---|
| * | A008 5459 | AC Harness | 1 |
| 101 | 1100 0864 | Housing - AWG14-20 | |
| 102 | 1100 0916 | Pin - MATE-N-LOCK | |
| 103 | 1100 1169 | Fastening Receptacle | |
| 104 | 1100 1170 | Positive Lock Receptacle | |
| 105 | 1100 1171 | Fastening Receptacle | |
| 106 | 1100 1172 | Fastening Receptacle | |
| 107 | 1100 1240 | Socket - MATE-N-LOCK | |
| 108 | 1100 1241 | Socket - MATE-N-LOCK | |
| 109 | 1100 1247 | Terminal | |
| 110 | 1100 1341 | Pin Contact | |
| 111 | 1100 1345 | Pin Contact | |
| 112 | 1102 0782 | Connector - 4P | |
| 113 | 1102 1401 | Receptacle Housing - 1P | |
| 114 | 1102 1402 | Receptacle Housing - 1P | |
| 115 | 1102 1403 | Receptacle Housing | |
| 116 | 1102 1404 | Receptacle Housing | |
| 117 | 1102 1408 | Connector - 1P | |
| 118 | 1102 1515 | Connector - 2P | |
| 119 | 1102 1532 | Connector - 2P | |
| 120 | 1102 1533 | Connector - 3P | |
| 121 | 1102 1559 | Connector - 2P (Black) | |
| 122 | 1102 1815 | Connector - 3P | |
| 123 | 1102 1889 | Connector - 6P | |
| 124 | 1102 1969 | Connector - 10P | |
| 125 | 1102 2099 | Connector - 12P | |
| 126 | 1102 3202 | Contact | |
| 127 | 1102 3203 | Contact | |
| 128 | 1102 0948 | Housing - 4P | |
| 129 | 1100 1328 | Contact | |

| Index No. | Parts No. | Description | Q'ty Per Assembly |
|---|---|---|---|

# 27. EXPANSION HARNESS (A008)



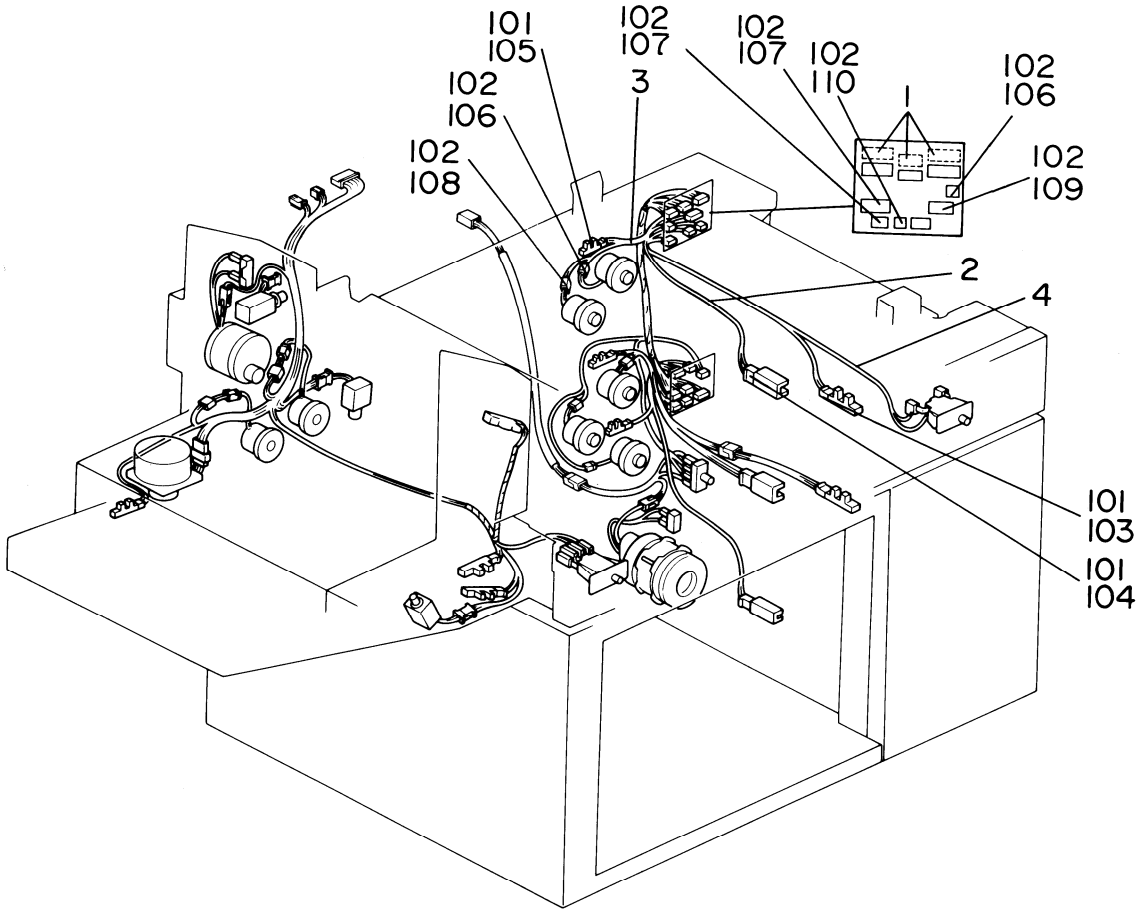

# 27. EXPANSION HARNESS (A008)



| Index No. | Parts No. | Description | Q'ty Per Assembly |
|---|---|---|---|
| 1 | 5922 5200 | Interface Harness | 1 |
| 2 | 5922 5201 | 3rd Feed Sensor Harness | 1 |
| 3 | 5922 5202 | Clutch Harness | 1 |
| 4 | 5922 5203 | Safety Switch Harness | 1 |
| 101 | 1100 1249 | Receptacle Terminal | |
| 102 | 1100 1327 | Contact | |
| 103 | 1102 1620 | Receptacle Housing - 3P | |
| 104 | 1102 1623 | Receptacle Housing - 7P | |
| 105 | 1102 1786 | Connector - 3P | |
| 106 | 1102 1910 | Connector - 2P | |
| 107 | 1102 1915 | Connector - 7P | |
| 108 | 1102 1924 | Connector - 2P | |
| 109 | 1102 1927 | Connector - 5P (Red) | |
| 110 | 1102 1938 | Connector - 2P | |

| Index No. | Parts No. | Description | Q'ty Per Assembly |
|---|---|---|---|

# 28. DECAL AND DOCUMENT (A008)

1

A2

2

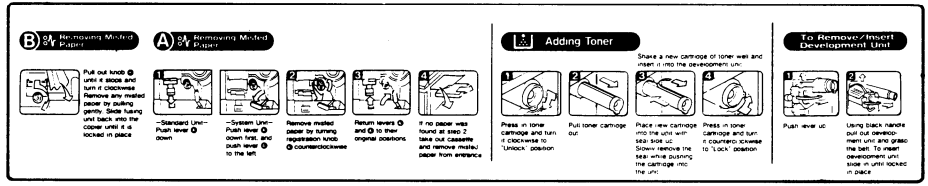


3



4



5

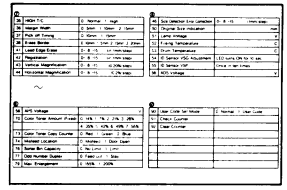

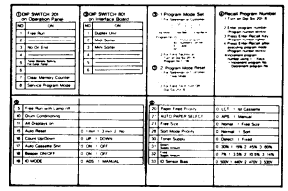

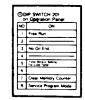

6

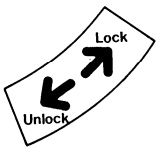


7

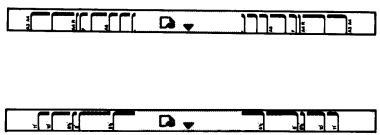

8

B1

9

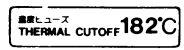

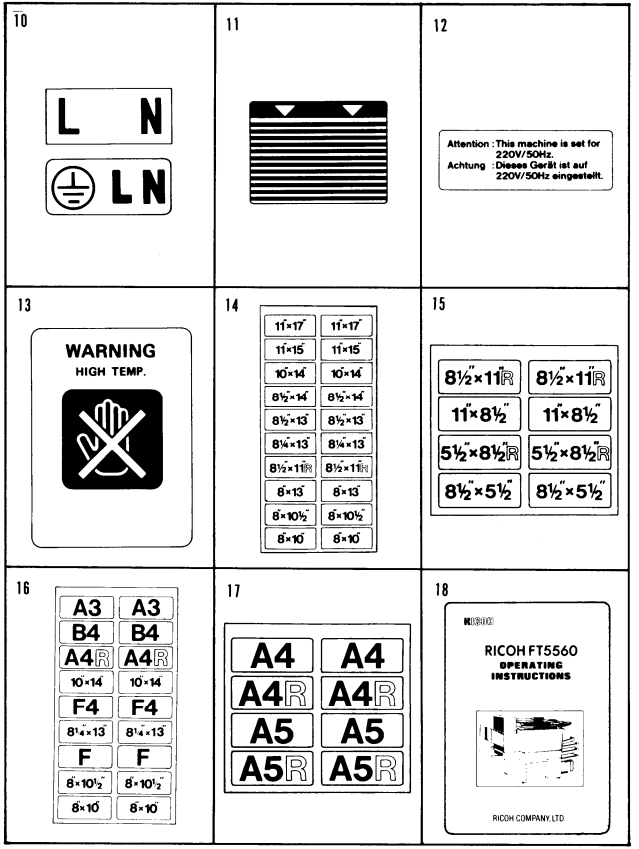


| Index No. | Parts No. | Description | Q'ty Per Assembly |
|---|---|---|---|
| * | A008 8671 | Decal Sheet - German | 1 |
| * | A008 8672 | Decal Sheet - French | 1 |
| * | A008 8673 | Decal Sheet - Italian | 1 |
| * | A008 8674 | Decal Sheet - Spanish | 1 |
| 1 | AA00 1022 | Decal - A2 | 1 |
| 2 | AA00 1026 | Decal - A | 1 |
| 3 | AA00 1031 | Decal - Front Scale - LT/LDG | 1 |
| 3 | AA00 1024 | Decal - Front Scale - A4/A3 | 1 |
| 4 | AA00 1032 | Decal - Rear Scale - LT/LDG | 1 |
| 4 | AA00 1025 | Decal - Rear Scale - A4/A3 | 1 |
| 5 | A008 5664 | Decal - S.P. Mode | 1 |
| 6 | AA00 1029 | Decal - Toner Cartridge | 1 |
| 7 | AA00 2012 | Decal - Manual Feed - LT/LDG | 1 |
| 7 | AA00 2013 | Decal - Manual Feed - A4/A3 | 1 |
| 8 | AA00 1039 | Decal - B1 | 1 |
| 9 | 5215 4211 | Decal - Thermofuse | 1 |
| 10 | 5403 4335 | Decal - Terminal 115V | 1 |
| 10 | 5447 4980 | Decal - Terminal 220V | 1 |
| 11 | AA00 2010 | Decal - Paper Level | 3 |
| 12 | 5442 1372 | Decal - Power Source 220V | 1 |
| 13 | 5442 4421 | Decal - Small | 2 |
| 14 | AA00 2017 | Decal Sheet - Large - LT/LDG | 1 |
| 15 | AA00 2015 | Decal Sheet - Small - LT/LDG | 1 |
| 16 | AA00 2016 | Decal Sheet - Large - A4/A3 | 1 |
| 17 | AA00 2018 | Decal Sheet - Small - A4/A3 | 1 |
| 18 | A008 8600 | Operating Instructions - English | 1 |
| 18 | A008 8601 | Operating Instructions - German | 1 |
| 18 | A008 8602 | Operating Instructions - French | 1 |
| 18 | A008 8603 | Operating Instructions - Italian | 1 |
| 18 | A008 8604 | Operating Instructions - Spanish | 1 |

# 29. SPECIAL TOOL (A008)



| | | | | | |
|---|---|---|---|---|---|
| 1 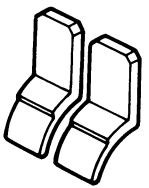 | 2 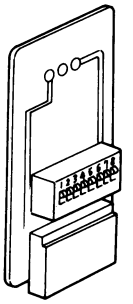 | 3 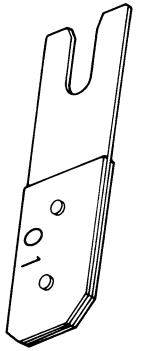 | 4 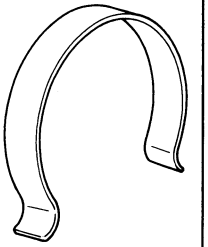 | 5 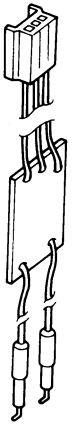 | 6 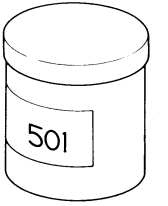  |
| 7 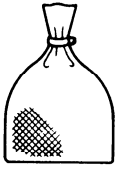 | 8 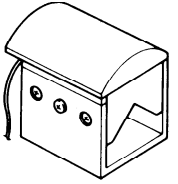 | 9 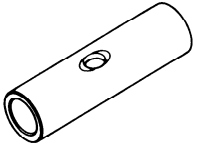 | 10 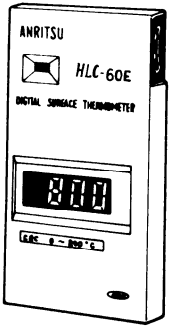  | 11 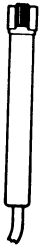 | 12 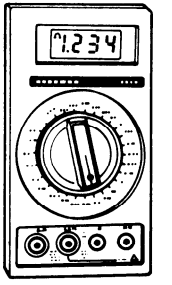  |

# 29. SPECIAL TOOL (A008)

April 1,'87

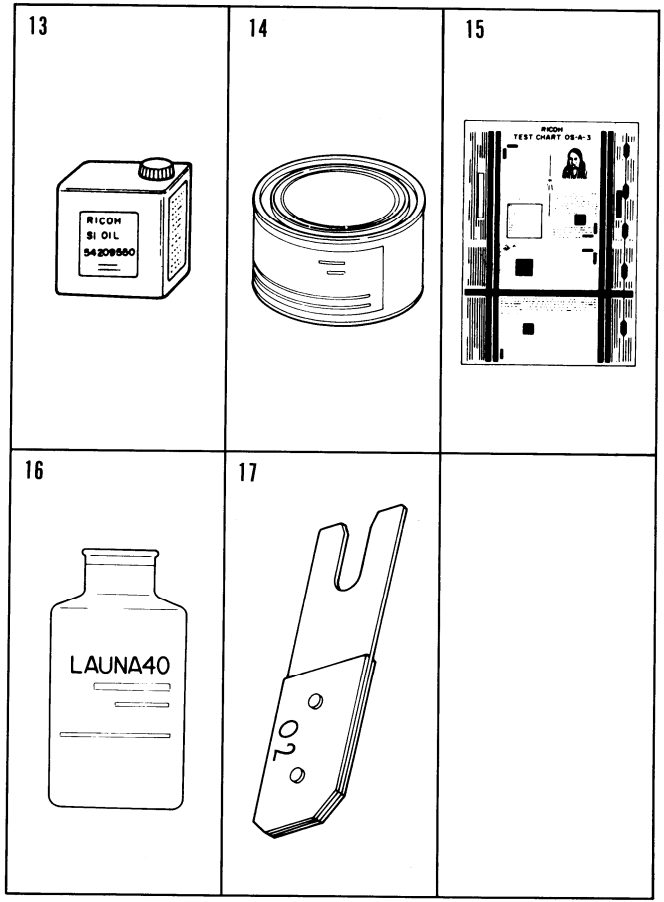


| Index No. | Parts No. | Description | Q'ty Per Assembly |
|---|---|---|---|
| 1 | 5215 9500 | DG Gauge (2 PCS/1 Set) | 1 |
| 2 | 5205 9601 | Switching Board | 1 |
| 3 | 5205 9101 | Gap Gauge | 1 |
| 4 | 5205 9111 | Omega Clamp | 1 |
| 5 | 5206 9600 | Sensor checker | 1 |
| 6 | 5203 9501 | Grease 501 | 1 |
| 7 | 5442 9101 | Setting Powder | 1 |
| 8 | 5442 9106 | Drum Shoe | 1 |
| 9 | 5447 9104 | Shoe Adaptor | 1 |
| 10 | 5420 9504 | Thermo Meter - HLC60-E | 1 |
| 11 | 5420 9505 | Probe - HLC60-E | 1 |
| 12 | 5420 9507 | Digital Multimeter - BECKMAN-RMS3030 | 1 |
| 13 | 5420 9550 | Silicon Oil | 1 |
| 14 | 5447 9078 | Heat Resisting Grease MT-78 | 1 |
| 15 | 5420 9516 | Test Chart - OS-A3 (10 pcs/set) | 1 |
| 15 | 5420 9502 | Test Chart - OS-A3 (10 pcs/set) | 1 |
| 16 | 5442 9103 | Launa Oil | 1 |
| 17 | 5446 9140 | Thickness Gauge - 0.2mm | 1 |

# PARTS INDEX

| Parts No. | Description | Page and Index No. |
|---|---|---|
| A008 1089 | Motor Cover | 15-12 |
| A008 1096 | Fusing Drive Bracket | 31-42 |
| A008 1111 | Shielding Plate - Fusing | 31-44 |
| A008 1257 | Front Cover | 3-47 |
| A008 1268 | Inner Cover | 3-44 |
| A008 1269 | Upper Cover - 115V | 3 - 6 |
| A008 1270 | Upper Cover - 220/240V | 3 - 6 |
| A008 1276 | Front Right Cover | 3-28 |
| A008 1278 | Left Cover | 3-35 |
| A008 1283 | Rear Right Cover | 3-27 |
| A008 1288 | Rear Cover - 115V | 3-10 |
| A008 1289 | Rear Cover - 220/240V | 3-10 |
| A008 1290 | Support Plate - Rear Cover | 37-13 |
| A008 1305 | ADF Cap - Upper Cover | 3 - 2 |
| A008 1306 | Sensor Cap - Upper Cover | 3 - 4 |
| A008 1307 | Left Cover Cap - Sorter | 3-31 |
| A008 1308 | Left Cover Cap - Duplex | 3-34 |
| A008 1309 | Cap - Scanner Clamp | 3-32 |
| A008 1329 | Operation Panel Bracket - Left | 5-42 |
| A008 1330 | Operation Panel Bracket - Right | 5-43 |
| A008 1335 | Operation Panel Bracket - Middle | 5-44 |
| A008 1336 | Operation Panel Bracket - Center | 3-53 |
| A008 1342 | Rear Upper Cover | 3 - 5 |
| A008 1351 | Cap - Left Cover - L | 3-30 |
| A008 1352 | Cap - Left Cover - S | 3-33 |
| A008 1460 | Operation Panel Ass'y - LT/LDG | 3-36 |
| A008 1460 | Operation Panel Ass'y - LT/LDG | 5 - 1 |
| A008 1470 | Operation Panel Ass'y - A3/A4 | 3-36 |
| A008 1470 | Operation Panel Ass'y - A3/A4 | 5 - 1 |
| A008 1666 | Front Platen Cover | 7 - 4 |
| A008 1672 | Left Bracket - Platen Cover | 29 - 4 |
| A008 1674 | Right Bracket - Platen Cover | 29 - 7 |
| A008 1676 | Mounting Bracket - Platen Cover | 7 - 9 |
| A008 1681 | 1st Scanner Ass'y | 25 - 6 |
| A008 1691 | Reflector Cover | 25 - 2 |

| Parts No. | Description | Page and Index No. |
|---|---|---|
| A008 1697 | Reflector - Aid | 25 - 1 |
| A008 1701 | Stud Bracket | 25-15 |
| A008 1704 | Guide Roller - 1st Scanner | 25-46 |
| A008 1721 | 2nd Scanner Ass'y | 25-24 |
| A008 1728 | Guide Roller - 2nd Scanner | 25-23 |
| A008 1747 | Exposure Lamp Harness | 25-48 |
| A008 1771 | 4th Mirror Cover | 27 - 3 |
| A008 1772 | Cover Shielding Sheet | 27-53 |
| A008 1776 | Shielding Plate - Enlarge | 27 - 1 |
| A008 1825 | Toner Shield Cover | 27-18 |
| A008 1840 | Scanner Drive Wire Bracket | 25-18 |
| A008 1844 | Lens Sheet | 27-44 |
| A008 1860 | Scanner Guide | 25-41 |
| A008 1867 | Left Cover Holder | 39-16 |
| A008 1868 | Upper Cover Guide | 39-19 |
| A008 1869 | Left Cover Guide | 39-20 |
| A008 1905 | Left Stay - Large | 29 - 3 |
| A008 1911 | Right Stay | 29-11 |
| A008 1915 | Vacuum Fan Filter | 27-47 |
| A008 1916 | Filter - Cooling Blower | 27-55 |
| A008 1921 | Mounting Plate - LT/LDG | 3-38 |
| A008 1922 | Mounting Plate - A3/A4 | 3-38 |
| A008 2051 | C&D Corona Rail | 13-15 |
| A008 2054 | Seal - 12 x 12 x 15 | 13-13 |
| A008 2060 | Duct Inlet | 15 - 1 |
| A008 2063 | Duct Outlet | 13-14 |
| A008 2068 | Fan Casing | 15 - 2 |
| A008 2074 | Cover - Charge Corona Unit | 13-17 |
| A008 2075 | Front Cover - Charge Corona | 13 - 9 |
| A008 2080 | Pulley Support - Charge Corona | 13-74 |
| A008 2084 | Cleaner Slider | 13-69 |
| A008 2085 | Cleaner - Charge Corona | 13-70 |
| A008 2090 | Supporter - Cleaner Sensor | 13-67 |
| A008 2091 | Support Pad - Cleaner Motor | 13-88 |
| A008 2095 | Slider Drive Wire | 13-72 |

| Parts No. | Description | Page and Index No. |
|---|---|---|
| A008 2105 | Solenoid Bracket | 31-56 |
| A008 2251 | Rear Drum Support | 29-13 |
| A008 2255 | Front Drum Support | 13-16 |
| A008 2262 | Link | 13-36 |
| A008 2265 | Duct - ID Sensor | 13-22 |
| A008 2268 | Bracket - Fan Motor | 37-19 |
| A008 2269 | Outer Duct - Fan Motor | 37-17 |
| A008 2270 | Inner Duct - Fan Motor | 13-21 |
| A008 2272 | T/S Corona Lever | 13-34 |
| A008 2279 | PTL Guide | 11-9 |
| A008 2284 | Paper Guide | 11-10 |
| A008 2290 | ID Sensor Bracket | 29-18 |
| A008 2310 | Drum Stay | 13-20 |
| A008 2555 | Arm Pad Ass'y | 9-12 |
| A008 2555 | Arm Pad Ass'y | 33-50 |
| A008 2559 | Lower Paper Feed Stay | 9-57 |
| A008 2570 | Upper Paper Feed Stay | 9-17 |
| A008 2574 | Upper Guide | 9-49 |
| A008 2578 | Upper Arm | 9-71 |
| A008 2583 | Pad Holder | 9-15 |
| A008 2583 | Pad Holder | 33-47 |
| A008 2593 | Lower Arm | 9-41 |
| A008 2594 | Sprocket - 30T | 31-19 |
| A008 2600 | Upper Feed Guide Plate | 9-22 |
| A008 2602 | Upper Guide Plate | 9-6 |
| A008 2604 | Feed Roller | 9-8 |
| A008 2610 | Lower Guide Plate | 9-31 |
| A008 2616 | Middle Guide Plate | 9-9 |
| A008 2632 | Guide Plate | 31-18 |
| A008 2634 | Regist Holder | 37-35 |
| A008 2638 | Harness Clamp Bracket | 9-62 |
| A008 2640 | Front Cassette Holder | 9-58 |
| A008 2641 | Rear Cassette Holder | 9-55 |
| A008 2642 | Manual Feed Guide | 9-54 |
| A008 2647 | Upper Lift Arm | 9-25 |

| Parts No. | Description | Page and Index No. |
|---|---|---|
| A008 2648 | Upper Front Arm | 9-65 |
| A008 2652 | Upper Rear Arm | 9-64 |
| A008 2656 | Lower Lift Arm | 9-69 |
| A008 2656 | Lower Lift Arm | 33-36 |
| A008 2657 | Lower Front Arm | 9-67 |
| A008 2657 | Lower Front Arm | 33-39 |
| A008 2659 | Lower Rear Arm | 9-66 |
| A008 2659 | Lower Rear Arm | 33-35 |
| A008 2664 | Pressure Arm | 9-60 |
| A008 2664 | Pressure Arm | 33-27 |
| A008 2674 | Lower Pad Mounting Plate | 9-42 |
| A008 2686 | Manual Feed Cover | 3-51 |
| A008 2688 | Side Fence Gear | 3-13 |
| A008 2694 | Bracket | 3-24 |
| A008 2698 | Manual Feed Table | 3-20 |
| A008 2710 | Bottom Plate | 7-29 |
| A008 2727 | Side Fence - Rear | 7-26 |
| A008 2734 | Large Cassette Cover | 7-25 |
| A008 2737 | Small Cassette Cover | 7-25 |
| A008 2769 | Registration Roller Knob | 11-14 |
| A008 3076 | Lower Front Side Plate - Development | 21-27 |
| A008 3077 | Lower Rear Side Plate - Development | 21-31 |
| A008 3078 | Lower Casing | 21-28 |
| A008 3145 | Upper Casing | 21-11 |
| A008 3150 | Filter Casing | 21-49 |
| A008 3495 | Rail Guide - Development | 29-2 |
| A008 3552 | Front Side Plate - Cleaning | 23-16 |
| A008 3556 | Cleaning Unit Casing | 23-1 |
| A008 3559 | Insulation Tape - Cleaning Casing | 23-42 |
| A008 3560 | Rear Side Plate - Cleaning | 23-36 |
| A008 3565 | Cleaning Brush Holder | 23-19 |
| A008 3570 | Seal - Cleaning Small | 23-18 |
| A008 3575 | Cleaning Blade Bracket | 23-6 |
| A008 3580 | Upper Cleaning Unit Casing | 23-54 |
| A008 3587 | Bias Roller Blade | 23-56 |

| Parts No. | Description | Page and Index No. |
|---|---|---|
| A008 3589 | Blade Cleaner | 23-12 |
| A008 3595 | Terminal Holder - Cleaning Bias | 13-53 |
| A008 3602 | Seal - Outer | 2 3 - 3 |
| A008 3604 | Seal - Front Inner | 2 3 - 5 |
| A008 3605 | Seal - Rear Inner | 2 3 - 8 |
| A008 3611 | Front Pick-off Guide Plate | 23-22 |
| A008 3612 | Rear Pick-off Guide Plate | 23-21 |
| A008 3615 | Spring Plate - Cleaning Unit Casing | 23-55 |
| A008 3617 | Spring Plate | 13-50 |
| A008 3619 | Pressure Arm | 23- 41 |
| A008 3622 | Seal - Bias Blade | 23-57 |
| A008 3624 | Seal - Cleaning Unit Casing | 23-53 |
| A008 3660 | Spring Plate - Cleaning Bias | 2 3 - 9 |
| A008 3883 | Harness Cover | 3-55 |
| A008 3886 | Toner Collection Bottle Cover | 15-25 |
| A008 4008 | Fusing Unit - 115V | 1 7 - * |
| A008 4009 | Fusing Unit - 220V | 1 7 - * |
| A008 4051 | Front Side Plate - Fusing | 17-48 |
| A008 4052 | Rear Side Plate - Fusing | 17-28 |
| A008 4063 | Lower Exit Guide | 19-25 |
| A008 4097 | Pressure Lever | 17-39 |
| A008 4100 | Left Fusing Unit Slide Guide | 17-42 |
| A008 4111 | Shaft - Fusing Entrance | 17-58 |
| A008 4112 | Right Rail - Fusing | 17-40 |
| A008 4116 | Lower Entrance Guide | 17-57 |
| A008 4117 | Bracket - Rear Fusing Entrance | 17-64 |
| A008 4120 | Spring Plate - Stopper | 17-60 |
| A008 4121 | Spring Plate - Adjustment Slide | 17-62 |
| A008 4122 | Adjustment Slide - Lower Entrance | 17-61 |
| A008 4123 | Knob - Adjustment Slide | 17-63 |
| A008 4124 | Fusing Entrance Cover | 17-65 |
| A008 4145 | Oil Pan | 17-54 |
| A008 4172 | Fusing Unit Cover | 17-34 |
| A008 4178 | Bracket - Thermistor | 17-31 |
| A008 4179 | Upper Entrance Guide | 17-67 |

| Parts No. | Description | Page and Index No. |
|---|---|---|
| A008 4181 | Fusing Unit Rail | 29-22 |
| A008 4183 | Unit Lock Lever | 29-21 |
| A008 4341 | Front Lever - Fusing Exit | 19-14 |
| A008 4344 | Rear Lever - Fusing Exit | 19-10 |
| A008 4451 | Frame - Exit | 19-13 |
| A008 4482 | Upper Exit Guide | 1 9 - 2 |
| A008 4485 | Feeler - Paper Exit Sensor | 19-22 |
| A008 4650 | Duplex Shipping Plate - Front | 33-64 |
| A008 4652 | Copier Relay Roller | 3 5 - 8 |
| A008 4711 | Rear Side Plate | 33-22 |
| A008 4715 | Paper Feed Guide | 33-30 |
| A008 4717 | Paper Feed Bracket | 3 3 - 3 |
| A008 4718 | Spacer - Paper Feed | 33-75 |
| A008 4804 | Sensor Feeler | 35-12 |
| A008 4805 | Left Guide - Copier Relay Feed | 35-10 |
| A008 4811 | Front Cassette Holder | 33-70 |
| A008 4812 | Rear Cassette Holder | 33-41 |
| A008 4821 | Relay Guide Lever | 35-17 |
| A008 4908 | Left Cover - Expansion Unit | 3 3 - 1 |
| A008 4910 | Rear Cover - Expansion Unit | 33-23 |
| A008 4911 | Front Cover - Expansion Unit | 33-60 |
| A008 4915 | Front Right Cover - Expansion Unit | 33-58 |
| A008 4916 | Rear Right Cover - Expansion Unit | 33-17 |
| A008 4920 | Front Cover Hinge - Right | 33-61 |
| A008 4922 | Front Cover Hinge - Left | 33-59 |
| A008 4927 | Cover Bracket | 33-57 |
| A008 5107 | IC - µPD27256D | 4 1 - 1 |
| A008 5108 | IC - µPD27128G | 4 1 - 2 |
| A008 5110 | RAM Board | 4 1 - 3 |
| A008 5115 | Main Board | 37-12 |
| A008 5115 | Main Board | 4 1 - * |
| A008 5171 | Optics Board | 37-11 |
| A008 5171 | Optics Board | 4 3 - * |
| A008 5175 | Heat Sink - Optics Board | 4 3 - 4 |
| A008 5181 | Harness - Optics Board | 4 3 - 5 |

| Parts No. | Description | Page and Index No. |
|---|---|---|
| A008 5193 | IC - µPD7811G | 43-1 |
| A008 5275 | Terminal Block Harness | 37-23 |
| A008 5281 | Optics Harness | 25-17 |
| A008 5321 | Motor - DC 5V/1.3W | 13-71 |
| A008 5340 | Display Board - LT/LDG | 5-40 |
| A008 5440 | Display Board - A3/A4 | 5-40 |
| A008 5447 | DC Harness - 220V | 37-16 |
| A008 5447 | DC Harness - 220/240V | 51-1 |
| A008 5449 | DC Harness - 115V | 37-16 |
| A008 5449 | DC Harness - 115V | 51-1 |
| A008 5458 | Safety Switch Harness | 39-8 |
| A008 5459 | AC Harness | 39-14 |
| A008 5459 | AC Harness | 53-* |
| A008 5611 | DIP SW Cover | 5 - 5 |
| A008 5612 | Instruction Cover | 5 - 2 |
| A008 5616 | Program Key Cover | 5-37 |
| A008 5617 | Slide Cover | 5 - 8 |
| A008 5625 | Key Top - Start | 5-35 |
| A008 5626 | Key Top - Program | 5-39 |
| A008 5627 | Key Top - Clear Mode | 5-34 |
| A008 5628 | Key Top - Interrupt | 5-33 |
| A008 5629 | Key Top - Recall | 5-36 |
| A008 5630 | Key Top - 0 | 5-30 |
| A008 5631 | Key Top - 1 | 5-21 |
| A008 5632 | Key Top - 2 | 5-22 |
| A008 5633 | Key Top - 3 | 5-23 |
| A008 5634 | Key Top - 4 | 5-24 |
| A008 5635 | Key Top - 5 | 5-25 |
| A008 5636 | Key Top - 6 | 5-26 |
| A008 5637 | Key Top - 7 | 5-27 |
| A008 5638 | Key Top - 8 | 5-28 |
| A008 5639 | Key Top - 9 | 5-29 |
| A008 5640 | Key Top - C/S | 5-32 |
| A008 5641 | Key Top - ADS | 5-20 |
| A008 5642 | Key Top - Lighter | 5-18 |

| Parts No. | Description | Page and Index No. |
|---|---|---|
| A008 5643 | Key Top - Darker | 5-19 |
| A008 5644 | Key Top - Select Cassette | 5-16 |
| A008 5645 | Key Top - Full Size | 5-15 |
| A008 5646 | Key Top - Enlarge | 5-14 |
| A008 5647 | Key Top - Reduce | 5-13 |
| A008 5648 | Key Top - Auto Cassette Selection | 5-17 |
| A008 5650 | Key Top - Zoom Up | 5-11 |
| A008 5651 | Key Top - Zoom Down | 5-12 |
| A008 5653 | Key Top | 5-10 |
| A008 5654 | Case - S.P. Mode Decal | 5 - 7 |
| A008 5658 | Key Top - Point | 5-31 |
| A008 5664 | Decal - S.P. Mode | 5 - 6 |
| A008 5664 | Decal - S.P. Mode | 57-5 |
| A008 5675 | Program Sheet - LT/LDG | 5-38 |
| A008 5676 | Duplex Sheet - LT/LDG | 5-47 |
| A008 5677 | Sorter Sheet - LT/LDG | 5-46 |
| A008 5678 | Key Top Sheet - LT/LDG | 5 - 9 |
| A008 5682 | Key Top Sheet - A3/A4 | 5 - 9 |
| A008 5731 | Program Sheet - A3/A4 | 5-38 |
| A008 5732 | Duplex Sheet - A3/A4 | 5-47 |
| A008 5733 | Sorter Sheet - A3/A4 | 5-46 |
| A008 5738 | Panel Sheet | 5-41 |
| A008 5803 | Feed Control Holder | 37-10 |
| A008 5804 | Bracket - AC Drive Board | 39-1 |
| A008 5807 | Power Cord Bracket - 220/240V | 37-25 |
| A008 5810 | Stabilizer Bracket | 37-8 |
| A008 5813 | Power Relay Bracket | 39-10 |
| A008 5814 | Main Board Bracket | 37-15 |
| A008 5854 | Cover - Counter | 37-3 |
| A008 8600 | Operating Instructions - English | 3 - * |
| A008 8600 | Operating Instructions - English | 57-18 |
| A008 8601 | Operating Instructions - German | 3 - * |
| A008 8601 | Operating Instructions - German | 57-18 |
| A008 8602 | Operating Instructions - French | 3 - * |
| A008 8602 | Operating Instructions - French | 57-18 |

| Parts No. | Description | Page and Index No. |
|---|---|---|
| A008 8603 | Operating Instructions - Italian | 3 - * |
| A008 8603 | Operating Instructions - Italian | 57-18 |
| A008 8604 | Operating Instructions - Spanish | 3 - * |
| A008 8604 | Operating Instructions - Spanish | 57-18 |
| A008 8610 | Installation Procedure - English | 3 - * |
| A008 8615 | Installation Procedure - 5 Language | 3 - * |
| A008 8630 | Instruction Cards - LT/LDG | 5 - 4 |
| A008 8631 | Instruction Cards - German | 5 - 4 |
| A008 8632 | Instruction Cards - French | 5 - 4 |
| A008 8633 | Instruction Cards - Italian | 5 - 4 |
| A008 8634 | Instruction Cards - Spanish | 5 - 4 |
| A008 8636 | Instruction Cards - A3/A4 | 5 - 4 |
| A008 8671 | Decal Sheet - German | 3 - * |
| A008 8671 | Decal Sheet - German | 57 - * |
| A008 8672 | Decal Sheet - French | 3 - * |
| A008 8672 | Decal Sheet - French | 57 - * |
| A008 8673 | Decal Sheet - Italian | 3 - * |
| A008 8673 | Decal Sheet - Italian | 57 - * |
| A008 8674 | Decal Sheet - Spanish | 3 - * |
| A008 8674 | Decal Sheet - Spanish | 57 - * |
| A008 8998 | Editing Sheet - A3/A4 | 3-54 |
| A008 8999 | Editing Sheet - LT/LDG | 3-54 |
| A008 9001 | Main Corona Wire (10pcs/1set) | 13-8 |
| A008 9002 | Hot Roller Stripper - 6pcs/set | 19-6 |
| A008 9500 | Toner Collection Bottle | 15-27 |
| A008 9501 | Platen Cover Sheet - 10sheet/set | 7 - 7 |

| Parts No. | Description | Page and Index No. |
|---|---|---|
| A007 3785 | Toner Collection Bottle Cap | 15-24 |
| A009 2345 | Pad - 10 x 8 x 1 mm | 13-89 |
| A415 2457 | Decal Misfeed E | 33-77 |
| A416 2456 | Decal - Removing Misfeed Paper C | 33-76 |
| AA00 1022 | Decal - A2 | 3-50 |
| AA00 1022 | Decal - A2 | 57-1 |
| AA00 1024 | Decal - Front Scale - A3/A4 | 3 - 1 |
| AA00 1024 | Decal - Front Scale - A4/A3 | 57-3 |
| AA00 1025 | Decal - Rear Scale - A3/A4 | 3 - 3 |
| AA00 1025 | Decal - Rear Scale - A4/A3 | 57-4 |
| AA00 1026 | Decal - A | 3-41 |
| AA00 1026 | Decal - A | 57-2 |
| AA00 1029 | Decal - Toner Cartridge | 3-49 |
| AA00 1029 | Decal - Toner Cartridge | 57-6 |
| AA00 1031 | Decal - Front Scale - LT/LDG | 3 - 1 |
| AA00 1031 | Decal - Front Scale - LT/LDG | 57-3 |
| AA00 1032 | Decal - Rear Scale - LT/LDG | 3 - 3 |
| AA00 1032 | Decal - Rear Scale - LT/LDG | 57-4 |
| AA00 1039 | Decal - B1 | 17-59 |
| AA00 1039 | Decal - B1 | 57-8 |
| AA00 1051 | Decal - Middle Guide | 9-74 |
| AA00 2010 | Decal - Paper Level | 7-28 |
| AA00 2010 | Decal - Paper Level | 57-11 |
| AA00 2012 | Decal - Manual Feed - LT/LDG | 3-18 |
| AA00 2012 | Decal - Manual Feed - LT/LDG | 57-7 |
| AA00 2013 | Decal - Manual Feed - A3/A4 | 3-18 |
| AA00 2013 | Decal - Manual Feed - A4/A3 | 57-7 |
| AA00 2015 | Decal Sheet - Small - LT/LDG | 7-36 |
| AA00 2015 | Decal Sheet - Small - LT/LDG | 57-15 |
| AA00 2016 | Decal Sheet - Small - A4/A3 | 7-36 |
| AA00 2016 | Decal Sheet - Large - A4/A3 | 57-16 |
| AA00 2017 | Decal Sheet - Large - LT/LDG | 7-36 |
| AA00 2017 | Decal Sheet - Large - LT/LDG | 57-14 |
| AA00 2018 | Decal Sheet - Large - A4/A3 | 7-36 |
| AA00 2018 | Decal Sheet - Small - A4/A3 | 57-17 |

| Parts No. | Description | Page and Index No. |
|---|---|---|
| AA01 1004 | QL Filter | 13-11 |
| AA01 2001 | PTL Filter | 11-8 |
| AA03 6001 | Oil Bottle Cap | 17-6 |
| AA04 3001 | Timing Belt - 92XL | 31-31 |
| AA05 0011 | Scanner Drive Wire | 25-33 |
| AA06 0041 | Spring - Pressure | 17-22 |
| AA06 0042 | Spring - Release Cleaning Blade | 23-40 |
| AA06 0043 | Spring - Pressure Cleaning Blade | 31-51 |
| AA06 0045 | Spring - Tension Cleaner | 13-73 |
| AA06 0080 | Spring - Lower Lift | 9-53 |
| AA06 0080 | Spring - Lower Lift | 33-33 |
| AA06 3017 | Spring - Terminal | 13-80 |
| AA06 3018 | Drum Flange Spring | 13-40 |
| AA06 3019 | Spring - Blade Cleaner | 23-52 |
| AA06 3020 | Spring - Feeler | 13-65 |
| AA06 3035 | Spring - Registration Roller | 11-4 |
| AA08 0010 | Bushing - 6mm | 21-47 |
| AA08 0012 | Bushing - 6 x 10 x 6 | 13-48 |
| AA08 2004 | Bushing - Bias Roller | 23-10 |
| AA11 1001 | Feeler - Charge Corona | 13-64 |
| AA13 2013 | Spacer - M8.2 | 31-37 |
| AA13 2014 | Spacer - Friction Pad Arm | 9-16 |
| AA13 2014 | Spacer - Friction Pad Arm | 33-46 |
| AA14 0041 | Shaft | 9 - 7 |
| AA14 0081 | Shaft | 9-68 |
| AA14 0081 | Shaft | 33-38 |
| AA14 3026 | Stud - Platen Cover Mounting | 7-24 |
| AA14 3027 | Stud - Cleaning Front | 23-43 |
| AA14 3036 | Stepped Screw | 27-9 |
| AA14 3037 | Stepped Screw | 27-4 |
| AA15 0002 | Seal - Left Stay | 27-49 |
| AA15 0003 | Mylar Seal - 42 x 56 | 29-15 |
| AA15 0004 | Shielding Sheet - 4th Mirror | 27-48 |
| AA15 0005 | Seal - 4th Mirror Cover | 27-50 |
| AA15 0006 | Mylar - Lens Bracket Cover | 27-54 |

| Parts No. | Description | Page and Index No. |
|---|---|---|
| AA15 1016 | Seal - Blade Rear | 23-37 |
| AA15 1017 | Seal - Blade Front | 23-17 |
| AA15 1018 | Seal - 16 x 10 x 35 | 27-21 |
| AA15 1019 | Seal - Shielding | 27-20 |
| AA16 1002 | Rubber Pad | 15-39 |
| AB01 0011 | Gear - 56T | 13-76 |
| AB01 1012 | Gear - 17T | 23-39 |
| AB01 1013 | Gear - 18T | 23-44 |
| AB01 1014 | Gear - 15T | 23-11 |
| AB01 3059 | Gear - 36T | 17-23 |
| AB01 3060 | Gear - 27T | 17-25 |
| AB01 3061 | Gear - 17T | 17-20 |
| AB01 3062 | Gear - 19T | 19-19 |
| AB01 3063 | Gear - 17T | 19-18 |
| AB01 3064 | Gear - Development Sleeve | 21-18 |
| AB01 7018 | Sprocket - 30T | 31-41 |
| AB01 7019 | Gear - 27T | 23-46 |
| AB03 2014 | Cleaner Drive Pulley | 13-75 |
| AB03 2015 | Cleaner Idler Pulley | 13-10 |
| AC00 1007 | Platen Cover Ass'y | 7 - 1 |
| AC04 1034 | Left Scale - LT/LDG | 3 - 7 |
| AC04 1035 | Left Scale - A3/A4 | 3 - 7 |
| AD00 1006 | Development Unit | 21-* |
| AD00 2005 | Cleaning Unit | 23-* |
| AD00 4003 | Charge Corona Unit | 13-60 |
| AD00 4007 | Quenching Charge Unit | 13-81 |
| AD00 4008 | T & S Corona Unit | 13-61 |
| AD01 0002 | Cleaning Bias Roller | 23-38 |
| AD02 1004 | Receptacle Housing - Q/C | 13-68 |
| AD02 1005 | Receptacle Housing - Charge Corona | 13-87 |
| AD02 2011 | Front Endblock - Charge Corona | 13-7 |
| AD02 2012 | Rear Endblock - Charge Corona | 13-2 |
| AD02 2014 | Rear Cover - Charge Corona | 13-5 |
| AD02 2030 | Front Endblock - Q/C | 13-78 |
| AD02 2032 | Rear Endblock - Q/C | 13-85 |

| Parts No. | Description | Page and Index No. |
|---|---|---|
| AD02 2033 | Front Endblock Cover - Q/C | 13-79 |
| AD02 2034 | Rear Endblock Cover - Q/C | 13-84 |
| AD02 2035 | Front Endblock - PCC | 23-25 |
| AD02 2036 | Rear Ehdblock - PCC | 23-47 |
| AD02 2037 | Front Endblock Cover - PCC | 23-26 |
| AD02 2038 | Rear Endblock Cover - PCC | 23-49 |
| AD02 2039 | Front Endblock - T & S Corona | 13-30 |
| AD02 2040 | Rear Endblock - T & S Corona | 13-28 |
| AD02 2041 | Front Endblock Cover - T & S Corona | 13-23 |
| AD02 2042 | Rear Endblock Cover - T & S Corona | 13-26 |
| AD02 3001 | T & S Corona Casing | 13-29 |
| AD02 3004 | Left Casing - Q/C | 13-82 |
| AD02 3005 | Right Casing - Q/C | 13-83 |
| AD02 3008 | Casing - Charge Corona | 13-1 |
| AD02 4001 | Adjusting Screw | 13-6 |
| AD02 5001 | Pick-off Pawl | 23-33 |
| AD03 1007 | Development Sleeve | 21-16 |
| AD03 8001 | Paddle Roller | 21-21 |
| AD04 2001 | Cleaning Brush | 23-14 |
| AD04 3001 | Toner Collection Coil | 23-15 |
| AD04 7001 | Seal - Cleaning Entrance | 23-2 |
| AE02 0001 | Pressure Roller | 17-19 |
| AE03 0001 | Ball Bearing - 10 x 22 x 5 | 17-118 |
| AE03 2001 | Bushing - 20mm | 17-24 |
| AF01 0001 | Large Cassette Body | 7-35 |
| AF01 0002 | Small Cassette Body | 7-35 |
| AF01 6001 | Rear Side Fence | 3-16 |
| AF01 6002 | Front Side Fence | 3-17 |
| AF01 7001 | Rear Fence | 7-34 |
| AF02 0053 | Lower Registration Roller | 11-12 |
| AF03 3003 | Friction Pad | 9-14 |
| AF03 3003 | Friction Pad | 33-48 |
| AF04 3002 | Copy Tray | 3-29 |
| AG02 1001 | Original Holder | 7 - 2 |
| AG04 0001 | Operating Instruction Holder | 3-52 |

| Parts No. | Description | Page and Index No. |
|---|---|---|
| AG05 0011 | Knob - Fusing | 17-53 |
| AG06 0009 | Front Cover Angle | 3-42 |
| AG06 0010 | Front Cover Hinge - Right | 3-48 |
| AG06 0012 | Front Cover Hinge - Left | 3-43 |
| AG06 0012 | Front Cover Angle | 15-23 |
| AW00 0002 | Fiber Connector | 41-4 |
| AW00 0003 | Fiber Connector - Red | 43-2 |
| AW00 0004 | Fiber Connector - White | 43-3 |
| AW40 0002 | ID Sensor Board | 11-7 |
| AX02 0027 | Main Motor - AC 45W | 15-4 |
| AX02 0032 | Cooling Blower - AC 100V | 27-46 |
| AX21 0002 | Magnetic Clutch | 9-44 |
| AX21 0002 | Magnetic Clutch | 33-15 |
| AX50 0007 | Quenching Lamp - 430V/1.3W | 13-49 |
| AX50 0008 | Pre-Transfer Lamp 430V/1.3W | 11-6 |
| AX50 0009 | Eraser | 13-12 |
| AX52 0004 | Exposure Lamp - 85V/295W | 25-3 |
| AY11 0001 | AC Drive Board - 115V | 39-2 |
| AY11 0001 | AC Drive Board - 115V | 45-* |
| AY11 0002 | AC Drive Board - 220V | 39-2 |
| AY11 0002 | AC Drive Board - 220/240V | 45-* |
| AZ02 0001 | Ground Inductor | 37-24 |
| AZ14 0002 | Transformer - 220V/240V | 37-29 |
| AZ23 0001 | Power Supply Unit | 39-9 |
| AZ30 0009 | Power Pack - B | 39-15 |
| AZ30 0010 | Power Pack - C | 37-6 |
| AZ32 0001 | Power Pack - T/S | 37-5 |
| AZ32 0002 | Power Pack - Q/BR/PCC | 37-22 |
| AZ40 0002 | Relay Harness | 9-73 |
| AZ40 0003 | Harness - DC Motor | 13-86 |
| AZ40 0004 | Harness - Cleaner Sensor | 13-63 |
| AZ43 0003 | Lead Wire - PCC | 37-21 |
| AZ43 0004 | Lead Wire - Bias Roller | 37-20 |
| AZ50 0001 | Stabilizer | 37-7 |

| Parts No. | Description | Page and Index No. |
|---|---|---|
| 5053 0223 | Bushing - 8mm | 9-21 |
| 5053 0223 | Bushing - 8mm | 17-49 |
| 5053 0223 | Bushing - 8mm | 33-16 |
| 5053 0223 | Bushing - 8mm | 35-7 |
| 5053 0447 | Bushing - 6 x 10 x 6 mm | 9 - 5 |
| 5053 0447 | Bushing - 6 x 10 x 6 mm | 15-20 |
| 5053 0447 | Bushing - 6 x 10 x 6 mm | 19-15 |
| 5053 0447 | Bushing - 6 x 10 x 6 mm | 27-33 |
| 5053 0447 | Bushing - 6 x 10 x 6 mm | 31-15 |
| 5053 0447 | Bushing - 6 x 10 x 6 mm | 35-9 |
| 5054 0536 | Magnet Catch Ass'y | 3-40 |
| 5054 0536 | Magnet Catch Ass'y | 33-62 |
| 5203 4146 | Thermistor Spring | 17-30 |
| 5203 9501 | Grease 501 | 59-6 |
| 5205 1083 | Sprocket - 30T/50Hz | 31-34 |
| 5205 1084 | Sprocket - 27T/60Hz | 31-34 |
| 5205 1099 | Fusing Drive Shaft | 31-39 |
| 5205 1105 | Chain Tightener | 31-28 |
| 5205 1121 | Belt Tightener | 31-30 |
| 5205 1336 | Front Cover Chain | 21-10 |
| 5205 1694 | Adjusting Cam - Start Lever | 25-16 |
| 5205 1751 | Lens - F8/180 | 27-8 |
| 5205 1793 | Shielding - Guide | 27-5 |
| 5205 1797 | Right Shield | 27-6 |
| 5205 1845 | 4th Mirror | 27-42 |
| 5205 1914 | Harness Holder | 37-4 |
| 5205 1923 | Spacer - 12.5 x 19 x 1 MM | 25-27 |
| 5205 1990 | Pulley | 27-28 |
| 5205 2697 | Bushing - Upper Registration Roller | 11-3 |
| 5205 2866 | Magnetic Clutch Collar | 9-45 |
| 5205 2960 | Actuator - A3 | 7-33 |
| 5205 2961 | Actuator - B4 | 7-33 |
| 5205 2962 | Actuator - A4R | 7-33 |
| 5205 2963 | Actuator - A5R | 7-33 |
| 5205 2964 | Actuator - A4 | 7-33 |

| Parts No. | Description | Page and Index No. |
|---|---|---|
| 5205 2965 | Actuator - B5 | 7-33 |
| 5205 2966 | Actuator - A5 | 7-33 |
| 5205 2967 | Actuator - A5R | 7-33 |
| 5205 2968 | Actuator - B6 | 7-33 |
| 5205 2969 | Actuator - A6R | 7-33 |
| 5205 2970 | Actuator - LG | 7-33 |
| 5205 2971 | Actuator - 11" x 17" | 7-33 |
| 5205 2972 | Actuator - 11" x 15" | 7-33 |
| 5205 2973 | Actuator - 11" x 14" | 7-33 |
| 5205 2974 | Actuator - 8-1/2 x 13" | 7-33 |
| 5205 2975 | Actuator - 8-1/4 x 13" | 7-33 |
| 5205 2976 | Actuator - 8 x 13 | 7-33 |
| 5205 2977 | Actuator - 8 x 10-1/2 | 7-33 |
| 5205 2978 | Actuator - 8 x 10 | 7-33 |
| 5205 2979 | Actuator - 11 x 8-1/2 | 7-33 |
| 5205 2992 | Actuator - 5-1/2 x 8-1/2 | 7-33 |
| 5205 2993 | Actuator - 8-1/2 x 5 | 7-33 |
| 5205 2996 | Actuator - 8-1/2 x 11R | 7-33 |
| 5205 2997 | Actuator - 8-1/2 x 14 | 7-33 |
| 5205 3103 | Bushing - 6mm | 21-14 |
| 5205 3306 | Gear - 18T | 21-33 |
| 5205 3306 | Gear - 18T | 31-1 |
| 5205 3565 | Cleaning Blade | 23-13 |
| 5205 3599 | Side Seal - Cleaning Rear | 23-45 |
| 5205 3635 | Pressure Lever | 31-54 |
| 5205 3821 | Terminal Spring | 13-27 |
| 5205 3872 | Rear Bracket - T & S Corona | 13-55 |
| 5205 3950 | Cam | 23-27 |
| 5205 3958 | Pick-off Pawl Shaft | 23-30 |
| 5205 3964 | Pick-off Solenoid | 31-53 |
| 5205 3965 | Spring | 23-32 |
| 5205 3966 | Set Screw | 23-31 |
| 5205 3968 | Set Screw - Separator Shaft | 23-51 |
| 5205 3971 | Pick-off Pawl Lever | 31-50 |
| 5205 3975 | Cam | 23-28 |

| Parts No. | Description | Page and Index No. |
|---|---|---|
| 5205 3981 | Collar - Spring | 23-34 |
| 5205 4135 | Collar - Fusing | 17-50 |
| 5205 4220 | Shaft - Hot Roller Stripper | 19-4 |
| 5205 4305 | Spring - Hot Roller Stripper | 19-5 |
| 5205 5250 | L.E.D. Sensor Type - T | 9-18 |
| 5205 5250 | L.E.D. Sensor Type S | 33-20 |
| 5205 5250 | L.E.D. Sensor Type S | 35-14 |
| 5205 5251 | L.E.D. Sensor Type - T | 9-51 |
| 5205 5251 | L.E.D. Sensor Type - T | 25-30 |
| 5205 5251 | L.E.D. Sensor Type - T | 27-24 |
| 5205 5251 | L.E.D. Sensor Type - T | 31-16 |
| 5205 5253 | Photointerruptor Pack | 9-27 |
| 5205 5253 | Photointerruptor Pack | 33-68 |
| 5205 5313 | Registration Clutch | 11-1 |
| 5205 5405 | Transformer - 115V | 37-29 |
| 5205 5494 | Harness - Transformer 220/240V | 37-32 |
| 5205 9001 | Charge Wire - Pre Cleaning Corona | 23-29 |
| 5205 9101 | Gap Gauge | 59-3 |
| 5205 9111 | Omega Clamp | 59-4 |
| 5205 9510 | Drum | 13-43 |
| 5205 9601 | Switching Board | 59-2 |
| 5206 2684 | Shoulder Screw - M3 | 19-27 |
| 5206 2684 | Shoulder Screw - M3 | 35-18 |
| 5206 9600 | Sensor Checker | 59-5 |
| 5209 4126 | Wire Clamp | 17-36 |
| 5209 4149 | Fusing Unit Shaft | 17-51 |
| 5209 4400 | Oil Pump Bracket | 17-9 |
| 5209 4405 | Oil Pump Lever | 17-4 |
| 5209 4407 | Cam Gear - 32T | 17-5 |
| 5209 4408 | Gear - 16T | 17-52 |
| 5209 4409 | Oil Tube - 105mm | 17-10 |
| 5209 4410 | Oil Tube - 140mm | 17-8 |
| 5209 4470 | Upper Exit Roller | 19-23 |
| 5209 5320 | Oil End Sensor | 17-33 |
| 5209 5450 | Relay - Cooling Fan Motor - 220V/240V | 39-18 |

| Parts No. | Description | Page and Index No. |
|---|---|---|
| 5211 1710 | 1st Mirror | 25-13 |
| 5211 1711 | Front Cover - Lamp Terminal | 25-43 |
| 5211 1712 | Rear Cover - Lamp Terminal | 25-44 |
| 5211 2262 | Drum Shaft Holder | 13-46 |
| 5211 2285 | Rear Flange | 13-45 |
| 5211 2800 | Rear Platen Cover | 7-3 |
| 5215 1090 | Pulse Generator Disk | 31-13 |
| 5215 1102 | Spring - Main Drive Tightener - 60Hz | 31-32 |
| 5215 1103 | Ratchet - Sleeve - Paper Feed | 31-7 |
| 5215 1104 | Spring - Clutch | 31-6 |
| 5215 1105 | Fusing Chain Stopper | 31-43 |
| 5215 1106 | Idler Chain Stopper | 31-36 |
| 5215 1112 | Power Cord Bracket Cover | 37-26 |
| 5215 1116 | Pulse Generator Bracket | 31-17 |
| 5215 1117 | Outlet Fan Bracket | 15-34 |
| 5215 1133 | Left Stay | 29-1 |
| 5215 1134 | Lower Paper Feed Stay - Right | 9-30 |
| 5215 1134 | Lower Paper Feed Stay - Right | 33-37 |
| 5215 1136 | Seal - 12 x 65 x 2 mm | 15-38 |
| 5215 1673 | Cover Bracket | 29-5 |
| 5215 1696 | Main Reflector | 25-4 |
| 5215 1697 | Wire Stopper Plate | 25-5 |
| 5215 1700 | Exposure Lamp Terminal - Fix | 25-8 |
| 5215 1702 | Clip - Exposure Lamp | 25-45 |
| 5215 1765 | Lens Bracket | 27-11 |
| 5215 1766 | Lens Cartridge | 27-14 |
| 5215 1767 | Lens H.P. Actuator | 27-13 |
| 5215 1771 | Mylar - Seal 4th Mirror | 27-10 |
| 5215 1772 | Lens Bracket Cover | 27-17 |
| 5215 1775 | Mylar - 118 x 50 mm | 27-43 |
| 5215 1778 | Mylar - Shielding Plate | 27-2 |
| 5215 1779 | Shield Plate Stopper | 27-19 |
| 5215 1780 | Lens Guide Rod | 27-16 |
| 5215 1794 | Left Shield | 27-7 |
| 5215 1805 | Lens Tension Pulley | 27-26 |

| Parts No. | Description | Page and Index No. |
|---|---|---|
| 5215 1811 | Spring - Lens Drive Wire | 27-25 |
| 5215 1812 | Lens Drive Pulley | 27-29 |
| 5215 1816 | Lens H.P. Sensor Bracket | 27-23 |
| 5215 1817 | Lens Drive Wire | 27-27 |
| 5215 1822 | H.P. Sensor Bracket | 27-30 |
| 5215 1842 | Cam Plate - Lens Shield | 27-15 |
| 5215 1846 | Shield Plate | 27-22 |
| 5215 1853 | Mylar - 15 x 350 mm | 25-40 |
| 5215 1857 | Harness Clamp | 25-42 |
| 5215 1858 | Right Cover Holder | 2 9 - 8 |
| 5215 1861 | Seal - 4.5 x 22 x 30 | 29-17 |
| 5215 1864 | Rear Guide Rod | 25-19 |
| 5215 1866 | Lens Drive Motor Bracket | 25-39 |
| 5215 1881 | Pulley Bracket | 25-35 |
| 5215 1886 | Wire Pulley Tightener | 25-32 |
| 5215 1893 | H.P. Sensor Bracket | 25-29 |
| 5215 1916 | Seal - Right Stay | 29-12 |
| 5215 1924 | Cushion | 3-39 |
| 5215 1926 | Front Frame Seal | 3-37 |
| 5215 1957 | Spacer | 27-51 |
| 5215 1958 | Worm Gear | 27-34 |
| 5215 1968 | Motor Cover | 27-40 |
| 5215 1969 | Seal - A | 27-39 |
| 5215 1970 | Seal - B | 27-37 |
| 5215 1972 | Motor Bracket | 27-32 |
| 5215 1975 | Pulley Bracket | 27-38 |
| 5215 1980 | Exposure Glass | 3 - 8 |
| 5215 1981 | Shaft | 27-35 |
| 5215 2108 | T & S Corona Receptacle | 13-57 |
| 5215 2119 | T & S Corona Guide Plate | 13-31 |
| 5215 2121 | T & S Corona Guide | 13-25 |
| 5215 2125 | T & S Corona Rail | 13-37 |
| 5215 2131 | T & S Corona Holder | 13-54 |
| 5215 2146 | Shaft | 13-35 |
| 5215 2150 | T & S Corona Harness Cover | 13-47 |

| Parts No. | Description | Page and Index No. |
|---|---|---|
| 5215 2258 | Drum Shaft | 13-44 |
| 5215 2265 | Edging | 13-56 |
| 5215 2270 | Heater Casing | 13-39 |
| 5215 2315 | Decal - Drum Knob | 13-32 |
| 5215 2576 | Upper Size Detection Bracket | 9-32 |
| 5215 2579 | Shaft | 9-39 |
| 5215 2579 | Shaft | 33-45 |
| 5215 2580 | Spring Anchor | 9-50 |
| 5215 2582 | Spring | 9-40 |
| 5215 2582 | Spring | 33-44 |
| 5215 2590 | Lower Size Detection Bracket | 9-26 |
| 5215 2593 | Lower Arm | 33-42 |
| 5215 2597 | Idle Gear - 30T | 9-48 |
| 5215 2597 | Idle Gear - 30T | 31-20 |
| 5215 2612 | Regist Guide Plate | 11-13 |
| 5215 2617 | Feed Shaft | 9-43 |
| 5215 2618 | Feed Roller Hub | 9-20 |
| 5215 2618 | Feed Roller Hub | 33-24 |
| 5215 2619 | Feed Roller | 9-28 |
| 5215 2619 | Feed Roller | 33-26 |
| 5215 2621 | Snap Ring - M6 | 9-29 |
| 5215 2621 | Snap Ring - M6 | 33-25 |
| 5215 2622 | Upper Feed Shaft Bracket | 9-19 |
| 5215 2624 | Paper End Feeder | 9-23 |
| 5215 2626 | Paper End Actuator | 9-46 |
| 5215 2626 | Paper End Actuator | 33-18 |
| 5215 2629 | Upper Pad Mounting Plate | 9-33 |
| 5215 2630 | Lower Feed Shaft Bracket | 9-56 |
| 5215 2634 | Paper Feed Clutch Holder | 9-35 |
| 5215 2637 | Paper End Bracket | 9-52 |
| 5215 2643 | Spring - Friction Pad - Upper | 9-70 |
| 5215 2644 | Spring - Friction Pad | 9-11 |
| 5215 2644 | Spring - Friction Pad | 33-51 |
| 5215 2662 | Bushing | 9-59 |
| 5215 2662 | Bushing | 33-34 |

| Parts No. | Description | Page and Index No. |
|---|---|---|
| 5215 2670 | Upper Regist Roller | 11-11 |
| 5215 2672 | Bushing | 11-2 |
| 5215 2673 | Fixing Pad Bracket | 9-13 |
| 5215 2673 | Fixing Pad Bracket | 33-49 |
| 5215 2678 | Spring Plate - Manual Feed Table | 3-23 |
| 5215 2679 | Upper Guide - Manual Feed | 3-15 |
| 5215 2680 | Front Manual Feed Link | 3-25 |
| 5215 2681 | Rear Manual Feed Link | 3-12 |
| 5215 2685 | Magnetic Rubber | 3-26 |
| 5215 2687 | Gear - 16T | 3-22 |
| 5215 2691 | Brake | 3-21 |
| 5215 2693 | Plate | 3-19 |
| 5215 2713 | Bottom Plate Pad | 7-30 |
| 5215 2716 | Front Side Fence | 7-31 |
| 5215 2720 | Front Side Holder | 7-32 |
| 5215 2731 | Rear Side Holder | 7-27 |
| 5215 2832 | Platen Cover Hinge Ass'y | 7-22 |
| 5215 2833 | Base Holder | 7-10 |
| 5215 2834 | Arm Holder | 7-11 |
| 5215 2835 | Crank | 7-12 |
| 5215 2838 | Rubber Magnet | 7-23 |
| 5215 2839 | Balancer Spring | 7-13 |
| 5215 2840 | Pin - 4 x 115 mm | 7-14 |
| 5215 2841 | Pin - 4 x 100 mm | 7-15 |
| 5215 2842 | Right Spring - Platen Cover | 7-16 |
| 5215 2843 | Left Spring - Platen Cover | 7-17 |
| 5215 2844 | Slide Supporter | 7-18 |
| 5215 2845 | Plate Magnet | 7-19 |
| 5215 2846 | Platen Base | 7-20 |
| 5215 3008 | Toner Supply Unit | 21-32 |
| 5215 3051 | Side Seal - Right | 21-7 |
| 5215 3052 | Side Seal - Left | 21-6 |
| 5215 3056 | Seal Development | 21-24 |
| 5215 3089 | Developer Knob | 21-19 |
| 5215 3095 | Adjusting Plate - Magnet Angle | 21-5 |

| Parts No. | Description | Page and Index No. |
|---|---|---|
| 5215 3097 | Sheet | 21-9 |
| 5215 3101 | Gear - 44T | 21-20 |
| 5215 3102 | Gear - 39T | 21-22 |
| 5215 3108 | Spacer - Development Sleeve | 21-45 |
| 5215 3110 | Bearing Retainer | 21-17 |
| 5215 3115 | Gear - 17T | 21-26 |
| 5215 3120 | Toner Supply Guide | 21-23 |
| 5215 3133 | Seal - Right | 21-48 |
| 5215 3153 | Mylar - 6 x 35 mm | 21-25 |
| 5215 3154 | Seal - Upper | 21-2 |
| 5215 3155 | Seal - Doctor | 21-4 |
| 5215 3161 | Doctor Plate | 21-3 |
| 5215 3162 | Side Seal - Doctor Blade | 21-8 |
| 5215 3165 | Development Auger | 21-15 |
| 5215 3167 | Gear - 25T | 21-13 |
| 5215 3175 | Backspill Plate | 21-12 |
| 5215 3191 | Entrance Seal Ass'y | 21-1 |
| 5215 3201 | Mylar Seal - Front Upper Guide | 9-3 |
| 5215 3203 | Seal - 1 x 10 x 60 mm | 9-1 |
| 5215 3204 | Seal - 4 x 10 x 370 mm | 9-2 |
| 5215 3257 | Seal | 15-37 |
| 5215 3281 | Pin | 21-34 |
| 5215 3302 | Toner Supply Roller | 21-29 |
| 5215 3303 | Seal - Toner Supply Roller | 21-50 |
| 5215 3321 | Gear - 56T | 21-36 |
| 5215 3327 | Shaft - Agitator | 21-53 |
| 5215 3328 | Joint - Hopper | 21-37 |
| 5215 3347 | Spring - Gear | 21-30 |
| 5215 3381 | Sensor Bracket | 9-34 |
| 5215 3394 | Seal - 12 x 406 mm | 21-51 |
| 5215 3395 | Seal - 25 x 75 mm | 21-52 |
| 5215 3462 | Toner Supply Bracket | 31-3 |
| 5215 3469 | Boss - Toner Supply Clutch | 31-8 |
| 5215 3470 | Gear - 42T | 31-25 |
| 5215 3471 | Supply Shaft | 31-2 |

| Parts No. | Description | Page and Index No. |
|---|---|---|
| 5215 3472 | Development Shaft | 31-26 |
| 5215 3475 | Sprocket - 19T | 31-12 |
| 5215 3476 | Gear - 26T | 31-5 |
| 5215 3481 | Sensor Bracket | 9-36 |
| 5215 3482 | Sensor Cover | 9-72 |
| 5215 3486 | Bias Terminal | 13-62 |
| 5215 3486 | Bias Terminal | 31-4 |
| 5215 3488 | Development Drive Holder | 31-10 |
| 5215 3489 | Toner Supply Drive Holder | 31-14 |
| 5215 3639 | Cleaning Blade Solenoid | 31-55 |
| 5215 3663 | Toner Collection Joint | 23-23 |
| 5215 3675 | Roller Holder | 15-9 |
| 5215 3677 | Roller | 15-8 |
| 5215 3680 | Sheel - 19 x 36 x 10 mm | 23-24 |
| 5215 3851 | Spring - Guide Plate | 15-29 |
| 5215 3853 | Transport Guide Plate | 15-13 |
| 5215 3855 | Guide Plate Shaft | 15-10 |
| 5215 3860 | Cushion | 31-33 |
| 5215 3861 | Follower | 31-22 |
| 5215 3865 | Sprocket - 20T | 31-45 |
| 5215 3869 | Toner Collection Bottle Cam | 31-47 |
| 5215 3872 | Gear - 45T | 31-48 |
| 5215 3873 | Follower Shaft | 31-23 |
| 5215 3877 | Plate | 15-36 |
| 5215 3878 | Sheet | 15-33 |
| 5215 3880 | Cushion | 15-6 |
| 5215 3884 | Shaft | 15-22 |
| 5215 3887 | Sensor Holder | 15-41 |
| 5215 3889 | Spring - Toner Collection Bottle | 15-26 |
| 5215 3892 | Ozone Filter | 15-42 |
| 5215 3897 | Transport Stay | 15-5 |
| 5215 3910 | Transport Frame | 15-17 |
| 5215 3917 | Transport Drive Roller | 15-11 |
| 5215 3923 | Driven Roller | 15-21 |
| 5215 3928 | Duct | 15-30 |

| Parts No. | Description | Page and Index No. |
|---|---|---|
| 5215 3931 | Bushing - 8mm | 15-15 |
| 5215 3935 | Toner Collection Bottle Stopper | 15-7 |
| 5215 3942 | Transport Guide Roller | 15-19 |
| 5215 3951 | Chain Guide | 31-46 |
| 5215 3978 | Transport Belt | 15-14 |
| 5215 4093 | Upper Frame | 17-13 |
| 5215 4116 | Oil Blade Holder | 17-16 |
| 5215 4117 | Oil Blade | 17-17 |
| 5215 4121 | Spring - Oil Blade | 17-14 |
| 5215 4130 | Oil Supply Pad | 17-11 |
| 5215 4168 | Fusing Mounting Bracket | 17-68 |
| 5215 4195 | Oil Sump | 17-32 |
| 5215 4196 | Oil Sump Holder | 17-27 |
| 5215 4208 | Spring Plate - Oil Supply Pad | 17-12 |
| 5215 4211 | Decal - Thermofuse | 17-55 |
| 5215 4211 | Decal - Thermofuse | 57-9 |
| 5215 4225 | Oil Tank | 17-7 |
| 5215 4320 | Hot Roller | 17-18 |
| 5215 4411 | Spring Plate | 17-47 |
| 5215 4444 | Pin | 29-20 |
| 5215 4485 | Lower Exit Roller | 19-24 |
| 5215 4488 | Exit Roller Belt | 19-26 |
| 5215 4497 | Exit Antistatic Brush | 19-1 |
| 5215 4502 | Exit Tray Bracket | 29-25 |
| 5215 5222 | Transformer - 100/25V | 45-1 |
| 5215 5228 | Regist Sensor Board | 11-5 |
| 5215 5230 | Photointerrupter - L Type | 19-21 |
| 5215 5240 | Feed Control Board | 37-9 |
| 5215 5240 | Feed Control Board | 47-* |
| 5215 5250 | Thermistor | 17-29 |
| 5215 5294 | Lens Drive Motor - DC 6W | 27-36 |
| 5215 5296 | Mirror Drive Motor - DC 7.5W | 27-31 |
| 5215 5300 | Scanner Drive Motor - DC55W | 25-36 |
| 5215 5304 | Toner Overflow Sensor | 15-40 |
| 5215 5307 | Fusing Lamp - 115V | 17-46 |

| Parts No. | Description | Page and Index No. |
|---|---|---|
| 5215 5309 | Fusing Lamp - 220/240V | 17-46 |
| 5215 5370 | Drum Heater - 8W | 13-38 |
| 5215 5371 | Grounding Wire | 13-59 |
| 5215 5390 | Thermofuse | 17-15 |
| 5215 5423 | Outlet Fan Motor - AC 24/22W | 15-35 |
| 5215 5423 | Outlet Fan Motor - AC 24/22W | 37-18 |
| 5215 5426 | Vacuum Fan Motor - 14/12W | 15-31 |
| 5215 5436 | Cement Registor | 39-13 |
| 5215 5453 | Toner End Harness | 9-37 |
| 5215 5454 | Front Door Harness | 39-7 |
| 5215 5464 | Fusing Harness | 17-38 |
| 5215 5468 | Home Position Sensor Harness | 27-45 |
| 5215 5495 | Transformer Harness - 220/240V | 9-38 |
| 5215 5496 | Lower Paper Feed Harness | 9-24 |
| 5215 5807 | Power Cord Bracket - 115V | 37-25 |
| 5215 5818 | Connector Unit Bracket | 17-37 |
| 5215 5819 | Harness Cover Angle - Front | 29-23 |
| 5215 5820 | Harness Cover Angle - Rear | 29-24 |
| 5215 5821 | Power Supply Unit Cover | 29-26 |
| 5215 5822 | Safety Switch Bracket | 39-5 |
| 5215 5824 | Safety Switch Lever | 39-3 |
| 5215 5825 | Fusing Connector Bracket | 29-10 |
| 5215 5827 | Control Board Angle | 37-14 |
| 5215 5832 | Transformer Bracket | 37-30 |
| 5215 5841 | Counter Bracket | 37-1 |
| 5215 9500 | DG Gauge (2 PCS/1 Set) | 59-1 |
| 5216 4100 | Rear Heater Terminal | 17-56 |
| 5216 5245 | Photointerruptor - IL-G-3P-S3T2-E | 13-66 |
| 5219 3326 | Rubber Seal - Paddle Roller | 21-46 |
| 5403 1030 | Tension Spring | 13-33 |
| 5403 1145 | Cover - Key Counter | 3-46 |
| 5403 2048 | Bushing - 4mm | 15-32 |
| 5403 2075 | Stepped Screw | 9-4 |
| 5403 2075 | Stepped Screw | 33-74 |
| 5403 4335 | Decal - Terminal - 115V | 37-28 |

| Parts No. | Description | Page and Index No. |
|---|---|---|
| 5403 4335 | Decal - Terminal 115V | 57-10 |
| 5409 1705 | Clamp - Reflector | 25-12 |
| 5409 1855 | Mounting Pin | 17-41 |
| 5413 1812 | Spring - Drum Return Arm | 31-49 |
| 5415 4310 | Valve - Oil Pump | 17-2 |
| 5415 4457 | Spring - Exit | 19-11 |
| 5418 2116 | Spacer - Guard | 23-50 |
| 5419 1057 | Rubber Foot | 29-27 |
| 5419 1057 | Rubber Foot | 33-65 |
| 5420 1515 | Plate - Key Counter | 3-45 |
| 5420 1675 | Insulator - Lamp Terminal | 25-7 |
| 5420 1676 | Spacer - Lamp Terminal | 25-10 |
| 5420 1682 | Supporter - Lamp Terminal | 25-9 |
| 5420 9502 | Test Chart - OS-A3 (10 pcs/set) | 59-15 |
| 5420 9504 | Thermo Meter - HLC60-E | 59-10 |
| 5420 9505 | Probe - HLC60-E | 59-11 |
| 5420 9507 | Digital Multimeter - BECKMAN-RMS3030 | 59-12 |
| 5420 9516 | Test Chart - OS-A3 (10 pcs/set) | 59-15 |
| 5420 9550 | Silicon Oil | 59-13 |
| 5434 7916 | High Voltage Decal | 13-18 |
| 5434 7916 | High Voltage Decal | 31-24 |
| 5439 5246 | Totalizer Ass'y | 37-2 |
| 5442 1099 | Gear - 24Z | 31-38 |
| 5442 1110 | Sprocket - 20T | 31-29 |
| 5442 1111 | Spring - Main Drive Tightener - 50Hz | 31-32 |
| 5442 1111 | Spring - Main Drive Tightener | 31-35 |
| 5442 1146 | Seal - Fan Duct | 29-16 |
| 5442 1372 | Decal - Power Source - 220V | 3-9 |
| 5442 1372 | Decal - Power Source 220V | 57-12 |
| 5442 1657 | Seal - 15 x 214 x 13 | 7-21 |
| 5442 1705 | Rear Terminal - Exposure Lamp | 25-11 |
| 5442 1711 | Spring Plate - 1st Mirror | 25-14 |
| 5442 1735 | Pulley | 25-25 |
| 5442 1740 | 2nd and 3rd Mirror | 25-21 |
| 5442 1741 | Rear Spring Plate - 2nd and 3rd Mirror | 25-20 |

| Parts No. | Description | Page and Index No. |
|---|---|---|
| 5442 1742 | Front Spring Plate - 2nd and 3rd Mirror | 25-22 |
| 5442 1748 | Cleaner - Guide Rod | 25-26 |
| 5442 1770 | Cam - Optics Axis | 27-12 |
| 5442 1798 | Hook - Scanner Drive Wire | 25-34 |
| 5442 1847 | Spring Plate (Front) - 4th Mirror | 27-41 |
| 5442 1867 | Main Pulley - Scanner Drive | 25-37 |
| 5442 1870 | Left Pulley | 25-28 |
| 5442 1875 | Right Pulley | 25-38 |
| 5442 1890 | Spring - Wire Tightener | 25-31 |
| 5442 1969 | Mylar Sheet - Terminal | 25-47 |
| 5442 2108 | Spring - Corona Wire | 13-4 |
| 5442 2108 | Spring - Corona Wire | 23-48 |
| 5442 2110 | Plug - Corona Unit | 13-3 |
| 5442 2143 | Fan - Main Corona | 15-3 |
| 5442 2165 | Receptacle Housing - Main Corona | 13-51 |
| 5442 2642 | Shoulder Screw - M3 | 9-10 |
| 5442 2642 | Shoulder Screw - M3 | 33-52 |
| 5442 2692 | Rear Spring - Middle Guide | 9-63 |
| 5442 2693 | Front Spring - Middle Guide | 9-61 |
| 5442 3154 | Holder - Development Unit | 31-27 |
| 5442 3233 | Spring - Drive Wheel | 21-44 |
| 5442 3233 | Spring - Drive Wheel | 31-11 |
| 5442 3593 | Seal - Cleaning Blade Shaft | 23-4 |
| 5442 3664 | Toner Collection Bottle Cap - Small | 15-28 |
| 5442 3872 | Gear - 16Z | 15-16 |
| 5442 3904 | Spring - Pick-off Pawl Slide | 23-35 |
| 5442 4152 | Spring - Fusing Drive | 17-26 |
| 5442 4186 | Spring - Fusing Unit Release Lever | 29-19 |
| 5442 4201 | Rear Bracket - Lamp Terminal | 17-21 |
| 5442 4421 | Decal - Small | 17-35 |
| 5442 4421 | Decal - Small | 57-13 |
| 5442 4444 | Stud - Exit Ass'y Release Lever | 19-9 |
| 5442 4463 | Spring - Front Release Lever | 19-16 |
| 5442 4464 | Spring - Rear Release Lever | 19-8 |
| 5442 4465 | Stripper Pawl Plate | 19-7 |

| Parts No. | Description | Page and Index No. |
|---|---|---|
| 5442 4467 | Spring - Stripper Pawl Plate | 19-12 |
| 5442 4491 | Actuator - Paper Exit Sensor | 19-20 |
| 5442 4495 | Slip Clutch | 19-17 |
| 5442 4500 | Cover - Exit Ass'y | 19-3 |
| 5442 5315 | Anti-Condensation Heater - 10W | 27-52 |
| 5442 9003 | Main Corona Wire (10 pcs/set) | 13-77 |
| 5442 9004 | T & S Corona Wire (10 pcs/set) | 13-24 |
| 5442 9101 | Setting Powder | 59-7 |
| 5442 9103 | Launa Oil | 59-16 |
| 5442 9106 | Drum Shoe | 59-8 |
| 5443 2668 | Bushing | 9-47 |
| 5443 2668 | Bushing | 15-18 |
| 5443 2668 | Bushing | 33-19 |
| 5443 2713 | Wave Washer | 3-14 |
| 5446 3648 | Stepped Screw - M4 | 23-7 |
| 5446 3707 | Bushing - 6 x 10 x 6 mm | 23-20 |
| 5446 9140 | Thickness Gauge - 0.2mm | 59-17 |
| 5447 2257 | Front Drum Flange | 13-41 |
| 5447 2267 | Timing Pulley - 48T | 13-52 |
| 5447 2268 | Drum Shaft Knob | 13-19 |
| 5447 2286 | Drum Guide | 13-42 |
| 5447 2681 | Snap Ring | 3-11 |
| 5447 2681 | Snap Ring | 13-58 |
| 5447 2769 | Stepped Screw | 17-66 |
| 5447 3236 | Gear - 23T | 21-35 |
| 5447 3361 | Toner Supply Solenoid | 31-9 |
| 5447 4216 | Front Lamp Terminal - Fusing Unit | 17-45 |
| 5447 4220 | Lamp Terminal Stud | 17-43 |
| 5447 4221 | Lamp Holder Spring | 17-44 |
| 5447 4229 | Sleeve - Oil Pump | 17-3 |
| 5447 4241 | Tube Clamp | 17-1 |
| 5447 4980 | Decal - Terminal - 220V | 37-28 |
| 5447 4980 | Decal - Terminal 220V | 57-10 |
| 5447 5690 | Noise Filter - 220/240V | 37-31 |
| 5447 9078 | Heat Resisting Grease MT-78 | 59-14 |

| Parts No. | Description | Page and Index No. |
|---|---|---|
| 5447 9104 | Shoe Adaptor | 5 9 - 9 |
| 5448 2803 | Pad - Platen Cover | 7 - 6 |
| 5448 2806 | Platen Cover Arm | 7 - 8 |
| 5448 2824 | Flex Hinge - Platen Cover | 7 - 5 |
| 5875 3026 | Spring - Original Feed Arm | 31-52 |
| 5918 3881 | DF Mounting Bracket - Left | 2 9 - 6 |
| 5918 3890 | DF Mounting Bracket - Right | 2 9 - 9 |
| 5920 1511 | Mylar - 100 x 19 mm | 33-63 |
| 5920 2139 | Sensor Feeler Cover | 33-32 |
| 5922 2062 | Sensor Actuator | 35-11 |
| 5922 2067 | Feeler Shaft | 35-13 |
| 5922 2081 | Copier Relay Drive Roller | 35-16 |
| 5922 2085 | Spring - Relay Guide | 3 5 - 6 |
| 5922 2090 | Stud Bracket | 3 5 - 3 |
| 5922 2093 | Gear - 28T | 3 5 - 1 |
| 5922 2094 | Gear - 40T | 3 3 - 7 |
| 5922 2094 | Gear - 40T | 3 5 - 5 |
| 5922 2095 | Spring - Gear | 3 5 - 2 |
| 5922 2211 | Front Side Plate | 33-53 |
| 5922 2224 | 3rd Paper Feed Guide | 33-40 |
| 5922 2229 | Upper Paper Guide | 33-31 |
| 5922 2231 | Gear - 32T | 33-13 |
| 5922 2233 | Gear - 46T | 33-14 |
| 5922 2236 | Feed Roller Shaft | 33-28 |
| 5922 2237 | Sensor Bracket | 33-21 |
| 5922 2238 | PCB Bracket | 3 3 - 8 |
| 5922 2240 | Stud Bracket | 33-11 |
| 5922 2332 | Copier Relay Feed Guide | 29-14 |
| 5922 2333 | Expansion Relay Feed Guide | 3 3 - 5 |
| 5922 2334 | Lower Guide Plate | 33-72 |
| 5922 2335 | Guide Plate Holder | 33-73 |
| 5922 2336 | Expansion Guide Plate | 3 3 - 4 |
| 5922 2340 | Paper End Feeler | 33-29 |
| 5922 2344 | Size Sensor Bracket | 33-69 |
| 5922 2346 | Pad Mounting Plate | 33-43 |

| Parts No. | Description | Page and Index No. |
|---|---|---|
| 5922 2395 | Safety Switch Bracket | 33-55 |
| 5922 2396 | Switch Actuator | 33-56 |
| 5922 2635 | Expansion Unit Handle | 33-71 |
| 5922 2636 | Rubber Seal | 33-66 |
| 5922 2637 | Rubber Seal | 3 3 - 6 |
| 5922 2667 | Duplex Shipping Plate - Left | 3 3 - 2 |
| 5922 5101 | 3rd Paper Feed Board | 33-10 |
| 5922 5101 | 3rd Paper Feed Board | 4 9 - * |
| 5922 5200 | Interface Harness | 3 3 - 9 |
| 5922 5200 | Interface Harness | 5 5 - 1 |
| 5922 5201 | 3rd Feed Sensor Harness | 33-67 |
| 5922 5201 | 3rd Feed Sensor Harness | 5 5 - 2 |
| 5922 5202 | Clutch Harness | 33-12 |
| 5922 5202 | Clutch Harness | 5 5 - 3 |
| 5922 5203 | Safety Switch Harness | 33-54 |
| 5922 5203 | Safety Switch Harness | 5 5 - 4 |
| 5922 5204 | Copier Relay Harness | 35-15 |
| 5922 5300 | Relay Feed Clutch | 3 5 - 4 |
| 5931 3330 | Toner End Lever | 21-43 |
| 5931 3332 | Toner End Actuator | 21- 41 |
| 5931 3337 | Color Toner End Lever | 21-38 |
| 5931 3382 | Actuator - Red | 21-40 |
| 5931 3384 | Actuator - Blue | 21-40 |
| 5931 3385 | Actuator - Green | 21-40 |
| 5931 3386 | Actuator Bracket | 21-39 |
| 5931 3394 | Spring - Arm | 21-42 |

| Parts No. | Description | Page and Index No. |
|---|---|---|
| 0313 0040W | Philips Pan Head Screw - M3 x 4 | 25-103 |
| 0313 0050W | Philips Pan Head Screw - M3 x 5 | 31-102 |
| 0313 0060W | Philips Pan Head Screw - M3 x 6 | 13-106 |
| 0313 0060W | Philips Pan Head Screw - M3 x 6 | 17-104 |
| 0313 0060W | Philips Pan Head Screw - M3 x 6 | 23-101 |
| 0313 0080W | Philips Pan Head Screw - M3 x 8 | 21-112 |
| 0313 0080W | Philips Pan Head Screw - M3 x 8 | 23-103 |
| 0313 0080W | Philips Pan Head Screw - M3 x 8 | 25-101 |
| 0313 0100W | Philips Pan Head Screw - M3 x 10 | 9-115 |
| 0313 0100W | Philips Pan Head Screw - M3 x 10 | 33-119 |
| 0313 0120W | Philips Pan Head Screw - M3 x 12 | 9-104 |
| 0313 0120W | Philips Pan Head Screw - M3 x 12 | 25-102 |
| 0313 0120W | Philips Pan Head Screw - M3 x 12 | 39-101 |
| 0313 0120W | Philips Pan Head Screw - M3 x 12 | 33-104 |
| 0313 0160W | Philips Pan Head Screw - M3 x 16 | 37-111 |
| 0314 0050W | Philips Pan Head Screw - M4 x 5 | 13-105 |
| 0314 0060M | Philips Pan Head Screw - M4 x 6 | 13-104 |
| 0314 0060W | Philips Pan Head Screw - M4 x 6 | 13-103 |
| 0314 0060W | Philips Pan Head Screw - M4 x 6 | 15-101 |
| 0314 0060W | Philips Pan Head Screw - M4 x 6 | 17-106 |
| 0314 0060W | Philips Pan Head Screw - M4 x 6 | 21-101 |
| 0314 0060W | Philips Pan Head Screw - M4 x 6 | 27-102 |
| 0314 0060W | Philips Pan Head Screw - M4 x 6 | 31-101 |
| 0314 0080M | Philips Pan Head Screw - M4 x 8 | 13-102 |
| 0314 0080M | Philips Pan Head Screw - M4 x 8 | 33-108 |
| 0314 0080W | Philips Pan Head Screw - M4 x 8 | 3-103 |
| 0314 0080W | Philips Pan Head Screw - M5 x 8 | 9-105 |
| 0314 0080W | Philips Pan Head Screw - M4 x 8 | 13-107 |
| 0314 0080W | Philips Pan Head Screw - M4 x 8 | 17-107 |
| 0314 0080W | Philips Pan Head Screw - M4 x 8 | 23-102 |
| 0314 0080W | Philips Pan Head Screw - M4 x 8 | 31-103 |
| 0314 0100W | Philips Pan Head Screw - M4 x 10 | 17-105 |
| 0314 0100W | Philips Pan Head Screw - M4 x 10 | 19-102 |
| 0314 0100W | Philips Pan Head Screw - M4 x 10 | 21-102 |
| 0314 0100W | Philips Pan Head Screw - M4 x 10 | 23-108 |

| Parts No. | Description | Page and Index No. |
|---|---|---|
| 0314 0120W | Philips Pan Head Screw - M4 x 12 | 9-101 |
| 0314 0120W | Philips Pan Head Screw - M4 x 12 | 17-109 |
| 0314 0120W | Philips Pan Head Screw - M4 x 12 | 25-104 |
| 0314 0120W | Philips Pan Head Screw - M4 x 12 | 27-101 |
| 0314 0120W | Philips Pan Head Screw - M4 x 12 | 31-104 |
| 0314 0120W | Philips Pan Head Screw - M4 x 12 | 33-110 |
| 0314 0120W | Philips Pan Head Screw - M4 x 12 | 35-101 |
| 0314 0240W | Philips Pan Head Screw - M4 x 24 | 21-103 |
| 0315 0080W | Philips Pan Head Screw - M5 x 8 | 7-102 |
| 0315 0080W | Philips Pan Head Screw - M5 x 8 | 15-102 |
| 0315 0080W | Philips Pan Head Screw - M5 x 8 | 37-112 |
| 0315 0120W | Philips Pan Head Screw - M5 x 12 | 13-114 |
| 0323 0080W | Philips Sunken Head Screw - M3 x 8 | 9-107 |
| 0323 0080W | Philips Sunken Head Screw - M3 x 8 | 37-101 |
| 0323 0080W | Philips Sunken Head Screw - M3 x 8 | 33-109 |
| 0344 0060D | Philips Truss Head Screw - M4 x 6 | 3-108 |
| 0344 0060D | Philips Truss Head Screw - M4 x 6 | 33-103 |
| 0413 0202W | Tapping Screw - M3 x 20 | 7-103 |
| 0413 0202W | Tapping Screw - M3 x 20 | 25-108 |
| 0413 0252W | Tapping Screw - M3 x 20 | 15-111 |
| 0414 0102B | Tapping Screw - M4 x 10 | 7-104 |
| 0414 0102W | Tapping Screw - M4 x 10 | 15-104 |
| 0434 0060W | Tapping Screw - M4 x 6 | 5-104 |
| 0434 0060W | Tapping Screw - M4 x 6 | 9-103 |
| 0434 0060W | Tapping Screw - M4 x 6 | 11-101 |
| 0434 0060W | Tapping Screw - M4 x 6 | 13-121 |
| 0434 0060W | Tapping Screw - M4 x 6 | 15-105 |
| 0434 0060W | Tapping Screw - M4 x 6 | 17-102 |
| 0434 0060W | Tapping Screw - M4 x 6 | 25-105 |
| 0434 0060W | Tapping Screw - M4 x 6 | 27-103 |
| 0434 0060W | Tapping Screw - M4 x 6 | 29-101 |
| 0434 0060W | Tapping Screw - M4 x 6 | 37-102 |
| 0434 0060W | Tapping Screw - M4 x 6 | 33-102 |
| 0434 0080W | Tapping Screw - M4 x 8 | 3-104 |
| 0434 0080W | Tapping Screw - M4 x 8 | 9-102 |

| Parts No. | Description | Page and Index No. |
|---|---|---|
| 0434 0080W | Tapping Screw - M4 x 8 | 11-102 |
| 0434 0080W | Tapping Screw - M4 x 8 | 13-108 |
| 0434 0080W | Tapping Screw - M4 x 8 | 15-103 |
| 0434 0080W | Tapping Screw - M4 x 8 | 17-101 |
| 0434 0080W | Tapping Screw - M4 x 8 | 19-101 |
| 0434 0080W | Tapping Screw - M4 x 8 | 23-104 |
| 0434 0080W | Tapping Screw - M4 x 8 | 25-106 |
| 0434 0080W | Tapping Screw - M4 x 8 | 29-102 |
| 0434 0080W | Tapping Screw - M4 x 8 | 31-105 |
| 0434 0080W | Tapping Screw - M4 x 8 | 37-103 |
| 0434 0080W | Tapping Screw - M4 x 8 | 39-102 |
| 0434 0080W | Tapping Screw - M4 x 8 | 33-101 |
| 0434 0100W | Tapping Screw - M4 x 10 | 13-112 |
| 0434 0100W | Tapping Screw - M4 x 10 | 17-110 |
| 0574 0040E | Hexagon Headless Set Screw - M4 x 4 | 35-102 |
| 0574 0050E | Hexagon Headless Set Screw - M4 x 5 | 27-107 |
| 0574 0060E | Hexagon Headless Set Screw - M4 x 6 | 15-107 |
| 0574 0060E | Hexagon Headless Set Screw - M4 x 6 | 25-116 |
| 0574 0060E | Hexagon Headless Set Screw - M4 x 6 | 31-113 |
| 0575 0060E | Hexagon Headless Set Screw - M5 x 6 | 9-108 |
| 0575 0060E | Hexagon Headless Set Screw - M5 x 6 | 31-107 |
| 0575 0060E | Hexagon Headless Set Screw - M5 x 6 | 33-111 |
| 0584 0160B | Hexagon Bolt - M4 x 6 | 29-103 |
| 0593 0120E | Hexagon Bolt - M3 x 12 | 27-106 |
| 0623 0140E | Spring Pin - 3 x 14 mm | 23-107 |
| 0710 0040B | Hexagon Nut - M4 | 29-104 |
| 0720 0025E | Retaining Ring - M2.5 | 9-110 |
| 0720 0025E | Retaining Ring - M2.5 | 21-108 |
| 0720 0025E | Retaining Ring - M2.5 | 23-106 |
| 0720 0025E | Retaining Ring - M2.5 | 33-112 |
| 0720 0030E | Retaining Ring - M3 | 9-109 |
| 0720 0030E | Retaining Ring - M3 | 13-119 |
| 0720 0030E | Retaining Ring - M3 | 17-115 |
| 0720 0030E | Retaining Ring - M3 | 19-104 |
| 0720 0030E | Retaining Ring - M3 | 33-113 |

| Parts No. | Description | Page and Index No. |
|---|---|---|
| 0720 0030E | Retaining Ring - M3 | 35-106 |
| 0720 0040E | Retaining Ring - M4 | 15-108 |
| 0720 0040E | Retaining Ring - M4 | 23-105 |
| 0720 0040E | Retaining Ring - M4 | 25-113 |
| 0720 0040E | Retaining Ring - M4 | 27-109 |
| 0720 0040E | Retaining Ring - M4 | 29-105 |
| 0720 0040E | Retaining Ring - M4 | 31-110 |
| 0720 0040E | Retaining Ring - M4 | 35-103 |
| 0720 0050E | Retaining Ring - M5 | 3-107 |
| 0720 0050E | Retaining Ring - M5 | 9-112 |
| 0720 0050E | Retaining Ring - M5 | 11-104 |
| 0720 0050E | Retaining Ring - M5 | 15-109 |
| 0720 0050E | Retaining Ring - M5 | 17-114 |
| 0720 0050E | Retaining Ring - M5 | 19-105 |
| 0720 0050E | Retaining Ring - M5 | 21-106 |
| 0720 0050E | Retaining Ring - M5 | 27-108 |
| 0720 0050E | Retaining Ring - M5 | 31-108 |
| 0720 0050E | Retaining Ring - M5 | 33-115 |
| 0720 0050E | Retaining Ring - M5 | 35-104 |
| 0720 0060E | Retaining Ring - M6 | 9-111 |
| 0720 0060E | Retaining Ring - M6 | 15-110 |
| 0720 0060E | Retaining Ring - M6 | 17-112 |
| 0720 0060E | Retaining Ring - M6 | 21-107 |
| 0720 0060E | Retaining Ring - M6 | 25-115 |
| 0720 0060E | Retaining Ring - M6 | 31-109 |
| 0720 0060E | Retaining Ring - M6 | 33-114 |
| 0720 0060E | Retaining Ring - M6 | 35-105 |
| 0720 0070E | Retaining Ring - M7 | 17-113 |
| 0720 0070E | Retaining Ring - M7 | 25-114 |
| 0725 0100E | Retaining Ring C - M10 | 13-101 |
| 0725 0100E | Retaining Ring C - M10 | 13-120 |
| 0725 0140E | Retaining Ring (C Type) - M14 | 21-109 |
| 0725 0200E | Retaining Ring - M20 | 17-117 |
| 0727 0060E | Retaining Ring - M6 | 21-111 |
| 0740 3008 | Ball Bearing | 31-111 |

| Parts No. | Description | Page and Index No. |
|---|---|---|
| 0801 1185 | Philips Truss Head Screw - M4 x 8 | 37-110 |
| 0802 5060 | Tapping Screw - M4 x 12 | 13-118 |
| 0802 5060 | Tapping Screw - M4 x 12 | 39-103 |
| 0802 5085 | Tapping Screw - M4 x 8 | 3-101 |
| 0802 5085 | Tapping Screw - M4 x 8 | 9-106 |
| 0802 5094 | Tapping Truss Head Screw - M4 x 8 | 3-102 |
| 0802 5094 | Tapping Truss Head Screw - M4 x 8 | 5-102 |
| 0802 5094 | Tapping Truss Head Screw - M4 x 8 | 33-105 |
| 0805 0083 | Retaining Ring - M4 | 7-105 |
| 0805 3235 | Ball Bearing - 15 x 32 x 9 mm | 21-110 |
| 0805 3291 | Ball Bearing - 8 x 16 x 5 mm | 17-116 |
| 0805 3291 | Ball Bearing - 8 x 16 x 5 mm | 31- 40 |
| 0805 3377 | Ball Bearing - 25 x 42 x 9 mm | 17-108 |
| 0805 3399 | Bushing - 6 x 10 x 8 mm | 19-106 |
| 0807 5010 | Washer | 11-105 |
| 0916 1222 | Bushed Roller Chain - 222P | 31- 21 |
| 0950 3005M | Philips Screw with Lock Washer - M3 x 5 | 17-103 |
| 0951 3005 | Philips Screw with Flat Washer - M3 x 5 | 17-111 |
| 0951 3006W | Philips Screw with Flat Washer - M3 x 6 | 13-113 |
| 0951 3006W | Philips Screw with Flat Washer - M3 x 6 | 25-107 |
| 0951 3006W | Philips Screw with Flat Washer - M3 x 6 | 37-104 |
| 0951 3008W | Philips Screw with Flat Washer - M3 x 8 | 5-103 |
| 0951 4004W | Philips Screw with Flat Washer - M4 x 4 | 3-105 |
| 0951 4004W | Philips Screw with Flat Washer - M4 x 4 | 25-110 |
| 0951 4008W | Philips Screw with Flat Washer - M4 x 8 | 13-117 |
| 0951 4008W | Philips Screw with Flat Washer - M4 x 8 | 21-105 |
| 0951 4008W | Philips Screw with Flat Washer - M4 x 8 | 25-109 |
| 0951 4008W | Philips Screw with Flat Washer - M4 x 8 | 27-105 |
| 0951 4012W | Philips Screw with Flat Washer - M4 x 12 | 13-115 |
| 0964 4006W | Tapping Screw with Flat Washer - M4 x 6 | 25-112 |
| 0964 4008W | Tapping Screw with Flat Washer - M4 x 8 | 13-111 |
| 0964 4008W | Tapping Screw with Flat Washer - M4 x 8 | 15-106 |
| 0964 4008W | Tapping Screw with Flat Washer - M4 x 8 | 19-103 |
| 0964 4008W | Tapping Screw with Flat Washer - M4 x 8 | 25-111 |
| 0964 4008W | Tapping Screw with Flat Washer - M4 x 8 | 27-104 |

| Parts No. | Description | Page and Index No. |
|---|---|---|
| 0964 4008W | Tapping Screw with Flat Washer - M4 x 8 | 37-105 |
| 0964 4008W | Tapping Screw with Flat Washer - M4 x 8 | 39-104 |
| 0964 4008W | Tapping Screw with Flat Washer - M4 x 8 | 33-106 |
| 0964 4010W | Philips Screw with Flat Washer - M4 x 10 | 7-101 |
| 0964 4010W | Tapping Screw with Flat Washer - M4 x 10 | 13-110 |
| 0965 3006W | Tapping Screw with Flat Washer - M3 x 6 | 3-106 |
| 0965 4008W | Tapping Screw with Flat Washer - M4 x 8 | 5-101 |
| 0965 4008W | Tapping Screw with Flat Washer - M4 x 8 | 9-113 |
| 0965 4008W | Tapping Screw with Flat Washer - M4 x 8 | 11-103 |
| 0965 4008W | Tapping Screw with Flat Washer - M4 x 8 | 13-116 |
| 0965 4008W | Tapping Screw with Flat Washer - M4 x 8 | 21-104 |
| 0965 4008W | Tapping Screw with Flat Washer - M4 x 8 | 31-106 |
| 0965 4008W | Tapping Screw with Flat Washer - M4 x 8 | 33-107 |
| 0971 3006A | Philips Pan Head Screw - M3 x 6 | 13-109 |
| 1005 0383 | Edging - B | 29-106 |
| 1100 0844 | Socket - MATE-N-LOCK | 51-104 |
| 1100 0864 | Housing - AWG14-20 | 53-101 |
| 1100 0916 | Pin - MATE-N-LOCK | 53-102 |
| 1100 1155 | Contact | 51-105 |
| 1100 1159 | Socket - MATE-N-LOCK | 51-106 |
| 1100 1169 | Fastening Receptacle | 51-107 |
| 1100 1169 | Fastening Receptacle | 53-103 |
| 1100 1170 | Positive Lock Receptacle | 53-104 |
| 1100 1171 | Fastening Receptacle | 53-105 |
| 1100 1172 | Fastening Receptacle | 51-108 |
| 1100 1172 | Fastening Receptacle | 53-106 |
| 1100 1238 | Pin - MATE-N-LOCK | 51-109 |
| 1100 1240 | Socket - MATE-N-LOCK | 51-101 |
| 1100 1240 | Socket - MATE-N-LOCK | 53-107 |
| 1100 1241 | Socket - MATE-N-LOCK | 51-110 |
| 1100 1241 | Socket - MATE-N-LOCK | 53-108 |
| 1100 1247 | Terminal | 51-111 |
| 1100 1247 | Terminal | 53-109 |
| 1100 1249 | Receptacle Terminal | 51-112 |
| 1100 1249 | Receptacle Terminal | 55-101 |

| Parts No. | Description | Page and Index No. |
|---|---|---|
| 1100 1270 | Fastening Receptacle | 51-113 |
| 1100 1278 | Terminal | 51-114 |
| 1100 1327 | Contact | 51-115 |
| 1100 1327 | Contact | 55-102 |
| 1100 1328 | Contact | 51-102 |
| 1100 1328 | Contact | 53-129 |
| 1100 1341 | Pin Contact | 53-110 |
| 1100 1345 | Pin Contact | 53-111 |
| 1100 1348 | Pin Contact | 51-116 |
| 1100 1356 | Pin Contact | 51-117 |
| 1100 1421 | Contact | 51-118 |
| 1101 0328 | Contact | 41-101 |
| 1101 0328 | Terminal - 3P | 43-101 |
| 1101 0359 | Terminal - 3P | 37-34 |
| 1102 0185 | Connector - 4P | 51-119 |
| 1102 0675 | Connector - 6P | 43-102 |
| 1102 0782 | Connector - 4P | 53-112 |
| 1102 0903 | Terminal - 4P | 41-102 |
| 1102 0948 | Housing - 4P | 53-128 |
| 1102 1286 | Connector | 51-120 |
| 1102 1306 | Connector - 3P | 51-121 |
| 1102 1396 | Connector - 2P | 51-122 |
| 1102 1397 | Connector - 2P | 51-123 |
| 1102 1401 | Receptacle Housing - 1P | 53-113 |
| 1102 1402 | Receptacle Housing - 1P | 53-114 |
| 1102 1403 | Receptacle Housing | 53-115 |
| 1102 1404 | Receptacle Housing | 51-124 |
| 1102 1404 | Receptacle Housing | 53-116 |
| 1102 1407 | Receptacle Housing - 1P | 51-125 |
| 1102 1408 | Connector - 1P | 51-126 |
| 1102 1408 | Connector - 1P | 53-117 |
| 1102 1509 | Connector - 4P | 51-127 |
| 1102 1515 | Connector - 2P | 51-128 |
| 1102 1515 | Connector - 2P | 53-118 |
| 1102 1532 | Connector - 2P | 53-119 |

| Parts No. | Description | Page and Index No. |
|---|---|---|
| 1102 1533 | Connector - 3P | 53-120 |
| 1102 1559 | Connector - 2P (Black) | 53-121 |
| 1102 1567 | Connector - 2P | 41-103 |
| 1102 1567 | Connecter - 2P | 43-103 |
| 1102 1620 | Connector - 3P | 51-129 |
| 1102 1620 | Receptacle Housing - 3P | 55-103 |
| 1102 1623 | Receptacle Housing - 7P | 55-104 |
| 1102 1632 | Connector - 4P | 51-130 |
| 1102 1785 | Connector - 11P | 51-131 |
| 1102 1786 | Connector - 3P | 55-105 |
| 1102 1815 | Connector - 3P | 53-122 |
| 1102 1889 | Connector - 6P | 53-123 |
| 1102 1896 | Connector - 2P | 51-132 |
| 1102 1910 | Connector - 2P | 51-133 |
| 1102 1910 | Connector - 2P | 55-106 |
| 1102 1911 | Connector - 3P | 51-134 |
| 1102 1912 | Connector - 4P | 51-135 |
| 1102 1913 | Connector - 5P | 51-136 |
| 1102 1914 | Connector - 6P | 51-137 |
| 1102 1915 | Connector - 7P | 51-138 |
| 1102 1915 | Connector - 7P | 55-107 |
| 1102 1916 | Connector - 8P | 51-139 |
| 1102 1917 | Connector - 9P | 51-140 |
| 1102 1918 | Connector - 10P | 51-141 |
| 1102 1921 | Connector - 13P | 51-142 |
| 1102 1924 | Connector - 2P | 51-143 |
| 1102 1924 | Connector - 2P | 55-108 |
| 1102 1926 | Connector - 4P | 51-144 |
| 1102 1927 | Connector - 5P (Red) | 51-145 |
| 1102 1927 | Connector - 5P (Red) | 55-109 |
| 1102 1938 | Connector - 2P | 51-146 |
| 1102 1938 | Connector - 2P | 55-110 |
| 1102 1939 | Connector - 3P | 51-147 |
| 1102 1942 | Connector - 6P | 51-148 |
| 1102 1969 | Connector - 10P | 53-124 |

| Parts No. | Description | Page and Index No. |
|---|---|---|
| 1102 2061 | Connector - 6P | 51-149 |
| 1102 2099 | Connector - 12P | 53-125 |
| 1102 2113 | Connector - 2P | 45-101 |
| 1102 2278 | Connector - 18P | 51-150 |
| 1102 2365 | Connector - 6P | 49-101 |
| 1102 2366 | Connector - 8P | 49-102 |
| 1102 2369 | Connector - 6P | 51-151 |
| 1102 2370 | Connector - 8P | 51-152 |
| 1102 2974 | Connector - 6P | 51-153 |
| 1102 2985 | Receptacle - 12P | 41-104 |
| 1102 2999 | Receptacle Housing | 51-154 |
| 1102 3202 | Contact | 53-126 |
| 1102 3203 | Contact | 53-127 |
| 1103 0347 | Connector - 8P | 41-105 |
| 1103 0657 | Connector - 50P | 51-155 |
| 1103 0701 | Connector | 45-102 |
| 1103 0750 | Pin Housing - 2P | 43-104 |
| 1103 1724 | Connector - 2P | 45-103 |
| 1103 1724 | Connector - 2P | 49-103 |
| 1103 1725 | Connector - 3P | 47-101 |
| 1103 1726 | Connector - 4P | 43-105 |
| 1103 1726 | Connector - 4P | 49-104 |
| 1103 1729 | Connector - 7P | 41-106 |
| 1103 1729 | Connector - 7P | 47-102 |
| 1103 1729 | Connector - 7P | 49-105 |
| 1103 1730 | Connector - 8P | 41-107 |
| 1103 1730 | Connector - 8P | 43-106 |
| 1103 1731 | Connector - 9P | 43-107 |
| 1103 1731 | Connector - 9P | 45-104 |
| 1103 1731 | Connector - 9P | 47-103 |
| 1103 1731 | Connector - 9P | 49-106 |
| 1103 1735 | Connector - 13P | 47-104 |
| 1103 1739 | Connector - 3P | 47-105 |
| 1103 1739 | Connector - 3P | 49-107 |
| 1103 1741 | Connector - 5P | 49-108 |

| Parts No. | Description | Page and Index No. |
|---|---|---|
| 1103 1752 | Connector - 2P | 49-109 |
| 1103 1753 | Connector - 3P | 47-106 |
| 1103 1757 | Connector - 7P | 47-107 |
| 1103 3020 | Connector - 20P | 41-108 |
| 1103 3025 | Connector - 50P | 41-109 |
| 1103 3037 | Connector - 26P | 41-110 |
| 1104 0224 | Relay Bracket | 39-12 |
| 1104 0271 | LSI Socket - 28P | 41-111 |
| 1104 0339 | IC Socket - 64P | 43-108 |
| 1105 0010 | Nylon Clip - 6N | 27-110 |
| 1105 0010 | Nylon Clip - 6N | 31-112 |
| 1105 0010 | Nylon Clip - 6N | 37-109 |
| 1105 0010 | Nylon Clip - 6N | 39-105 |
| 1105 0034 | Nylon Clip - 7N | 25-117 |
| 1105 0087 | Clamp | 37-108 |
| 1105 0087 | Clamp | 39-106 |
| 1105 0106 | Wire Saddle | 9-114 |
| 1105 0120 | Wire Clamp | 33-116 |
| 1105 0144 | Harness Clamp | 27-111 |
| 1105 0144 | Harness Clamp | 39-107 |
| 1105 0159 | PCB Stud | 37-106 |
| 1105 0159 | PCB Stud | 33-117 |
| 1105 0201 | Harness Clamp | 37-113 |
| 1106 0394 | Locking Support | 37-107 |
| 1106 0442 | Cord Stopper - 220/240V | 37-114 |
| 1107 0363 | Circuit Breaker - 115V | 37-33 |
| 1107 0415 | Fuse - 5A | 39-108 |
| 1107 0550 | Circuit Breaker - 220/240V | 37-33 |
| 1204 1078 | Microswitch | 39-6 |
| 1204 1226 | Push Switch | 33-118 |
| 1204 1280 | Push Switch | 39-4 |
| 1204 1520 | Switch | 5-45 |
| 1208 1029 | Power Relay | 39-11 |
| 1208 1034 | Relay - DC24V | 45-105 |
| 1208 1151 | Relay - AC 250V - 115V | 39-18 |

| Parts No. | Description | Page and Index No. |
|---|---|---|
| 1400 0031 | Transistor - 2SC458 | 43-109 |
| 1400 0072 | Transistor - 2SC372Y | 41-112 |
| 1401 0391 | Transistor Array - PU4310 60V/3A | 41-113 |
| 1401 0392 | Transistor - 2SB1193 | 43-110 |
| 1401 0393 | Transistor - 2SD1773 | 43-111 |
| 1401 0467 | Diode - S5566G | 49-111 |
| 1401 0611 | Diode - 1S1588 | 41-114 |
| 1401 0611 | Diode - 1S1588 | 47-108 |
| 1401 0825 | Diode - 1SS176 | 49-110 |
| 1402 0110 | Diode - V06C | 43-112 |
| 1402 0277 | Zener Diode - 1Z12 | 43-113 |
| 1402 0360 | Zener Diode - HZ20 | 45-106 |
| 1402 0388 | Diode - S5566G | 51-103 |
| 1402 0467 | Diode - S5566G | 41-115 |
| 1402 0467 | Diode - S5566G | 45-107 |
| 1405 0127 | Photothyristor - TLP541G | 45-108 |
| 1405 0130 | Rectifier - 400V/10A IG4B42 | 45-109 |
| 1405 0148 | Triac - 600V - 16A - BCR | 45-110 |
| 1405 0151 | Photothyristor - TLP545J | 45-111 |
| 1405 0152 | Rectifier - 1J4B42 | 45-112 |
| 1405 0156 | Triac - 400V/8A | 45-113 |
| 1405 0157 | Triac - 400V/10A | 45-114 |
| 1407 0508 | IC - HD74LS04N | 43-114 |
| 1407 0520 | IC - HD74LS00 | 43-115 |
| 1407 0542 | IC - SN74LS00 | 41-116 |
| 1407 0605 | IC - TC4050BP | 43-116 |
| 1407 0610 | IC - SN74LS32N | 41-117 |
| 1407 0621 | IC - SN74LS08N | 41-118 |
| 1407 0975 | IC - HD7407P | 41-119 |
| 1407 1016 | IC - µPD8255AC-5 | 41-120 |
| 1407 1020 | IC - HD74LS02P | 43-117 |
| 1407 1026 | IC - SN74LS373N | 41-121 |
| 1407 1083 | IC - HD74LS138P | 41-121 |
| 1407 1090 | IC - HD74LS74AP | 43-118 |
| 1407 1334 | IC - µPD7810G | 41-123 |

| Parts No. | Description | Page and Index No. |
|---|---|---|
| 1407 1335 | IC - RF5G02-005 | 41-124 |
| 1407 1348 | IC - TD62304P | 41-125 |
| 1407 1534 | IC - µPD8253C-2 | 43-119 |
| 1407 1535 | IC - TD62308AP | 41-126 |
| 1407 1535 | IC - TD62308AP | 43-120 |
| 1407 1537 | IC - TC74HC14P | 41-127 |
| 1407 1652 | IC - TD62307P | 41-128 |
| 1407 2028 | IC - SN74LS06N | 41-129 |
| 1408 0200 | IC - TA75339P | 47-109 |
| 1408 0233 | IC - HA17903PS | 45-115 |
| 1408 0258 | IC - AN6914 | 41-130 |
| 1408 0412 | IC - 7705CP | 41-131 |
| 1408 0413 | IC - TL092CP | 41-132 |
| 1408 0516 | IC - TLS2714 | 43-121 |
| 1503 0070 | Ceramic Oscillator - 10MHz | 41-133 |
| 1503 0181 | Oscillator - 10MHz | 43-122 |
| 1601 2844 | Resistor - 1.8KOHM 1/2W | 45-117 |
| 1601 7282 | Resistor Array - 150KOHM | 41-134 |
| 1601 7348 | Resistor Array - 470OHM 1/8 ±5% | 41-135 |
| 1601 7351 | Resistor Array - 3.3KOHM | 41-136 |
| 1601 7352 | Resistor Array - 4.7KOHM | 41-137 |
| 1601 7354 | Resistor Array - 10KOHM | 41-138 |
| 1601 7360 | Resistor Array - 33KOHM 1/8W ±5% | 41-139 |
| 1601 7374 | Resistor Array - 4.7KOHM ±5% 1/8W | 41-140 |
| 1601 7374 | Resistor Array - 4.7KOHM | 47-110 |
| 1601 7468 | Resistor Array - 100OHM 1/2W | 45-118 |
| 1601 8185 | Variable Resistor - 200OHM 0.5W | 45-119 |
| 1601 8349 | Variable Resistor - 500Kc | 43-123 |
| 1601 8385 | Variable Resistor - 30KOHM | 41-141 |
| 1602 0923 | Noise Filter - 115V | 37- 31 |
| 1602 0934 | RC Array - CR01-R | 41-142 |
| 1602 0934 | RC Array - CR01-R | 43-124 |
| 1602 0975 | Noise Killer - 0.1µF, 120OHM | 45-120 |
| 1602 0976 | Noise Killer - 0.1µF, 120OHM | 45-121 |
| 1604 1355 | Capacitor - 220µF 10V | 43-125 |

| Parts No. | Description | Page and Index No. |
|---|---|---|
| 1604 1378 | Capacitor - 1µF 50V | 41-143 |
| 1604 1381 | Capacitor - 4.7µF 50V | 41-144 |
| 1604 1382 | Capacitor - 10µF 50V | 41-145 |
| 1604 1382 | Capacitor - 10µF 50V | 47-111 |
| 1604 1383 | Capacitor - 22µF 50V | 41-146 |
| 1604 1386 | Capacitor - 100µF 50V | 41-147 |
| 1604 1386 | Capacitor - 100µF 50V | 43-126 |
| 1605 0279 | Capacitor - 0.047µF 50V | 41-148 |
| 1605 0280 | Capacitor - 0.01µF 50V | 45-122 |
| 1606 0689 | Capacitor - 0.01µF 50V | 45-123 |
| 1606 0867 | Capacitor - 3300PF 50V | 43-127 |
| 1606 0996 | Capacitor - 470PF 50V | 41-149 |
| 1606 0998 | Capacitor - 0.01µF 50V | 41-150 |
| 1606 0998 | Capacitor - 0.01µF 50V | 47-112 |
| 1606 1184 | Capacitor - 27PF 50V | 41-151 |
| 1606 1333 | Capacitor - 2200PF 50V | 43-128 |
| 1606 1336 | Capacitor - 1000PF 50V | 43-129 |
| 1606 1458 | Capacitor - 0.1µF 50V | 41-152 |
| 1606 1458 | Capacitor - 0.1µF 50V | 43-130 |
| 1606 1484 | Capacitor - 16µF 220V | 39-17 |
| 1606 1485 | Capacitor - 16µF 220V | 39-17 |
| 1606 1495 | Capacitor - 0.1µF 250V | 45-124 |
| 1606 1496 | Capacitor - 0.1µF 400V | 45-125 |
| 1606 1497 | Capacitor - 0.047µF 125V | 45-126 |
| 1606 1542 | Capacitor - 0.22µF 250V | 45-127 |
| 1607 0218 | Inductor - 6660µF | 45-128 |
| 1611 4102 | Resistor - 1KOHM 1/4T ±5% | 41-153 |
| 1611 4102 | Resistor - 1KOHM 1/4T ±5% | 43-131 |
| 1611 4103 | Resistor - 10KOHM 1/4T ±5% - 220/240V | 41-154 |
| 1611 4103 | Resistor - 10KOHM 1/4T ±5% | 43-132 |
| 1611 4103 | Resistor - 10KOHM 1/4T ±5% | 45-129 |
| 1611 4103 | Resistor - 10KOHM 1/4T ±5% | 47-113 |
| 1611 4104 | Resistor - 100KOHM 1/4T ±5% - 220/240V | 41-155 |
| 1611 4105 | Resistor - 1MOHM 1/4T ±5% | 41-156 |
| 1611 4106 | Resistor - 10MOHM 1/4T ±5% | 43-133 |

| Parts No. | Description | Page and Index No. |
|---|---|---|
| 1611 4124 | Resistor - 120KOHM 1/4T ±5% | 41-157 |
| 1611 4183 | Resistor - 18KOHM 1/4T ±5% | 41-158 |
| 1611 4220 | Resistor - 22OHM 1/4T ±5% | 41-159 |
| 1611 4223 | Resistor - 22KOHM 1/4T ±5% | 41-160 |
| 1611 4223 | Resistor - 22KOHM 1/4T ±5% | 45-130 |
| 1611 4273 | Resistor - 27KOHM 1/4T ±5% | 41-161 |
| 1611 4275 | Resistor - 2.7MOHM 1/4W ±5% | 41-162 |
| 1611 4331 | Resistor - 330OHM 1/4T ±5% | 41-163 |
| 1611 4332 | Resistor - 3.3KOHM 1/4T ±5% | 41-164 |
| 1611 4332 | Resistor - 3.3KOHM 1/4T ±5% | 43-134 |
| 1611 4333 | Resistor - 33KOHM 1/4T ±5% | 43-135 |
| 1611 4431 | Resistor - 430OHM 1/4T ±5% | 41-165 |
| 1611 4471 | Resistor - 470OHM 1/4T ±5% | 41-166 |
| 1611 4472 | Resistor - 4.7KOHM 1/4T ±5% | 41-167 |
| 1611 4472 | Resistor - 4.7KOHM 1/4T ±5% | 43-136 |
| 1611 4473 | Resistor - 47KOHM 1/4 ±5% | 41-171 |
| 1611 4562 | Resistor - 5.6KOHM 1/4T ±5% | 41-168 |
| 1611 4562 | Resistor - 5.6KOHM 1/4T ±5% | 45-131 |
| 1611 4820 | Resistor - 82OHM 1/4T ±5% | 45-132 |
| 1611 6222 | Resistor - 2.2KOHM 1/2T ±5% | 45-133 |
| 1622 1001 | Resistor - 1KOHM 1/4T ±1% | 41-169 |
| 1622 1202 | Resistor - 2KOHM 1/4T ±1% | 41-170 |
| 1622 1203 | Resistor - 120KOHM 1/4T ±1% | 45-134 |
| 1622 1800 | Resistor - 185OHM 1/4W ±1% | 45-135 |
| 1622 4703 | Resistor - 470OHM 1/4W ±1% | 45-136 |
| 1622 8202 | Resistor - 82KOHM 1/4W ±1% | 45-137 |
| 2801 0027 | Power Supply Cord - 220/240V | 37-27 |
| 2801 0040 | Power Supply Cord - 115V | 37- 27 |