RICOH

RICOH FT5560

FIELD SERVICE MANUAL

RICOH COMPANY, LTD.

TABLE OF CONTENTS

I. INSTALLATION

INSTALLATION REQUIREMENTS

Environment 1-1
Machine Level 1-3
Minimum Space Requirements 1-4
Power Requirements 1-5

COMPONENT INSTALLATION PROCEDURE 1-6

SYSTEM CONFIGURATION TABLE 1-7
How to Use 1-8

PAPER BANK INSTALLATION

Accessory Check 1-9
Installation Procedure 1-10

LARGE CAPACITY TRAY INSTALLATION

Accessory Check 1-16
Installation Procedure With Paper Bank (5th feed station) 1-17
Installation Procedure Without Paper Bank (3rd feed station) 1-17
Common Procedure for LCT Installation 1-19

COPIER INSTALLATION

Accessory Check 1-25
Installation Procedure 1-26
Cassette Modification 1-34
Key Counter Holder Installation 1-35
Accessory Counter Installation 1-37

DUPLEX UNIT INSTALLATION

Accessory Check 1-38
Installation Procedure 1-39

MINI SORTER INSTALLATION
Accessory Check 1-46
Removal of Shipping Retainers 1-46
Adapter Accessory Check 1-47
Installation Procedure 1-48

MIDI SORTER INSTALLATION
Accessory Check 1-51
Removal of Shipping Retainers 1-51
Adapter Accessory Check 1-52
Installation Procedure 1-53

DOCUMENT FEEDER INSTALLATION
Accessory Check 1-57
Installation Procedure 1-58

AUTO REVERSE DOCUMENT FEEDER
Accessory Check 1-66
Installation Procedure 1-68

COLOR UNIT INSTALLATION
Accessory Check 1-75
Installation Procedure 1-76

PREPARATION FOR TRANSPORTING THE COPIER
Short Haul Transportation 1-79
Long Haul Transportation By Vehicle 1-81

II. SERVICE TABLES

PM TABLE 2–1

SERVICE PROGRAM MODE OPERATION
Data Check Mode 2-6
Data Change Mode 2-7
Service Program Mode Table 2-8
Input Check Table 2-30
User Code 2-31
SERVICE REMARKS 2-32

III. REPLACEMENT AND ADJUSTMENT

OPTICS

1. Fiber Optics Cable Replacement 3-1
2. Auto Paper Size Sensor 3-4
3. Length Sensing Adjustment 3-5

DEVELOPMENT AND TONER SUPPLY

1. Image Density Sensor Removal 3-6
2. Image Density Check and Adjustment 3-7
3. Toner Supply Clutch Disassembly 3-9

CLEANING

1. Cleaning Unit Removal 3-11
2. Pick-off Pawl Replacement 3-12
3. Bias Roller Replacement 3-14
4. Bias Roller Blade Replacement 3-15

PRE-QUENCHING

1. Pre-Quenching Corona Unit Replacement 3-16

PAPER FEED
1. Feed Roller/Friction Pad Gap Adjustment 3-17
2. Registration Clutch Adjustment 3-18

FUSING
1. Checking Hot Roller Temperature 3-19
2. Changing Hot Roller Temperature 3-20
3. Fusing Pressure Adjustment 3-21
4. Entrance Guide Height Adjustment 3-22

COPY IMAGE
1. Light Intensity Adjustment 3-23
2. Auto ID Sensor Adjustment 3-26
3. Horizontal Magnification Adjustment 3-28
4. Vertical Magnification Adjustment 3-29
5. Lead Edge Registration Adjustment 3-30
6. Lead Edge Erase Margin Adjustment 3-32

CORONA
1. Charge Corona Wire Replacement 3-34
2. Charge Cleaner Drive Wire Replacement 3-36
3. Pre-Quenching Corona Wire Replacement 3-37

DRUM CURRENT ADJUSTMENTS

1. Preparation 3-39
2. Charge Corona 3-41
3. Transfer Corona 3-44
4. Separation Corona 3-46
5. Pre-cleaning Corona 3-48
6. Pre-quenching Corona 3-50

LARGE CAPACITY TRAY

l. Tray Wire Replacement 3-51
2. Tray Down Sensor and Positioning Switch Replacement 3-53
3. Paper Size Sensor Replacement 3-55
4. Side Registration Adjustment 3-56

DUPLEX UNIT

1. Positioning Roller and Drive Belt Replacement . . 3-58
2. Positioning Roller Pressure Adjustment 3-59
3. Jogger Home Position Adjustment 3-60

MIDI SORTER
1. Bin Drive Belt Replacement 3-61
2. Bin Drive Motor Replacement 3-63
3. Bin Replacement 3-64
4. Exit Roller Drive Motor Replacement 3-65
5. Lower Exit Roller Unit and Exit Sensor Replacement 3-66

DOCUMENT FEEDER ARDF
1. DF Belt Drive Motor Speed Adjustment 3-68
2. DF Registration Adjustment 3-70

IV. ELECTRICAL DATA

SCHEMATICS 4-1
TIMING CHART 4-9

SECTION I

INSTALLATION

I. INSTALLATION

Installation Requirements 1-1
Component Installation Procedure 1-6
System Configuration Table 1-7
Paper Bank Installation 1-9
Large Capacity Tray Installation 1-16
Copier Installation 1-25
Duplex Unit Installation 1-38
Mini Sorter Installation 1-46
Midi Sorter Installation 1-51
Document Feeder Installation 1-57
Auto Reverse Document Feeder 1-66
Color Unit Installation 1-75
Preparation for Transporting the Copier 1-70

INSTALLATION REQUIREMENTS

ENVIRONMENT

1. Temperature Range: 10°C to 30°C (50°F to 86°F)

2. Humidity Range: 15% to 90% RH

3. Ambient Illumination: Less than 1,500 lux (Do not expose to direct sunlight)

4. Ventilation: Room air should turn over at least 3 times/hour.

5. Ambient Dust: Less than 0.15 mg/m^3 (4×10^{-3} oz/yd^3)

6. Room Size: More than 10 m^3 (13.4 yd^3)

7. If the installation place is air-conditioned or heated, place the machine:

   a. Where it will not be subjected to sudden temperature changes.

   b. Where it will not be directly exposed to cool air from an air conditioner in summer.

   c. Where it will not be directly exposed to reflected heat from a space heater in winter.

8. Avoid placing the copier in an area filled with corrosive gas.

9. Avoid any area higher than 2,000 meters (6,500 feet) above sea level.

10. Place the copier on a strong and level base.

11. Avoid any area where the copier may be subjected to frequent strong vibration.

MACHINE LEVEL

1. Front to back: Within 5 mm (0.2”) of level

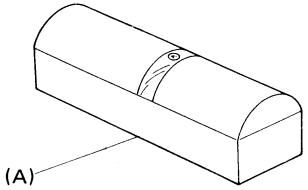

2. Right to left: Within 5 mm (0.2”) of level

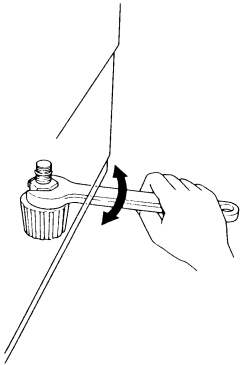

(Legs may be screwed up or down to level the machine. Set a carpenter’s level [A] on the exposure glass.)

MINIMUM SPACE REQUIREMENTS

1. Front: 70 cm (27.6")
2. Back: 10 cm (3.9")
3. Right: 80 cm (31.5")
4. Left : 10 cm (3.9")

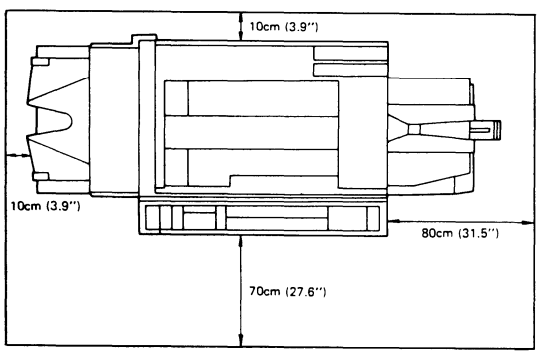

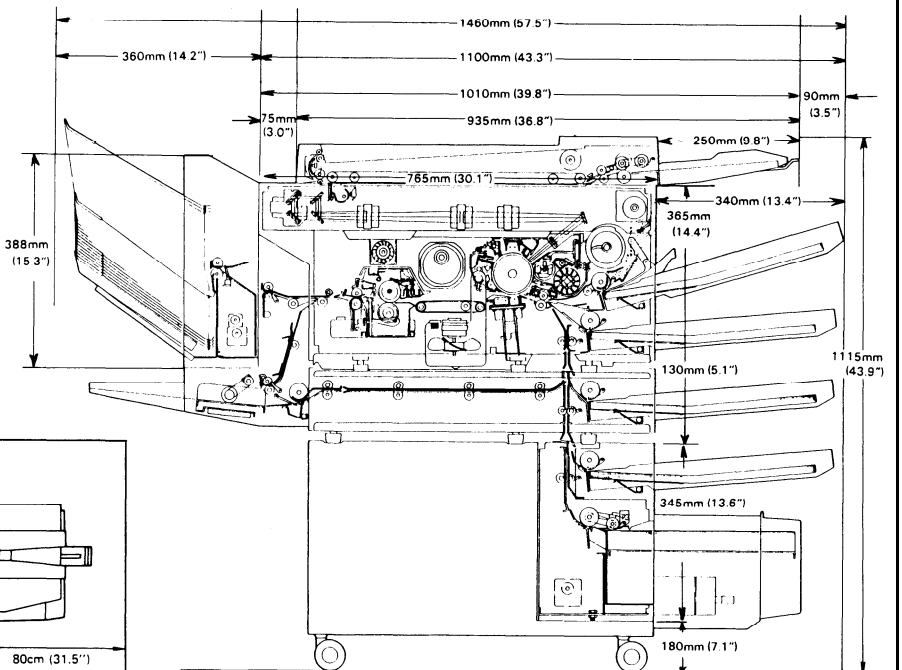

POWER REQUIREMENTS

1. Input voltage level

   110V/60Hz : More than 15A
   115V/60Hz : More than 15A
   220V/50Hz : More than 7A
   240V/50Hz : More than 7A

2. Permissible voltage fluctuation: 10%

3. Permissible extension cord: At least 300V, 30A capacity and less than 5 meters (16.4 ft) long.

   NOTES: a) Be sure to ground the machine. (Do not connect the grounding wire to a gas pipe.)
   b) Make sure the plug is firmly inserted in the outlet.
   c) Avoid multi-wiring.

4. Do not set anything on the power cord.

COMPONENT INSTALLATION PROCEDURE

1. Paper Bank
2. Large Capacity Tray
3. Copier
4. Auto Duplex Unit
5. Sorter
6. Document Feeder

The illustration to the right shows the relative order of installing the different components to the base copier to obtain the system configuration desired by the customer. This installation procedure has been tailored to this illustration. The installation of components should start from the lower numbered components and progress to higher numbered components.

NOTE: When not installing the duplex unit or the sorter save the duplex unit or sorter key tops and key covers for future use.

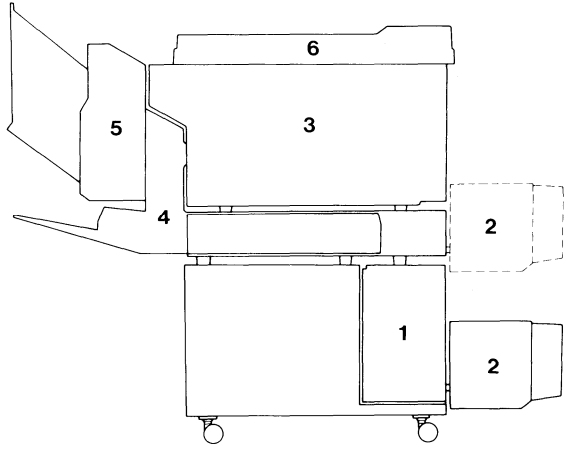

SYSTEM CONFIGURATION TABLE

Use this table to determine what extra equipment is required to install the optional equipment.

Optional equipment \ Required Equipment		Interface Board (Note 2)	Sorter Adapter	System Table	Optional Cassette (Note 1)
Auto Document Feeder		*			
Sorter	With Duplex Unit	*			
	Without Duplex Unit	*	*		
Duplex Unit		*			
Large Capacity Tray					
Paper Bank (4th and 5th Cassette)				*	*

NOTE 1: All copiers have three cassettes as accessories.

NOTE 2: If the copier already has an ADF, sorter, or duplex unit installed, you do not need an interface board.

HOW TO USE:

As shown in the following example, check off each piece of optional equipment to be installed. For each checked item, the asterisks to the right show the required equipment. Check off each piece of required equipment.

			√ Interface Board (Note 2)	√ Sorter Adapter	System Table	Optional Cassette (Note 1)
	Optional equipment \ Required Equipment					
√	Auto Document Feeder		*			
√	Sorter	With Duplex Unit	*			
		Without Duplex Unit	*	*		
	Duplex Unit		*			
√	Large Capacity Tray					
	Paper Bank (4th and 5th Cassette)				*	*

PAPER BANK INSTALLATION

ACCESSORY CHECK

Check the quantity and condition of the accessories in the box according to the following list:

1. Installation procedure (115V - English only, 220V - five languages)	1
2. New Equipment Condition Report	1
3. Envelope - NECR (115V only)	1
4. Expansion docking bracket	2
5. Expansion docking plate	2
6. Mylar paper guide	1
7. Expansion relay roller unit	1
8. Spring	1
9. Nylon wire clamp - large (10N)	1
10. Nylon wire clamp - small (4N)	1
11. Bank docking bracket	1
12. Pan head screw - M4 X 8	16
13. Pan head screw with washer - M4 X 8	2
14. Shoulder screw	1
15. Decal - Misfeed	1
16. Multilingual decals (220/240V only) (115V - English only, 220V - five languages)	1 set

INSTALLATION PROCEDURE

1. Remove the strips of shipping tape [A].
2. Remove the right side of the system table [B] (5 screws).
3. Install the front and rear expansion docking brackets [C] on the system table as shown (2 screws each).

Note: If an LCT is to be installed in the system, first perform the following:

- All steps of "LCT Installation With Paper Bank."
- Steps 1 to 17 of "Common Procedures For LCT Installation."

4. Place the paper bank [D] on the right side of the system table.
   NOTE: The bank's left side plate should be flush against the system table [E].

5. Set the expansion unit [F] onto the system table. Align the 2 pins of the paper bank with the holes in the base plate of the expansion unit. At this time the expansion and the paper bank right side cover and cassette holders will align with one another.

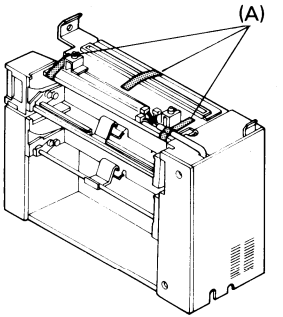

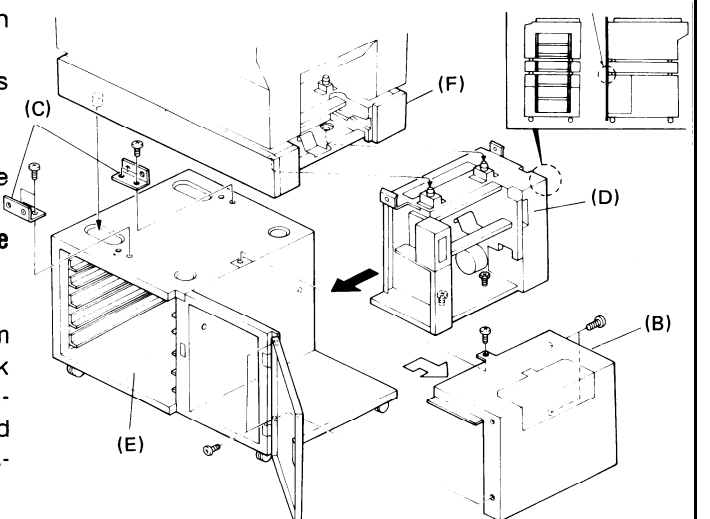

6. Remove the front [A] and rear [B] covers from the expansion unit (2 screws each).
7. Adjust the height of the paper bank:
   a. Remove the internal cover [C] from the paper bank (2 screws).
   b. Using the height adjusting bolts [D], raise or lower the paper bank so that both the front [E] and rear [F] screw holes of the paper bank and expansion unit align.
   c. Secure the paper bank to the expansion unit (2 screws).
   d. Open the system table front door [G], swing out the 4th paper feed station [H], and secure the paper bank to the front side of the system table (1 screw).
   e. Remove the bank rear cover [I] and the bank rear right cover [J] (2 screws each), then secure the bank to the rear side of the system table (1 screw).
   f. Install the bank docking bracket [K] (2 screws).
   g. Install the internal cover to the paper bank (2 screws).
8. Install the front [L] and rear [M] expansion docking plates as shown (2 screws each).

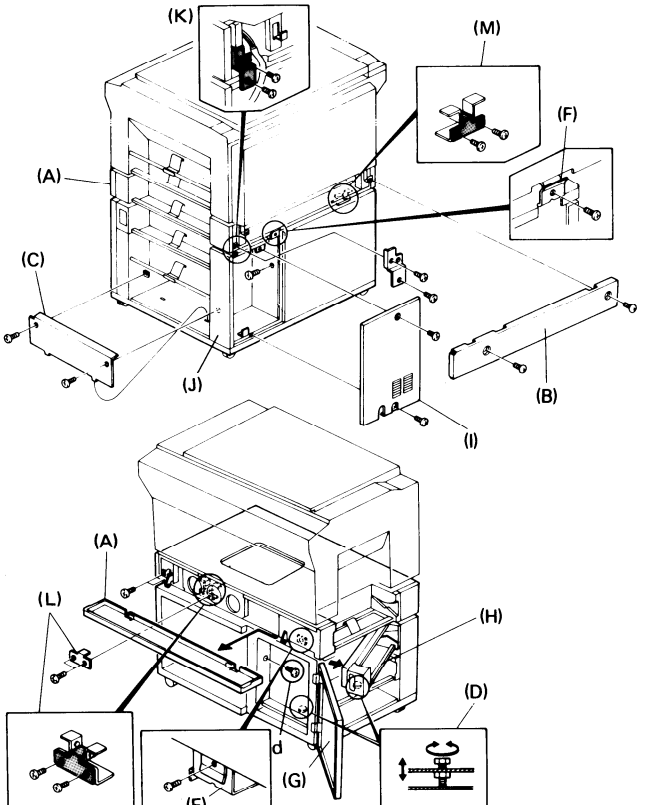

9. Remove the front right [A] and rear right [B] covers of the expansion unit (front - 2 screws, rear - 1 screw).

10. Remove the right side safety switch assembly [C] (1 screw).

11. Remove the copier rear cover (4 screws) lower the PCB plate (2 screws), and disconnect the expansion interface harness from the copier.

12. Pull the 3rd feed unit out [D] (4 screws).

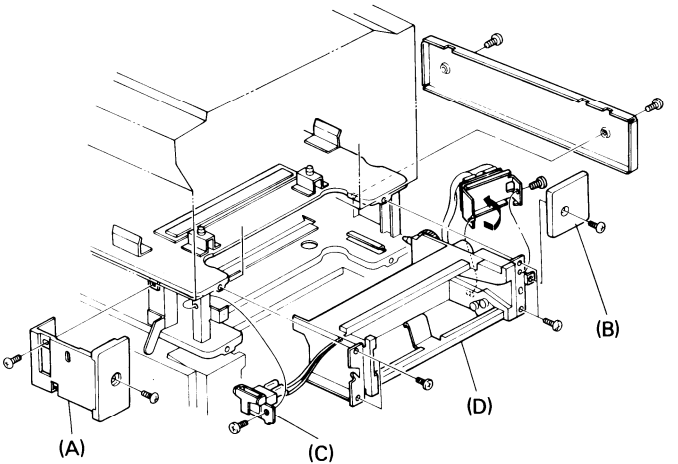

13. System without duplex unit only:
Install the mylar paper guide [E] on the expansion relay roller unit.

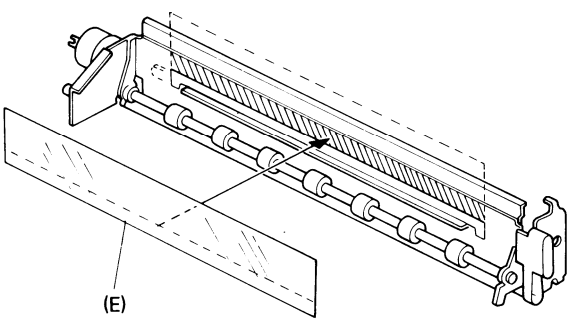

14. While doing this step:
    a. Run the expansion relay unit harness [A] (except the clutch harness) through the harness access hole [B] on the rear side of the 3rd paper feed unit [C].
    b. Set the front of the relay unit before setting the hook on the rear.

    Mount the expansion relay roller unit [D] on the 3rd feed unit. (front: 1 screw and 2 hooks, rear: 1 shoulder screw and 1 hook).
15. Hook the spring [E] between the guide plate lever [F] and the 3rd feed unit mounting bracket.
16. While doing this step, you must pass the expansion interface harness and the safety switch assembly around their respective expansion unit uprights.

    Plug the 5P connector (red) [G], into CN912 of the 3rd paper feed PCB [H], connect the other end to the expansion relay clutch [I], and clamp the harnesses with the twist clamp [J].
17. Reinstall the 3rd paper feed unit and the safety switch assembly (1 screw) in the expansion unit (4 screws).

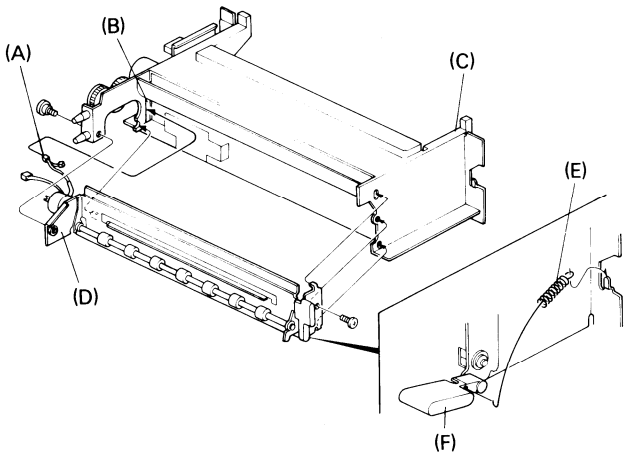

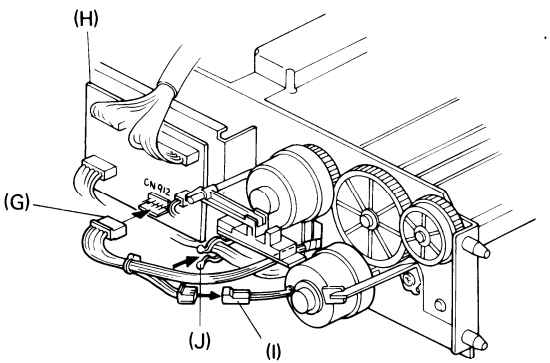

18. Connect the bank interface harness [A] to the 3rd paper feed PCB [B] as shown.

19. Clamp the bank interface harness to the bank docking bracket [C] with the large nylon wire clamp [D] (1 screw with washer).

20. a. Connect the ac paper bank harness [E] to the copier and clamp the harness with the small nylon wire clamp [F] on the left image plate of the PCB plate [G] as shown (1 screw with washer).

    b. When doing this step, run the harness from the left side of the PCB plate so that the rear cover may close properly. Connect the 9P expansion interface harness connector [H] to CN606 of the paper feed PCB [I] and 2 free connectors (8P [J] and 6P [K]) to free connectors from the dc harness.

    c. Fix the expansion interface harness to the left hinge plate of the PCB plate with the nylon wire clamp [L] (1 screw with washer).

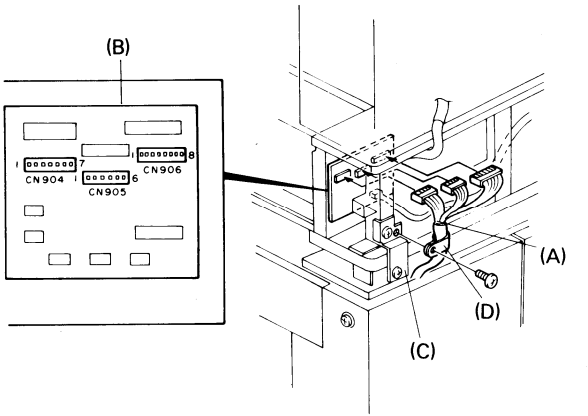

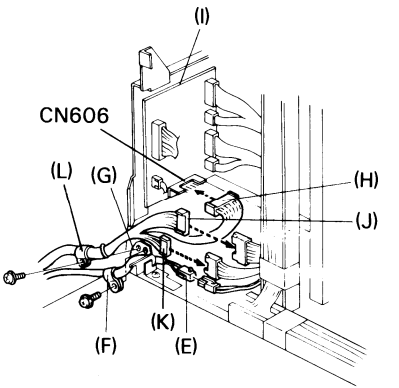

21. Stick the “Misfeed E” decal [A] on the front cover of the expansion unit as shown.

22. When reinstalling the expansion rear cover, place the bank ac harness inside the expansion unit.

23. Reinstall all covers except under the following conditions.:

    - If the LCT is to be installed, leave off the bank rear cover.
    - If the duplex unit is to be installed, leave off the expansion rear cover.
    - Leave off the copier rear cover if the duplex unit, DF, and/or sorter are to be installed.

24. Fill out the New Equipment Condition Report.

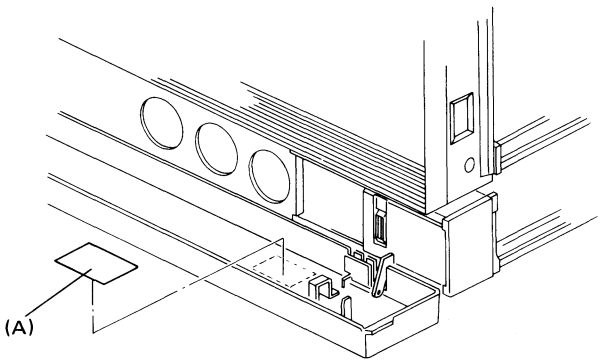

COPIER INSTALLATION

ACCESSORY CHECK

Check the quantity and condition of the accessories in the box according to the following list:

1.	Installation procedure (115V - English only, 220V - five languages)	1
2.	New Equipment Condition Report	1
3.	Envelope - NECR (115V only)	1
4.	Cassette - large	1
5.	Cassette - small	2
6.	Receiving tray	1
7.	Original holder	1
8.	Editing sheet	1
9.	Operating instructions (115V - English only 220V - five languages)	1
10.	Operating instruction cards (115V - English only 220V - five languages)	1 set
11.	Sort/Stack Key Cover	1
12.	Sort/Stack Key Top	1
13.	Duplex Key Cover	1
14.	Duplex Key Top	1
15.	Multilingual decals (220/240V only)	1 set

If not installing the duplex unit or sorter, save the duplex unit and sorter key tops and key covers for future use.

INSTALLATION PROCEDURE

1. Remove the shipping tape [A] from the copier as shown.
2. Open the copier front cover [B], remove the shipping tape [C] and the wedge [D] between the registration rollers as shown.
3. Remove the copier scanner lock plate cover [E] (1 screw).
4. Remove the copier scanner lock plate [F] (1 screw).
   - ▶ Save the scanner lock plate for future use.
5. Reinstall the copier scanner lock plate cover.

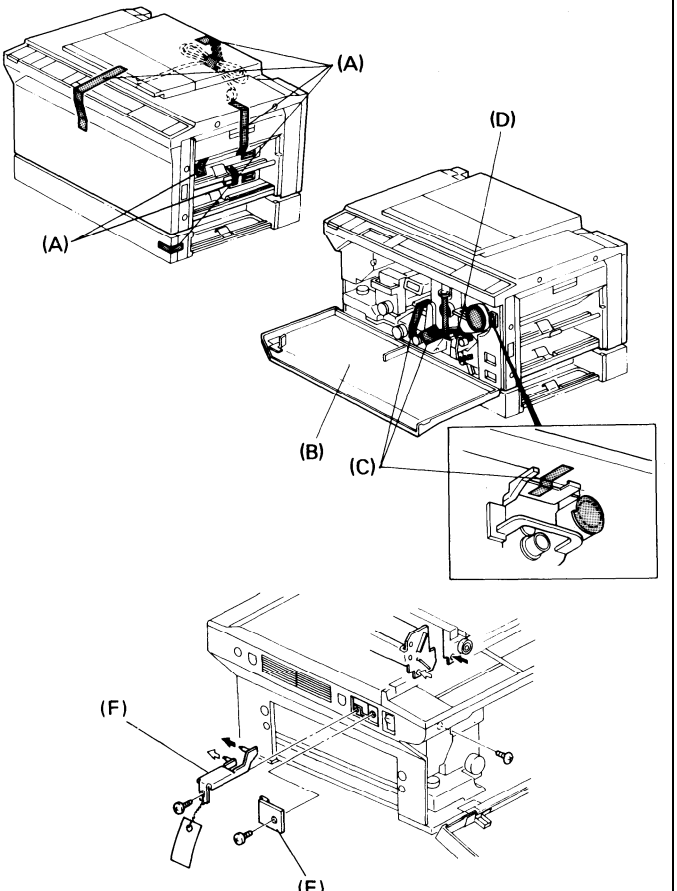

6. Remove the fusing lock plate [A] (2 screws).

7. Use one of the screws removed in the previous step to secure the inner cover [B].

8. Pull out the fusing unit [C] to the lock position and remove the fusing unit cover [D] (2 screws).

9. Prime the oil supply pad [E] with silicon oil.

10. Fill the oil tank [F] with silicon oil.

11. Manually operate the oil pump lever [G] and confirm proper operation and condition of the silicon oil supply system.

12. Reassemble the fusing unit and return it to its original position.

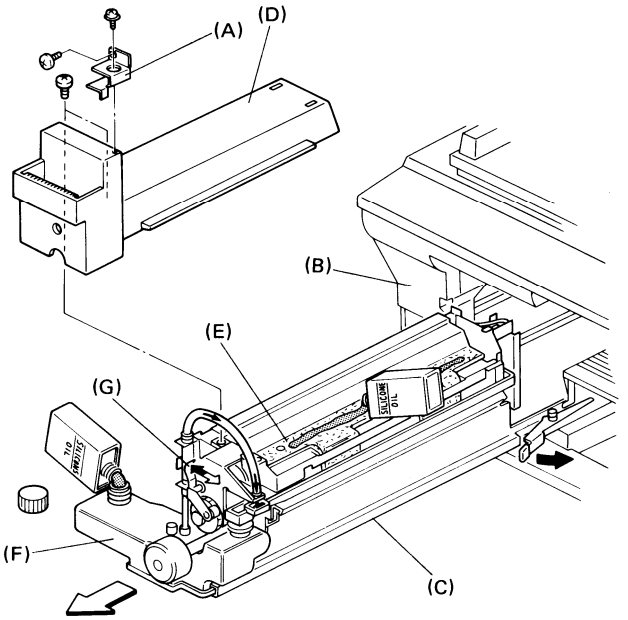

13. Raise the development lock lever [A] and pull out the development unit [B]. Place the unit on a clean sheet of paper.

14. Separate the toner tank [C] from the development unit [D] (2 screws).

15. Pour one bottle [E] of developer into the development unit while turning the knob [F] counterclockwise to distribute the developer.

16. Remount the toner tank on the development unit.

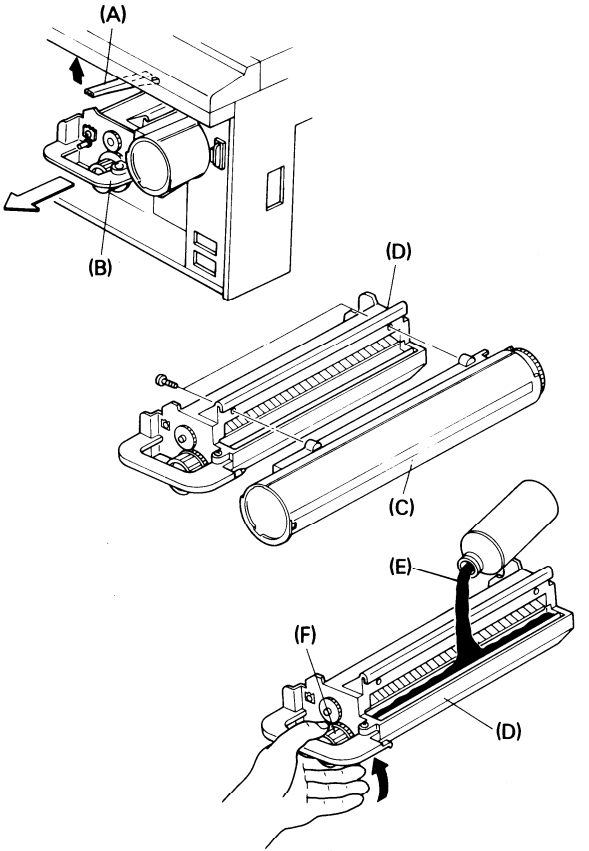

17. Swing the toner collection bottle cover [A] to the left (1 screw) and unplug the toner overflow sensor connector [B].

18. Remove the toner collection bottle [C].

19. Lower the T/S corona unit [D].

20. Place a sheet of paper [E] over the T/S corona unit.

21. Remove the charge corona cover [F] (1 screw).

22. Unplug the charge corona connectors [G] and remove the charge corona unit [H]

23. Remove the quenching charge unit [I].

24. Remove the drum stay [J] (reverse threaded knob and 1 screw).

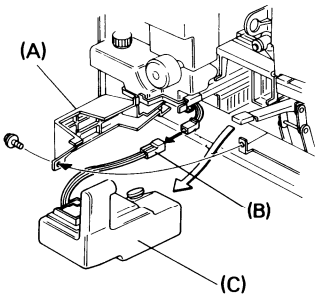

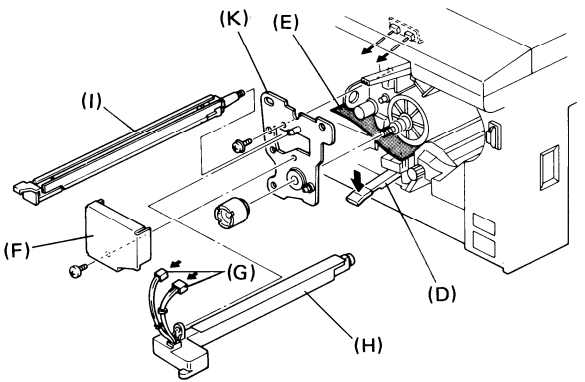

25. Remove the cleaning unit [A]. Dust the cleaning blade [B] and brush [C] with setting powder (P/N 54429101).

26. Reinstall the cleaning unit.

27. Pull out the drum protective sleeve [D].

    ▶ Save the drum protective sleeve for future use when servicing the copier.

28. Reinstall the drum stay (1 knob and 1 screw), the quenching charge unit, and the charge corona unit.

29. Reconnect the charge corona connectors and reinstall the charge corona unit cover (1 screw).

30. Remove the paper over the T/S corona unit and return the T/S corona unit to its original position.

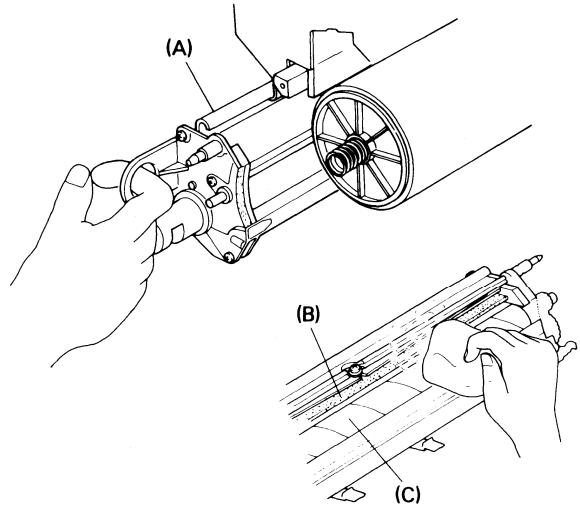

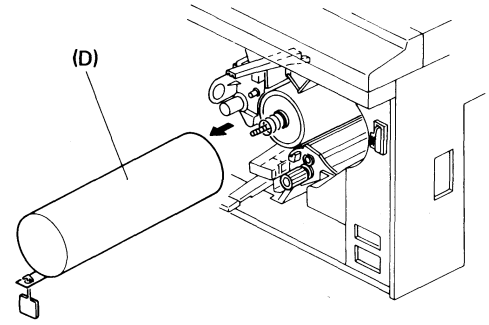

31. Reinstall the toner collection bottle [A] and plug in the toner overflow sensor connector [B].

32. Make sure that the hooks of the transport plate [C] are positioned underneath the bottle cover [D], then reinstall the toner collection bottle cover [E] (1 screw).

CAUTION: When installing the development unit [F], be sure the development unit rail is properly engaged with the guide rail in the copier.

33. Reinstall the development unit.

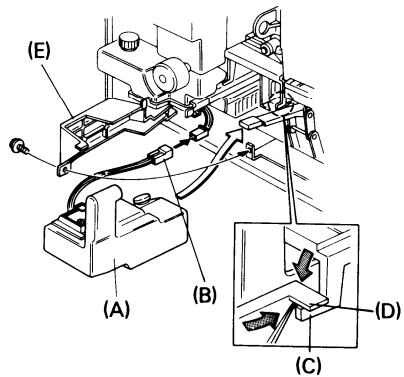

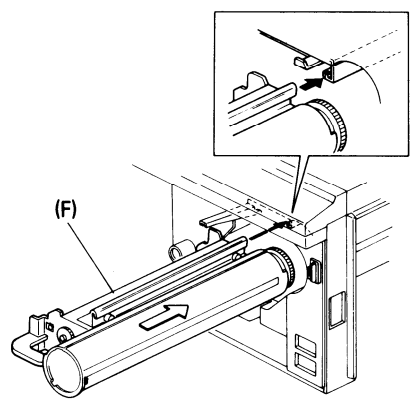

34. Install one toner cartridge [A].

    - Confirm that the toner cartridge gear is properly engaged by attempting to rotate the cartridge counterclockwise. When the toner cartridge gear is properly engaged, the toner cartridge will not rotate freely.

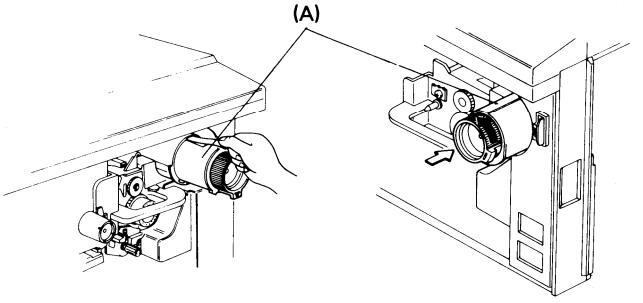

35. 240 volt areas only:
    Remove the copier rear cover (3 screws), disconnect the wire from the 220-volt terminal [B], and connect it to the 240-volt terminal [C] as shown. Reinstall the copier rear cover.

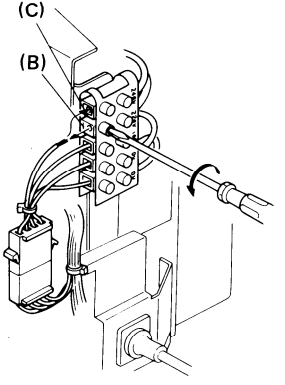

36. Put five sheets of white paper (A3 or 11" x 17") on the exposure glass.
37. Lower the platen cover.
38. Plug in the machine and turn on the main switch.
39. After pressing the Clear Modes Key, the Clear/Stop Key, and the Recall/Enter Key in that order, enter 10 using the Number Keys. Press the Recall/Enter Key again.
40. After the warm up period is completed, press the Start key for drum conditioning.
41. After the machine stops, turn off the main switch.
42. Install the operating instruction cards [A] over the Dip switch cover as shown (two-sided tape).
43. Install the original holder [B] on the platen cover as shown and install the receiving tray [C].
44. Load paper into the cassette and check machine operation and copy quality.
43. Fill out the New Equipment Condition Report.

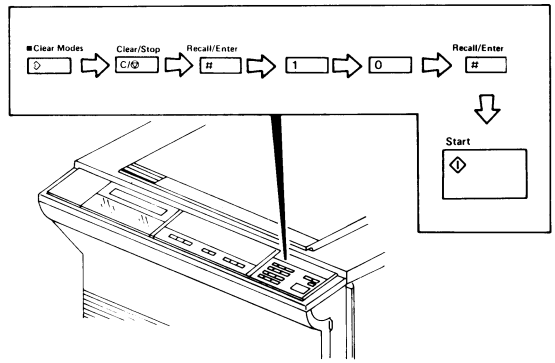

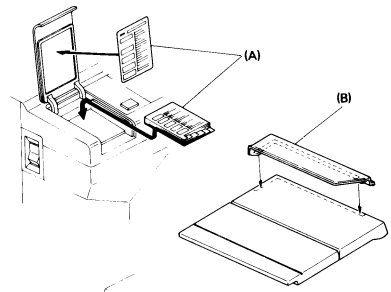

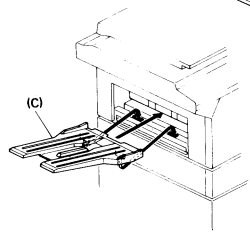

CASSETTE MODIFICATION

1. Take off the cassette cover [A].
2. Remove the side fences [B] (1 screw each) and the bottom plate [C].
3. Reposition the rear fence [D] in the desired paper size position (1 screw).
   - ▶ Paper size positions are shown on the inside of the cassette.
4. Reinstall the bottom plate.
5. Reinstall the side fences in the desired paper size position.
6. Attach the proper paper size decals [E] on the cassette at the positions shown.
7. Insert the actuator plate [F] in the slot on the front of the cassette as shown.

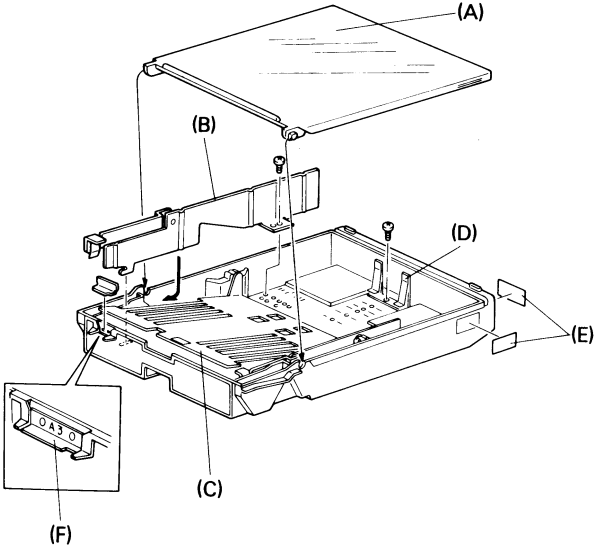

KEY COUNTER HOLDER INSTALLATION

Note: Ricoh, Hecon, and Hengstler key counters are recommended for this copier.

1. Remove the right front cover [A] (2 screws).
2. Remove the cover plate [B] (2 screws).
3. Pull out the 4P key counter connector [C] through the key counter access hole and remove the shorting plug [D].
4. Connect the 4P connector on the key counter holder [E] to the key counter harness.
5. Hold the fixing plate on the inside of the key counter bracket [F] and insert the key counter holder.

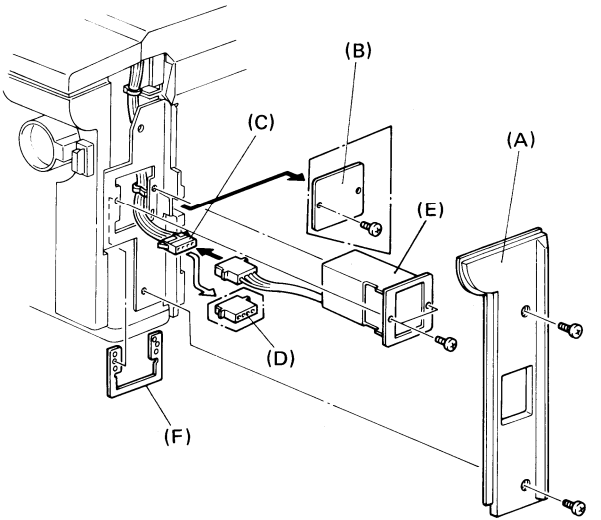

6. Align the holes in the fixing plate with the mounting holes of the key counter holder and secure the key counter holder.

   Note: The fixing plate has three sets of holes. Make sure to use the holes that match the type of counter when installing.

7. Reinstall all covers.

ACCESSORY COUNTER INSTALLATION

1. Remove the front cover [A] (1 knob screw).
2. Pull out the fusing unit [B] about half way.
3. Remove the front inner cover [C] (5 screws); this cover should be removed from the top first.
4. Remove the accessory counter cover plate [D] (2 screws).
5. Push the accessory counter [E] into the space provided until it locks.
6. Connect the 2P connector [F] on the accessory counter to the counter harness [G].
7. Reinstall all covers.

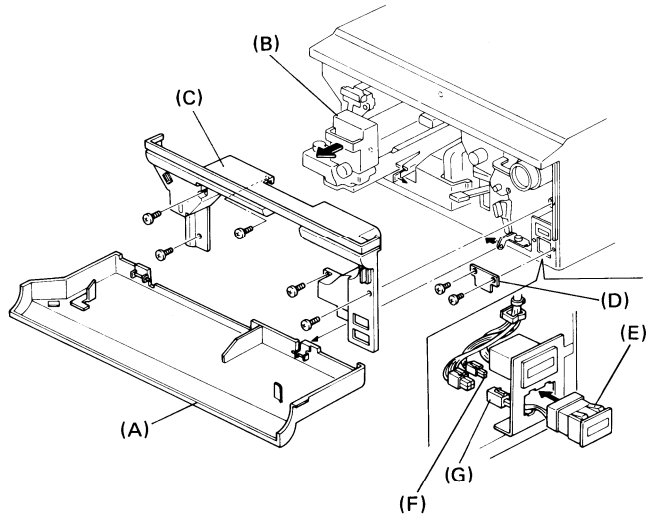

COLOR UNIT INSTALLATION

ACCESSORY CHECK

Check the quantity and the condition of the accessories in the box according to the following list:

1.	Actuator -- Red	1
2.	Actuator -- Blue	1
3.	Actuator -- Green	1
4.	Screw -- M3 x 4	1
5.	Color Decal Sheet	1

Note: The color development unit should be installed after drum conditioning is finished.

This procedure should be done when the color developer is replaced.

INSTALLATION PROCEDURE

1. Install the appropriate color actuator [A] on the color development unit.

2. Stick the appropriate decal [B] on the development unit handle.

3. Separate the toner tank [C] from the development unit [D] (2 screws).

4. Pour one bottle of color developer [E] into the development unit while turning the knob [F] counterclockwise to distribute the developer.

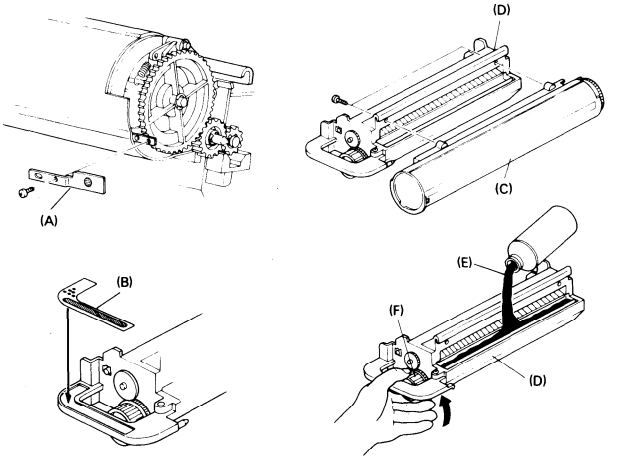

Steps 5 through 16 should also be done when color developer is replaced.

5. Remount the toner tank onto the development unit.

6. Making sure that the color development unit is properly engaged with the unit guide rail of the copier, install the color development unit [A].

7. Install a color toner cartridge [B].

8. Remove the DIP switch cover [C] on the left side of the operation panel (1 screw) and turn on DIP SW5 [D].

9. Plug in the machine and turn on the main switch. Confirm that the color toner indicator is displayed on the operation panel.

10. Press the Program key. “20” should be displayed in the Copy Counter.

11. Put five sheets of white paper (A3 or 11” x 17”) on the exposure glass.

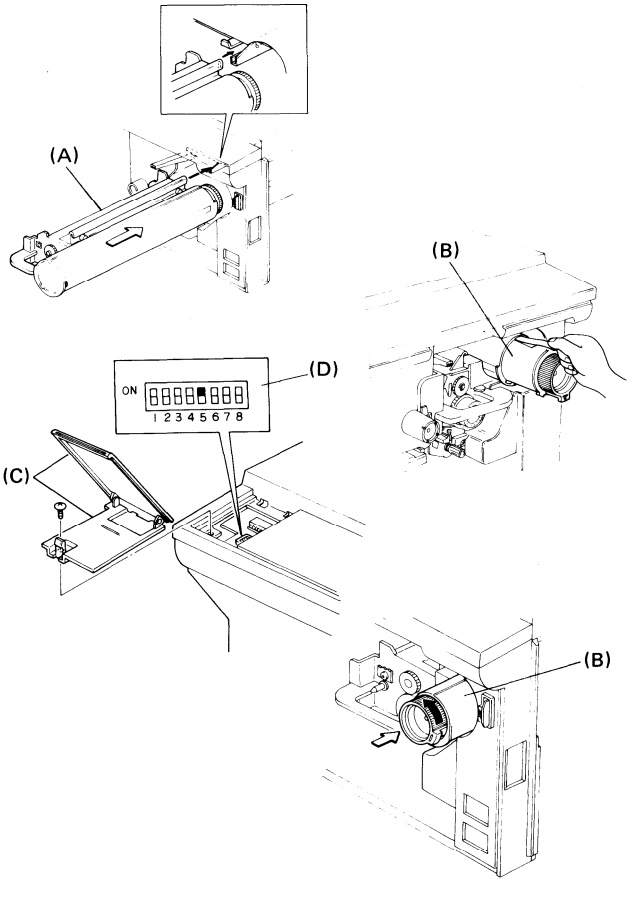

12. Lower the platen cover.

13. After the warm up period is completed, press the Start key.

14. After the machine stops, press the appropriate Number key according to the following list:

    Red toner: 7
    Green toner: 8
    Blue toner: 9

15. Turn off the main switch and the DIP switch.

16. Reinstall the DIP switch cover (1 screw).

PREPARATION FOR TRANSPORTING THE COPIER

SHORT HAUL TRANSPORTATION

Before moving the copier from its place of installation, be sure to prepare it for transportation as follows:

CAUTION: The copier may be seriously damaged if it is moved without proper preparation.

1. Insert the drum protective sleeve [A].
2. Re-install the development unit.
3. Re-install the drum stay and charge corona unit.
4. Secure the following items with tape:
   - Manual feed table
   - Platen cover or document feeder
   - The power supply cord (roll up first)
   - Expansion front cover
   - System table front door

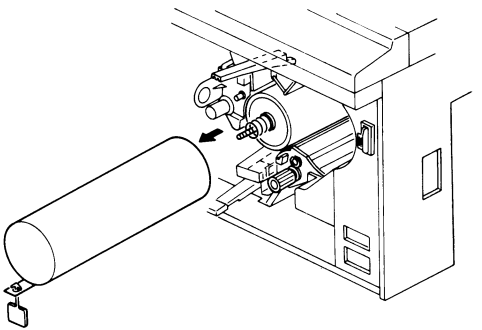

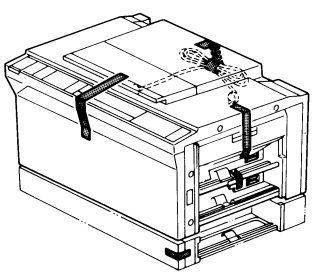

5. Remove the sorter to prevent damage to the bins.

6. Remove the duplex receiving tray.

7. Remove the cassettes.

8. Remove the original table from the document feeder.

9. Remove the LCT if it is installed in the 3rd feed station.

LONG HAUL TRANSPORTATION BY VEHICLE

If the machine is to be transported by vehicle, do the following steps after you have completed the above short haul procedure.

1. Remove the developer from the development unit.

2. Place a wedge between the registration rollers.

3. Remove the sorter and secure the following items with tape.

   - top cover
   - jam clearing tray
   - bins--tape the right and left edges of the spacers together.

4. Remove the scanner lock plate cover [A] and install the scanner lock plate [B].

   NOTE: Confirm that the scanner is at the home position.

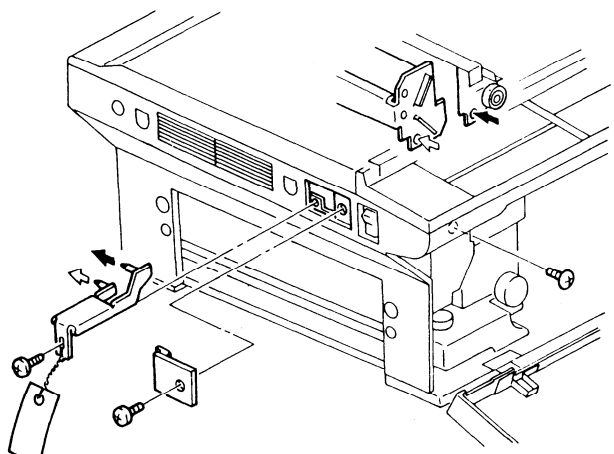

5. Secure the following items with tape:

   - T/S corona release lever to the drum stay knob
   - Transport plate to the toner collection bottle cover
   - Toner shield glass
   - 1st and 2nd feed guide plates

6. Remove the LCT if it is installed in the 5th feed station.

7. Secure the LCT covers and power supply cord with tape.

8. Separate the system into the two units as follows:

   - Paper Bank and System Table
   - Copier, duplex unit and/or document feeder

9. Tape the bank interface harness and ac harnesses to the top of the bank.

SECTION II

SERVICE TABLES

II. SERVICE TABLES

PM Table 2-1
Service Program Mode Operation 2-6
Service Remarks 2-32

PM TABLE

C: Clean R: Replace L: Lubricate A: Add I: Inspect

ITEM	EM	80K	160K	240K	320K	NOTES
OPTICS						
1. Mirrors, lens, reflectors, toner shield glass	C	C	C	C	C	Alcohol or water (silicone cloth)
2. Exposure glass	C	C	C	C	C	Alcohol or water
3. Platen cover sheet	C	C	C	C	C	Alcohol or water (replace if necessary)
4. Scanner guide rod and plate		L	L	L	L	Launa oil or equivalent
5. Guide rod felt		L	L	L	L	Launa oil or equivalent (if necessary)
6. APS sensor	C	C	C	C	C	Dry cloth
7. ADS sensor	C	C	C	C	C	Dry cloth
PAPER FEED						
8. Paper feed roller	C	R	R	R	R	Water
9. Friction pad	C	R	R	R	R	Water
10. Paper feed guide plate		C	C	C	C	
11. Registration sensor		C	C	C	C	Blower brush

C: Clean R: Replace L: Lubricate A: Add I: Inspect

ITEM	EM	80K	160K	240K	320K	NOTES
12. Cassette bottom plate pad		C	C	C	C	Alcohol or water
13. Paper feed sensor		C	C	C	C	Blower brush
AROUND DRUM						
14. Corona wires	C	R	R	R	R	Dry cloth
15. Wire cleaner		R	R	R	R	
16. End blocks and casing	C	C	C	C	C	Dry cloth
17. Transfer guide plate		C	C	C	C	Dry cloth
18. PTL filter	C	C	C	C	C	Dry cloth, discharge before installation.
19. QL filter	C	C	C	C	C	Dry cloth, discharge before installation.
20. ID sensor	C	C	C	C	C	Blower brush
21. Erase lamp unit		C	C	C	C	Dry cloth

C: Clean R: Replace L: Lubricate A: Add I: Inspect

ITEM	EM	80K	160K	240K	320K	NOTES
CLEANING UNIT						
22. Cleaning blade		R	R	R	R	Dust with setting powder
23. Cleaning seal		C	C	C	C	Replace if necessary
24. Cleaning brush		R	R	R	R	Dust with setting powder
25. Bias roller blade		R	R	R	R	
26. Bias roller		C	C	C	C	
27. Cleaning unit		C	C	C	C	
28. Pick-off pawls	C	C	C	C	C	Replace if necessary
29. Used toner bottle	C	C	C	C	C	Empty of used toner
DEVELOPMENT UNIT						
30. Developer		R	R	R	R	If necessary
31. Upper brush seal		C	C	C	C	
32. Side seals		C	C	C	C	
33. Development unit guide		C	C	C	C	
34. Toner supply clutch			L		L	Mobil Temp 78
35. Filter casing		C	C	C	C	

C: Clean R: Replace L: Lubricate A: Add I: Inspect

ITEM	EM	80K	160K	240K	320K	NOTES
FUSING UNIT						
36. Hot roller		C	R	C	R	
37. Pressure roller		C	R	C	R	If necessary
38. Stripper pawls		C	R	C	R	Replace if necessary
39. Oil supply pad		R	R	R	R	Prime with silicone oil
40. Oil blade		C	R	C	R	Prime with silicone oil
41. Fusing entrance and exit guides		C	C	C	C	Suitable solvent
42. Oil sump		C	C	C	C	
43. Oil tank		C	C	C	C	Remove paper clay with pipette
OTHERS						
44. Development drive chain			L		L	Spindle oil
45. Main drive chain			L		L	Mobil Temp 78
46. Transport belt			C	C	C	Alcohol or water
47. Bushings			L		L	Spindle oil
48. Fusing drive gear			L		L	Mobil Temp 78
49. Development sleeve gear			L		L	Silicone G-40M
50. Resin gear			L		L	Silicone G-40M

C: Clean R: Replace L: Lubricate A: Add I: Inspect

ITEM	EM	80K	160K	240K	320K	NOTES
DUPLEX UNIT						
51. Duplex spring clutch			L		L	Mobil Temp 78
52. Paper feed roller				R		
53. Friction pad				R		
54. O-ring				R		
55. Positioning roller				C		Dry cloth
DOCUMENT FEEDER						
56. Belt	C	C	**C**	C	C	Belt cleaner, replace if necessary
57. Pick-up roller	C	C	**C**	C	C	Water, replace if necessary
58. Feed roller	C	C	**C**	C	C	Water, replace if necessary
59. Friction roller	C	C	**C**	C	C	Water, replace if necessary
LARGE CAPACITY TRAY						
60. Pick-up roller	C		**R**		R	Water

SERVICE PROGRAM MODE OPERATION

The service program mode is used to (1) check electrical data and (2) change modes or adjustment values. The factory settings are stored in ROM; other settings are stored in permanent (battery maintained) RAM.

1. Data Check Mode

1. Remove the DIP switch cover on the operation panel and turn on DIP SW 201-8. The Copy Counter will start blinking.
2. Enter the number of the desired SP Mode using the numeral keys according to the Service Program Mode table.
3. Press the Enter (#) key.
4. The appropriate data will be displayed in the Magnification indicator.
5. After you have finished with the service program mode, turn off DIP SW No. 8.

2. Data Change Mode

1. Follow steps 1-3 of the preceding procedure.

2. Factory setting values or mode will be displayed in the Magnification indicator (three-digit indicator). (If the data values are not to be changed, turn off DIP SW 201-8.)

3. Enter the desired value or mode using the numeral keys according to the Service Program Mode table.

4. Turn off DIP SW 201-8.

• The following procedure can also be used to access program numbers 10, 11, 90, 91, and 92 instead of using DIP SW 201-8.

1. Press the Mode Clear key.
2. Press the Clear/Stop key.
3. Press the Enter key; at this time the Copy Counter should blink.
4. Enter the desired number using the numeral keys.
5. Press the Enter key.

• Service program mode is cleared by pressing the Clear Modes key.

3. Service Program Mode Table

Mode No.	Function	Data	Factory Setting	Comments
5 Exposure Lamp OFF Free Run	Free run with exposure lamp OFF			
6 Jam Detection OFF	Copies are made without jam detection.			The total counter advances while copying.
7 Charge Wire Cleaner	Charge wire cleaner motor operation.			The motor starts when Enter key is pressed. Stops after 1 cycle (about 60 s).
8 Input Check	Displays the input from sensors.			For data, see the input check table.
9 Exposure Lamp output	Displays lamp regulator output.			Input #1 then press the Enter key. The lamp stays on 10 s.

Mode No.	Function	Data	Factory Setting	Comments
10 Drum Conditioning	Used to condition a new drum.			Enter 10 via the number keys. 100 will appear in the copy counter. Press Start to activate. For 50 copies, lamp is on. Then lamp OFF until Vsp > 0.4 V. Then, lamp on for rest of cycle. Press C/S to stop.
11 All Indicators ON	Turns on all the indicators on the operation panel.			
13 Destination Code	Shows the market the machine is intended for.			D = Japan A = USA C = Canada E = Europe F = Taiwan

Mode No.	Function	Data	Factory Setting	Comments
15 Auto Reset Time	Selects auto reset of 1 or 3 minutes.	0: 1 min. 1: 3 min. 2: None	0	
16 Count Up/Down	Selects count up or count down.	0: UP 1: DOWN	0	
17 Auto Cassette Shift	Selects auto-cassette shift mode	0: ON 1: OFF	0	Copier automatically shifts to another cassette holding same size paper when paper runs out.
18 Beeper	Turns beeper ON or OFF	0: ON 1: OFF	0	
19 Image Density Mode	Selects the priority of image density control when the main switch is turned on.	0: ADS 1: Manual	0	
20 Feed Station Priority	Selects feed station priority at power on.	0: LCT 1: 1st	0	

Mode No.	Function	Data	Factory Setting	Comments
21 APS Priority	Selects APS or manual	0: APS 1: Manual	0	
22 Auto Mode Reset	Sets the auto-reset time.	0: 4 s 1: 60 s	0	Timer starts from original feed out.
23 Free Size	Enables originals of various sizes to be fed from the same stack.	0: Normal 1: Free	0	
28 Auto Sort Mode	Sort mode is automatically selected when more than 2 originals are set on the DF original table and the entered quantity is greater than 2.	0: Normal 1: Sort	0	Sorter and DF must be installed on the machine.
29 Fusing Unit Idle	Selects fusing unit idling mode.	0: OFF 1: ON	0	Idles for 15 s.
30 Toner Supply Mode	Selects toner supply system.	0: Detect 1: Fixed	0	

Mode No.	Function	Data	Factory Setting	Comments
31 Toner Supply Amount (Detect Mode)	Determines how much toner is supplied in detect mode.	0: 30% 1: 15% 2: 45% 3: 60%	0	
32 Toner Supply Amount (Fixed Mode)	Determines how much toner is supplied in fixed mode.	0: 7% 1: 3.5% 2: 10.5% 3: 14%	0	
33 ID Sensor Bias (Black Toner)	Sets the bias voltage applied to the bias roller when sensing image density.	0: 500 1: 440 2: 470 3: 530	0	500 V = normal 440 V = lightest 470 V = light 530 V = dark
35 Toner Supply	ID sensor check is performed every 5 copies. Changes toner end level from 0.75 V to 0.7 V.	0: Normal 1: ON	0	

Mode No.	Function	Data	Factory Setting	Comments
36 Margin Adjustment	Selects the preset margin adjustment value.	0: 5 mm 1: 10 mm 2: 15 mm	0	
37 Lead Edge Separation Corona Timing	Sets the length of time that the lead edge separation corona is applied.	0: 10 mm 1: 15 mm	0	Use when separation problems occur.
38 Erase margin	Sets the width of the erase margin.	0: 10 mm 1: 5 mm 2: 15 mm 3: 20 mm	0	
39 Charge Wire Cleaner	Sets charge wire cleaner operation to ON or OFF.	0: ON 1: OFF	0	
41 Lead Edge Erase Margin Adjustment	Adjusts the lead edge margin.	0 - 15	8	1 mm per step +7 mm to -8 mm
42 Registration Adjustment	Adjusts registration.	0 - 15	8	1 mm per step +7 mm to -8 mm

Mode No.	Function	Data	Factory Setting	Comments
43 Vertical Magnification Adjustment	Adjusts magnification in the paper travel direction.	0 - 15	8	0.2% per step +1.4% to -1.6%
44 Horizontal Magnification Adjustment	Adjusts magnification perpendicular to the direction of paper travel.	0 - 15	8	0.2% per step +1.4% to -1.6%
46 Size Detection Error Correction	Corrects size detection.	0 - 15	8	1 mm per step +7 mm to -8 mm
49 Fusing Temperature Adjustment	Adjusts fusing temp.	0: Normal 1: Low	0	185° 175°
50 Length Detection Check	Displays the length detected by the size detection circuit.			Press Start key to display. Do not repeat more than 10 times to avoid overheating the fiber optic cables.

Mode No.	Function	Data	Factory Setting	Comments
51 Exposure Lamp Voltage Check	Displays exposure lamp voltage.			
52 Fusing Temperature	Displays the fusing temperature.			
53 Drum Temperature	Displays the drum temperature.			
54 Vsg Adjustment	Turns on ID sensor LED.			Adjust Vsg with VR on the ID sensor board LED turns on 10 s (no drum rotation).
55 Vsg/Vsp Check	Displays Vsg and Vsp.			Average value of 10 copies.
56 ADS Reference Voltage	Sets ADS reference voltage for standard originals. Press Print to start and C/S to stop.			Machine starts free run.

Mode No.	Function	Data	Factory Setting	Comments
57 ADS Voltage (Non-standard Original)	Checks ADS Voltage for non-standard Originals. Press Start key to turn on. Press C/S to stop.			Machine starts free run.
58 APS Sensor Adjustment	Adjusts the APS sensor voltage with standard original. Press Start key to turn on. After pressing # key, press 0 to set length voltage or press 1 to set width voltage. Press C/S to stop.			Machine starts free run. APS voltage is adjusted.
59 Bias Voltage	Displays bias voltage. Press Start to turn on. Press C/S to stop.			Without temperature compensation.

Mode No.	Function	Data	Factory Setting	Comments
60 Toner Density Recovery	After the Start key is pressed, the toner supply clutch turns on and free run starts. Free run stops and constant supply is reset when Vsp becomes < 0.5 V.			Use this mode to bring a low toner condition back to normal. Use only with black toner. During this period, Vsp is displayed. Press 0 to display Vsg.
70 Color Toner Supply Amount (Fixed Mode)	Selects the color toner supply ratio.	0: 14% 1: 7% 2: 21% 3: 28% 4: 35% 5: 42% 6: 49% 7: 56%	0	
73 Color Toner Copy Count	Shows the number of color copies made.	0: Red 1: Green 2: Blue		Multiply number by 100. Example: 24 = 2400 sheets. Cannot be reset unless memory is cleared.

Mode No.	Function	Data	Factory Setting	Comments
74 Door Open Location Indicator	Sets the copier to show the locations of open doors using the Jam indicator.	0: OFF 1: ON	0	Not effective for the front door.
75 ID Sensor Bias (Color Toner)	Sets the bias voltage applied to the bias roller when sensing image density.	0: 620 1: 590 2: 650	0	620 V = normal 590 V = lighter 650 V = darker
76 Sorter Bin Capacity	Sets the stack mode quantity limit.	0: No limit 1: Limit	0	Limit is determined by paper size.
77 Odd Number Duplex Copy	Sets the copier to eject the final copy if an odd number of originals is copied. (When copying single sided originals only.)	0: ON 1: OFF	0	When on, the final sheet is fed out; when off, it stays in the duplex tray.

Mode No.	Function	Data	Factory Setting	Comments
79 Maximum Reproduction Ratio	Sets the maximum reproduction ratio.	0: 155% 1: 200%	0	
86 PM Counter	Turns on the PM counter.	0: OFF 1: ON	0	For PB machines, 0 is ON and 1 is OFF.
87 PM Copy Count	Sets the interval of the PM counter.	0: 80 k 1: 60 k 2: 100 k	0	
88 PM Counter Check	Displays contents of the PM counter.			When the PM count is exceeded the Service Call and Key Counter indicators blink.
89 PM Counter Reset	Resets the PM counter.			Use after performing PM.
90 User Code Mode	Selects user code mode. (Key counter shorting connector must be removed.)	0: OFF 1: ON	0	If on, must enter a code to copy. See user code table. Reset after 60s or if C/S and Clear Modes pressed together.

Mode No.	Function	Data	Factory Setting	Comments
91 User Code Counter Check	Displays the contents of each user counter. Use + and - keys to select user code (lower two digits of user code displayed in copy counter). First 3 digits of copy count are displayed in Magnification indicator. Press "." to display second 3 digits.			User counters count from 0 to 999999 (endless count).
92 User Code Counter Reset	Resets user counters. Select the user code counter using + and - keys. To reset press 1 then #.			

Mode No.	Function	Data	Factory Setting	Comments
93 Maximum Copy Quantity	Limits the maximum copy quantity that can be entered.		0	The indicator blinks and the limit quantity is displayed. If you enter 0, the max is 999. Otherwise, max is number entered.
97 Clear Service & Jam Count	Clears the service call and jam counters.			DIP SW 201-7 must be on.
98 Clear Counters	Clears the following counters: - counters 100 to 139 - user program - PM counter - User code counter			Cleared at factory. DIP SW 201-7 must be on.
99 Clear All Memory	Clears all counters and returns all modes to factory settings.			Test pin 101 and 102 shorted. DIP SW 201-7 must be on.

Mode No.	Function	Data	Factory Setting	Comments
100 Main Motor ON Time	Displays the total (accumulated) time that the main motor has operated.			Time in hours.
101 Total Copies	Displays the total number of copies.			The first three digits are shown in the Magnification indicator. Press "." to display the second 3 digits.
102 Duplex Copies	Displays the total number of duplex copies made.			The first three digits are shown in the Magnification indicator. Press "." to display the second 3 digits.

Mode No.	Function	Data	Factory Setting	Comments
103 DF Copies	Displays the total number of copies made using the DF.			The first three digits are shown in the Magnification indicator. Press "." to display the second 3 digits.
104 Sort Copies	Displays the total number of copies made using the sorter.			The first three digits are shown in the Magnification indicator. Press "." to display the second 3 digits.
105 Paper Bank Copies	Displays the total number of sheets fed from the paper bank unit.			The first three digits are shown in the Magnification indicator. Press "." to display the second 3 digits.
106 LCT Copies	Displays the total number of sheets fed from the LCT.			The first three digits are shown in the Magnification indicator. Press "." to display the second 3 digits.

Mode No.	Function	Data	Factory Setting	Comments
108 A3/11 x 17 Copies	Displays the total number of A3 or 11 x 17 copies.			The first three digits are shown in the Magnification indicator. Press "." to display the second 3 digits.
109 A4/8-1/2 x 11 Copies	Displays the total number of A4 or 8-1/2 x 11 copies.			The first three digits are shown in the Msgnification indicator. Press "." to display the second 3 digits.
111 Reduction Copies	Displays the total number of reduction copies.			The first three digits are shown in the Magnification indicator. Press "." to display the second 3 digits.
112 Enlarged Copies	Displays the total number of enlarged copies.			The first three digits are shown in the Magnification indicator. Press "." to display the second 3 digits.

Mode No.	Function	Data	Factory Setting	Comments
114 Originals Copied	Displays the total number of originals copied.			The first three digits are shown in the Magnification indicator. Press "." to display the second 3 digits.
115 Originals Copied Using DF	Displays the total number of originals copied using the DF.			The first three digits are shown in the Magnification indicator. Press "." to display the second 3 digits.
120 Total Service Calls	Displays the total number times that the Service Call indicator has turned on.			The first three digits are shown in the Magnification indicator. Press "." to display the second 3 digits.
121 Service Calls for Optics	Displays the total number "Optics" service calls.			The first three digits are shown in the Magnification indicator. Press "." to display the second 3 digits.

Mode No.	Function	Data	Factory Setting	Comments
122 Service Calls for Exposure	Displays the total number of "Exposure" service calls.			The first three digits are shown in the Magnification indicator. Press "." to display the second 3 digits.
123 Service Calls for Drive	Displays the total number of "Drive" service calls.			The first three digits are shown in the Magnification indicator. Press "." to display the second 3 digits. This service call can result from the pulse generator or corona wire cleaner sensor.
124 Service Calls for Fusing	Displays the total number of "Fusing" service calls.			The first three digits are shown in the Magnification indicator. Press "." to display the second 3 digits.

Mode No.	Function	Data	Factory Setting	Comments
125 Service Calls for Interface Communication	Displays the total number of "Interface Communication" service calls.			The first three digits are shown in the Magnification indicator. Press "." to display the second 3 digits.
130 Paper Jams	Displays the total number of paper jams.			The first three digits are shown in the Magnification indicator. Press "." to display the second 3 digits.
131 Feed Jams	Displays the total number of entrance area paper jams.			The first three digits are shown in the Magnification indicator. Press "." to display the second 3 digits.
132 Fusing Jams	Displays the total number of jams at the fusing unit.			The first three digits are shown in the Magnification indicator. Press "." to display the second 3 digits.

Mode No.	Function	Data	Factory Setting	Comments
134 Duplex Jams	Displays the total number of jams in the duplex area.			The first three digits are shown in the Magnification indicator. Press "." to display the second 3 digits.
136 Exit Jams	Displays the total number of jams in the exit area.			The first three digits are shown in the Magnification indicator. Press "." to display the second 3 digits.
137 Paper Bank Jams	Displays the total number of paper bank jams.			The first three digits are shown in the Magnification indicator. Press "." to display the second 3 digits.
138 Sorter Jams	Displays the total number of sorter jams.			The first three digits are shown in the Magnification indicator. Press "." to display the second 3 digits.

Mode No.	Function	Data	Factory Setting	Comments
139 DF Jams	Displays the total number of DF jams.			The first three digits are shown in the Magnification indicator. Press "." to display the second 3 digits.

Input Check Table

No.	Item	Normal Mode
1	Registration Sensor	0
3	Exit Sensor	0
4	Relay Roller Sensor #3	0
5	Relay Roller Sensor #4	0
6	Relay Roller Sensor #5	0
7	Duplex Exit Sensor	0
11	Duplex Tray Sensor	0
15	Sorter Inlet Sensor	0
16	Sorter Bin Sensor	1
17	Sorter Home Position Sensor	0
18	Sorter Cover Switch	1
20	Toner End Sensor (Color)	1
21	Key Counter Noise Prevention Switch	0
22	Charge Corona Wire Cleaner Sensor	0
25	Paper Bank Installed	1
26	Large Capacity Tray Installed	1
27	Duplex Unit Installed	1
28	Midi Sorter Installed	1
29	Mini Sorter Installed	1

USER CODES

There are 20 user codes as follows:

1	1101	11	2111
2	1202	12	2212
3	1303	13	2313
4	1404	14	2414
5	1505	15	2515
6	1606	16	2616
7	1707	17	2717
8	1808	18	2818
9	1909	19	2919
10	2010	20	3020

SERVICE REMARKS

General Caution:
Keep hands away from mechanical drive components when the copier is warming up. This is to avoid possible injury when the copier starts idling at the end of warm up.

NOTE:
The following two items are the only service remarks that are unique to this copier. For other service remarks, refer to the base machine's manual (F9 manual).

1. When the main board is removed from the PCB plate, do not put it on a conductive surface. (This is to avoid discharging the battery of the user program memory.)

2. When installing a new RAM board on the main board, clear its RAM as follows:

   a. Make sure that the main switch is off.
   b. Fix the new main board to the PCB plate and plug in all the connectors.
   c. Connect test pins TP101 and TP102 with a jumper wire.
   d. Turn on the main switch.
   e. Turn on DIP switch 201-7 and 201-8.
   f. Press 9, 9, #, and 1 in that order.
   g. Turn off the main switch and remove the jumper wire.

3. Make sure the main switch is off when you install a previously used RAM board on a new main board.

SECTION III

REPLACEMENT AND ADJUSTMENT

III. REPLACEMENT AND ADJUSTMENT

Optics ..... 3— 1
Development and Toner Supply ..... 3— 6
Cleaning ..... 3—11
Pre-Quenching ..... 3—16
Paper Feed ..... 3—17
Fusing ..... 3—19
Copy Image ..... 3—23
Corona ..... 3—34
Drum Current Adjustments ..... 3—39
Large Cpacity Tray ..... 3—51
Duplex Unit ..... 3—58
Midi Sorter ..... 3—61
Document Feeder ARDF ..... 3—68

OPTICS

1. FIBER OPTICS CABLE REPLACEMENT

1. Remove the front cover [A] (1 knob screw) and pull the fusing unit [B] about halfway out.
2. Remove the front inner cover [C] (5 screws).
3. Remove the power relay bracket [D] (1 screw).
4. Disconnect the exposure lamp harness [E] (2p white connector).
5. Take off the left scale (2 short screws).
6. Remove the exposure glass.

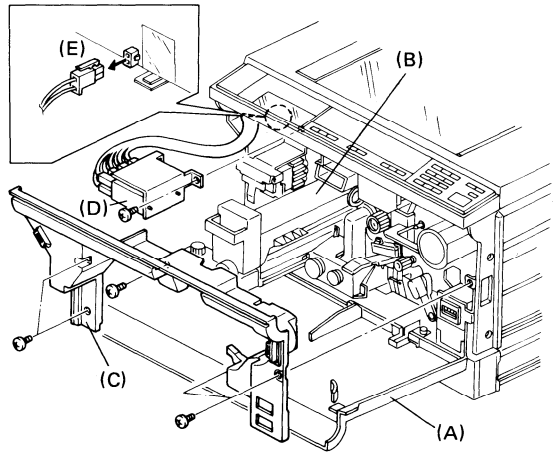

7. Remove the front terminal cover [A] (1 screw).
8. Unhook the fiber optics cable [B] from the reflector cover [C] and remove the reflector cover (2 screws).
9. Remove the leads to the exposure lamp terminals [D].
10. Remove the auto ID sensor [E] and length sensor [F] (1 screw).
11. Remove the width sensor [G] (1 screw).
12. Remove the scanner harness [H] from the 1st scanner [I] (1 screw).
13. Slide the scanner to the right and remove the female end of the exposure lamp power supply harness [J] from the copier.
14. Remove the scanner harness from the harness hold-down block [K] (1 screw).
15. Release the fiber optics cable from the clamps [L], then remove it.
16. Slide the scanner to the left and remove the lens housing cover [M] (3 screws).
17. Release the fiber optics cable from the clamps [N] in the optics cavity.

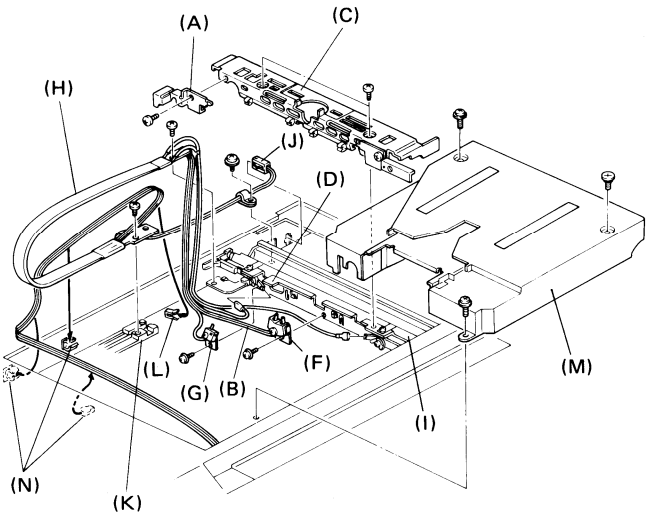

18. Remove the copier rear cover (3 screws).

19. Using a small screwdriver [A], disconnect the fiber optic cables from CN109 [B] on the main board and CN407/408 [C,D] on the optics board.

    NOTE: Be careful not to damage the ends of the cables.

20. Lower the PCB plate [E].

21. Pull the fiber optics cables [F] into the optics cavity.

22. Replace the fiber optics cables.

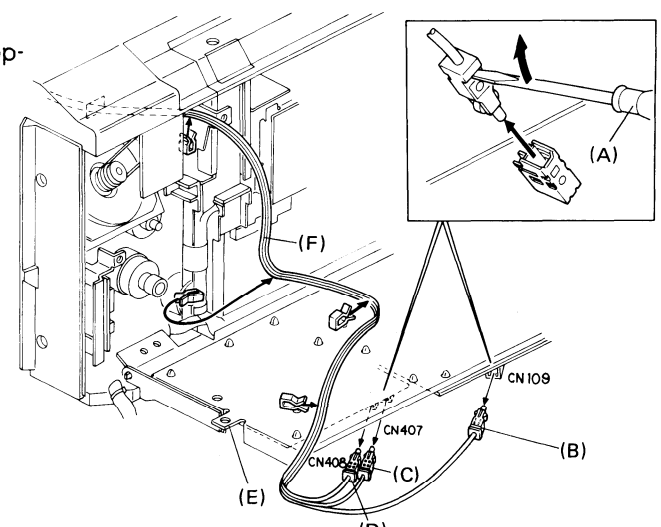

2. AUTO PAPER SIZE SENSOR ADJUSTMENT

ADJUSTMENT STANDARD: +3 ± 0.1 V

1. Turn off the main switch.
2. Remove the rear cover (3 screws).
3. Remove the DIP switch cover [A] on the left side of the operation panel (1 screw) and turn on DIP SW 201-8.
4. Place 5 sheets of A3 (11" x 17") paper on the exposure glass.
5. Turn on the main switch and press "5", then "8", then the "#" key.
6. Wait for the copier to warm up; then, press the Start key.
7. Press the "0" key and adjust the paper length sensor using VR401 on the optics board [B].
8. Press the "1" key and adjust the paper width sensor using VR402 on the optics board [B]. (Turn clockwise to increase [H]. Turn counterclockwise to decrease [L].)
9. Press the C/S key to stop the copier.
10. Turn off the main switch then turn off DIP SW 201-8.

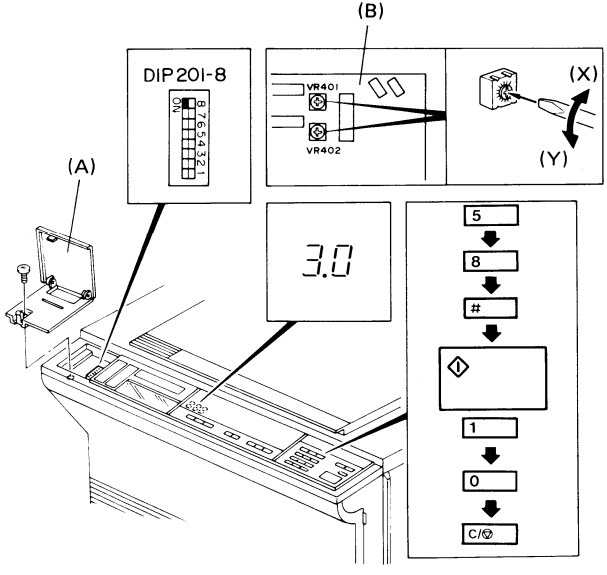

3. LENGTH SENSING ADJUSTMENT

1. Turn off the main switch.
2. Remove the DIP switch cover [A] on the left side of the operation panel (1 screw) and turn on DIP SW 201-8.
3. Place the A3 test chart on the exposure glass.
4. Turn on the main switch, then press “5”, “0”, and “#”. The length of the test chart is displayed in the Magnification Ratio indicator. (The correct length for A3 is 420.)
5. If the length displayed is not 420, the adjusting procedure is as follows:
   1) Remember the number displayed by SP mode #50 and subtract it from 420.
   2) Add this difference to the number displayed (flashing) by SP mode #46. (Press “#”, “4”, “6”, and “#” in that order.)
   3) Enter this number and press the Enter key.
6. Confirm that the length is correct by repeating the above procedure.

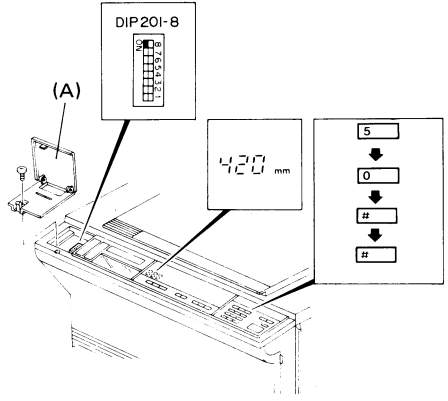

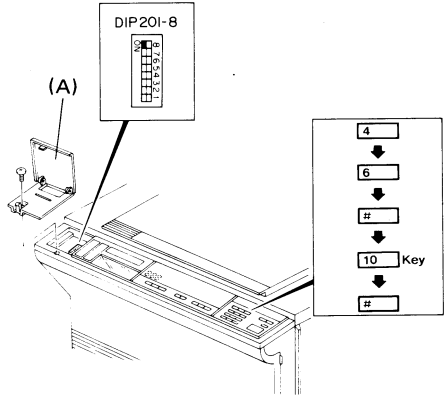

DEVELOPMENT AND TONER SUPPLY

1. IMAGE DENSITY SENSOR REMOVAL

1. Open the front cover.
2. Remove the development unit [A].
3. Slide out the image density sensor [B].
4. Clean or replace the sensor.

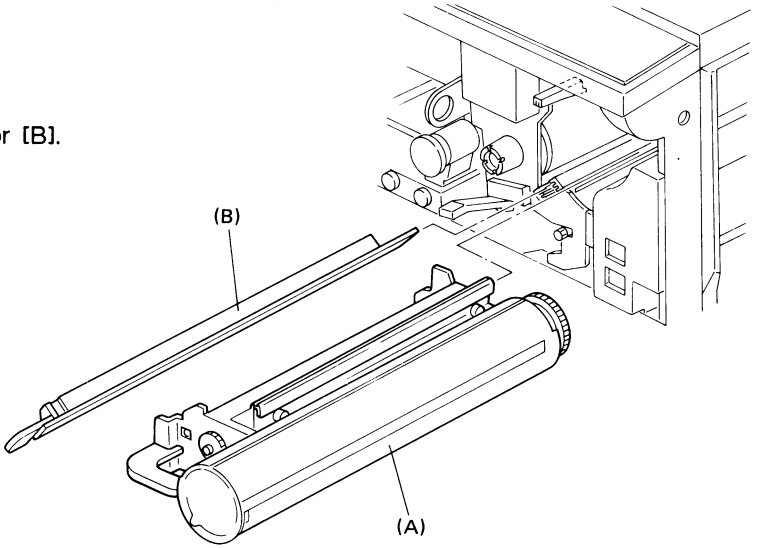

2. IMAGE DENSITY SENSOR CHECK AND ADJUSTMENT

ID sensor adjustment is required in the following cases:

- When the ID sensor board is replaced.
- When the main board is replaced.
- When the drum has been replaced and Vsg is not within specifications.
- When a problem with toner supply occurs and checking the ID sensor shows that the Vsg is not within specifications.

ADJUSTMENT STANDARD: +4 V ± 0.2 V

1. Clean the Image density sensor.
2. Copy a white sheet of paper to ensure that the ID development area on the drum is clean.
3. Turn off the main switch.

4. Remove the DIP switch cover [A], and turn on DIP SW 201-8.

5. Turn on the main switch; then, press "5", "4", and "#" in that order.

   Vsg is displayed in the Magnification indicator for ten seconds.

6. Adjust Vsg using the variable resistor [B] on the front of the ID sensor board [C]. (Turn clockwise to increase [HI]. Turn counterclockwise to decrease [L].)

7. Turn off the main switch and DIP SW 201-8.

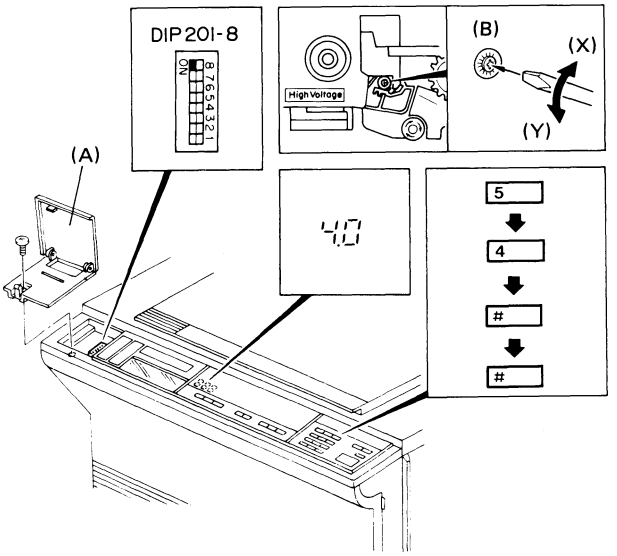

3. TONER SUPPLY CLUTCH DISASSEMBLY

1. Remove the rear cover (3 screws).
2. Lower the PCB plate (2 screws).
3. Disconnect the harness [A] of the bias power pack (10p connector) and remove the bias power pack bracket [B] (2 screws and 1 connector).
4. Disconnect the cooling blower connector [C] (2p) and the lens drive motor connector [D] (6p)
5. Remove the screw [E] securing the dc harness guide.
6. Remove the development drive support bracket [F] (2 screws, 1 E-ring, and 1 bushing).
7. Remove the toner supply clutch assembly [G] from the drive shaft while pushing the main drive chain to the right (1 Allen screw).

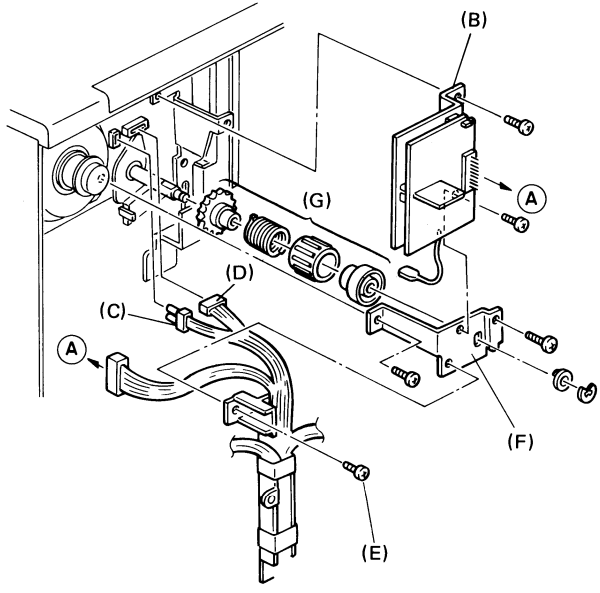

8. Disassemble the toner supply clutch.

9. Clean the clutch hub [A], spring [B], and gear [C]. Then, lightly grease the spring with Mobil Temp 78.

NOTE: • When reassembling, make sure that the chamfered end [D] of the clutch sleeve is to the outside.

• When securing the Allen screw of the clutch hub, insert a 0.1 mm gap gauge [E] between the E-ring [F] and the toner supply roller drive gear [G] as shown in the figure.

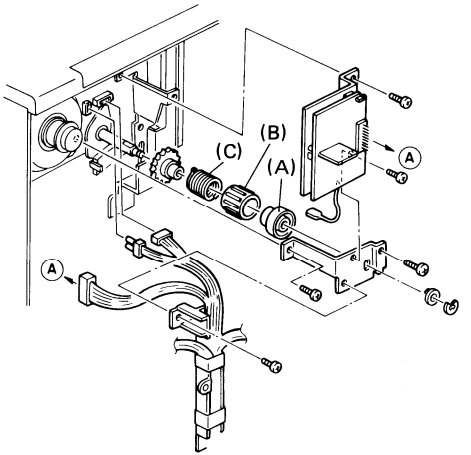

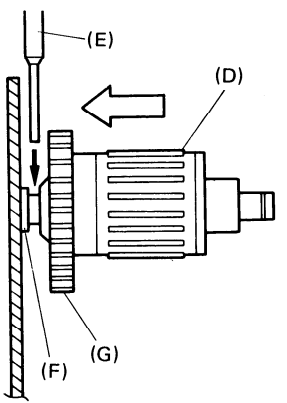

CLEANING

1. CLEANING UNIT REMOVAL

1. Raise the development lock lever and pull out the development unit. Place the unit on a clean sheet of paper.
2. Swing the toner collection bottle cover [A] to the left (1 screw) and unplug the toner overflow sensor connector [B].
3. Remove the toner collection bottle [C].
4. Lower the T/S corona unit [D].
5. Place a sheet of paper [E] over the T/S corona unit.
6. Remove the charge corona cover [F] (1 screw).
7. Unplug the charge corona connectors [G] and remove the charge corona unit [H].
8. Remove the pre-quenching corona unit [I].
9. Remove the drum stay [J] (knob and 1 screw).
10. Slide out the cleaning unit [K].

CAUTION: Be sure the pick-off pawls are kept away from the drum when removing the cleaning unit or serious drum damage will result.

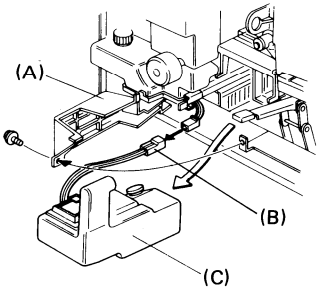

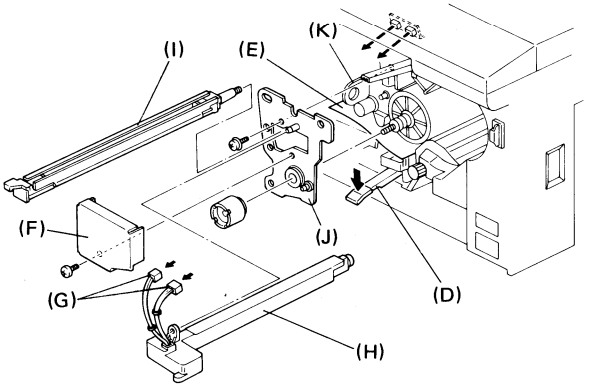

2. PICK-OFF PAWL REPLACEMENT

1. Remove the pick-off guide plates [A] (1 screw each).

2. Remove the pawl shaft pin [B] from the pawl shaft [C].

3. Push the pawl shaft to the rear and slide off the cam holder [D] from the front side plate.

4. Take out the whole pawl shaft assembly.

5. Slide off the cam holder and cam rider [E].

6. Slide off the front pick-off pawl [F] (1 positioning pin) and the front pawl spring [G] (1 screw).

7. Slide off the rear pick-off pawl [H] (1 positioning pin [I]).

8. Set new pick-off pawls on the shaft and position them with the positioning pins and pawl springs.

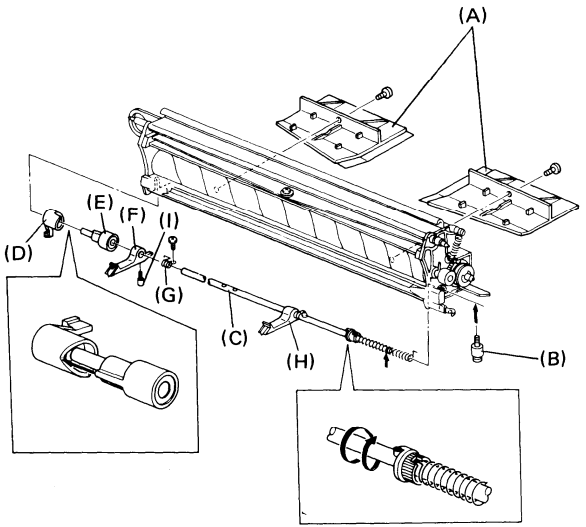

9. Assemble the pawl shaft assembly and slide it into the cleaning unit until the shaft touches the rear side plate.

NOTE: • When installing the cam holder and the cam rider, align X and Y as shown in the figure.

• Make sure that the spring end is in the small hole on the rear side plate.

10. Install the pawl shaft pin.

11. Push the spring collar [A] to the rear and rotate it one turn as shown in the figure. Then set the collar on the pin [B].

NOTE: Make sure that the end of the spring is correctly positioned in the groove of the collar.

12. Reassemble.

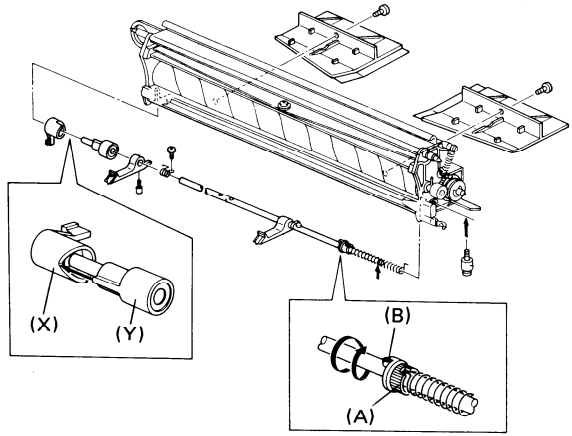

3. BIAS ROLLER REPLACEMENT

1. Remove the bottle joint seal [A] and the toner collection coil cover [B] (1 screw).
2. Remove the bushing [C] of the cleaning bias roller (1 E-ring).
3. Remove the cleaning unit drive gear [D] (1 Allen screw).
4. Remove the idle gear [E] (1 E-ring)
5. Remove the pressure arm [F] (1 screw and 1 spring).
6. Remove the cam gear [G] (1 E-ring).
7. Remove the spring plate [H] (1 screw).
8. Remove the cleaning bias roller gear [I] (1 E-ring).
9. Remove the bias roller bracket [J] and pull out the bias roller [K] from the rear.

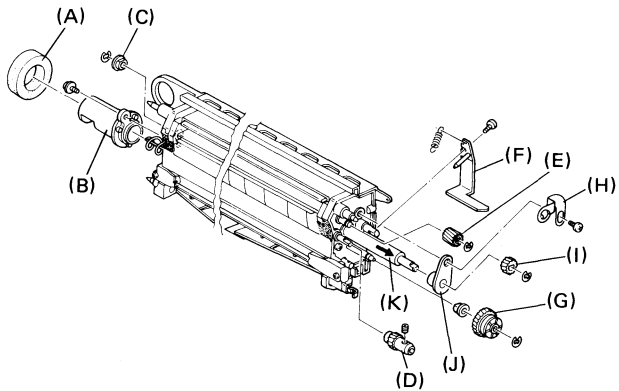

4. BIAS ROLLER BLADE REPLACEMENT

1. Remove the spring plate [A] (1 screw).
2. Remove the cleaning bias blade [B] (1 screw).

Take care not to damage the pick-off pawls.

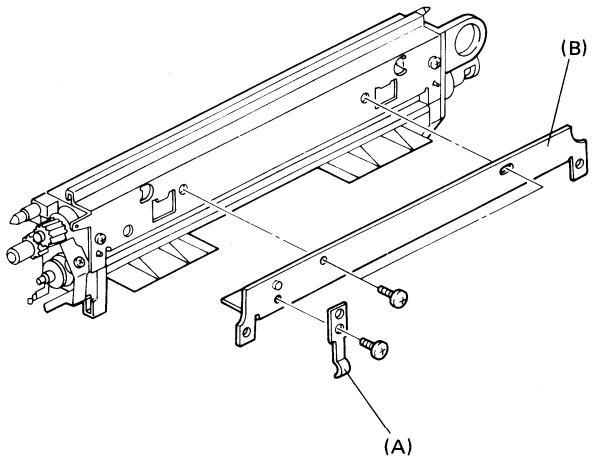

PRE-QUENCHING

1. PRE-QUENCHING CORONA UNIT REPLACEMENT

1. Open the copier's front cover [A].
2. Remove the charge corona cover [B] (1 screw).
3. Unplug the charge corona connectors [C] and pull out the charge corona unit [D].
4. Pull out the pre-quenching corona unit [E].

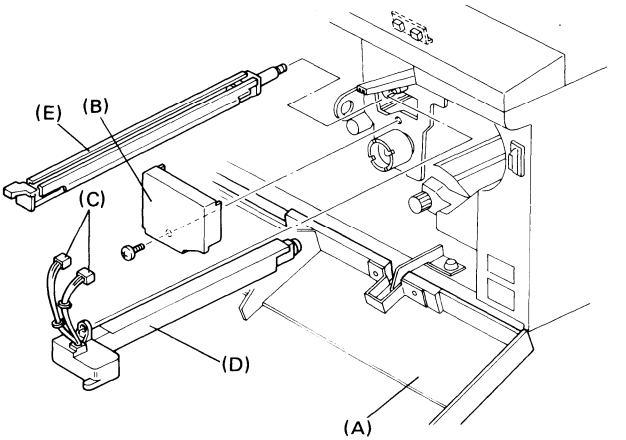

PAPER FEED

1. FEED ROLLER/FRICTION PAD GAP ADJUSTMENT

This adjustment is required when multifeeding occurs or paper fails to feed and after replacing the friction pad.

ADJUSTMENT STANDARD: 215 ± 15 grams

1. Remove the screw [A] from the pad bracket.
2. Loosen the screw [B] and the screw [C] of the pad bracket.
3. Adjust the gap as closely as possible by moving the screw [B] of the pad bracket up and down. After that, use the cam collar screw [D] for fine adjustment.

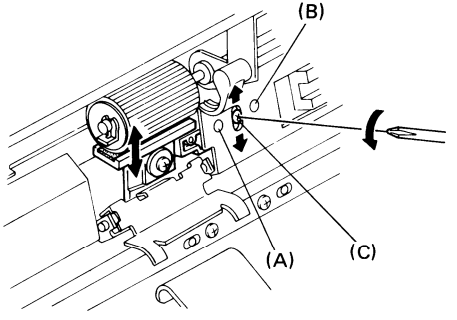

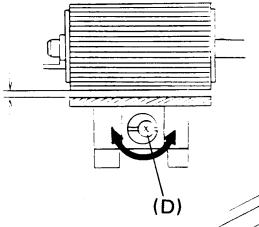

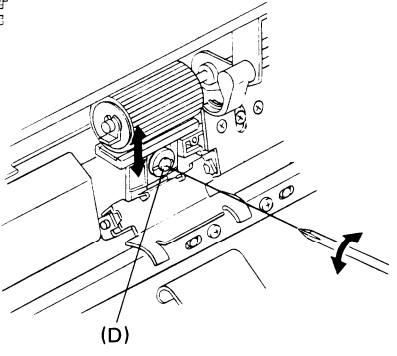

2. REGISTRATION CLUTCH ADJUSTMENT

ADJUSTMENT STANDARD: 0.2 mm (0.008")

1. Remove the rear cover (3 screws).
2. Take the adjusting collar [A] off the relay roller shaft [B] (1 Allen screw).
3. Loosen the screw in the lock collar [C] on the clutch to be adjusted (1 Allen screw).
4. Place the adjusting collar next to the lock collar on the clutch shaft.
5. Position a 0.2 mm gap gauge [D] (part no. 54469140) between the two collars.
6. Push the collars and the gap gauge back until the clutch presses against the rear plate.
7. Remove the gap gauge and move the lock collar against the adjusting collar. Tighten the Allen screw in the lock collar.

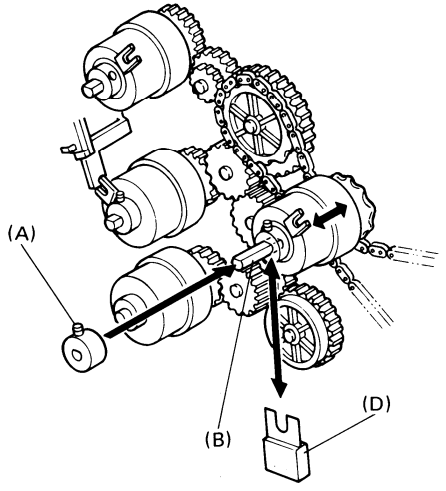

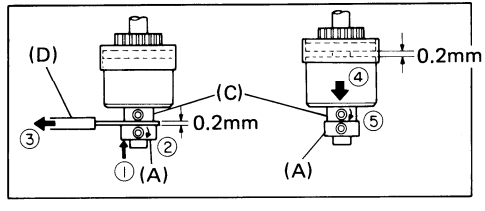

FUSING

1. CHECKING HOT ROLLER TEMPERATURE

1. Turn off the main switch.
2. Remove the DIP switch cover [A] on the left side of the operation panel (1 screw).
3. Turn on DIP SW 201-8.
4. Turn on the main switch.
5. Press “5”, “2”, and “#” in that order.

   The hot roller temperature is displayed in the Magnification Ratio indicator.

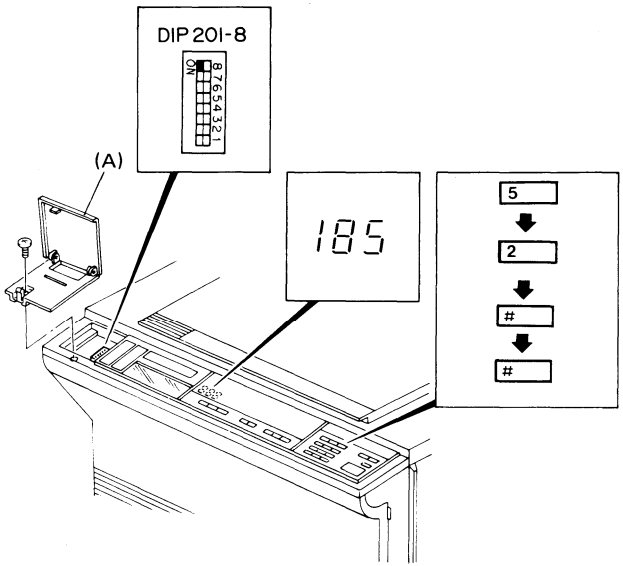

2. CHANGING HOT ROLLER TEMPERATURE

1. Turn off the main switch.
2. Remove the DIP switch cover [A] and turn on DIP SW 201-8.
3. Turn on the main switch.
4. Press "4", "9", and "#" in that order. Then press "0" or "1".

Selected Number	Hot Roller Temperature
0	185°*
1	175°

*Normal

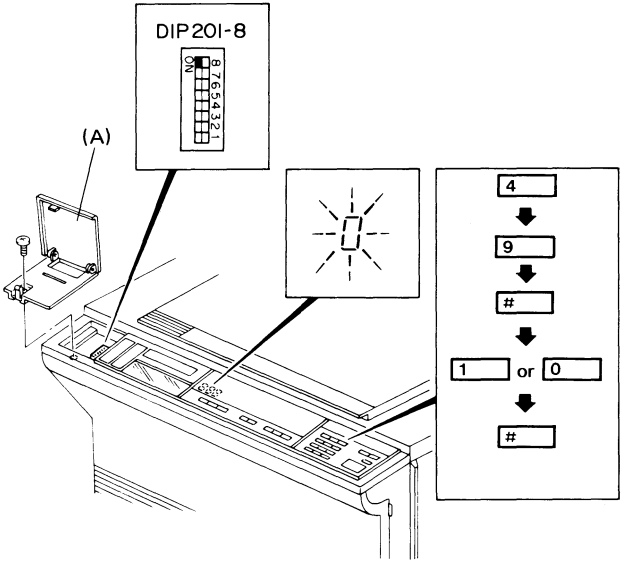

▶ Set the hot roller temperature to 175° when excessive paper curl occurs.

3. FUSING PRESSURE ADJUSTMENT

Pressure adjustment is required when unfused copy or paper creasing occurs.
Ensure that the pressure is even on both sides.

1. Remove the fusing unit.
2. Remove the fusing unit cover [A] (2 screws).
3. Open the fusing exit assembly [B].
4. Move the pressure springs [C] to the desired position. (See the following table.)

Position	Nip Width	Spring Pressure
A -- a	6.3 ± 0.5 mm	32.8 kg
A -- b	6.9 ± 0.5 mm	42.1 kg
B -- a*	6.7 ± 0.5 mm	39.9 kg
B -- b	7.3 ± 0.5 mm	46.5 kg

* Standard

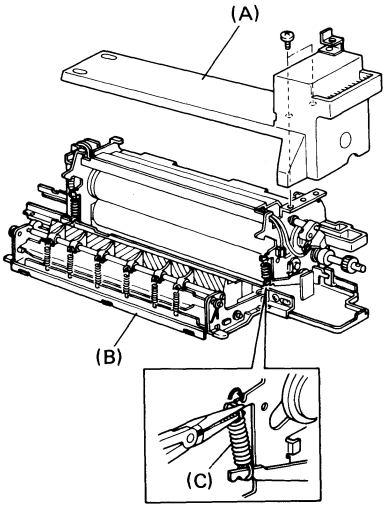

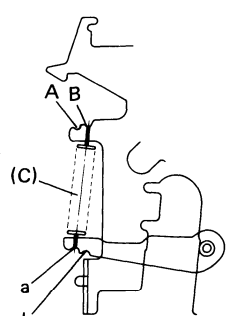

4. ENTRANCE GUIDE HEIGHT ADJUSTMENT

1. Remove the fusing unit.

2. Move the knob [A] to the front to raise the fusing guide plate [B].

   Move the knob to the rear to lower the fusing guide plate.

   (The movement range is 1 mm.)

- **Normally the entrance guide is set in the lower position (factory setting). Set it in the upper position if paper creasing occurs.**

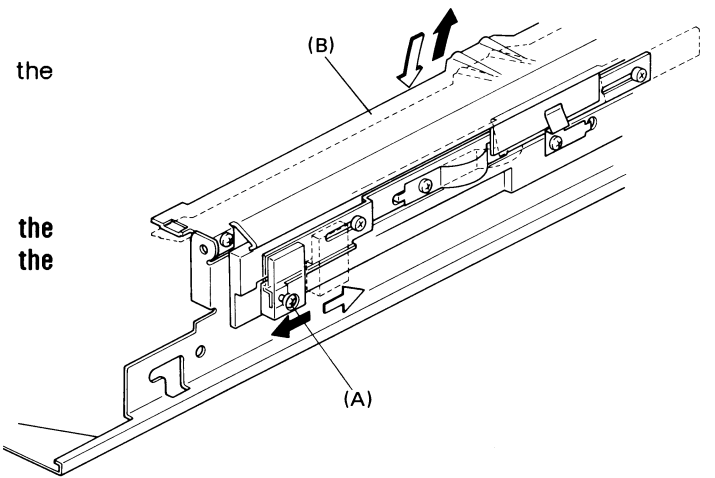

COPY IMAGE

1. LIGHT INTENSITY ADJUSTMENT

This adjustment should be done when the rest time compensation of the bias voltage is 0V.
Auto ID sensor adjustment must be done after light intensity adjustment.

ADJUSTMENT STANDARD: Level 2 of the gray scale on the OS-A3 chart should be slightly visible on the copy when the 4th level of the density control is selected.

1. Clean the optics (mirrors, lens, reflectors, exposure glass, toner shield glass).

2. Turn on the main switch and wait for the machine to warm up.

3. Set the image density level at the 4th position and make 6 test copies of the OS-A3 test chart.

4. Confirm that the second level of the gray scale is slightly visible on the 6th copy. If the light intensity is not correct, proceed to steps 5 and 6.

5. Remove the DIP switch cover [A] on the left side of the operation panel (1 screw).

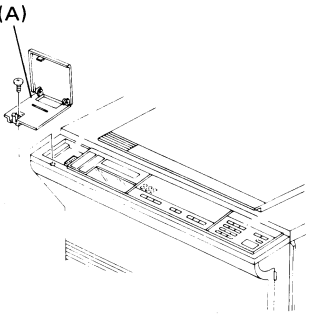

6. Check the lamp voltage as follows:

   a) Turn the main switch off.
   b) Turn on DIP SW 201-8 on the left side of the operation panel.
   c) Turn on the main switch.
   d) Press 5, 1, and # in that order.
   e) Check the lamp voltage, displayed in the Magnification Ratio indicator, at ID level 4.

   - **The lamp voltage at ID level 4 should not be more than 79 volts. If it is more than 79 volts, replace the exposure lamp.**

7. Adjust VR1 [A] on the operation panel board to achieve proper image density. (Turn clockwise to increase [H] or counter-clockwise to decrease [L].)

8. Turn off the main switch.

9. Turn off DIP SW 201-8, and reassemble.

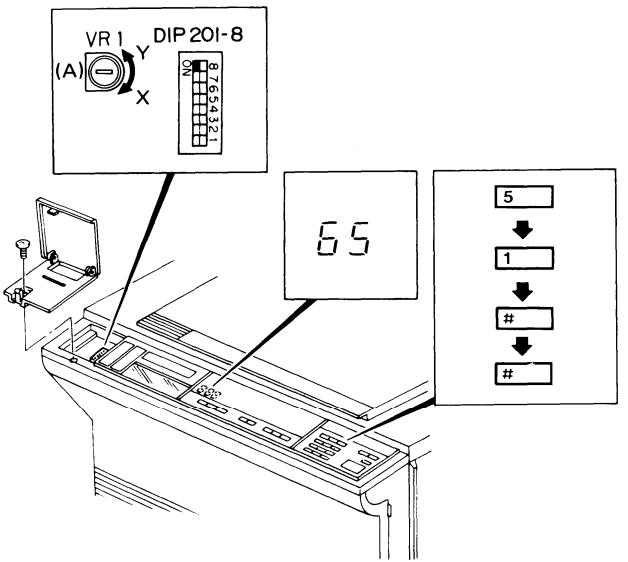

2. AUTO ID SENSOR ADJUSTMENT

ADJUSTMENT STANDARD: +3 ± 0.06 volts

1. Perform the lamp intensity adjustment before performing the auto ID sensor adjustment.
2. Remove the rear cover (3 screws).
3. Turn off the main switch.
4. Remove the DIP switch cover [A] on the left side of the operation panel and turn on DIP SW 201-8.
5. Turn on the main switch.
6. Place 2 sheets of A3 (11" x 17") paper on the exposure glass.
7. Press "5", "6" and "#" in that order and wait for the copier to warm up.
8. Select the auto ID setting.

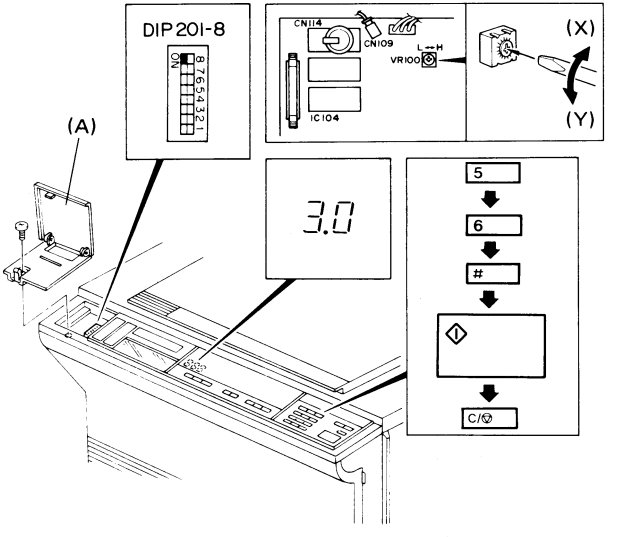

9. Press the Start key, the press and hold the "0" key.

10. Adjust the Auto ID sensor by turning VR 100 on the main board. (Turn clockwise to increase [H]. Turn counterclockwise to decrease [L].)

11. Press the C/S key to stop the copier.

12. Turn off the main switch and DIP SW 201-8.

3. HORIZONTAL MAGNIFICATION ADJUSTMENT

ADJUSTMENT STANDARD: ± 0.5% (Full Size)

1. Turn off the main switch.
2. Remove the DIP switch cover [A] on the left side of the operation panel (1 screw) and turn on DIP SW 201-8.
3. Turn on the main switch and place a sheet of A3 paper on the original glass.
4. Press "4", "4", and "#" in that order. The present horizontal magnification factor will start to blink in the Magnification indicator.
5. Adjust the horizontal magnification by entering a magnification factor using the number keys. The magnification factor can take values from 0 to 15 as follows:

(Narrower) 0 ——— 8 ——— 15 (Wider)
-1.6% 0% +1.4%
0.2% per step

"8" is the factory setting.
Press C/S to correct an entry.

6. Press "#" when you have finished.

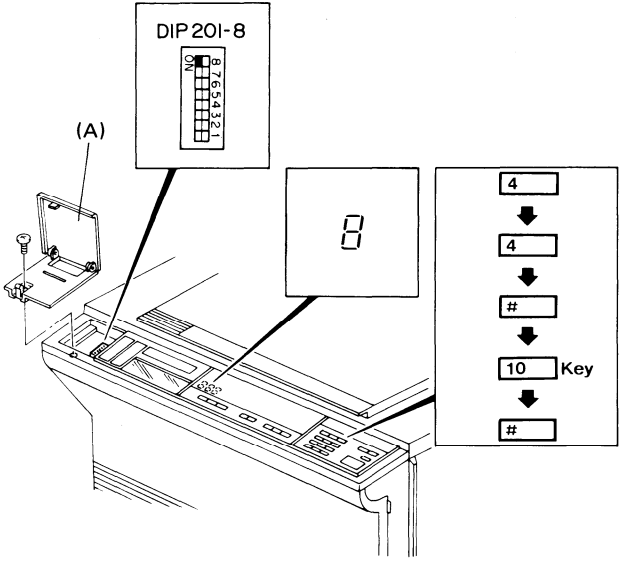

4. VERTICAL MAGNIFICATION ADJUSTMENT

ADJUSTMENT STANDARD: ± 1%

1. Turn off the main switch.
2. Remove the DIP switch cover [A] on the left side of the operation panel (1 screw) and turn on DIP SW 201-8.
3. Turn on the main switch.
4. Press "4", "3", and "#" in that order.
   The present vertical magnification factor will start to blink in the Magnification indicator.
5. Adjust the vertical magnification by entering a magnification factor using the number keys. The magnification factor can take values from 0 to 15 as follows:

   0 ——— 8 ——— 15
   -1.6% 0% +1.4%
   0.2% per step

   "8" is the factory setting.
   Press C/S key to correct an entry.

6. Press "#" when you have finished.

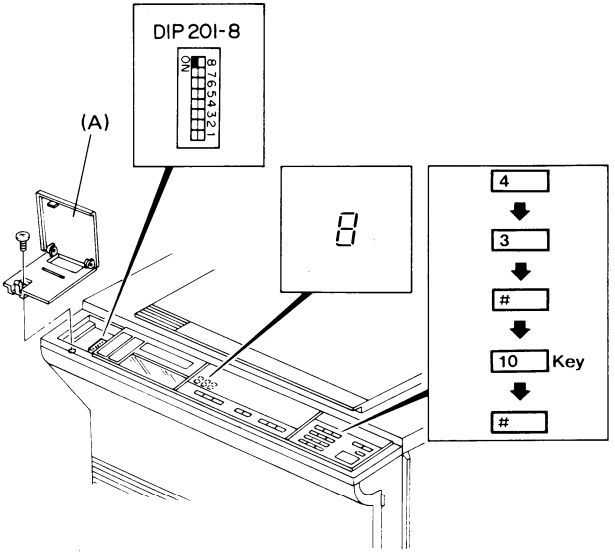

5. LEAD EDGE REGISTRATION ADJUSTMENT

ADJUSTMENT STANDARD "L-10": 0 ± 2 mm
(0 ± 0.08")

1. Place a 150 mm scale [A] on the exposure glass [B], aligning it with the left scale [C].
2. Make 3 copies.
3. Turn off the main switch.
4. Remove the DIP switch cover [D] on the left side of the operation panel (1 screw) and turn on DIP SW 201-8.
5. Turn on the main switch.
6. Press "4", "2", and "#" in that order.
   The present lead edge registration factor will start to blink in the Magnification indicator.

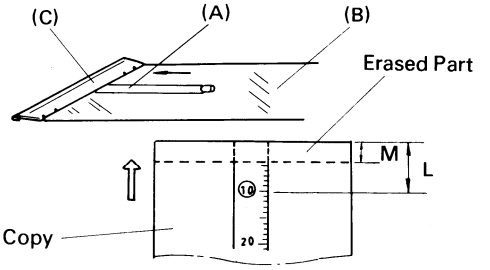

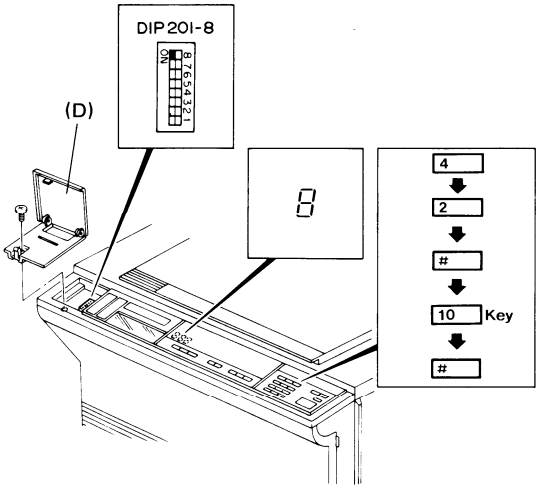

7. Adjust the registration by entering a registration factor using the number keys. The registration factor can take values from 0 to 15 as follows:

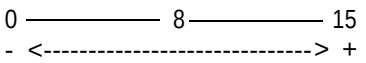

1 mm per step

"8" is the factory setting.
Press the C/S key if you need to correct an entry.

8. Press "#" when you have finished.

6. LEAD EDGE ERASE MARGIN ADJUSTMENT

ADJUSTMENT STANDARD: M = 3.5 ± 2.5 mm

This adjustment should be done after lead edge registration adjustment.

1. Place a 150 mm scale [A] on the exposure glass [B], aligning it with the left scale [C].
2. Make 3 copies.
3. Turn off the main switch.
4. Remove the DIP switch cover [D] on the left side of the operation panel (1 screw) and turn on DIP SW 201-8.
5. Turn on the main switch.
6. Press "4", "1", and "#" in that order.
   The present lead edge erase margin factor will start to blink in the Magnification indicator.

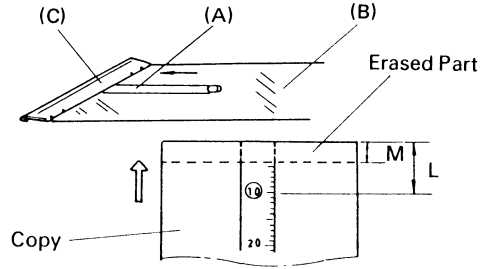

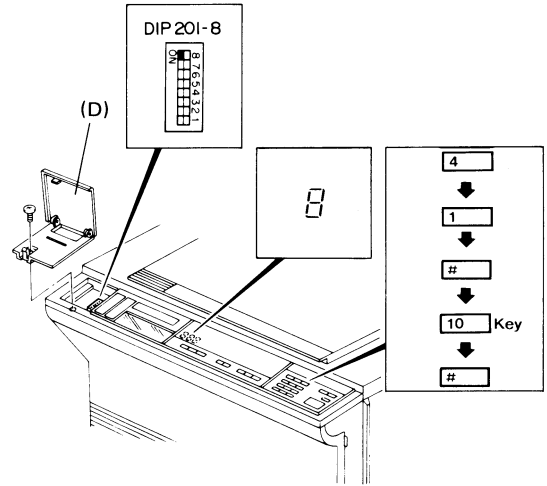

7. Adjust the lead edge erase margin by entering a margin factor using the number keys. The erase margin factor can take values from 0 to 15 as follows:

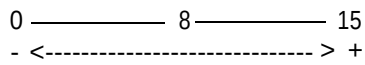

   1 mm per step
   "8" is the factory setting.
   Press the C/S key if you need to correct an entry.

8. Press "#" when you have finished.

CORONA

1. CHARGE CORONA WIRE REPLACEMENT

1. Remove the charge corona cover [A] (1 screw).
2. Unplug the charge corona connectors [B] and take out the charge corona unit [C].
3. Remove the front [D] and rear [E] endblock covers.
4. Remove the wire cleaner [F] (1 screw}.
5. Remove the rear endblock [G] (1 screw). The endblock may spring away from the corona unit, so hold it firmly.

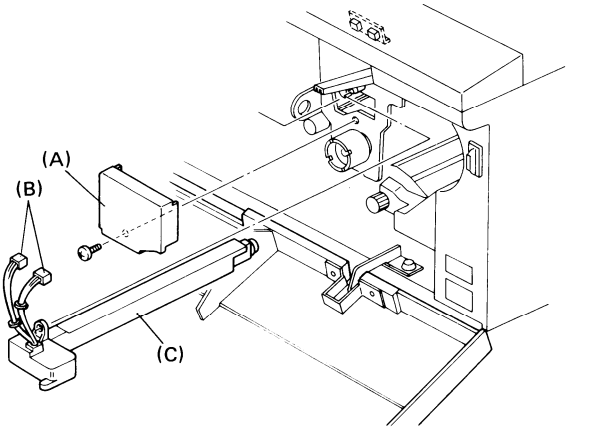

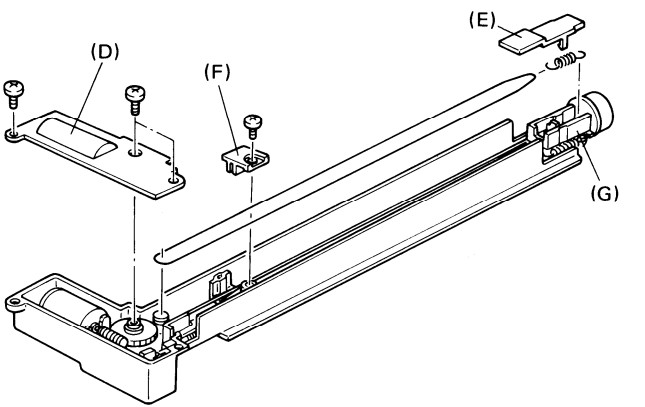

6. Unhook the spring [A] and take off the old corona wire [B].

7. Clean the endblocks, endblock covers and the corona unit casing with a blower brush and dry cloth.

8. Hook the corona wire onto the front anchor post.

9. Hook the tension spring onto the wire; then, hook it onto the rear terminal. (The wire junction [C] should be positioned inside the rear endblock [D].)

10. Reassemble the charge corona unit.

    Make sure that the corona wire [E] is positioned between the cleaner pads [F]. Also, check the wire cleaner movement using SP-7.

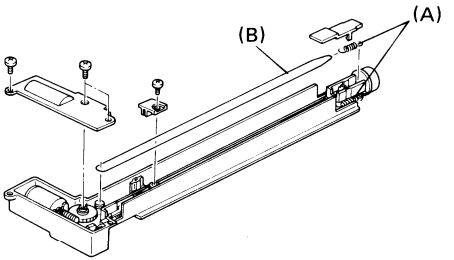

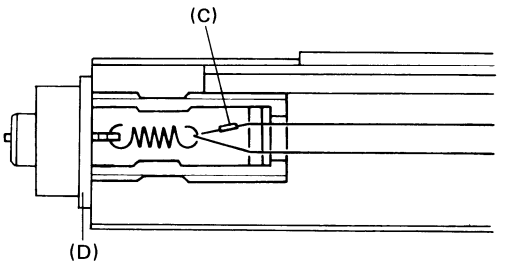

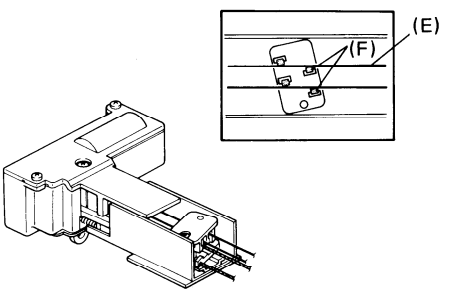

2. CHARGE CLEANER DRIVE WIRE REPLACEMENT

1. Remove the corona wires. (Refer to "Charge Corona Wire Replacement".)
2. Remove the drive wire tension springs [A], drive gear [B], and the old drive wire [C].
3. Wrap the new wire around the drive pulley one and one-half times [D].
4. Fit the drive ring [E] over the post of the wire cleaner [F].
5. Slip the wire over the idle pulley [G].
6. Route the wire.
7. Reassemble the corona unit.

   Make sure that the corona wire is positioned between the cleaner pads. Also, check the wire cleaner movement using SP-7.

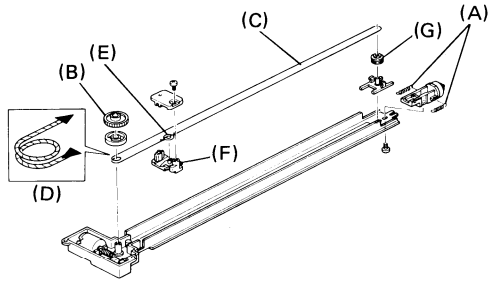

3. PRE-QUENCHING CORONA WIRE REPLACEMENT

1. Remove the pre-quenching corona unit. (Refer to "Pre-Quenching Corona Unit Replacement".)

2. Remove the rear endblock cover [A].

3. Remove the front endblock cover [B] and take the old corona wire [C] off the front spring [D].

4. Pull the rear spring [E] out of the rear endblock [F], and remove the old quenching corona wire.

5. Install a new corona wire.

6. Reassemble the quenching corona unit.

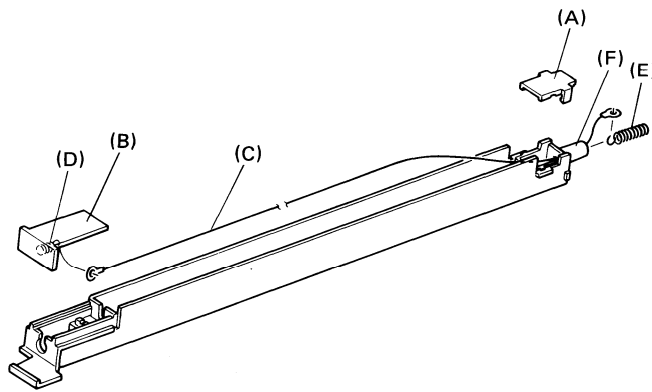

DRUM CURRENT ADJUSTMENT

NOTE: The drum current varies with environmental conditions such as humidity and atmospheric pressure. The drum current should only be checked and adjusted when the copy image is out of specification because each corona unit is adjusted for a range of environments in the factory.

Drum current adjustment may be required when there are problems with paper separation, incomplete toner transfer, or copy image problems.

CAUTION: Make sure that the main switch is turned off when you change the range on the digital multimeter. If it is not off, the multimeter may be damaged.

I. PREPARATION

1. Turn off the main switch and remove the following parts:
   - Development unit
   - Charge corona unit cover (1 screw) and charge corona unit
   - Quenching corona unit
   - Drum stay (1 screw and 1 knob screw)
   - Toner collection bottle (1 screw)
   - Cleaning unit
   - Drum flange
   - Drum -- should be covered with a protective sleeve
   - Drum guide [A]
   - T/S corona unit
   - T/S corona paper guide

2. Clean or replace each corona wire. Also clean the corona units and the cleaning unit.

3. Actuate the front safety switch.

4. Remove the rear cover (3 screws).

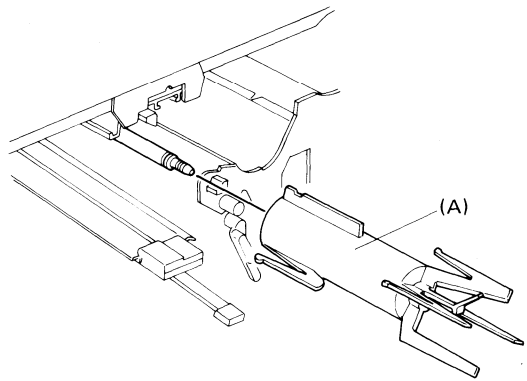

5. Plug a switching board [B] into either CN106 or CN112 of the main board [C] as shown.

   Two switching boards are required only when adjusting the photo mode corona current, lead edge separation current, or reverse side transfer current.

6. Install the drum shoe and adapter on the drum shaft with the lip to the rear.

7. Route the shoe lead wire out through the development unit opening.

8. Connect the drum shoe and the digital multimeter leads as follows: the multimeter positive to the red lead clip, the multimeter negative and the black lead clip to the machine ground. (See next page.)

9. Open the manual feed table to keep the Start key red even if the machine is warmed up.

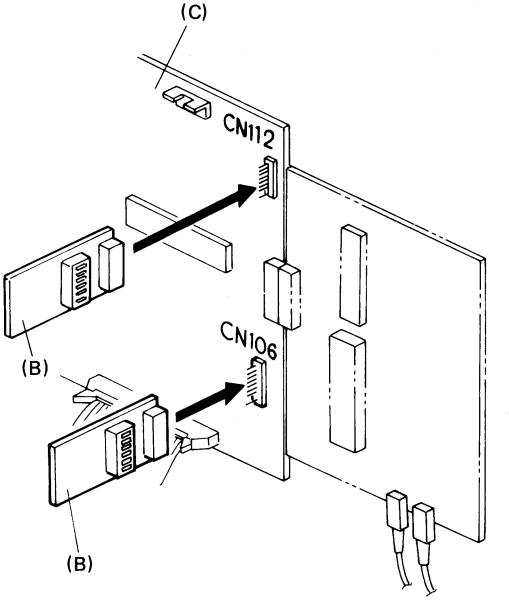

II. CHARGE CORONA

OPTIMUM ADJUSTING VALUE:

Normal: DC +66 ± 1 µA
Photo Mode: DC +55 ± 1 µA

1. Slide the drum shoe [A] to its rear limit as shown (position X on next page).
2. Position the drum shoe so that the axis of the current sensing plate is aligned with the charge corona wire as shown.
3. Reinstall the drum stay [B] (1 screw and 1 knob) and the charge corona unit [C].
4. Select the dc 200 µA range of the digital multimeter [D].
5. Turn on switch 8 of the switching board plugged into CN106.
6. Turn on the main switch and note the reading. (Wait 30 seconds for the current to stabilize.)

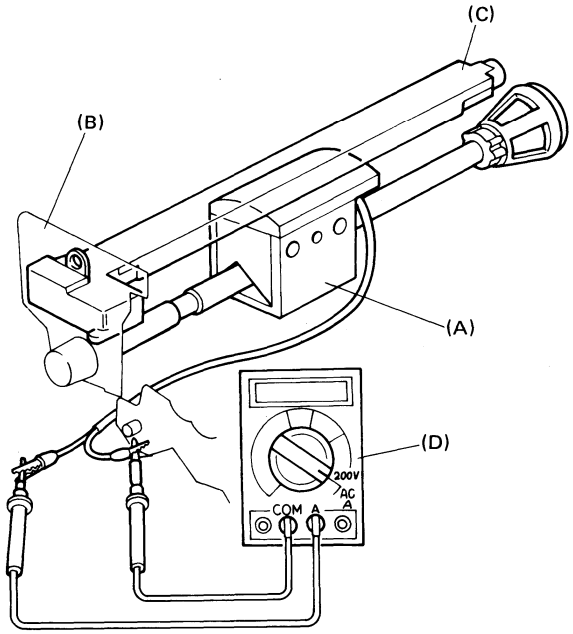

7. Turn off the main switch, move the drum shoe to the front as shown (position "Y"), and repeat steps 4 to 6.

8. The difference between front and rear should not be more than 0.2 µA. If the readings differ, correct them using the front corona wire height adjusting screw.

NOTE: • Turn the adjusting screw clockwise to increase the reading.

• Turn it counterclockwise to decrease the reading.

• After adjusting the front, check the rear reading once again.

9. Turn off the main switch and position the drum shoe on the center of the shaft (position Z). (Reference to the ID sensor will show the center of the shaft.)

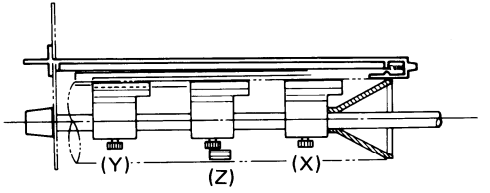

10. Turn on the main switch and adjust the charge corona current by turning C1 [A] on the charge corona power pack [B].

11. Turn off the main switch.

12. Turn on switch 8 of the switching board that is in CN112.

13. Turn on the main switch and adjust the photo mode charge corona current by turning C2 [C].

14. Turn off the main switch and switch 8 of the two switching boards.

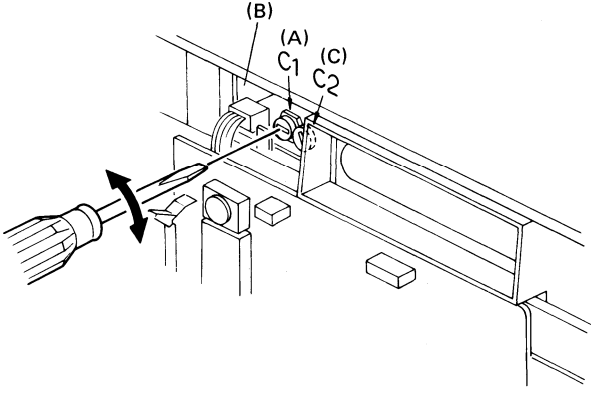

III. TRANSFER CORONA

OPTIMUM ADJUSTING VALUE:

T: DC +20 ± 1 µA
T1: DC +20 ± 1 µA

1. Reinstall the T/S corona unit and the cleaning unit [A], then position the drum shoe [B] at the center of the shaft so that the axis of the current sensing plate is aligned with the transfer corona wire as shown.

2. Reinstall the drum stay [C] (1 screw and 1 knob), and return the T/S corona unit to its original position.

3. Select the dc 200 µA range of the digital multimeter [D].

4. Turn on switch 3 of the switching board plugged into CN106.

5. Lower the PCB plate (2 screws).

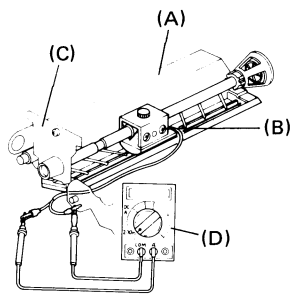

6. Turn on the main switch and adjust the transfer corona current by turning **T** on the T/S power pack [A]. (Wait 30 seconds for the corona current to stabilize.)

7. Turn off the main switch.

8. Plug the switching board into CN112 and turn on switch 3.

9. Turn on the main switch and adjust the transfer corona current by turning **T1** on the T/S power pack. (Wait 30 seconds for the corona current to stabilize.)

   T is used to adjust the normal transfer current.
   T1 is used to adjust the corona current for the reverse side of duplex copies.

10. Turn off the main switch and SW 3 of the switching board(s).

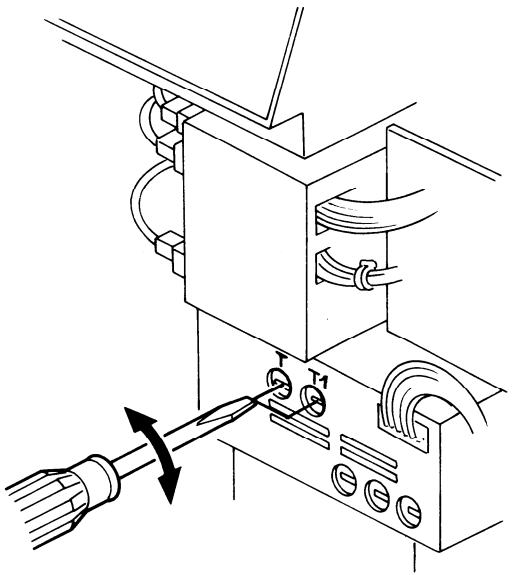

IV. SEPARATION CORONA

OPTIMUM ADJUSTING VALUES:

AC 47 ± 1 µA (normal)
DC 1.7 ± 1.0 µA (normal)
DC -11 ± 1.0 µA (leading edge)

NOTE: There is no adjustment for leading edge ac current.

1. Reinstall the T/S corona unit [A] and the cleaning unit [B].

2. Position the drum shoe [C] at the center of the shaft so that the axis of the current sensing plate is aligned between the separation corona wires as shown.

3. Reinstall the drum stay [D] (1 screw and 1 knob) and return the T/S corona unit to its original position.

4. Select the dc 200 µA range of the digital multimeter [E].

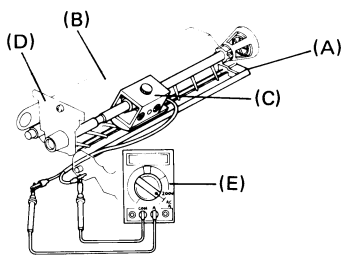

5. **Normal:** Plug the switching board into CN106 and turn on SW4.
   Leading Edge: Plug the switching boards into CN106 and CN112 and then turn on SW4 of both boards.
6. Lower the PCB plate (2 screws).
7. Turn on the main switch and adjust the separation dc current by turning **DC** on the T/S power pack [A] (for leading edge corona current turn **DC1).** (Wait 30 seconds for the corona current to stabilize.)
8. Turn off the main switch and select the ac 200 µA range of the multimeter.
9. Turn on the main switch and adjust the separation ac current (normal mode) by turning **DAC** on the T/S power pack. (Wait 30 seconds for the corona current to stabilize.)
10. Turn off the main switch.
11. Repeat steps 5 to 10 until both the dc and ac corona currents are adjusted to within the optimum adjusting value.
12. Turn off the main switch and the switches on the switching boards.

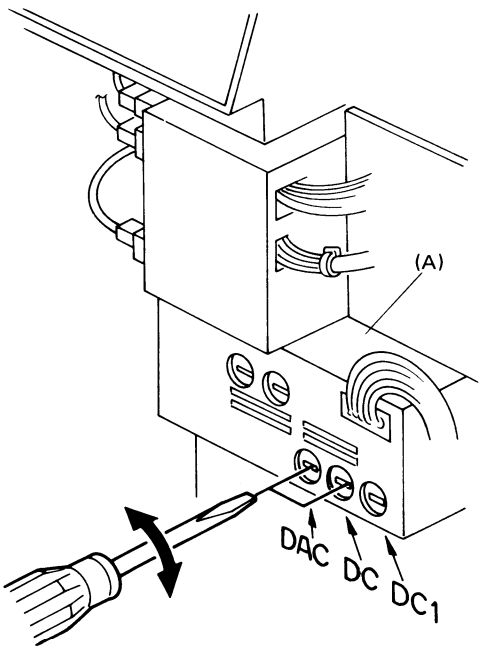

V. PRE-CLEANING CORONA

OPTIMUM ADJUSTING VALUES:

AC 58 ± 1.0 µA
DC -25 ± 1.0 µA

1. Reinstall the cleaning unit [A].
2. Position the drum shoe [B] at the center of the shaft so that the axis of the current sensing plate is aligned with the pre-cleaning corona wire as shown.
3. Reinstall the drum stay [C] (1 screw and 1 knob).
4. Turn on switch 2 of the switching board plugged into CN106.
5. Lower the PCB plate (2 screws).
6. Select the dc 200 µA range of the digital multimeter [D].

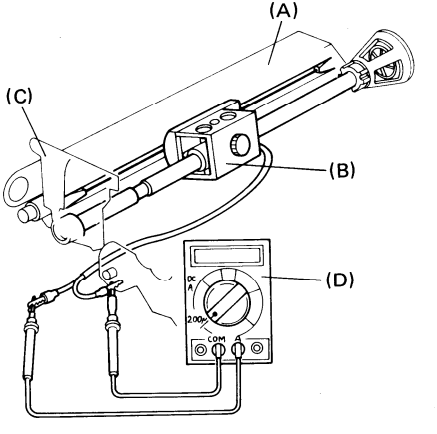

7. Turn on the main switch and adjust the pre-cleaning dc current by turning **PCC-DC** on the power pack [A]. (Wait 30 seconds for the current to stabilize.)

8. Turn off the main switch and select the dc 200 μA range of the digital multimeter.

9. Turn on the main switch and adjust the pre-cleaning ac current by turning **PCC-AC** on the power pack. (Wait 30 seconds for the corona current to stabilize.)

10. Turn off the main switch.

11. Repeat steps 6 through 10 until both the ac and the dc currents are within the optimum range.

12. Turn off the main switch and switch 2 of the switching board.

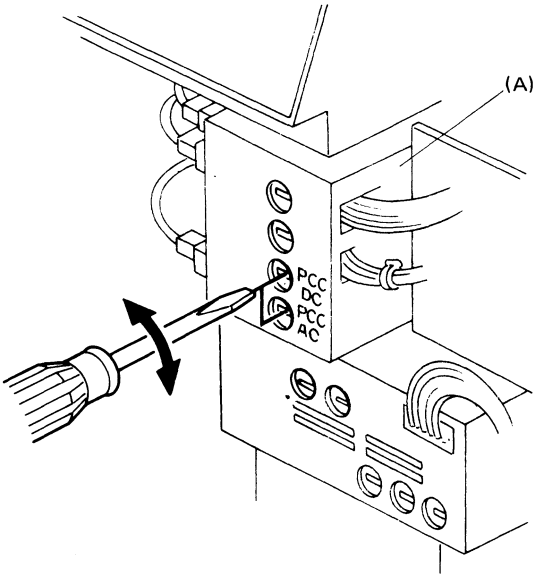

VI. PRE-QUENCHING CORONA

Optimum Adjusting Value: DC +25 ± 1.0 µA

1. Position the drum shoe at the center of the shaft so that the axis of the current sensing plate is aligned with the quenching corona wire.
2. Reinstall the drum stay (1 screw and 1 knob), the cleaning unit, and the quenching corona unit.
3. Select the dc 200 µA range of the digital multimeter.
4. Disconnect the connector of the cleaning bias roller at the power pack as the on timing of the cleaning bias roller and the pre-quenching corona are the same.
5. Plug the switching board into CN106 and turn on SW 5.
6. Lower the PCB plate (2 screws).
7. Turn on the main switch and adjust the quenching corona current by turning **PQC** on the power pack [A]. (Wait 30 seconds for the corona current to stabilize.)
8. Turn off the main switch and switch 5 of the switching board.

