MODIFICATION BULLETIN CORRECTION **ISSUED ON: December 31, '92**

Model : F30/31

MB No. : 25 **Issued on:** December 28, '87

The following item (S) is (are) mentioned by mistake. Please replace the MB with the new one.

* Part number correction

Incorrect:

Page	Index No.	Incorrect P/N	Correct P/N	Description
57	8	A0073791	A0073728	Transport Fan Cover

Correct:

Page	Index No.	Incorrect P/N	Correct P/N	Description
57	8	A0073791	A0073928	Transport Fan Cover

T. Ito, Manager
Copier Technical Support

Model	F30/31	Volt/Hz	Date of Modification	Serial Number
Modified Article	Mylar Sael - 18 x 76			
Reason for Modification	To make the machine run quieter			

A mylar seal has been added to prevent noise caused by friction between the drum stay and the drum flange.

P/N	Description	Q'ty	Index No.	Page
AA150246	Mylar - 18 x 76	1	*74	41
			* New Index	

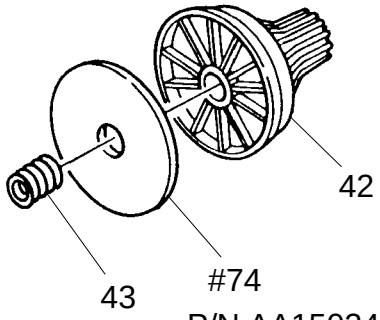

P/N AA150246

T.Ito, Manager
Copier Technical Support

MODEL NAME	V/Hz	DESTINATION	JAPAN PRODUCTION	
			CODE	SERIAL NUMBER
NASHUA 7150D	115/60	S. AMERICA	A007-16	030010XXXX
RICOH FT5590	115/60	USA, CANADA	A007-17	40010XXXXX
RICOH FT5590	110/60	TAIWAN	A007-19	40010XXXXX
NASHUA 7150D	220,240/50	EUROPE etc.	A007-25	030009XXXX
KALLE 9048DZ	220,240/50	EUROPE	A007-26	359100XXXX
RICOH FT5590	220,240/50	EUROPE etc.	A007-27	40010XXXXX
RICOH FT5590	220,240/50	ASIA etc.	A007-29	4000921629
P.B. M750	115/60	USA, CANADA	A007-51	010XXXX
NASHUA 7150	115/60	S. AMERICA	A007-56	035010XXXX
RICOH FT5580	110/60	TAIWAN	A007-59	41010XXXXX
NASHUA 7150	220,240/50	EUROPE etc.	A007-65	035010XXXX
KALLE 9048Z	220,240/50	EUROPE	A007-66	360100XXXX
RICOH FT5580	220,240/50	EUROPE etc.	A007-67	41010XXXX
RICOH FT5580	220,240/50	ASIA etc.	A007-69	41010XXXX
INFOTEC 9150Z	220,240/50	EUROPE	A007-76	351090XXXX

MODEL NAME	V/Hz	DESTINATION	REI PRODUCTION	
			CODE	SERIAL NUMBER
RICOH FT5590	115/60	USA, CANADA	A007-06	

MODEL NAME	V/Hz	DESTINATION	JAPAN PRODUCTION	
			CODE	SERIAL NUMBER
P.B. D750	115/60	USA, CANADA	A019-11	009XXXX
SAVIN 7500	115/60	USA, CANADA	A019-15	94009XXXXX
NASHUA 7150C	115/60	S. ANERICA	A019-16	036009XXXX
RICOH FT6620	115/60	USA, CANADA	A019-17	202010XXXX
NASHUA 7150C	220,240/50	EUROPE etc.	A019-25	036009XXXX
KALLE 9052DZ	220,240/50	EUROPE	A019-26	366100XXXX
RICOH FT6620	220,240/50	EUROPE etc.	A019-27	202009XXXX
RICOH FT6620	220,240/50	ASIA etc.	A019-29	202009XXXX

MODEL NAME	V/Hz	DESTINATION	REI PRODUCTION	
			CODE	SERIAL NUMBER
RICOH FT6620	115/60	USA, CANADA	A019-06	
SAVIN 7500	115/60	USA, CANADA	A019-07	

Model	F30/31	Volt/Hz	Date of Modification	Serial Number
Modified Article	Positioning Stud			
Reason for Modification	To prevent the holder from flexing			

Draw No.	Old Parts No.		New Parts No.	Description	A.B.C. Rank	Q'ty Used Old → New	Inter-change-ability	Part needed for replacement by new part		Parts Catalog	
								Part No.	Description	Index No.	Page
	AA143032			Positioning Stud - End Block		2 ---- 1	X/			25	45
			AA143302	Positioning Stud - Front End Block		0 ---- 1	/X	as a set x/o		76	45
			AA148256	Cap Nut		0 ---- 1	/X			77	45

Rank: A : Replace with new parts immediately. B : Replace with new parts at time of repair. C : Replace with new parts at time of overhall.
Interchangeability:
(1) When old and new parts are not mutually interchangeable, use additional parts or an assembly part as indicated in "Parts needed for replacement by new part" to install the new part.
(2) The mark to the left of the slash indicates whether the old part can be used in the new machine, and the mark to the right indicates whether the new part can be used in the old machine. x = Not interchangeable o = Interchangeable

DETAILS OF MODIFICATION

The positioning stud-end block (P/N AA143032) has been modified so that it can accept a cap nut. The cap nut prevents the holder from flexing which could cause noise from the cleaning unit.
The old part (#AA143032) and new parts (P/N AA143302, P/N AA148256) are interchangeable as a set.

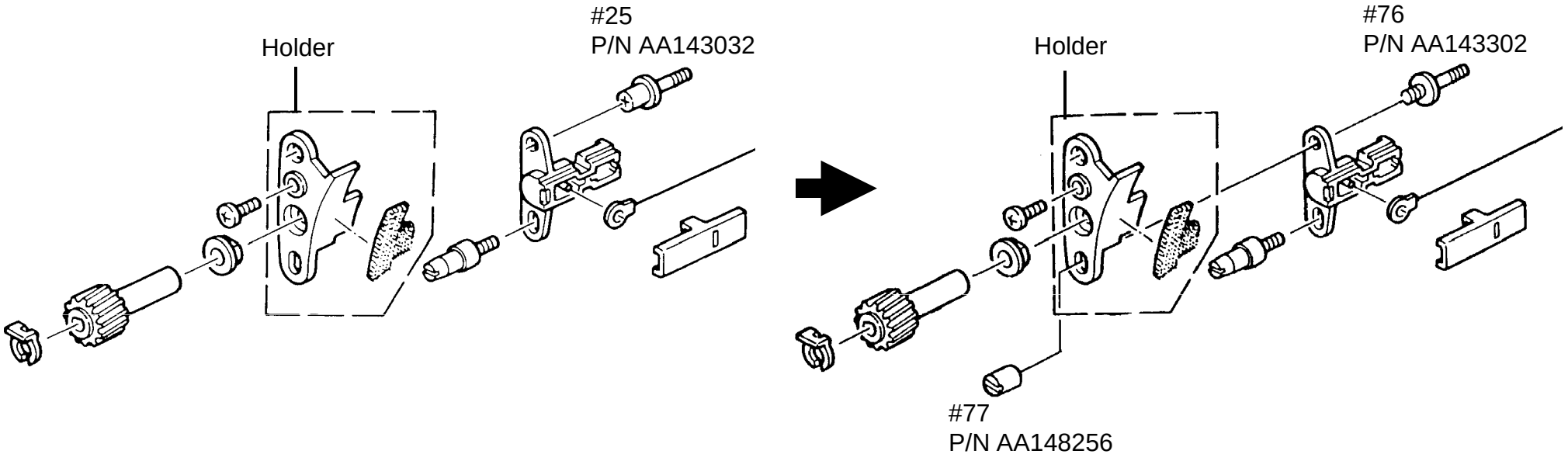

Old **New**

T. Ito, Manager
Copier Technical Support

MODEL NAME	V/Hz	DESTINATION	JAPAN PRODUCTION	
			CODE	SERIAL NUMBER
NASHUA 7150D	115/60	S. AMERICA	A007-16	030011XXXX
RICOH FT5590	115/60	USA, CANADA	A007-17	40011XXXXX
RICOH FT5590	110/60	TAIWAN	A007-19	4011XXXXXX
NASHUA 7150D	220,240/50	EUROPE etc.	A007-25	030011XXXX
KALLE 9048DZ	220,240/50	EUROPE	A007-26	359110XXXX
RICOH FT5590	220,240/50	EUROPE etc.	A007-27	40011XXXXX
RICOH FT5590	220,240/50	ASIA etc.	A007-29	40011XXXXX
P.B. M750	115/60	USA, CANADA	A007-51	011XXXX
NASHUA 7150	115/60	S. AMERICA	A007-56	035011XXXX
RICOH FT5580	110/60	TAIWAN	A007-59	41011XXXXX
NASHUA 7150	220,240/50	EUROPE etc.	A007-65	035011XXXX
KALLE 9048Z	220,240/50	EUROPE	A007-66	360110XXXX
RICOH FT5580	220,240/50	EUROPE etc.	A007-67	41011XXXXX
RICOH FT5580	220,240/50	ASIA etc.	A007-69	41011XXXXX
INFOTEC 9150Z	220,240/50	EUROPE	A007-76	351110XXXX

MODEL NAME	V/Hz	DESTINATION	REI PRODUCTION	
			CODE	SERIAL NUMBER
RICOH FT5590	115/60	USA, CANADA	A007-06	

MODEL NAME	V/Hz	DESTINATION	JAPAN PRODUCTION	
			CODE	SERIAL NUMBER
P.B. D750	115/60	USA, CANADA	A019-11	010XXXX
SAVIN 7500	115/60	USA, CANADA	A019-15	94010XXXXX
NASHUA 7150C	115/60	S. ANERICA	A019-16	036011XXXX
RICOH FT6620	115/60	USA, CANADA	A019-17	202011XXXX
NASHUA 7150C	220,240/50	EUROPE etc.	A019-25	036010XXXX
KALLE 9052DZ	220,240/50	EUROPE	A019-26	366 110XXXX
RICOH FT6620	220,240/50	EUROPE etc.	A019-27	202010XXXX
RICOH FT6620	220,240/50	ASIA etc.	A019-29	202010XXXX

MODEL NAME	V/Hz	DESTINATION	REI PRODUCTION	
			CODE	SERIAL NUMBER
RICOH FT6620	115/60	USA, CANADA	A019-06	
SAVIN 7500	115/60	USA, CANADA	A019-07	

Model	F30/31	**Volt/Hz**	**Date of Modification**	**Serial Number**
Modified Article	Power Pack - PCC and power pack - T & S			
Reason for Modification	Parts standardization			

To standardize F30/31 and F40 parts, the power packs have been changed as follows:

Old P/N	New P/N	Description	Q'ty	Interchangeability	Index No.	Page
AZ310001	AZ310008	Power Pack - pcc	1	O/O	13	57
AZ320006	AZ320050	Power Pack - T & S	1	O/O	16	57

T. Ito, Manager
Copier Technical Support

MODEL NAME	V/Hz	DESTINATION	JAPAN PRODUCTION	
			CODE	SERIAL NUMBER
NASHUA 7150D	115/60	S. AMERICA	A007-16	030101XXXX
RICOH FT5590	115/60	USA, CANADA	A007-17	40101XXXXX
RICOH FT5590	110/60	TAIWAN	A007-19	40101XXXXX
NASHUA 7150D	220,240/50	EUROPE etc.	A007-25	030012XXXX
KALLE 9048DZ	220,240/50	EUROPE	A007-26	359011XXXX
RICOH FT5590	220,240/50	EUROPE etc.	A007-27	40012XXXXX
RICOH FT5590	220,240/50	ASIA etc.	A007-29	40012XXXXX
P.B. M750	115/60	USA, CANADA	A007-51	012XXXX
NASHUA 7150	115/60	S. AMERICA	A007-56	035101XXXX
RICOH FT5580	110/60	TAIWAN	A007-59	41012XXXXX
NASHUA 7150	220,240/50	EUROPE etc.	A007-65	035101XXXX
KALLE 9048Z	220,240/50	EUROPE	A007-66	360011XXXX
RICOH FT5580	220,240/50	EUROPE etc.	A007-67	41101XXXXX
RICOH FT5580	220,240/50	ASIA etc.	A007-69	41101XXXXX
INFOTEC 9150Z	220,240/50	EUROPE	A007-76	351120XXXX

MODEL NAME	V/Hz	DESTINATION	REI PRODUCTION	
			CODE	SERIAL NUMBER
RICOH FT5590	115/60	USA, CANADA	A007-06	

MODEL NAME	V/Hz	DESTINATION	JAPAN PRODUCTION	
			CODE	SERIAL NUMBER
P.B. D750	115/60	USA, CANADA	A019-11	101XXXX
SAVIN 7500	115/60	USA, CANADA	A019-15	94101XXXXX
NASHUA 7150C	115/60	S. ANERICA	A019-16	036101XXXX
RICOH FT6620	115/60	USA, CANADA	A019-17	202101XXXX
NASHUA 7150C	220,240/50	EUROPE etc.	A019-25	036101XXXX
KALLE 9052DZ	220,240/50	EUROPE	A019-26	366011XXXX
RICOH FT6620	220,240/50	EUROPE etc.	A019-27	202101XXXX
RICOH FT6620	220,240/50	ASIA etc.	A019-29	202101XXXX

MODEL NAME	V/Hz	DESTINATION	REI PRODUCTION	
			CODE	SERIAL NUMBER
RICOH FT6620	115/60	USA, CANADA	A019-06	
SAVIN 7500	115/60	USA, CANADA	A019-07	

Model	F30/31	Volt/Hz	Date of Modification	Serial Number
Modified Article	Operation Panel Cover			
Reason for Modification	As per field rewuest			

Draw No.	Old Parts No.		New Parts No.	Description	A.B.C. Rank	Q'ty Used Old → New	Inter-change-ability	Part needed for replacement by new part: Part No.	Part needed for replacement by new part: Description	Parts Catalog: Index No.	Parts Catalog: Page
			A0071510	Operation Panel Cover - LT		0 — 1			F30 Dup./F31	62	53
			A0071511	Operation Panel Cover - A4		0 — 1			F30 Dup./F31 — RICOH	62	53
			A0071512	Operation Panel Cover - A4		0 — 1			F30	62	53
			A0071513	Operation Panel Cover		0 — 1			F30 Dup./F31 — INFOTEC	62	53
			A0071514	Operation Panel Cover		0 — 1			F30	62	53
			A0071515	Operation Panel Cover		0 — 1			F30 P.B. — P.B.	62	53
			A0191515	Operation Panel Cover		0 — 1			F31	62	53
			A0191506	Operation Panel Cover		0 — 1			F31 SAVIN	62	53
			A0071516	Operation Panel Cover - A4		0 — 1			F30 Dup./F31	62	53
			A0071517	Operation Panel Cover - A4		0 — 1			F30NASHUA — NASHUA	62	53
			A0071518	Operation Panel Cover - LT		0 — 1			F30 Dup./F31	62	53

Rank: A : Replace with new parts immediately. B : Replace with new parts at time of repair. C : Replace with new parts at time of overhall.
Interchangeability:
(1) When old and new parts are not mutually interchangeable, use additional parts or an assembly part as indicated in "Parts needed for replacement by new part" to install the new part.
(2) The mark to the left of the slash indicates whether the old part can be used in the new machine, and the mark to the right indicates whether the new part can be used in the old machine. x = Not interchangeable o = Interchangeable

Draw No.	Old Parts No.		New Parts No.	Description	A.B.C. Rank	Q'ty Used Old → New	Inter-change-ability	Part needed for replacement by new part		Parts Catalog	
								Part No.	Description	Index No.	Page
			A0071519	Operation Panel Cover - LT		0 — 1			F30 — NASHUA	62	53
			A0071520	Operation Panel Cover		0 — 1			F30 — INFOTEC 9150DZ	62	53
			A0071527	Operation Panel Cover		0 — 1			F30 DUP — RICOH-TAIWAN	62	53
			A0071528	Operation Panel Cover		0 — 1			F30	62	53

DETAILS OF MODIFICATION

As per field request the operation panel cover has been registered as a service part.

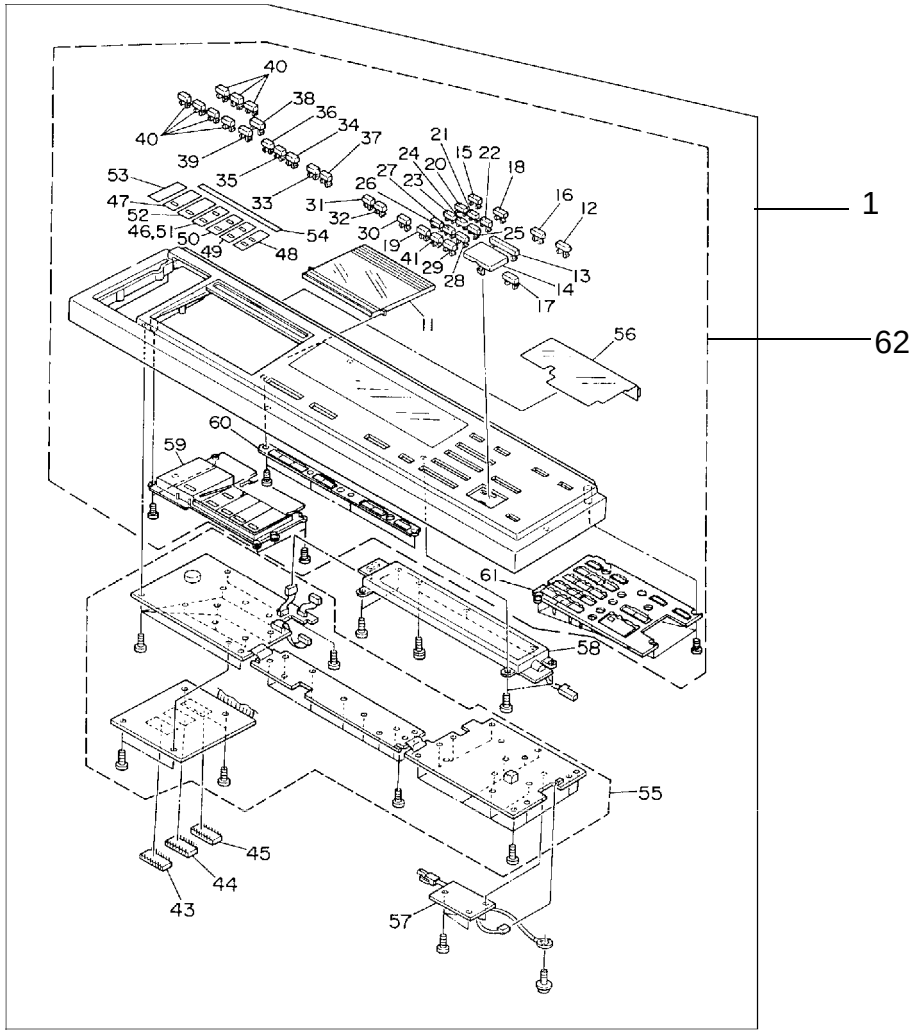

T. Ito, Manager
Copier Technical Support

MODEL NAME	V/Hz	DESTINATION	JAPAN PRODUCTION	
			CODE	SERIAL NUMBER
NASHUA 7150D	115/60	S. AMERICA	A007-16	
RICOH FT5590	115/60	USA, CANADA	A007-17	
RICOH FT5590	110/60	TAIWAN	A007-19	
NASHUA 7150D	220,240/50	EUROPE etc.	A007-25	
KALLE 9048DZ	220,240/50	EUROPE	A007-26	
RICOH FT5590	220,240/50	EUROPE etc.	A007-27	
RICOH FT5590	220,240/50	ASIA etc.	A007-29	
P.B. M750	115/60	USA, CANADA	A007-51	
NASHUA 7150	115/60	S. AMERICA	A007-56	
RICOH FT5580	110/60	TAIWAN	A007-59	
NASHUA 7150	220,240/50	EUROPE etc.	A007-65	
KALLE 9048Z	220,240/50	EUROPE	A007-66	
RICOH FT5580	220,240/50	EUROPE etc.	A007-67	
RICOH FT5580	220,240/50	ASIA etc.	A007-69	
INFOTEC 9150Z	220,240/50	EUROPE	A007-76	

MODEL NAME	V/Hz	DESTINATION	REI PRODUCTION	
			CODE	SERIAL NUMBER
RICOH FT5590	115/60	USA, CANADA	A007-06	

MODEL NAME	V/Hz	DESTINATION	JAPAN PRODUCTION	
			CODE	SERIAL NUMBER
P.B. D750	115/60	USA, CANADA	A019-11	
SAVIN 7500	115/60	USA, CANADA	A019-15	
NASHUA 7150C	115/60	S. ANERICA	A019-16	
RICOH FT6620	115/60	USA, CANADA	A019-17	
NASHUA 7150C	220,240/50	EUROPE etc.	A019-25	
KALLE 9052DZ	220,240/50	EUROPE	A019-26	
RICOH FT6620	220,240/50	EUROPE etc.	A019-27	
RICOH FT6620	220,240/50	ASIA etc.	A019-29	

MODEL NAME	V/Hz	DESTINATION	REI PRODUCTION	
			CODE	SERIAL NUMBER
RICOH FT6620	115/60	USA, CANADA	A019-06	
SAVIN 7500	115/60	USA, CANADA	A019-07	

Model	F30/31 (SAVIN only)	**Volt/Hz**	**Date of Modification**	**Serial Number**
Modified Article	Parts Catalog			
Reason for Modification	Parts catalog correction			

Please correct your parts catalog as follows:

Incorrect P/N	Correct P/N	Description	Index No.	Page
52056592	52056593	Large Cassette Body	25	19
52056595	52056596	Small Cassette Body	25	19

T. Ito, Manager
Copier Technical Support

MODEL NAME	V/Hz	DESTINATION	JAPAN PRODUCTION	
			CODE	SERIAL NUMBER
NASHUA 7150D	115/60	S. AMERICA	A007-16	
RICOH FT5590	115/60	USA, CANADA	A007-17	
RICOH FT5590	110/60	TAIWAN	A007-19	
NASHUA 7150D	220,240/50	EUROPE etc.	A007-25	
KALLE 9048DZ	220,240/50	EUROPE	A007-26	
RICOH FT5590	220,240/50	EUROPE etc.	A007-27	
RICOH FT5590	220,240/50	ASIA etc.	A007-29	
P.B. M750	115/60	USA, CANADA	A007-51	
NASHUA 7150	115/60	S. AMERICA	A007-56	
RICOH FT5580	110/60	TAIWAN	A007-59	
NASHUA 7150	220,240/50	EUROPE etc.	A007-65	
KALLE 9048Z	220,240/50	EUROPE	A007-66	
RICOH FT5580	220,240/50	EUROPE etc.	A007-67	
RICOH FT5580	220,240/50	ASIA etc.	A007-69	
INFOTEC 9150Z	220,240/50	EUROPE	A007-76	

MODEL NAME	V/Hz	DESTINATION	REI PRODUCTION	
			CODE	SERIAL NUMBER
RICOH FT5590	115/60	USA, CANADA	A007-06	

MODEL NAME	V/Hz	DESTINATION	JAPAN PRODUCTION	
			CODE	SERIAL NUMBER
P.B. D750	115/60	USA, CANADA	A019-11	
SAVIN 7500	115/60	USA, CANADA	A019-15	
NASHUA 7150C	115/60	S. ANERICA	A019-16	
RICOH FT6620	115/60	USA, CANADA	A019-17	
NASHUA 7150C	220,240/50	EUROPE etc.	A019-25	
KALLE 9052DZ	220,240/50	EUROPE	A019-26	
RICOH FT6620	220,240/50	EUROPE etc.	A019-27	
RICOH FT6620	220,240/50	ASIA etc.	A019-29	

MODEL NAME	V/Hz	DESTINATION	REI PRODUCTION	
			CODE	SERIAL NUMBER
RICOH FT6620	115/60	USA, CANADA	A019-06	
SAVIN 7500	115/60	USA, CANADA	A019-08	

Model	F30/31	**Volt/Hz**	**Date of Modification**	**Serial Number**
Modified Article	Corona Wires			
Reason for Modification	To facilitate service			

To facilitate service, the platinum corona wires have been registered as service parts.
For details, please refer to F30/31 RTB No. 048.

Page	Index	P/N	Description
41	61	# A0079540	Main Corona Wire (1 PC/Set)
39	34	# A0079542	Transfer Corona Wire (1 PC/Set)
41	67	# A0079541	PQC Corona Wire (1 PC/Set)

T. Ito, Manager
Copier Technical Support

MODEL NAME	V/Hz	DESTINATION	JAPAN PRODUCTION	
			CODE	SERIAL NUMBER
NASHUA 7150D	115/60	S. AMERICA	A007-16	Service Parts Only
RICOH FT5590	115/60	USA, CANADA	A007-17	Service Parts Only
RICOH FT5590	110/60	TAIWAN	A007-19	Service Parts Only
NASHUA 7150D	220,240/50	EUROPE etc.	A007-25	Service Parts Only
KALLE 9048DZ	220,240/50	EUROPE	A007-26	Service Parts Only
RICOH FT5590	220,240/50	EUROPE etc.	A007-27	Service Parts Only
RICOH FT5590	220,240/50	ASIA etc.	A007-29	Service Parts Only
P.B. M750	115/60	USA, CANADA	A007-51	Service Parts Only
NASHUA 7150	115/60	S. AMERICA	A007-56	Service Parts Only
RICOH FT5580	110/60	TAIWAN	A007-59	Service Parts Only
NASHUA 7150	220,240/50	EUROPE etc.	A007-65	Service Parts Only
KALLE 9048Z	220,240/50	EUROPE	A007-66	Service Parts Only
RICOH FT5580	220,240/50	EUROPE etc.	A007-67	Service Parts Only
RICOH FT5580	220,240/50	ASIA etc.	A007-69	Service Parts Only
INFOTEC 9150Z	220,240/50	EUROPE	A007-76	Service Parts Only

MODEL NAME	V/Hz	DESTINATION	REI PRODUCTION	
			CODE	SERIAL NUMBER
RICOH FT5590	115/60	USA, CANADA	A007-06	Service Parts Only

MODEL NAME	V/Hz	DESTINATION	JAPAN PRODUCTION	
			CODE	SERIAL NUMBER
P.B. D750	115/60	USA, CANADA	A019-11	Service Parts Only
SAVIN 7500	115/60	USA, CANADA	A019-15	Service Parts Only
NASHUA 7150C	115/60	S. AMERICA	A019-16	Service Parts Only
RICOH FT6620	115/60	USA, CANADA	A019-17	Service Parts Only
NASHUA 7150C	220,240/50	EUROPE etc.	A019-25	Service Parts Only
KALLE 9052DZ	220,240/50	EUROPE	A019-26	Service Parts Only
RICOH FT6620	220,240/50	EUROPE etc.	A019-27	Service Parts Only
RICOH FT6620	220,240/50	ASIA etc.	A019-29	Service Parts Only

MODEL NAME	V/Hz	DESTINATION	REI PRODUCTION	
			CODE	SERIAL NUMBER
RICOH FT6620	115/60	USA, CANADA	A019-06	Service Parts Only
SAVIN 7500	115/60	USA, CANADA	A019-08	Service Parts Only

Model	F30/31	Volt/Hz	Date of Modification	Serial Number
Modified Article	Cleaning Blade			
Reason for Modification	Parts standardization			

For the purpose of parts standardization, a new cleaning blade (P/N A0073565) replaces cleaning blade P/N 52053565 and P/N A0093565.
The interchangeability of the old and new blades is O/O.

Old P/N	New P/N	Description	Q'ty	interchangeability	Index No.	Page
52053565	A0073565	Cleaning Blade	1 → 1	O/O	48	45

P/N	Model in which cleaning blade is used
52053565	F3/4, F9, F30/31, F33/34, F80, F85, F90
A0093565	F12, F13, F23, F24, F25

T .Ito, Manager
Copier Technical Support

MODEL NAME	V/Hz	DESTINATION	JAPAN PRODUCTION	
			CODE	SERIAL NUMBER
NASHUA 7150D	115/60	S. AMERICA	A007-16	
RICOH FT5590	115/60	USA, CANADA	A007-17	
RICOH FT5590	110/60	TAIWAN	A007-19	
NASHUA 7150D	220,240/50	EUROPE etc.	A007-25	
KALLE 9048DZ	220,240/50	EUROPE	A007-26	
RICOH FT5590	220,240/50	EUROPE etc.	A007-27	
RICOH FT5590	220,240/50	ASIA etc.	A007-29	
P.B. M750	115/60	USA, CANADA	A007-51	
NASHUA 7150	115/60	S. AMERICA	A007-56	
RICOH FT5580	110/60	TAIWAN	A007-59	
NASHUA 7150	220,240/50	EUROPE etc.	A007-65	
KALLE 9048Z	220,240/50	EUROPE	A007-66	
RICOH FT5580	220,240/50	EUROPE etc.	A007-67	
RICOH FT5580	220,240/50	ASIA etc.	A007-69	
INFOTEC 9150Z	220,240/50	EUROPE	A007-76	

MODEL NAME	V/Hz	DESTINATION	REI PRODUCTION	
			CODE	SERIAL NUMBER
RICOH FT5590	115/60	USA, CANADA	A007-06	

MODEL NAME	V/Hz	DESTINATION	JAPAN PRODUCTION	
			CODE	SERIAL NUMBER
P.B. D750	115/60	USA, CANADA	A019-11	
SAVIN 7500	115/60	USA, CANADA	A019-15	
NASHUA 7150C	115/60	S. ANERICA	A019-16	
RICOH FT6620	115/60	USA, CANADA	A019-17	
NASHUA 7150C	220,240/50	EUROPE etc.	A019-25	
KALLE 9052DZ	220,240/50	EUROPE	A019-26	
RICOH FT6620	220,240/50	EUROPE etc.	A019-27	
RICOH FT6620	220,240/50	ASIA etc.	A019-29	

MODEL NAME	V/Hz	DESTINATION	REI PRODUCTION	
			CODE	SERIAL NUMBER
RICOH FT6620	115/60	USA, CANADA	A019-06	
SAVIN 7500	115/60	USA, CANADA	A019-08	

Model	F30/31	Volt/Hz	Date of Modification	Serial Number
Modified Article	Cleaning Brush Drive Shaft Set			
Reason for Modification	1. Answer to field request			

Draw No.	Old Parts No.		New Parts No.	Description	A.B.C. Rank	Q'ty Used Old → New	Inter-change-ability	Part needed for replacement by new part		Parts Catalog	
								Part No.	Description	Index No.	Page
			A0079520	Cleaning Brush Drive Shaft Set		0 →1				—	—
	A0079520		A0079521	Cleaning Brush Drive Shaft Set		1 →1	X/O			—	—

Rank: A : Replace with new parts immediately. B : Replace with new parts at time of repair. C : Replace with new parts at time of overhaul.
Interchangeability:
(1) When old and new parts are not mutually interchangeable, use additional parts or an assembly part as indicated in "Parts needed for replacement by new part" to install the new part.
(2) The mark to the left of the slash indicates whether the old part can be used in the new machine, and the mark to the right indicates whether the new part can be used in the old machine. x = Not interchangeable o = Interchangeable

DETAILS OF MODIFICATION

1. In answer to the field's request, we have registered the cleaning brush drive shaft set (# A0079520) as a service part. (This part number is mentioned in RTB No. 46) This set is composed of the following parts:

Item	P/N	Description	Q'ty
1	A0073570	Cleaning Brush Drive Shaft	1
2	AA143302	Positioning Stud - Front End Block	1
3	AA148256	Cup Nut	1

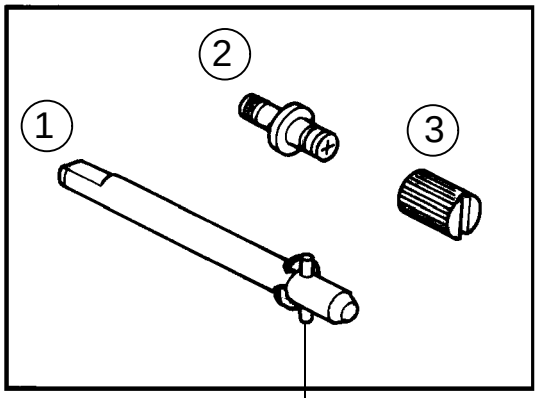

Round Pin

2. The cleaning brush drive shaft included in this set (# A0079520) will be changed from # A0073570 (round type pin) to # A0073573 (square type pin). Therefore, the part number for the cleaning brush drive shaft set will be changed from # A0079520 to # A0079521.

Item	P/N	Description	Q'ty
1	A0073573	Cleaning Brush Drive Shaft	1
2	AA143302	Positioning Stud - Front End Block	1
3	AA148256	Cap Nut	1

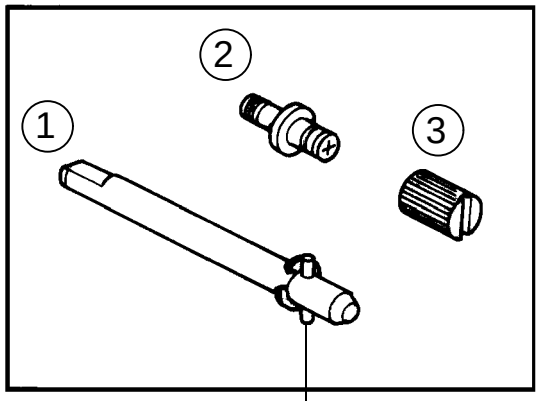

Square Pin

NOTE: An another MB for the change of the drive shaft will separatedly be issued as soon as new shaft is fitted to the production machines.

T. Ito, Manager
Copier Technical Support

MODEL NAME	V/Hz	DESTINATION	JAPAN PRODUCTION	
			CODE	SERIAL NUMBER
NASHUA 7150D	115/60	S. AMERICA	A007-16	
RICOH FT5590	115/60	USA, CANADA	A007-17	
RICOH FT5590	110/60	TAIWAN	A007-19	
NASHUA 7150D	220,240/50	EUROPE etc.	A007-25	
KALLE 9048DZ	220,240/50	EUROPE	A007-26	
RICOH FT5590	220,240/50	EUROPE etc.	A007-27	
RICOH FT5590	220,240/50	ASIA etc.	A007-29	
P.B. M750	115/60	USA, CANADA	A007-51	
NASHUA 7150	115/60	S. AMERICA	A007-56	
RICOH FT5580	110/60	TAIWAN	A007-59	
NASHUA 7150	220,240/50	EUROPE etc.	A007-65	
KALLE 9048Z	220,240/50	EUROPE	A007-66	
RICOH FT5580	220,240/50	EUROPE etc.	A007-67	
RICOH FT5580	220,240/50	ASIA etc.	A007-69	
INFOTEC 9150Z	220,240/50	EUROPE	A007-76	

MODEL NAME	V/Hz	DESTINATION	REI PRODUCTION	
			CODE	SERIAL NUMBER
RICOH FT5590	115/60	USA, CANADA	A007-06	

MODEL NAME	V/Hz	DESTINATION	JAPAN PRODUCTION	
			CODE	SERIAL NUMBER
P.B. D750	115/60	USA, CANADA	A019-11	
SAVIN 7500	115/60	USA, CANADA	A019-15	
NASHUA 7150C	115/60	S. ANERICA	A019-16	
RICOH FT6620	115/60	USA, CANADA	A019-17	
NASHUA 7150C	220,240/50	EUROPE etc.	A019-25	
KALLE 9052DZ	220,240/50	EUROPE	A019-26	
RICOH FT6620	220,240/50	EUROPE etc.	A019-27	
RICOH FT6620	220,240/50	ASIA etc.	A019-29	

MODEL NAME	V/Hz	DESTINATION	REI PRODUCTION	
			CODE	SERIAL NUMBER
RICOH FT6620	115/60	USA, CANADA	A019-06	
SAVIN 7500	115/60	USA, CANADA	A019-08	

Model	F30/31	Volt/Hz	Date of Modification	Serial Number
Modified Article	Parts Catalog			
Reason for Modification	Parts catalog correciton			

Please correct your parts catalog as follows:
Addition

P/N	Description	Q'ty	Index No.	Page
AB013081	Gear - 18T	2	* 24	11
AB013082	Gear - 18T (Black)	1	* 25	11

* New Index No.

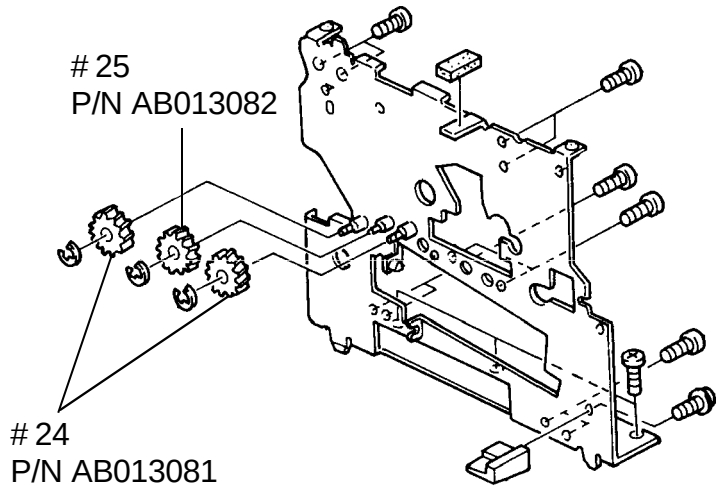

T. Ito, Manager
Copier Technical Support

MODEL NAME	V/Hz	DESTINATION	JAPAN PRODUCTION	
			CODE	SERIAL NUMBER
NASHUA 7150D	115/60	S. AMERICA	A007-16	
RICOH FT5590	115/60	USA, CANADA	A007-17	
RICOH FT5590	110/60	TAIWAN	A007-19	
NASHUA 7150D	220,240/50	EUROPE etc.	A007-25	
KALLE 9048DZ	220,240/50	EUROPE	A007-26	
RICOH FT5590	220,240/50	EUROPE etc.	A007-27	
RICOH FT5590	220,240/50	ASIA etc.	A007-29	
P.B. M750	115/60	USA, CANADA	A007-51	
NASHUA 7150	115/60	S. AMERICA	A007-56	
RICOH FT5580	110/60	TAIWAN	A007-59	
NASHUA 7150	220,240/50	EUROPE etc.	A007-65	
KALLE 9048Z	220,240/50	EUROPE	A007-66	
RICOH FT5580	220,240/50	EUROPE etc.	A007-67	
RICOH FT5580	220,240/50	ASIA etc.	A007-69	
INFOTEC 9150Z	220,240/50	EUROPE	A007-76	

MODEL NAME	V/Hz	DESTINATION	REI PRODUCTION	
			CODE	SERIAL NUMBER
RICOH FT5590	115/60	USA, CANADA	A007-06	

MODEL NAME	V/Hz	DESTINATION	JAPAN PRODUCTION	
			CODE	SERIAL NUMBER
P.B. D750	115/60	USA, CANADA	A019-11	
SAVIN 7500	115/60	USA, CANADA	A019-15	
NASHUA 7150C	115/60	S. ANERICA	A019-16	
RICOH FT6620	115/60	USA, CANADA	A019-17	
NASHUA 7150C	220,240/50	EUROPE etc.	A019-25	
KALLE 9052DZ	220,240/50	EUROPE	A019-26	
RICOH FT6620	220,240/50	EUROPE etc.	A019-27	
RICOH FT6620	220,240/50	ASIA etc.	A019-29	

MODEL NAME	V/Hz	DESTINATION	REI PRODUCTION	
			CODE	SERIAL NUMBER
RICOH FT6620	115/60	USA, CANADA	A019-06	
SAVIN 7500	115/60	USA, CANADA	A019-08	

Model	F30/31	Volt/Hz	Date of Modification	Serial Number
Modified Article	Parts Catalog			
Reason for Modification	Parts catlog correction			

Please correct your parts catalog as follows:

Correction

	P/N	Description	Q'ty	Index No.	Page
Incorrect	A0073604	Cleaning Brush Holder	1	37	45
Correct	A0073602	Cleaning Brush Holder	1	37	45

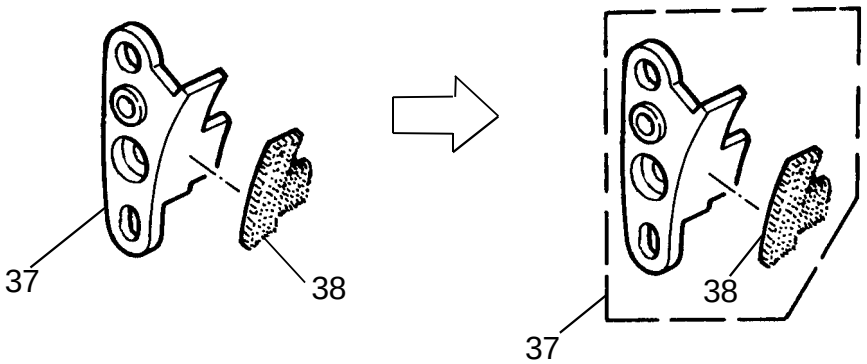

T. Ito, Manager
Copier Technical Support

MODEL NAME	V/Hz	DESTINATION	JAPAN PRODUCTION	
			CODE	SERIAL NUMBER
NASHUA 7150D	115/60	S. AMERICA	A007-16	
RICOH FT5590	115/60	USA, CANADA	A007-17	
RICOH FT5590	110/60	TAIWAN	A007-19	
NASHUA 7150D	220,240/50	EUROPE etc.	A007-25	
KALLE 9048DZ	220,240/50	EUROPE	A007-26	
RICOH FT5590	220,240/50	EUROPE etc.	A007-27	
RICOH FT5590	220,240/50	ASIA etc.	A007-29	
P.B. M750	115/60	USA, CANADA	A007-51	
NASHUA 7150	115/60	S. AMERICA	A007-56	
RICOH FT5580	110/60	TAIWAN	A007-59	
NASHUA 7150	220,240/50	EUROPE etc.	A007-65	
KALLE 9048Z	220,240/50	EUROPE	A007-66	
RICOH FT5580	220,240/50	EUROPE etc.	A007-67	
RICOH FT5580	220,240/50	ASIA etc.	A007-69	
INFOTEC 9150Z	220,240/50	EUROPE	A007-76	

MODEL NAME	V/Hz	DESTINATION	REI PRODUCTION	
			CODE	SERIAL NUMBER
RICOH FT5590	115/60	USA, CANADA	A007-06	

MODEL NAME	V/Hz	DESTINATION	JAPAN PRODUCTION	
			CODE	SERIAL NUMBER
P.B. D750	115/60	USA, CANADA	A019-11	
SAVIN 7500	115/60	USA, CANADA	A019-15	
NASHUA 7150C	115/60	S. ANERICA	A019-16	
RICOH FT6620	115/60	USA, CANADA	A019-17	
NASHUA 7150C	220,240/50	EUROPE etc.	A019-25	
KALLE 9052DZ	220,240/50	EUROPE	A019-26	
RICOH FT6620	220,240/50	EUROPE etc.	A019-27	
RICOH FT6620	220,240/50	ASIA etc.	A019-29	

MODEL NAME	V/Hz	DESTINATION	REI PRODUCTION	
			CODE	SERIAL NUMBER
RICOH FT6620	115/60	USA, CANADA	A019-06	
SAVIN 7500	115/60	USA, CANADA	A019-08	

Model	F30/31	Volt/Hz	Date of Modification	Serial Number
Modified Article	Cleaning Brush Drive Shaft and Cleaning Unit			
Reason for Modification	To improve durability			

To improve durability the cleaning brush drive shaft has been changed from the round pin type to the square pin type.
For details please refer to RTB No. 46 issued on Feb. 15, '91.

Old P/N	New P/N	Description	Q'ty Used	Interchangeability	Index No.	Page
AD002003	A0073510	Cleaning Unit	1 →1	O/O	*	45
A0073570	A0073573	Cleaning Brush Drive Shaft	1 →1	X/O	49	45

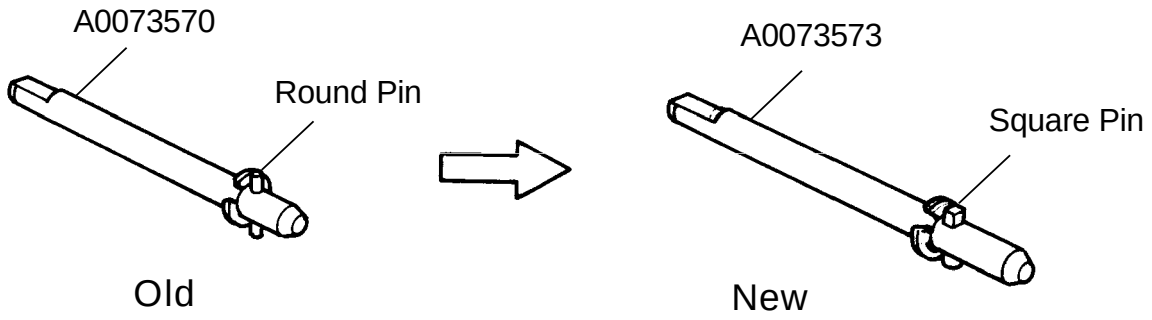

T. Ito, Manager
Copier Technical Support

MODEL NAME	V/Hz	DESTINATION	JAPAN PRODUCTION	
			CODE	SERIAL NUMBER
NASHUA 7150D	115/60	S. AMERICA	A007-16	030105XXX
RICOH FT5590	115/60	USA, CANADA	A007-17	40105XXXXX
RICOH FT5590	110/60	TAIWAN	A007-19	40105XXXXX
NASHUA 7150D	220,240/50	EUROPE etc.	A007-25	030105XXXX
KALLE 9048DZ	220,240/50	EUROPE	A007-26	359051XXXX
RICOH FT5590	220,240/50	EUROPE etc.	A007-27	40105XXXXX
RICOH FT5590	220,240/50	ASIA etc.	A007-29	40105XXXXX
P.B. M750	115/60	USA, CANADA	A007-51	105XXXX
NASHUA 7150	115/60	S. AMERICA	A007-56	035105XXXX
RICOH FT5580	110/60	TAIWAN	A007-59	41105XXXX
NASHUA 7150	220,240/50	EUROPE etc.	A007-65	035105XXXX
KALLE 9048Z	220,240/50	EUROPE	A007-66	360105XXXX
RICOH FT5580	220,240/50	EUROPE etc.	A007-67	41105XXXXX
RICOH FT5580	220,240/50	ASIA etc.	A007-69	41105XXXXX
INFOTEC 9150Z	220,240/50	EUROPE	A007-76	351051XXXX

MODEL NAME	V/Hz	DESTINATION	REI PRODUCTION	
			CODE	SERIAL NUMBER
RICOH FT5590	115/60	USA, CANADA	A007-06	

MODEL NAME	V/Hz	DESTINATION	JAPAN PRODUCTION	
			CODE	SERIAL NUMBER
P.B. D750	115/60	USA, CANADA	A019-11	105XXXX
SAVIN 7500	115/60	USA, CANADA	A019-15	94105XXXXX
NASHUA 7150C	115/60	S. ANERICA	A019-16	036105XXXX
RICOH FT6620	115/60	USA, CANADA	A019-17	202105XXXX
NASHUA 7150C	220,240/50	EUROPE etc.	A019-25	036105XXXX
KALLE 9052DZ	220,240/50	EUROPE	A019-26	366051XXXX
RICOH FT6620	220,240/50	EUROPE etc.	A019-27	202105XXXX
RICOH FT6620	220,240/50	ASIA etc.	A019-29	202105XXXX

MODEL NAME	V/Hz	DESTINATION	REI PRODUCTION	
			CODE	SERIAL NUMBER
RICOH FT6620	115/60	USA, CANADA	A019-06	
SAVIN 7500	115/60	USA, CANADA	A019-08	

Model	F30/31	Volt/Hz	Date of Modification	Serial Number
Modified Article	Stepped Screw - M3			
Reason for Modification	To ensure that tension lever rotates smoothly			

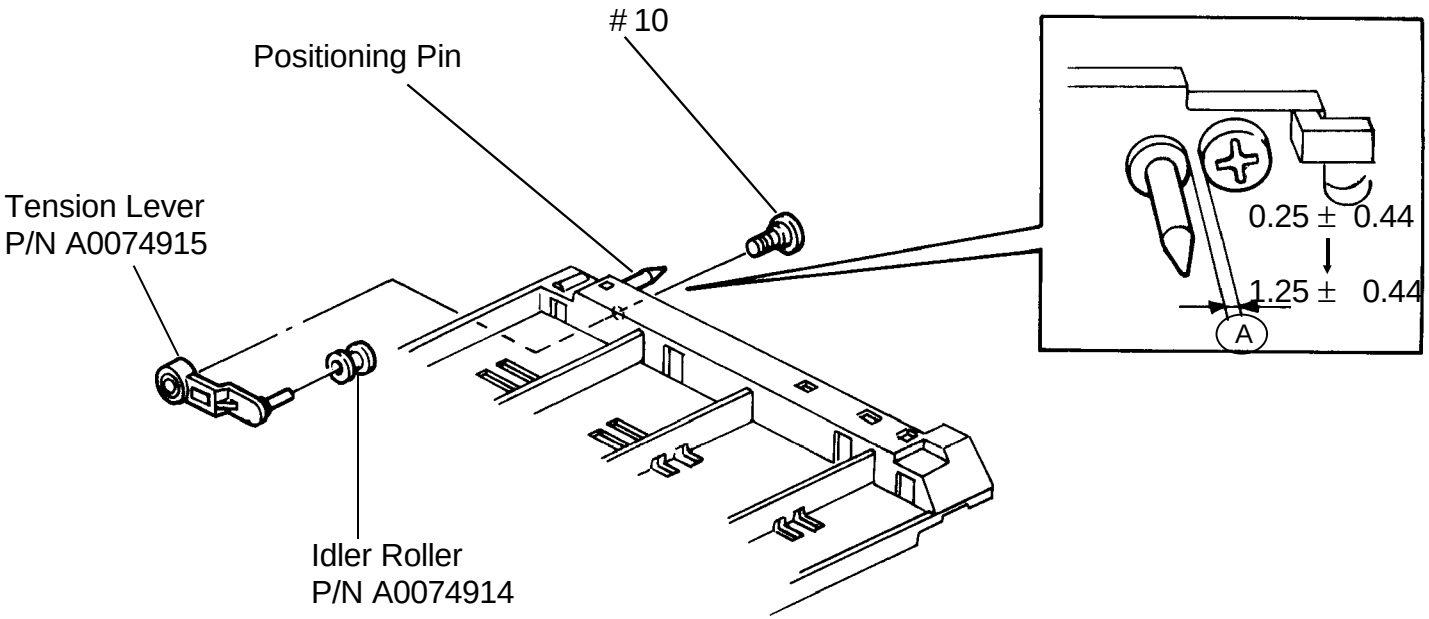

T. Ito, Manager
Copier Technical Support

MODEL NAME	V/Hz	DESTINATION	JAPAN PRODUCTION	
			CODE	SERIAL NUMBER
NASHUA 7150D	115/60	S. AMERICA	A007-16	030105XXX
RICOH FT5590	115/60	USA, CANADA	A007-17	40105XXXXX
RICOH FT5590	110/60	TAIWAN	A007-19	40105XXXXX
NASHUA 7150D	220,240/50	EUROPE etc.	A007-25	030105XXXX
KALLE 9048DZ	220,240/50	EUROPE	A007-26	359051XXXX
RICOH FT5590	220,240/50	EUROPE etc.	A007-27	40105XXXXX
RICOH FT5590	220,240/50	ASIA etc.	A007-29	40105XXXXX
P.B. M750	115/60	USA, CANADA	A007-51	105XXXX
NASHUA 7150	115/60	S. AMERICA	A007-56	035105XXXX
RICOH FT5580	110/60	TAIWAN	A007-59	41105XXXX
NASHUA 7150	220,240/50	EUROPE etc.	A007-65	035105XXXX
KALLE 9048Z	220,240/50	EUROPE	A007-66	360051XXXX
RICOH FT5580	220,240/50	EUROPE etc.	A007-67	41105XXXXX
RICOH FT5580	220,240/50	ASIA etc.	A007-69	41105XXXXX
INFOTEC 9150Z	220,240/50	EUROPE	A007-76	351051XXXX

MODEL NAME	V/Hz	DESTINATION	REI PRODUCTION	
			CODE	SERIAL NUMBER
RICOH FT5590	115/60	USA, CANADA	A007-06	

MODEL NAME	V/Hz	DESTINATION	JAPAN PRODUCTION	
			CODE	SERIAL NUMBER
P.B. D750	115/60	USA, CANADA	A019-11	105XXXX
SAVIN 7500	115/60	USA, CANADA	A019-15	94105XXXXX
NASHUA 7150C	115/60	S. ANERICA	A019-16	036105XXXX
RICOH FT6620	115/60	USA, CANADA	A019-17	202105XXXX
NASHUA 7150C	220,240/50	EUROPE etc.	A019-25	036105XXXX
KALLE 9052DZ	220,240/50	EUROPE	A019-26	366051XXXX
RICOH FT6620	220,240/50	EUROPE etc.	A019-27	202105XXXX
RICOH FT6620	220,240/50	ASIA etc.	A019-29	202105XXXX

MODEL NAME	V/Hz	DESTINATION	REI PRODUCTION	
			CODE	SERIAL NUMBER
RICOH FT6620	115/60	USA, CANADA	A019-06	
SAVIN 7500	115/60	USA, CANADA	A019-08	

Model	F30/31	Volt/Hz	Date of Modification	Serial Number
Modified Article	Main Drive Motor - AC39.5W			
Reason for Modification	To eliminate noise			

Draw No.	Old Parts No.		New Parts No.	Description	A.B.C. Rank	Q'ty Used Old → New	Inter-change-ability	Part needed for replacement by new part		Parts Catalog	
								Part No.	Description	Index No.	Page
	AX020030		A0075430	Main Drive Motor - AC39.5W		1 → 1	X/O			15	55
			A0075895	Fan - Main Drive Motor		0 → 1				* 54	55
									* New Index No.		

Rank: A : Replace with new parts immediately. B : Replace with new parts at time of repair. C : Replace with new parts at time of overhall.
nterchangeability:
1) When old and new parts are not mutually interchangeable, use additional parts or an assembly part as indicated in "Parts needed for replacement by new part" to install the new part.
2) The mark to the left of the slash indicates whether the old part can be used in the new machine, and the mark to the right indicates whether the new part can be used in the old machine. x = Not interchangeable o = Interchangeable

DETAILS OF MODIFICATION

When the fan installed on the motor shaft, there might be a little play between the fan and the motor shaft, causing noise. To eliminate noise, the shape of the fan and the motor shaft have been redesigned from the D-hub type to the round type with roullet.

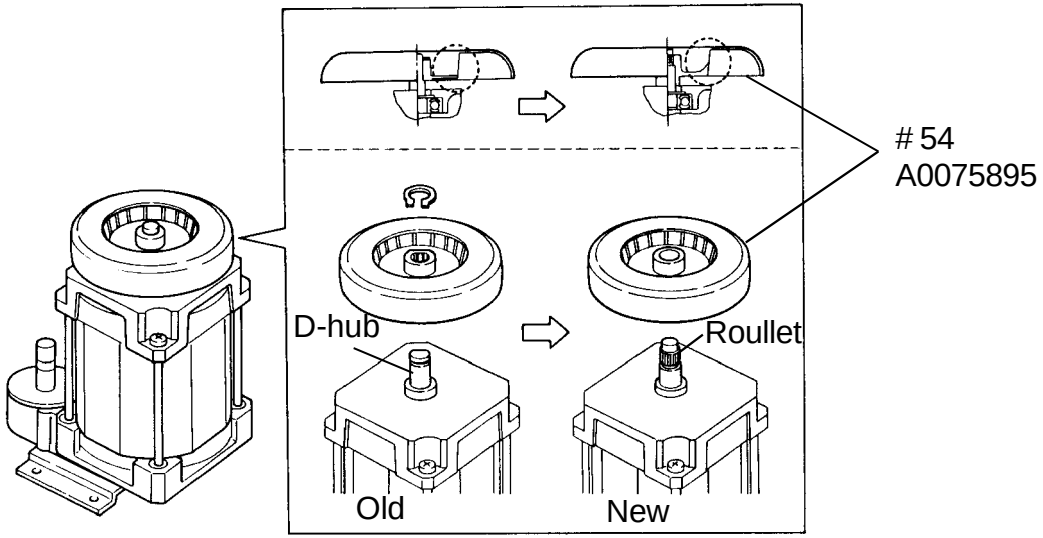

T. Ito, Manager
Copier Technical Support

MODEL NAME	V/Hz	DESTINATION	JAPAN PRODUCTION	
			CODE	SERIAL NUMBER
NASHUA 7150D	115/60	S. AMERICA	A007-16	030103XXXX
RICOH FT5590	115/60	USA, CANADA	A007-17	40106XXXXX
RICOH FT5590	110/60	TAIWAN	A007-19	40103XXXXX
NASHUA 7150D	220,240/50	EUROPE etc.	A007-25	030102XXXX
KALLE 9048DZ	220,240/50	EUROPE	A007-26	359061XXXX
RICOH FT5590	220,240/50	EUROPE etc.	A007-27	40102XXXXX
RICOH FT5590	220,240/50	ASIA etc.	A007-29	40101XXXXX
P.B. M750	115/60	USA, CANADA	A007-51	102XXXX
NASHUA 7150	115/60	S. AMERICA	A007-56	035106XXXX
RICOH FT5580	110/60	TAIWAN	A007-59	41102XXXX
NASHUA 7150	220,240/50	EUROPE etc.	A007-65	035106XXXX
KALLE 9048Z	220,240/50	EUROPE	A007-66	360061XXXX
RICOH FT5580	220,240/50	EUROPE etc.	A007-67	41106XXXXX
RICOH FT5580	220,240/50	ASIA etc.	A007-69	41106XXXXX
INFOTEC 9150Z	220,240/50	EUROPE	A007-76	351011XXXX

MODEL NAME	V/Hz	DESTINATION	REI PRODUCTION	
			CODE	SERIAL NUMBER
RICOH FT5590	115/60	USA, CANADA	A007-06	

MODEL NAME	V/Hz	DESTINATION	JAPAN PRODUCTION	
			CODE	SERIAL NUMBER
P.B. D750	115/60	USA, CANADA	A019-11	103XXXX
SAVIN 7500	115/60	USA, CANADA	A019-15	94105XXXXX
NASHUA 7150C	115/60	S. ANERICA	A019-16	036102XXXX
RICOH FT6620	115/60	USA, CANADA	A019-17	202106XXXX
NASHUA 7150C	220,240/50	EUROPE etc.	A019-25	036101XXXX
KALLE 9052DZ	220,240/50	EUROPE	A019-26	366061XXXX
RICOH FT6620	220,240/50	EUROPE etc.	A019-27	202101XXXX
RICOH FT6620	220,240/50	ASIA etc.	A019-29	202101XXXX

MODEL NAME	V/Hz	DESTINATION	REI PRODUCTION	
			CODE	SERIAL NUMBER
RICOH FT6620	115/60	USA, CANADA	A019-06	
SAVIN 7500	115/60	USA, CANADA	A019-08	

Model	F30/31	Volt/Hz	Date of Modification	Serial Number
Modified Article	Fan			
Reason for Modification	As per field request			

As per field request the following parts have been registered as a service parts.

P/N	Description	Q'ty	Index No.	Page
A0075893	Development Motor Fan	1	* 52	55
A0075894	Fan - Paper Feed Motor	1	* 53	55

* New Index No.

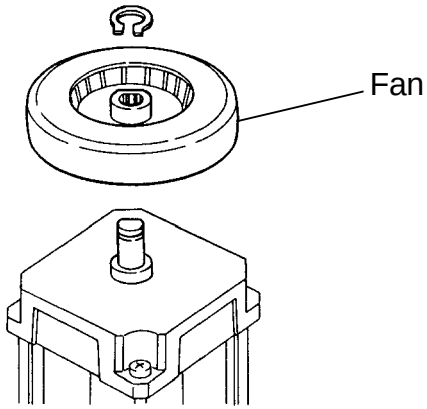

T. Ito, Manager
Copier Technical Support

MODEL NAME	V/Hz	DESTINATION	JAPAN PRODUCTION	
			CODE	SERIAL NUMBER
NASHUA 7150D	115/60	S. AMERICA	A007-16	
RICOH FT5590	115/60	USA, CANADA	A007-17	
RICOH FT5590	110/60	TAIWAN	A007-19	
NASHUA 7150D	220,240/50	EUROPE etc.	A007-25	
KALLE 9048DZ	220,240/50	EUROPE	A007-26	
RICOH FT5590	220,240/50	EUROPE etc.	A007-27	
RICOH FT5590	220,240/50	ASIA etc.	A007-29	
P.B. M750	115/60	USA, CANADA	A007-51	
NASHUA 7150	115/60	S. AMERICA	A007-56	
RICOH FT5580	110/60	TAIWAN	A007-59	
NASHUA 7150	220,240/50	EUROPE etc.	A007-65	
KALLE 9048Z	220,240/50	EUROPE	A007-66	
RICOH FT5580	220,240/50	EUROPE etc.	A007-67	
RICOH FT5580	220,240/50	ASIA etc.	A007-69	
INFOTEC 9150Z	220,240/50	EUROPE	A007-76	

MODEL NAME	V/Hz	DESTINATION	REI PRODUCTION	
			CODE	SERIAL NUMBER
RICOH FT5590	115/60	USA, CANADA	A007-06	

MODEL NAME	V/Hz	DESTINATION	JAPAN PRODUCTION	
			CODE	SERIAL NUMBER
P.B. D750	115/60	USA, CANADA	A019-11	
SAVIN 7500	115/60	USA, CANADA	A019-15	
NASHUA 7150C	115/60	S. ANERICA	A019-16	
RICOH FT6620	115/60	USA, CANADA	A019-17	
NASHUA 7150C	220,240/50	EUROPE etc.	A019-25	
KALLE 9052DZ	220,240/50	EUROPE	A019-26	
RICOH FT6620	220,240/50	EUROPE etc.	A019-27	
RICOH FT6620	220,240/50	ASIA etc.	A019-29	

MODEL NAME	V/Hz	DESTINATION	REI PRODUCTION	
			CODE	SERIAL NUMBER
RICOH FT6620	115/60	USA, CANADA	A019-06	
SAVIN 7500	115/60	USA, CANADA	A019-08	

Model	F30/31	Volt/Hz	Date of Modification	Serial Number
Modified Article	End Block - T/S, PCC, PQC			
Reason for Modification	To improve reliability			

To improve reliability the material has been changed to the same as the F40.

Old P/N	New P/N	Description	Q'ty Used Old → New	Interchangeability	Index No.	Page
AD004006		T&S Corona Unit	1 → 0	X/	63	39
	AD004055	T/S Corona Unit	0 → 1	/O	63	39
AB032014		Cleaning Drive Pulley	1 → 0	X/	25	39
	AB032025	Pulley	0 → 1	/O	25	39
AD022022		Front End Block - T&S	1 → 0	X/	44	39
	AD022183	End Block - T/S Corona - Front	0 → 1	/O	44	39
AD022023		Front End Block Cover - T&S	1 → 0	X/	34	39
	A0533860	Front End Block Cover - T/S	0 → 1	/O	34	39
AD022024		Rear End Block - T&S	1 → 0	X/	35	39
	AD022184	Rear End Block - T/S Corona Unit	0 → 1	/O	35	39
AD022025		Rear End Block Cover - T&S	1 → 0	X/	31	39
	AD022186	Rear Cover - End Block	0 → 1	/O	31	39

DETAILS OF MODIFICATION

Old P/N	New P/N	Description	Q'ty Used Old → New	Interchangeability	Index No.	Page
AD022017	AD022192	Front Cover - PCC End Block	2 → 2	X/O	65 41	41 45
AD022019	AD022193	Rear Cover - PCC End Block	2 → 2	X/O	62 15	41 45
AD022016	AD022190	Front End Block - PCC	1 → 1	X/O	40	45
AD022018	AD022191	Rear End Block - PCC	1 → 1	X/O	24	45

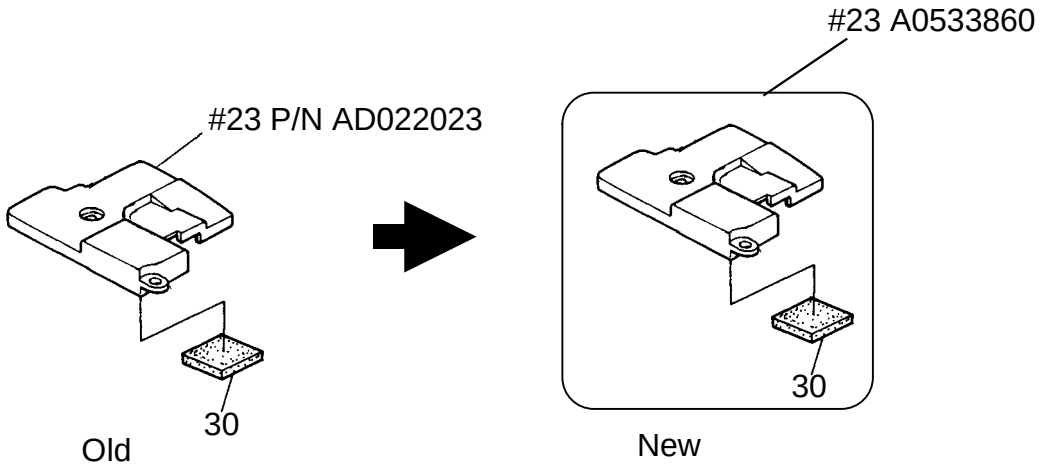

T. Ito, Manager
Copier Technical Support

MODEL NAME	V/Hz	DESTINATION	JAPAN PRODUCTION	
			CODE	SERIAL NUMBER
NASHUA 7150D	115/60	S. AMERICA	A007-16	030106XXXX
RICOH FT5590	115/60	USA, CANADA	A007-17	40106XXXXX
RICOH FT5590	110/60	TAIWAN	A007-19	40105XXXXX
NASHUA 7150D	220,240/50	EUROPE etc.	A007-25	030105XXXX
KALLE 9048DZ	220,240/50	EUROPE	A007-26	359051XXXX
RICOH FT5590	220,240/50	EUROPE etc.	A007-27	40105XXXXX
RICOH FT5590	220,240/50	ASIA etc.	A007-29	40105XXXXX
P.B. M750	115/60	USA, CANADA	A007-51	105XXXX
NASHUA 7150	115/60	S. AMERICA	A007-56	035106XXXX
RICOH FT5580	110/60	TAIWAN	A007-59	41105XXXX
NASHUA 7150	220,240/50	EUROPE etc.	A007-65	035105XXXX
KALLE 9048Z	220,240/50	EUROPE	A007-66	360061XXXX
RICOH FT5580	220,240/50	EUROPE etc.	A007-67	41106XXXXX
RICOH FT5580	220,240/50	ASIA etc.	A007-69	41106XXXXX
INFOTEC 9150Z	220,240/50	EUROPE	A007-76	351051XXXX

MODEL NAME	V/Hz	DESTINATION	REI PRODUCTION	
			CODE	SERIAL NUMBER
RICOH FT5590	115/60	USA, CANADA	A007-06	

MODEL NAME	V/Hz	DESTINATION	JAPAN PRODUCTION	
			CODE	SERIAL NUMBER
P.B. D750	115/60	USA, CANADA	A019-11	105XXXX
SAVIN 7500	115/60	USA, CANADA	A019-15	94105XXXXX
NASHUA 7150C	115/60	S. AMERICA	A019-16	036107XXXX
RICOH FT6620	115/60	USA, CANADA	A019-17	202107XXXX
NASHUA 7150C	220,240/50	EUROPE etc.	A019-25	036105XXXX
KALLE 9052DZ	220,240/50	EUROPE	A019-26	366071XXXX
RICOH FT6620	220,240/50	EUROPE etc.	A019-27	202105XXXX
RICOH FT6620	220,240/50	ASIA etc.	A019-29	202107XXXX

MODEL NAME	V/Hz	DESTINATION	REI PRODUCTION	
			CODE	SERIAL NUMBER
RICOH FT6620	115/60	USA, CANADA	A019-06	
SAVIN 7500	115/60	USA, CANADA	A019-08	

Model	F30/31	Volt/Hz	Date of Modification	Serial Number
Modified Article	Cleaning Brush Drive Shaft			
Reason for Modification	Parts standardization			

For the purpose of parts standardization, the cleaning brush drive shaft has been changed. The old pin was square at one end and round at the other, but the new pin is square at both ends.

Old P/N	New P/N	Description	Q'ty	Interchangeability	Index No.	Page
A0073573	A0073575	Cleaning Brush Drive Shaft	1	O/O	49	45

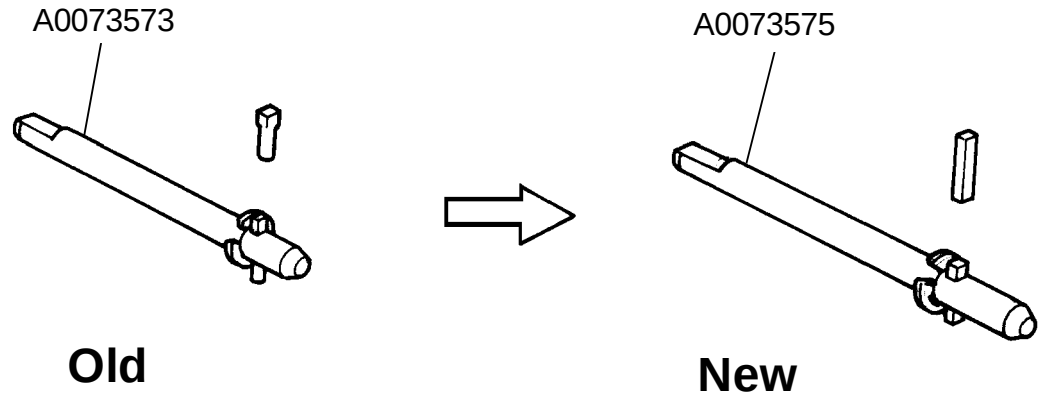

T. Ito, Manager
Copier Technical Support

MODEL NAME	V/Hz	DESTINATION	JAPAN PRODUCTION	
			CODE	SERIAL NUMBER
NASHUA 7150D	115/60	S. AMERICA	A007-16	
RICOH FT5590	115/60	USA, CANADA	A007-17	
RICOH FT5590	110/60	TAIWAN	A007-19	
NASHUA 7150D	220,240/50	EUROPE etc.	A007-25	
KALLE 9048DZ	220,240/50	EUROPE	A007-26	
RICOH FT5590	220,240/50	EUROPE etc.	A007-27	
RICOH FT5590	220,240/50	ASIA etc.	A007-29	
P.B. M750	115/60	USA, CANADA	A007-51	
NASHUA 7150	115/60	S. AMERICA	A007-56	
RICOH FT5580	110/60	TAIWAN	A007-59	
NASHUA 7150	220,240/50	EUROPE etc.	A007-65	
KALLE 9048Z	220,240/50	EUROPE	A007-66	
RICOH FT5580	220,240/50	EUROPE etc.	A007-67	
RICOH FT5580	220,240/50	ASIA etc.	A007-69	
INFOTEC 9150Z	220,240/50	EUROPE	A007-76	

MODEL NAME	V/Hz	DESTINATION	REI PRODUCTION	
			CODE	SERIAL NUMBER
RICOH FT5590	115/60	USA, CANADA	A007-06	

MODEL NAME	V/Hz	DESTINATION	JAPAN PRODUCTION	
			CODE	SERIAL NUMBER
P.B. D750	115/60	USA, CANADA	A019-11	
SAVIN 7500	115/60	USA, CANADA	A019-15	
NASHUA 7150C	115/60	S. ANERICA	A019-16	
RICOH FT6620	115/60	USA, CANADA	A019-17	
NASHUA 7150C	220,240/50	EUROPE etc.	A019-25	
KALLE 9052DZ	220,240/50	EUROPE	A019-26	
RICOH FT6620	220,240/50	EUROPE etc.	A019-27	
RICOH FT6620	220,240/50	ASIA etc.	A019-29	

MODEL NAME	V/Hz	DESTINATION	REI PRODUCTION	
			CODE	SERIAL NUMBER
RICOH FT6620	115/60	USA, CANADA	A019-06	
SAVIN 7500	115/60	USA, CANADA	A019-08	

Model	F30/31	Volt/Hz	Date of Modification	Serial Number
Modified Article	Ferrite Core Harness			
Reason for Modification	To eliminate electric noise			

Draw No.	Old Parts No.		New Parts No.	Description	A.B.C. Rank	Q'ty Used Old → New	Inter-change-ability	Part needed for replacement by new part		Parts Catalog	
								Part No.	Description	Index No.	Page
			A0459900	Ferrite Core Harness		0 → 1				38	15
	A0459900		A0078999	Ferrite Core Harness		1 → 1	O/O			38	15

Rank: A : Replace with new parts immediately. B : Replace with new parts at time of repair. C : Replace with new parts at time of overhall.
Interchangeability:
(1) When old and new parts are not mutually interchangeable, use additional parts or an assembly part as indicated in "Parts needed for replacement by new part" to install the new part.
(2) The mark to the left of the slash indicates whether the old part can be used in the new machine, and the mark to the right indicates whether the new part can be used in the old machine. x = Not interchangeable o = Interchangeable

DETAILS OF MODIFICATION

To eliminate electric noise, a ferrite core harness (A0078999) has been added between the scanner motor and dc harness.
For details please refer to RTB No.050 issued on July 15, '91 (reviced on Nov. 30, '91).

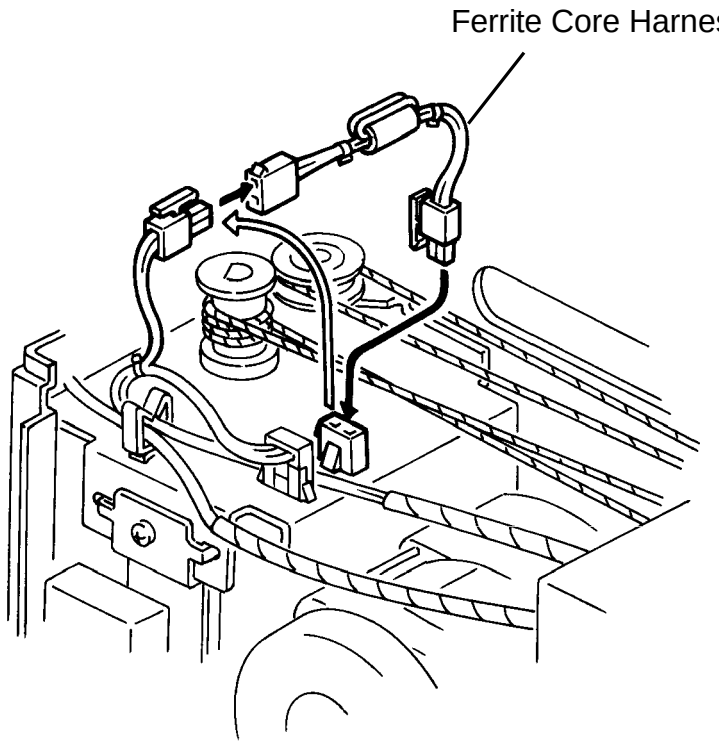

T. Ito, Manager
Copier Technical Support

MODEL NAME	V/Hz	DESTINATION	JAPAN PRODUCTION	
			CODE	SERIAL NUMBER
NASHUA 7150D	115/60	S. AMERICA	A007-16	0301080001
RICOH FT5590	115/60	USA, CANADA	A007-17	40109XXXXX
RICOH FT5590	110/60	TAIWAN	A007-19	4010925191
NASHUA 7150D	220,240/50	EUROPE etc.	A007-25	0301070126
KALLE 9048DZ	220,240/50	EUROPE	A007-26	359101XXXX
RICOH FT5590	220,240/50	EUROPE etc.	A007-27	4010724464
RICOH FT5590	220,240/50	ASIA etc.	A007-29	4010724990
P.B. M750	115/60	USA, CANADA	A007-51	110XXXX
NASHUA 7150	115/60	S. AMERICA	A007-56	035110XXXX
RICOH FT5580	110/60	TAIWAN	A007-59	4110702291
NASHUA 7150	220,240/50	EUROPE etc.	A007-65	035110XXXX
KALLE 9048Z	220,240/50	EUROPE	A007-66	360101XXXX
RICOH FT5580	220,240/50	EUROPE etc.	A007-67	4110702301
RICOH FT5580	220,240/50	ASIA etc.	A007-69	41110XXXXX
INFOTEC 9150Z	220,240/50	EUROPE	A007-76	3510710031

MODEL NAME	V/Hz	DESTINATION	REI PRODUCTION	
			CODE	SERIAL NUMBER
RICOH FT5590	115/60	USA, CANADA	A007-06	

MODEL NAME	V/Hz	DESTINATION	JAPAN PRODUCTION	
			CODE	SERIAL NUMBER
P.B. D750	115/60	USA, CANADA	A019-11	109XXXX
SAVIN 7500	115/60	USA, CANADA	A019-15	94109XXXXX
NASHUA 7150C	115/60	S. ANERICA	A019-16	036109XXXX
RICOH FT6620	115/60	USA, CANADA	A019-17	202109XXXX
NASHUA 7150C	220,240/50	EUROPE etc.	A019-25	036109XXXX
KALLE 9052DZ	220,240/50	EUROPE	A019-26	036109XXXX
RICOH FT6620	220,240/50	EUROPE etc.	A019-27	2021080001
RICOH FT6620	220,240/50	ASIA etc.	A019-29	202109XXXX

MODEL NAME	V/Hz	DESTINATION	REI PRODUCTION	
			CODE	SERIAL NUMBER
RICOH FT6620	115/60	USA, CANADA	A019-06	
SAVIN 7500	115/60	USA, CANADA	A019-08	

Model	F30/31	Volt/Hz	Date of Modification	Serial Number
Modified Article	Guide Plate - Open and shut			
Reason for Modification	To prevent paper jams at the inverter section			

To prevent paper jams at the inverter section, the guide plate has been made thicker by 0.7mm.
For details please refer to RTB No. 047 issued on Feb. 15, '91 (reviced on Nov. 30, '91).

Old P/N	New P/N	Description	Q'ty	Interchangeability	Index	Page
A0074461	A0074468	Guide Plate - Open and Shut	1 → 1	X/O	12	31

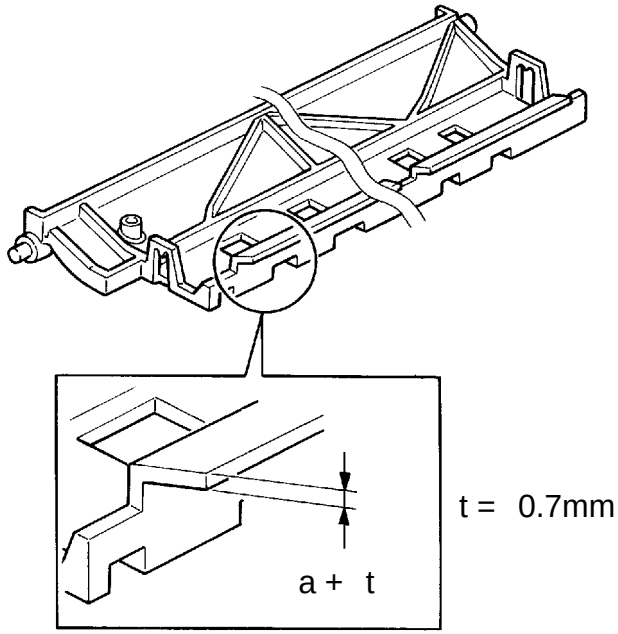

t = 0.7mm

T. Ito, Manager
Copier Technical Support

MODEL NAME	V/Hz	DESTINATION	JAPAN PRODUCTION	
			CODE	SERIAL NUMBER
NASHUA 7150D	115/60	S. AMERICA	A007-16	0301100001
RICOH FT5590	115/60	USA, CANADA	A007-17	40110XXXXX
RICOH FT5590	110/60	TAIWAN	A007-19	4011025498
NASHUA 7150D	220,240/50	EUROPE etc.	A007-25	030110XXXX
KALLE 9048DZ	220,240/50	EUROPE	A007-26	359101XXXX
RICOH FT5590	220,240/50	EUROPE etc.	A007-27	4011025503
RICOH FT5590	220,240/50	ASIA etc.	A007-29	4011025834
P.B. M750	115/60	USA, CANADA	A007-51	110XXXX
NASHUA 7150	115/60	S. AMERICA	A007-56	035110XXXX
RICOH FT5580	110/60	TAIWAN	A007-59	4110902353
NASHUA 7150	220,240/50	EUROPE etc.	A007-65	035110XXXX
KALLE 9048Z	220,240/50	EUROPE	A007-66	360101XXXX
RICOH FT5580	220,240/50	EUROPE etc.	A007-67	41110XXXXX
RICOH FT5580	220,240/50	ASIA etc.	A007-69	41110XXXXX
INFOTEC 9150Z	220,240/50	EUROPE	A007-76	351010001

MODEL NAME	V/Hz	DESTINATION	REI PRODUCTION	
			CODE	SERIAL NUMBER
RICOH FT5590	115/60	USA, CANADA	A007-06	

MODEL NAME	V/Hz	DESTINATION	JAPAN PRODUCTION	
			CODE	SERIAL NUMBER
P.B. D750	115/60	USA, CANADA	A019-11	112XXXX
SAVIN 7500	115/60	USA, CANADA	A019-15	94112XXXXX
NASHUA 7150C	115/60	S. ANERICA	A019-16	036112XXXX
RICOH FT6620	115/60	USA, CANADA	A019-17	202112XXXX
NASHUA 7150C	220,240/50	EUROPE etc.	A019-25	036112XXXX
KALLE 9052DZ	220,240/50	EUROPE	A019-26	366121XXXX
RICOH FT6620	220,240/50	EUROPE etc.	A019-27	2021090001
RICOH FT6620	220,240/50	ASIA etc.	A019-29	202112XXXX

MODEL NAME	V/Hz	DESTINATION	REI PRODUCTION	
			CODE	SERIAL NUMBER
RICOH FT6620	115/60	USA, CANADA	A019-06	
SAVIN 7500	115/60	USA, CANADA	A019-08	

Model	F30/31	Volt/Hz	Date of Modification	Serial Number
Modified Article	Paper Transport Guide - T & S Corona			
Reason for Modification	To prevent paper jams at the T & S corona unit			

To prevent paper jams at the T & S corona unit, the paper transport guide has been changed from a 6 guide type to an 8 guide type, as shown.

Old P/N	New P/N	Description	Q'ty	Interchangeability	Index No.	Page
A0073867	A0073890	Paper Transport Guide - T & S Corona	1	X/O	24	61

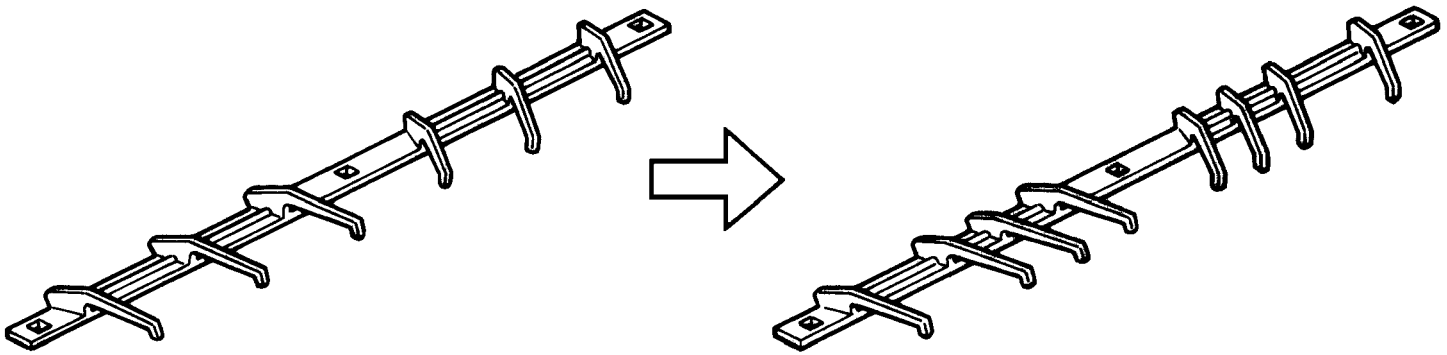

Old

New

T. Ito, Manager
Copier Technical Support

MODEL NAME	V/Hz	DESTINATION	JAPAN PRODUCTION	
			CODE	SERIAL NUMBER
NASHUA 7150D	115/60	S. AMERICA	A007-16	0301110042
~~RICOH FT5590~~	~~115/60~~	~~USA, CANADA~~	~~A007-17~~	
RICOH FT5590	110/60	TAIWAN	A007-19	40201XXXXX
NASHUA 7150D	220,240/50	EUROPE etc.	A007-25	0301110047
~~KALLE 9048DZ~~	~~220,240/50~~	~~EUROPE~~	~~A007-26~~	
RICOH FT5590	220,240/50	EUROPE etc.	A007-27	4011126304
RICOH FT5590	220,240/50	ASIA etc.	A007-29	40112XXXXX
P.B. M750	115/60	USA, CANADA	A007-51	201XXXX
NASHUA 7150	115/60	S. AMERICA	A007-56	035201XXXX
RICOH FT5580	110/60	TAIWAN	A007-59	41201XXXXX
NASHUA 7150	220,240/50	EUROPE etc.	A007-65	035201XXXXX
KALLE 9048Z	220,240/50	EUROPE	A007-66	360012XXXX
RICOH FT5580	220,240/50	EUROPE etc.	A007-67	41112XXXXX
RICOH FT5580	220,240/50	ASIA etc.	A007-69	41201XXXXX
INFOTEC 9150Z	220,240/50	EUROPE	A007-76	351012XXXXX

MODEL NAME	V/Hz	DESTINATION	RPL PRODUCTION	
			CODE	SERIAL NUMBER
NASHUA 7150D	220, 240/50	EUROPE etc.	A007-45	
RICOH FT5590	220, 240/50	EUROPE etc.	A007-47	
INFOTEC 9150HZ	220, 240/50	EUROPE	A007-86	

MODEL NAME	V/Hz	DESTINATION	JAPAN PRODUCTION	
			CODE	SERIAL NUMBER
P.B. D750	115/60	USA, CANADA	A019-11	Service Part Only
SAVIN 7500	115/60	USA, CANADA	A019-15	Service Part Only
NASHUA 7150C	115/60	S. ANERICA	A019-16	Service Part Only
RICOH FT6620	115/60	USA, CANADA	A019-17	Service Part Only
NASHUA 7150C	220,240/50	EUROPE etc.	A019-25	Service Part Only
KALLE 9052DZ	220,240/50	EUROPE	A019-26	Service Part Only
RICOH FT6620	220,240/50	EUROPE etc.	A019-27	Service Part Only
RICOH FT6620	220,240/50	ASIA etc.	A019-29	Service Part Only

MODEL NAME	V/Hz	DESTINATION	REI PRODUCTION	
			CODE	SERIAL NUMBER
RICOH FT5590	115/60	USA, CANADA	A007-06	
RICOH FT6620	115/60	USA, CANADA	A019-06	
SAVIN 7500	115/60	USA, CANADA	A019-08	

Model	F30/31	Volt/Hz	Date of Modification	Serial Number
Modified Article	Friction Pad - B			
Reason for Modification	To prevent the friction pad from getting out of position			

To prevent the friction pad from getting out of position, the adhesiveness between the friction pad and the bottom plate has been improved.

Old P/N	New P/N	Description	Q'ty	Interchangeability	Index No.	Page
54472927	A0532916	Friction Pad-B	1	X/O	23	19
52052937	A0532915	Bottom Plate (Large)	1	X/O	22	19
52056570	A0532917	Bottom Plate - Small	1	X/O	22	19

T. Ito, Manager
Copier Technical Support

MODEL NAME	V/Hz	DESTINATION	JAPAN PRODUCTION	
			CODE	SERIAL NUMBER
NASHUA 7150D	115/60	S. AMERICA	A007-16	030202XXXX
RICOH FT5590	115/60	USA, CANADA	A007-17	Service Parts Only
RICOH FT5590	110/60	TAIWAN	A007-19	40202XXXXX
NASHUA 7150D	220,240/50	EUROPE etc.	A007-25	030202XXXX
KALLE 9048DZ	220,240/50	EUROPE	A007-26	359042XXXX
RICOH FT5590	220,240/50	EUROPE etc.	A007-27	40204XXXXX
RICOH FT5590	220,240/50	ASIA etc.	A007-29	40203XXXXX
P.B. M750	115/60	USA, CANADA	A007-51	204XXXX
NASHUA 7150	115/60	S. AMERICA	A007-56	035203XXXX
RICOH FT5580	110/60	TAIWAN	A007-59	41203XXXXX
NASHUA 7150	220,240/50	EUROPE etc.	A007-65	035202XXXX
KALLE 9048Z	220,240/50	EUROPE	A007-66	360042XXXX
RICOH FT5580	220,240/50	EUROPE etc.	A007-67	41204XXXXX
RICOH FT5580	220,240/50	ASIA etc.	A007-69	41204XXXXX
INFOTEC 9150Z	220,240/50	EUROPE	A007-76	351042XXXX

MODEL NAME	V/Hz	DESTINATION	RPL PRODUCTION	
			CODE	SERIAL NUMBER
NASHUA 7150D	220, 240/50	EUROPE etc.	A007-45	
RICOH FT5590	220, 240/50	EUROPE etc.	A007-47	
INFOTEC 9150HZ	220, 240/50	EUROPE	A007-86	

MODEL NAME	V/Hz	DESTINATION	JAPAN PRODUCTION	
			CODE	SERIAL NUMBER
P.B. D750	115/60	USA, CANADA	A019-11	Service Parts Only
SAVIN 7500	115/60	USA, CANADA	A019-15	Service Parts Only
NASHUA 7150C	115/60	S. ANERICA	A019-16	Service Parts Only
RICOH FT6620	115/60	USA, CANADA	A019-17	Service Parts Only
NASHUA 7150C	220,240/50	EUROPE etc.	A019-25	Service Parts Only
KALLE 9052DZ	220,240/50	EUROPE	A019-26	Service Parts Only
RICOH FT6620	220,240/50	EUROPE etc.	A019-27	Service Parts Only
RICOH FT6620	220,240/50	ASIA etc.	A019-29	Service Parts Only

MODEL NAME	V/Hz	DESTINATION	REI PRODUCTION	
			CODE	SERIAL NUMBER
RICOH FT5590	115/60	USA, CANADA	A007-06	
RICOH FT6620	115/60	USA, CANADA	A019-06	
SAVIN 7500	115/60	USA, CANADA	A019-08	

Reissued on: April 30, '92
ISSUED ON: March 31, '92

Model	F30/31	Volt/Hz	Date of Modification	Serial Number
Modified Article	Ferrite Core			
Reason for Modification	To eliminate electric noise			

To eliminate electric noise, the ferrite core has been added to the lens housing harness instead of to the ferrite core harness (A0078999).
The part number of the lens housing harness (A0075216) is not changed.
The ferrite core harness is kept available as a service part.

P/N	Description	Q'ty	Index No.	Page
16070116	Ferrite Core	1	110	76

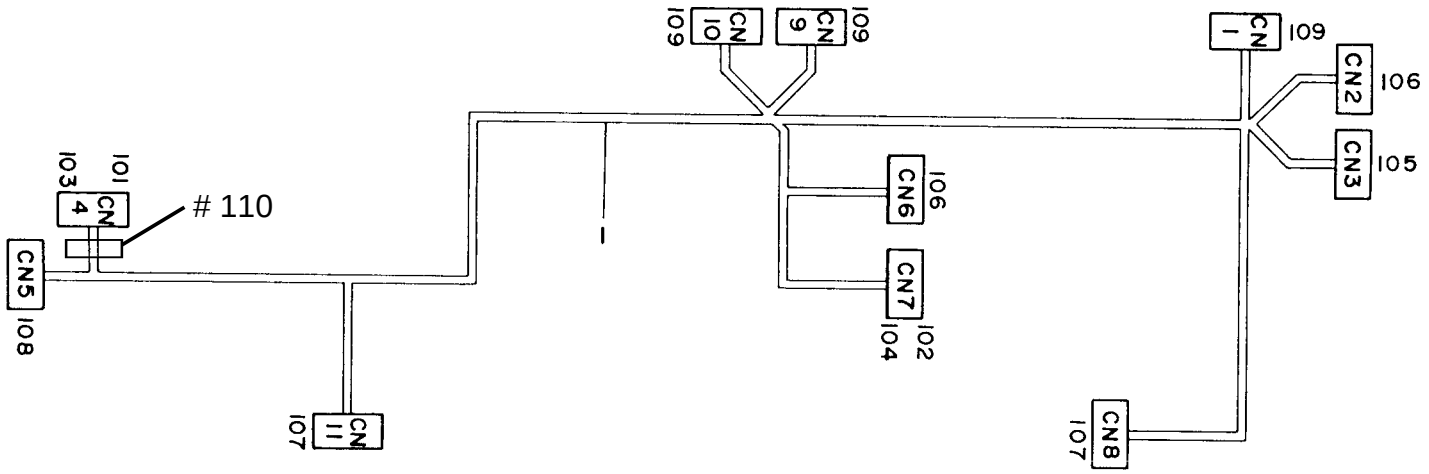

T. Ito, Manager
Copier Technical Support

MODEL NAME	V/Hz	DESTINATION	JAPAN PRODUCTION	
			CODE	SERIAL NUMBER
NASHUA 7150D	115/60	S. AMERICA	A007-16	030201XXXX
RICOH FT5590	115/60	USA, CANADA	A007-17	40201XXXXX
RICOH FT5590	110/60	TAIWAN	A007-19	40201XXXXX
NASHUA 7150D	220,240/50	EUROPE etc.	A007-25	030201XXXX
KALLE 9048DZ	220,240/50	EUROPE	A007-26	359012XXXX
RICOH FT5590	220,240/50	EUROPE etc.	A007-27	40112XXXXX
RICOH FT5590	220,240/50	ASIA etc.	A007-29	4011226516
P.B. M750	115/60	USA, CANADA	A007-51	201XXXX
NASHUA 7150	115/60	S. AMERICA	A007-56	035201XXXX
RICOH FT5580	110/60	TAIWAN	A007-59	41201XXXXX
NASHUA 7150	220,240/50	EUROPE etc.	A007-65	035201XXXX
KALLE 9048Z	220,240/50	EUROPE	A007-66	360012XXXX
RICOH FT5580	220,240/50	EUROPE etc.	A007-67	41112XXXXX
RICOH FT5580	220,240/50	ASIA etc.	A007-69	41201XXXXX
INFOTEC 9150Z	220,240/50	EUROPE	A007-76	351012XXXX

MODEL NAME	V/Hz	DESTINATION	RPL PRODUCTION	
			CODE	SERIAL NUMBER
NASHUA 7150D	220, 240/50	EUROPE etc.	A007-45	
RICOH FT5590	220, 240/50	EUROPE etc.	A007-47	
INFOTEC 9150HZ	220, 240/50	EUROPE	A007-86	

MODEL NAME	V/Hz	DESTINATION	JAPAN PRODUCTION	
			CODE	SERIAL NUMBER
P.B. D750	115/60	USA, CANADA	A019-11	Service Parts Only
SAVIN 7500	115/60	USA, CANADA	A019-15	Service Parts Only
NASHUA 7150C	115/60	S. ANERICA	A019-16	Service Parts Only
RICOH FT6620	115/60	USA, CANADA	A019-17	Service Parts Only
NASHUA 7150C	220,240/50	EUROPE etc.	A019-25	Service Parts Only
KALLE 9052DZ	220,240/50	EUROPE	A019-26	Service Parts Only
RICOH FT6620	220,240/50	EUROPE etc.	A019-27	Service Parts Only
RICOH FT6620	220,240/50	ASIA etc.	A019-29	Service Parts Only

MODEL NAME	V/Hz	DESTINATION	REI PRODUCTION	
			CODE	SERIAL NUMBER
RICOH FT5590	115/60	USA, CANADA	A007-06	4024301774
RICOH FT6620	115/60	USA, CANADA	A019-06	202244XXXX
SAVIN 7500	115/60	USA, CANADA	A019-08	9424301496

Model	F30 / F31	Volt/Hz	Date of Modification	Serial Number
Modified Article	Drum			
Reason for Modification	To standardize the part number			

The part number has been changed to standardize the part number of the drum.

Old P/N	New P/N	Description	Q'ty Used	Interchangeability
52059590	52059510	Drum	1 → 1	O/O

T. Ito, Manager
Copier Technical Support

MODEL NAME	V/Hz	DESTINATION	JAPAN PRODUCTION	
			CODE	SERIAL NUMBER
~~NASHUA 7150D~~	~~115/60~~	~~S. AMERICA~~	~~A007-16~~	
~~RICOH FT5590~~	~~115/60~~	~~USA, CANADA~~	~~A007-17~~	
~~RICOH FT5590~~	~~110/60~~	~~TAIWAN~~	~~A007-19~~	
NASHUA 7150D	220,240/50	EUROPE etc.	A007-25	Service Parts Only
KALLE 9048DZ	220,240/50	EUROPE	A007-26	Service Parts Only
RICOH FT5590	220,240/50	EUROPE etc.	A007-27	Service Parts Only
~~RICOH FT5590~~	~~220,240/50~~	~~ASIA etc.~~	~~A007-29~~	
~~P.B. M750~~	~~115/60~~	~~USA, CANADA~~	~~A007-51~~	
~~NASHUA 7150~~	~~115/60~~	~~S. AMERICA~~	~~A007-56~~	
~~RICOH FT5580~~	~~110/60~~	~~TAIWAN~~	~~A007-59~~	
NASHUA 7150	220,240/50	EUROPE etc.	A007-65	Service Parts Only
KALLE 9048Z	220,240/50	EUROPE	A007-66	Service Parts Only
RICOH FT5580	220,240/50	EUROPE etc.	A007-67	Service Parts Only
~~RICOH FT5580~~	~~220,240/50~~	~~ASIA etc.~~	~~A007-69~~	
INFOTEC 9150Z	220,240/50	EUROPE	A007-76	Service Parts Only

MODEL NAME	V/Hz	DESTINATION	RPL PRODUCTION	
			CODE	SERIAL NUMBER
NASHUA 7150D	220, 240/50	EUROPE etc.	A007-45	Service Parts Only
RICOH FT5590	220, 240/50	EUROPE etc.	A007-47	Service Parts Only
INFOTEC 9150HZ	220, 240/50	EUROPE	A007-86	Service Parts Only

MODEL NAME	V/Hz	DESTINATION	JAPAN PRODUCTION	
			CODE	SERIAL NUMBER
~~P.B. D750~~	~~115/60~~	~~USA, CANADA~~	~~A019-11~~	
~~SAVIN 7500~~	~~115/60~~	~~USA, CANADA~~	~~A019-15~~	
~~NASHUA 7150C~~	~~115/60~~	~~S. ANERICA~~	~~A019-16~~	
~~RICOH FT6620~~	~~115/60~~	~~USA, CANADA~~	~~A019-17~~	
NASHUA 7150C	220,240/50	EUROPE etc.	A019-25	Service Parts Only
KALLE 9052DZ	220,240/50	EUROPE	A019-26	Service Parts Only
RICOH FT6620	220,240/50	EUROPE etc.	A019-27	Service Parts Only
~~RICOH FT6620~~	~~220,240/50~~	~~ASIA etc.~~	~~A019-29~~	

MODEL NAME	V/Hz	DESTINATION	REI PRODUCTION	
			CODE	SERIAL NUMBER
~~RICOH FT5590~~	~~115/60~~	~~USA, CANADA~~	~~A007-06~~	
~~RICOH FT6620~~	~~115/60~~	~~USA, CANADA~~	~~A019-06~~	
~~SAVIN 7500~~	~~115/60~~	~~USA, CANADA~~	~~A019-08~~	

Model	F30/31	Volt/Hz	Date of Modification	Serial Number
Modified Article	Inverter Roller			
Reason for Modification	Parts standardization			

To standardize F30/31 and F40 parts, the inverter roller has been changed from #AF020030 to #AF020199.

Old P/N	New P/N	Description	Q'ty	Interchangeability	Index No.	Page
AF020030	AF020199	Inverter Roller	1	O/O	24	33

T. Ito, Manager
Copier Technical Support

MODEL NAME	V/Hz	DESTINATION	JAPAN PRODUCTION	
			CODE	SERIAL NUMBER
NASHUA 7150D	115/60	S. AMERICA	A007-16	
RICOH FT5590	115/60	USA, CANADA	A007-17	
RICOH FT5590	110/60	TAIWAN	A007-19	
NASHUA 7150D	220,240/50	EUROPE etc.	A007-25	
KALLE 9048DZ	220,240/50	EUROPE	A007-26	
RICOH FT5590	220,240/50	EUROPE etc.	A007-27	
RICOH FT5590	220,240/50	ASIA etc.	A007-29	
P.B. M750	115/60	USA, CANADA	A007-51	
NASHUA 7150	115/60	S. AMERICA	A007-56	
RICOH FT5580	110/60	TAIWAN	A007-59	
NASHUA 7150	220,240/50	EUROPE etc.	A007-65	
KALLE 9048Z	220,240/50	EUROPE	A007-66	
RICOH FT5580	220,240/50	EUROPE etc.	A007-67	
RICOH FT5580	220,240/50	ASIA etc.	A007-69	
INFOTEC 9150Z	220,240/50	EUROPE	A007-76	

MODEL NAME	V/Hz	DESTINATION	RPL PRODUCTION	
			CODE	SERIAL NUMBER
NASHUA 7150D	220, 240/50	EUROPE etc.	A007-45	
RICOH FT5590	220, 240/50	EUROPE etc.	A007-47	
INFOTEC 9150HZ	220, 240/50	EUROPE	A007-86	

MODEL NAME	V/Hz	DESTINATION	JAPAN PRODUCTION	
			CODE	SERIAL NUMBER
P.B. D750	115/60	USA, CANADA	A019-11	
SAVIN 7500	115/60	USA, CANADA	A019-15	
NASHUA 7150C	115/60	S. ANERICA	A019-16	
RICOH FT6620	115/60	USA, CANADA	A019-17	
NASHUA 7150C	220,240/50	EUROPE etc.	A019-25	
KALLE 9052DZ	220,240/50	EUROPE	A019-26	
RICOH FT6620	220,240/50	EUROPE etc.	A019-27	
RICOH FT6620	220,240/50	ASIA etc.	A019-29	

MODEL NAME	V/Hz	DESTINATION	REI PRODUCTION	
			CODE	SERIAL NUMBER
RICOH FT5590	115/60	USA, CANADA	A007-06	
RICOH FT6620	115/60	USA, CANADA	A019-06	
SAVIN 7500	115/60	USA, CANADA	A019-08	

Model	F30/31	**Volt/Hz**	**Date of Modification**	**Serial Number**
Modified Article	Decal - Paper Level			
Reason for Modification	Parts standardization			

For the purpose of parts standardization, the decal - paper level has been changed.

Old P/N	New P/N	Description	Q'ty	Interchangeability	Index No.	Page
54134835	AA002010	Decal - Paper Level	1	O/O	20 11 (27)	19 111 (131)

( ) : for SAVIN

T. Ito, Manager
Copier Technical Support

MODEL NAME	V/Hz	DESTINATION	JAPAN PRODUCTION	
			CODE	SERIAL NUMBER
NASHUA 7150D	115/60	S. AMERICA	A007-16	
RICOH FT5590	115/60	USA, CANADA	A007-17	
RICOH FT5590	110/60	TAIWAN	A007-19	
NASHUA 7150D	220,240/50	EUROPE etc.	A007-25	
KALLE 9048DZ	220,240/50	EUROPE	A007-26	
RICOH FT5590	220,240/50	EUROPE etc.	A007-27	
RICOH FT5590	220,240/50	ASIA etc.	A007-29	
P.B. M750	115/60	USA, CANADA	A007-51	
NASHUA 7150	115/60	S. AMERICA	A007-56	
RICOH FT5580	110/60	TAIWAN	A007-59	
NASHUA 7150	220,240/50	EUROPE etc.	A007-65	
KALLE 9048Z	220,240/50	EUROPE	A007-66	
RICOH FT5580	220,240/50	EUROPE etc.	A007-67	
RICOH FT5580	220,240/50	ASIA etc.	A007-69	
INFOTEC 9150Z	220,240/50	EUROPE	A007-76	

MODEL NAME	V/Hz	DESTINATION	RPL PRODUCTION	
			CODE	SERIAL NUMBER
NASHUA 7150D	220, 240/50	EUROPE etc.	A007-45	
RICOH FT5590	220, 240/50	EUROPE etc.	A007-47	
INFOTEC 9150HZ	220, 240/50	EUROPE	A007-86	

MODEL NAME	V/Hz	DESTINATION	JAPAN PRODUCTION	
			CODE	SERIAL NUMBER
P.B. D750	115/60	USA, CANADA	A019-11	
SAVIN 7500	115/60	USA, CANADA	A019-15	
NASHUA 7150C	115/60	S. ANERICA	A019-16	
RICOH FT6620	115/60	USA, CANADA	A019-17	
NASHUA 7150C	220,240/50	EUROPE etc.	A019-25	
KALLE 9052DZ	220,240/50	EUROPE	A019-26	
RICOH FT6620	220,240/50	EUROPE etc.	A019-27	
RICOH FT6620	220,240/50	ASIA etc.	A019-29	

MODEL NAME	V/Hz	DESTINATION	REI PRODUCTION	
			CODE	SERIAL NUMBER
RICOH FT5590	115/60	USA, CANADA	A007-06	
RICOH FT6620	115/60	USA, CANADA	A019-06	
SAVIN 7500	115/60	USA, CANADA	A019-08	

Model	F30 / 31	**Volt/Hz**	**Date of Modification**	**Serial Number**
Modified Article	Operating Instructions - Chinese			
Reason for Modification	Customs clearance (Taiwan)			

To clear this copier through Taiwanese customs, the Chinese operating instructions now have to be included in the machine carton box. Please add the following part number to your parts catalog.

Page	Index	P/N	Description
111	20	A0078609	Operating Instructions - Chinese

T. Ito, Manager
Copier Technical Support

MODEL NAME	V/Hz	DESTINATION	JAPAN PRODUCTION	
			CODE	SERIAL NUMBER
NASHUA 7150D	115/60	S. AMERICA	A007-16	
RICOH FT5590	115/60	USA, CANADA	A007-17	
RICOH FT5590	110/60	TAIWAN	A007-19	4020626910
NASHUA 7150D	220,240/50	EUROPE etc.	A007-25	
KALLE 9048DZ	220,240/50	EUROPE	A007-26	
RICOH FT5590	220,240/50	EUROPE etc.	A007-27	
RICOH FT5590	220,240/50	ASIA etc.	A007-29	
P.B. M750	115/60	USA, CANADA	A007-51	
NASHUA 7150	115/60	S. AMERICA	A007-56	
RICOH FT5580	110/60	TAIWAN	A007-59	40209XXXXX
NASHUA 7150	220,240/50	EUROPE etc.	A007-65	
KALLE 9048Z	220,240/50	EUROPE	A007-66	
RICOH FT5580	220,240/50	EUROPE etc.	A007-67	
RICOH FT5580	220,240/50	ASIA etc.	A007-69	
INFOTEC 9150Z	220,240/50	EUROPE	A007-76	

MODEL NAME	V/Hz	DESTINATION	RPL PRODUCTION	
			CODE	SERIAL NUMBER
NASHUA 7150D	220, 240/50	EUROPE etc.	A007-45	
RICOH FT5590	220, 240/50	EUROPE etc.	A007-47	
INFOTEC 9150HZ	220, 240/50	EUROPE	A007-86	

MODEL NAME	V/Hz	DESTINATION	JAPAN PRODUCTION	
			CODE	SERIAL NUMBER
P.B. D750	115/60	USA, CANADA	A019-11	
SAVIN 7500	115/60	USA, CANADA	A019-15	
NASHUA 7150C	115/60	S. AMERICA	A019-16	
RICOH FT6620	115/60	USA, CANADA	A019-17	
NASHUA 7150C	220,240/50	EUROPE etc.	A019-25	
KALLE 9052DZ	220,240/50	EUROPE	A019-26	
RICOH FT6620	220,240/50	EUROPE etc.	A019-27	
RICOH FT6620	220,240/50	ASIA etc.	A019-29	

MODEL NAME	V/Hz	DESTINATION	REI PRODUCTION	
			CODE	SERIAL NUMBER
RICOH FT5590	115/60	USA, CANADA	A007-06	
RICOH FT6620	115/60	USA, CANADA	A019-06	
SAVIN 7500	115/60	USA, CANADA	A019-08	

ISSUED ON: January 31, '94

Model	F30/31	**Volt/Hz**	**Date of Modification**	**Serial Number**
Modified Article	Exposure Glass			
Reason for Modification	Parts standardization			

Due to parts standardization, the exposure glass has been changed.
The interchangeability is O/O.

Old P/N	New P/N	Description	Q'ty Used	Inter-change-ability	Parts Catalog	
					Index No.	Page
AC012021	AC012049	Exposure Glass - LT (RICOH)	1 → 1	O/O	33	13
AC012022	AC012054	Exposure Glass - A3/A4 (RICOH)	1 → 1	O/O	33	13
AC012024	AC012051	Exposure Glass - A3/A4 (NSA)	1 → 1	O/O	33	13
AC012025	AC012050	Exposure Glass - LT (NSA)	1 → 1	O/O	33	13
AC012028	AC012052	Exposure Glass - (INF)	1 → 1	O/O	33	13

S. Hamano, Assistant General Manager
Technical Support Department

ISSUED ON: January 31, '94

MODEL NAME	V/Hz	DESTINATION	JAPAN PRODUCTION	
			CODE	SERIAL No.
NASHUA 7150D	115/60	S. AMERICA	A007-16	
RICOH FT5590	115/60	USA, CANADA	A007-17	
RICOH FT5590	110/60	TAIWAN	A007-19	
NASHUA 7150D	220,240/50	EUROPE etc.	A007-25	
KALLE 9048DZ	220,240/50	EUROPE	A007-26	Service Parts Only
RICOH FT5590	220,240/50	EUROPE etc.	A007-27	
RICOH FT5590	220,240/50	ASIA etc.	A007-29	
P.B. M750	115/60	USA, CANADA	A007-51	
NASHUA 7150	115/60	S. AMERICA	A007-56	
RICOH FT5580	110/60	TAIWAN	A007-59	
NASHUA 7150	220,240/50	EUROPE etc.	A007-65	
KALLE 9048Z	220,240/50	EUROPE	A007-66	
RICOH FT5580	220,240/50	EUROPE etc.	A007-67	
RICOH FT5580	220,240/50	ASIA etc.	A007-69	
INFOTEC 9150Z	220,240/50	EUROPE	A007-76	

MODEL NAME	V/Hz	DESTINATION	RPL PRODUCTION	
			CODE	SERIAL No.
NASHUA 7150D	220, 240/50	EUROPE etc.	A007-45	
RICOH FT5590	220, 240/50	EUROPE etc.	A007-47	
INFOTEC9150HZ	220, 240/50	EUROPE	A007-86	

MODEL NAME	V/Hz	DESTINATION	JAPAN PRODUCTION	
			CODE	SERIAL NUMBER
P.B. D750	115/60	USA, CANADA	A019-11	Service Parts Only
SAVIN 7500	115/60	USA, CANADA	A019-15	Service Parts Only
NASHUA 7150C	115/60	S. AMERICA	A019-16	Service Parts Only
RICOH FT6620	115/60	USA, CANADA	A019-17	Service Parts Only
NASHUA 7150C	220,240/50	EUROPE etc.	A019-25	Service Parts Only
KALLE 9052DZ	220,240/50	EUROPE	A019-26	Service Parts Only
RICOH FT6620	220,240/50	EUROPE etc.	A019-27	Service Parts Only
RICOH FT6620	220,240/50	ASIA etc.	A019-29	Service Parts Only

MODEL NAME	V/Hz	DESTINATION	REI PRODUCTION	
			CODE	SERIAL NUMBER
RICOH FT5590	115/60	USA, CANADA	A007-06	
RICOH FT6620	115/60	USA, CANADA	A019-06	Service Parts Only
SAVIN 7500	115/60	USA, CANADA	A019-08	

ISSUED ON: January 31, '94

Model	F30/31	**Volt/Hz**	**Date of Modification**	**Serial Number**
Modified Article	Front Cover			
Reason for Modification	As Per Gestetner request			

As per Gestetner request, the following parts have been changed:

Old P/N	New P/N	Description	Q'ty Used	Inter-change-ability	Parts Catalog	
					Index No.	Page
A0076056	A0076079	Front Cover	1 → 1	X/X	56	9
A0076375	A0076377	Name Plate	1 → 1	X/X	55	9
	A0546330	Decal - Key Top Cover	0 → 1		57	9

S. Hamano, Assistant General Manager
Technical Support Department

ISSUED ON: January 31, '94

MODEL NAME	V/Hz	DESTINATION	JAPAN PRODUCTION	
			CODE	SERIAL No.
NASHUA 7150D	115/60	S. AMERICA	A007-16	
RICOH FT5590	115/60	USA, CANADA	A007-17	
RICOH FT5590	110/60	TAIWAN	A007-19	
NASHUA 7150D	220,240/50	EUROPE etc.	A007-25	
KALLE 9048DZ	220,240/50	EUROPE	A007-26	
RICOH FT5590	220,240/50	EUROPE etc.	A007-27	
RICOH FT5590	220,240/50	ASIA etc.	A007-29	
P.B. M750	115/60	USA, CANADA	A007-51	
NASHUA 7150	115/60	S. AMERICA	A007-56	
RICOH FT5580	110/60	TAIWAN	A007-59	
NASHUA 7150	220,240/50	EUROPE etc.	A007-65	
KALLE 9048Z	220,240/50	EUROPE	A007-66	
RICOH FT5580	220,240/50	EUROPE etc.	A007-67	
RICOH FT5580	220,240/50	ASIA etc.	A007-69	
INFOTEC 9150Z	220,240/50	EUROPE	A007-76	

MODEL NAME	V/Hz	DESTINATION	RPL PRODUCTION	
			CODE	SERIAL No.
NASHUA 7150D	220, 240/50	EUROPE etc.	A007-45	
RICOH FT5590	220, 240/50	EUROPE etc.	A007-47	
INFOTEC 9150HZ	220, 240/50	EUROPE	A007-86	

MODEL NAME	V/Hz	DESTINATION	JAPAN PRODUCTION	
			CODE	SERIAL NUMBER
P.B. D750	115/60	USA, CANADA	A019-11	
SAVIN 7500	115/60	USA, CANADA	A019-15	
NASHUA 7150C	115/60	S. AMERICA	A019-16	
RICOH FT6620	115/60	USA, CANADA	A019-17	
NASHUA 7150C	220,240/50	EUROPE etc.	A019-25	
KALLE 9052DZ	220,240/50	EUROPE	A019-26	
RICOH FT6620	220,240/50	EUROPE etc.	A019-27	
RICOH FT6620	220,240/50	ASIA etc.	A019-29	

MODEL NAME	V/Hz	DESTINATION	REI PRODUCTION	
			CODE	SERIAL NUMBER
RICOH FT5590	115/60	USA, CANADA	A007-06	
RICOH FT6620	115/60	USA, CANADA	A019-06	
SAVIN 7500	115/60	USA, CANADA	A019-08	

REISSUED ON: March 15, '94
ISSUED ON: February 15, '94

Model	F30/31	**Volt/Hz**	**Date of Modification**	**Serial Number**
Modified Article	Photothyristor			
Reason for Modification	Due to VDE standard change			

Due to VDE standard change from VDE0883 to VDE0884, the phtothyristor have been changed. Interchangeability is O/O for 110/115V version.

Old P/N	New P/N	Description	Q'ty Used	Inter-change-ability	Parts Catalog	
					Index No.	Page
14050127		Phtothyristor - TLP545G	n → 0	X/	108	69
14050151		Phtothyristor - TLP545J	n → 0	X/	111	69
	14050250	Phtothyristor - TLP741J(D4)	0 → n	/O	108 111	69

S. Hamano, Assistant General Manager
Technical Support Department

MODEL NAME	V/Hz	DESTINATION	JAPAN PRODUCTION	
			CODE	SERIAL NUMBER
NASHUA 7150D	115/60	S. AMERICA	A007-16	
RICOH FT5590	115/60	USA, CANADA	A007-17	
RICOH FT5590	110/60	TAIWAN	A007-19	
NASHUA 7150D	220,240/50	EUROPE etc.	A007-25	0303030001
KALLE 9048DZ	220,240/50	EUROPE	A007-26	Service Parts only
RICOH FT5590	220,240/50	EUROPE etc.	A007-27	4030329264
RICOH FT5590	220,240/50	ASIA etc.	A007-29	4030329312
P.B. M750	115/60	USA, CANADA	A007-51	
NASHUA 7150	115/60	S. AMERICA	A007-56	
RICOH FT5580	110/60	TAIWAN	A007-59	
NASHUA 7150	220,240/50	EUROPE etc.	A007-65	035303XXXX
KALLE 9048Z	220,240/50	EUROPE	A007-66	360033XXXX
RICOH FT5580	220,240/50	EUROPE etc.	A007-67	41303XXXX
RICOH FT5580	220,240/50	ASIA etc.	A007-69	41303XXXX
INFOTEC 9150Z	220,240/50	EUROPE	A007-76	351033XXXX

MODEL NAME	V/Hz	DESTINATION	RPL PRODUCTION	
			CODE	SERIAL NUMBER
NASHUA 7150D	220, 240/50	EUROPE etc.	A007-45	

MODEL NAME	V/Hz	DESTINATION	JAPAN PRODUCTION	
			CODE	SERIAL NUMBER
P.B. D750	115/60	USA, CANADA	A019-11	
SAVIN 7500	115/60	USA, CANADA	A019-15	
NASHUA 7150C	115/60	S. ANERICA	A019-16	
RICOH FT6620	115/60	USA, CANADA	A019-17	
NASHUA 7150C	220,240/50	EUROPE etc.	A019-25	Service Parts only
KALLE 9052DZ	220,240/50	EUROPE	A019-26	Service Parts only
RICOH FT6620	220,240/50	EUROPE etc.	A019-27	Service Parts only
RICOH FT6620	220,240/50	ASIA etc.	A019-29	Service Parts only

MODEL NAME	V/Hz	DESTINATION	REI PRODUCTION	
			CODE	SERIAL NUMBER
RICOH FT5590	115/60	USA, CANADA	A007-06	
RICOH FT6620	115/60	USA, CANADA	A019-06	
SAVIN 7500	115/60	USA, CANADA	A019-08	

ISSUED ON: February 15, '94

Model	F30/31	**Volt/Hz**	**Date of Modification**	**Serial Number**
Modified Article	Arm Holder			
Reason for Modification	Parts standardization			

Due to parts standardization with A7, the following parts have been changed. The interchangeability is O/O.

Old P/N	New P/N	Description	Q'ty Used	Parts Catalog	
				Index No.	Page
52152834	A0691972	Arm Holder	1 → 1	16	19
52152832	A0691971	Platen Cover Hinge Ass'y	1 → 1	9	19

S. Hamano, Assistant General Manager
Technical Support Department

ISSUED ON: February 15, '94

MODEL NAME	V/Hz	DESTINATION	JAPAN PRODUCTION	
			CODE	SERIAL NUMBER
NASHUA 7150D	115/60	S. AMERICA	A007-16	
RICOH FT5590	115/60	USA, CANADA	A007-17	
RICOH FT5590	110/60	TAIWAN	A007-19	
NASHUA 7150D	220,240/50	EUROPE etc.	A007-25	
KALLE 9048DZ	220,240/50	EUROPE	A007-26	
RICOH FT5590	220,240/50	EUROPE etc.	A007-27	
RICOH FT5590	220,240/50	ASIA etc.	A007-29	
P.B. M750	115/60	USA, CANADA	A007-51	
NASHUA 7150	115/60	S. AMERICA	A007-56	
RICOH FT5580	110/60	TAIWAN	A007-59	
NASHUA 7150	220,240/50	EUROPE etc.	A007-65	
KALLE 9048Z	220,240/50	EUROPE	A007-66	
RICOH FT5580	220,240/50	EUROPE etc.	A007-67	
RICOH FT5580	220,240/50	ASIA etc.	A007-69	
INFOTEC 9150Z	220,240/50	EUROPE	A007-76	

MODEL NAME	V/Hz	DESTINATION	RPL PRODUCTION	
			CODE	SERIAL NUMBER
NASHUA 7150D	220, 240/50	EUROPE etc.	A007-45	
RICOH FT5590	220, 240/50	EUROPE etc.	A007-47	
INFOTEC 9150HZ	220, 240/50	EUROPE	A007-86	

MODEL NAME	V/Hz	DESTINATION	JAPAN PRODUCTION	
			CODE	SERIAL NUMBER
P.B. D750	115/60	USA, CANADA	A019-11	
SAVIN 7500	115/60	USA, CANADA	A019-15	
NASHUA 7150C	115/60	S. AMERICA	A019-16	
RICOH FT6620	115/60	USA, CANADA	A019-17	
NASHUA 7150C	220,240/50	EUROPE etc.	A019-25	
KALLE 9052DZ	220,240/50	EUROPE	A019-26	
RICOH FT6620	220,240/50	EUROPE etc.	A019-27	
RICOH FT6620	220,240/50	ASIA etc.	A019-29	

MODEL NAME	V/Hz	DESTINATION	REI PRODUCTION	
			CODE	SERIAL NUMBER
RICOH FT5590	115/60	USA, CANADA	A007-06	
RICOH FT6620	115/60	USA, CANADA	A019-06	
SAVIN 7500	115/60	USA, CANADA	A019-08	

ISSUED ON: February 15, '94

Model	F30/31	**Volt/Hz**	**Date of Modification**	**Serial Number**
Modified Article	LED Sensor Type - T			
Reason for Modification	Due to parts standardization			

Due to parts standardization with the other models, the following part has been changed. Interchangeability is O/O.

Old P/N	New P/N	Description	Q'ty Used	Parts Catalog	
				Index No.	Page
52055251	AW020041	LED Sensor Type - T Photointerruptor	1 — 1 1 — 1 1 — 1 1 — 1 1 — 1 1 — 1 1 — 1 3 — 3	32 57 17 30 8 30 27 7	15 17 21 29 31 33 49 61

S. Hamano, Assistant General Manager
Technical Support Department

ISSUED ON: February 15, '94

MODEL NAME	V/Hz	DESTINATION	JAPAN PRODUCTION	
			CODE	SERIAL NUMBER
NASHUA 7150D	115/60	S. AMERICA	A007-16	
RICOH FT5590	115/60	USA, CANADA	A007-17	
RICOH FT5590	110/60	TAIWAN	A007-19	
NASHUA 7150D	220,240/50	EUROPE etc.	A007-25	
KALLE 9048DZ	220,240/50	EUROPE	A007-26	
RICOH FT5590	220,240/50	EUROPE etc.	A007-27	
RICOH FT5590	220,240/50	ASIA etc.	A007-29	
P.B. M750	115/60	USA, CANADA	A007-51	
NASHUA 7150	115/60	S. AMERICA	A007-56	
RICOH FT5580	110/60	TAIWAN	A007-59	
NASHUA 7150	220,240/50	EUROPE etc.	A007-65	
KALLE 9048Z	220,240/50	EUROPE	A007-66	
RICOH FT5580	220,240/50	EUROPE etc.	A007-67	
RICOH FT5580	220,240/50	ASIA etc.	A007-69	
INFOTEC 9150Z	220,240/50	EUROPE	A007-76	

MODEL NAME	V/Hz	DESTINATION	RPL PRODUCTION	
			CODE	SERIAL NUMBER
NASHUA 7150D	220, 240/50	EUROPE etc.	A007-45	
RICOH FT5590	220, 240/50	EUROPE etc.	A007-47	
INFOTEC 9150HZ	220, 240/50	EUROPE	A007-86	

MODEL NAME	V/Hz	DESTINATION	JAPAN PRODUCTION	
			CODE	SERIAL NUMBER
P.B. D750	115/60	USA, CANADA	A019-11	
SAVIN 7500	115/60	USA, CANADA	A019-15	
NASHUA 7150C	115/60	S. ANERICA	A019-16	
RICOH FT6620	115/60	USA, CANADA	A019-17	
NASHUA 7150C	220,240/50	EUROPE etc.	A019-25	
KALLE 9052DZ	220,240/50	EUROPE	A019-26	
RICOH FT6620	220,240/50	EUROPE etc.	A019-27	
RICOH FT6620	220,240/50	ASIA etc.	A019-29	

MODEL NAME	V/Hz	DESTINATION	REI PRODUCTION	
			CODE	SERIAL NUMBER
RICOH FT5590	115/60	USA, CANADA	A007-06	
RICOH FT6620	115/60	USA, CANADA	A019-06	
SAVIN 7500	115/60	USA, CANADA	A019-08	

ISSUED ON: July 31, '94

Model	F30/31	Volt/Hz	Date of Modification	Serial Number
Modified Article	Operation Panel			
Reason for Modification	Due to vender change			

Due to vender change, the following parts have been changed.

Old P/N	New P/N	Description	Q'ty Used	Inter-change-ability		Parts Catalog	
						Index No.	Page
A0191491	A0076560	Operation Panel Ass'y - LT (F30 Dup. F31)	1 → 1	O/O		1	53
A0191493	A0076561	Operation Panel Ass'y - A4 (F30 Dup. F31)	1 → 1	O/O		1	53
A0071459	A0076562	Operation Panel Ass'y - A4 (F30)	1 → 1	O/O	Ricoh	1	53
A0071510	A0076575	Operation Panel Cover - LT (F30 Dup. F31)	1 → 1	O/O		62	53
A0071511	A0076576	Operation Panel Cover - A4 (F30 Dup. F31)	1 → 1	O/O		62	53
A0071512	A0076577	Operation Panel Cover - A4 (F30)	1 → 1	O/O		62	53
A0071497	A0076566	Operation Panel Ass'y - LT (F30 Dup. F31)	1 → 1	O/O		1	53
A0071495	A0076565	Operation Panel Ass'y - A4 (F30 Dup. F31)	1 → 1	O/O		1	53
A0071464	A0076567	Operation Panel Ass'y - A4 (F30)	1 → 1	O/O	NRG	1	53
A0071465	A0076568	Operation Panel Ass'y - LT (F30)	1 → 1	O/O		1	53
A0071516	A0076580	Operation Panel Cover - A4 (F30 Dup. F31)	1 → 1	O/O		62	53
A0071517	A0076582	Operation Panel Cover - A4 (F30)	1 → 1	O/O		62	53
A0071518	A0076581	Operation Panel Cover - LT (F30 Dup. F31)	1 → 1	O/O		62	53
A0071519	A0076583	Operation Panel Cover - LT (F30)	1 → 1	O/O		62	53

Old P/N	New P/N	Description	Q'ty Used	Inter-change-ability		Parts Catalog	
						Index No.	Page
A0071480	A0076563	Operation Panel - Ass'y (F30 Dup.)	1 → 1	O/O		1	53
A0071463	A0076564	Operation Panel - Ass'y (F30)	1 → 1	O/O	Infotec	1	53
A0071520	A0076578	Operation Panel Cover - (F30 Dup.)	1 → 1	O/O		62	53
A0071514	A0076579	Operation Panel Cover - (F30)	1 → 1	O/O		62	53
A0191498	A0191500	Operation Panel - Ass'y (F31)	1 → 1	O/O	Savin	1	53
A0191506	A0191508	Operation Panel Cover (F31)	1 → 1	O/O		62	53
A0071527	A0076584	Operation Panel Cover - (F30 Dup.)	1 → 1	O/O	Ricoh (ASIA)	62	53
A0071528	A0076585	Operation Panel Cover - (F30)	1 → 1	O/O		62	53
A0071461	A0531529	Keytop Base - A	1 → 1	O/O		56	53
A0071462	A0531530	Keytop Base - B	1 → 1	O/O		57	53

S. Hamano, Assistant General Manager
Technical Support Department

ISSUED ON: July 31, '94

MODEL NAME	V/Hz	DESTINATION	JAPAN PRODUCTION	
			CODE	SERIAL NUMBER
NASHUA 7150D	115/60	S. AMERICA	A007-16	
RICOH FT5590	115/60	USA, CANADA	A007-17	
RICOH FT5590	110/60	TAIWAN	A007-19	
NASHUA 7150D	220,240/50	EUROPE etc.	A007-25	
KALLE 9048DZ	220,240/50	EUROPE	A007-26	
RICOH FT5590	220,240/50	EUROPE etc.	A007-27	
RICOH FT5590	220,240/50	ASIA etc.	A007-29	
P.B. M750	115/60	USA, CANADA	A007-51	
NASHUA 7150	115/60	S. AMERICA	A007-56	
RICOH FT5580	110/60	TAIWAN	A007-59	
NASHUA 7150	220,240/50	EUROPE etc.	A007-65	
KALLE 9048Z	220,240/50	EUROPE	A007-66	
RICOH FT5580	220,240/50	EUROPE etc.	A007-67	
RICOH FT5580	220,240/50	ASIA etc.	A007-69	
INFOTEC 9150Z	220,240/50	EUROPE	A007-76	

MODEL NAME	V/Hz	DESTINATION	RPL PRODUCTION	
			CODE	SERIAL NUMBER
NASHUA 7150D	220, 240/50	EUROPE etc.	A007-45	
RICOH FT5590	220, 240/50	EUROPE etc.	A007-47	
Infotec 9150HZ	220, 240/50	EUROPE	A007 - 86	

MODEL NAME	V/Hz	DESTINATION	JAPAN PRODUCTION	
			CODE	SERIAL NUMBER
P.B. D750	115/60	USA, CANADA	A019-11	
SAVIN 7500	115/60	USA, CANADA	A019-15	
NASHUA 7150C	115/60	S. ANERICA	A019-16	
RICOH FT6620	115/60	USA, CANADA	A019-17	
NASHUA 7150C	220,240/50	EUROPE etc.	A019-25	
KALLE 9052DZ	220,240/50	EUROPE	A019-26	
RICOH FT6620	220,240/50	EUROPE etc.	A019-27	
RICOH FT6620	220,240/50	ASIA etc.	A019-29	

MODEL NAME	V/Hz	DESTINATION	REI PRODUCTION	
			CODE	SERIAL NUMBER
RICOH FT5590	115/60	USA, CANADA	A007-06	
RICOH FT6620	115/60	USA, CANADA	A019-06	
SAVIN 7500	115/60	USA, CANADA	A019-08	

ISSUED ON: September 15, '94

Model	F30 / F31	Volt/Hz	Date of Modification	Serial Number
Modified Article	Fusing Exit Frame			
Reason for Modification	To improve the paper transportation			

To improve the paper transportation, the Fusing Exit Frame has been modified

Old P/N	New P/N	Description	Q'ty Used	Inter-change-ability	Parts Catalog	
					Index No.	Page
A0074310	A0074313	Fusing Exit Frame	1 → 1	X/O	24	49

S. Hamano, Assistant General Manager
Technical Support Department

ISSUED ON: September 15, '94

MODEL NAME	V/Hz	DESTINATION	JAPAN PRODUCTION	
			CODE	SERIAL NUMBER
NASHUA 7150D	115/60	S. AMERICA	A007-16	Service Parts Only
RICOH FT5590	115/60	USA, CANADA	A007-17	Service Parts Only
RICOH FT5590	110/60	TAIWAN	A007-19	Service Parts Only
NASHUA 7150D	220,240/50	EUROPE etc.	A007-25	030408XXXX
KALLE 9048DZ	220,240/50	EUROPE	A007-26	Service Parts Only
RICOH FT5590	220,240/50	EUROPE etc.	A007-27	40408XXXXX
RICOH FT5590	220,240/50	ASIA etc.	A007-29	40408XXXXX
P.B. M750	115/60	USA, CANADA	A007-51	Service Parts Only
NASHUA 7150	115/60	S. AMERICA	A007-56	Service Parts Only
RICOH FT5580	110/60	TAIWAN	A007-59	Service Parts Only
NASHUA 7150	220,240/50	EUROPE etc.	A007-65	035408XXXX
KALLE 9048Z	220,240/50	EUROPE	A007-66	360084XXXX
RICOH FT5580	220,240/50	EUROPE etc.	A007-67	41408XXXX
RICOH FT5580	220,240/50	ASIA etc.	A007-69	41408XXXX
INFOTEC 9150Z	220,240/50	EUROPE	A007-76	351084XXXX

MODEL NAME	V/Hz	DESTINATION	RPL PRODUCTION	
			CODE	SERIAL NUMBER
NASHUA 7150D	220, 240/50	EUROPE etc.	A007-45	
RICOH FT5590	220, 240/50	EUROPE etc.	A007-47	

MODEL NAME	V/Hz	DESTINATION	JAPAN PRODUCTION	
			CODE	SERIAL NUMBER
P.B. D750	115/60	USA, CANADA	A019-11	Service Parts Only
SAVIN 7500	115/60	USA, CANADA	A019-15	Service Parts Only
NASHUA 7150C	115/60	S. ANERICA	A019-16	Service Parts Only
RICOH FT6620	115/60	USA, CANADA	A019-17	Service Parts Only
NASHUA 7150C	220,240/50	EUROPE etc.	A019-25	Service Parts Only
KALLE 9052DZ	220,240/50	EUROPE	A019-26	Service Parts Only
RICOH FT6620	220,240/50	EUROPE etc.	A019-27	Service Parts Only
RICOH FT6620	220,240/50	ASIA etc.	A019-29	Service Parts Only

MODEL NAME	V/Hz	DESTINATION	REI PRODUCTION	
			CODE	SERIAL NUMBER
RICOH FT5590	115/60	USA, CANADA	A007-06	Service Parts Only
RICOH FT6620	115/60	USA, CANADA	A019-06	Service Parts Only
SAVIN 7500	115/60	USA, CANADA	A019-08	Service Parts Only

ISSUED ON: September 15, '94

Model	F30 / F31	**Volt/Hz**	**Date of Modification**	**Serial Number**
Modified Article	Fusing Exit Guide Plate			
Reason for Modification	To improve the paper transportation			

To improve the paper transportation, the fusing exit guide plate has been modified.

To reduce the warp, the following are changed

- Material (from Dupon FR - 945 to Mitsubishi NC 640-M3)
- Two ribs have been eliminated

Old P/N	New P/N	Description	Q'ty Used	Inter-change-ability	Parts Catalog	
					Index No.	Page
A0074325	A0074326	Fusing Exit Guide Plate	1 → 1	X/O	2	49

S. Hamano, Assistant General Manager
Technical Support Department

ISSUED ON: September 15, '94

MODEL NAME	V/Hz	DESTINATION	JAPAN PRODUCTION	
			CODE	SERIAL NUMBER
NASHUA 7150D	115/60	S. AMERICA	A007-16	Service Parts Only
RICOH FT5590	115/60	USA, CANADA	A007-17	Service Parts Only
RICOH FT5590	110/60	TAIWAN	A007-19	Service Parts Only
NASHUA 7150D	220,240/50	EUROPE etc.	A007-25	030408XXXX
KALLE 9048DZ	220,240/50	EUROPE	A007-26	Service Parts Only
RICOH FT5590	220,240/50	EUROPE etc.	A007-27	40408XXXXX
RICOH FT5590	220,240/50	ASIA etc.	A007-29	40408XXXXX
P.B. M750	115/60	USA, CANADA	A007-51	Service Parts Only
NASHUA 7150	115/60	S. AMERICA	A007-56	Service Parts Only
RICOH FT5580	110/60	TAIWAN	A007-59	Service Parts Only
NASHUA 7150	220,240/50	EUROPE etc.	A007-65	035408XXXX
KALLE 9048Z	220,240/50	EUROPE	A007-66	360084XXXX
RICOH FT5580	220,240/50	EUROPE etc.	A007-67	41408XXXX
RICOH FT5580	220,240/50	ASIA etc.	A007-69	41408XXXX
INFOTEC 9150Z	220,240/50	EUROPE	A007-76	351084XXXX

MODEL NAME	V/Hz	DESTINATION	RPL PRODUCTION	
			CODE	SERIAL NUMBER
NASHUA 7150D	220, 240/50	EUROPE etc.	A007-45	
RICOH FT5590	220, 240/50	EUROPE etc.	A007-47	

MODEL NAME	V/Hz	DESTINATION	JAPAN PRODUCTION	
			CODE	SERIAL NUMBER
P.B. D750	115/60	USA, CANADA	A019-11	Service Parts Only
SAVIN 7500	115/60	USA, CANADA	A019-15	Service Parts Only
NASHUA 7150C	115/60	S. ANERICA	A019-16	Service Parts Only
RICOH FT6620	115/60	USA, CANADA	A019-17	Service Parts Only
NASHUA 7150C	220,240/50	EUROPE etc.	A019-25	Service Parts Only
KALLE 9052DZ	220,240/50	EUROPE	A019-26	Service Parts Only
RICOH FT6620	220,240/50	EUROPE etc.	A019-27	Service Parts Only
RICOH FT6620	220,240/50	ASIA etc.	A019-29	Service Parts Only

MODEL NAME	V/Hz	DESTINATION	REI PRODUCTION	
			CODE	SERIAL NUMBER
RICOH FT5590	115/60	USA, CANADA	A007-06	Service Parts Only
RICOH FT6620	115/60	USA, CANADA	A019-06	Service Parts Only
SAVIN 7500	115/60	USA, CANADA	A019-08	Service Parts Only

ISSUED ON: September 30, '94

Model	F30 / F31	Volt/Hz	Date of Modification	Serial Number
Modified Article	Cushion - Motor			
Reason for Modification	To standardize with other models			

To standardize with other models, the part number of the following part has been modified.

Old P/N	New P/N	Description	Q'ty Used	Inter-change-ability	Parts Catalog	
					Index No.	Page
AA161014	AA161104	Cushion - Motor	7 → 7	O/O	5	55

S. Hamano, Assistant General Manager
Technical Support Department

ISSUED ON: September 30, '94

MODEL NAME	V/Hz	DESTINATION	JAPAN PRODUCTION	
			CODE	SERIAL NUMBER
NASHUA 7150D	115/60	S. AMERICA	A007-16	
RICOH FT5590	115/60	USA, CANADA	A007-17	
RICOH FT5590	110/60	TAIWAN	A007-19	
NASHUA 7150D	220,240/50	EUROPE etc.	A007-25	
KALLE 9048DZ	220,240/50	EUROPE	A007-26	
RICOH FT5590	220,240/50	EUROPE etc.	A007-27	
RICOH FT5590	220,240/50	ASIA etc.	A007-29	
P.B. M750	115/60	USA, CANADA	A007-51	
NASHUA 7150	115/60	S. AMERICA	A007-56	
RICOH FT5580	110/60	TAIWAN	A007-59	
NASHUA 7150	220,240/50	EUROPE etc.	A007-65	
KALLE 9048Z	220,240/50	EUROPE	A007-66	
RICOH FT5580	220,240/50	EUROPE etc.	A007-67	
RICOH FT5580	220,240/50	ASIA etc.	A007-69	
INFOTEC 9150Z	220,240/50	EUROPE	A007-76	

MODEL NAME	V/Hz	DESTINATION	RPL PRODUCTION	
			CODE	SERIAL NUMBER
NASHUA 7150D	220, 240/50	EUROPE etc.	A007-45	
RICOH FT5590	220, 240/50	EUROPE etc.	A007-47	
INFOTEC 9150HZ	220, 240/50	EUROPE	A007-86	

MODEL NAME	V/Hz	DESTINATION	JAPAN PRODUCTION	
			CODE	SERIAL NUMBER
P.B. D750	115/60	USA, CANADA	A019-11	
SAVIN 7500	115/60	USA, CANADA	A019-15	
NASHUA 7150C	115/60	S. ANERICA	A019-16	
RICOH FT6620	115/60	USA, CANADA	A019-17	
NASHUA 7150C	220,240/50	EUROPE etc.	A019-25	
KALLE 9052DZ	220,240/50	EUROPE	A019-26	
RICOH FT6620	220,240/50	EUROPE etc.	A019-27	
RICOH FT6620	220,240/50	ASIA etc.	A019-29	

MODEL NAME	V/Hz	DESTINATION	REI PRODUCTION	
			CODE	SERIAL NUMBER
RICOH FT5590	115/60	USA, CANADA	A007-06	
RICOH FT6620	115/60	USA, CANADA	A019-06	
SAVIN 7500	115/60	USA, CANADA	A019-08	

ISSUED ON: February 29, '96

Model	F30 / 31	**Volt/Hz**	**Date of Modification**	**Serial Number**
Modified Article	Transport Fan Motor			
Reason for Modification	Due to parts standardization			

Due to parts standardization with another model, the transport fan motor has been changed.

Old P/N	New P/N	Description	Q'ty Used	Inter-change-ability	Parts Catalog	
					Index No.	Page
AX050008	AX650018	Transport Fan Motor	1 → 1	O/O	12	57

M. Iwasa, Manager
Technical Support Department

ISSUED ON: February 29, '96

MODEL NAME	V/Hz	DESTINATION	JAPAN PRODUCTION	
			CODE	SERIAL NUMBER
NASHUA 7150D	115/60	S. AMERICA	A007-16	
RICOH FT5590	115/60	USA, CANADA	A007-17	
RICOH FT5590	110/60	TAIWAN	A007-19	
NASHUA 7150D	220,240/50	EUROPE etc.	A007-25	
KALLE 9048DZ	220,240/50	EUROPE	A007-26	
RICOH FT5590	220,240/50	EUROPE etc.	A007-27	
RICOH FT5590	220,240/50	ASIA etc.	A007-29	
P.B. M750	115/60	USA, CANADA	A007-51	
NASHUA 7150	115/60	S. AMERICA	A007-56	
RICOH FT5580	110/60	TAIWAN	A007-59	
NASHUA 7150	220,240/50	EUROPE etc.	A007-65	
KALLE 9048Z	220,240/50	EUROPE	A007-66	
RICOH FT5580	220,240/50	EUROPE etc.	A007-67	
RICOH FT5580	220,240/50	ASIA etc.	A007-69	
INFOTEC 9150Z	220,240/50	EUROPE	A007-76	

MODEL NAME	V/Hz	DESTINATION	RPL PRODUCTION	
			CODE	SERIAL NUMBER
NASHUA 7150D	220, 240/50	EUROPE etc.	A007-45	
RICOH FT5590	220, 240/50	EUROPE etc.	A007-47	
INFOTEC	220, 240/50	EUROPE	A007-86	

MODEL NAME	V/Hz	DESTINATION	JAPAN PRODUCTION	
			CODE	SERIAL NUMBER
P.B. D750	115/60	USA, CANADA	A019-11	
SAVIN 7500	115/60	USA, CANADA	A019-15	
NASHUA 7150C	115/60	S. ANERICA	A019-16	
RICOH FT6620	115/60	USA, CANADA	A019-17	
NASHUA 7150C	220,240/50	EUROPE etc.	A019-25	
KALLE 9052DZ	220,240/50	EUROPE	A019-26	
RICOH FT6620	220,240/50	EUROPE etc.	A019-27	
RICOH FT6620	220,240/50	ASIA etc.	A019-29	

MODEL NAME	V/Hz	DESTINATION	REI PRODUCTION	
			CODE	SERIAL NUMBER
RICOH FT5590	115/60	USA, CANADA	A007-06	
RICOH FT6620	115/60	USA, CANADA	A019-06	
SAVIN 7500	115/60	USA, CANADA	A019-08	

ISSUED ON: March 15, '96

Model	F30/31 (115V version only)	**Volt/Hz**	**Date of Modification**	**Serial Number**
Modified Article	Power Supply Cord			
Reason for Modification	Vender change			

Due to a vender change, the power supply cord has been changed.

Old P/N	New P/N	Description	Q'ty Used	Inter-change-ability	Parts Catalog	
					Index No.	Page
11500003	AZ000026	Power Supply Cord	1 → 1	O/O	13	59

M. Iwasa, Manager
Technical Support Department

ISSUED ON: March 15, '96

MODEL NAME	V/Hz	DESTINATION	JAPAN PRODUCTION	
			CODE	SERIAL NUMBER
NASHUA 7150D	115/60	S. AMERICA	A007-16	
RICOH FT5590	115/60	USA, CANADA	A007-17	
RICOH FT5590	110/60	TAIWAN	A007-19	
NASHUA 7150D	220,240/50	EUROPE etc.	A007-25	
KALLE 9048DZ	220,240/50	EUROPE	A007-26	
RICOH FT5590	220,240/50	EUROPE etc.	A007-27	
RICOH FT5590	220,240/50	ASIA etc.	A007-29	
P.B. M750	115/60	USA, CANADA	A007-51	
NASHUA 7150	115/60	S. AMERICA	A007-56	
RICOH FT5580	110/60	TAIWAN	A007-59	
NASHUA 7150	220,240/50	EUROPE etc.	A007-65	
KALLE 9048Z	220,240/50	EUROPE	A007-66	
RICOH FT5580	220,240/50	EUROPE etc.	A007-67	
RICOH FT5580	220,240/50	ASIA etc.	A007-69	
INFOTEC 9150Z	220,240/50	EUROPE	A007-76	

MODEL NAME	V/Hz	DESTINATION	RPL PRODUCTION	
			CODE	SERIAL NUMBER
NASHUA 7150D	220, 240/50	EUROPE etc.	A007-45	
RICOH FT5590	220, 240/50	EUROPE etc.	A007-47	
INFOTEC 9150HZ	220, 240/50	EUROPE	A007-86	

MODEL NAME	V/Hz	DESTINATION	JAPAN PRODUCTION	
			CODE	SERIAL NUMBER
P.B. D750	115/60	USA, CANADA	A019-11	
SAVIN 7500	115/60	USA, CANADA	A019-15	
NASHUA 7150C	115/60	S. ANERICA	A019-16	
RICOH FT6620	115/60	USA, CANADA	A019-17	
NASHUA 7150C	220,240/50	EUROPE etc.	A019-25	
KALLE 9052DZ	220,240/50	EUROPE	A019-26	
RICOH FT6620	220,240/50	EUROPE etc.	A019-27	
RICOH FT6620	220,240/50	ASIA etc.	A019-29	

MODEL NAME	V/Hz	DESTINATION	REI PRODUCTION	
			CODE	SERIAL NUMBER
RICOH FT5590	115/60	USA, CANADA	A007-06	
RICOH FT6620	115/60	USA, CANADA	A019-06	
SAVIN 7500	115/60	USA, CANADA	A019-08	