RICOH

RICOH FT5580/5590

PARTS CATALOG

First Edition May 1987

RICOH COMPANY, LTD.

PARTS CATALOG

INTRODUCTION

This chapter instructs you the numbers and names of this parts on this machine.

INDEX to PARTS CATALOG

Location of Unit 3

1. Exterior 1 8
2. Exterior 2 10
3. Optics 1 12
4. Optics 2 14
5. Optics 3 16
6. Platen Cover and Cassette 18
7. Paper Feed Unit 1 20
8. Paper Feed Unit 2 22
9. Duplex Section 1 24
10. Duplex Section 2 26
11. Duplex Section 3 28
12. Invertor Section 1 30
13. Invertor Section 2 32
14. Development 1 34
15. Development 2 36
16. Transfer and Separation 38
17. Drum Section 1 40
18. Drum Section 2 42
19. Cleaning Unit 1 44
20. Cleaning Unit and Toner Collection 46
21. Fusing Unit 1 48
22. Fusing Unit 2 50
23. Operation Panel 52
24. Drive Section 54
25. Electrical Section 1 56
26. Electrical Section 2 58
27. Electrical Section 3 60
28. Main Control Board 62
29. Optics Board 64
30. Paper Feed Control Board 66
31. AC Drive Board 68
32. Harness Layout Front View 70
33. DC Harness 72
34. AC Harness 74
35. Lens Housing Harness 76
36. Lens Home Sensor Harness 78
37. Paper Feed Unit Harness 80
38. AC Drive Board Harness 82
39. Power Pack Harness 84
40. Transport Unit Harness 86
41. Safety Switch Harness 88
42. Lift Motor Harness 90
43. Fusing Unit Harness and Gate Harness 92
44. Main Control Harness and DC Motor Harness 94
45. Cleaner Sensor Harness and Gate Solenoid Harness 96

46. Duplex Entrance Harness
and Toner End Sensor Harness 98
47. Duplex Stopper Solenoid Harness,
Inverter Guide Entrance Harness
and Led Sensor Harness 100
48. Transport Sensor Harness
and Home Sensor Harness 102
49. Special Tool 104
50. Decal and Document 106
Parts Index 113

1. EXTERIOR 1

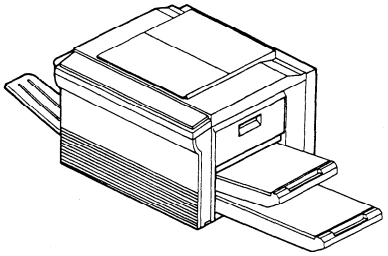

2. EXTERIOR 2

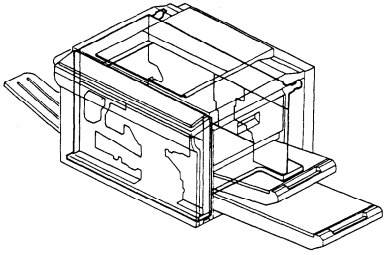

3. OPTICS 1

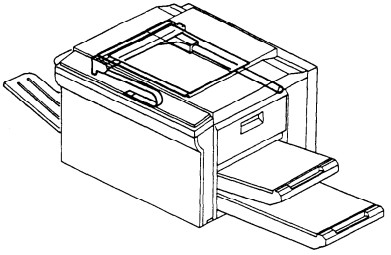

4. OPTICS 2

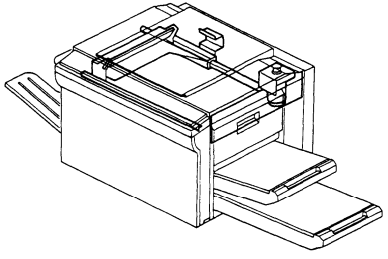

5. OPTICS 3

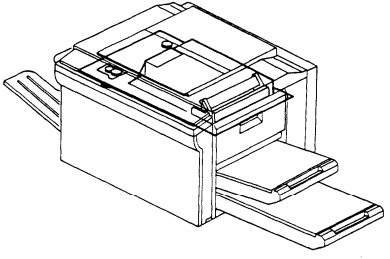

6. PLATEN COVER AND CASSETTE

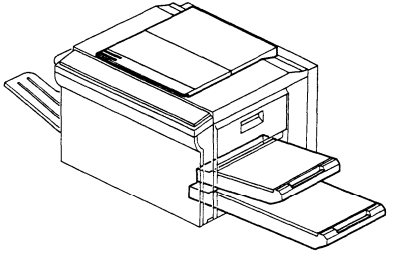

7. PAPER FEED UNIT 1

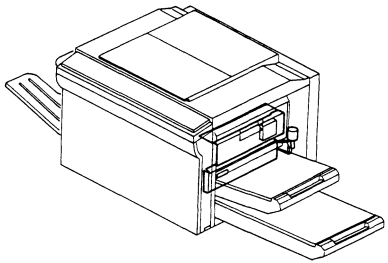

8. PAPER FEED UNIT 2

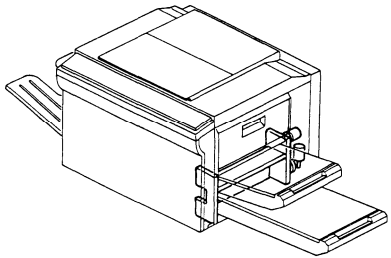

9. DUPLEX SECTION 1

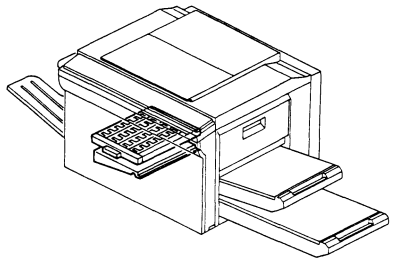

10. DUPLEX SECTION 2

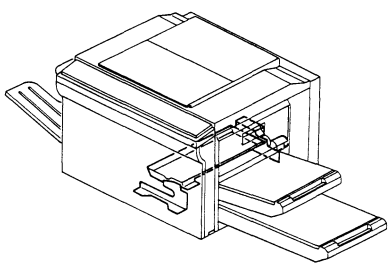

11. DUPLEX SECTION 3

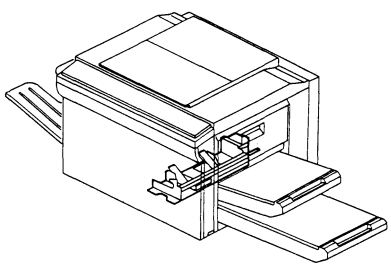

12. INVERTOR SECTION 1

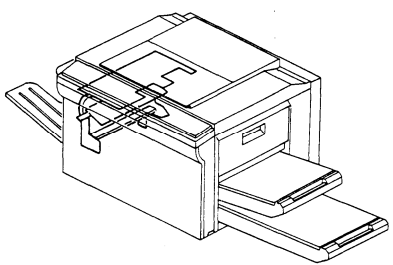

13. INVERTOR SECTION 2

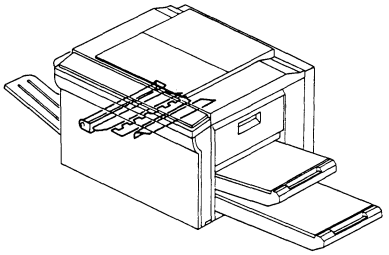

14. DEVELOPMENT 1

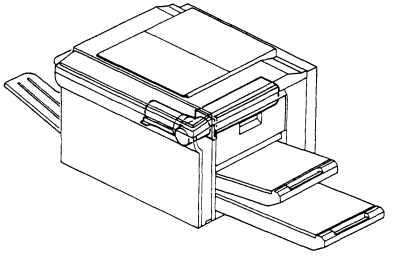

15. DEVELOPMENT 2

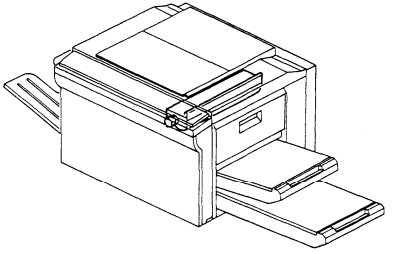

16. TRANSFER AND SEPARATION

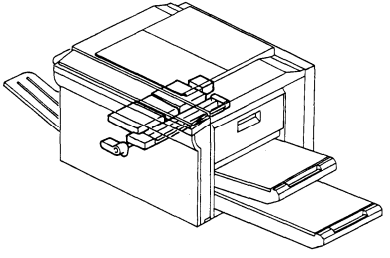

17. DRUM SECTION 1

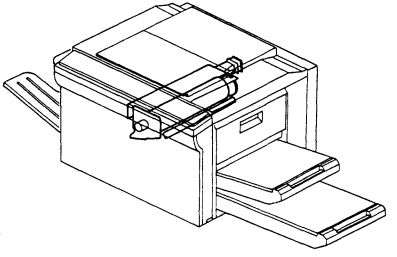

18. DRUM SECTION 2

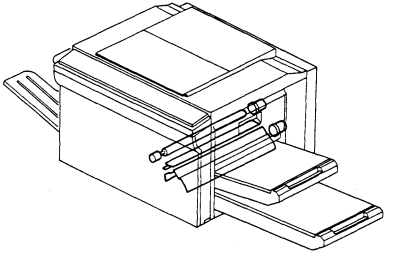

19. CLEANING UNIT 1

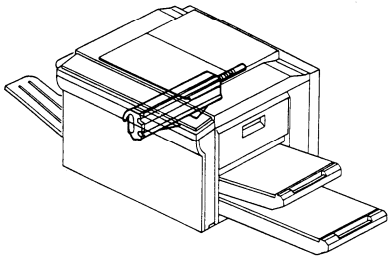

20. CLEANING UNIT AND TONER COLLECTION

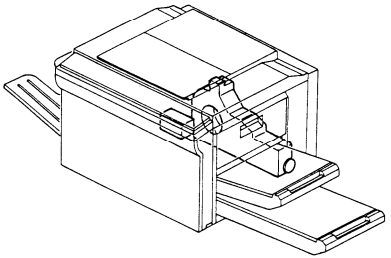

21. FUSING UNIT 1

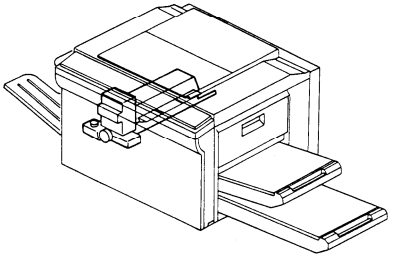

22. FUSING UNIT 2

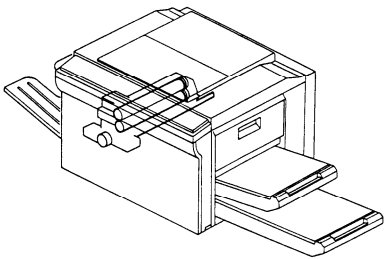

23. OPERATION PANEL

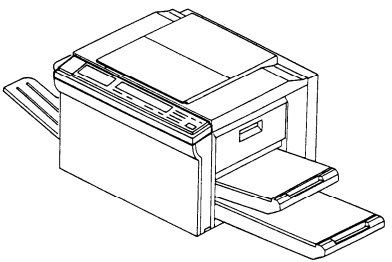

24. DRIVE SECTION

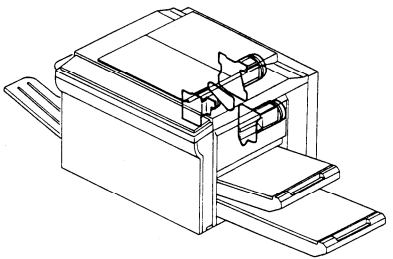

25. ELECTRICAL SECTION 1

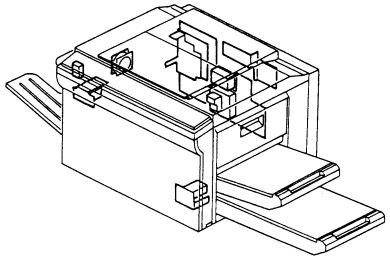

26. ELECTRICAL SECTION 2

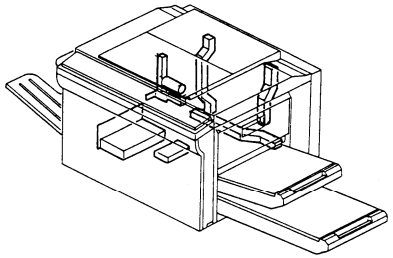

27. ELECTRICAL SECTION 3

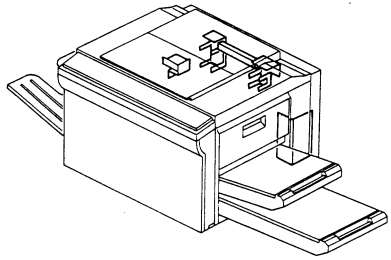

1. EXTERIOR 1

May 30, '87

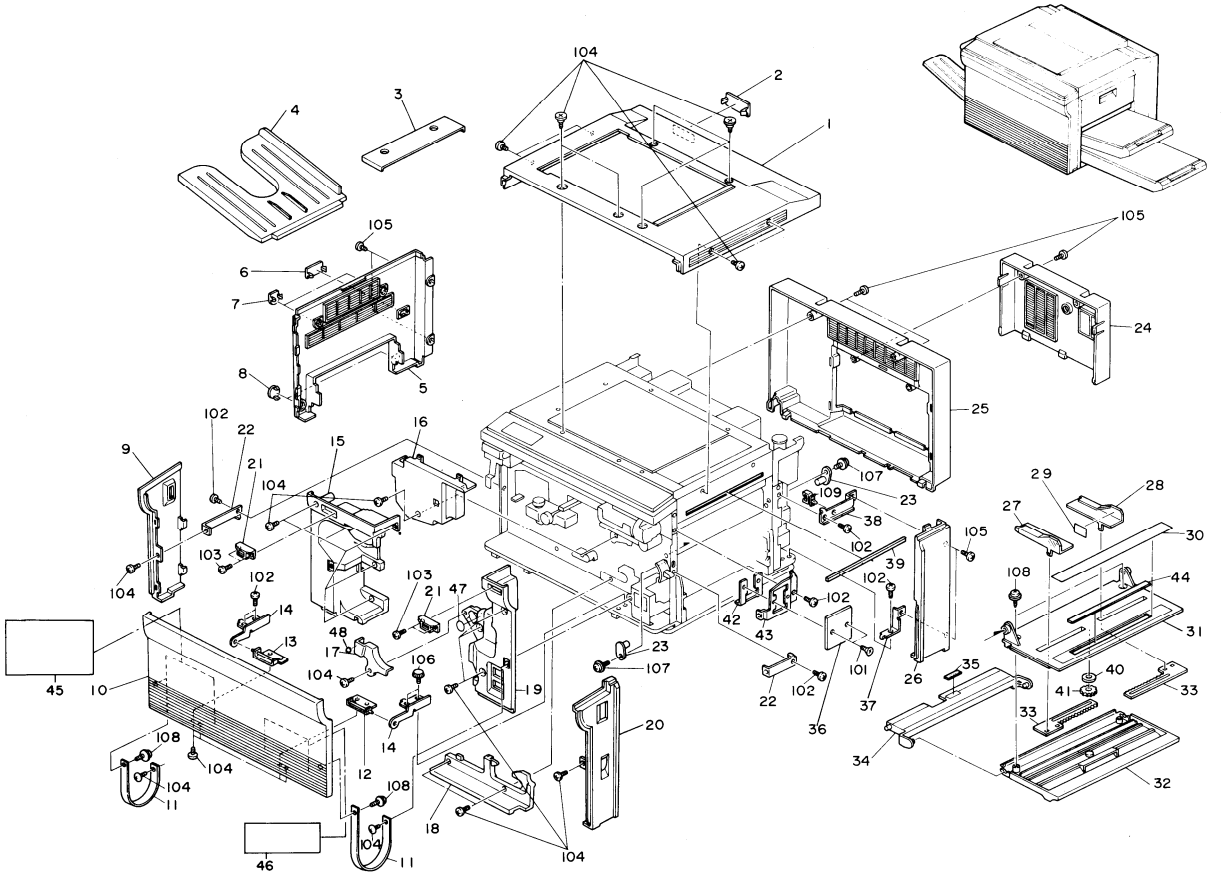

1. EXTERIOR 1

May 30, '87

Index No.	Part No.	Description	Q'ty Per Assembly
1	A007 6094	Rear Upper Cover	1
2	A007 1267	Upper Cover Cap - ADF	1
3	AC04 1004	Left Original Scale	1
3	AC04 1035	Left Original Scale - A3/A4	1
4	AF04 3001	Receiving Tray	1
5	A007 6150	Left Cover	1
6	A008 1307	Left Cover Cap - Sorter	1
7	A008 1351	Left Cover Cap - L	2
8	A008 1352	Left Cover Cap - S	2
9	A007 6135	Left Front Cover	1
10	A007 6061	Front Cover Ass'y	1
11	A008 1272	Front Cover Band	2
12	5215 1295	Front Cover Hinge - Right	1
13	5215 1297	Front Cover Hinge - Left	1
14	A007 1257	Front Cover Bracket	2
15	A007 6206	Left Inner Cover	1
16	A007 6229	Front Inner Cover - Upper	1
17	A007 1308	Inner Cover - Registration Sensor	1
18	A007 6225	Front Inner Cover - Lower	1
19	A007 6216	Right Inner Cover	1
20	A007 6114	Right Front Cover	1
21	5054 0536	Magnet Catch Ass'y	2
22	A007 1314	Right Front Cover Bracket	2
23	A007 2803	Manual Feed Table Holder	2
24	A007 6181	Toner Collection Rear Cover	1
25	A007 6174	Rear Cover	1
26	A007 6121	Right Rear Cover	1
27	A007 2796	Front Side Fence - Manual Feed Table	1
28	A007 2797	Rear Side Fence - Manual Feed Table	1
29	A007 2802	Decal - Manual Feed Table	1
30	AA00 2035	Manual Feed Decal	1
30	AA00 2030	Manual Feed Decal - A3/A4	1
31	A007 2793	Manual Feed Table	1
32	A007 2794	Manual Feed Cover	1
33	5215 2688	Side Fence Gear	2
34	A007 2800	Manual Feed Table Support	1
35	5447 2927	Friction Pad - B	1
36	5424 1472	Key Counter Cover	1
37	A007 1316	Bottom Bracket - Right Rear Cover	1
38	A007 1315	Upper Bracket - Right Rear Cover	1
39	5205 2734	Manual Feed Table Magnet	1
40	5215 2691	Brake	1
41	5215 2687	Gear - 16T	1
42	5446 1239	Plate Nut - Key Counter	1
43	A007 5874	Key Cunter Bracket	1
44	5443 2706	Plate - 12x220x1T	1
45	A007 6348	Decal - Misfeed Large	1
45	A007 6349	Decal - Misfeed Small	1
46	A007 6351	Decal - Adding Toner	1
47	AA00 1037	Decal - A2	1
48	AA00 1038	Decal - Regist Sensor	1
101	0323 0060W	Philips Sunken Head Screw - M3x6	
102	0434 0080W	Tapping Screw - M4x8	
103	0802 5085	Tapping Screw - M4x8	
104	0802 5094	Tapping Truss Head Screw - M4x8	
105	0802 5094F	Truss Tapping Screw - M4T3x8	
106	0803 0017	Knob Screw - M4x65	
107	0960 4005W	Philips Flange Screw - M4x5	
108	0965 3008W	Tapping Screw With Flat Washer - M3x8	
109	1105 0197	Wire Saddle	

2. EXTERIOR 2

May 30, '87

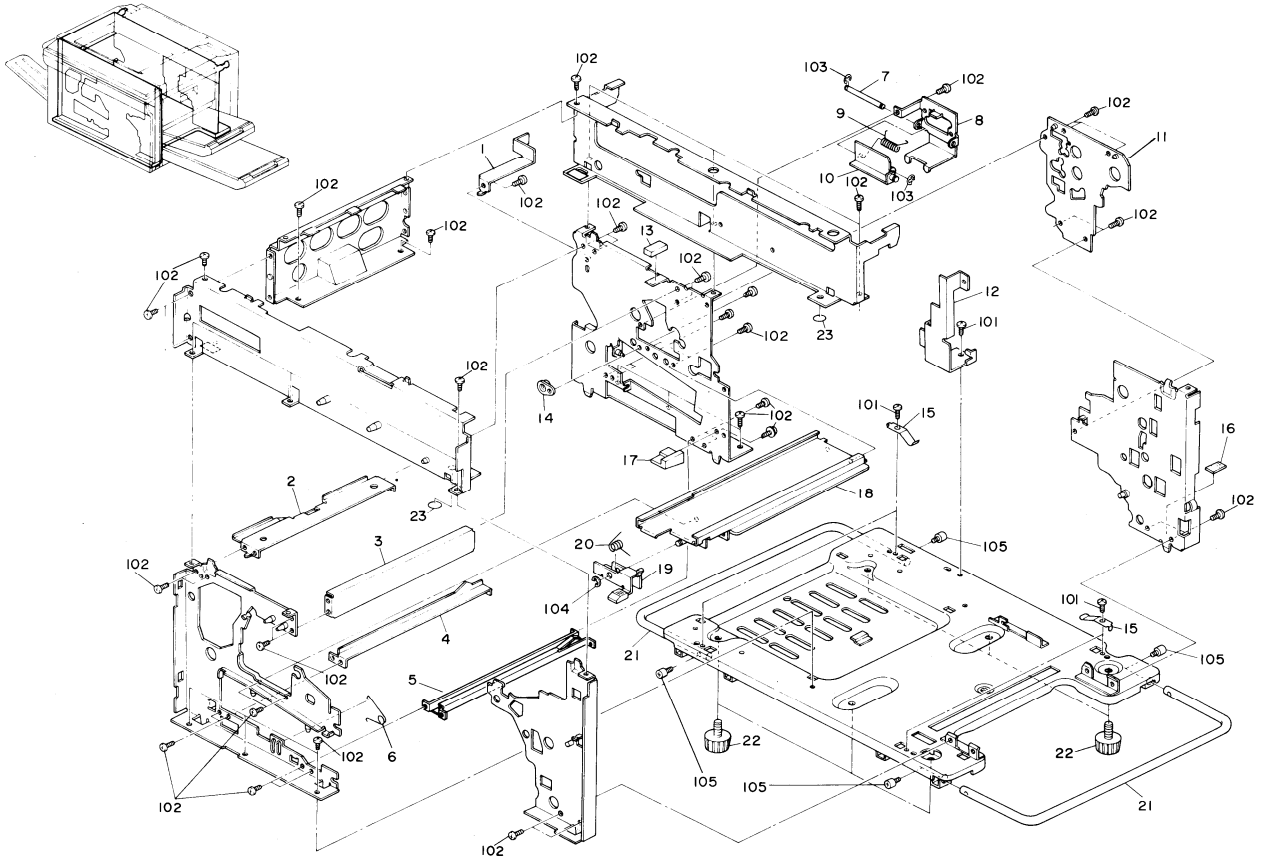

2. EXTERIOR 2

May 30, '87

Index No.	Part No.	Description	Q'ty Per Assembly
1	A007 5862	Main Control Board Angle	1
2	A007 1065	Upper Left Stay	1
3	A007 1066	Upper Right Stay	1
4	A007 5005	Left Stay - Transport Chamber	1
5	A007 5006	Right Stay - Transport Chamber	1
6	AA06 6019	Transport Spring	1
7	AA14 5027	Shutter Shaft	1
8	A007 4381	Connector Bracket	1
9	AA06 6014	Connector Shotter Spring	1
10	A007 4382	Connector Shutter Plate	1
11	A007 2125	Side Plate - Behind Drum	1
12	A007 5864	Fan Angle	1
13	A007 2894	Cushion - 8x15x30	1
14	A007 4475	Guide Holder	1
15	A007 1068	Leaf Spring - Transport Handle	2
16	5205 2893	Cushion - Sector Gear	1
17	5206 2851	Right Fork Gate Guide	1
18	A007 4370	Fusing Unit Rail	1
19	A007 4376	Release Lever - Fusing Unit	1
20	5205 1170	Fusing Release Lever Spring	1
21	AG05 1003	Transport Handle Rod	2
22	5419 1057	Rubber Foot	6
23	5205 1853	Seal - 14mm	2

Index No.	Part No.	Description	Q'ty Per Assembly
101	0434 0060W	Tapping Screw - M4x6	
102	0434 0080W	Tapping Screw - M4x8	
103	0720 0030E	Retaining Ring - M3	
104	0720 0040E	Retaining Ring - M4	
105	0801 1179	Philips Screw With Toothed Washer	

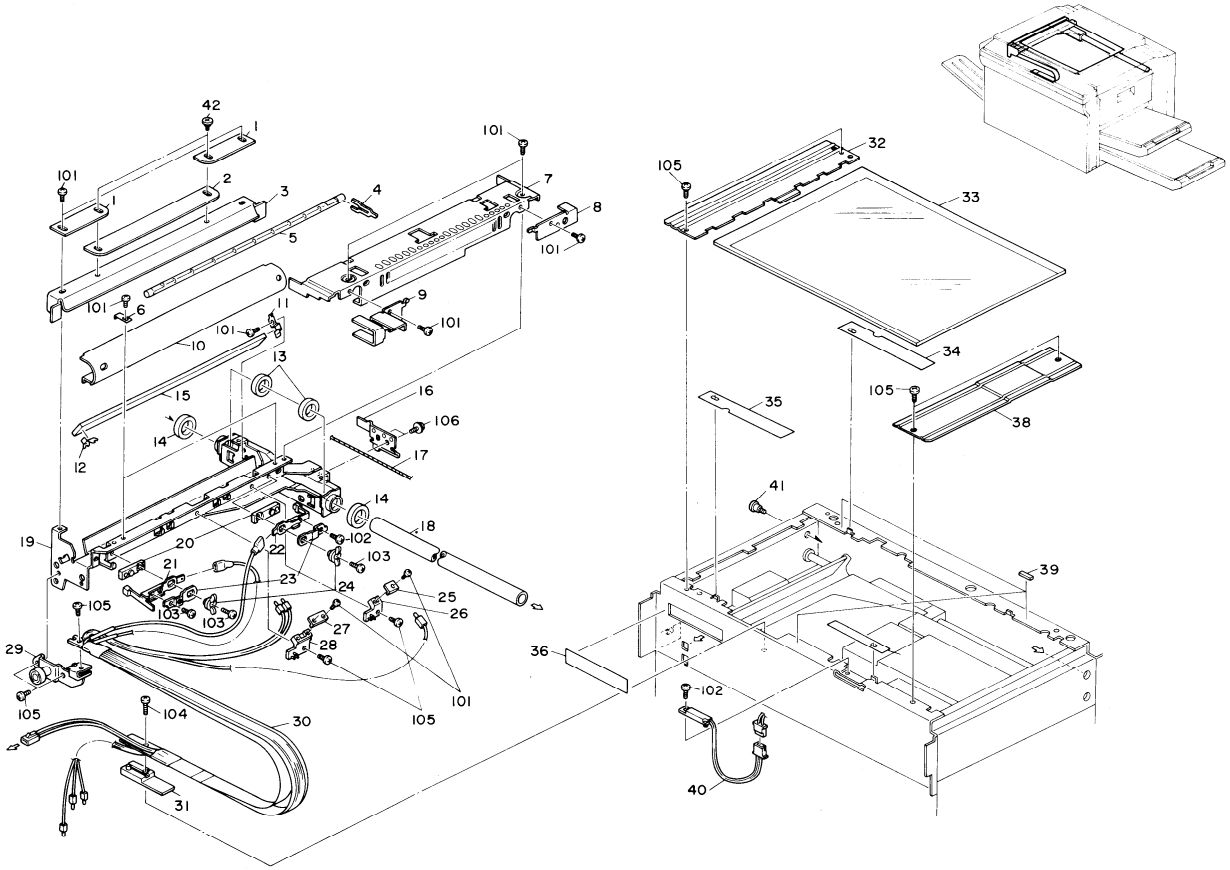
42
1
101
2
3
4
5
6
7
8
9
10
11
12
13
14
15
16
17
18
19
20
21
22
23
24
25
26
27
28
29
30
31
32
33
34
35
36
38
39
40
41
102
103
104
105
106

3. OPTICS 1

May 30, '87

Index No.	Part No.	Description	Q'ty Per Assembly
1	5442 1704	Side Wing	2
2	5442 1703	Center Wing	1
3	A007 1860	Reflector Clamp	1
4	5215 1702	Exposure Lamp Clip	1
5	AX52 0005	Exposure Lamp - 85V/160W	1
6	5409 1705	Switch Actuator - 1st Mirror	1
7	A007 1870	Reflector Cover	1
8	A007 1875	Rear Cover - Lamp Terminal	1
9	A007 1873	Front Cover - Lamp Terminal	1
10	A007 1865	Main Reflector	1
11	AC03 5009	Rear Spring Plate - 1st Mirror	1
12	AC03 5008	Front Spring Plate - 1st Mirror	1
13	A007 1848	Guide Rod Cleaner	2
14	AA16 1019	Cushion Guide Rod	2
15	AC03 0013	1st Mirror	1
16	A007 1845	Wire Clamp	1
17	AA05 0012	Scanner Drive Wire	1
18	AC05 0002	Guide Rod - Scanner	1
19	A007 1851	1st Scanner	1
20	5420 1675	Insulator - Lamp Terminal	2
21	5442 1705	Exposure Lamp Terminal - Release	1
22	5215 1700	Exposure Lamp Termianl - Fix	1
23	5420 1682	Lamp Terminal Support	2
24	5420 1676	Lamp Terminal Spacer	2
25	A007 1892	Rear Cover - Optical Fiber	1
26	A007 1894	Rear Bracket - Optical Fiber	1
27	A007 1893	Center Cover - Optical Fiber	1
28	A007 1895	Center Bracket - Optical Fiber	1
29	A007 1880	1st Scanner Slider	1
30	A007 5281	Exposure Lamp Harness	1
31	A007 1890	Harness Bracket - Exposure Lamp	1
32	A007 1675	Mounting Bracket Scale	1
33	AC01 2002	Exposure Glass - LT	1
33	AC01 2003	Exposure Glass - A3/A4	1
34	AA15 0011	Shielding Mylar - Rear Left	1
35	AA15 0009	Shielding Mylar - Front Left	1
36	AA15 0013	Light Shielding Mylar - Front Left	1
37	AA15 0010	Shielding Mylar - Front Center	1
38	A007 1680	Exposure Grass Stay	1
39	5442 1924	Cushion - Exposure Glass	3
40	5422 5131	Reed Switch	1
41	5216 1859	Stepped Screw - Slider Lock	2
42	5442 1702	Small Screw - M3	2
101	0313 0060W	Philips Pan Head Screw - M3x6	
102	0313 0080W	Philips Pan Head Screw - M3x8	
103	0313 0120W	Philips Pan Head Screw - M3x12	
104	0314 0140W	Philips Pan Head Screw - M4x14	
105	0434 0060W	Tapping Screw - M4x6	
106	0434 0080W	Tapping Screw - M4x8	

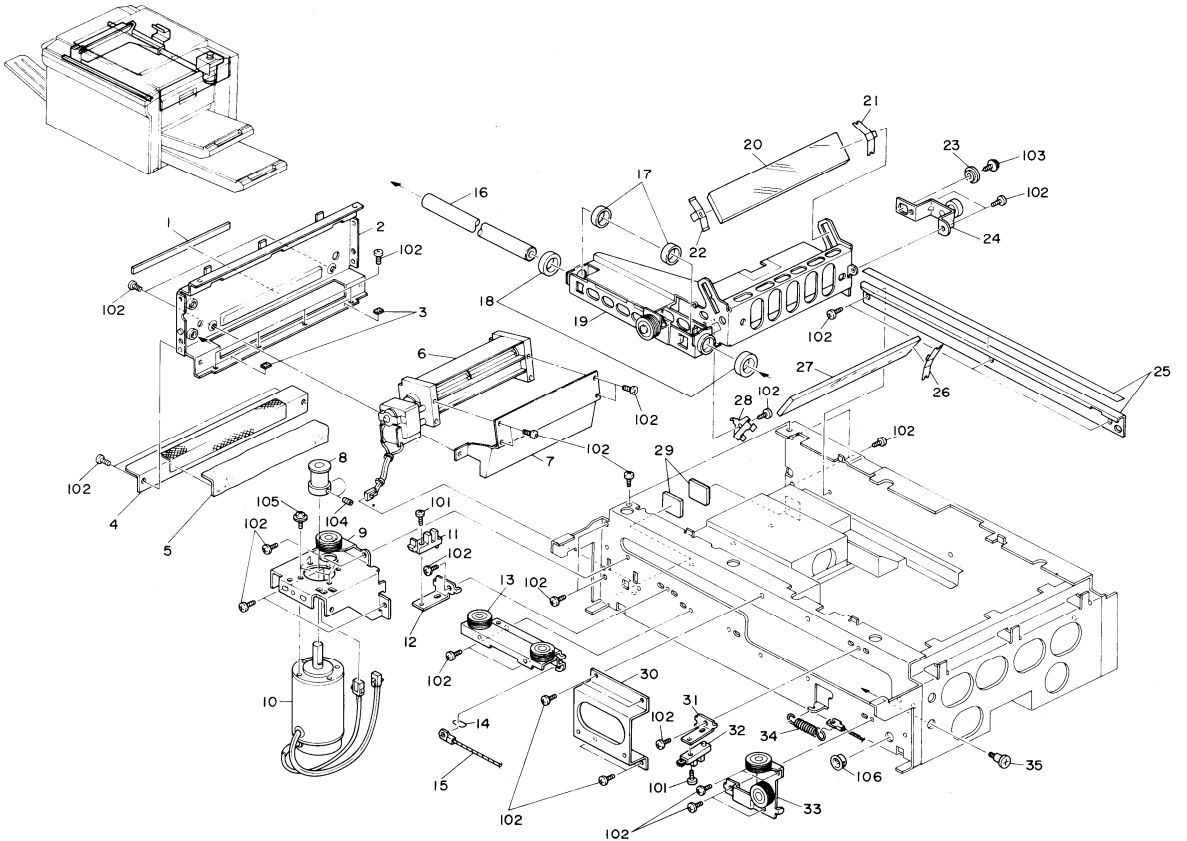
1
2
3
4
5
6
7
8
9
10
11
12
13
14
15
16
17
18
19
20
21
22
23
24
25
26
27
28
29
30
31
32
33
34
35
101
102
103
104
105
106

4. OPTICS 2

May 30, '87

Index No.	Part No.	Description	Q'ty Per Assembly
1	5205 2734	Manual Feed Table Magnet	1
2	A007 1670	Optics Right Frame	1
3	AA15 1087	Shield - 2x15x15	2
4	A007 1691	Optics Fan Filter Bracket	1
5	A007 1694	Optics Fan Flter	1
6	AX02 0029	Cooling Blower - AC50Hz 20.5W/60Hz 18W	1
7	A007 1686	Cooling Blower Bracket	1
8	AB03 2018	Scanner Drive Pulley	1
9	A007 1810	Scanner Motor Bracket	1
10	AX06 0003	Scanner Motor - DC 42W	1
11	5215 5230	Photointerrupter - L Type	1
12	A007 1806	Scanner Sensor Bracket	1
13	A007 1836	Center Pulley Bracket	1
14	5442 1798	Scanner Drive Wire Hook	1
15	AA05 0014	Scanner Drive Wire	1
16	AC05 0002	Guide Rod - Scanner	1
17	A007 1848	Guide Rod Cleaner	2
18	AA16 1019	Cushion Guide Rod	3
19	A007 1901	2nd Scanner	1
20	AC03 0014	2nd Mirror	1
21	AC03 5010	Front Spring Plate - 2nd Mirror	1
22	AC03 5011	Rear Spring Plate - 2nd Mirror	1
23	5205 1694	Adjusting Cam - Start Lever	1
24	A007 1915	2nd Scanner Slider	1
25	A007 1925	Scanner Guide Plate	1
26	AC03 5012	Front Spring Plate - 3rd Mirror	1
27	AC03 0015	3rd Mirror	1
28	AC03 5014	Rear Spring Plate - 3rd Mirror	1
29	AA15 1089	Seal - 6x32x32	2
30	A007 1815	Support Bracket - Optics Frame	1
31	A007 1801	Scanner Home Sensor Bracket	1
32	5205 5251	LED Sensor Type - T	1
33	A007 1826	Left Pulley Bracket	1
34	5442 1890	Wire Tightner Spring	1
35	5216 1859	Stepped Screw - Slider Lock	1

Index No.	Part No.	Description	Q'ty Per Assembly
101	0314 0100W	Philips Pan Head Screw - M4x10	
102	0434 0060W	Tapping Screw - M4x6	
103	0434 0080W	Tapping Screw - M4x8	
104	0574 0060E	Hexagon Headless Set Screw - M4x6	
105	0951 4010W	Philips Screw With Flat Washer - M4x10	
106	1106 0458	Bushing - 9.9mm	

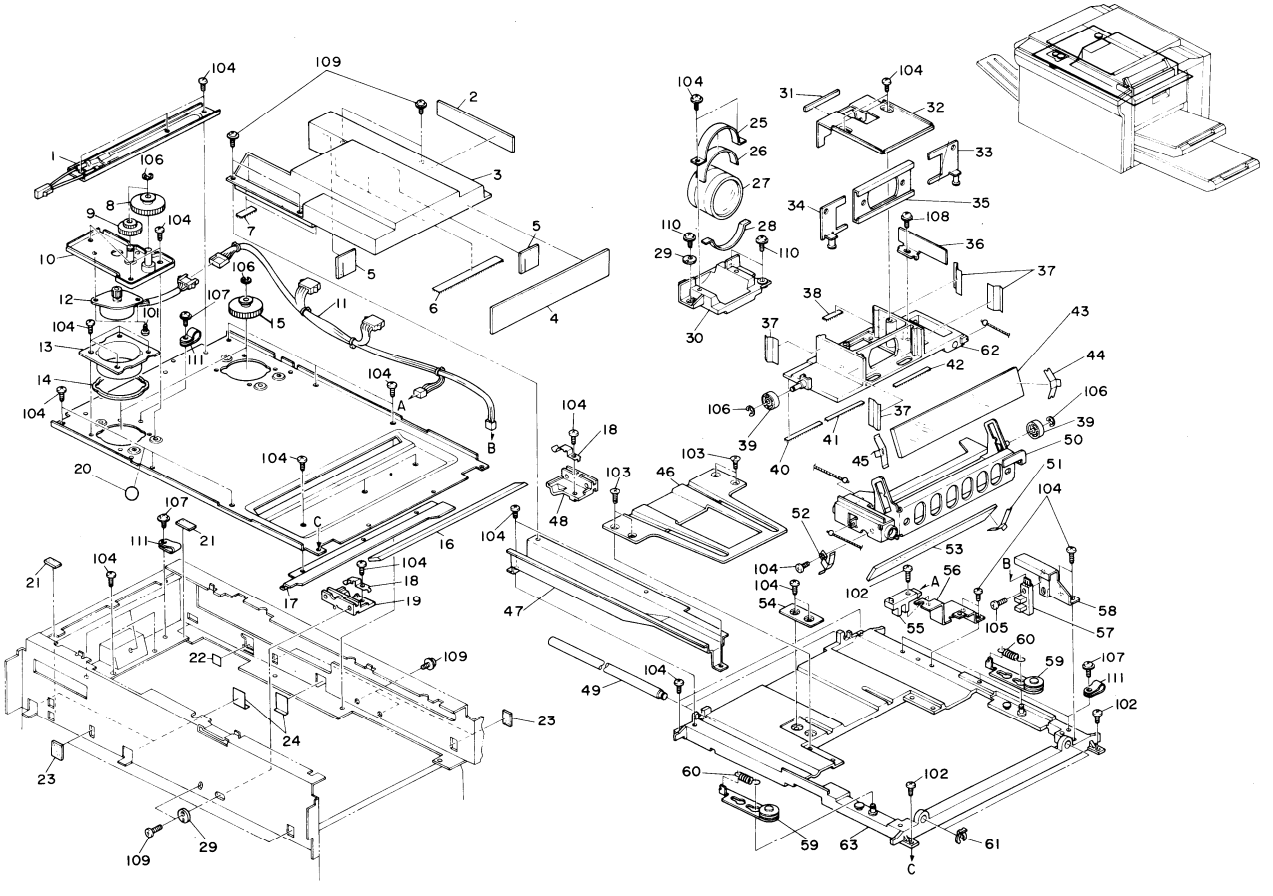

Index No.	Part No.	Description	Q'ty Per Assembly
1	5205 5438	Anticondensation Heater - 18W	1
2	AA15 1093	Seal - 3x25x170	1
3	A007 1791	Mirror Cover	1
4	AA15 1092	Seal - 3x42x270	1
5	AA15 1094	Seal - 2x50x48	2
6	AA15 2007	Brush Seal - 6x7x144	1
7	AA15 2008	Seal - 5x6x40	1
8	A007 1709	Mirror Drive Pulley - 80T	1
9	AB01 7039	Gear - 24T/48T	1
10	A007 1707	Magnification Motor Bracket	1
11	A007 5215	Lens Home Sensor Harness	1
12	A007 1706	Magnification Drive Motor - DC4.8W	1
13	A007 1663	Stepping Motor Cover	1
14	A007 1664	Seal - Stepping Motor Cover	1
15	A007 1716	Lens Drive Pulley - 80T	1
16	AC03 0018	6th Mirror	1
17	A007 3497	Development Unit Rail	1
18	AC03 5007	Spring Plate - 6th Mirror	1
19	A007 1700	Front Bracket - 6th Mirror	1
20	5205 1853	Seal - 14mm	1
21	AA15 1087	Shield - 2x15x15	1
22	AA15 0012	Shielding Mylar - 30x30	1
23	AA15 1088	Seal - 2x20x28	2
24	AA15 0014	Light Shielding Mylar - Center	2
25	A007 1729	Lens Fixing Plate	1
26	AA16 1015	Lens Cushion	1
27	AC02 0047	Lens 5/215 - 19	1
28	AA15 1091	Seal - 2x8x110	1
29	5205 1694	Adjusting Cam - Start Lever	2
30	A007 1730	Lens Bracket	1
31	AA16 1020	Lens Cushion - 3x7x80	1
32	A007 1751	Lens Shielding Cover	1
33	A007 1744	Rear Lens Shield	1
34	A007 1742	Front Lens Shield	1
35	A007 1741	Lens Shield	1

Index No.	Part No.	Description	Q'ty Per Assembly
36	A007 1727	Actuator Plate - Lens Home Sensor	1
37	AA15 0015	Light Shielding Mylar - Lens	4
38	AA15 2012	Brush Seal - 4x4x40	1
39	5209 1694	Guide Roller - 1st Scanner	2
40	AA15 2009	Brush Seal - 4x5x84	1
41	AA15 2010	Brush Seal - 5x10x64	1
42	AA15 2011	Brush Seal - 4x5x25	1
43	AC03 0016	4th Mirror	1
44	AC03 5004	Rear Spring Plate - 4th Mirror	1
45	AC03 5003	Front Spring Plate - 4th Mirror	1
46	A007 1722	Cam Plate - Lens Shield	1
47	A007 1785	Harness Guide - Exposure Lamp	1
48	A007 1701	Rear Bracket - 6th Mirror	1
49	AC05 1001	Guide Rod - Magnification	2
50	A007 1761	4th and 5th Mirror Bracket	1
51	AC03 5005	Front Spring Plate - 5th Mirror	1
52	AC03 5006	Rear Spring Plate - 5th Mirror	1
53	AC03 0017	5th Mirror	1
54	A007 1770	Guide Bracket - Lens Shield	1
55	5215 5230	Photointerrupter - L Type	1
56	A007 1776	Lens Home Sensor Bracket	1
57	5205 5251	LED Sensor - T Type	1
58	A007 1781	Mirror Home Sensor Bracket	1
59	5215 1805	Lens Tension Pulley	2
60	5215 1811	Lens Drive Wire Spring	2
61	5215 2621	Snap Ring - M6	2
62	A007 1726	Lens Bracket	1
63	A007 1721	Lens Unit Base	1

Index No.	Part No.	Description	Q'ty Per Assembly
101	0313 0060W	Philips Pan Head Screw - M3x6	
102	0314 0100W	Philips Pan Head Screw - M4x10	
103	0324 0080W	Philips Sunken Head Screw - M4x8	
104	0434 0060W	Tapping Screw - M4x6	
105	0434 0100W	Tapping Screw - M4x10	
106	0720 0040E	Retaining Ring - M4	
107	0951 4005W	Philips Screw With Flat Washer - M4x5	
108	0951 4006W	Philips Screw With Flat Washer - M4x6	
109	0951 4008W	Philips Screw With Flat Washer - M4x8	
110	0951 4010W	Philips Screw With Flat Washer - M4x10	
111	1105 0005	Nylon Clip - 3N	

Index No.	Part No.	Description	Q'ty Per Assembly

6. PLATEN COVER AND CASSETTE

May 30, '87

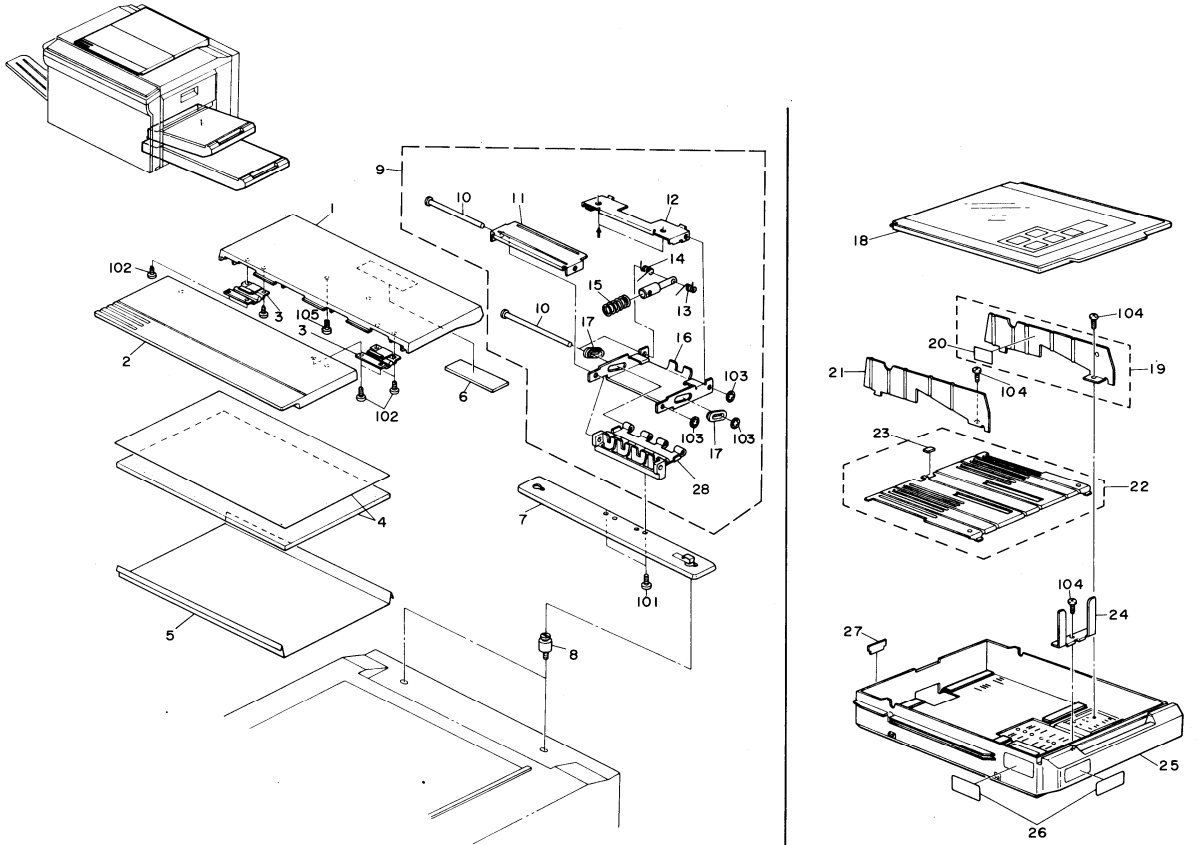

6. PLATEN COVER AND CASSETTE

May 30, '87

Index No.	Part No.	Description	Q'ty Per Assembly
*	AC00 1010	Platen Cover Ass'y	1
*	A007 2926	Cassette Ass'y - DLT	1
*	A007 2943	Cassette Ass'y - LT	1
*	A007 2945	Cassette Ass'y - LTR	1
*	A007 2922	Cassette Ass'y - A3	1
*	A007 2937	Cassette Ass'y - A4	1
*	A007 2939	Cassette Ass'y - A4R	1
1	A008 1668	Rear Platen Cover	1
2	A007 1951	Front Platen Cover	1
3	5448 2824	Flex Hinge - Platen Cover	2
4	5448 2803	Platen Cover Pad	1
5	A008 9501	Platen Cover Sheet - 10 Sheets/set	1
6	5215 2838	Rubber Magnet	1
7	5215 2819	Mounting Bracket - Platen Cover	1
8	AA14 3035	Stud - Platen Cover Mounting	2
9	5215 2832	Platen Cover Hinge Ass'y	1
10	5215 2840	Pin - 4x115mm	3
11	5215 2845	Magnet Plate	1
12	5215 2846	Platen Base	1
13	5215 2842	Right Spring - Platen Cover	1
14	5215 2843	Left Spring - Platen Cover	1
15	5215 2839	Balancer Spring	1
16	5215 2834	Arm Holder	1
17	5215 2844	Slide Supporter	2
18	AF01 2004	Cassette Cover - DLT	1
18	AF01 2008	Cassette Cover - LT	1
19	5205 2947	Rear Side Fence - DLT	1
19	5205 6491	Rear Side Fence	1
20	5413 4835	Decal - Paper Level	1
21	5205 2946	Front Side Fence - DLT	1
21	5205 6493	Front Side Fence	1
22	5205 2937	Bottom Plate	1
22	5205 6570	Bottom Plate - Small	1
23	5447 2927	Friction Pad - B	1
24	5205 2953	Rear Fence	1

Index No.	Part No.	Description	Q'ty Per Assembly
25	A007 2955	Cassette Body - DLT	1
25	A007 2950	Cassette Body - LT	1
26	AA00 2003	Decal - 8-1/2"x14"	2
26	AA00 2004	Decal - 11"x17"	2
26	AA00 2005	Decal - 8-1/2"x11R"	2
26	AA00 2006	Decal - 8-1/2"x11"	2
26	AA00 2007	Decal - A3	2
26	AA00 2008	Decal - A4R	2
26	AA00 2009	Decal - A4	2
27	5205 2971	Actuator - 11"x17"	1
27	5205 2979	Actuator - 11"x8-1/2"	1
27	5205 2996	Actuator - 8-1/2"x11R"	1
27	5205 2997	Actuator - 8-1/2"x14"	1
27	5205 2960	Actuator - A3	1
27	5205 2962	Actuator - A4R	1
27	5205 2964	Actuator - A4	1
28	5215 2847	Base Holder - Platen Cover	1
101	0414 0102W	Tapping Screw - M4x10	
102	0802 5131	Truss Head Screw - M4x8	
103	0805 0083	Retaining Ring - M4	
104	0965 4010W	Tapping Screw With Flat Washer - M4x10	
105	0965 4012W	Tapping Screw With Flat Washer - M4x12	

7. PAPER FEED UNIT 1

May 30, '87

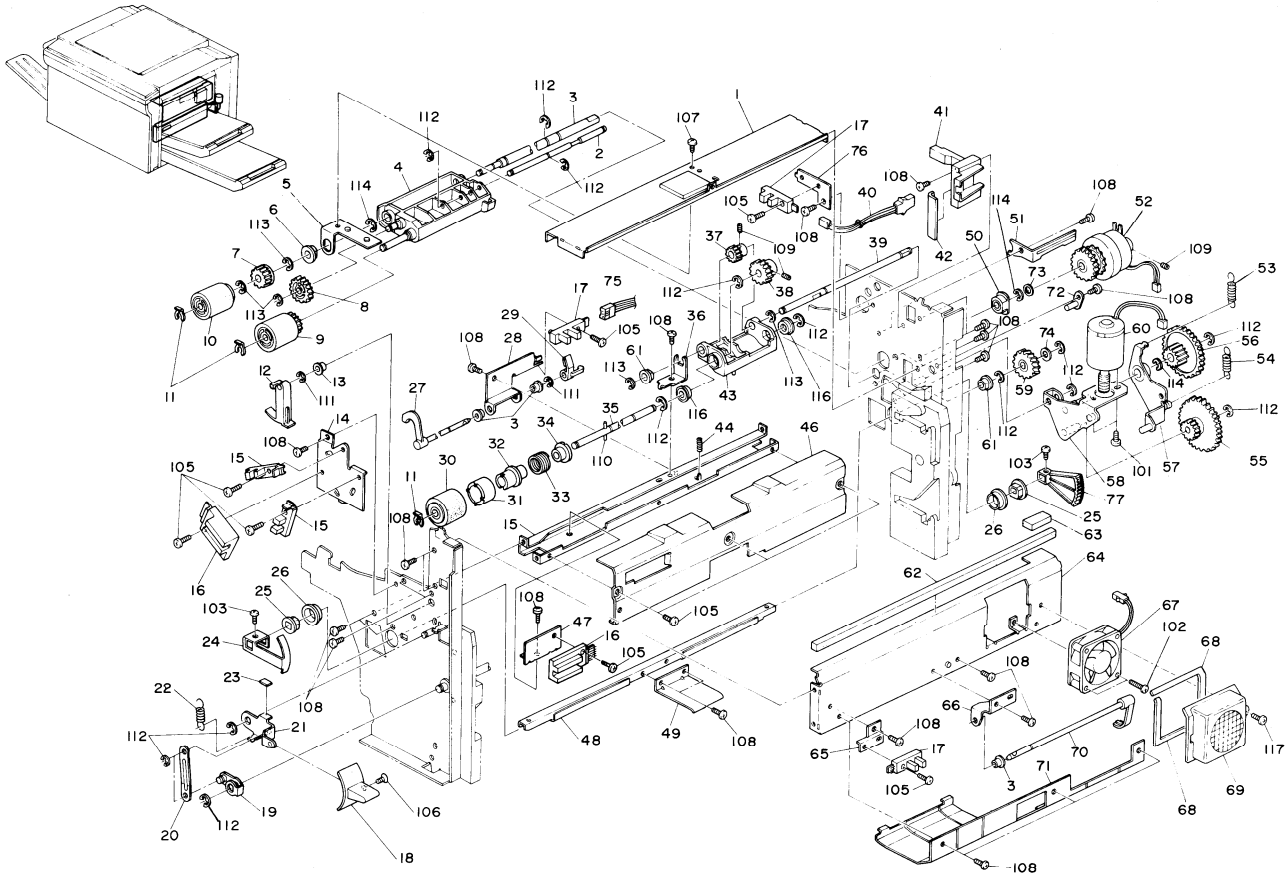

7. PAPER FEED UNIT 1

May 30, '87

Index No.	Part No.	Description	Q'ty Per Assembly
1	A007 2689	Paper Feed Stay	1
2	AA14 0045	Pick-up Shaft	1
3	AA14 0046	Paper Feed Shaft - Upper	1
4	A007 2686	Feed Guide - Paper Feed Roller	1
5	A007 2684	Paper Feed Roller Bracket	1
6	5053 0223	Bushing - 8mm	1
7	AB01 3078	Gear - 18T	1
8	AB01 3079	Gear - 21T	1
9	5447 2723	Pick-up Roller	1
10	5447 2726	Paper Feed Roller	1
11	5447 2681	Snap Ring	3
12	A007 2725	Paper End Shutter - Upper	1
13	5443 2668	Bushing	4
14	A007 2722	Upper Bracket - Paper End	1
15	5215 5230	Photointerrupter - L Type	2
16	5205 5253	Photointerrupter Pack	2
17	5205 5251	L.E.D Sensor - Type	1
18	A007 2843	Release Knob - Bottom Plate	1
19	A007 2850	Release Arm - Bottom Plate	1
20	A007 2853	Link Plate - Release Lever	1
21	A007 2844	Release Lever - Bottom Plate	1
22	AA06 0049	Release Lever Spring	1
23	A007 2848	Cushion - Release Lever	1
24	A007 2758	Volume Sensor Arm	1
25	A007 2757	Sector Gear Bushing	2
26	A007 2756	Bushing - Volume Sensor Shaft	2
27	A007 2599	Paper Detect Feeler - Transport	1
28	A007 2602	Transport Roller Sensor Bracket	1
29	A007 2601	Transport Roller Sensor Shutter	1
30	5447 2693	Separation Roller	1
31	5447 2678	Slip Clutch Cover	1
32	5447 2676	Output Hub	1
33	5447 2697	Cyrindrical Spring	1
34	5447 2695	Input Hub	1
35	5205 2782	Separation Driven Shaft	1

Index No.	Part No.	Description	Q'ty Per Assembly
36	A007 2655	Separation Fixed Bracket	1
37	AB01 1023	Gear - 15T	1
38	AB01 1024	Gear - 25T	1
39	AA14 0044	Pressure Arm Shaft	1
40	A007 5204	Toner End Sensor Harness	1
41	A007 3487	Toner End Sensor Cover	1
42	AA15 1027	Seal - 3x16x57	1
43	A007 2650	Separation Ressure Arm	1
44	AA06 3021	Paper Feed Separation Spring	1
45	A007 2653	Paper Feed Brace - Upper	1
46	A007 2649	Separation Guide	1
47	A007 2661	Paper Size Sensor Bracket	1
48	A007 2752	Volume Sensor Shaft	1
49	A007 2754	Bottom Plate Lever	1
50	5205 2865	Bushing - Paper Feed Roller	1
51	A007 2698	Upper Magnetic Clutch Stopper	1
52	AX20 0018	Paper Feed Clutch	1
53	5205 2674	Spring	1
54	5205 2678	Spring	1
55	5205 2680	Coupled Gear - 16T/53T	1
56	5205 2681	Coupled Gear - 17T/50T	1
57	5205 2788	Cassette Sensor Arm - Upper	1
58	5205 2667	Bracket - Paper Lift Motor	1
59	AB01 3077	Gear - 20T	1
60	A000 5507	Lift Motor - DC1.69W	1
61	5053 0447	Bushing - M6	2
62	A007 2896	Seal - 8x8x368	1
63	A007 2894	Cushion - 8x15x30	1
64	A007 2893	Upper Paper Feed Bracket	1
65	A007 2805	Manual Feed Sensor Bracket	1
66	A007 2720	Paper End Actuator Bracket	1
67	AX04 0004	Cooling Fan Motor	1
68	AA15 1064	Seal - Cooling Fan	2
69	A007 3495	Cooling Fan Cover	1
70	A007 2718	Paper End Feeler	1

Index No.	Part No.	Description	Q'ty Per Assembly
71	A007 2615	Upper Feed Guide	1
72	A007 2803	Manual Feed Table Holder	1
73	AA13 2025	Spacer - 1x8x12mm	1
74	AA13 2024	Spacer - 1x6x10mm	1
75	A007 5249	Paper Feed Unit Harness	1
76	A007 3486	Toner End Sensor Bracket	1
77	A007 2759	Sector Gear	1

Index No.	Part No.	Description	Q'ty Per Assembly
101	0313 0050W	Philips Pan Head Screw - M3x5	
102	0313 0280W	Philips Pan Head Screw - M3x28	
103	0314 0060W	Philips Pan Head Screw - M4x6	
104	0314 0080W	Philips Pan Head Screw - M4x8	
105	0314 0100W	Philips Pan Head Screw - M4x10	
106	0324 0080W	Philips Sunken Head Screw - M4x8	
107	0434 0060W	Tapping Screw - M4x6	
108	0434 0080W	Tapping Screw - M4x8	
109	0574 0050E	Hexagon Headless Set Screw - M4x5	
110	0622 0100W	Parallel Pin - M2x10	
111	0720 0030E	Retaining Ring - M3	
112	0720 0040E	Retaining Ring - M4	
113	0720 0050E	Retaining Ring - M5	
114	0720 0060E	Retaining Ring - M6	
115	0720 0070E	Retaining Ring - M7	
116	0805 3042	Ball Bearing - 6x10x3mm	
117	0951 4008W	Philips Screw With Flat Washer - M4x8	

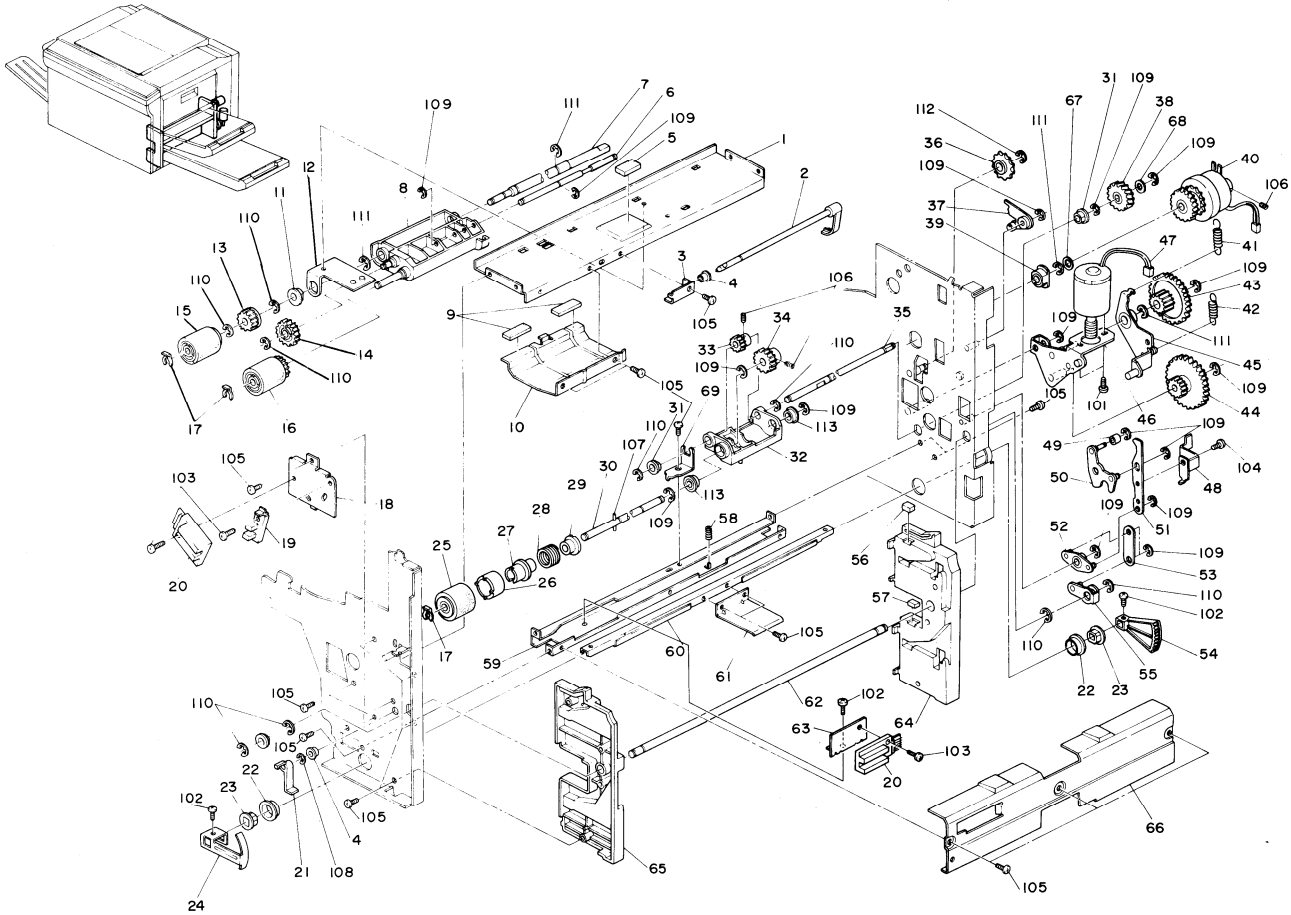

8. PAPER FEED UNIT 2

May 30, '87

Index No.	Part No.	Description	Q'ty Per Assembly
1	A007 2712	Lower Paper Feed Stay	1
2	A007 2718	Paper End Feeler	1
3	A007 2726	Paper End Actuator Bracket	1
4	5443 2668	Bushing	2
5	A007 2894	Cushion - 8x15x30	1
6	AA14 0045	Pick-up Shaft	1
7	AA14 0047	Paper Feed Shaft - Lower	1
8	A007 2686	Feed Guide - Paper Feed Roller	1
9	5205 2777	Cushion - Lower Pick-up	2
10	A007 2631	Pick-up Guide - Lower	1
11	5053 0223	Bushing - 8mm	2
12	A007 2709	Paper Feed Roller Bracket	1
13	5442 3218	Gear - 18Z	1
14	AB01 3079	Gear - 21T	1
15	5447 2726	Paper Feed Roller	1
16	5447 2723	Pick-up Roller	1
17	5447 2681	Snap Ring	3
18	A007 2724	Lower Bracket - Paper End	1
19	5215 5230	Photointerrupter - L Type	1
20	5205 5253	Photointerrupter Pack	2
21	5205 2644	Paper End Actuator	1
22	A007 2756	Bushing - Volume Sensor Shaft	2
23	A007 2757	Sector Gear Bushing	2
24	A007 2758	Volume Sensor Arm	1
25	5447 2693	Separation Roller	1
26	5447 2678	Slip Clutch Cover	1
27	5447 2676	Output Hub	1
28	5447 2697	Cyrindrical Spring	1
29	5447 2695	Input Hub	1
30	5205 2782	Separation Driven Shaft	1
31	5053 0447	Bushing - M6	2
32	A007 2650	Separation Pressure Arm	1
33	AB01 1023	Gear - 15T	1
34	AB01 1024	Gear - 25T	1
35	AA14 0044	Pressure Arm Shaft	1
36	AB02 3018	Sprocket - 15T	1
37	A007 2880	Bottom Plate Release Stopper	1
38	AB01 3077	Gear - 20T	1
39	5205 2865	Bushing - Paper Feed Roller	1
40	AX20 0018	Paper Feed Clutch	1
41	5205 2674	Spring	1
42	5205 2678	Spring	1
43	5205 2681	Coupled Gear - 17T/50T	1
44	5205 2680	Coupled Gear - 16T/53T	1
45	5205 2670	Cassette Sensor Arm	1
46	5205 2667	Bracket - Paper Lift Motor	1
47	A000 5507	Lift Motor - DC1.69W	1
48	A007 2857	Actuator - Bottom Plate Release	1
49	A007 2883	Bottom Plate Release Roller	1
50	A007 2885	Cam - Bottom Plate Release	1
51	A007 2867	Link Plate - Release Arm Lever	1
52	A007 2864	Release Arm Lever	1
53	A007 2861	Link Plate - Release Arm	1
54	A007 2759	Sector Gear	1
55	A007 2850	Release Arm - Bottom Plate	1
56	A007 2877	Cushion - Upper Pick-off Bracket	1
57	A007 2878	Cushion - Lower Pick-off Bracket	1
58	AA06 3021	Paper Feed Separation Spring	1
59	A007 2675	Paper Feed Stay - Lower	1
60	A007 2752	Volume Sensor Shaft	1
61	A007 2754	Bottom Plate Lever	1
62	AA14 0053	Shaft - Bottom Plate Release	1
63	A007 2661	Paper Size Sensor Bracket	1
64	A007 2874	Rear Side Guide - Cassette Holder	1
65	A007 2873	Front Side Guide - Cassette Holder	1
66	A007 2649	Separation Guide	1
67	AA13 2025	Spacer - 1x8x12mm	1
68	AA13 2024	Spacer - 1x6x10mm	1
69	A007 2655	Separation Fixed Bracket	1

Index No.	Part No.	Description	Q'ty Per Assembly
101	0313 0050W	Philips Pan Head Screw - M3x5	
102	0314 0080W	Philips Pan Head Screw - M4x8	
103	0314 0100W	Philips Pan Head Screw - M4x10	
104	0434 0060W	Tapping Screw - M4x6	
105	0434 0080W	Tapping Screw - M4x8	
106	0574 0050E	Hexagon Headless Set Screw - M4x5	
107	0622 0100W	Spring Pin - 2x10mm	
108	0720 0030E	Retaining Ring - M3	
109	0720 0040E	Retaining Ring - M4	
110	0720 0050E	Retaining Ring - M5	
111	0720 0060E	Retaining Ring - M6	
112	0720 0070E	Retaining Ring - M7	
113	0805 3042	Ball Bearing - 6x10x3mm	

Index No.	Part No.	Description	Q'ty Per Assembly

9. DUPLEX SECTION 1

May 30, '87

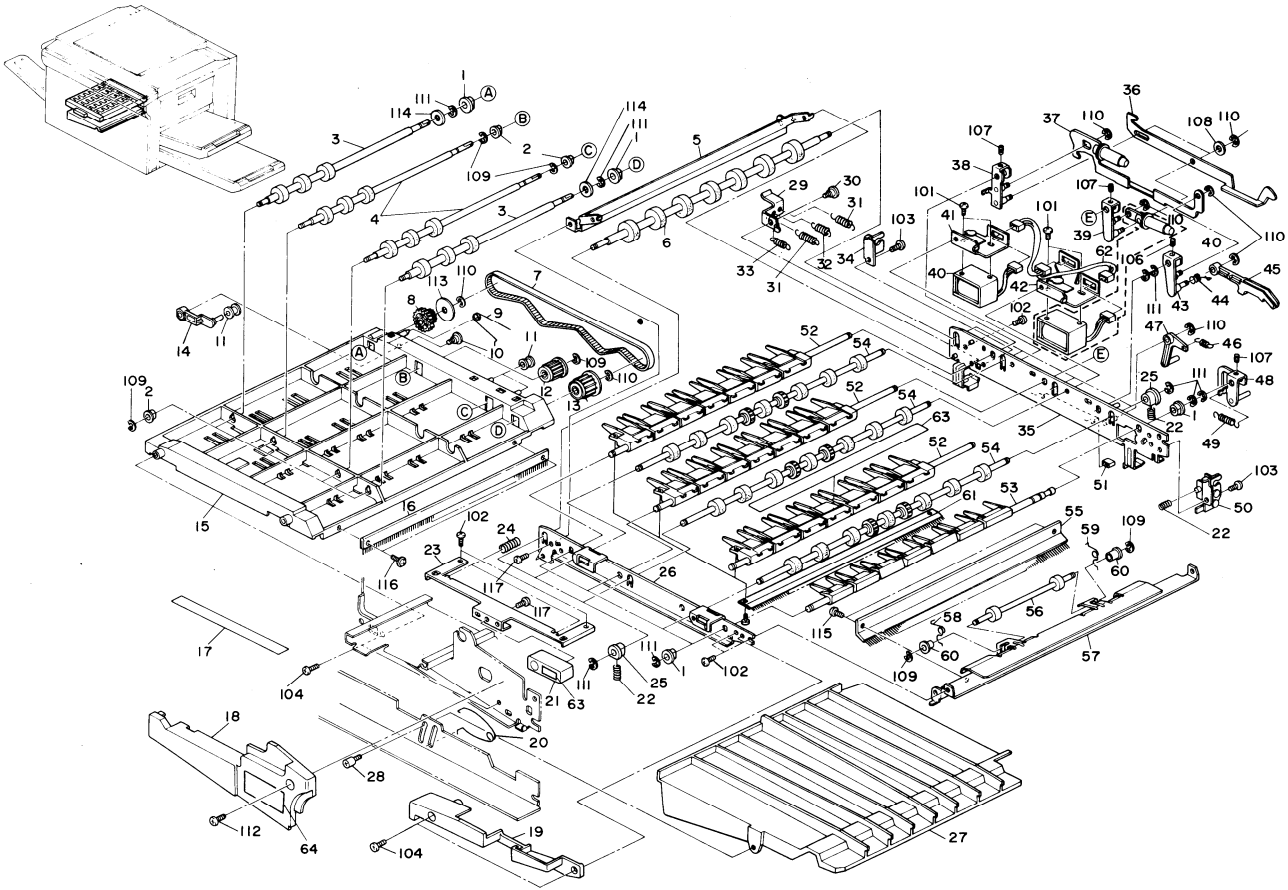

9. DUPLEX SECTION 1

May 30, '87

Index No.	Part No.	Description	Q'ty Per Assembly
*	A007 4550	Fork Gate Unit	1
1	5053 0447	Bushing - M6	4
2	AA08 0022	Bushing - 4x7x5mm	3
3	AF02 0018	Transport Roller - 20mm	2
4	AF02 0026	Transport Roller - 16mm	2
5	A007 4927	Entrance Guide Plate - Fork Gate	1
6	AF02 0029	Inverter Return Roller	1
7	AA04 0008	Timing Belt - 228MXL	1
8	AB03 2016	Gear - 25T	1
9	AA06 6020	Tension Spring	1
10	AA14 3047	Stepped Screw - M3	1
11	A007 4914	Idler Roller	2
12	AB03 0018	Pulley - 20T	1
13	AB03 0017	Pulley - 25T	1
14	A007 4915	Tension Lever	1
15	A007 4900	Transport Chamber	1
16	AA12 0003	Anti - Static Brush - Duplex	1
17	A007 4942	Guide Plate - Fork Gate	1
18	A007 1303	Cover - Transport	1
19	A007 4919	Fork Gate Cover	1
20	AA06 6019	Transport Spring	1
21	A007 4711	Fork Gate Knob	1
22	5206 4478	Spring - Drive Roller	3
23	A007 4986	Fork Gate Stopper	1
24	AA06 3028	Spring - Fork Gate Stopper	1
25	5442 2751	Bushing - Upper Registration Roller	2
26	A007 4920	Front Side Frame - Fork Gate	1
27	A007 4990	Duplex Tray	1
28	5413 1875	Knob Screw	1
29	A007 4978	Micro Switch Lever	1
30	5413 1882	Stepped Screw	1
31	5206 2826	Spring - Gate Arm	2
32	AA06 0061	Spring - Fork Gate Lever	1
33	AA06 0062	Micro Switch Spring	1
34	5206 2840	Fork Gate Holder	1

Index No.	Part No.	Description	Q'ty Per Assembly
35	A007 4921	Rear Side Frame - Fork Gate	1
36	A007 4970	Fork Gate Lever	1
37	A007 4967	Left Solenoid Gate	1
38	A007 4950	First Gate Arm	1
39	A007 4955	Second Gate Arm	1
40	A007 4979	Fork Gate Solenoid	2
41	5206 2833	Gate Solenoid Bracket	1
42	A007 4976	Fork Gate Solenoid Bracket	1
43	A007 4960	Third Gate Arm	1
44	AA06 6018	Spring - Fork Gate Actuator	1
45	A007 4972	Fork Gate Actuator	1
46	5446 4235	Spring - Hot Roller Stripper	1
47	A007 4973	Release Lever - Fork Gate	1
48	A007 4965	Junction Gate Shaft Arm	1
49	5208 4173	Spring - Stripper	1
50	A007 4980	Fork Gate Setting Plate Bracket	1
51	AA16 1016	Cushion - Fork Gate	2
52	AF02 5002	Fork Gate Pawl - Large	3
53	AF02 5003	Fork Gate Pawl - Small	1
54	A007 4934	Fork Guide Roller	3
55	AA12 0002	Anti-static Brush - Fork Gate 4	1
56	AF02 0027	Exit Roller - Entrance Guide Plate	1
57	A007 4930	Exit Guide Plate - Fork Gate	1
58	AA06 0059	Front Spring - Exit Roller	1
59	AA06 0060	Rear Spring - Exit Roller	1
60	5443 2668	Bushing	2
61	AA12 0001	Anti-static Brush - Fork Gate	3
62	A007 5264	Gate Solenoid Harness	1
63	AA00 1062	Decal - Handle	1
63	AA00 1050	Decal - Handle - A3/A4	1
64	A007 6353	Decal - Reset	1

Index No.	Part No.	Description	Q'ty Per Assembly
101	0313 0040W	Philips Pan Head Screw - M3x4	
102	0313 0060W	Philips Pan Head Screw - M3x6	
103	0434 0060W	Tapping Screw - M4x6	
104	0434 0080W	Tapping Screw - M4x8	
105	0574 0050E	Hexagon Headless Set Screw - M4x5	
106	0574 0060E	Hexagon Headless Set Screw - M4x6	
107	0594 0050E	Hexagon Bolt - M4x5	
108	0700 050W	Flat Washer - M5	
109	0720 0030E	Retaining Ring - M3	
110	0720 0040E	Retaining Ring - M4	
111	0720 0050E	Retaining Ring - M5	
112	0802 5094	Tapping Screw - M4x8	
113	0807 4041	Collar - 6.5x20mm	
114	0807 4123	Spacer - 6x13x1mm	
115	0965 3006W	Tapping Screw With Flat Washer - M3x6	
116	0965 4008W	Tapping Screw With Flat Washer - M4x8	
117	0314 0060W	Philips Pan Head Screw - M4x6	

Index No.	Part No.	Description	Q'ty Per Assembly

10. DUPLEX SECTION 2

May 30, '87

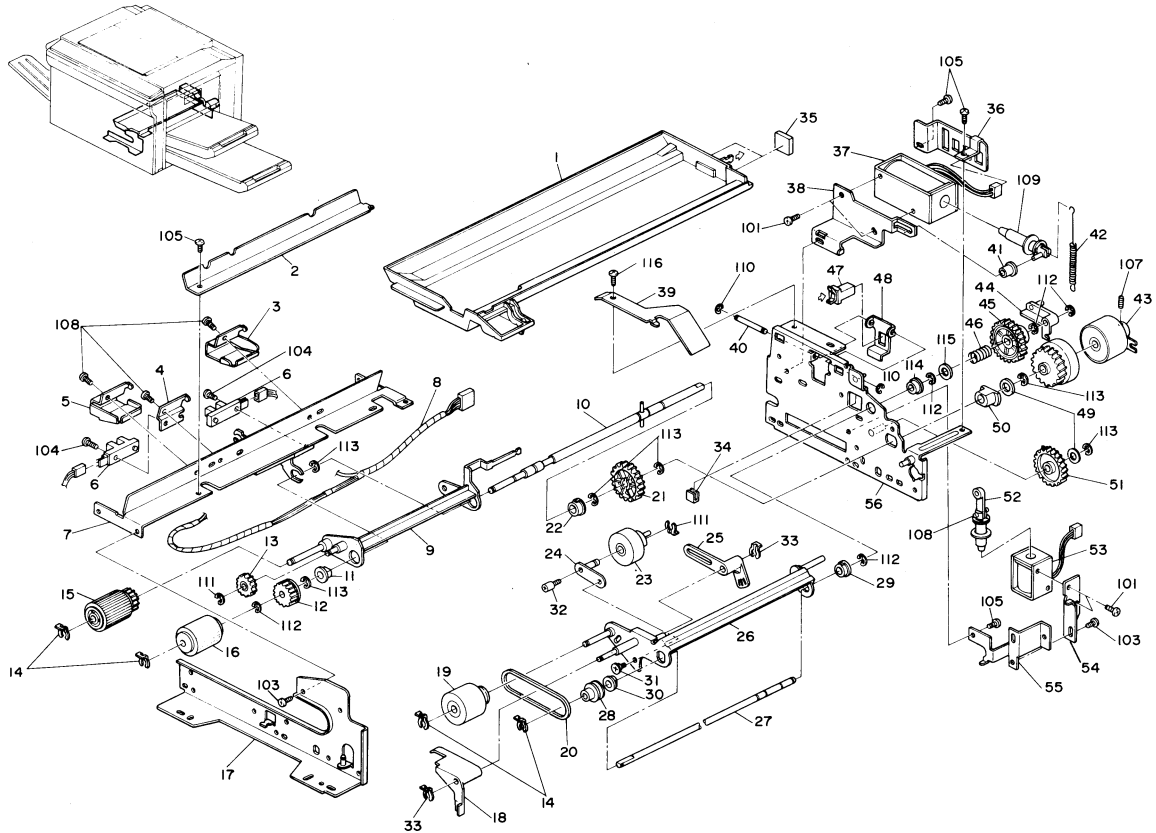

10. DUPLEX SECTION 2

May 30, '87

Index No.	Part No.	Description	Q'ty Per Assembly
*	A007 4520	Duplex Transport Unit	1
1	A007 4846	Toner Catch Pan	1
2	A007 4841	Sensor Harness Cover	1
3	A007 4843	Enteance Actuator Sensor Cover	1
4	5206 2626	Sensor Bracket - Duplex Paper End	1
5	5206 2695	Cover - Duplex Paper Sensor	1
6	5205 5250	L.E.D Sensor Type - S	2
7	A007 4800	Duplex Stay	1
8	A007 5263	Duplex Entrance Harness	1
9	A007 4805	Pick-up Arm	1
10	A007 4809	Duplex Feed Shaft	1
11	5206 2650	Bushing - 8x12x7mm	1
12	AB01 3105	Gear - 18T	1
13	5447 2706	Gear - 15T	1
14	5447 2681	Snap Ring	4
15	AF03 0001	Entrance Actuator Roller	1
16	AF01 0003	Feed Roller	1
17	A007 4700	Front Frame - Duplex Feed	1
18	5206 2690	Duplex Paper Actuator	1
19	AF03 1001	Duplex Feed Roller	1
20	AA04 2001	Feed Drive Belt	1
21	AB01 3087	Gear - 30T	1
22	AA08 0020	Bushing - 8x16x5mm	1
23	5206 2680	Entrance Actuator Roller	1
24	5206 2681	Axle Plate	1
25	5206 2685	Entrance Actuator Plate	1
26	A007 4820	Feed Roller Arm	1
27	AA14 0063	Feed Roller Arm Shaft	1
28	AB03 2017	Feed Roller Pulley - 25T	1
29	AA08 0021	Bushing - 6x12x4mm	1
30	5206 2677	Bushing - 6x10x7mm	1
31	5206 2684	Shoulder Screw - M3	1
32	5206 2687	Stud Screw - M3	1
33	5206 2686	Snap Ring	2
34	AA16 1018	Cushion - Duplex Frame	1

Index No.	Part No.	Description	Q'ty Per Assembly
35	A007 4847	Seal - 5x20x20	1
36	A007 4792	Connector Bracket	1
37	AX11 0006	Duplex Pick-up Solenoid	1
38	A007 4865	Pick-up Solenoid Bracket	1
39	A007 4868	Pick-up Solenid Cover	1
40	5919 2303	Actuator Shaft	1
41	A007 4866	Solenoid Guide Roller	1
42	AA06 0056	Pressure Spring	1
43	AX20 0020	Transport Magnetic Clutch-Duplex Feed	1
44	A007 4826	Duplex Feed Arm	1
45	AB01 3089	Gear - 30T	1
46	AA06 3030	Duplex Spring	1
47	A007 4709	Push Lock	1
48	A007 4710	Push Lock Bracket	1
49	AA13 2025	Spacer - 1x8x12mm	2
50	5206 2651	Ball Bearing - 8x20x13mm	1
51	AB01 3086	Gear - 30T	1
52	A007 4828	Positioning Solenoid Lever	1
53	AX10 0005	Duplex Positioning Solenoid	1
54	A007 4870	Solenoid Bracket	1
55	A007 4871	Duplex Solenoid Bracket	1
56	A007 4705	Rear Frame - Duplex Feed	1

Index No.	Part No.	Description	Q'ty Per Assembly
101	0313 0040W	Philips Pan Head Screw - M3x4	
102	0314 0060W	Philips Pan Head Screw - M4x6	
103	0314 0080W	Philips Pan Head Screw - M4x8	
104	0314 0100W	Philips Pan Head Screw - M4x10	
105	0434 0060W	Tapping Screw - M4x6	
106	0434 0080W	Tapping Screw - M4x8	
107	0574 0060E	Hexagon Headless Set Screw - M4x6	
108	0623 0100E	Spring Pin - 3x10mm	
109	0623 0180E	Spring Pin - 3x18mm	
110	0720 0025E	Retaining Ring - M2.5	
111	0720 0040E	Retaining Ring - M4	
112	0720 0050E	Retaining Ring - M5	
113	0720 0060E	Retaining Ring - M6	
114	0805 3101	Ball Bearing - 6x13x5mm	
115	0807 4043	Spacer	

Index No.	Part No.	Description	Q'ty Per Assembly

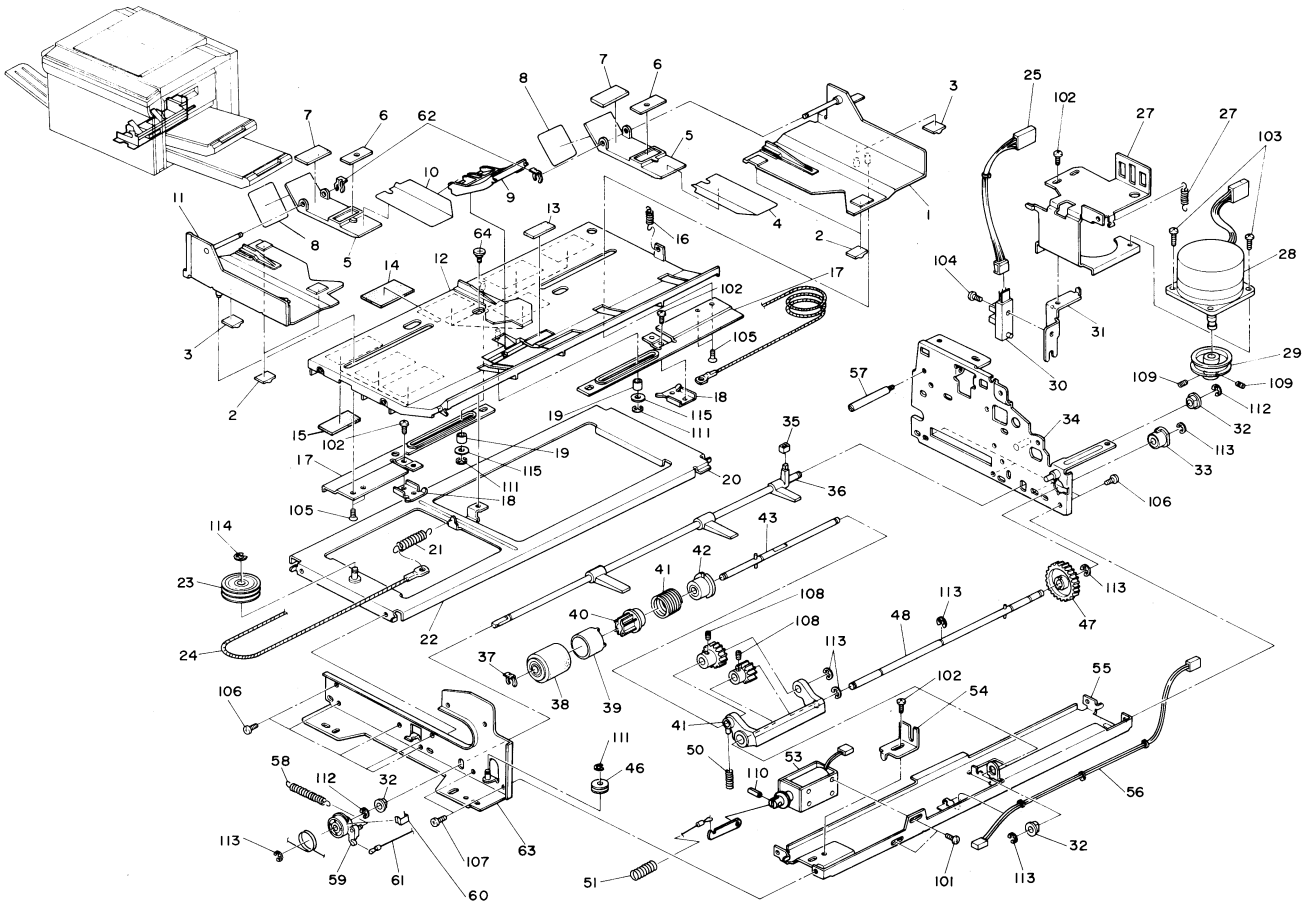

11. DUPLEX SECTION 3

May 30, '87

Index No.	Part No.	Description	Q'ty Per Assembly
*	A007 4500	Jogger Unit	1
*	A007 4510	Front Paper Stopper Guide Unit	1
*	A117 4511	Rear Paper Stopper Guide Unit	1
1	A007 4742	Rear Jogger Fence	1
2	A007 4739	Jogger Fence Shoe - 2	4
3	A007 4740	Jogger Fence Shoe - 1	2
4	A007 4749	Duplex Setter Mylar - Rear	1
5	5206 2925	Duplex Settler	2
6	5206 2926	Weight - Duplex Settler	2
7	5206 2929	Cushion - Duplex Settler	2
8	A007 4752	Duplex Settler Guide	2
9	A007 4730	Duplex Guide Plate - Middle	1
10	A007 4746	Duplex Setter Mylar - Front	1
11	A007 4735	Front Jogger Fence	1
12	A007 4725	Duplex Guide Plate	1
13	5206 2557	Friction Pad - Duplex Guide Plate	1
14	A007 4731	Anti-Vibration Pad - Large	4
15	A007 4732	Anti-Vibration Pad - Small	3
16	5206 2700	Spring - Pick-up Roller	1
17	A007 4744	Guide Plate - Jogger Fence	2
18	5206 2877	Wire Clamp Plate	2
19	A007 4727	Jogger Fence Roller	2
20	AA16 1018	Cushion - Duplex Frame	1
21	5206 2876	Spring - Wire	1
22	A007 4712	Jogger Stay	1
23	5209 1735	Pully	1
24	AA05 0013	Jogger Fence Drive Wire	1
25	A007 5261	Home Sensor Harness	1
26	A007 4720	Jogger Motor Bracket	1
27	5350 2466	Spring - Pressure Arm	1
28	5919 5309	Stepper Motor - DC 4.8W	1
29	A007 4717	Jogger Motor Pulley	1
30	5205 5251	L.E.D Sensor Type - T	1
31	A007 4722	Home Sensor Bracket	1
32	5053 0447	Bushing - M6	3

Index No.	Part No.	Description	Q'ty Per Assembly
33	AA08 3003	Bushing - 6x18x5mm	1
34	A007 4705	Rear Frame - Duplex Feed	1
35	AA16 1016	Cushion - Fork Gate	1
36	A007 4780	Duplex Stopper	1
37	5447 2681	Snap Ring	1
38	5206 2605	Separation Roller	1
39	5447 2678	Slip Clutch Cover	1
40	5447 2688	Output Hub	1
41	5206 2607	Spring - Separation	1
42	5447 2695	Input Hub	1
43	5206 2603	Separation Driven Shaft	1
44	5205 2608	Gear - 23T	1
45	5206 2609	Gear - 22T	1
46	A007 4783	Paper Stopper Pulley	1
47	AB01 3088	Helical Gear - 29T	1
48	A007 4854	Separation Drive Shaft	1
49	A007 4851	Duplex Separation Arm	1
50	AA06 3029	Separation Pressure Spring	1
51	AA06 3027	Spring - Duplex Stopper Solenoid	1
52	A007 4779	Duplex Stopper Solenoid Lever	1
53	5206 5326	Duplex Stopper Solenoid	1
54	A007 4785	Adjusting Plate - Duplex Solenoid	1
55	A007 4849	Bottom Frame - Duplex Feed	1
56	A007 5262	Duplex Stopper Solenoid Harness	1
57	5447 2833	Pin - Manual Feed Table	1
58	AA06 0058	Spring - Duplex Stopper Cam	1
59	A007 4782	Paper Stopper Pulley	1
60	A007 4786	Wire Clamp	1
61	AA05 1002	Wire - Duplex Stopper Solenoid	1
62	5206 2689	Snap Ring	2
63	A007 4700	Front Frame - Duplex Feed	1
64	5442 2117	Shoulder Screw - Hinge	1

Index No.	Part No.	Description	Q'ty Per Assembly
101	0313 0050W	Philips Pan Head Screw - M3x5	
102	0314 0060W	Philips Pan Head Screw - M4x6	
103	0314 0080W	Philips Pan Head Screw - M4x8	
104	0314 0100W	Philips Pan Head Screw - M4x10	
105	0323 0060W	Philips Sunken Head Screw - M3x6	
106	0434 0060W	Tapping Screw - M4x6	
107	0434 0080W	Tapping Screw - M4x8	
108	0574 0040E	Hexagon Headless Set Screw - M4x4	
109	0574 0060E	Hexagon Headless Set Screw - M4x6	
110	0623 0120E	Spring Pin - 3x12mm	
111	0720 0030E	Retaining Ring - M3	
112	0720 0040E	Retaining Ring - M4	
113	0720 0050E	Retaining Ring - M5	
114	0720 0060E	Retaining Ring - M6	
115	0807 3014	Nylon Washer	

Index No.	Part No.	Description	Q'ty Per Assembly

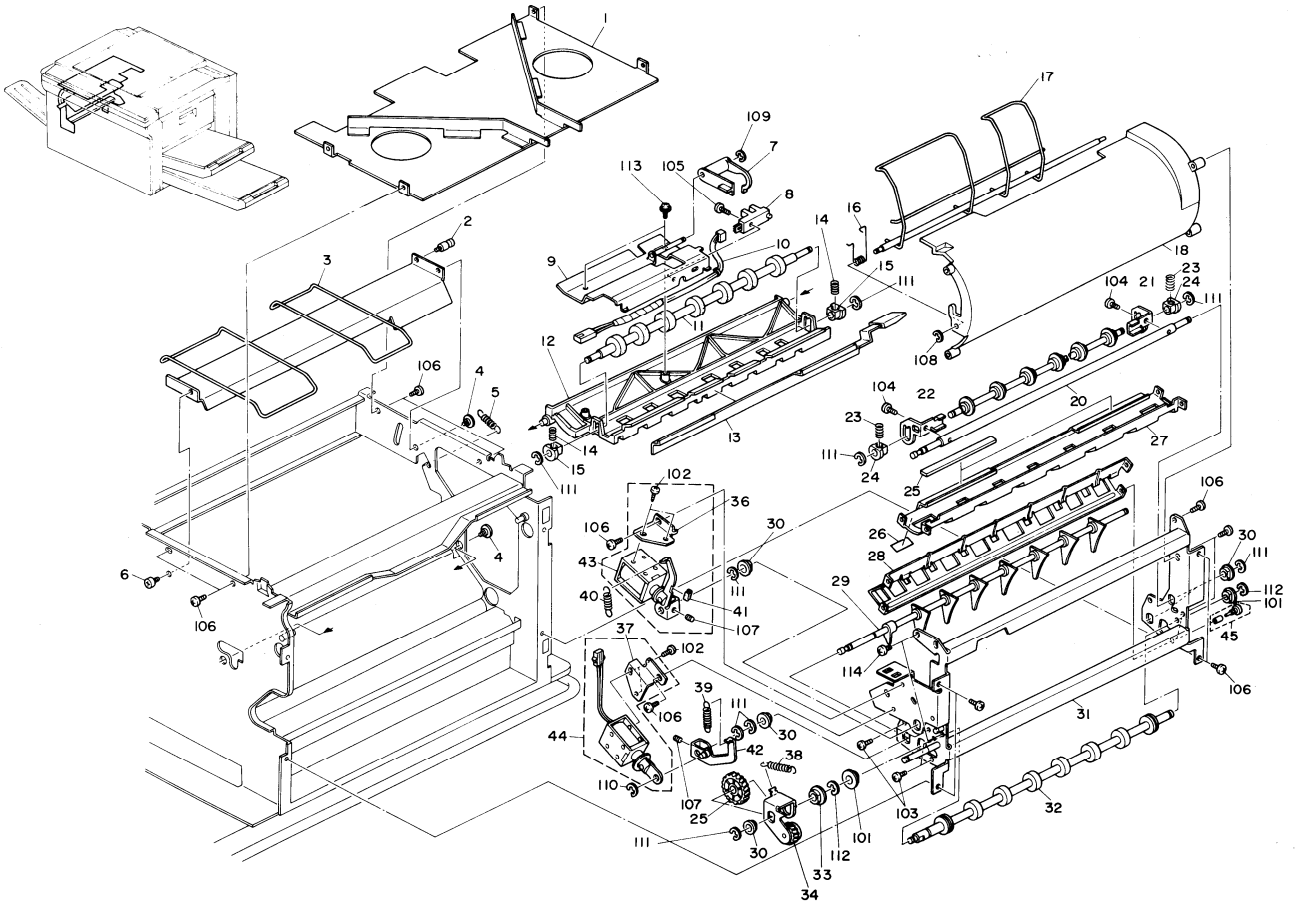
1
2
3
4
5
6
7
8
9
10
11
12
13
14
15
16
17
18
20
21
22
23
24
25
26
27
28
29
30
31
32
33
34
36
37
38
39
40
41
42
43
44
45
101
102
103
104
105
106
107
108
109
110
111
112
113
114

12. INVERTOR SECTION 1

May 30, '87

Index No.	Part No.	Description	Q'ty Per Assembly
*	A007 4409	Inverter Unit	1
1	A007 1930	Vacuum Fan Duct	1
2	5403 2049	Spring Anchor	1
3	A007 4455	Upper Guide - Inverter Unit	1
4	5403 2075	Stepped Screw	2
5	5207 4405	Spring - Fusing	1
6	5206 2687	Stud Screw - M3	1
7	A007 4466	Paper Entrance Feeler	1
8	5205 5251	LED Sensor Type - T	1
9	A007 4463	Paper L.E.D. Sensor Bracket	1
10	A007 5260	Inverter Guide Entrance Harness	1
11	AF02 0029	Inverter Return Roller	1
12	A007 4461	Guide Plate - Open and Shut	1
13	A007 4460	Guide Holder Pressure	1
14	5205 4527	Spring - Exit	2
15	5442 2751	Bushing - Upper Registration Roller	2
16	5206 4388	Spring - Inverter Guide	1
17	A007 4630	Inverter Guide	1
18	A007 4625	Inverter Guide Pltee	1
19	AF02 0031	Inverter Pressure Roller	1
20	AA14 0049	Inverter Pressure Shaft	1
21	A007 4616	Inverter Pressure Arm - Front	1
22	A007 4617	Inverter Pressure Arm - Rear	1
23	5206 4478	Spring - Drive Roller	2
24	AA08 0031	Bushing	2
25	AA02 0007	Inverter Unit Magnet	1
26	AA16 1017	Cushion - Junction Gate	1
27	A007 4620	Upper Guide - Inverter Pressure	1
28	A007 4623	Lower Guide - Inverter Pressure	1
29	AF02 5001	Junction Gate	1
30	5053 0447	Bushing - M6	4
31	A007 4600	Side Frame - Inverter Unit	1
32	AF02 2003	Inverter Return Roller	1
33	5304 1639	Bushing - 8mm	1
34	A007 4605	Drive Gear Bracket - Inverter Roller	1
35	AB01 3084	Gear - 23T	1
36	A007 4675	Pressure Solenoid Bracket	1
37	A007 4660	Junction Gate Solenoid Bracket	1
38	5918 2307	Spring - Drive Motor Tension	1
39	AA06 0055	Spring - Inverter Pressure Release	1
40	AA06 0057	Spring - Inverter Pressure	1
41	AA16 1018	Cushion - Duplex Frame	1
42	A007 4655	Junction Gate Lever	1
43	A007 4669	Inverter Pressure Solenoid	1
44	A007 4659	Junction Gate Solenoid	1
45	5887 4162	Screw - Driven Guide Plate	1
101	0313 0040E	Philips Pan Head Screw - M3x4	
102	0313 0040W	Philips Pan Head Screw - M3x4	
103	0313 0060W	Philips Pan Head Screw - M3x6	
104	0314 0060W	Philips Pan Head Screw - M4x6	
105	0314 0100W	Philips Pan Head Screw - M4x10	
106	0434 0080W	Tapping Screw - M4x8	
107	0574 0060E	Hexagon Headless Set Screw - M4x6	
108	0720 0025E	Retaining Ring - M2.5	
109	0720 0030E	Retaining Ring - M3	
110	0720 0040E	Retaining Ring - M4	
111	0720 0050E	Retaining Ring - M5	
112	0720 0060E	Retaining Ring - M6	
113	0965 3006W	Tapping Screw With Flat Washer - M3x6	
114	0965 4008W	Tapping Screw With Flat Washer - M4x8	

13. INVERTOR SECTION 2

May 30, '87

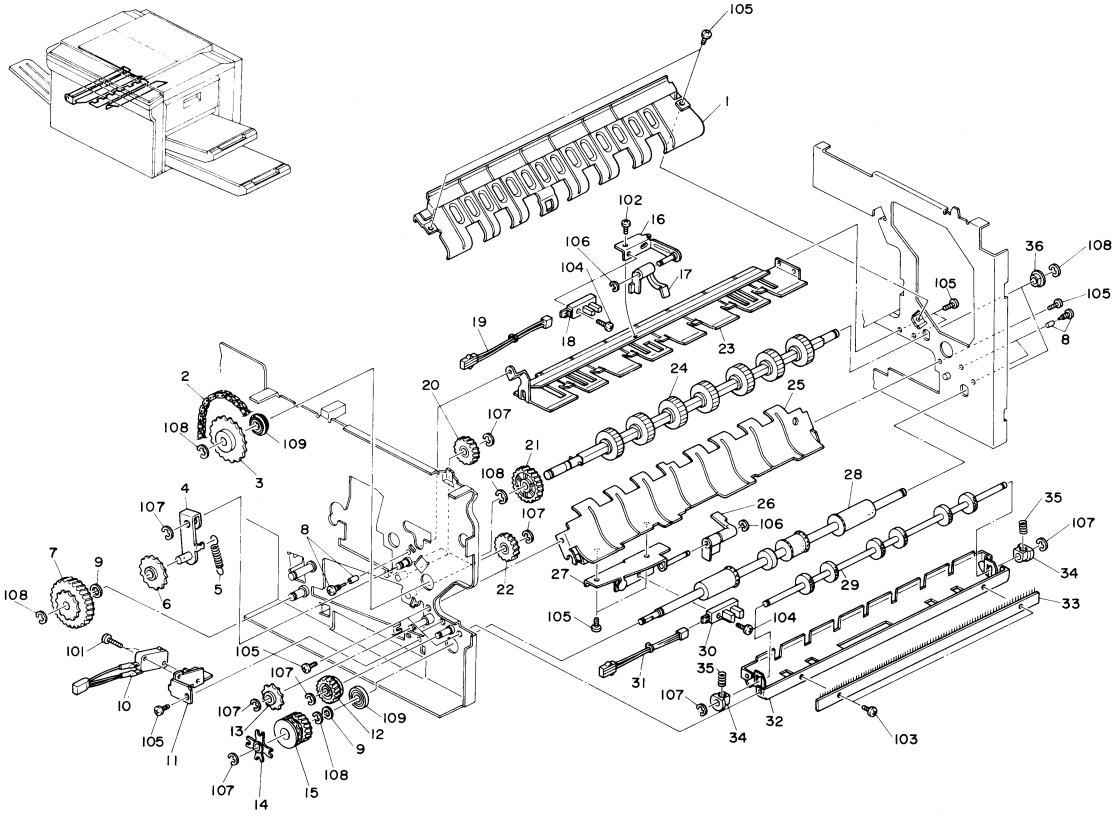

13. INVERTOR SECTION 2

May 30, '87

Index No.	Part No.	Description	Q'ty Per Assembly
1	A007 4450	Guide Plate - Inverter Unit	1
2	A007 1140	Bushed Roller Chain - 160P	1
3	5205 1100	Sprocket - 24T	1
4	5205 1105	Chain Tightener	1
5	AA06 0064	Tension Spring	1
6	5442 1110	Sprocket - 20T	1
7	AB01 7031	Sprocket - 16T/36T	1
8	5887 4162	Screw - Driven Guide Plate	2
9	AA13 2025	Spacer - 1x8x12mm	2
10	A007 5231	Transfer Safety Switch	1
11	5206 2850	Bracket - Transfer Safety Switch	1
12	AB01 3083	Gear - 18T	1
13	5205 1101	Sprocket - 12T	1
14	5442 4495	Slip Clutch	1
15	AB02 6006	Sprocket - 23T	1
16	A007 4481	Exit Sensor Bracket	1
17	A007 4484	Exit Sensor Feeler	1
18	5205 5250	LED Sensor Type - S	1
19	A007 5265	L.E.D. Sensor Harness	1
20	AB01 3082	Gear - 18T	1
21	AB01 3080	Gear - 27T	1
22	AB01 3081	Gear - 18T	1
23	A007 4478	Guide Plate - Exit Inverter Unit	1
24	AF02 0030	Inverter Roller	1
25	A007 4487	Exit Guide Plate - Upper	1
26	A007 4492	Paper Exit Feeler	1
27	A007 4490	Paper Exit Feeler Bracket	1
28	AF04 0006	Exit Roller	1
29	5205 4518	Upper Exit Roller	1
30	5205 5251	L.E.D Sensor Type - T	1
31	A007 5261	Home Sensor Harness	1
32	A007 4485	Exit Guide Plate - Upper	1
33	5206 2808	Anti Static Brush - Duplex Transport	1
34	5442 2751	Bushing - Upper Registration Roller	2
35	5205 4527	Spring - Exit	2
36	5304 1639	Bushing - 8mm	1
101	0313 0140W	Philips Pan Head Screw - M3x14	
102	0314 0060W	Philips Pan Head Screw - M4x6	
103	0314 0080W	Philips Pan Head Screw - M4x8	
104	0314 0100W	Philips Pan Head Screw - M4x10	
105	0434 0080W	Tapping Screw - M4x8	
106	0720 0030E	Retaining Ring - M3	
107	0720 0050E	Retaining Ring - M5	
108	0720 0060E	Retaining Ring - M6	
109	0805 3291	Ball Bearing - 8x16x5mm	

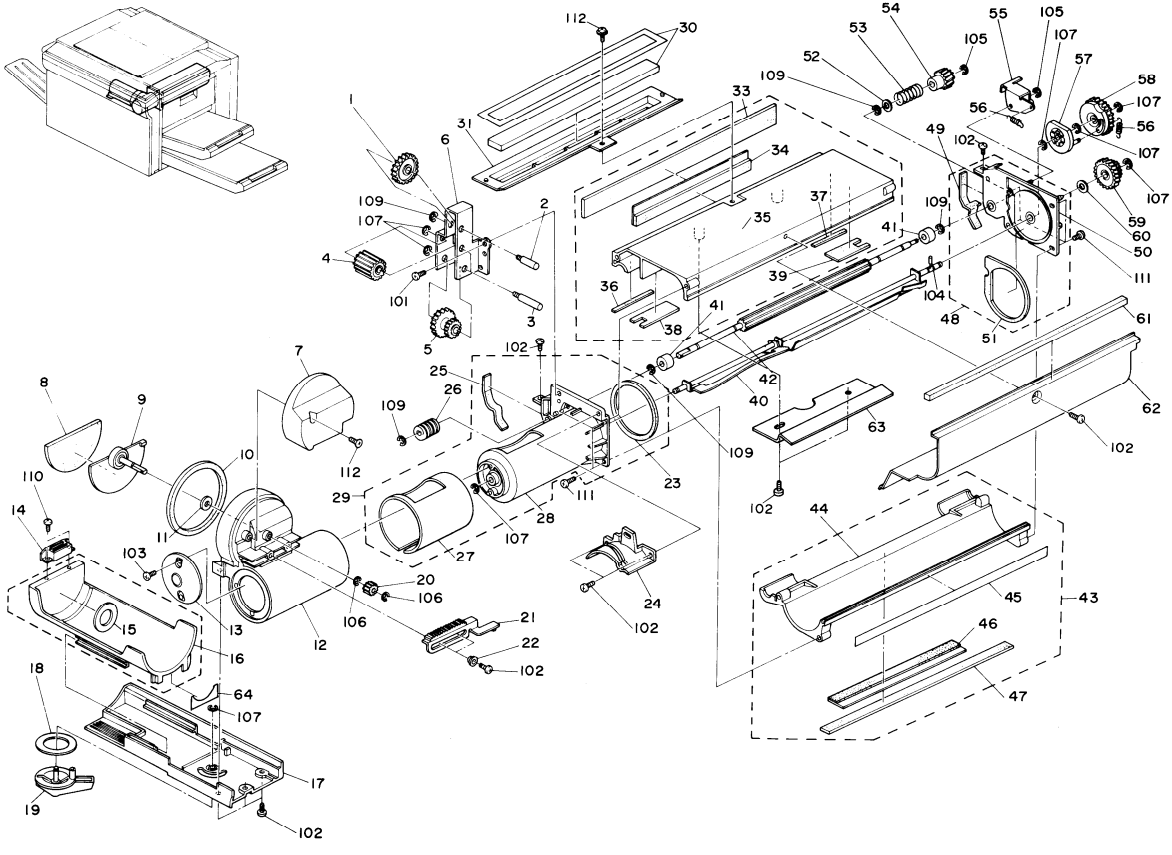

14. DEVELOPMENT 1

May 30, '87

Index No.	Part No.	Description	Q'ty Per Assembly
*	A007 3051	Development Unit	1
*	A007 3199	Toner Supply Unit	1
1	5205 3314	Gear - 20T	1
2	5205 3316	Upper Shaft	1
3	5205 3317	Lower Shaft	2
4	AB01 5001	Gear - 14T	1
5	AB01 7033	Gear - Toner Cartridge Drive	1
6	A007 3391	Cartridge Drive Bracket	1
7	A007 3256	Toner Hopper Pipe Cover	1
8	AA15 1026	Seal - Toner Shutter	1
9	A007 3271	Toner Shutter	1
10	AA15 1024	Seal - Toner Hopper Entrance	1
11	AA15 1025	Seal - Toner Hopper Pipe	1
12	A007 3251	Toner Hopper Pipe	1
13	A007 3290	Toner Hopper Pipe Cover	1
14	5054 0536	Magnet Catch Ass'y	1
15	5205 3374	Positioning Lug - Toner Supply	1
16	A007 3223	Toner Supply Bracket	1
17	A007 3221	Toner Supply Cover	1
18	5205 3421	Seal - Bottle Release Lever	1
19	A007 3286	Bottle Release Lever	1
20	AB01 1017	Gear - 15T	1
21	A007 3281	Toner Shutter Rack	1
22	5403 2048	Bushing - 4mm	1
23	AA15 1039	Seal - 2x51x60	1
24	A007 3388	Rack Guide Bracket	1
25	AA15 1030	Seal - 2x11x75	1
26	AB01 3093	Worm Gear	1
27	AA15 1040	Seal - 3x72x172	1
28	A007 3351	Front Side Plate - Toner Tank	1
29	A007 3350	Front Side Plate Ass'y - Toner Tank	1
30	AA01 2005	Filter Bracket - Development Unit	1
31	A007 3176	Development Filter	1
32	A007 3341	Upper Hopper Case Ass'y	1
33	AA15 1028	Seal - 3x28x308	1

Index No.	Part No.	Description	Q'ty Per Assembly
34	AA15 1038	Seal - 4x16x210	1
35	A007 3342	Upper Hopper Case	1
36	AA15 1034	Seal - 2x3x53	1
37	AA15 1035	Seal - 2x3x45	1
38	AA15 1036	Seal - 2x16x53	1
39	AA15 1037	Seal - 2x16x45	1
40	AD03 9001	Toner Agitator	1
41	A007 3311	Seal - Toner Supply Shaft	2
42	AD03 3001	Toner Supply Shaft	1
43	A007 3321	Lower Hopper Case Ass'y	1
44	A007 3322	Lower Hopper Case	1
45	A007 3395	Toner Hopper Casing Sheet	1
46	AA15 1033	Seal - 4x12x211	1
47	AA15 1029	Seal - 2x15x308	1
48	A007 3360	Hopper Side Plate Ass'y - Rear	1
49	AA15 1031	Seal - Toner Hopper	1
50	A007 3361	Hopper Side Plate - Rear	1
51	AA15 1041	Seal - 2x50x58	1
52	AA13 2025	Spacer - 1x8x12mm	1
53	5203 1136	Registration Drive Spring	1
54	AB01 3071	Gear - 16T	1
55	A007 3380	Toner End Actuator	1
56	5442 3233	Spring - Drive Wheel	2
57	A007 3376	Cam Wheel - Toner End	1
58	AB01 3102	Gear - 47T	1
59	AB01 7032	Idler Gear - Toner Hopper	1
60	AA13 2024	Spacer - 1x6x10mm	1
61	AA15 1023	Seal - 8x8x278	1
62	A007 3195	Guide Plate - Development Unit	1
63	A007 3343	Toner Agitator Scraper	1
64	5205 3373	Plate Spring - Toner Supply Bracket	1

Index No.	Part No.	Description	Q'ty Per Assembly
101	0314 0060W	Philips Pan Head Screw - M4x6	
102	0314 0080W	Philips Pan Head Screw - M4x8	
103	0344 0060D	Philips Truss Head Screw - M4x6	
104	0622 0060E	Spring Pin - 2x6mm	
105	0720 0030E	Retaining Ring - M3	
106	0720 0040E	Retaining Ring - M4	
107	0720 0050E	Retaining Ring - M5	
108	0720 0070E	Retaining Ring - M7	
109	0720 0060E	Retaining Ring - M6	
110	0802 5085	Tapping Screw - M4x8	
111	0802 5086	Tapping Screw - M4x10	
112	0951 4008W	Philips Screw With Flat Washer - M4x8	

Index No.	Part No.	Description	Q'ty Per Assembly

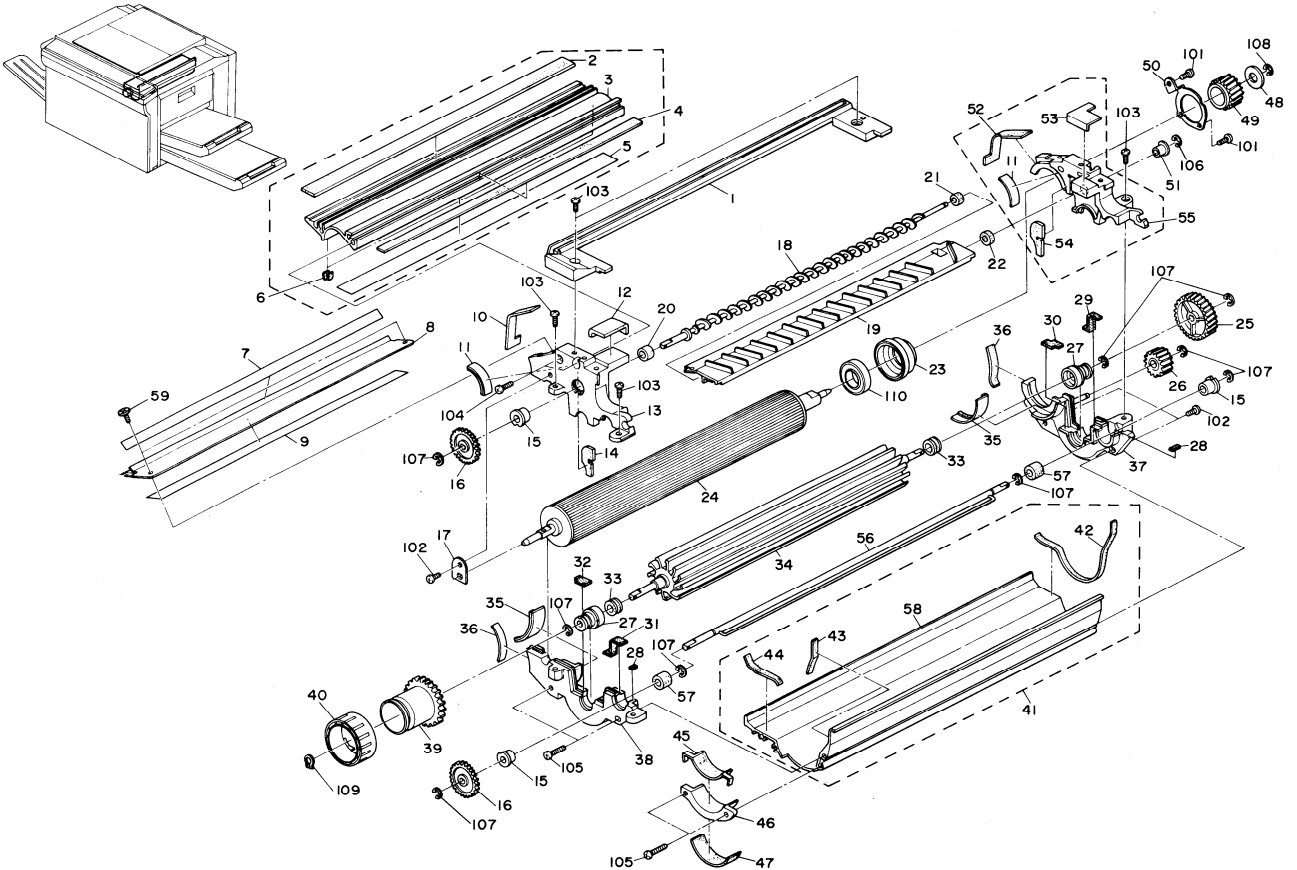
1
2
3
4
5
6
7
8
9
10
11
12
13
14
15
16
17
18
19
20
21
22
23
24
25
26
27
28
29
30
31
32
33
34
35
36
37
38
39
40
41
42
43
44
45
46
47
48
49
50
51
52
53
54
55
56
57
58
59
101
102
103
104
105
106
107
108
109
110

15. DEVELOPMENT 2

May 30, '87

Index No.	Part No.	Description	Q'ty Per Assembly
1	A007 3198	Development Unit Guide	1
2	AA15 1060	Seal - 3x16x310	1
3	AD03 0001	Doctor Blade	1
4	AA15 1059	Seal - 2x8x310	1
5	A007 3162	Seal - Doctor Blade 1	1
6	5215 3162	Side Seal - Doctor Blade	2
7	A007 3194	Guide Plate - Anti Static Brush	1
8	AA15 1022	Anti-Static Brush-Development Unit	1
9	A007 3191	Entrance Seal Retainer	1
10	AA15 1063	Seal - 2x5x55	1
11	A007 3082	Seal Plate - Upper Side Plate	2
12	AA15 1056	Seal - 3x27x39	1
13	A007 3141	Front Upper Side Plate	1
14	AA15 1057	Separator Seal - Rear	1
15	5205 3103	Bushing - 6mm	3
16	5215 3167	Gear - 25T	2
17	A007 3128	Adjusting Plate - Magnet Angle	1
18	AD03 7001	Development Anger	1
19	AD03 6001	Back Spill Plate	1
20	AA15 1061	Seal - 6x11x5	1
21	AA15 1062	Seal - 3x10x6.5	1
22	5215 3180	Seal - Ring	1
23	AA08 4003	Holder - Development Roller Bearing	1
24	AD03 1020	Development Roller	1
25	AB01 3091	Gear - 39T	1
26	A007 3135	Idle Gear - 17T	1
27	AA08 0010	Bushing - 6mm	2
28	AA15 1046	Seal - 2x2x5	2
29	AA15 1052	Lower Side Plate Seal - Large	1
30	AA15 1051	Seal - 2x5x10	1
31	AA15 1048	Seal - 2x5x28	1
32	AA15 1047	Seal - 2x5x10	1
33	5219 3326	Rubber Seal - Paddle Roller	2
34	AD03 8002	Paddle Roller	1
35	A007 3062	Seal Plate - Lower Side Plate	2

Index No.	Part No.	Description	Q'ty Per Assembly
36	AA15 1021	Seal - 3x7x55	2
37	A007 3071	Rear Lower Side Plate	1
38	A007 3061	Front Lower Side Plate	1
39	5215 3101	Gear - 44T	1
40	5215 3089	Developer Knob	1
41	A007 3054	Development Bottom Plate Ass'y	1
42	AA15 1042	Seal - 3x5x142	1
43	AA15 1044	Seal - 3x8x40	1
44	AA15 1045	Seal - 3x5x41	1
45	AA15 1049	Seal - 2x17x94	1
46	A007 3075	Side Plate Bracket - Dev Unit	1
47	AA15 1050	Seal - 2x12x64	1
48	AA13 2020	Spacer - 8.5x20x0.5mm	1
49	AB01 3092	Gear - 24T	1
50	A007 3126	Bearing Retainer	1
51	AA08 0015	Bushing - 3x6x6mm	1
52	AA15 1020	Seal - 2x16x20	1
53	AA15 1058	Seal - 3x27x28	1
54	AA15 1055	Separator Seal - Front	1
55	A007 3151	Rear Upper Side Plate	1
56	AD03 9003	Toner Agitator	1
57	AA15 1053	Seal - 6x12x7	2
58	A007 3055	Development Bottom Plate	1
59	5894 2540	Arm Screw	2

Index No.	Part No.	Description	Q'ty Per Assembly
101	0313 0050W	Philips Pan Head Screw - M3x5	
102	0314 0080W	Philips Pan Head Screw - M4x8	
103	0314 0100W	Philips Pan Head Screw - M4x10	
104	0314 0200W	Philips Pan Head Screw - M4x20	
105	0434 0100W	Tapping Screw - M4x10	
106	0720 0025E	Retaining Ring - M2.5	
107	0720 0050E	Retaining Ring - M5	
108	0720 0060E	Retaining Ring - M6	
109	0727 0050E	Retaining Ring - M5	
110	0805 3410	Ball Bearing - 15x28x7mm	

Index No.	Part No.	Description	Q'ty Per Assembly

16. TRANSFER AND SEPARATION

May 30, '87

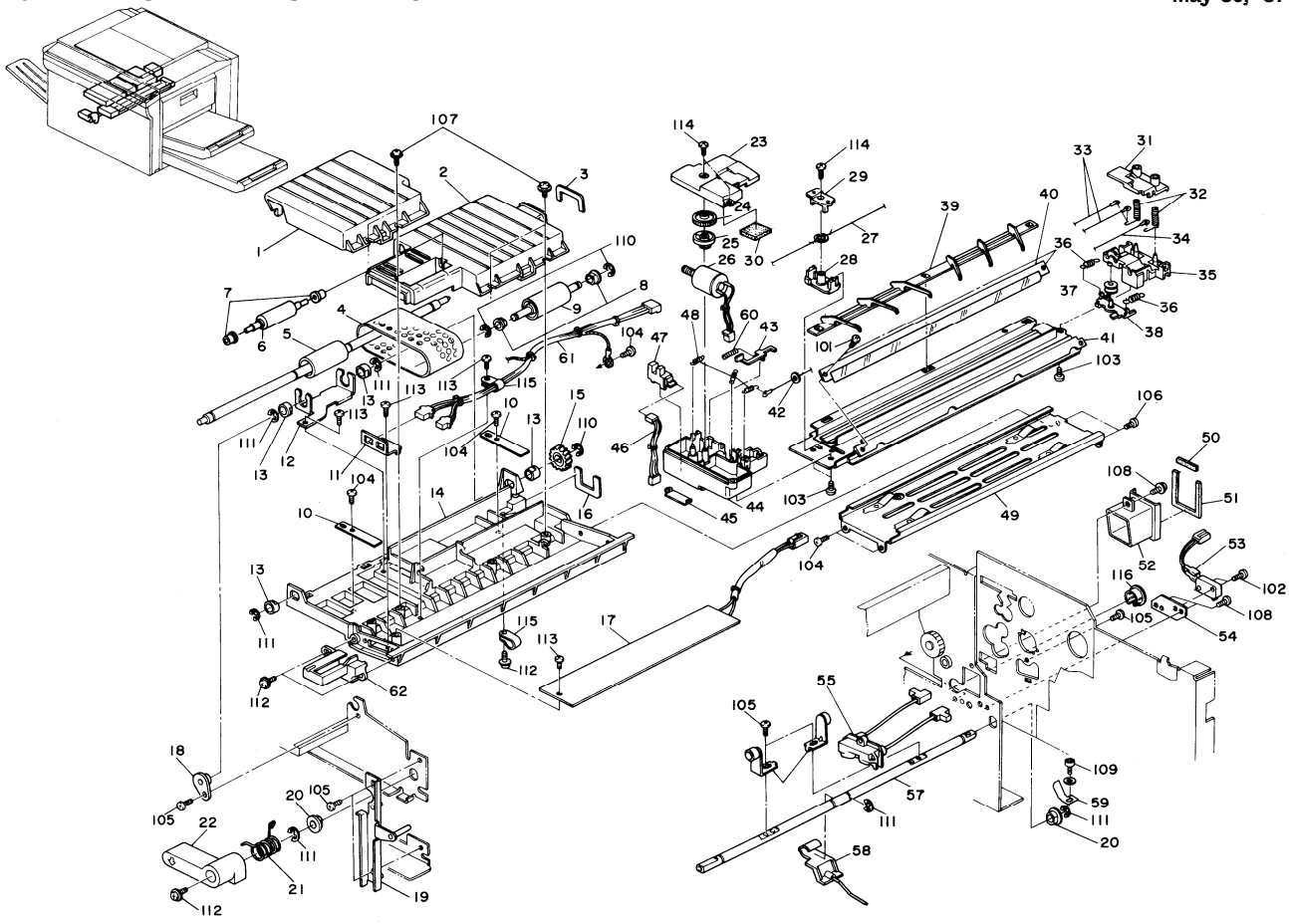

16. TRANSFER AND SEPARATION

May 30, '87

Index No.	Part No.	Description	Q'ty Per Assembly
1	A007 3905	Transport Guide Plate - Front	1
2	A007 3907	Transport Guide Plate - Rear	1
3	AA15 1070	Seal - Transport Upper	1
4	AA04 0007	Transport Belt	1
5	A007 3971	Drive Roller - Transport Belt	1
6	5215 3942	Transport Guide Roller	1
7	5443 2668	Bushing	2
8	5053 0447	Bushing - M6	2
9	5215 3923	Drive Roller	1
10	A007 3911	Leaf Spring - Transport	2
11	A007 3882	Connector Bracket	1
12	A007 3974	Transport Drive Shaft Bracket	1
13	5215 3931	Bushing - 8mm	4
14	A007 3901	Base Plate - Transport Unit	1
15	AB01 1005	Gear - 18T	1
16	AA15 1071	Seal - Transport Lower	1
17	A007 5405	Drum Heater	1
18	AA08 0017	Supporter - Drive Roller	1
19	A007 5007	Fixed Holder - Toner Tray	1
20	5053 0223	Bushing - 8mm	2
21	AA06 6021	Transport Lever Spring	1
22	A007 3939	Transport Lever	1
23	AD02 2023	Front End Block Cover - T & S	1
24	AB01 0011	Gear - 56T	1
25	AB03 2014	Cleaner Drive Pulley	1
26	A008 5321	Motor - DC 5V/1.3W	1
27	A007 3872	Cleaner Drive Wire - Separation	1
28	A007 3868	Separation Cleaner Slider	1
29	A007 3863	Separation Corona Cleaner	1
30	A008 2091	Support Pad - Cleaner Motor	1
31	AD02 2025	Rear End Block Cover - T & S	1
32	AD02 4003	Termianl Spring - T & S	2
33	A007 9004	Separation Corona Wire (10pcs/set)	1
34	A007 9003	Transfer Corona Wire (10pcs/set)	1
35	AD02 2024	Rear End Block - T & S	1

Index No.	Part No.	Description	Q'ty Per Assembly
36	AA06 0045	Tension Cleaner Spring	2
37	AB03 2015	Cleaner Idler Pulley	1
38	A007 3870	Tension Bracket - Wire Cleaner	1
39	A007 3867	Paper Guide - T & S Corona	1
40	5215 2119	T & S Corona Guide Plate	1
41	AD02 3015	T & S Corona Casing	1
42	5219 9060	Plastic Ring - 3x6x1mm (10pcs/set)	1
43	A007 3875	Sensor Feeler - Separation Corona	1
44	AD02 2022	Front End Block - T & S	1
45	A008 2090	Support - Cleaner Sensor	1
46	AZ40 0004	Cleaner Sensor Harness	1
47	5216 5245	Photointerrupter - IL-G-3P-S3T2-E	1
48	5446 3944	Spring - Charge Wire PCC	3
49	A007 3877	T & S Corona Casing	1
50	AA15 1073	Seal - 3x5x30	1
51	AA15 1074	Seal - 3x4x122	1
52	A007 3927	Transport Duct	1
53	A007 5231	Transfer Safety Switch	1
54	A007 3941	Transport Switch Bracket	1
55	AD02 1010	T & S Corona Receptacle	1
56	A007 3934	Transport Lock Lever	2
57	AA14 0057	Transport Lock Shaft	1
58	A007 4750	Low Shaft Guide - Transport	1
59	A007 3932	Leaf Spring - Micro Switch	1
60	AA06 3020	Feeler Spring	1
61	A007 5214	Transport Unit Harness	1
62	A007 3883	T & S Corona Cover	1

Index No.	Part No.	Description	Q'ty Per Assembly
101	0313 0060W	Philips Pan Head Screw - M3x6	
102	0313 0120W	Philips Pan Head Screw - M3x12	
103	0314 0050W	Philips Pan Head Screw - M4x5	
104	0314 0060W	Philips Pan Head Screw - M4x6	
105	0314 0080W	Philips Pan Head Screw - M4x8	
106	0314 0200W	Philips Pan Head Screw - M4x20	
107	0414 0082W	Tapping Screw With Flat Washer - M4x8	
108	0434 0080W	Tapping Screw - M4x8	
109	0594 0060W	Hexagon Bolt - M4x6	
110	0720 0050E	Retaining Ring - M5	
111	0720 0060E	Retaining Ring - M6	
112	0951 4008W	Philips Screw With Flat Washer - M4x8	
113	0965 4008W	Tapping Screw With Flat Washer - M4x8	
114	0971 3006A	Philips Polycarbonate Screw - M3x6	
115	1105 0005	Nylon Clip - 3N	
116	1106 0430	Bushing - 13mm	

Index No.	Part No.	Description	Q'ty Per Assembly

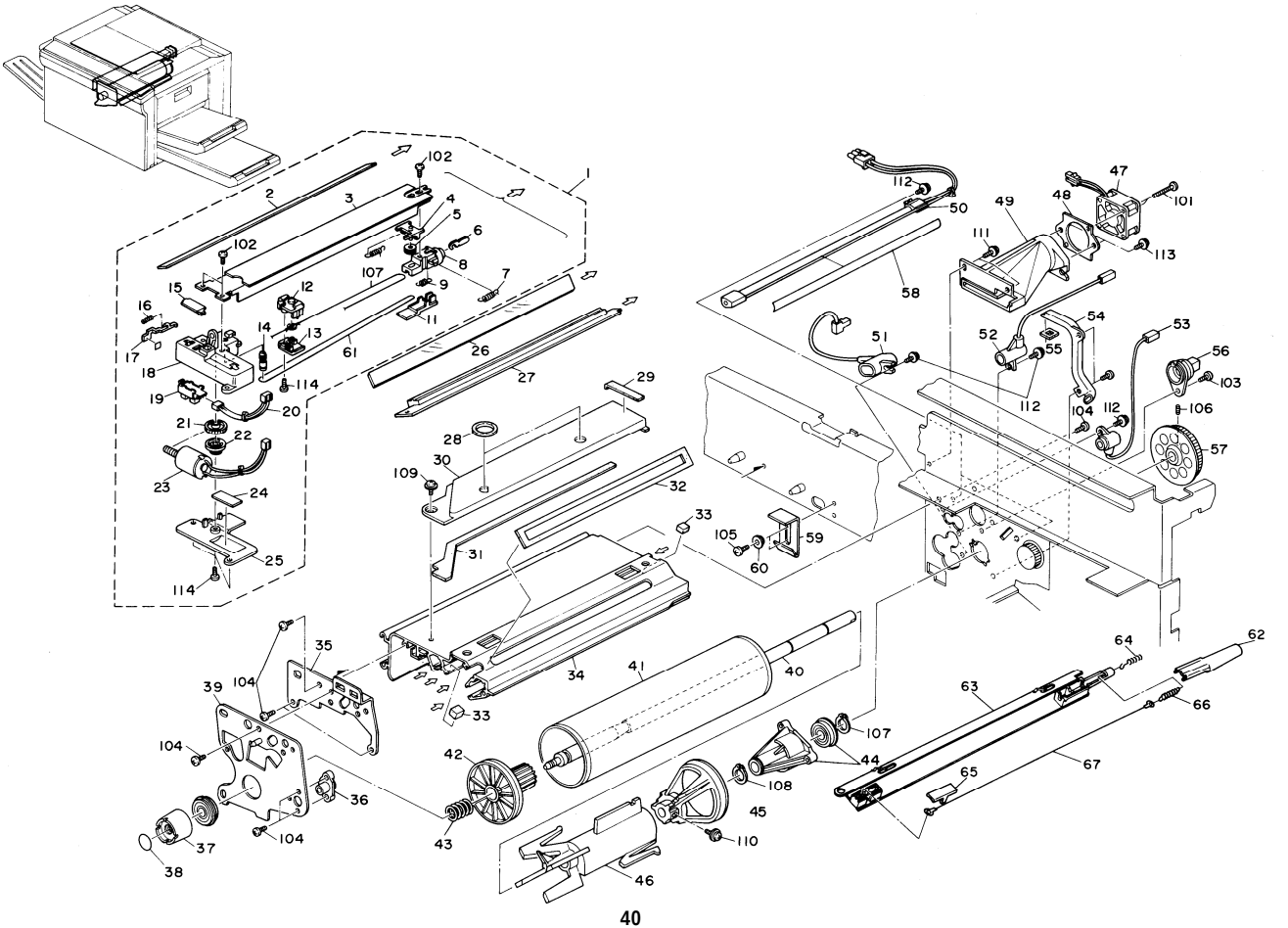
1
2
3
4
5
6
7
8
9
11
12
13
14
15
16
17
18
19
20
21
22
23
24
25
26
27
28
29
30
31
32
33
34
35
36
37
38
39
40
41
42
43
44
45
46
47
48
49
50
51
52
53
54
55
56
57
58
59
60
61
62
63
64
65
66
67
101
102
103
104
105
106
107
108
109
110
111
112
113
114

17. DRUM SECTION 1

May 30, '87

Index No.	Part No.	Description	Q'ty Per Assembly
1	AD00 4003	Charge Corona Unit	1
2	AA01 1005	PTL Filter	1
3	AD02 3008	Pulley Support - Charge Corona	1
4	A008 2080	Pulley Support - Charge Corona	1
5	AB03 2015	Cleaner Idler Pulley	1
6	5442 2110	Plug - Corona Unit	1
7	AA06 0045	Tension Cleaner Spring	2
8	AD02 2012	Rear End Block - Charge Corona	1
9	5442 2108	Spring - Corona Wire	1
10	A008 2095	Slider Drive Wire	1
11	AD02 2014	Rear Cover - Charge Corona	1
12	A008 2084	Cleaner Slider	1
13	A008 2085	Cleaner - Charge Corona	1
14	AD02 4001	Adjusting Screw	1
15	A008 2090	Support - Cleaner Sensor	1
16	AA06 3020	Feeler Spring	1
17	AA11 1001	Charge Corona Feeler	1
18	AD02 2011	Front End Block - Charge Corona	1
19	5216 5245	Photointerrupter - IL-G-3P-S3T2-E	1
20	AZ40 0004	Cleaner Sensor Harness	1
21	AB01 0011	Gear - 56T	1
22	AB03 2014	Cleaner Drive Pulley	1
23	A008 5321	Motor - DC 5V/1.3W	1
24	A008 2091	Support Pad - Cleaner Motor	1
25	AD02 2013	Front Cover - Charge Corona	1
26	AC01 5001	Dust Proof Glass	1
27	AX50 0010	Eraser	1
28	5219 3312	Seal - 2x17x23	2
29	AA15 1030	Seal - 2x11x75	1
30	A007 2152	Air Guide Plate	1
31	AA15 1068	Seal - 2x7x357	1
32	AA15 1067	Seal - 2x8x310	2
33	AA15 1065	Seal - C & D Rail	2
34	A007 2051	C & D Rail	1
35	A007 2121	Drum Stay Support Bracket	1
36	5442 3154	Holder - Development Unit	1
37	A007 2140	Drum Shaft Knob	1
38	A007 6811	Decal - Drum Shaft Knob	1
38	A007 6813	Decal - Drum Shaft Knob - 220V	1
39	A007 2133	Drum Stay Support Plate	1
40	AA14 0054	Drum Support Shaft	1
41	5205 9510	Drum	1
42	A007 2145	Front Drum Flange	1
43	AA06 3018	Drum Flange Spring	1
44	A007 2137	Drum Stay Support Bracket	1
45	5211 2285	Rear Flange	1
46	5447 2286	Drum Guide	1
47	AX04 0006	Blower Fan Motor	1
48	A007 2149	Blower Bracket	1
49	A007 2146	Blower Duct	1
50	AX50 0011	Quinching Lamp	1
51	AD02 1007	Receptacle - PCC	1
52	AD02 1008	Receptacle - PQC	1
53	AD02 1009	Bias Receptacle	1
54	A007 2155	ID Sensor Duct	1
55	AA15 1066	Seal - Sensor Duct	1
56	AD02 1012	Main Corona Receptacle	1
57	A007 2267	Drum Drive Pulley - 112T	1
58	AA01 1008	QL - Filter	1
59	A007 3197	Development Unit Clamp	1
60	5403 2048	Bushing - 4mm	1
61	A008 9001	Main Corona Wire (10pcs/set)	1
62	AD02 2019	Rear Cover - PCC End Block	1
63	A007 3690	PQC - Casing	1
64	AA06 3025	PQC Terminal Spring	1
65	AD02 2017	Front Cover PCC End Block	1
66	5442 2108	Spring - Corona Wire	1
67	A007 9002	PCC/PQC Colona Wire (10pcs/set)	1

Index No.	Part No.	Description	Q'ty Per Assembly
101	0313 0450W	Philips Pan Head Screw - M3x45	
102	0314 0050W	Philips Pan Head Screw - M4x5	
103	0314 0080W	Philips Pan Head Screw - M4x8	
104	0434 0060W	Tapping Screw - M4x6	
105	0434 0080W	Tapping Screw - M4x8	
106	0534 0050E	Headless Screw - M4x5	
107	0725 0100E	Retaining Ring C - M10	
108	0725 0120E	Retaining Ring C - M12	
109	0951 4008W	Philips Screw With Flat Washer - M4x8	
110	0951 4012W	Philips Screw With Flat Washer - M4x12	
111	0951 4060W	Philips Screw With Flat Washer - M4x6	
112	0951 4008W	Philips Screw With Flat Washer - M4x8	
113	0965 4010W	Tapping Screw With Flat Washer - M4x10	
114	0971 3006A	Philips Polycarbonate Screw - M3x6	

Index No.	Part No.	Description	Q'ty Per Assembly

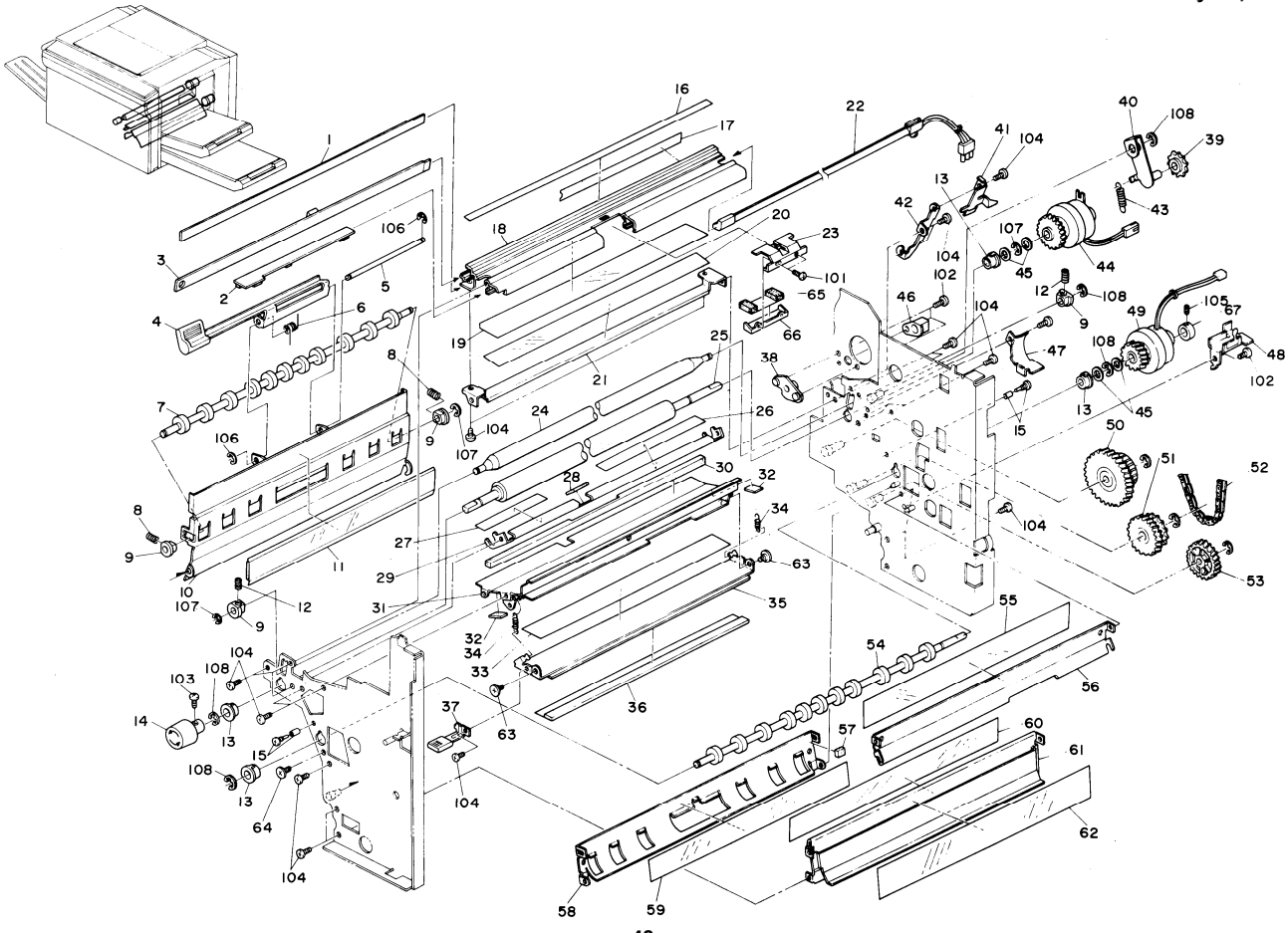

18. DRUM SECTION 2

Index No.	Part No.	Description	Q'ty Per Assembly
1	AA01 1005	PTL Filter	1
2	AW40 0005	Paper Registration Sensor	1
3	AW40 0003	Toner Density Sensor	1
4	A007 2606	Release Transport Guide Lever	1
5	5205 2691	Shaft - Paper Guide Plate	1
6	5205 2694	Spring - Paper Guide Plate	1
7	AF02 0024	Lower Middle Roller	1
8	AA06 3041	Relay Roller Spring	2
9	5205 2697	Bushing - Upper Registration Roller	4
10	A007 2592	Transport Guide	1
11	A007 2597	Cushion Transport Guide	1
12	5442 2754	Spring - Registration Roller	2
13	5215 2672	Bushing	4
14	A007 2577	Registration Knob	1
15	5887 4162	Screw - Driven Guide Plate	2
16	A007 2110	PTL Guide Sheet	1
17	A007 2109	PTL Guide Cover	1
18	A007 2101	PTL Guide	1
19	5215 2281	Mylar Seal - Guide PTL Cover	1
20	A007 3886	PTL Guide Plate	1
21	A007 3885	PTL Guide Holder	1
22	AX50 0008	Pre - Transfer Lamp 430V/1.3W	1
23	A007 2783	Paper Dust Scraper Cover	1
24	AF02 0021	Upper Registration Roller	1
25	AF02 0022	Lower Registration Roller	1
26	A007 2624	Registration Lower Guide - Long	1
27	A007 2625	Registration Lower Guide - Short	1
28	5205 2584	Cushion - Guide Registration Lower	1
29	A007 2614	Registration Lower Guide	1
30	AA15 1069	Seal - 10x12x370	1
31	A007 2616	Registration Upper Guide	1
32	A007 2628	Cushion - Registratin Upper Guide	2
33	A007 2620	Transport Middle Guide - Upper	1
34	5205 2579	Spring - Guide	2
35	A007 2619	Transport Middle Guide	1
36	A007 2626	Cushion - Transport Middle	1
37	A007 2632	Knob - Transport Middle Guide	1
38	A007 2129	Development Rear Holder	1
39	AB02 3018	Sprocket - 15T	1
40	A007 2903	Chain Tightener	1
41	A007 2116	Density Sensor Conector Bracket	1
42	A007 2115	Density Sensor Bracket	1
43	AA06 0050	Tightener Spring	1
44	AX20 0017	Registration Magnetic Clutch	1
45	AA13 2025	Spacer - 1x8x12mm	4
46	A007 3480	Development Bias Receptacle	1
47	A007 2909	Bushed Roller Guide Bracket	1
48	A007 2713	Magnetic Clutch Stopper	1
49	AX20 0021	Transport Magnetic Clutch	1
50	A007 1114	Pulley & Gear - 36T/45T	1
51	AB01 7020	Drive Gear - 18T/30T	1
52	A007 2910	Bushed Roller Chain - 106P	1
53	AB01 3068	Gear - 30T	1
54	AF02 0023	Upper Middle Roller	1
55	A007 2623	Separate Duplex Guide	1
56	A007 2622	Separate Lower Guide	1
57	A007 2608	Cushion - Transport Upper Guide	1
58	A007 2604	Transport Upper Guide	1
59	A007 2605	Transport Aid Guide	1
60	A007 2644	Paper Bank Aid 2 - Duplex	1
61	A007 2640	Paper Bank Guide - Duplex	1
62	A007 2643	Paper Bank Aid 1 - Duplex	1
63	5403 2075	Stepped Screw	2
64	5840 1632	Stepped Screw	1
65	A007 2782	Paper Dust Scraper	1
66	A007 2781	Paper Dust Scraper Bracket	1
67	5205 2866	Magnetic Clutch Collar	1

Index No.	Part No.	Description	Q'ty Per Assembly
101	0313 0060W	Philips Pan Head Screw - M3x6	
102	0314 0080W	Philips Pan Head Screw - M4x8	
103	0314 0100W	Philips Pan Head Screw - M4x10	
104	0434 0080W	Tapping Screw - M4x8	
105	0574 0050E	Hexagon Headless Set Screw - M4x5	
106	0720 0040E	Retaining Ring - M4	
107	0720 0050E	Retaining Ring - M5	
108	0720 0060E	Retaining Ring - M6	

Index No.	Part No.	Description	Q'ty Per Assembly

19. CLEANING UNIT 1

May 30, '87

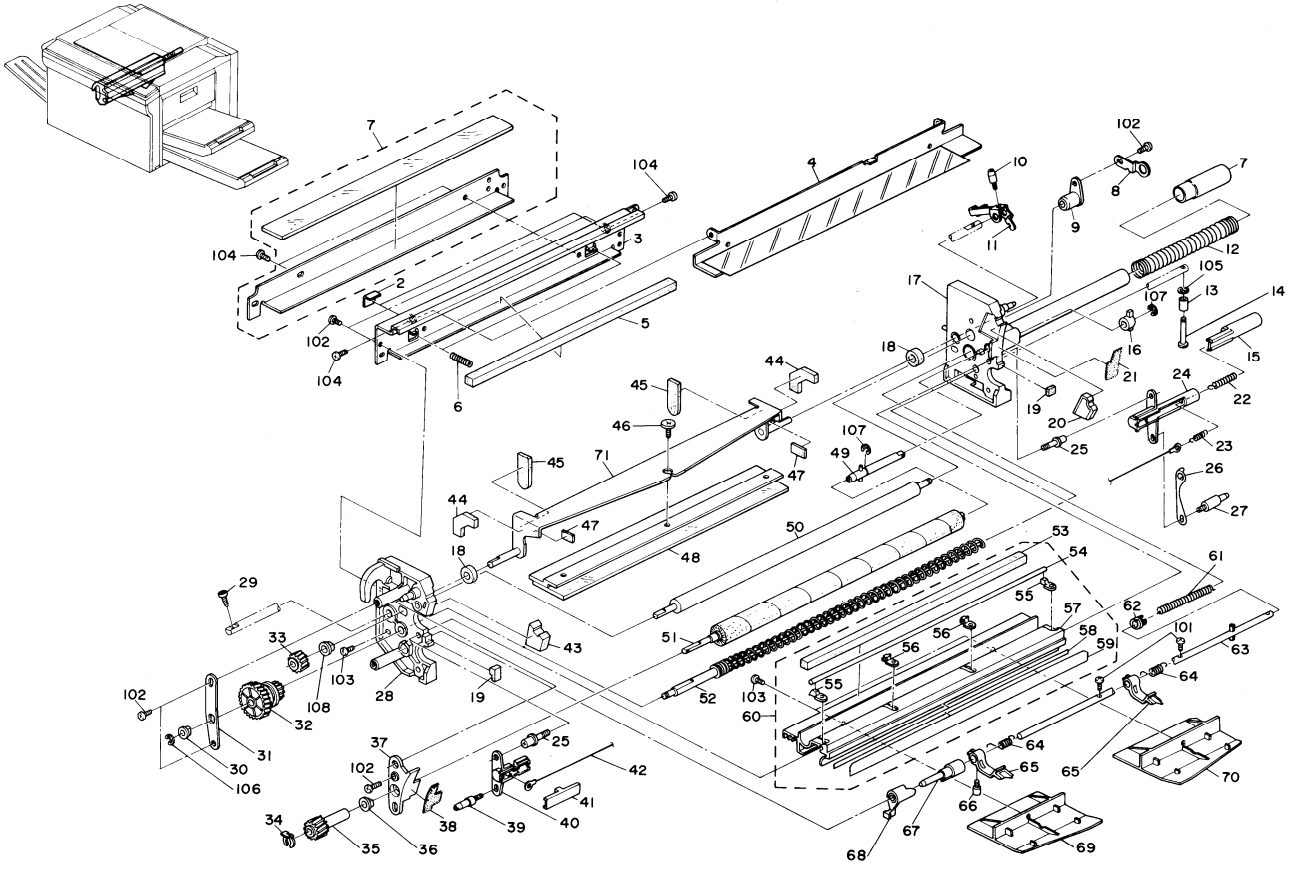

19. CLEANING UNIT 1

Index No.	Part No.	Description	Q'ty Per Assembly
*	AD00 2003	Cleaning Unit	1
1	A008 3587	Bias Roller Blade	1
2	A007 3583	Seal - Upper Casing	2
3	A007 3582	Upper Casing - Cleaning Unit	1
4	A007 3584	Cleaning Blade Cleaner	1
5	AA15 1080	Seal - 12x10x318	1
6	AA06 3023	Cleaning Blade Spring	1
7	5446 3619	Toner Receiving Pipe	1
8	A007 3614	Spring Brush - Bias Roller	1
9	AA08 2006	Bushing Bias Roller	1
10	5413 3903	Pin - Transfer Guide Plate	1
11	A007 3642	Pressure Arm - Cleaning Blade	1
12	AA06 3024	Toner Receiving Spring	1
13	5418 2116	Spacer - Guard	1
14	AA14 3034	Pin - Separator Shaft	1
15	AD02 2019	Rear Cover - PCC End Block	1
16	A007 3572	Cleaning Brush Joint	1
17	A007 3561	Rear Side Plate - Cleaning	1
18	5442 3593	Seal - Cleaning Balde Shaft	2
19	AA15 1078	Rubber Seal - Cleaning	2
20	AA15 1079	Seal - Blade Rear	1
21	AA15 2005	Side Seal - Cleaning Rear	1
22	AA06 3025	PQC Terminal Spring	1
23	5442 2108	Spring - Corona Wire	1
24	AD02 2018	Rear End Block - PCC	1
25	AA14 3032	Positioning Stud - End Block	2
26	A007 3655	Cleaning Grounding Plate	1
27	AA14 3031	Rear Position Pin	1
28	A007 3551	Front Side Plate - Cleaning	1
29	AA14 3029	Blade Swing Pin	1
30	5203 4244	Bushing - 4x8x6mm	1
31	A007 3685	Gear Support Bracket Cleaning	1
32	AB01 7027	Gear - 34T/21T	1
33	AB01 1011	Gear - 14T	1
34	5447 2681	Snap Ring	1
35	AB01 1010	Gear - 16T	1
36	5446 3707	Bushing - 6x10x6mm	1
37	A007 3604	Cleaning Brush Holder	1
38	AA15 2006	Side Seal - Cleaning Front	1
39	AA14 3030	Front Position Pin	1
40	AD02 2016	Front End Block - PCC	1
41	AD02 2017	Front Cover - PCC End Block	1
42	A007 9002	PCC/PQC Corona Wire (10pcs/set)	1
43	AA15 1077	Seal - Blade Front	1
44	AA15 1085	Seal - Outer	2
45	AA15 1083	Seal - Inner	2
46	5446 3648	Stepped Screw - M4	1
47	AA15 1082	Seal - 11x16x2	2
48	5205 3565	Cleaning Blade	1
49	A007 3570	Cleaning Brush Drive Shaft	1
50	AD04 5001	Cleaning Biash Roller	1
51	AD04 2002	Cleaning Brush	1
52	AD04 3004	Toner Collection Coil	1
53	A008 3624	Seal - Cleaning Unti Casing	1
54	A008 3558	Beater Bar	1
55	A007 3693	Outer Holder - Brater Bar	2
56	A007 3594	Inner Holder - Beater Bar	2
57	A007 3591	Lower Casing - Cleaning Unit	1
58	5215 3591	Tape - Entrance Seal	1
59	AD04 7002	Seal - Cleaning Entrance	1
60	A007 3590	Lower Casing Ass'y - Cleaning Unit	1
61	5442 3904	Spring - Pick-off Pawl Slide	1
62	5205 3981	Collar	1
63	5205 3958	Pick-off Pawl Shaft	1
64	5205 3965	Spring	2
65	AD02 5001	Pick-off Pawl	2
66	5205 3966	Set Screw	2
67	5205 3975	Cam	1
68	5205 3950	Cam	1
69	A008 3611	Front Pick-off Guide Plate	1
70	A008 3612	Rear Pick-off Guide Plate	1
71	A007 3631	Cleaning Blade Holder	1
72	5418 2859	Spring - Regist Roller (Front)	1
101	0313 0060W	Philips Pan Head Screw - M3x6	
102	0314 0080W	Philips Pan Head Screw - M4x8	
103	0314 0120W	Philips Pan Head Screw - M4x12	
104	0434 0080W	Tapping Screw - M4x8	
105	0720 0025E	Retaining Ring - M2.5	
106	0720 0030W	Retaining Ring - M3	
107	0720 0040E	Retaining Ring - M4	
108	0734 0607D	Bushing - 6x7	

20. CLEANING UNIT AND TONER COLLECTION

May 30, '87

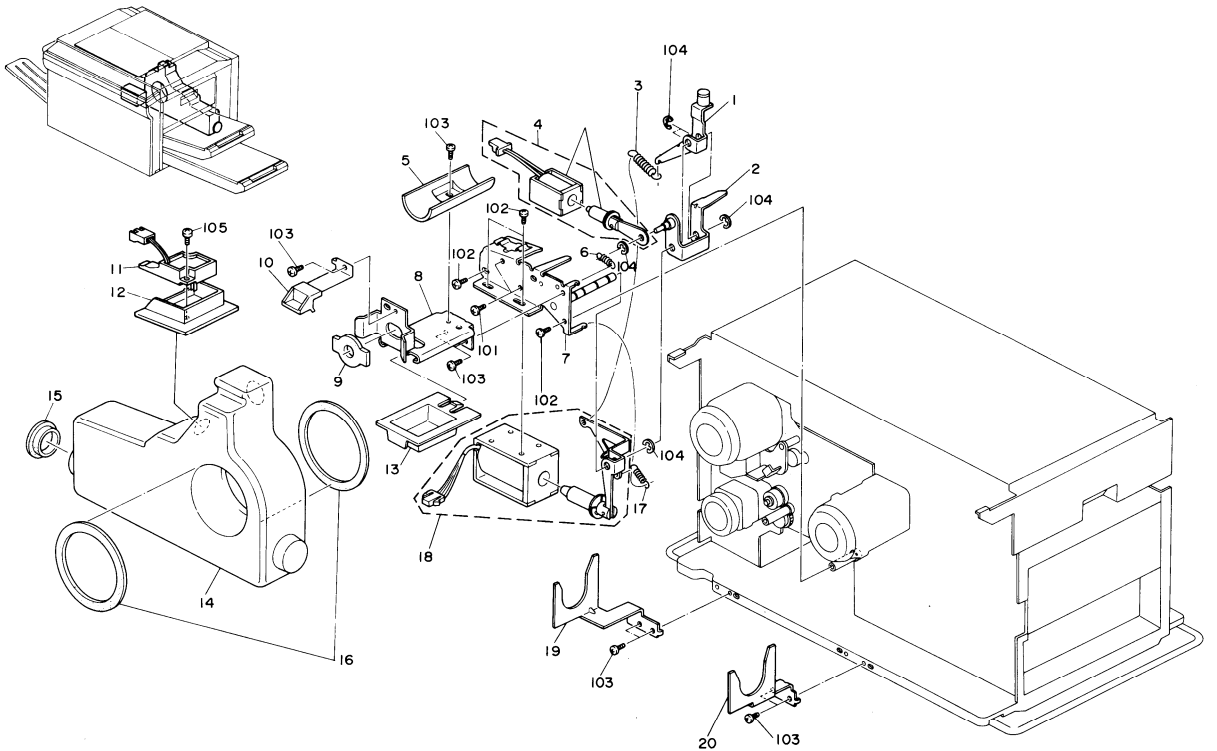

20. CLEANING UNIT AND TONER COLLECTION

May 30, '87

Index No.	Part No.	Description	Q'ty Per Assembly
1	A007 3707	Pressure Lever	1
2	A007 3710	Pick-off Pawl Lever	1
3	AA06 3031	Cleaning Blade	1
4	5205 3964	Pick-off Solenoid	1
5	A007 3784	Pipe - Toner Collection Receiver	1
6	5413 1812	Spring - Drum Return Arm	1
7	A007 3702	Blade Solenoid Bracket	1
8	A007 3780	Toner Collection Bracket	1
9	AA15 1075	Seal - Toner Collection	1
10	A007 3770	Leaf Spring - Toner Collection Tank	1
11	5215 5304	Toner Overflow Sensor	1
12	A007 3762	Sensor Holder	1
13	A007 3783	Toner Collection Receiver	1
14	AA03 2002	Toner Collection Tank	1
15	A007 3751	Cap Large - Toner Collection Tank	1
16	AA15 1076	Seal - Toner Collection Tank	2
17	5433 3785	Spring	1
18	A007 3715	Blade Solenoid	1
19	A007 3781	Right Bracket - Toner Collection	1
20	A007 3782	Left Bracket - Toner Collection	1

Index No.	Part No.	Description	Q'ty Per Assembly
101	0313 0060W	Philips Pan Head Screw - M3x6	
102	0314 0080W	Philips Pan Head Screw - M4x8	
103	0434 0080W	Tapping Screw - M4x8	
104	0720 0040E	Retaining Ring - M4	
105	0965 3006W	Tapping Screw With Flat Washer - M3x6	

21. FUSING UNIT 1

May 30, '87

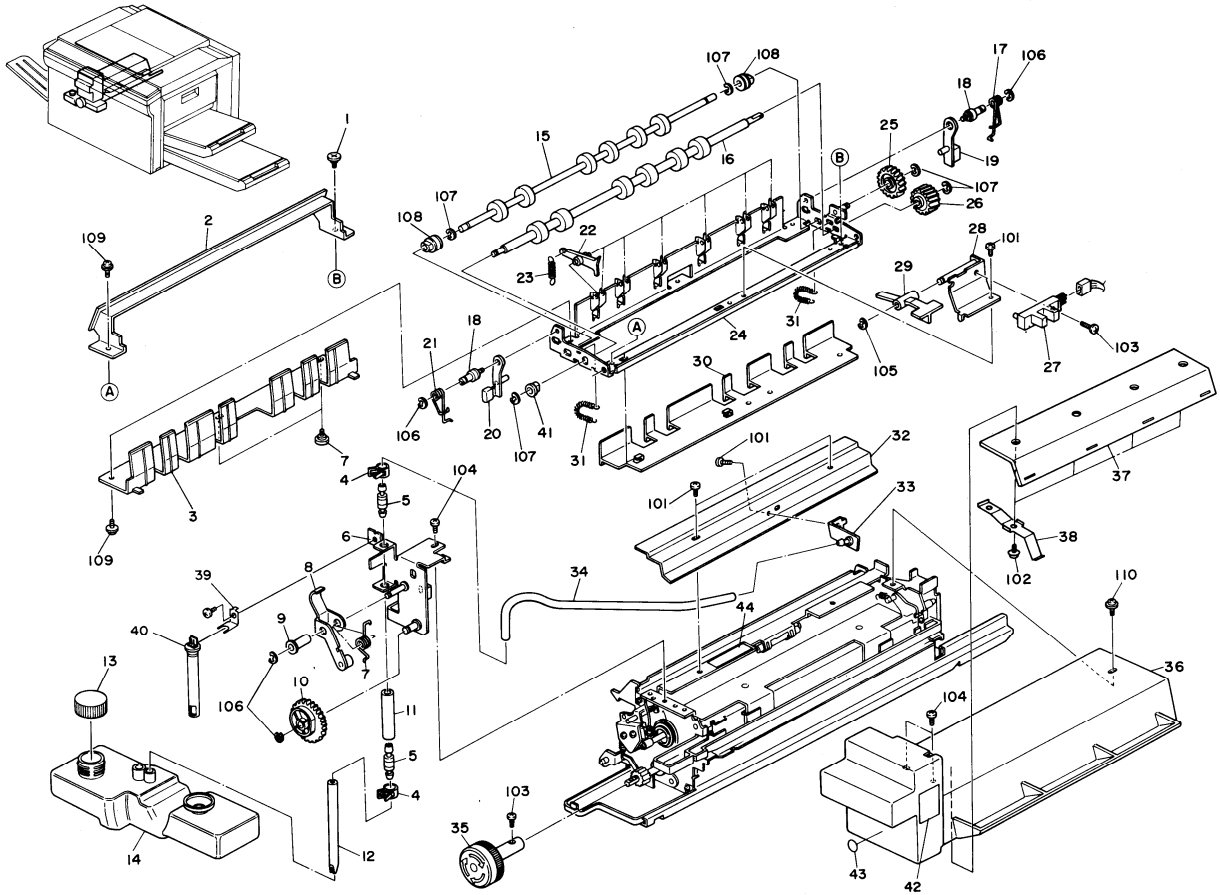

21. FUSING UNIT 1

Index No.	Part No.	Description	Q'ty Per Assembly
*	A007 4017	Fusing Unit - 115V	1
*	A007 4027	Fusing Unit - 220V	1
1	5840 1632	Stepped Screw	3
2	A007 4325	Fusing Exit Guide Plate	1
3	A007 4323	Upper Exit Guide	1
4	5447 4241	Tube Clamp	2
5	5415 4310	Valve - Oil Pump	2
6	A007 4240	Oil Supply Bracket	1
7	AA06 6012	Spring - Oil Pump Actuator	1
8	A007 4251	Oil Pump Actuator	1
9	AA08 0016	Bushing - 5x7x16	1
10	AB01 7038	Gear - 32T	1
11	5447 4229	Sleeve - Oil Pump	1
12	AA18 0001	Oil Tube - 7.8mm	1
13	AA03 6001	Oil Bottle Cap	1
14	AA03 1001	Oil Tank	1
15	5209 4470	Upper Exit Roller	1
16	AF04 0005	Lower Exit Roller	1
17	5442 4464	Spring - Rear Release Lever	1
18	5442 4444	Stud - Exit Ass'y Release Lever	2
19	A007 4344	Rear Release Lever - Exit Ass'y	1
20	A007 4341	Front Release Lever - Exit Ass'y	1
21	5442 4463	Spring - Front Release Lever	1
22	A007 9005	Hot Roller Stripper (6pcs/set)	1
23	5214 4122	Stripper Spring	6
24	A007 4310	Fusing Exit Frame	1
25	AB01 3062	Gear - 19T	1
26	AB01 3090	Gear - 17T	1
27	5205 5251	LED Sensor Type - T	1
28	A007 4332	Fusing Exit Sensor Bracket	1
29	A007 4331	Fusing Exit Sensor Feeler	1
30	A007 4322	Lower Exit Guide	1
31	5415 4457	Spring - Exit	2
32	A007 4227	Shielding Plate	1
33	A007 4228	Silicon Oil Nozzle	1
34	AA18 0002	Oil Tube 320mm	1
35	AG05 0006	Fusing Unti Knob	1
36	A007 4229	Fusing Unit Cover	1
37	AA17 2003	Heat Shielding Sheet	1
38	A007 4232	Leaf Spring - Heat Shield	1
39	A007 4253	Leaf Spring - Oil End Sensor	1
40	5209 5320	Oil End Sensor	1
41	5053 0447	Bushing - M6	1
42	5442 6126	Decal - High Temperature	1
43	AA00 1054	Decal - B3	1
44	5215 4211	Decal - Thermofuse	1
101	0314 0060W	Philips Pan Head Screw - M4x6	
102	0413 0062W	Tapping Screw - M3x6	
103	0314 0100W	Philips Pan Head Screw - M4x10	
104	0434 0080W	Tapping Screw - M4x8	
105	0720 0030E	Retaining Ring - M3	
106	0720 0040E	Retaining Ring - M4	
107	0720 0050E	Retaining Ring - M5	
108	0805 3399	Bushing - 6x10x8mm	
109	0951 4006W	Philips Screw With Flat Washer - M4x6	
110	0964 4008W	Tapping Screw With Flat Washer - M4x8	

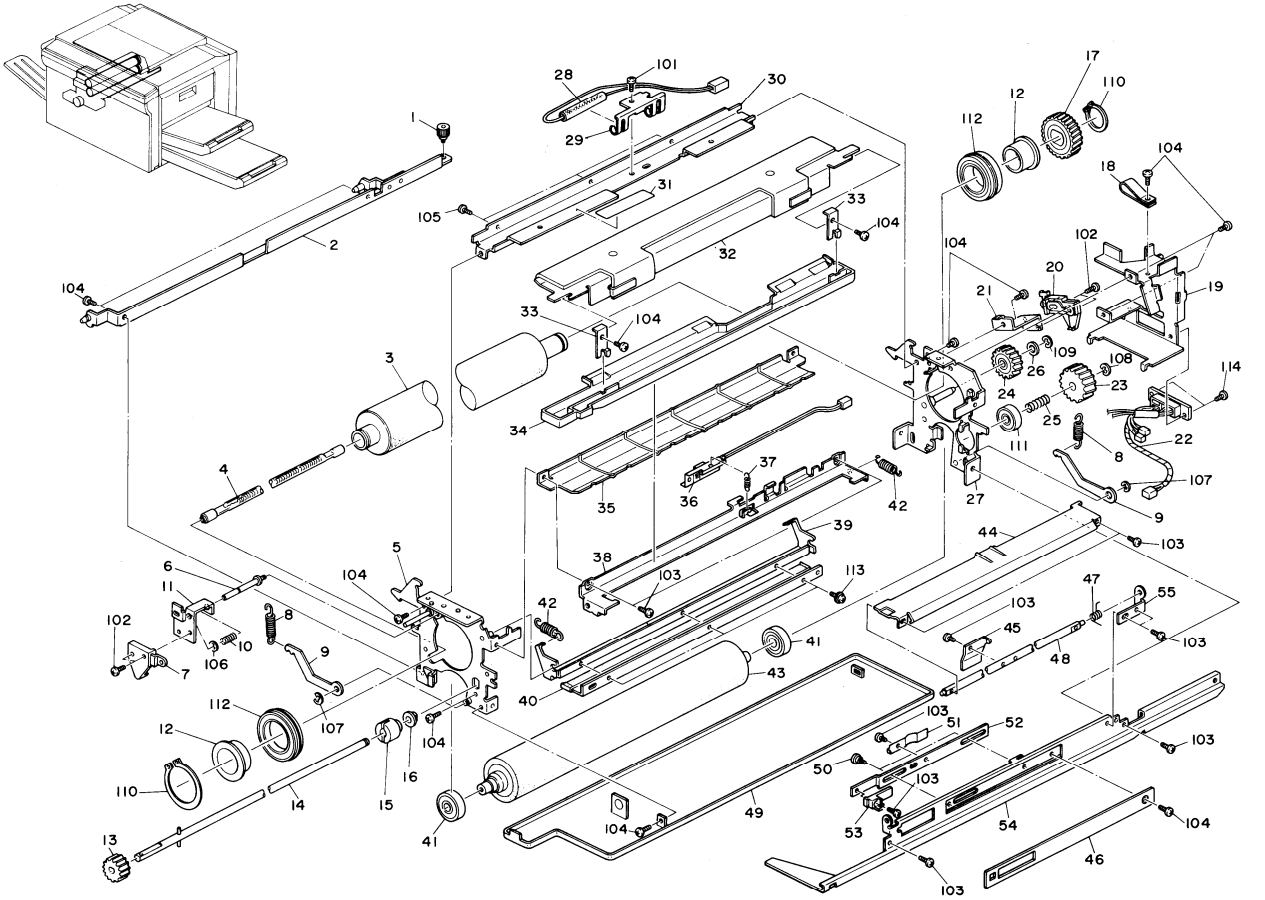
1
2
3
4
5
6
7
8
9
10
11
12
13
14
15
16
17
18
19
20
21
22
23
24
25
26
27
28
29
30
31
32
33
34
35
36
37
38
39
40
41
42
43
44
45
46
47
48
49
50
51
52
53
54
55
101
102
103
104
105
106
107
108
109
110
111
112
113
114

22. FUSING UNIT 2

May 30, '87

Index No.	Part No.	Description	Q'ty Per Assembly
1	A007 4218	Fusing Unit Stopper	1
2	A007 4212	Left Fusing Rail	1
3	AE01 1001	Hot Roller	1
4	AX44 0008	Heater - 750W - 115V	1
4	AX44 0009	Heater - 800W - 220V	1
5	A007 4161	Fusing Side Frame - Front	1
6	A007 4276	Front Lamp Terminal Shaft	1
7	A007 4274	Front Lamp Terminal	1
8	AA06 0051	Pressure Spring	2
9	A007 4172	Pressure Lever	2
10	AA06 3022	Front Lamp Terminal Spring	1
11	A007 4273	Front Lamp Terminal Bracket	1
12	AE03 2001	Bushing - 20mm	2
13	5209 4408	Gear - 16T	1
14	5209 4149	Fusing Unit Shaft	1
15	5205 4135	Fusing Shaft Collar	1
16	5053 0223	Bushing - 8mm	1
17	AB01 3076	Gear - 36T	1
18	5209 4126	Wire Clamp	1
19	A007 4192	Fusing Connector Bracket	1
20	5216 4100	Rear Heater Terminal	1
21	5442 4201	Rear Bracket - Lamp Terminal	1
22	A007 5540	Fusing Unit Harness	1
23	AB01 3060	Gear - 27T	1
24	AB01 3061	Gear - 17T	1
25	5442 4152	Spring - Fusing Drive	1
26	AA13 2024	Spacer - 1x6x10mm	1
27	A007 4151	Fusing Side Frame - Rear	1
28	5215 5390	Temperature Fuse - 182°C	1
29	5203 5801	Thermofuse Bracket	1
30	5215 4093	Upper Frame	1
31	5215 4211	Decal - Thermofuse	1
32	AE04 5001	Oil Supply Pad	1
33	5215 4196	Oil Sump Holder	2
34	A007 4195	Oil Sump	1

Index No.	Part No.	Description	Q'ty Per Assembly
35	A007 4179	Upper Entrance Guide Plate - Fusing	1
36	5215 5250	Thermistor	1
37	5203 4146	Thermistor Spring	1
38	A007 4178	Thermistor Mounting Frame	1
39	5215 4116	Oil Blade Holder	1
40	5215 4117	Oil Blade	1
41	AE03 0002	Ball Bearing 10x26x8	2
42	5215 4121	Spring - Oil Blade	2
43	AE02 0001	Pressure Roller	1
44	A007 4281	Lower Entrnace Guide Plate - Fusing	1
45	A007 4287	Fusing Entrance	1
46	A007 4288	Fusing Entrnace Cover	1
47	AA06 6047	Fusing Entrance Spring	1
48	AA14 0073	Fusing Entrnace Shaft	1
49	A007 4221	Oil Pan	1
50	5447 2769	Stepped Screw	2
51	A007 4285	Slider Leaf Spring	1
52	A007 4284	Fusing Entrance Slider	1
53	A007 4286	Slider Knob Lever	1
54	A007 4282	Right Fusing Rail	1
55	A007 4283	Right Fusing Rail Bracket	1

Index No.	Part No.	Description	Q'ty Per Assembly
101	0313 0060W	Philips Pan Head Screw - M3x6	
102	0313 0120W	Philips Pan Head Screw - M3x12	
103	0314 0060W	Philips Pan Head Screw - M4x6	
104	0434 0080W	Tapping Screw - M4x8	
105	0434 0140W	Tapping Screw - M4x14	
106	0720 0030E	Retaining Ring - M3	
107	0720 0050E	Retaining Ring - M5	
108	0720 0060E	Retaining Ring - M6	
109	0720 0070E	Retaining Ring - M7	
110	0725 0200E	Retaining Ring C - M20	
111	0740 3008	Ball Bearing	
112	0805 3377	Ball Bearing - 25x42x9mm	
113	0951 3005W	Philips Screw With Flat Washer - M3x5	
114	0434 0100W	Tapping Screw - M4x10	

Index No.	Part No.	Description	Q'ty Per Assembly

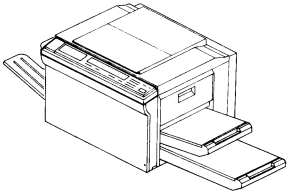

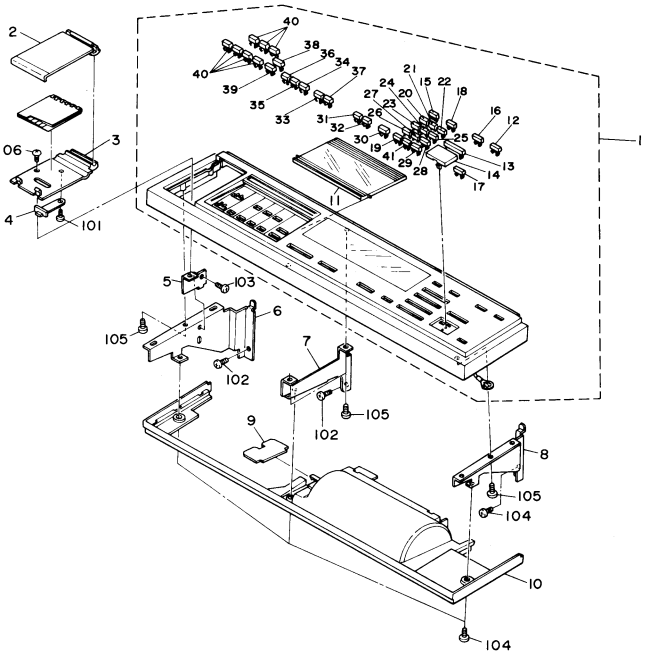
1
2
3
4
5
6
7
8
9
10
11
12
13
14
15
16
17
18
19
20
21
22
23
24
25
26
27
28
29
30
31
32
33
34
35
36
37
38
39
40
41
101
102
103
104
105
106

23. OPERATION PANEL

May 30, '87

Index No.	Part No.	Description	Q'ty Per Assembly
1	A007 1491	Operation Panel Ass'y	1
1	A007 1492	Operation Panel Ass'y - A3/A4	1
2	A007 1473	Instruction Card Cover	1
3	A007 1471	Instruction Card Holder	1
4	A007 1472	Instruction Card Spring	1
5	A007 1313	Operation Panel Support Bracket	1
6	A007 1311	Operation Panel Bracket - Left	1
7	A007 1312	Operation Panel Bracket - Center	1
8	A007 1310	Operation Panel Bracket - Right	1
9	A007 1294	Magnet Catch Plate	1
10	A007 6194	Inner Front Upper Cover Ass'y	1
11	A007 1531	Slide Cover	1
12	A007 5728	Key Top - Timer	1
13	A007 5729	Key Top - Interrupt	1
14	A007 5730	Key Top - Start	1
15	A007 5731	Key Top - Guidance	1
16	A008 5626	Key Top - Program	1
17	A008 5627	Key Top - Clear Mode	1
18	A008 5629	Key Top - Recall	1
19	A008 5630	Key Top - 0	1
20	A008 5631	Key Top - 1	1
21	A008 5632	Key Top - 2	1
22	A008 5633	Key Top - 3	1
23	A008 5634	Key Top - 4	1
24	A008 5635	Key Top - 5	1
25	A008 5636	Key Top - 6	1
26	A008 5637	Key Top - 7	1
27	A008 5638	Key Top - 8	1
28	A008 5639	Key Top - 9	1
29	A008 5640	Key Top - C/S	1
30	A008 5641	Key Top - ADS	1
31	A008 5642	Key Top - Lighter	1
32	A008 5643	Key Top - Darker	1
33	A008 5644	Key Top - Select Cassette	1
34	A008 5645	Key Top - Full Size	1
35	A008 5646	Key Top - Enlarge	1
36	A008 5647	Key Top - Reduce	1
37	A008 5648	Key Top - Auto Cassette Selection	1
38	A008 5650	Key Top - Zoom UP	1
39	A008 5651	Key Top - Zoom Down	1
40	A008 5653	Key Top	1
41	A008 5658	Key Top - Point	1
101	0313 0050M	Philips Pan Head Screw - M3x5	
102	0434 0060W	Tapping Screw - M4x6	
103	0434 0080W	Tapping Screw - M4x8	
104	0802 5094	Tapping Struss Head Screw - M4x8	
105	0965 4008W	Tapping Screw With Flat Washer - M4x8	
106	0971 4010A	Polycarbonate Screw - M4x10	

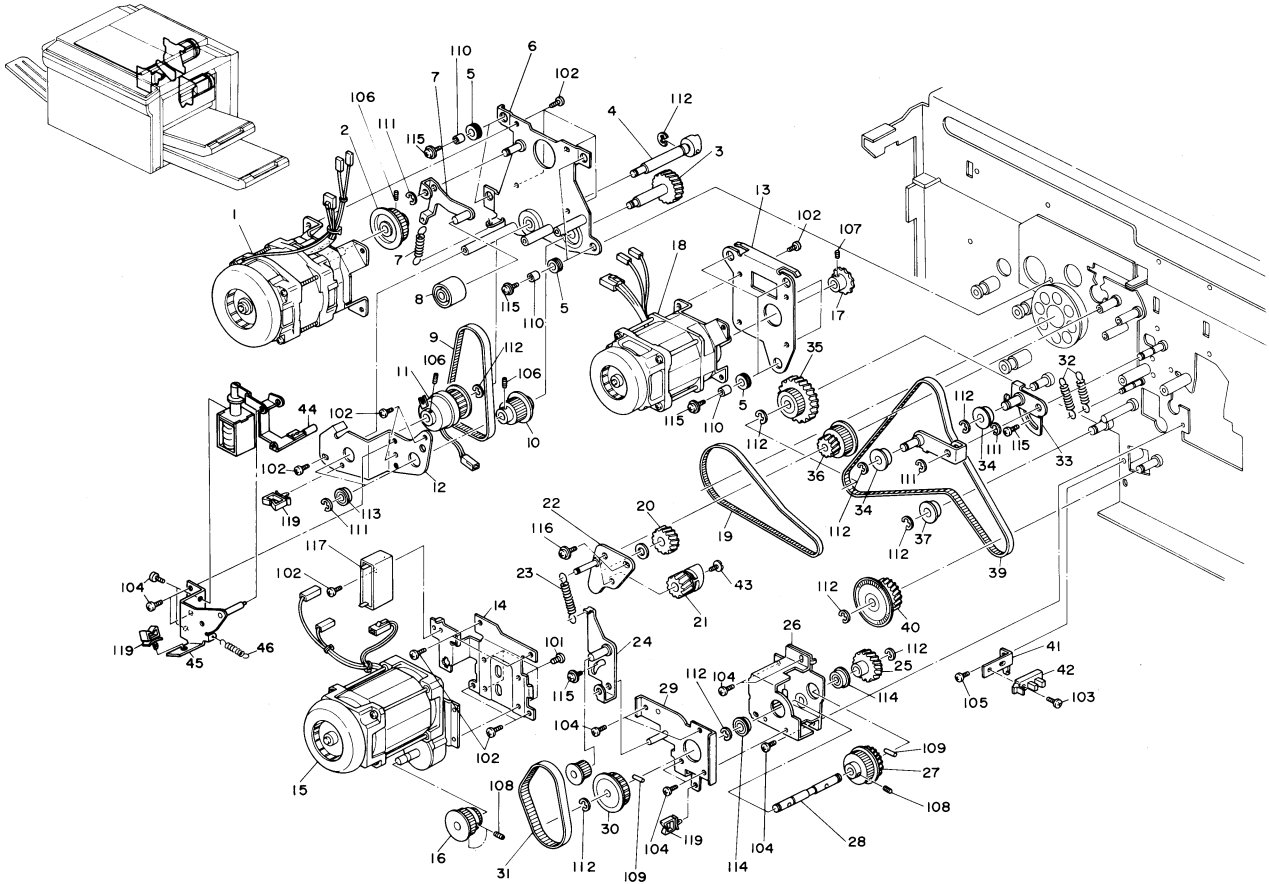
1
2
3
4
5
6
7
8
9
10
11
12
13
14
15
16
17
18
19
20
21
22
23
24
25
26
27
28
29
30
31
32
33
34
35
36
37
39
40
41
42
43
44
45
46
101
102
103
104
105
106
107
108
109
110
111
112
113
114
115
116
117
119

24. DRIVE SECTION

May 30, '87

Index No.	Part No.	Description	Q'ty Per Assembly
1	AX02 0031	Development Motor - AC 28W	1
2	AB03 0015	Pulley - 35T 60Hz	1
2	AB03 0014	Pulley - 42T 50Hz	1
3	A007 3425	Helical Gear	1
4	A007 3430	Joint Shaft - Toner Supply	1
5	AA16 1014	Cushion - Motor	7
6	A007 3411	Development Motor Bracket	1
7	A007 3455	Tightener Bracket	1
8	AA13 0006	Idle Pulley	1
9	AA04 3002	Timing Belt - 345PX	1
10	AB03 0016	Pulley - 24T	1
11	AX20 0019	Magnetic Clutch - Toner Supply	1
12	A007 3441	Support Bracket - Development Motor	1
13	A007 2901	Paper Feed Motor Bracket	1
14	A007 1082	Main Drive Motor Bracket	1
15	AX02 0030	Main Drive Motor - AC 39.5W	1
16	AB03 3010	Pulley - 30T 60Hz	1
16	AB03 3009	Pulley - 18T/36T 50Hz	1
17	AB02 3017	Sprocket - 15T 60Hz	1
17	AB02 3016	Sprocket - 18T 50Hz	1
18	AX02 0028	Paper Feed Motor	1
19	AA04 3005	Timing Belt - 200XL	1
20	AB01 3107	Gear - 19T	1
21	AB01 7037	Gear - 16T	1
22	A007 3722	Cleaning Drive Bracket	1
23	AA06 0066	Fusing Drive Spring - 60Hz	1
23	AA06 0065	Fusing Drive Spring - 50Hz	1
24	A007 1103	Tension Lever - Fusing Drive	1
25	AB01 1015	Gear - 27T	1
26	A007 1091	Fusing Drive Unit Bracket	1
27	AB01 7022	Gear & Pulley - 27T/36T	1
28	AA14 5029	Fusing Drive Shaft	1
29	A007 1100	Timing Belt Tension Bracket	1
30	AB03 0019	Gear - 36T	1
31	AA04 3003	Timing Belt - 222PX	1

Index No.	Part No.	Description	Q'ty Per Assembly
32	AA06 0063	Tension Spring - Drum Drive	2
33	A007 1117	Idle Pulley Bracket	1
34	AB03 0021	Idler Pulley	2
35	A007 1114	Pulley & Gear - 36T/45T	1
36	AB01 7029	Pulley & Gear - 28T/16T	1
37	AB03 0020	Idler Pulley - 20T	1
38	A007 1123	Tension Lever - Drum Drive	1
39	AA04 3004	Timing Belt - 699PX	1
40	A007 1108	Perforated Disk	1
41	A007 1112	Photointerruptor Bracket	1
42	5215 5230	Photointerrupter - L-Type	2
43	AA14 3033	Stopper Screw	1
44	A007 3461	Development Support Solenoid	1
45	A007 3466	Solenoid Bracket	1
46	5442 3233	Spring - Drive Wheel	1
101	0314 0060W	Philips Pan Head Screw - M4x6	
102	0314 0080W	Philips Pan Head Screw - M4x8	
103	0314 0100W	Philips Pan Head Screw - M4x10	
104	0434 0060W	Tapping Screw - M4x6	
105	0434 0080W	Tapping Screw - M4x8	
106	0574 0050E	Hexagon Headless Set Screw - M4x5	
107	0575 0050E	Hexagon Headless Set Screw - M5x5	
108	0575 0060E	Hexagon Headless Set Screw - M5x6	
109	0633 0140Z	Parallel Pin - M3x14	
110	0707 4050B	Bushing - 4x5	
111	0720 0050E	Retaining Ring - M5	
112	0720 0060E	Retaining Ring - M6	
113	0805 3145	Ball Bearing - 6x12x4mm	
114	0805 3291	Ball Bearing - 8x16x5mm	
115	0951 4006W	Philips Screw With Flat Washer - M4x6	
116	0960 4008W	Philips Flange Screw - M4x8	
117	1606 1627	Capacitor - 14MF 250V	
118	0720 0040W	Retaining Ring - M4	
119	1105 0196	Harness Clamp	

25. ELECTRICAL SECTION 1

May 30, '87

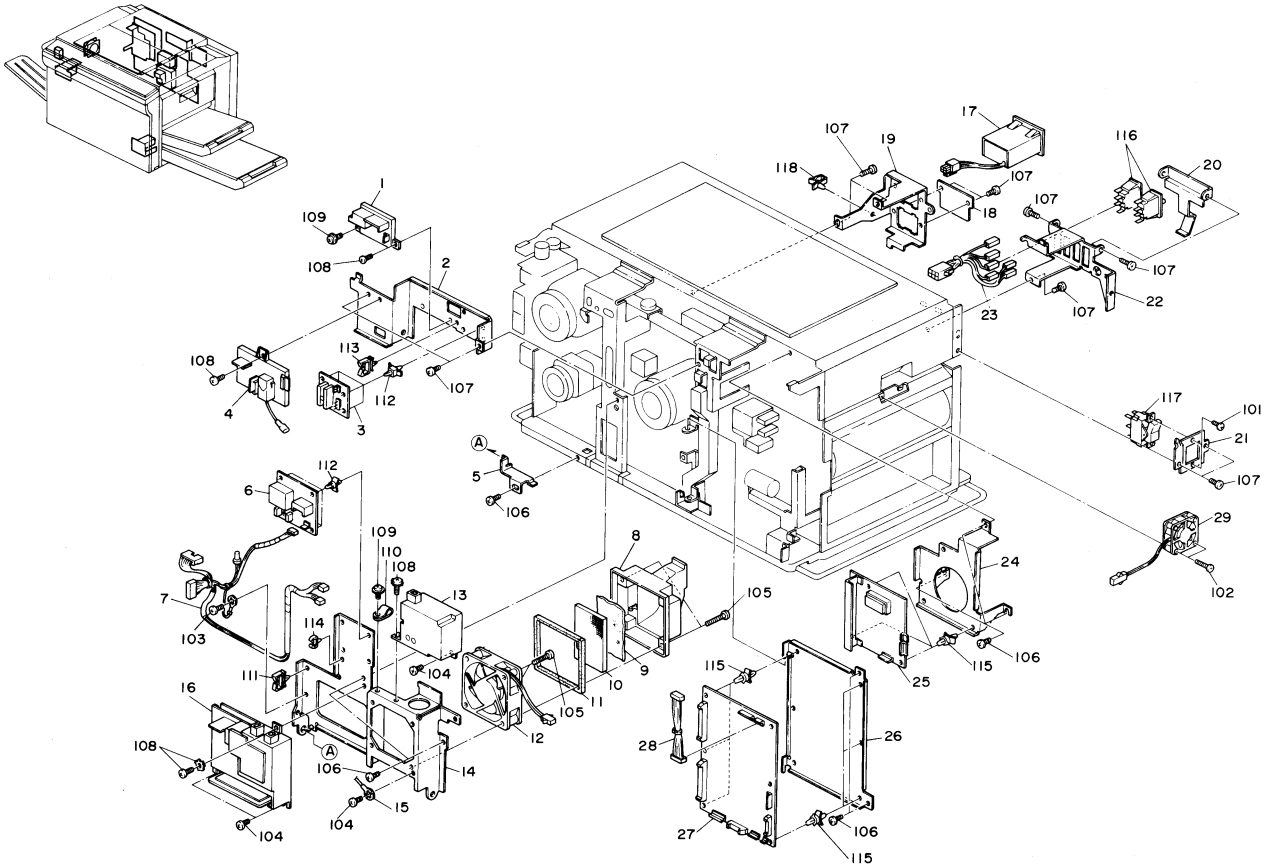

25. ELECTRICAL SECTION 1

May 30, '87

Index No.	Part No.	Description	Q'ty Per Assembly
1	AZ32 0007	Power Pack - PQC & BR	1
2	A007 5865	Power Pack Bracket	1
3	A007 5416	SSR Board - AC Drive	1
4	AZ32 0005	Power Pack - Charge & Bias	1
5	A007 5858	Transport Fan Support Bracket	1
6	AZ50 0002	CFL Stabilizer	1
7	A007 5366	Power Pack Harness	1
8	A007 3791	Transport Fan Cover	2
9	AA01 2006	Transport Fan Filter	1
10	AA01 0009	Ozone Filter - 234x60x13	1
11	AA15 1072	Seal - 3x7x484	1
12	AX05 0008	Transport Fan Motor	1
13	AZ31 0001	Power Pack - PCC	1
14	A007 5857	Transport Fan Bracket	1
15	A007 5460	Grounding Wire	1
16	AZ32 0006	Power Pack - T & S	1
17	5215 5380	Total Counter	1
18	A007 5879	Counter Cover	1
19	A007 5861	Total Counter Bracket	1
20	A007 5872	Safety Switch Lever	1
21	A007 5876	Main Power Switch Bracket	1
22	A007 5871	Safety Switch Bracket	1
23	A007 5218	Safety Switch Harness	1
24	A007 5863	Optics Board Bracket	1
25	A007 5180	Optics Board	1
26	A007 5850	Transport Fan Bracket	1
27	A007 5101	Main Control Board	1
28	A007 5217	Main Contorl Harness	1
29	AX04 0007	Exhaust Fan Motor	1

Index No.	Part No.	Description	Q'ty Per Assembly
101	0313 0060W	Philips Pan Head Screw - M3x6	
102	0313 0300W	Philips Pan Head Screw - M3x30	
103	0314 0080M	Philips Pan Head Screw - M4x8	
104	0314 0080W	Philips Pan Head Screw - M4x8	
105	0314 0450W	Philips Pan Head Screw - M4x45	
106	0434 0060W	Tapping Screw - M4x6	
107	0434 0080W	Tapping Screw - M4x8	
108	0801 1185	Philips Truss Head Screw - M4x8	
109	0964 4008W	Tapping Screw With Flat Washer - M4x8	
110	1105 0008	Nylon Clip - 2N	
111	1105 0099	Wire Saddle	
112	1105 0159	P.C.B. Stud	
113	1105 0197	Wire Saddle	
114	1105 0199	Clamp	
115	1106 0395	Locking Support	
116	1204 1280	Push Switch	
117	1204 1520	Switch	
118	1105 0200	Clamp	

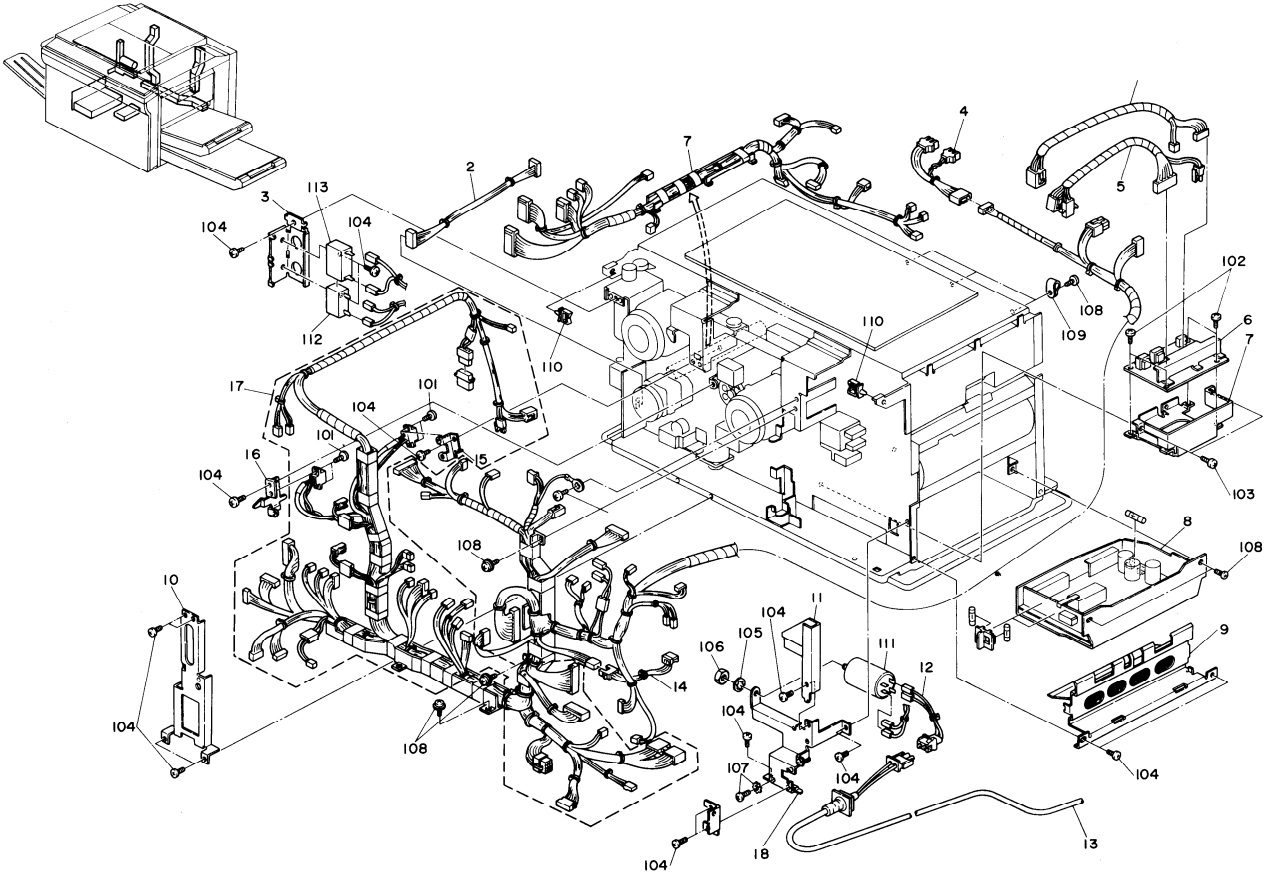
1
2
3
4
5
6
7
8
9
10
11
12
13
14
16
17
18
101
102
103
104
105
106
107
108
109
110
111
112
113

26. ELECTRICAL SECTION 2

Index No.	Part No.	Description	Q'ty Per Assembly
1	A007 5249	Paper Feed Unit Harness	1
2	A007 5253	Upper Paper Size Harness	1
3	A007 5843	Capacitor Bracket	1
4	AZ40 0003	DC Motor Harness	1
5	A007 5462	AC Drive Board Harness	1
6	AY11 0001	AC Drive Board - 115V	1
6	AY11 0002	AC Drive Board - 220/240V	1
7	A007 5851	AC Drive Bracket	1
8	AZ23 0002	DC Control Unit	1
9	A007 1130	Exit Cover	1
10	A007 1128	ADF Support Bracket	1
11	A007 5860	Solenoid Cover Bracket	1
12	A007 5458	AC Descent Harness	1
13	5215 5272	Power Supply Cord	1
14	A007 5205	Gate Descent Harness	1
15	A007 2108	DC Harness Bracket	1
16	A007 2116	Density Sensor Connector Bracket	1
17	A007 5240	DC Harness	1
18	A007 5853	Power Supply Cord Bracket	1

Index No.	Part No.	Description	Q'ty Per Assembly
101	0313 0100W	Philips Pan Head Screw - M3x10	
102	0314 0060W	Philips Pan Head Screw - M4x6	
103	0434 0060W	Tapping Screw - M4x6	
104	0434 0080W	Tapping Screw - M4x8	
105	0704 0080B	Toothed Washer - M8	
106	0712 0080B	Hexagon Nut - M8	
107	0801 1185	Philips Truss Head Screw - M4x8	
108	0964 4008W	Tapping Screw With Flat Washer - M4x8	
109	1105 0005	Nylon Clip - 3N	
110	1105 0196	Harness Clamp	
111	1602 0923	Noise Filter - 115V	
112	1606 1587	Capacitor - 8µF 220V	
113	1606 1626	Capacitor - 14MF 220V	

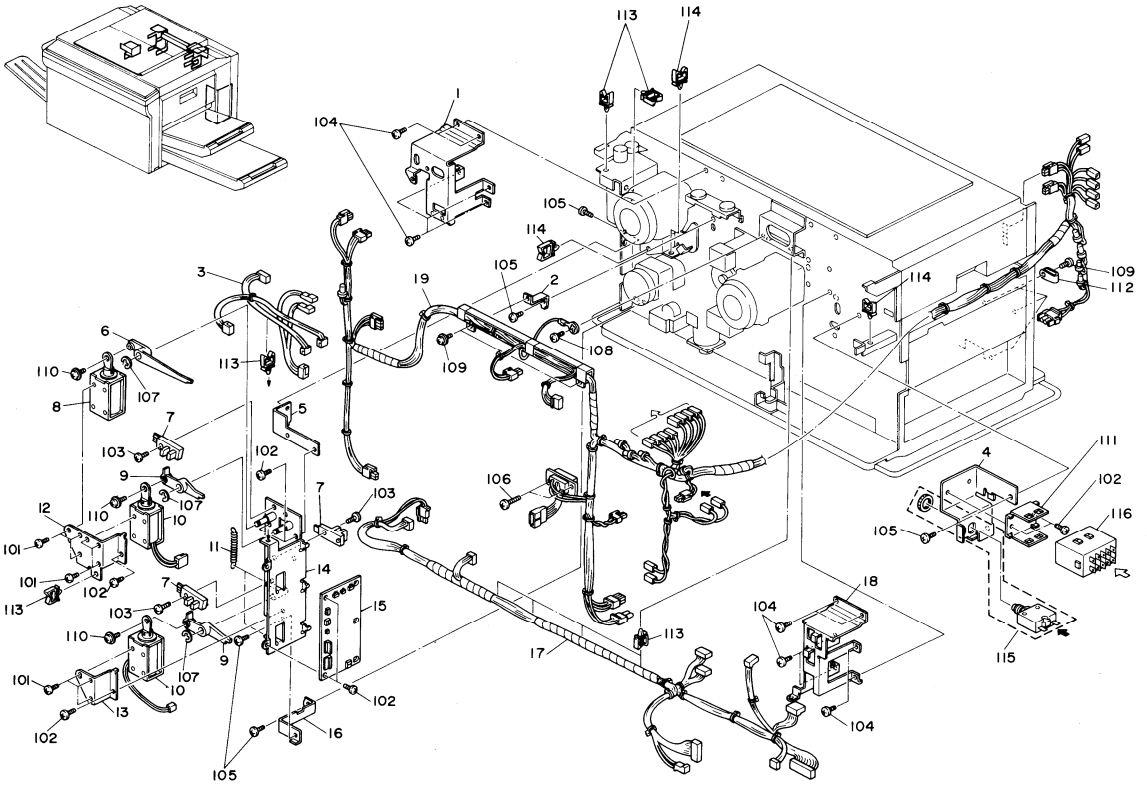
113
114
1
104
105
114
105
2
19
3
6
110
107
8
113
109
108
114
109
112
5
7
103
102
9
107
110
10
12
101
101
102
113
11
7
103
14
15
103
110
9
107
10
101
13
102
102
16
105
106
17
113
18
104
104
4
111
102
116
105
115

27. ELECTRICAL SECTION 3

May 30, '87

Index No.	Part No.	Description	Q'ty Per Assembly
1	A007 1125	Right ADF Bracket	1
2	A007 5878	AC Harness Angle	1
3	A007 5251	Left Motor Harness	1
4	A007 5852	Noise Filter Bracket	1
5	A007 2740	Support Bracket 1 - Feed Control	1
6	A007 2744	Pick-up Arm - Manual Feed	1
7	5205 5251	LED Sensor Type - T	3
8	AX10 0004	Pick-up Solenoid - Manual Feed	1
9	A007 2742	Shutter Plate	1
10	5205 5321	Pick-up Solenoid	2
11	AA06 0082	Pick-up Lever Spring	1
12	A007 2746	Solenoid Upper Bracket	1
13	A007 2748	Solenoid Lower Bracket	1
14	A007 2733	Feed Control Board Bracket	1
15	A007 5190	Paper Feed Control Board	1
16	A007 2741	Support Bracket 2 - Feed Control	1
17	A007 5216	Lens Housing Harness	1
18	A007 1129	Left ADF Bracket	1
19	A007 5456	AC Harness	1

Index No.	Part No.	Description	Q'ty Per Assembly
101	0313 0050W	Philips Pan Head Screw - M3x5	
102	0314 0060W	Philips Pan Head Screw - M4x6	
103	0314 0100W	Philips Pan Head Screw - M4x10	
104	0434 0060W	Tapping Screw - M4x6	
105	0434 0080W	Tapping Screw - M4x8	
106	0434 0100W	Tapping Screw - M4x10	
107	0720 0050E	Retaining Ring - M5	
108	0801 1185	Philips Truss Head Screw - M4x8	
109	0964 4008W	Tapping Screw With Flat Washer - M4x8	
110	0965 3008W	Tapping Screw With Flat Washer - M3x8	
111	1104 0224	Relay Bracket	
112	1105 0005	Nylon Clip - 3N	
113	1105 0196	Harness Clamp	
114	1105 0197	Wire Saddle	
115	1107 0363	Circuit Breaker - 115V	
116	1208 1029	Power Relay	

IC

SYMBOL NO.	INDEX NO.
IC100	144
IC101	130
IC102	127
IC103	2
IC103	112
IC106	138
IC107	134
IC108	146
IC109	126
IC110	129

SYMBOL NO.	INDEX NO.
IC111	126
IC112	125
IC113	133
IC114	143
IC115	143
IC116	134
IC117	134
IC118	139
IC119	131
IC120	131

SYMBOL NO.	INDEX NO.
IC121	136
IC122	137
IC123	134
IC124	123
IC125	125
IC126	135
IC127	134
IC128	124
IC129	125
IC130	131

SYMBOL NO.	INDEX NO.
IC131	131
IC132	134
IC133	134
IC134	140
IC135	144
IC136	3
IC137	132
IC138	145
IC139	142
IC140	131

SYMBOL NO.	INDEX NO.
IC141	131
IC142	128
IC143	131
IC144	134
IC145	134
IC146	132
IC147	126
IC148	141

ZENER

SYMBOL NO.	INDEX NO.
ZD101	121
ZD102	120
ZD103	122

DIODE

SYMBOL NO.	INDEX NO.
D101	118
D102	118
D103	118
D104	118
D105	118
D106	118
D107	118
D108	118
D109	117
D110	117

SYMBOL NO.	INDEX NO.
D111	117
D112	117
D113	117
D114	117
D115	119
D116	119
D117	119

TRANSISTOR

SYMBOL NO.	INDEX NO.
Q102	116
Q103	116
Q104	114

DIP SW

SYMBOL NO.	INDEX NO.
BIP100	113

OSCILLATOR

SYMBOL NO.	INDEX NO.
OSC100	147
OSC101	147

CONNECTOR

SYMBOL NO.	INDEX NO.
CN100	105
CN101	111
CN102	111
CN103	109
CN104	110
CN105	107
CN106	101
CN107	110
CN108	108
CN109	106

SYMBOL NO.	INDEX NO.
CN111	1
CN112	4
CN120	103
CN190	104

RESISTOR

SYMBOL NO.	INDEX NO.
R100	186
R101	166
R102	166
R103	166
R104	164
R105	173
R106	173
R111	163
R112	163
R113	163

SYMBOL NO.	INDEX NO.
R114	163
R115	178
R116	178
R117	178
R118	178
R119	178
R120	178
R121	178
R122	178
R123	178

SYMBOL NO.	INDEX NO.
R124	178
R125	178
R126	178
R127	178
R128	178
R129	178
R130	178
R131	173
R132	173
R133	173

SYMBOL NO.	INDEX NO.
R134	173
R139	172
R140	172
R141	172
R142	172
R143	173
R144	173
R145	173
R146	173
R147	173

SYMBOL NO.	INDEX NO.
R148	173
R149	180
R150	175
R151	188
R152	163
R153	177
R154	176
R155	176
R156	166
R157	166

SYMBOL NO.	INDEX NO.
R158	173
R159	166
R160	160
R161	160
R162	160
R163	160
R164	160
R165	160
R166	173
R167	173

SYMBOL NO.	INDEX NO.
R168	173
R169	173
R170	166
R171	163
R172	173
R173	173
R174	173
R175	173
R176	173
R177	176

SYMBOL NO.	INDEX NO.
R178	184
R179	184
R180	184
R181	184
R182	184
R183	184
R184	184
R185	184
R186	187
R187	190

SYMBOL NO.	INDEX NO.
R188	189
R189	176
R190	171
R191	173
R192	173
R193	173
R194	173
R195	173
R196	165
R197	165

SYMBOL NO.	INDEX NO.
R198	172
R199	173
R200	173
R201	173
R202	173
R203	185
R204	169
R205	183
R206	183
R207	169

SYMBOL NO.	INDEX NO.
R208	163
R209	169
R210	162
R211	181
R212	165
R213	165
R214	165
R215	165
R217	180
R218	166

SYMBOL NO.	INDEX NO.
R219	166
R220	158
R221	165
R222	165
R223	165
R224	165
R225	179
R226	165
R227	163
R228	162

SYMBOL NO.	INDEX NO.
R230	165
R231	165
R232	165
R233	165
R234	165
R235	166
R236	166
R237	167
R238	159
R239	168

SYMBOL NO.	INDEX NO.
R240	168
R241	161
R242	161
R243	162
R244	162
R245	162
R246	162
R247	163
R248	163
R249	163

SYMBOL NO.	INDEX NO.
R250	163
R251	165
R252	165
R253	173
R254	173
R255	165
R256	165
R257	165
R258	166
R259	169

SYMBOL NO.	INDEX NO.
R260	169
R261	169
R262	166
R263	166
R264	166
R265	182
R266	167
R267	169
R268	167
R269	163

SYMBOL NO.	INDEX NO.
R270	166
R271	169
R272	165
R273	165
R274	165
R275	165
R276	165
R277	165
R278	165
R279	165

SYMBOL NO.	INDEX NO.
R280	165
R281	165
R282	165
R283	165
R284	165
R285	165
R286	165
R287	165
R288	165
R289	165

SYMBOL NO.	INDEX NO.
R290	165
R291	165
R292	165
R293	165
R294	165
R295	165
R296	165
R297	165
R298	165
R299	165

SYMBOL NO.	INDEX NO.
R300	165
R301	165
R302	177
R303	177
R304	177
R305	177
R306	173
R307	174
R308	166
R309	180

SYMBOL NO.	INDEX NO.
R310	180
R311	177
R312	166
R313	166
R314	166
R315	169
R316	169
R317	169
R318	169
R319	169

SYMBOL NO.	INDEX NO.
R320	169
R321	169
R322	169
R323	178
R324	170
R325	170
R330	173
R331	166
R332	169
R333	169

CAPACITOR

SYMBOL NO.	INDEX NO.
C100	152
C102	152
C103	152
C104	156
C105	156
C106	157
C107	150
C108	156
C109	156
C110	156

SYMBOL NO.	INDEX NO.
C111	152
C112	156
C113	152
C114	149
C115	157
C116	155
C117	152
C118	156
C119	156
C120	156

SYMBOL NO.	INDEX NO.
C121	151
C122	153
C123	153
C124	152
C126	156
C127	156
C128	156
C129	156
C130	155
C131	155

SYMBOL NO.	INDEX NO.
C132	155
C133	155
C134	155
C135	156
C136	156
C137	156
C138	156
C139	156
C140	156
C141	156

SYMBOL NO.	INDEX NO.
C142	155
C143	156
C144	154
C145	154
C146	156
C147	155
C148	155
C149	155
C150	156
C151	156

SYMBOL NO.	INDEX NO.
C152	136
C153	136
C154	136
C155	136
C156	136
C157	136
C158	136
C159	136
C160	156
C161	156

SYMBOL NO.	INDEX NO.
C162	156
C163	156
C164	156
C165	156
C166	156
C167	156
C168	156
C169	156
C170	156
C171	156

SYMBOL NO.	INDEX NO.
C172	156
C173	156
C174	154
C175	154
C176	156
C177	156
C178	156
C179	156
C180	155
C181	156

SYMBOL NO.	INDEX NO.
C182	156
C183	155
C184	155
C185	156
C186	156
C187	156
C188	156
C189	156
C190	156
C191	156

SYMBOL NO.	INDEX NO.
C193	156
C194	156
C195	156
C196	156
C197	156
C198	156
C199	156
C200	156
C201	156
C202	156

SYMBOL NO.	INDEX NO.
C203	156
C204	156
C205	156
C206	156
C207	155
C208	156
C209	156
C210	155
C211	156
C212	157

SYMBOL NO.	INDEX NO.
C213	156
C215	155
C220	152
C221	152
C222	156

TA

SYMBOL NO.	INDEX NO.
TA100	115
TA101	115

TP

SYMBOL NO.	INDEX NO.
TP100	102
TP101	102
TP102	102
TP103	102

VR

SYMBOL NO.	INDEX NO.
VR100	148

28. MAIN CONTROL BOARD

Index No.	Part No.	Description	Q'ty Per Assembly
*	A007 5101	Main Control Board	1
1	AW00 0002	Fiber Connector	1
2	A007 5103	Rom - Main P.C.B	1
3	A007 5105	CPU - Main P.C.B	1
4	A409 5710	Fiber Connector - 2-174135-1	1

Index No.	Part No.	Description	Q'ty Per Assembly
101	1100 1094	Connector - 4P	
102	1101 0328	Connector Pin Contact	
103	1102 1567	Connector - 2P	
104	1102 2986	Receptacle - 14P	
105	1103 1390	Pin Header - 6P	
106	1103 1725	Connector - 3P	
107	1103 1732	Connector - 10P	
108	1103 1733	Connector - 11P	
109	1103 1736	Connector - 14P	
110	1103 3020	Connector - 20P	
111	1103 3025	Connector - 50P	
112	1104 0271	LSI Socket - 28P	
113	1204 1482	Dip Switch	
114	1401 0298	Transistor - 2SC2712YTE85L	
115	1401 0391	Transistor Array - PU4310 60V3A	
116	1401 0395	Transistor - 2SC2883	
117	1401 0826	Diode - 1SS181	
118	1401 0832	Diode - DSA1A1	
119	1402 0476	Diode - 1SS184	
120	1402 0688	Diode - 6.8V 1W	
121	1402 0690	Diode - RD39P	
122	1402 0734	Diode - RD6.2	
123	1407 1306	Ttl - HD74LS00FP	
124	1407 1309	Ttl - HD74LS04FP	
125	1407 1310	IC - HD74LS08FP	
126	1407 1311	IC - HD74LS32FP	
127	1407 1317	IC - HD74LS138FP	
128	1407 1335	IC - RF5G02-005	
129	1407 1813	IC - SN74LS11NS	
130	1407 1882	IC - SN74LS373NS	
131	1407 2054	IC - TD62308F	
132	1407 2055	IC - TD62304F	
133	1407 2073	Microprocessor - MPD78C10GF	
134	1407 2187	IC - SN74LS07NS	
135	1407 2218	Ttlic SNT4LS06NS	

Index No.	Part No.	Description	Q'ty Per Assembly
136	1407 2221	IC - SN75157	
137	1407 2222	IC - SN75158	
138	1407 2223	TMP82C51AF	
139	1407 2228	LSI TMP82C55AF	
140	1407 2229	Timer NJM555M	
141	1407 2230	IC - TD62303F	
142	1407 2231	IC - TD62308AF	
143	1407 2232	IC - 74HC157F	
144	1408 0456	IC - AN6914S	
145	1408 0537	IC - 7705CPS-B	
146	1408 0561	IC - TL092PS	
147	1503 0070	Ceramic Oscillator - 10MHz	
148	1601 8328	Variable Resistor - 30KOHM	
149	1604 1375	Capacitor - 0.22µF 50V	
150	1604 1378	Capacitor - 1MF 50V	
151	1604 1381	Capacitor - 4.7µF 50V	
152	1604 1382	Capacitor - 10µF 50V	
153	1604 1386	Capacitor - 100MF 50V	
154	1605 0166	Capacitor - 27øF 50V	
155	1606 1451	Capacitor - 0.1µF 50V	
156	1606 1454	Capacitor - 0.01MF 50V	
157	1606 1455	Capacitor - 470øF 25V	
158	1610 0025	Resistor - 22OHM 1/8W ±5%	
159	1610 0035	Resistor - 100OHM 1/8W ±5%	
160	1610 0047	Resistor - 330OHM 1/8W ±5%	
161	1610 0048	Resistor - 390OHM 1/8W ±5%	
162	1610 0049	Resistor - 470OHM 1/8W ±5%	
163	1610 0053	Resistor - 1KOHM 1/8W ±5%	
164	1610 0057	Resistor - 1.5KOHM 1/8W ±5%	
165	1610 0064	Resistor - 3KOHM 1/8W ±5%	
166	1610 0067	Resistor - 4.7KOHM 1/8W ±5%	
167	1610 0068	Resistor - 5.6KOHM 1/8W ±5%	
168	1610 0069	Resistor - 6.8KOHM 1/8W ±5%	
169	1610 0071	Resistor - 10KOHM 1/8W ±5%	
170	1610 0073	Resistor - 12KOHM 1/8W ±5%	

Index No.	Part No.	Description	Q'ty Per Assembly
171	1610 0075	Resistor - 15KOHM 1/8W ±5%	
172	1610 0077	Resistor - 18KOHM 1/8W ±5%	
173	1610 0079	Resistor - 22KOHM 1/8W ±5%	
174	1610 0083	Resistor - 33KOHM 1/8W ±5%	
175	1610 0085	Resistor - 47KOHM 1/8W ±5%	
176	1610 0086	Resistor - 56KOHM 1/8W ±5%	
177	1610 0089	Resistor - 100KOHM 1/8W ±5%	
178	1610 0091	Resistor - 120KOHM 1/8W ±5%	
179	1610 0099	Resistor - 270KOHM 1/8W ±5%	
180	1610 0107	Resistor - 111KOHM 1/8W ±5%	
181	1610 0108	Resistor - 1.2MOHM 1/8W ±5%	
182	1610 0110	Resistor - 1.8KOHM 1/8W ±5%	
183	1610 0113	Resistor - 3.3MOHM 1/8W ±5%	
184	1611 4151	Resistor - 150OHM 1/4W ±5%	
185	1611 4181	Resistor - 180OHM 1/4W ±5%	
186	1611 4820	Resistor - 82OHM 1/4W ±5%	
187	1622 1003	Resistor - 100KOHM 1/4W ±1%	
188	1622 1202	Resistor - 2KOHM 1/4W ±1%	
189	1622 5231	Resistor - 2.5KOHM 1/4W ±1%	
190	1622 8661	Resistor - 8.6KOHM 1/4W ±1%	

IC

SYMBOL NO.	INDEX NO.
IC301	123
IC302	123
IC303	121
IC304	3
IC305	124
IC306	124
IC307	118
IC308	119
IC309	117

SYMBOL NO.	INDEX NO.
IC310	120
IC311	116
IC312	126
IC313	117
IC314	119
IC315	122
IC316	118
IC317	119

ZENER

SYMBOL NO.	INDEX NO.
ZD301	115
ZD302	115

DIODE

SYMBOL NO.	INDEX NO.
D301	113
D302	113
D303	113
D304	113

TRANSISTOR

SYMBOL NO.	INDEX NO.
Q301	112
Q302	111
Q303	111
Q304	112
Q305	109
Q306	110
Q307	110
Q308	109

OSCILLATOR

SYMBOL NO.	INDEX NO.
OS301	127
OS302	128

CONNECTOR

SYMBOL NO.	INDEX NO.
CN301	102
CN302	105
CN303	107
CN304	101
CN305	106
CN306	103
CN307	1
CN308	2
CN309	101
CN310	104

RESISTOR

SYMBOL NO.	INDEX NO.
R301	145
R302	145
R303	145
R304	145
R305	140
R306	137
R307	140
R308	137
R309	137
R310	138

SYMBOL NO.	INDEX NO.
R311	138
R312	140
R313	140
R314	140
R315	140
R316	144
R317	144
R318	141
R319	137
R320	141

SYMBOL NO.	INDEX NO.
R321	137
R322	141
R323	141
R324	141
R325	141
R326	141
R327	137
R328	140
R329	143
R330	140

SYMBOL NO.	INDEX NO.
R331	140
R332	140
R333	140
R334	141
R335	140
R336	140
R337	142
R338	139
R339	140
R340	139

SYMBOL NO.	INDEX NO.
R341	140
R342	139
R343	143
R344	139

CAPACITOR

SYMBOL NO.	INDEX NO.
C301	131
C302	135
C303	135
C304	135
C305	135
C306	135
C307	135
C308	136
C309	135
C310	132

SYMBOL NO.	INDEX NO.
C311	135
C312	132
C313	135
C314	135
C315	133
C316	133
C317	135
C318	135
C319	136
C320	135

SYMBOL NO.	INDEX NO.
C321	135
C322	135
C323	134
C324	134
C325	135
C326	135
C327	135
C328	135
C329	135
C330	135

SYMBOL NO.	INDEX NO.
C331	136
C332	135
C333	135
C334	135

VR

SYMBOL NO.	INDEX NO.
VR301	129
VR302	129

29. OPTICS BOARD

Index No.	Part No.	Description	Q'ty Per Assembly
*	A007 5180	Optics Board	1
1	AW00 0003	Fiber Connector - Red	1
2	AW00 0004	Fiber Connector - White	1
3	A007 5182	EP ROM	1
101	1100 1094	Connector - 9P	
102	1102 0958	Connector - 2P	
103	1102 1172	EI Connector - 4P	
104	1102 1567	Connector - 2P	
105	1103 0725	Connector - 3P	
106	1103 1134	Connector - 12P	
107	1103 1403	Connector - 12P	
108	1104 0271	LSI Socket - 28P	
109	1400 0423	Transistor - 2SA1121C	
110	1400 0424	Transistor - 2SC2618C	
111	1401 0392	Transistor - 2SB1193	
112	1401 0393	Transistor - 2SD1773	
113	1402 0110	Diode - 1.1A 200V	
114	1402 0687	Diode - 12V 1W	
115	1402 0688	Diode - 6.8V 1W	
116	1407 1305	IC - SN7406NS	
117	1407 1306	IC - HD74LS00FP	
118	1407 1309	IC - HD74LS04FP	
119	1407 1314	IC - HD74LS74AFP	
120	1407 1740	IC - SN74LS27NS	
121	1407 1882	IC - SN74LS373NS	
122	1407 1883	IC - TC4050BF	
123	1407 2054	IC - TD62308F	
124	1407 2073	Microprocessor - MPD78C10GF	
125	1407 2217	Timer IC - MPD71054G	
126	1408 0516	IC - TLS27L4	
127	1503 0070	Ceramic Oscillator - 10MHz	
128	1503 0180	Oscillator - 8MHz	
129	1601 8421	Resistor - 500KOHM	
130	1604 1353	Capacitor - 47µF 10V	
131	1604 1387	Capacitor - 220µF 50V	
132	1605 0304	Capacitor - 2200øF 50V	
133	1605 0305	Capacitor - 3300øF 50V	
134	1605 0306	Capacitor - 27øF 50V	
135	1606 1452	Capacitor - 0.01µF 50V	
136	1606 1453	Capacitor - 0.1µF 25V	
137	1610 0053	Resistor - 1KOHM 1/8W ±5%	
138	1610 0061	Resistor - 2.2KOHM 1/8W ±5%	
139	1610 0065	Resistor - 3.3KOHM 1/8W ±5%	
140	1610 0067	Resistor - 4.7KOHM 1/8W ±5%	
141	1610 0071	Resistor - 10KOHM 1/8W ±5%	
142	1610 0081	Resistor - 27KOHM 1/8W ±5%	
143	1610 0107	Resistor - 111KOHM 1/8W ±5%	
144	1610 0118	Resistor - 8.2MOHM 1/8W ±5%	
145	1611 6122	Resistor - 1.2KOHM ±5% 1/2W	

IC

SYMBOL NO.	INDEX NO.
IC401	119
IC402	119
IC403	119

DIODE

SYMBOL NO.	INDEX NO.
D401	117
D402	117
D403	117
D404	117
D405	117
D406	117
D407	117
D408	117
D409	117
D410	117

SYMBOL NO.	INDEX NO.
D411	117
D412	117
D413	117
D414	117
D415	117
D416	117
D417	117
D418	117
D419	117
D420	117

SYMBOL NO.	INDEX NO.
D421	117
D422	117
D423	118
D424	118
D425	118
D426	118
D427	118

CONNECTOR

SYMBOL NO.	INDEX NO.
CN401	107
CN403	101
CN404	114
CN404	107
CN405	111
CN406	102
CN407	106
CN408	110
CN409	103
CN410	108

SYMBOL NO.	INDEX NO.
CN411	109
CN412	104
CN413	112
CN414	113
CN415	105
CN416	116
CN417	115

RESISTOR ARRAY

SYMBOL NO.	INDEX NO.
RAY401	120
RAY402	120

RESISTOR

SYMBOL NO.	INDEX NO.
R401	124
R402	125
R403	123

CAPACITOR

SYMBOL NO.	INDEX NO.
C401	122
C402	122
C403	121
C404	122
C405	122
C406	122

30. PAPER FEED CONTROL BOARD

May 30, '87

Index No.	Part No.	Description	Q'ty Per Assembly
*	A007 5190	Paper Feed Control Board	1

Index No.	Part No.	Description	Q'ty Per Assembly
101	1100 1091	EI Connector - 3P	
102	1100 1095	Connector - 10P	
103	1100 1096	Connector - 12P	
104	1102 3169	Connector - 32P	
105	1103 0774	Connector - 3P	
106	1103 0777	Connector - 30	
107	1103 1400	Connector - 2P	
108	1103 1401	Connector - 7P	
109	1103 1402	Connector - 10P	
110	1103 1531	Connector - 4P	
111	1103 1682	Connector - 2P	
112	1103 1694	Connector - 14P	
113	1103 1696	Connector - 2P	
114	1103 1724	Connector - 2P	
115	1103 1725	Connector - 3P	
116	1103 1752	Connector - 2P	
117	1401 0825	Diode - 1SS176	
118	1402 0423	Diode - S5500G	
119	1408 0200	IC - TA75339P	
120	1601 7167	Resistor Array - 4.7KOHM 1/8W	
121	1604 1382	Capacitor - 10µF 50V	
122	1606 0998	Capacitor - 0.01µF 50V	
123	1611 4153	Resistor - 15KOHM 1/4T ±5%	
124	1611 4472	Resistor - 4.7KOHM 1/4T ±5%	
125	1611 4682	Resistor - 6.8KOHM 1/4T ±5%	

RA

SYMBOL NO.	INDEX NO.
RA501	105

CONNECTOR

SYMBOL NO.	INDEX NO.
CN501	104
CN502	103
CN503	102
CN504	101

L

SYMBOL NO.	INDEX NO.
L501	128

CAPACITOR

SYMBOL NO.	INDEX NO.
C501	123
C502	122
C503	122
C504	122
C505	126
(115V)	126
(220V)	124
C506	
(115V)	125
(220V)	127

TR

SYMBOL NO.	INDEX NO.
TR501	1
TR502	1

RESISTOR

SYMBOL NO.	INDEX NO.
R501	131
R502	129
R503	136
R504	137
R505	134
R506	129
R507	129
R508	129
R509	129
R510	117

SYMBOL NO.	INDEX NO.
R511	135
R512	133
R513	133
R514	133
R515	130
R516	130
R517	130
R518	116
R519	116
R520	116

SYMBOL NO.	INDEX NO.
R521	132
R522	132
R523	132

ZENNER

SYMBOL NO.	INDEX NO.
ZD501	106

DIODE

SYMBOL NO.	INDEX NO.
D501	107

TRC

SYMBOL NO.	INDEX NO.
TRC501	114
TRC502	113
TRC503	110

VR

SYMBOL NO.	INDEX NO.
VR501	119

IC

SYMBOL NO.	INDEX NO.
IC501	115

PC

SYMBOL NO.	INDEX NO.
PC501	108
PC502	108
PC503	
(115V)	108
(220V)	111

CR

SYMBOL NO.	INDEX NO.
CR501	
(115V)	120
(220V)	121
CR502	
(115V)	120
(220V)	121
CR503	
(115V)	120
(220V)	121

DB

SYMBOL NO.	INDEX NO.
DB501	
(115V)	109
(220V)	112
DB502	
(115V)	109
(220V)	112
DB503	
(115V)	109
(220V)	112
DB504	
(115V)	109
(220V)	112
CR505	
(115V)	109
(220V)	112

31. AC DRIVE BOARD

May 30, '87

Index No.	Part No.	Description	Q'ty Per Assembly
*	AY11 0001	AC Drive Board - 115V	1
*	AY11 0002	AC Drive Board - 220/240V	1
1	5215 5222	Transformer - 100V/25V	2
101	1102 2113	Connector - 2P	
102	1103 0701	Connector - 6P	
103	1103 1724	Connector - 2P	
104	1103 1731	Connector - 9P	
105	1208 1034	Relay - DC24V	
106	1402 0360	Zener Diode - HZ20	
107	1402 0467	Diode - S5566G	
108	1405 0127	Photothyristor - TLP541G	
109	1405 0130	Rectifier - 1G4B42	
110	1405 0148	Triac - 600V 16A Bcr	
111	1405 0151	Photothyristor - TLP545J	
112	1405 0152	Rectifier - 1J4B42	
113	1405 0156	Triac - 400V 8A	
114	1405 0157	Triac - 400V 10A	
115	1408 0233	IC - HA17903PS	
116	1600 1112	Resistor - 100OHM 2W	
117	1601 2844	Resistor - 1.8KOHM 1/2W	
118	1601 7468	Fuse Resistor - 100OHM 1/2W	
119	1601 8185	Variable Resistor - 200OHM 0.5W	
120	1602 0975	Noise Filler - 0.1MF,120OHM	
121	1602 0976	Noidrkillrt - 1200HM +0.1MF	
122	1605 0280	Capacitor - 0.01MF 50V	
123	1606 0689	Capacitor - 0.01MF 50V	
124	1606 1494	Capacitor - 0.047MF 250V	
125	1606 1496	Capacitor - 0.1µF 400V	
126	1606 1497	Capacitor - 0.047µF 125V	
127	1606 1542	Capacitor - 0.22MF AC250V	
128	1607 0218	Inductor - 6660MF	
129	1611 4103	Resistor - 10KOHM 1/4T ±5%	
130	1611 4223	Resistor - 22KOHM 1/4T ±5%	
131	1611 4562	Resistor - 5.6KOHM 1/4T ±5%	
132	1611 4820	Resistor - 82OHM 1/4T ±5%	
133	1611 6222	Resistor - 2.2KOHM 1/2T ±5%	
134	1622 1203	Resistor - 120KOHM 1/4T ±1%	
135	1622 1800	Resistor - 185OHM 1/4W ±1%	
136	1622 4703	Resistor - 470OHM 1/4W ±1%	
137	1622 8202	Resistor - 82KOHM 1/4W ±1%	

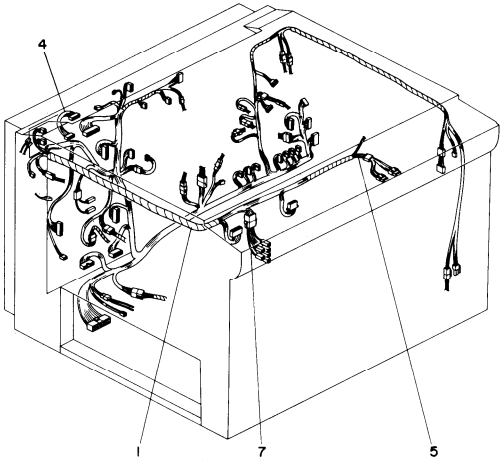
4
1
7
5

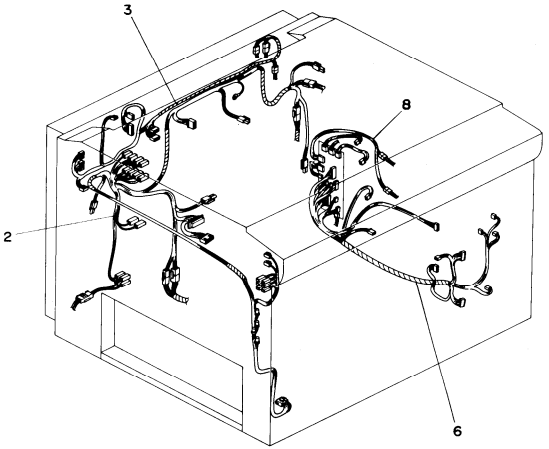
3
8
2
6

32. HARNESS LAYOUT FRONT VIEW

May 30, '87

Index No.	Part No.	Description	Q'ty Per Assembly
1	A007 5240	DC Harness	1
2	A007 5456	AC Harness	1
3	A007 5216	Lens Housing Harness	1
4	A007 5217	Main Contorl Harness	1
5	A240 0005	DC Motor Harness	1
6	A007 5249	Paper Feed Unit Harness	1
7	A007 5218	Safety Switch Harness	1
8	A007 5251	Left Motor Harness	1

Index No.	Part No.	Description	Q'ty Per Assembly

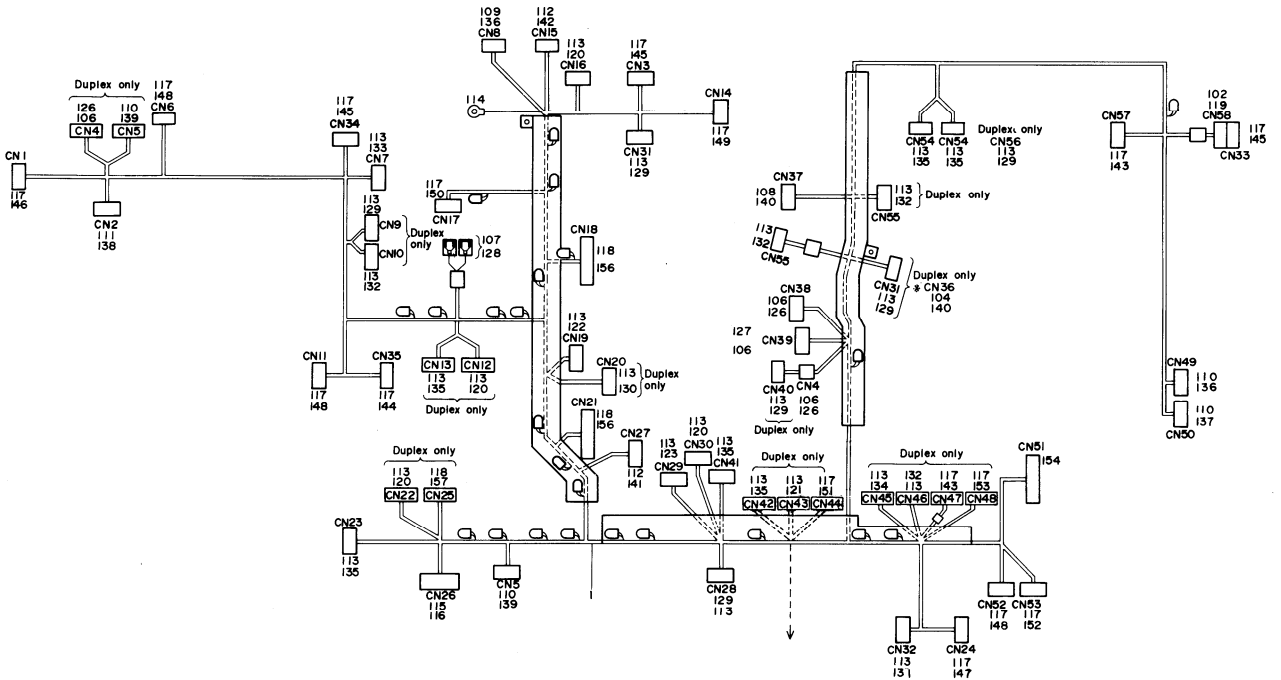
Duplex only
126 106 CN4
110 139 CN5
117 148 CN6
CN1 117 146
CN2 111 138
117 145 CN34
113 133 CN7
113 129 CN9
CN10
Duplex only
107 128
113 132
109 136 CN8
112 142 CN15
113 120 CN16
117 145 CN3
CN14
114
117 149
CN31 113 129
117 150 CN17
CN18 118 156
113 122 CN19
CN20 113 130 Duplex only
CN21 118 156
CN27 112 141
CN11 117 148
CN35 117 144
CN13 113 135
CN12 113 120
Duplex only
Duplex only
113 118 120 157 CN22 CN25
CN23 113 135
CN26 115 116
CN5 110 139
113 120 CN30
113 123 CN29
113 135 CN41
CN28 129 113
CN37 108 140
113 132 Duplex only CN55
113 132 CN55
CN31 113 129 Duplex only * CN36 104 140
CN38 106 126
127 106 CN39
CN40 113 129
CN4 106 126
Duplex only
Duplex only
113 135 CN42
113 121 CN43
117 151 CN44
CN54 113 135
CN54 113 135
Duplex only CN56 113 129
CN57 117 143
102 119 CN58 CN33 117 145
CN49 110 136
CN50 110 137
Duplex only
113 134 CN45
132 113 CN46
117 143 CN47
117 153 CN48
CN51 154
CN52 117 148
CN53 117 152
CN32 113 131
CN24 117 147

33. DC HARNESS

May 30, '87

Index No.	Part No.	Description	Q'ty Per Assembly
1	A007 5240	DC Harness	1
101	1100 0350	Closed Terminal	
102	1100 0844	Socket - Mate-N-Lock	
103	1100 0853	Closed Terminal	
104	1100 1153	Terminal	
105	1100 1155	Contact	
106	1100 1159	Socket - Mate-N-Lock	
107	1100 1172	Fastening Receptacle	
108	1100 1200	Terminal	
109	1100 1239	Pin - Mate-N-Lock	
110	1100 1240	Socket - Mate-N-Lock	
111	1100 1241	Socket - Mate-N-Lock	
112	1100 1247	Terminal	
113	1100 1259	Socket - Mate-N-Lock	
114	1100 1264	Fastening Receptacle	
115	1100 1300	Fastening Receptacle	
116	1100 1301	Fastening Receptacle	
117	1100 1327	Contact	
118	1100 1348	Pin Contact	
119	1102 0185	Connector - 4P	
120	1102 1089	Connector - 3P	
121	1102 1091	Connector - 6P	
122	1102 1093	Connector - 10P	
123	1102 1178	Connector - 5P	
124	1102 1286	Connector	
125	1102 3168	Receptacle - 32P	
126	1102 1396	Connector - 2P	
127	1102 1397	Connector - 2P	
128	1102 1404	Receptacle Housing	
129	1102 1412	Receptacle Housing - 2P	
130	1102 1413	Connector - 4P	
131	1102 1418	Connector - 8P	
132	1102 1419	Connector - 2P	
133	1102 1420	Connector - 2P	
134	1102 1422	Housing - 6P Black	
135	1102 1423	Housing - 3P Black	
136	1102 1509	Connector - 4P	
137	1102 1515	Connector - 2P	
138	1102 1518	Connector - 6P	
139	1102 1520	Connector - 12P	
140	1102 1714	Connector - 6P	
141	1102 1775	Connector - 8P	
142	1102 1878	Connector - 3P	
143	1102 1910	Connector - 2P	
144	1102 1911	Connector - 3P	
145	1102 1912	Connector - 4P	
146	1102 1914	Connector - 6P	
147	1102 1916	Connector - 8P	
148	1102 1918	Connector - 10P	
149	1102 1919	Connector - 11P	
150	1102 1922	Connector - 14P	
151	1102 1924	Connector - 2P	
152	1102 1930	Connector - 6P	
153	1102 1938	Connector - 2P	
154	1102 3168	Receptacle - 32P	
155	1102 3173	Contact	
156	1103 0657	Connector - 50P	
157	1103 0662	Connector - 20P	
158	1103 1622	Connector - 14P	
160	1402 0423	Diode - S5500G	

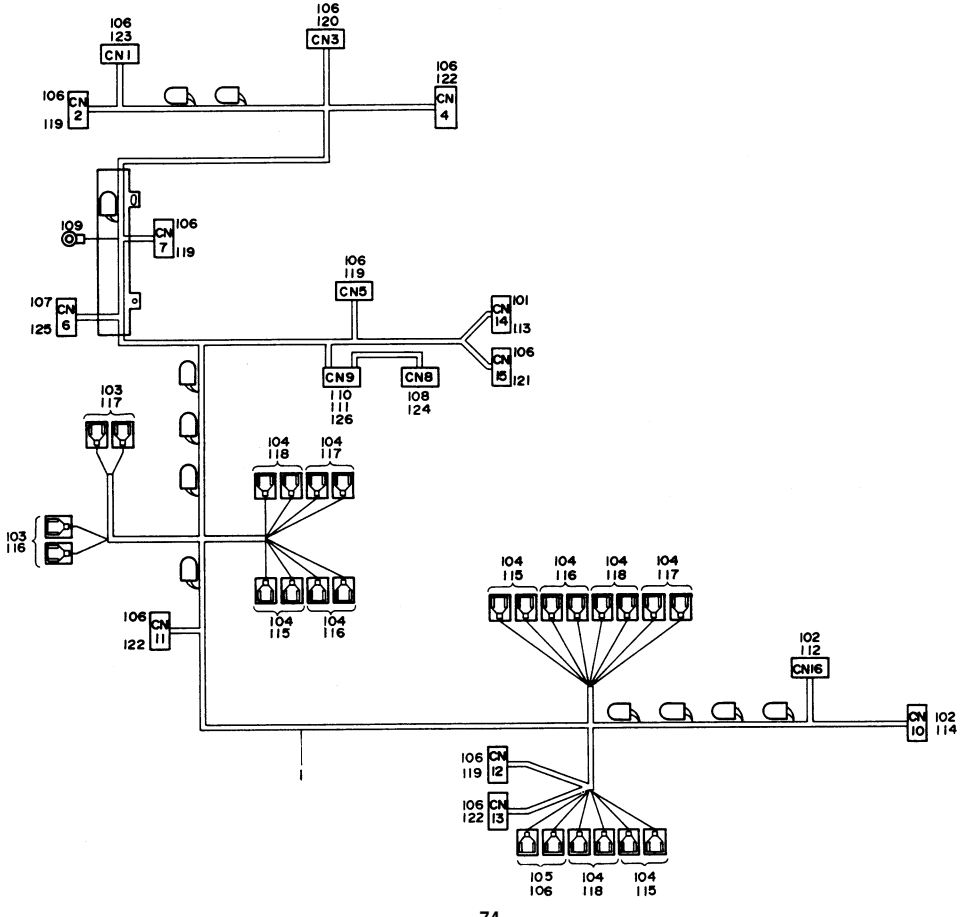
106 123 CN1
106 120 CN3
106 122 CN 4
106 119 CN 2
109
CN 7 106 119
106 119 CN5
107 125 CN 6
101 CN 14 113
106 CN 15 121
CN9 110 111 126
CN8 108 124
103 117
104 118
104 117
103 116
104 115
104 116
106 CN 11 122
104 115
104 116
104 118
104 117
102 112 CN16
CN 10 102 114
106 CN 12 119
106 CN 13 122
105 106
104 118
104 115

34. AC HARNESS

Index No.	Part No.	Description	Q'ty Per Assembly
1	A007 5456	AC Harness	1

Index No.	Part No.	Description	Q'ty Per Assembly
101	1100 0864	Housing - AWG14-20	
102	1100 0916	Pin - Mate-N-Lock	
103	1100 1170	Fastening Receptacle	
104	1100 1171	Fastening Receptacle	
105	1100 1172	Fastening Receptacle	
106	1100 1241	Socket - Mate-N-Lock	
107	1100 1247	Terminal	
108	1100 1253	Pin - Mate-N-Lock	
109	1100 1264	Fastening Receptacle	
110	1100 1341	Pin Contact	
111	1100 1345	Pin Contact	
112	1102 0782	Connector - 4P	
113	1102 0946	Housing - 3P	
114	1102 0983	Connector - 2P	
115	1102 1401	Receptacle Housing - 1P	
116	1102 1402	Receptacle Housing - 1P	
117	1102 1403	Receptacle Housing	
118	1102 1404	Receptacle Housing	
119	1102 1515	Connector - 2P	
120	1102 1516	Connector - 3P	
121	1102 1518	Connector - 6P	
122	1102 1532	Connector - 2P	
123	1102 1544	Connector - 3P	
124	1102 1778	Connector - 4P	
125	1102 1815	Connector - 3P	
126	1102 2099	Connector - 12P	

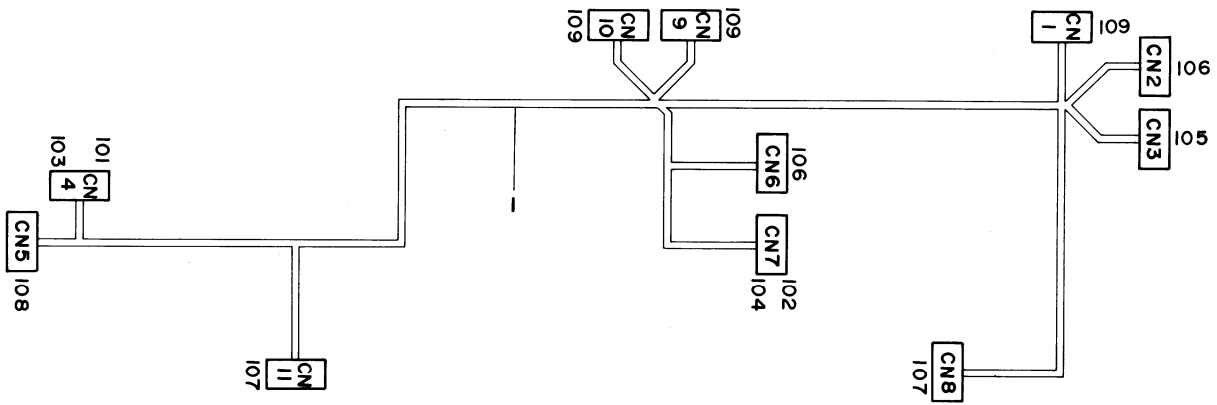
CN 1
109
CN2
106
CN3
105
CN 10
109
CN 9
109
CN6
106
CN7
102
104
CN8
107
CN 4
101
103
CN5
108
CN 11
107

35. LENS HOUSING HARNESS

May 30, '87

Index No.	Part No.	Description	Q'ty Per Assembly
1	A007 5216	Lens Housing Harness	1
101	1100 1241	Socket - Mate-N-Lock	
102	1100 1247	Terminal	
103	1102 1515	Connector - 2P	
104	1102 2549	Connector - 2P	
105	1103 1337	Connector - 4P	
106	1103 1344	Connector - 12P	
107	1103 1429	Connector - 3P	
108	1103 1430	Connector - 4P	
109	1103 1431	Connector - 8P	

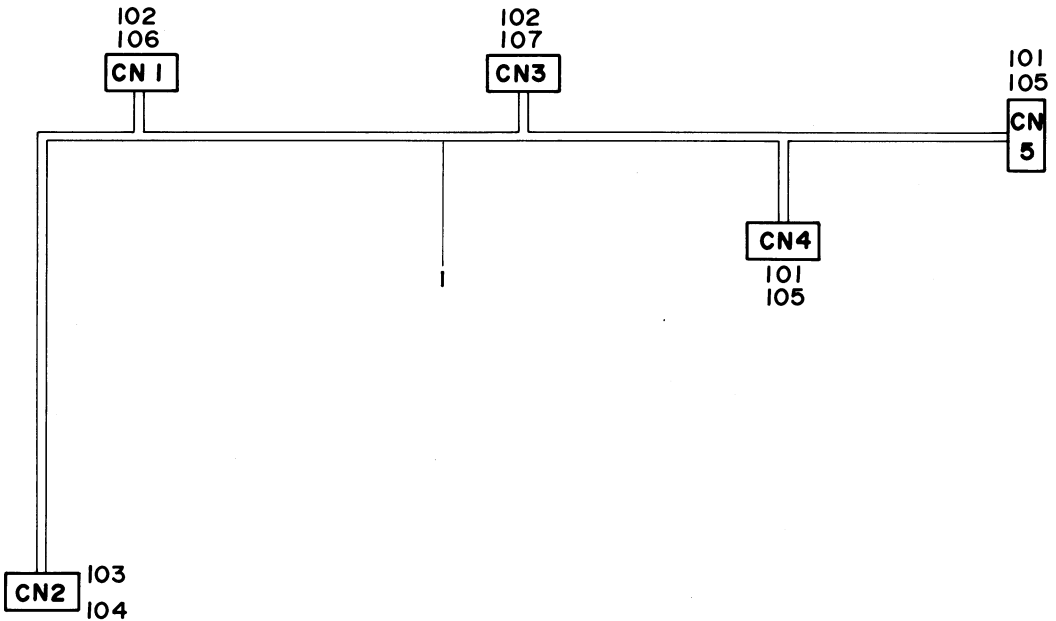
102
106
CN 1
102
107
CN3
101
105
CN
5
CN4
101
105
CN2
103
104

36. LENS HOME SENSOR HARNESS

Index No.	Part No.	Description	Q'ty Per Assembly
1	A007 5215	Lens Home Sensor Harness	1

Index No.	Part No.	Description	Q'ty Per Assembly
101	1100 1249	Receptacle Terminal	
102	1100 1253	Pin - Mate-N-Lock	
103	1100 1259	Socket - Mate-N-Lock	
104	1102 1091	Connector - 6P	
105	1102 1786	Connector - 3P	
106	1102 1790	Connector - 6P	
107	1102 1867	Connector - 6P	

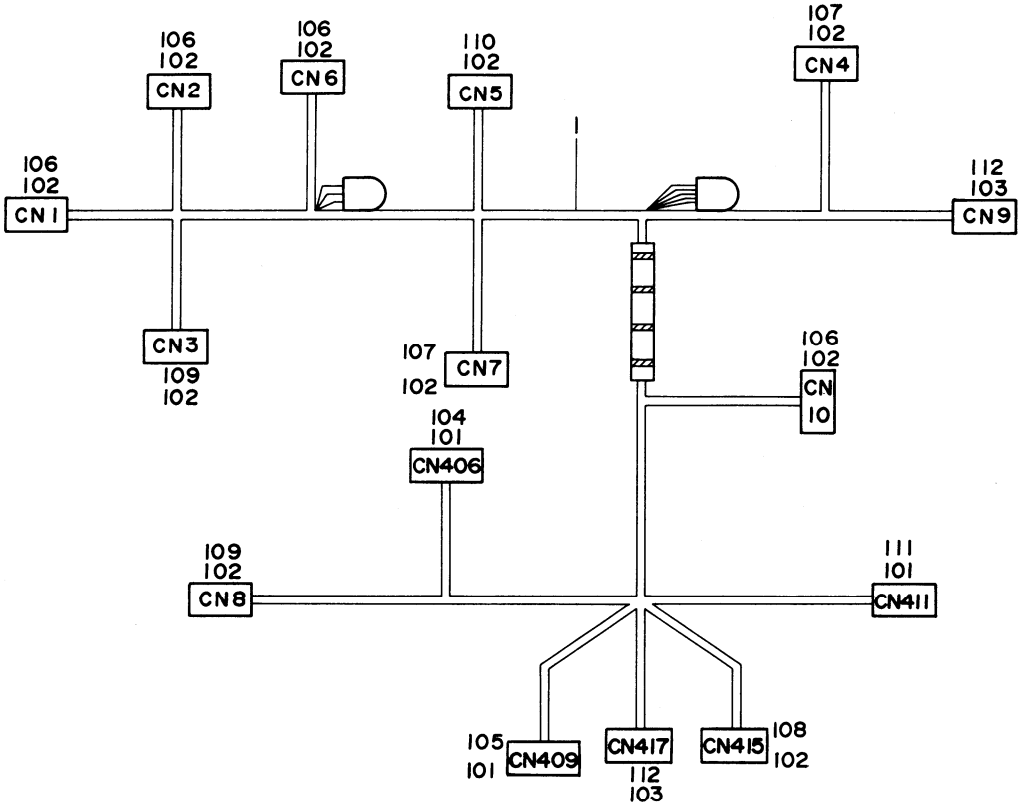
106
102
CN2
106
102
CN6
110
102
CN5
107
102
CN4
106
102
CN1
112
103
CN9
CN3
109
102
107
102
CN7
106
102
CN
10
104
101
CN406
109
102
CN8
111
101
CN411
105
101
CN409
CN417
112
103
CN415
108
102

37. PAPER FEED UNIT HARNESS

May 30, '87

Index No.	Part No.	Description	Q'ty Per Assembly
1	A007 5249	Paper Feed Unit Harness	1

Index No.	Part No.	Description	Q'ty Per Assembly
101	1100 1089	Socket - Mate-N-Lock	
102	1100 1249	Receptacle Terminal	
103	1100 1327	Contact	
104	1102 1093	Connector - 10P	
105	1102 1094	Connector - 12P	
106	1102 1620	Connector - 3P	
107	1102 1623	Receptacle Housing - 7P	
108	1102 1786	Connector - 3P	
109	1102 1787	Connector - 3P	
110	1102 1788	Connector - 7P	
111	1102 1854	Connector - 10P	
112	1102 1911	Connector - 3P	

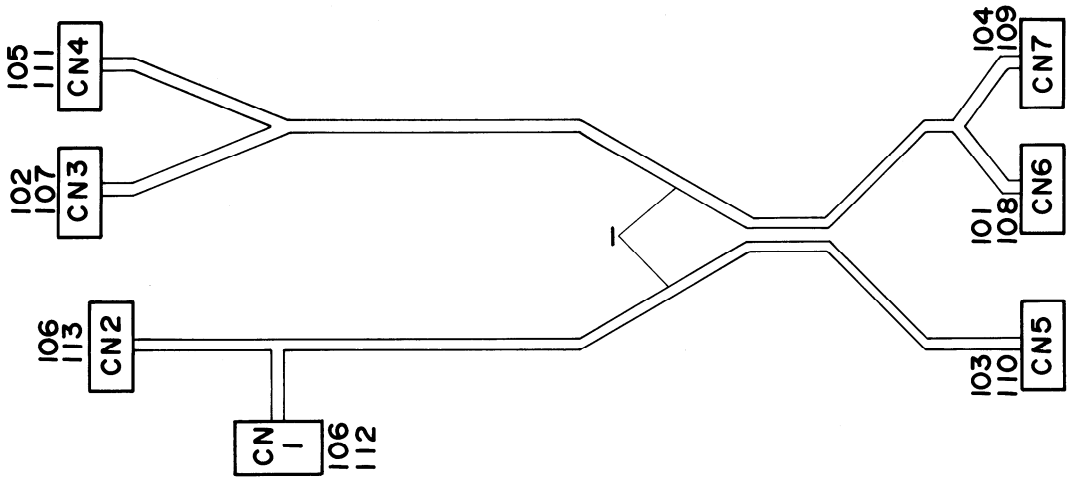
105
111
CN4
102
107
CN3
106
113
CN2
CN
1
106
112
1
104
109
CN7
101
108
CN6
103
110
CN5

38. AC DRIVE BOARD HARNESS

May 30, '87

Index No.	Part No.	Description	Q'ty Per Assembly
1	A007 5462	AC Drive Board Harness	1

Index No.	Part No.	Description	Q'ty Per Assembly
101	1100 0863	Stud Pin	
102	1100 0864	Housing - AWG14-20	
103	1100 1238	Pin - Mate-N-Lock	
104	1100 1239	Pin - Mate-N-Lock	
105	1100 1247	Terminal	
106	1100 1327	Contact	
107	1102 0946	Housing - 3P	
108	1102 0977	Connector - Heater	
109	1102 1510	Connector - 6P	
110	1102 1512	Connector - 12P	
111	1102 1889	Connector - 6P	
112	1102 1910	Connector - 2P	
113	1102 1917	Connector - 8P	

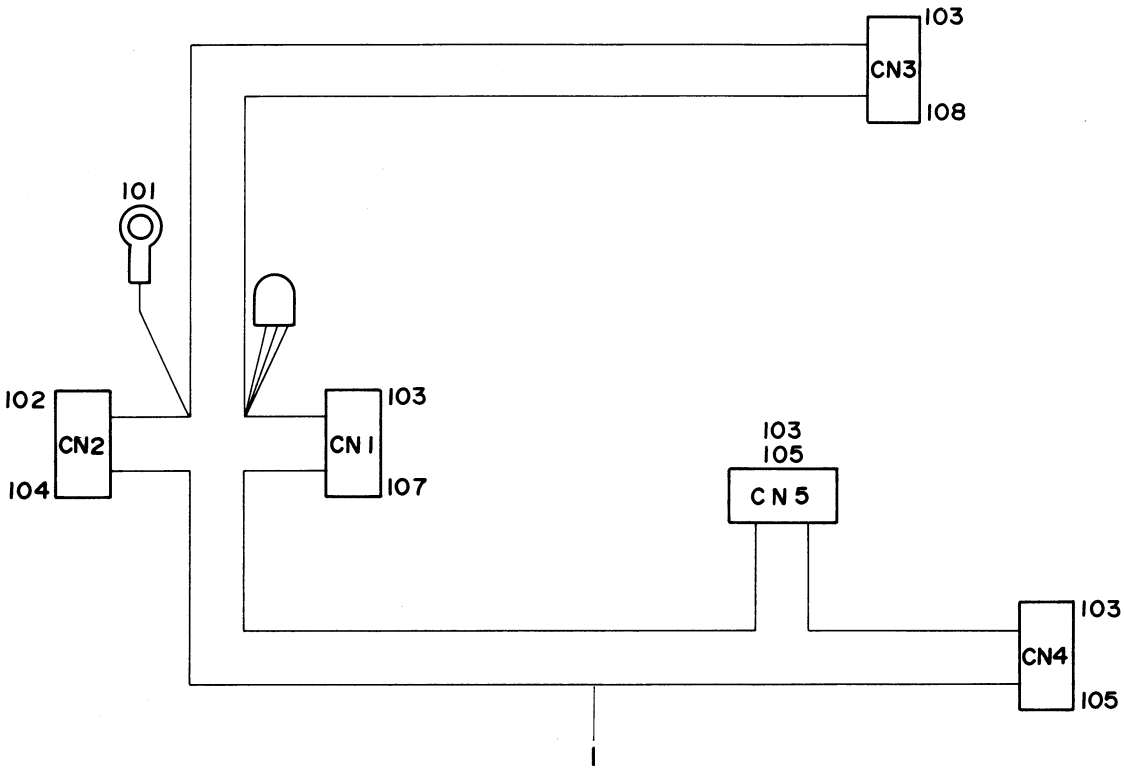
103
CN3
108
101
102
CN2
104
CN1
103
107
103
105
CN5
103
CN4
105
1

39. POWER PACK HARNESS

May 30, '87

Index No.	Part No.	Description	Q'ty Per Assembly
1	A007 5366	Power Pack Harness	1

Index No.	Part No.	Description	Q'ty Per Assembly
101	1100 0082	Solid Strand	
102	1100 1253	Pin - Mate-N-Lock	
103	1100 1327	Contact	
104	1102 1777	Connector - 8P	
105	1102 1911	Connector - 3P	
106	1102 1925	Connector - 3P	
107	1102 1932	Connector - 10P	
108	1102 1940	Connector - 4P	

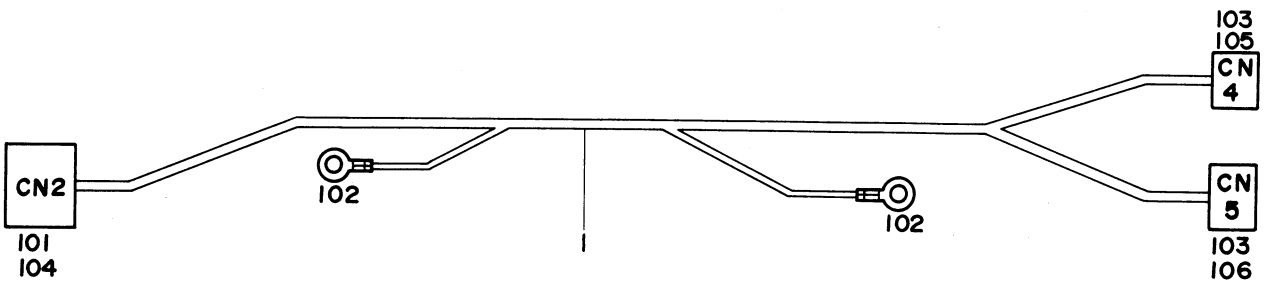
103
105
CN
4
CN2
102
102
CN
5
101
104
1
103
106

40. TRANSPORT UNIT HARNESS

Index No.	Part No.	Description	Q'ty Per Assembly
1	A007 5214	Transport Unit Harness	1
101	1100 1253	Pin - Mate-N-Lock	
102	1100 1264	Fastening Receptacle	
103	1100 1328	Contact	
104	1102 1753	Connector - 5P	
105	1102 1952	Connector - 2P	
106	1102 1953	Connector - 3P	

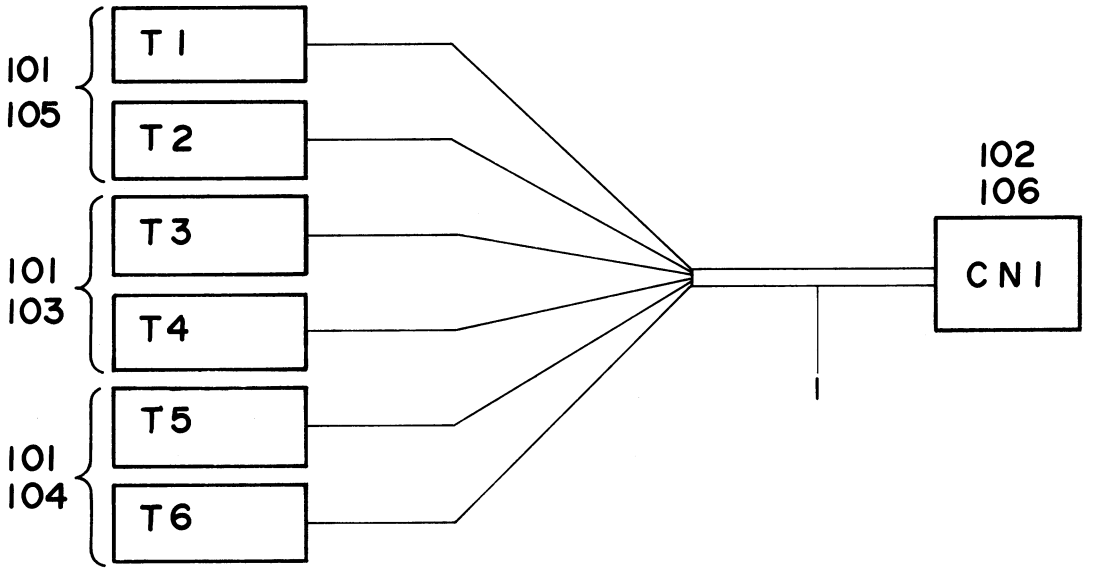
101
105
T 1
T 2
101
103
T 3
T 4
101
104
T 5
T 6
102
106
C N 1

41. SAFETY SWITCH HARNESS

May 30, '87

Index No.	Part No.	Description	Q'ty Per Assembly
1	A007 5218	Safety Switch Harness	1
101	1100 1172	Fastening Receptacle	
102	1100 1238	Pin - Mate-N-Lock	
103	1102 1402	Receptacle Housing - 1P	
104	1102 1403	Receptacle Housing	
105	1102 1404	Receptacle Housing	
106	1102 1510	Connector - 6P	

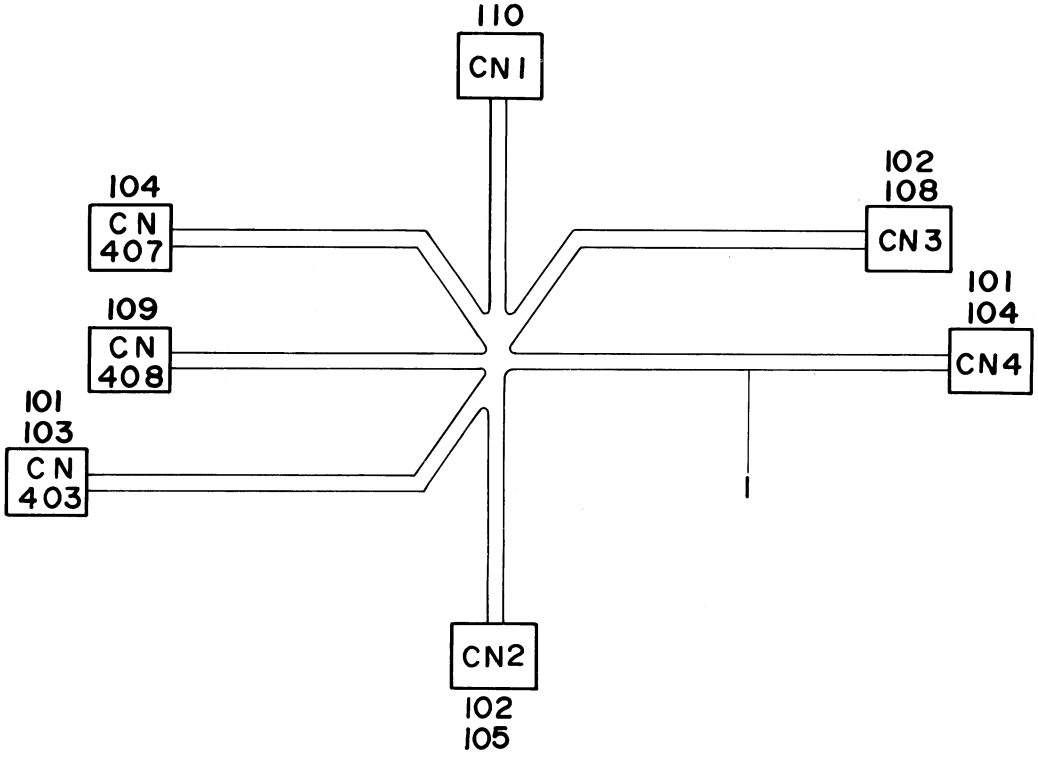
110
CN1
104
CN
407
102
108
CN3
109
CN
408
101
104
CN4
101
103
CN
403
CN2
102
105

42. LIFT MOTOR HARNESS

Index No.	Part No.	Description	Q'ty Per Assembly
1	A007 5251	Left Motor Harness	1

Index No.	Part No.	Description	Q'ty Per Assembly
101	1100 1249	Receptacle Terminal	
102	1100 1328	Contact	
103	1102 1620	Connector - 3P	
104	1102 1786	Connector - 3P	
105	1102 1964	Connector - 2P	
106	1102 1976	Connector - 2P	
107	1103 1337	Connector - 4P	
108	1103 1429	Connector - 3P	

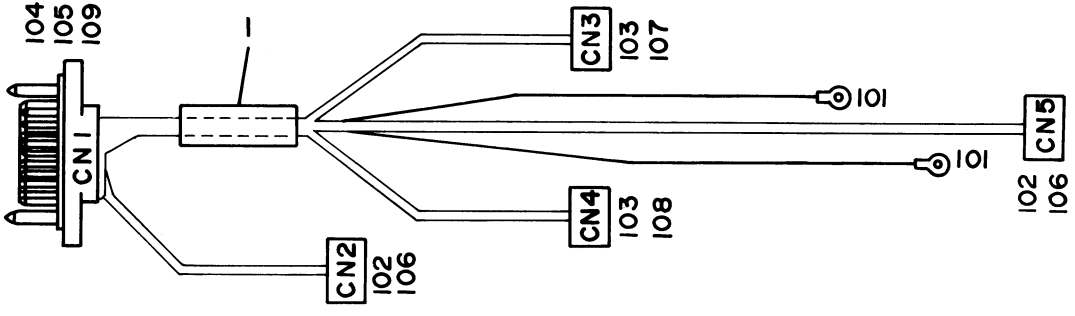
104
105
109
1
CN1
CN3
103
107
101
CN5
101
102
106
CN4
103
108
CN2
102
106

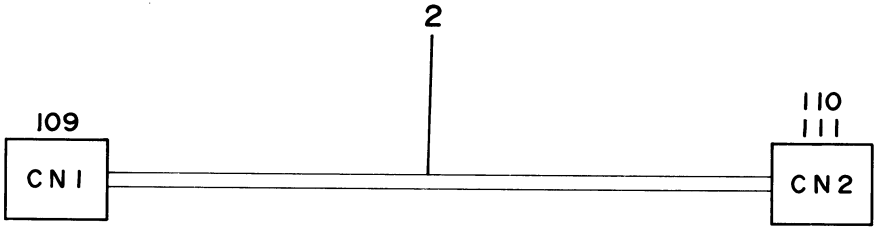
2
109
CN1
110
111
CN2

43. FUSING UNIT HARNESS AND GATE HARNESS

May 30, '87

Index No.	Part No.	Description	Q'ty Per Assembly
1	A007 5540	Fusing Unit Harness	1
2	A007 5205	Gate Descent Harness	1

Index No.	Part No.	Description	Q'ty Per Assembly
101	1100 0086	Solid Strand	
102	1100 1249	Receptacle Terminal	
103	1100 1327	Contact	
104	1100 1339	Pin Contact	
105	1100 1343	Pin Contact	
106	1102 1620	Connector - 3P	
107	1102 1910	Connector - 2P	
108	1102 1924	Connector - 2P	
109	1102 2098	Connector - 12P	
110	1100 1253	Pin - Mate-N-Lock	
111	1102 1859	Connector - 4P	

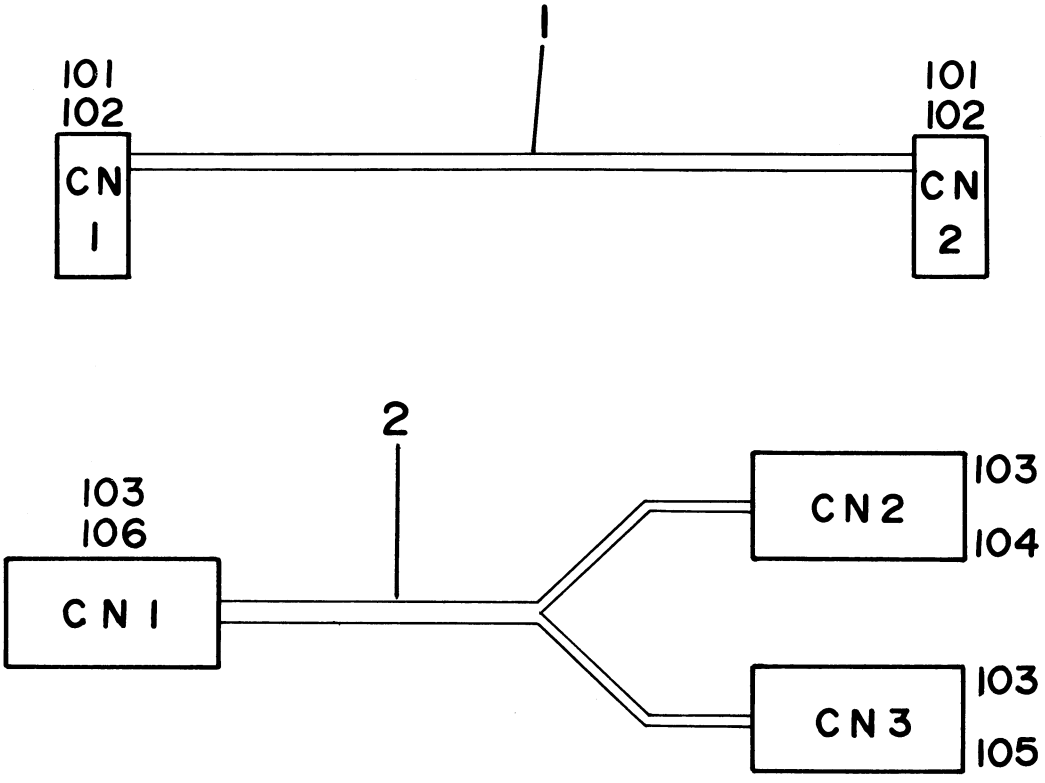
1
101
102
CN
1
101
102
CN
2
2
103
106
CN 1
CN 2
103
104
CN 3
103
105

44. MAIN CONTROL HARNESS AND DC MOTOR HARNESS

May 30, '87

Index No.	Part No.	Description	Q'ty Per Assembly
1	A007 5217	Main Contorl Harness	1
2	AZ40 0003	DC Motor Harness	1

Index No.	Part No.	Description	Q'ty Per Assembly
101	1100 1259	Socket - Mate-N-Lock	
102	1102 1092	Connector - 9P	
103	1100 1328	Contact	
104	1102 1952	Connector - 2P	
105	1102 1953	Connector - 3P	
106	1102 1967	Connector - 6P	

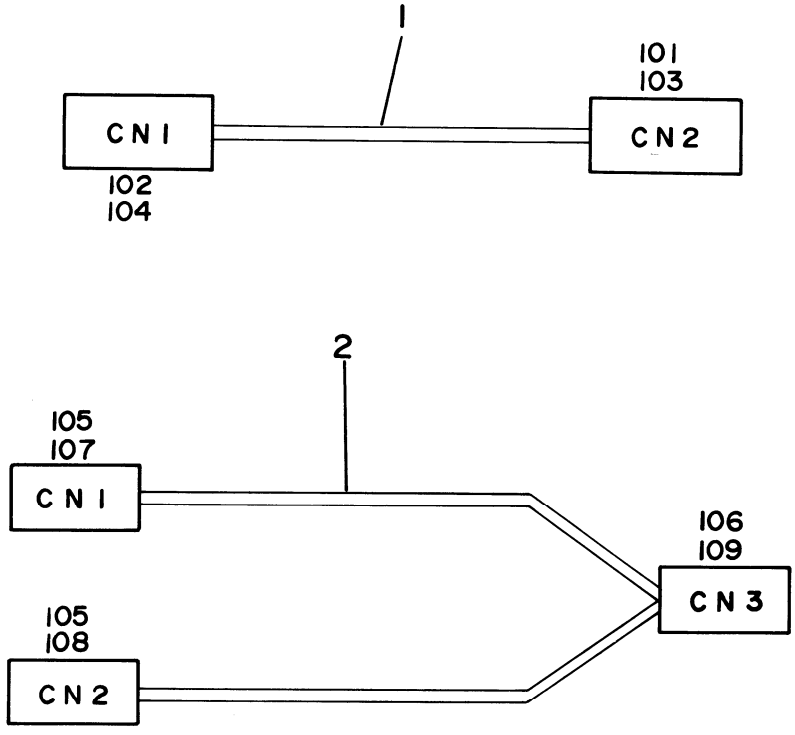
1
101
103
CN1
CN2
102
104
2
105
107
CN1
106
109
CN3
105
108
CN2

45. CLEANER SENSOR HARNESS AND GATE SOLENOID HARNESS

May 30, '87

Index No.	Part No.	Description	Q'ty Per Assembly
1	AZ40 0004	Cleaner Sensor Harness	1
2	A007 5264	Gate Solenoid Harness	1

Index No.	Part No.	Description	Q'ty Per Assembly
101	1100 1327	Contact	
102	1100 1329	Socket Contact	
103	1102 1911	Connector - 3P	
104	1102 1983	Socket Housing - 3P	
105	1100 1159	Socket - Mate-N-Lock	
106	1100 1253	Pin - Mate-N-Lock	
107	1102 1396	Connector - 2P	
108	1102 1398	Connector - 2P	
109	1102 1861	Connector - 4P	

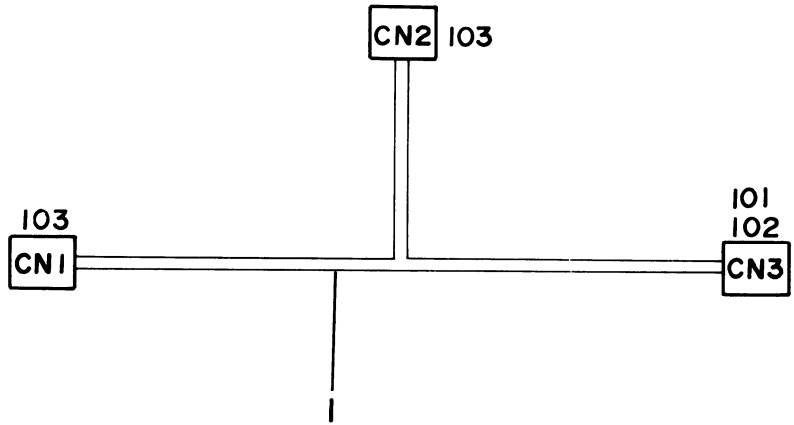
CN2
103
103
CN1
101
102
CN3
1
2
105
106
C N
1
104
107
C N
2

46. DUPLEX ENTRANCE HARNESS AND TONER END SENSOR HARNESS

May 30, '87

Index No.	Part No.	Description	Q'ty Per Assembly
1	A007 5263	Duplex Entrance Harness	1
2	A007 5204	Tonner End Sensor Harness	1

Index No.	Part No.	Description	Q'ty Per Assembly
101	1100 1253	Pin - Mate-N-Lock	
102	1102 1790	Connector - 6P	
103	1103 1336	Connector - 3P	
104	1100 1253	Pin - Mate-N-Lock	
105	1100 1259	Socket - Mate-N-Lock	
106	1102 1089	Connector - 3P	
107	1102 1814	Connector - 3P	

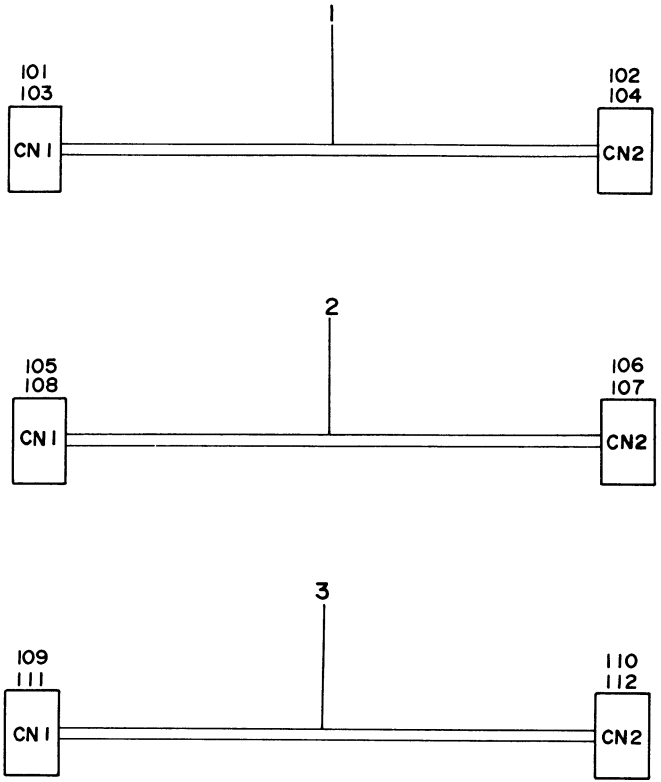
1
101
103
CN 1
102
104
CN2
2
105
108
CN 1
106
107
CN2
3
109
111
CN 1
110
112
CN2

47. DUPLEX STOPPER SOLENOID HARNESS, INVERTER GUIDE ENTRANCE HARNESS AND LED SENSOR HARNESS

May 30, '87

Index No.	Part No.	Description	Q'ty Per Assembly
1	A007 5262	Duplex Stopper Solenoid Harness	1
2	A007 5260	Inverter Guide Entrance Harness	1
3	A007 5265	L.E.D. Sensor Harness	1

Index No.	Part No.	Description	Q'ty Per Assembly
101	1100 1159	Socket - Mate-N-Lock	
102	1100 1253	Pin - Mate-N-Lock	
103	1102 1396	Connector - 2P	
104	1102 1860	Connector - 2P	
105	1100 1249	Receptacle Terminal	
106	1100 1253	Pin - Mate-N-Lock	
107	1102 1660	Receptacle Housing - 3P	
108	1102 1786	Connector - 3P	
109	1100 1249	Receptacle Terminal	
110	1102 1253	Connector - 15P	
111	1102 1620	Connector - 3P	
112	1102 1814	Connector - 3P	

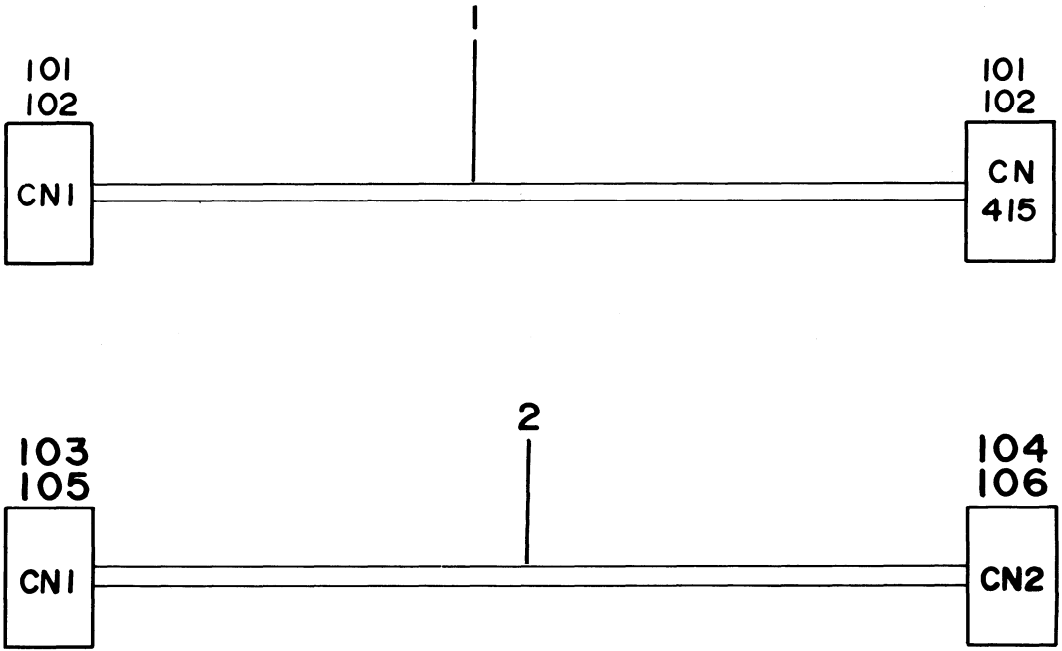
1
101
102
CN1
101
102
CN
415
2
103
105
CN1
104
106
CN2

48. TRANSPORT SENSOR HARNESS AND HOME SENSOR HARNESS

May 30, '87

INdex No.	Part No.	Description	Q'ty Per Assembly
1	A007 5254	Transport Sensor Harness	1
2	A007 5261	Home Sensor Harness	1

Index No.	Part No.	Description	Q'ty Per Assembly
101	1100 1249	Receptacle Terminal	
102	1102 1786	Connector - 3P	
103	1100 1249	Receptacle Terminal	
104	1100 1253	Pin - Mate-N-Lock	
105	1102 1620	Connector - 3P	
106	1102 1814	Connector - 3P	

1	2	3	4	5	6	7	8
	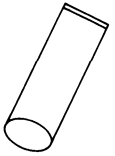	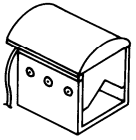	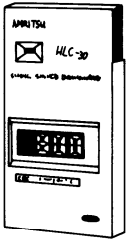	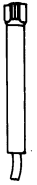	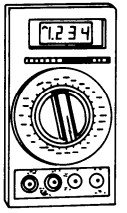	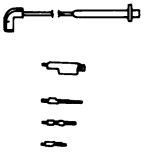	
9	**10**	**11**	**12**	**13**	**14**	**15**	
	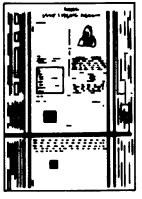		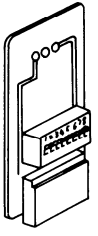	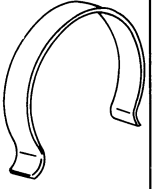	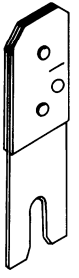	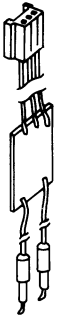	

49. SPECIAL TOOL

May 30, '87

Index No.	Part No.	Description	Q'ty Per Assembly
1	5442 9101	Setting Powder	1
2	5442 9102	Light Shielding Bag	1
3	5442 9106	Drum Shoe	1
4	5420 9504	Thermo Meter - HLC60-E	1
5	5420 9505	Probe - HLC60-E	1
6	5420 9507	Digital Multimeter - BECKMAN RMS3030	1
7	5420 9508	Delux Test Lead Accessory Kit	1
8	5420 9550	Silicone Oil	1
9	5442 9103	Launa Oil	1
10	5420 9516	Test Chart - OS - A3 (10pcs/set)	1
11	5447 9078	Heat Resisting Grease MT-78	1
12	5205 9601	Switching Board	1
13	5205 9111	Omega Clamp	1
14	5205 9101	Gap Gauge	1
15	5206 9600	Sensor Checker	1

Index No.	Part No.	Description	Q'ty Per Assembly

1



2

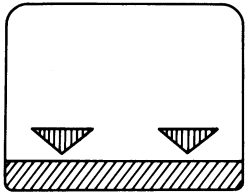

3

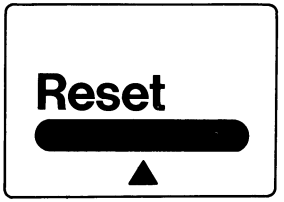

4

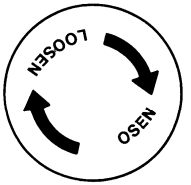

5

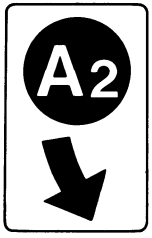

6



7



8

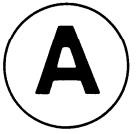

9

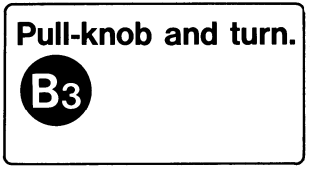

10



11

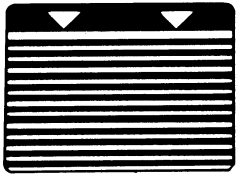

12

温度ヒューズ
THERMAL CUTOFF 182°C

13

8½x14

14

11x17

15

8½x11

16

8½x11

17

A3
297×420

18

A4
210×297

19

A4
210×297

20



21

ADDITION TONER

When Add Toner Indicator blinks, 50 more copies can be made.
Replace Toner Bottle promptly. When indicator stays lit, copies cannot be made until toner is added.

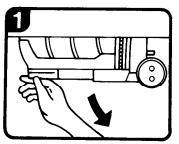

Grasp the bottle holder and gently but firmly pull down.

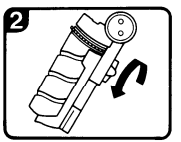

Turn the lever on reverse side of bottle holder counterclockwise.

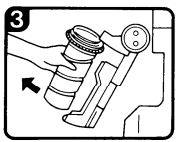

Remove empty Toner Bottle.

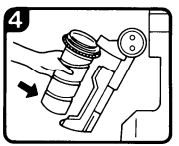

Place new Toner Bottle in the holder.

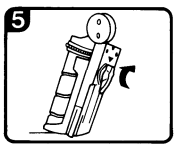

Turn lever clockwise until it locks.

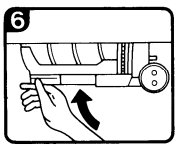

Grasp bottle holder handle and pull up until holder meets magnetic catch.

22



23

Removing Misfed Paper

■ If the misfeed indicator lights, there is a misfeed inside the copier.

If A is lit.



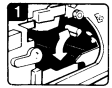

Push down the knob (A) and lower the guide plate.



Remove misfed paper by turning the registration knob counterclockwise and to pushing down the lever (A).

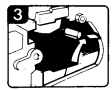

Return guide plate to its original position with the lever (A).



If no paper was found at step 2, take out the paper cassette and remove any paper that remains in the feed entrance.

If B is lit.

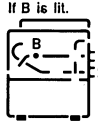



Turn the lever (B) counterclockwise and lower the transport unit.



Turn the knob (B) counterclockwise. Remove any misfed paper, taking care not to tear it.

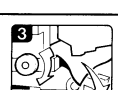

Pull out the fusing unit knob (B) and turn clockwise, while removing paper.

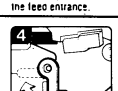

Turn lever (B) clockwise and return the transport unit to the original position.

If B is lit. Removing misfeed from fusing unit.

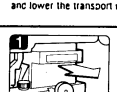

Push down the lever (B), grasp the fusing unit knob, and pull the fusing unit out. CAUTION : The fusing unit may be very hot, so be careful when touching it.



Push down the two (B) levers at the front and rear of the fusing unit. Swing down the fusing exit assembly.



Remove any misfed paper, being careful not to tear the paper or touch the fusing rollers.



After removing the misfed paper, return the fusing exit assembly back to its original position. Slide the fusing unit back into the copier.

If C is lit.

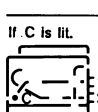



Pull any misfed paper out of the paper exit.

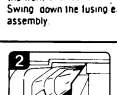

If no paper is in exit, push the tab (C) up in the direction of the arrow.



While holding the guide plate, pull out the misfed paper.

If D is lit.



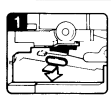

Press the lever (D) firmly to the left and lower the fork gate unit.



Remove any misfed paper caught in the fork gate unit.

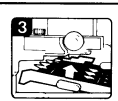

To close the fork gate unit, push up lever (D).

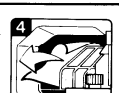

Check the inverter unit and remove any misfed paper caught inside.

Note :
If misfeed location indicator stays on after the front cover is closed, a misfeed may still be within the copier-Be sure to remove all misfed paper.
Do not touch the selenium drum when clearing misfeeds.

24

Removing Misfed Paper

- If the misfeed indicator lights, there is a misfeed inside the copier.

If A is lit.

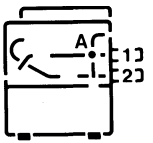

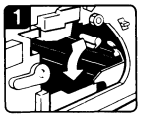

Push down the knob (A) and lower the guide plate.

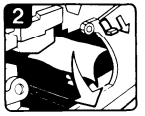

Remove misfed paper by turning the registration knob counterclockwise and by pushing down the lever (A).

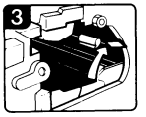

Return guide plate to its original position with the lever (A).



If no paper was found at step 2, take out the paper cassette and remove any paper that remains in the feed entrance.

If B is lit.

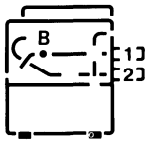

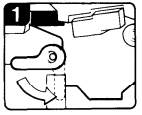

Turn the lever (B) counterclockwise and lower the transport unit.



Turn the knob (B) counterclockwise. Remove any misfed paper, taking care not to tear it.

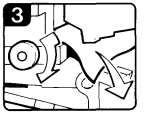

Pull out the fusing unit knob (B) and turn clockwise, while removing paper.

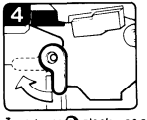

Turn lever (B) clockwise and return the transport unit to the original position.

If B is lit. Removing misfeed from fusing unit.

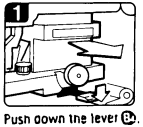

Push down the lever (B), grasp the fusing unit knob, and pull the fusing unit out. CAUTION : The fusing unit may be very hot, so be careful when touching it.

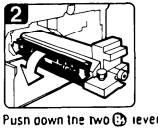

Push down the two (B) levers at the front and rear of the fusing unit. Swing down the fusing exit assembly.



Remove any misfed paper, being careful not to tear the paper or touch the fusing rollers.

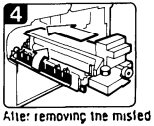

After removing the misfed paper, return the fusing exit assembly back to its original position. Slide the fusing unit back into the copier.

If C is lit.

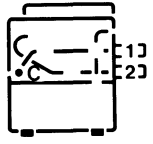

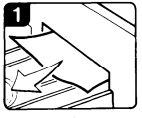

Pull any misfed paper out of the paper exit.

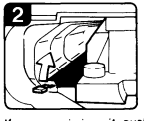

If no paper is in exit, push the tab (B) up in the direction of the arrow.

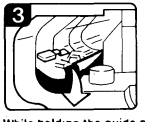

While holding the guide plate, pull out the misfed paper.

50. DECAL AND DOCUMENT

May 30, '87

Index No.	Part No.	Description	Q'ty Per Assembly
1	A007 1373	Decal - Reset	1
2	A007 2802	Decal - Manual Feed Table	1
3	A007 6353	Decal - Reset	1
4	A007 6811	Decal - Drum Shaft Knob	1
4	A007 6813	Decal - Drum Shaft Knob - A3/A4	1
5	AA00 1037	Decal - A2	1
6	AA00 1038	Decal - Regist Sensor	1
7	AA00 1050	Decal - Handle - A3/A4	1
7	AA00 1062	Decal - Handle	1
8	5442 2769	Decal - A	1
9	AA00 1054	Decal - B3	1
10	5442 6126	Decal - High Temperature	1
11	5413 4835	Decal - Paper Level	1
12	5215 4211	Decal - Thermofuse	1
13	AA00 2003	Decal - 8-1/2"x14"	2
14	AA00 2004	Decal - 11"x17"	2
15	AA00 2005	Decal - 8-1/2"x11R"	2
16	AA00 2006	Decal - 8-1/2"x11"	2
17	AA00 2007	Decal - A3	2
18	AA00 2008	Decal - A4R	2
19	AA00 2009	Decal - A4	2
20	A007 8600	Operating Instructions - English	1
20	A007 8601	Operating Instructions - German	1
20	A007 8602	Operating Instructions - French	1
20	A007 8603	Operating Instructions - Italian	1
20	A007 8604	Operating Instructions - Spanish	1
20	A007 8605	Operating Instructions - 5 Language	1
21	A007 6351	Decal - Adding Toner	1
22	AA00 2035	Manual Feed Decal	1
22	AA00 2030	Manual Feed Decal - A3/A4	1
23	A007 6348	Decal - Misfeed Large	1
24	A007 6349	Decal - Misfeed Small	1

Index No.	Part No.	Description	Q'ty Per Assembly

PARTS INDEX

Parts No.	Description	Page and Index No.
A000 5507	Lift Motor - DC1.69W	21-60
A000 5507	Lift Motor - DC1.69W	23-47
A007 1065	Upper Left Stay	11-2
A007 1066	Upper Right Stay	11-3
A007 1068	Leaf Spring - Transport Handle	11-15
A007 1082	Main Drive Motor Bracket	55-14
A007 1091	Fusing Drive Unit Bracket	55-26
A007 1100	Timing Belt Tension Bracket	55-29
A007 1103	Tension Lever - Fusing Drive	55-24
A007 1108	Perforated Disk	55-40
A007 1112	Photointerruptor Bracket	55-41
A007 1114	Pulley & Gear - 36T/45T	43-50
A007 1114	Pulley & Gear - 36T/45T	55-35
A007 1117	Idle Pulley Bracket	55-33
A007 1123	Tension Lever - Drum Drive	55-38
A007 1125	Right ADF Bracket	61-1
A007 1128	ADF Support Bracket	59-10
A007 1129	Left ADF Bracket	61-18
A007 1130	Exit Cover	59-9
A007 1140	Bushed Roller Chain - 160P	33-2
A007 1257	Front Cover Bracket	9-14
A007 1267	Upper Cover Cap - ADF	9-2
A007 1294	Magnet Catch Plate	53-9
A007 1303	Cover - Transport	25-18
A007 1308	Inner Cover - Registration Sensor	9-17
A007 1310	Operation Panel Bracket - Right	53-8
A007 1311	Operation Panel Bracket - Left	53-6
A007 1312	Operation Panel Bracket - Center	53-7
A007 1313	Operation Panel Support Bracket	53-5
A007 1314	Right Front Cover Bracket	9-22
A007 1315	Upper Bracket - Right Rear Cover	9-38
A007 1316	Bottom Bracket - Right Rear Cover	9-37
A007 1373	Decal - Reset	111-1
A007 1471	Instruction Card Holder	53-3
A007 1472	Instruction Card Spring	53-4

Parts No.	Description	Page and Index No.
A007 1473	Instruction Card Cover	53-2
A007 1491	Operation Panel Ass'y	53-1
A007 1492	Operation Panel Ass'y - A3/A4	53-1
A007 1531	Slide Cover	53-11
A007 1663	Stepping Motor Cover	17-13
A007 1664	Seal - Stepping Motor Cover	17-14
A007 1670	Optics Right Frame	15-2
A007 1675	Mounting Bracket Scale	13-32
A007 1680	Exposure Grass Stay	13-38
A007 1686	Cooling Blower Bracket	15-7
A007 1691	Optics Fan Filter Bracket	15-4
A007 1694	Optics Fan FIter	15-5
A007 1700	Front Bracket - 6th Mirror	17-19
A007 1701	Rear Bracket - 6th Mirror	17-48
A007 1706	Magnification Drive Motor - DC4.8W	17-12
A007 1707	Magnification Motor Bracket	17-10
A007 1709	Mirror Drive Pulley - 80T	17-8
A007 1716	Lens Drive Pulley - 80T	17-15
A007 1721	Lens Unit Base	17-63
A007 1722	Cam Plate - Lens Shield	17-46
A007 1726	Lens Bracket	17-62
A007 1727	Actuator Plate - Lens Home Sensor	17-36
A007 1729	Lens Fixing Plate	17-25
A007 1730	Lens Bracket	17-30
A007 1741	Lens Shield	17-35
A007 1742	Front Lens Shield	17-34
A007 1744	Rear Lens Shield	17-33
A007 1751	Lens Shielding Cover	17-32
A007 1761	4th and 5th Mirror Bracket	17-50
A007 1770	Guide Bracket - Lens Shield	17-54
A007 1776	Lens Home Sensor Bracket	17-56
A007 1781	Mirror Home Sensor Bracket	17-58
A007 1785	Harness Guide - Exposure Lamp	17-47
A007 1791	Mirror Cover	17-3
A007 1801	Scanner Home Sensor Bracket	15-31

Parts No.	Description	Page and Index No.
A007 1806	Scanner Sensor Bracket	15-12
A007 1810	Scanner Motor Bracket	15-9
A007 1815	Support Bracket - Optics Frame	15-30
A007 1826	Left Pulley Bracket	15-33
A007 1836	Center Pulley Bracket	15-13
A007 1845	Wire Clamp	13-16
A007 1848	Guide Rod Cleaner	13-13
A007 1848	Guide Rod Cleaner	15-17
A007 1851	1st Scanner	13-19
A007 1860	Reflector Clamp	13-3
A007 1865	Main Reflector	13-10
A007 1870	Reflector Cover	13-7
A007 1873	Front Cover - Lamp Terminal	13-9
A007 1875	Rear Cover - Lamp Terminal	13-8
A007 1880	1st Scanner Slider	13-29
A007 1890	Harness Bracket - Exposure Lamp	13-31
A007 1892	Rear Cover - Optical Fiber	13-25
A007 1893	Center Cover - Optical Fiber	13-27
A007 1894	Rear Bracket - Optical Fiber	13-26
A007 1895	Center Bracket - Optical Fiber	13-28
A007 1901	2nd Scanner	15-19
A007 1915	2nd Scanner Slider	15-24
A007 1925	Scanner Guide Plate	15-25
A007 1930	Vacuum Fan Duct	31-1
A007 1951	Front Platen Cover	19-2
A007 2051	C & D Rail	41-34
A007 2101	PTL Guide	43-18
A007 2108	DC Harness Bracket	59-15
A007 2109	PTL Guide Cover	43-17
A007 2110	PTL Guide Sheet	43-16
A007 2115	Density Sensor Bracket	43-42
A007 2116	Density Sensor Conector Bracket	43-41
A007 2116	Density Sensor Connector Bracket	59-16
A007 2121	Drum Stay Support Bracket	41-35
A007 2125	Side Plate - Behind Drum	11-11

Parts No.	Description	Page and Index No.
A007 2129	Development Rear Holder	43-38
A007 2133	Drum Stay Support Plate	41-39
A007 2137	Drum Stay Support Bracket	41-44
A007 2140	Drum Shaft Knob	41-37
A007 2145	Front Drum Flange	41-42
A007 2146	Blower Duct	41-49
A007 2149	Blower Bracket	41-48
A007 2152	Air Guide Plate	41-30
A007 2155	ID Sensor Duct	41-54
A007 2267	Drum Drive Pulley - 112T	41-57
A007 2577	Registration Knob	43-14
A007 2592	Transport Guide	43-10
A007 2597	Cushion Transport Guide	43-11
A007 2599	Paper Detect Feeler - Transport	21-27
A007 2601	Transport Roller Sensor Shutter	21-29
A007 2602	Transport Roller Sensor Bracket	21-28
A007 2604	Transport Upper Guide	43-58
A007 2605	Transport Aid Guide	43-59
A007 2606	Release Transport Guide Lever	43-4
A007 2608	Cushion - Transport Upper Guide	43-57
A007 2614	Registration Lower Guide	43-29
A007 2615	Upper Feed Guide	21-71
A007 2616	Registration Upper Guide	43-31
A007 2619	Transport Middle Guide	43-35
A007 2620	Transport Middle Guide - Upper	43-33
A007 2622	Separate Lower Guide	43-56
A007 2623	Separate Duplex Guide	43-55
A007 2624	Registration Lower Guide - Long	43-26
A007 2625	Registration Lower Guide - Short	43-27
A007 2626	Cushion - Transport Middle	43-36
A007 2628	Cushion - Registratin Upper Guide	43-32
A007 2631	Pick-up Guide - Lower	23-10
A007 2632	Knob - Transport Middle Guide	43-37
A007 2640	Paper Bank Guide - Duplex	43-61
A007 2643	Paper Bank Aid 1 - Duplex	43-62

Parts No.	Description	Page and Index No.
A007 2644	Paper Bank Aid 2 - Duplex	43-60
A007 2649	Separation Guide	21-46
A007 2649	Separation Guide	23-66
A007 2650	Separation Ressure Arm	21-43
A007 2650	Separation Pressure Arm	23-32
A007 2653	Paper Feed Brace - Upper	21-45
A007 2655	Separation Fixed Bracket	21-36
A007 2655	Separation Fixed Bracket	23-69
A007 2661	Paper Size Sensor Bracket	21-47
A007 2661	Paper Size Sensor Bracket	23-63
A007 2675	Paper Feed Stay - Lower	23-59
A007 2684	Paper Feed Roller Bracket	21-5
A007 2686	Feed Guide - Paper Feed Roller	21-4
A007 2686	Feed Guide - Paper Feed Roller	23-8
A007 2689	Paper Feed Stay	21-1
A007 2698	Upper Magnetic Clutch Stopper	21-51
A007 2709	Paper Feed Roller Bracket	23-12
A007 2712	Lower Paper Feed Stay	23-1
A007 2713	Magnetic Clutch Stopper	43-48
A007 2718	Paper End Feeler	21-70
A007 2718	Paper End Feeler	23-2
A007 2720	Paper End Actuator Bracket	21-66
A007 2722	Upper Bracket - Paper End	21-14
A007 2724	Lower Bracket - Paper End	23-18
A007 2725	Paper End Shutter - Upper	21-12
A007 2726	Paper End Actuator Bracket	23-3
A007 2733	Feed Control Board Bracket	61-14
A007 2740	Support Bracket 1 - Feed Control	61-5
A007 2741	Support Bracket 2 - Feed Control	61-16
A007 2742	Shutter Plate	61-9
A007 2744	Pick-up Arm - Manual Feed	61-6
A007 2746	Solenoid Upper Bracket	61-12
A007 2748	Solenoid Lower Bracket	61-13
A007 2752	Volume Sensor Shaft	21-48
A007 2752	Volume Sensor Shaft	23-60

Parts No.	Description	Page and Index No.
A007 2754	Bottom Plate Lever	21-49
A007 2754	Bottom Plate Lever	23-61
A007 2756	Bushing - Volume Sensor Shaft	21-26
A007 2756	Bushing - Volume Sensor Shaft	23-22
A007 2757	Sector Gear Bushing	21-25
A007 2757	Sector Gear Bushing	23-23
A007 2758	Volume Sensor Arm	21-24
A007 2758	Volume Sensor Arm	23-24
A007 2759	Sector Gear	21-77
A007 2759	Sector Gear	23-54
A007 2781	Paper Dust Scraper Bracket	43-66
A007 2782	Paper Dust Scraper	43-65
A007 2783	Paper Dust Scraper Cover	43-23
A007 2793	Manual Feed Table	9-31
A007 2794	Manual Feed Cover	9-32
A007 2796	Front Side Fence - Manual Feed Table	9-27
A007 2797	Rear Side Fence - Manual Feed Table	9-28
A007 2800	Manual Feed Table Support	9-34
A007 2802	Decal - Manual Feed Table	111-2
A007 2802	Decal - Manual Feed Table	9-29
A007 2803	Manual Feed Table Holder	21-72
A007 2803	Manual Feed Table Holder	9-23
A007 2805	Manual Feed Sensor Bracket	21-65
A007 2843	Release Knob - Bottom Plate	21-18
A007 2844	Release Lever - Bottom Plate	21-21
A007 2848	Cushion - Release Lever	21-23
A007 2850	Release Arm - Bottom Plate	21-19
A007 2850	Release Arm - Bottom Plate	23-55
A007 2853	Link Plate - Release Lever	21-20
A007 2857	Actuator - Bottom Plate Release	23-48
A007 2861	Link Plate - Release Arm	23-53
A007 2864	Release Arm Lever	23-52
A007 2867	Link Plate - Release Arm Lever	23-51
A007 2873	Front Side Guide - Cassette Holder	23-65
A007 2874	Rear Side Guide - Cassette Holder	23-64

Parts No.	Description	Page and Index No.
A007 2877	Cushion - Upper Pick-off Bracket	23-56
A007 2878	Cushion - Lower Pick-off Bracket	23-57
A007 2880	Bottom Plate Release Stopper	23-37
A007 2883	Bottom Plate Release Roller	23-49
A007 2885	Cam - Bottom Plate Release	23-50
A007 2893	Upper Paper Feed Bracket	21-64
A007 2894	Cushion - 8x15x30	11-13
A007 2894	Cushion - 8x15x30	21-63
A007 2894	Cushion - 8x15x30	23-5
A007 2896	Seal - 8x8x368	21-62
A007 2901	Paper Feed Motor Bracket	55-13
A007 2903	Chain Tightener	43-40
A007 2909	Bushed Roller Guide Bracket	43-47
A007 2910	Bushed Roller Chain - 106P	43-52
A007 2922	Cassette Ass'y - A3	19-*
A007 2926	Cassette Ass'y - DLT	19-*
A007 2937	Cassette Ass'y - A4	19-*
A007 2939	Cassette Ass'y - A4R	19-*
A007 2943	Cassette Ass'y - LT	19-*
A007 2945	Cassette Ass'y - LTR	19-*
A007 2950	Cassette Body - LT	19-25
A007 2955	Cassette Body - DLT	19-25
A007 3051	Development Unit	35-*
A007 3054	Development Bottom Plate Ass'y	37-41
A007 3055	Development Bottom Plate	37-58
A007 3061	Front Lower Side Plate	37-38
A007 3062	Seal Plate - Lower Side Plate	37-35
A007 3071	Rear Lower Side Plate	37-37
A007 3075	Side Plate Bracket - Dev Unit	37-46
A007 3082	Seal Plate - Upper Side Plate	37-11
A007 3126	Bearing Retainer	37-50
A007 3128	Adjusting Plate - Magnet Angle	37-17
A007 3135	Idle Gear - 17T	37-26
A007 3141	Front Upper Side Plate	37-13
A007 3151	Rear Upper Side Plate	37-55

Parts No.	Description	Page and Index No.
A007 3162	Seal - Doctor Blade 1	37-5
A007 3176	Development Filter	35-31
A007 3191	Entrance Seal Retainer	37-9
A007 3194	Guide Plate - Anti Static Brush	37-7
A007 3195	Guide Plate - Development Unit	35-62
A007 3197	Development Unit Clamp	41-59
A007 3198	Development Unit Guide	37-1
A007 3199	Toner Supply Unit	35-*
A007 3221	Toner Supply Cover	35-17
A007 3223	Toner Supply Bracket	35-16
A007 3251	Toner Hopper Pipe	35-12
A007 3256	Toner Hopper Pipe Cover	35-7
A007 3271	Toner Shutter	35-9
A007 3281	Toner Shutter Rack	35-21
A007 3286	Bottle Release Lever	35-19
A007 3290	Toner Hopper Pipe Cover	35-13
A007 3311	Seal - Toner Supply Shaft	35-41
A007 3321	Lower Hopper Case Ass'y	35-43
A007 3322	Lower Hopper Case	35-44
A007 3341	Upper Hopper Case Ass'y	35-32
A007 3342	Upper Hopper Case	35-35
A007 3343	Toner Agitator Scraper	35-63
A007 3350	Front Side Plate Ass'y - Toner Tank	35-29
A007 3351	Front Side Plate - Toner Tank	35-28
A007 3360	Hopper Side Plate Ass'y - Rear	35-48
A007 3361	Hopper Side Plate - Rear	35-50
A007 3376	Cam Wheel - Toner End	35-57
A007 3380	Toner End Actuator	35-55
A007 3388	Rack Guide Bracket	35-24
A007 3391	Cartridge Drive Bracket	35-6
A007 3395	Toner Hopper Casing Sheet	35-45
A007 3411	Development Motor Bracket	55-6
A007 3425	Helical Gear	55-3
A007 3430	Joint Shaft - Toner Supply	55-4
A007 3441	Support Bracket - Development Motor	55-12

Parts No.	Description	Page and Index No.
A007 3455	Tightener Bracket	55-7
A007 3461	Development Support Solenoid	55-44
A007 3466	Solenoid Bracket	55-45
A007 3480	Development Bias Receptacle	43-46
A007 3486	Toner End Sensor Bracket	21-76
A007 3487	Toner End Sensor Cover	21-41
A007 3495	Cooling Fan Cover	21-69
A007 3497	Development Unit Rail	17-17
A007 3551	Front Side Plate - Cleaning	45-28
A007 3561	Rear Side Plate - Cleaning	45-17
A007 3570	Cleaning Brush Drive Shaft	45-49
A007 3572	Cleaning Brush Joint	45-16
A007 3582	Upper Casing - Cleaning Unit	45-3
A007 3583	Seal - Upper Casing	45-2
A007 3584	Cleaning Blade Cleaner	45-4
A007 3590	Lower Casing Ass'y - Cleaning Unit	45-60
A007 3591	Lower Casing - Cleaning Unit	45-57
A007 3594	Inner Holder - Beater Bar	45-56
A007 3604	Cleaning Brush Holder	45-37
A007 3614	Spring Brush - Bias Roller	45-8
A007 3631	Cleaning Blade Holder	45-71
A007 3642	Pressure Arm - Cleaning Blade	45-11
A007 3655	Cleaning Grounding Plate	45-26
A007 3685	Gear Support Bracket Cleaning	45-31
A007 3690	PQC - Casing	41-63
A007 3693	Outer Holder - Brater Bar	45-55
A007 3702	Blade Solenoid Bracket	47-7
A007 3707	Pressure Lever	47-1
A007 3710	Pick-off Pawl Lever	47-2
A007 3715	Blade Solenoid	47-18
A007 3722	Cleaning Drive Bracket	55-22
A007 3751	Cap Large - Toner Collection Tank	47-15
A007 3762	Sensor Holder	47-12
A007 3770	Leaf Spring - Toner Collection Tank	47-10
A007 3780	Toner Collection Bracket	47-8

Parts No.	Description	Page and Index No.
A007 3781	Right Bracket - Toner Collection	47-19
A007 3782	Left Bracket - Toner Collection	47-20
A007 3783	Toner Collection Receiver	47-13
A007 3784	Pipe - Toner Collection Receiver	47-5
A007 3791	Transport Fan Cover	57-8
A007 3863	Separation Corona Cleaner	39-29
A007 3867	Paper Guide - T & S Corona	39-39
A007 3868	Separation Cleaner Slider	39-28
A007 3870	Tension Bracket - Wire Cleaner	39-38
A007 3872	Cleaner Drive Wire - Separation	39-27
A007 3875	Sensor Feeler - Separation Corona	39-43
A007 3877	T & S Corona Casing	39-49
A007 3882	Connector Bracket	39-11
A007 3883	T & S Corona Cover	39-62
A007 3885	PTL Guide Holder	43-21
A007 3886	PTL Guide Plate	43-20
A007 3901	Base Plate - Transport Unit	39-14
A007 3905	Transport Guide Plate - Front	39-1
A007 3907	Transport Guide Plate - Rear	39-2
A007 3911	Leaf Spring - Transport	39-10
A007 3927	Transport Duct	39-52
A007 3932	Leaf Spring - Micro Switch	39-59
A007 3934	Transport Lock Lever	39-56
A007 3939	Transport Lever	39-22
A007 3941	Transport Switch Bracket	39-54
A007 3971	Drive Roller - Transport Belt	39-5
A007 3974	Transport Drive Shaft Bracket	39-12
A007 4017	Fusing Unit - 115V	49-*
A007 4027	Fusing Unit - 220V	49-*
A007 4151	Fusing Side Frame - Rear	51-27
A007 4161	Fusing Side Frame - Front	51-5
A007 4172	Pressure Lever	51-9
A007 4178	Thermister Mounting Frame	51-38
A007 4179	Upper Entrance Guide Plate - Fusing	51-35
A007 4192	Fusing Connector Bracket	51-19

Parts No.	Description	Page and Index No.
A007 4195	Oil Sump	51-34
A007 4212	Left Fusing Rail	51-2
A007 4218	Fusing Unit Stopper	51-1
A007 4221	Oil Pan	51-49
A007 4227	Shielding Plate	49-32
A007 4228	Silicon Oil Nozzle	49-33
A007 4229	Fusing Unit Cover	49-36
A007 4232	Leaf Spring - Heat Shield	49-38
A007 4240	Oil Supply Bracket	49-6
A007 4251	Oil Pump Actuator	49-8
A007 4253	Leaf Spring - Oil End Sensor	49-39
A007 4273	Front Lamp Terminal Bracket	51-11
A007 4274	Front Lamp Terminal	51-7
A007 4276	Front Lamp Terminal Shaft	51-6
A007 4281	Lower Entrnace Guide Plate - Fusing	51-44
A007 4282	Right Fusing Rail	51-54
A007 4283	Right Fusing Rail Bracket	51-55
A007 4284	Fusing Entrance Slider	51-52
A007 4285	Slider Leaf Spring	51-51
A007 4286	Slider Knob Lever	51-53
A007 4287	Fusing Entrance	51-45
A007 4288	Fusing Entrnace Cover	51-46
A007 4310	Fusing Exit Frame	49-24
A007 4322	Lower Exit Guide	49-30
A007 4323	Upper Exit Guide	49-3
A007 4325	Fusing Exit Guide Plate	49-2
A007 4331	Fusing Exit Sensor Feeler	49-29
A007 4332	Fusing Exit Sensor Bracket	49-28
A007 4341	Front Release Lever - Exit Ass'y	49-20
A007 4344	Rear Release Lever - Exit Ass'y	49-19
A007 4370	Fusing Unit Rail	11-18
A007 4376	Release Lever - Fusing Unit	11-19
A007 4381	Connector Bracket	11-8
A007 4382	Connector Shutter Plate	11-10
A007 4409	Inverter Unit	31-*

Parts No.	Description	Page and Index No.
A007 4450	Guide Plate - Inverter Unit	33-1
A007 4455	Upper Guide - Inverter Unit	31-3
A007 4460	Guide Holder Pressure	31-13
A007 4461	Guide Plate - Open and Shut	31-12
A007 4463	Paper L.E.D. Sensor Bracket	31-9
A007 4466	Paper Entrance Feeler	31-7
A007 4475	Guide Holder	11-14
A007 4478	Guide Plate - Exit Inverter Unit	33-23
A007 4481	Exit Sensor Bracket	33-16
A007 4484	Exit Sensor Feeler	33-17
A007 4485	Exit Guide Plate - Upper	33-32
A007 4487	Exit Guide Plate - Upper	33-25
A007 4490	Paper Exit Feeler Bracket	33-27
A007 4492	Paper Exit Feeler	33-26
A007 4500	Jogger Unit	29-*
A007 4510	Front Paper Stopper Guide Unit	29-*
A007 4520	Duplex Transport Unit	27-*
A007 4550	Fork Gate Unit	25-*
A007 4600	Side Frame - Inverter Unit	31-31
A007 4605	Drive Gear Bracket - Inverter Roller	31-34
A007 4616	Inverter Pressure Arm - Front	31-21
A007 4617	Inverter Pressure Arm - Rear	31-22
A007 4620	Upper Guide - Inverter Pressure	31-27
A007 4623	Lower Guide - Inverter Pressure	31-28
A007 4625	Inverter Guide Pltee	31-18
A007 4630	Inverter Guide	31-17
A007 4655	Junction Gate Lever	31-42
A007 4659	Junction Gate Solenoid	31-44
A007 4660	Junction Gate Solenoid Bracket	31-37
A007 4669	Inverter Pressure Solenoid	31-43
A007 4675	Pressure Solenoid Bracket	31-36
A007 4700	Front Frame - Duplex Feed	27-17
A007 4700	Front Frame - Duplex Feed	29-63
A007 4705	Rear Frame - Duplex Feed	27-56
A007 4705	Rear Frame - Duplex Feed	29-34

Parts No.	Description	Page and Index No.
A007 4709	Push Lock	27-47
A007 4710	Push Lock Bracket	27-48
A007 4711	Fork Gate Knob	25-21
A007 4712	Jogger Stay	29-22
A007 4717	Jogger Motor Pulley	29-29
A007 4720	Jogger Motor Bracket	29-26
A007 4722	Home Sensor Bracket	29-31
A007 4725	Duplex Guide Plate	29-12
A007 4727	Jogger Fence Roller	29-19
A007 4730	Duplex Guide Plate - Middle	29-9
A007 4731	Anti-Vibration Pad - Large	29-14
A007 4732	Anti-Vibration Pad - Small	29-15
A007 4735	Front Jogger Fence	29-11
A007 4739	Jogger Fence Shoe - 2	29-2
A007 4740	Jogger Fence Shoe - 1	29-3
A007 4742	Rear Jogger Fence	29-1
A007 4744	Guide Plate - Jogger Fence	29-17
A007 4746	Duplex Setter Mylar - Front	29-10
A007 4749	Duplex Setter Mylar - Rear	29-4
A007 4750	Low Shaft Guide - Transport	39-58
A007 4752	Duplex Settler Guide	29-8
A007 4779	Duplex Stopper Solenoid Lever	29-52
A007 4780	Duplex Stopper	29-36
A007 4782	Paper Stopper Pulley	29-59
A007 4783	Paper Stopper Pulley	29-46
A007 4785	Adjusting Plate - Duplex Solenoid	29-54
A007 4786	Wire Clamp	29-60
A007 4792	Connector Bracket	27-36
A007 4800	Duplex Stay	27-7
A007 4805	Pick-up Arm	27-9
A007 4809	Duplex Feed Shaft	27-10
A007 4820	Feed Roller Arm	27-26
A007 4826	Duplex Feed Arm	27-44
A007 4828	Positioning Solenoid Lever	27-52
A007 4841	Sensor Harness Cover	27-2

Parts No.	Description	Page and Index No.
A007 4843	Enteance Actuator Sensor Cover	27-3
A007 4846	Toner Catch Pan	27-1
A007 4847	Seal - 5x20x20	27-35
A007 4849	Bottom Frame - Duplex Feed	29-55
A007 4851	Duplex Separation Arm	29-49
A007 4854	Separation Drive Shaft	29-48
A007 4865	Pick-up Solenoid Bracket	27-38
A007 4866	Solenoid Guide Roller	27-41
A007 4868	Pick-up Solenid Cover	27-39
A007 4870	Solenoid Bracket	27-54
A007 4871	Duplex Solenoid Bracket	27-55
A007 4900	Transport Chamber	25-15
A007 4914	Idler Roller	25-11
A007 4915	Tension Lever	25-14
A007 4919	Fork Gate Cover	25-19
A007 4920	Front Side Frame - Fork Gate	25-26
A007 4921	Rear Side Frame - Fork Gate	25-35
A007 4927	Entrance Guide Plate - Fork Gate	25-5
A007 4930	Exit Guide Plate - Fork Gate	25-57
A007 4934	Fork Guide Roller	25-54
A007 4942	Guide Plate - Fork Gate	25-17
A007 4950	First Gate Arm	25-38
A007 4955	Second Gate Arm	25-39
A007 4960	Third Gate Arm	25-43
A007 4965	Junction Gate Shaft Arm	25-48
A007 4967	Left Solenoid Gate	25-37
A007 4970	Fork Gate Lever	25-36
A007 4972	Fork Gate Actuator	25-45
A007 4973	Release Lever - Fork Gate	25-47
A007 4976	Fork Gate Solenoid Bracket	25-42
A007 4978	Micro Switch Lever	25-29
A007 4979	Fork Gate Solenoid	25-40
A007 4980	Fork Gate Setting Plate Bracket	25-50
A007 4986	Fork Gate Stopper	25-23
A007 4990	Duplex Tray	25-27

Parts No.	Description	Page and Index No.
A007 5005	Left Stay - Transport Chamber	11-4
A007 5006	Right Stay - Transport Chamber	11-5
A007 5007	Fixed Holder - Toner Tray	39-19
A007 5101	Main Control Board	57-27
A007 5101	Main Control Board	63-*
A007 5103	Rom - Main P.C.B	63-2
A007 5105	CPU - Main P.C.B	63-3
A007 5180	Optics Board	57-25
A007 5180	Optics Board	65-*
A007 5182	EP ROM	65-3
A007 5190	Paper Feed Control Board	61-15
A007 5190	Paper Feed Control Board	67-*
A007 5204	Toner End Sensor Harness	21-40
A007 5204	Tonner End Sensor Harness	99-2
A007 5205	Gate Descent Harness	59-14
A007 5205	Gate Descent Harness	93-2
A007 5214	Transport Unit Harness	39-61
A007 5214	Transport Unit Harness	87-1
A007 5215	Lens Home Sensor Harness	17-11
A007 5215	Lens Home Sensor Harness	79-1
A007 5216	Lens Housing Harness	61-17
A007 5216	Lens Housing Harness	71-3
A007 5216	Lens Housing Harness	77-1
A007 5217	Main Contorl Harness	57-28
A007 5217	Main Contorl Harness	71-4
A007 5217	Main Contorl Harness	95-1
A007 5218	Safety Switch Harness	57-23
A007 5218	Safety Switch Harness	71-7
A007 5218	Safety Switch Harness	89-1
A007 5231	Transfer Safety Switch	33-10
A007 5231	Transfer Safety Switch	39-53
A007 5240	DC Harness	59-17
A007 5240	DC Harness	71-1
A007 5240	DC Harness	73-1
A007 5249	Paper Feed Unit Harness	21-75

Parts No.	Description	Page and Index No.
A007 5249	Paper Feed Unit Harness	59-1
A007 5249	Paper Feed Unit Harness	71-6
A007 5249	Paper Feed Unit Harness	81-1
A007 5251	Left Motor Harness	61-3
A007 5251	Left Motor Harness	71-8
A007 5251	Left Motor Harness	91-1
A007 5253	Upper Paper Size Harness	59-2
A007 5254	Transport Sensor Harness	103-1
A007 5260	Inverter Guide Entrance Harness	101-2
A007 5260	Inverter Guide Entrance Harness	31-10
A007 5261	Home Sensor Harness	103-2
A007 5261	Home Sensor Harness	29-25
A007 5261	Home Sensor Harness	33-31
A007 5262	Duplex Stopper Solenoid Harness	101-1
A007 5262	Duplex Stopper Solenoid Harness	29-56
A007 5263	Duplex Entrance Harness	27-8
A007 5263	Duplex Entrance Harness	99-1
A007 5264	Gate Solenoid Harness	25-62
A007 5264	Gate Solenoid Harness	97-2
A007 5265	L.E.D. Sensor Harness	101-3
A007 5265	L.E.D. Sensor Harness	33-19
A007 5281	Exposure Lamp Harness	13-30
A007 5366	Power Pack Harness	57-7
A007 5366	Power Pack Harness	85-1
A007 5405	Drum Heater	39-17
A007 5416	SSR Board - AC Drive	57-3
A007 5456	AC Harness	61-19
A007 5456	AC Harness	71-2
A007 5456	AC Harness	75-1
A007 5458	AC Descent Harness	59-12
A007 5460	Grounding Wire	57-15
A007 5462	AC Drive Board Harness	59-5
A007 5462	AC Drive Board Harness	83-1
A007 5540	Fusing Unit Harness	51-22
A007 5540	Fusing Unit Harness	93-1

Parts No.	Description	Page and Index No.
A007 5728	Key Top - Timer	53-12
A007 5729	Key Top - Interrupt	53-13
A007 5730	Key Top - Start	53-14
A007 5731	Key Top - Guidance	53-15
A007 5843	Capacitor Bracket	59-3
A007 5850	Transport Fan Bracket	57-26
A007 5851	AC Drive Bracket	59-7
A007 5852	Noise Filter Bracket	61-4
A007 5853	Power Supply Cord Bracket	59-18
A007 5857	Transport Fan Bracket	57-14
A007 5858	Transport Fan Support Bracket	57-5
A007 5860	Solenoid Cover Bracket	59-11
A007 5861	Total Counter Bracket	57-19
A007 5862	Main Control Board Angle	11-1
A007 5863	Optics Board Bracket	57-24
A007 5864	Fan Angle	11-12
A007 5865	Power Pack Bracket	57-2
A007 5871	Safety Switch Bracket	57-22
A007 5872	Safety Switch Lever	57-20
A007 5874	Key Cunter Bracket	9-43
A007 5876	Main Power Switch Bracket	57-21
A007 5878	AC Harness Angle	61-2
A007 5879	Counter Cover	57-18
A007 6061	Front Cover Ass'y	9-10
A007 6094	Rear Upper Cover	9-1
A007 6114	Right Front Cover	9-20
A007 6121	Right Rear Cover	9-26
A007 6135	Left Front Cover	9-9
A007 6150	Left Cover	9-5
A007 6174	Rear Cover	9-25
A007 6181	Toner Collection Rear Cover	9-24
A007 6194	Inner Front Upper Cover Ass'y	53-10
A007 6206	Left Inner Cover	9-15
A007 6216	Right Inner Cover	9-19
A007 6225	Front Inner Cover - Lower	9-18

Parts No.	Description	Page and Index No.
A007 6229	Front Inner Cover - Upper	9-16
A007 6348	Decal - Misfeed Large	111-23
A007 6348	Decal - Misfeed Large	9-45
A007 6349	Decal - Misfeed Small	111-24
A007 6349	Decal - Misfeed Small	9-45
A007 6351	Decal - Adding Toner	111-21
A007 6351	Decal - Adding Toner	9-46
A007 6353	Decal - Reset	111-3
A007 6353	Decal - Reset	25-64
A007 6811	Decal - Drum Shaft Knob	111-4
A007 6811	Decal - Drum Shaft Knob	41-38
A007 6813	Decal - Drum Shaft Knob - A3/A4	111-4
A007 6813	Decal - Drum Shaft Knob - 220V	41-38
A007 8600	Operating Instructions - English	111-20
A007 8601	Operating Instructions - German	111-20
A007 8602	Operating Instructions - French	111-20
A007 8603	Operating Instructions - Italian	111-20
A007 8604	Operating Instructions - Spanish	111-20
A007 8605	Operating Instructions - 5 Language	111-20
A007 9002	PCC/PQC Colona Wire (10pcs/set)	41-67
A007 9002	PCC/PQC Corona Wire (10pcs/set)	45-42
A007 9003	Transfer Corona Wire (10pcs/set)	39-34
A007 9004	Separation Corona Wire (10pcs/set)	39-33
A007 9005	Hot Roller Stripper (6pcs/set)	49-22
A117 4511	Rear Paper Stopper Guide Unit	29-*

Parts No.	Description	Page and Index No.
AA00 1037	Decal - A2	111-5
AA00 1037	Decal - A2	9-47
AA00 1038	Decal - Regist Sensor	111-6
AA00 1038	Decal - Regist Sensor	9-48
AA00 1050	Decal - Handle - A3/A4	111-7
AA00 1050	Decal - Handle - A3/A4	25-63
AA00 1054	Decal - B3	111-9
AA00 1054	Decal - B3	49-43
AA00 1062	Decal - Handle	111-7
AA00 1062	Decal - Handle	25-63
AA00 2003	Decal - 8-1/2"x14"	111-13
AA00 2003	Decal - 8-1/2"x14"	19-26
AA00 2004	Decal - 11"x17"	111-14
AA00 2004	Decal - 11"x17"	19-26
AA00 2005	Decal - 8-1/2"x11R"	111-15
AA00 2005	Decal - 8-1/2"x11R"	19-26
AA00 2006	Decal - 8-1/2"x11"	111-16
AA00 2006	Decal - 8-1/2"x11"	19-26
AA00 2007	Decal - A3	111-17
AA00 2007	Decal - A3	19-26
AA00 2008	Decal - A4R	111-18
AA00 2008	Decal - A4R	19-26
AA00 2009	Decal - A4	111-19
AA00 2009	Decal - A4	19-26
AA00 2030	Manual Feed Decal - A3/A4	111-22
AA00 2030	Manual Feed Decal - A3/A4	9-30
AA00 2035	Manual Feed Decal	111-22
AA00 2035	Manual Feed Decal	9-30
AA01 0009	Ozone Filter - 234x60x13	57-10
AA01 1005	PTL Filter	41-2
AA01 1005	PTL Filter	43-1
AA01 1008	QL - Filter	41-58
AA01 2005	Filter Bracket - Development Unit	35-30
AA01 2006	Transport Fan Filter	57-9
AA02 0007	Inverter Unit Magnet	31-25

Parts No.	Description	Page and Index No.
AA03 1001	Oil Tank	49-14
AA03 2002	Toner Collection Tank	47-14
AA03 6001	Oil Bottle Cap	49-13
AA04 0007	Transport Belt	39-4
AA04 0008	Timing Belt - 228MXL	25-7
AA04 2001	Feed Drive Belt	27-20
AA04 3002	Timing Belt - 345PX	55-9
AA04 3003	Timing Belt - 222PX	55-31
AA04 3004	Timing Belt - 699PX	55-39
AA04 3005	Timing Belt - 200XL	55-19
AA05 0012	Scanner Drive Wire	13-17
AA05 0013	Jogger Fence Drive Wire	29-24
AA05 0014	Scanner Drive Wire	15-15
AA05 1002	Wire - Duplex Stopper Solenoid	29-61
AA06 0045	Tension Cleaner Spring	39-36
AA06 0045	Tension Cleaner Spring	41-7
AA06 0049	Release Lever Spring	21-22
AA06 0050	Tightener Spring	43-43
AA06 0051	Pressure Spring	51-8
AA06 0055	Spring - Inverter Pressure Release	31-39
AA06 0056	Pressure Spring	27-42
AA06 0057	Spring - Inverter Pressure	31-40
AA06 0058	Spring - Duplex Stopper Cam	29-58
AA06 0059	Front Spring - Exit Roller	25-58
AA06 0060	Rear Spring - Exit Roller	25-59
AA06 0061	Spring - Fork Gate Lever	25-32
AA06 0062	Micro Switch Spring	25-33
AA06 0063	Tension Spring - Drum Drive	55-32
AA06 0064	Tension Spring	33-5
AA06 0065	Fusing Drive Spring - 50Hz	55-23
AA06 0066	Fusing Drive Spring - 60Hz	55-23
AA06 0082	Pick-up Lever Spring	61-11
AA06 3018	Drum Flange Spring	41-43
AA06 3020	Feeler Spring	39-60
AA06 3020	Feeler Spring	41-16

Parts No.	Description	Page and Index No.
AA06 3021	Paper Feed Separation Spring	21-44
AA06 3021	Paper Feed Separation Spring	23-58
AA06 3022	Front Lamp Terminal Spring	51-10
AA06 3023	Cleaning Blade Spring	45-6
AA06 3024	Toner Receiving Spring	45-12
AA06 3025	PQC Terminal Spring	41-64
AA06 3025	PQC Terminal Spring	45-22
AA06 3027	Spring - Duplex Stopper Solenoid	29-51
AA06 3028	Spring - Fork Gate Stopper	25-24
AA06 3029	Separation Pressure Spring	29-50
AA06 3030	Duplex Spring	27-46
AA06 3031	Cleaning Blade	47-3
AA06 3041	Relay Roller Spring	43-8
AA06 6012	Spring - Oil Pump Actuator	49-7
AA06 6014	Connector Shotter Spring	11-9
AA06 6018	Spring - Fork Gate Actuator	25-44
AA06 6019	Transport Spring	11-6
AA06 6019	Transport Spring	25-20
AA06 6020	Tension Spring	25-9
AA06 6021	Transport Lever Spring	39-21
AA06 6047	Fusing Entrance Spring	51-47
AA08 0010	Bushing - 6mm	37-27
AA08 0015	Bushing - 3x6x6mm	37-51
AA08 0016	Bushing - 5x7x16	49-9
AA08 0017	Supporter - Drive Roller	39-18
AA08 0020	Bushing - 8x16x5mm	27-22
AA08 0021	Bushing - 6x12x4mm	27-29
AA08 0022	Bushing - 4x7x5mm	25-2
AA08 0031	Bushing	31-24
AA08 2006	Bushing Bias Roller	45-9
AA08 3003	Bushing - 6x18x5mm	29-33
AA08 4003	Holder - Development Roller Bearing	37-23
AA11 1001	Charge Corona Feeler	41-17
AA12 0001	Anti-static Brush - Fork Gate	25-61
AA12 0002	Anti-static Brush - Fork Gate 4	25-55

Parts No.	Description	Page and Index No.
AA12 0003	Anti - Static Brush - Duplex	25-16
AA13 0006	Idle Pulley	55-8
AA13 2020	Spacer - 8.5x20x0.5mm	37-48
AA13 2024	Spacer - 1x6x10mm	21-74
AA13 2024	Spacer - 1x6x10mm	23-68
AA13 2024	Spacer - 1x6x10mm	35-60
AA13 2024	Spacer - 1x6x10mm	51-26
AA13 2025	Spacer - 1x8x12mm	21-73
AA13 2025	Spacer - 1x8x12mm	23-67
AA13 2025	Spacer - 1x8x12mm	27-49
AA13 2025	Spacer - 1x8x12mm	33-9
AA13 2025	Spacer - 1x8x12mm	35-52
AA13 2025	Spacer - 1x8x12mm	43-45
AA14 0044	Pressure Arm Shaft	21-39
AA14 0044	Pressure Arm Shaft	23-35
AA14 0045	Pick-up Shaft	21-2
AA14 0045	Pick-up Shaft	23-6
AA14 0046	Paper Feed Shaft - Upper	21-3
AA14 0047	Paper Feed Shaft - Lower	23-7
AA14 0049	Inverter Pressure Shaft	31-20
AA14 0053	Shaft - Bottom Plate Release	23-62
AA14 0054	Drum Support Shaft	41-40
AA14 0057	Transport Lock Shaft	39-57
AA14 0063	Feed Roller Arm Shaft	27-27
AA14 0073	Fusing Entrnace Shaft	51-48
AA14 3029	Blade Swing Pin	45-29
AA14 3030	Front Position Pin	45-39
AA14 3031	Rear Position Pin	45-27
AA14 3032	Positioning Stud - End Block	45-25
AA14 3033	Stopper Screw	55-43
AA14 3034	Pin - Separator Shaft	45-14
AA14 3035	Stud - Platen Cover Mounting	19-8
AA14 3047	Stepped Screw - M3	25-10
AA14 5027	Shutter Shaft	11-7
AA14 5029	Fusing Drive Shaft	55-28

Parts No.	Description	Page and Index No.
AA15 0009	Shielding Mylar - Front Left	13-35
AA15 0010	Shielding Mylar - Front Center	13-37
AA15 0011	Shielding Mylar - Rear Left	13-34
AA15 0012	Shielding Mylar - 30x30	17-22
AA15 0013	Light Shielding Mylar - Front Left	13-36
AA15 0014	Light Shielding Mylar - Center	17-24
AA15 0015	Light Shielding Mylar - Lens	17-37
AA15 1020	Seal - 2x16x20	37-52
AA15 1021	Seal - 3x7x55	37-36
AA15 1022	Anti-Static Brush-Development Unit	37-8
AA15 1023	Seal - 8x8x278	35-61
AA15 1024	Seal - Toner Hopper Entrance	35-10
AA15 1025	Seal - Toner Hopper Pipe	35-11
AA15 1026	Seal - Toner Shutter	35-8
AA15 1027	Seal - 3x16x57	21-42
AA15 1028	Seal - 3x28x308	35-33
AA15 1029	Seal - 2x15x308	35-47
AA15 1030	Seal - 2x11x75	35-25
AA15 1030	Seal - 2x11x75	41-29
AA15 1031	Seal - Toner Hopper	35-49
AA15 1033	Seal - 4x12x211	35-46
AA15 1034	Seal - 2x3x53	35-36
AA15 1035	Seal - 2x3x45	35-37
AA15 1036	Seal - 2x16x53	35-38
AA15 1037	Seal - 2x16x45	35-39
AA15 1038	Seal - 4x16x210	35-34
AA15 1039	Seal - 2x51x60	35-23
AA15 1040	Seal - 3x72x172	35-27
AA15 1041	Seal - 2x50x58	35-51
AA15 1042	Seal - 3x5x142	37-42
AA15 1044	Seal - 3x8x40	37-43
AA15 1045	Seal - 3x5x41	37-44
AA15 1046	Seal - 2x2x5	37-28
AA15 1047	Seal - 2x5x10	37-32
AA15 1048	Seal - 2x5x28	37-31

Parts No.	Description	Page and Index No.
AA15 1049	Seal - 2x17x94	37-45
AA15 1050	Seal - 2x12x64	37-47
AA15 1051	Seal - 2x5x10	37-30
AA15 1052	Lower Side Plate Seal - Large	37-29
AA15 1053	Seal - 6x12x7	37-57
AA15 1055	Separator Seal - Front	37-54
AA15 1056	Seal - 3x27x39	37-12
AA15 1057	Separator Seal - Rear	37-14
AA15 1058	Seal - 3x27x28	37-53
AA15 1059	Seal - 2x8x310	37-4
AA15 1060	Seal - 3x16x310	37-2
AA15 1061	Seal - 6x11x5	37-20
AA15 1062	Seal - 3x10x6.5	37-21
AA15 1063	Seal - 2x5x55	37-10
AA15 1064	Seal - Cooling Fan	21-68
AA15 1065	Seal - C & D Rail	41-33
AA15 1066	Seal - Sensor Duct	41-55
AA15 1067	Seal - 2x8x310	41-32
AA15 1068	Seal - 2x7x357	41-31
AA15 1069	Seal - 10x12x370	43-30
AA15 1070	Seal - Transport Upper	39-3
AA15 1071	Seal - Transport Lower	39-16
AA15 1072	Seal - 3x7x484	57-11
AA15 1073	Seal - 3x5x30	39-50
AA15 1074	Seal - 3x4x122	39-51
AA15 1075	Seal - Toner Collection	47-9
AA15 1076	Seal - Toner Collection Tank	47-16
AA15 1077	Seal - Blade Front	45-43
AA15 1078	Rubber Seal - Cleaning	45-19
AA15 1079	Seal - Blade Rear	45-20
AA15 1080	Seal - 12x10x318	45-5
AA15 1082	Seal - 11x16x2	45-47
AA15 1083	Seal - Inner	45-45
AA15 1085	Seal - Outer	45-44
AA15 1087	Shield - 2x15x15	15-3

Parts No.	Description	Page and Index No.
AA15 1087	Shield - 2x15x15	17-21
AA15 1088	Seal - 2x20x28	17-23
AA15 1089	Seal - 6x32x32	15-29
AA15 1091	Seal - 2x8x110	17-28
AA15 1092	Seal - 3x42x270	17-4
AA15 1093	Seal - 3x25x170	17-2
AA15 1094	Seal - 2x50x48	17-5
AA15 2005	Side Seal - Cleaning Rear	45-21
AA15 2006	Side Seal - Cleaning Front	45-38
AA15 2007	Brush Seal - 6x7x144	17-6
AA15 2008	Seal - 5x6x40	17-7
AA15 2009	Brush Seal - 4x5x84	17-40
AA15 2010	Brush Seal - 5x10x64	17-41
AA15 2011	Brush Seal - 4x5x25	17-42
AA15 2012	Brush Seal - 4x4x40	17-38
AA16 1014	Cushion - Motor	55-5
AA16 1015	Lens Cushion	17-26
AA16 1016	Cushion - Fork Gate	25-51
AA16 1016	Cushion - Fork Gate	29-35
AA16 1017	Cushion - Junction Gate	31-26
AA16 1018	Cushion - Duplex Frame	27-34
AA16 1018	Cushion - Duplex Frame	29-20
AA16 1018	Cushion - Duplex Frame	31-41
AA16 1019	Cushion Guide Rod	13-14
AA16 1019	Cushion Guide Rod	15-18
AA16 1020	Lens Cushion - 3x7x80	17-31
AA17 2003	Heat Shielding Sheet	49-37
AA18 0001	Oil Tube - 7.8mm	49-12
AA18 0002	Oil Tube 320mm	49-34
AB01 0011	Gear - 56T	39-24
AB01 0011	Gear - 56T	41-21
AB01 1005	Gear - 18T	39-15
AB01 1010	Gear - 16T	45-35
AB01 1011	Gear - 14T	45-33
AB01 1015	Gear - 27T	55-25

Parts No.	Description	Page and Index No.
AB01 1017	Gear - 15T	35-20
AB01 1023	Gear - 15T	21-37
AB01 1023	Gear - 15T	23-33
AB01 1024	Gear - 25T	21-38
AB01 1024	Gear - 25T	23-34
AB01 3060	Gear - 27T	51-23
AB01 3061	Gear - 17T	51-24
AB01 3062	Gear - 19T	49-25
AB01 3068	Gear - 30T	43-53
AB01 3071	Gear - 16T	35-54
AB01 3076	Gear - 36T	51-17
AB01 3077	Gear - 20T	21-59
AB01 3077	Gear - 20T	23-38
AB01 3078	Gear - 18T	21-7
AB01 3079	Gear - 21T	21-8
AB01 3079	Gear - 21T	23-14
AB01 3080	Gear - 27T	33-21
AB01 3081	Gear - 18T	33-22
AB01 3082	Gear - 18T	33-20
AB01 3083	Gear - 18T	33-12
AB01 3084	Gear - 23T	31-35
AB01 3086	Gear - 30T	27-51
AB01 3087	Gear - 30T	27-21
AB01 3088	Helical Gear - 29T	29-47
AB01 3089	Gear - 30T	27-45
AB01 3090	Gear - 17T	49-26
AB01 3091	Gear - 39T	37-25
AB01 3092	Gear - 24T	37-49
AB01 3093	Worm Gear	35-26
AB01 3102	Gear - 47T	35-58
AB01 3105	Gear - 18T	27-12
AB01 3107	Gear - 19T	55-20
AB01 5001	Gear - 14T	35-4
AB01 7020	Drive Gear - 18T/30T	43-51
AB01 7022	Gear & Pulley - 27T/36T	55-27

Parts No.	Description	Page and Index No.
AB01 7027	Gear - 34T/21T	45-32
AB01 7029	Pulley & Gear - 28T/16T	55-36
AB01 7031	Sprocket - 16T/36T	33-7
AB01 7032	Idler Gear - Toner Hopper	35-59
AB01 7033	Gear - Toner Cartridge Drive	35-5
AB01 7037	Gear - 16T	55-21
AB01 7038	Gear - 32T	49-10
AB01 7039	Gear - 24T/48T	17-9
AB02 3016	Sprocket - 18T 50Hz	55-17
AB02 3017	Sprocket - 15T 60Hz	55-17
AB02 3018	Sprocket - 15T	23-36
AB02 3018	Sprocket - 15T	43-39
AB02 6006	Sprocket - 23T	33-15
AB03 0014	Pulley - 42T 50Hz	55-2
AB03 0015	Pulley - 35T 60Hz	55-2
AB03 0016	Pulley - 24T	55-10
AB03 0017	Pulley - 25T	25-13
AB03 0018	Pulley - 20T	25-12
AB03 0019	Gear - 36T	55-30
AB03 0020	Idler Pulley - 20T	55-37
AB03 0021	Idler Pulley	55-34
AB03 2014	Cleaner Drive Pulley	39-25
AB03 2014	Cleaner Drive Pulley	41-22
AB03 2015	Cleaner Idler Pulley	39-37
AB03 2015	Cleaner Idler Pulley	41-5
AB03 2016	Gear - 25T	25-8
AB03 2017	Feed Roller Pulley - 25T	27-28
AB03 2018	Scanner Drive Pulley	15-8
AB03 3009	Pulley - 18T/36T 50Hz	55-16
AB03 3010	Pulley - 30T 60Hz	55-16
AC00 1010	Platen Cover Ass'y	19-*
AC01 2002	Exposure Glass - LT	13-33
AC01 2003	Exposure Glass - A3/A4	13-33
AC01 5001	Dust Proof Glass	41-26
AC02 0047	Lens 5/215 - 19	17-27

Parts No.	Description	Page and Index No.
AC03 0013	1st Mirror	13-15
AC03 0014	2nd Mirror	15-20
AC03 0015	3rd Mirror	15-27
AC03 0016	4th Mirror	17-43
AC03 0017	5th Mirror	17-53
AC03 0018	6th Mirror	17-16
AC03 5003	Front Spring Plate - 4th Mirror	17-45
AC03 5004	Rear Spring Plate - 4th Mirror	17-44
AC03 5005	Front Spring Plate - 5th Mirror	17-51
AC03 5006	Rear Spring Plate - 5th Mirror	17-52
AC03 5007	Spring Plate - 6th Mirror	17-18
AC03 5008	Front Spring Plate - 1st Mirror	13-12
AC03 5009	Rear Spring Plate - 1st Mirror	13-11
AC03 5010	Front Spring Plate - 2nd Mirror	15-21
AC03 5011	Rear Spring Plate - 2nd Mirror	15-22
AC03 5012	Front Spring Plate - 3rd Mirror	15-26
AC03 5014	Rear Spring Plate - 3rd Mirror	15-28
AC04 1004	Left Original Scale	9-3
AC04 1035	Left Original Scale - A3/A4	9-3
AC05 0002	Guide Rod - Scanner	13-18
AC05 0002	Guide Rod - Scanner	15-16
AC05 1001	Guide Rod - Magnification	17-49
AD00 2003	Cleaning Unit	45-*
AD00 4003	Charge Corona Unit	41-1
AD02 1007	Receptacle - PCC	41-51
AD02 1008	Receptacle - PQC	41-52
AD02 1009	Bias Receptacle	41-53
AD02 1010	T & S Corona Receptacle	39-55
AD02 1012	Main Corona Receptacle	41-56
AD02 2011	Front End Block - Charge Corona	41-18
AD02 2012	Rear End Block - Charge Corona	41-8
AD02 2013	Front Cover - Charge Corona	41-25
AD02 2014	Rear Cover - Charge Corona	41-11
AD02 2016	Front End Block - PCC	45-40
AD02 2017	Front Cover PCC End Block	41-65

Parts No.	Description	Page and Index No.
AD02 2017	Front Cover - PCC End Block	45-41
AD02 2018	Rear End Block - PCC	45-24
AD02 2019	Rear Cover - PCC End Block	41-62
AD02 2019	Rear Cover - PCC End Block	45-15
AD02 2022	Front End Block - T & S	39-44
AD02 2023	Front End Block Cover - T & S	39-23
AD02 2024	Rear End Block - T & S	39-35
AD02 2025	Rear End Block Cover - T & S	39-31
AD02 3008	Pulley Support - Charge Corona	41-3
AD02 3015	T & S Corona Casing	39-41
AD02 4001	Adjusting Screw	41-14
AD02 4003	Termianl Spring - T & S	39-32
AD02 5001	Pick-off Pawl	45-65
AD03 0001	Doctor Blade	37-3
AD03 1020	Development Roller	37-24
AD03 3001	Toner Supply Shaft	35-42
AD03 6001	Back Spill Plate	37-19
AD03 7001	Development Anger	37-18
AD03 8002	Paddle Roller	37-34
AD03 9001	Toner Agitator	35-40
AD03 9003	Toner Agitator	37-56
AD04 2002	Cleaning Brush	45-51
AD04 3004	Toner Collection Coil	45-52
AD04 5001	Cleaning Biash Roller	45-50
AD04 7002	Seal - Cleaning Entrance	45-59
AE01 1001	Hot Roller	51-3
AE02 0001	Pressure Roller	51-43
AE03 0002	Ball Bearing 10x26x8	51-41
AE03 2001	Bushing - 20mm	51-12
AE04 5001	Oil Supply Pad	51-32
AF01 0003	Feed Roller	27-16
AF01 2004	Cassette Cover - DLT	19-18
AF01 2008	Cassette Cover - LT	19-18
AF02 0018	Transport Roller - 20mm	25-3
AF02 0021	Upper Registration Roller	43-24

Parts No.	Description	Page and Index No.
AF02 0022	Lower Registration Roller	43-25
AF02 0023	Upper Middle Roller	43-54
AF02 0024	Lower Middle Roller	43-7
AF02 0026	Transport Roller - 16mm	25-4
AF02 0027	Exit Roller - Entrance Guide Plate	25-56
AF02 0029	Inverter Return Roller	25-6
AF02 0029	Inverter Return Roller	31-11
AF02 0030	Inverter Roller	33-24
AF02 0031	Inverter Pressure Roller	31-19
AF02 2003	Inverter Return Roller	31-32
AF02 5001	Junction Gate	31-29
AF02 5002	Fork Gate Pawl - Large	25-52
AF02 5003	Fork Gate Pawl - Small	25-53
AF03 0001	Entrance Actuator Roller	27-15
AF03 1001	Duplex Feed Roller	27-19
AF04 0005	Lower Exit Roller	49-16
AF04 0006	Exit Roller	33-28
AF04 3001	Receiving Tray	9-4
AG05 0006	Fusing Unti Knob	49-35
AG05 1003	Transport Handle Rod	11-21
AW00 0002	Fiber Connector	63-1
AW00 0003	Fiber Connector - Red	65-1
AW00 0004	Fiber Connector - White	65-2
AW40 0003	Toner Density Sensor	43-3
AW40 0005	Paper Registration Sensor	43-2
AX02 0028	Paper Feed Motor	55-18
AX02 0029	Cooling Blower - AC50Hz 20.5W/60Hz 18W	15-6
AX02 0030	Main Drive Motor - AC 39.5W	55-15
AX02 0031	Development Motor - AC 28W	55-1
AX04 0004	Cooling Fan Motor	21-67
AX04 0006	Blower Fan Motor	41-47
AX04 0007	Exhaust Fan Motor	57-29
AX05 0008	Transport Fan Motor	57-12
AX06 0003	Scanner Motor - DC 42W	15-10
AX10 0004	Pick-up Solenoid - Manual Feed	61-8

Parts No.	Description	Page and Index No.
AX10 0005	Duplex Positioning Solenoid	27-53
AX11 0006	Duplex Pick-up Solenoid	27-37
AX20 0017	Registration Magnetic Clutch	43-44
AX20 0018	Paper Feed Clutch	21-52
AX20 0018	Paper Feed Clutch	23-40
AX20 0019	Magnetic Clutch - Toner Supply	55-11
AX20 0020	Transport Magnetic Clutch-Duplex Feed	27-43
AX20 0021	Transport Magnetic Clutch	43-49
AX44 0008	Heater - 750W - 115V	51-4
AX44 0009	Heater - 800W - 220V	51-4
AX50 0008	Pre - Transfer Lamp 430V/1.3W	43-22
AX50 0010	Eraser	41-27
AX50 0011	Quinching Lamp	41-50
AX52 0005	Exposure Lamp - 85V/160W	13-5
AY11 0001	AC Drive Board - 115V	59-6
AY11 0001	AC Drive Board - 115V	69-*
AY11 0002	AC Drive Board - 220/240V	59-6
AY11 0002	AC Drive Board - 220/240V	69-*
AZ23 0002	DC Control Unit	59-8
AZ31 0001	Power Pack - PCC	57-13
AZ32 0005	Power Pack - Charge & Bias	57-4
AZ32 0006	Power Pack - T & S	57-16
AZ32 0007	Power Pack - PQC & BR	57-1
AZ40 0003	DC Motor Harness	59-4
AZ40 0003	DC Motor Harness	95-2
AZ40 0004	Cleaner Sensor Harness	39-46
AZ40 0004	Cleaner Sensor Harness	41-20
AZ40 0004	Cleaner Sensor Harness	97-1
AZ50 0002	CFL Stabilizer	57-6
A008 1272	Front Cover Band	9-11
A008 1307	Left Cover Cap - Sorter	9-6
A008 1351	Left Cover Cap - L	9-7
A008 1352	Left Cover Cap - S	9-8
A008 1668	Rear Platen Cover	19-1
A008 2080	Pulley Support - Charge Corona	41-4

Parts No.	Description	Page and Index No.
A008 2084	Cleaner Slider	41-12
A008 2085	Cleaner - Charge Corona	41-13
A008 2090	Support - Cleaner Sensor	39-45
A008 2090	Support - Cleaner Sensor	41-15
A008 2091	Support Pad - Cleaner Motor	39-30
A008 2091	Support Pad - Cleaner Motor	41-24
A008 2095	Slider Drive Wire	41-10
A008 3558	Beater Bar	45-54
A008 3587	Bias Roller Blade	45-1
A008 3611	Front Pick-off Guide Plate	45-69
A008 3612	Rear Pick-off Guide Plate	45-70
A008 3624	Seal - Cleaning Unti Casing	45-53
A008 5321	Motor - DC 5V/1.3W	39-26
A008 5321	Motor - DC 5V/1.3W	41-23
A008 5626	Key Top - Program	53-16
A008 5627	Key Top - Clear Mode	53-17
A008 5629	Key Top - Recall	53-18
A008 5630	Key Top - 0	53-19
A008 5631	Key Top - 1	53-20
A008 5632	Key Top - 2	53-21
A008 5633	Key Top - 3	53-22
A008 5634	Key Top - 4	53-23
A008 5635	Key Top - 5	53-24
A008 5636	Key Top - 6	53-25
A008 5637	Key Top - 7	53-26
A008 5638	Key Top - 8	53-27
A008 5639	Key Top - 9	53-28
A008 5640	Key Top - C/S	53-29
A008 5641	Key Top - ADS	53-30
A008 5642	Key Top - Lighter	53-31
A008 5643	Key Top - Darker	53-32
A008 5644	Key Top - Select Cassette	53-33
A008 5645	Key Top - Full Size	53-34
A008 5646	Key Top - Enlarge	53-35
A008 5647	Key Top - Reduce	53-36

Parts No.	Description	Page and Index No.
A008 5648	Key Top - Auto Cassette Selection	53-37
A008 5650	Key Top - Zoom UP	53-38
A008 5651	Key Top - Zoom Down	53-39
A008 5653	Key Top	53-40
A008 5658	Key Top - Point	53-41
A008 9001	Main Corona Wire (10pcs/set)	41-61
A008 9501	Platen Cover Sheet - 10 Sheets/set	19-5
A240 0005	DC Motor Harness	71-5
A409 5710	Fiber Connector - 2-174135-1	63-4
5053 0223	Bushing - 8mm	21-6
5053 0223	Bushing - 8mm	23-11
5053 0223	Bushing - 8mm	39-20
5053 0223	Bushing - 8mm	51-16
5053 0447	Bushing - M6	21-61
5053 0447	Bushing - M6	23-31
5053 0447	Bushing - M6	25-1
5053 0447	Bushing - M6	29-32
5053 0447	Bushing - M6	31-30
5053 0447	Bushing - M6	39-8
5053 0447	Bushing - M6	49-41
5054 0536	Magnet Catch Ass'y	35-14
5054 0536	Magnet Catch Ass'y	9-21
5203 1136	Registration Drive Spring	35-53
5203 4146	Thermistor Spring	51-37
5203 4244	Bushing - 4x8x6mm	45-30
5203 5801	Thermofuse Bracket	51-29
5205 1100	Sprocket - 24T	33-3
5205 1101	Sprocket - 12T	33-13
5205 1105	Chain Tightener	33-4
5205 1170	Fusing Release Lever Spring	11-20
5205 1694	Adjusting Cam - Start Lever	15-23
5205 1694	Adjusting Cam - Start Lever	17-29
5205 1853	Seal - 14mm	11-23
5205 1853	Seal - 14mm	17-20
5205 2579	Spring - Guide	43-34

Parts No.	Description	Page and Index No.
5205 2584	Cushion - Guide Registration Lower	43-28
5205 2608	Gear - 23T	29-44
5205 2644	Paper End Actuator	23-21
5205 2667	Bracket - Paper Lift Motor	21-58
5205 2667	Bracket - Paper Lift Motor	23-46
5205 2670	Cassette Sensor Arm	23-45
5205 2674	Spring	21-53
5205 2674	Spring	23-41
5205 2678	Spring	21-54
5205 2678	Spring	23-42
5205 2680	Coupled Gear - 16T/53T	21-55
5205 2680	Coupled Gear - 16T/53T	23-44
5205 2681	Coupled Gear - 17T/50T	21-56
5205 2681	Coupled Gear - 17T/50T	23-43
5205 2691	Shaft - Paper Guide Plate	43-5
5205 2694	Spring - Paper Guide Plate	43-6
5205 2697	Bushing - Upper Registration Roller	43-9
5205 2734	Manual Feed Table Magnet	15-1
5205 2734	Manual Feed Table Magnet	9-39
5205 2777	Cushion - Lower Pick-up	23-9
5205 2782	Separation Driven Shaft	21-35
5205 2782	Separation Driven Shaft	23-30
5205 2788	Cassette Sensor Arm - Upper	21-57
5205 2865	Bushing - Paper Feed Roller	21-50
5205 2865	Bushing - Paper Feed Roller	23-39
5205 2866	Magnetic Clutch Collar	43-67
5205 2893	Cushion - Sector Gear	11-16
5205 2937	Bottom Plate	19-22
5205 2946	Front Side Fence - Dlt	19-21
5205 2947	Rear Side Fence - Dlt	19-19
5205 2953	Rear Fence	19-24
5205 2960	Actuator - A3	19-27
5205 2962	Actuator - A4R	19-27
5205 2964	Actuator - A4	19-27
5205 2971	Actuator - 11"x17"	19-27

Parts No.	Description	Page and Index No.
5205 2979	Actuator - 11"x8-1/2"	19-27
5205 2996	Actuator - 8-1/2"x11R"	19-27
5205 2997	Actuator - 8-1/2"x14"	19-27
5205 3103	Bushing - 6mm	37-15
5205 3314	Gear - 20T	35-1
5205 3316	Upper Shaft	35-2
5205 3317	Lower Shaft	35-3
5205 3373	Plate Spring - Toner Supply Bracket	35-64
5205 3374	Positioning Lug - Toner Supply	35-15
5205 3421	Seal - Bottle Release Lever	35-18
5205 3565	Cleaning Blade	45-48
5205 3950	Cam	45-68
5205 3958	Pick-off Pawl Shaft	45-63
5205 3964	Pick-off Solenoid	47-4
5205 3965	Spring	45-64
5205 3966	Set Screw	45-66
5205 3975	Cam	45-67
5205 3981	Collar	45-62
5205 4135	Fusing Shaft Collar	51-15
5205 4518	Upper Exit Roller	33-29
5205 4527	Spring - Exit	31-14
5205 4527	Spring - Exit	33-35
5205 5250	L.E.D Sensor Type - S	27-6
5205 5250	LED Sensor Type - S	33-18
5205 5251	LED Sensor Type - T	15-32
5205 5251	LED Sensor - T Type	17-57
5205 5251	L.E.D Sensor - Type	21-17
5205 5251	L.E.D Sensor Type - T	29-30
5205 5251	LED Sensor Type - T	31-8
5205 5251	L.E.D Sensor Type - T	33-30
5205 5251	LED Sensor Type - T	49-27
5205 5251	LED Sensor Type - T	61-7
5205 5253	Photointerrupter Pack	21-16
5205 5253	Photointerrupter Pack	23-20
5205 5321	Pick-up Solenoid	61-10

Parts No.	Description	Page and Index No.
5205 5438	Anticondensation Heater - 18W	17-1
5205 6491	Rear Side Fence	19-19
5205 6493	Front Side Fence	19-21
5205 6570	Bottom Plate - Small	19-22
5205 9101	Gap Gauge	105-14
5205 9111	Omega Clamp	105-13
5205 9510	Drum	41-41
5205 9601	Switching Board	105-12
5206 2557	Friction Pad - Duplex Guide Plate	29-13
5206 2603	Separation Driven Shaft	29-43
5206 2605	Separation Roller	29-38
5206 2607	Spring - Separation	29-41
5206 2609	Gear - 22T	29-45
5206 2626	Sensor Bracket - Duplex Paper End	27-4
5206 2650	Bushing - 8x12x7mm	27-11
5206 2651	Ball Bearing - 8x20x13mm	27-50
5206 2677	Bushing - 6x10x7mm	27-30
5206 2680	Entrance Actuator Roller	27-23
5206 2681	Axle Plate	27-24
5206 2684	Shoulder Screw - M3	27-31
5206 2685	Entrance Actuator Plate	27-25
5206 2686	Snap Ring	27-33
5206 2687	Stud Screw - M3	27-32
5206 2687	Stud Screw - M3	31-6
5206 2689	Snap Ring	29-62
5206 2690	Duplex Paper Actuator	27-18
5206 2695	Cover - Duplex Paper Sensor	27-5
5206 2700	Spring - Pick-up Roller	29-16
5206 2808	Anti Static Brush - Duplex Transport	33-33
5206 2826	Spring - Gate Arm	25-31
5206 2833	Gate Solenoid Bracket	25-41
5206 2840	Fork Gate Holder	25-34
5206 2850	Bracket - Transfer Safety Switch	33-11
5206 2851	Right Fork Gate Guide	11-17
5206 2876	Spring - Wire	29-21

Parts No.	Description	Page and Index No.
5206 2877	Wire Clamp Plate	29-18
5206 2925	Duplex Settler	29-5
5206 2926	Weight - Duplex Settler	29-6
5206 2929	Cushion - Duplex Settler	29-7
5206 4388	Spring - Inverter Guide	31-16
5206 4478	Spring - Drive Roller	25-22
5206 4478	Spring - Drive Roller	31-23
5206 5326	Duplex Stopper Solenoid	29-53
5206 9600	Sensor Checker	105-15
5207 4405	Spring - Fusing	31-5
5208 4173	Spring - Stripper	25-49
5209 1694	Guide Roller - 1st Scanner	17-39
5209 1735	Pully	29-23
5209 4126	Wire Clamp	51-18
5209 4149	Fusing Unit Shaft	51-14
5209 4408	Gear - 16T	51-13
5209 4470	Upper Exit Roller	49-15
5209 5320	Oil End Sensor	49-40
5211 2285	Rear Flange	41-45
5214 4122	Stripper Spring	49-23
5215 1295	Front Cover Hinge - Right	9-12
5215 1297	Front Cover Hinge - Left	9-13
5215 1700	Exposure Lamp Termianl - Fix	13-22
5215 1702	Exposure Lamp Clip	13-4
5215 1805	Lens Tension Pulley	17-59
5215 1811	Lens Drive Wire Spring	17-60
5215 2119	T & S Corona Guide Plate	39-40
5215 2281	Mylar Seal - Guide PTL Cover	43-19
5215 2621	Snap Ring - M6	17-61
5215 2672	Bushing	43-13
5215 2687	Gear - 16T	9-41
5215 2688	Side Fence Gear	9-33
5215 2691	Brake	9-40
5215 2819	Mounting Bracket - Platen Cover	19-7
5215 2832	Platen Cover Hinge Ass'y	19-9

Parts No.	Description	Page and Index No.
5215 2834	Arm Holder	19-16
5215 2838	Rubber Magnet	19-6
5215 2839	Balancer Spring	19-15
5215 2840	Pin - 4x115mm	19-10
5215 2842	Right Spring - Platen Cover	19-13
5215 2843	Left Spring - Platen Cover	19-14
5215 2844	Slide Supporter	19-17
5215 2845	Magnet Plate	19-11
5215 2846	Platen Base	19-12
5215 2847	Base Holder - Platen Cover	19-28
5215 3089	Developer Knob	37-40
5215 3101	Gear - 44T	37-39
5215 3162	Side Seal - Doctor Blade	37-6
5215 3167	Gear - 25T	37-16
5215 3180	Seal - Ring	37-22
5215 3591	Tape - Entrance Seal	45-58
5215 3923	Drive Roller	39-9
5215 3931	Bushing - 8mm	39-13
5215 3942	Transport Guide Roller	39-6
5215 4093	Upper Frame	51-30
5215 4116	Oil Blade Holder	51-39
5215 4117	Oil Blade	51-40
5215 4121	Spring - Oil Blade	51-42
5215 4196	Oil Sump Holder	51-33
5215 4211	Decal - Thermofuse	111-12
5215 4211	Decal - Thermofuse	49-44
5215 4211	Decal - Thermofuse	51-31
5215 5222	Transformer - 100V/25V	69-1
5215 5230	Photointerrupter - L Type	15-11
5215 5230	Photointerrupter - L Type	17-55
5215 5230	Photointerrupter - L Type	21-15
5215 5230	Photointerrupter - L Type	23-19
5215 5230	Photointerrupter - L-Type	55-42
5215 5250	Thermistor	51-36
5215 5272	Power Supply Cord	59-13

Parts No.	Description	Page and Index No.
5215 5304	Toner Overflow Sensor	47-11
5215 5380	Total Counter	57-17
5215 5390	Temperature Fuse - 182°C	51-28
5216 1859	Stepped Screw - Slider Lock	13-41
5216 1859	Stepped Screw - Slider Lock	15-35
5216 4100	Rear Heater Terminal	51-20
5216 5245	Photointerrupter - IL-G-3P-S3T2-E	39-47
5216 5245	Photointerrupter - IL-G-3P-S3T2-E	41-19
5219 3312	Seal - 2x17x23	41-28
5219 3326	Rubber Seal - Paddle Roller	37-33
5219 9060	Plastic Ring - 3x6x1mm (10pcs/set)	39-42
5304 1639	Bushing - 8mm	31-33
5304 1639	Bushing - 8mm	33-36
5350 2466	Spring - Pressure Arm	29-27
5403 2048	Bushing - 4mm	35-22
5403 2048	Bushing - 4mm	41-60
5403 2049	Spring Anchor	31-2
5403 2075	Stepped Screw	31-4
5403 2075	Stepped Screw	43-63
5409 1705	Switch Actuator - 1st Mirror	13-6
5413 1812	Spring - Drum Return Arm	47-6
5413 1875	Knob Screw	25-28
5413 1882	Stepped Screw	25-30
5413 3903	Pin - Transfer Guide Plate	45-10
5413 4835	Decal - Paper Level	111-11
5413 4835	Decal - Paper Level	19-20
5415 4310	Valve - Oil Pump	49-5
5415 4457	Spring - Exit	49-31
5418 2116	Spacer - Guard	45-13
5418 2859	Spring - Regist Roller (Front)	45-72
5419 1057	Rubber Foot	11-22
5420 1675	Insulator - Lamp Terminal	13-20
5420 1676	Lamp Terminal Spacer	13-24
5420 1682	Lamp Terminal Support	13-23
5420 9504	Thermo Meter - HLC60-E	105-4

Parts No.	Description	Page and Index No.
5420 9505	Probe - HLC60-E	105-5
5420 9507	Digital Multimeter - BECKMAN RMS3030	105-6
5420 9508	Delux Test Lead Accessory Kit	105-7
5420 9516	Test Chart - OS - A3 (10pcs/set)	105-10
5420 9550	Silicone Oil	105-8
5422 5131	Reed Switch	13-40
5424 1472	Key Counter Cover	9-36
5433 3785	Spring	47-17
5442 1110	Sprocket - 20T	33-6
5442 1702	Small Screw - M3	13-42
5442 1703	Center Wing	13-2
5442 1704	Side Wing	13-1
5442 1705	Exposure Lamp Terminal - Release	13-21
5442 1798	Scanner Drive Wire Hook	15-14
5442 1890	Wire Tightner Spring	15-34
5442 1924	Cushion - Exposure Glass	13-39
5442 2108	Spring - Corona Wire	41-66
5442 2108	Spring - Corona Wire	41-9
5442 2108	Spring - Corona Wire	45-23
5442 2110	Plug - Corona Unit	41-6
5442 2117	Shoulder Screw - Hinge	29-64
5442 2751	Bushing - Upper Registration Roller	25-25
5442 2751	Bushing - Upper Registration Roller	31-15
5442 2751	Bushing - Upper Registration Roller	33-34
5442 2754	Spring - Registration Roller	43-12
5442 2769	Decal - A	111-8
5442 3154	Holder - Development Unit	41-36
5442 3218	Gear - 18Z	23-13
5442 3233	Spring - Drive Wheel	35-56
5442 3233	Spring - Drive Wheel	55-46
5442 3593	Seal - Cleaning Balde Shaft	45-18
5442 3904	Spring - Pick-off Pawl Slide	45-61
5442 4152	Spring - Fusing Drive	51-25
5442 4201	Rear Bracket - Lamp Terminal	51-21
5442 4444	Stud - Exit Ass'y Release Lever	49-18

Parts No.	Description	Page and Index No.
5442 4463	Spring - Front Release Lever	49-21
5442 4464	Spring - Rear Release Lever	49-17
5442 4495	Slip Clutch	33-14
5442 6126	Decal - High Temperature	111-10
5442 6126	Decal - High Temperature	49-42
5442 9101	Setting Powder	105-1
5442 9102	Light Shielding Bag	105-2
5442 9103	Launa Oil	105-9
5442 9106	Drum Shoe	105-3
5443 2668	Bushing	21-13
5443 2668	Bushing	23-4
5443 2668	Bushing	25-60
5443 2668	Bushing	39-7
5443 2706	Plate - 12x220x1T	9-44
5446 1239	Plate Nut - Key Counter	9-42
5446 3619	Toner Receiving Pipe	45-7
5446 3648	Stepped Screw - M4	45-46
5446 3707	Bushing - 6x10x6mm	45-36
5446 3944	Spring - Charge Wire PCC	39-48
5446 4235	Spring - Hot Roller Stripper	25-46
5447 2286	Drum Guide	41-46
5447 2676	Output Hub	21-32
5447 2676	Output Hub	23-27
5447 2678	Slip Clutch Cover	21-31
5447 2678	Slip Clutch Cover	23-26
5447 2678	Slip Clutch Cover	29-39
5447 2681	Snap Ring	21-11
5447 2681	Snap Ring	23-17
5447 2681	Snap Ring	27-14
5447 2681	Snap Ring	29-37
5447 2681	Snap Ring	45-34
5447 2688	Output Hub	29-40
5447 2693	Separation Roller	21-30
5447 2693	Separation Roller	23-25
5447 2695	Input Hub	21-34

Parts No.	Description	Page and Index No.
5447 2695	Input Hub	23-29
5447 2695	Input Hub	29-42
5447 2697	Cyrindrical Spring	21-33
5447 2697	Cyrindrical Spring	23-28
5447 2706	Gear - 15T	27-13
5447 2723	Pick-up Roller	21-9
5447 2723	Pick-up Roller	23-16
5447 2726	Paper Feed Roller	21-10
5447 2726	Paper Feed Roller	23-15
5447 2769	Stepped Screw	51-50
5447 2833	Pin - Manual Feed Table	29-57
5447 2927	Friction Pad - B	19-23
5447 2927	Friction Pad - B	9-35
5447 4229	Sleeve - Oil Pump	49-11
5447 4241	Tube Clamp	49-4
5447 9078	Heat Resisting Grease MT-78	105-11
5448 2803	Platen Cover Pad	19-4
5448 2824	Flex Hinge - Platen Cover	19-3
5840 1632	Stepped Screw	43-64
5840 1632	Stepped Screw	49-1
5887 4162	Screw - Driven Guide Plate	31-45
5887 4162	Screw - Driven Guide Plate	33-8
5887 4162	Screw - Driven Guide Plate	43-15
5894 2540	Arm Screw	37-59
5918 2307	Spring - Drive Motor Tension	31-38
5919 2303	Actuator Shaft	27-40
5919 5309	Stepper Motor - DC 4.8W	29-28

Parts No.	Description	Page and Index No.
0313 0040E	Philips Pan Head Screw - M3x4	31-101
0313 0040W	Philips Pan Head Screw - M3x4	25-101
0313 0040W	Philips Pan Head Screw - M3x4	27-101
0313 0040W	Philips Pan Head Screw - M3x4	31-102
0313 0050M	Philips Pan Head Screw - M3x5	53-101
0313 0050W	Philips Pan Head Screw - M3x5	21-101
0313 0050W	Philips Pan Head Screw - M3x5	23-101
0313 0050W	Philips Pan Head Screw - M3x5	29-101
0313 0050W	Philips Pan Head Screw - M3x5	37-101
0313 0050W	Philips Pan Head Screw - M3x5	61-101
0313 0060W	Philips Pan Head Screw - M3x6	13-101
0313 0060W	Philips Pan Head Screw - M3x6	17-101
0313 0060W	Philips Pan Head Screw - M3x6	25-102
0313 0060W	Philips Pan Head Screw - M3x6	31-103
0313 0060W	Philips Pan Head Screw - M3x6	39-101
0313 0060W	Philips Pan Head Screw - M3x6	43-101
0313 0060W	Philips Pan Head Screw - M3x6	45-101
0313 0060W	Philips Pan Head Screw - M3x6	47-101
0313 0060W	Philips Pan Head Screw - M3x6	51-101
0313 0060W	Philips Pan Head Screw - M3x6	57-101
0313 0080W	Philips Pan Head Screw - M3x8	13-102
0313 0100W	Philips Pan Head Screw - M3x10	59-101
0313 0120W	Philips Pan Head Screw - M3x12	13-103
0313 0120W	Philips Pan Head Screw - M3x12	39-102
0313 0120W	Philips Pan Head Screw - M3x12	51-102
0313 0140W	Philips Pan Head Screw - M3x14	33-101
0313 0280W	Philips Pan Head Screw - M3x28	21-102
0313 0300W	Philips Pan Head Screw - M3x30	57-102
0313 0450W	Philips Pan Head Screw - M3x45	41-101
0314 0050W	Philips Pan Head Screw - M4x5	39-103
0314 0050W	Philips Pan Head Screw - M4x5	41-102
0314 0060W	Philips Pan Head Screw - M4x6	21-103
0314 0060W	Philips Pan Head Screw - M4x6	25-117
0314 0060W	Philips Pan Head Screw - M4x6	27-102
0314 0060W	Philips Pan Head Screw - M4x6	29-102

Parts No.	Description	Page and Index No.
0314 0060W	Philips Pan Head Screw - M4x6	31-104
0314 0060W	Philips Pan Head Screw - M4x6	33-102
0314 0060W	Philips Pan Head Screw - M4x6	35-101
0314 0060W	Philips Pan Head Screw - M4x6	39-104
0314 0060W	Philips Pan Head Screw - M4x6	49-101
0314 0060W	Philips Pan Head Screw - M4x6	51-103
0314 0060W	Philips Pan Head Screw - M4x6	55-101
0314 0060W	Philips Pan Head Screw - M4x6	59-102
0314 0060W	Philips Pan Head Screw - M4x6	61-102
0314 0080M	Philips Pan Head Screw - M4x8	57-103
0314 0080W	Philips Pan Head Screw - M4x8	21-104
0314 0080W	Philips Pan Head Screw - M4x8	23-102
0314 0080W	Philips Pan Head Screw - M4x8	27-103
0314 0080W	Philips Pan Head Screw - M4x8	29-103
0314 0080W	Philips Pan Head Screw - M4x8	33-103
0314 0080W	Philips Pan Head Screw - M4x8	35-102
0314 0080W	Philips Pan Head Screw - M4x8	37-102
0314 0080W	Philips Pan Head Screw - M4x8	39-105
0314 0080W	Philips Pan Head Screw - M4x8	41-103
0314 0080W	Philips Pan Head Screw - M4x8	43-102
0314 0080W	Philips Pan Head Screw - M4x8	45-102
0314 0080W	Philips Pan Head Screw - M4x8	47-102
0314 0080W	Philips Pan Head Screw - M4x8	55-102
0314 0080W	Philips Pan Head Screw - M4x8	57-104
0314 0100W	Philips Pan Head Screw - M4x10	15-101
0314 0100W	Philips Pan Head Screw - M4x10	17-102
0314 0100W	Philips Pan Head Screw - M4x10	21-105
0314 0100W	Philips Pan Head Screw - M4x10	23-103
0314 0100W	Philips Pan Head Screw - M4x10	27-104
0314 0100W	Philips Pan Head Screw - M4x10	29-104
0314 0100W	Philips Pan Head Screw - M4x10	31-105
0314 0100W	Philips Pan Head Screw - M4x10	33-104
0314 0100W	Philips Pan Head Screw - M4x10	37-103
0314 0100W	Philips Pan Head Screw - M4x10	43-103
0314 0100W	Philips Pan Head Screw - M4x10	49-103

Parts No.	Description	Page and Index No.
0314 0100W	Philips Pan Head Screw - M4x10	55-103
0314 0100W	Philips Pan Head Screw - M4x10	61-103
0314 0120W	Philips Pan Head Screw - M4x12	45-103
0314 0140W	Philips Pan Head Screw - M4x14	13-104
0314 0200W	Philips Pan Head Screw - M4x20	37-104
0314 0200W	Philips Pan Head Screw - M4x20	39-106
0314 0450W	Philips Pan Head Screw - M4x45	57-105
0323 0060W	Philips Sunken Head Screw - M3x6	29-105
0323 0060W	Philips Sunken Head Screw - M3x6	9-101
0324 0080W	Philips Sunken Head Screw - M4x8	17-103
0324 0080W	Philips Sunken Head Screw - M4x8	21-106
0344 0060D	Philips Truss Head Screw - M4x6	35-103
0413 0062W	Tapping Screw - M3x6	49-102
0414 0082W	Tapping Screw With Flat Washer - M4x8	39-107
0414 0102W	Tapping Screw - M4x10	19-101
0434 0060W	Tapping Screw - M4x6	11-101
0434 0060W	Tapping Screw - M4x6	13-105
0434 0060W	Tapping Screw - M4x6	15-102
0434 0060W	Tapping Screw - M4x6	17-104
0434 0060W	Tapping Screw - M4x6	21-107
0434 0060W	Tapping Screw - M4x6	23-104
0434 0060W	Tapping Screw - M4x6	25-103
0434 0060W	Tapping Screw - M4x6	27-105
0434 0060W	Tapping Screw - M4x6	29-106
0434 0060W	Tapping Screw - M4x6	41-104
0434 0060W	Tapping Screw - M4x6	53-102
0434 0060W	Tapping Screw - M4x6	55-104
0434 0060W	Tapping Screw - M4x6	57-106
0434 0060W	Tapping Screw - M4x6	59-103
0434 0060W	Tapping Screw - M4x6	61-104
0434 0080W	Tapping Screw - M4x8	11-102
0434 0080W	Tapping Screw - M4x8	13-106
0434 0080W	Tapping Screw - M4x8	15-103
0434 0080W	Tapping Screw - M4x8	21-108
0434 0080W	Tapping Screw - M4x8	23-105

Parts No.	Description	Page and Index No.
0434 0080W	Tapping Screw - M4x8	25-104
0434 0080W	Tapping Screw - M4x8	27-106
0434 0080W	Tapping Screw - M4x8	29-107
0434 0080W	Tapping Screw - M4x8	31-106
0434 0080W	Tapping Screw - M4x8	33-105
0434 0080W	Tapping Screw - M4x8	39-108
0434 0080W	Tapping Screw - M4x8	41-105
0434 0080W	Tapping Screw - M4x8	43-104
0434 0080W	Tapping Screw - M4x8	45-104
0434 0080W	Tapping Screw - M4x8	47-103
0434 0080W	Tapping Screw - M4x8	49-104
0434 0080W	Tapping Screw - M4x8	51-104
0434 0080W	Tapping Screw - M4x8	53-103
0434 0080W	Tapping Screw - M4x8	55-105
0434 0080W	Tapping Screw - M4x8	57-107
0434 0080W	Tapping Screw - M4x8	59-104
0434 0080W	Tapping Screw - M4x8	61-105
0434 0080W	Tapping Screw - M4x8	9-102
0434 0100W	Tapping Screw - M4x10	17-105
0434 0100W	Tapping Screw - M4x10	37-105
0434 0100W	Tapping Screw - M4x10	51-114
0434 0100W	Tapping Screw - M4x10	61-106
0434 0140W	Tapping Screw - M4x14	51-105
0534 0050E	Headless Screw - M4x5	41-106
0574 0040E	Hexagon Headless Set Screw - M4x4	29-108
0574 0050E	Hexagon Headless Set Screw - M4x5	21-109
0574 0050E	Hexagon Headless Set Screw - M4x5	23-106
0574 0050E	Hexagon Headless Set Screw - M4x5	25-105
0574 0050E	Hexagon Headless Set Screw - M4x5	43-105
0574 0050E	Hexagon Headless Set Screw - M4x5	55-106
0574 0060E	Hexagon Headless Set Screw - M4x6	15-104
0574 0060E	Hexagon Headless Set Screw - M4x6	25-106
0574 0060E	Hexagon Headless Set Screw - M4x6	27-107
0574 0060E	Hexagon Headless Set Screw - M4x6	29-109
0574 0060E	Hexagon Headless Set Screw - M4x6	31-107

Parts No.	Description	Page and Index No.
0575 0050E	Hexagon Headless Set Screw - M5x5	55-107
0575 0060E	Hexagon Headless Set Screw - M5x6	55-108
0594 0050E	Hexagon Bolt - M4x5	25-107
0594 0060W	Hexagon Bolt - M4x6	39-109
0622 0060E	Spring Pin - 2x6mm	35-104
0622 0100W	Parallel Pin - M2x10	21-110
0622 0100W	Spring Pin - 2x10mm	23-107
0623 0100E	Spring Pin - 3x10mm	27-108
0623 0120E	Spring Pin - 3x12mm	29-110
0623 0180E	Spring Pin - 3x18mm	27-109
0633 0140Z	Parallel Pin - M3x14	55-109
0700 0050W	Flat Washer - M5	25-108
0704 0080B	Toothed Washer - M8	59-105
0707 4050B	Bushing - 4x5	55-110
0712 0080B	Hexagon Nut - M8	59-106
0720 0025E	Retaining Ring - M2.5	27-110
0720 0025E	Retaining Ring - M2.5	31-108
0720 0025E	Retaining Ring - M2.5	37-106
0720 0025E	Retaining Ring - M2.5	45-105
0720 0030E	Retaining Ring - M3	11-103
0720 0030E	Retaining Ring - M3	21-111
0720 0030E	Retaining Ring - M3	23-108
0720 0030E	Retaining Ring - M3	25-109
0720 0030E	Retaining Ring - M3	29-111
0720 0030E	Retaining Ring - M3	31-109
0720 0030E	Retaining Ring - M3	33-106
0720 0030E	Retaining Ring - M3	35-105
0720 0030E	Retaining Ring - M3	49-105
0720 0030E	Retaining Ring - M3	51-106
0720 0030W	Retaining Ring - M3	45-106
0720 0040E	Retaining Ring - M4	11-104
0720 0040E	Retaining Ring - M4	17-106
0720 0040E	Retaining Ring - M4	21-112
0720 0040E	Retaining Ring - M4	23-109
0720 0040E	Retaining Ring - M4	25-110

Parts No.	Description	Page and Index No.
0720 0040E	Retaining Ring - M4	27-111
0720 0040E	Retaining Ring - M4	29-112
0720 0040E	Retaining Ring - M4	31-110
0720 0040E	Retaining Ring - M4	35-106
0720 0040E	Retaining Ring - M4	43-106
0720 0040E	Retaining Ring - M4	45-107
0720 0040E	Retaining Ring - M4	47-104
0720 0040E	Retaining Ring - M4	49-106
0720 0040W	Retaining Ring - M4	55-118
0720 0050E	Retaining Ring - M5	21-113
0720 0050E	Retaining Ring - M5	23-110
0720 0050E	Retaining Ring - M5	25-111
0720 0050E	Retaining Ring - M5	27-112
0720 0050E	Retaining Ring - M5	29-113
0720 0050E	Retaining Ring - M5	31-111
0720 0050E	Retaining Ring - M5	33-107
0720 0050E	Retaining Ring - M5	35-107
0720 0050E	Retaining Ring - M5	37-107
0720 0050E	Retaining Ring - M5	39-110
0720 0050E	Retaining Ring - M5	43-107
0720 0050E	Retaining Ring - M5	49-107
0720 0050E	Retaining Ring - M5	51-107
0720 0050E	Retaining Ring - M5	55-111
0720 0050E	Retaining Ring - M5	61-107
0720 0060E	Retaining Ring - M6	21-114
0720 0060E	Retaining Ring - M6	23-111
0720 0060E	Retaining Ring - M6	27-113
0720 0060E	Retaining Ring - M6	29-114
0720 0060E	Retaining Ring - M6	31-112
0720 0060E	Retaining Ring - M6	33-108
0720 0060E	Retaining Ring - M6	35-109
0720 0060E	Retaining Ring - M6	37-108
0720 0060E	Retaining Ring - M6	39-111
0720 0060E	Retaining Ring - M6	43-108
0720 0060E	Retaining Ring - M6	51-108

Parts No.	Description	Page and Index No.
0720 0060E	Retaining Ring - M6	55-112
0720 0070E	Retaining Ring - M7	21-115
0720 0070E	Retaining Ring - M7	23-112
0720 0070E	Retaining Ring - M7	35-108
0720 0070E	Retaining Ring - M7	51-109
0725 0100E	Retaining Ring C - M10	41-107
0725 0120E	Retaining Ring C - M12	41-108
0725 0200E	Retaining Ring C - M20	51-110
0727 0050E	Retaining Ring - M5	37-109
0734 0607D	Bushing - 6x7	45-108
0740 3008	Ball Bearing	51-111
0801 1179	Philips Screw With Toothed Washer	11-105
0801 1185	Philips Truss Head Screw - M4x8	57-108
0801 1185	Philips Truss Head Screw - M4x8	59-107
0801 1185	Philips Truss Head Screw - M4x8	61-108
0802 5085	Tapping Screw - M4x8	35-110
0802 5085	Tapping Screw - M4x8	9-103
0802 5086	Tapping Screw - M4x10	35-111
0802 5094	Tapping Screw - M4x8	25-112
0802 5094	Tapping Struss Head Screw - M4x8	53-104
0802 5094	Tapping Truss Head Screw - M4x8	9-104
0802 5094F	Truss Tapping Screw - M4T3x8	9-105
0802 5131	Truss Head Screw - M4x8	19-102
0803 0017	Knob Screw - M4x65	9-106
0805 0083	Retaining Ring - M4	19-103
0805 3042	Ball Bearing - 6x10x3mm	21-116
0805 3042	Ball Bearing - 6x10x3mm	23-113
0805 3101	Ball Bearing - 6x13x5mm	27-114
0805 3145	Ball Bearing - 6x12x4mm	55-113
0805 3291	Ball Bearing - 8x16x5mm	33-109
0805 3291	Ball Bearing - 8x16x5mm	55-114
0805 3377	Ball Bearing - 25x42x9mm	51-112
0805 3399	Bushing - 6x10x8mm	49-108
0805 3410	Ball Bearing - 15x28x7mm	37-110
0807 3014	Nylon Washer	29-115

Parts No.	Description	Page and Index No.
0807 4041	Collar - 6.5x20mm	25-113
0807 4043	Spacer	27-115
0807 4123	Spacer - 6x13x1mm	25-114
0951 3005W	Philips Screw With Flat Washer - M3x5	51-113
0951 4005W	Philips Screw With Flat Washer - M4x5	17-107
0951 4006W	Philips Screw With Flat Washer - M4x6	17-108
0951 4006W	Philips Screw With Flat Washer - M4x6	49-109
0951 4006W	Philips Screw With Flat Washer - M4x6	55-115
0951 4008W	Philips Screw With Flat Washer - M4x8	17-109
0951 4008W	Philips Screw With Flat Washer - M4x8	21-117
0951 4008W	Philips Screw With Flat Washer - M4x8	35-112
0951 4008W	Philips Screw With Flat Washer - M4x8	39-112
0951 4008W	Philips Screw With Flat Washer - M4x8	41-109
0951 4008W	Philips Screw With Flat Washer - M4x8	41-112
0951 4010W	Philips Screw With Flat Washer - M4x10	15-105
0951 4010W	Philips Screw With Flat Washer - M4x10	17-110
0951 4012W	Philips Screw With Flat Washer - M4x12	41-110
0951 4060W	Philips Screw With Flat Washer - M4x6	41-111
0960 4005W	Philips Flange Screw - M4x5	9-107
0960 4008W	Philips Flange Screw - M4x8	55-116
0964 4008W	Tapping Screw With Flat Washer - M4x8	49-110
0964 4008W	Tapping Screw With Flat Washer - M4x8	57-109
0964 4008W	Tapping Screw With Flat Washer - M4x8	59-108
0964 4008W	Tapping Screw With Flat Washer - M4x8	61-109
0965 3006W	Tapping Screw With Flat Washer - M3x6	25-115
0965 3006W	Tapping Screw With Flat Washer - M3x6	31-113
0965 3006W	Tapping Screw With Flat Washer - M3x6	47-105
0965 3008W	Tapping Screw With Flat Washer - M3x8	61-110
0965 3008W	Tapping Screw With Flat Washer - M3x8	9-108
0965 4008W	Tapping Screw With Flat Washer - M4x8	25-116
0965 4008W	Tapping Screw With Flat Washer - M4x8	31-114
0965 4008W	Tapping Screw With Flat Washer - M4x8	39-113
0965 4008W	Tapping Screw With Flat Washer - M4x8	53-105
0965 4010W	Tapping Screw With Flat Washer - M4x10	19-104
0965 4010W	Tapping Screw With Flat Washer - M4x10	41-113

Parts No.	Description	Page and Index No.
0965 4012W	Tapping Screw With Flat Washer - M4x12	19-105
0971 3006A	Philips Polycarbonate Screw - M3x6	39-114
0971 3006A	Philips Polycarbonate Screw - M3x6	41-114
0971 4010A	Polycarbonate Screw - M4x10	53-106
1100 0082	Solid Strand	85-101
1100 0086	Solid Strand	93-101
1100 0350	Closed Terminal	73-101
1100 0844	Socket - Mate-N-Lock	73-102
1100 0853	Closed Terminal	73-103
1100 0863	Stud Pin	83-101
1100 0864	Housing - AWG14-20	75-101
1100 0864	Housing - AWG14-20	83-102
1100 0916	Pin - Mate-N-Lock	75-102
1100 1089	Socket - Mate-N-Lock	81-101
1100 1091	EI Connector - 3P	67-101
1100 1094	Connector - 4P	63-101
1100 1094	Connector - 9P	65-101
1100 1095	Connector - 10P	67-102
1100 1096	Connector - 12P	67-103
1100 1153	Terminal	73-104
1100 1155	Contact	73-105
1100 1159	Socket - Mate-N-Lock	101-101
1100 1159	Socket - Mate-N-Lock	73-106
1100 1159	Socket - Mate-N-Lock	97-105
1100 1170	Fastening Receptacle	75-103
1100 1171	Fastening Receptacle	75-104
1100 1172	Fastening Receptacle	73-107
1100 1172	Fastening Receptacle	75-105
1100 1172	Fastening Receptacle	89-101
1100 1200	Terminal	73-108
1100 1238	Pin - Mate-N-Lock	83-103
1100 1238	Pin - Mate-N-Lock	89-102
1100 1239	Pin - Mate-N-Lock	73-109
1100 1239	Pin - Mate-N-Lock	83-104
1100 1240	Socket - Mate-N-Lock	73-110

Parts No.	Description	Page and Index No.
1100 1241	Socket - Mate-N-Lock	73-111
1100 1241	Socket - Mate-N-Lock	75-106
1100 1241	Socket - Mate-N-Lock	77-101
1100 1247	Terminal	73-112
1100 1247	Terminal	75-107
1100 1247	Terminal	77-102
1100 1247	Terminal	83-105
1100 1249	Receptacle Terminal	101-105
1100 1249	Receptacle Terminal	101-109
1100 1249	Receptacle Terminal	103-101
1100 1249	Receptacle Terminal	103-103
1100 1249	Receptacle Terminal	79-101
1100 1249	Receptacle Terminal	81-102
1100 1249	Receptacle Terminal	91-101
1100 1249	Receptacle Terminal	93-102
1100 1253	Pin - Mate-N-Lock	101-102
1100 1253	Pin - Mate-N-Lock	101-106
1100 1253	Pin - Mate-N-Lock	103-104
1100 1253	Pin - Mate-N-Lock	75-108
1100 1253	Pin - Mate-N-Lock	79-102
1100 1253	Pin - Mate-N-Lock	85-102
1100 1253	Pin - Mate-N-Lock	87-101
1100 1253	Pin - Mate-N-Lock	93-110
1100 1253	Pin - Mate-N-Lock	97-106
1100 1253	Pin - Mate-N-Lock	99-101
1100 1253	Pin - Mate-N-Lock	99-104
1100 1259	Socket - Mate-N-Lock	73-113
1100 1259	Socket - Mate-N-Lock	79-103
1100 1259	Socket - Mate-N-Lock	95-101
1100 1259	Socket - Mate-N-Lock	99-105
1100 1264	Fastening Receptacle	73-114
1100 1264	Fastening Receptacle	75-109
1100 1264	Fastening Receptacle	87-102
1100 1300	Fastening Receptacle	73-115
1100 1301	Fastening Receptacle	73-116

Parts No.	Description	Page and Index No.
1100 1327	Contact	73-117
1100 1327	Contact	81-103
1100 1327	Contact	83-106
1100 1327	Contact	85-103
1100 1327	Contact	93-103
1100 1327	Contact	97-101
1100 1328	Contact	87-103
1100 1328	Contact	91-102
1100 1328	Contact	95-103
1100 1329	Socket Contact	97-102
1100 1339	Pin Contact	93-104
1100 1341	Pin Contact	75-110
1100 1343	Pin Contact	93-105
1100 1345	Pin Contact	75-111
1100 1348	Pin Contact	73-118
1101 0328	Connector Pin Contact	63-102
1102 0185	Connector - 4P	73-119
1102 0782	Connector - 4P	75-112
1102 0946	Housing - 3P	75-113
1102 0946	Housing - 3P	83-107
1102 0958	Connector - 2P	65-102
1102 0977	Connector - Heater	83-108
1102 0983	Connector - 2P	75-114
1102 1089	Connector - 3P	73-120
1102 1089	Connector - 3P	99-106
1102 1091	Connector - 6P	73-121
1102 1091	Connector - 6P	79-104
1102 1092	Connector - 9P	95-102
1102 1093	Connector - 10P	73-122
1102 1093	Connector - 10P	81-104
1102 1094	Connector - 12P	81-105
1102 1172	EI Connector - 4P	65-103
1102 1178	Connector - 5P	73-123
1102 1253	Connector - 15P	101-110
1102 1286	Connector	73-124

Parts No.	Description	Page and Index No.
1102 1396	Connector - 2P	101-103
1102 1396	Connector - 2P	73-126
1102 1396	Connector - 2P	97-107
1102 1397	Connector - 2P	73-127
1102 1398	Connector - 2P	97-108
1102 1401	Receptacle Housing - 1P	75-115
1102 1402	Receptacle Housing - 1P	75-116
1102 1402	Receptacle Housing - 1P	89-103
1102 1403	Receptacle Housing	75-117
1102 1403	Receptacle Housing	89-104
1102 1404	Receptacle Housing	73-128
1102 1404	Receptacle Housing	75-118
1102 1404	Receptacle Housing	89-105
1102 1412	Receptacle Housing - 2P	73-129
1102 1413	Connector - 4P	73-130
1102 1418	Connector - 8P	73-131
1102 1419	Connector - 2P	73-132
1102 1420	Connector - 2P	73-133
1102 1422	Housing - 6P Black	73-134
1102 1423	Housing - 3P Black	73-135
1102 1509	Connector - 4P	73-136
1102 1510	Connector - 6P	83-109
1102 1510	Connector - 6P	89-106
1102 1512	Connector - 12P	83-110
1102 1515	Connector - 2P	73-137
1102 1515	Connector - 2P	75-119
1102 1515	Connector - 2P	77-103
1102 1516	Connector - 3P	75-120
1102 1518	Connector - 6P	73-138
1102 1518	Connector - 6P	75-121
1102 1520	Connector - 12P	73-139
1102 1532	Connector - 2P	75-122
1102 1544	Connector - 3P	75-123
1102 1567	Connector - 2P	63-103
1102 1567	Connector - 2P	65-104

Parts No.	Description	Page and Index No.
1102 1620	Connector - 3P	101-111
1102 1620	Connector - 3P	103-105
1102 1620	Connector - 3P	81-106
1102 1620	Connector - 3P	91-103
1102 1620	Connector - 3P	93-106
1102 1623	Receptacle Housing - 7P	81-107
1102 1660	Receptacle Housing - 3P	101-107
1102 1714	Connector - 6P	73-140
1102 1753	Connector - 5P	87-104
1102 1775	Connector - 8P	73-141
1102 1777	Connector - 8P	85-104
1102 1778	Connector - 4P	75-124
1102 1786	Connector - 3P	101-108
1102 1786	Connector - 3P	103-102
1102 1786	Connector - 3P	79-105
1102 1786	Connector - 3P	81-108
1102 1786	Connector - 3P	91-104
1102 1787	Connector - 3P	81-109
1102 1788	Connector - 7P	81-110
1102 1790	Connector - 6P	79-106
1102 1790	Connector - 6P	99-102
1102 1814	Connector - 3P	101-112
1102 1814	Connector - 3P	103-106
1102 1814	Connector - 3P	99-107
1102 1815	Connector - 3P	75-125
1102 1854	Connector - 10P	81-111
1102 1859	Connector - 4P	93-111
1102 1860	Connector - 2P	101-104
1102 1861	Connector - 4P	97-109
1102 1867	Connector - 6P	79-107
1102 1878	Connector - 3P	73-142
1102 1889	Connector - 6P	83-111
1102 1910	Connector - 2P	73-143
1102 1910	Connector - 2P	83-112
1102 1910	Connector - 2P	93-107

Parts No.	Description	Page and Index No.
1102 1911	Connector - 3P	73-144
1102 1911	Connector - 3P	81-112
1102 1911	Connector - 3P	85-105
1102 1911	Connector - 3P	97-103
1102 1912	Connector - 4P	73-145
1102 1914	Connector - 6P	73-146
1102 1916	Connector - 8P	73-147
1102 1917	Connector - 8P	83-113
1102 1918	Connector - 10P	73-148
1102 1919	Connector - 11P	73-149
1102 1922	Connector - 14P	73-150
1102 1924	Connector - 2P	73-151
1102 1924	Connector - 2P	93-108
1102 1925	Connector - 3P	85-106
1102 1930	Connector - 6P	73-152
1102 1932	Connector - 10P	85-107
1102 1938	Connector - 2P	73-153
1102 1940	Connector - 4P	85-108
1102 1952	Connector - 2P	87-105
1102 1952	Connector - 2P	95-104
1102 1953	Connector - 3P	87-106
1102 1953	Connector - 3P	95-105
1102 1964	Connector - 2P	91-105
1102 1967	Connector - 6P	95-106
1102 1976	Connector - 2P	91-106
1102 1983	Socket Housing - 3P	97-104
1102 2098	Connector - 12P	93-109
1102 2099	Connector - 12P	75-126
1102 2113	Connector - 2P	69-101
1102 2549	Connector - 2P	77-104
1102 2986	Receptacle - 14P	63-104
1102 3168	Receptacle - 32P	73-125
1102 3168	Receptacle - 32P	73-154
1102 3169	Connector - 32P	67-104
1102 3173	Contact	73-155

Parts No.	Description	Page and Index No.
1103 0657	Connector - 50P	73-156
1103 0662	Connector - 20P	73-157
1103 0701	Connector - 6P	69-102
1103 0725	Connector - 3P	65-105
1103 0774	Connector - 3P	67-105
1103 0777	Connector - 30	67-106
1103 1134	Connector - 12P	65-106
1103 1336	Connector - 3P	99-103
1103 1337	Connector - 4P	77-105
1103 1337	Connector - 4P	91-107
1103 1344	Connector - 12P	77-106
1103 1390	Pin Header - 6P	63-105
1103 1400	Connector - 2P	67-107
1103 1401	Connector - 7P	67-108
1103 1402	Connector - 10P	67-109
1103 1403	Connector - 12P	65-107
1103 1429	Connector - 3P	77-107
1103 1429	Connector - 3P	91-108
1103 1430	Connector - 4P	77-108
1103 1431	Connector - 8P	77-109
1103 1531	Connector - 4P	67-110
1103 1622	Connector - 14P	73-158
1103 1682	Connector - 2P	67-111
1103 1694	Connector - 14P	67-112
1103 1696	Connector - 2P	67-113
1103 1724	Connector - 2P	67-114
1103 1724	Connector - 2P	69-103
1103 1725	Connector - 3P	63-106
1103 1725	Connector - 3P	67-115
1103 1731	Connector - 9P	69-104
1103 1732	Connector - 10P	63-107
1103 1733	Connector - 11P	63-108
1103 1736	Connector - 14P	63-109
1103 1752	Connector - 2P	67-116
1103 3020	Connector - 20P	63-110

Parts No.	Description	Page and Index No.
1103 3025	Connector - 50P	63-111
1104 0224	Relay Bracket	61-111
1104 0271	LSI Socket - 28P	63-112
1104 0271	LSI Socket - 28P	65-108
1105 0005	Nylon Clip - 3N	17-111
1105 0005	Nylon Clip - 3N	39-115
1105 0005	Nylon Clip - 3N	59-109
1105 0005	Nylon Clip - 3N	61-112
1105 0008	Nylon Clip - 2N	57-110
1105 0099	Wire Saddle	57-111
1105 0159	P.C.B. Stud	57-112
1105 0196	Harness Clamp	55-119
1105 0196	Harness Clamp	59-110
1105 0196	Harness Clamp	61-113
1105 0197	Wire Saddle	57-113
1105 0197	Wire Saddle	61-114
1105 0197	Wire Saddle	9-109
1105 0199	Clamp	57-114
1105 0200	Clamp	57-118
1106 0395	Locking Support	57-115
1106 0430	Bushing - 13mm	39-116
1106 0458	Bushing - 9.9mm	15-106
1107 0363	Circuit Breaker - 115V	61-115
1204 1280	Push Switch	57-116
1204 1482	Dip Switch	63-113
1204 1520	Switch	57-117
1208 1029	Power Relay	61-116
1208 1034	Relay - DC24V	69-105
1400 0423	Transistor - 2SA1121C	65-109
1400 0424	Transistor - 2SC2618C	65-110
1401 0298	Transistor - 2SC2712YTE85L	63-114
1401 0391	Transistor Array - PU4310 60V3A	63-115
1401 0392	Transistor - 2SB1193	65-111
1401 0393	Transistor - 2SD1773	65-112
1401 0395	Transistor - 2SC2883	63-116

Parts No.	Description	Page and Index No.
1401 0825	Diode - 1SS176	67-117
1401 0826	Diode - 1SS181	63-117
1401 0832	Diode - DSA1A1	63-118
1402 0110	Diode - 1.1A 200V	65-113
1402 0360	Zener Diode - HZ20	69-106
1402 0423	Diode - S5500G	67-118
1402 0423	Diode - S5500G	73-160
1402 0467	Diode - S5566G	69-107
1402 0476	Diode - 1SS184	63-119
1402 0687	Diode - 12V 1W	65-114
1402 0688	Diode - 6.8V 1W	63-120
1402 0688	Diode - 6.8V 1W	65-115
1402 0690	Diode - RD39P	63-121
1402 0734	Diode - RD6.2	63-122
1405 0127	Photothyristor - TLP541G	69-108
1405 0130	Rectifier - 1G4B42	69-109
1405 0148	Triac - 600V 16A Bcr	69-110
1405 0151	Photothyristor - TLP545J	69-111
1405 0152	Rectifier - 1J4B42	69-112
1405 0156	Triac - 400V 8A	69-113
1405 0157	Triac - 400V 10A	69-114
1407 1305	IC - SN7406NS	65-116
1407 1306	Ttl - HD74LS00FP	63-123
1407 1306	IC - HD74LS00FP	65-117
1407 1309	Ttl - HD74LS04FP	63-124
1407 1309	IC - HD74LS04FP	65-118
1407 1310	IC - HD74LS08FP	63-125
1407 1311	IC - HD74LS32FP	63-126
1407 1314	IC - HD74LS74AFP	65-119
1407 1317	IC - HD74LS138FP	63-127
1407 1335	IC - RF5G02-005	63-128
1407 1740	IC - SN74LS27NS	65-120
1407 1813	IC - SN74LS11NS	63-129
1407 1882	IC - SN74LS373NS	63-130
1407 1882	IC - SN74LS373NS	65-121

Parts No.	Description	Page and Index No.
1407 1883	IC - TC4050BF	65-122
1407 2054	IC - TD62308F	63-131
1407 2054	IC - TD62308F	65-123
1407 2055	IC - TD62304F	63-132
1407 2073	Microprocessor - MPD78C10GF	63-133
1407 2073	Microprocessor - MPD78C10GF	65-124
1407 2187	IC - SN74LS07NS	63-134
1407 2217	Timer IC - MPD71054G	65-125
1407 2218	Ttlic SNT4LS06NS	63-135
1407 2221	IC - SN75157	63-136
1407 2222	IC - SN75158	63-137
1407 2223	TMP82C51AF	63-138
1407 2228	LSI TMP82C55AF	63-139
1407 2229	Timer NJM555M	63-140
1407 2230	IC - TD62303F	63-141
1407 2231	IC - TD62308AF	63-142
1407 2232	IC - 74HC157F	63-143
1408 0200	IC - TA75339P	67-119
1408 0233	IC - HA17903PS	69-115
1408 0456	IC - AN6914S	63-144
1408 0516	IC - TLS27L4	65-126
1408 0537	IC - 7705CPS-B	63-145
1408 0561	IC - TL092PS	63-146
1503 0070	Ceramic Oscillator - 10MHz	63-147
1503 0070	Ceramic Oscillator - 10MHz	65-127
1503 0180	Oscillator - 8MHz	65-128
1600 1112	Resistor - 100OHM 2W	69-116
1601 2844	Resistor - 1.8KOHM 1/2W	69-117
1601 7167	Resistor Array - 4.7KOHM 1/8W	67-120
1601 7468	Fuse Resistor - 100OHM 1/2W	69-118
1601 8185	Variable Resistor - 200OHM 0.5W	69-119
1601 8328	Variable Resistor - 30KOHM	63-148
1601 8421	Resistor - 500KOHM	65-129
1602 0923	Noise Filter - 115V	59-111
1602 0975	Noise Filler - 0.1MF,120OHM	69-120

Parts No.	Description	Page and Index No.
1602 0976	Noidrkillrt - 1200HM + 0.1MF	69-121
1604 1353	Capacitor - 47µF 10V	65-130
1604 1375	Capacitor - 0.22µF 50V	63-149
1604 1378	Capacitor - 1MF 50V	63-150
1604 1381	Capacitor - 4.7µF 50V	63-151
1604 1382	Capacitor - 10µF 50V	63-152
1604 1382	Capacitor - 10µF 50V	67-121
1604 1386	Capacitor - 100MF 50V	63-153
1604 1387	Capacitor - 220µF 50V	65-131
1605 0166	Capacitor - 27øF 50V	63-154
1605 0280	Capacitor - 0.01MF 50V	69-122
1605 0304	Capacitor - 2200øF 50V	65-132
1605 0305	Capacitor - 3300øF 50V	65-133
1605 0306	Capacitor - 27øF 50V	65-134
1606 0689	Capacitor - 0.01MF 50V	69-123
1606 0998	Capacitor - 0.01µF 50V	67-122
1606 1451	Capacitor - 0.1µF 50V	63-155
1606 1452	Capacitor - 0.01µF 50V	65-135
1606 1453	Capacitor - 0.1µF 25V	65-136
1606 1454	Capacitor - 0.01MF 50V	63-156
1606 1455	Capacitor - 470øF 25V	63-157
1606 1494	Capacitor - 0.047MF 250V	69-124
1606 1496	Capacitor - 0.1µF 400V	69-125
1606 1497	Capacitor - 0.047µF 125V	69-126
1606 1542	Capacitor - 0.22MF AC250V	69-127
1606 1587	Capacitor - 8µF 220V	59-112
1606 1626	Capacitor - 14MF 220V	59-113
1606 1627	Capacitor - 14MF 250V	55-117
1607 0218	Inductor - 6660MF	69-128
1610 0025	Resistor - 22OHM 1/8W ±5%	63-158
1610 0035	Resistor - 100OHM 1/8W ±5%	63-159
1610 0047	Resistor - 330OHM 1/8W ±5%	63-160
1610 0048	Resistor - 390OHM 1/8W ±5%	63-161
1610 0049	Resistor - 470OHM 1/8W ±5%	63-162
1610 0053	Resistor - 1KOHM 1/8W ±5%	63-163

Parts No.	Description	Page and Index No.
1610 0053	Resistor - 1KOHM 1/8W ±5%	65-137
1610 0057	Resistor - 1.5KOHM 1/8W ±5%	63-164
1610 0061	Resistor - 2.2KOHM 1/8W ±5%	65-138
1610 0064	Resistor - 3KOHM 1/8W ±5%	63-165
1610 0065	Resistor - 3.3KOHM 1/8W ±5%	65-139
1610 0067	Resistor - 4.7KOHM 1/8W ±5%	63-166
1610 0067	Resistor - 4.7KOHM 1/8W ±5%	65-140
1610 0068	Resistor - 5.6KOHM 1/8W ±5%	63-167
1610 0069	Resistor - 6.8KOHM 1/8W ±5%	63-168
1610 0071	Resistor - 10KOHM 1/8W ±5%	63-169
1610 0071	Resistor - 10KOHM 1/8W ±5%	65-141
1610 0073	Resistor - 12KOHM 1/8W ±5%	63-170
1610 0075	Resistor - 15KOHM 1/8W ±5%	63-171
1610 0077	Resistor - 18KOHM 1/8W ±5%	63-172
1610 0079	Resistor - 22KOHM 1/8W ±5%	63-173
1610 0081	Resistor - 27KOHM 1/8W ±5%	65-142
1610 0083	Resistor - 33KOHM 1/8W ±5%	63-174
1610 0085	Resistor - 47KOHM 1/8W ±5%	63-175
1610 0086	Resistor - 56KOHM 1/8W ±5%	63-176
1610 0089	Resistor - 100KOHM 1/8W ±5%	63-177
1610 0091	Resistor - 120KOHM 1/8W ±5%	63-178
1610 0099	Resistor - 270KOHM 1/8W ±5%	63-179
1610 0107	Resistor - 111KOHM 1/8W ±5%	63-180
1610 0107	Resistor - 111KOHM 1/8W ±5%	65-143
1610 0108	Resistor - 1.2MOHM 1/8W ±5%	63-181
1610 0110	Resistor - 1.8KOHM 1/8W ±5%	63-182
1610 0113	Resistor - 3.3MOHM 1/8W ±5%	63-183
1610 0118	Resistor - 8.2MOHM 1/8W ±5%	65-144
1611 4103	Resistor - 10KOHM 1/4T ±5%	69-129
1611 4151	Resistor - 150OHM 1/4W ±5%	63-184
1611 4153	Resistor - 15KOHM 1/4T ±5%	67-123
1611 4181	Resistor - 180OHM 1/4W ±5%	63-185
1611 4223	Resistor - 22KOHM 1/4T ±5%	69-130
1611 4472	Resistor - 4.7KOHM 1/4T ±5%	67-124
1611 4562	Resistor - 5.6KOHM 1/4T ±5%	69-131

Parts No.	Description	Page and Index No.
1611 4682	Resistor - 6.8KOHM 1/4T ±5%	67-125
1611 4820	Resistor - 82OHM 1/4T ±5%	63-186
1611 4820	Resistor - 82OHM 1/4W ±5%	69-132
1611 6122	Resistor - 1.2KOHM ±5% 1/2W	65-145
1611 6222	Resistor - 2.2KOHM 1/2T ±5%	69-133
1622 1003	Resistor - 100KOHM 1/4W ±1%	63-187
1622 1202	Resistor - 2KOHM 1/4W ±1%	63-188
1622 1203	Resistor - 120KOHM 1/4T ±1%	69-134
1622 1800	Resistor - 185OHM 1/4W ±1%	69-135
1622 4703	Resistor - 470OHM 1/4W ±1%	69-136
1622 5231	Resistor - 2.5KOHM 1/4W ±1%	63-189
1622 8202	Resistor - 82KOHM 1/4W ±1%	69-137
1622 8661	Resistor - 8.6KOHM 1/4W ±1%	63-190

Parts No.	Description	Page and Index No.