RICOH

Technical Bulletin No. RTB-046

SUBJECT: Cleaning Brush Drive Shaft	DATE: Feb.15.'91 PAGE: 1 of 3
PREPARED BY: F. Noguchi CHECKED BY: T. Ito	FROM: Copier Technical Support Sec. Technical Support Department

CLASSIFICATION:

- ☐ Action Required
- ■ Troubleshooting
- ☐ Retrofit Information
- ☐ Revision of service manual
- ☐ Information only
- ☐ Other

MODEL: **F30/31**

1. Symptom

   Cleaning unit operates noisily and/or cleaning drive shaft locks.

2. Cause

   A: When there is too much play between the cleaning brush groove and the drive shaft (#A0073570), then the E-ring groove in the drive shaft becomes worn, causing no unit drive.

   B: If the cleaning brush holder is pushed by some unkown force , then an excessive load is applied to the bushing area, causing brush to be locked.

3. Solution (on production line)

   A: To ensure that the pin stays in the slot, the ∅2.5mm spring pin is being replaced with a ∅2.5mm pin that is square shaped at one end, round at the other. The square-shaped end increases the tolerance; the pin can move as far as 3.85mm before disengaging from the slot.

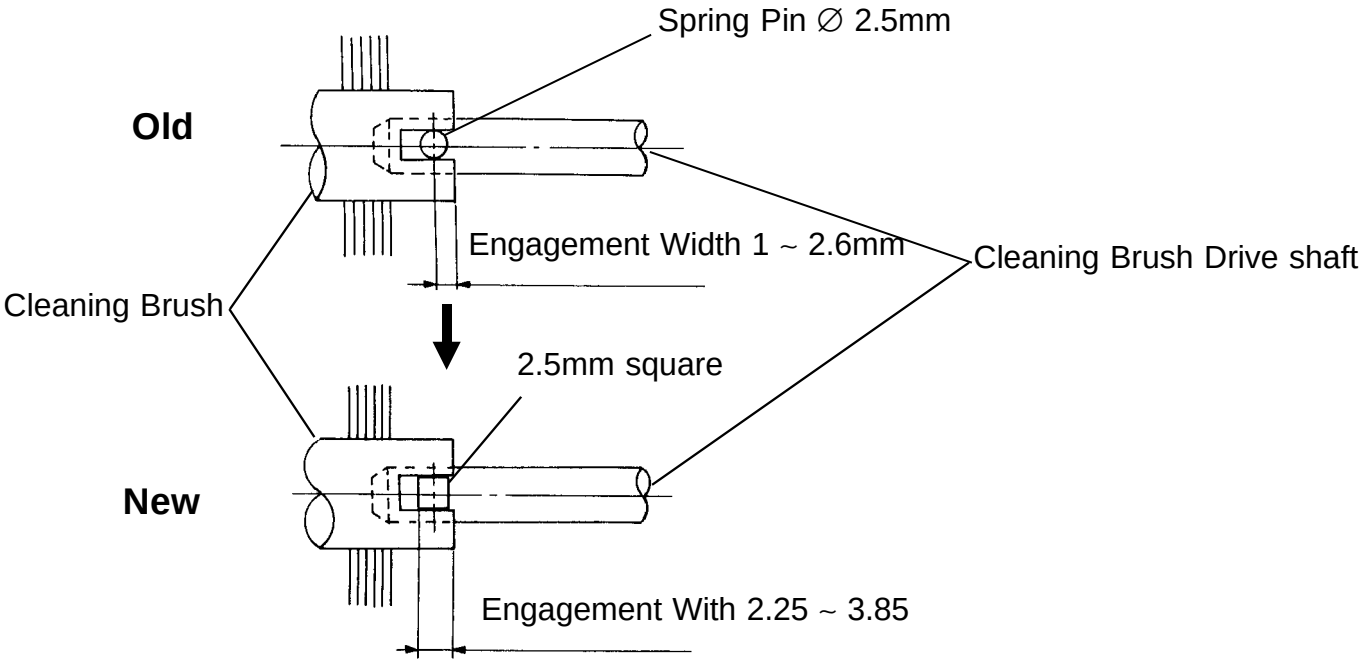

B: To prevent the holder at the front side of the cleaning brush from coming off, the positioning stud is secured with a cup nut that screws on to the end of pin.

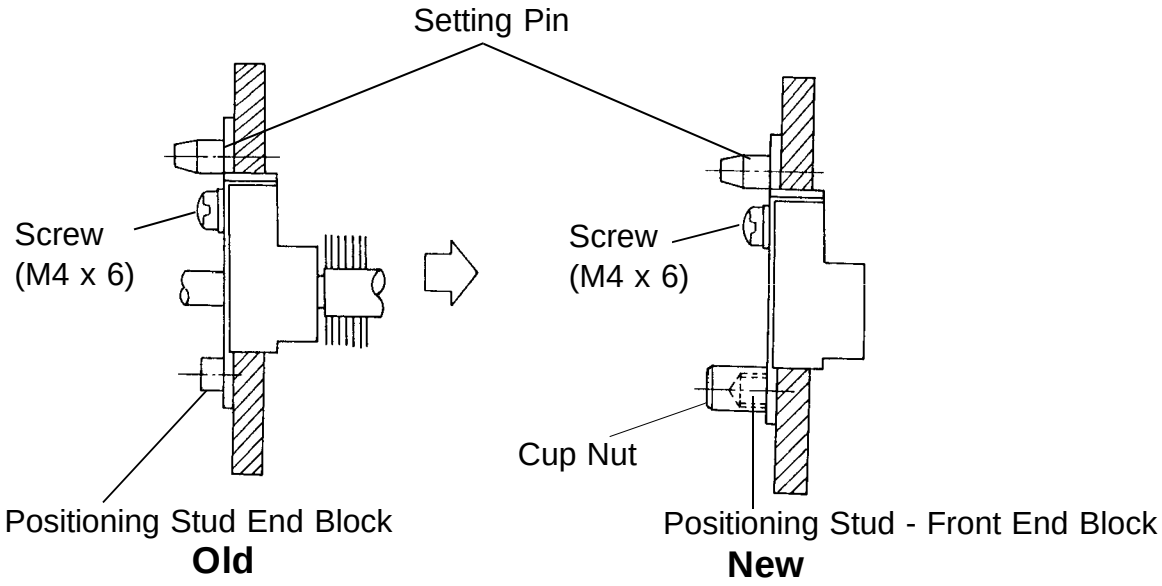

Old **New**

To do this, the positioning stud (P/N AA143032) has been modified.

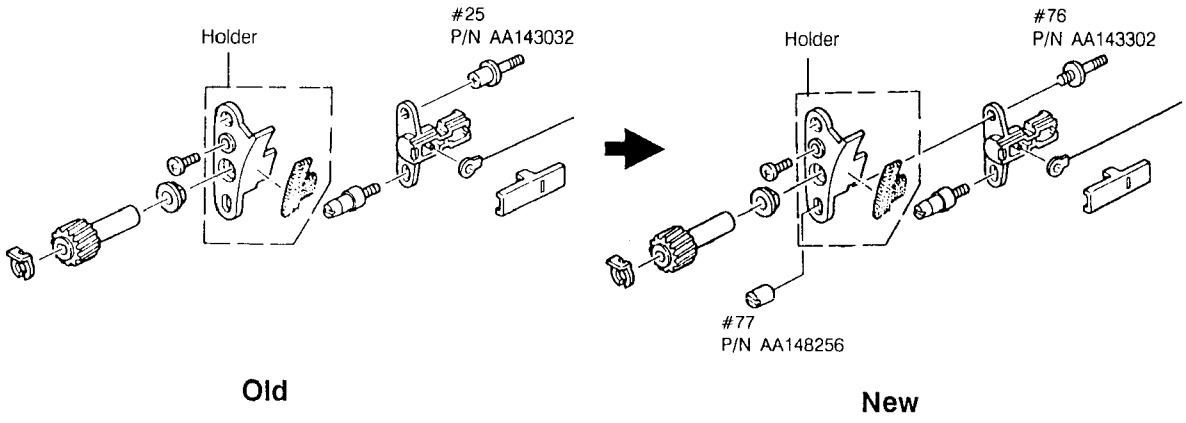

Old **New**

Note:Regarding the cut-in serial number, please see the MBs.

Modification A: We will issue an MB.
Modification B: MB No. 100 (issued on Nov.15.'90)

4. Field countermeasures

A: Without replacing the drive shaft or installing the cup nut.

(1). Check to see if the drive shaft is worn or not. If so, replace it with a new one.
(2). Add the appropriate spacer (e.g. 1mm) to reduce the play within specifications (0.2 - 0.6mm).

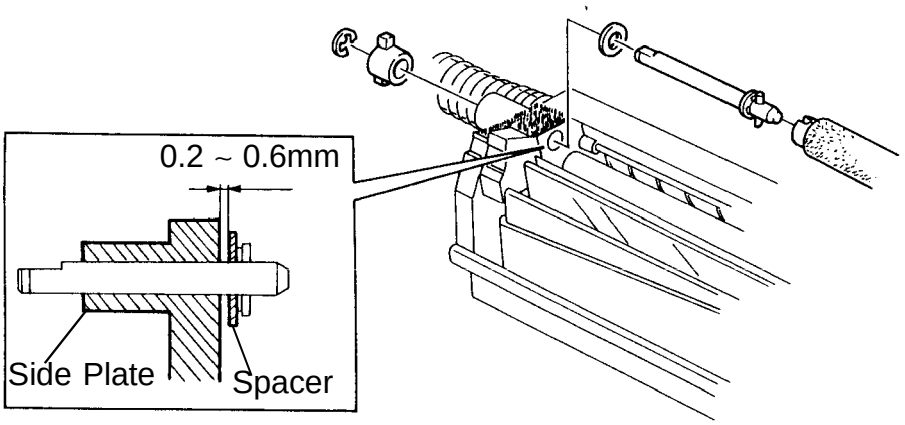

(3). In order to securely tighten the holder[A], replace the screw[B] with a screw and a flat washer (M4x8)

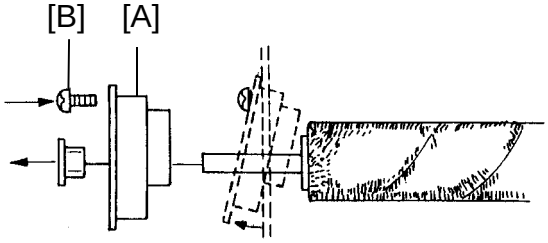

B: Replacing the drive shaft and installing the cup nut.

Replace the following parts as a set order from SPC

A0079520 : Cleaning Brush Drive Shaft Set
(1) Cleaning Drive Shaft
(2) Positioning Stud - Front End Block
(3) Cup Nut

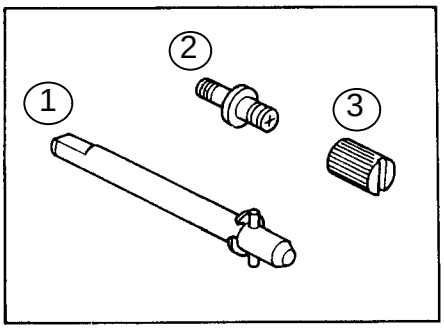

REVICED ON NOV. 30, ’91

RICOH	Technical Bulletin	No. RTB-047

SUBJECT: Inverter Jam	DATE: Feb. 15, ’91 PAGE: 1 of 4
PREPARED BY: M. Furusawa CHECKED BY: T. Ito	FROM: Copier Technical Support Sec. Technical Support Dept.

CLASSIFICATION: ☐ Action Required ■ Troubleshooting ☐ Retrofit Information	☐ Revision of service manual ☐ Information only ☐ Other	MODEL: F30/31

1.SYMPTOM:

An "accordion" paper jam occurs at the inverter unit with the first sheet in duplex mode, lighting the jam indicator "D" on the display panel.

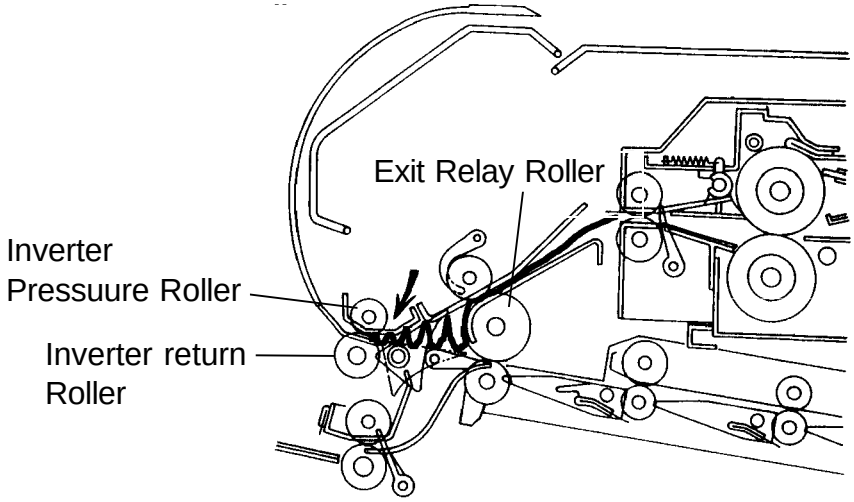

The exact position where the leading edge of the paper stops is the third roller from the front side of the guide plate.

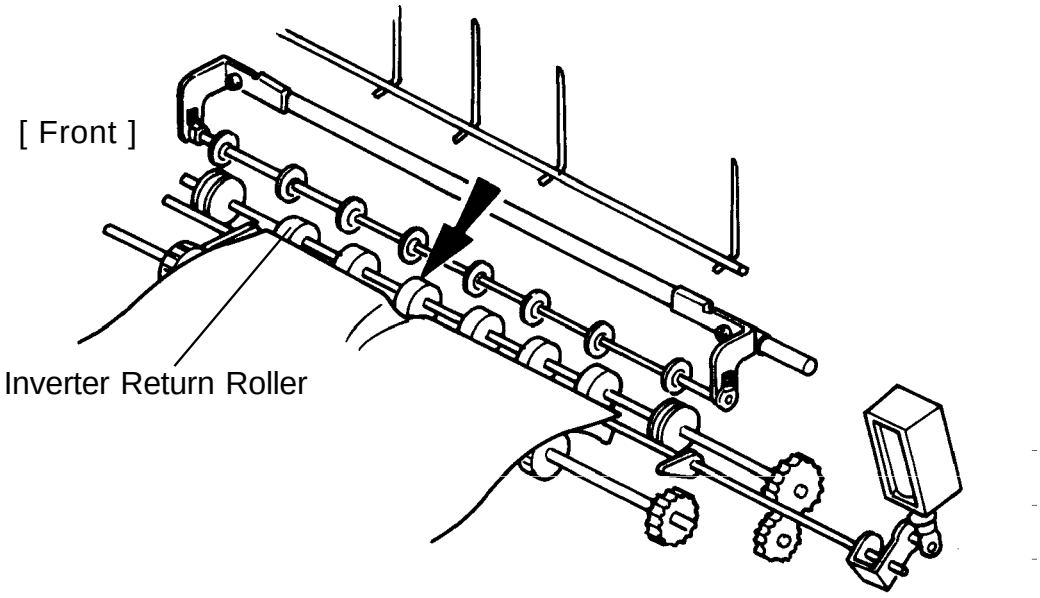

When this occurs:

After about 100 copies have been made and the inside of the copier has heated up, this paper jam may occur.

The occurrence ratio differs depending on the temperature, humidity,and paper type. Paper jamming is most likely to occur under the following conditions:

* at low temperature
* at low humidity
* with certain brands of paper (ex. Sabre-X)
* when sideways A4 copies are made

2. CAUSE:

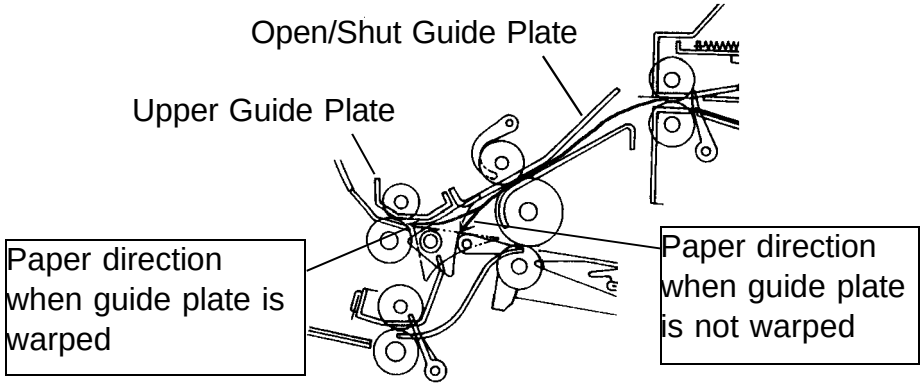

A. The guide plate warps.

The open/shut guide plate warps and curves downward as shown as the result of heat from the fusing unit.

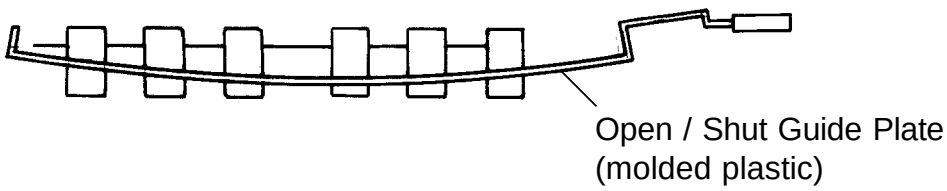

B. The gap between the open/shut guide plate and the lower guide plate narrows.

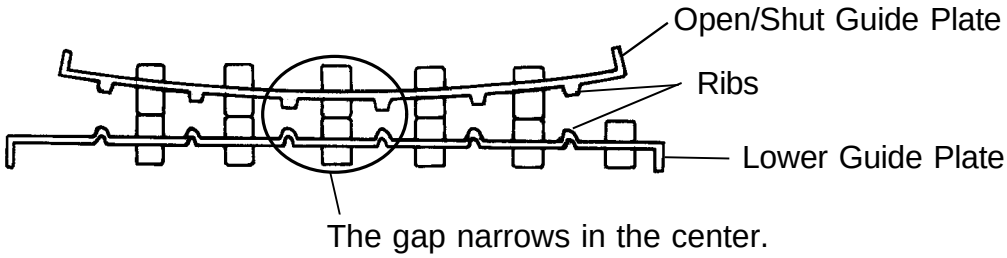

C. Paper passing through the guide plates has crease marks at the point where the gap is narrow.

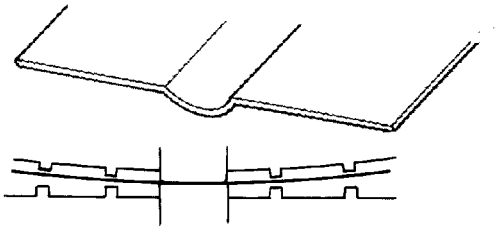

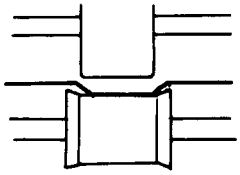

NOTE: This is also done (intentionally) at the exit rollers to create stiffness in the paper sheet.

D. This "stiff" paper proceeds strait ahead (due to its stiffness), and hits the inverter return roller. Jams often occur at this point.

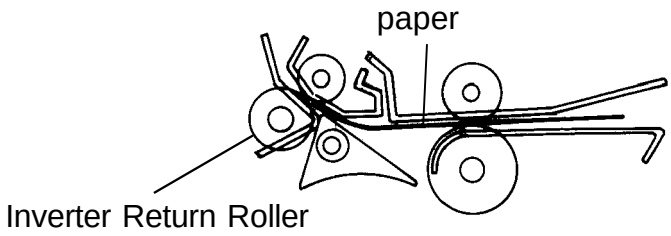

If the gap between the plates is even, paper jams do not occur.

NOTE: This paper jam occurs only when the first sheet is fed in duplex mode because of the short interval betweeen pages. The preceding sheet of paper prevents the following sheet from hitting the inverter return roller.

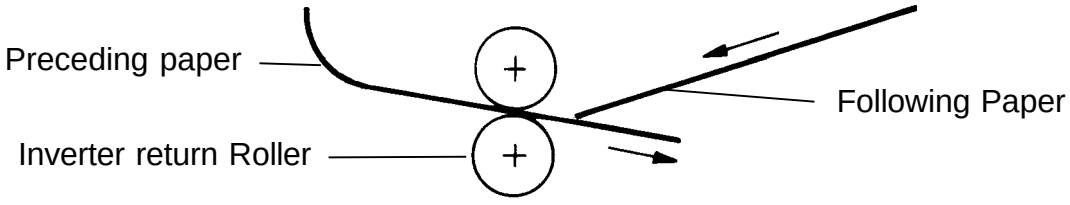

3. ACTION IN THE FIELD (Temporary Solution)

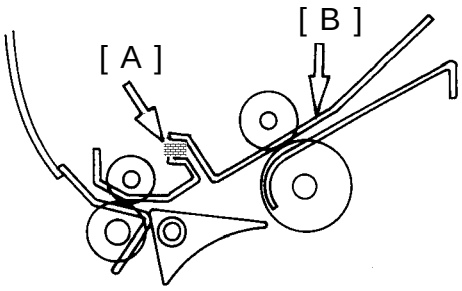

Place flat spacers [A] between the open/shut guide plate and the magnet. This will raise the open/shut guide plate [B].

Install the spacers. Line up the spacers with the arrows as shown.

Spacer : P/N A0458991 (Thickness = 0.5, Size = 10 X 80 mm)

Method of adhesion: Double sided tape

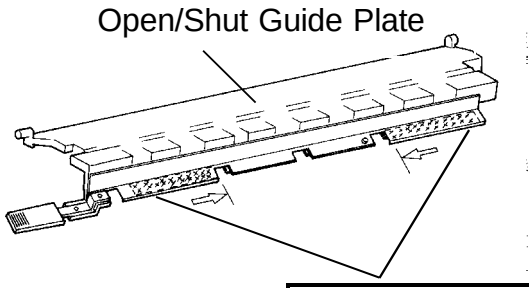

SPACER (A0458991)

NOTE: This temporary solution has already been implemented from the November, '90 production run. This countermeasure will be applied until a permanent solution is found.

4. PERMANENT SOLUTION

The open/shut guide plate has been made thicker by 0.7mm at the place where the spacers were stuck on.

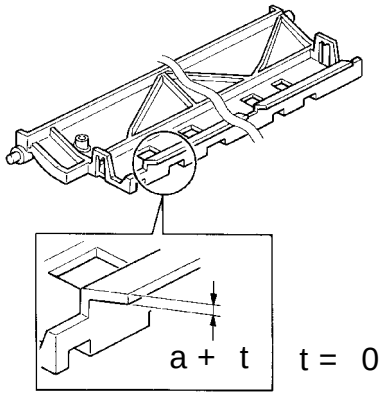

t = 0.7mm

NOTE: This permanent solution has been implemented from the September '91 production run. (Refer to MB No. 119 issued on NOV. 30, '91)

RICOH

Technical Bulletin No. RTB-048

SUBJECT: Platinum Corona Wire	DATE: Apr. 15, '91 PAGE: 1 of 2
PREPARED BY: H. Kobayashi CHECKED BY:	FROM:Copier Technical Support Section

CLASSIFICATION:

- ☐ Action Required
- ☐ Troubleshooting
- ☐ Retrofit Information
- ☐ Revision of service manual
- ■ Information only
- ☐ Other

MODEL: F30/31

The following platinum corona wires have been registered as service parts. The tungsten corona wires are currently being installed on the assembly line, but they may be replaced in the field with the platinum corona wires, if desired.

Platinum corona P/N	Description	Current Tungsten Corona P/N
# 52199540	Corona Wire (1 pc/set)	# 52199101
# A0079540	Main Corona Wire (1 pc/set)	# A0089001
# A0079541	PQC Corona Wire (1 pc/set)	# A0079002
# A0079542	Transfer Corona Wire (1 pc/set)	# A0079003

The platinum and the tungsten corona wires are fairly similar in performance and handling; however, there are the following differences:

Point 1
During the copy cycle, less foreign matter (toner, dust, gas) will build up on the surface of a platinum corona wire than on a tungsten wire. Consequently, platinum corona wires do not need to be cleaned as often to maintain copy quality. This is true for both these platinum corona wires and the third vendor's platinum corona wires.

Point 2
Negative charges cause portions of the surface of a platinum corona wire to break off, affecting the copy image and requiring replacement of the wire. A platinum wire cannot be used as a negative charge corona. (A tungsten wire can be used as a negative charge corona wire.) This is true for both these platinum corona wires and the third vendor's platinum corona wires.

–When to install the platinum corona wires-

The platinum corona wires do not have to be cleaned as often as the tungsten wires (point 1). For this reason, the platinum corona wires are most suitable in cases where a machine is installed in a relatively inaccessible location (far from a service center) and service calls are difficult to make.

The platinum wires can be installed in the field on the following models:

Model	Main	Transfer	PQC	PCC	Separation	PTC
F20 F21 F22	# 52199540	# 52199540	# 52199540	Negative charge. Do not use.	Negative charge. Do not use.	Negative charge. Do not use.
F30 F31 F33 F34 F40	# A0079540	# A0079542	# A0079541	Negative charge. Do not use.	Negative charge. Do not use.	Not used.

Note 1
When installing the platinum corona wires, please take the following actions:
1. Clean the corona casings, end blocks, and new platinum wires with damp cloth.
2. Confirm VSG.

Note 2
A0079540 can also be used as the F90 main corona wire.

RICOH	Technical Bulletin	No. RTB-049

SUBJECT: Installation Procedure change	DATE: May 31,1991 PAGE: 1 of 2
PREPARED BY: F. Noguchi CHECKED BY: T. Ito	FROM: Copier Technical Support Section

CLASSIFICATION:		MODEL:
■ Action Required ☐ Troubleshooting ☐ Retrofit Information	☐ Revision of service manual ☐ Information only ☐ Other	F 31

The following shipping retainer has been changed:

a) The location of the shipping tape has been changed.
b) A cushion has been added.
c) The retainer of the lower left side has been eliminated.

The installation procedure has been changed as follows:

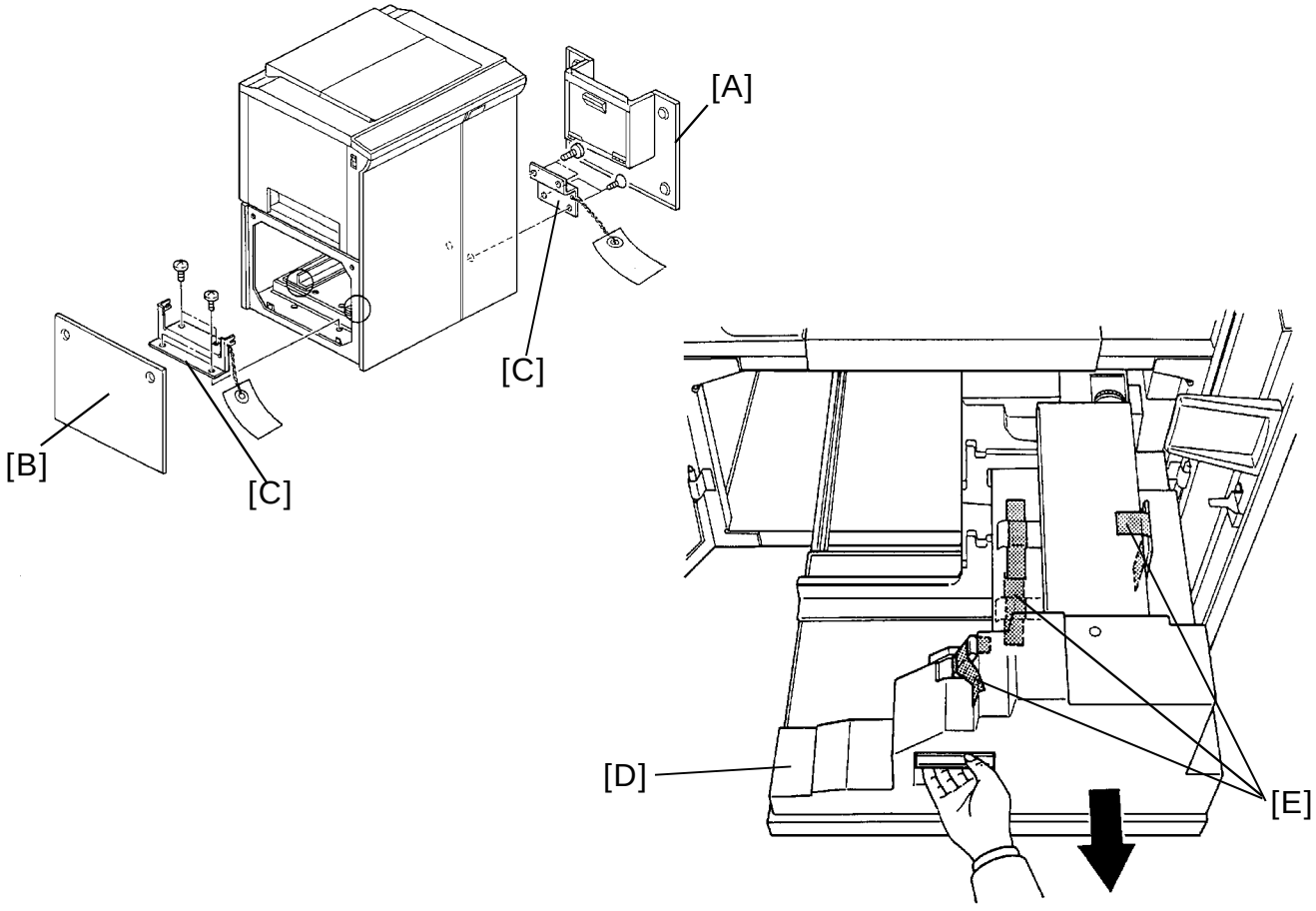

10. Remove the lower right cover [A] (4 screws) and the lower left cover [B] (2 screws), then remove two retainers [C] (4 screws each).

11. Pull the drawer [D] all the way out, and remove the strips of tape [E].

12. Reset the drawer and reinstall the lower right and lower left covers.

NE

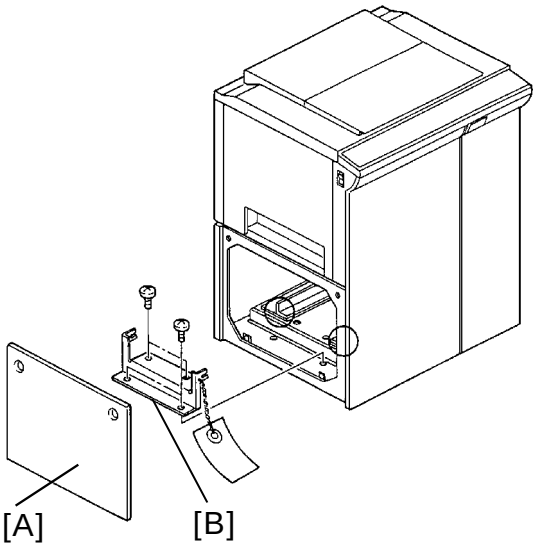

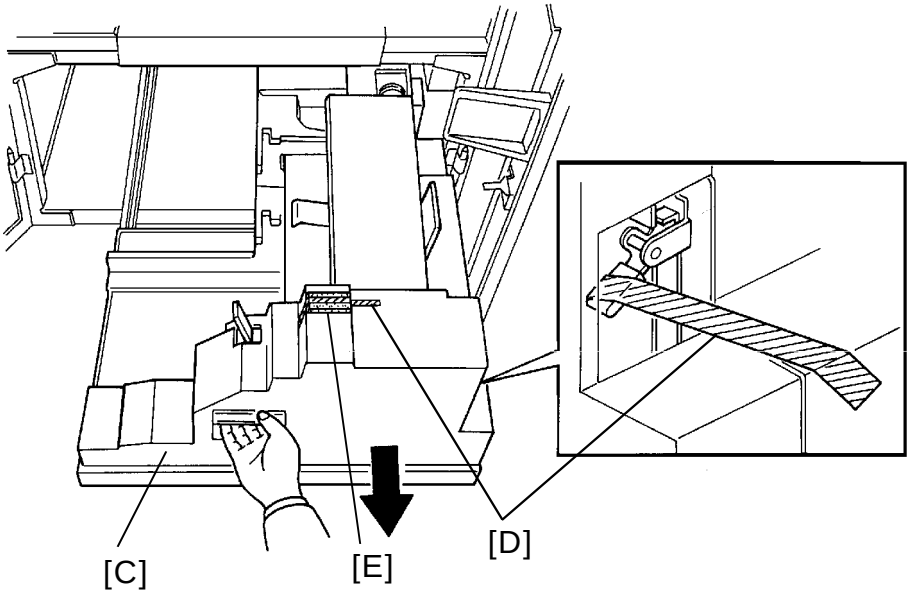

10. Remove the lower left cover[A] (2 screws), then remove the retainer [B] (4 screws).
11. Slide out the paper feed unit [C], then remove all strips of filament tape [D] and the cushion [E].
12. Put the paper feed unit back and reinstall the lower left cover.

This modification is applied from the 1991 May production run.

RICOH	Technical Bulletin	No. RTB-050

SUBJECT: Erratic operation	DATE: 15 July '91 PAGE: 1 of 2
PREPARED BY: F. Noguchi CHECKED BY: T. Ito	From: Copier Technical Support Section Technical Support Department

CLASSIFICATION:		MODEL: F30/31
☐ Action Required ■ Troubleshooting ☐ Retrofit Information	☐ Revision of service manual ☐ Information only ☐ Other	

1. Symptom

During copy operation, the machine sometimes shows some of the following symptoms:
(1) Paper feeds through continuously
(2) Different SC code is displayed
(3) RAM data is cleared
(4) Erratic display is shown
(5) Language in the message display is changed
(6) others

The above also happens during free run and drum conditioning.

2. Cause and objective machines

Some scanner motors(AX060023) may generate high electrical noise, causing the above symptom.
This motor has been used in machines with these serial numbers and onwards:

Japan production

A007	-17	from 4000218765
	-19	from '90 Feb. production
	others	from '90 Mar. production
A019	-11	from '90 Mar. production
	-15	from '90 Mar. production
	-16	from '90 Mar. production
	-25	from '90 Mar. production
	others	from '90 Apr. production

REI production

A007	all	from first production
A019	all	from first production

3. Solution

For the problem machines, install the ferrite core harness(A0078999) on the 30V motor drive lines as shown. This will reduce the peak noise level.

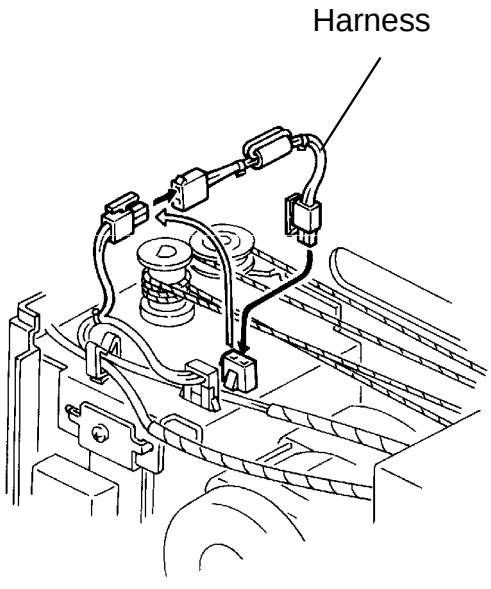

4. Cut-in serial number for the factory modification:

Japan production

A007-16 : 301070002 ~ 007, 009, 013
and from '91 Aug. production
A007-17 : from '91 Sep. production (no production in Aug.)
A007-19 : 4010724339 ~ 348
and from '91 Sep. production (no production in Aug.)
A007-25 : 301070099 ~ 105, 107, 108, 115, 116, 119 ~ 123
and from 301070125
A007-26 : from '91 Sep. production (no production in Aug.)
A007-27 : 4010724376, 388, 390, 428, 438, 444, 445, 447, 449, 456
and from 4010724464
A007-29 : from 4010724490
A007-51 : from '91 Oct. production (no production in Aug. and Sep.)
A007-56 : from '91 Oct. production (no production in Aug. and Sep.)
A007-59 : from 4110702291
A007-65 : from '91 Oct. production (no production in Aug. and Sep.)
A007-66 : from '91 Oct. production (no production in Aug. and Sep.)
A007-67 : from 4110702301
A007-69 : from '91 Oct. production (no production in Aug. and Sep.)
A007-76 : from 3510710031
A019-11 : from '91 Sep. production (no production in Aug.)
A019-15 : from '91 Sep. production (no production in Aug.)
A019-16 : from '91 Sep. production (no production in Aug.)
A019-25 : from '91 Sep. production (no production in Aug.)
A019-26 : from '91 Sep. production (no production in Aug.)
A019-27 : 2021070002 ~ 044, 046 ~ 121, 124, 125, 130, 131, 135 ~ 146, 148 ~ 150
and from '91 Aug. production
A019-29 : from '91 Sep. production (no production in Aug.)

REI production

A007-06 : from 4014901071
A019-06 : from '91 Oct. production (no production in Aug. and Sep.)
A019-08 : from 9415000926