⚠ IMPORTANT SAFETY NOTICES

PREVENTION OF PHYSICAL INJURY

1. Before disassembling or assembling parts of the copier and peripherals, make sure that the copier power cord is unplugged.
2. The wall outlet should be near the copier and easily accessible.
3. Note that some components of the copier and the paper tray unit are supplied with electrical voltage even if the main switch is turned off.
4. If any adjustment or operation check has to be made with exterior covers off or open while the main switch is turned on, keep hands away from electrified or mechanically driven components.
5. If the start key is pressed before the copier completes the warm-up period, keep hands away from the mechanical and the electrical components as the copier starts making copies as soon as the warm-up period is completed.
6. The inside and the metal parts of the fusing unit become extremely hot while the copier is operating. Be careful to avoid touching those components with your bare hands.

HEALTH SAFETY CONDITIONS

1. Toner and developer are non-toxic, but if you get either of them in your eyes by accident, it may cause temporary eye discomfort. Try to remove with eye drops or flush with water as first aid. If unsuccessful, get medical attention.

OBSERVANCE OF ELECTRICAL SAFETY STANDARDS

1. The copier and its peripherals must be installed and maintained by a customer service representative who has completed the training course on those models.
2. The RAM board on the main control board has a lithium battery which can explode if replaced incorrectly. Replace the battery only with an identical one. The manufacturer recommends replacing the entire RAM board. Do not recharge or burn this battery. Used batteries must be handled in accordance with local regulations.

SAFETY AND ECOLOGICAL NOTES FOR DISPOSAL

1. Do not incinerate the toner bottle or the used toner. Toner dust may ignite suddenly when exposed to open flame.
2. Dispose of used toner, developer, and organic photoconductor according to local regulations. (These are non-toxic supplies.)
3. Dispose of replaced parts in accordance with local regulations.
4. When keeping used lithium batteries in order to dispose of them later, do not put more than 100 batteries per sealed box. Storing larger numbers or not sealing them apart may lead to chemical reactions and heat build-up.

A204/A206/A207/A208/A210/A211 COPIER

SERVICE MANUAL

The A204 copier is based on the A153 copier.
The A206 copier is based on the A155 copier.
The A207 copier is based on the A156 copier.
The A208 copier is based on the A157 copier.
The A210 copier is based on the A159 copier.
The A211 copier is based on the A160 copier.

Only the differences from the base copiers are described in the following pages. Therefore, this documentation should be treated as an insert version of the base copier's service manual, although it has a separate binder. It should always be utilized together with the base copier's service manual.

1. SPECIFICATIONS

NOTE: Only items marked with ✻ are different from A153, A155, A156, A157, A159, and A160 copiers.

Configuration:	Desktop
Copy Process:	Dry electrostatic transfer system
Originals:	Sheet/Book
Original Size:	Maximum: A3/11" x 17"
Copy Paper Size:	Maximum: A3/11" x17" (Paper trays) Minimum: A5/8 1/2" x 5 1/2" sideways (Paper trays) A4/11" x 8 1/2" sideways (LCT) A6/5 1/2" x 8 1/2" lengthwise (By-pass)
Duplex Copying:	Maximum: A3/11" x 17" Minimum: A5/8 1/2" x 5 1/2" (sideways)
✻ Copy Paper Weight:	Paper tray: 52 ~ 128 g/m^2, 14 ~ 34 lb By-pass: 52 ~ 157 g/m^2, 14 ~ 42 lb LCT: 52 ~ 128 g/m^2, 14 ~ 34 lb Duplex copying: 64 ~ 105 g/m^2, 17 ~ 24 lb
Reproduction Ratios:	4 Enlargement and 6 Reduction

	A4/A3 Version	LT/DLT Version
Enlargement	200% 141% 122% 115%	200% 155% 129% 121%
Full size	100%	100%
Reduction	93% 82% 75% 71% 65% 50%	93% 85% 77% 74% 65% 50%

Power Source:

120 V/60 Hz:
More than 12 A (for North America)
220 V ~ 240 V/50 Hz:
More than 7 A (for Europe)
220 V/50 Hz:
More than 7 A (for Asia)
110 V/60 Hz:
More than 13 A (for Taiwan)
220 V/60 Hz:
More than 7 A (for Saudi Arabia, Philippines)

✻ Power Consumption:

	A204, A206, and A207 copiers		A208, A210, and A211 copiers	
	Copier Only	**Full System**	**Copier Only**	**Full System**
Maximum	1.35 kW	1.40 kW	1.35 kW	1.40 kW
Copying	1.15 kW	1.21 kW	0.90 kW	1.00 kW
Warm-up	1.21 kW	1.23 kW	0.98 kW	1.00 kW
Stand-by	0.18 kW	0.20 kW	0.16 kW	0.18 kW

NOTE: – Full System –
Copier + ARDF (A663) + Paper Tray Unit (A549) + 20 Bin S/S (A664)

✻ Noise Emission:

	A204, A206, and A207 copiers	A208, A210, and A211 copiers
	Copier Only	**Copier Only**
1. Sound Pressure Level		
Operator position	64 dB (A)	63 dB (A)
Standard position	59 dB (A)	58 dB (A)
2. Sound Power Level		
Copying	70 dB (A)	69 dB (A)
Stand-by	42 dB (A)	43 dB (A)

NOTE: The above measurements were made in accordance with ISO 7779.

Dimensions:

	Width	Depth	Height
A204 copier	1,030 mm (40.6")	655 mm (25.8")	606 mm (23.9")
A208 copier	900 mm (35.5")	655 mm (25.8")	606 mm (23.9")
A206 and A207 copiers	1,258 mm (49.6")	655 mm (25.8")	606 mm (23.9")
A210 and A211 copiers	1,128 mm (44.5")	655 mm (25.8")	606 mm (23.9")

Measurement Conditions
1) With by-pass feed table closed
2) With platen cover and copy tray attached
3) With LCT cover closed

✻ Weight:

	Weight	
	NA	EU
A204 copier	70 kg (154.3 lb)	73 kg (160.9 lb)
A206 copier	78 kg (172.0 lb)	81 kg (178.5 lb)
A207 copier	81 kg (178.6 lb)	84 kg (185.2 lb)
A208 copier	69 kg (152.1 lb)	72 kg (158.7 lb)
A210 copier	77 kg (169.8 lb)	80 kg (176.4 lb)
A211 copier	79 kg (174.2 lb)	82 kg (180.7 lb)

Zoom: From 50% to 200% in 1% steps

✻ Copying Speed (copies/minute):

	A4 sideways/ 11" x 8 1/2"	A3/11" x 17"	B4/8 1/2" x 14"
A204, A206, and A207 copiers	40	22/21	25
A208, A210, and A211 copiers	32	17/16	19

✻ Warm-up Time: A204, A206, and A207 copiers:
Less than 250 seconds (20°C)
A208, A210, and A211 copiers:
Less than 110 seconds (20°C)

✻ First Copy Time:

Paper Feed Station	A4/11" x 8 1/2" (sideways)	
	A204, A206, and A207 copiers	A208, A210, and A211 copiers
1st Tray	4.4 s (except for A207)	4.9 s (except for A211)
2nd Tray	4.9 s	5.4 s
By-pass	4.4 s	4.7 s
LCT	4.4 s	4.9 s

NOTE: In A207 and A211 copiers, the 2nd tray in the above table is called the 1st tray.

Copy Number Input: Ten-key pad, 1 to 999 (count up or count down)

Manual Image Density Selection: 7 steps

Automatic Reset: 1 minute is the standard setting; it can be changed to a maximum of 999 seconds or no auto reset by SP mode.

✻ Copy Paper Capacity:

	Paper Tray	By-pass Feed	LCT
A204 copier	About 500 sheets x 2	About 40 sheets	—
A206 copier	About 500 sheets x 2	About 40 sheets	About 1,000 sheets
A207 copier	About 500 sheets x 1	About 40 sheets	About 1,000 sheets
A208 copier	About 500 sheets x 2	About 40 sheets	—
A210 copier	About 500 sheets x 2	About 40 sheets	About 1,000 sheets
A211 copier	About 500 sheets x 1	About 40 sheets	About 1,000 sheets

NOTE: Paper tray - 500 sheets or less than 53 mm stack height
By-pass feed - 40 sheets or less than 4 mm stack height
LCT - 1,000 sheets or less than 120 mm stack height

Duplex Tray Capacity [A207/A211]: 50 sheets (30 sheets for A3/11"x17" 81 ~ 105g/m^2, 21.5 ~ 27.9 lb paper)

Toner Replenishment: Cartridge exchange (415 g/cartridge)

✻ Optional Equipment:

- Platen cover
- Document feeder
- Paper tray unit with two paper trays
- Paper tray unit with three paper trays
- 10 bin micro sorter (for A208, A210, and A211 copiers)
- 20 bin mini sorter
- 10 bin sorter stapler
- 20 bin sorter stapler
- 20 bin multi-position sorter stapler
- Sorter adapter (required when installing 20 bin mini sorter, 10 bin sorter stapler, 20 bin sorter stapler, or 20 bin multi-position sorter stapler for A208, A210, and A211 copiers)
- Key counter
- Tray heater

- Optical anti-condensation heater
- Original length sensor for 11" x 15" size paper (only for LT/DLT version)
- ADS sensor for particular types of red original

- Specifications are subject to change without notice.

2. MACHINE CONFIGURATION

2.1 COPIER

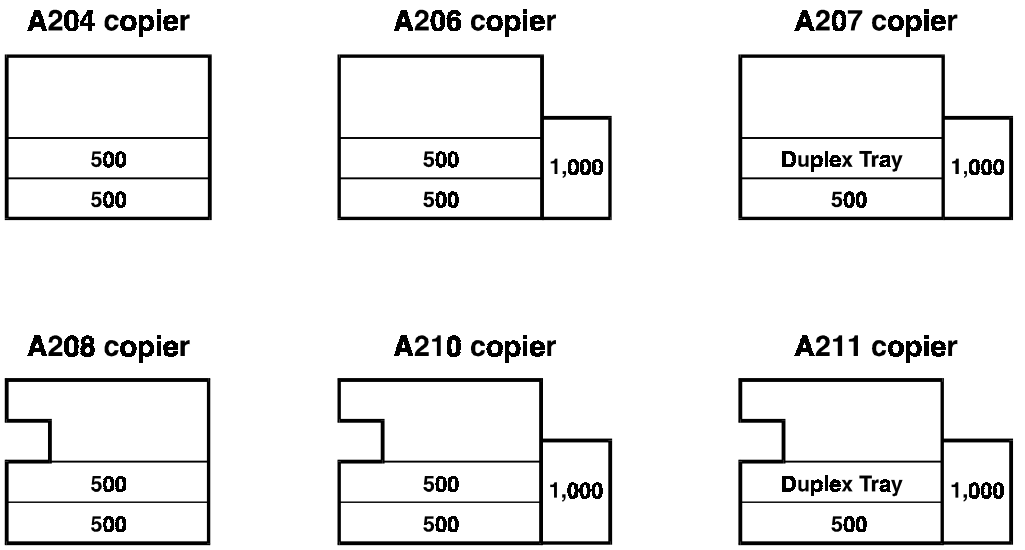

A204V500.wmf

2.2 OPTIONAL EQUIPMENT

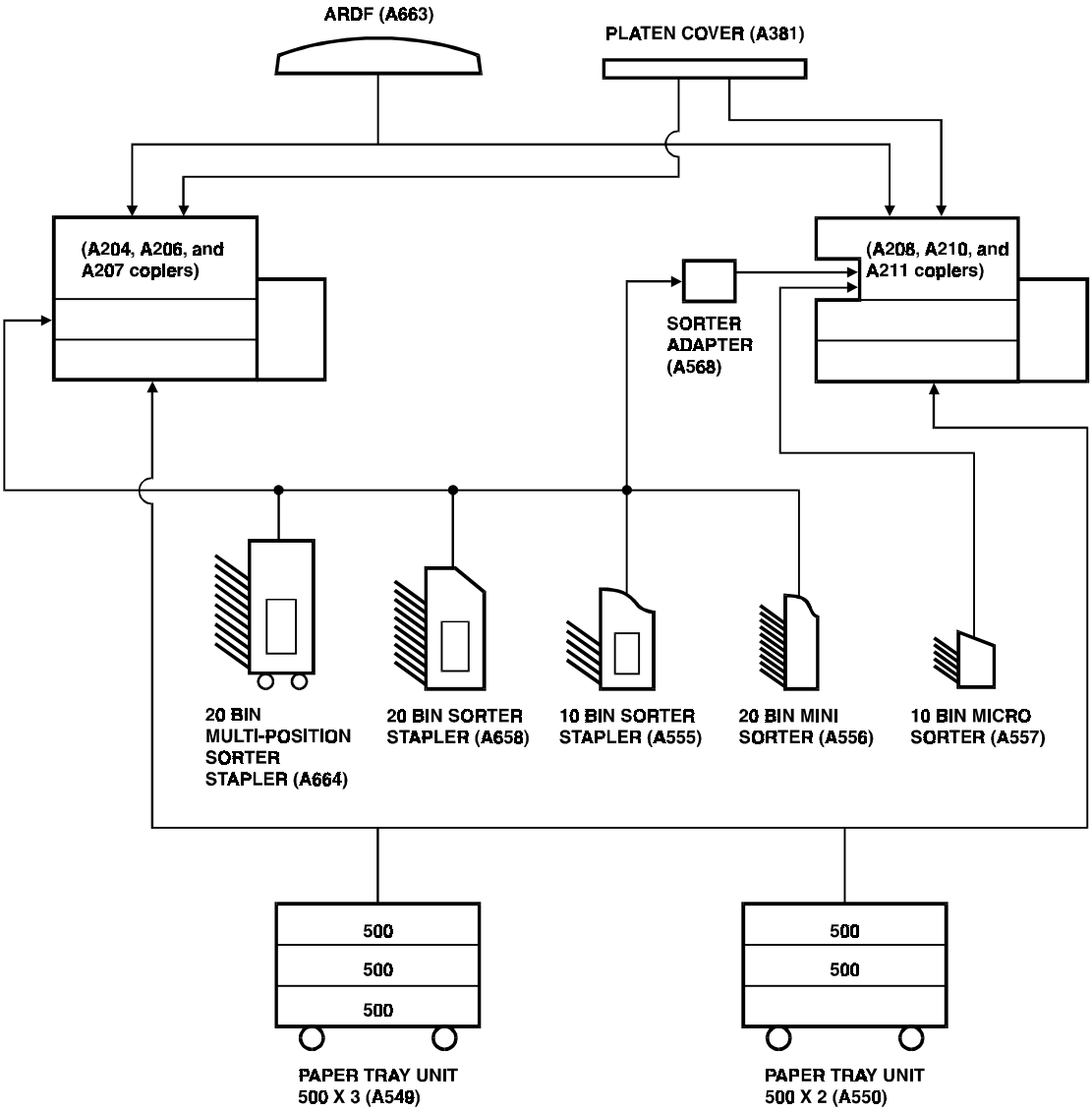

A204V501.wmf

3. MECHANICAL COMPONENT LAYOUT

– A207 copier –

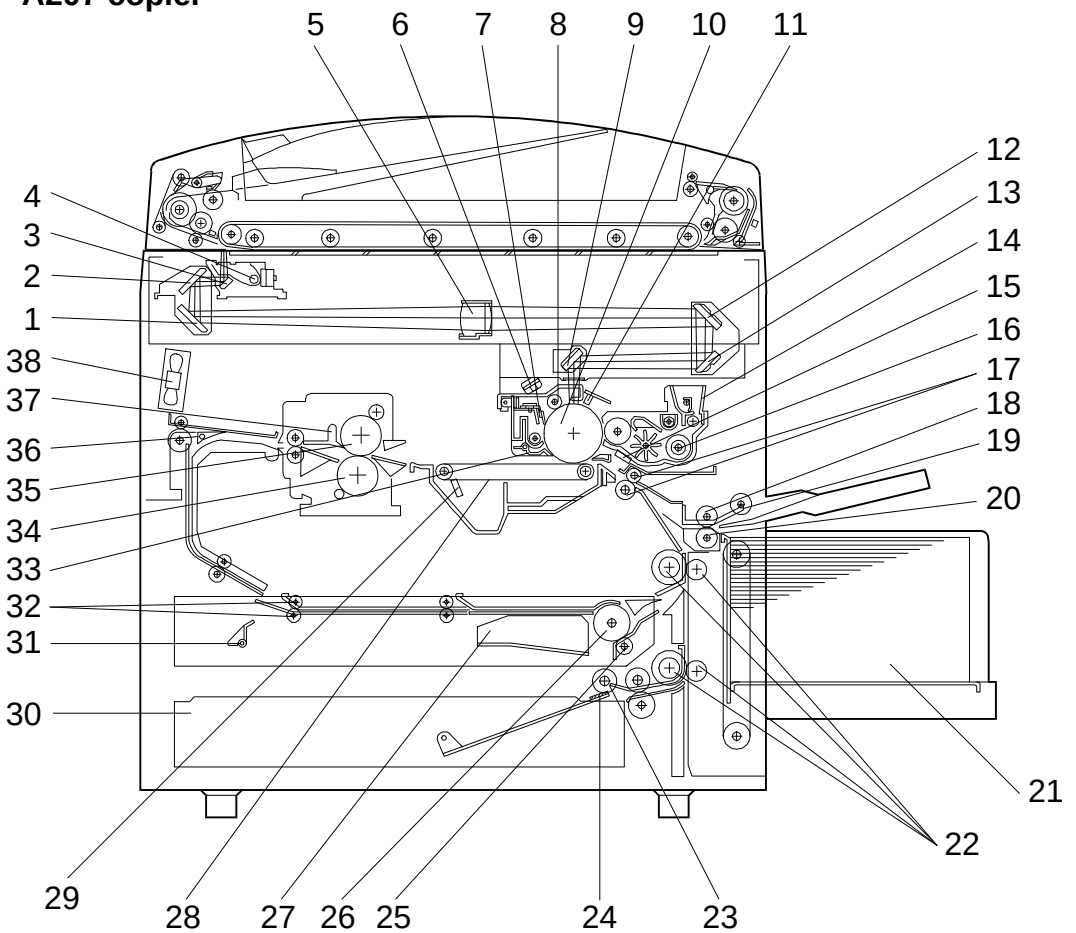

A204V502.wmf

The fusing unit has been changed. (See Detailed Descriptions for more information.)

NOTE: 1) The A204 copier is the same as the A207 copier except that the A204 does not have a duplex tray or an LCT.

2) The A206 copier is the same as the A207 copier except that the A206 does not have a duplex tray.

– A211 copier –

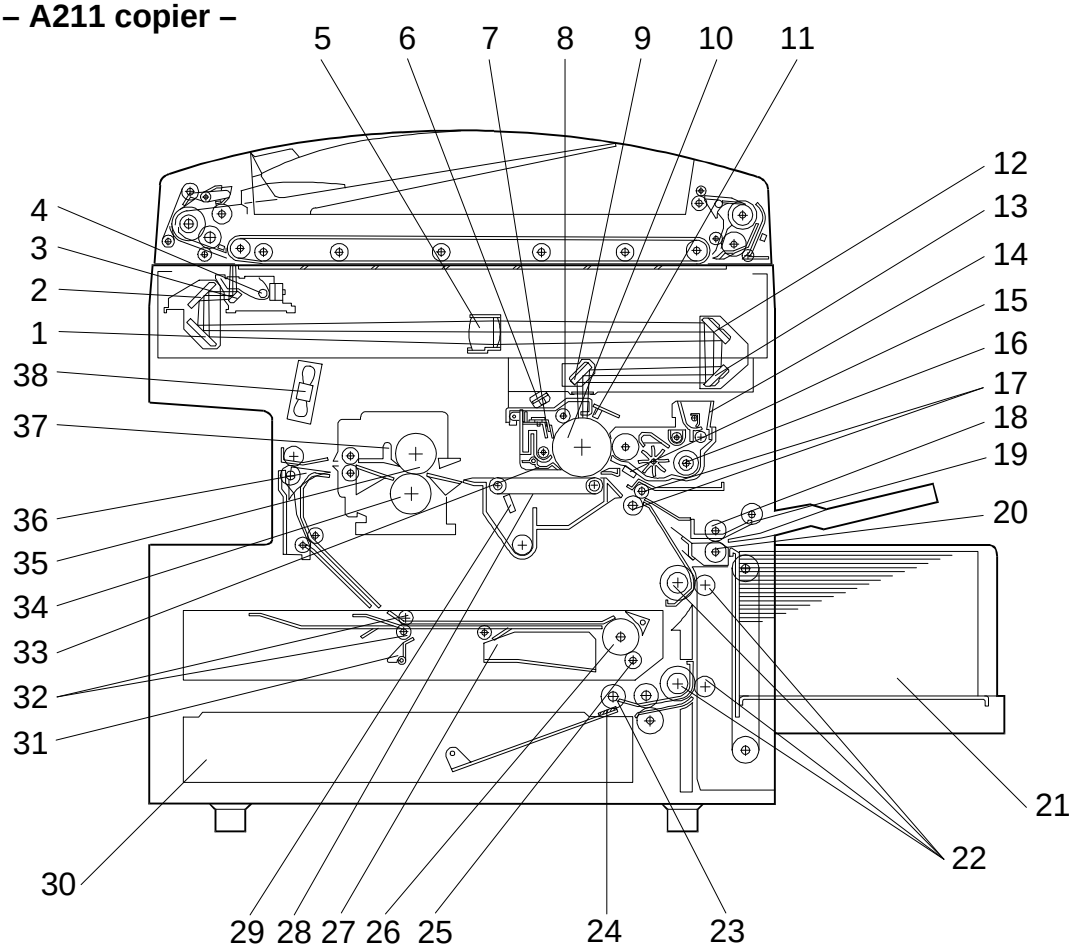

A204V503.wmf

The paper tray unit has been changed from the corner separation system to the FRR feed system.

NOTE: 1) The A208 copier is the same as the A211 copier except that the A208 does not have a duplex tray or an LCT.

2) The A210 copier is the same as the A211 copier except that the A210 does not have a duplex tray.

1. 3rd Mirror
2. 2nd Mirror
3. 1st Mirror
4. Exposure Lamp
5. Lens
6. Quenching Lamp
7. Drum Cleaning Blade
8. Drum Charge Roller
9. 6th Mirror
10. OPC Drum
11. Erase Lamp
12. 4th Mirror
13. 5th Mirror
14. Toner Supply Unit
15. Pre-transfer Lamp
16. Development Unit
17. Registration Rollers
18. Feed Roller
19. Pick-up Roller
20. Separation Roller
21. Large Capacity Tray
22. Vertical Transport Rollers
23. Paper Feed Roller
24. Friction Pad
25. Duplex Friction Roller
26. Duplex Feed Roller
27. Jogger Fence
28. Transfer Belt
29. Transfer Belt Cleaning Blade
30. Lower Paper Tray
31. End Fence
32. Entrance Rollers
33. Pick-off Pawls
34. Pressure Roller
35. Hot Roller
36. Junction Gate
37. Hot Roller Strippers
38. Exhaust Fan

4. ELECTRICAL COMPONENT DESCRIPTIONS

Refer to the electrical component layout and the point to point diagram on the waterproof paper in the pocket for symbols and index numbers.

✻ : New or modified components

Symbol	Name	Function	Index No.
Printed Circuit Boards			
PCB1	Main Control	Controls all copier functions both directly or through other control boards.	13
PCB2	AC Drive	Provides ac power to the exposure lamp and fusing lamps.	11
PCB3	DC Power Supply	Provides dc power.	10
PCB4	Main Motor Control	Controls the rotation of the main motor.	94
PCB5	CB High Voltage Supply	Supplies high voltage to the drum charge roller and development roller.	1
PCB6	T High Voltage Supply	Supplies high voltage to the transfer belt.	52
PCB7	Operation Panel	Controls the LED matrix, and monitors the key matrix.	3
PCB8	Noise Filter (220 ~ 240 V machines only)	Removes electrical noise.	8
PCB9	Duplex Control (Duplex machines only)	Controls the operation of the duplex tray.	60
PCB10	Liquid Crystal Display (A207 machines only)	Controls the guidance display and displays guidance for machine operation.	6
PCB11	LCT Interface (LCT machines only)	Interfaces the LCT control signal between the main board and the LCT.	100
Motors			
M1	Main	Drives the main unit components.	85
M2	Toner Bottle Drive	Rotates the toner bottle to supply toner to the toner supply unit.	76
✻ M3	Upper Tray Lift (Non-duplex machines only)	Raises the bottom plate in the upper paper tray. ✻ A204/206/208/210: M3 and M4 are combined into one unit	95
✻ M4	Lower Tray Lift	Raises the bottom plate in the lower paper tray.	83
M5	LCT Lift (LCT machines only)	Lifts up and lowers the LCT bottom plate.	97
M6	Optics Cooling Fan 1	Removes heat from the optics unit.	92
✻ M7	Optics Cooling Fan 2	Removes heat from the optics unit. ✻ A208/210/211 now have two fans.	93
M8	Exhaust Fan 1	Removes the heat from around the fusing unit.	87

Symbol	Name	Function	Index No.
M9	Exhaust Fan 2 (A204/A206/A207 machines only)	Removes the heat from around the fusing unit.	88
M10	Scanner Drive	Drives the 1st and 2nd scanners (dc stepper motor).	90
M11	3rd Scanner Drive	Drives the 3rd scanner (dc stepper motor).	75
M12	Lens Vertical Drive	Shifts the lens vertical position.	84
M13	Lens Horizontal Drive	Shifts the lens horizontal position.	74
M14	Duplex Feed (Duplex machines only)	Drives the feed roller and moves the bottom plate up and down.	55
M15	End Fence Jogger (Duplex machines only)	Drives the end fence jogger to square the paper stack.	58
M16	Side Fence Jogger (Duplex machines only)	Drives the side fence jogger to square the paper stack.	57
✻ M17	DC Board Cooling Fan Motor (A204/A206/A207 N. American models)	Removes heat from the dc power supply board.	86
Sensors			
S1	By-pass Feed Paper Width	Informs the CPU what width paper is in the by-pass feed table.	26
S2	By-pass Feed Paper End	Informs the CPU that there is no paper in the by-pass tray.	30
S3	Upper Tray Paper End (Non-duplex machines only)	Informs the CPU when the upper paper tray runs out of paper.	48
S4	Upper Relay	Detects the leading edge of paper from the upper tray to determine the stop timing of the upper paper feed clutch, and detects misfeeds.	105
✻ S5	Upper Tray Upper Limit (Non-duplex machines only)	Detects the height of the paper stack in the upper paper tray to stop the upper tray lift motor. ✻ A208/210/211 have the components needed for an FRR mechanism.	28
S6	Lower Tray Paper End	Informs the CPU when the lower paper tray runs out of paper.	49
S7	Lower Relay	Detects the leading edge of paper from the lower paper tray to determine the stop timing of the lower paper feed clutch, and detects misfeeds.	104
✻ S8	Lower Tray Upper Limit	Detects the height of the paper stack in the lower paper tray to stop the lower tray lift motor. ✻ A208/210/211 have the components needed for an FRR mechanism.	29

Symbol	Name	Function	Index No.
S9	LCT Lower Limit (LCT machines only)	Sends a signal to the CPU to stop lowering the LCT bottom plate.	98
S10	LCT Paper End (LCT machines only)	Informs the CPU when the LCT runs out of paper.	99
S11	LCT Upper Limit (LCT machines only)	Sends a signal to the CPU to stop lifting the LCT bottom plate.	25
S12	Registration	Detects the leading edge of the copy paper to determine the stop timing of the paper feed clutch, and detects misfeeds.	27
S13	Image Density (ID)	Detects the density of various patterns on the drum during process control.	47
S14	Toner Density (TD)	Detects the toner concentration inside the development unit.	50
S15	Lens Horizontal HP	Informs the CPU that the lens is at the horizontal home position.	36
S16	Lens Vertical HP	Informs the CPU that the lens is at the full-size position.	19
S17	Scanner HP	Informs the CPU when the 1st and 2nd scanners are at the home position.	14
S18	3rd Scanner HP	Informs the CPU when the 3rd scanner is at the home position.	23
S19	Original Length-2	Detects the length of the original. This is one of the APS (Auto Paper Select) sensors.	20
S20	Fusing Exit	Detects misfeeds.	42
S21	Platen Cover	Informs the CPU whether the platen cover is up or down (related to APS/ARE functions). ARE: Auto Reduce and Enlarge	15
S22	Toner End	Instructs the CPU to add toner to the toner supply unit, and detects toner end conditions.	51
S23	Auto Response	Returns the operation panel display and exits from the energy saver mode.	40
S24	Transfer Belt Contact HP	Informs the CPU of the current position of both the transfer belt unit and the drum charge roller unit.	22
S25	Auto Image Density (ADS Sensor)	Detects the background density of each original in ADS mode.	12
S26	Original Width	Detects the width of the original. This is one of the APS (Auto Paper Select) sensors.	41
S27	Original Length-1	Detects the length of the original. This is one of the APS (Auto Paper Select) sensors.	18
S28	Duplex Paper End (Duplex machines only)	Detects paper in the duplex tray.	53

Symbol	Name	Function	Index No.
S29	Duplex Turn (Duplex machines only)	Detects the trailing edge of the copy paper to determine the jogging timing, and detects misfeeds.	54
S30	Duplex Entrance (Duplex machines only)	Detects misfeeds.	59
S31	Side Fence Jogger HP (Duplex machines only)	Detects the home position of the duplex side fence jogger.	56
S32	End Fence Jogger HP (Duplex machines only)	Detects the home position of the duplex end fence jogger.	61
S33	Original Length (Option for N. American models)	Detects original length for 11" x 15" paper.	21
Switches			
SW1	By-pass Feed Table	Detects whether the by-pass feed table is open or closed.	32
SW2	Tray Down (LCT machines only)	Sends a signal to the CPU to lower the LCT bottom plate.	102
✻ SW3	Upper Tray Paper Size (Non-duplex machines only)	Determines what size of paper is in the upper paper tray, and detects when the tray has been closed. ✻ The upper tray switch has been eliminated.	24
✻ SW4	Lower Tray Paper Size	Determines what size of paper is in the lower paper tray, and detects when the tray has been closed. ✻ The lower tray switch has been eliminated.	33
SW5	Vertical Guide Set (Non-LCT machines only)	Detects whether the vertical guide is open or not.	31
SW6	LCT Cover-1 (LCT machines only)	Detects whether the LCT cover is open or not.	103
SW7	LCT Cover-2 (LCT machines only)	Cuts the dc power line of the LCT lift motor.	101
SW8	Main	Supplies power to the copier.	39
SW9	Front Cover Safety	Cuts the ac power line and detects whether the front door is open or not.	38
SW10	Exit Cover Safety (A211 machines only)	Cuts the ac power line and detects whether the exit cover is open or not.	45
Magnetic Clutches			
CL1	Toner Supply	Turns the toner supply roller to supply toner to the development unit.	69
CL2	Development	Drives the development roller.	68

Symbol	Name	Function	Index No.
CL3	Transfer Belt Contact	Controls the touch and release movement of both the transfer belt unit and the drum charge roller unit.	91
CL4	Registration	Drives the registration rollers.	70
CL5	By-pass Feed	Starts paper feed from the by-pass feed table or LCT.	71
CL6	Relay	Drives the relay rollers.	73
CL7	Upper Paper Feed (Non-duplex machines only)	Starts paper feed from the upper paper tray.	81
CL8	Lower Paper Feed	Starts paper feed from the lower paper tray.	82
Solenoids			
SOL1	LCT machines: LCT/By-Pass Pick-up Solenoid Non-LCT machines: By-pass Pick-up Solenoid	Picks paper up from the by-pass feed table. When paper is fed from the LCT, this solenoid assists SOL3.	72
SOL2	Junction Gate (Duplex machines only)	Moves the junction gate to direct copies to the duplex tray or to the paper exit.	89
SOL3	LCT Pick-up (LCT machines only)	Picks up paper from the LCT.	96
✻ SOL4	Upper Tray Pick-up (Non-duplex machines only)	Controls the up/down movement of the pick-up roller in the upper paper tray. ✻ A208/210/211 have the components needed for an FRR mechanism.	77
✻ SOL5	Lower Tray Pick-up	Controls the up/down movement of the pick-up roller in the lower paper tray. ✻ A208/210/211 have the components needed for an FRR mechanism.	79
✻ SOL6	Upper Tray Separation (Non-duplex machines only)	Controls the up-down movement of the separation roller in the upper paper tray feed station. ✻ A208/210/211 have the components needed for an FRR mechanism.	78
✻ SOL7	Lower Tray Separation	Controls the up-down movement of the separation roller in the lower paper tray feed station. ✻ A208/210/211 have the components needed for an FRR mechanism.	80
Lamps			
✻ L1	Exposure	Applies high intensity light to the original for exposure. ✻ Modified - see the "Optics" section for details.	16

Symbol	Name	Function	Index No.
✻ L2	Main Fusing	Provides heat to the central area of the hot roller. ✻ Modified - see the "Fusing" section for details.	62
✻ L3	Secondary Fusing	Provides heat to both ends of the hot roller. ✻ Modified - see the "Fusing" section for details.	63
L4	Pre-transfer	Reduces the charge remaining on the drum surface before transfer.	4
L5	Quenching	Neutralizes any charge remaining on the drum surface after cleaning.	5
L6	Erase	After exposure, this eliminates the charge on areas of the drum that will not be used for the image.	2
Heaters			
H1	Drum	Turns on when the main switch is off to keep the temperature around the drum charge roller at a certain level. Also prevents moisture from forming around the drum.	35
H2	Optics Anti-condensation (option)	Turns on when the main switch is off to prevent moisture from forming on the optics.	43
H3	Lower Tray (option)	Turns on when the main switch is off to keep paper dry in the lower paper tray.	34
Thermistors			
TH1	Main Fusing	Monitors the temperature at the central area of the hot roller.	66
✻ TH2	Secondary Fusing (A208/A210/A211 machines only)	Monitors the temperature at the ends of the hot roller. ✻ A204/206/207 have only one thermistor.	67
TH3	Optics	Monitors the temperature of the optics cavity.	44
TH4	Drum Charge	Monitors the temperature of the drum charge roller.	46
Thermofuses			
TF1	Main Fusing	Provides back-up overheat protection in the fusing unit.	65
✻ TF2	Secondary Fusing (A208/A210/A211 machines only)	Provides back-up overheat protection in the fusing unit. ✻ A204/206/207 have only one thermofuse.	64

Symbol	Name	Function	Index No.
TF3	Exposure Lamp	Opens the exposure lamp circuit if the 1st scanner overheats.	17
Counters			
CO1	Total	Keeps track of the total number of copies made.	37
CO2	Key (option)	Used for control of authorized use. The copier will not operate until it is installed.	N/A
Others			
CB1	Circuit Breaker (220 ~ 240 V machines only)	Provides back-up high current protection for electrical components.	9
TR1	Transformer (220 ~ 240 V machines only)	Steps down the wall voltage to 100 Vac.	7
CC1		This has been eliminated from all models.	

5. PAPER FEED DRIVE LAYOUT

5.1 A204/A206/A207/A208/A210/A211

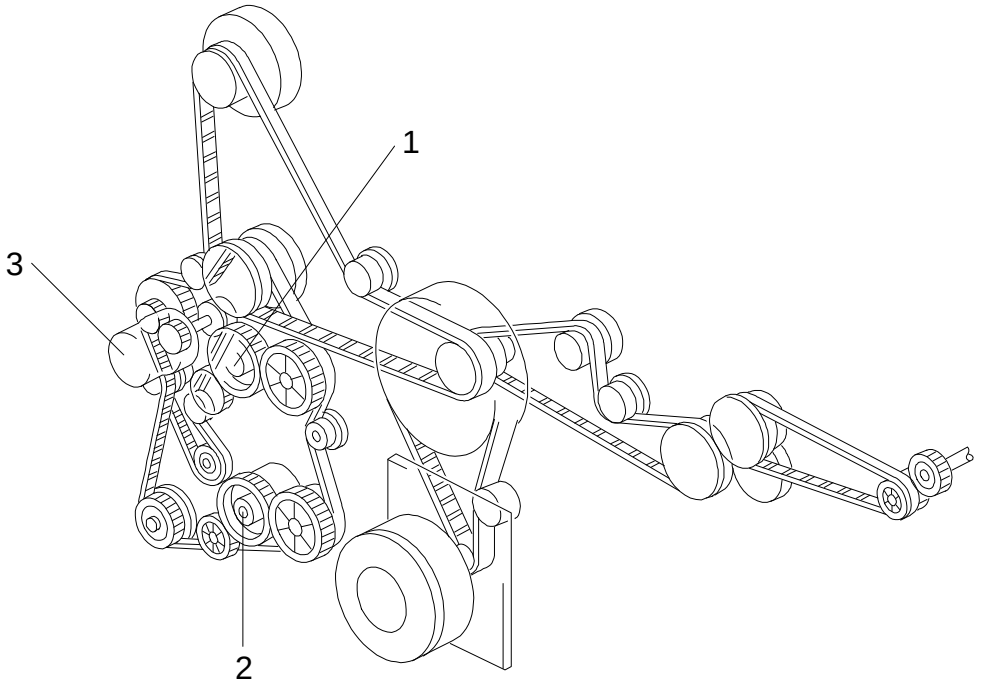

A204V504.wmf

Since A208, A210, and A211 have been changed to the FRR feed system, all models carry the same type of drive layout.

1. Upper Paper Feed Clutch Gear (A207/A211 only)
2. Lower Paper Feed Clutch Gear
3. Relay Clutch Gear

6. PROCESS CONTROL

6.1 HALFTONE MODE

This mode is newly added.

If the user selects the halftone mode function on the operation panel, the machine reduces the size of the exposure lamp voltage, development bias, and the drum charge voltage by the changes shown below.

- Exposure Lamp Voltage: –1.0 V
- Development Bias: +80 V
- Drum Charge Voltage: +300 V

6.2 ADS CORRECTION

✻ Five possible corrections can be selected from, where the base copier has only three.

ADS correction

ADS Density SP5-106		Development Bias Correction Voltage
Setting	Copy Density	
✻ 0	Darkest	816 x (AR – 0.85) + 60
1	Darker	816 x (AR – 0.75)
2	Normal	816 x (AR – 0.85)
3	Lighter	816 x (AR – 0.95)
✻ 4	Lightest	816 x (AR – 0.85) – 60

Where AR (ADS Ratio) = V_{ADS} (original)/V_{ADS} (pattern)

6.3 TONER SUPPLY CONTROL DURING COPYING

✻ The amount of toner supplied per unit of time (TS) has been changed from the base copier.

Toner clutch on time is calculated by the following formula.

$$\text{Toner CL on time [ms]} = \frac{\mathbf{S \times AT \times TSC / 100}}{\mathbf{TS}} \qquad \text{(Formula 1)}$$

where: S = Copy paper size [cm^2]
AT = Amount of toner developed on the latent image per unit area
= 0.7 [mg/cm^2] (constant)
TSC = Toner supply coefficient [%]
✻ TS = Amount of toner supplied per unit of time
= 0.217 [mg/ms] (for A204, A206, and A207 copiers)
= 0.183 [mg/ms] (for A208, A210, and A211 copiers)

6.4 V_R PATTERN CORRECTION

✻ The values in the ID correction column of the table have been changed.

V_R correction

	ID Correction			Drum Charge Roller Correction Voltage	Development Bias Correction Voltage
	±0 V	**–40 V**	**–80 V**		
V_{RP}/V_{RG} x 100 (%)	74 ~ 100	68 ~ 100	62 ~ 100	±0 V	±0 V
	53 ~ 73	50 ~ 67	43 ~ 61	–40 V	–40 V
	41 ~ 52	37 ~ 49	26 ~ 42	–80 V	–80 V
	31 ~ 40	26 ~ 36	19 ~ 25	–120 V	–120 V
	0 ~ 30	0 ~ 25	0 ~ 18	–160 V	–160 V

For example, taking the ID correction to be zero for now, if V_{RP}/V_{RG} is 45%, the drum charge and development bias corrections will both be –80 V.

V_R correction also depends on the current V_{SP} pattern ID correction that is being used. If development bias has been increased by ID correction, the V_R correction may be smaller in some cases to take this into account. This is shown by both the table above and the following diagram.

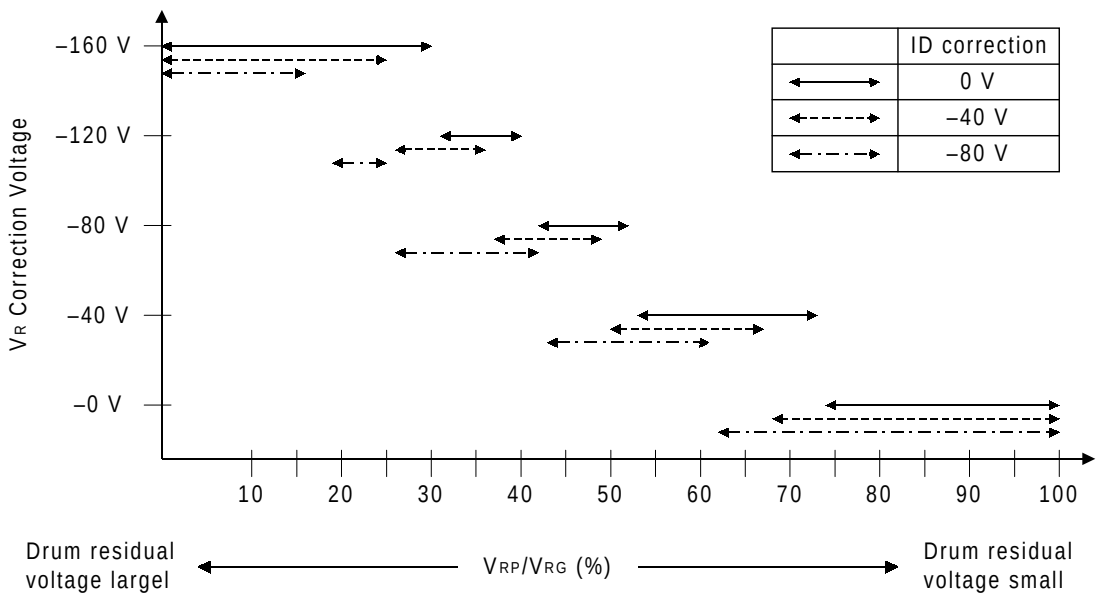

A204D505.wmf

Using the same example to illustrate this, but with an ID correction of –80 V, the corrections will both be –40 V this time.

6.5 TONER SUPPLY IN ABNORMAL SENSOR CONDITIONS

If any sensor errors occur under detect supply mode, toner supply mode is changed automatically as shown below.

Error	Abnormal Condition	Fallback Toner Supply Mode	Display on Operation Panel
ID Sensor Adjustment Error	When ID sensor output cannot be adjusted to 4.0 ± 0.2 V	Fixed Supply Mode	None
Abnormal ID Sensor (V_{SP})	If V_{SP} > 2.5 V during V_{SP} detection.	Fixed Supply Mode	None
Abnormal ID Sensor (V_{SG})	If V_{SG} < 2.5 V during V_{SG} detection	Fixed Supply Mode	
TD Sensor Adjustment Error	When TD sensor output cannot be adjusted to 2.5 ± 0.1 V	Fixed Supply Mode	Manual ID level or ADS indicator blinks
TD Sensor (V_T) Measurement Error	If V_T > 4.0 V or V_T < 0.3 V during V_T detection.	Fixed Supply Mode	Manual ID level or ADS indicator blinks
Drum Charge Thermistor Error	Temperature detected by the drum charge thermistor is below 0°C or above 60°C	Fixed Supply Mode	None
✻ Abnormal Drum Charge Thermistor Output	Temperature detected by the drum charge thermistor is between 0°C and 14°C	TD Sensor Supply Mode	None

NOTE: No indication is displayed under the "abnormal drum charge thermistor output" condition, because the machine soon recovers due to the heat inside the machine.

6.6 TEMPERATURE CORRECTION

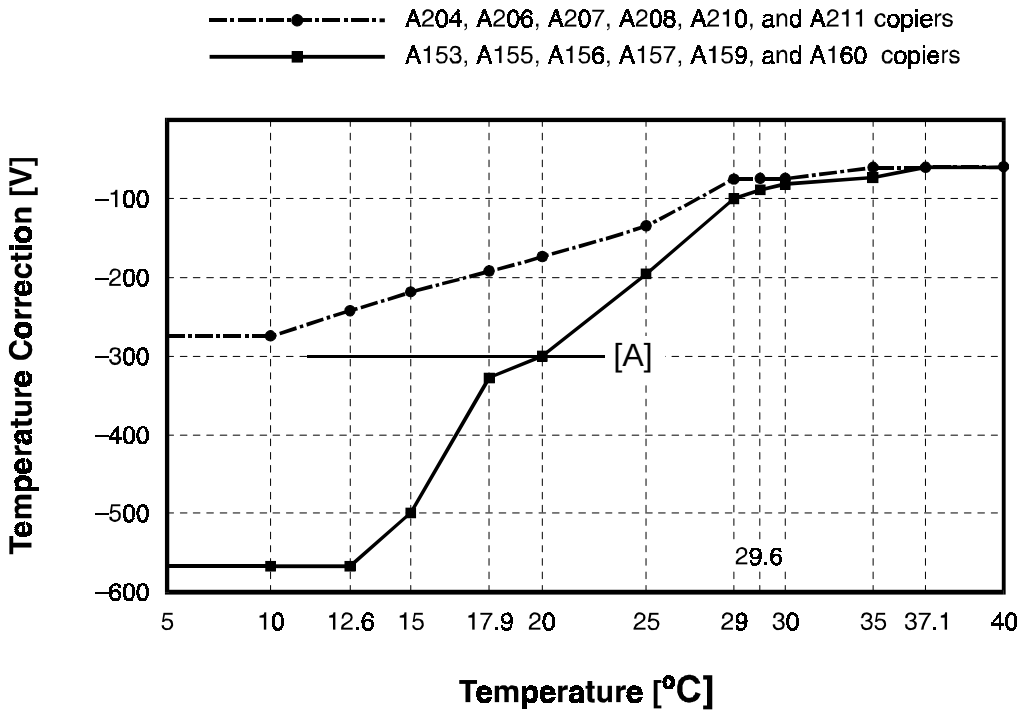

A204D506.wmf

✻ The temperature correction has changed as explained below. Also, the machine no longer does the drum rotation time correction.

The temperature correction difference between the A204, A206, and A207 copiers and the A208, A210, and A211 copiers is a result of the difference in copy processing speed (240 mm/s for the A204, A206, and A207 copiers, compared with 200 mm/s for the A208, A210, and A211 copiers).

The new drum charge roller needs only about half the correction voltage used for the base copier. Also, the level of correction needed for the lowest temperature point (5°C) is about the same as the normal room temperature point for the base copier [A].

In the base machine, rotation time correction was only needed for low temperatures where the temperature correction was large. In the new machines, the temperature correction is never greater than –300 V, so the rotation time correction has been eliminated.

The temperature corrections are as shown below.

- Temperature Correction (Copying) - Base drum charge voltage = –1,500 V
- Temperature Correction (VSP Pattern) - Base drum charge = –1,370 V

– A204, A206, and A207 –

Drum Charge Roller Temperature (°C)	Temperature Correction	
	VSP Pattern	Copying
35.0 ≤ T	+53	–57.0
28.0 ≤ T < 35.0	–83.5 + 3.9T	–211.0 + 4.4T
10.0 ≤ T < 28.0	–217.6 + 8.7T	–410.0 + 11.5T
T < 10.0	–130.0	–295.0

– A208, A210, and A211 –

Drum Charge Roller Temperature (°C)	Temperature Correction	
	VSP Pattern	Copying
35.0 ≤ T	+47	–61.0
29.0 ≤ T < 35.0	–51.0 + 2.8T	–173.0 + 3.2T
10.0 ≤ T < 29.0	–199.1 + 7.9T	–355.5 + 9.5T
T < 10.0	–120.0	–260.0

6.7 TONER END RECOVERY

If the front cover switch or the main switch is turned off and on during a toner near-end/end condition, the machine will perform the toner end recovery procedure as shown on the flow chart on the next page.

For the base copier, the toner end sensor checked for toner for a total of 10 seconds. The check stops when the toner supply clutch stops transporting toner.

For the A204 series, the toner sensor checks for toner for a total of 14 seconds, stopping 2 seconds after the toner supply clutch stops. When the toner supply clutch stops, any toner present is likely to drop into the development unit, which will be detected during the final 2 seconds of detection time. This will decrease the chances of a mis-detection when a new toner bottle has been installed by the customer.

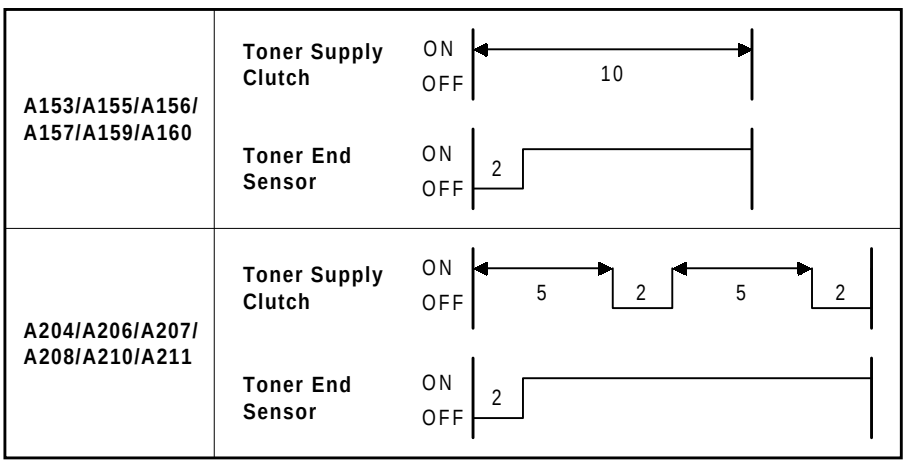

A204D516.wmf

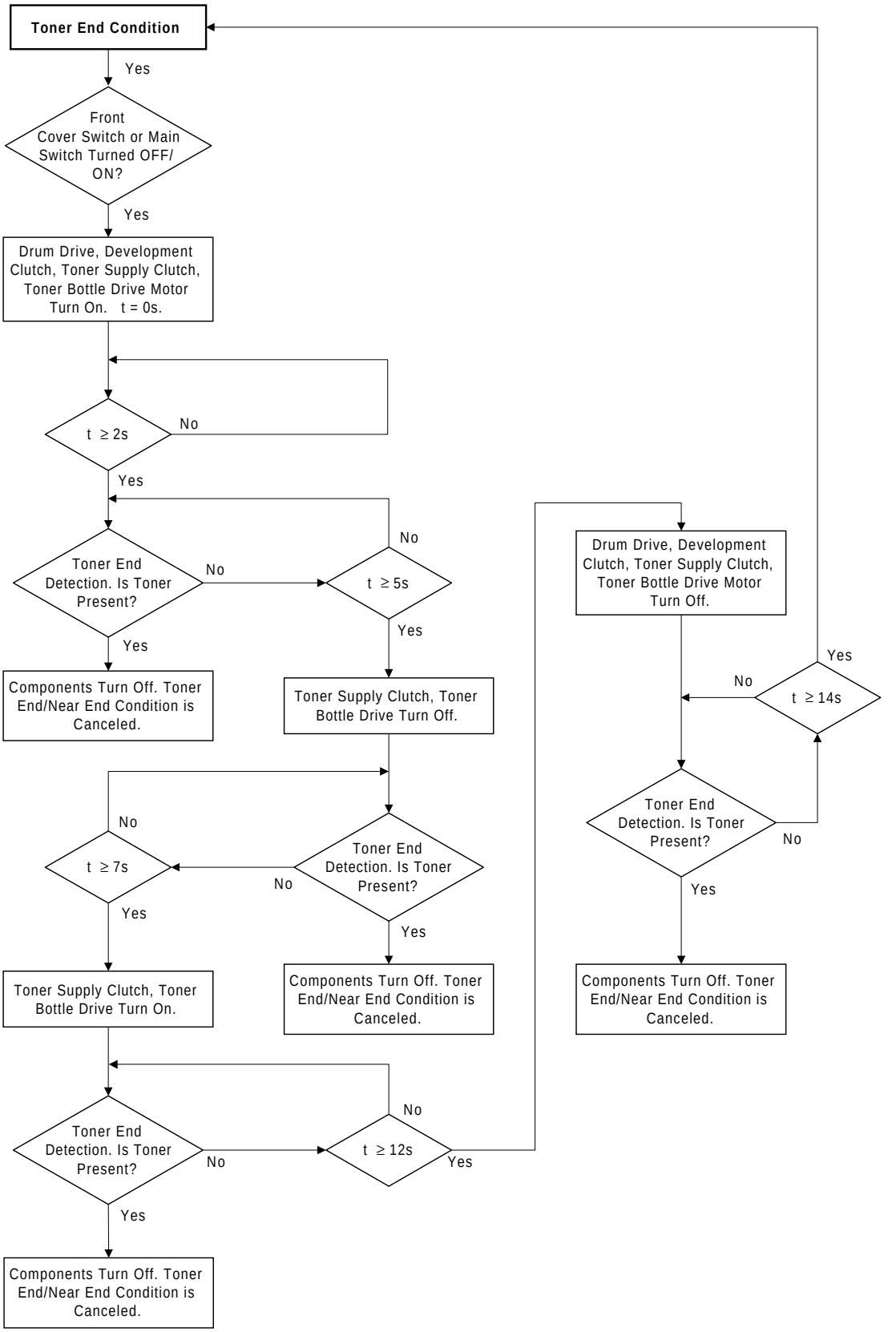

A204D515.wmf

6.8 SUMMARY

NOTE: Only items marked with ✻ are different or reviewed from A153, A155, A156, A157, A159, and A160 copiers.

A summary of process control and correction timing is shown below.

Correction	Electrical Component	Sensor Output Used	Correction Timing		Corrected Value
			Forced Correction	Automatic Correction	
Manual ID correction	Operation panel	—	—	Every copy in manual ID mode	• Lamp voltage • Dev. bias
Reproduction ratio correction	Operation panel	—	—	Every copy in reduce/enlarge mode	Development bias
✻ Halftone mode	Operation panel	—	—	Every copy in halftone mode	• Lamp voltage • Dev. bias • Drum charge roller voltage
ADS correction	ADS sensor	V_{ADS} (pattern) V_{ADS} (original)	—	• ADS Mode: Once per original (ARDF mode), or once when the ⊡ key is pressed (Platen mode)	Development bias
			New exposure lamp, ADS sensor, after SP4-001 (Exposure lamp voltage adjustment) or optics cleaning	Every 1,000 copies	• V_{ADS} (pattern) is stored
ID correction and Toner density control	ID sensor	V_{SG}	New drum, ID sensor or ID sensor cleaning	At the start of each copy job	• Dev. bias • Toner supply clutch ON time
		V_{SP}		About every 10 copies	
	TD sensor	VT	When the developer is changed	Every copy	
V_R correction	ID sensor	V_{RP}, V_{RG}	New drum or ID sensor replacement	After every 1,000 copies	• Drum charge roller voltage • Dev. bias
V_L correction	ID sensor	V_{LP}, V_{LG}	New drum, exposure lamp or after SP4-001 (Exposure lamp voltage adjustment)		Lamp voltage
✻ Temperature correction	Drum charge roller thermistor	T: (temperature)	—	Every copy	Drum charge roller voltage

Development bias, drum charge voltage, and exposure lamp voltage

NOTE: Only items marked with ✻ are different from A153, A155, A156, A157, A159, and A160 copiers.

The following table shows how process control affects development bias, drum charge, and exposure lamp voltages for various machine operations.

Mode			Development Bias [V]	Drum Charge Voltage [V]	Exposure Lamp Voltage [V]
Copying	ADS mode		(–240) + ADS correction + Reproduction ratio correction + V_R correction + B		Vexp + V_L correction
	Manual ID mode	ID Level 1 ~ 6	(–240) + Manual ID correction + Reproduction ratio correction + V_R correction + ✻ Halftone Mode + B	(–1500) + V_R correction + ✻Temperature correction + ✻ Halftone Mode + C	Vexp + Manual ID correction + V_L correction + ✻ Halftone Mode
		ID Level 7	(–240) + Lightest ID level dev.bias + Reproduction ratio correction + V_R correction + ✻ Halfotone Mode + B		
VSP Pattern Detection			(–300) + BP + ID correction	(✻ –1370) + ✻Temperature correction + CP	0
VR Pattern Detection			0	(–1500) + V_R correction + ✻Temperature correction + C	0
VL Pattern Detection	Forced VL Detection		BL + V_R correction + VBL (ID)		Vexp
	VL Detection		BL + (–25) + V_R correction + VBL (ID)		Vexp + V_L correction
Non Image Area			(–200) + V_R correction + VBL (ID)	0	0
Auto ADS Gain Adjustment			0	0	Vexp + V_L correction

NOTE: B = Development bias adjustment factor, selected with SP2-201-001.
BP = Correction to the development bias used for making for VSP patterns, selected with SP2-203.
BL = The value of the development bias that was reached during the most recently performed forced V_L detection routine.
V_{BL} (ID) = ID compensation factor based on the current ID correction used for making VSP patterns.
C = Correction to the drum charge voltage, selected with SP2-001.
CP = Correction to the drum charge voltage for maknig VSP patterns, selected with SP2-003.
Vexp = Exposure lamp voltage, selected with SP4-001.

7. DRUM

7.1 DRUM CHARGE ROLLER CLEANING

✻ The cleaning interval and the cleaning time have been changed.

The drum charge roller cleaning routine is executed at the following intervals:

1) For 2 seconds at the end of every job
2) ✻ For 5 seconds after the copy job interval set by SP2-901.

SP2-901 setting: 0: Every 1,000 copies (5 seconds)
1: Every 500 copies (5 seconds) [✻ new default]
2: Every 200 copies (5 seconds)
3: Every 100 copies (5 seconds)

The effect of the change in the default setting is to do the cleaning more frequently.

8. OPTICS

8.1 OVERVIEW

8.1.1 Halogen Lamp

✻ The specifications of the halogen lamp have been changed as follows. Note that the A204/A206/A207 models are faster, so they need more light during exposure.

	115 V Machines	230 V Machines
A204/A206/A207	97 V 310 W	85 V 310 W
A208/A210/A211	✻ 97 V 200 W	✻ 85 V 280 W

✻ The halogen lamps installed in the A208/A210/A211 are the same as for the A153/A155/A156 copiers

8.1.2 Toner Shield Glass

✻ The shield glass by the green filter above the drum has been removed (it is no longer needed).

8.1.3 Optics Cooling Fans

✻ The optics cooling fan specifications have changed. Both models now have two fans; this is because the cpm for the A207/A210/A211 models has been increased from the previous models (27 → 32). Also the rotating speed has been changed as follows:

	A204/A206/A207	A207/A210/A211
Rotating speed	3,450 rpm	✻ 3,200 rpm
Rotating temperature	45°C	45°C
Number of fans	2	2

✻ The rotating speed of 3,200 rpm is as same as for the A153/A155/A156 copiers.

8.2 SCANNER DRIVE

✻ The scanner drive speeds have changed as follows.

The first scanner drive speed in full size mode is:
240 (mm/s) for A204/A206/A207 copiers
200 (mm/s) for A208/A210/A211 copiers
The first scanner drive speed for a selected reproduction ratio is:
240/M (mm/s) for A204/A206/A207 copiers
200/M (mm/s) for A208/A210/A211 copiers

NOTE: M = Selected reproduction ratio (0.5 ~ 2.0)

8.3 ADS SAMPLING DURING COPYING

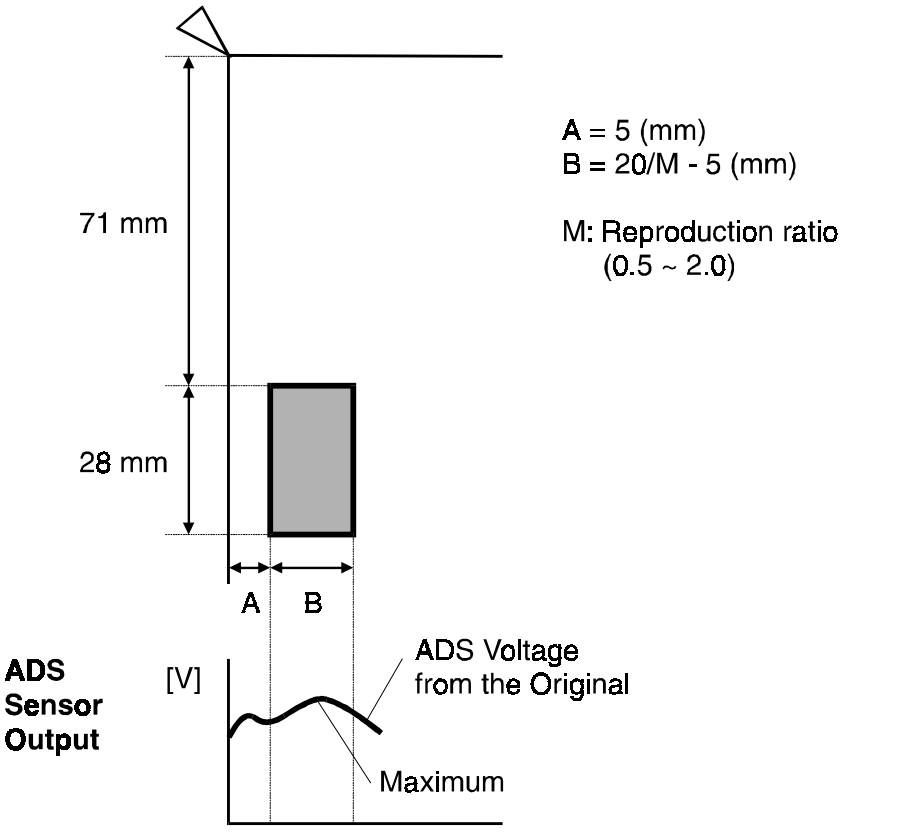

A204D511.wmf

✻ The position of the sampling area has been changed (in the base copier, it was 60 mm from the edge and 38 mm wide).

9. PAPER FEED AND REGISTRATION

9.1 OVERVIEW

- A204/206/207/208/210/211 -

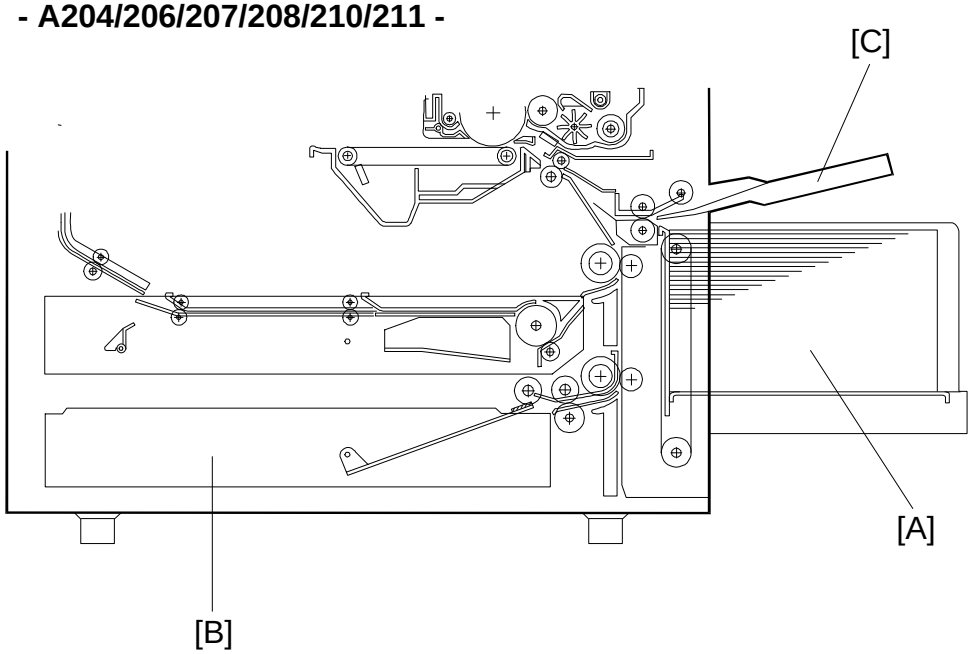

A204D512.wmf

✻ All of the above-mentioned models use the FRR system.

This model has three paper feed stations: the large capacity tray feed station [A] (LCT machines only), the upper paper tray feed station (non-duplex machines only), and the lower paper tray feed station [B].

The LCT holds 1,000 sheets of paper. The upper and lower paper trays are drawer trays that hold 500 sheets of paper.

Paper can also be fed using the by-pass feed table [C], which uses the feed mechanism of the LCT feed station. The by-pass feed table can hold 40 sheets of paper. All feed stations use the FRR feed system.

The top sheet of paper separates from the stack and is fed to the relay rollers, then to the registration rollers.

There are two relay sensors, one located just under each set of relay rollers. These sensors are used for paper jam detection.

10. IMAGE FUSING (A204/A206/A207 COPIERS)

10.1 OVERVIEW

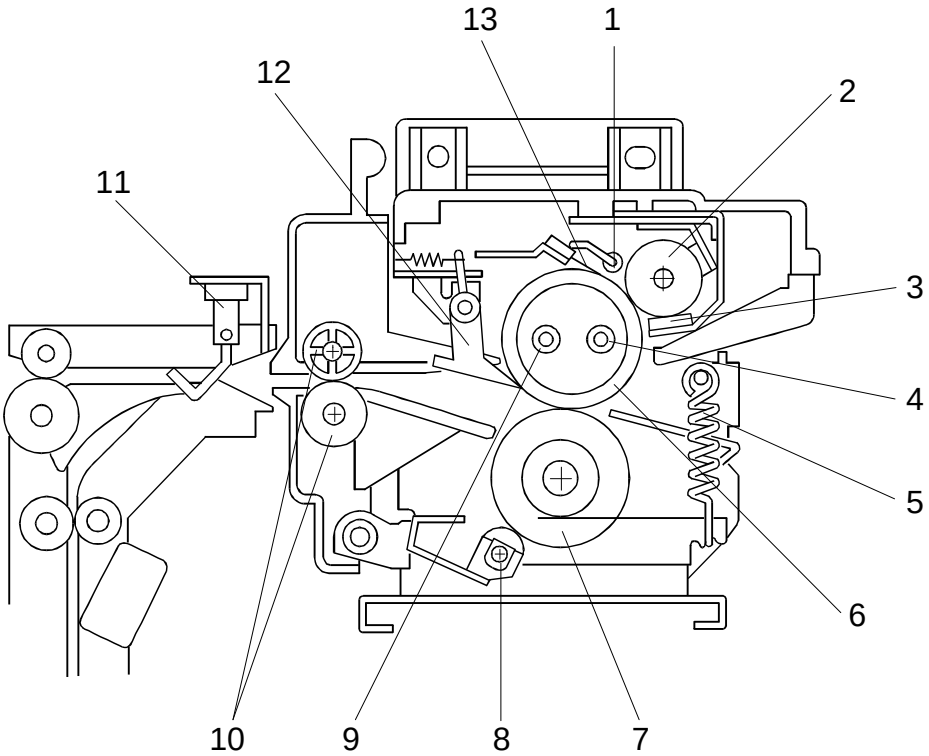

A204D513.wmf

✻ 1. Thermofuse

✻ 2. Oil Supply Roller

✻ 3. Oil Supply Roller Cleaning Brush

✻ 4. Main Fusing Lamp

5. Pressure Springs

✻ 6. Hot Roller

7. Pressure Roller

8. Cleaning Roller

✻ 9. Secondary Fusing Lamp

10. Fusing Exit Rollers

11. Fusing Exit Sensor

12. Hot Roller Strippers (7 pcs)

✻ 13. Thermistor

The fusing unit for the A204/206/207 has several new features, which are described in the following pages.

NOTE: The fusing unit for the A208/210/211 is the same as the fusing unit for the A153/155/156 except for the drawer connector (the shape for changed), and uses the same parts (hot roller, etc).

10.2 OIL SUPPLY MECHANISM

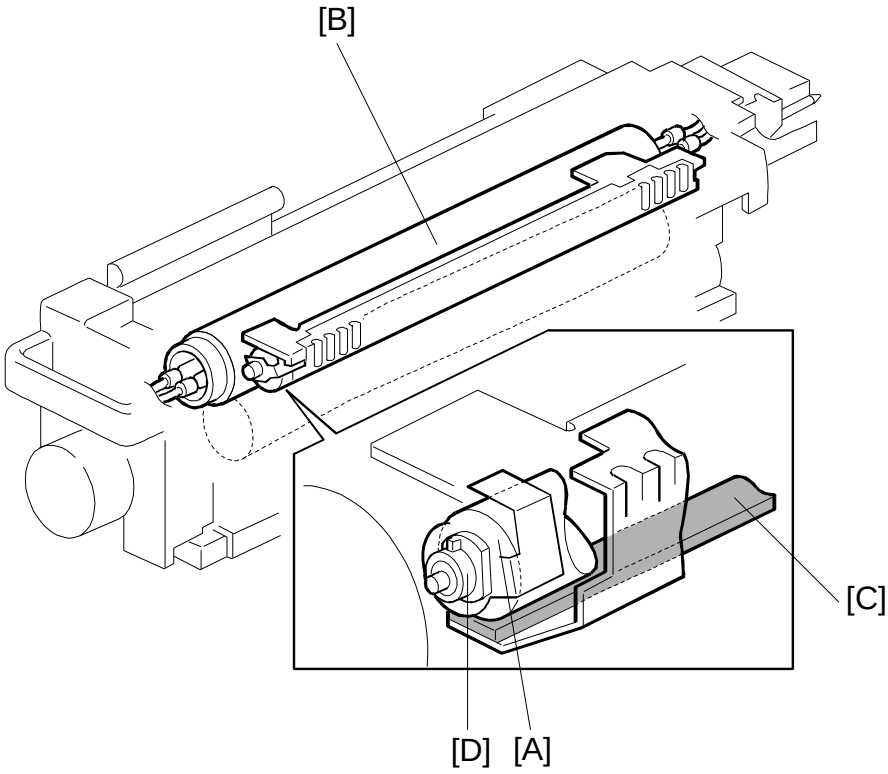

A204D517.wmf

The oil supply is necessary for a 40 cpm copier. An oil supply roller [A] is installed above the hot roller [B]. It is always in contact with the hot roller, and applies a light coat of silicone oil as the roller rotates.

The oil supply roller is made of paper soaked with silicone oil wrapped around the shaft, and covered with PTFE (polytetra fluoroethylene) tube. As the temperature of the hot roller rises, the PTFE tube contracts and squeezes the oil-soaked paper, and the oil comes out through the coating.

The oil supply roller cleaning brush [C] under the oil supply roller removes the toner and paper dust accumulated on the oil supply roller.

The oil supply roller shaft is installed on a one-way bushing [D], to prevent collected toner from returning to the hot roller surface by the customer operating the fusing knob manually in the reverse direction.

10.3 FUSING LAMP CONTROL

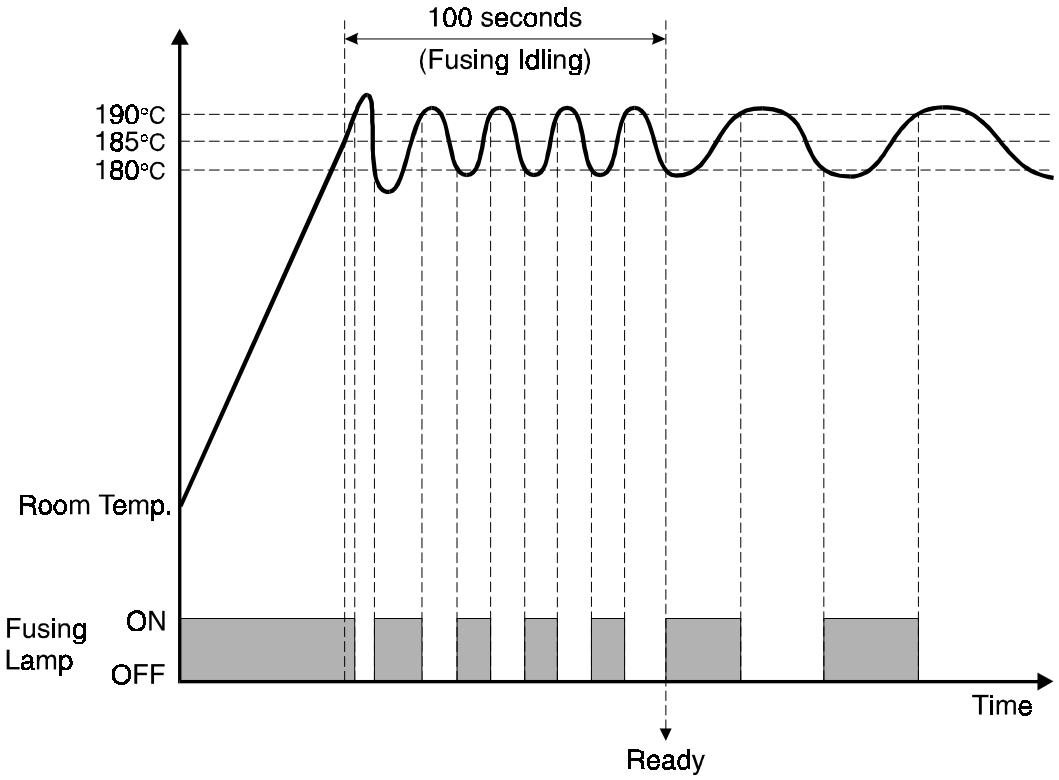

A204D514.wmf

There are two fusing lamps in the hot roller: the main fusing lamp (800 W) [A] and the secondary fusing lamp (350 W) [B].

The main fusing lamp has a much higher wattage that the one in the base copier, because it is the only lamp that is used during copying to control the operating temperature of the fusing unit (185°C).

The secondary fusing lamp is only used in the following conditions to help achieve a faster warm-up time.

- When the main switch is turned on
- When exiting from the energy saver mode

The new hot roller's metal core is thicker than the base copier's hot roller's. The new roller holds heat much better, to allow multicopying at the higher cpm of this model without the hot roller temperature dropping too far. However, it takes a lot longer to warm up after switching on (see the Warm-up Time in the Specifications section).

The temperature is only monitored at the center; there is only one fusing thermistor. There is also only one thermofuse.

When the main switch turns on, the CPU checks the mains frequency for 500 ms; this is done in case phase control mode is selected later. Then the CPU turns on the main fusing lamp. After 3 more seconds, the secondary fusing lamp is turned on. This delay reduces the surge current after the main switch is turned on.

Both lamps are turned on to raise the temperature of the hot roller's surface. When the thermistor detects the operating temperature (185°C), the copier turns off the secondary fusing lamp, and starts fusing idling for 100 seconds to warm up the hot roller completely and evenly (the roller has a thicker metal core), and to distribute the oil. During fusing idling, the temperature is kept at 185°C.

When fusing idling is finished, the copier enters the ready condition. The CPU keeps the temperature at 185°C by turning off and on the main fusing lamp. The lamp is turned off at 190°C, and on at 180°C.

If the fusing lamp turns on while the exposure lamp is on, the power supplied to the exposure lamp may fluctuate, possibly degrading the copy quality. To prevent this, in this machine, the fusing lamp can either stay off or change from on to off while the exposure lamp is on.

There are two types of fusing unit control: on/off control, and phase control. The mode can be selected with SP1-104.

11. INSTALLATION

11.1 COPIER ACCESSORY CHECK

Check the accessories against the following list:

Description	Q'ty
1. Paper Size Decal	1
2. Symbol Explanation Decal (except for the A207 copier)	1
3. Optional Zoom Function Decal	1
4. Optional Margin Adjustment Function Decal	1
5. Combine Originals Explanation Decal (except for the A207 copier)	1
6. Receiving Tray	1
7. Operating Instructions (except for -27 machines)	1
8. User Survey Card (-17 machines only)	1
9. New Equipment Condition Report	1
10. Cushion	1

11.2 COPIER INSTALLATION PROCEDURE

⚠CAUTION

Rating Voltage for Peripherals

Make sure to plug the cables into the correct sockets.

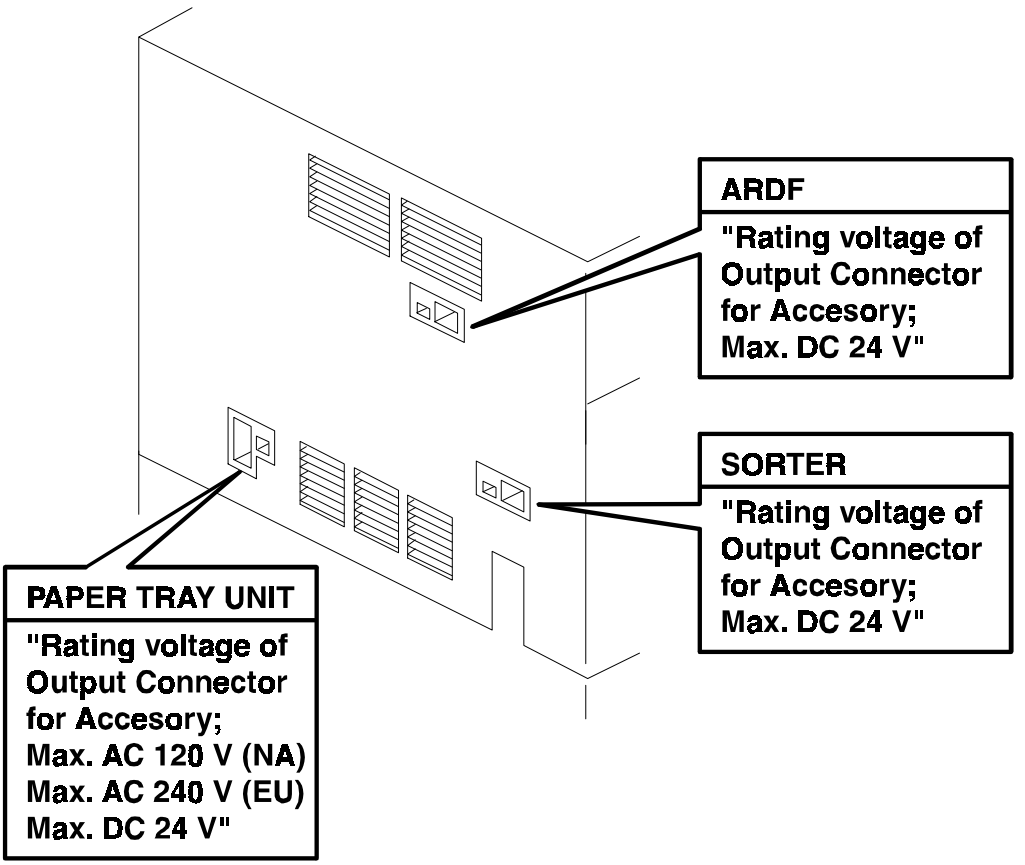

A204I516.wmf

–A204/A206/A207 copiers–

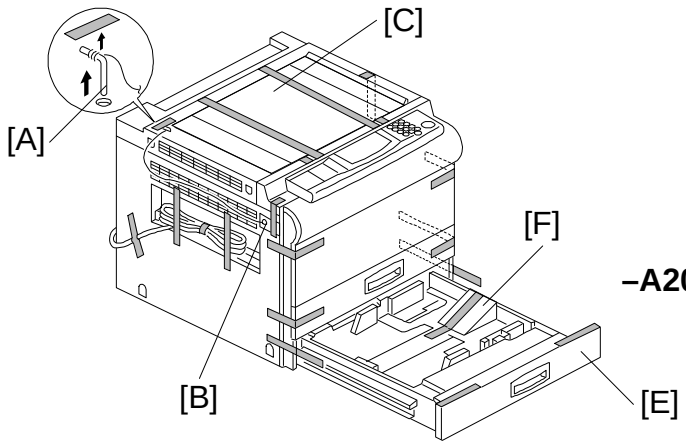

A204I500.wmf

–A206/A207/A210/A211 copiers–

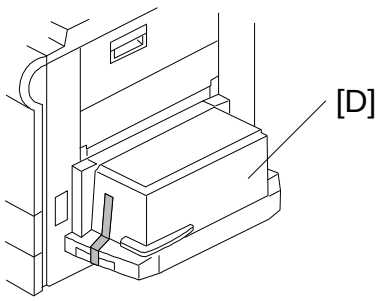

A204I501.wmf

–A208/A210/A211 copiers–

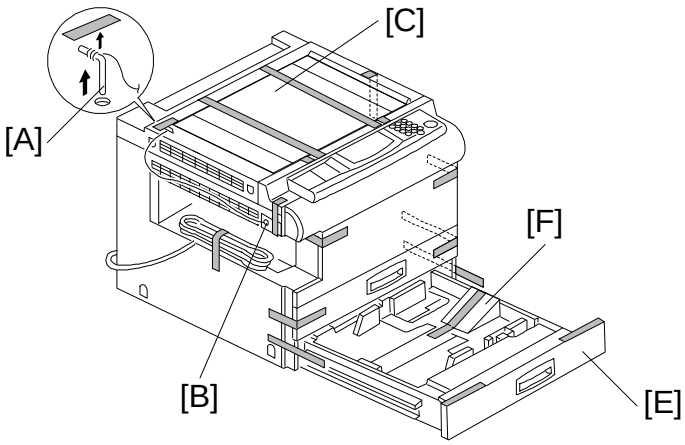

A204I502.wmf

NOTE: 1) Never lift the machine by holding the LCT, or the LCT will break.

2) Keep the shipping retainers after installing the machine. They will be reused if the machine is moved to another location in the future.

3) Proper reinstallation of the shipping retainers is required in order to avoid any transport damage. It is most important to put back the scanner lock pin when transporting this copier. If not, skewed image may result.

1. Remove the scanner lock pin [A] and red tag [B] as shown.
2. Remove the strips of tape and the sheet of paper [C]. Also, for A206/207/A210/A211 copiers, remove the strip of tape on the LCT [D].
3. Pull out the paper tray [E], and remove the strips of tape and the bottom plate stopper [F]. Then install the paper tray in the copier (1 tray for duplex machines and 2 trays for non-duplex machines).

–A207 copier–

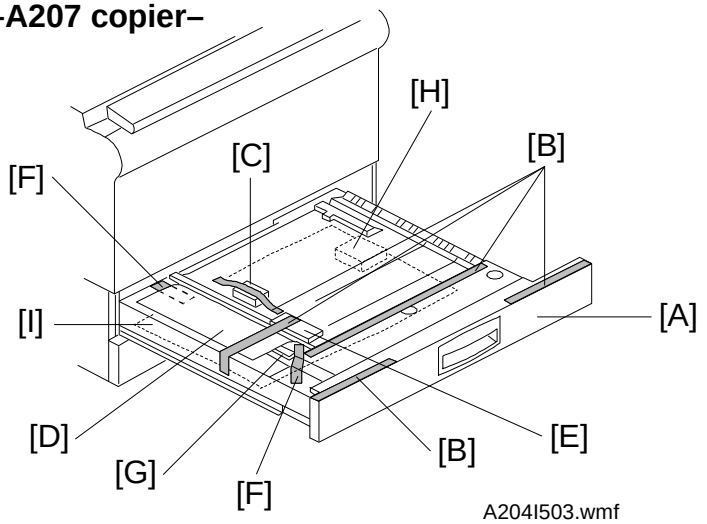

A204I503.wmf

–A211 copier–

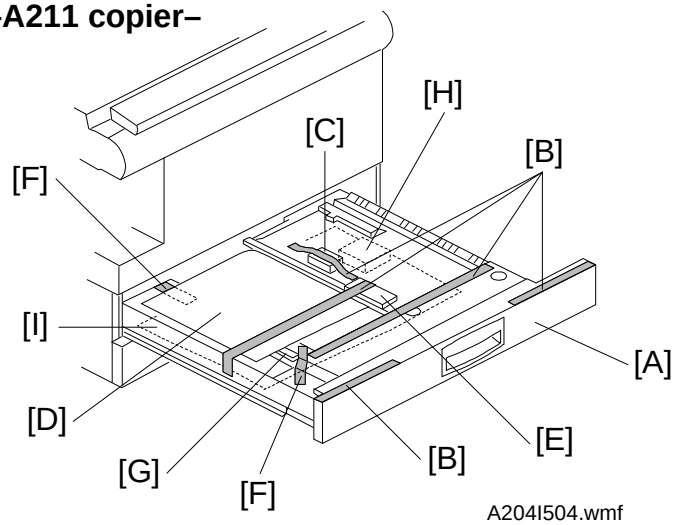

A204I504.wmf

4. **A207/A211 copiers only:**
   1) Pull out the duplex tray [A] and remove the strips of tape [B].
   2) Remove the guide roller stopper [C] and a sheet of paper [D].
   3) Open the upper duplex guide plate [E] and remove the strips of tape [F].
   4) Open the lower duplex guide plate [G], and remove the styrofoam support [H] and the sheet of paper [I].
   5) Install the duplex tray in the copier.

–A204/A206/A207 copiers–

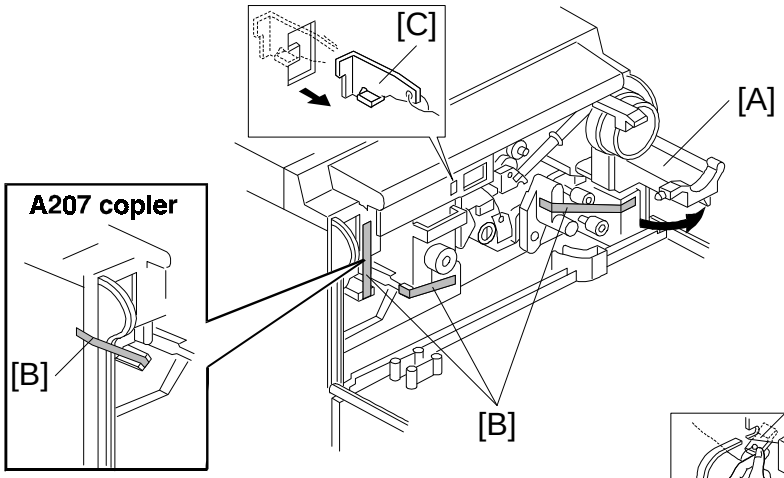

A204I505.wmf

–A208/A210/A211 copiers–

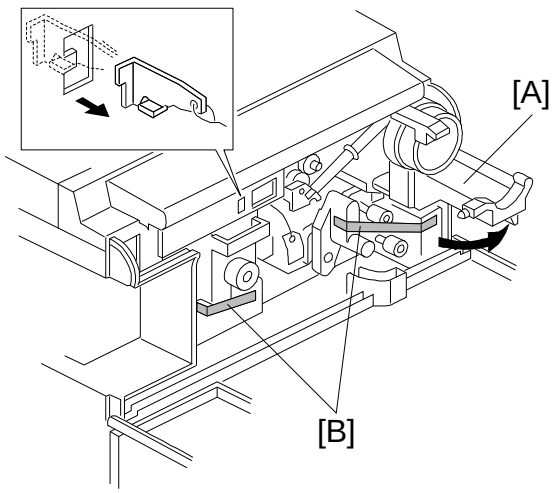

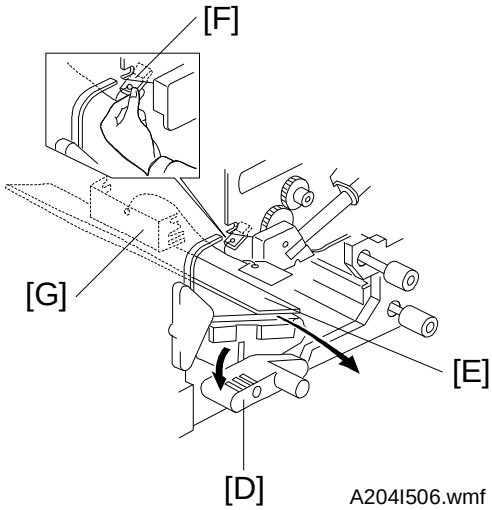

A204I506.wmf

A204I507.wmf

5. Open the front cover and swing out the toner bottle holder [A].
6. Remove the strips of tape [B].
7. Remove the switch actuator lock bracket [C] as shown.
8. Turn the "A1" lever [D] counterclockwise to lower the transfer belt unit. Then remove the cushion sheet [E].
9. Remove the blade release wedge [F] together with the pick off pawl release mylar [G].
10. Return the "A1" lever to the set position.

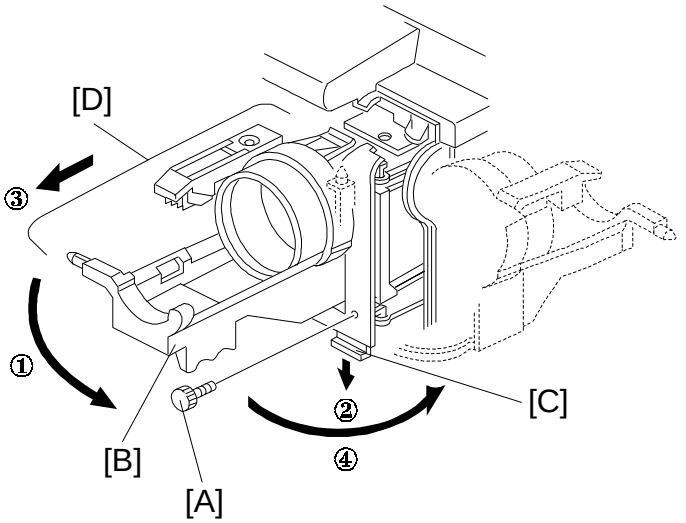

A204I508.wmf

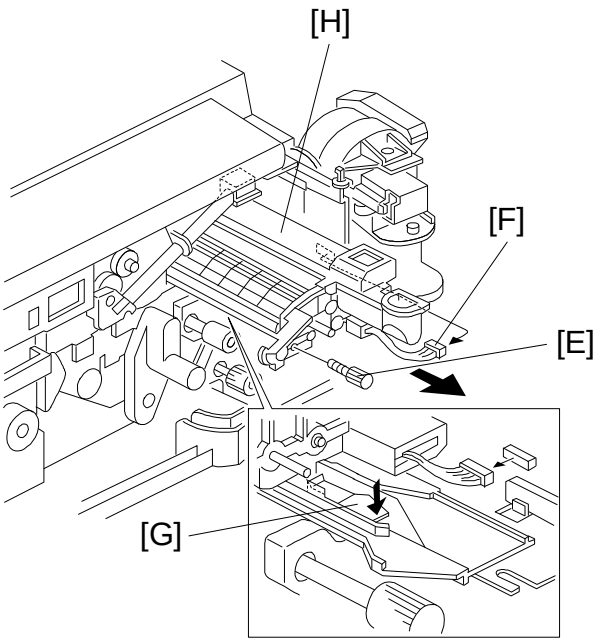

A204I509.wmf

11. Remove the knob screw [A].
12. ① Swing out the bottle holder [B] and ② pull down the lock lever [C]. ③ Then slide out the bottle holder assembly [D] and ④ swing out the bottle holder assembly [D].
13. Remove the knob screw [E] and disconnect the white connector [F].
14. Pull down the development unit lock lever [G] from under the plate and pull out the development unit [H]. Then place it on a clean sheet of paper.

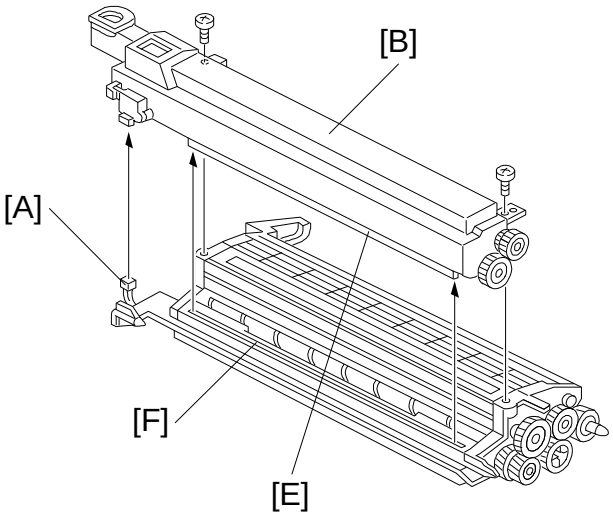

A204I510.wmf

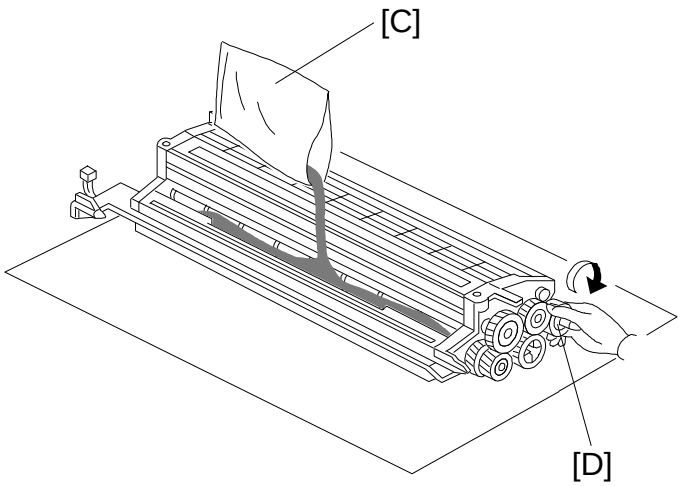

A204I511.wmf

15. Disconnect the connector [A] and separate the toner supply unit [B] from the development unit (2 screws).
16. Pour about half a pack of developer [C] into the development unit. Then rotate the outer gear [D] as shown to distribute the developer evenly. Then pour in all the remaining developer and rotate the gear again.

    NOTE: To prevent the developer from spilling, do not rotate the gears in the other direction.
17. Remount the toner supply unit on the development unit (2 screws) and connect the white connector.

    NOTE: Make sure that the positioning rib [E] sits in the groove [F].
18. Install the development unit in the copier (1 knob screw and 1 connector).

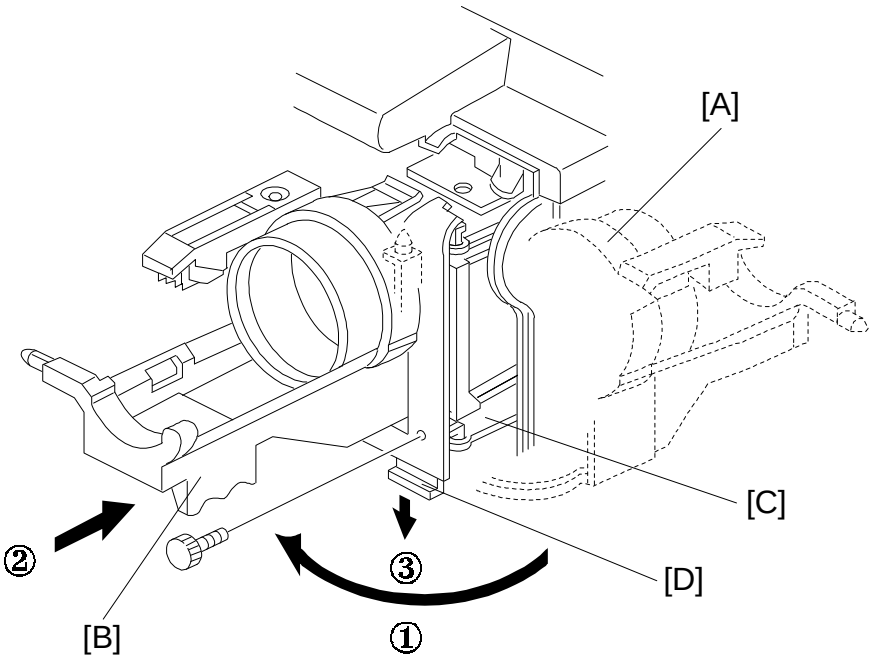

A204I512.wmf

19. Swing in the bottle holder assembly [A] so that the toner bottle holder [B] and the slide rail [C] are aligned straight.

    IMPORTANT: Do not swing the bottle holder fully into the machine before doing step 20.

20. Slide the bottle holder assembly in as described below:
    1) Slide the bottle holder assembly into its lock position while pressing down the bottle holder lock lever [D].
    2) When the bottle holder assembly reaches its lock position, push up the bottle holder lock lever so that the knob screw holes are aligned.
    3) Secure the bottle holder lock lever with the knob screw.

    NOTE: Do not swing the bottle holder assembly all the way into its original position in the machine without sliding and locking it into position exactly as described above. Otherwise, the assembly will be damaged.

21. Install a toner bottle by following the instructions placed on the reverse side of the front cover.

22. Swing in the toner bottle holder to its original position and close the front cover.

23. Plug in the copier and turn on the main switch.

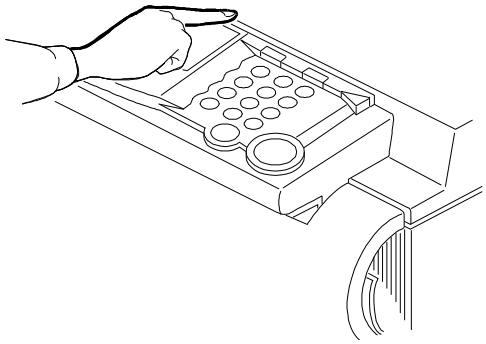

A204I513.wmf

24. Enter SP mode as follows:
    1) Press the [◈/◎] key.
    2) Enter "107" using the numeric keys.
    3) Hold down the [C/▽] key for more than 3 seconds.

    NOTE: When SP mode is selected, "1" blinks in the 3rd digit of the copy counter, the Auto Image Density indicator starts blinking, and the reduce/enlarge indicator turns off.

25. Perform the "TD sensor initial setting" SP mode as follows:
    1) Enter "2" and press the [R/#] key.
    2) Enter "214" and press the [R/#] key.
    3) Press the [◇] key.

    NOTE: The machine will automatically stop when TD sensor initial setting is completed. (It takes about 2.5 minutes.)

    Then perform the "Compulsory toner supply" SP mode as follows:
    1) Press the [◈/◎] key twice.
    2) Enter "2" and press the [R/#] key.
    3) Enter "207" and press the [R/#] key.
    4) Press the [◇] key.

    NOTE: The machine will automatically stop when compulsory toner supply is completed. (It takes about 30 seconds.)

    5) Compulsory toner supply must be performed twice in order to supply enough toner to the toner hopper, so press the [◇] key again.

26. **A207 copier only:**
    Select the proper language for the guidance display as follows:
    1) Press the [◈/◎] key twice.
    2) Enter "5" in the 3rd digit of the copy counter and press the [R/#] key.
    3) Enter "910" and press the [R/#] key.
    4) Enter the number for the desired language in the three-digit indicator and press the [R/#] key.
       1: English 2: French 3: German 4: Italian 5: Spanish 6: Swedish
       7: Portuguese 8: Danish 9: Norwegian 10: Finnish 11: Dutch

27. Press the [◈/◎] key three times to exit SP mode.

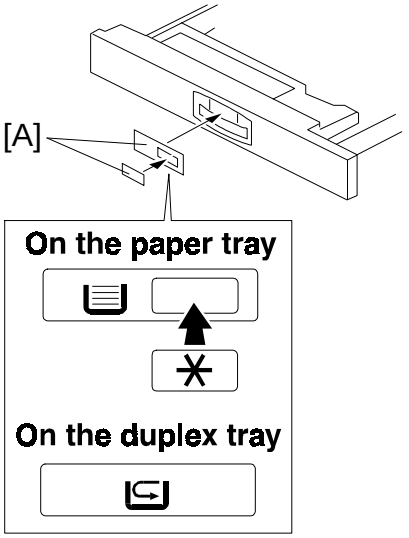

A204I514.wmf

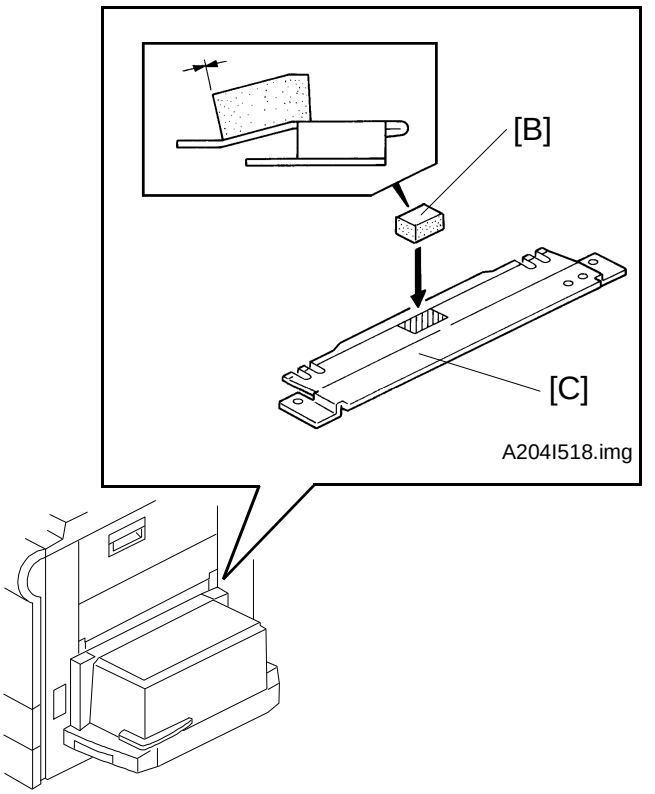

A204I518.img

A204I517.wmf

28. Pull out the paper tray and load paper into it. (The paper size and direction for each tray should be as specified by the customer.)

    NOTE: The side and rear fences should be properly positioned.

29. Select the appropriate paper size for the paper trays in the main body by sliding the paper size slider into the correct position (see section 2.3.2 in the base copier manual, "Paper size selection for the copier paper trays" for details).

30. **When a paper tray unit is installed:** Enter the proper paper size for each paper tray by following the procedure shown in section 2.3 in the base copier manual, "Paper Size Selection" and in "Service Tables - SP5-019: Paper Size Setting".

31. Load paper into the paper trays and the copy tray.

32. Attach the appropriate paper size decals [A] to the paper trays.
    Also (A207/A211 copiers only), attach the duplex decal to the duplex tray.

    NOTE: Paper size decals are used also for the paper tray unit. Save the remaining decals for use with the paper tray unit.

33. Attach the cushion [B] at the center of the LCT upper stay [C] as shown.

    NOTE: Make sure that the edge of the cushion is aligned with the line where the stay is bent at a slight angle.

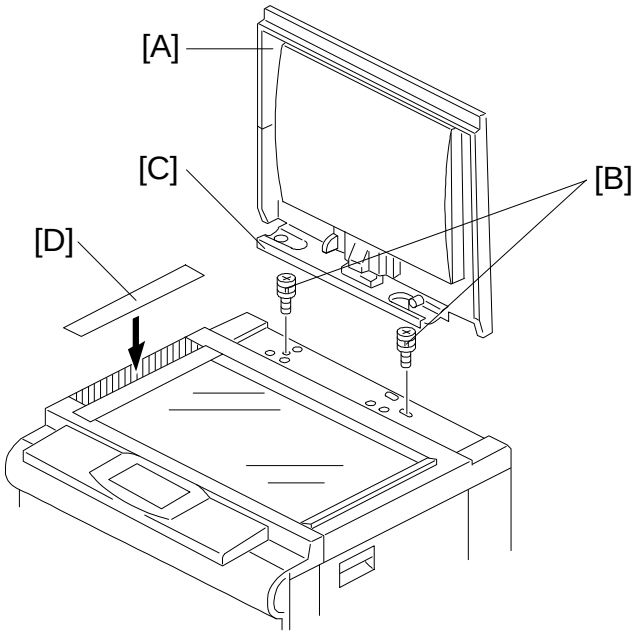

A204I515.wmf

34. Install the optional platen cover [A] as follows if necessary:
    1) Install 2 stud screws [B] on the top cover as shown.
    2) Position the platen cover bracket [C] on the stud screws and slide it to the left.
35. **All models except the A207:** Attach the symbol explanation decal [D] to the top cover as shown. (If the ARDF will be installed, stick the decal on the ARDF exit cover. Refer to the ARDF installation procedure.)
36. Check the copy quality and machine operation.

11.3 AUTO REVERSE DOCUMENT FEEDER (A663) ACCESSORY CHECK

Check the accessories against the following list:

Description	Q'ty
1. New Equipment Condition Report (Multi-language)	1
2. Installation Procedure (English)	1
3. Stud Screw	2
4. Philips Screw with Flat Washer - M4 x 10	2
5. Sponge Retainer	1

11.4 AUTO REVERSE DOCUMENT FEEDER (A663) INSTALLATION PROCEDURE

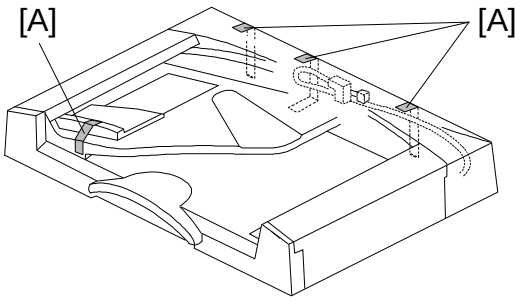

A663I500.wmf

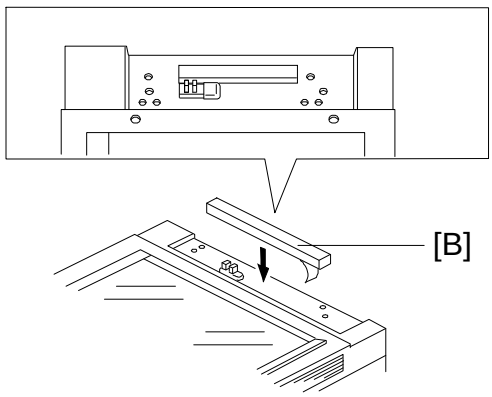

A663I501.wmf

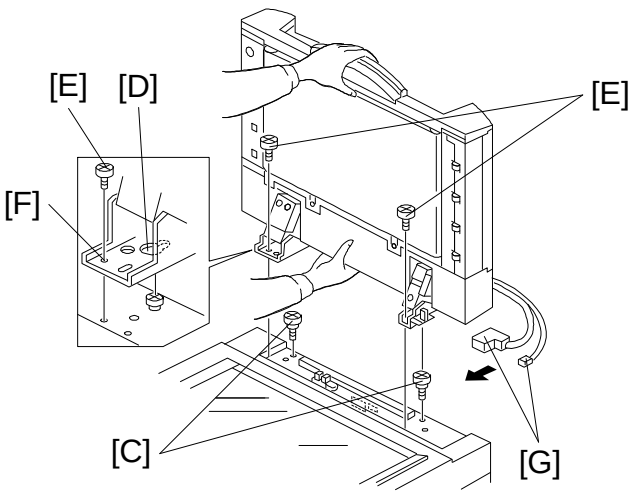

A663I502.wmf

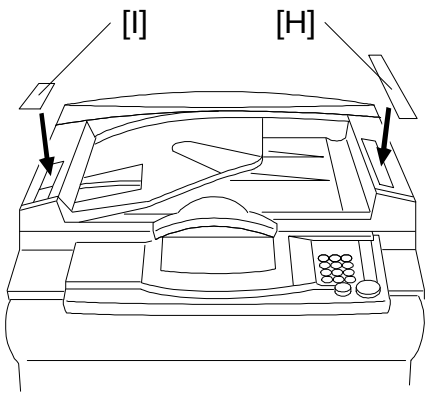

A663I503.wmf

⚠CAUTION

Unplug the copier power cord before starting the following procedure.

1. Remove the strips of tape [A].
2. Attach the sponge retainer [B] to the top cover of the copier as shown.
3. Tighten the two stud screws [C].
4. Mount the ARDF by aligning the holes [D] in the ARDF and the stud screws [C], then slide the ARDF to the front as shown.

   NOTE: When mounting the ARDF, hold it by hand as shown in the illustration. Holding it in another way may damage the ARDF.
5. Screw the two stud screws [E] into the holes [F] and tighten them.
6. Connect the connectors [G] into the socket on the rear of the copier.
7. Attach the symbol explanation decal [H] and the combine originals explanation decal [I] to the ARDF as shown **(except for the A207 copier).**

11.5 20-BIN SORTER STAPLER (A664) ACCESSORY CHECK

Check the accessories against the following list:

Description	Q'ty
1. Front Connection Bracket	1
2. Rear Connecting Bracket	1
3. Cushion	2
4. Entrance Guide Mylar for A204/A206/A207 copiers	1
5. Entrance Guide Mylar for A208/A210/A211 copiers	1
6. Proof Tray	1
7. Caster Stopper	2
8. Relay Guide	1
9. Philips Pan Head Screw - M4 x 12	4
10. Philips Pan Head Screw - M4 x 6	2
11. New Equipment Condition Report (Multi-language)	1
12. Staple Position Decal	1
13. Installation Procedure (English)	1

11.6 20-BIN SORTER STAPLER (A664) INSTALLATION PROCEDURE

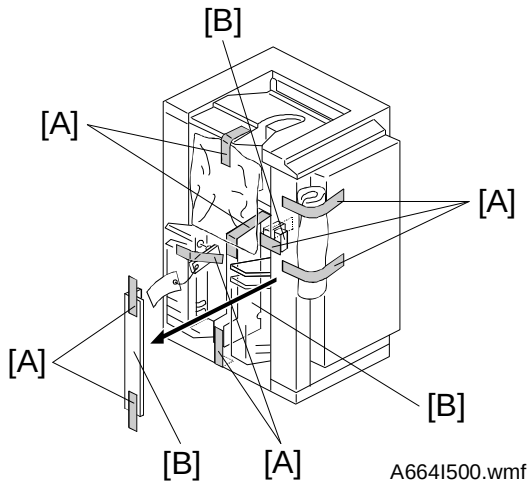

A664I500.wmf

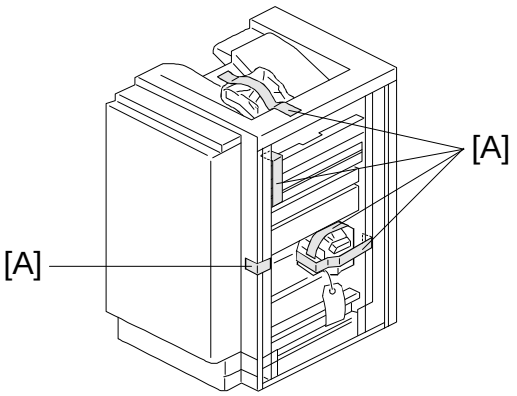

A664I501.wmf

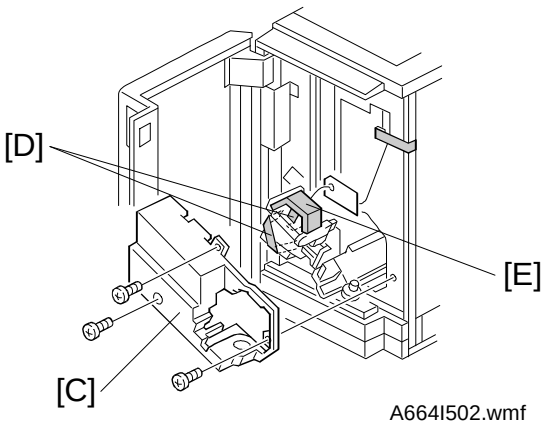

A664I502.wmf

⚠CAUTION

Unplug the copier power cord before starting the following procedure.

NOTE: 1) Keep the shipping retainers after installing the machine. They will be reused if the machine will be transported to another location.

2) Proper reinstallation of the shipping retainers is required in order to avoid any transport damage.

3) A sorter adapter (A568) is required to install this sorter stapler in the A208/A210/A211 copiers. Before installing this sorter stapler, please install the sorter adapter.

1. Remove the strips of tape [A] and the cushions [B].
2. Open the front door and remove the inner cover [C] (3 screws).
3. Remove the strips of tape [D] and remove the cushion [E]. Then re-install the inner cover [C].

–A204/A206/A207 copiers–

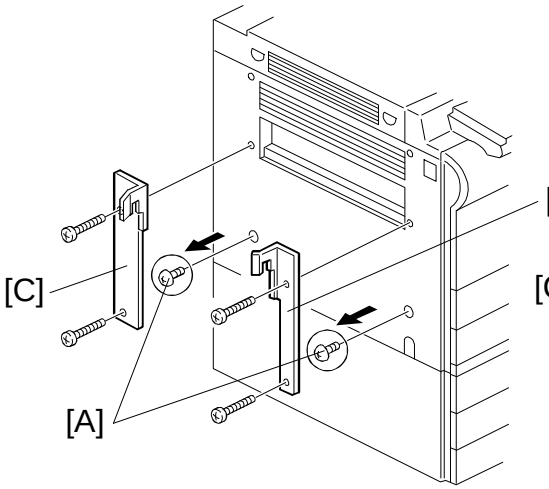

A664I503.wmf

–A208/A210/A211 copiers–

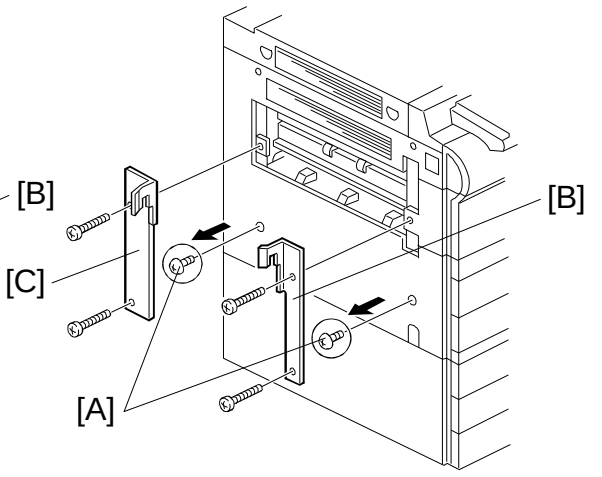

A664I504.wmf

–A204/A206/A207 copiers–

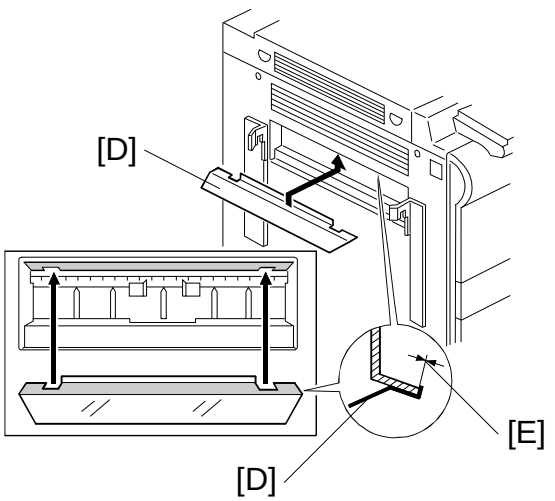

A664I505.wmf

–A208/A210/A211 copiers–

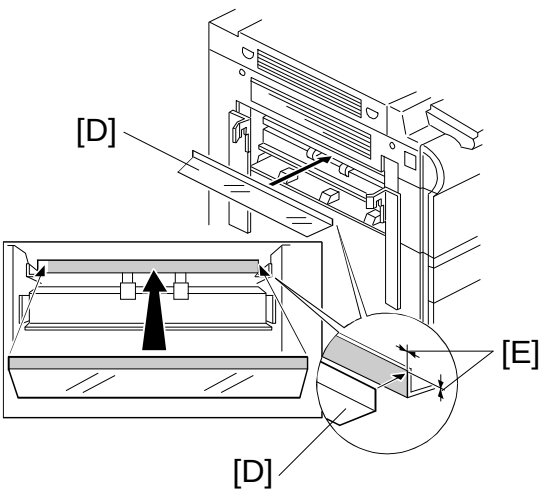

A664I506.wmf

4. Remove the two M4 x 8 round head screws [A] from the left cover of the copier.
5. Install the front connecting bracket [B] (2 screws M4 x 12) and the rear connecting bracket [C] (2 screws M4 x 12) on the copier.
6. Attach the entrance guide mylar [D] to the copier exit area, as shown.

   NOTE: 1) The entrance guide mylar differs depending on the model.

   2) Align the edge [E] of the cover and the mylar.

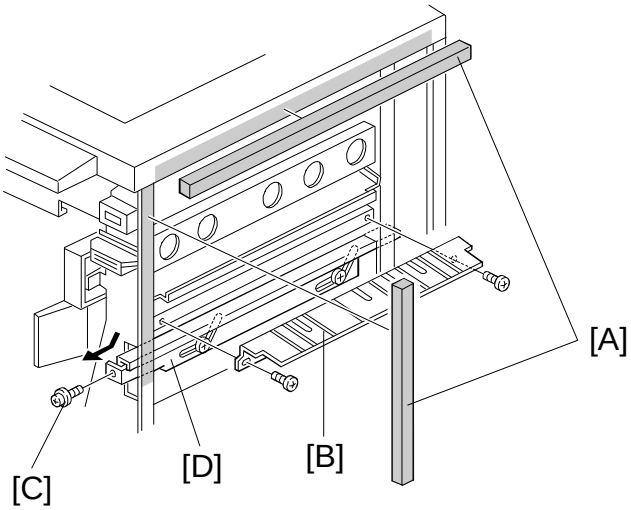

A664I507.wmf

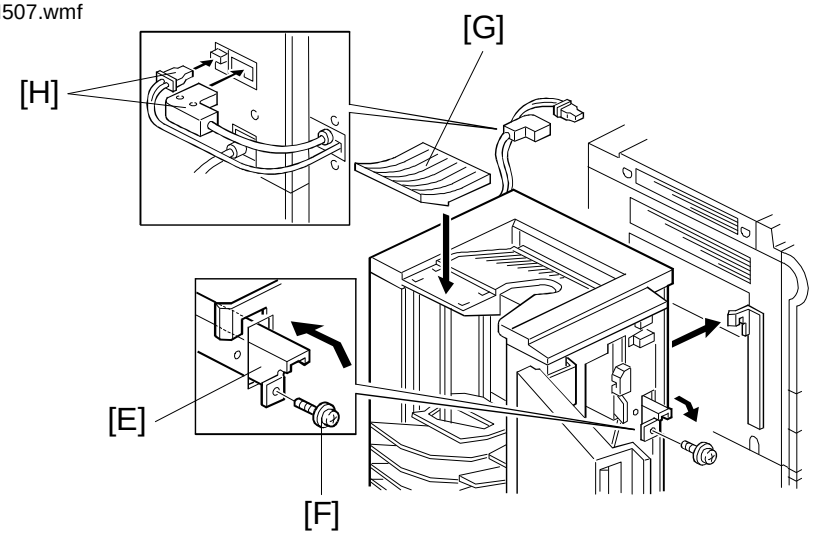

A664I508.wmf

7. Attach the two cushions [A] as shown.
8. Install the relay guide [B] (2 screws M4 x 6).
9. Open the front door of the sorter stapler and remove the screw [C] securing the locking lever [D], then lower the locking lever.
10. Align and press the sorter stapler against the copier and secure them by raising the locking lever [E].
11. Secure the locking lever (1 screw [F]).
12. Install the proof tray [G].
13. Connect the connectors [H] to the sockets at the rear of the copier.

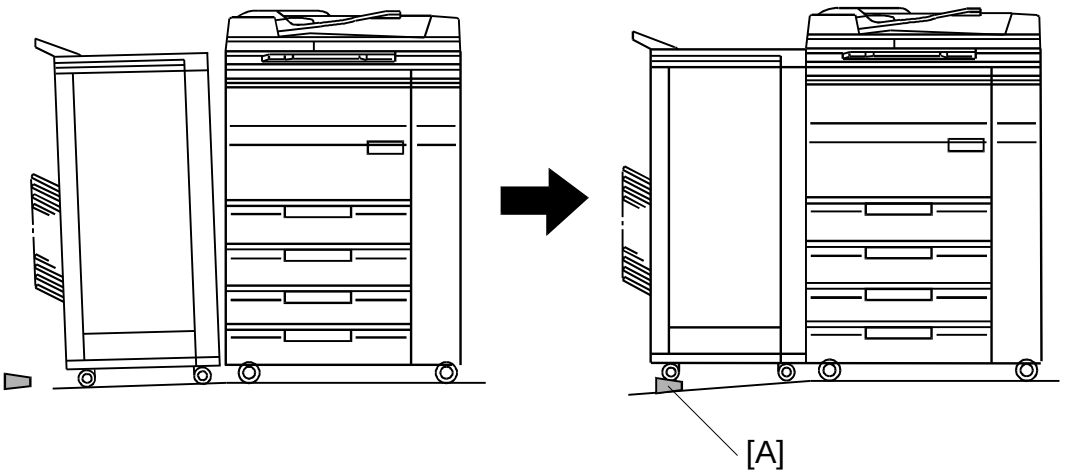

A664I509.wmf

14. If the gap between the top of the sorter stapler and the copier is too great, adjust it by placing caster stoppers [A].
15. Plug in the copier.
16. Turn on the main switch of the copier and test the operation of the sorter stapler.

    NOTE: The copier automatically recognizes that the sorter stapler has been installed.

11.7 20-BIN SORTER STAPLER (A658) ACCESSORY CHECK

Check the accessories against the following list:

Description	Q'ty
1. Staple Position Decal	1
2. Chain	1
3. Cap Remover	1
4. Philips Pan Head Screw - M4 x 14	5
5. New Equipment Condition Report (Multi-language)	1
6. Installation Procedure (English)	1
7. Stepped Screw	1

11.8 20-BIN SORTER STAPLER (A658) INSTALLATION PROCEDURE

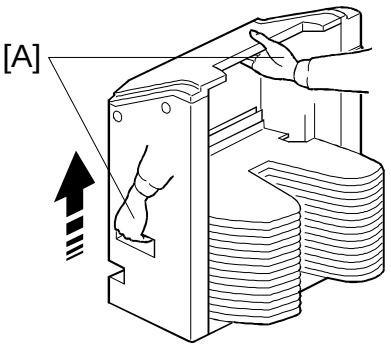

A658I500.wmf

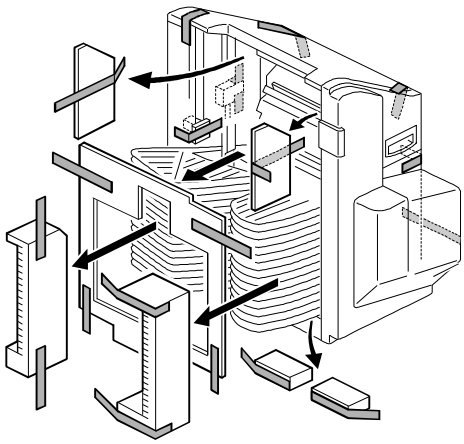

A658I501.wmf

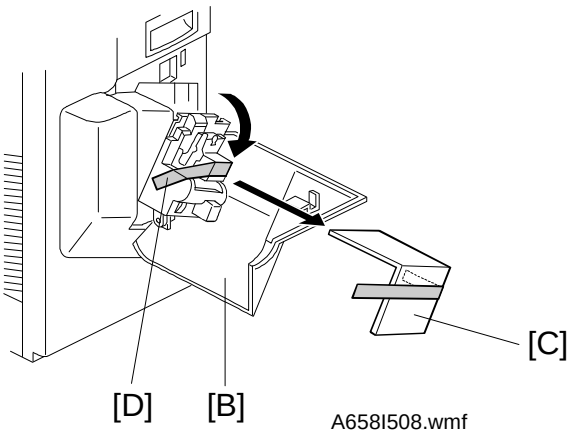

A658I508.wmf

⚠CAUTION

Unplug the copier power cord before starting the following procedure. When handling the sorter stapler, make sure to hold the parts shown [A]. Otherwise, the resulting damage may cause paper jams at the entrance.

NOTE: 1) Keep the shipping retainers after installing the machine. They will be reused if the machine will be transported to another location.

2) Proper reinstallation of the shipping retainers is required in order to avoid any transport damage.

3) A sorter adapter (A568) is required to install this sorter stapler in the A208/A210/A211 copiers. Before installing this sorter stapler, please install the sorter adapter.

1. Remove the strips of tape and the shipping retainers as shown.
2. Open the front door [B] and remove the cardboard [C] and the strip of tape [D] from the staple unit. Close the front door.

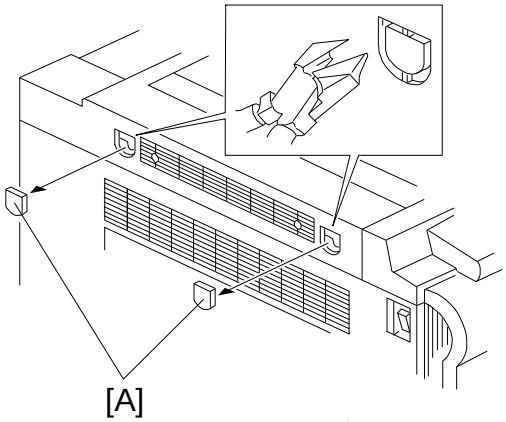

A658I502.wmf

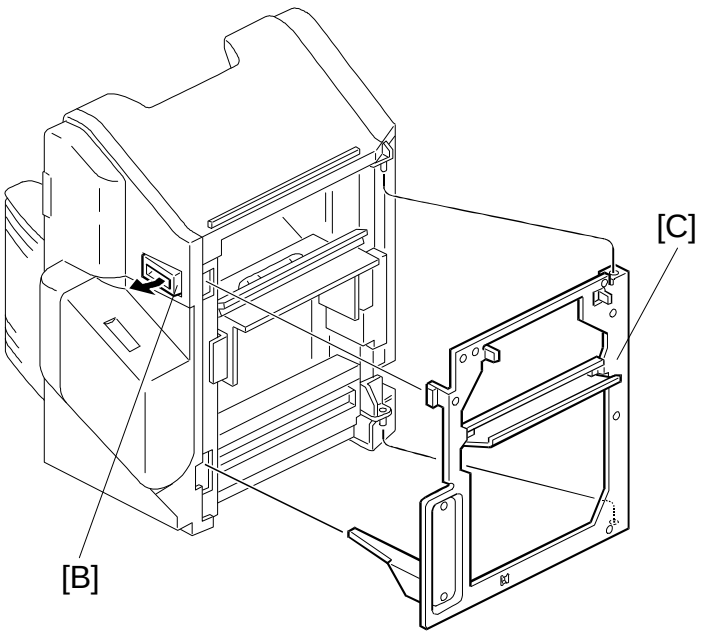

A658I503.wmf

3. Remove the two plastic caps [A] from the copier left cover with nippers.
4. By releasing the open lever [B] of the sorter stapler, remove the sorter stapler mounting frame [C], as shown.

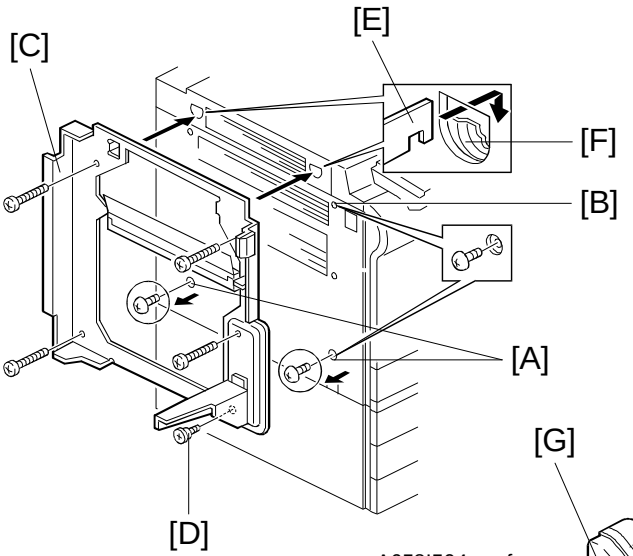

A658I504.wmf

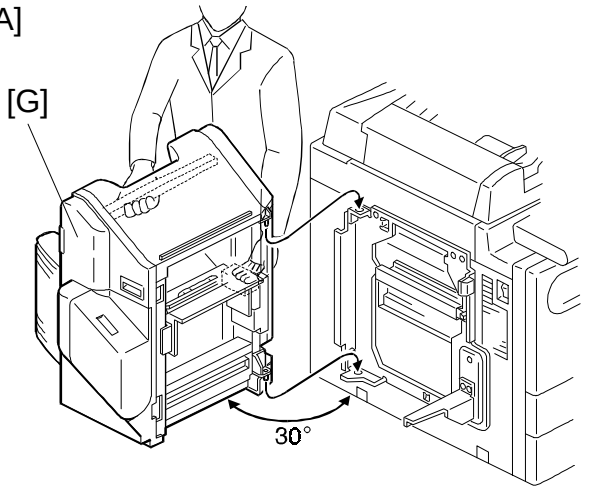

A658I505.wmf

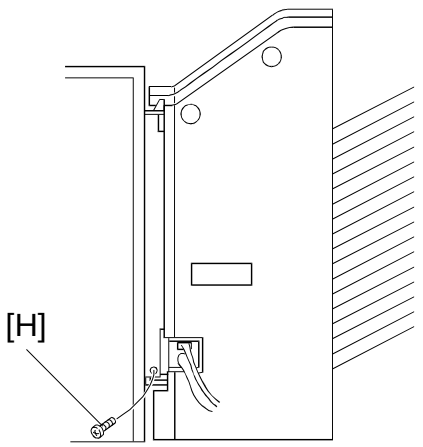

A658I506.wmf

5. Remove the M4 x 8 round head screws (2 screws [A] for the **A204/A206/A207 copiers**, 3 screws [A] and [B] for **A208/A210/A211 copiers**) from the left cover of the copier.

6. Mount the sorter stapler mounting frame [C] on the copier as shown (4 screws M4 x 14 and 1 stepped screw [D]).

   NOTE: When hooking the sorter stapler mounting frame on the left side of the copier, make sure that the positioning hooks [E] on the frame are properly inserted in the positioning holes [F] in the copier.

7. Install the sorter stapler [G] on the frame (2 hinge pins at the rear) as shown.

8. Tighten the M4 x 14 screw [H].

   NOTE: This screw prevents the sorter stapler from falling down.

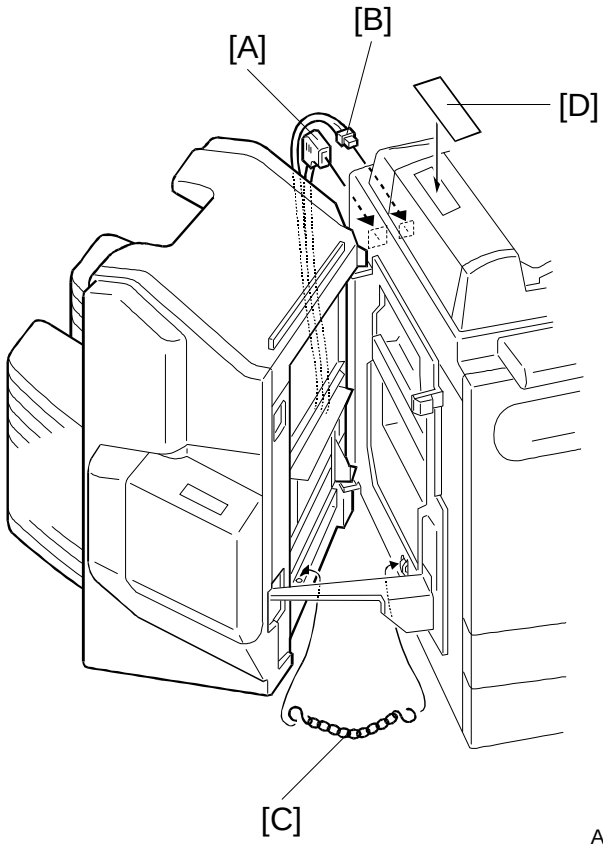

A658I507.wmf

9. Connect the cable [A] and the optic cable [B].
10. Install the chain [C] as shown.
11. Attach the staple position decal [D], as shown.
12. Plug in the copier.
13. Turn on the main switch of the copier and test the operation of the sorter stapler.

    NOTE: The copier automatically recognizes that the sorter stapler has been installed.

OPTION

AUTO REVERSE DOCUMENT FEEDER

(Machine Code: A663)

The A663 ARDF is based on the A548 ARDF.

Only the differences from the A548 are described in the following pages. Refer to the A548 ARDF section inside the A153/A155/A156/A157/A159/A160 copier service manual for other information.

Table of Contents

1. SPECIFICATIONSA663-1

2. DIFFERENCES FROM THE A548 ARDF A663-2

1. SPECIFICATIONS

✻ The specifications are the same as for the A548 ARDF.

Original Size and Weight:	Thick original mode (default mode) Use this setting for normal paper types Maximum A3, 11" x 17" Minimum B6, 5 1/2" x 8 1/2" Weight 52 ~ 128 g/m^2 (14 ~ 34 lb) Thin original mode Maximum A3, 11" x 17" Minimum B6 (sideways), 5 1/2" x 8 1/2" Weight 40 ~ 128 g/m^2 (11 ~ 34 lb) Auto reverse mode Maximum A3, 11" x 17" Minimum B5, 5 1/2" x 8 1/2" Weight 52 ~ 105 (14 ~ 27 lb)
Original Feed:	Automatic feed - ADF mode Manual feed one by one - SADF mode Auto Reverse Feed - ARDF mode
Original Table Capacity:	50 sheets at 80 g/m^2 (21 lb)
Original Placement:	Face up, first sheet on top
Original Separation:	Feed Roller and Friction Belt
Original Transport:	One flat belt
Power Consumption:	45 W
Power Source:	24 V $\pm$ 10% from the copier, 1.8 A
Dimensions (W x D x H):	610 x 507 x 130 mm (24.0" x 20.0" x 5.1")
Weight:	Approximately 10.5 kg (23.2 lb)

2. DIFFERENCES FROM THE A548 ARDF

	A663	A548
1-to-1 Copying Speed Capability	40 cpm (A4/LT sideways)	35 cpm (A4/LT sideways)
Original Transport Speed	555 mm/s	505 mm/s
Time Needed for Original Replacement (A4 sideways)	590 ms (thin original mode) 690 ms (thick original mode)	620 ms (thin original mode) 720 ms (thick original mode)

20-BIN SORTER STAPLER

(Machine Code: A664)

1. SPECIFICATIONS

Configuration: Console

Number of Bins: 20 + Proof Tray

Paper for Proof Tray:

Size: Maximum: A3, 11" x 17"
Minimum: A6 lengthwise, 5 1/2" x 8 1/2"

Weight: 52 ~ 157 g/m^2,14 ~ 42 lb

Capacity: Proof Tray - 250 sheets (80 g/m^2, 20 lb)

Paper for Bins: See the table below.

	Sort	Stack	Staple
Maximum paper size	A3, 11" x 17"	A3, 11" x 17"	A3, 11" x 17"
Minimum paper size	Sideways: A5, 8 1/2" x 11" Lengthwise: A5, 5 1/2" x 8 1/2"	Sideways: A5, 8 1/2" x 11" Lengthwise: A5, 5 1/2" x 8 1/2"	B5, 8 1/2" x 11"
Maximum paper weight	157 g/m^2, 42 lb	157 g/m^2, 42 lb	157 g/m^2, 42 lb
Minimum paper weight	52 g/m^2, 14 lb	52 g/m^2, 14 lb	52 g/m^2, 14 lb
Maximum capacity	All sizes: 50 sheets/bin Two-sided copies: 40 sheets/bin	All sizes: 50 sheets/bin Two-sided copies: 40 sheets/bin	All sizes: 50 sheets (80 g/m^2)

Stapling Positions:

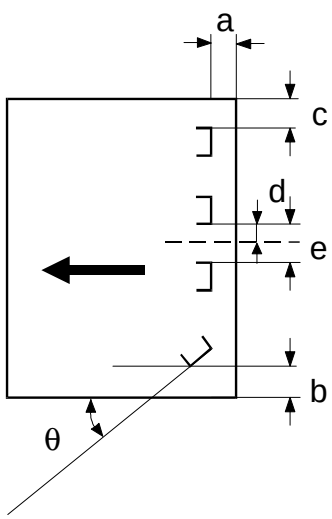

A664V500.wmf

a = 6 ± 3 mm
b = 6 ± 3 mm
c = 6 ± 3 mm
d = 66 ± 3 mm
e = 132 ± 2 mm
θ = 45 ± 5°

Staple Replenishment:	Cartridge refill (5,000 pieces/cartridge)
Power Source:	DC24 V (from copier)
Power Consumption:	Average: less than 50 W (without punch) Maximum: In sort/stack mode: Less than 45 W (without punch) In staple mode: Less than 50 W
Dimensions: (W x D x H)	566 x 583 x 978 mm
Weight:	Approximately 48 kg

2. COMPONENT LAYOUT

2.1 MECHANICAL COMPONENT LAYOUT

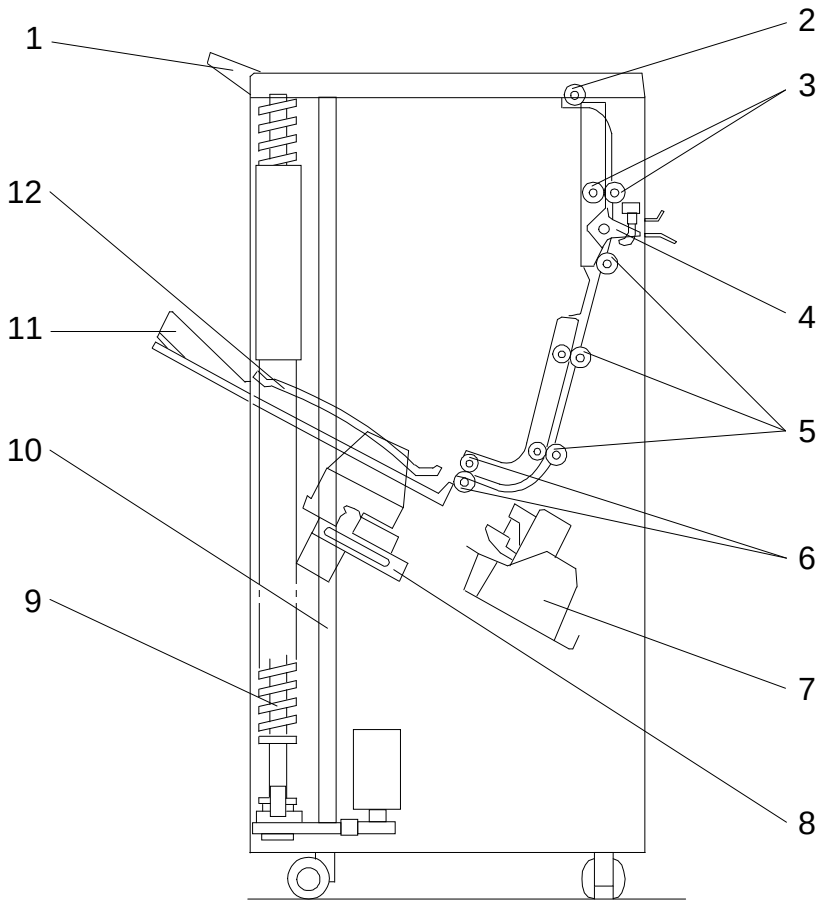

A664V501.wmf

1. Proof Tray
2. Proof Exit Rollers
3. Proof Transport Rollers
4. Turn Gate
5. Sorter Transport Rollers
6. Sorter Exit Rollers
7. Staple Unit
8. Grip Assembly
9. Helical Wheels
10. Jogger Plate
11. Bins
12. Upper Guide Plate

2.2 DRIVE LAYOUT

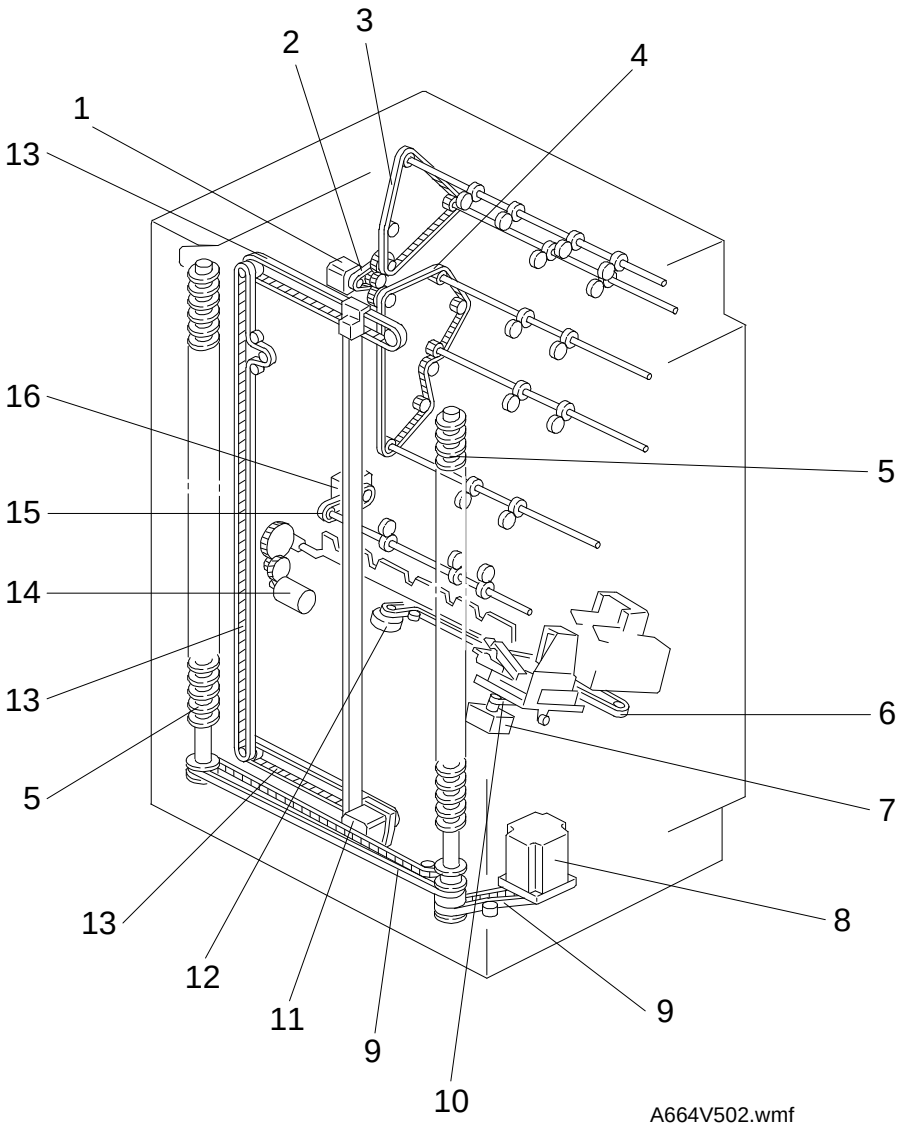

1. Main Motor
2. Main Drive Belt
3. Proof Drive Belt
4. Sorter Drive Belt
5. Helical Wheels
6. Staple Unit Drive Belt
7. Gripper Motor
8. Bin Drive Motor
9. Wheel Drive Belts
10. Grip Drive Belt
11. Jogger Motor
12. Staple Unit Drive Motor
13. Jogger Drive Belts
14. Bin Rear Plate Drive Motor
15. Sorter Exit Drive Belt
16. Sorter Exit Motor

3. ELECTRICAL COMPONENT DESCRIPTION

Please refer to the electrical component layout on the reverse side of the point-to-point diagram on waterproof paper.

Symbol	Name	Function	Index No.
Motors			
M1	Main	Drives the paper transport rollers.	1
M2	Stapler	Feeds the staples and drives the stapler hammer.	9
M3	Grip	Drives the grip assembly forward and backward into the bin to grip the copies and bring them to the stapling position.	23
M4	Bin Drive	Drives the bins upward and downward by rotating the three helical wheels.	17
M5	Jogger	Drives the jogger plate to jog the copies against the front side plate.	20
M6	Stapler Unit Drive	Drives the stapler unit in accordance with the required staple position and angle.	24
M7	Bin Rear Plate Drive	Lowers and raises the bin rear plate.	25
M8	Sorter Exit	Delivers the paper into the bins.	28
Sensors			
S1	Bin Jam (LED)	Detects paper jams at the distribution section and detects if there is paper in the bins.	3
S2	Proof Exit	Detects paper jams at the proof tray exit.	4
S3	Entrance	Detects paper jams at the entrance guides.	5
S4	Staple Hammer Home Position	Detects if the staple hammer is at the home position.	10
S5	Stapler Unit Pulled-out position	Detects if the stapler unit is at the pulled-out position.	11
S6	Paper	Detects whether copies are under the hammer.	12
S7	Stapler Unit Home Position	Detects if the stapler unit is at the home position.	14
S8	Grip Home Position	Detects if the grip assembly is in the home position.	16
S9	Bin Jam (Photo Tr.)	Detects paper jams at the distribution section and detects if there is paper in the bins.	19
S10	Wheel Sensor	Detects the bin position.	18
S11	Bin Home Position	Detects if the bins are at the home position.	21
S12	Jogger Home Position	Detects if the jogger plate is at the home position.	22
S13	Bin Rear Plate Open	Detects if the bin rear plate is at the open position.	26
S14	Bin Rear Plate Home Position	Detects if the bin rear plate is at the home (closed) position.	27

Symbol	Name	Function	Index No.
Solenoids			
SOL1	Turn Gate	Opens and closes the turn gate to direct the copies into either the proof tray or the bins.	2
SOL2	Grip	Opens and closes the grip arms to grip the copies on the bins.	13
SOL3	Grip Arm Positioning	Moves the grip ass'y to the rear and front to catch or release the paper to carry it to the stapler.	15
PCBs			
PCB1	Main Control	Controls all sorter stapler functions.	29
Switches			
SW1	Door Safety	Cuts the dc power when the front door is opened.	6
SW2	Cartridge Set	Detects if the staple cartridge is installed or not.	7
SW3	Staple End	Detects staple end.	8

4. BASIC OPERATION

4.1 NORMAL (PROOF MODE) AND SORT/STACK MODE

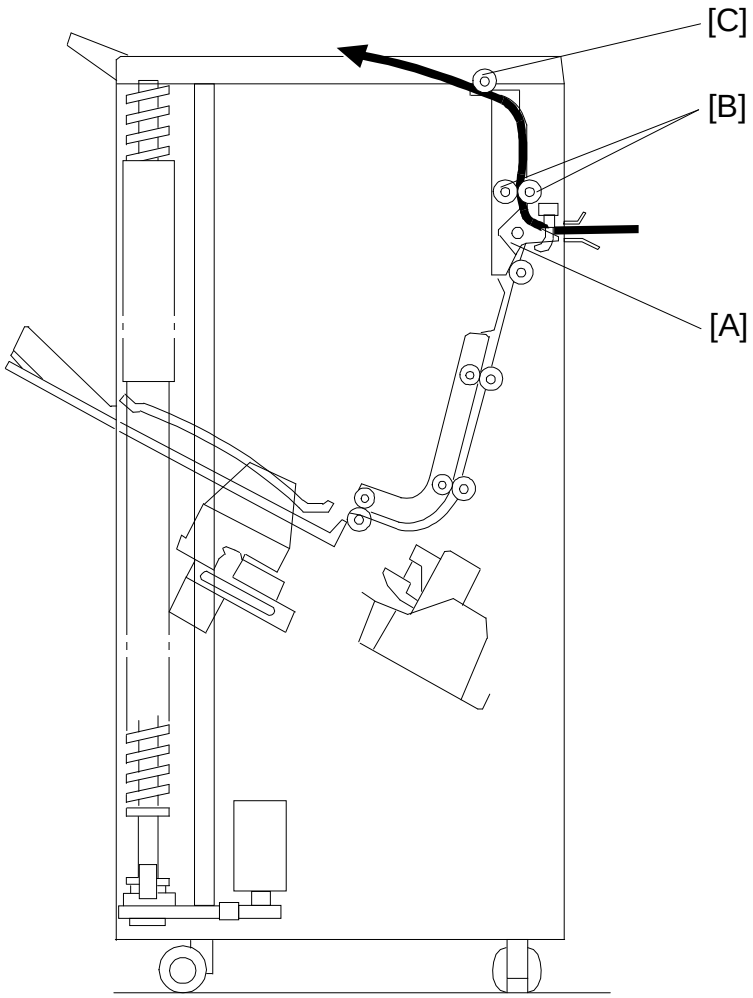

A664D500.wmf

Copies exiting the copier pass through the entrance guide plates to the turn gate section. The turn gate [A] will send copies either to the proof tray or to the bins, depending on the mode.

– Normal (proof) mode (from the turn gate section to the proof tray) –

The turn gate solenoid energizes to turn the turn gate clockwise when the ◇ key is pressed. The turn gate directs copies through the proof transport section to the proof tray. The main motor turns counterclockwise to rotate the vertical transport rollers [B] and proof exit roller [C].

– Sort mode (from the turn gate section to the bins) –

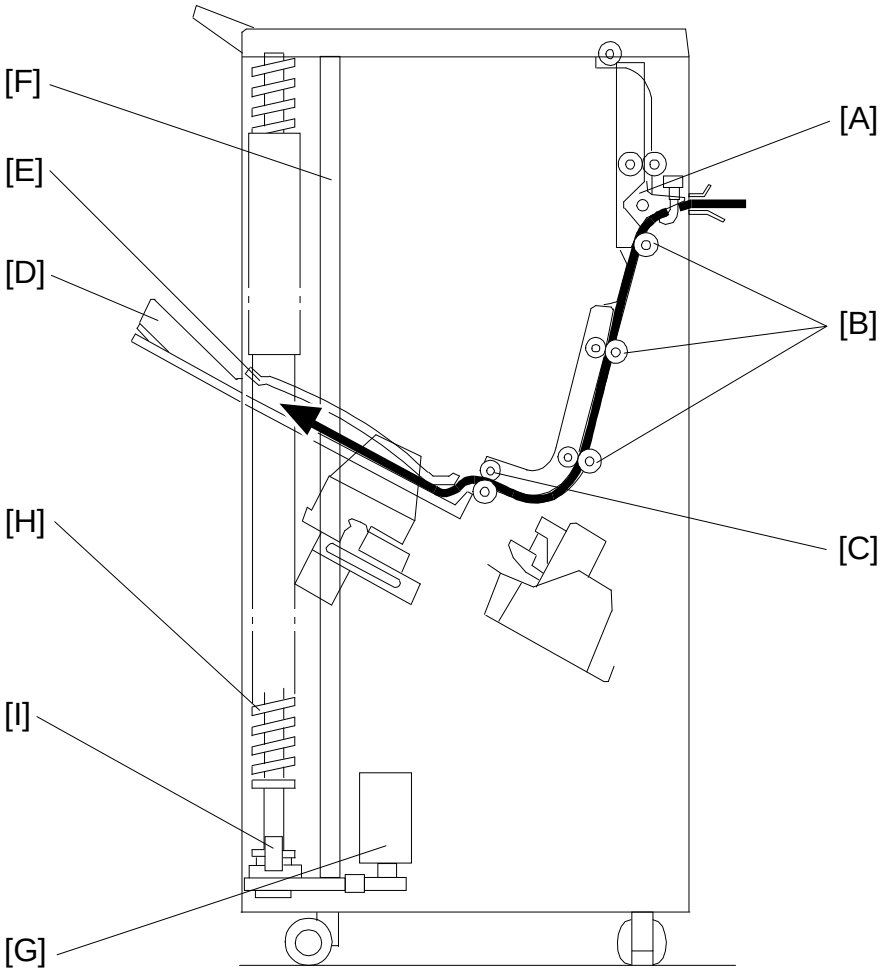

A664D501.wmf

In this mode, the turn gate solenoid stays off to keep the turn gate [A] at the upper position. The main motor turns clockwise to rotate the sorter transport rollers [B] and the exit motor rotates the exit rollers [C].

The turn gate directs copies to the sorter bins through the sorter transport section, then the first copy is delivered between the top bin [D] and the upper guide plate [E]. The jogger plate [F] then jogs to square the copies each time.

Before the next copy reaches the sorter exit roller, the bin drive motor [G] rotates and advances the bin one step (the helical wheels [H] rotate once). When the cut out in the actuator reaches below the wheel sensor [I], the bin drive motor turns off.

Bins advance each time copies are delivered.

– Stack mode (from the turn gate section to the bins) –

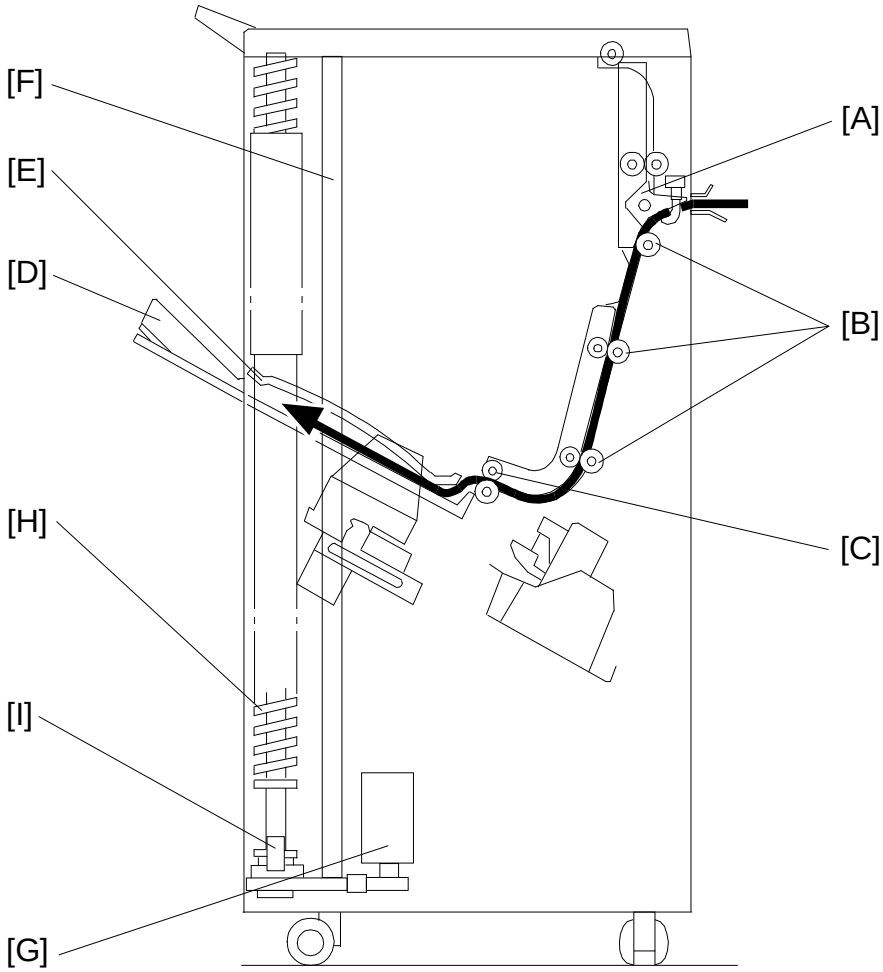

A664D501-2.wmf

As with sort mode, the turn gate solenoid stays off and the turn gate [A] stays up when the ◇ key is pressed. The main motor turns clockwise to rotate the sorter transport rollers [B] and the exit motor rotates the exit rollers [C].

The turn gate directs copies to the sorter bins through the sorter transport section, then the copies are delivered between the top bin [D] and the upper guide plate [E]. The jogger plate [F] then jogs to square the copies each time.

All copies of the copy run are then fed to the first bin. When the final copy is delivered, the wheel drive motor [G] turns and advances the bin one step (the helical wheels [H] rotate once). When the cut out in the actuator reaches below the wheel sensor [I], the bin drive motor turns off.

4.2 STAPLE MODE

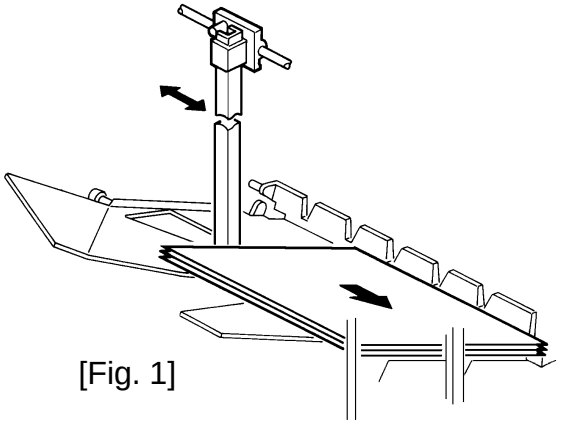

[Fig. 1]

A664D502.img

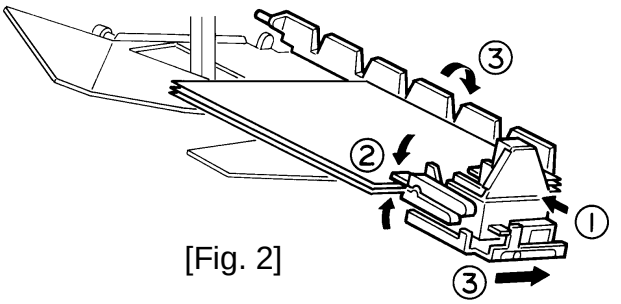

[Fig. 2]

A664D503.img

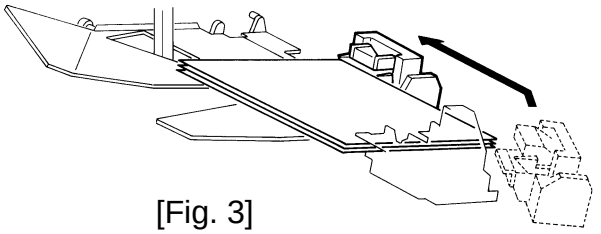

[Fig. 3]

A664D504.img

When the final set of copies is jogged [Fig. 1], the stapler unit staples the stacked copies as follows:

The grip arms move inside the front side plate and catch the paper.

The bin rear plate is turned so as to be flat with the sorter bin.

The grip assembly brings the copies down underneath the stapler [Fig. 2].

The staple unit changes position (the position varies depending on the copy size and staple mode) and the stapler staples the copies [Fig. 3].

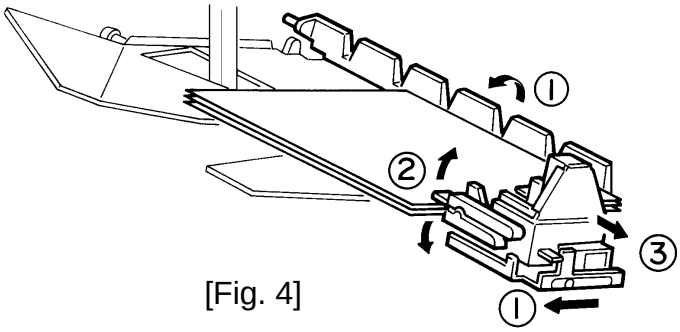

[Fig. 4]

A664D505.img

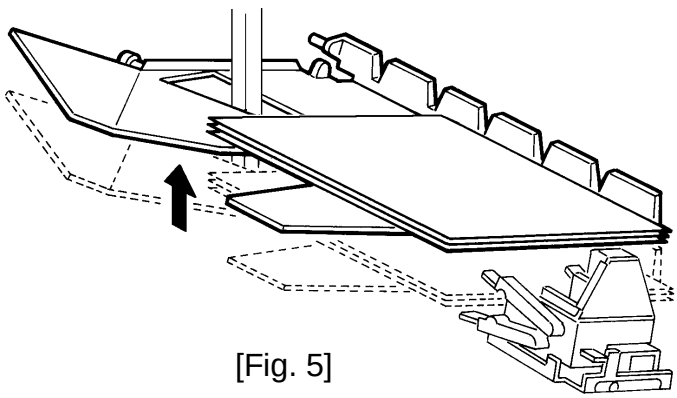

[Fig. 5]

A664D506.img

The grip assembly brings the stapled copies back to the bin and the bin rear plate returns to the original position.

The grip assembly releases the copies and returns to outside the front side plate so as not to disturb the bin movement [Fig. 4].

The bin advances one step [Fig. 5].

When the final set of copies is stapled, the stapler unit is returned to the home position.

There are two staple modes.

1) Automatic stapling:
   In ADF mode, when staple mode is selected before pressing the ◇ key, copies will be delivered to each bin and stapled automatically.

2) Manual stapling:
   In sort mode, after copies are sorted in the bins, the copies will be stapled when the manual staple key is pressed and the staple position is selected. In stack mode, manual stapling is impossible.

5. TURN GATE

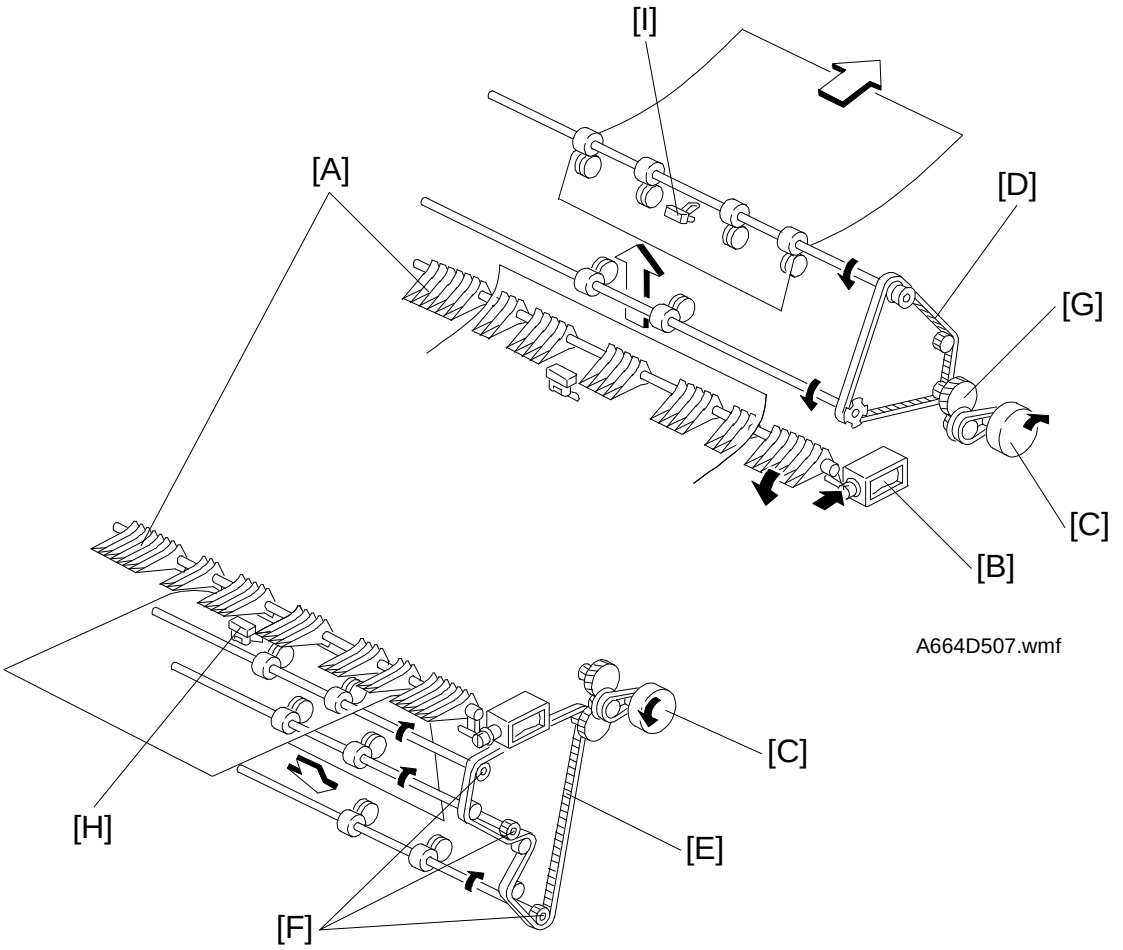

The turn gate [A] sends copies to the proof tray or the sorter bins depending on the mode. In the proof mode, the turn gate solenoid [B] turns on and the main motor [C] turns clockwise when the ◇ key is pressed.
The turn gate [A], directs copies upward through the proof transport section to the proof tray. In this mode, main motor drive is transmitted by both the proof drive belt [D] and sorter drive belt [E]. However, the one-way clutch in each sorter transport roller drive gear [F] does not transmit the drive to the sorter transport rollers.

In the sort, stack, and staple modes, the turn gate solenoid stays off to direct copies downward to the sorter transport section. When the ◇ key is pressed, the main motor [C] turns counterclockwise.
In this mode, main motor drive is not transmitted to the proof drive belt [D] because of the one-way clutch in the pulley [G]. The entrance [H] and the proof exit [I] sensors check for paper jams.

6. BIN DRIVE MECHANISM

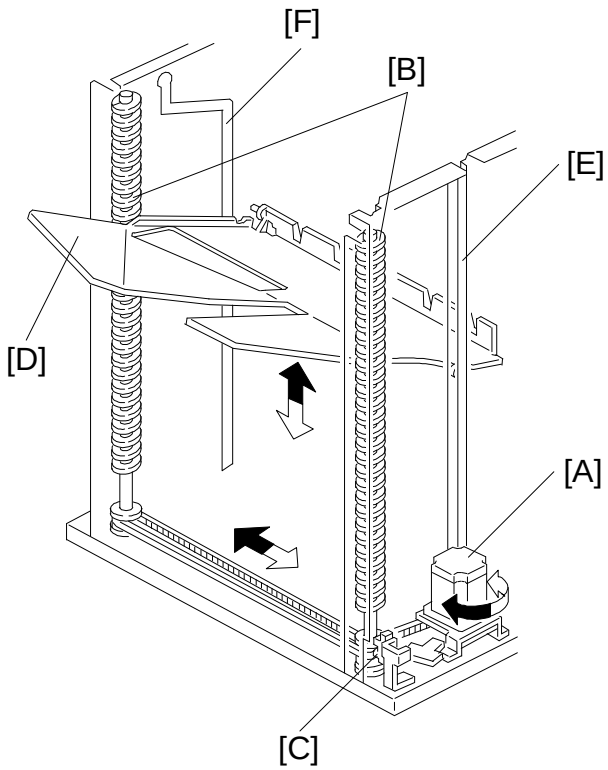

A664D509.wmf

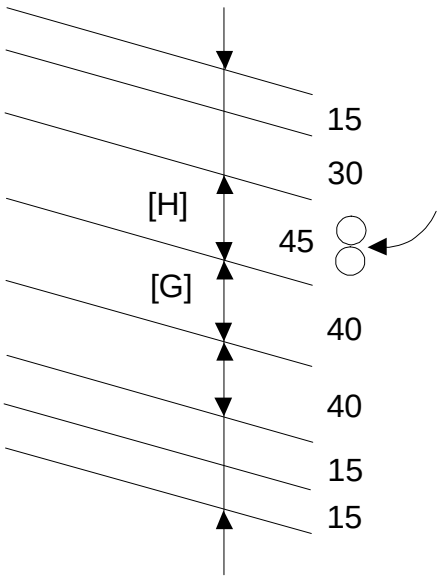

A664D510.wmf

The bin drive mechanism moves the bins up and down to receive copies. The main components in this mechanism are the bin drive motor [A], the two helical wheels [B], the wheel sensor [C], and the bins themselves [D]. There are four pins on each bin. Two of them fit in the slots in the helical wheels. Another pin fits into the slot [E] in the front side frame, and the last pin fits in the guide rail [F]. The pins slide up and down in these slots.

Two timing belts transmit drive from the bin drive motor to the helical wheels. When the motor rotates clockwise, the bins lift (black arrow) and when it rotates counterclockwise, the bins lower (white arrow). The wheel sensor actuator on the front helical wheel has a slot which detects when the helical wheel has rotated 360 degrees.

When the bins are advanced, the helical wheels rotate once (360 degrees) for each step.

As the pitch of the spiral on the helical wheel is greater when bins are at the staple and paper exit area than when bins are elsewhere, the amount of bin shift is greater when bins are at the staple and paper exit area. This leaves enough space to staple [G] and stack paper [H] and reduces the total machine height.

7. BIN HOME POSITION

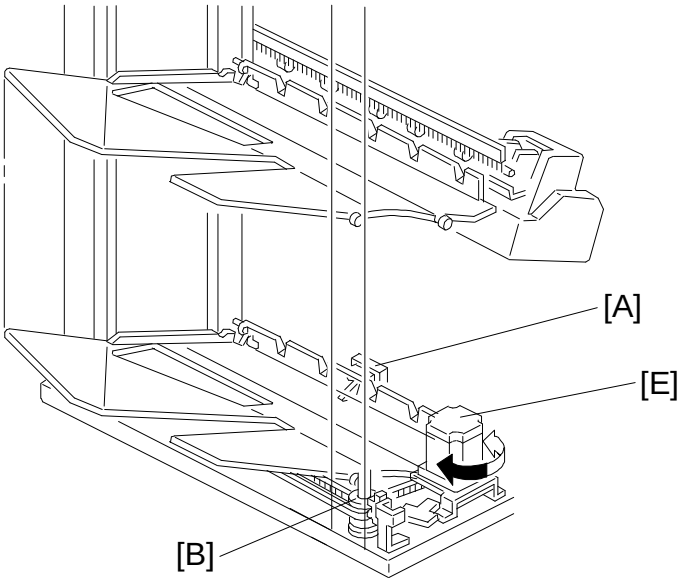

A664D511.wmf

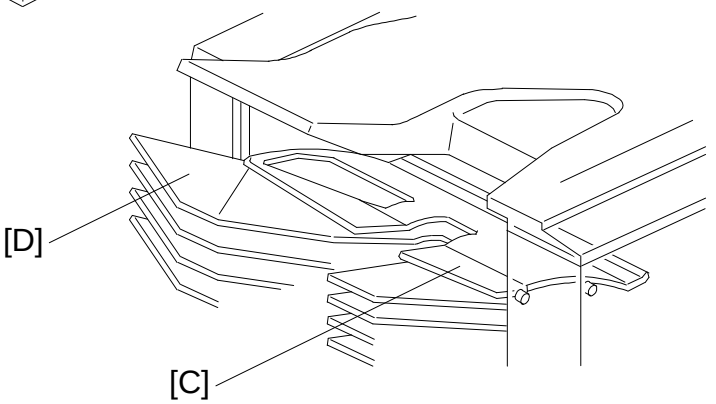

A664D512.wmf

The bin home position sensor [A] and the wheel sensor [B] ensure that the sorter exit roller is between the upper guide plate [C] and the 1st bin [D] when all the bins are at the home position.

When the main switch is turned on, the bin lift motor [E] lowers the bins (turns counterclockwise) until the bottom bin actuates the bin home position sensor. Then, the bin lift motor raises the bins (turns clockwise) until the wheel sensor activates. At this point, the bins are in the home position.

8. JOGGER

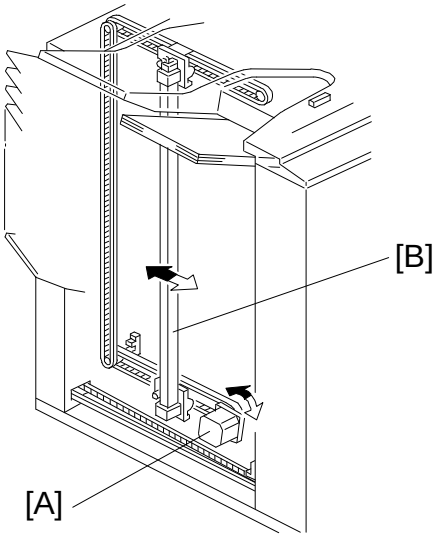

A664D513.wmf

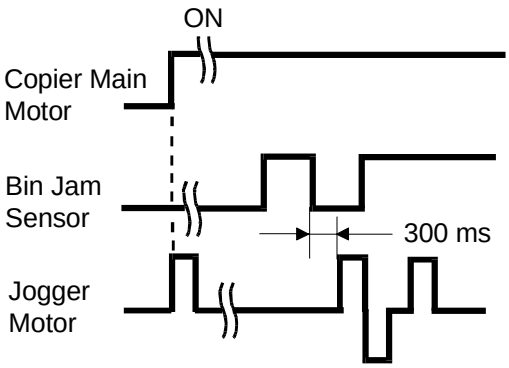

A664D514.wmf

NOTE:
- The bin jam detector contains two LED/phototransistor pairs.
- To detect jams, light from an LED above the bins passes through the slots in the bins to a phototransistor below the bins. If the light path is blocked at the wrong time, a jam is detected.
- To detect paper in the bins, light from another LED above the bins passes through the circular holes in the bins to another phototransistor below the bins. If the light path is blocked, the machine determines that there is paper in the bins.

When the ⧫ key is pressed in the sort, staple, and stack modes, the copier sends the paper size information to the sorter stapler. In accordance with this data, the jogger motor [A] drives the jogger plate [B] from the jogger home position to a point 10 mm wider than the selected paper.

300 ms after the trailing edge of the copy passes underneath the bin jam sensor (jam detection part), the jogger motor rotates forward and in reverse. This makes the jogger plate push all the copies against the front side plate to square the sheets. When the jogger plate pushes the paper, the plate shifts to a position 5 mm wider than the paper size when the bins lift, and it shifts to a position 1 mm narrower than the paper size when the bins lower.

The jogger plate then returns to 10 mm away from the selected paper size for the next copy.

When the bin jam sensor (paper detector part) detects that all copies have been removed from the bins after jogging is finished, the jogger plate returns to its home position.

Fig. 1

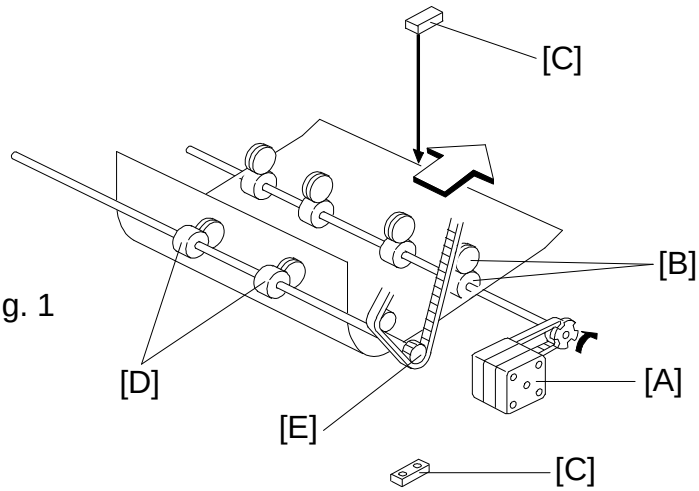

A664D515.wmf

Normally all rollers in the sorter stapler transport the paper at a speed of 360 mm/s. To have enough paper jogging time, the sorter exit motor [A] rotation speed changes as follows to transport the paper quickly and to stack the paper smoothly into the bins.

- 360 mm/s: When the sorter exit roller [B] catches the leading edge of the paper
- 1,000 mm/s: After the bin jam sensor [C] detects the leading edge of the paper
- 600 mm/s: When releasing the trailing edge of the paper

The transport roller [D] is driven at a speed of 360 mm/s constantly. However, when the sorter exit roller [B] rotates quickly, the transport rollers also rotate quickly with the pulled paper because of the one-way clutch in the drive gear [E].

– Jogger Off Conditions –

1. Under the following conditions, the jogger plate does not jog after copies are delivered to the bins.
   - If paper is loaded in a bin by hand while the sort/stack or staple mode is selected.
   - If the selected paper size does not match the stapling specifications.
   - If copy of smaller width is delivered to the bins later in the "Mixed sizes" mode.
2. If paper is in a bin before the main switch is turned on, the sort/stack mode is disabled when the sort key is touched.

9. BIN REAR PLATE DRIVE

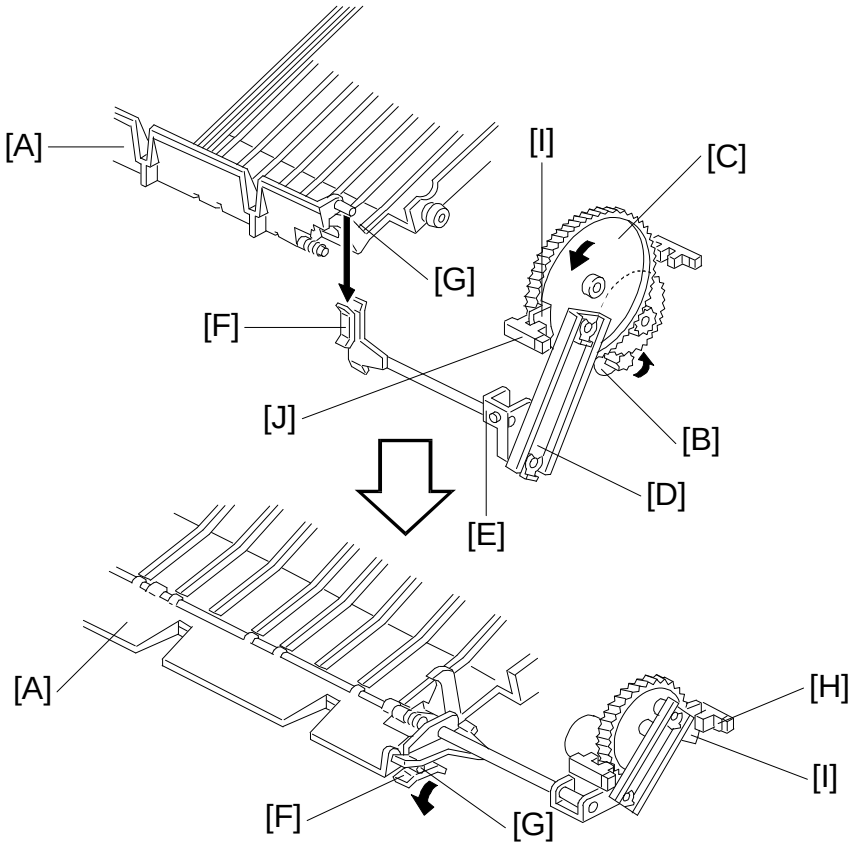

A664D516.wmf

The bin rear plates [A] basically stand up as shown (top diagram). They are lowered only during stapling as shown (bottom diagram).

In staple mode, when all copies have been jogged by the jogger plate, the bin rear plate drive motor [B] rotates gear [C]. Gear [C] drives the piston rod [D] to push the lever [E] down.

The holder [F] engaging the pin [G] on the bin rear plate lowers with the lever [E]. Thus, the bin rear plate becomes flat so as not to interfere with the copies being brought to the stapling position by the grip assembly.

While the rear plate is down (during stapling), the bin rear plate open sensor [H] is interrupted by the actuator [I] (bottom diagram). After stapling is completed and stapled paper is returned to the bin, gear [C] rotates 180 degrees and the bin rear plate returns to its home position.

When the bin rear plates are in the home position, the bin rear plate HP sensor [J] is interrupted by the actuator [I] (top diagram). Also, the holder [F] is vertical again, and the pins [G] on the bins can move up or down through the holder as the bins are moved up or down.

10. GRIP ASSEMBLY

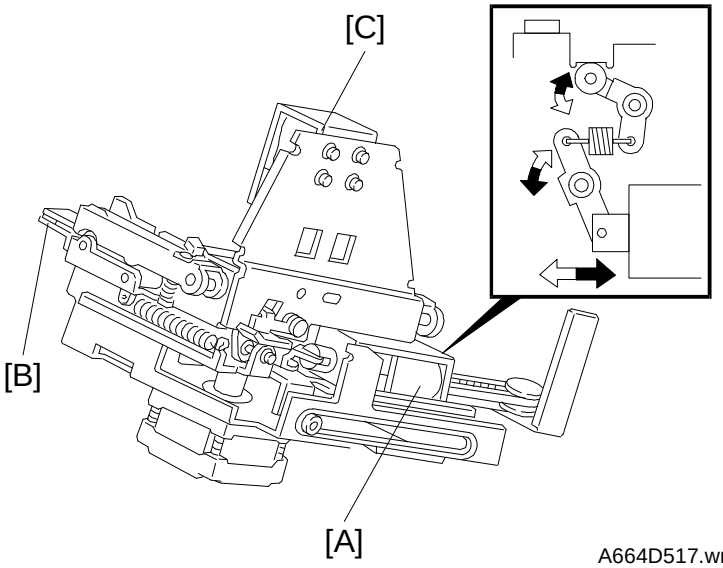

A664D517.wmf

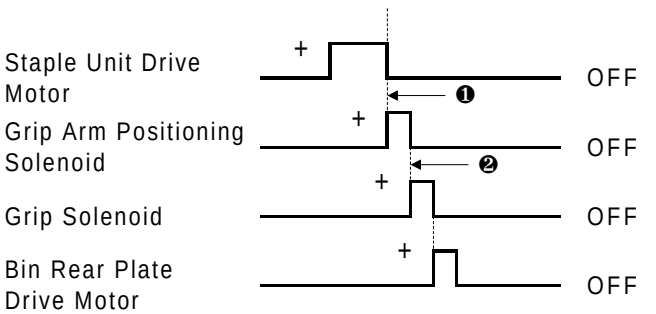

A664D518.wmf

The grip assembly works as follows:

❶ When the stapler unit reaches the stapling position, the grip arm positioning solenoid [A] activates and the plunger is pulled in to move the grip arms [B] towards the rear of the machine. This is to access the paper on the bin.
The grip arm positioning solenoid has a strong magnet inside; the plunger stays in this condition until the solenoid is energized by an opposite charge.
The inset at the upper right of the illustration shows the mechanical linkage as seen from the top.

❷ The grip solenoid [C] activates to close the grip arms and the grip arms catch the papers.
For this solenoid also, the plunger keeps the grip arms closed until the solenoid is energized by an opposite charge.

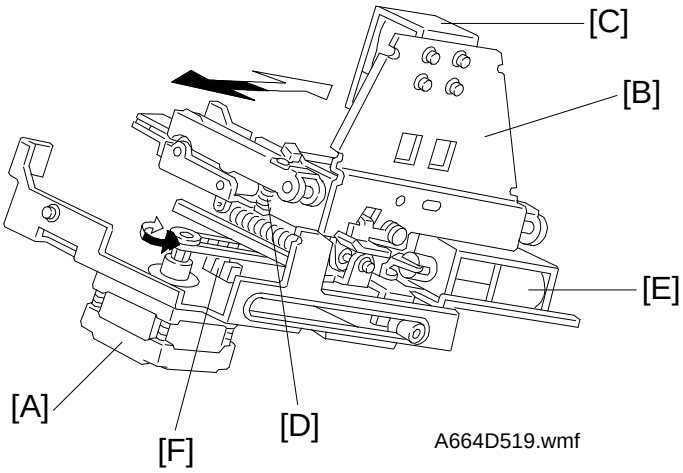

A664D519.wmf

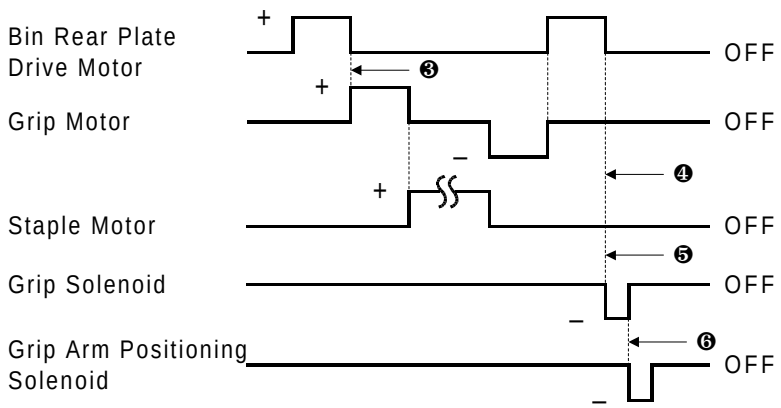

A664D520.wmf

❸ After the bin rear plate drive motor lowers the bin rear plate, the grip motor [A] turns clockwise (white arrow) until the gripper [B] carries the paper to the stapling position.

❹ After stapling is finished, the grip motor turns counterclockwise to move the stapled copies held in the grip arms back to the bin.

❺ When the grip solenoid [C] activates in reverse, the return spring [D] opens the grip arms to release the copy into the bin.

❻ The grip arm positioning solenoid [E] activates to return the grip arms to the home position to prepare for the next stapling cycle.

The grip home position sensor [F] is actuated while the gripper is in the home (grip) position. The sorter stapler main control board sends the appropriate pulses to the grip motor (a stepper motor) [A] to reach the grip position and stapling position.

Vertical stapling positions can be adjusted by changing the number of stepper motor pulses from the home position (see the SP mode table in the copier service manual).

11. STAPLER UNIT

11.1 STAPLER UNIT DRIVE MECHANISM

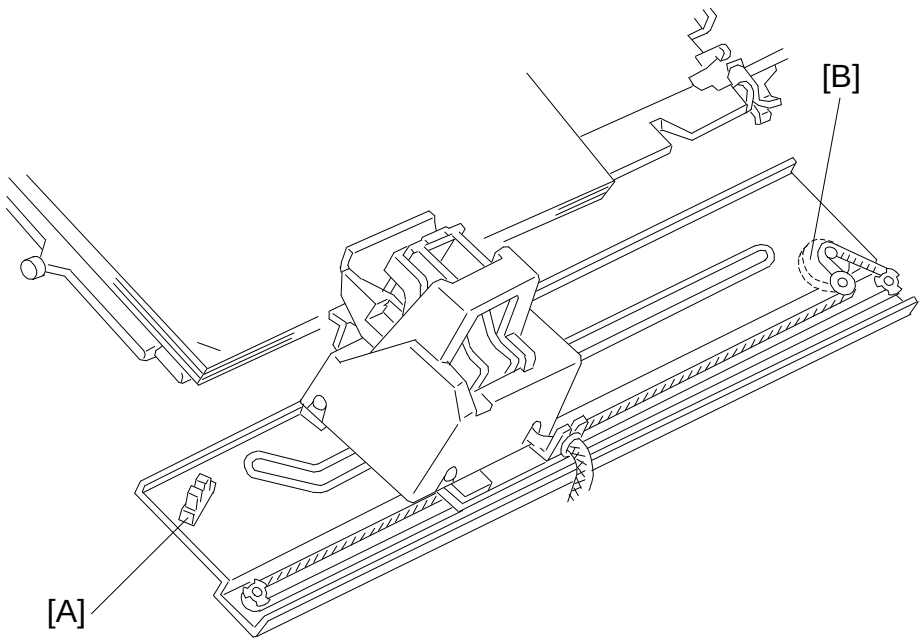

A664D529.wmf

The stapler unit moves from the home position (top slant position) towards the rear of the machine in order to change the stapling position. The stapler unit HP sensor [A] activates when the stapler unit is in the home position.

In Top Slant mode, the stapler stays at the home position.

In "Top" ("Bottom") single staple mode, the stapler unit moves to the front (rear) single staple position and stays there until all stapling is completed. It then returns to the home position.

In "2 Staples" mode or "Bottom" single staple mode, the stapling positions depend on the paper size. The stapler unit drive motor [B] is a stepper motor, and the stapling position is reached by counting the steps from the home position. During stapling in the "2 Staples" mode, the stapler unit goes back and forth to staple the two positions.

Horizontal stapling positions can be adjusted by changing the number of stepper motor pulses from the home position (see the SP mode table in the copier service manual).

11.2 STAPLER

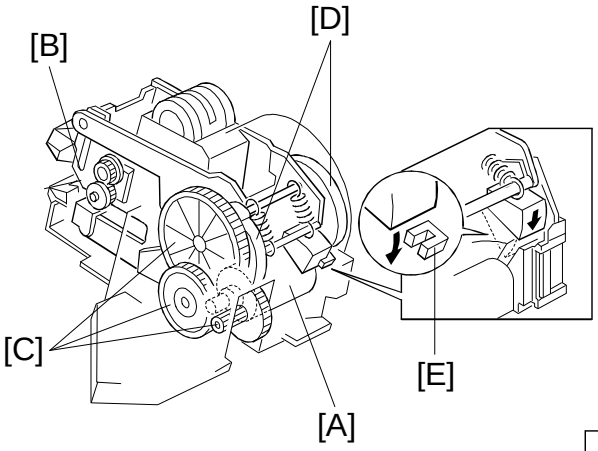

A664D521.wmf

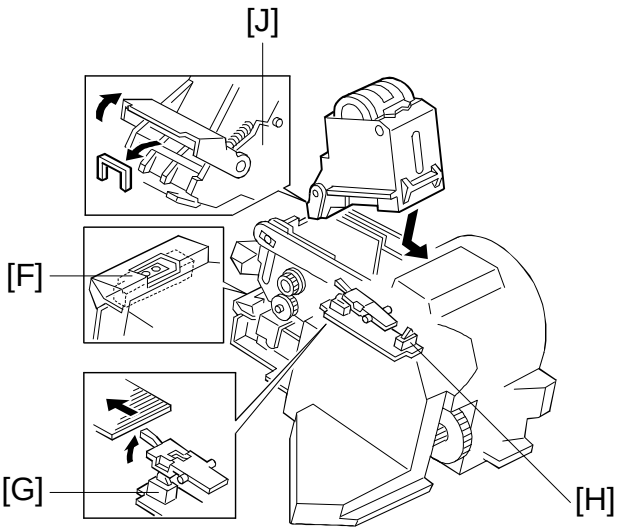

A664D522.wmf

The stapler motor [A] drives the staple sheet drive belt. The staple sheets are fed under the hammer [B].

The stapler motor drives the staple hammer via gears [C] and two eccentric cams [D].

When the aligned copies are brought to the stapling position by the grip, the stapler motor starts rotating to staple the copies. When the cams complete one rotation, the staple hammer home position sensor [E] is de-actuated. The stapler motor then stops.

When the paper sensor [F] in the grip assembly does not detect copies under the hammer, the stapler motor does not rotate.

The staple end sensor [G] detects staple end conditions. The cartridge set sensor [H] detects when the staple cartridge is not installed.

The staple cartridge has a clinch area [J], in which the jammed staples are left. Operators can remove the jammed staples from the cartridge.

– Conditions in which Stapling is Disabled –

1. Under the following conditions, the staple mode is disabled when the staple key on the operation panel is pressed.

   - If there is paper in a bin before the main switch is turned on.
   - If the selected paper size does not match the stapling specifications.
   - If the paper is fed from the by-pass feed table.

2. Under the following conditions, the staple mode is canceled.

   - If paper is loaded in a bin by hand while the staple mode is selected.
   - If only one sheet is delivered to the bin.
   - If the stack, slip sheet, or interrupt modes are selected.

3. Under the following conditions, the manual stapling mode in sort mode cannot be selected.

   - If paper is loaded in a bin by hand while the sort mode is selected.
   - If the paper size in the bin does not match the stapling specifications.
   - If only one sheet is delivered to the bin.
   - If a smaller width of paper is delivered on the bin later in "Mixed Sizes" mode.
   - If copies already stapled are left in the bin.

11.3 STAPLER UNIT PULL-OUT MECHANISM

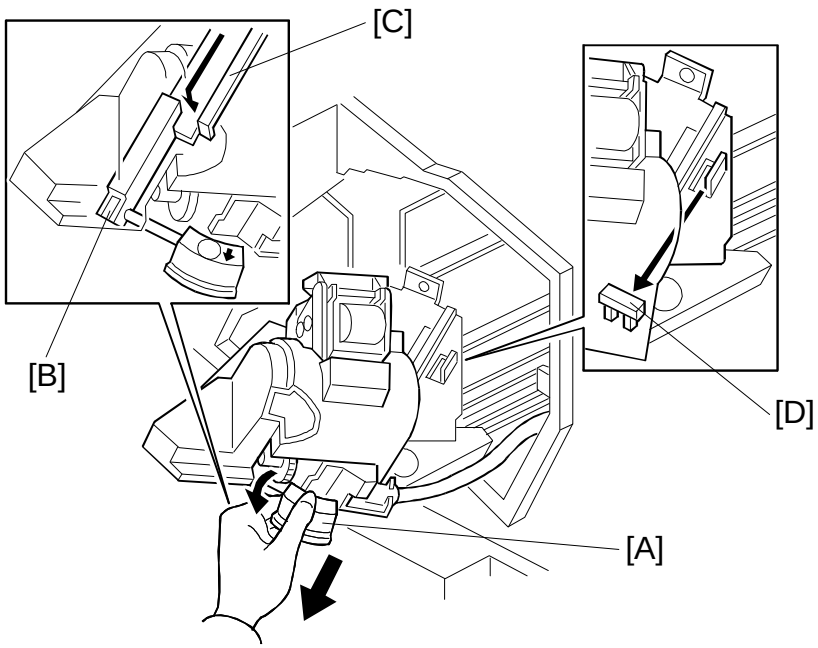

A664D525.wmf

For easy staple cartridge replenishment, the stapler unit can be pulled out to the front. When pulling out the R3 release grip [A] , the stopper is released and the staple unit can be pulled out (to the "staple unit pulled-out" position). At this position, the stopper arm [B] locks the stapler unit by dropping the arm to the edge of bracket [C].

When the stapler unit is not pushed in completely (the staple unit is between the stapler unit home position and stapler unit pulled-out position [D]), a message is displayed advising the user to put the staple unit in the home position.

12. JAM DETECTION

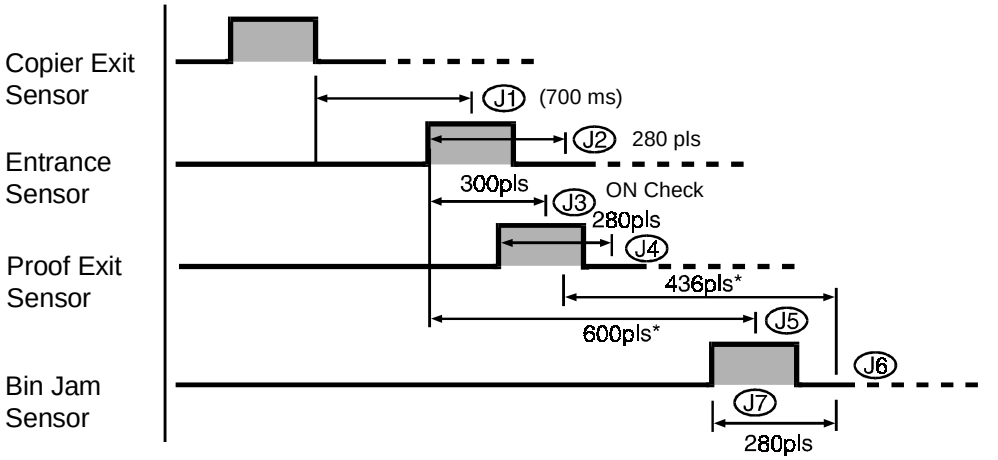

*This is the jam detection timing for the 1st bin. Timing depends on the bins used.

1 pulse ¢ 3.61 ms

A664D526.wmf

– Sorter Jams –

The sorter stapler main control board detects jams when the following conditions are detected. In these cases, a jam signal is sent to the copier, then the copier stops the paper feed and indicates a sorter misfeed.

– Normal (Proof) mode –

J1: The entrance sensor has not turned on 700 ms after the copier exit sensor turns on.

J2: The entrance sensor stays on for more than a certain number of pulses (for example, 280 pulses for A4 sideways).

J3: The proof exit sensor has not turned on 300 pulses after the entrance sensor turns on.

J4: The proof exit sensor stays on for more than a certain number of pulses (for example, 280 pulses for A4 sideways).

– In Sort/Stack or Staple Mode –

J1 and J2: Same as Normal mode.

J5: The bin jam sensor has not turned on for 600 pulses after the entrance sensor turns on.

J6: The bin jam sensor stays on for more than a certain number of pulses (for example, 280 pulses for A4 sideways).

J7: The bin jam sensor is still on when the bin drive motor turns on.

13. TIMING CHARTS

13.1 SORTER/STAPLER TIMING CHART (PROOF MODE)

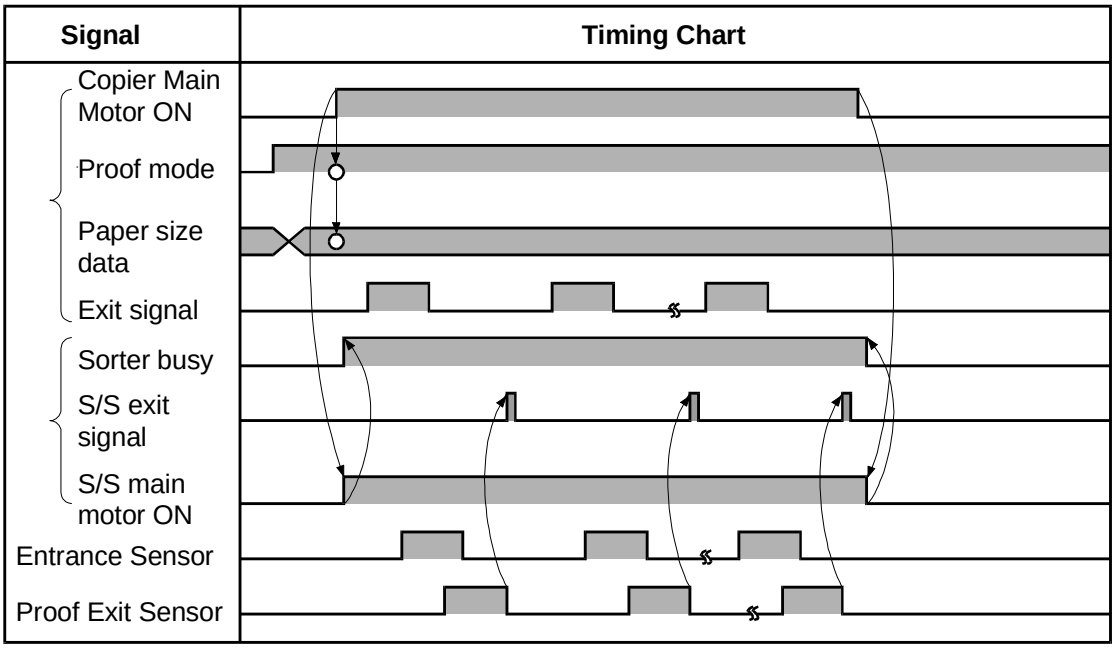

A664D527.wmf

13.2 SORTER/STAPLER TIMING CHART (STAPLE MODE)

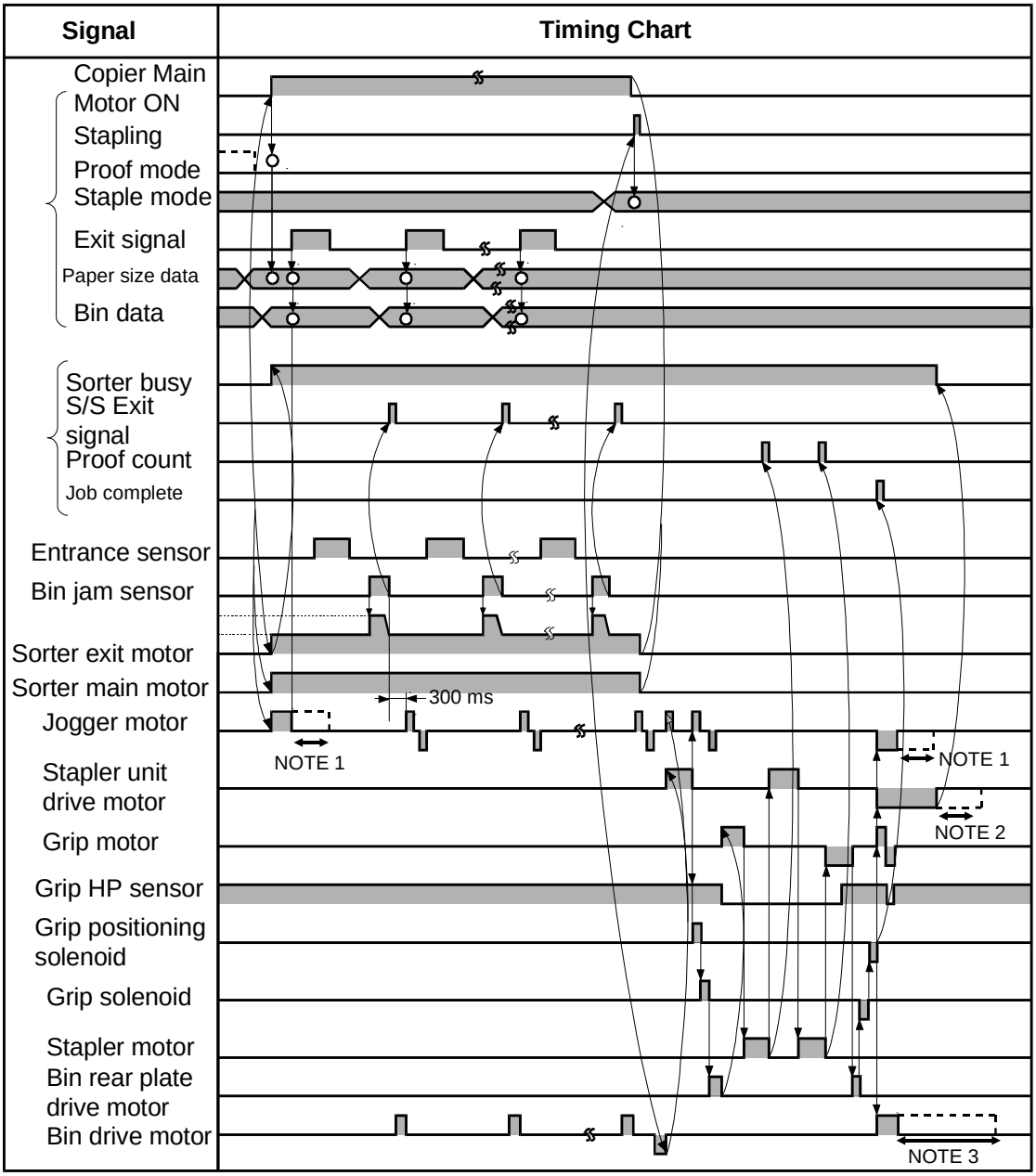

A664D528.wmf

NOTE: 1) Jogger motor on time depends on the paper size.

2) Staple unit drive motor on time depends on the paper size.

3) Bin drive motor on time depends on the number of copy sets.

14. SERVICE TABLES (MAIN CONTROL BOARD)

14.1 DIP SWITCHES

Dip Switch 100

0: OFF 1: ON

Function	1	2	3	4
Standard setting	0	0	—	—
Raises all bins to the top position	1	0	0	0
Free run	0	1	0	0

Dip Switch 101 Vertical Staple Position Adjustment
Dip Switch 102 Horizontal Staple Position Adjustment

Adjustment Value	1	2	3	4
Standard Position	0	0	0	—
0.5 mm	1	0	0	0/1
1.0 mm	0	1	0	0/1
1.5 mm	1	1	0	0/1
2.0 mm	0	0	1	0/1
2.5 mm	1	0	1	0/1
3.0 mm	0	1	1	0/1
3.5 mm	1	1	1	0/1
+ direction (See the illustration below.)	—	—	—	0
– direction (See the illustration below.)	—	—	—	1

NOTE: The adjustment value and the combination of the dip switch positions are exactly the same for Dip Switch 101 and Dip Switch 102.

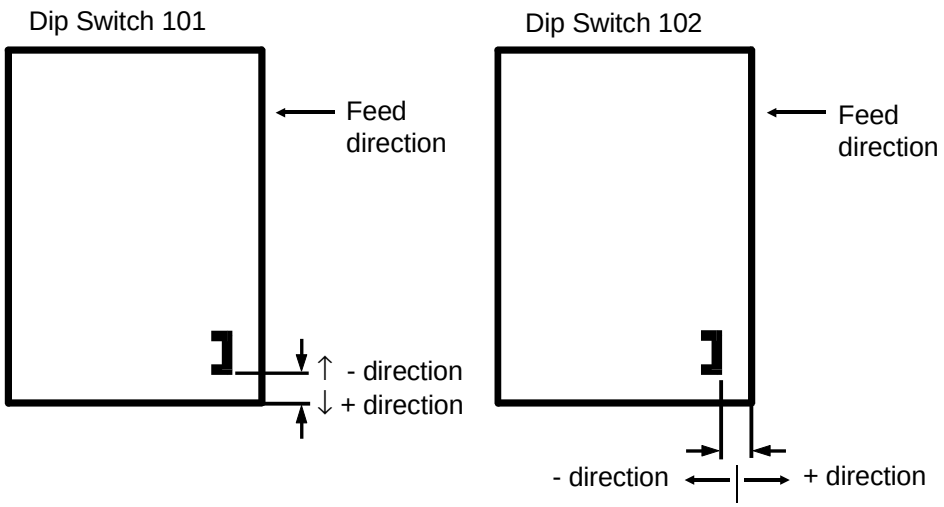

A664M500.wmf

14.2 TEST POINTS

Number	Function
TP100	GND
TP101	+ 5 V

14.3 FUSES

FUSES	Rated Current and Voltage
FUSE100	250 V T5A

15. REPLACEMENT AND ADJUSTMENT

15.1 EXTERIOR COVER REMOVAL

– Front –

Remove the covers in the following order.

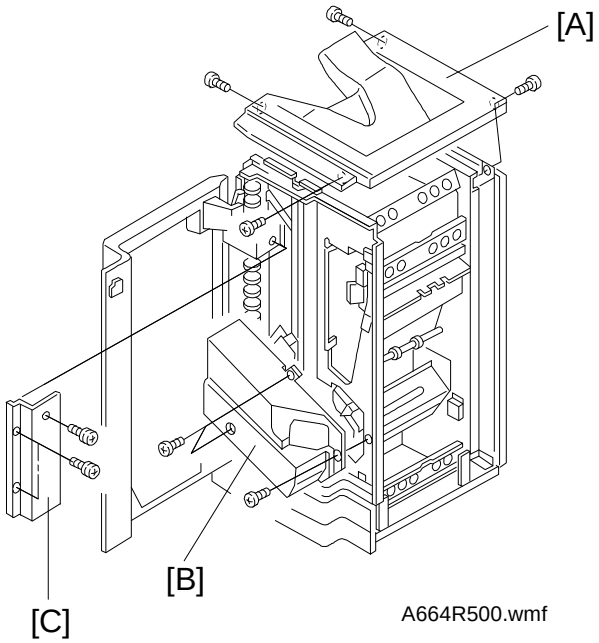

A664R500.wmf

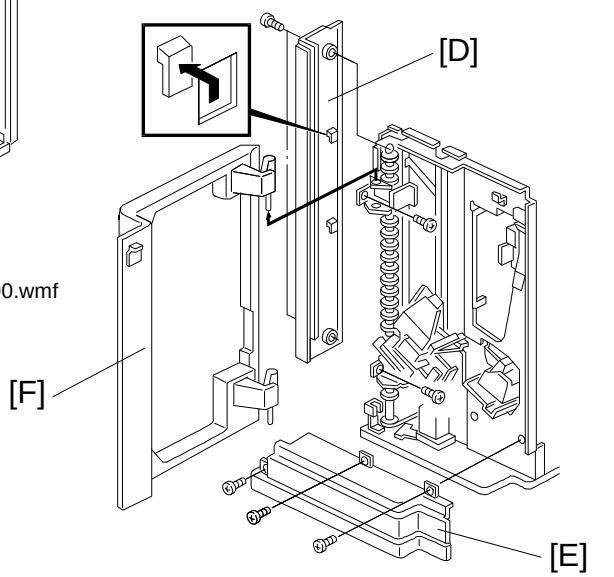

A664R501.wmf

1. Remove the proof tray [A] (4 screws).
2. Open the front door.
3. Remove the front inner cover [B] (3 screws).
4. Remove the front wheel cover [C] (3 screws).
5. Remove the four screws that hold the front left cover [D] and remove the front left cover by shifting the cover up to release the two hooks.
6. Remove the front lower cover [E] (3 screws).
7. Remove the front door [F] (2 hinge pins).

– Rear –

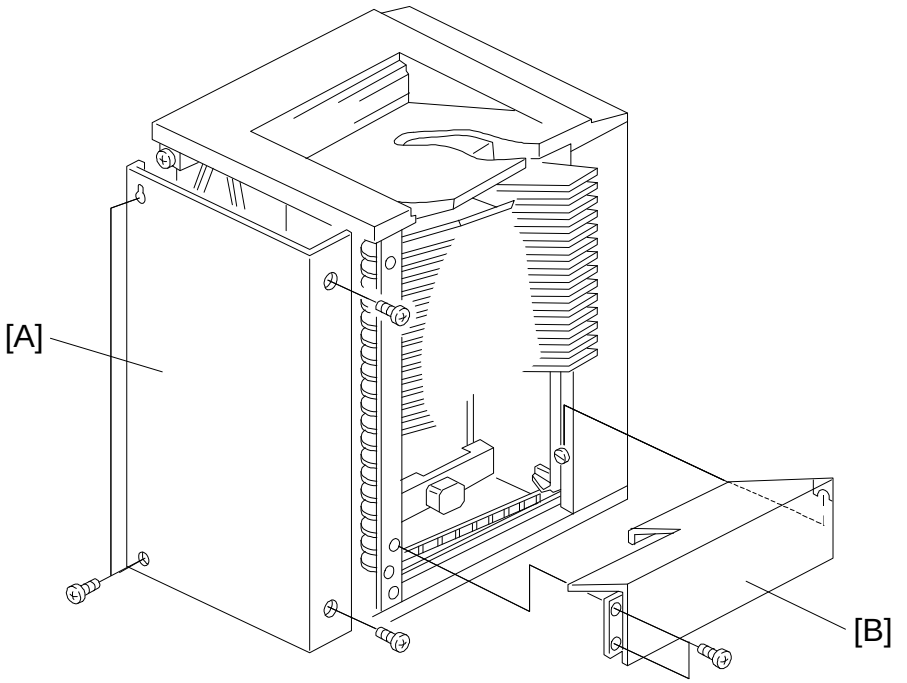

A664R502.wmf

1. Remove the rear cover [A] (6 screws).
2. Remove the bottom plate [B] (2 screws and 1 hook).

15.2 STAPLER REMOVAL AND REINSTALLATION

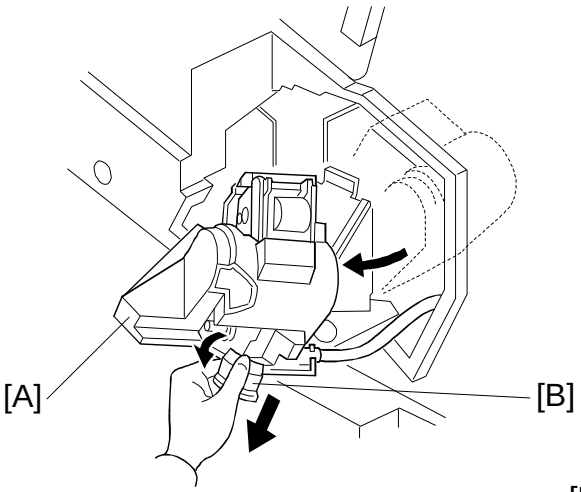

A664R503.wmf

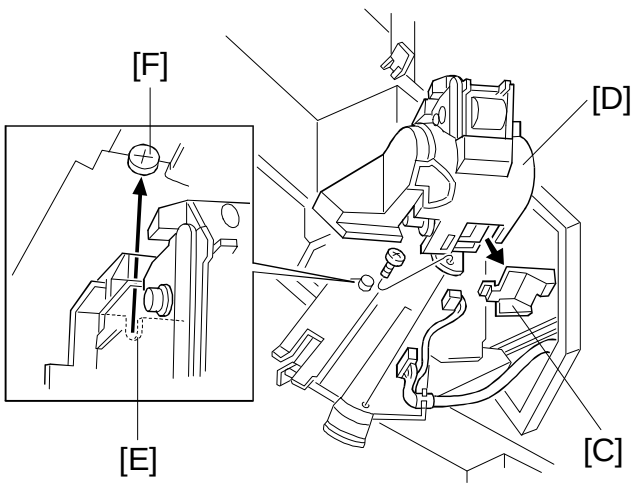

A664R504.wmf

1. Return the stapler unit [A] to the home position by pulling out the stapler unit.
2. Pull out the R3 release lever [B] and pull out the stapler unit.
3. Remove the harness cover [C].
4. Remove the stapler unit [D] (1 connector and 1 screw).

NOTE: When re-assembling, hook the cut-out [E] over the shoulder screw [F].

15.3 JOGGER PLATE REMOVAL AND INSTALLATION

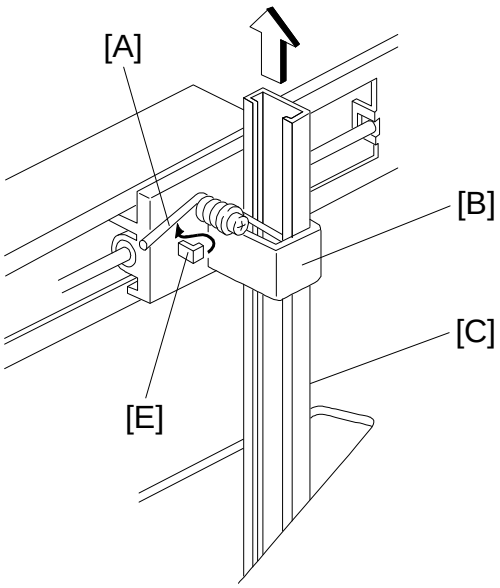

A664R505.wmf

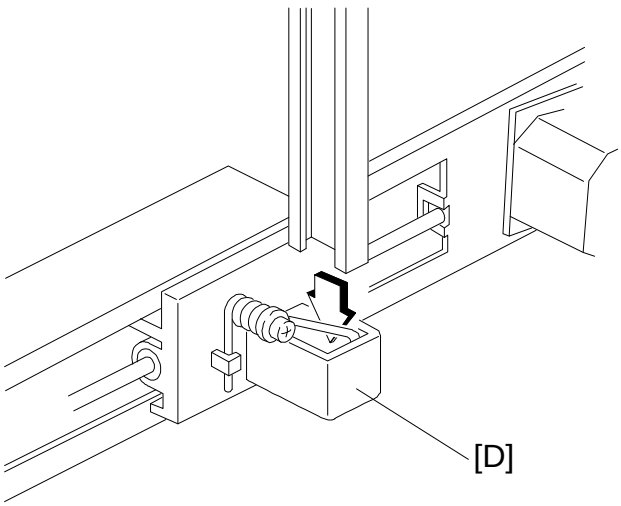

A664R506.wmf

– Removal –

1. Remove the proof tray. (Refer to Exterior Cover Removal.)
2. Release the spring [A] of the upper jogger holder [B], then pull out the jogger plate [C].

– Installation –

1. Insert the jogger plate through the upper holder [B].
2. Push down the jogger plate towards the lower holder [D].
3. Set the jogger plate in the lower holder [D].
4. Hook the spring [A] of the upper jogger holder onto the stopper [E].

15.4 BINS

– Removal –

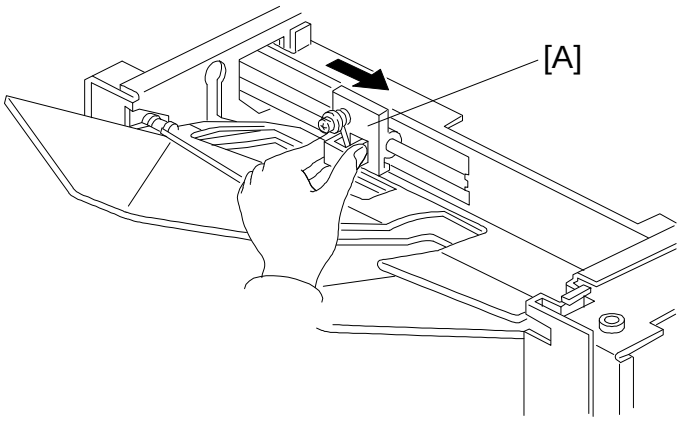

A664R507.wmf

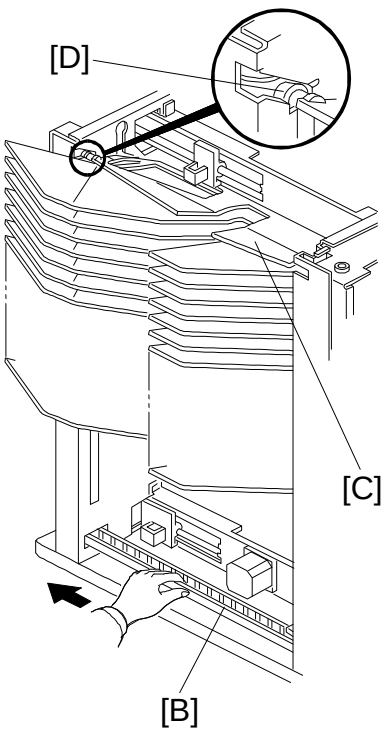

A664R508.wmf

1. Remove the rear cover.
2. Raise all bins to the highest position by turning on DIP SW100-1 on the sorter main PCB, then turn off the main switch of the copier.
3. Remove the jogger plate (refer to Jogger Plate Removal), then move the upper jogger holder [A] to the front.
4. Remove the rear cover, then remove the bottom plate to access the drive belt. (Refer to Exterior Cover Removal.)
5. Manually rotate the helical wheel drive belt [B] and move up the top guide [C] until the three guide pins [D] reach the top of the helical wheel as shown.

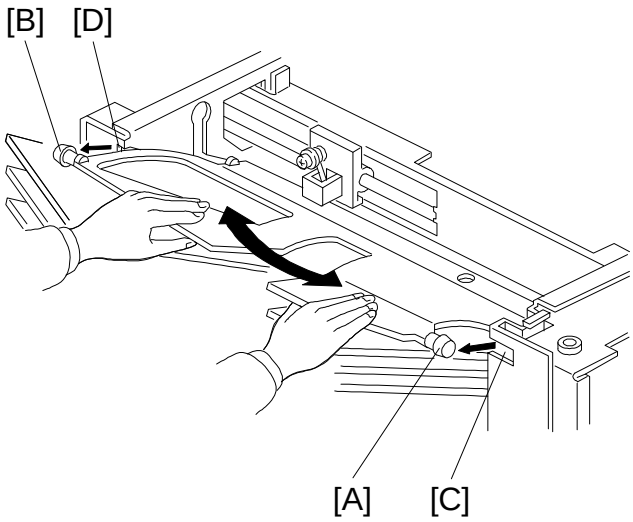

A664R509.wmf

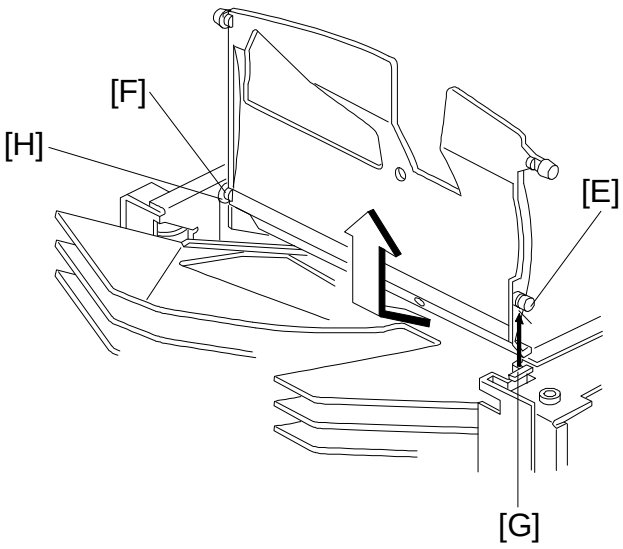

A664R510.wmf

6. Remove the top guide by releasing the pins [A] and [B] from cut-outs [C] and [D] at the end of the bin guide slots. Then remove the pins [E] and [F] from cut-outs [G] and [H].
7. Move up the next bin to the top position by manually rotating the helical wheel drive belt and remove it as in the top guide removal procedure (steps 5 and 6).
8. Remove the other nineteen bins by repeating step 7.

– Installation –

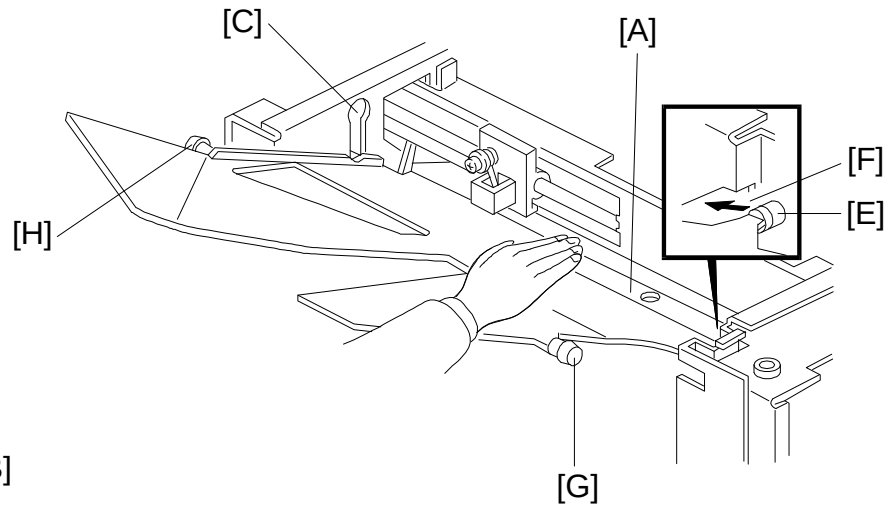

A664R511.wmf

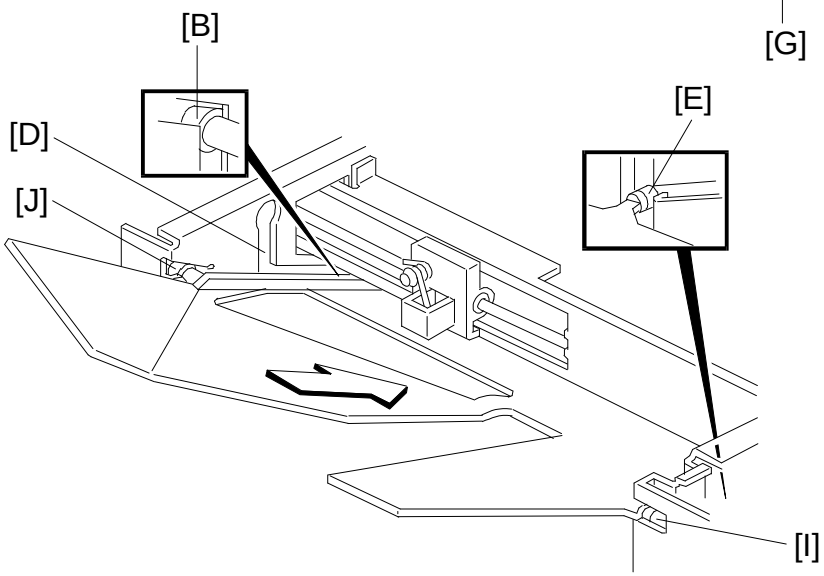

A664R512.wmf

1. While holding the bin rear plate [A] straight, insert rear right guide pin [B] into the slot [C], then lower the rear guide pin to the corner [D].
2. While still holding the bin rear plate straight, insert the front right guide pin [E] into guide slot [F].
3. Insert the other guide pins [G] and [H] into the slots [I] and [J].

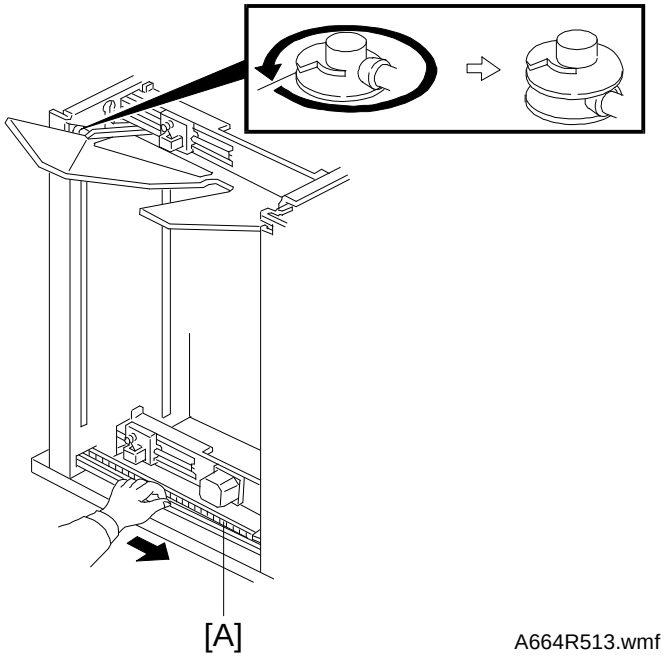

A664R513.wmf

4. Manually rotate the helical wheel drive belt [A] and lower the bin.

   NOTE: Before installing the next bin, rotate the helical wheels only once. Otherwise, the distance between the guide pins [B] will become uneven and the bins will tilt.

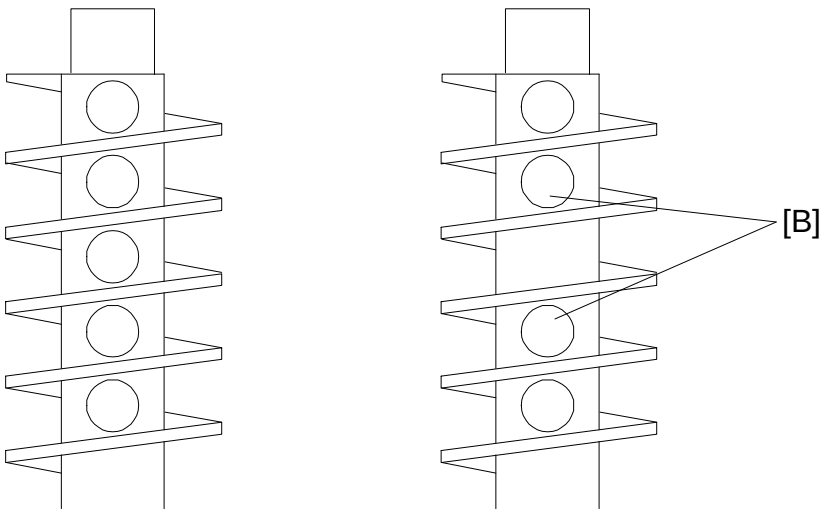

A664R514.wmf

5. Install all bins and the top cover by repeating steps 1 to 4.

6. Re-install the jogger plate and all covers.

15.5 MAIN MOTOR REMOVAL

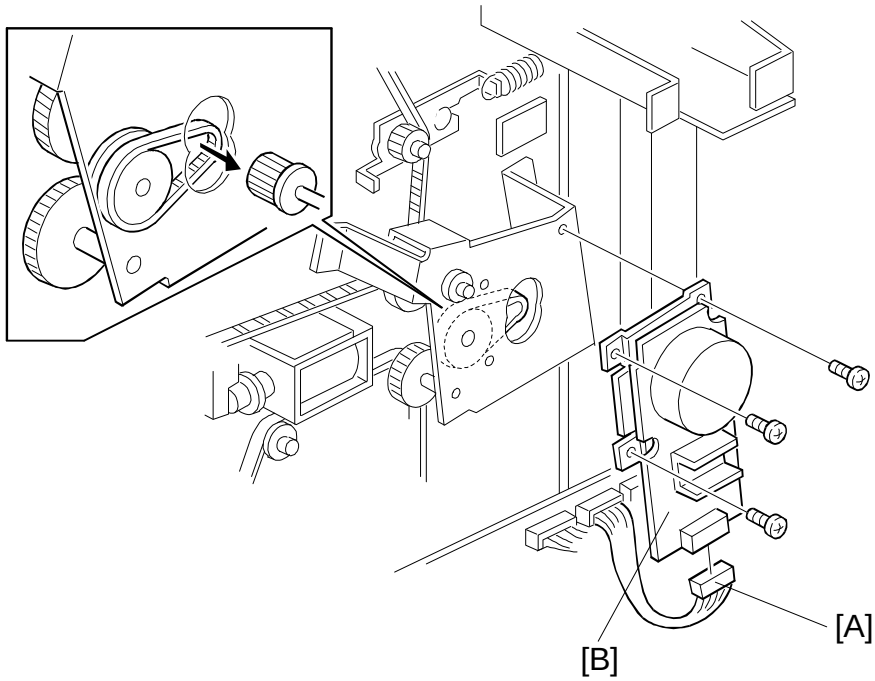

A664R515.wmf

1. Remove the rear cover (4 screws).
2. Disconnect the connector [A].
3. Remove the main motor bracket [B] (4 screws) with the main motor.

15.6 GRIP ASSEMBLY REMOVAL, AND GRIP SOLENOID, AND GRIP POSITIONING SOLENOID ADJUSTMENT

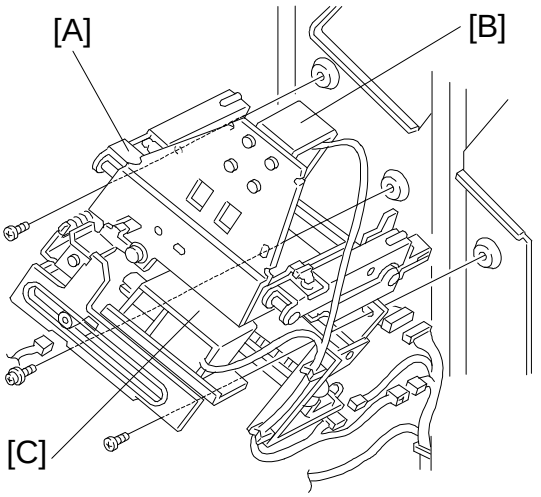

A664R517.wmf

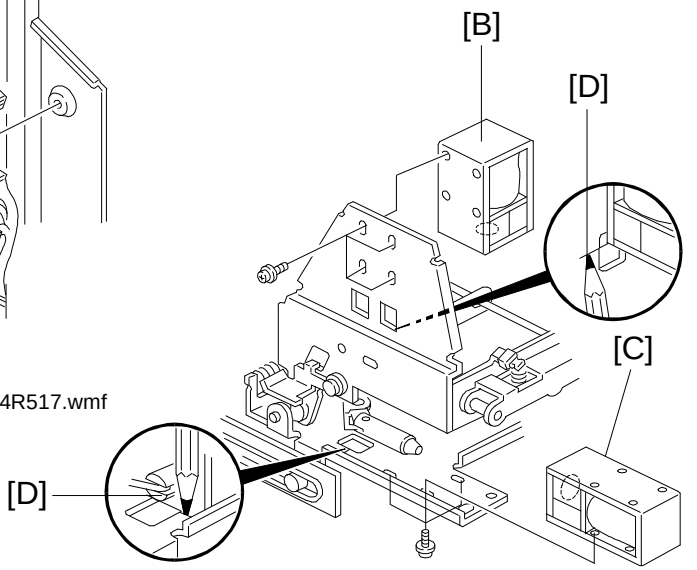

A664R518.wmf

– Grip assembly removal –

1. Open the front cover then remove the front inner cover. (Refer to Exterior Cover Removal.)
2. Remove the grip assembly [A] (4 connectors, 3 screws).
3. Replace the grip solenoid [B] and the grip arm positioning solenoid [C].

   Note: Mark the original positions of the plungers first (see below).

– Grip solenoid [B] and the grip arm positioning solenoid [C] adjustments –

It is impossible to perform the fine positioning adjustments for these solenoids because the magnets in both solenoids pull the plunger very strongly.

So, mark the original position of the solenoids before removing the solenoid. Then place the solenoid at the original position by referring to the mark you made [D] and tighten the screws (4 screws for the grip solenoid and 3 screws for the grip arm positioning solenoid).

15.7 MAIN CONTROL BOARD REPLACEMENT

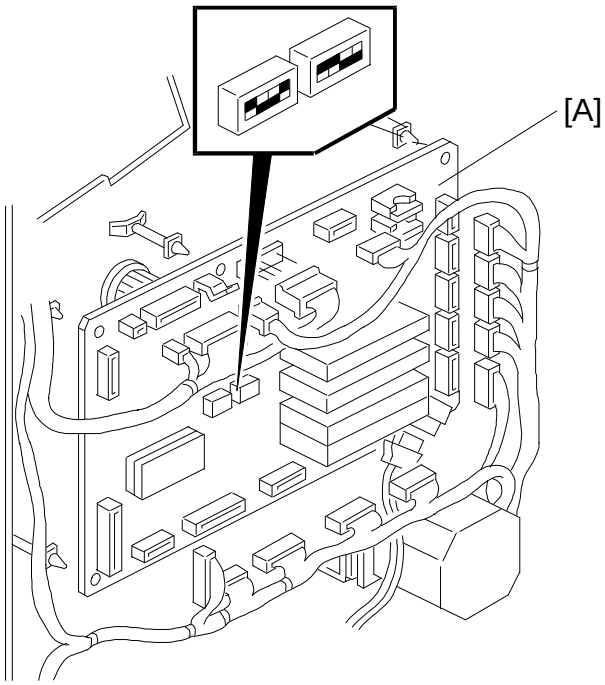

A664R520.wmf

1. Remove the rear cover (refer to Exterior Cover Removal), then disconnect all connectors (15 connectors and 1 fiber optics connector).
2. Remove the main control board [A] (6 studs).
3. Install the new main control board and connect all connectors.
4. Position DIP SW 100, 101 and 102 as on the original main control board (DIP SW 101 and 102 are for stapling position adjustment and DIP SW 100 is for SP mode).
5. Turn on the copier main switch then check the stapling position. If it is incorrect, adjust the stapling position. (Refer to the Stapling Position Adjustment.)

15.8 GRIP MOTOR REMOVAL

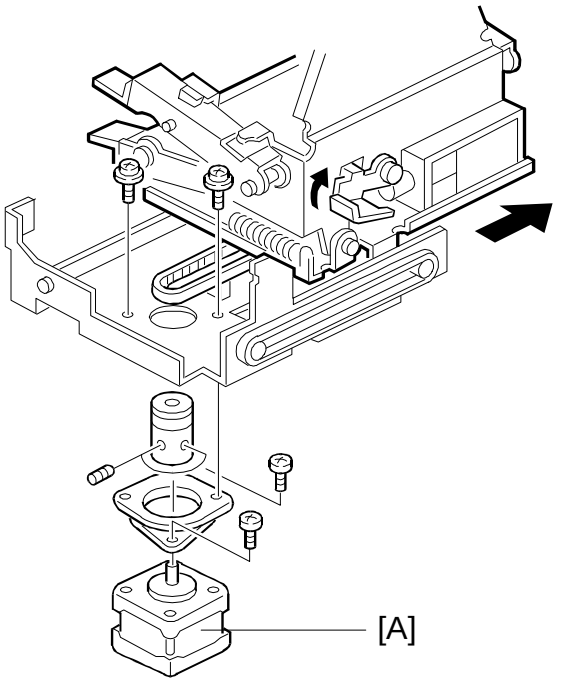

A664R519.wmf

1. Remove the grip assembly.
2. Remove the grip motor [A] (4 screws and 2 Allen screws).

15.9 HELICAL WHEELS

– Removal –

Before removing the helical wheels, remove all bins and all exterior covers. (Refer to Exterior Cover and Bin Removal.)

– Front Helical Wheel –

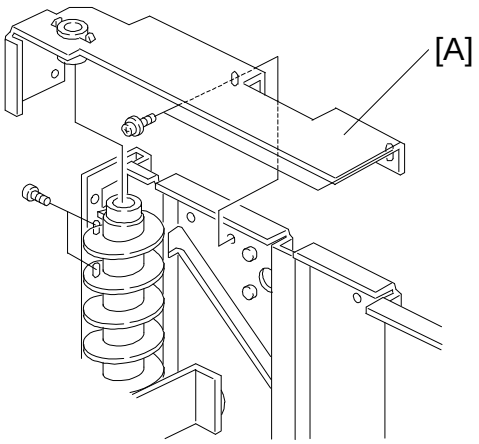

A664R524.wmf

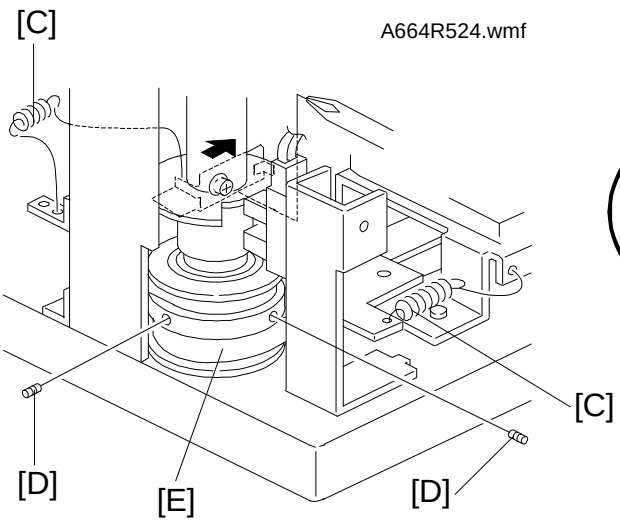

A664R526.wmf

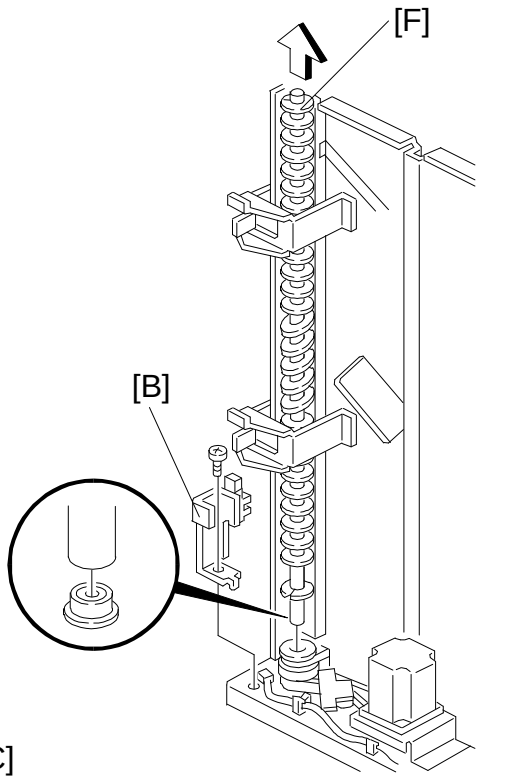

A664R525.wmf

1. Remove the bracket [A] (4 screws).
2. Remove the wheel sensor bracket [B] (1 screw).
3. Unhook the two springs [C].
4. Loosen the two Allen screws [D].
5. While holding the pulley [E] to keep it in position, remove the helical wheel [F].

– Rear Long Helical Wheel –

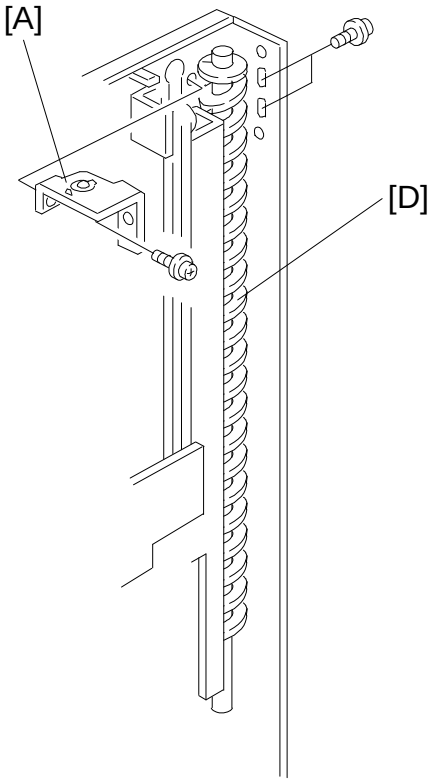

A664R527.wmf

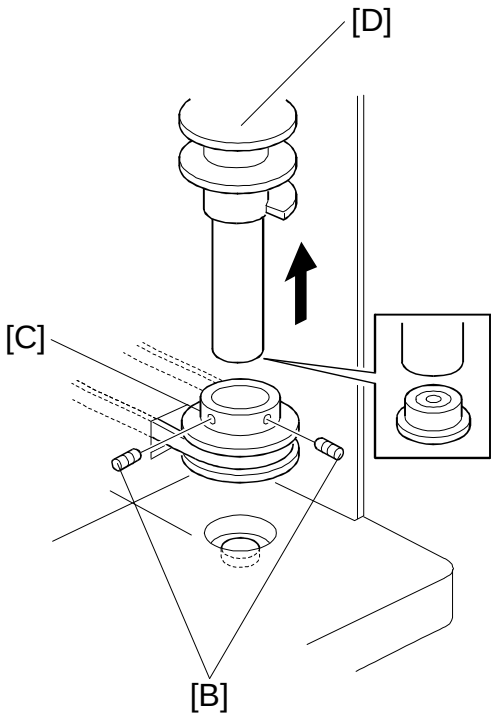

A664R528.wmf

1. Remove the bracket [A] (3 screws).
2. Loosen the two Allen screws [B] on the drive pulley.
3. While holding the pulley [C] to keep it in position, remove the helical wheel [D].

– Installation –

NOTE: After installing the helical wheels, perform the helical wheel alignment, which is explained later.

– Rear Long Helical Wheel –

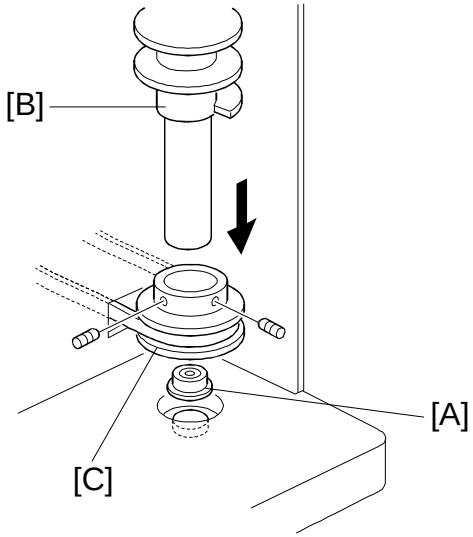

A664R533.wmf

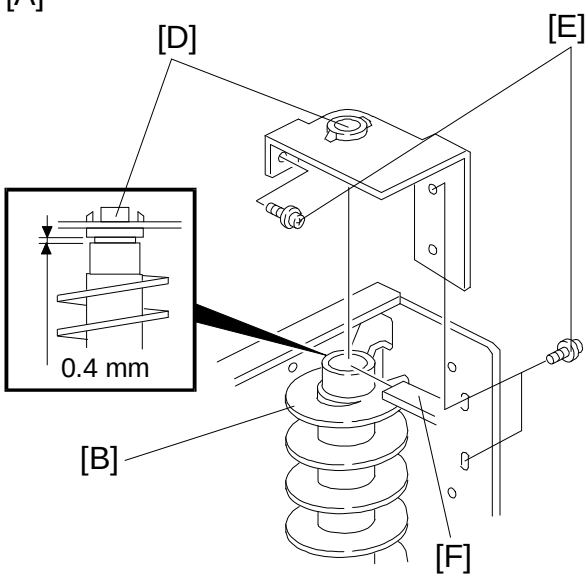

A664R534.wmf

1. Place the bearing [A] over the stud on the bottom plate.
2. Insert the helical wheel [B] into the pulley [C], then place the helical wheel on the bearing [A].
3. Place the bracket with the bushing [D] on top of the helical wheel, then install and slightly tighten three screws [E].
4. Place a 0.4 mm thickness gauge [F] between the helical wheel [B] and the bushing [D] on the bracket. While holding the bushing down on the helical wheel, tighten the three screws [E].

– Front Helical Wheel –

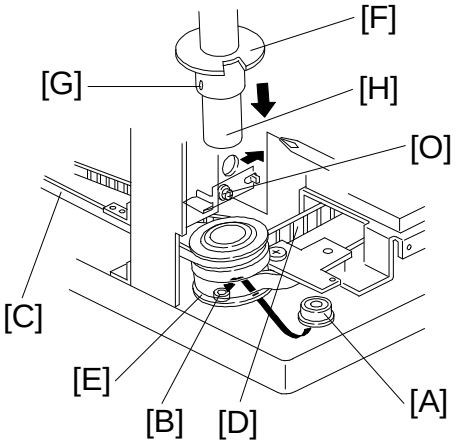

A664R535.wmf

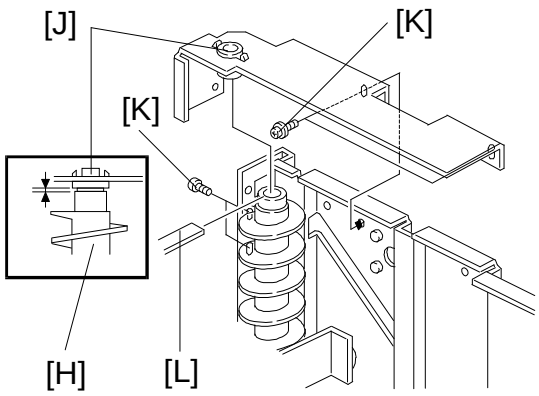

A664R536.wmf

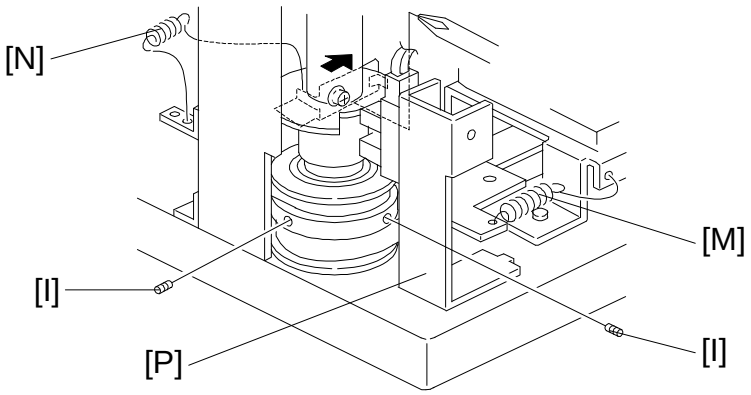

A664R537.wmf

1. Place the bearing [A] over the stud [B] on the bottom plate then thread timing belt-918XL [C] and timing belt-300XL [D] around the pulley.
2. Place the pulley [E] on the bearing. The direction of the pulley should be as shown in the illustration.
3. Feed the helical wheel through the wheel sensor actuator [F]. Leave the Allen screw [G] loosened.
4. Place the helical wheel [H] in the pulley [E]. Leave the Allen screws [I] loosened.
5. Place the bracket with a bushing [J] on top of the helical wheel, then install and slightly tighten the four screws [K].
6. Place a 0.4 mm thickness gauge [L] between the helical wheel and the bushing on the bracket. While holding the bushing down on the helical wheel [H], tighten the four screws [K].
7. Hook tension springs [M] and [N] then tighten the screw [O].
8. Install the wheel sensor bracket [P].

– Alignment of the 2 Helical Wheels –

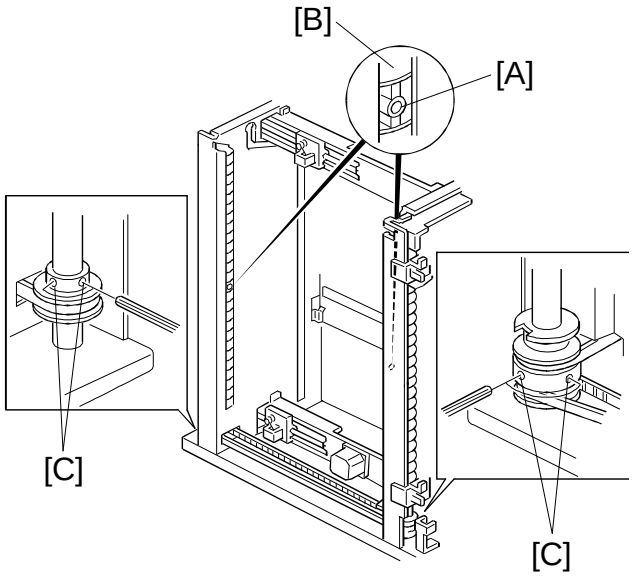

A664R538.wmf

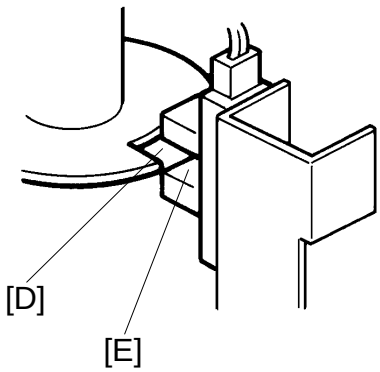

A664R539.img

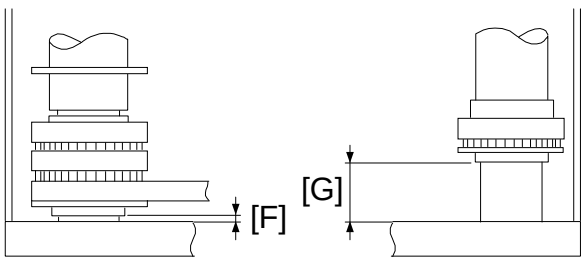

G = 22.5 ± 0.5 mm
F = 1.7 ± 0.5 mm

A664R540.wmf

1. Check that all belts are set correctly.
2. Align all screw holes [A] at the middle of the helical wheels at the center of the bin guide slots [B], as shown.
3. In this condition, tighten all Allen screws [C] in the helical wheel drive pulleys (2 Allen screws on each drive pulley).
4. In this condition, place the cut out [D] on the wheel sensor actuator under the wheel sensor [E] then tighten the Allen screw on the wheel sensor actuator.
5. Make sure that the gaps [F and G] between the base plates and the pulleys are as shown in the illustration.

20-BIN SORTER STAPLER

(Machine Code: A658)

Table of Contents

1. SPECIFICATIONSA658-1
2. COMPONENT LAYOUT A658-2
2.1 MECHANICAL COMPONENT LAYOUT A658-2
2.2 DRIVE LAYOUT A658-3
2.3 ELECTRICAL COMPONENT DESCRIPTION A658-4
3. BASIC OPERATION A658-5
3.1 NORMAL MODE AND SORT/STACK MODE A658-5
3.2 STAPLE MODE A658-7
3.3 BIN DRIVE MECHANISM A658-8
3.4 BIN HOME POSITION A658-9
3.5 JOGGER MECHANISM A658-10
3.6 GRIP ASSEMBLY A658-11
3.7 STAPLER UNIT A658-12
3.8 STAPLER SWITCH A658-13
3.9 PAPER FEED AND MISFEED DETECTION TIMING A658-14
3.10 JAM DETECTION A658-16
4. REPLACEMENT AND ADJUSTMENT A658-17
4.1 EXTERIOR COVER REMOVAL A658-17
4.1.1 Front Cover A658-17
4.1.2 Rear Cover A658-17
4.1.3 Top Cover A658-17
4.1.4 Lower Cover A658-17
4.2 STAPLER UNIT REMOVAL A658-18
4.3 GRIP ARM REPLACEMENT A658-19
4.4 BIN REMOVAL A658-20
4.5 TRANSPORT MOTOR REMOVAL A658-21

1. SPECIFICATIONS

Paper Size for Bins:	Sort/Stack Modes: Maximum: A3, 11 x 17" Minimum: B5, 8 1/2 x 11"
Paper Weight for Bins:	Sorting: 52 ~ 157 g/m^2 (14 ~ 42 lb) Stacking: 52 ~ 157 g/m^2 (14 ~ 42 lb) Stapling: 52 ~ 157 g/m^2 (14 ~ 42 lb)
Bin Capacity:	Sorting: A4, 8 1/2 x 11" or smaller: 30 copies B4, 8 1/2 x 14" or larger: 25 copies Stacking: A4, 8 1/2 x 11" or smaller: 25 copies B4, 8 1/2 x 14" or larger: 20 copies
Stapler Capacity:	2 ~ 20 copies
Proof Tray Capacity:	100 sheets (80g/m^2, 20 lb)
Number of Bins:	20 bins + proof tray
Stapling Position:	a = 6 ± 3 mm b = 6 ± 3 mm

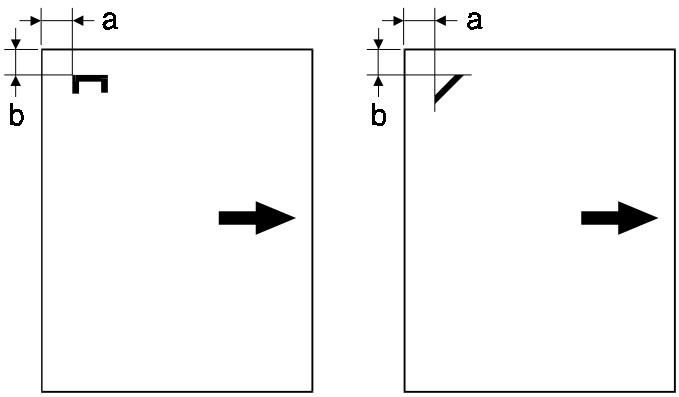

A658V500.wmf

Staple Replenishment:	Cartridge exchange (2,000 staples/cartridge)
Power Source:	DC 24 V (from the copier)
Power Consumption:	Average: less than 35 W Average for Sorting: less than 30 W Average for Stapling: less than 33 W
Weight:	20.5 kg (27.4 lb)
Dimensions (W x D x H):	430 x 570 x 680 mm (15.0" x 21.6" x 17.5")

- Specifications are subject to change without notice.

2. COMPONENT LAYOUT

2.1 MECHANICAL COMPONENT LAYOUT

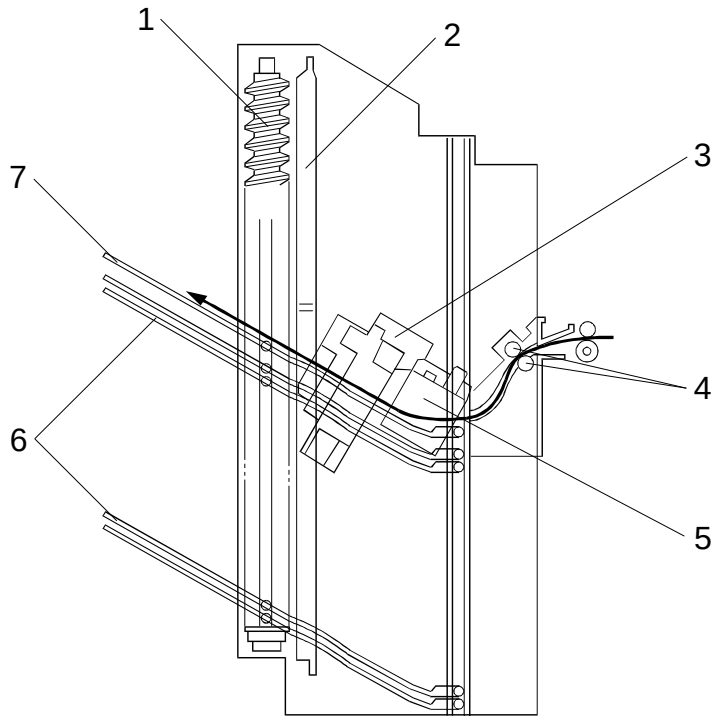

A658V501.wmf

1. Helical Wheels
2. Jogger Plate
3. Grip Assembly
4. Transport Rollers
5. Staple Unit
6. Bins
7. Proof Tray

2.2 DRIVE LAYOUT

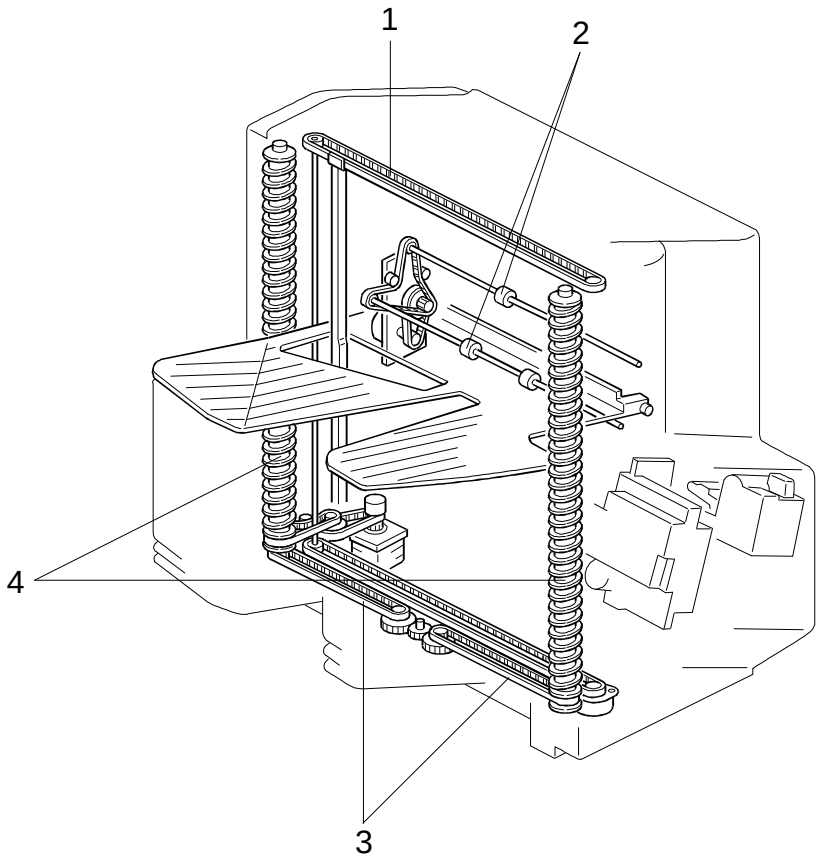

A658V502.wmf

1. Jogger Drive Belt
2. Transport Roller
3. Wheel Drive Belts
4. Helical Wheels

2.3 ELECTRICAL COMPONENT DESCRIPTION

Refer to the electrical component layout on the reverse side of the Point to Point Diagram (on waterproof paper).

Symbol	Name	Function	Index No.
Motors			
M1	Main Drive	Drives the transport roller	16
M2	Jogger	Drives the jogger plate to square the copies	9
M3	Bin Drive	Drives the bins	14
M4	Stapler	Drives the stapler hammer	7
M5	Grip	Drives the grippers forwards and back into the bin to grip the copies and bring them to the stapling position	3
Sensors			
S1	Bin (Phototransistor)	Detects whether there is any paper in the bins (light receiving element)	1
S2	Grip Home Position	Detects when the grip assembly cam gear has rotated once	6
S3	Bin Home Position	Detects whether the bins are at home position	11
S4	Sorter Entrance	Detects paper jams	2
S5	Jogger Home Position	Detects whether the jogger plate is in its home position	13
S6	Wheel	Detects the bin position.	12
S7	Bin (LED)	Detects whether there is paper in the bins (light emitting element)	10
S8	Stapler Paper	Detects whether any copies are under the hammer.	4
S9	Staple End	Detects when the staples run out	18
S10	Staple Hammer Home Position	Detects whether the stapler hammer is at home position	17
Switches			
SW1	Door Safety	Cuts the dc +24 V supply when either the unit or the stapler cover is opened.	5
SW2	Stapler	Cuts the signals to the stapler.	8
Circuit Board			
PCB1	Main	Controls all sorter/stapler functions	15

3. BASIC OPERATION

3.1 NORMAL MODE AND SORT/STACK MODE

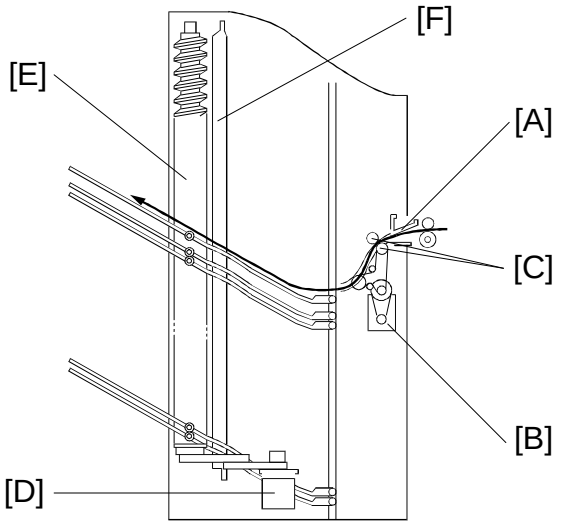

A658D500.wmf

Copies exiting the copier pass through the entrance guide plate [A]. The transport roller will send copies either to the proof tray or to each bin, depending on the selected mode.

During copying, all rollers in the sorter stapler transport the paper at a speed which depends on the copier. When the trailing edge of the copy passes the fusing exit sensor, the speed of the rollers changes to 600 mm/s. This makes enough time for the jogger plate to square the stack of paper and to stack the paper smoothly into the bins.

– Normal (proof) mode –

When the ◇ key is pressed, the transport motor [B] energizes to rotate the transport rollers [C]. The transport rollers send copies to the proof tray directly.

– Sort mode –

When sort mode is selected, the bin drive motor [D] energizes to rotate the helical wheels. The helical wheels [E] rotate twice to move the top bin to the transport roller position, then the first copy is delivered to the top bin.

After the first copy of the first original has been fed to the top bin, the bin drive motor moves the bins up one step (the helical wheels rotate once) so that the second copy of the first original will be delivered to the next bin.

The jogger plate [F] squares the copies after each copy has been fed to a bin. After the copies of the first original have been delivered to each bin, the sorter stapler maintains its status (the bin drive motor does not rotate).

The first copy of the second original is delivered to the final bin that was used for the first original, then the final bin descends one step. The bins descend each time a copy of the second original is delivered.

The direction of motion of the bins alternates for each page of the original until the copy run is finished.

– Stack mode –

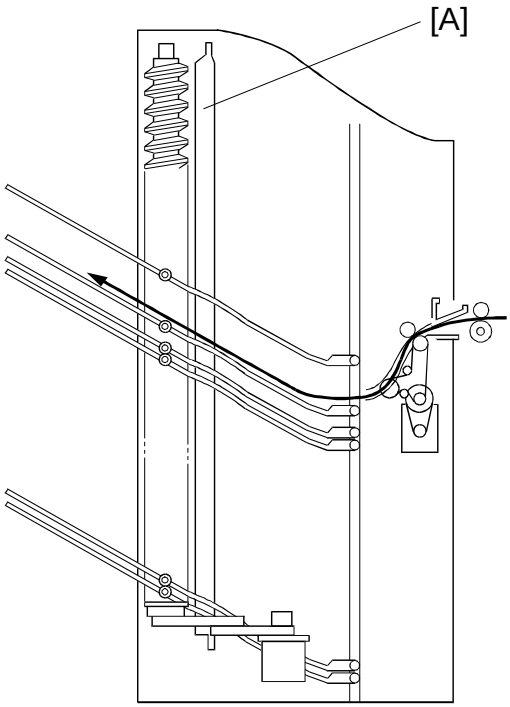

A658D501.wmf

When stack mode is selected, the top bin advances to the transport roller position in the same way as in sort mode.

After the first copy is delivered to the top bin, the jogger plate [A] moves across to square the copy. The jogger plate squares the copies after each copy has been fed to a bin.

After one set of copies for the first original has been delivered to the top bin, the bin drive motor moves the bins up one step. Then, one set of copies of the second original will be delivered to the next bin.

3.2 STAPLE MODE

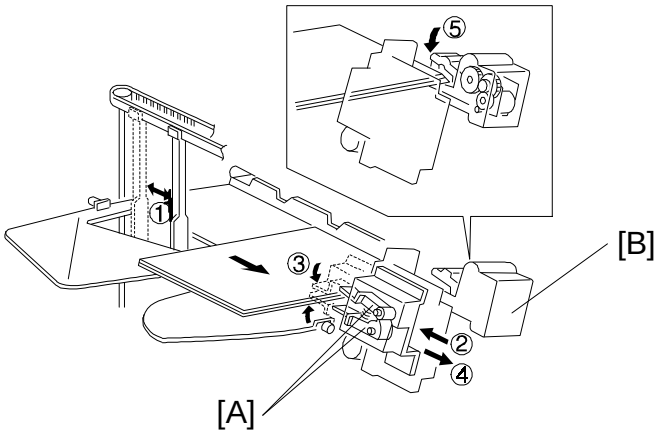

A658D502.wmf

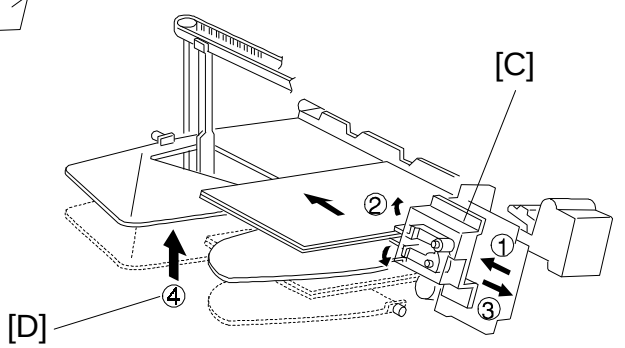

A658D503.wmf

The stapler is only available in sort mode.

When the jogger plate has squared the final set of copies, the grip arms [A] move inside the front side frame and catch the paper. The grip assembly brings the copies into the stapler [B], and the stapler staples the copies.

After stapling, the grip assembly [C] brings the stapled copies back to the bin and releases the copies. Then the grip assembly goes back to the normal position. The bin either advances or descends one step [D] (depending on whether the page is an odd or even numbered page of the original).

When the final set of copies has been stapled, the bins go back to the standby position.

There are two staple modes.

– Automatic Stapling –

In ADF mode, when staple mode is selected before pressing the ◇ key, copies will be delivered to each bin and stapled automatically.

– Manual Stapling –

In platen cover mode, after the copies have been sorted into the bins, the staple mode LED starts to blink. If the sort key is pressed while this LED is blinking, the copies will be stapled.

3.3 BIN DRIVE MECHANISM

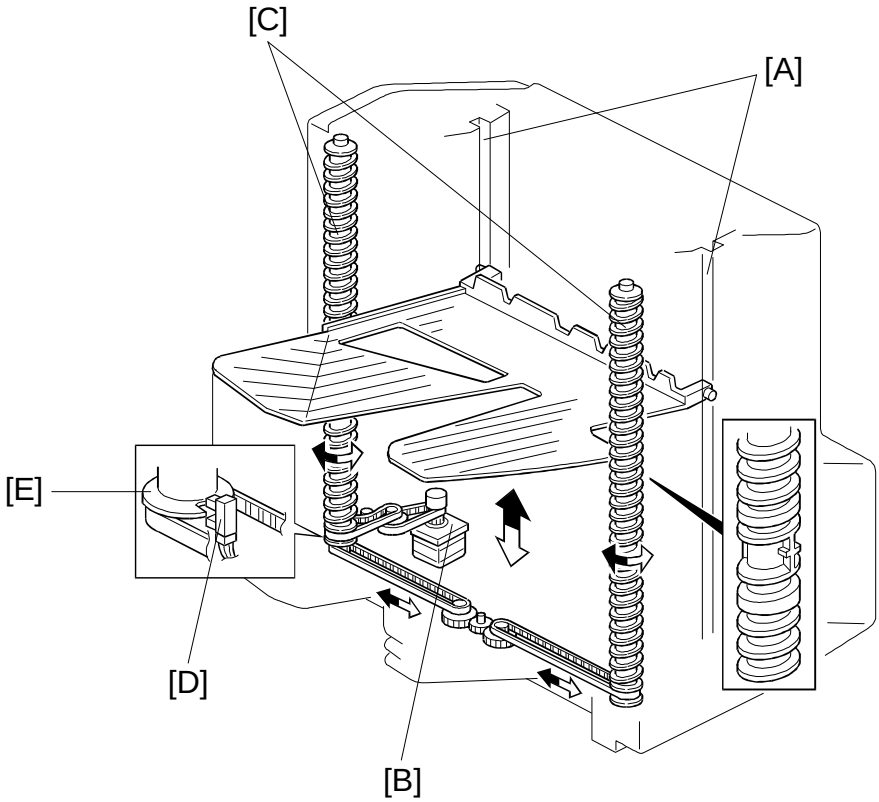

The bin drive mechanism moves the bins up and down to receive copies.

There are four pins on each bin. Two pins fit into the slots [A] in both the front and rear side frames; the pins slide up and down in these slots. The other two pins fit into the slot in the helical wheels; as the helical wheels turn, these pins move up and down, and the other pins move up and down in the slots at the other end of the bin.

The bin drive motor [B] drives the helical wheels [C] through timing belts as shown. When the motor rotates clockwise, the bins lift; when it rotates counterclockwise, the bins lower. There is a wheel sensor [D] located under the actuator [E] on the rear helical wheel; the actuator has a slot which detects when the helical wheel has rotated once.

When the bins are advanced, the helical wheels rotate once for each step. As the pitch of the spiral on the helical wheel is greater when the bins are at the stapling and paper exit area than when the bins are elsewhere, the amount of bin shift is greater when the bins are at the stapling and paper exit area. This leaves enough space to staple and stack the copies. Also, this reduces the total machine height.

3.4 BIN HOME POSITION

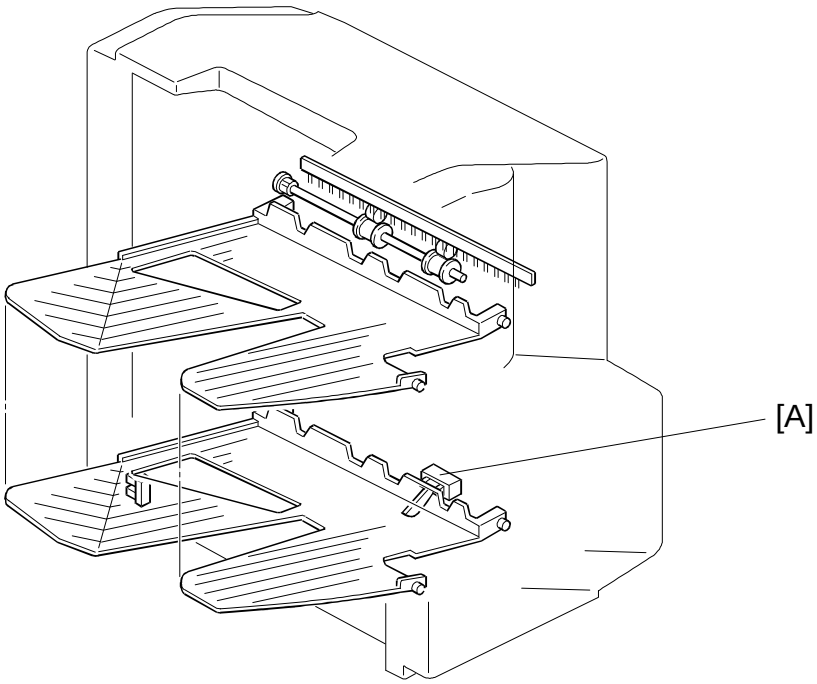

A658D505.wmf

The bin home position sensor [A] ensures that the proof tray is lower than the transport roller when the bins are in the home position.

When the main switch is turned on, the sorter stapler initializes itself to check whether the component parts work or not. At this time, the bin drive motor raises the bins for a few moments, then it lowers the bins until the bottom bin actuates the bin home position sensor.

3.5 JOGGER MECHANISM

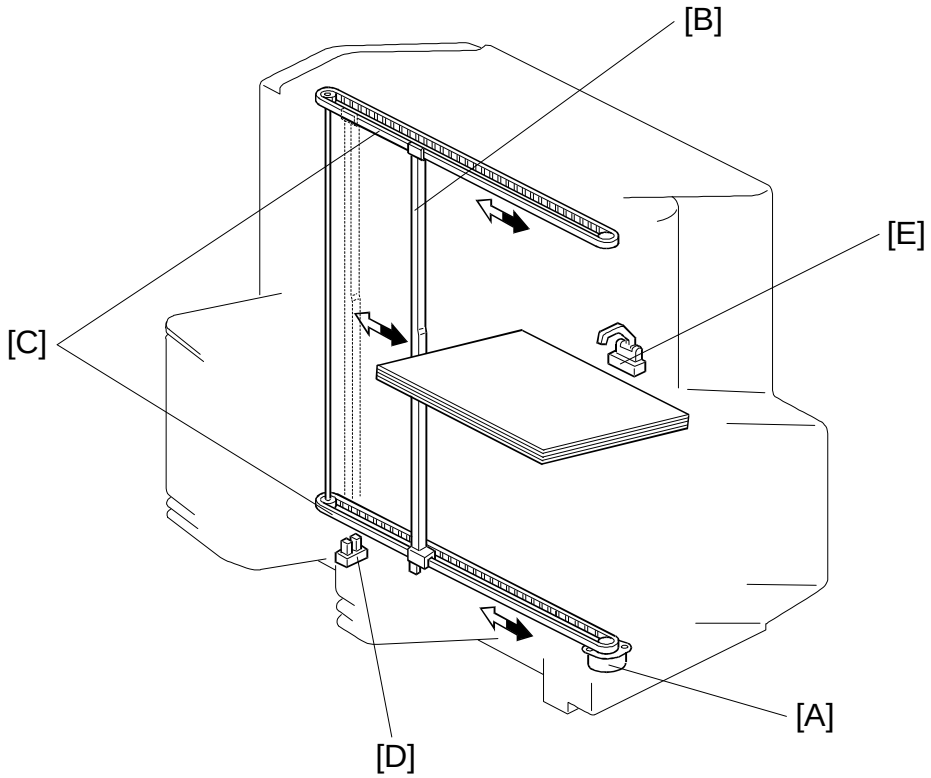

A658D506.wmf

The jogger motor [A] drives the jogger plate [B] through the timing belts [C].

The jogger is at home position when the actuator on the jogger plate goes into the jogger home position sensor [D].

At standby, the jogger plate is at the home position. When the ◇ key is pressed, the copier sends the paper size information to the sorter stapler.

In sort, staple, and stack modes, the jogger moves three times to square the stack of paper. First, when the paper has been fed completely into the bin (at the proper time after the copy has passed through the entrance sensor [E], depending on the paper length), the jogger motor moves the jogger plate out of the jogger home position. Then, the jogger motor drives the jogger plate to the width of the copy. Finally, the jogger plate moves inward to push all the copies against the front side frame, which squares the sheets of paper. Then the jogger plate returns to the home position.

3.6 GRIP ASSEMBLY

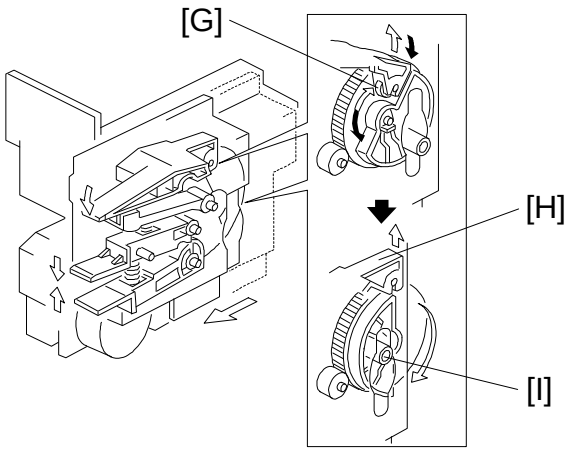

A658D507.wmf

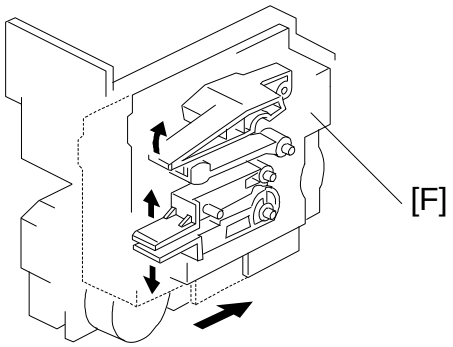

A658D509.wmf

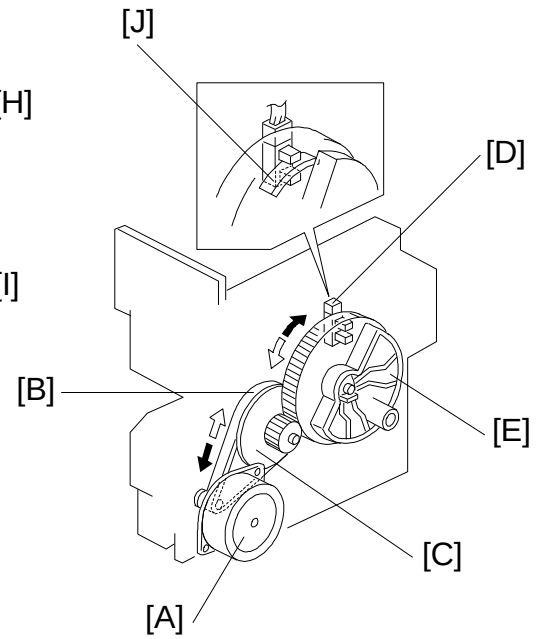

A658D508.wmf

The grip assembly consists of the grip motor [A], the timing belt [B], the drive gear [C], the grip home position sensor [D], and the cam gear [E].

The grip motor drives the cam gear through the timing belt and drive gear. Cam gear rotation drives the mechanism that catches the copies and moves the grip arm unit [F]. When the cam gear rotates clockwise one full turn, the grip arm moves to catch the copies and returns to the home position to prepare for stapling. After stapling, the cam gear rotates counterclockwise once so that the stapled copies go back to the bin, and the cam gear returns to its home position.

When the cam pushes the roller [G] on the lever [H] and the lever pushes the grip arm, the grip arm can catch the copies.

A pin [I] on the cam gear fits into the slot in the grip arm unit. So, when the cam gear rotates, the slot moves the grip arm unit inward and outward.

The actuator [J] on the cam gear activates the grip home position sensor once every rotation of the cam gear. This allows the sorter stapler to determine that the cam gear has rotated once.

3.7 STAPLER UNIT

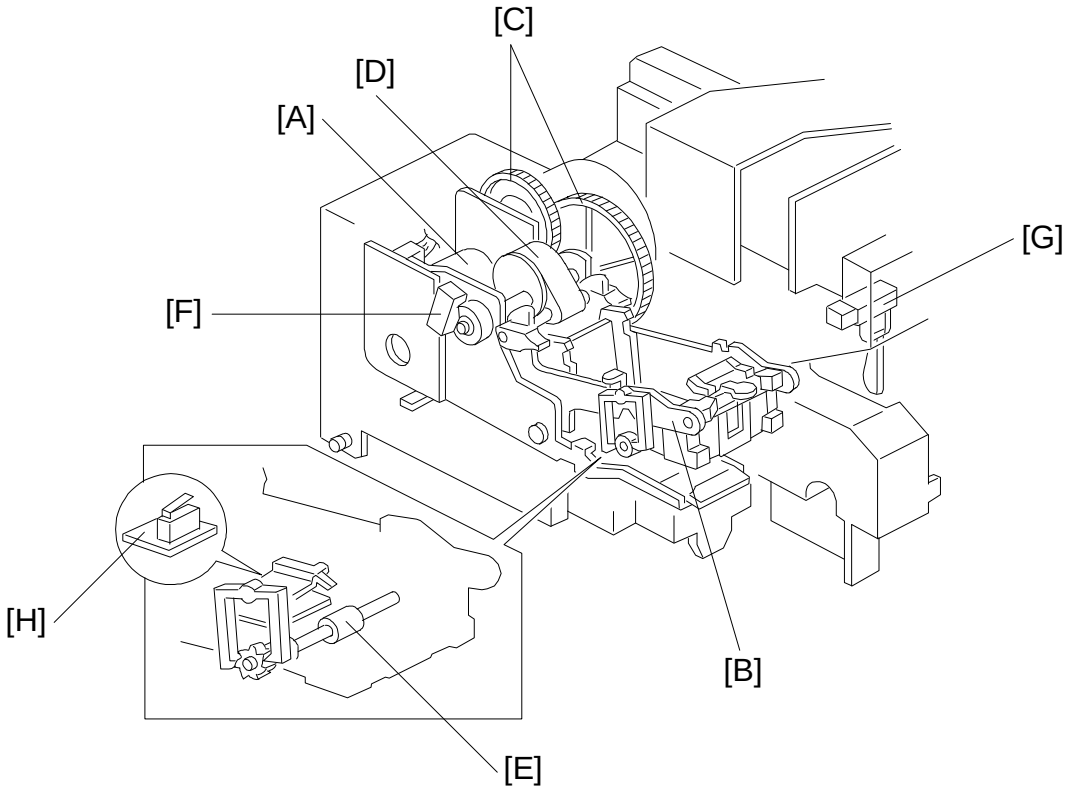

A658D510.wmf

The stapler motor [A] drives the staple hammer [B] using the gears [C] and the eccentric cam [D].

The roller [E] feeds the staple sheets under the hammer.

When the aligned copies are brought to the staple position by the grip unit, the stapler motor starts rotating and the copies are stapled. When the cam completes one rotation, the staple hammer home position sensor [F] is deactuated and the stapler motor stops.

When the stapler paper sensor [G] in the grip assembly does not detect any copies under the hammer, the stapler motor does not rotate.

When the trailing edge of the last staple sheet pass through the staple end sensor [H], the sorter stapler enters the staple near end condition. After the current job is completed, the Add Staples indicator lights on the operation panel. Then the copier cannot be used whenever the staple mode is selected.

3.8 STAPLER SWITCH

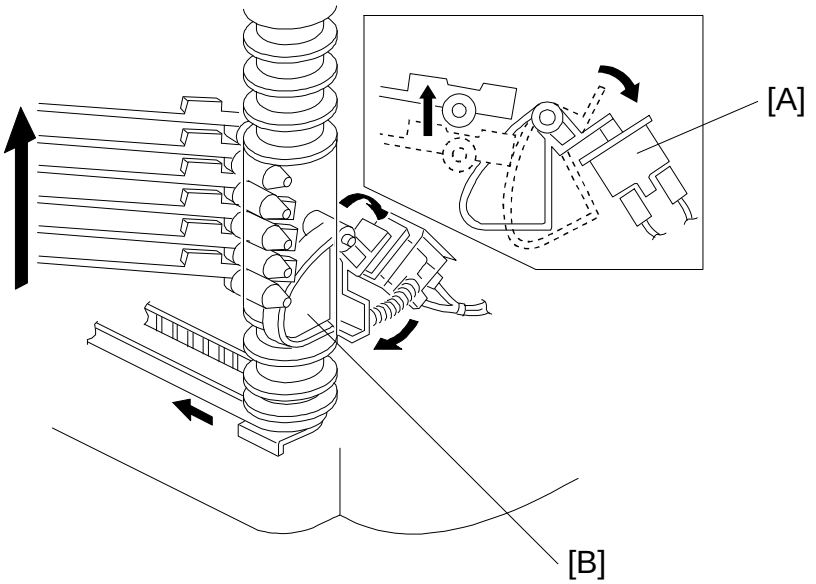

A658D511.wmf

The stapler switch [A] below the grip assembly cuts the dc +24 V supply to the stapler. In proof mode, all bins lower and push the lever [B]. This opens the stapler switch so that the signal to the stapler is cut. In sort and staple modes, all bins are advanced and the switch is closed so that the signal can be supplied to the stapler.

– Staple Mode Disabling Conditions –

1. Under the following conditions, staple mode is disabled.

   - If there is paper in a bin before the main switch is turned on.
   - If the selected paper size does not match the stapling specifications.
   - If the paper is fed from the by-pass feed table.
   - If the stack or interrupt modes are selected.

2. Under the following conditions, staple mode is canceled if it had been selected.

   - If paper is inserted into a bin by hand while the staple mode is selected.
   - If only one sheet is delivered to the bin.
   - If the number of sheets to be stapled exceeds the stapler capacity.

3.9 PAPER FEED AND MISFEED DETECTION TIMING

– Proof Mode – A4 sideways, 5 copies, 150 mm/s

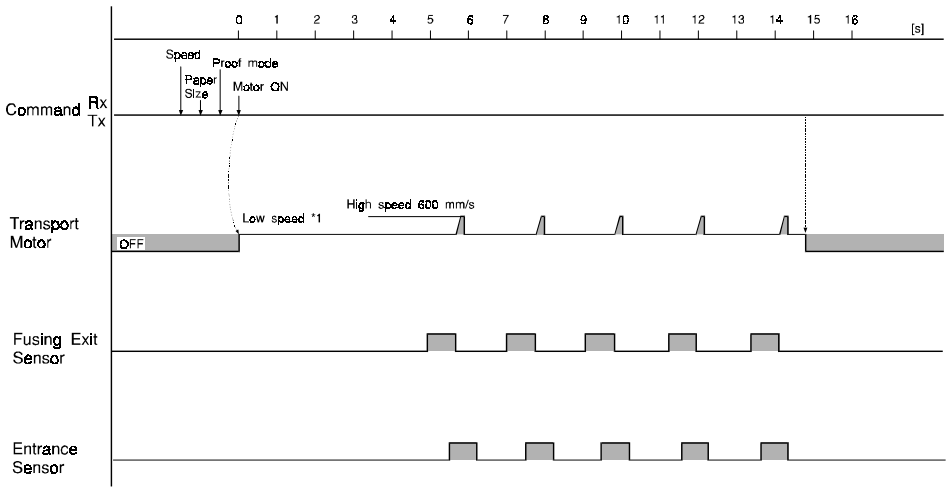

A658D512.wmf

*1: The value of the low speed depends on the copier.

– Sorter Mode – A4 sideways, two copies a of two-page original, 150 mm/s

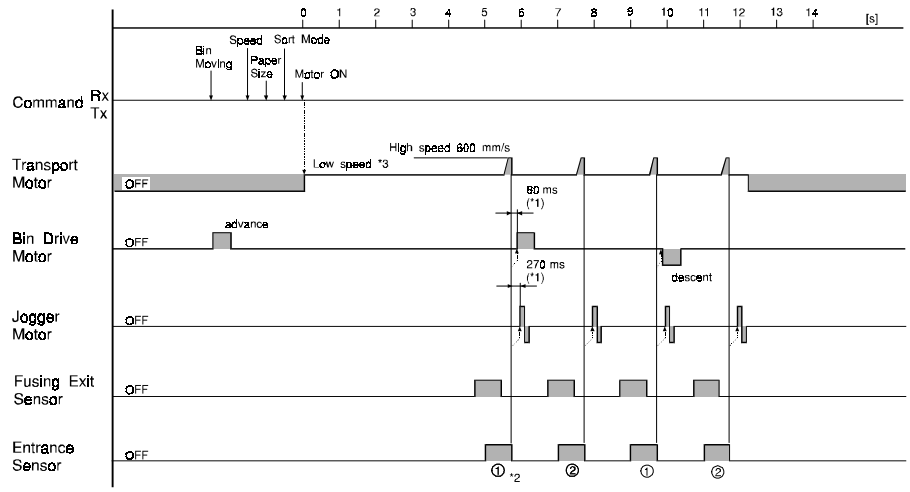

A658D513.wmf

*1: The start times of the bin drive and the jogger motors depend on the paper size as shown in the following table.

*2: Bin No.

Paper Size	Bin drive motor timing	Jogger motor timing	Paper Size	Bin drive motor timing	Jogger motor timing
A3/11"x17"	80 ms	270 ms	A4 lengthwise/ 8 1/2"x11"	254 ms	96 ms
B4	160 ms	190 ms	B5 sideways	160 ms	190 ms
A4 sideways/ 11"x8 1/2"	80 ms	270 ms	B5 lengthwise	310 ms	40 ms

– Staple Mode – A4 sideways, two copies of a two-page original, after sorting, 150 mm/s

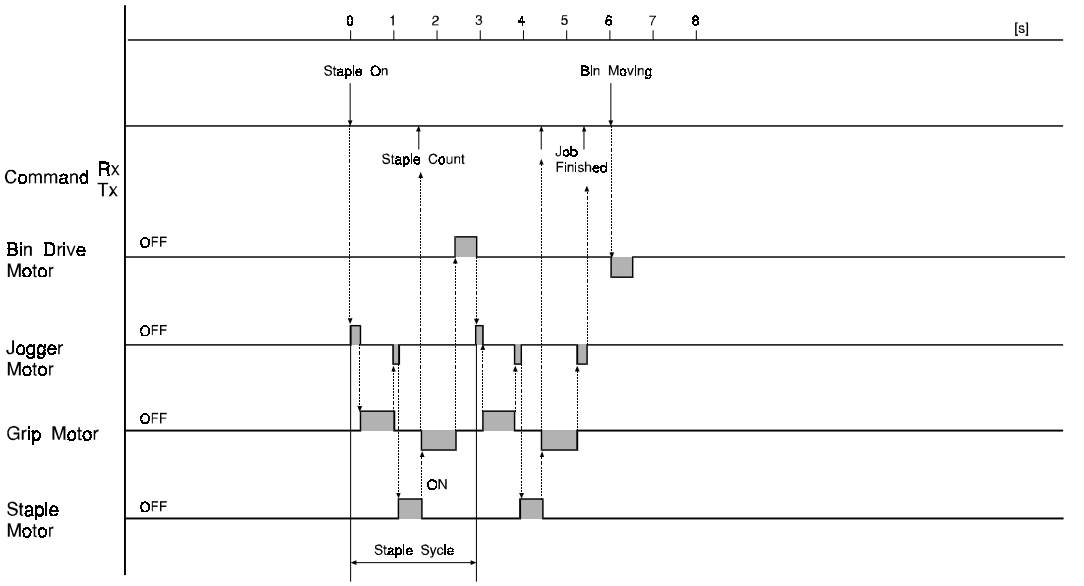

A658D514.wmf

3.10 JAM DETECTION

– Paper Jam – A4 sideways

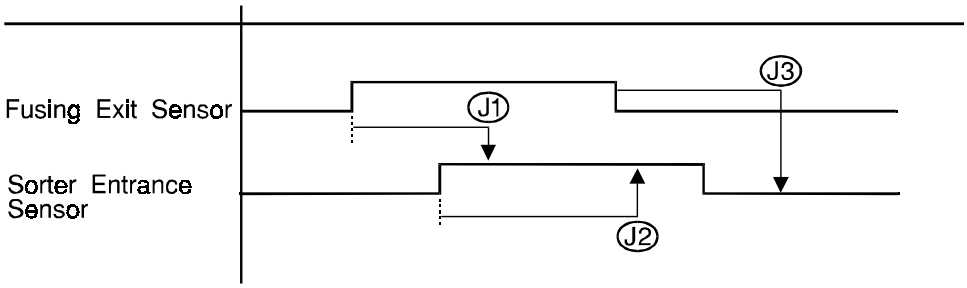

A658D515.wmf

J1: The sorter entrance sensor does not turn on within 2 s after the fusing exit sensor has turned on.

J2: The fusing exit sensor does not turn off within 11.4 s after the sorter entrance sensor has turned on.

J3: The sorter entrance sensor does not turn off within 1 s after the fusing exit sensor has turned off.

– Staple Jam –

In the following conditions, a staple jam will occur and the sorter jam indicator on the operation panel will light.

1. If the stapler paper sensor is on when the main switch turns on or just as the stapler cover is closed.
2. If the stapler paper sensor stays on after the stapling job has been finished.

4. REPLACEMENT AND ADJUSTMENT

4.1 EXTERIOR COVER REMOVAL

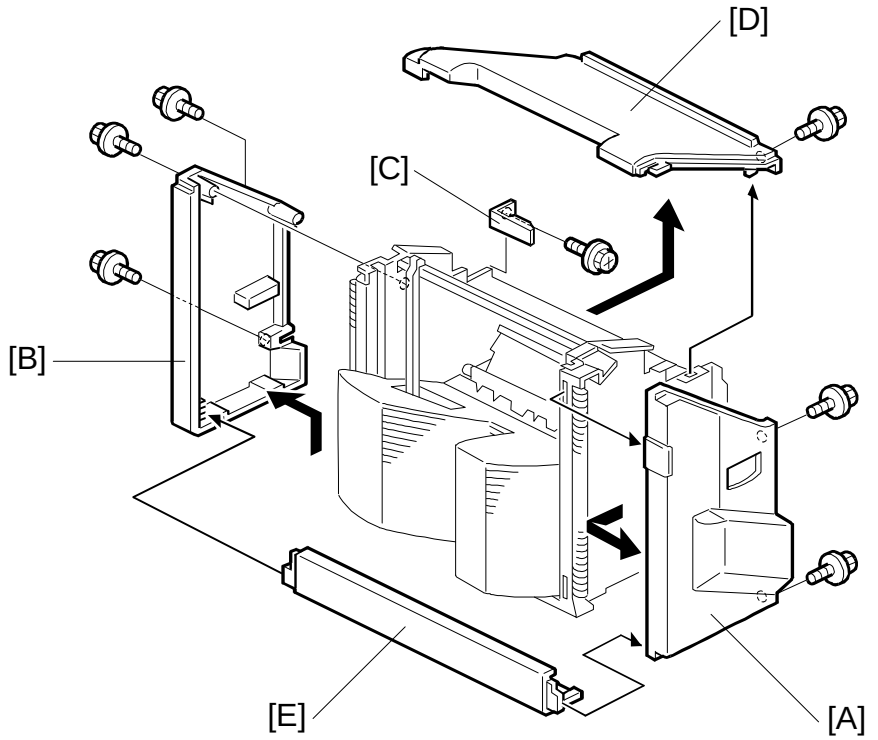

A658R506.wmf

4.1.1 Front Cover

1. Remove the front cover [A] (2 screws).

4.1.2 Rear Cover

1. Remove the rear cover [B] (3 screws).

4.1.3 Top Cover

1. Remove the rear cover [B].
2. Remove the top cover support bracket [C] (1 screw).
3. Remove the top cover [C] (1 screw).

4.1.4 Lower Cover

1. Remove the front cover [A] and the rear cover [B].
2. Remove the lower cover [E].

4.2 STAPLER UNIT REMOVAL

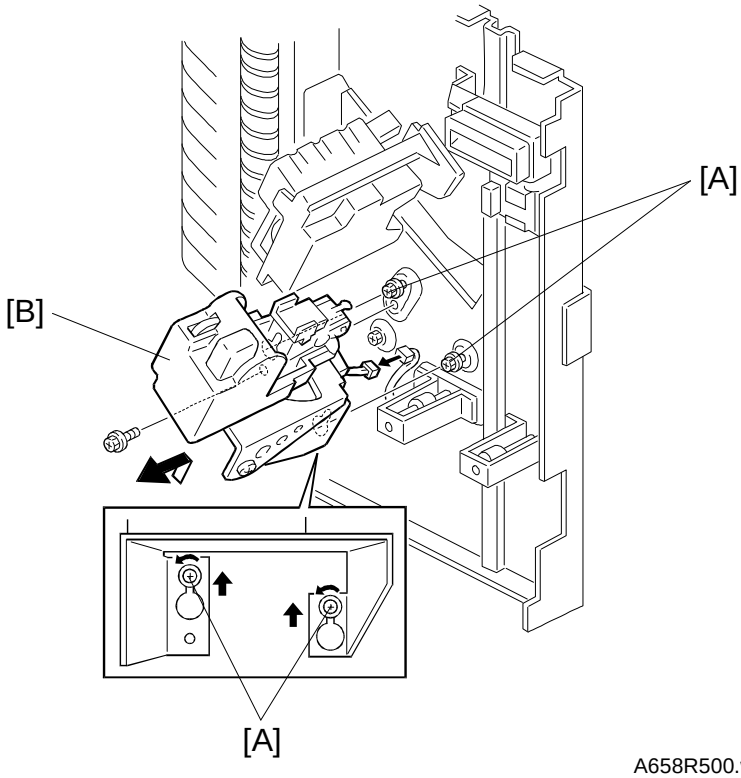

A658R500.wmf

1. Remove the front cover. (See Exterior Cover Removal.)
2. Loosen the screws [A].
3. Remove the staple unit [B], as shown (1 screw and 1 connector).

4.3 GRIP ARM REPLACEMENT

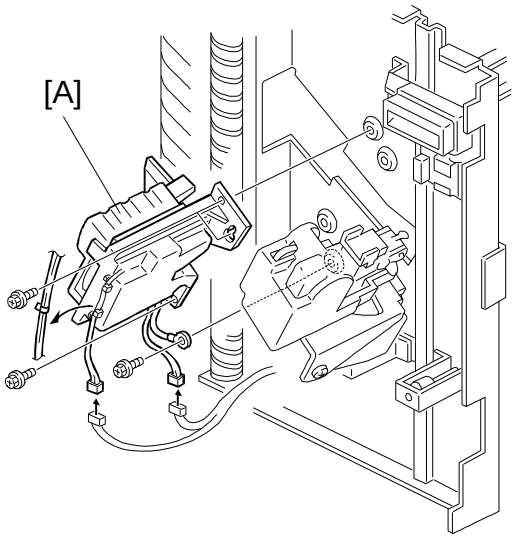

A658R501.wmf

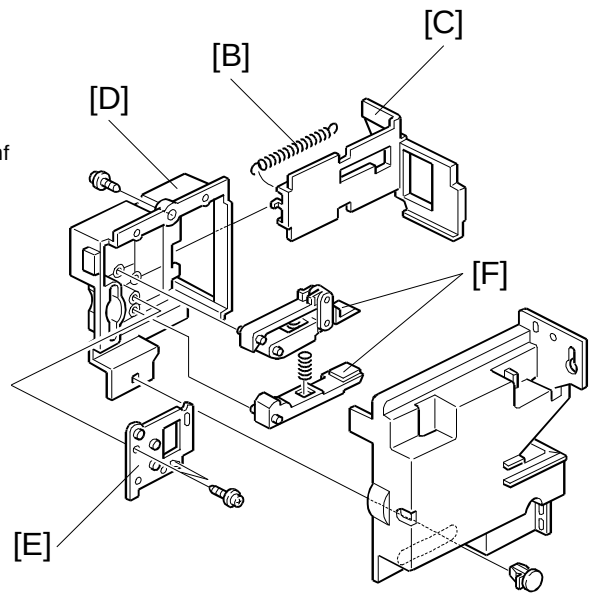

A658R502.wmf

1. Remove the front cover. (See Exterior Cover Removal.)
2. Remove the grip assembly [A] (4 screws, 2 connectors, and 1 grounding wire).
3. Remove the spring [B] and remove the slider [C].
4. Remove the grip arm unit [D] (1 screw and 1 clip).
5. Remove the grip arm plate [E] (2 screws).
6. Replace the grip arms [F].

4.4 BIN REMOVAL

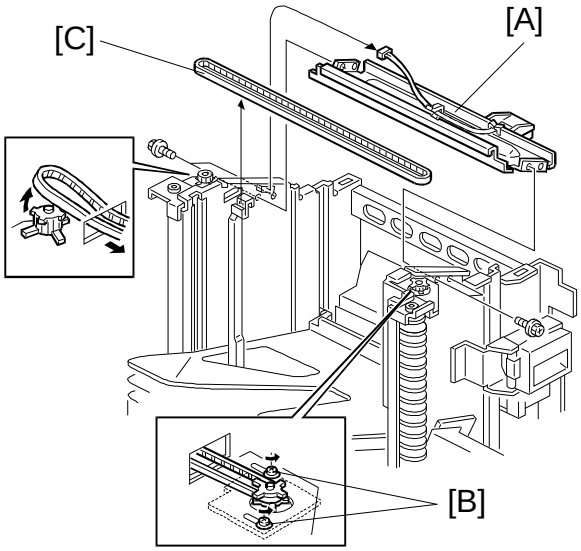

A658R503.wmf

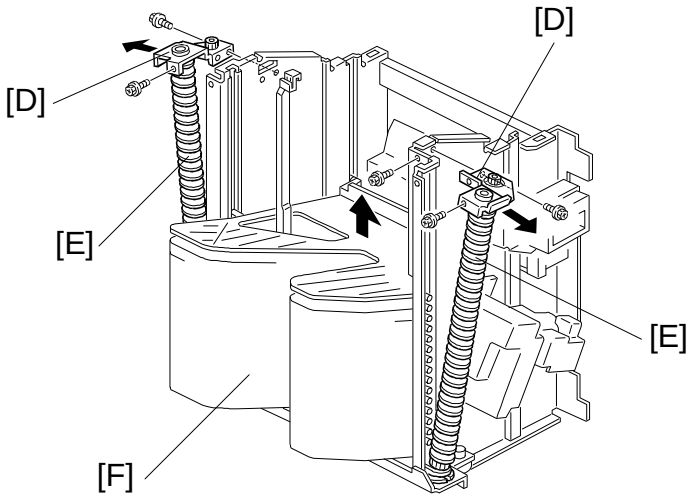

A658R504.wmf

1. Remove the front, rear, and top covers. (See Exterior Cover Removal.)
2. Remove the upper stay bracket [A] (4 screws and 1 connector).
3. Loosen the two screws [B], then remove the timing belt [C].
4. Remove the brackets [D] (3 springs each).
5. While moving the helical wheels [E] outward, remove the bins [F].

4.5 TRANSPORT MOTOR REMOVAL

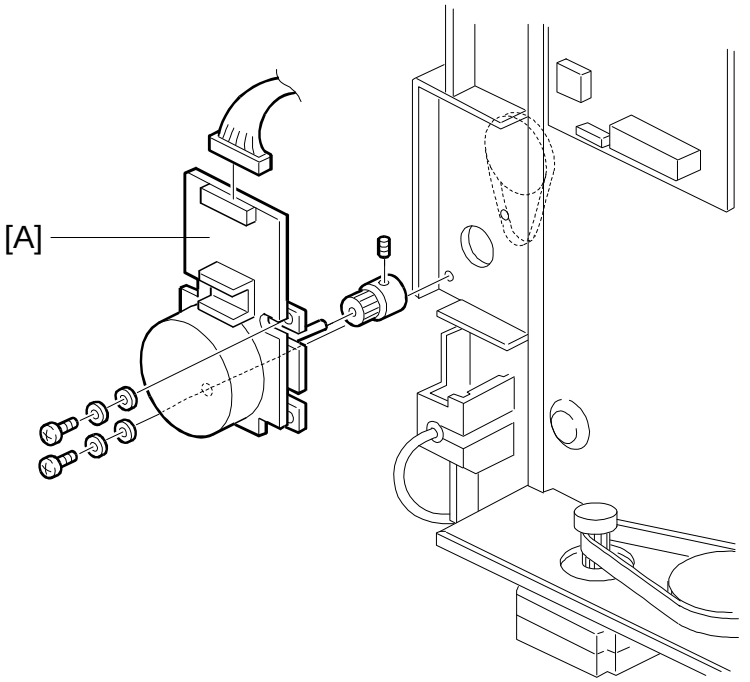

A658R505.wmf

1. Remove the sorter stapler (1 screw and 1 chain).
2. Remove the rear cover. (See Exterior Cover Removal.)
3. Remove the transport motor [A] (2 screws and 4 washers).

COPIER ELECTRICAL COMPONENT LAYOUT

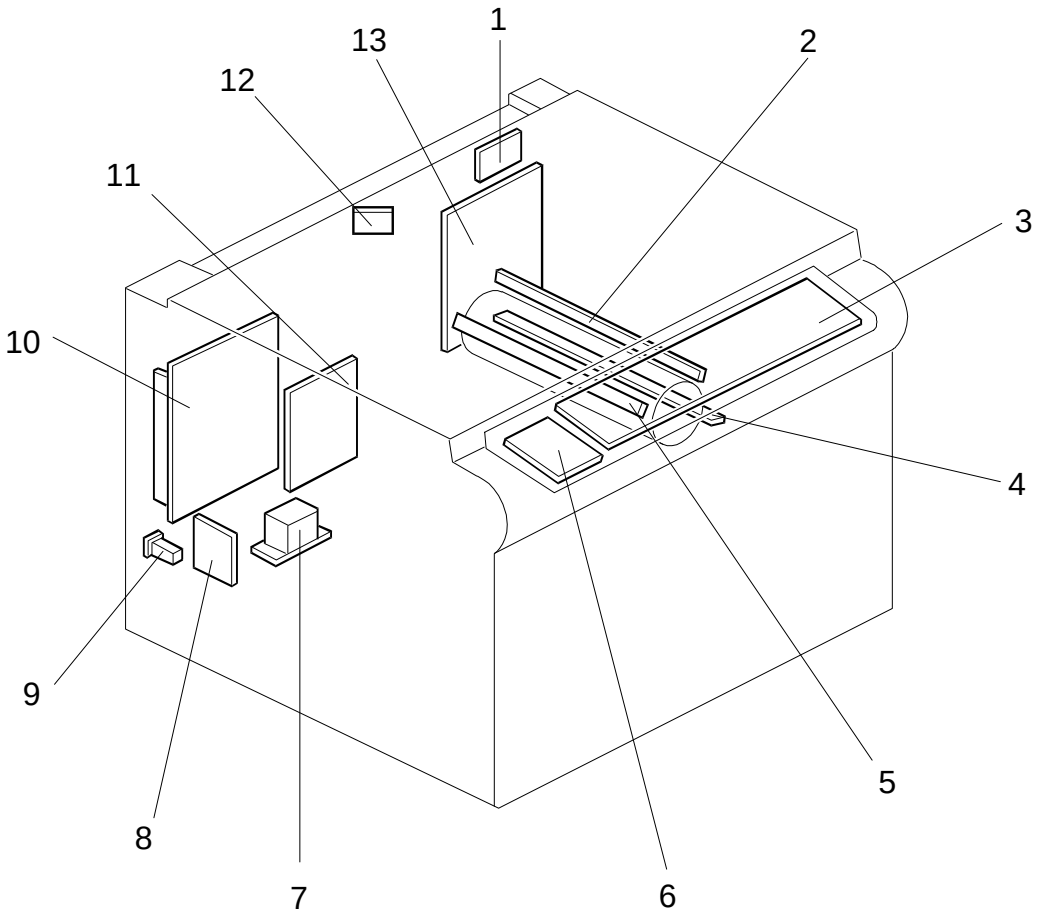

A204S500.wmf

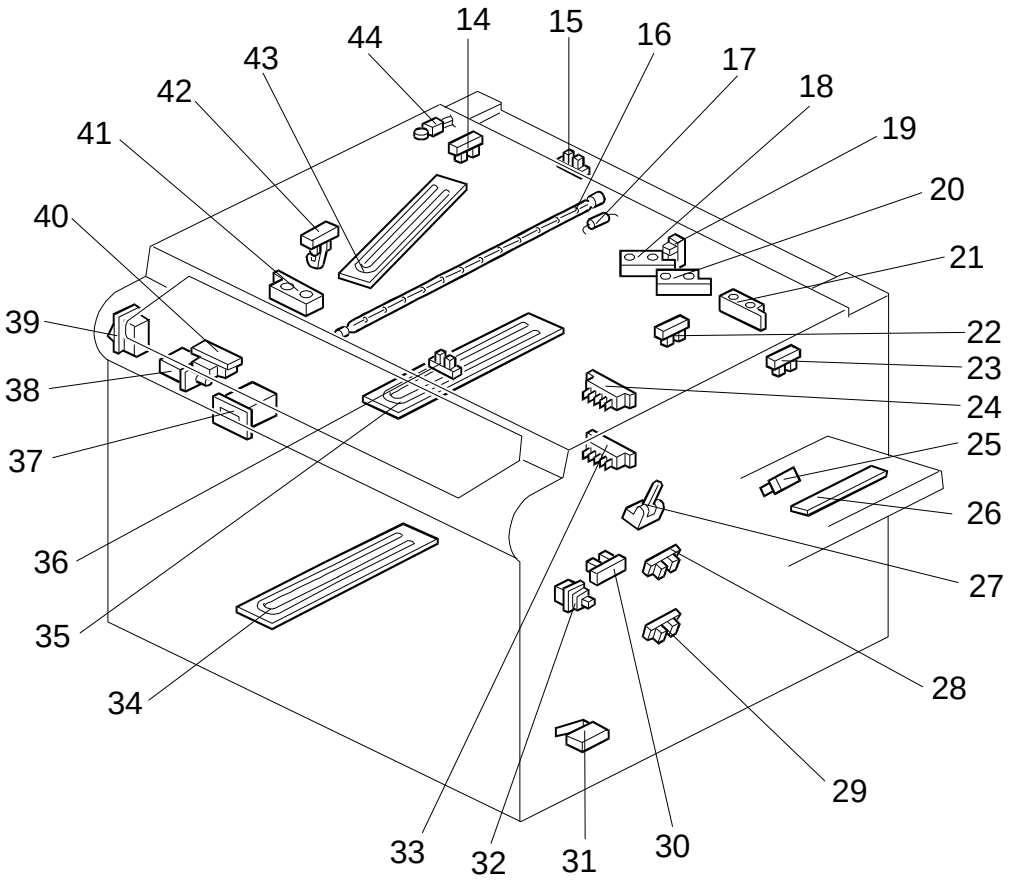

A204S501.wmf

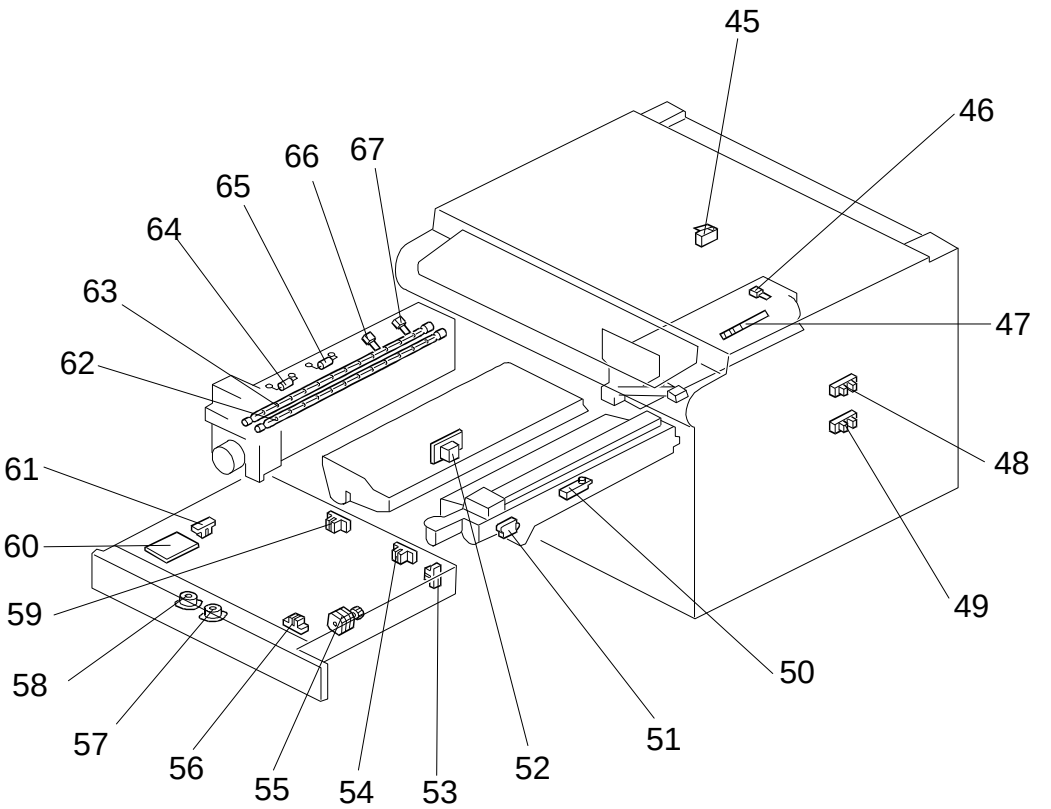

A204S502.wmf

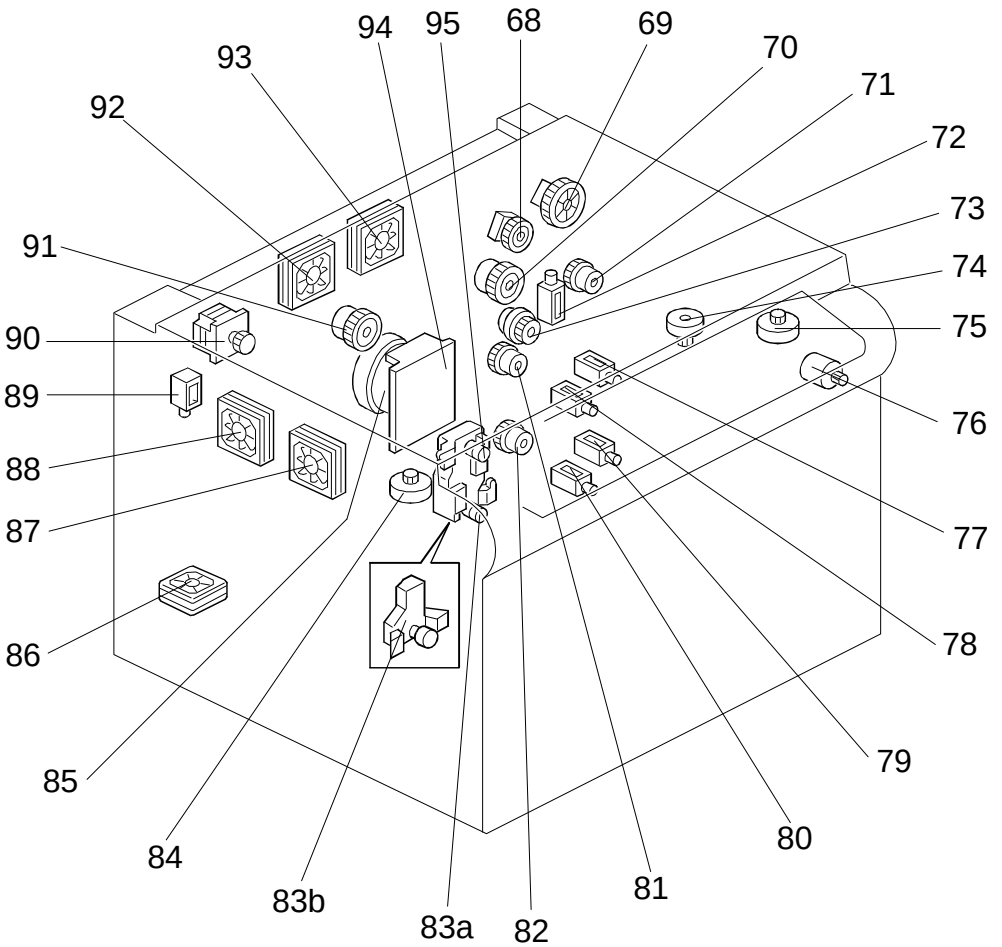
94
95
68
69
93
70
92
71
72
73
91
74
90
75
89
76
88
77
87
78
86
79
85
80
84
81
83b
83a
82
A204S503.wmf

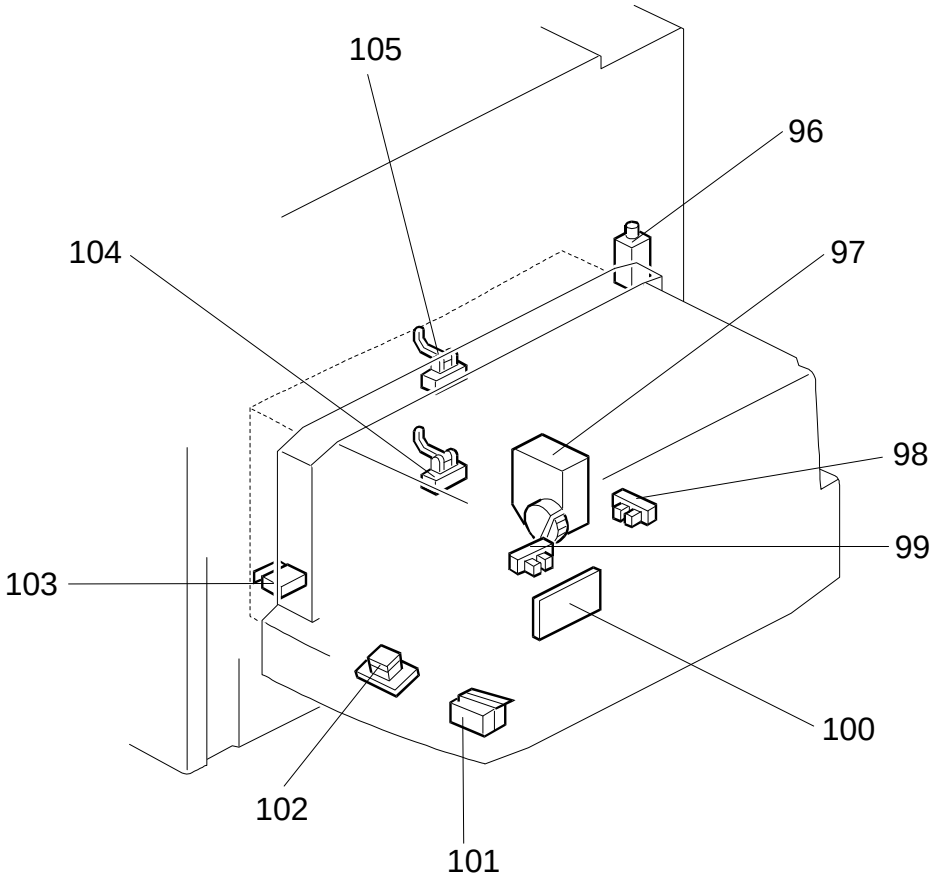

A204S504.wmf

Description	Index No.	P to P Location
CB High Voltage Supply Board (PCB5)	1	A12
Erase Lamp (L6)	2	H2
Operation Panel Board (PCB7)	3	F2
Pre-transfer Lamp (L4)	4	D13
Quenching Lamp (L5)	5	D14
Liquid Crystal Display Board (A207 machines only) (PCB10)	6	E2
Transformer (220 ~ 240 V machines only) (TR1)	7	C3
Nose Filter Board (220 ~ 240 V machines only) (PCB8)	8	B4
Circuit Breaker (220 ~ 240 V machines only) (CB1)	9	B3
DC Power Supply Board (PCB3)	10	C9
AC Drive Board (PCB2)	11	C6
Auto Image Density Sensor (ADS Sensor) (S25)	12	D8
Main Control Board (PCB1)	13	F13

Description	Index No.	P to P Location
Scanner HP Sensor (S17)	14	G10
Platen Cover Sensor (S21)	15	D13
Exposure Lamp (L1)	16	A6
Exposure Lamp Thermofuse (TF3)	17	A6
Original Length Sensor-1 (S27)	18	D7
Lens Vertical HP Sensor (S16)	19	G10
Original Length Sensor-2 (S19)	20	D14
Original Length Sensor (Option for N. American models) (S33)	21	D11
Transfer Belt Contact HP Sensor (S24)	22	D12
3rd Scanner HP Sensor (S18)	23	F9
Upper Tray Paper Size Switch (Non-duplex machines only) (SW3)	24	G16
LCT Upper Limit Sensor (LCT machines only) (S11)	25	J13
By-pass Feed Paper Width Sensor (S1)	26	J16
Registration Sensor (S12)	27	H10
Upper Tray Upper Limit Sensor (Non-duplex machines only) (S5)	28	I16
Lower Tray Upper Limit Sensor (S8)	29	J16
By-pass Feed Paper End Sensor (S2)	30	H10
Vertical Guide Set Switch (Non-LCT machines only) (SW5)	31	K16
By-pass Feed Table Switch (SW1)	32	I10
Lower Tray Paper Size Switch (SW4)	33	H16
Lower Tray Heater (option) (H3)	34	A5
Drum Heater (H1)	35	A4
Lens Horizontal HP Sensor (S15)	36	H10
Total Counter (CO1)	37	D11
Front Cover Safety Switch (SW9)	38	C10
Main Switch (SW8)	39	C8
Auto Response Sensor (S23)	40	F1
Original Width Sensor (S26)	41	D8
Fusing Exit Sensor (S20)	42	D14
Optics Anti-condensation Heater (option) (H2)	43	A5
Optics Thermistor (TH3)	44	D4

Description	Index No.	P to P Location
Exit Cover Safety Switch (A211 machines only) (SW10)	45	C10
Drum Charge Thermistor (TH4)	46	I2
Image Density Sensor (ID) (S13)	47	I3
Upper Tray Paper End Sensor (Non-duplex machines only) (S3)	48	H16
Lower Tray Paper End Sensor (S6)	49	I16
Toner Density Sensor (TD) (S14)	50	I3
Toner End Sensor (S22)	51	D13
T High Voltage Supply Board (PCB6)	52	B12
Duplex Paper End Sensor (Duplex machines only) (S28)	53	K5
Duplex Turn Sensor (Duplex machines only) (S29)	54	K5
Duplex Feed Motor (Duplex machines only) (M14)	55	J8
Side Fence Jogger HP Sensor (Duplex machines only) (S31)	56	K6
Side Fence Jogger Motor (Duplex machines only) (M16)	57	K5
End Fence Jogger Motor (Duplex machines only) (M15)	58	K4
Duplex Entrance Sensor (Duplex machines only) (S30)	59	K6
Duplex Control Board (Duplex machines only) (PCB9)	60	J5
End Fence Jogger HP Sensor (Duplex machines only) (S32)	61	K6
Main Fusing Lamp (L2)	62	A7
Secondary Fusing Lamp (L3)	63	A8
Secondary Fusing Thermofuse (A208/A210/A211 machines only) (TF2)	64	B7
Main Fusing Thermofuse (TF1)	65	A7
Main Fusing Thermistor (TH1)	66	D12
Secondary Fusing Thermistor (A208/A210/A211 machines only) (TH2)	67	C12

Description	Index No.	P to P Location
Development Clutch (CL2)	68	D6
Toner Supply Clutch (CL1)	69	D5
Registration Clutch (CL4)	70	I10
By-pass Feed Clutch (CL5)	71	I10
LCT machines: LCT/By-Pass Pick up Solenoid Non-LCT machines: By-Pass Pick up Solenoid (SOL1)	72	I10
Relay Clutch (CL6)	73	K16
Lens Horizontal Drive Motor (M13)	74	G9
3rd Scanner Drive Motor (M11)	75	G8
Toner Bottle Drive Motor (M2)	76	D6
Upper Tray Pick-up Solenoid (Non-duplex machines only) (SOL4)	77	E16
Upper Tray Separation Solenoid (Non-duplex machines only) (SOL6)	78	F16
Lower Tray Pick-up Solenoid (SOL5)	79	F16
Lower Tray Separation Solenoid (SOL7)	80	F16
Upper- Paper Feed Clutch (Non-duplex machines only) (CL7)	81	E16
Lower Paper Feed Clutch (CL8)	82	E16
Lower Tray Lift Motor (Duplex machines only) (M4)	83a	G16
Lower Tray Lift Motor (Non-duplex machines only) (M4)	83b	G16
Lens Vertical Drive Motor (M12)	84	G8
Main Motor (M1)	85	D10
DC Board Cooling Fan Motor (A204/A206/A207 machines for N. American only) (M17)	86	I7
Exhaust Fan Motor 1 (M8)	87	D5
Exhaust Fan Motor 2 (A204/A206/A207 machines only) (M9)	88	D5
Junction Gate Solenoid (Duplex machines only) (SOL2)	89	G7
Scanner Drive Motor (M10)	90	F7
Transfer Belt Contact Clutch (CL3)	91	D12
Optics Cooling Fan Motor 1 (M6)	92	D4
Optics Cooling Fan Motor 2 (M7)	93	D5
Main Motor Control Board (PCB4)	94	D9
Upper Tray Lift Motor (Non-duplex machines only) (M3)	95	F16

Description	Index No.	P to P Location
LCT Pick-up Solenoid (LCT machines only) (SOL3)	96	J14
LCT Lift Motor (LCT machines only) (M5)	97	L11
LCT Lower Limit Sensor (LCT machines only) (S9)	98	J12
LCT Paper End Sensor (LCT machines only) (S10)	99	J13
LCT Interface Board (LCT machines only) (PCB11)	100	K12
LCT Cover Switch-2 (LCT machines only) (SW7)	101	K12
Tray Down Switch (LCT machines only) (SW2)	102	J13
LCT Cover Switch-1 (LCT machines only) (SW6)	103	J12
Lower Relay Sensor (S7)	104	J16
Upper Relay Sensor (S4)	105	I16

ARDF (A663) ELECTRICAL COMPONENT LAYOUT

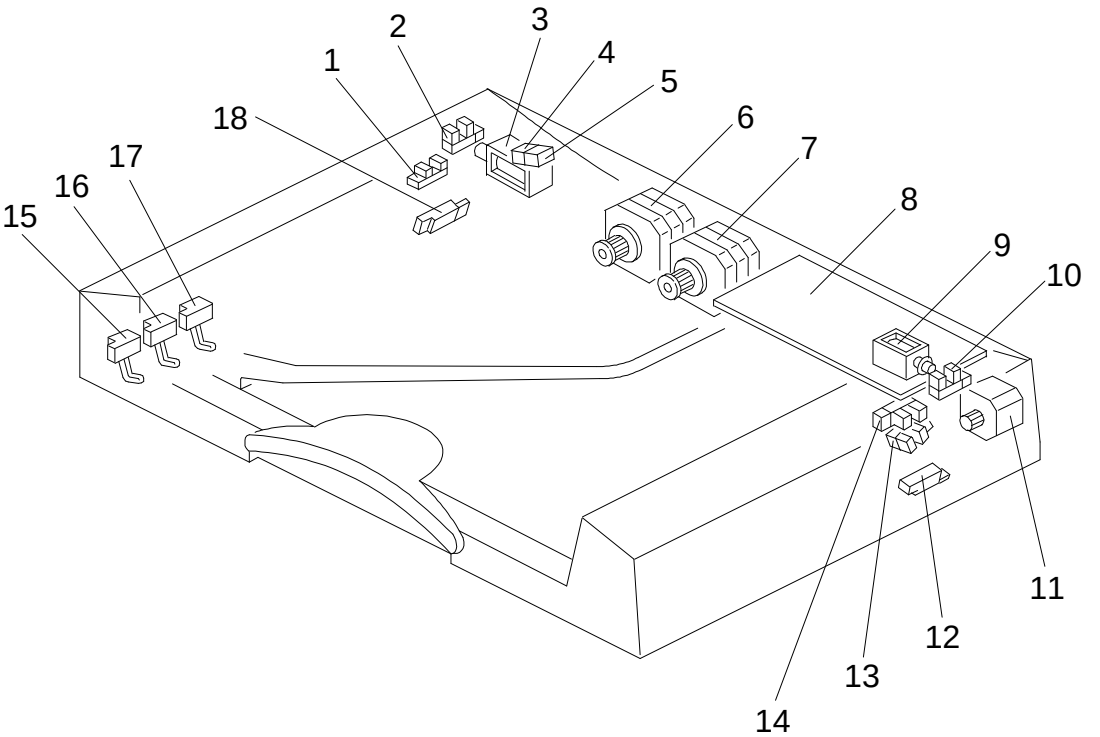

Description	Index No.	P to P Location
Original Set Sensor (S1)	1	B2
Feed-in Cover Open Sensor (S2)	2	E2
Stopper Solenoid (SOL1)	3	J16
Ready Lamp (L1)	4	D2
Auto Lamp (L2)	5	C2
Feed-in Motor (M1)	6	D17
Belt Drive Motor (M2)	7	F17
DF Main Board (PCB1)	8	F11
Inverter Solenoid (SOL2)	9	K16
Feed-out Cover Open Sensor (S3)	10	J2
Feed-out Motor (M3)	11	H17
Feed-out Sensor (S4)	12	I2
APS Start Sensor (S5)	13	L2
DF Position Sensor (S6)	14	K2
Original Width Sensor-1 (S7)	15	H2
Original Width Sensor-2 (S8)	16	G2
Original Width Sensor-3 (S9)	17	F2
Registration Sensor (S10)	18	A2

20 BIN SORTER STAPLER (A664) ELECTRICAL COMPONENT LAYOUT

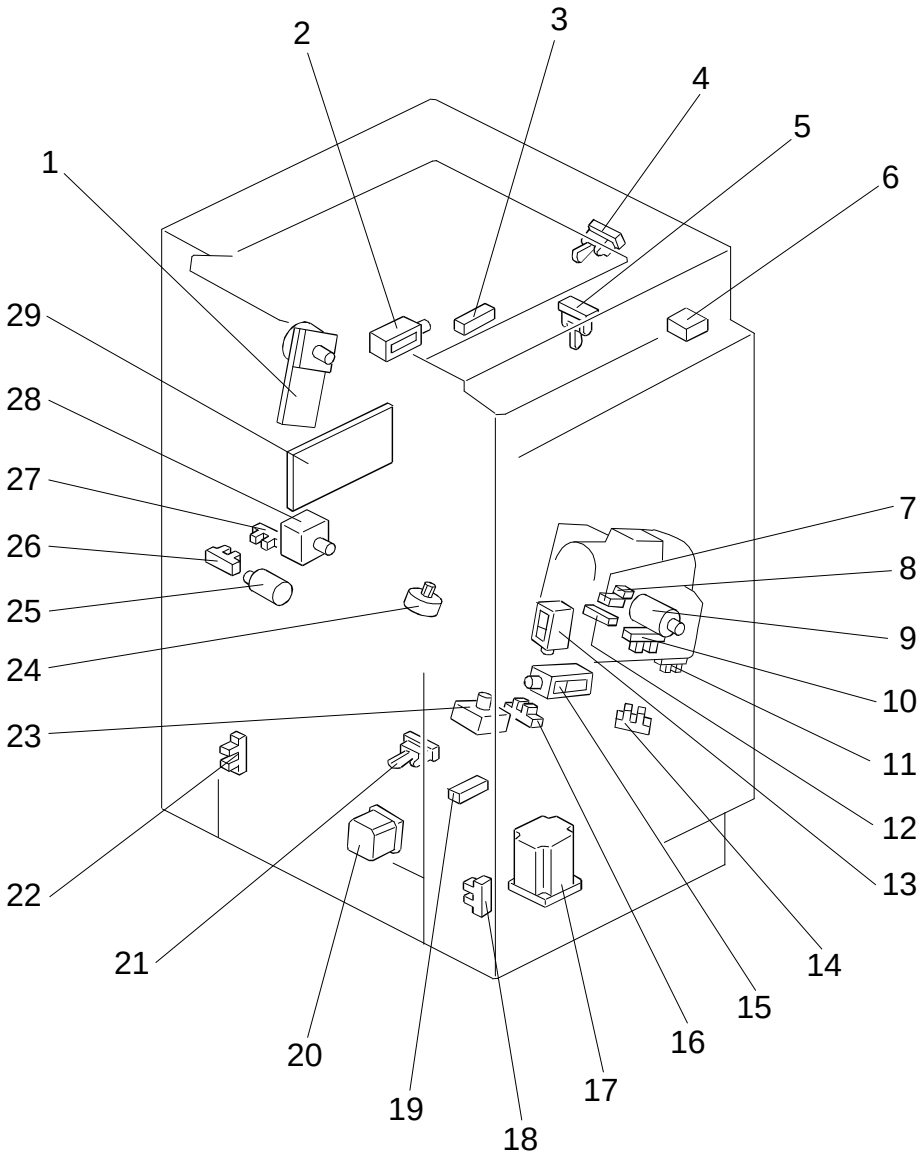

Description	Index No.	P to P Location
Main Motor (M1)	1	A3
Turn Gate Solenoid (SOL1)	2	A4
Bin Jam (LED) Sensor (S1)	3	G1
Proof Exit Sensor(S2)	4	A5
Entrance Sensor (S3)	5	A4
Door Safety Switch (SW1)	6	B2
Cartridge Set Switch (SW2)	7	A11
Staple End Switch (SW3)	8	A11
Staple Motor (M2)	9	A10
Staple Hammer Home Position Sensor (S4)	10	A11
Staple Unit Pulled-out position Sensor (S5)	11	A7
Paper Sensor (S6)	12	G9
Grip Solenoid (SOL2)	13	A9
Staple Unit Home Position Sensor (S7)	14	A8
Grip Arm Positioning Solenoid (SOL3)	15	A9
Grip Home Position Sensor (S8)	16	G9
Bin Drive Motor (M4)	17	G3
Wheel Sensor (S10)	18	G4
Bin Jam Sensor (Photo Tr.) (S9)	19	G2
Jogger Motor (M5)	20	G6
Bin Home Position (S11)	21	G4
Jogger Home Position Sensor (S12)	22	G5
Grip Motor (M3)	23	G10
Staple Unit Drive Motor (M6)	24	A8
Bin Rear Plate Drive Motor (M7)	25	A10
Bin Rear Plate Open Sensor (S13)	26	A6
Bin Rear Plate Home Position Sensor (S14)	27	A7
Sorter Exit Motor (M8)	28	A5
Main Control Board (PCB1)	29	D1

20 BIN SORTER STAPLER (A658) ELECTRICAL COMPONENT LAYOUT

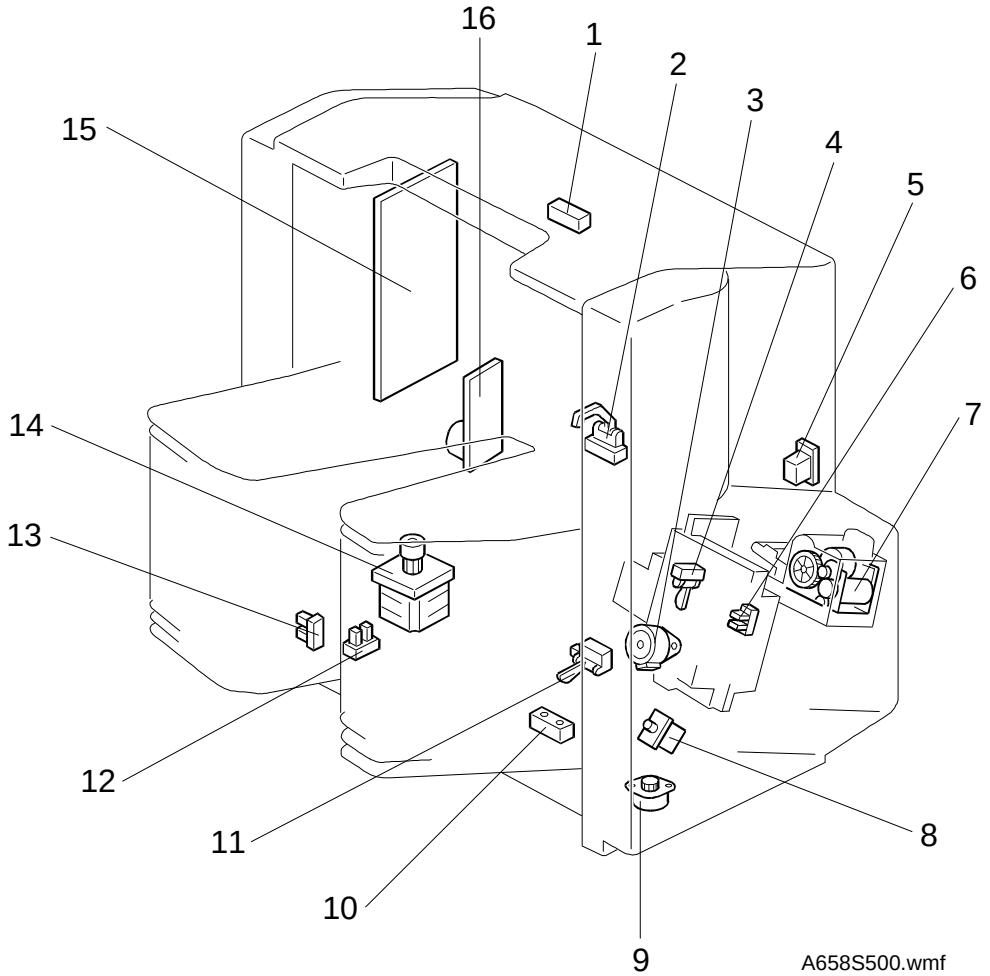

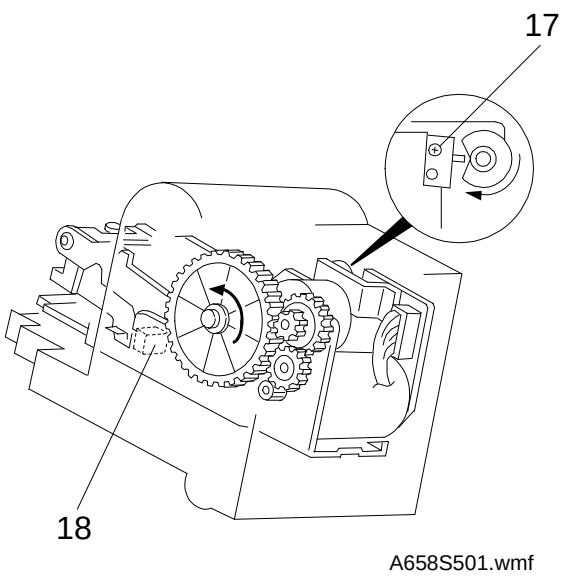

Description	Index No.	P to P Location
Bin Sensor (Photo tr.) (S1)	1	I16
Sorter Entrance Sensor (S4)	2	H16
Grip Motor (M5)	3	H2
Stapler Paper Sensor (S8)	4	C16
Door Safety Switch (SW1)	5	A5
Grip Home Position Sensor (S2)	6	D16
Stapler Motor (M4)	7	D1
Stapler Switch (SW2)	8	F5
Jogger Motor (M2)	9	G2
Bin Sensor (LED) (S7)	10	L16
Bin Home Position Sensor (S3)	11	K16
Wheel Sensor (S6)	12	B16
Jogger Home Position Sensor (S5)	13	A16
Bin Drive Motor (M3)	14	J2
Main Board (PCB1)	15	F8
Main Drive Motor (M1)	16	F17
Staple Home Position Sensor (S10)	17	E1
Staple End Sensor (S9)	18	E1