IMPORTANT SAFETY NOTICES

PREVENTION OF PHYSICAL INJURY

1. Before disassembling or assembling parts of the copier and peripherals, make sure that the copier power cord is unplugged.
2. The wall outlet should be near the copier and easily accessible.
3. Note that some components of the copier and the paper tray unit are supplied with electrical voltage even if the main switch is turned off.
4. If any adjustment or operation check has to be made with exterior covers off or open while the main switch is turned on, keep hands away from electrified or mechanically driven components.
5. The inside and the metal parts of the fusing unit become extremely hot while the copier is operating. Be careful to avoid touching those components with your bare hands.
6. The copier is not attached to the table. Pushing the copier too heard may cause it to drop onto the floor. While moving the copier, push the table.
7. When the main switch is tuned on, the machine will suddenly start turning to perform the developer initialization. Keep hans away from any mechanical and electrical components during this period.

HEALTH SAFETY CONDITIONS

1. Never operate the copier without the ozone filters installed.
2. Always replace the ozone filters with the specified ones at the specified intervals.
3. Toner and developer are non-toxic, but if you get either of them in your eyes by accident, it may cause temporary eye discomfort. Try to remove with eye drops or flush with water as first aid. If unsuccessful, get medical attention.

OBSERVANCE OF ELECTRICAL SAFETY STANDARDS

1. The copier and its peripherals must be installed and maintained by a customer service representative who has completed the training course on those models.

⚠ CAUTION

2. The RAM board on the main control board has a lithium battery which can explode if replaced incorrectly. Replace the RAM board only with an identical one. The manufacturer recommends replacing the entire RAM board. Do not recharge or burn this battery. Used RAM board must be handled in accordance with local regulations.

SAFETY AND ECOLOGICAL NOTES FOR DISPOSAL

1. Do not incinerate the toner cartridge or the used toner. Toner dust may ignite suddenly when exposed to open flame.
2. Dispose of used toner, developer, and organic photoconductor according to local regulations. (These are non-toxic supplies.)
3. Dispose of replaced parts in accordance with local regulations.
4. When keeping used RAM boards in order to dispose of them later, do not put more than 100 RAM boards per sealed box. Storing larger numbers or not sealing them apart may lead to chemical reactions and heat build-up.

SECTION 1

OVERALL MACHINE INFORMATION

1. SPECIFICATION

Configuration:	Console
Copy Process:	Dry electrostatic transfer system
Toner Supply Control:	Fuzzy Control
Photoconductor:	OPC drum
Originals:	Sheet/Book
Original Size:	Maximum A3/11" x 17"
Original Alignment:	Left rear corner
Copy Paper Size:	Maximum A3/11" x 17" Minimum A5/5 1/2" x 8 1/2" (Tray) B5/8 1/2" x 11" (1.5 k LCT) A6/5 1/2" x 8 1/2" (By-pass)
Duplex Copying:	Maximum A3/11" x 17" Minimum A5/5 1/2" x 8 1/2" (sideways)
Copy Paper Weight:	Paper tray: 52 ~ 128 g/m^2, 14 ~ 34 lb Bypass feed table: 52 ~ 157 g/m^2, 14 ~ 42 lb Duplex copying: 64 ~ 104 g/m^2, 17 ~ 24 lb
Reproduction Ratios:	4 Enlargement and 6 Reduction

	A4/A3 Version	LT/LDG Version
Enlargement	200% 141% 122% 115%	200% 155% 129% 121%
Full Size	100%	100%
Reduction	93% 82% 75% 71% 65% 50%	93% 85% 77% 74% 65% 50%

Power Source: 115 V, 60 Hz, more than 20 A (for N.A)
220 ~ 240 V, 50 Hz/60 Hz, more than 10 A (for Europe and Asia)

Power Consumption: A175 copier

	Copier only	Full system*
Warm-up	1.20 kVA	1.22 kVA
Stand-by	0.22 kVA	0.24 kVA
Copying	1.40 kVA	1.40 kVA
Maximum	1.70 kVA	1.75 kVA

A176/A191 copiers

	Copier only	Full system*
Warm-up	1.20 kVA	1.22 kVA
Stand-by	0.22 KVA	0.24 kVA
Copying	1.50 kVA	1.50 kVA
Maximum	1.70 kVA	1.75 kVA

A177/A192 copiers

	Copier only	Full system*
Warm-up	1.20 kVA	1.22 kVA
Stand-by	0.22 kVA	0.24 kVA
Copying	1.60 kVA	1.60 kVA
Maximum	1.70 kVA	1.75 kVA

*Full System:

- Mainframe with dual job feeder, floor type sorter stapler and 3,500-sheet large capacity tray
- Mainframe with recirculating document handler, finisher and 3,500-sheet large capacity tray

Noise Emission: Sound Pressure Level:
The measurements are made according to ISO7779

A175 copier
Sound pressure level (The measurements are made according to ISO 7779 at the operator position.)

	Copier only
Stand-by	less than 34 dB (A)
Copying	less than 57 dB (A) (average)

Sound power level (The measurements are made according to ISO 7779.)

	Copier only
Stand-by	less than 48 dB (A)
Copying	less than 70 dB (A) (average)

A176/A191 copiers
Sound pressure level (The measurements are made according to ISO 7779 at the operator position.)

	Copier only
Stand-by	less than 34 dB (A)
Copying	less than 59 dB (A) (average)

Sound power level (The measurements are made according to ISO 7779.)

	Copier only
Stand-by	less than 48 dB (A)
Copying	less than 73 dB (A) (average)

A177/A192 copiers
Sound pressure level (The measurements are made according to ISO 7779 at the operator position.)

	Copier only
Stand-by	less than 36 dB (A)
Copying	less than 59 dB (A) (average)

Sound power level (The measurements are made according to ISO 7779.)

	Copier only
Stand-by	less than 50 dB (A)
Copying	less than 73 dB (A) (average)

Dimensions:

	Width	Depth	Height
Copier only	690 mm 27.2"	690 mm 27.2"	980 mm 38.6"
Copier with dual job feeder, sorter stapler, and 3,500-sheet large capacity tray	1,659 mm 65.4"	690 mm 27.2 mm"	1,116 mm 43.9"
Copier with dual job feeder, sorter stapler with punch, and 3,500-sheet large capacity tray	1,659 mm 65.4"	690 mm 27.2"	1,113 mm 43.9
Copier with recirculating document handler, finisher, and 3,500-sheet large capacity tray	1,764 mm 65.9"	690 mm 27.2"	1,112 mm 43.8"

Weight:

Copier only: (Without the optional platen cover = Approximately 2 kg)
A175 copier: Approximately 161 kg
A176/A177 copiers: Approximately 164 kg
A191/A192 copiers: Approximately 167 kg

Zoom: From 50% to 200% in 1% steps

Copying Speed:

	A4/LT (sideways)	A3/DLT	B4/LG
A175 copier	51 (A4 others) 50 (A4/in France) 50 (LT)	26	32
A176/A191 copiers	60	31	38
A177/A192 copiers	70	36	44

Warm-up Time:

Less than 5 minutes (20°C) (A175 copier)
Less than 5.5 minutes (20°C) (A176/A177/A191/A192 copiers)

First Copy Time:
(A4/81/2: x 11" sideways from the 1st feed station)

3.1 seconds (A175 copier)
2.6 seconds (A176/A177/A191/A192 copiers)

Copy Number Input: Number keys, 1 to 999 (count up or count down)

Manual Image Density Selection: 7 steps

Automatic Reset: 1 minute standard setting; can also be set from 1 second to 999 seconds or no auto reset.

Copy Paper Capacity:

- By-pass feed table: approximately 50 sheets
- Paper tray: approximately 550 sheets
- Tandem tray: approximately 500 sheets
- Large capacity tray: approximately 1500 sheets

Toner Replenishment: 1,100 g/cartridge

Optional Equipment:

- Platen cover (A528-04)
- Dual job feeder (A610)
- Recirculating document handler (A607)
- 20 bin sorter stapler (Floor type) (A606-17: Ricoh, -22: NRG, -15: Savin, -26: Infotec)
- Finisher (A608)
- 3500-sheet Large capacity tray (A609)
- Receiving Tray (A446-05)
- Key Counter Bracket D (A509-03)
- 20 bin sorter stapler (Floor type) with punch (A606-57, -67: Ricoh, -52, -62: NRG -66: Infotec, -55: Savin)
- Guidance ROM KIT (A627)
- Editing sheet (spare part)

2. MACHINE CONFIGURATION

2.1 COPIER OVERVIEW

There are three types of mainframe.

A175 copier

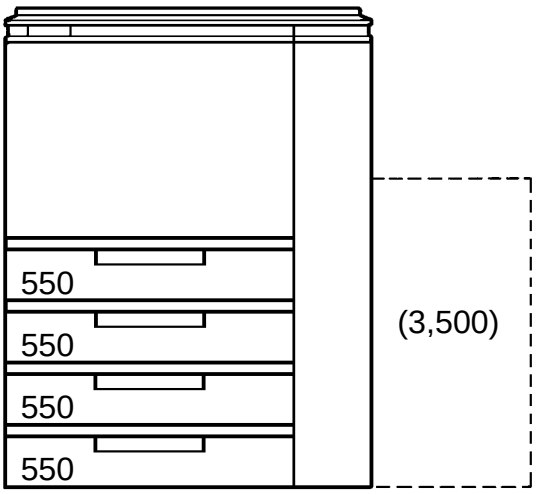

Four 550-sheet paper trays
Optional 3,500-sheet large capacity tray

A176V500.img

A176/A177 (U.S.A., Asia) copiers

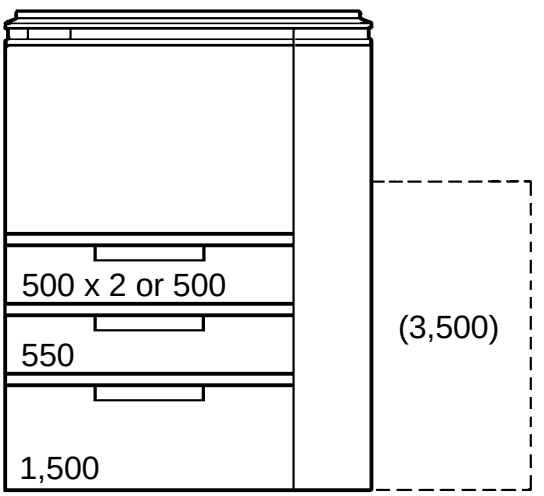

Tandem paper tray
(including two 500-sheet paper tray)
One 550-sheet paper tray
1,500-sheet built-in large capacity tray
Optional 3,500-sheet large capacity tray

A176V501.img

A191/A192 (Europe) copiers

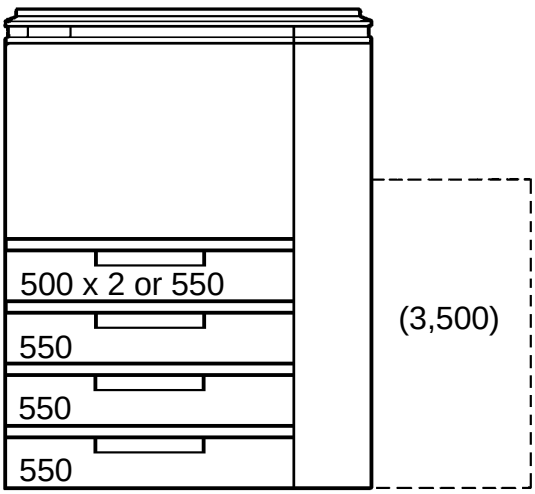

A176V500.img

Tandem paper tray
Three 550-sheet paper trays
Optional 3,500-sheet large capacity tray

2.2 SYSTEM OVERVIEW

DJF version

(Mainframe type (A175/A176/A177 (U.S.A.), A175/A191/A192 (EU)) with dual job feeder and floor type sorter stapler. The mainframe in the illustration below is the A176.)

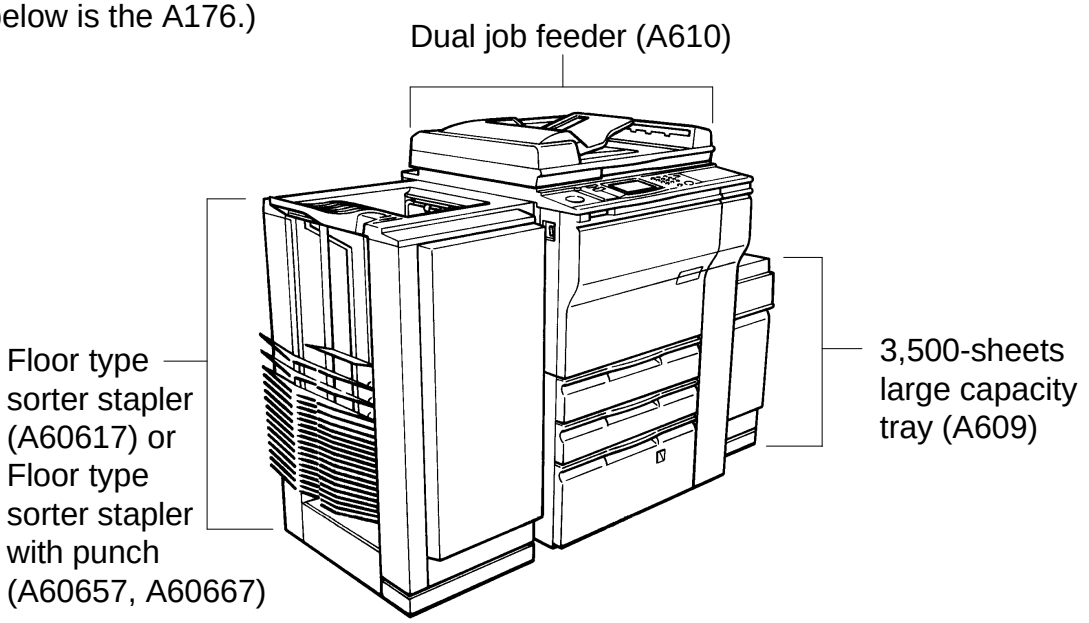

A176V502.img

RDH version

(The mainframe (A175/A176/A177 (U.S.A.), A175/A191/A192 (EU)) with recirculating document handler and finisher. The mainframe in the illustration below is the A176.)

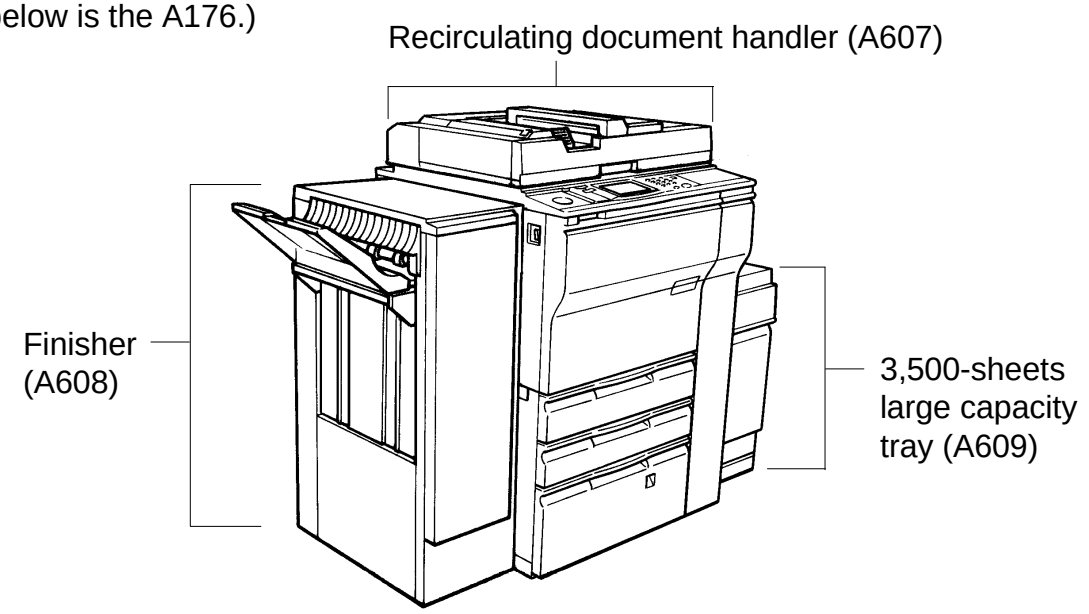

A176V503.img

MEMO

3. COPY PROCESS AROUND THE DRUM

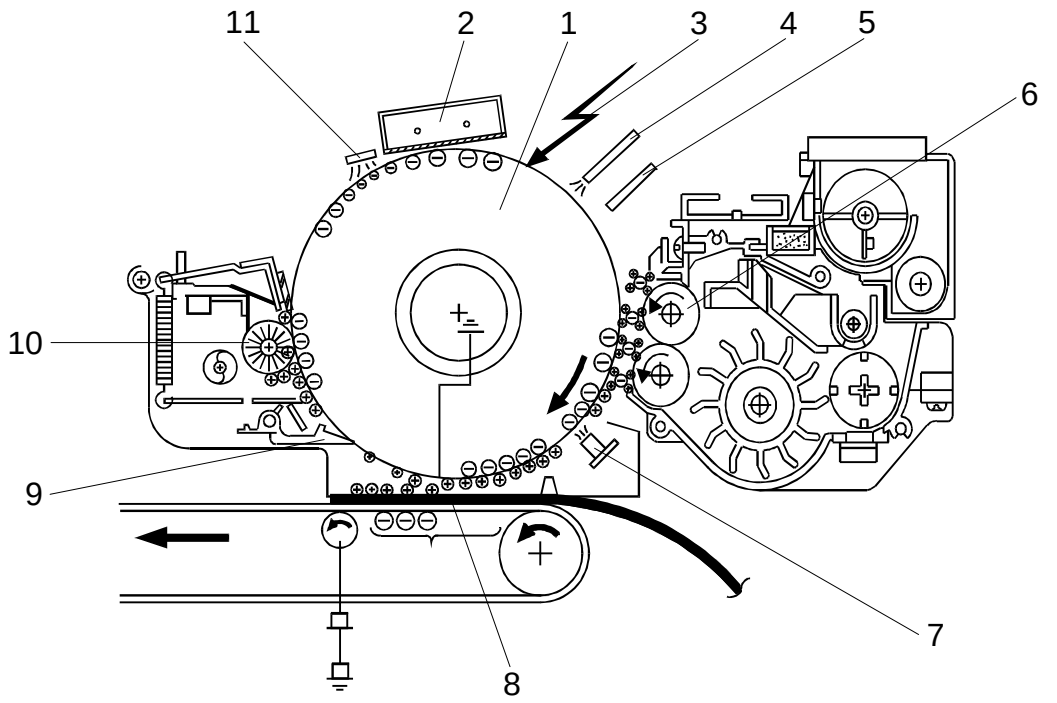

A176V504.wmf

1. OPC DRUM
The organic photo conductive (OPC) drum (100 mm diameter) has high resistance in the dark and low resistance under light.

2. DRUM CHARGE
In the dark, the charge corona unit gives a uniform negative charge to the OPC drum. The charge remains on the surface of the drum. The amount of negative charge on the drum is proportional to the negative grid bias voltage applied to the grid plate on the charge corona unit.

3. EXPOSURE
An image of the original is reflected to the OPC drum surface via the optics section. The charge on the drum surface is dissipated in direct proportion to the intensity of the reflected light, thus producing an electrical latent image on the drum surface.

The amount of charge remaining as a latent image on the drum depends on the exposure lamp intensity controlled by the exposure lamp voltage.

4. ERASE
The erase lamp illuminates the areas of the charged drum surface that will not be used for the copy image. The resistance of drum in the illuminated areas drops and the charge on those areas dissipates.

5. DRUM POTENTIAL SENSOR
The drum potential sensor detects the electric potential on the drum to compensate image processing elements.

6. DEVELOPMENT
Positively charged toner is attracted to the negatively charged areas of the drum, thus developing the latent image. (The positive triboelectric charge of the toner is caused by friction between the carrier and toner particles.)

The development bias voltage applied to the development roller shaft controls two things:

1) The threshold level if toner is attracted to the drum or toner remains on the development roller.
2) The amount of toner to be attracted to the drum.

The higher the negative development bias voltage is, the less toner is attracted to the drum surface.

7. PRE-TRANSFER LAMP (PTL)
The PTL illuminates the drum to remove almost all the negative charge from the exposed areas of the drum. This makes image transfer easier.

8. IMAGE TRANSFER
Paper is fed to the drum surface at the proper timing so as to align the copy paper and the developed image on the drum surface. Then, a negative charge is applied to the reverse side of the copy paper by the transfer belt, producing an electrical force which pulls the toner particles from the drum surface onto the copy paper. At the same time, the copy paper is electrically attracted to the transfer belt.

9. PAPER SEPARATION
Paper separates from the OPC drum by the electrical attraction between the paper and the transfer belt. The pick-off pawls help to separate the paper from the drum.

10. CLEANING
The cleaning brush removes toner remaining on the drum after image transfer and the cleaning blade scrapes off all the remaining toner.

11. QUENCHING
Light from the quenching lamp electrically neutralizes the charge potential of the drum surface.

4. MECHANICAL COMPONENT LAYOUT

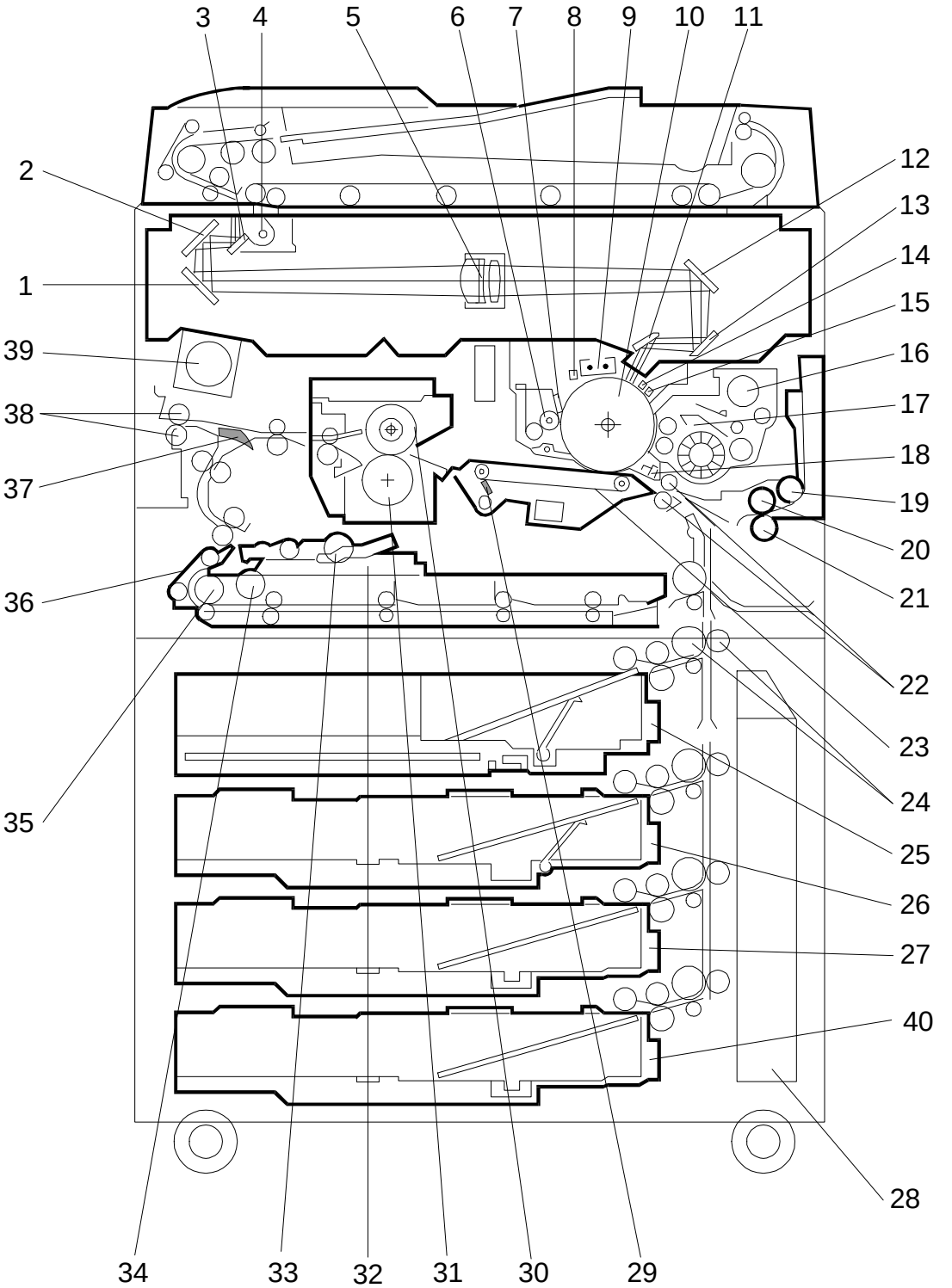

A176V505.wmf

1. 3rd Mirror
2. 2nd Mirror
3. 1st Mirror
4. Exposure Lamp
5. Lens
6. Cleaning Brush
7. Cleaning Blade
8. Quenching Lamp
9. Charge Corona Unit
10. OPC Drum
11. 6th Mirror
12. 4th Mirror
13. 5th Mirror
14. Erase Unit
15. Drum Potential Sensor
16. Toner Hopper
17. Development Unit
18. Pre-Transfer Lamp
19. Pick-up Roller
20. Feed Roller
21. Separation Roller
22. Registration Rollers
23. Transfer Belt
24. Vertical Transport Rollers
25. Tandem Tray
    550-sheet Tray
26. Universal Tray
27. 1500-sheet LCT
    550-sheet Tray
28. Toner Collection Bottle
29. Transfer Belt Cleaning Blade
30. Hot Roller
31. Pressure Roller
32. Jogger Fences
33. Duplex Positioning Roller
34. Duplex Pick-up Roller
35. Duplex Feed Roller
36. Separation Belt
37. Junction Gate
38. Exit Rollers
39. Optics Cooling Fan
40. 550-sheet Tray

5. DRIVE LAYOUT

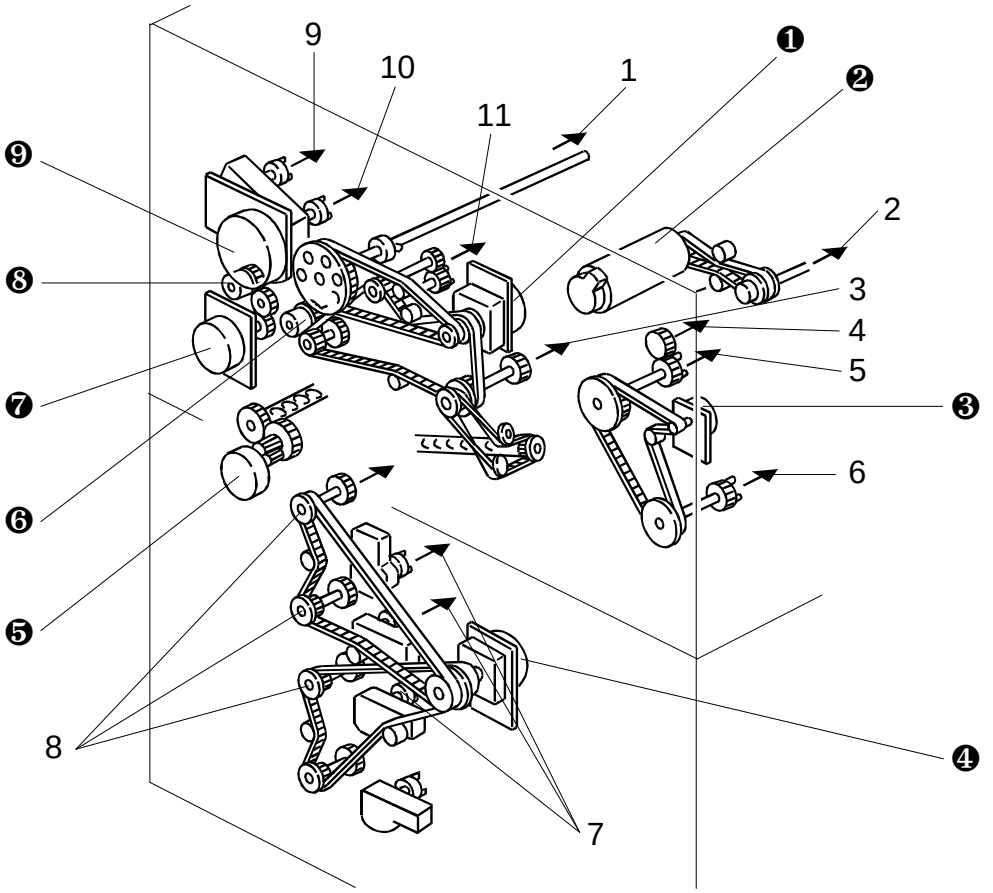

A176V506.wmf

❶ Main Motor
❷ Scanner Drive Motor
❸ Fusing/Duplex Drive Motor
❹ Paper Feed Motor
❺ Toner Collection Motor
❻ Registration Clutch
❼ By-Pass Feed Motor
❽ BY-Pass Feed Clutch
❾ Development Drive Motor

1. OPC Drum
2. Scanner Unit
3. Transfer Belt Unit
4. Paper Exit Unit
5. Fusing Unit
6. Duplex Unit
7. Paper Trays
8. Paper Feed Units
9. Toner Hopper
10. Development Unit
11. Cleaning Unit

6. PAPER PATH

6.1 STANDARD COPYING

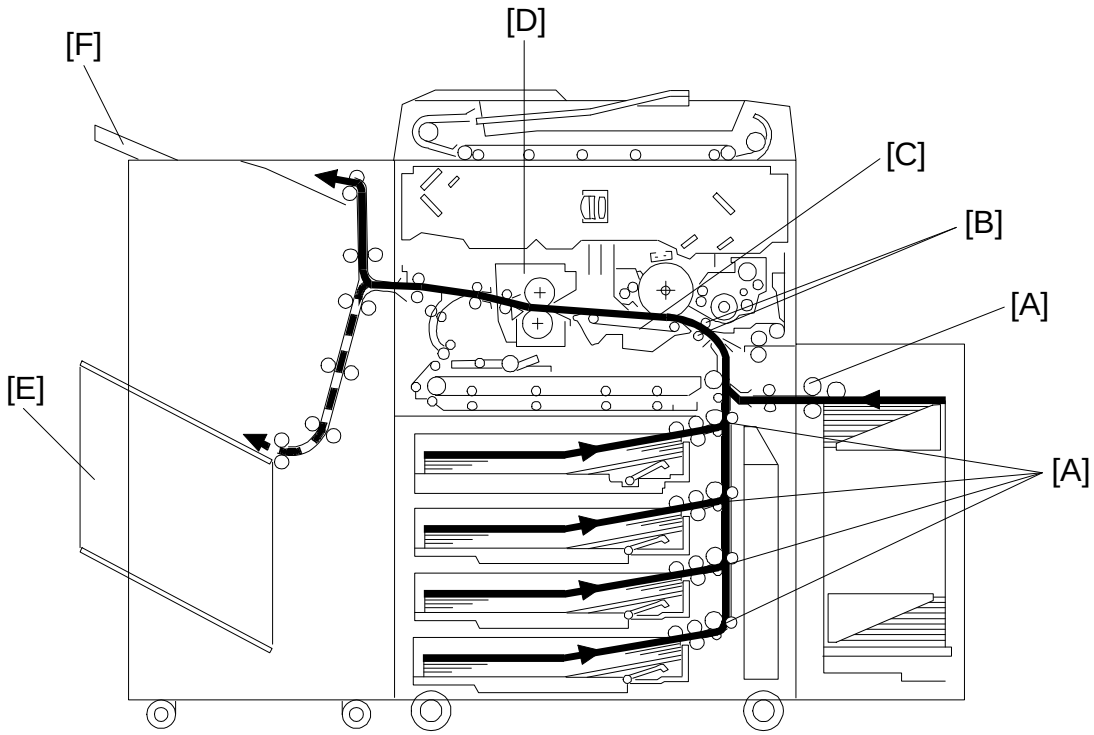

A176V507.wmf

Paper feed begins from the exterior LCT, by-pass feed table or paper feed stations in the paper tray unit. The copy paper then follows one of two paths inside the copier. The path followed depends on which mode the operator has selected. For copy processing, all sheets follow the same paths from the paper feed mechanism [A] through the registration rollers [B], transfer belt [C], and fusing unit [D]. After that, copies are delivered to the sorter bins [E] or proof tray [F], however, 2 sided copies are diverted for further processing.

6.2 MULTIPLE 2-SIDED COPYING

a. Front Side

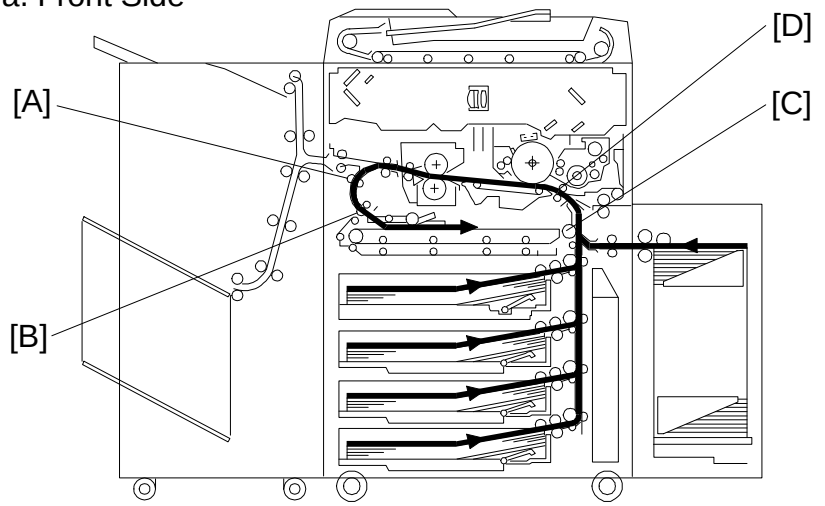

A176V508.wmf

b. Rear Side

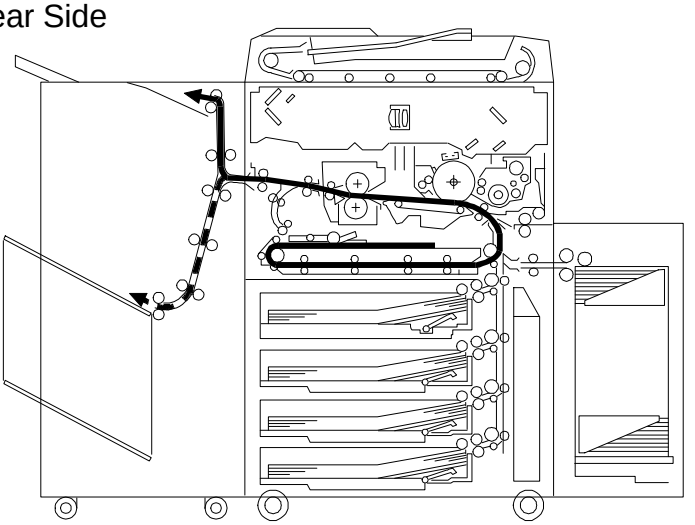

A176V509.wmf

In this mode the junction gate [A] directs sheets exiting the fusing unit to the duplex tray entrance. After that, all sheets follow the path through the duplex entrance rollers [B].

After all front side copying is completed, the sheets on the duplex tray are fed in order from the bottom to the top and follow the path through the duplex feed mechanism and vertical transport rollers [C] to the registration rollers [D]. After that, these sheets follow the same path as standard copying from the registration rollers to the sorter.

7. ELECTRICAL COMPONENT DESCRIPTION

Refer to the electrical component layout on the reverse side of the attached Point to Point for symbols and index numbers.

Symbol	Name	Function	Index No.
Motors			
M1	Scanner Drive	Drives the 1st and 2nd scanners (dc servo).	42
M2	Exhaust Fan	Removes the heat from around the fusing unit.	43
M3	Main	Drives the main unit components.	44
M4	Development Drive	Drives the development unit.	45
M5	By-pass Feed	Drives the by-pass feed rollers.	46
M6	3rd Scanner Drive	Drives the 3rd scanner (dc stepper)	47
M7	Toner Bottle Drive	Rotates the toner bottle to supply toner to the toner hopper.	48
M8	Charge Wire Cleaner Drive	Drives the main charge wire cleaner to clean the charge wire.	49
M9	Jogger	Drives the jogger fences to square the paper stack in the duplex tray (dc stepper).	50
M10	Lens Horizontal Drive	Shifts the lens horizontal position.	51
M11	Lens Vertical Drive	Shifts the lens vertical position.	52
M12	Optic Cooling Fan	Removes heat from the optics unit.	53
M13	Fusing/Duplex Drive	Drives the fusing unit, the duplex unit, and the paper exit rollers.	54
M14	Paper Feed	Drives all feed and transport rollers in the paper tray unit.	90
M15	1st Lift	Raises the bottom plate in the 1st paper tray.	91
M16	2nd Lift	Raises the bottom plate in the 2nd paper tray.	92
M17	Toner Collection	Transports the collected toner to the toner collection bottle.	93
M18	3rd Lift (4 Tray version only)	Raises the bottom plate in the 3rd paper tray.	94
M19	Side Fence Drive (Tandem version only)	Opens and closes the front and the rear side fences of the tandem tray.	95
M20	Rear Fence Drive (Tandem version only)	Moves the papers stacked in the left tandem tray to the right tandem tray.	96
M21	LCT Motor (1,500 Tray version only)	Lifts and lowers the LCT bottom plate to bring paper to the feed position and allow loading of the paper.	127

Symbol	Name	Function	Index No.
M22	AC Drive Cooling Fan (60/70 CPM version only)	Remove heat from around the AC drive unit.	141
M23	Optic Cooling Fan-2 (60/70 CPM version only)	Remove heat from the optic unit.	142
M24	Duplex Cooling Fan	Cools the paper on the duplex tray to reduce the heat around the drum.	*143A, B
M25	Drum Cooling Fan (70 CPM version only)	Cools the drum unit to remove the heat from the duplex tray.	144
M26	4th Lift (4 Tray version only)	Raises the bottom plate in the 4th paper tray.	151
* (A: 60/70 CPM, B: 50/51 CPM)			
Magnetic Clutches			
MC1	Toner Supply	Turns the toner supply roller to supply toner to the development unit.	57
MC2	Registration	Drives the registration rollers.	58
MC3	By-pass Feed	Starts paper feed from the by-pass feed table.	60
MC4	Duplex Transport	Drives the duplex transport rollers to transport the paper to the vertical transport rollers.	64
MC5	Duplex Feed	Starts paper feed from the duplex tray to the duplex transport rollers.	65
MC6	1st Feed	Starts paper feed from the 1st feed tray.	99
MC7	2nd Feed	Starts paper feed from the 2nd feed tray.	101
MC8	3rd Feed	Starts paper feed from the 3rd feed tray.	104
MC9	4th Feed (4 Tray version only)	Starts paper feed from the 4th feed tray.	152
Switches			
SW1	By-pass Table	Detects if the by-pass feed table is open or closed.	25
SW2	Front Door Safety	Cuts the ac power line and detects if the front door is open or not.	29
SW3	1st Tray Set (Non-Tandem version only)	Detects if the 1st tray is set or not.	66
SW4	2nd Paper Size	Determines what size paper is in the 2nd (universal) paper tray.	67
SW5	Toner Overflow	Detects when the toner collection bottle is full.	75

Symbol	Name	Function	Index No.
SW6	Toner Collection Bottle Set	Detects if the toner collection bottle is set or not.	77
SW7	Lower Front Door Safety	Detects if the front door is open or not.	83
SW8	3rd Tray Set (4 Tray version only)	Detects if the 3rd tray is set or not.	84
SW9	Main	Provides power to the copier	122
SW10	Tray Down (1500 Tray version only)	Lowers the LCT bottom plate.	126
SW11	4th Tray Set (4 Tray version only)	Detects if the 4th tray is set or not.	149
Solenoids			
SOL1	Junction Gate	Moves the junction gate to direct copies to the duplex tray or to the paper exit.	55
SOL2	Duplex Positioning	Controls the up-down movement of the positioning roller.	56
SOL3	By-pass Pick-up	Controls the up-down movement of the pick-up roller for by-pass feed.	59
SOL4	Guide Plate	Opens the guide plate when a paper misfeed occurs around this area.	61
SOL5	Transfer Belt Positioning	Controls the up-down movement of the transfer belt unit.	62
SOL6	Pressure Arm	Presses the paper on the duplex tray against the duplex feed rollers.	63
SOL7	Tandem Lock	Locks the left tandem feed tray and separates the right and left tandem trays.	97
SOL8	1st Pick-up	Controls the up-down movement of the pick-up roller in the 1st feed station.	98
SOL9	1st Separation Roller	Controls the up-down movement of the separation roller in the 1st feed station.	100
SOL10	2nd Pick-up	Controls the up-down movement of the pick-up roller in the 2nd feed station.	102
SOL11	2nd Separation Roller	Controls the up-down movement of the separation roller in the 2nd feed station.	103
SOL12	3rd Pick-up	Controls the up-down movement of the pick-up roller in the 3rd feed station.	105

Symbol	Name	Function	Index No.
SOL13	3rd Separation Roller	Controls the up-down movement of the separation roller in the 3rd feed station.	106
SOL14	4th Pick-up (4 Tray version only)	Controls the up-down movement of the pick-up roller in the 4th feed station.	153
SOL15	4th Separation Roller (4 Tray version only)	Controls the up-down movement of the separation roller in the 4th feed station.	154
Sensors			
S1	Scanner HP	Informs the CPU when the 1st and 2nd scanners are at the home position.	1
S2	Platen Cover Position-1	Informs the CPU that the platen cover is in the up or down position (related to APS/ARE function).	2
S3	Platen Cover Position-2	Informs the CPU that the platen cover is in the up or down position to detect if the original has been removed or not.	3
S4	Lens Vertical HP	Informs the CPU that the lens is at the full-size position.	4
S5	Lens Horizontal HP	Informs the CPU that the lens is at the horizontal home position.	5
S6	3rd Scanner HP	Informs the CPU when the 3rd scanner is at the home position.	6
S7	By-Pass Paper End	Informs the CPU that there is no paper in the by-pass feed table.	7
S8	Guide Plate Position	Informs the CPU if the registration guide plate is closed or not.	8
S9	Jogger HP	Detects if the duplex jogger fences are at the home position or not.	9
S10	Vertical Transport	Detects the leading edge of the paper to determine the paper feed timing of the next sheet.	10
S11	Duplex Exit	Detects the leading edge of the paper to determine the duplex transport clutch on timing.	11
S12	Duplex Entrance Sensor	Detects the leading edge of the paper to determine the duplex feed clutch off timing.	12
S13	Duplex Paper End	Detects paper in the duplex tray.	13
S14	Duplex Transport	Detects the leading edge of the paper to control the jogger motor and the positioning solenoid on timing.	14
S15	Exit	Detects misfeeds.	15

Symbol	Name	Function	Index No.
S16	Fusing Exit	Detects misfeeds.	16
S17	Paper Guide	Detects misfeeds.	17
S18	Auto Image Density	Senses the background density of the original.	20
S19	Original Length-1	Detects original length.	21
S20	Original Length-2	Detects original length.	22
S21	Original Width	Detects original width.	23
S22	By-Pass Paper Size	Informs the CPU what size paper is in the by-pass feed table.	26
S23	Toner Density	Senses the amount of toner in the black developer.	27
S24	Registration	Detects misfeeds and controls registration clutch off-on timing.	28
S25	Toner Near End	Detects toner end condition.	30
S26	Auto-Response	Returns the display from the screen saver.	34
S27	Drum Potential	Detects the drum surface potential.	39
S28	Image Density	Detects the density of the ID sensor pattern on the drum.	41
S29	1st Paper End	Informs the CPU when the 1st cassette runs out of paper.	68
S30	1st Paper Near End	Informs the CPU when the 1st cassette is in near end condition.	69
S31	1st Paper Feed	Controls the 1st paper feed clutch off/on timing and the 1st pick-up solenoid off timing.	70
S32	2nd Paper Near End	Informs the CPU when the 2nd cassette is in near end condition.	71
S33	1st Lift	Detects the correct feed height of the 1st cassette.	72
S34	2nd Paper End	Informs the CPU when the 2nd cassette runs out of paper.	73
S35	Toner Collection Motor	Detects the toner collection motor operation.	74
S36	2nd Lift	Detects the correct feed height of the 2nd cassette.	76
S37	3rd Lift	Detects the correct feed height of the 3rd cassette.	78
S38	3rd Paper Near End (4 Tray version only)	Informs the CPU when the 3rd cassette is in near end condition.	79
S39	3rd Paper End	Informs the CPU when the 3rd cassette runs out of paper.	80

Symbol	Name	Function	Index No.
S40	3rd Paper Feed	Controls the 3rd paper feed clutch off/on timing and the 3rd pick-up solenoid off timing.	81
S41	2nd Paper Feed	Controls the 2nd paper feed clutch off/on timing and the 2nd pick-up solenoid off timing.	82
S42	Base Plate Down (Tandem version only)	Detects when the bottom plate is completely lowered to stop the 1st lift motor.	85
S43	Side Fence Positioning (Tandem version only)	Informs the CPU when the tandem tray side fences are open.	86
S44	Rear Fence Return (Tandem version only)	Informs the CPU when the tandem tray rear fence is in the return position.	87
S45	Rear Fence HP (Tandem version only)	Informs the CPU when the tandem tray rear fence is in the home position.	88
S46	Left Tandem Paper End (Tandem version only)	Informs the CPU when the left tandem tray runs out of paper.	89
S47	LCT Near End (1,500 Tray version only)	Detects the paper near end condition.	123
S48	Tray Down (1,500 Tray version only)	Detects when the tray is completely lowered to stop the LCT motor.	124
S49	Tray Paper Set (1,500 Tray version only)	Informs the CPU when the paper is set on the LCT bottom tray.	125
S50	Side Fence Close (Tandem version only)	Detects whether the side fence close or not.	150
S51	4th Lift (4 Tray version only)	Detects the correct feed height of the 4th cassette.	145
S52	4th Paper Near End (4 Tray version only)	Informs the CPU when the 4th cassette is in near end condition.	146
S53	4th Paper End (4 Tray version only)	Informs the CPU when the 4th cassette runs out of paper.	147
S54	4th Paper Feed (4 Tray version only)	Controls the 4th paper feed clutch off/on timing and the 4th pick-up solenoid off timing.	148
PCBs			
PCB1	AC Drive	Provides AC power to the exposure lamp and fusing lamp.	108
PCB2	Main	Controls all machine functions.	109
PCB3	Optic Control	Controls all optics components.	110
PCB4	Development Bias Control	Controls the output of development bias.	111
PCB5	Paper Feed Control	Controls all components in the paper bank.	112

Symbol	Name	Function	Index No.
PCB6	DC Power Supply Unit	Provides DC power.	113
PCB7	Guidance	Controls the guidance display.	120
PCB8	Operation Panel	Controls the LED matrix, and monitors the key matrix.	121
Lamps			
L1	Exposure	Applies high intensity light to the original for exposure.	18
L2	Fusing	Provides heat to the hot roller.	32
L3	Quenching	Neutralizes any charge remaining on the drum surface after cleaning.	37
L4	Erase	Discharges the drum outside the image area.	38
L5	Pre-transfer	Reduces the charge on the drum surface before transfer.	40
Power Packs			
PP1	Transfer	Provides high voltage for the transfer belt and controls the transfer belt positioning solenoid.	117
PP2	Charge	Provides high voltage for the charge corona wires, and the grid plate. Controls QL, PTL, and charge wire cleaner motor functions.	119
Others			
TS1	Optics Thermoswitch	Opens the exposure lamp circuit if the optics unit overheats.	19
TF1	Fusing Thermofuse	Opens the fusing lamp circuit if the fusing unit overheats.	33
TH1	Fusing Thermistor	Senses the temperature of the hot roller.	24
TH2	Optics Thermistor	Monitors the temperature of the optics cavity.	36
TH3	Drum Thermistor (Located on the ID Sensor Ass'y)	Monitors the temperature of the OPC drum.	41
H1	Transfer Anti-Condensation	Turns on when the main switch is off to prevent moisture from forming on the transfer belt.	31
H2	Optics Anti-Condensation	Turns on when the main switch is off to prevent moisture from forming on the optics.	35
RA1	Main Power Relay	Controls main power.	107

Symbol	Name	Function	Index No.
CO1	Total Counter	Keeps track of the total number of copies made.	114
NF1	Noise Filter	Removes electrical noise.	115
CB1	Circuit Breaker	Provides back-up high current protection for the electrical components.	116
LA1	Lightening Arrestor	Removes current surges from the AC input lines.	118

SECTION 2

DETAILED SECTION DESCRIPTIONS

1. PROCESS CONTROL

1.1 OVERVIEW

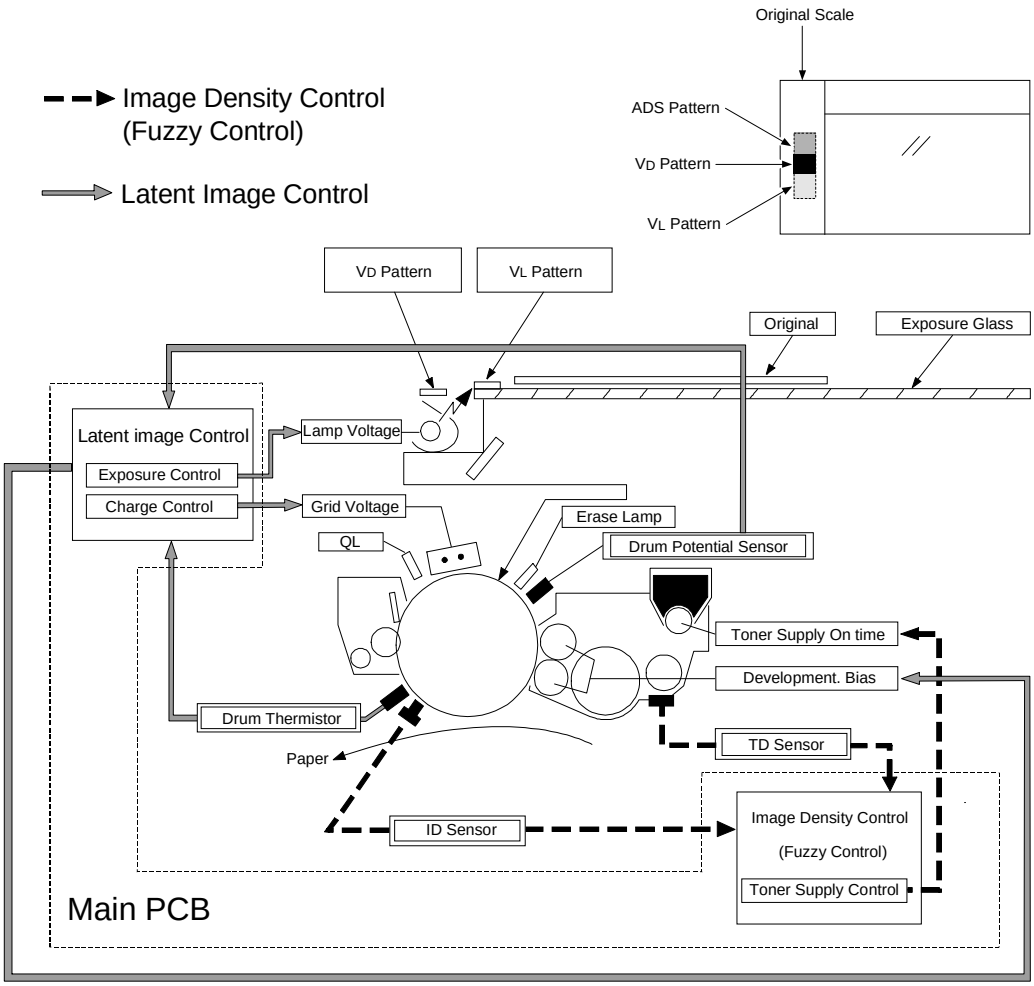

A176D500.wmf

This model uses two process control methods. One compensates for variation in the drum potential (latent image control) and the other controls the toner concentration and toner supply amount (image density control).

1.1.1 Latent Image Control

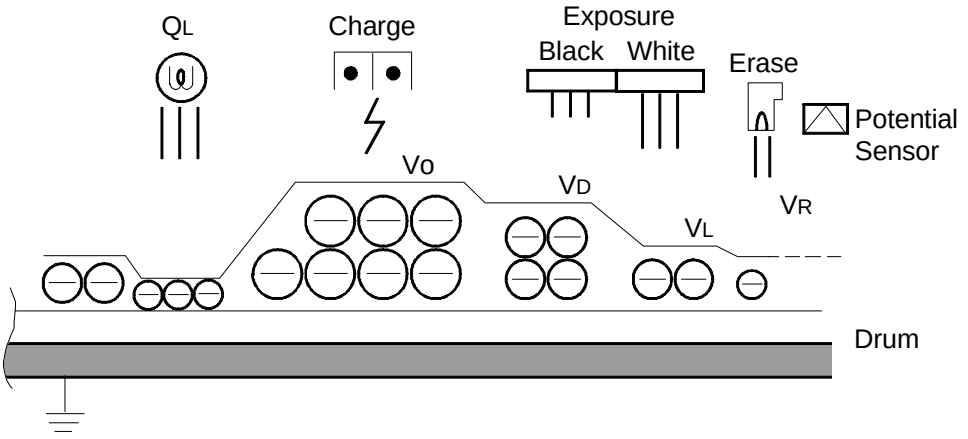

A176D501.wmf

The figure shows the changes of the drum potential during the copy process.

VO:	The drum potential just after charging the drum.
VD (Dark Potential):	The drum potential just after exposing the black pattern (VD pattern)
VL (Light Potential):	The drum potential just after exposing the white pattern (VL pattern)
VR (Residual Voltage):	The drum potential just after the exposure of the erase lamp.

After long usage following installation or a PM, drum potential will gradually increase due to the following factors:

Dirty optics or exposure lamp deterioration

Dirty charge corona casing and grid plate

Change of the drum sensitivity

In this copier, the change in drum potential is detected by the drum potential sensor and the following items are controlled to maintain good copy quality.

The grid bias voltage

The exposure lamp voltage

The development bias voltage.

A drum thermistor detects the drum temperature and this data is also used to control the above voltages. It is impossible to explain simply because it is controlled by methods developed in our laboratories using an artificial neural network.

1.1.2 Image Density Control

Image density is controlled by the following sensors:

Toner density sensor (TD sensor)

Image density sensor (ID sensor)

Data from the TD sensor is used to keep the toner concentration in the developer at a constant level. However, the image on the OPC drum varies due to the variation of toner chargeability (influenced by the environment) even if the toner concentration is constant. By the ID sensor compensation, toner concentration is changed to keep the image density on the OPC drum constant.

The following items are controlled to maintain a constant copy image density:

Toner supply clutch on time

Toner supply level data (VREF) of the TD sensor

1.2 PROCESS CONTROL DATA INITIAL SETTING

The following flow chart shows all the steps that will be performed whenever the machine is turned on while the hot roller temperature is below 100°C. This initializes all the process control settings.

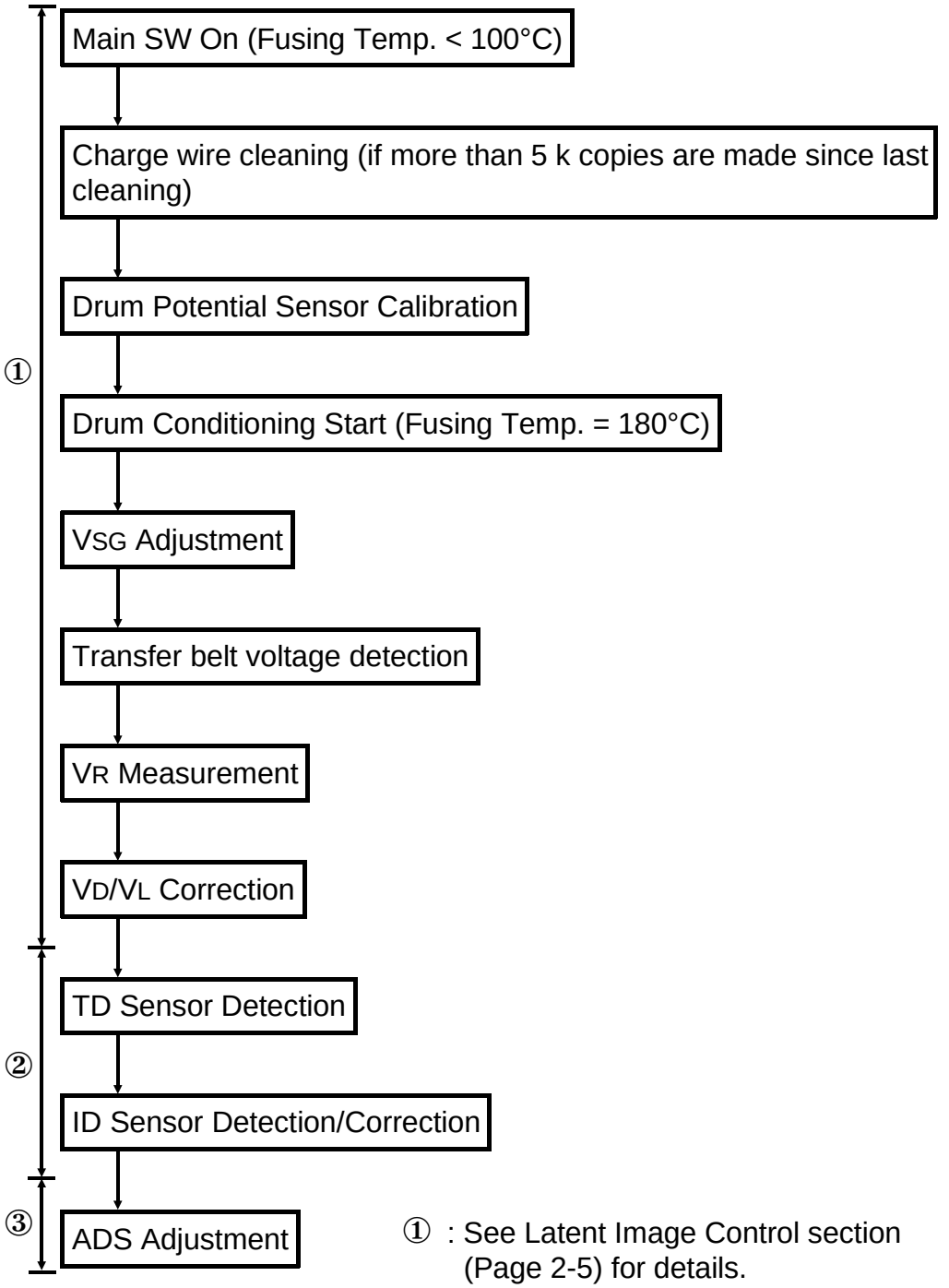

① : See Latent Image Control section (Page 2-5) for details.
② : See Image Density Control section (Page 2-12) for details.
③ : See Optics section (Page 2-39) for details.

1.3 LATENT IMAGE CONTROL

1.3.1 Drum Potential Sensor Calibration

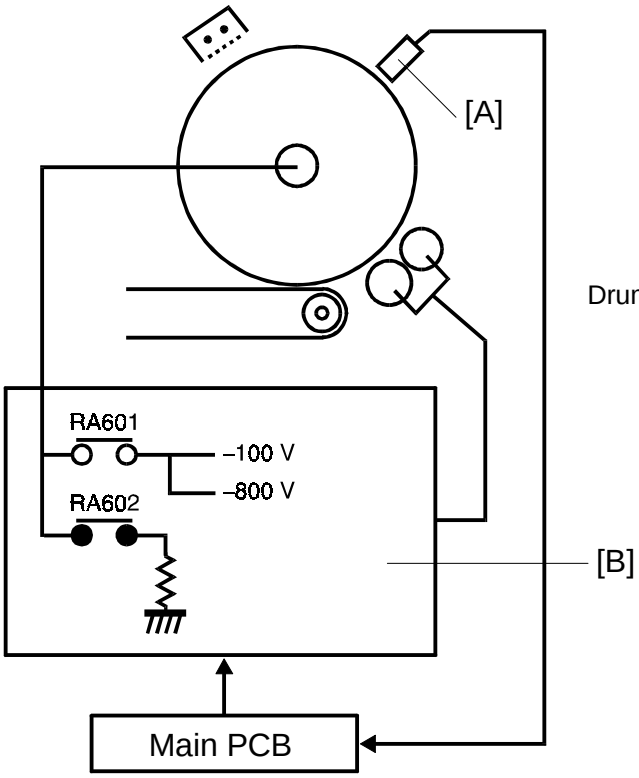

A176D502.wmf

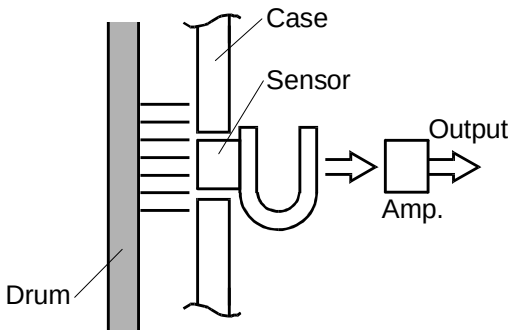

A176D503.wmf

The drum potential sensor [A] is located just above the development unit. The sensor has a detector which detects the strength of the electric field from the electric potential on the drum. The output of the sensor depends on the strength of the electric field.

Since the output of the sensor is affected by environmental conditions, such as temperature and humidity, the sensor output is calibrated during process control data initial setting.

The High Voltage Control PCB [B] has two relay contacts. Usually RA602 grounds the drum. However, during the initial setting, the main PCB turns RA601 on and RA602 off and applies the voltage to the drum shaft.

By measuring the output of the drum potential sensor when –100 V and –800 V are applied to the drum, the sensor output is calibrated automatically. (The machine recognizes the relationship between actual drum potential and the potential sensor output.)

1.3.2 Drum Conditioning

When the fusing temperature reaches 180°C, the machine starts the drum conditioning process. In this mode, the main motor, main charge corona, erase lamp and development bias are activated for about 30 seconds and drum sensitivity and residual voltage (V_R) are stabilized, as in continuous copy runs.

1.3.3 V_{SG} Adjustment

During drum conditioning, the ID sensor checks the bare drum's reflectivity and calibrates the output of the ID sensor to 4 ± 0.2 V.

1.3.4 V_R Measurement

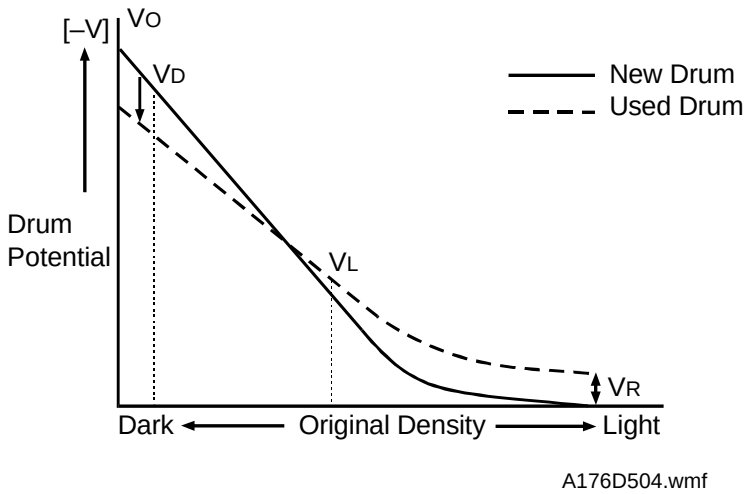

The above figure shows the relationship between the drum potential and the original density. To get constant copy quality, this relationship must be maintained.

Since this relationship tends to change to the one represented by the dotted line by various factors, compensations are required.

The residual voltage (V_R) cannot be compensated even if the exposure lamp voltage is increased. Therefore, the V_R change has to be compensated by other means.

The main control board checks the drum potential just after the erase lamp exposure by the drum potential sensor after drum conditioning. This measured drum potential is in fact V_R. This V_R is used as the standard for the V_D and V_L corrections.

NOTE: In the figure above, the residual voltage (V_R) for the new drum is 0 V. Actually, there is some residual voltage even on the new drum.

1.3.5 VD Correction

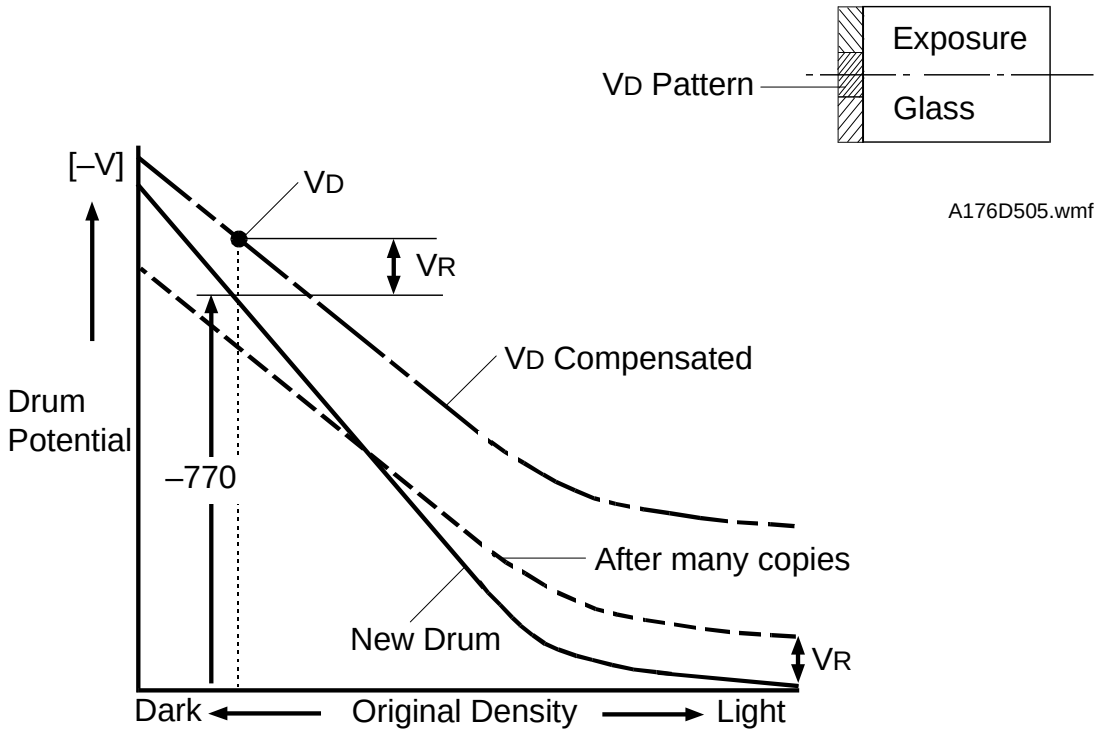

The drum potential just after the black pattern (VD Pattern) is exposed (VD: Dark Potential) tends to lower during drum life due to a decrease in the drum's capacity to carry a charge.

To check the actual VD, the first scanner moves to the home position and the VD pattern (Black) stuck on the bottom side of the exposure glass bracket is exposed on the drum.

The main control board measures VD through the drum potential sensor and adjusts it to a target value by adjusting the grid bias voltage (VGRID).

On the other hand, there is a change of the drum residual voltage (VR), so that the target VD voltage is compensated as follows:

Target VD Value: VD = VR + (–770)

The adjusted grid bias voltage (VGRID) is kept in memory until the next process control data initial setting.

1.3.6 VL Correction

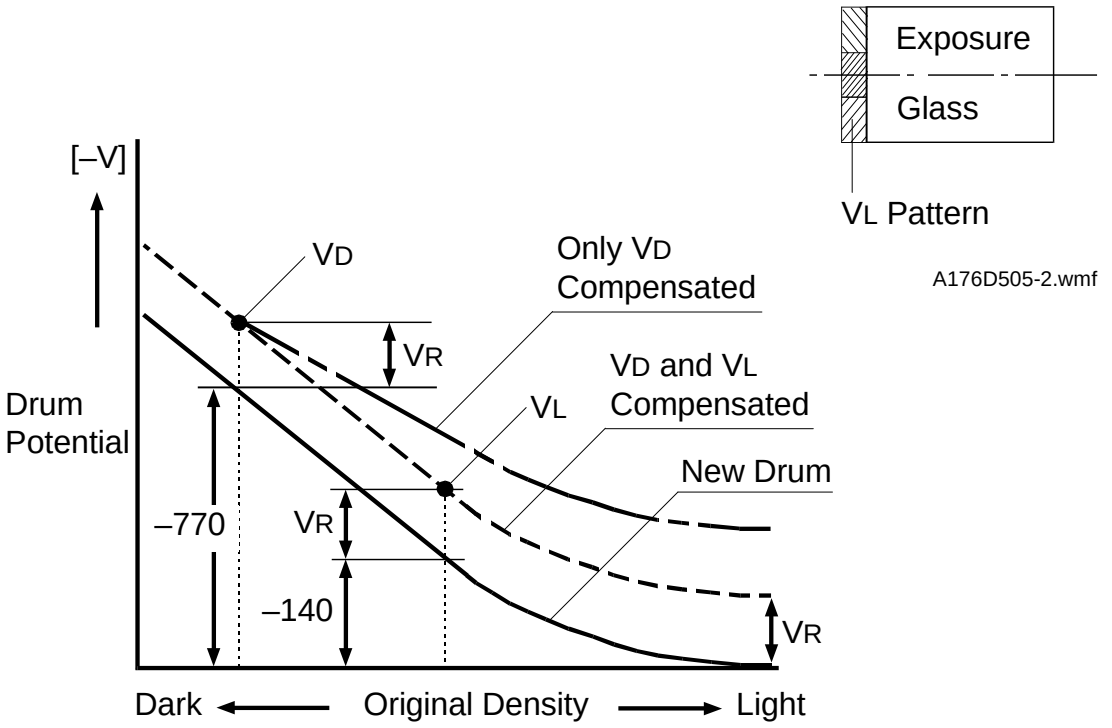

Dirty optics and/or exposure lamp deterioration decreases the intensity of the light that reaches the drum. In addition to this, the drum sensitivity also changes during the drum's life. These factors change the drum potential just after white pattern exposure (V_L: Light Potential).

To check the actual V_L, the lens moves to the V_L pattern check position. The V_L pattern (White) stuck underneath the original scale is exposed on the drum.

The main control board measures V_L through the drum potential sensor and adjusts it to a target value by adjusting the exposure lamp voltage (V_{LAMP}).

The residual voltage (V_R) change also affects V_L, so that V_L's target voltage is compensated as follows:

Target V_L Value: $V_L = V_R + (-140)$

The adjusted exposure lamp voltage (V_{LAMP}) is stored in memory until the next process control data initial setting.

1.3.7 V_R Correction

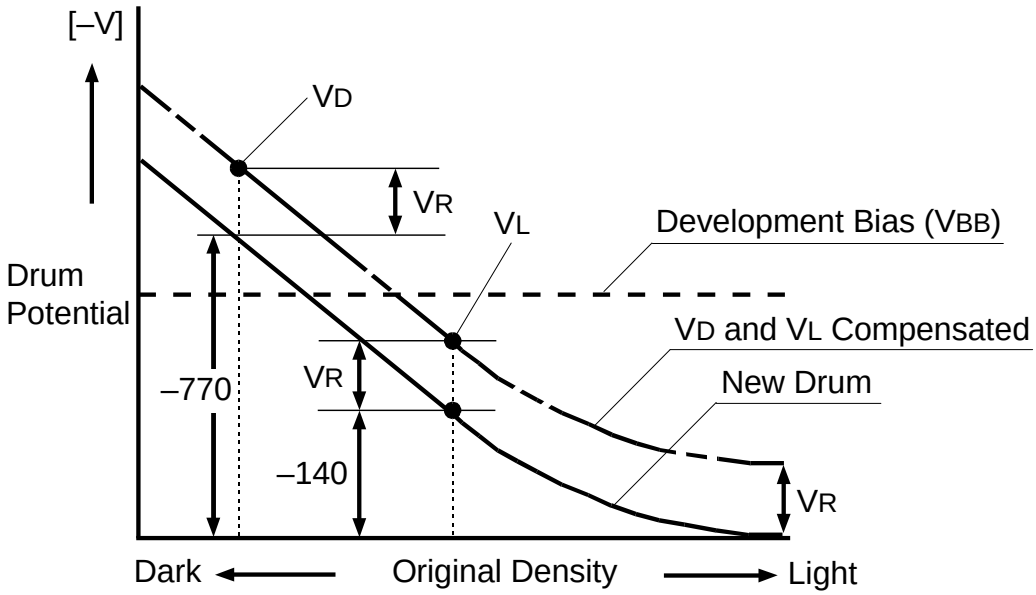

A176D508.wmf

Potentials (V_R, V_D, V_L) are monitored by the potential sensor. (This is done only when the fusing temperature is less than 100°C after the machine is turned on.)
During the check cycle, the V_D and V_L patterns are exposed and the drum potential on the area where exposed by each pattern is checked by the potential sensor.

Compare the curve of the V_D and V_L compensated drum potential with the curve of the new drum, they are parallel but the compensated potential is still higher (V_R) than the new drum potential. To prevent dirty backgrounds due to increased residual potential, development bias (V_{BB}) is applied as follows:

$V_{BB} = V_R + (-220)$

1.3.8 Initial Setting Sequence

The following graph shows the sequence of events during process control data initial setting.

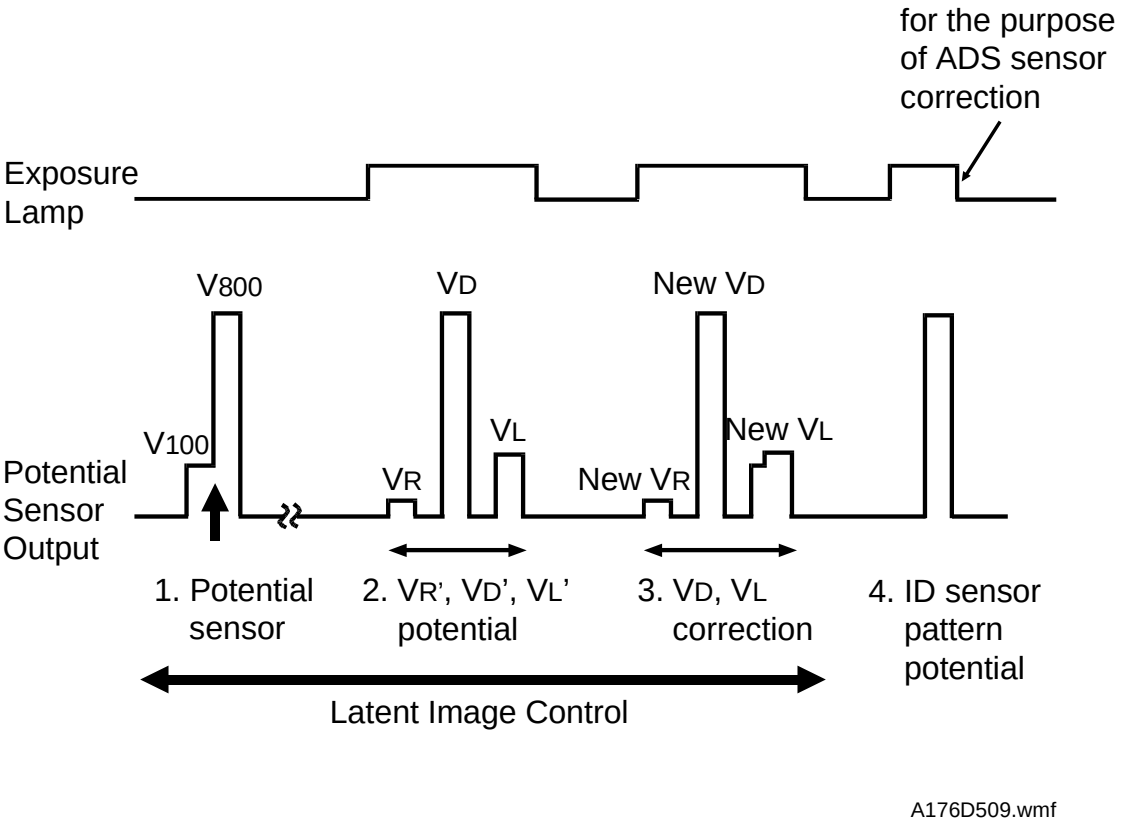

A176D509.wmf

1. Potential sensor calibration
   By measuring the output of the drum potential sensor when –100 V and –800 V are applied to the drum, the sensor output (V_{100} and V_{800}) is calibrated automatically (See page 2-5 for details).

2. V_R, V_D, V_L potential detection
   After about 30 seconds of drum conditioning, V_D and V_L Patterns are developed by using the previous grid bias voltage (V_{GRID}) data and exposure lamp voltage (V_{LAMP}) data to detect the V_R, V_D, V_L data.

   The machine calculates the new V_{GRID} and V_{LAMP} data using the detected V_R, V_D, V_L data.

3. V_D and V_L corrections
   Using the calculated V_{GRID} and V_{LAMP} data, V_R, V_D, and V_L patterns are developed again and the new V_R, V_D, and V_L data are detected.

   If both V_D and V_L data are within specifications, the new V_{GRID}, V_{LAMP} and development bias (V_{BB}) are determined based on the new V_D, V_L, and V_R values.

Specifications:

$V_D = -770 + V_R \pm 20$ V

$V_L = -140 + V_R \pm 20$ V

If V_D is outside specifications, V_{GRID} is shifted one step. Then the V_D pattern is measured again and V_D is detected again.
The same is done for V_L and V_{LAMP}.
The above process continues until both V_D and V_L fall within specifications.
The graph on the previous page shows the example when only V_L was outside specifications at the first V_L detection and it became within specifications after one V_L correction (V_{LAMP} is changed 0.5V/step , V_{GRID} is changed 20V/step).

If V_{100} or V_{800} at drum potential sensor calibration is outside specifications or if V_D or V_L do not fall within specifications after V_{GRID} or V_{LAMP} are shifted to the maximum or minimum level, the machine stops V_D or V_L correction and uses the previous V_{GRID} and V_{LAMP} values during copying.
In this case, nothing is indicated on the machine but the SC counter is incremented.

Related SC codes (see troubleshooting section for details):

Code	Condition
361	Incomplete drum potential sensor calibration
364	Abnormal V_D detection
365	Abnormal V_L detection
366	V_R abnormal

Development bias is also decided by using V_R as follows.

$V_{BB} = V_R + (-220)$

4. ID sensor pattern potential detection
   This is performed to determine ID Sensor Bias Voltage. The details are explained in the development control section (see page 2-16).

1.4 IMAGE DENSITY CONTROL

1.4.1 Toner Density Sensor

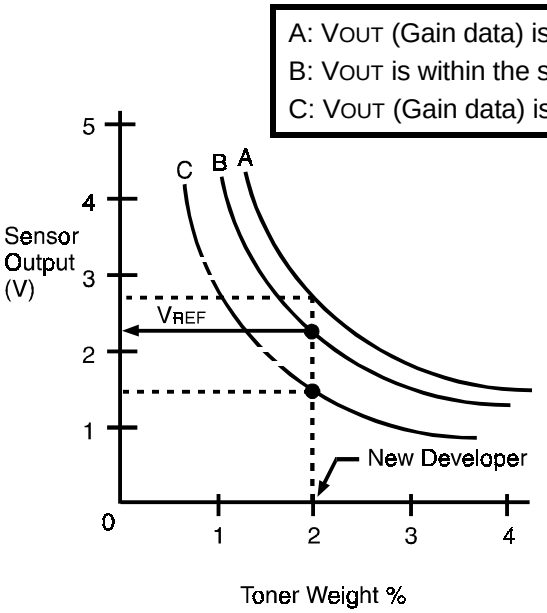

A176D531.wmf

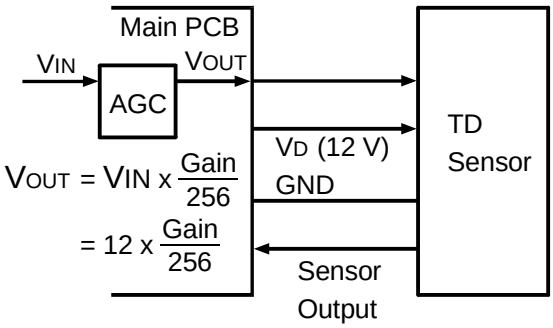

A176D510.wmf

Developer consists of carrier particles (iron) and toner particles (resin and carbon). Inside the development unit, developer passes through a magnetic field created by coils inside the toner density sensor. When the toner concentration changes, the voltage output by the sensor changes accordingly.

<Toner Density Sensor Initial Setting>

When new developer with the standard toner concentration (2.0% by weight, 20 g of toner in 1000 g of developer) is installed, developer initial setting must be performed by using SP mode (1 SP Adjustment - PAGE 1).

During this setting, the output voltage (VOUT) from the auto gain control circuit (AGC) on the main control board PCB varies to change the output voltage from the toner density (TD) sensor. This is done by changing the gain data, see below.

$$V_{OUT} = V_{IN} \times \frac{\text{Gain Data}}{256} = 12 \times \frac{\text{Gain Data}}{256}$$

If the data is high, VOUT becomes high, and the sensor output voltage becomes high. As a result, the sensor characteristic becomes as illustrated by curve A. If the data is low, VOUT becomes low, and the sensor output voltage becomes low. As a result, the sensor characteristic shifts as illustrated by curve C.

By selecting the proper gain data, the sensor output is set within the targeted control level (V_{REF}, $V_{REF} = 2.5 \pm 0.1$ V). Now, the sensor characteristic is illustrated by curve B and the TD sensor initial setting is completed.

The selected gain data is stored in memory, and V_{OUT} from the auto gain control circuit stays constant during the toner sensor detection cycle.

<Toner Supply Criteria>

At every copy cycle, toner density in the developer is detected once. The sensor output voltage (V_{TD}) during the detection cycle is compared with the toner supply level voltage (V_{REF}).

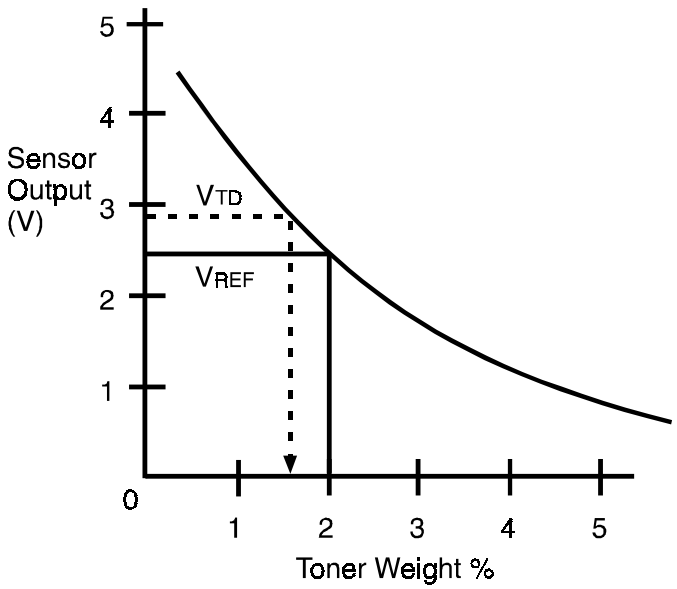

A176D511.wmf

<Toner Supply Clutch on Time>

To stabilize toner concentration, toner supply amount (toner supply clutch on time) is controlled by referring to VREF and VTD.
The toner supply amount is calculated at every copy. The toner supply amount is determined by using the following factors.

① VREF – VTD

② VREF – VTD' (VTD' = VTD of the previous copy cycle)

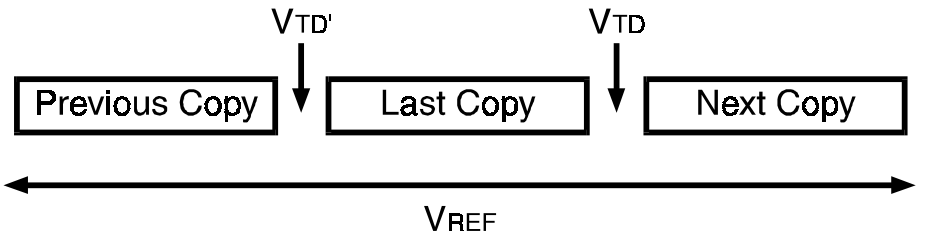

A176D512.wmf

By referring to these factors, the machine recognizes the difference between the current toner concentration and the target toner concentration. The machine also understands how much toner concentration has changed and predicts how much the toner supply amount will probably change.
By changing the toner supply amount precisely, toner concentration (image density) is kept at a constant level.
Since the toner supply clutch on time updating is under fuzzy control, the relation among VTD, VTD', VREF cannot be expressed by a simple algebraic formula.

<VREF Correction>

The image on the OPC drum changes due to variation of toner chargeability (influenced by the environment) even if the toner concentration is constant. The image density sensor (ID sensor) directly checks the image on the OPC drum and shifts VREF data (under fuzzy control) to keep the image on the OPC drum constant, as explained in the next section.

NOTE: 1) Toner end condition is detected by the toner end sensor (see the development section for details).

2) The toner supply clutch turns on at the intervals between each copy process while image development is not performed.

1.4.2 Image Density Sensor Detection

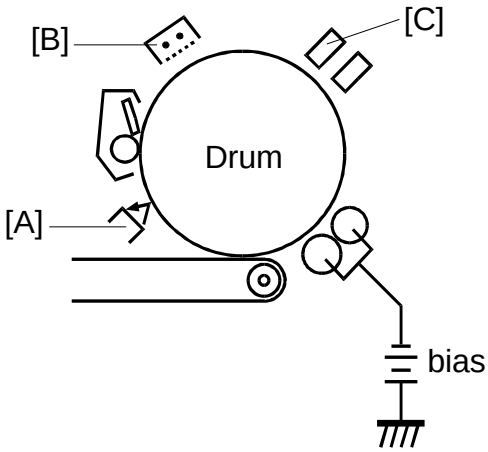

A176D513.wmf

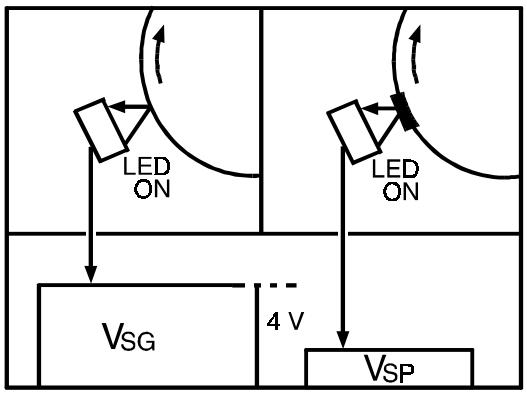

A176D514.wmf

VSG and VSP are checked by the ID sensor [A]. The ID sensor is located underneath the drum cleaning section.
There is no ID sensor pattern in the optics, however, a pattern image is made on the OPC drum by the charge corona unit [B] and the erase lamp [C].

VSG is the ID sensor output when checking the erased drum surface.
VSP is the ID sensor output when checking the ID sensor pattern image.

To compensate for any variation in light intensity from the sensor LED, the reflectivity of both the erased drum surface and the pattern on the drum are checked.

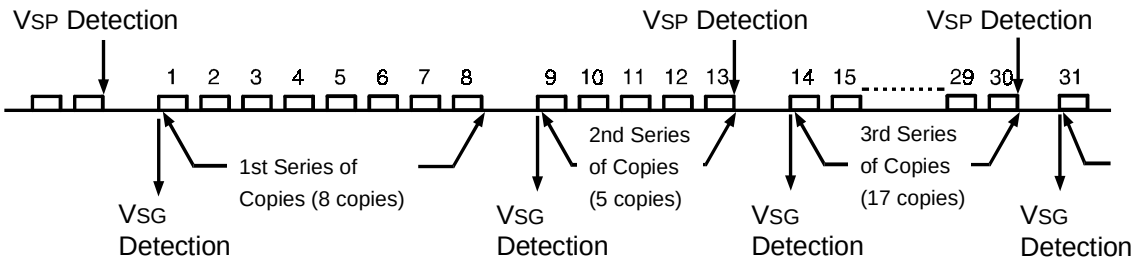

A176D515.wmf

VSG is detected every time the machine starts copying.
During VSG detection, the development sleeve rollers do not rotate and no development bias is applied.
VSP is detected after copying is completed if 10 or more copies have been made since VSP was last detected. Since the transfer belt must be released when checking VSP, a VSP check cannot be done during continuous copying.

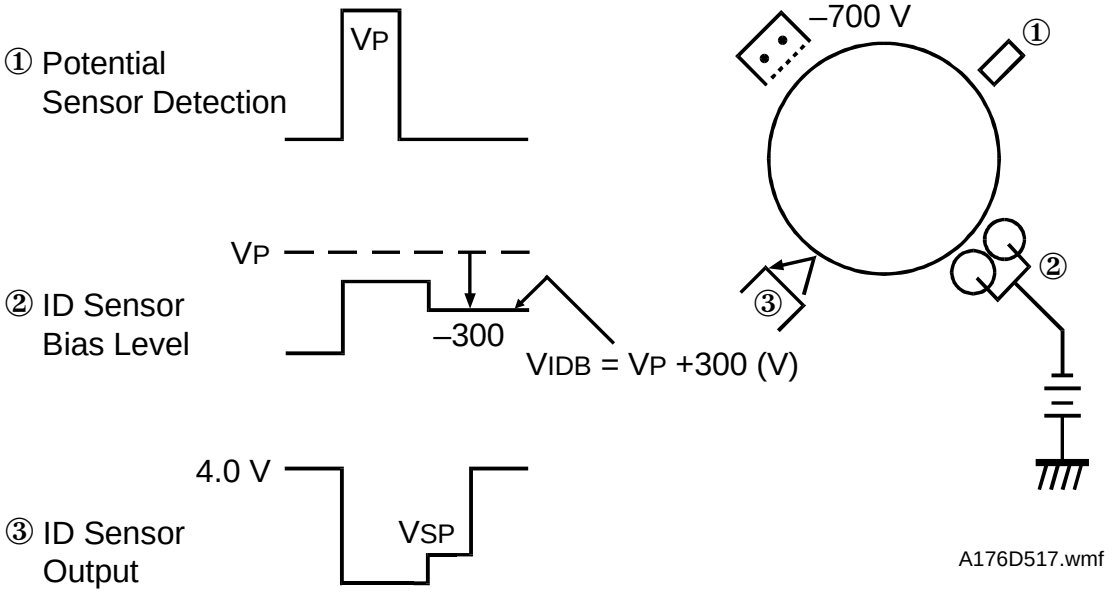

A176D516.wmf

A176D517.wmf

While developing the ID sensor pattern, ID sensor bias is applied. ID sensor bias is determined during process control data initial setting as follows:

Apply charge while grid voltage is –700 V to create the ID sensor pattern.

Check the drum potential (V_P) of the latent image created by the charge with –700 V grid.

Adjust the ID sensor bias (V_{IDB}) so that it satisfies the following formula.

$$V_{IDB} = V_P - (-300)\ (V)$$
$$= V_P + 300\ (V)$$

Change the bias to the calculated V_{IDB} and detect V_{SP}. V_{SG} detected during V_{SG} adjustment sequence in the process control data initial setting and V_{SP} are used to determine V_{REF} data at process control data initial setting. V_{IDB} is not changed until the next process control data initial setting is done.

<V_{REF} correction timing>

After the series of copies is completed in the case that 10 or more copies have been made, V_{REF} is updated by referring to the previous V_{REF} (V_{REF}'), V_{SG}, V_{SP} and the current TD sensor output (V_{TD}).

Since this V_{REF} data updating is under fuzzy control, the relationship among V_{REF}, V_{REF}', V_{SG}, V_{SP} and V_{TD} cannot be expressed by a simple algebraic formula.

V_{REF} is updated not only at the above case. But also during developer initial setting and during process control data initial setting.

1.4.3 Sensor Abnormal Conditions

a. ID sensor (V_{SG},V_{SP}) abnormal

Whenever V_{SG} falls under 2.5 V or V_{SP} rises over 2.5 V, the CPU fixes the V_{REF} data and toner concentration is controlled only by using TD sensor output.

V_{SG} and V_{SP} are still detected as usual during abnormal conditions and if output returns to normal levels ($V_{SG} \geq 2.5$ V, $V_{SP} \leq 2.5$ V), the CPU returns the toner concentration control to normal mode.

b. TD sensor (V_{TD}) abnormal

Whenever V_{TD} rises over 4.0 V or V_{TD} falls under 0.5 V, the CPU shifts the toner supply to the fixed supply mode. In this condition, the CPU never stops the toner supply. The fixed toner supply amount can be changed in four steps (4%, 7%, 11%, 14%) by using SP mode. The default fixed toner supply amount is 4%.

V_{TD} is still detected as usual during the abnormal condition and if its output returns to a normal level, the CPU returns the toner concentration control to normal mode.

c. Drum Potential Sensor abnormal

Whenever V_{100} rises over 0.7 V or V_{100} falls under 0.1 V or whenever V_{800} rises over 4.2 V or V_{800} falls under 2.7 V, the CPU also shifts the toner supply to the fixed supply mode, as for a TD sensor (V_{TD}) abnormal condition.

Related SC codes. (See troubleshooting section of details.):

Code	Condition
351	Abnormal V_{SG} Detection (V_{SG} > 4.2 V)
352	Incomplete TD Sensor Initial Setting
353	Abnormal V_{SP} Detection (V_{SP} > 2.5 V)
354	Abnormal V_{SG} Detection ($V_{SG} \leq$ 2.5 V)
355	Abnormal V_{TD} Detection (V_{TD} > 4 V)
356	Abnormal V_{TD} Detection (V_{TD} < 0.5 V)
357	Abnormal V_{SP}/V_{SG} Detection ($V_{SP}/V_{SG} \geq$ 0.25)
358	Abnormal V_{SP}/V_{SG} Detection (V_{SP}/V_{SG} < 0.025)
361	Incomplete Drum Potential Sensor Calibration

2. DRUM UNIT

2.1 OVERVIEW

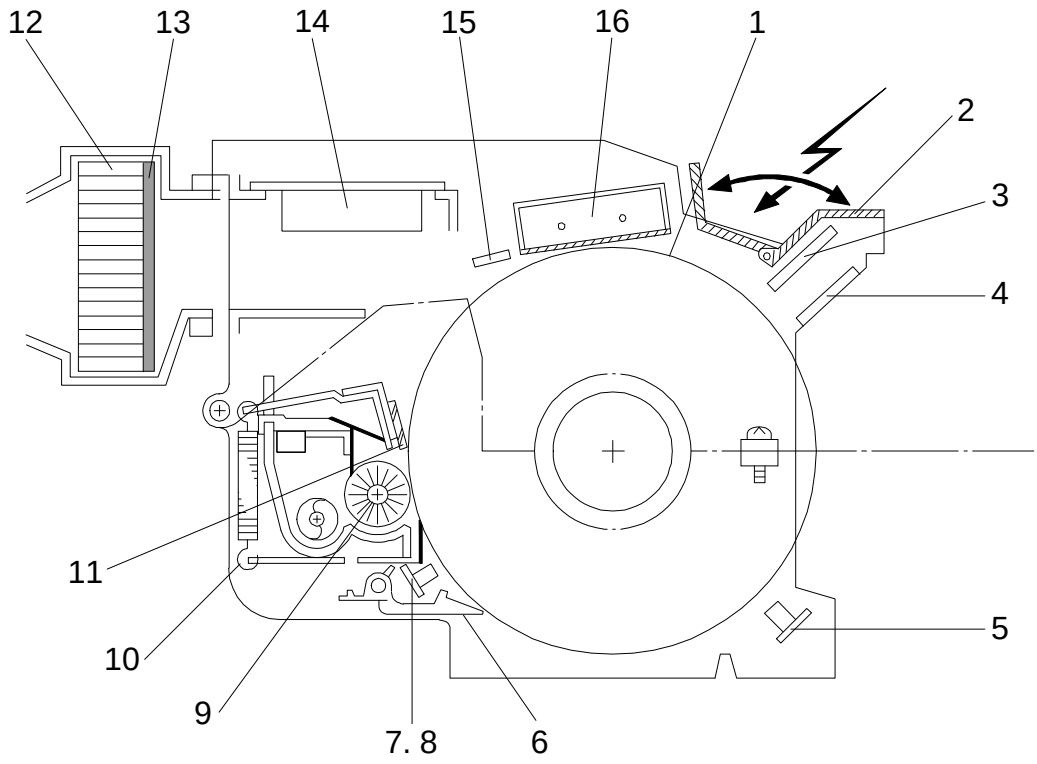

A176D518.wmf

The drum unit consists of the components as shown in the above illustration. An organic photoconductor drum (diameter: 100 mm) is used for this model.

1. OPC Drum
2. OPC Drum Protective Shutter
3. Erase Lamp
4. Drum Potential Sensor
5. Pre-transfer Lamp
6. Pick-off Pawl
7. Image Density Sensor
8. Drum Thermistor
9. Cleaning Brush
10. Toner Collection Coil
11. Cleaning Blade
12. Ozone Filter
13. Cleaning Filter
14. Charge Power Pack
15. Quenching Lamp
16. Main Charge Corona Unit

2.2 OPC DRUM CHARACTERISTICS

An OPC has the characteristics of:

1. Being able to accept a high negative electrical charge in the dark. (The electrical resistance of a photoconductor is high in the absence of light.)
2. Dissipating the electrical charge when exposed to light. (Exposure to light greatly increases the conductivity of a photoconductor.)
3. Dissipating an amount of charge in direct proportion to the intensity of the light. That is, where stronger light is directed to the photoconductor surface, a smaller voltage remains on the OPC.
4. Being less sensitive to changes in temperature (when compared to selenium F type drums).
5. Being less sensitive to changes in rest time (light fatigue). This makes it unnecessary to compensate development bias voltage for variations in rest time.

2.3 DRUM CHARGE

2.3.1 Overview

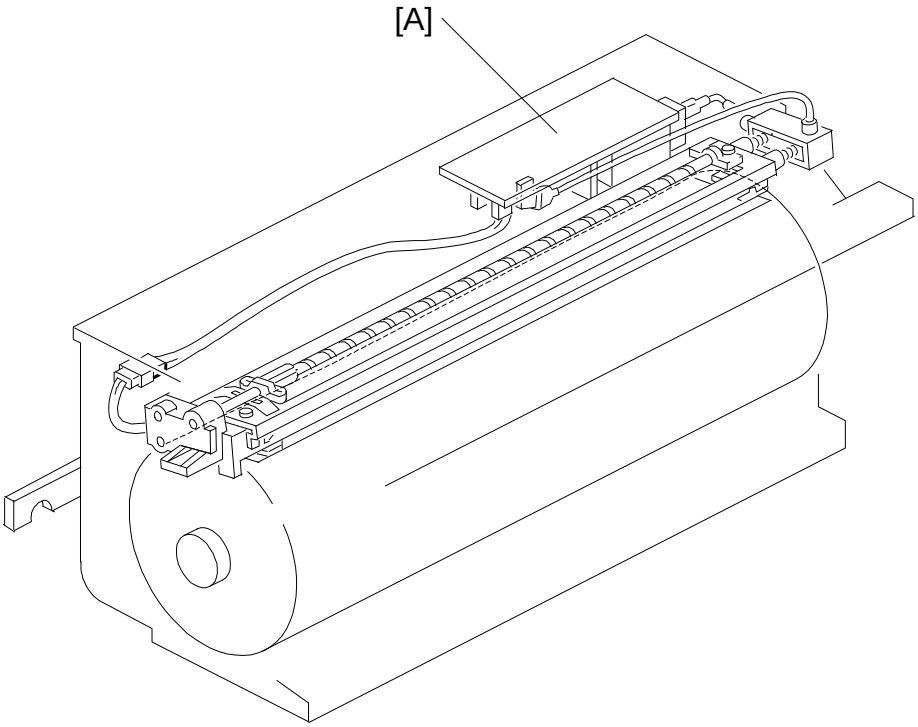

A176D519.wmf

This copier uses a double corona wire scorotron system for drum charge. Two corona wires are required to give sufficient negative charge on the drum surface because of a rather high drum speed (330 mm/s.). The stainless steel grid plate makes the corona charge uniform and controls the amount of negative charge on the drum surface by applying the negative grid bias voltage.

The charge power pack [A] gives a constant corona current to the corona wires (–1100 μA) and bias voltage to the grid plate is automatically controlled to maintain proper image density according to the change of the OPC drum potential due to dirty grid plate and charge corona casing.

2.3.2 Air Flow Around the Drum

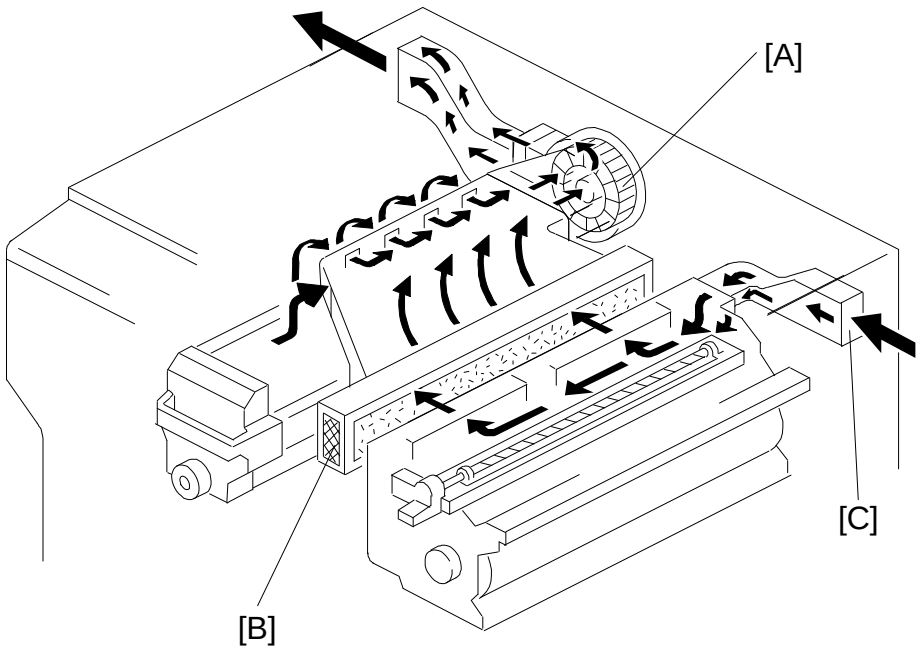

A176D520.wmf

The exhaust fan [A] located above the fusing unit provides an air flow to the charge corona unit to prevent uneven built-up of negative ions that can cause an uneven charge of the drum surface as shown.

An ozone filter [B] absorbs the ozone (O_3) around the drum.

The exhaust fan rotates slowly during stand-by and rotates quickly during copying to keep the temperature inside the machine constant.

70 CPM machine has another fan (drum cooling fan), which is located at the right rear side of machine (front view). The drum cooling fan cools the drum unit to remove the heat from the duplex tray. To prevent foreign matters from entering the copier inside, a dust protection filter is installed in the entrance [C] of the duct.

2.3.3 Charge Wire Cleaning Mechanism

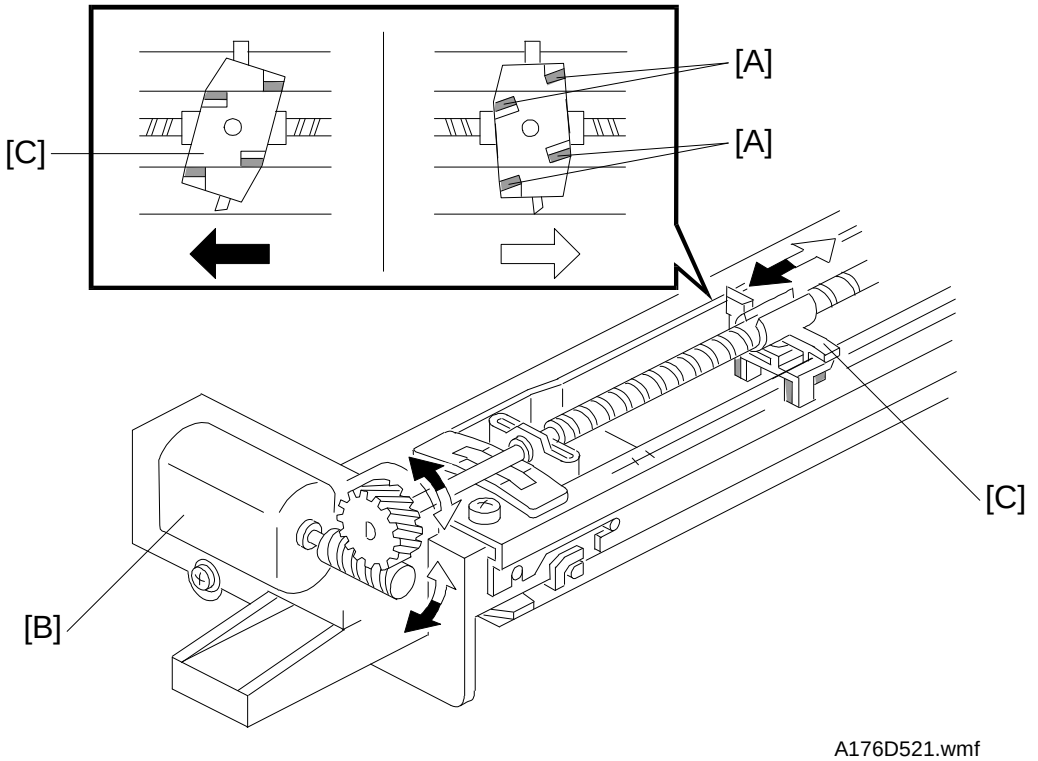

A176D521.wmf

The flow of air around the charge corona wire may deposit toner particles on the corona wires. These particles may interfere with charging and cause low density bands on copies.

The wire cleaner pads [A] automatically clean the wires to prevent such a problem.

The wire cleaner is driven by a dc motor [B]. Normally the wire cleaner [C] is located at the front end position (home position). After 5000 or more copies are made and fusing temperature is less than 100°C after the main switch is turned on, the wire cleaner motor turns on to bring the wire cleaner to the rear end and then back to the home position.

When the wire cleaner moves from the rear to the home position (black arrow in the illustration), the wire cleaner pads clean the wires.

There are no home position and return position sensors. The CPU monitors the input voltage (5 V). When the wire cleaner reaches the end, it is stopped and the motor is locked. At this time, input voltage slightly decreases (to about 4 V) and the CPU judges to rotate the motor in reverse.

2.4 ERASE

2.4.1 Overview

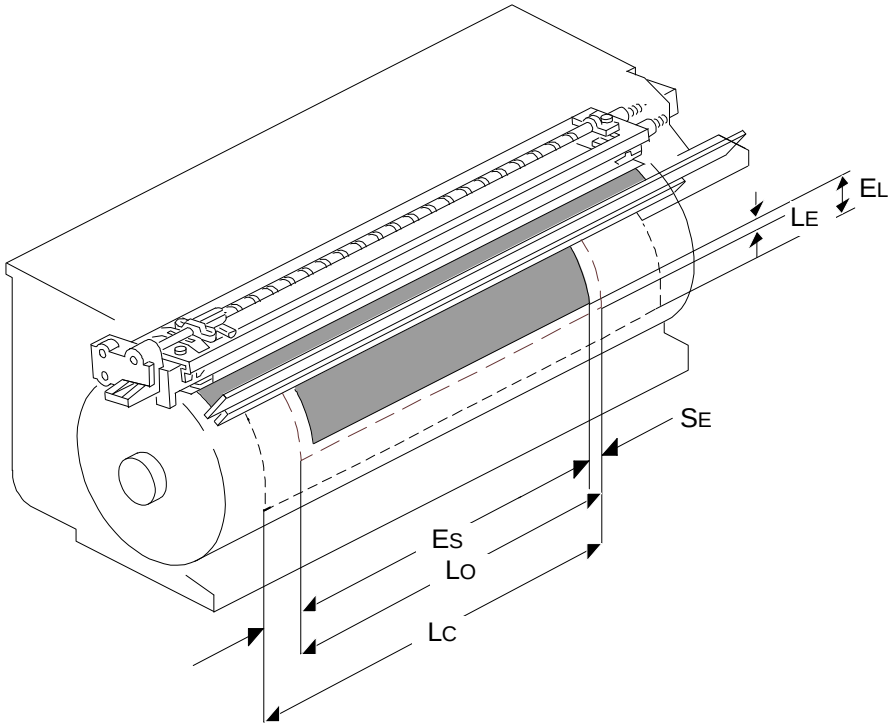

A176D522.wmf

LE:	Lead edge erase margin	3.5 ± 2.5 mm
SE:	Side erase margin	total of both sides 3 mm or less
Lo:	Original width	
Lc:	Charged width of drum	
EL:	Lead edge erase	
Es:	Side erase	

The erase lamp unit consists of a line of 123 LEDs extending across the full width of the drum, the width of each being about 2.5 mm. In editing mode, the appropriate LED's turn on according to the customer's designation.

2.4.2 Lead Edge and Trail Edge Erase

The entire line of LEDs turns on when the main motor turns on. They stay on until the erase margin slightly overlaps the lead edge of the original image on the drum (lead edge erase margin). It prevents the shadow of the original lead edge from appearing on the copy paper. This lead erase margin is also necessary for the lead edge of the copy paper to separate from the hot roller. The width of the lead edge erase margin can be adjusted by SP mode (1 SP Adjustment - PAGE 3).

When the scanner reaches the return position, the charge corona, the grid bias, and the exposure lamp turn off. However, the charged area on the drum surface is a little longer than the actual original length in order to have the entire latent image of the original.
The entire line of LEDs turn on when the trail edge of the latent image has passed under the erase lamp unit. This prevents developing unnecessary parts of the drum surface, reducing toner consumption and drum cleaning load.
The LEDs stay on to erase the lead edge of the latent image in the next copy cycle. After the final copy, the erase lamps turn off at the same time as the main motor.

2.4.3 Side Erase

Based on the combination of copy paper size and the reproduction ratio data, the LEDs turn on in blocks. This prevents the shadow of the original side edge and unexposed front and rear sides of the drum surface in reduction mode from being developed. This reduces toner consumption and drum cleaning load.

In the DJF mode, the horizontal original standard position on the exposure glass is 5 mm away from the rear scale.
In the RDH mode, the horizontal center of the original is aligned with the center of the exposure glass.
On the other hand, the horizontal original standard position on the exposure glass in the platen cover mode is the rear scale edge.
To erase the shadow made by the edge of the rear scale in platen cover mode, one more LED at the front side turns on. This is in addition to the LED’s on in DJF and RDH modes.

2.5 CLEANING

2.5.1 Overview

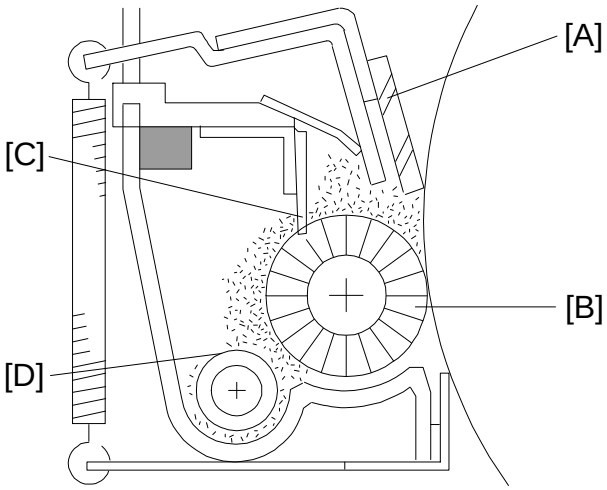

A176D523.wmf

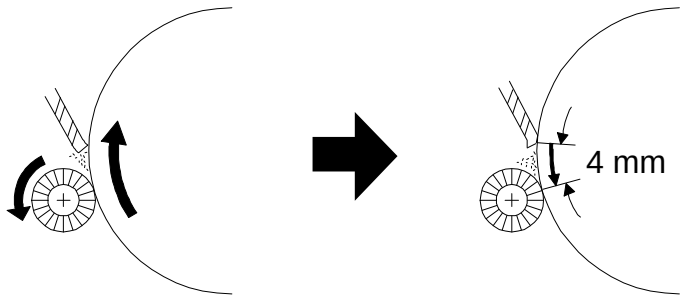

A176D524.wmf

This copier uses the counter blade system for drum cleaning.
The blade [A] is angled against drum rotation. This counter blade system has the following advantages:

- Less wearing of the cleaning blade edge.
- High cleaning efficiency.

Due to the high efficiency of this cleaning system, the pre-cleaning corona and cleaning bias are not used for this copier.

The cleaning brush [B] is used to support the cleaning blade.
The brush collects toner from the drum surface and scraped by the cleaning blade. Toner on the cleaning brush is scraped off by the mylar [C] and falls to the toner collection coil [D]. Toner is transported to the toner collection bottle by the toner collection coil.

To remove the accumulated toner at the edge of the cleaning blade, the drum turns in reverse for about 4 mm at the end of every copy job. The accumulated toner is removed by the cleaning brush by this action.

2.5.2 Drive Mechanism

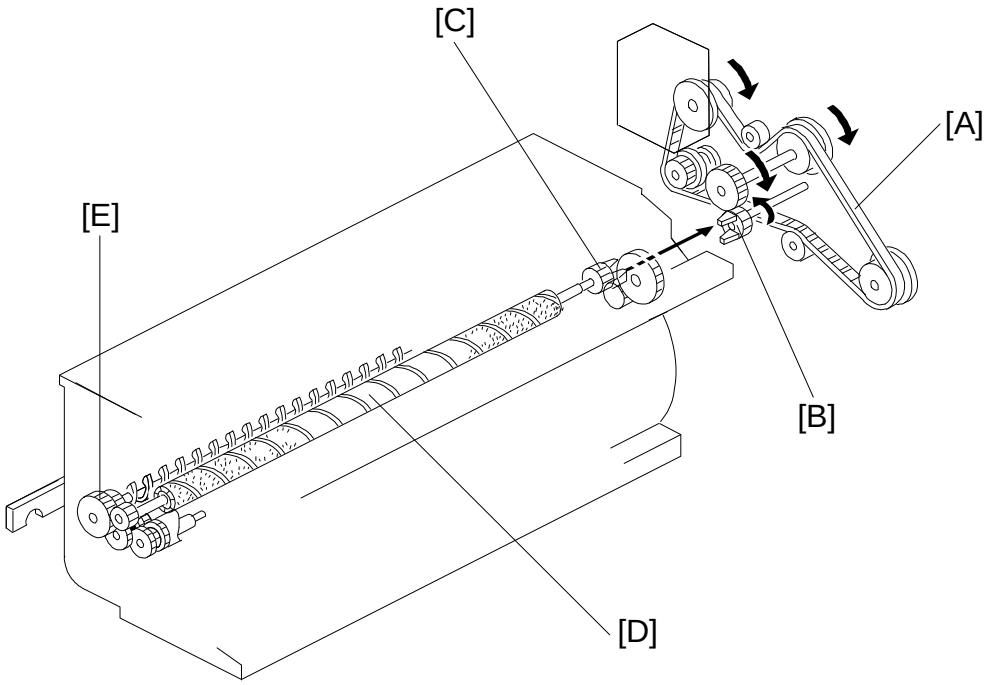

A176D525.wmf

The drive force from the main motor is transmitted to the cleaning unit drive gear via the timing belt [A] and the cleaning unit coupling [B]. The cleaning unit drive gear [C] then transmits the force to the front side through the cleaning brush [D]. The force at the front side is used for the toner collection coil gear [E].

2.5.3 Cleaning Blade Pressure Mechanism and Side-to-Side Movement

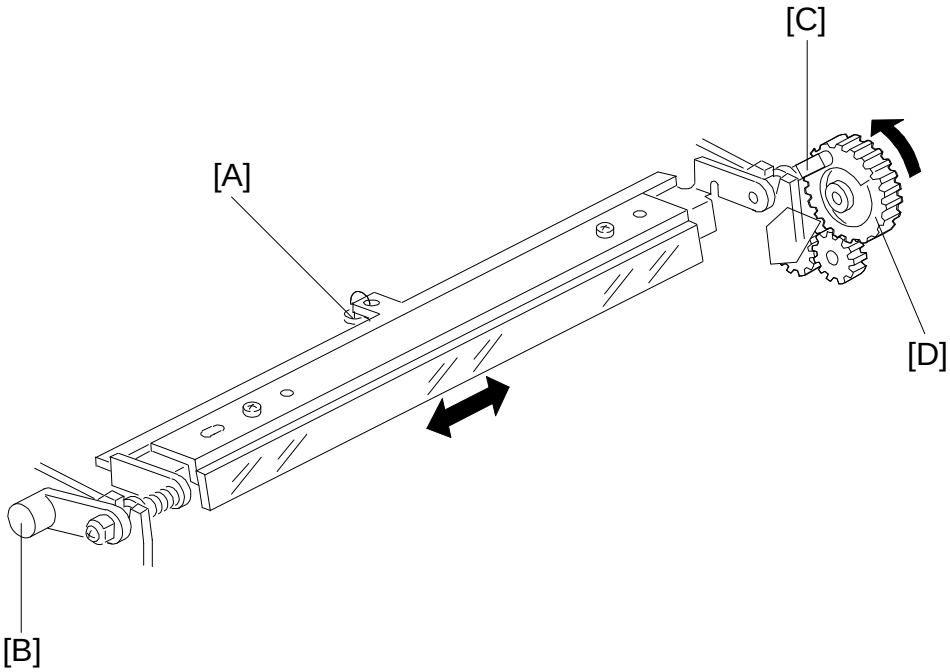

A176D526.wmf

The spring [A] always pushes the cleaning blade against the OPC drum. The cleaning blade pressure can be manually released by pushing up the release lever [B]. To prevent cleaning blade deformation during the transportation, the release lever is locked in the pressure release (upper) position.

The pin [C] at the rear end of the cleaning blade holder touches the cam gear [D] which gives a side-to-side movement to the blade. This movement helps to disperse accumulated toner to prevent early blade edge deterioration.

2.5.4 Toner Collection Mechanism

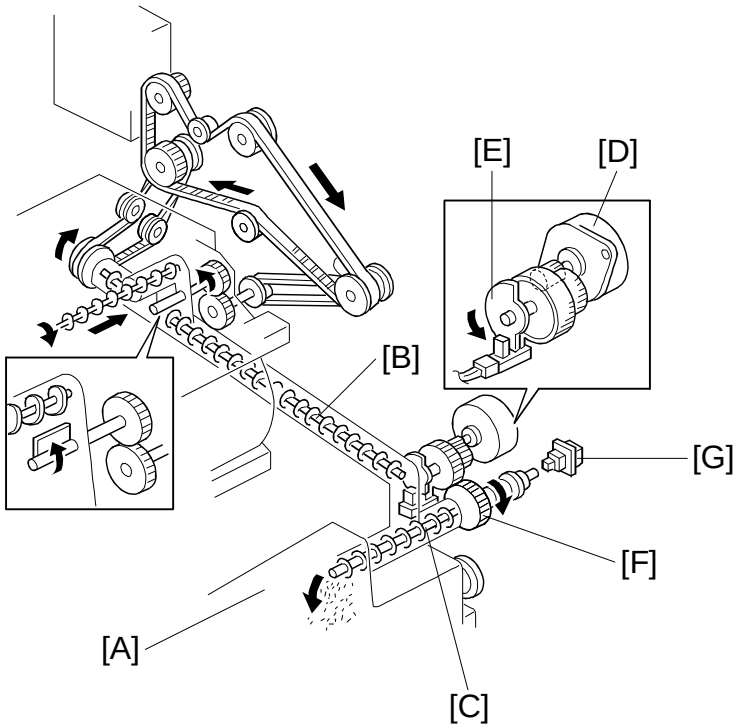

A176D527.wmf

Toner collected by the cleaning unit is transported to the toner collection bottle [A] through the toner collection tubes. Three helical coils are used for toner transport.

One coil [B] is driven by the main motor via drive belts and the other coil [C] is driven by an independent toner collection drive motor [D].

The actuator disk [E] on the toner collection drive motor monitors the proper rotation of the toner collection coil [C] to prevent the coil from being damaged by toner clogged in the collection tube. The main PCB monitors the sensor output and increases the motor speed if the sensor monitors that the toner collection motor rotates at a speed lower than normal. Also, the CPU will display an SC 342 if no signal changes (ON → OFF) are detected for more than 2.55 seconds while the toner collection motor is turning.

When the toner collection bottle [A] become full, the toner pressure in the bottle increases and presses the gear [F] against the toner overflow switch [G]. After the toner overflow switch is activated, the finishing of the copy job, or up to 100 continuous copies, is allowed, then copying is prohibited and the service call "full toner collection bottle" indication is displayed on the LCD.

This condition can be cleared by de-actuating the toner overflow switch while de-actuating then actuating the toner collection bottle switch ([C] in next page).

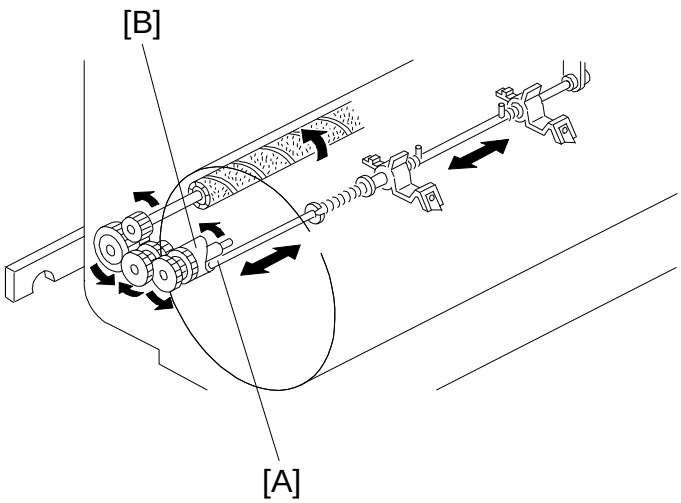

A176D528.wmf

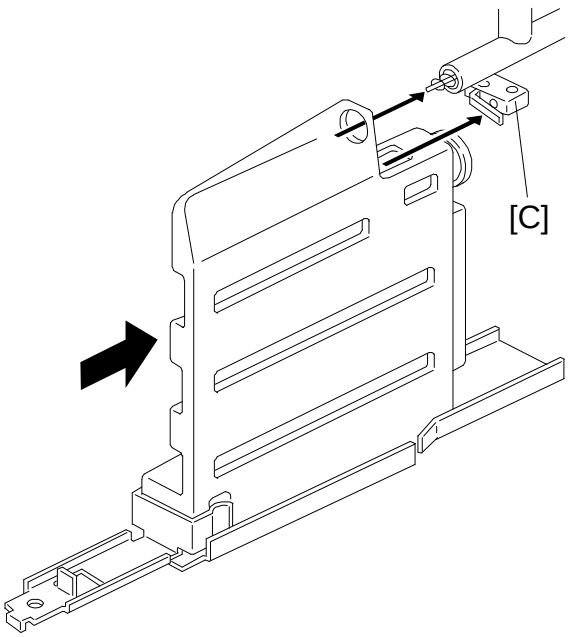

A176D529.wmf

2.5.5 Pick-off mechanism

The pick-off pawls are always in contact with the drum surface with weak spring pressure. They move side to side during the copy cycle. This movement is made via a shaft [A] and an eccentric cam [B].

2.5.6 Toner Collection Bottle Set Detection

The toner collection bottle set switch [C] prohibits machine operation by indicating SC343 while the toner collection bottle is not set.

2.6 QUENCHING

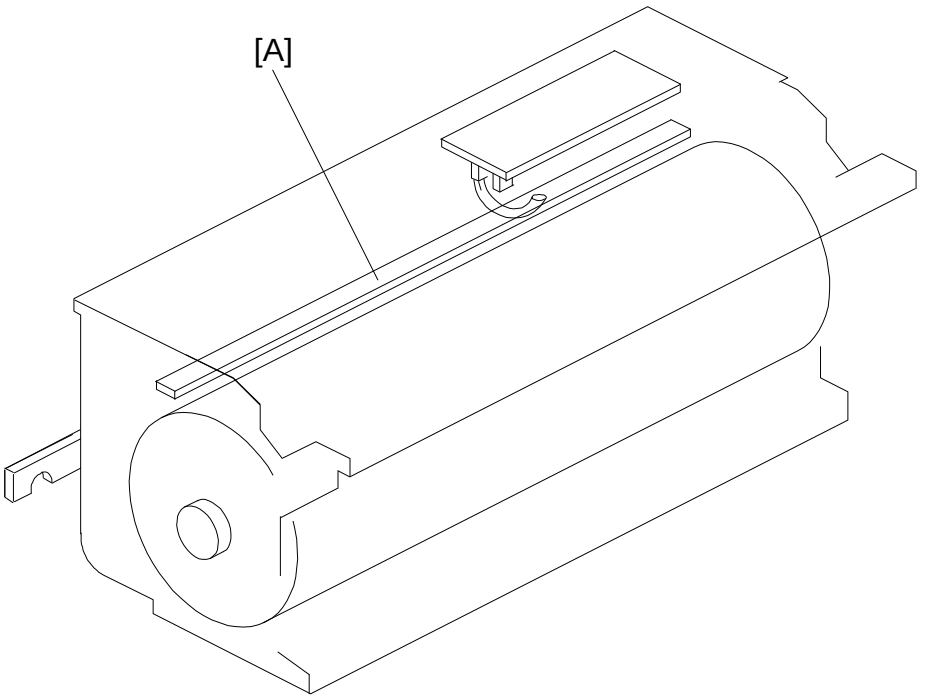

A176D530.wmf

In preparation for the next copy cycle, light from the quenching lamp (QL) [A] neutralizes any charge remaining on the drum.

The quenching lamp consists of a line of 16 LEDs extending across the full width of the drum.

Yellow colored LEDs are used for QL to reduce ultra violet light which would cause light fatigue on the OPC drum.

3. OPTICS

3.1 OVERVIEW

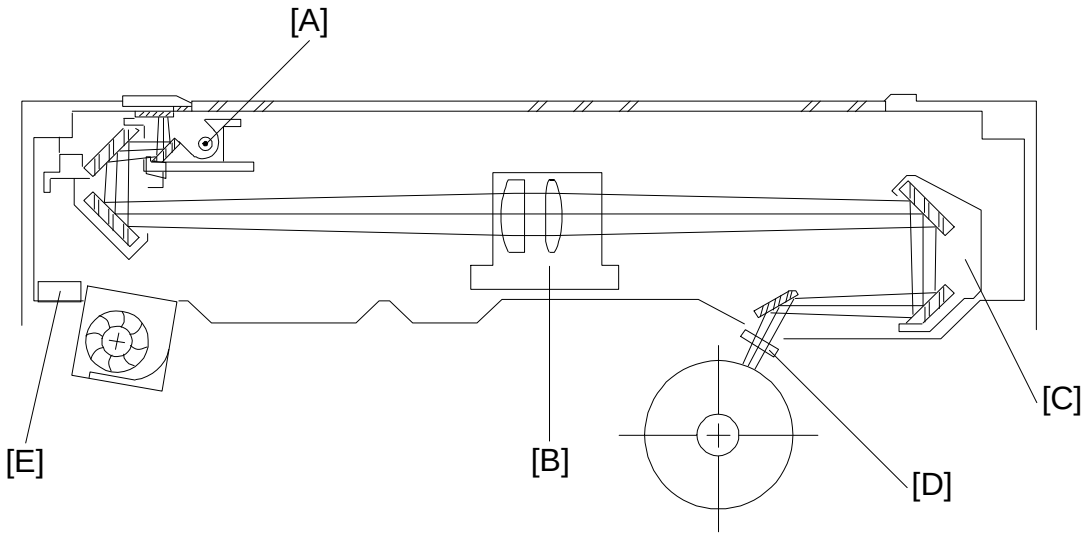

A176D532.wmf

The optics unit reflects an image of the original on the exposure glass onto the OPC drum. This forms a latent electrical image of the original.

On this model a halogen lamp (85 V 200 W: A175 copier, 225 W: others) is used for the exposure lamp [A]. Lamp surface is frosted to ensure even exposure.

Six mirrors are used to make the optics unit smaller and obtain the wide reproduction ratio range (50 ~ 200%).

The lens [B] is driven by two stepping motors for (1) vertical direction (parallel to the paper feed direction) and (2) horizontal direction movements.

To correct focal length change in reduction and enlargement modes, the third scanner unit [C] (4th and 5th mirrors) position is changed by a stepping motor.

The toner shielding filter [D] is green (a green filter partly absorbs red light) to improve red original duplication.

The optic anti-condensation heater [E] (located on the optic base plate) turns on while main switch is turned off to prevent the moisture from forming on the optics.

3.2 SCANNER DRIVE

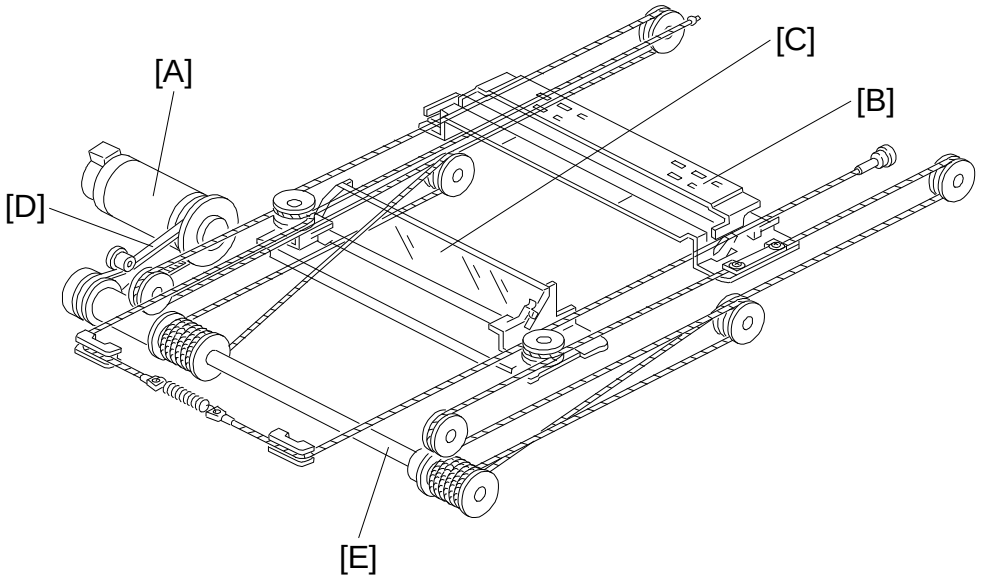

A176D533.wmf

A dc servo motor is used as the scanner drive motor [A]. Scanner drive speed is 330 mm/s (A175 coper) or 430 mm/s (others). during scanning, and 1,950 mm/s (50/51, 60 CPM versions) or 2,670 mm/s (70 CPM version) when the scanner goes back.

The scanner drive motor drives the first [B] and second scanners [C] using two scanner drive wires via the timing belt [D] and the scanner drive shaft [E]. The second scanner speed is half of the first scanner speed.

The scanner drive wire is not directly wound around the pulley on the scanner drive motor.

3.3 VERTICAL LENS DRIVE

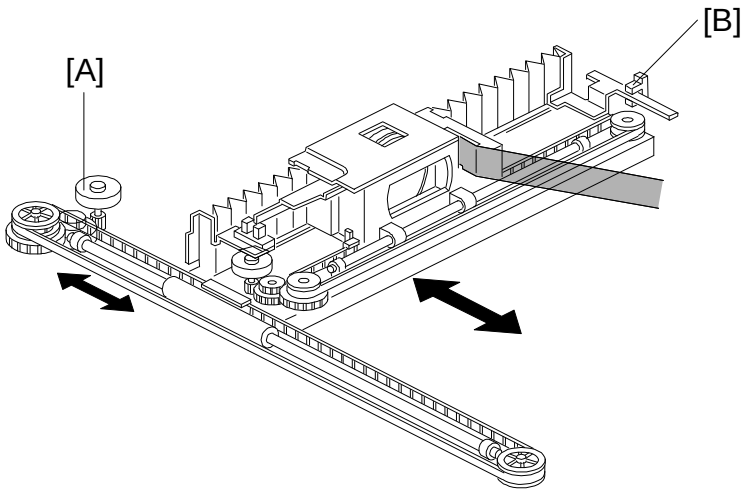

A176D534.wmf

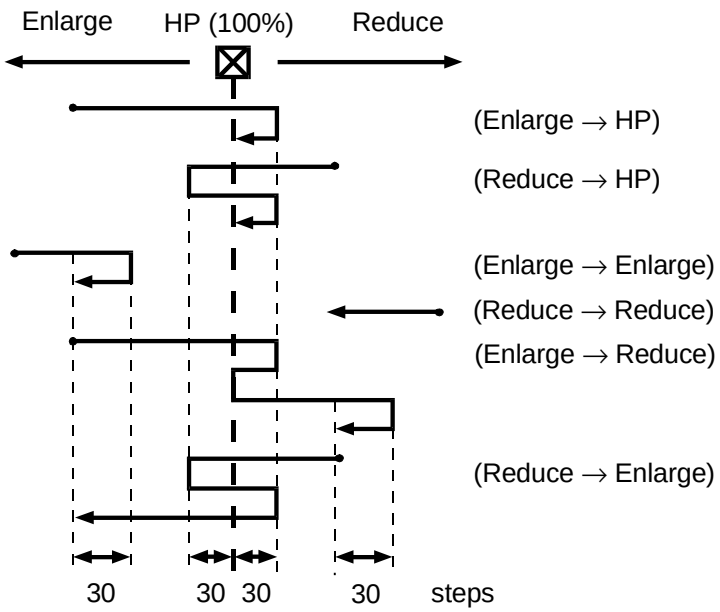

A176D535.wmf

The lens vertical drive motor [A] changes the lens vertical position in accordance with the selected reproduction ratio.

A stepping motor (approx. 0.095 mm/step) is used to drive the lens through the lens drive belt. The maximum lens vertical shift distance is 290 mm (from the position at 50% to the position at 200%).

The lens vertical home position sensor [B] detects the lens vertical position for full size mode. The optic control PCB keeps track of the lens position based on the number of pulses sent to the lens vertical drive motor.

3.4 HORIZONTAL LENS DRIVE

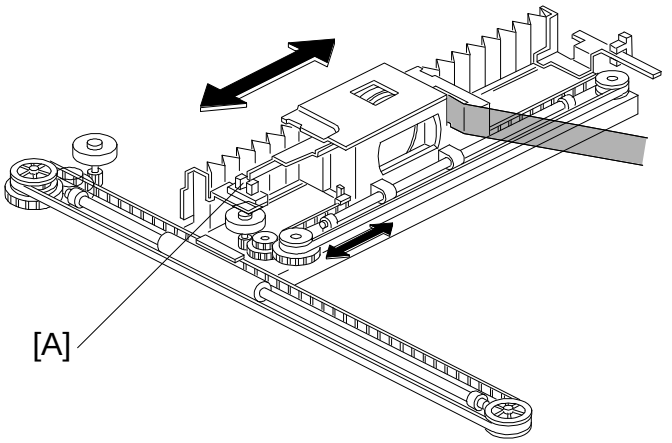

A176D536.wmf

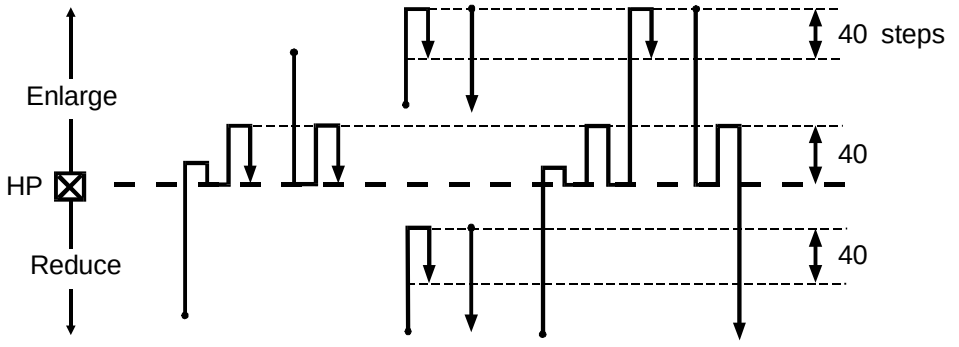

A176D537.wmf

The original horizontal position on the exposure glass varies depending on the mode (such as platen, DJF and RDH modes) for easy original handling. However, the center is the standard position for paper feed.

Therefore, the lens horizontal position has to be changed according to paper size, reproduction ratio, original feed modes and the edit modes (centering, margin adjust, etc.).

A stepping motor (approx. 0.07 mm/step) is used to drive the lens through the lens drive belt.

The lens horizontal home position sensor [A] is used to detect the lens horizontal position for A4/LT sideways, in full size and platen mode.

The other positions are determined by counting the number of motor drive pulses.

Since this model has a horizontal lens drive mechanism, side-to-side registration adjustment for each feed station can be done easily by using SP mode (1 SP Adjustment - PAGE 4).

3.5 HORIZONTAL LENS POSITIONING

3.5.1 For Original Position

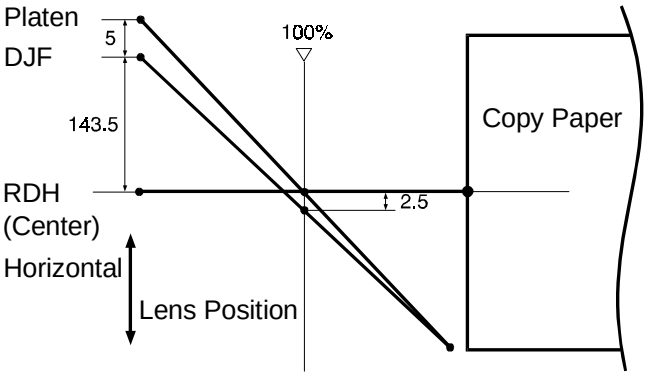

A176D538.wmf

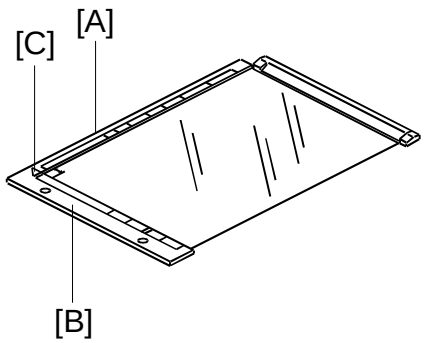

A176D539.wmf

There are three standard original positions for the platen, DJF and RDH modes.

In platen mode, the original is aligned with both the rear [A] and the left [B] original scales (rear left corner [C] is the standard position).

In RDH mode, the original position is the center of the left scale [B].

In DJF mode, the original position is 5 mm to front of the platen mode original position to maintain the original transport path (5 mm from the rear scale).

The above figure shows the lens horizontal positions for each original mode when identical size paper is used.

3.5.2 For Paper Size

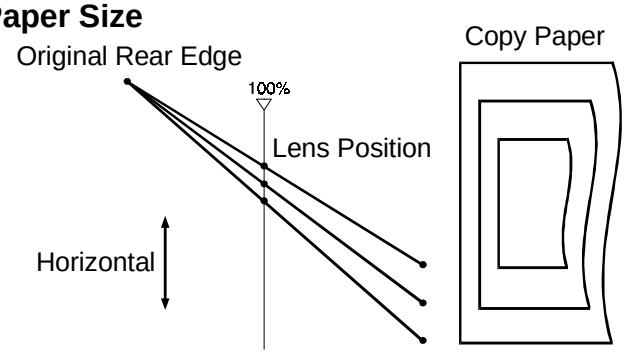

A176D540.wmf

To keep high paper feed performance, the center is assigned as the paper feed standard position. Therefore, the lens horizontal position is changed according to the paper size.

The figure shows the lens horizontal position for each paper size in full size mode.

3.5.3 For Reproduction Ratio

Original Rear Edge

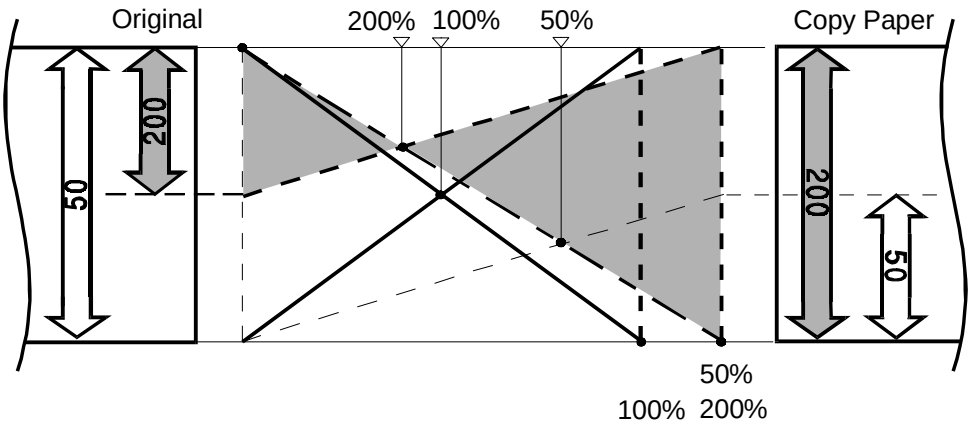

A176D541.wmf

When the reproduction ratio is changed, the vertical position of the lens is changed. At the same time, the total focal length has to be changed to adjust the image focusing. For this focal length change, the horizontal position of the 3rd scanner is also adjusted. The maximum 3rd mirror shift distance is 50 mm (from the position at 100% to the position at 50, 200%).

The figure shows the lens horizontal position for 50, 100 and 200%.

3.6 3RD SCANNER DRIVE

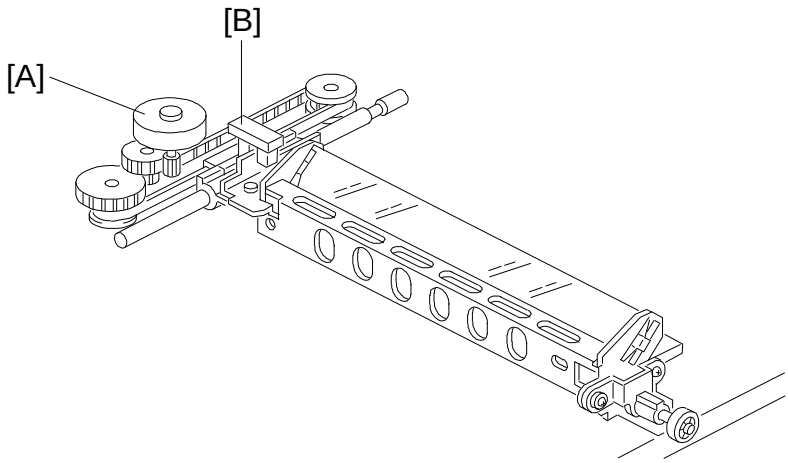

A176D542.wmf

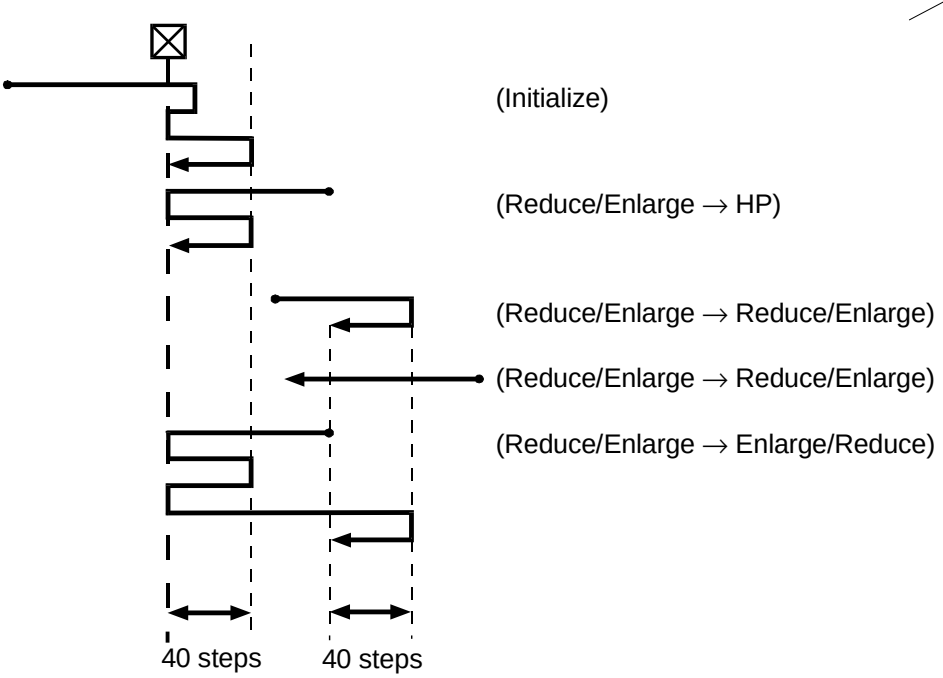

A176D543.wmf

To compensate the focus for reproduction and lens position changes, the 3rd scanner (4th and 5th mirrors) position is changed.

A stepping motor [A] (approx. 0.095 mm/step) is used for the 3rd scanner drive.

The 3rd scanner home position sensor [B] is used to detect the unit position for full size mode. The optic control PCB keeps track of the unit position based on the number of motor drive pulses.

3.7 OPTICS CONTROL CIRCUIT

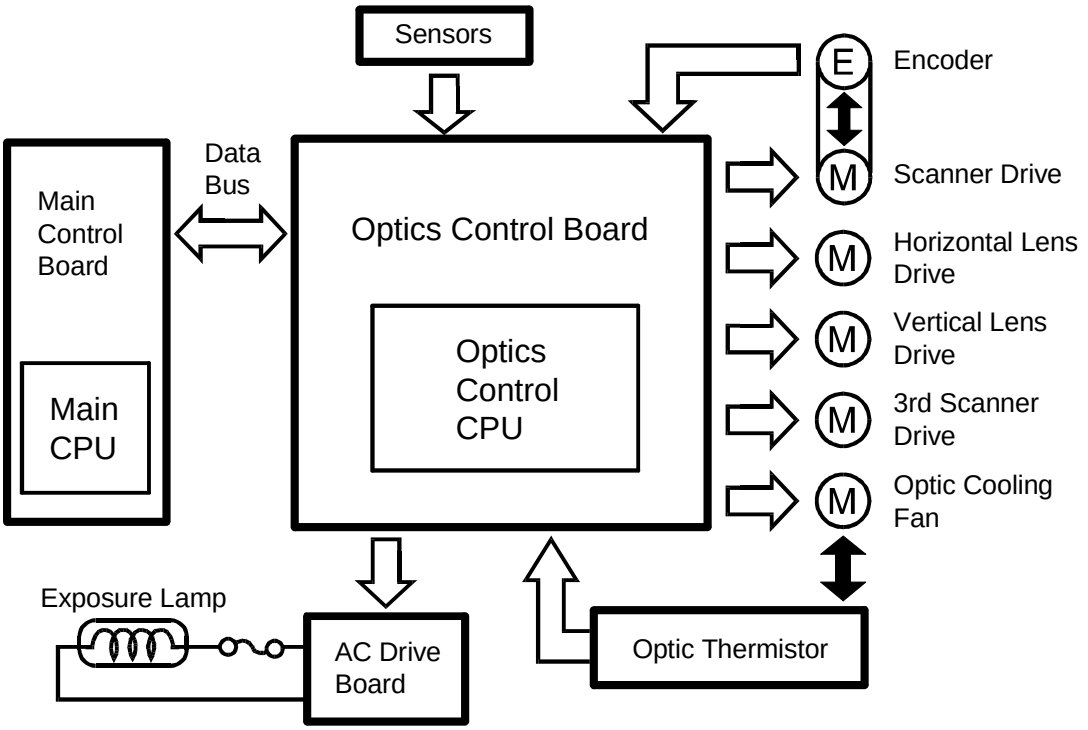

The optic control board communicates with the main board through a data bus. The optics control board monitors all the sensor signals, encoder output, thermistor output and controls all motors in the optics.

At the programmed time, the main CPU sends a scanner start signal to the optics control CPU.

The CPU generates a pulse-width modulation (PWM) signal. The PWM signal goes to a driver circuit, which sends drive pulses to the scanner drive motor.

An encoder in the scanner drive motor generates pulse signals.
A speed/direction control circuit monitors the scanner speed and the direction of the signals, and uses this data to regulate the motor speed.

The home position sensor monitors the position of the scanner. When the main switch is turned on, the main CPU confirms the position of the scanner by moving the scanner out of the home position and back again. This data is sent to the optics control CPU.

3.8 AUTOMATIC IMAGE DENSITY CONTROL SYSTEM (ADS)

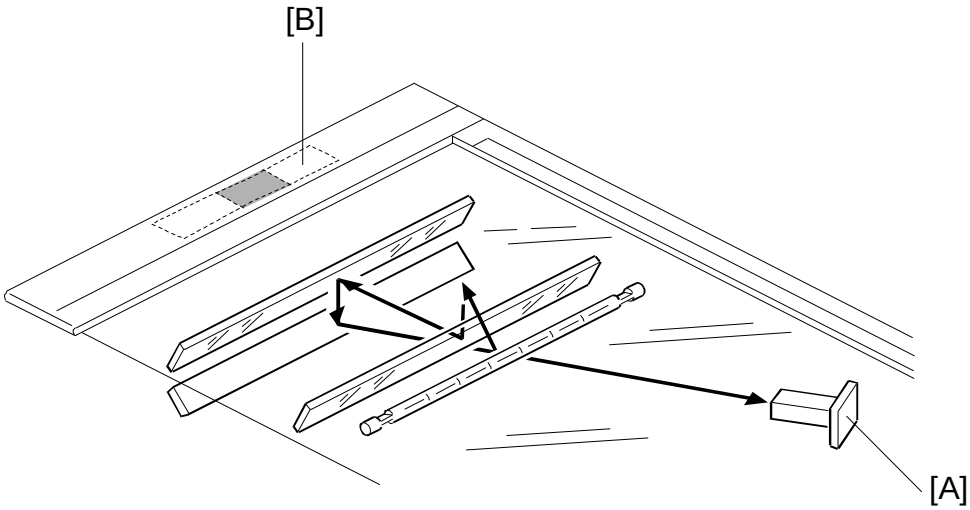

A176D545.wmf

In ADS mode the original background density is sensed by the ADS sensor [A] and the main CPU determines an appropriate development bias voltage for the original to prevent dirty backgrounds from appearing on copies.

The ADS sensor board is mounted on the rear side of the optics side plate. The sensor board is covered by the sensor housing cover which has a small hole to direct the reflected light from the original to the ADS sensor.

The ADS sensor standard voltage is adjusted to 2.7 V when process control data initial setting is performed. The exposure lamp turns on with ID level 4 at the home position and the light reflected by the ADS pattern [B] (white painted) reaches the ADS sensor. The main CPU adjusts the ADS gain data automatically to make the output 2.7 V. This gain data is stored in the RAM board.

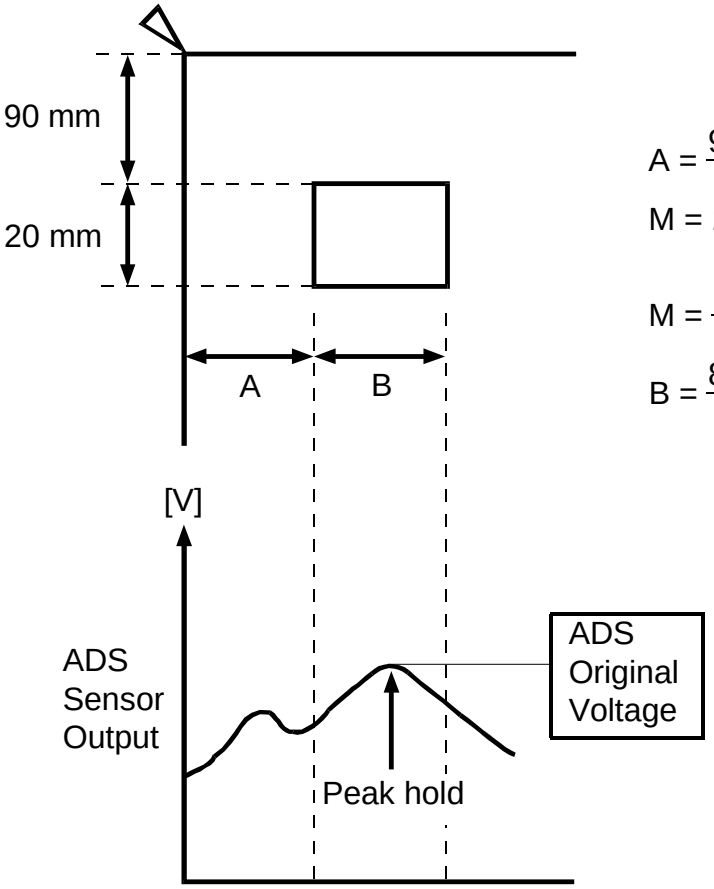

$A = \frac{9.7}{M}$ (mm)

M = 1.0 (m = 50 ~ 100)

$M = \frac{m}{100}$ (m = 101 ~ 200)

$B = \frac{8.25}{m} \times 100$ (mm)

m: reproduction ratio
(50 ~ 200)

A176D546.wmf

For the first scanning of an original in ADS mode, the CPU starts sampling of the ADS sensor output while exposing the ADS pattern at the scanner home position. Then the CPU stores the maximum ADS sensor output as a reference voltage. This means that every ADS check cycle, the first scanning for the original, the ADS reference voltage is renewed by the latest exposure light reflected by the ADS pattern.

In the full size mode, the CPU samples the ADS sensor output when the scanner scans the original from 9.7 mm to 18 mm from the left scale edge. The CPU takes the maximum ADS sensor output during the sampling period and compares it with the ADS reference voltage to determine the proper development bias voltage. (See development bias control section for details.)

The sampling length of ADS sensor output for the original differs depending on the reproduction ratio because the scanner speed is different.

3.9 MANUAL IMAGE DENSITY CONTROL

When the image density is set manually, the voltage applied to the exposure lamp changes as shown in the table below.

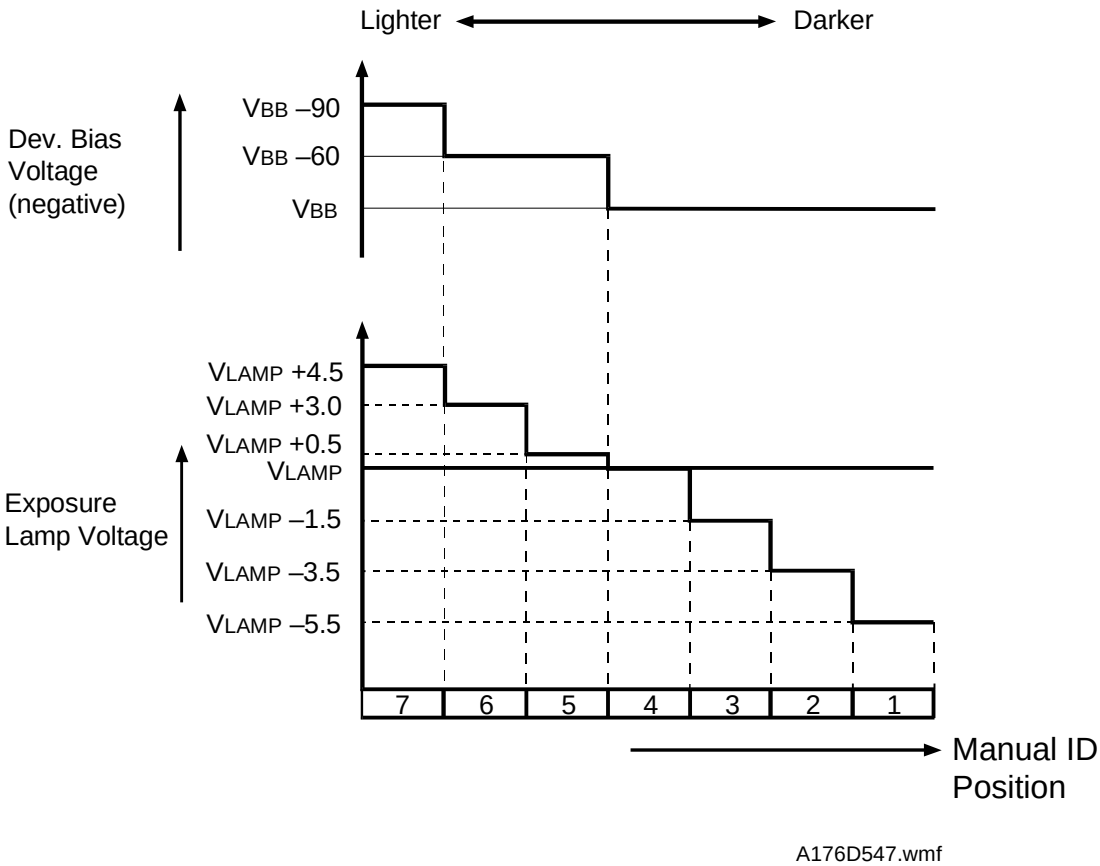

VLAMP: Exposure lamp voltage at ID level 4.
This value is determined at process control data initial setting.

VBB: Development bias (negative) voltage at ID level 4.
This value is determined at process control data initial setting.

3.10 UNEVEN LIGHT INTENSITY CORRECTION

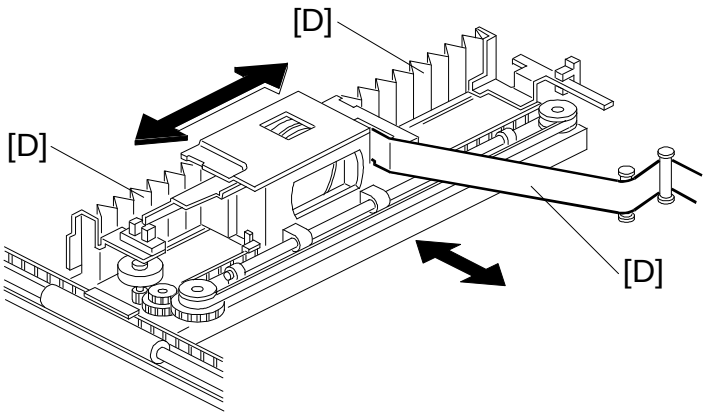

A176D548.wmf

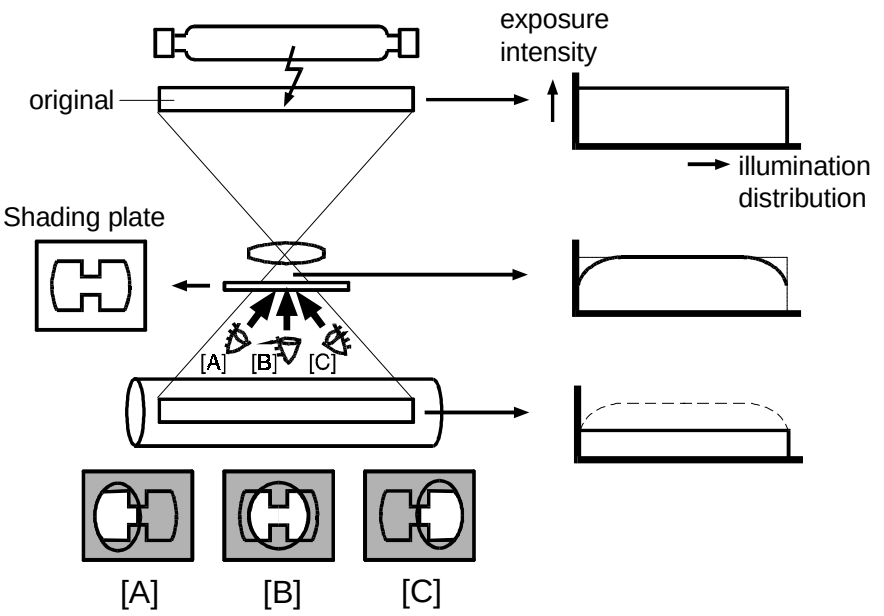

A176D549.wmf

The entire exposure lamp surface is frosted to ensure even exposure.

To compensate for reduced light at the edge of the lens, a shading plate is placed in front of the lens. The shading plate is fixed to the lens unit.
The shading plate compensates the light intensity when the lens horizontal position is shifted ([A] to [C]).

Also three shading mylars [D] intercept any diffused reflected light from outside the light path.

3.11 ORIGINAL SIZE DETECTION IN PLATEN MODE

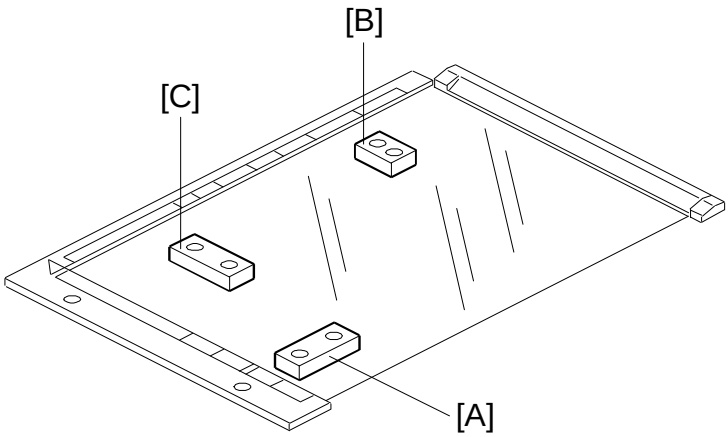

A176D551.wmf

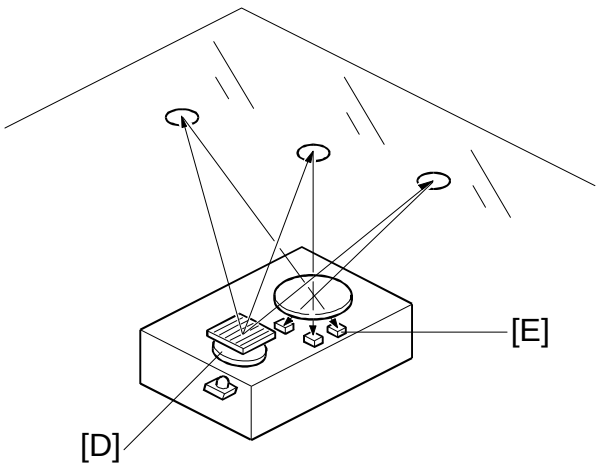

A176D550.wmf

There are three reflective sensors (APS sensors) in the optics cavity for the original size detection. Original width Sensor [A] is used for sensing the original width and Original Length Sensor-1 [B] and Original Length Sensor-2 [C] sense the original length.

Inside each APS sensor, there is an LED [D] and three photoelectric devices [E]. The light generated by the LED is broken up in three beams and each beam scans a different point of the exposure glass. If the original or platen cover is present over the scanning point, the beam is reflected and each reflected beam exposes a photoelectric device and activates it.

While the main switch is on, these sensors are active and the original size data is always sent to the main CPU. However, the main CPU checks the data only when the platen cover is opened.

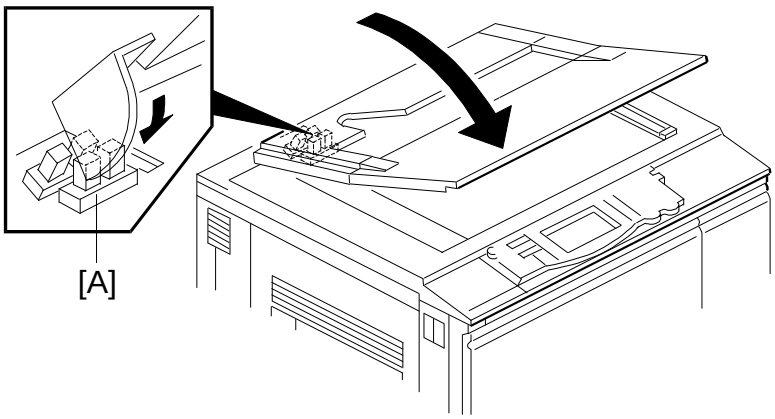

A176D552.wmf

Original Size		Length Sensor 1			Length Sensor 2			Width Sensor		
A4/A3 version	**LT/DLT version**	**1**	**2**	**3**	**4**	**5**	**6**	**7**	**8**	**9**
A3	11 x 7	O	O	O	O	O	O	O	O	O
B4	10 x 14	X	O	O	O	O	O	O	O	O
—	8 1/2 x 14	X	O	O	—	O	—	O	O	X
F4	8 x 13	X	X	O	O	O	O	O	O	X
A4-L	8 1/2 x 11	X	X	X	O	O	O	O	O	X
B5-L	—	X	X	X	O	O	O	O	X	X
A5-L	5 1/2 x 8 1/2	X	X	X	O	O	O	X	X	X
B6-L	—	X	X	X	X	O	O	X	X	X
A6-L	—	X	X	X	X	X	O	X	X	X
A4-S	11 x 8 1/2	X	X	X	O	O	O	O	O	O
B5-S	—	X	X	X	X	O	O	O	O	O
A5-S	8 1/2 x 5 1/2	X	X	X	X	X	O	O	X	X
A6-S	—	X	X	X	X	X	X	X	X	X

NOTE: -L: Lengthwise
-S: Sideways
Sensors #4 and #6 are not used for LT/DLT version machines.

The check is done when the platen position sensor [A] turns on. This is when the platen is positioned about 15 cm above the exposure glass. At this time, only the sensor(s) located underneath the original receive the reflected light and are on. Other sensor(s) are off. Through the on/off data of the nine (seven for LT/DLT version machine) sensors, the main CPU can recognize the original size.

In case the copy is made with the platen open, the main CPU decides the original size only through the data when the Print key is pressed.

This original size detection method eliminates the necessity for a pre-scan and increases the machine's productivity.

3.12 HALF TONE MODE

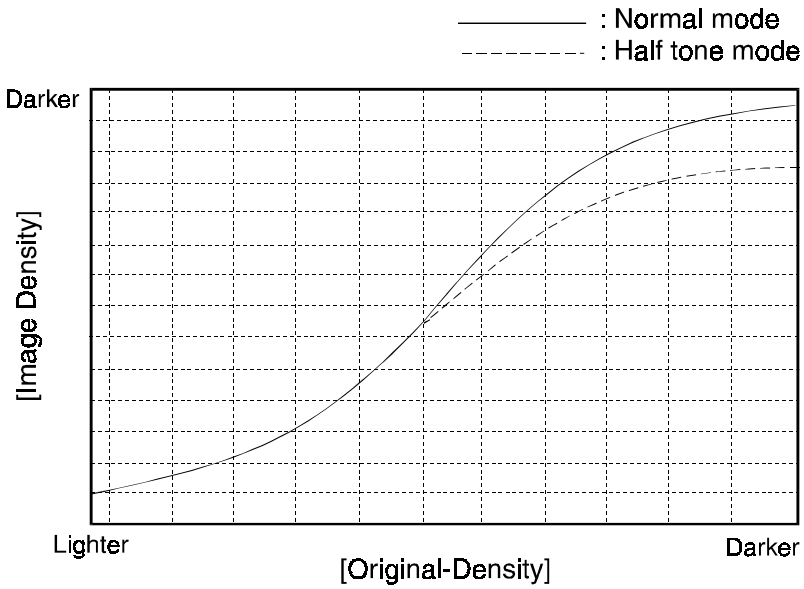

A176D553.wmf

This machine has a half tone mode. In this mode, which can be select in the operation panel, the charge corona grid voltage is decreased by 200 V but the charge corona grid voltage might blank out low density areas of the original. To correct this, the exposure lamp voltage is decreased by 3 V. As a result, the image density is lowered for picture or half tone original.

4. DEVELOPMENT

4.1 OVERVIEW

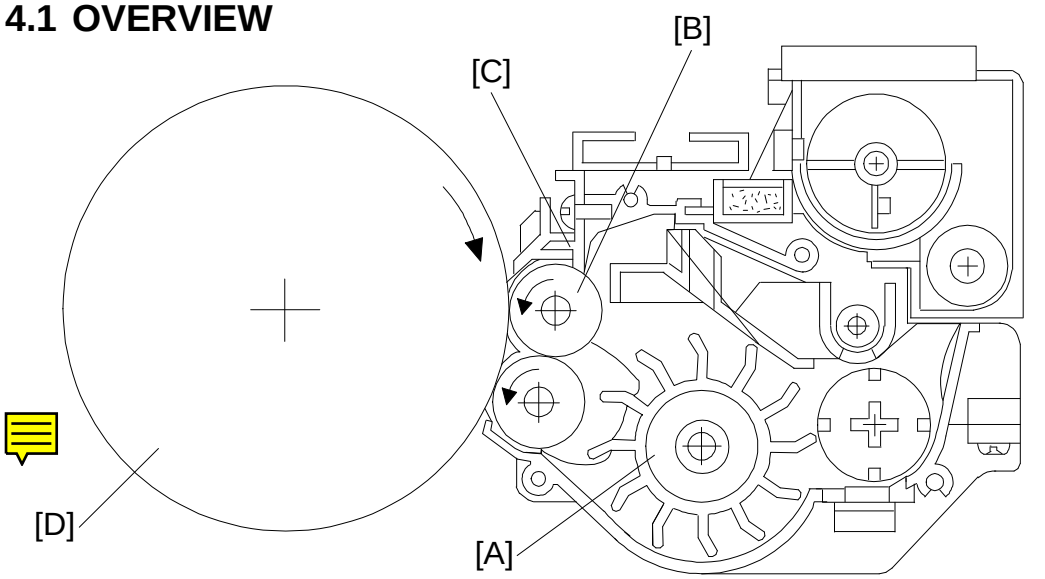

A176D554.wmf

This copier uses a double roller (diameter 20 mm each) development (DRD) system. This system differs from single roller development systems in that (1) it develops the image in a narrower area, (2) it develops the image twice, and (3) the relative speed of each development roller against the drum is reduced. Also, finer toner (Approx. 9 μm) and developer (Approx. 70 μm) are used. Both the DRD system and new supplies improve the image quality, especially of thin horizontal lines, the trailing edges of the half-tone areas, and black cross points.

The paddle roller [A] picks up developer in its paddles and transports it to the upper development roller [B]. Internal permanent magnets in the development rollers attract the developer to the development roller sleeve. The upper development roller carries the developer past the doctor blade [C]. The doctor blade trims the developer to the desired thickness and creates backspill to the cross mixing mechanism.

The development rollers continues to turn, carrying the developer to the OPC drum [D]. When the developer brush contacts the drum surface, the negatively charged areas of the drum surface attract and hold the positively charged toner. In this way, the latent image is developed.

The development roller is given a negative bias to prevent the toner form being attracted to the non-image areas on the drum surface that may have a slight residual negative charge.

After turning another 100 degrees, the developer is returned to the paddle roller [A].

4.2 DRIVE MECHANISM

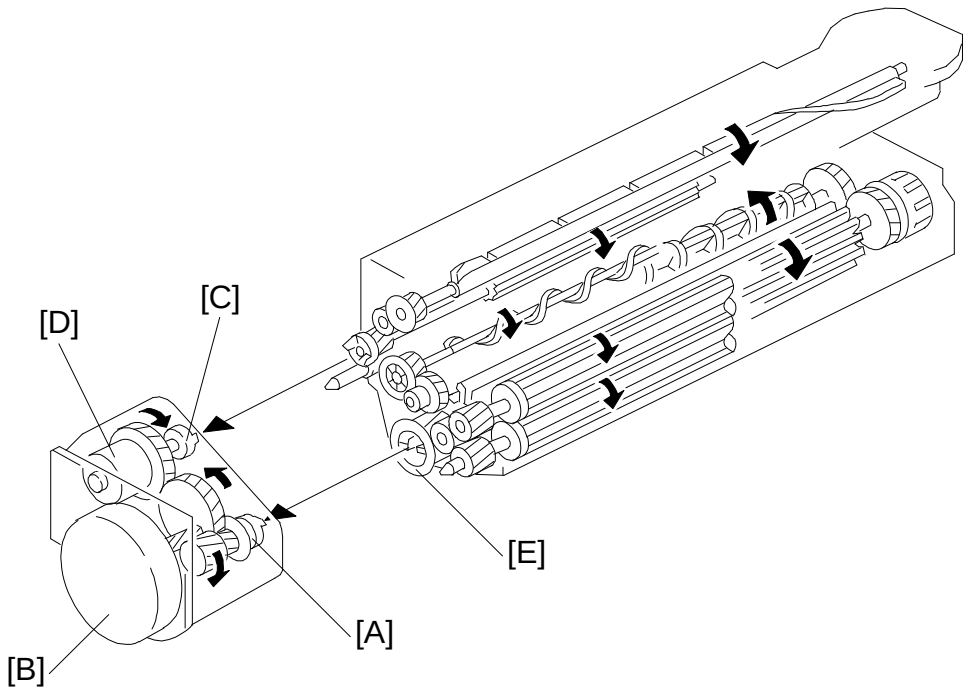

A176D555.wmf

The gears of the development unit are driven by the development drive gear [A] when the development motor [B] (dc servomotor) turns.

The gears of the toner hopper are driven by the toner supply roller drive gear [C] when the toner supply clutch [D] activates.

The above gears are helical gears. Helical gears are more quiet than normal gears. The teeth of the development drive gear are chamfered so that they smoothly engage with the development roller gear [E] when the unit is installed.

4.3 CROSSMIXING

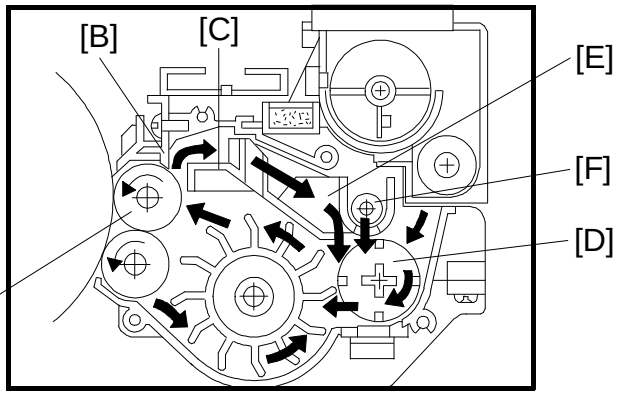

A176D556.wmf

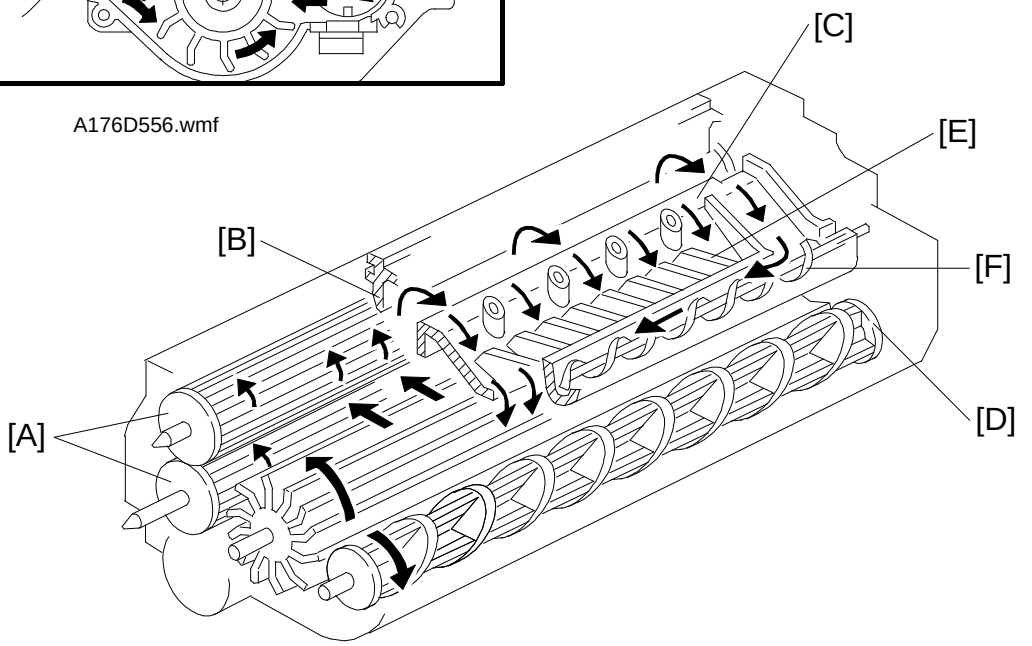

A176D557.wmf

This copier uses a standard cross-mixing mechanism to keep the toner and developer evenly mixed. It also helps agitate the developer to prevent developer clumps from forming and helps create the triboelectric charge.

The developer on the turning development rollers [A] is split into two parts by the doctor blade [B]. The part that stays on the development rollers forms the magnetic brush and develops the latent image on the drum. The part that is trimmed off by the doctor blade goes to the backspill plate [C].

As the developer slides down the backspill plate to the agitator [D], the mixing vanes [E] move it slightly toward the rear of the unit. Part of the developer falls into the auger inlet and is transported to the front of the unit by the auger [F].

The agitator moves the developer slightly to the front as it turns, so the developer stays level in the development unit.

4.4 DEVELOPMENT BIAS

4.4.1 Overview

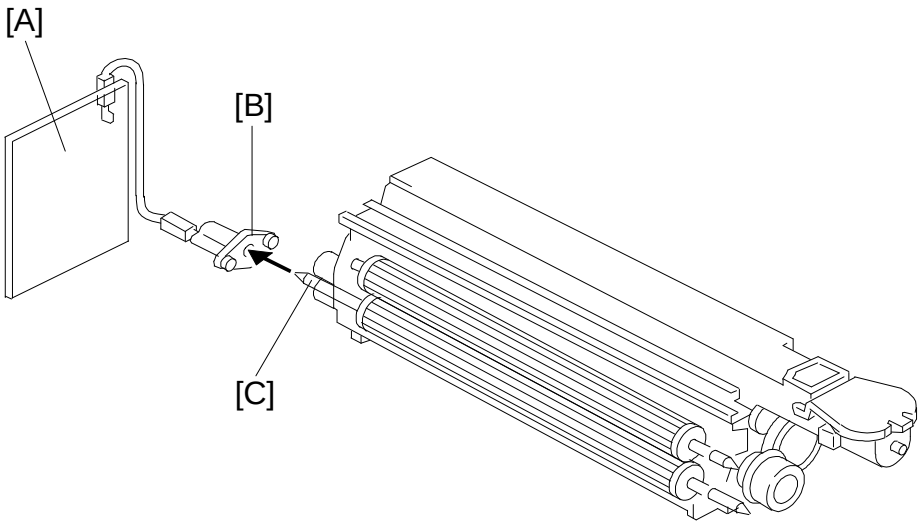

A176D558.wmf

The high voltage control Board [A] applies the negative development bias to the lower sleeve roller through the receptacle [B] and the lower sleeve roller shaft [C]. Then the bias is applied to the upper sleeve roller through the rear sleeve roller holder made of conductive resin.

The development bias prevents toner from being attracted to the background area of the non-image area on the OPC drum where there is residual voltage. Also, the development bias is used to adjust image density according to the conditions the customer selected.

4.4.2 Bias Control In Copy Cycle

The bias output is determined by five factors.

The total bias is described as;

ADS Mode: $V_B = V_{BB} + V_{BU} + V_{BMG} + V_{BA}$
Manual ID Mode: $V_B = V_{BB} + V_{BU} + V_{BMG} + V_{BM}$

- V_B: Total bias
- V_{BB}: Base bias
- V_{BA}: ADS Compensation
- V_{BU}: User Tool mode ID Selection Compensation
- V_{BMG}: Magnification Compensation
- V_{BM}: Manual ID Selection Compensation

1) Base Bias (V_{BB})

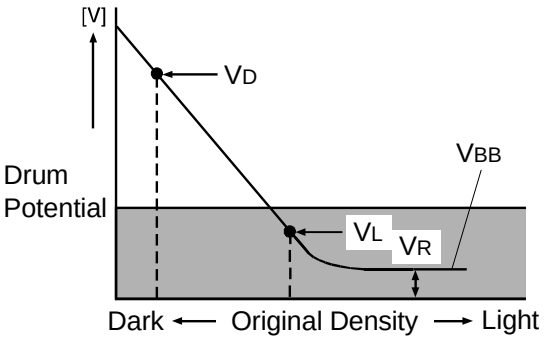

A176D559.wmf

As explained in the process control section, the base bias for development is determined by the residual voltage (V_R) measured in process control data initial setting.

$V_{BB} = V_R + (-220)$

2) ADS Compensation (V_{BA})

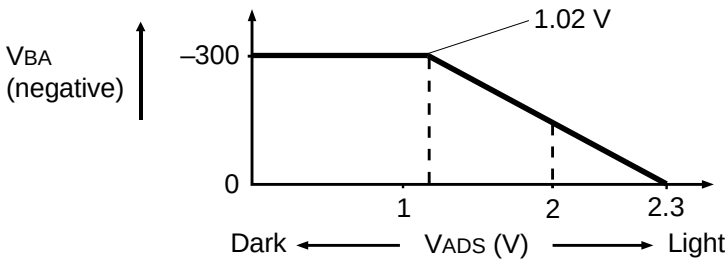

A176D560.wmf

According to the original background density, the bias is compensated. The compensation value is determined with the voltage measured by the ADS sensor (ADS sensor output: V_{ADS}) as follows:

$V_{BA} = 234 \times (V_{ADS} - 2.3)$

NOTE: V_{BA} has a limited range from 0 V to –300 V.

3) Manual ID Selection Position Compensation (VBM)

According to the manual ID selection position, the bias is compensated as follows:

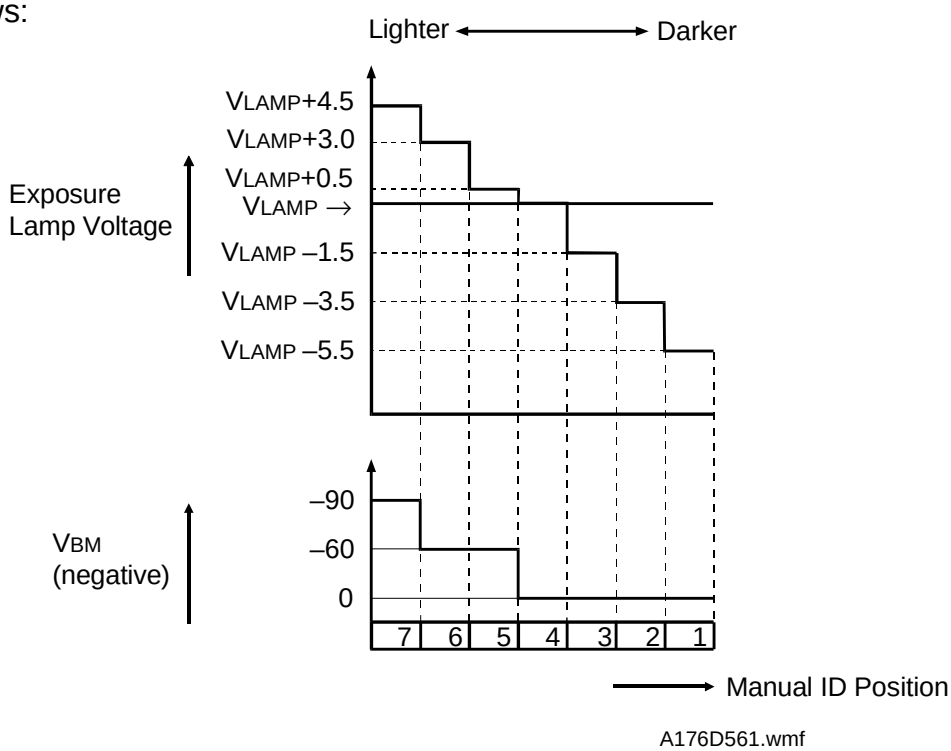

A176D561.wmf

VLAMP: Exposure lamp voltage at ID level 4. This value is determined at process control data initial setting.

4) User Tool Mode ID Selection Compensation (VBU)

In the User Tool mode, the image density level can be selected from five steps. The VBU is determined by the User Tool ID position setting as follows:

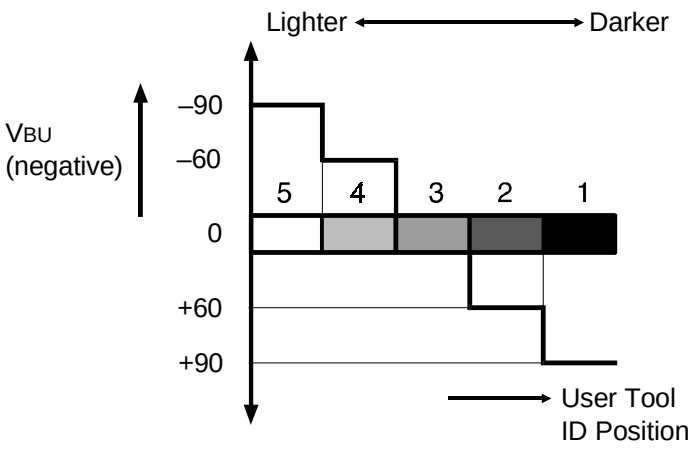

A176D562.wmf

5) Magnification Compensation (V_{BMG})

V_{BMG} is determined by the selected reproduction ratio as follows:

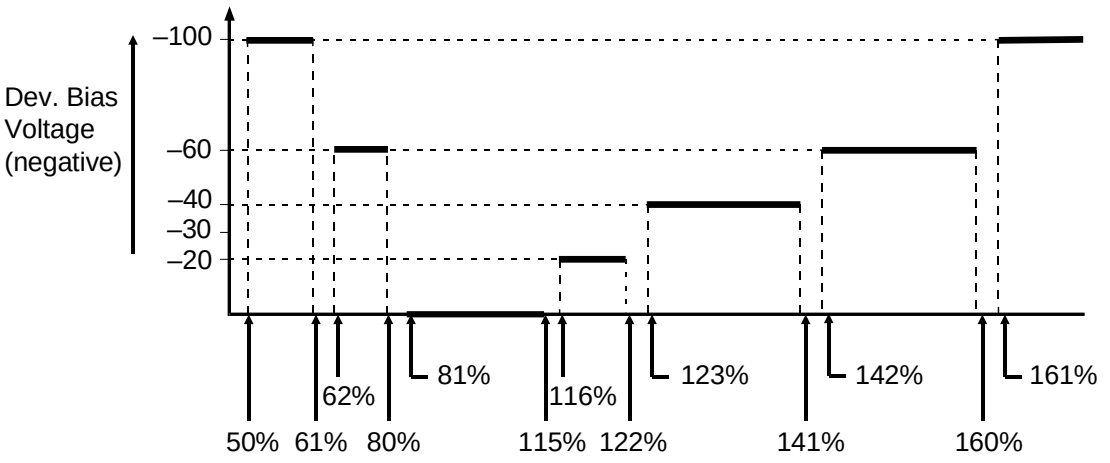

A176D563.wmf

4.4.3 Bias Control Out of Copy Cycle

To hold the toner on the sleeve rollers while the development sleeve rollers are rotating without image development, a constant –300 V bias is applied.

4.4.4 ID Sensor Pattern Bias

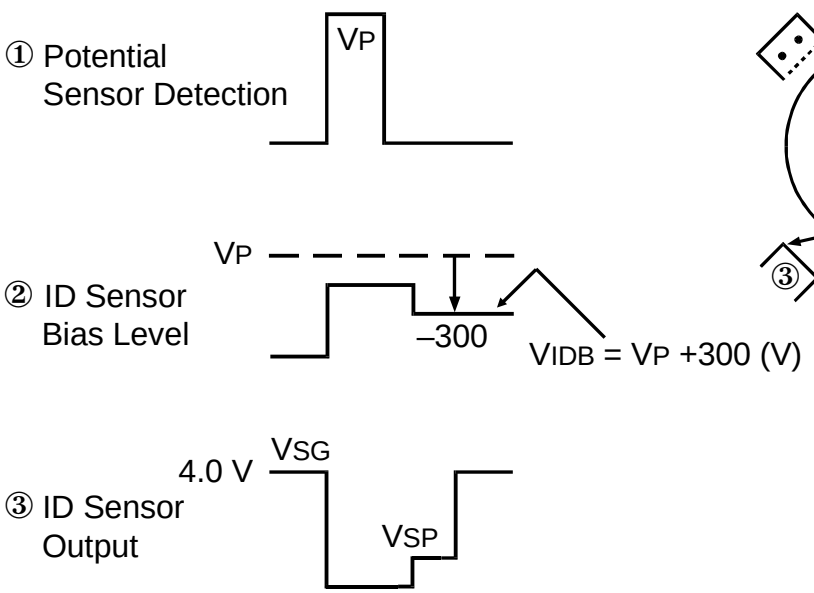

A176D564.wmf

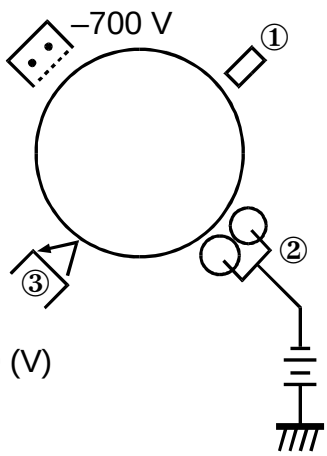

A172D565.wmf

While developing the ID sensor pattern, ID sensor bias is applied. ID sensor bias is determined during process control initial setting as follows:

A charge is applied while grid voltage is –700 V to create the ID sensor pattern.

The drum potential (V_P) of the ID sensor pattern is checked.

The ID sensor bias (V_{IDB}) is adjusted so that it satisfies the following formula:

$$V_{IDB} = V_P - (-300)$$
$$= V_P + 300 \text{ (V)}$$

4.5 TONER SUPPLY

4.5.1 Toner Supply Mechanism

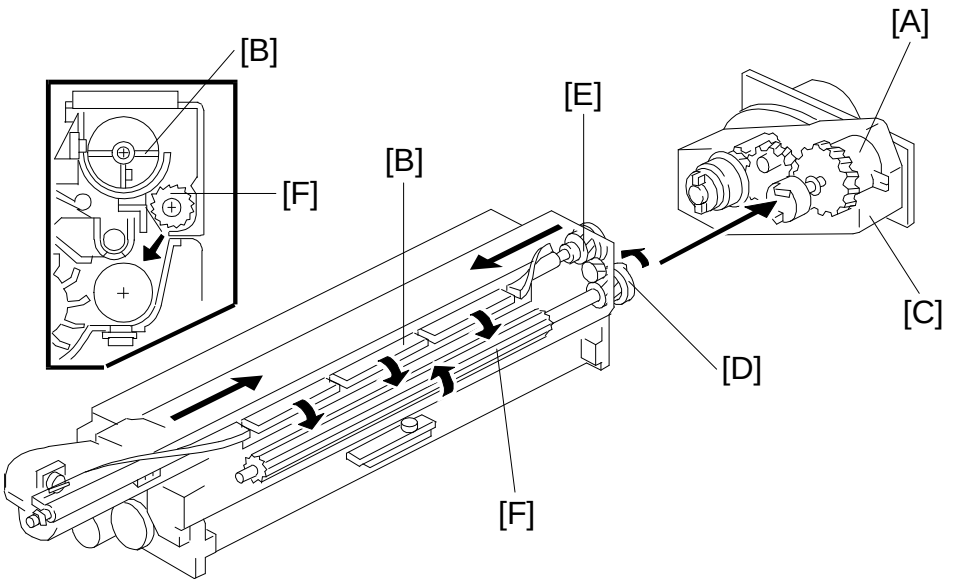

A176D566.wmf

When the toner supply clutch [A] turns on, the agitator [B] moves the toner from front to rear and sends the toner to the toner supply roller.

The toner supply clutch [A] located inside the development motor [C] applies the rotation from the development motor to the toner supply roller gear [D], which drives the agitator gear [E]. Toner is caught in the grooves on the toner supply roller [F]. Then, as the grooves turn past the opening, the toner falls into the development unit.

4.5.2 Toner End Detection

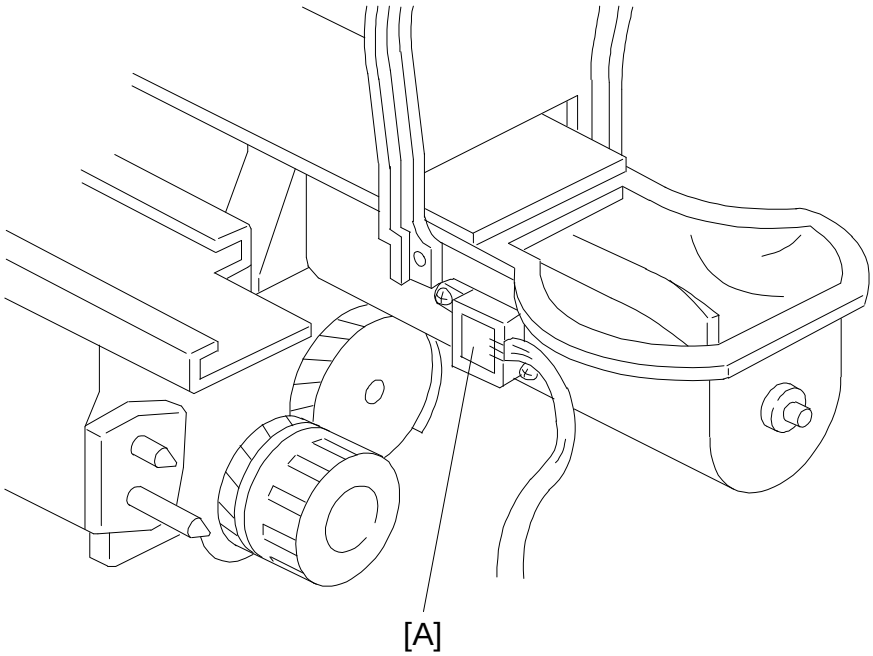

A176D567.wmf

The toner end sensor [A] detects if sufficient toner remains in the toner hopper or not. The toner end sensor monitors toner end condition once when the toner supply clutch turns on. When there is little toner inside the toner hopper and toner pressure on the toner end sensor becomes low, the toner end sensor outputs a pulse signal for each (one detection per one copy).

The toner near end indication is displayed on the LCD after receiving the pulse signal 150 times (If no pulse signal is output twice continually, the pulse count is canceled).

Fifty copies are allowed after entering toner near end condition. After fifty copies are made in toner near end condition, the machine enters the toner end condition and copying is prohibited.

When the main switch is turned off and on, or the front door is opened and closed, the machine drives toner supply mechanism and monitors the toner end sensor output. If the toner end sensor does not output the pulse signal twice continually, the toner end condition is canceled.

4.5.3 Toner Supply Control

By using an SP mode (1 SP Adjustment - PAGE 7), the following 3 kinds of toner supply controls can be selected.

- Auto Process Control Mode
- Detect Mode
- Fixed Mode

1) Auto Process Control Mode
Originals have various image proportions and image densities. For the best toner supply control, it is necessary to link the amount of toner supplied on each copy cycle to the amount of toner consumed for each copy.
Fuzzy control is used in this model to provide this kind of toner supply control.

Fuzzy Control 1
According to data of the TD sensor, the CPU checks the following at every copy cycle:

1. The results of toner supply control (TD sensor output) in the previous copy cycle.

2. How quickly the toner density is changing.
Then the CPU decides the most suitable toner supply amount (toner supply clutch on time) for the next copy cycle by using fuzzy logic.

Fuzzy Control 2

The image on the OPC drum changes due to variations in toner chargeability (influenced by the environment) even if toner concentration is constant.

The ID sensor directly checks the image on the OPC drum and shifts the VREF data under fuzzy control to keep the image on the OPC drum constant.

NOTE: The toner supply amount is changed at every copy cycle. The target toner density sensor output is updated under the following conditions:

1. During toner density sensor initial setting
2. During process control data initial setting
3. After the copy job is completed in case that 10 or more copies have been made since the last update.

(Refer to section 2.1.4 "Image Density Control" for details.)

2) Detect Mode

In this mode, only the TD sensor is used to control the toner concentration (VREF data is fixed). The machine performs only fuzzy control 1.

In ID sensor abnormal condition, the machine automatically enters this mode.

3) Fixed Mode

In this mode, a fixed amount of toner is supplied every copy cycle as determined (4%, 7%, 11%, 14%) by SP mode (1 SP Adjustment - PAGE 7). There is no overtoning detection mechanism.

In TD sensor abnormal condition or Drum Potential sensor abnormal condition, the machine automatically enter this mode.

4.5.4 Bottle Drive Mechanism

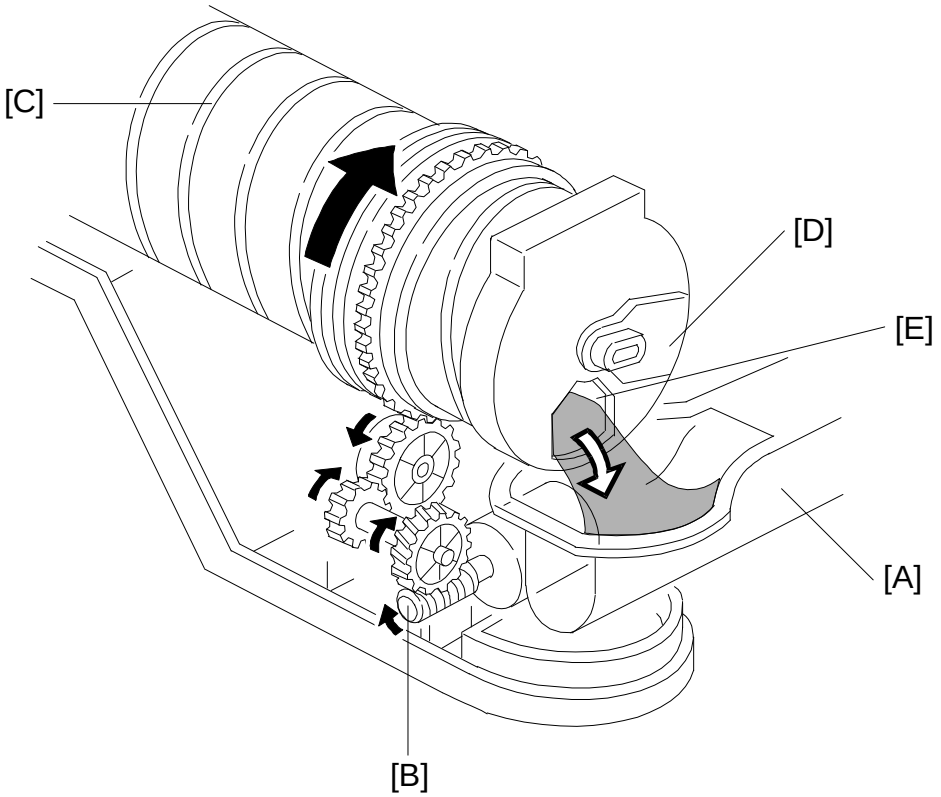

For easy access, the toner bottle is just inside the front cover. The bottle is positioned horizontally.

The bottle drive mechanism transports toner from the bottle to the toner hopper [A]. A worm gear [B] on the bottle drive motor drives this mechanism.

The toner bottle has a spiral groove [C] that helps move the toner to the toner hopper.

To prevent toner from scattering when the toner bottle is removed from the holder, toner shutter [D] which covers the hole [E] is installed on the toner bottle.

When the toner is set on the holder and the lever is lowered, the toner shutter [D] opens to supply toner to the toner hopper.

The bottle drive motor turns on 0.7 seconds when the toner end sensor turns on five times continually.

5. IMAGE TRANSFER

5.1 PRE-TRANSFER LAMP

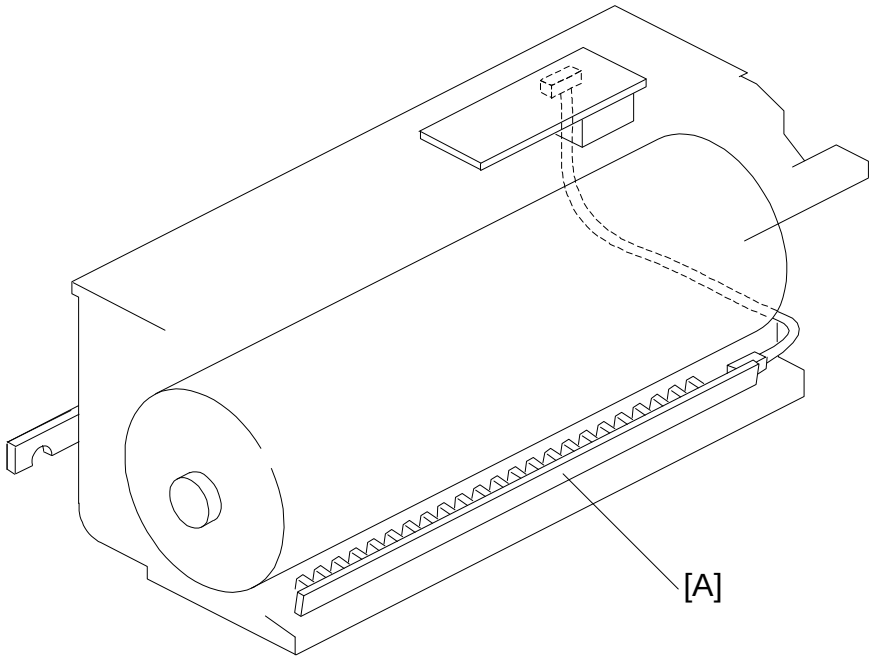

A176D569.wmf

The pre-transfer lamp [A] located in the drum unit is used to prevent incomplete toner transfer.

After the latent image is developed but before the image is transferred to the copy paper, the drum surface is illuminated by the pre-transfer lamp. This illumination reduces the negative potential on the drum surface charged by the main charge corona and partially discharged by the exposure. This makes image transfer easier.

The pre-transfer lamp is turned on and off by the charge power pack at the same time as when the main motor turns on and off.

5.2 IMAGE TRANSFER AND PAPER SEPARATION OVERVIEW

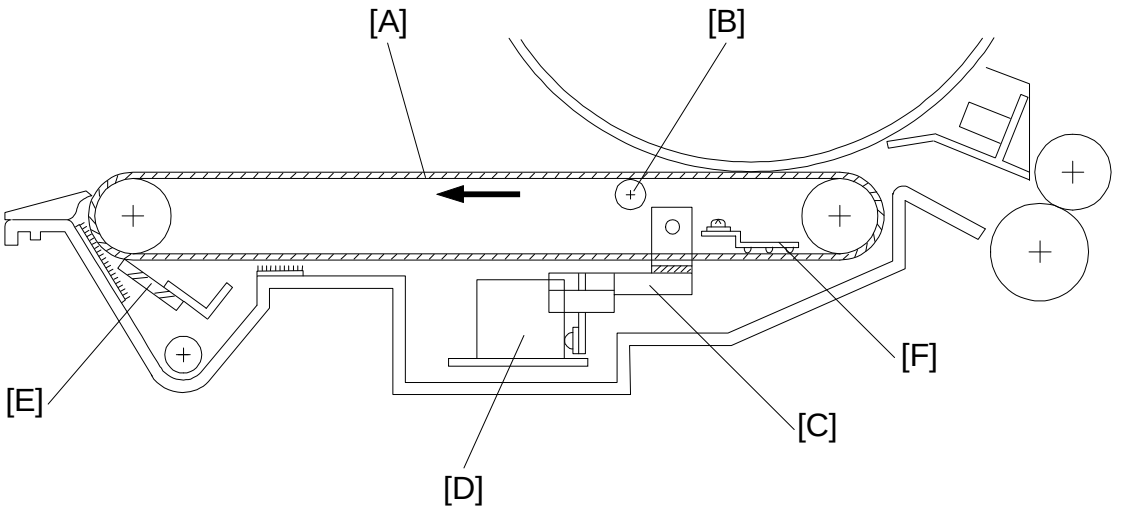

A176D570.wmf

This model uses a unique transfer belt unit instead of the transfer and separation corona unit. The transfer belt unit consists of the following parts:

[A] Transfer belt
A belt (length: 321 mm) with high electrical resistance which holds a high negative electrical potential and attracts the toner on the OPC drum onto the paper. Also the electrical potential attracts the paper itself and helps paper separation from the OPC drum.

[B] Transfer bias roller
Applies transfer voltage to the transfer belt.

[C] Transfer belt lift lever (driven by a solenoid)
Lifts the transfer belt to contact the transfer belt with the OPC drum.

[D] Transfer power pack
Generates the constant transfer current.

[E] Transfer belt cleaning blade
Removes toner attached on the transfer belt to prevent the rear side of the paper from being stained.

[F] Discharge plate
Discharges the remaining negative charge on the transfer belt and feeds it back to the transfer power pack to control the transfer current and keep it constant.

5.3 IMAGE TRANSFER AND PAPER SEPARATION MECHANISM

The registration rollers [A] starts feeding the paper [B] to the gap between the OPC drum [C] and the transfer belt [D] in proper timing.

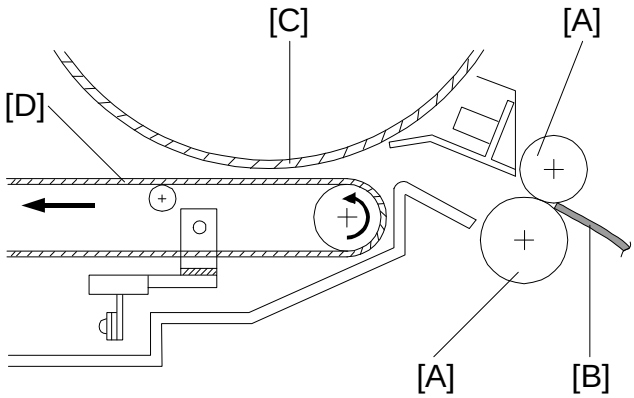

A176D571.wmf

Immediately when the leading edge of the paper reaches the gap between the transfer belt and the OPC drum, the transfer belt lift lever [E] raises the transfer belt to contact the transfer belt and the OPC drum. The lift lever is driven by a solenoid.

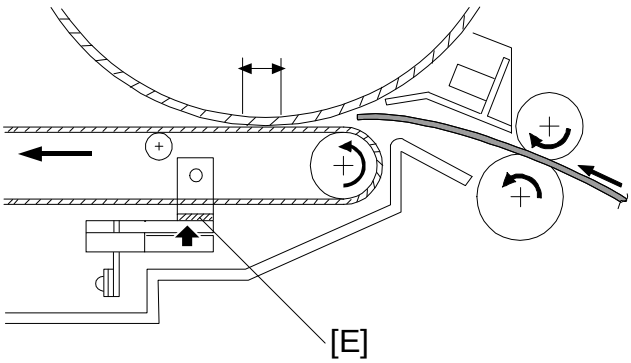

A176D572.wmf

Then a negative transfer bias is applied to the transfer bias roller [F] and attracts the positively charged toner [G] on the OPC drum. It also attracts the paper and separates the paper from the OPC drum.

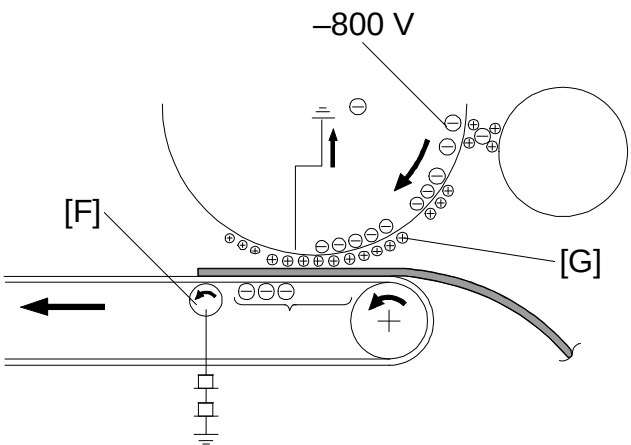

A176D573.wmf

After the image transfer is completed, the charge on the transfer belt holds the paper to the transfer belt.
After separating the paper from the transfer belt, the transfer belt is discharged by the discharge plate [A].

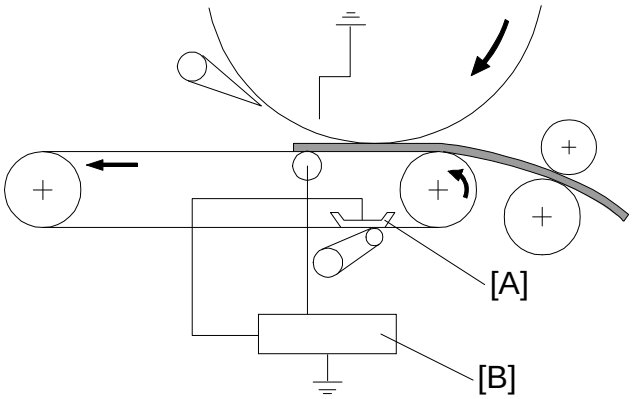

A176D574.wmf

The transfer power pack [B] inside the transfer belt unit monitors the current fed back from the discharge plate to adjust the transfer current. This way, the current stays constant even if the paper, environmental conditions, and the transfer belt surface resistance are changed.

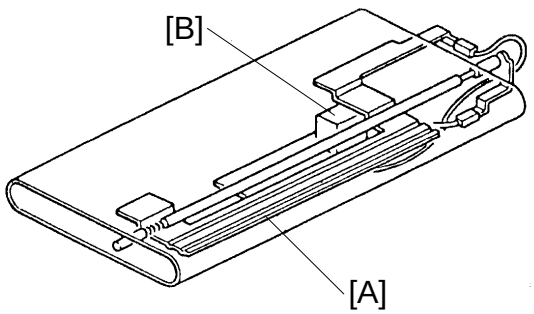

A176D575.img

5.4 TRANSFER BELT UNIT LIFT MECHANISM

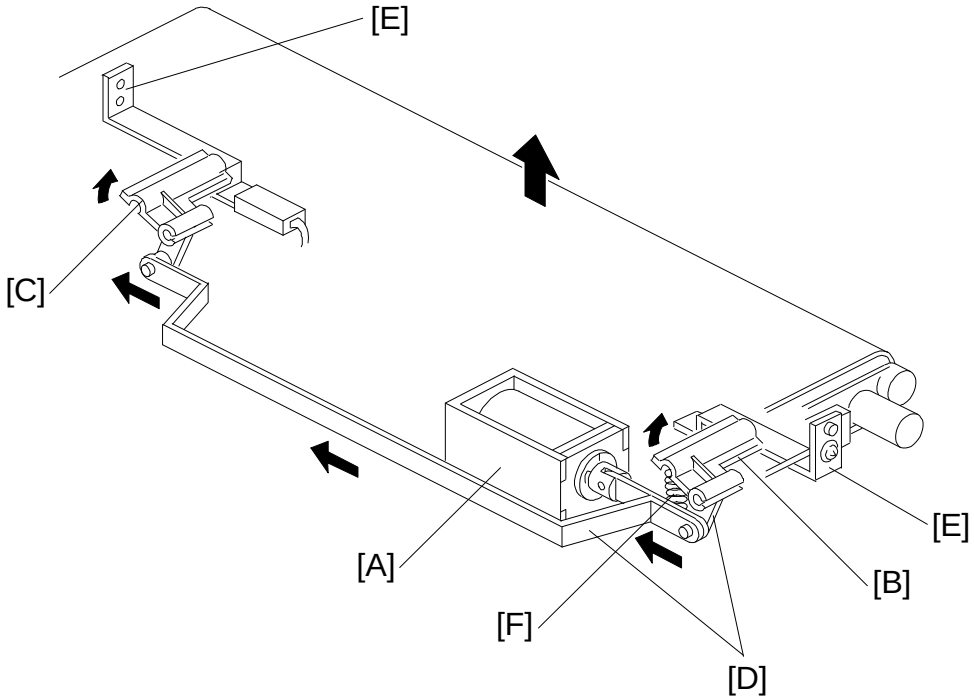

A176D576.wmf

The transfer belt lift solenoid [A] located inside the transfer belt unit turns on to raise the transfer belt to contact the OPC drum at the appropriate timing. The front lever [B] and the rear lever [C] are connected to the solenoid by links [D] and push up the stays [E] when the solenoid turns on.
The support spring [F] helps the solenoid to raise the transfer belt.
The solenoid turns off after the copy job is finished.
The transfer belt must be released from the OPC drum for the following reasons:

1. To prevent the ID sensor pattern on the OPC drum from being rubbed by the transfer belt because the transfer belt is located between the development unit and the ID sensor.
2. To decrease the load to the transfer belt cleaning blade, it is better to keep toner on the non-image area (for example V_D, V_L, ID sensor pattern developed during process control data initial setting) from being transferred onto the transfer belt.
3. To prevent change of OPC drum characteristics by the influence of additives inside the rubber belt.

5.5 PAPER TRANSPORTATION AND BELT DRIVE MECHANISM

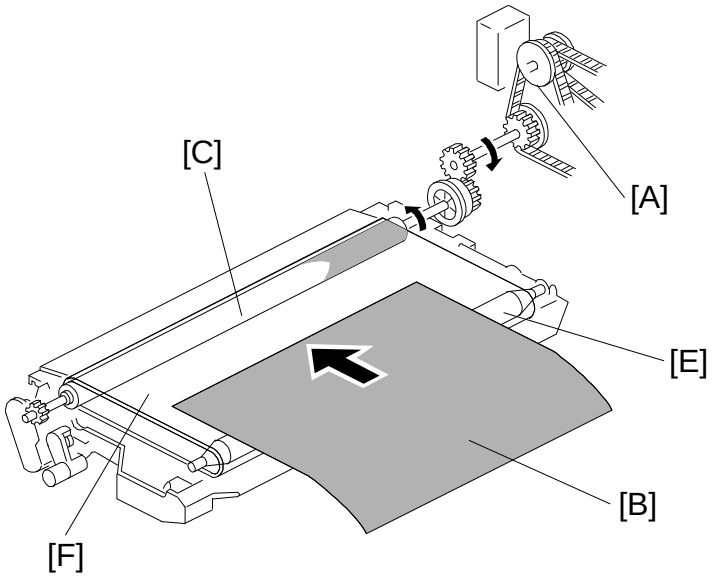

A176D577.wmf

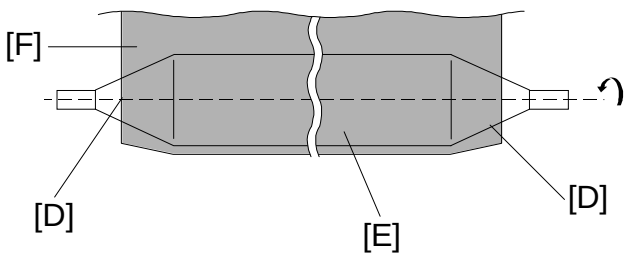

A176D578.wmf

The transfer belt is driven by the main drive motor [A] through belt and gears. Since the transfer belt electrically attracts the paper [B], the transport fan is not required.

The charge on the transfer belt is discharged by the discharge plate to reduce paper attraction and paper is separated by the paper stiffness above the transfer belt drive roller [C] where the transfer belt is turning.

The tapered parts [D] at both sides of the roller [E] help keep the transfer belt [F] at the center position.

5.6 TRANSFER BELT CLEANING MECHANISM

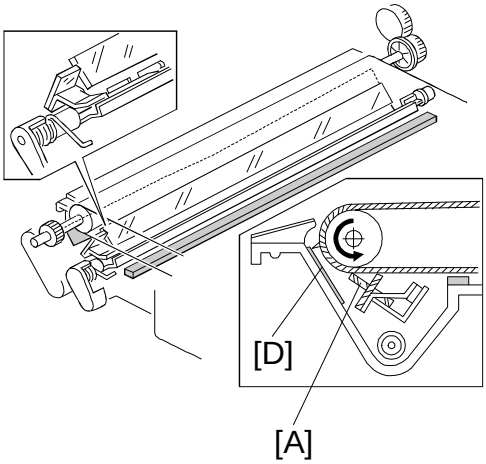

A176D579.wmf

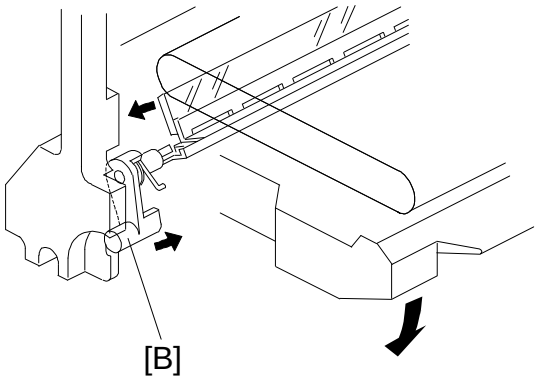

A176D580.wmf

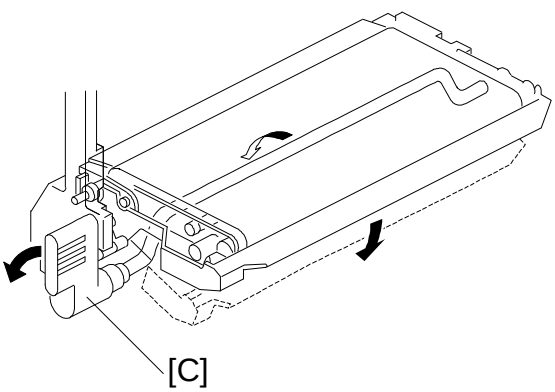

A176D581.wmf

Some toner may adhere to transfer belt when paper jams occur, or when the by-pass feed table side fences are set in the wrong position causing the erase lamp to miss some toner. The adhered toner must be removed to prevent the rear side of the copy paper from being stained.
The cleaning blade [A] scrapes off any toner remaining on the transfer belt. A counter blade system is used for the transfer belt cleaning. The surface of the transfer belt is coated to make it smooth and so prevent the cleaning blade from being flipped by the transfer belt.

The lever [B] on the front end of the cleaning blade releases the cleaning blade when the transfer belt unit is lowered and the lever is pushed by the transfer belt unit support prop. (The transfer belt unit is lowered when the lever [C] is turned anti-clockwise)

When the cleaning blade is released, the edge of the cleaning blade rubs the seal so that the seal [D] removes the toner or paper dust on the cleaning blade edge.

5.7 TONER COLLECTION MECHANISM

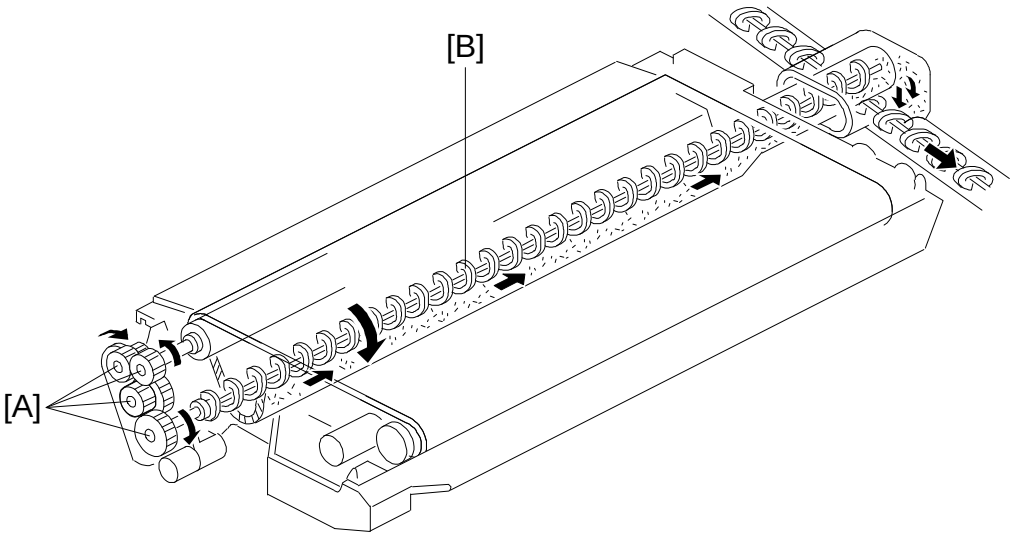

A176D582.wmf

Through idle gears [A], transfer belt drive is transmitted to the toner collection coil [B]. The toner collection coil transports the collected toner to the toner collection bottle. See section 2.2.5 for details.

6. PAPER FEED

6.1 OVERVIEW

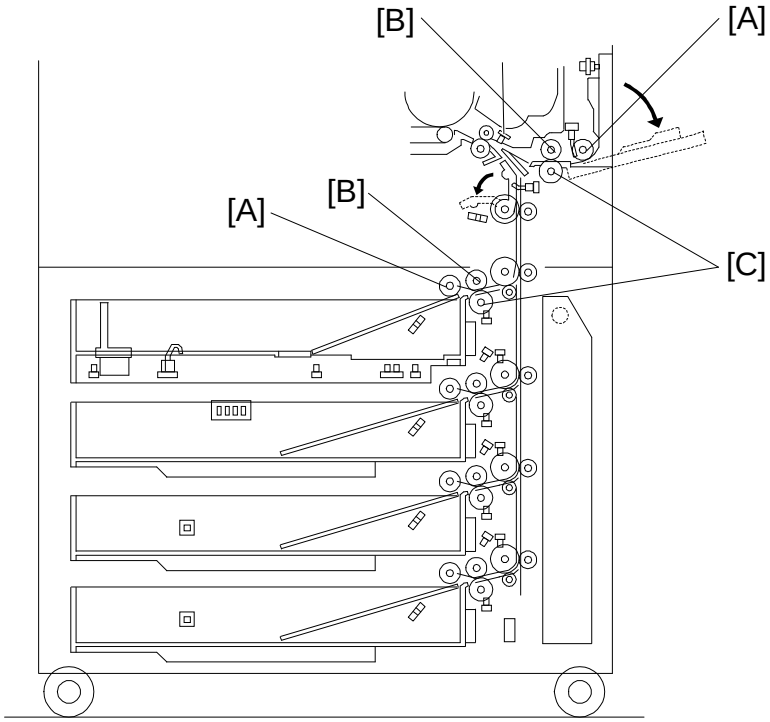

A176D583.wmf

This model has three or four drawer tray paper feed stations.
The following table shows the configuration of each feed stations of the copiers.

Feed station	A175 copier	A176/177 copiers	A191/A192 copiers
1st	550 sheets tray	500 + 500 sheets tandem feed tray	500 + 500 sheets tandem feed tray
2nd	550 sheets universal tray	550 sheets universal tray	550 sheets universal tray
3rd	550 sheets tray	1500 sheets built-in LCT	550 sheets tray
4th	550 sheets tray	—	550 sheets tray

Paper can also be fed using the by-pass feed table which has an independent feed mechanism. The by-pass feed table can hold 50 sheets of paper.

All feed stations use an FRR feed system. Rotation of the pick-up roller [A] drives the top sheets of paper from each tray to the feed [B] and the separation [C] rollers. The feed and separation rollers then take over paper drive. If more than one sheet is fed by the pick-up roller, the separation rollers rotates in the opposite direction and prevents all but the top sheet from passing through to the registration rollers.

6.2 FRR FEED SYSTEM

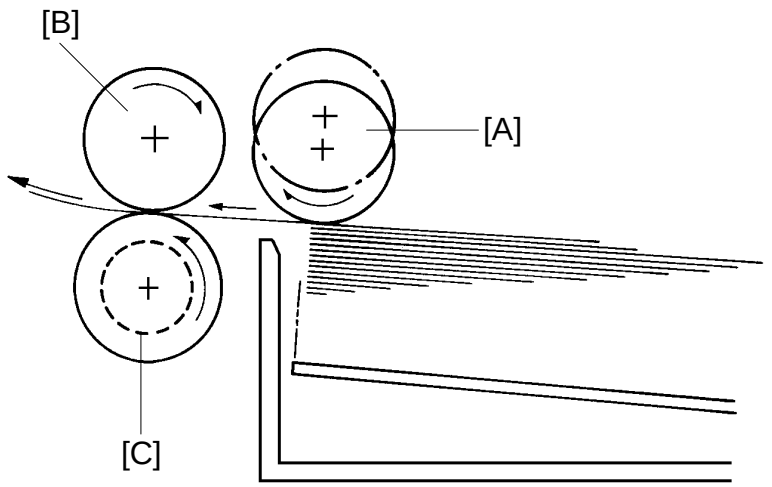

A184D584.img

This copier uses an FRR paper feed system using three rollers.

6.2.1 Pick-up Roller

The pick-up roller [A] is not in contact with the paper stack before it starts feeding paper. Shortly after the Start key is pressed, the pick-up roller drops down and feeds the top sheet between the feed [B] and the separation rollers [C]. At almost the same time that the paper's leading edge arrives at the feed roller, the pick-up roller lifts off the paper stack so that it does not interfere with the operation of the feed and separation rollers. The feed and separation rollers then take over the paper feed process.

6.2.2 Feed and Separation Rollers

There is a one-way bearing inside the feed roller so it can turn only in one direction. The separation roller is driven in the opposite direction to the feed roller. The separation roller, however, is driven through a slip clutch (torque limiter clutch) which allows it to turn in either direction depending on the friction between the rollers. The separation roller solenoid keeps the separation roller in contact with the feed roller.

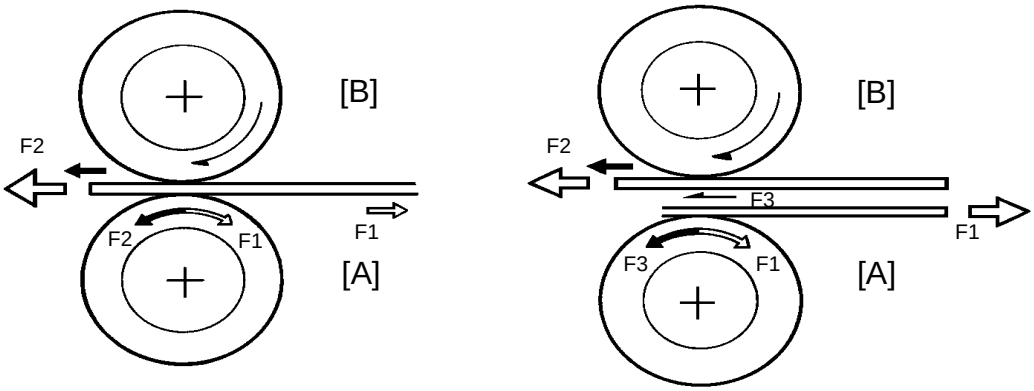

A76D585.img

The direction in which the separation roller [A] turns depends on the frictional forces acting on it. The slip clutch applies a constant clockwise force (F1). When there is a single sheet of paper being driven between the rollers, the force of friction between the feed roller [B] and the paper (F2) is greater than F1. So, the separation roller turns counterclockwise.

If two or more sheets are fed between the rollers, the forward force on the second sheet (F3), becomes less than F1 because the friction between the two sheets is small. So, the separation roller starts turning clockwise and drives the second sheet back to the tray.

6.3 SLIP CLUTCH MECHANISM

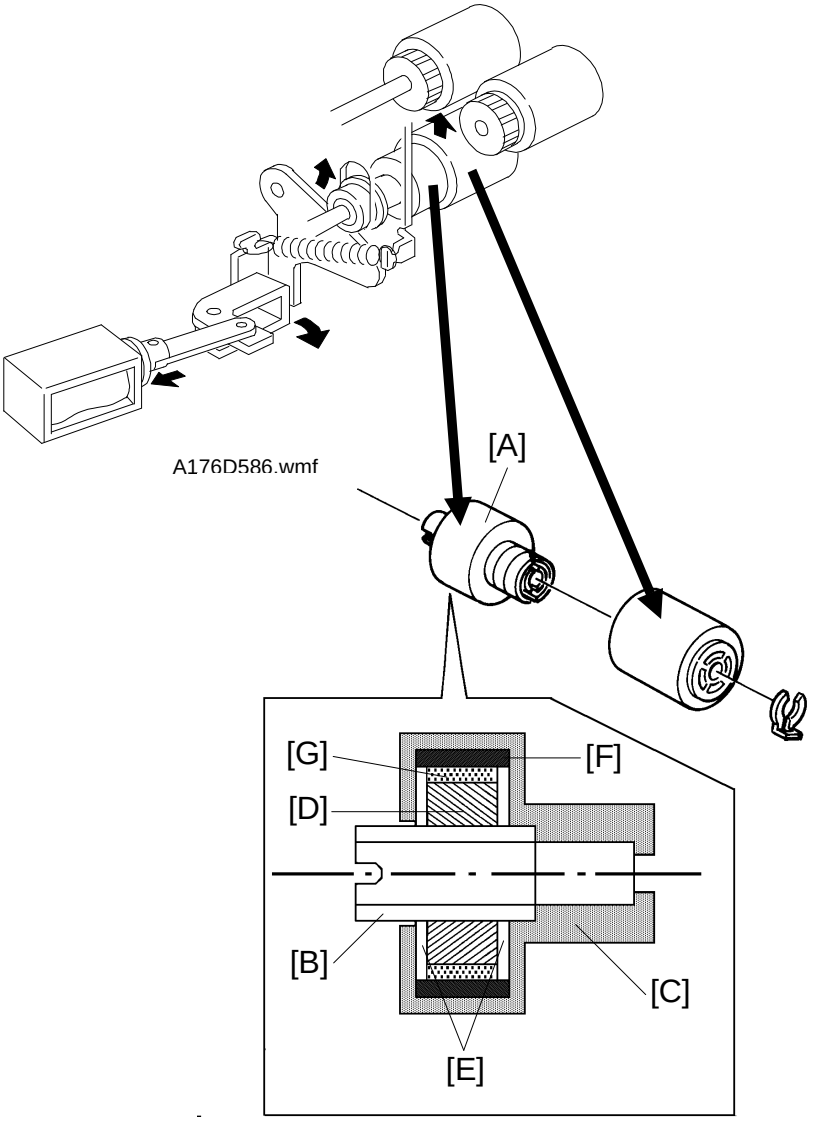

A176D587.img

The slip clutch [A] consists of the input hub [B] and the output hub [C] which is the case of the clutch as well. The magnetic ring [D] and the steel spacers [E] are fitted onto the input hub. The ferrite ring [F] is fitted into the output hub. Ferrite powder [G] packed between the magnetic ring and the ferrite ring [F] generates a constant torque due to magnetic force. The input hub and the output hub slip when the rotational force exceeds the constant torque.

This type of slip clutch does not require lubrication.

6.4 FRR FEED DRIVE MECHANISM

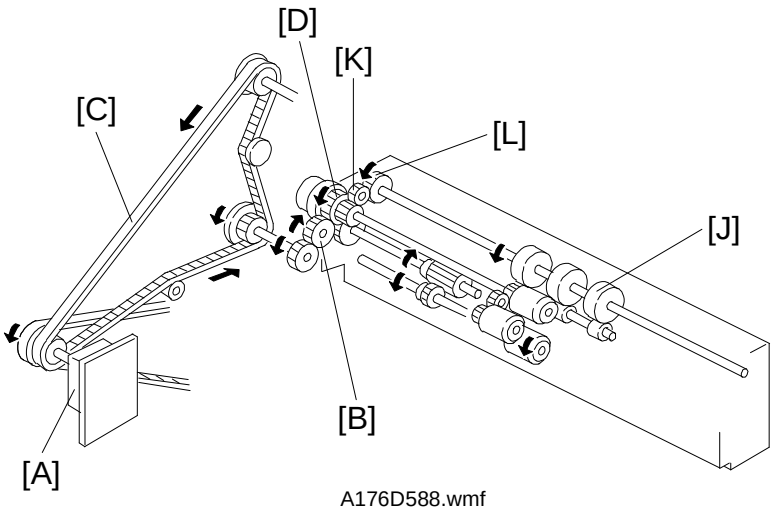

A176D588.wmf

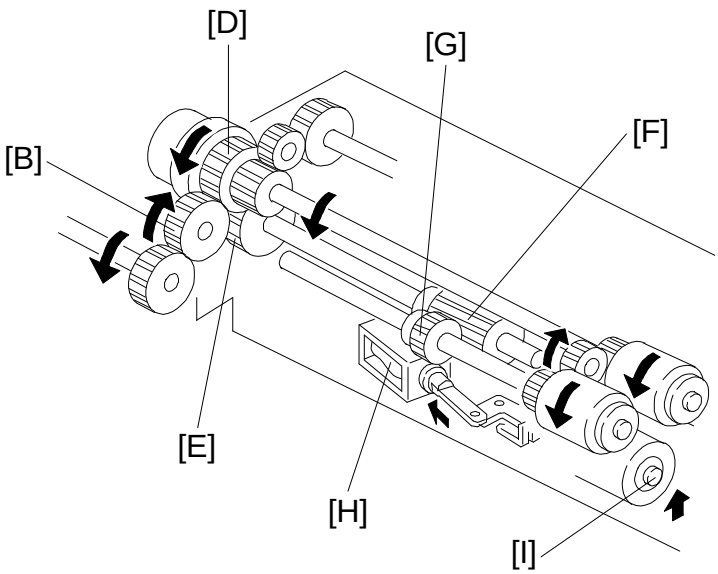

A176D589.wmf

The rotation of the paper feed motor [A] is transmitted to the gear [B] via the timing belt [C], and then transmitted to the separation roller via the feed clutch gear [D], gear [E], gear [F] and gear [G].

If the paper feed station is not selected, the separation roller solenoid [H] de-activates and the separation roller [I] rotates freely in the reverse direction of paper feeding.

Gear [B] also transmits the drive to the vertical transport roller [J] via gear [D], idle gear [K] and gear [L].

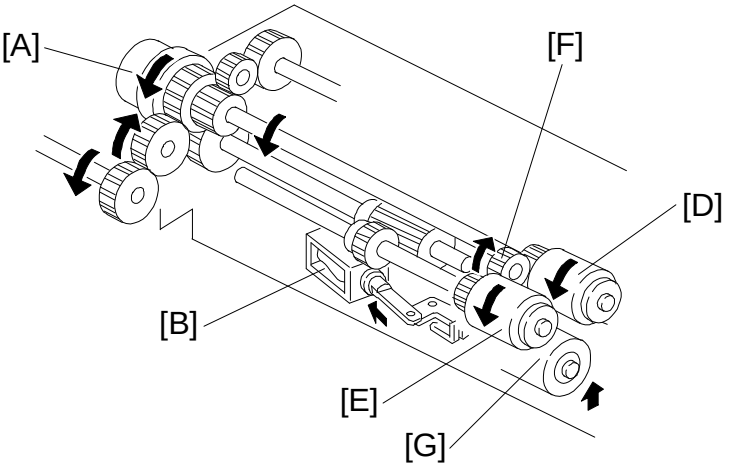

A176D589-2.wmf

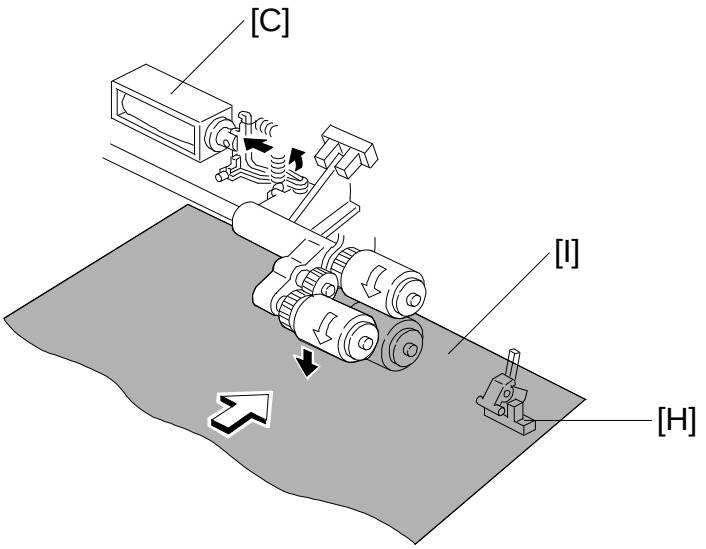

A176D590.wmf

When the paper feed station is selected and the start key is pressed, the feed clutch [A], separation roller solenoid [B], and the pick-up solenoid [C] turn on at once.

When the feed clutch [A] activates to rotate the feed roller [D], the feed roller and the pick-up roller [E] turn together because they are linked by the idle gear [F].

When the separation roller solenoid [B] turns on, the separation roller [G] contacts the feed roller [D] then rotates together with the feed roller in spite of the separation roller's drive in the opposite direction due to the torque limiter function in the separation roller [G].

When the pick-up solenoid [C] activates, the pick-up roller [E] lowers to make contact with the top sheet of the paper stack and send it to the feed and separation rollers.
When the paper feed sensor [H] detects the leading edge of the paper [I], the pick-up solenoid de-energizes to lift the pick-up roller and the paper feed clutch de-energizes at a certain time to wait until it is ready to feed to the registration roller.

6.5 SEPARATION ROLLER RELEASE MECHANISM

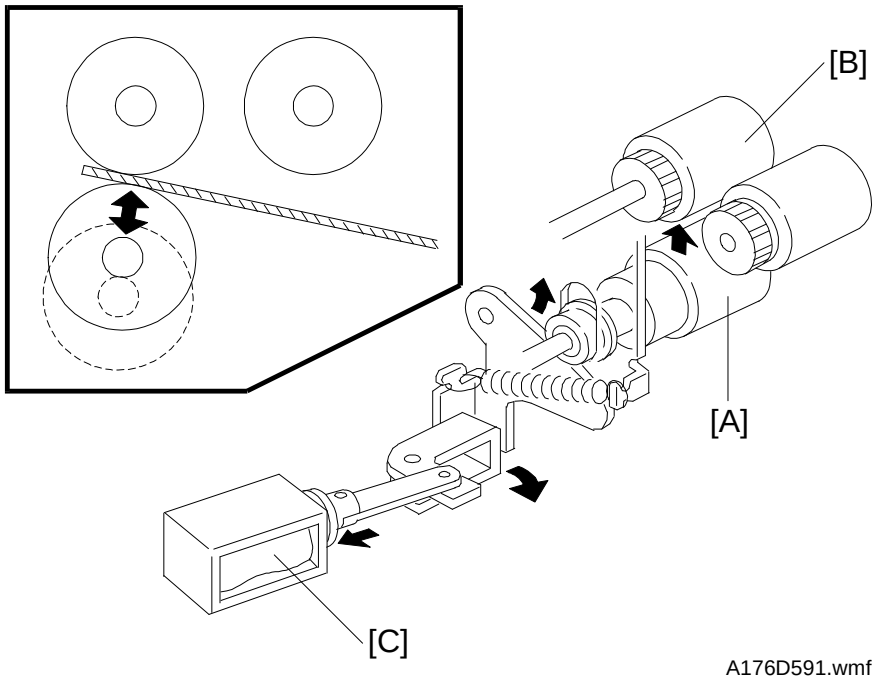

In this model, the separation roller [A] is normally away from the feed roller [B]. When the paper feed station is selected, the separation roller solenoid [C] contacts the separation roller to the feed roller as explained in the previous two pages.

This contact/release mechanism has the following three advantages:

1. When the paper feed motor turns on, all separation rollers in each feed stations rotate. If the separation roller is away from the feed roller, it reduces the mechanical load to the paper feed motor and drive mechanism, and also reduces wear of the rubber surface of the separation roller due to the friction between the separation roller and the feed roller.

2. After paper feeding is completed, paper sometimes remains in the gap between the feed roller and the separation roller.
   If the feed tray is drawn out in this condition, it is possible for the remaining paper to be torn.
   When the separation roller is away from the feed roller, remaining paper is released from the gap between the feed and the separation rollers.

3. When paper misfeeds occur around this area, the customer can easily pull out the jammed paper between the feed and the separation rollers because the separation roller is away from the feed roller.

6.6 PAPER RETURN MECHANISM

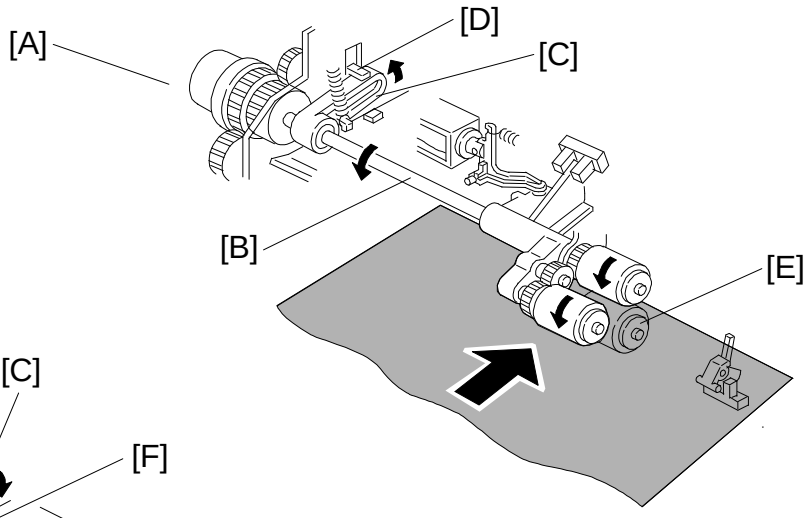

A176D592.wmf

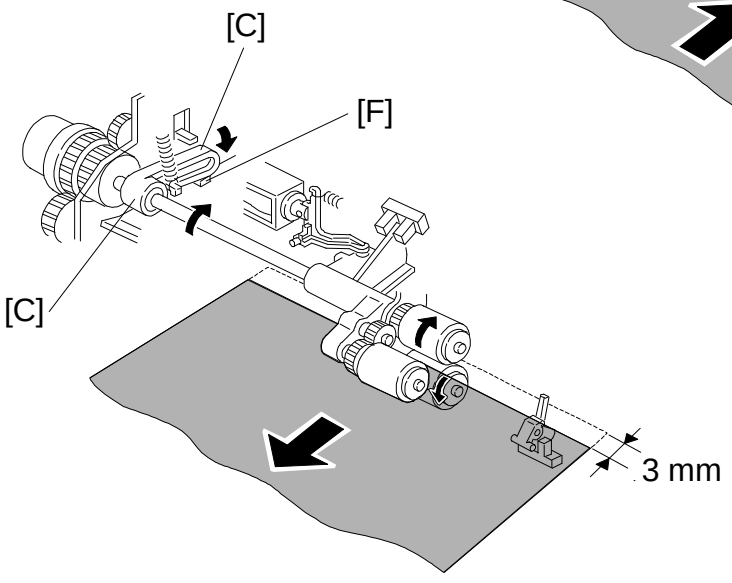

A176D593.wmf

When the paper feed clutch [A] activates and the feed roller drive shaft [B] rotates, the lever [C] rotates together with the shaft. However, the lever is immediately stopped by the stopper [D].

After all paper is fed and the paper feed clutch turns off, the paper feed motor still rotates to turn the separation roller [E] in the reverse direction. The separation roller, still contacting the feed roller, turns the feed roller in the reverse direction until the lever hits the rubber cushion [F].

By this feed roller reverse mechanism, the paper remaining in the gap between the feed and the separation rollers returns 3 mm to the paper feed tray.

After that, the separation roller solenoid turns off to move the separation roller away from the feed roller. This releases the leading edge of the paper and drops the paper to the paper feed tray.

This prevents remaining paper from being torn when the feed tray is drawn out.

6.7 PAPER SKEW PREVENTION MECHANISM

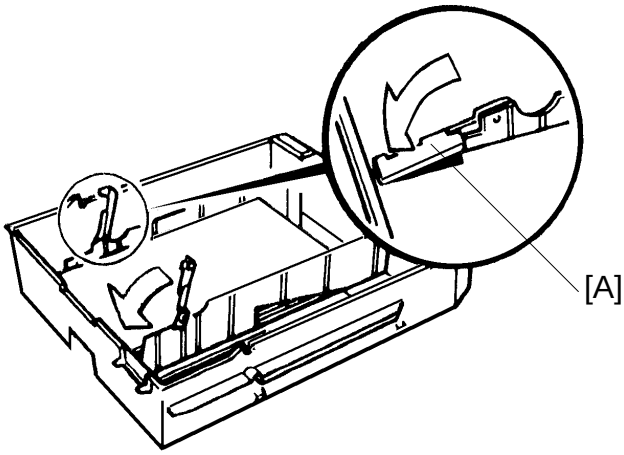

A176D594.img

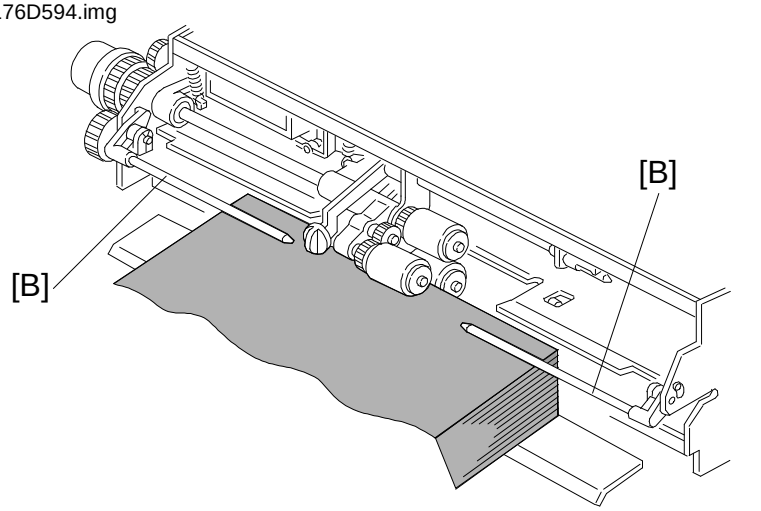

A176D595.wmf

In this model, paper corner holders [A] are not used to facilitate paper loading.

Instead of the corner holders, both paper press arms [B] press down both paper side edges, especially in the case of paper with a face curl. This helps to keep paper from being guided by the tray side fences to prevent paper skew or jam.

6.8 PAPER LIFT MECHANISM

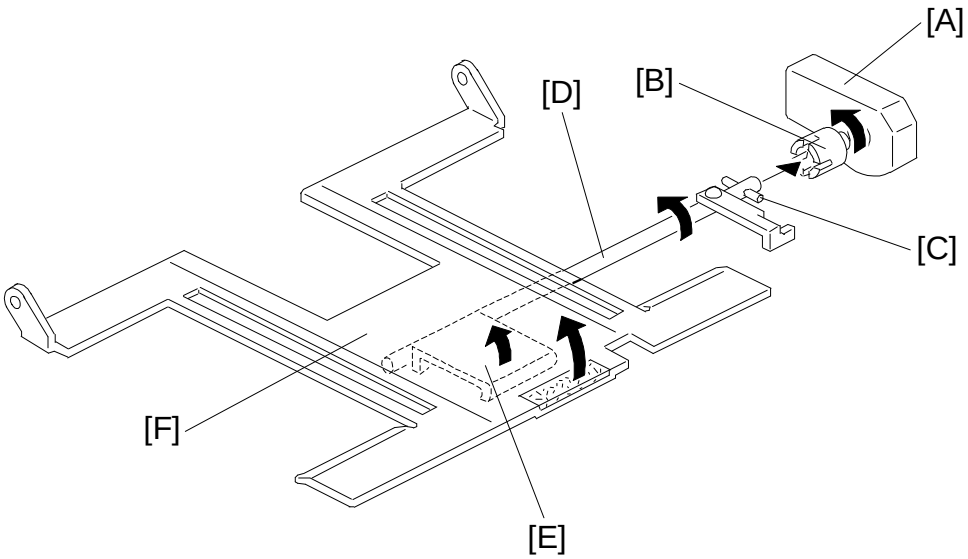

A176D596.wmf

When the tray is set in the machine, the machine detects this condition by using several detection methods as shown in the table:

Feed station	A175 copier	A176/A177 copiers	A191/A192 copiers
1st	Tray set switch	Tray set signal through the connector	Tray set signal through the connector
2nd	Paper size switch	Paper size switch	Paper size switch
3rd	Tray set switch	LCT set signal through the connector	Tray set switch
4th	Tray set switch	—	Tray set switch

When the machine detects that the paper tray is set in the machine, the lift motor [A] rotates and the coupling gear [B] on the tray lift motor engages the pin [C] of the lift arm shaft [D], then turns the tray lift arm [E] to lift the tray bottom plate [F].

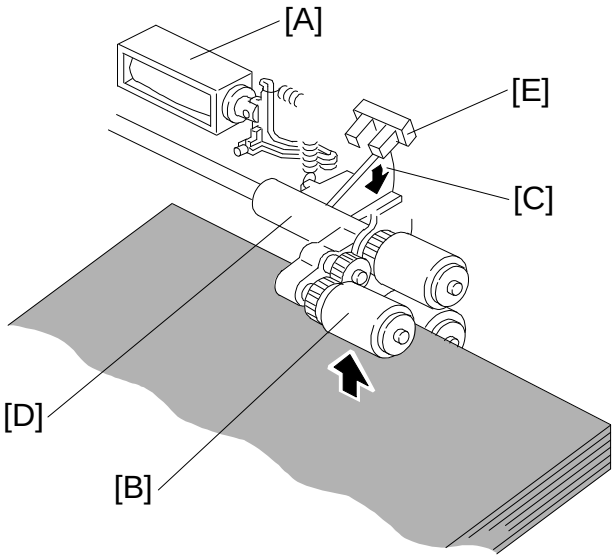

A176D597.wmf

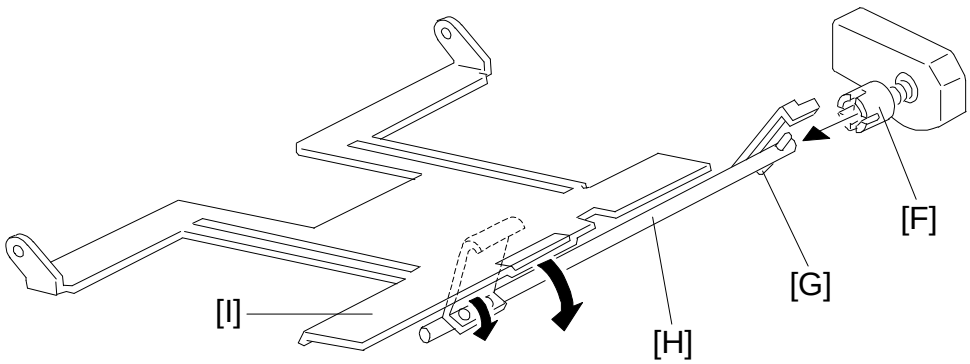

A176D598.wmf

When the lift motor turns on, the pick-up solenoid [A] activates to lower the pick-up roller [B]. When the top sheet of paper reaches the proper paper feed level, the paper pushes up the pick-up roller and the actuator [C] on the pick-up roller supporter [D] activates the lift sensor [E] to stop the lift motor.

After several paper feeds, the paper level gradually lowers then the lift sensor is de-activated and the lift motor turns on again until the lift sensor is activated again.

When the tray is drawn out of the feed unit, the lift motor coupling gear [F] disengages the pin [G] of the lift arm shaft [H], then the tray bottom plate [I] drops.

6.9 PAPER NEAR END/PAPER END DETECTION

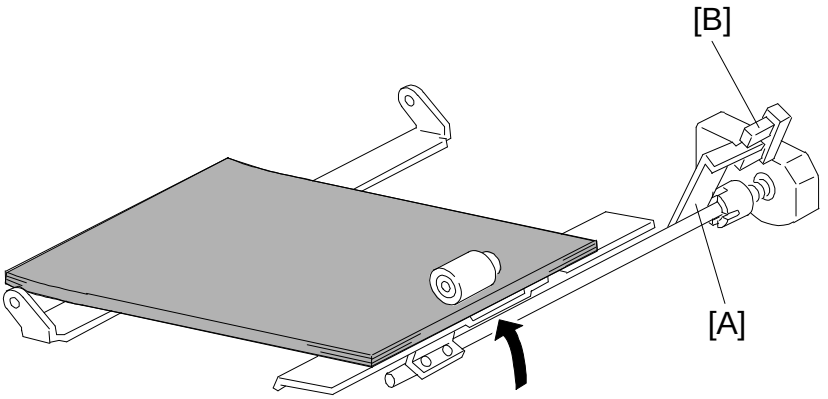

A176D599.wmf

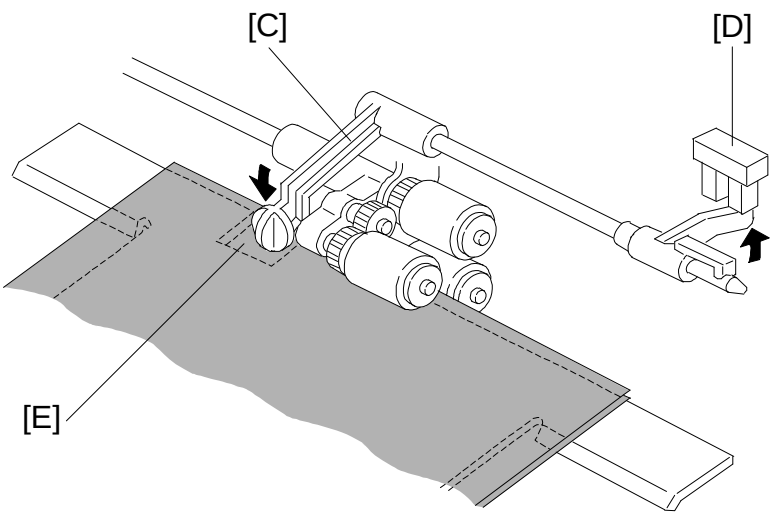

A176D600.wmf

A feeler [A] on the lift arm shaft rotates counterclockwise in accordance with the change of the top paper level. When almost 50 sheets are left on the tray, the feeler activate the paper near end sensor [B] and informs the copier CPU of the paper near end condition.

If paper is loaded in the paper tray, the paper end feeler [C] is raised by the paper stack and the paper end sensor [D] is deactivated. When the paper tray runs out of paper, the paper end feeler drops in the cut out [E] of the tray bottom plate and the paper end sensor is activated.

6.10 TANDEM FEED TRAY (A176/A177/A191/A192 Copiers Only)

6.10.1 OVERVIEW

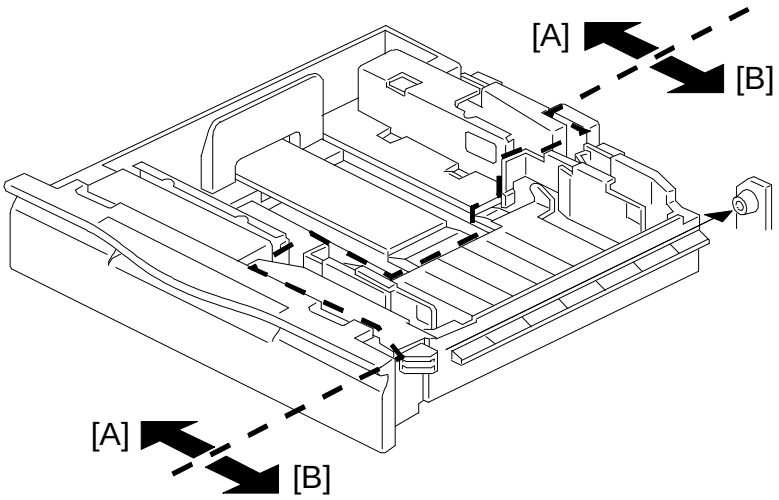

A176D601.wmf

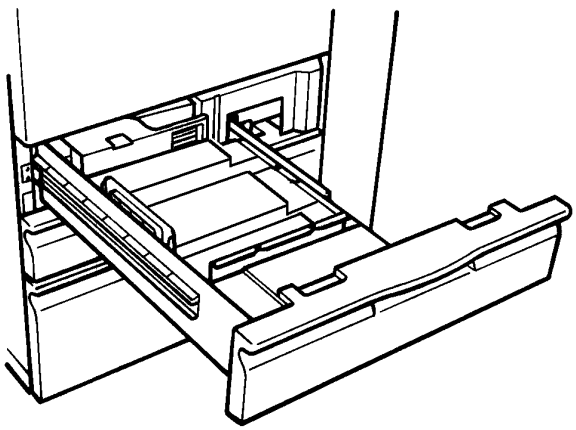

A176D602.img

500 sheets of paper can be set in each of the left [A] and right trays [B]. Paper is fed from the right tray. When the paper in the right tray runs out, the paper in the left tray is automatically transported to the right tray. After the paper is transported to the right tray, paper feeding resumes.

Normally both the right and the left trays are joined together.
During copying, if there is no paper in the left tray, only the left tray can be pulled out to load paper, as shown. That time, paper feed continues.

6.10.2 Fences Drive Mechanism

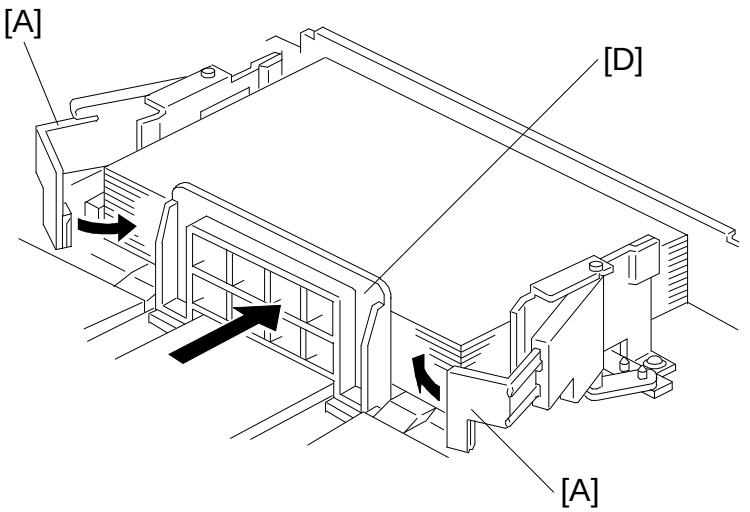

A176D603.wmf

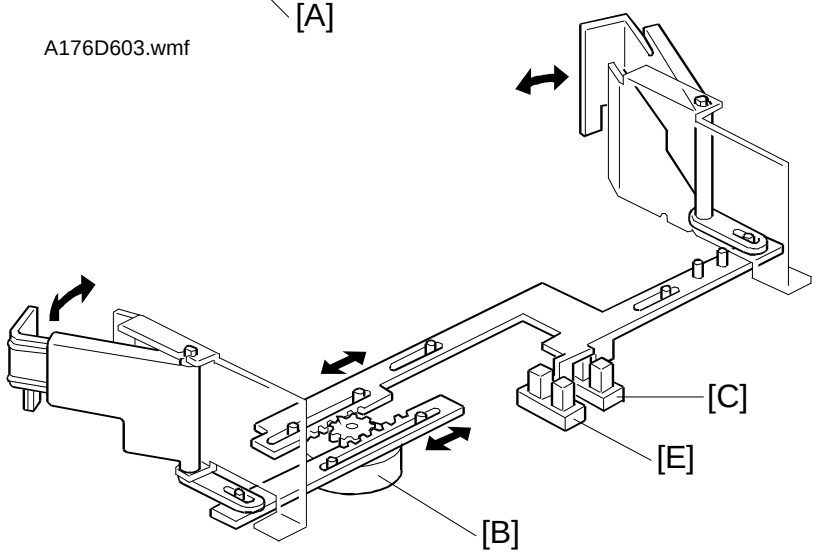

A176D604.wmf

The side fences [A] of the right tray are normally closed. They open only when paper in the left tray is transported to the right tray.

The side fences are driven by the side fence drive motor [B] (stepping motor). When the paper loaded in the left tray is transported to the right tray, the side fence drive motor turns counterclockwise to open the side fences until the side fence positioning sensor [C] is activated.

When the rear fence [D] in the left tray pushes paper into the right tray, the side fence drive motor turns clockwise to close the side fences.

When the side fence close sensor [E] is actuated after the tandem tray is pushed in, a message is displayed advising the user to set the paper at the correct position in the tandem tray.

6.10.3 Rear Fence Drive Mechanism

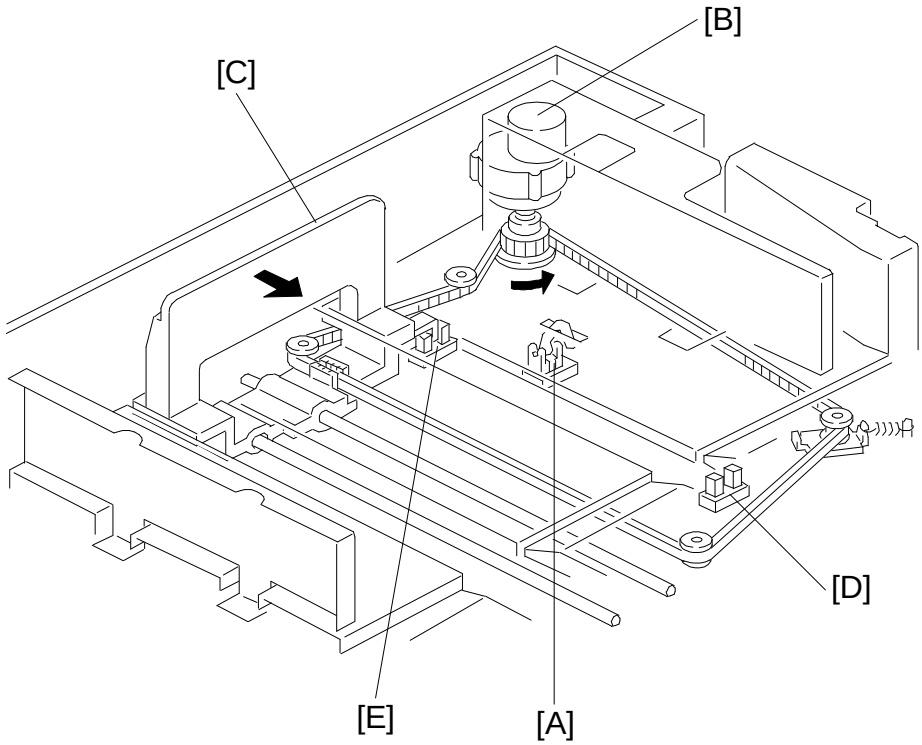

A176D605.wmf

When the paper end sensor [A] in the left tray detects paper and the paper end sensor in the right tray detects the paper end condition, the rear fence drive motor [B] (dc motor) in the left tray rotates counterclockwise to drive the rear fence [C] to push the paper into the right tray.
When the actuator on the rear fence activates the return position sensor [D], the rear fence drive motor rotates clockwise until the actuator activates the rear fence home position sensor [E].

6.10.4 Tray Lock Mechanism

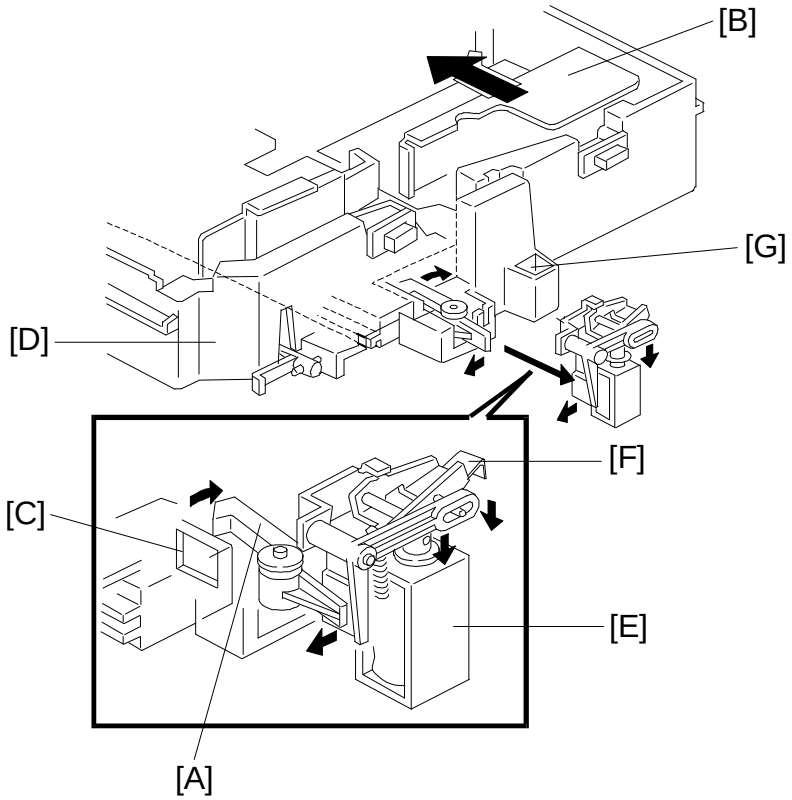

A176D606.wmf

Normally the left tray lock lever [A] in the right tray [B] fits in the hole [C] in the left tray [D]. During copying, if there is no paper in the left tray, the tray lock solenoid [E] turns on to release the tray lock lever so that the left tray can be separated from the right tray. The lock lever solenoid also lowers the right tray lock lever [F] to hook itself in the hole [G] on the right tray. Therefore, only the left tray is pulled out to load paper.

6.11 PAPER SIZE DETECTION

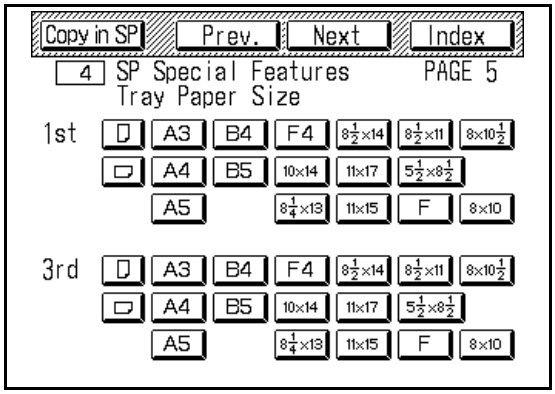

A176D607.img

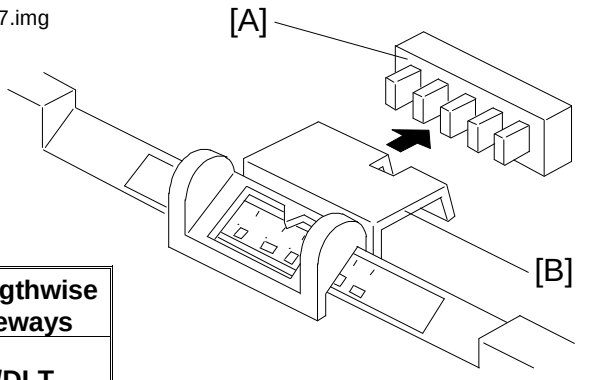

A176D608.wmf

SW Actuate....0 De-actuate....1 (1 2 3 4 5)	Paper size	L: Lengthwise S: Sideways
	A4/A3 Version	LT/DLT version
01111	A3-L	11 x 17-L
00111	B4-L	8 1/2 x 14-L
10011	A4-L	8 1/2 x 11-L
01001	A4-S	8 1/2 x 11-S
00100	8 1/2 x 13	5 1/2 x 8 1/2-S
00010	—	8 x 10-S
00001	A5-S	8 x 10-L
10000	8 k-L (*)	8 x 13-L
11000	16 k-L (*)	10 x 14-L
11100	16 k-S (*)	11 x 15-L
11110	A5-L	5 1/2 x 8 1/2-L

For the first and the third feed trays, the paper size is stored by using the SP mode (4 SP Special Feature - PAGE 5).

For the second feed tray (universal tray), the paper size switch [A] detects the paper size. The paper size switch has five microswitches inside. The paper size switch is actuated by an actuator plate [B] located on the rear of the tray. Each paper size has its own unique combination as shown in the table and the CPU judges the paper size by this combination of activated switches.

(*) It is necessary to set 1 SP Adjustment - PAGE 17 No. 6 to 1.

6.12 VERTICAL TRANSPORT MECHANISM

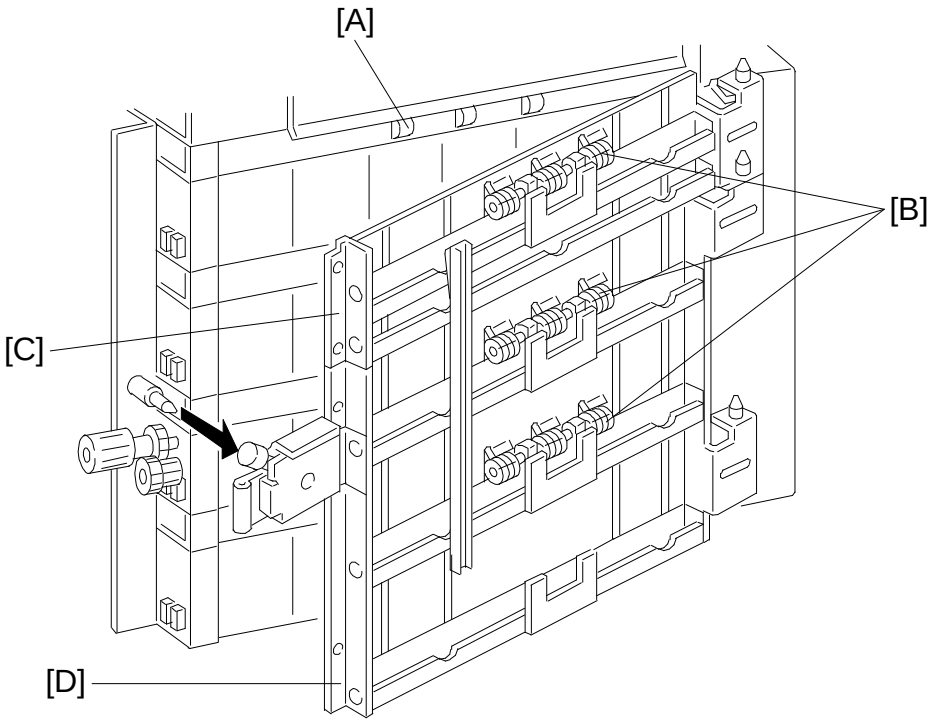

A176D610.wmf

The vertical transport rollers [A] in each feed unit is driven by the paper feed motor. The vertical transport rollers and the driven vertical transport rollers [B], on the upper and the lower vertical guide plates, transport the paper from each feed unit to the registration roller.

The upper [C] and lower [D] vertical transport guides can be opened to access jammed paper in the vertical transport area.
The lower vertical transport guide separates from the upper guide to gain wider jam removal space.

To reduce the first copy time, the paper feed motor rotates at a quicker speed (430 mm/s.) than normal (330 mm/s). This quick rotation is performed only in the case of the first copy from the first feed station.

6.13 TRAY POSITIONING MECHANISM

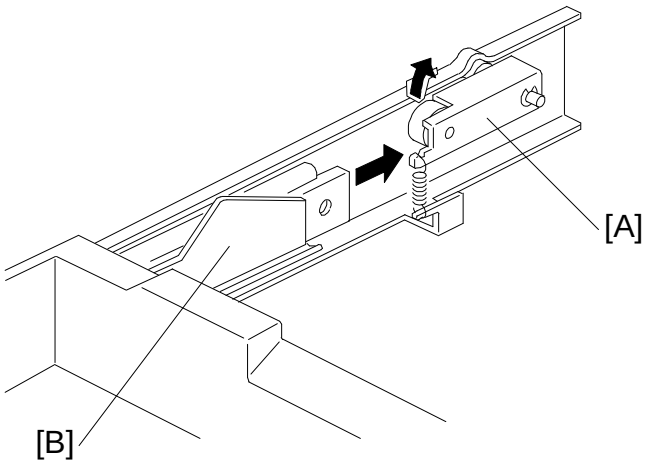

A176D611.wmf

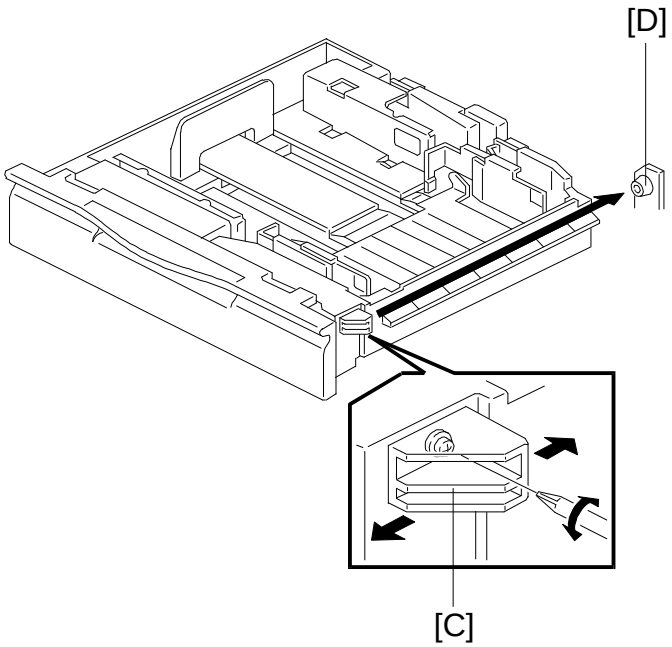

A176D612.wmf

- Tray Lock Mechanism -

When the feed tray is set in the paper feed unit, the lock lever [A] drops behind the lock plate [B] on the Accuride support bracket to lock the tray in the proper position.

- Side-to-side Positioning Mechanism (tandem and built-in LCT trays) -

When the feed tray is set in the paper feed unit, the side-to-side positioning plate [C] presses the feed tray against the rubber stopper [D]. By moving the positioning plate, the tray position can be changed to adjust the side-to-side registration.

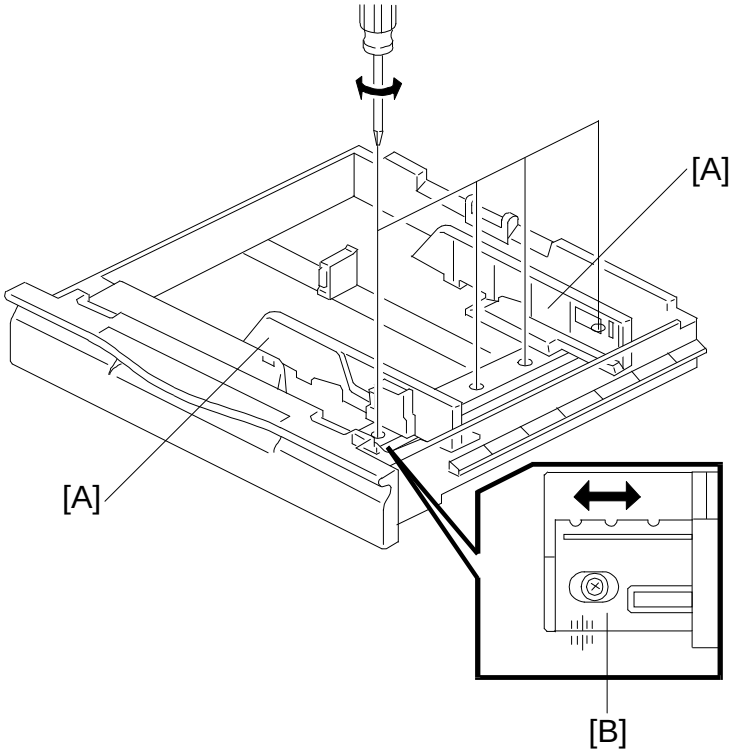

A176D613.wmf

- Side-to-side Positioning Mechanism (except for tandem and built-in LCT trays) -

Side plates [A] are fixed on the positioning plate [B]. By moving the positioning plate (fixed by four screws), the paper position can be changed to adjust the side-to-side registration.

6.14 BUILT IN LCT

6.14.1 Paper Tray Lift Mechanism

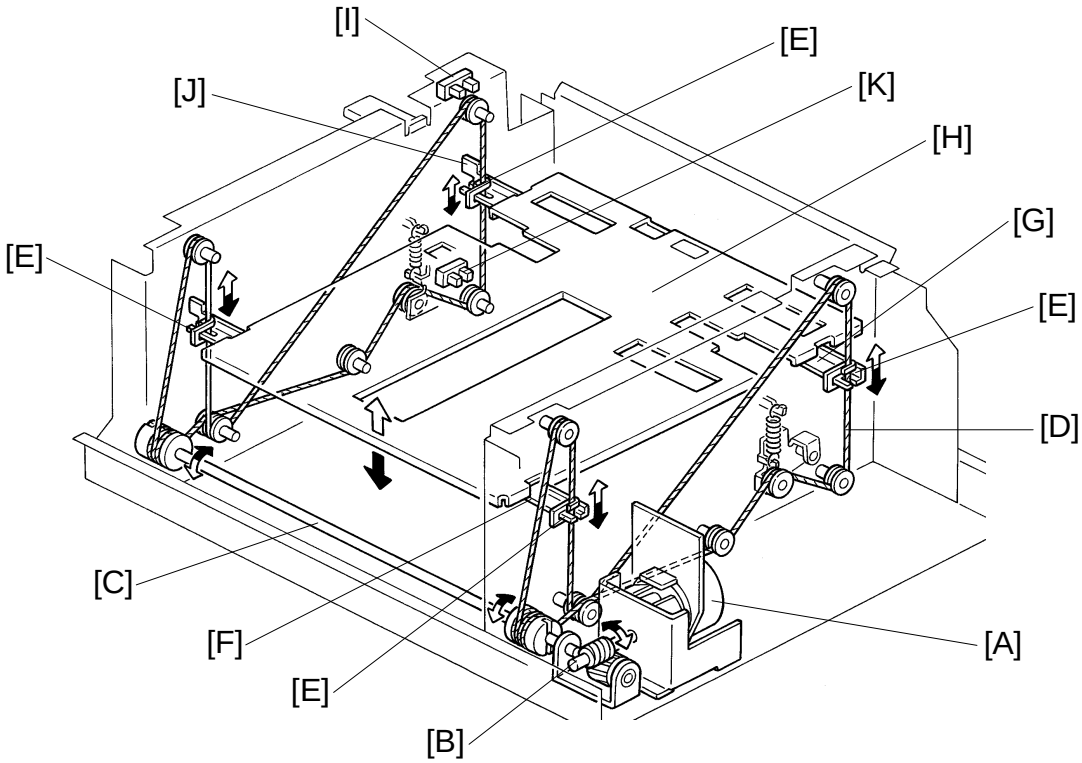

A176D614.img

Drive from the reversible LCT motor [A] is transmitted through a worm gear [B] to the drive pulley shaft [C]. The tray wires [D] are fixed in the slots [E] at the ends of the tray support rods [F] and [G].

When the LCT motor rotates forward and the drive pulley shaft [C] turns counterclockwise, the tray support rods and the tray bottom plate [H] move upward. The tray goes up until the top paper pushes up the pick-up roller and the lift sensor in the third feed unit is activated.

The paper near end sensor [I] detects the paper near end condition when it is activated by the actuator [J] on the rear end of the right support rod [G].

To lower the tray bottom plate [H], the LCT motor rotates in reverse and the drive pulley shaft [C] turns clockwise, the tray support rods and the tray bottom plate move downward. The tray goes down until the tray down sensor [K] is activated by the actuator.

6.14.2 Tray Lock Mechanism

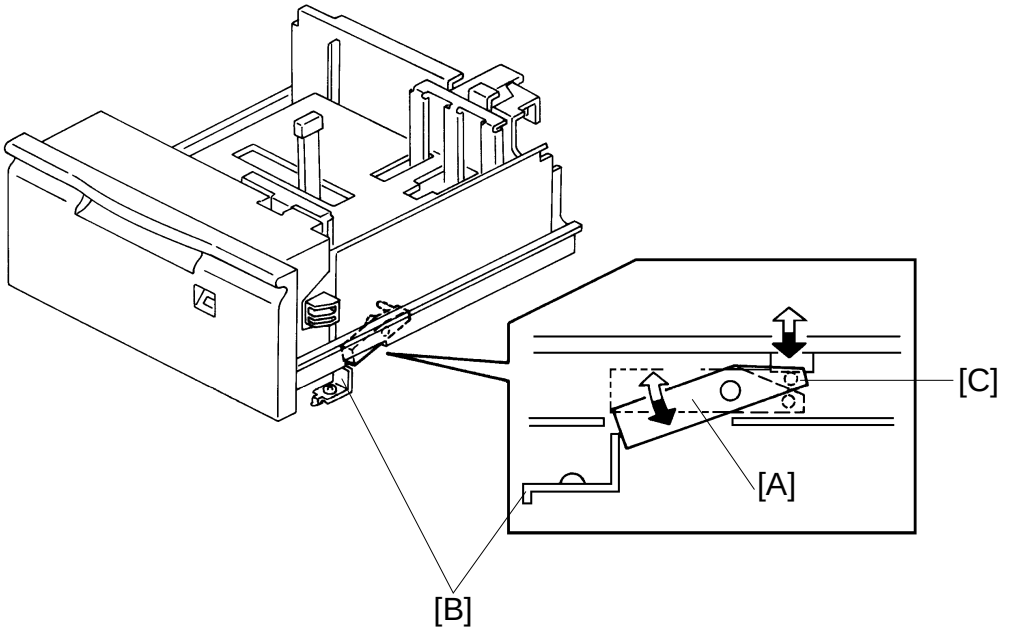

A176D615.img

When the tray starts moving up, the tray lock lever [A] drops in the hole on the base plate to engage the stopper [B], locking the tray in position. This prevents the tray from being pulled out while in the up position.

When the bottom plate is lowered to the bottom position, the bottom plate presses down the pin [C] on the lock lever. The opposite end of the lever then moves up, allowing the tray to be pulled out.

6.15 BY-PASS FEED TABLE

6.15.1 Feed Mechanism/Paper End Detection

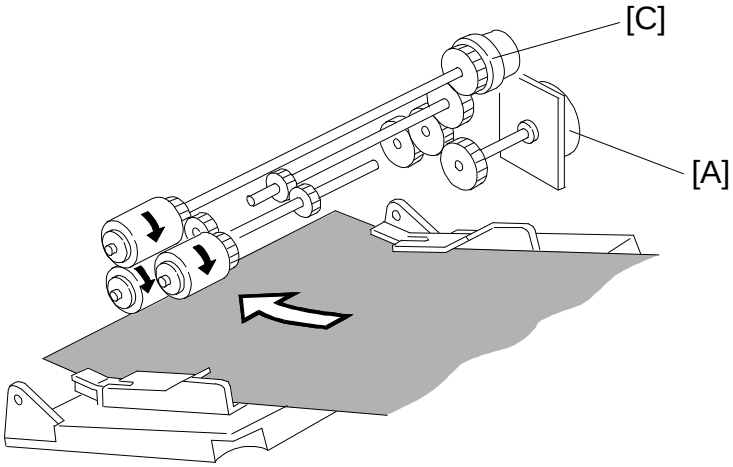

A176D617.wmf

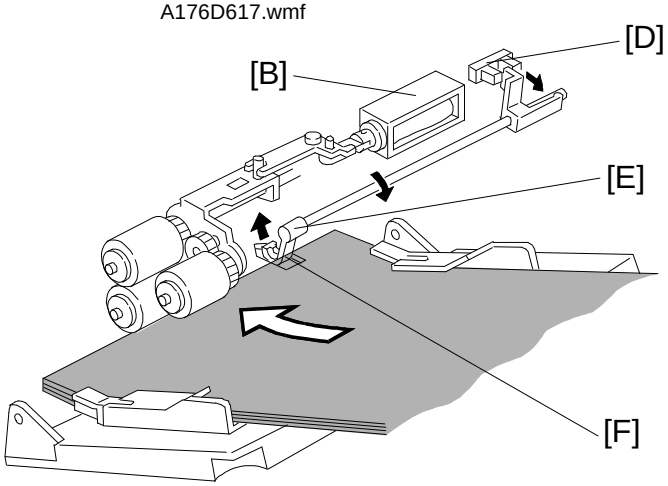

A176D616.wmf

The by-pass feed table uses the FRR feed system. The by-pass feed motor [A], pick-up solenoid [B], and by-pass feed clutch [C] control paper feeding from the by-pass feed table.

The by-pass paper end sensor [D] detects if there is paper on the by-pass feed table.

When there is no paper on the by-pass feed table, the paper end feeler [E] drops in the cut out [F] of the lower guide plate and the paper end sensor [D] deactivates. When paper is present on the by-pass feed table, the paper pushes up the end feeler [E] to activate the paper end sensor [D]. The CPU turns off the paper end indicator on the LCD panel and turns the start key from red to green.

6.15.2 Table Open/Close Detection

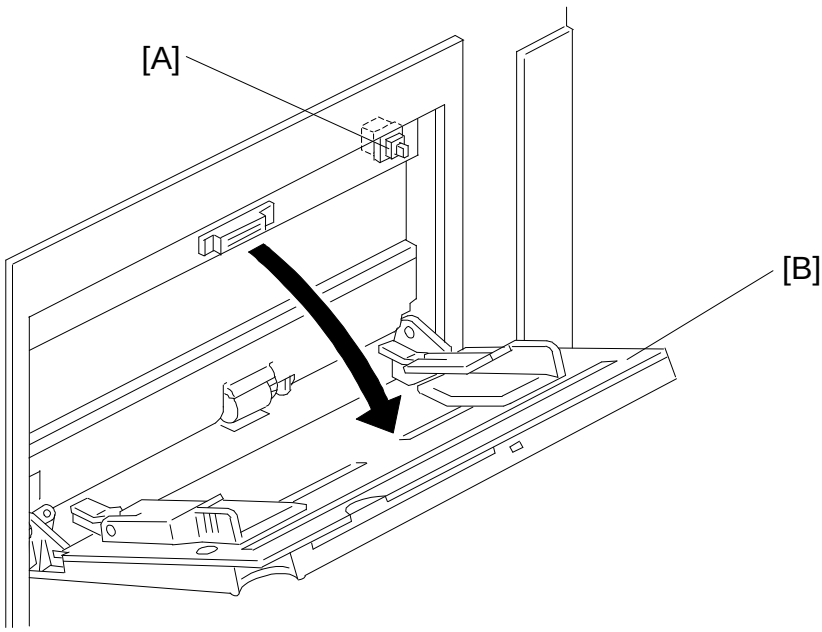

A176D618.wmf

When the by-pass feed table is opened, the by-pass table switch [A] is activated by part of the feed table [B]. Then the CPU turns on the by-pass feed indicator on the operation panel.

On this model, opening the by-pass feed table does not shift the copier into interrupt mode. The selected modes and input data before opening the by-pass feed table remain. Also other paper trays can be selected while the by-pass feed table is open.

6.15.3 Paper Size Detection

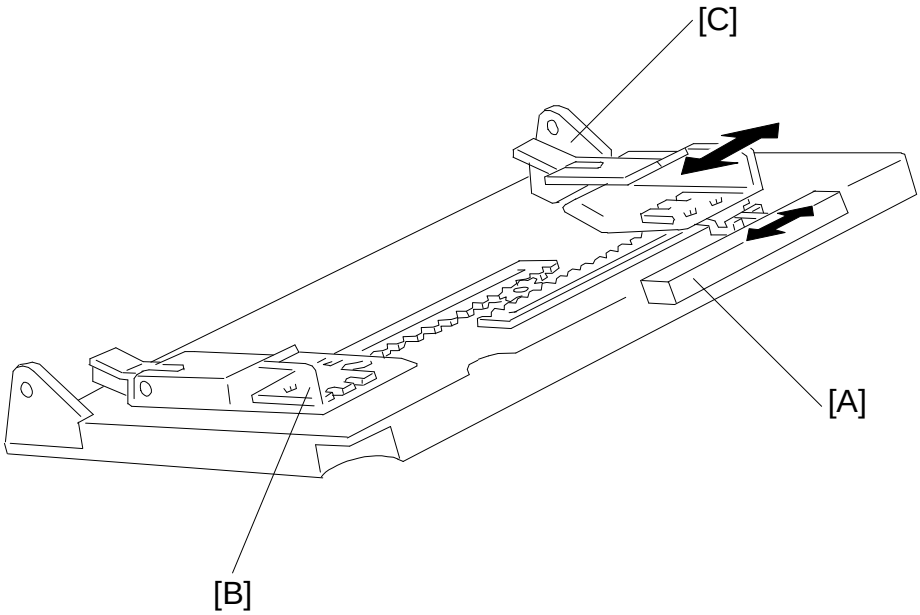

A176D619.wmf

The paper width detection is necessary to decide the lens horizontal position because the standard position of the optics (rear left corner) and the paper (center) is different.

The by-pass paper size sensor [A] (variable resistor) monitors the paper width. When the paper side fences [B] and [C] are positioned according to the paper width, the rear side fence is connected to the lever of the by-pass paper size sensor. The electrical resistance of the sensor changes in accordance with the side fence position, This informs the CPU of the paper width.

At the first copy from the by-pass feed table, the scanner makes a full distance scan. The registration sensor monitors the length of this paper (between the ON timing by the leading edge and the OFF timing by the trailing edge). From the following copies, the copier is controlled according to this paper length data.

6.16 PAPER REGISTRATION

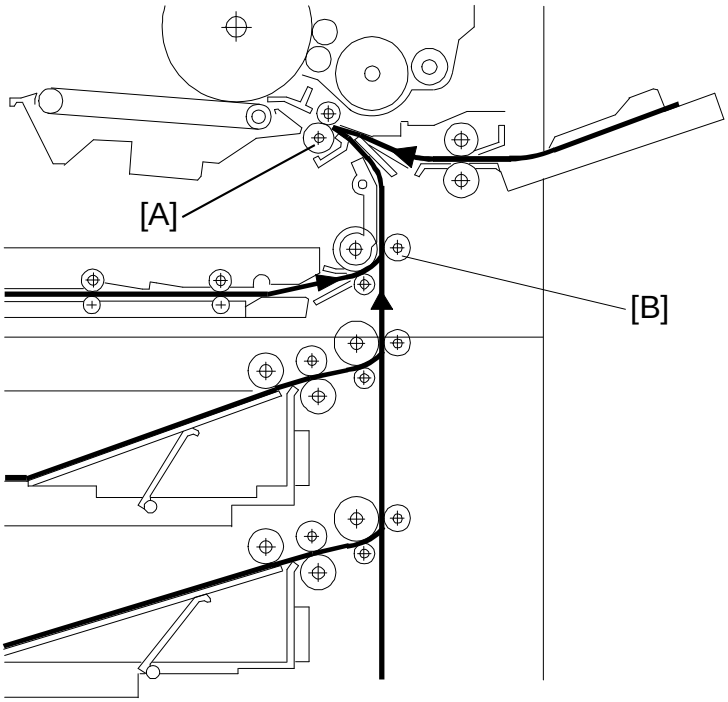

A176D620.wmf

The registration rollers [A] have two functions. One is aligning the lead edge of the paper with the leading edge of the latent image on the OPC drum. When the CPU receives the signal from the registration sensor, the registration clutch turns on. It turns off 90ms after the trailing edge of the paper is detected by the registration sensor.

The other function is to correct skewing of paper fed from the trays. When the leading edge of the paper reaches the registration rollers, the vertical transport rollers [B] continuously turn to transport the paper. On the other hand, the registration roller is not turning. The leading edge of the paper is pushed against the registration roller. This makes a little buckle on the paper between the vertical transport rollers and the registration rollers to correct paper skew.

Shortly after the leading edge of the paper reaches the registration roller, the registration clutch activates to feed the paper.

6.17 REGISTRATION DRIVE MECHANISM

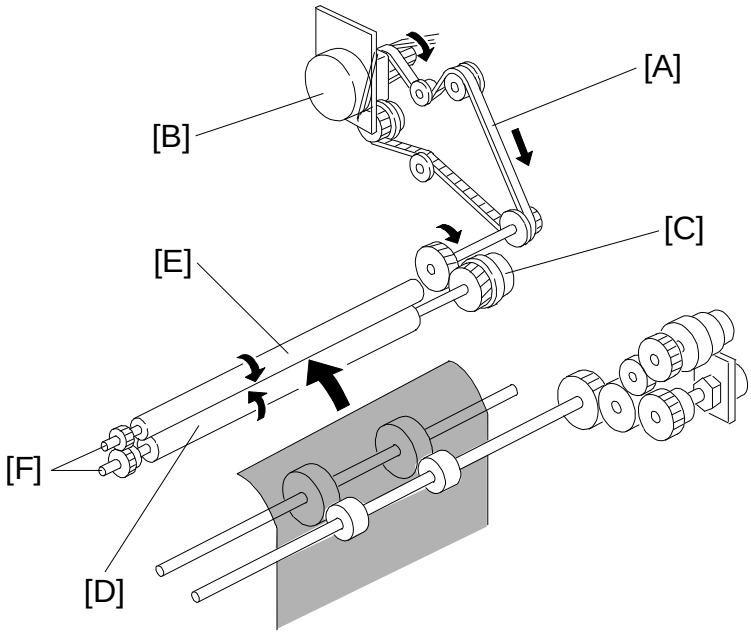

A176D621.wmf

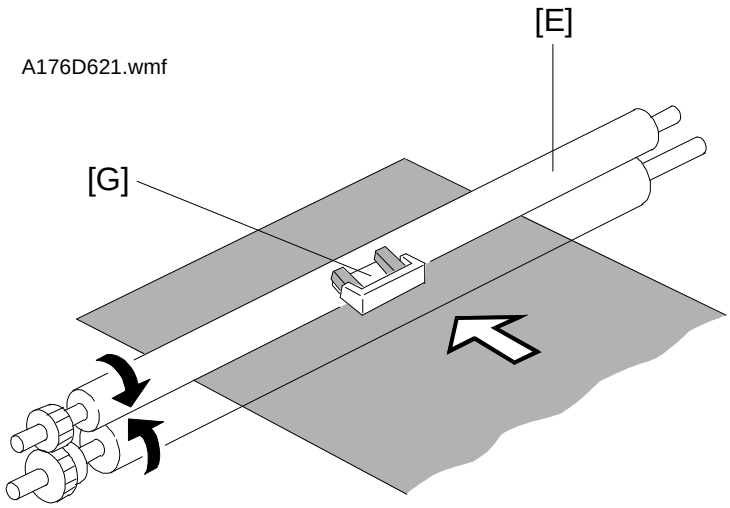

A176D622.wmf

Through the timing belt [A], main motor [B] rotation is transmitted to the registration clutch [C]. When the registration clutch activates, the main motor drive is transmitted to the lower registration roller [D], then to the upper registration roller [E] via two gears [F] at the front side.

A paper dust cleaner [G] is located at the center of the upper registration roller [E]. This is in line with the feed rollers where most paper dust is generated.

6.18 GUIDE PLATE RELEASE MECHANISM

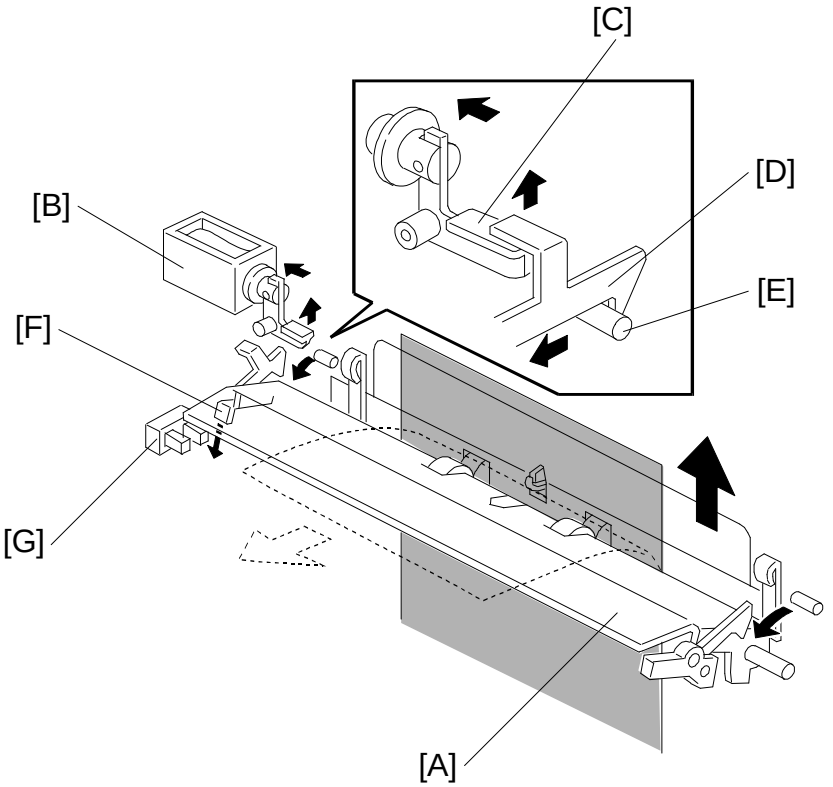

A176D623.wmf

When a paper misfeed occurs between the vertical transport rollers and the registration rollers, the lower paper guide plate [A] automatically opens.

When the registration sensor is not activated at a certain jam check timing, the guide plate solenoid [B] turns on. The lever [C] raises the lock lever [D] on the guide plate to release the pin [E] on the rear side frame. Then, the guide plate falls open.

The actuator [F] on the guide plate activates the guide plate position sensor [G] when the guide plate opens.

To prevent the guide plate from being left open, if the guide plate position sensor is activated, copying is prohibited and a caution guidance is displayed on the LCD panel.

7. IMAGE FUSING

7.1 OVERVIEW

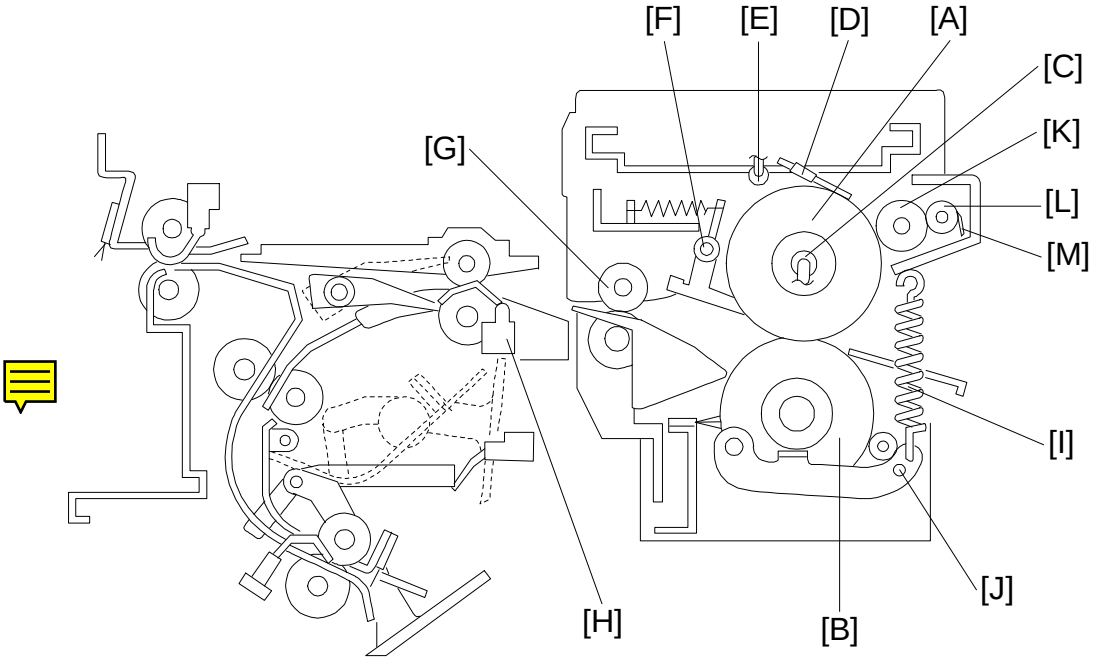

A176D624.wmf

After the image is transferred, the copy paper enters the fusing unit. Then the image is fused to the copy paper by a heat and pressure process through the use of a hot roller [A] and pressure roller [B].

The fusing lamp [C] located inside the hot roller is turned on and off to maintain the operating temperature of 185°C. The CPU monitors the hot roller surface temperature through a thermistor [D] which is in contact with the hot roller's surface. A thermofuse [E] protects the fusing unit form overheating.

The hot roller strippers [F] separate the copy paper from the hot roller and direct it to the fusing exit rollers [G]. The exit sensor [H] monitors the progress of the copy paper through the fusing unit and acts as a misfeed detector while the exit rollers drive the copy paper to the inverter section.

The hook positions of the tension springs [I] on the pressure lever [J] adjusts the roller pressure.

The oil supply roller [K] applies a light coat of silicon oil to the hot roller. The oil supply cleaning roller [L] and oil supply cleaning blade [M] remove the paper dust accumulated on the cleaning roller.

7.2 FUSING ENTRANCE GUIDE

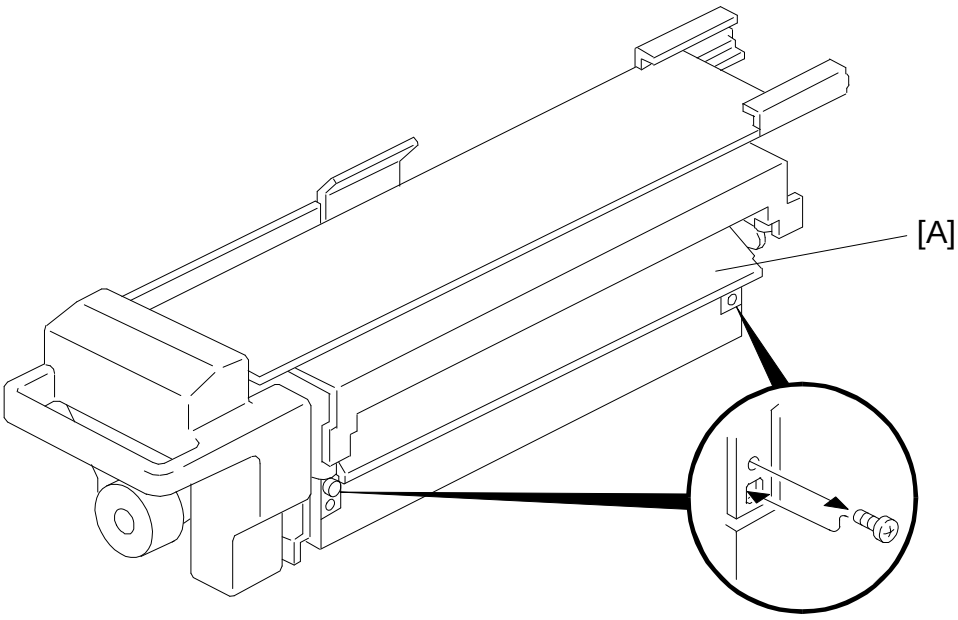

A176D625.wmf

The entrance guide [A] for this machine is adjustable for thick or thin paper.

With thin paper, set the entrance guide in the upper position. This slightly lengthens the paper path which prevents the paper from creasing in the fusing unit. With thick paper, set the entrance guide in the lower position.

This is because thick paper does not bend as easily, and is therefore less prone to creasing. Also, the lower setting allows more direct access to the gap between the hot and pressure rollers. This prevents thick paper from buckling against the hot roller, which can cause blurring at the leading edge of the copy.

In this model, the transfer belt improves paper transport and the paper path to the fusing entrance is stabilized. This reduces the chance of paper creasing due to paper skews in the fusing unit.

Therefore, the guide plate standard position is the lower position. (Standard position on previous models was the upper position).
Since there are very few reasons to change the guide plate position, there is no guide plate position adjustment lever for customer use.

7.3 FUSING DRIVE MECHANISM

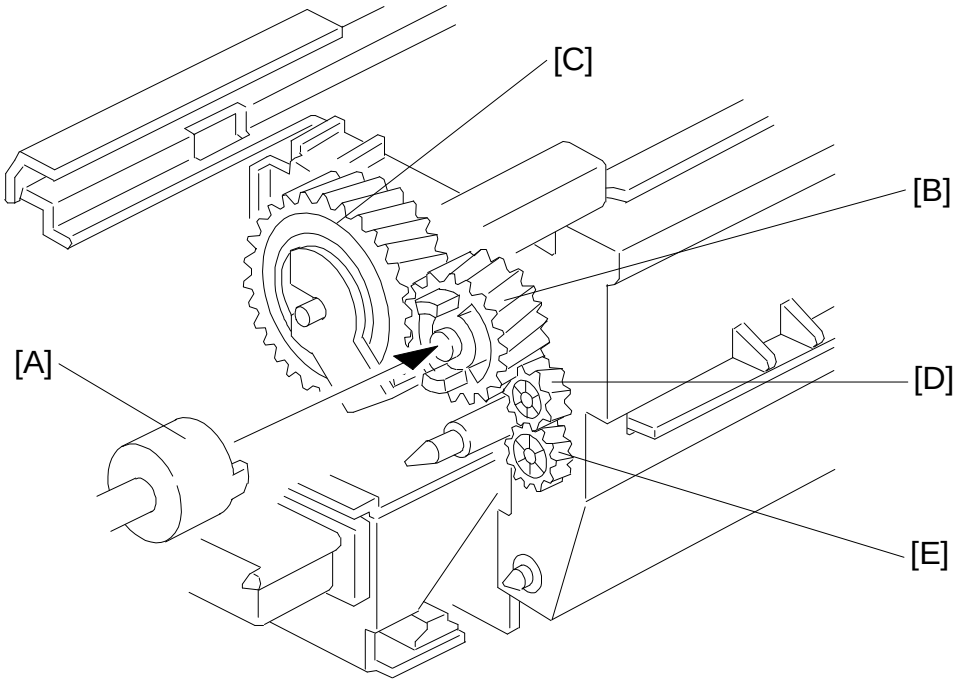

A176D626.wmf

The fusing drive gear [A] transmits the drive from the fusing/duplex drive motor to the gear [B] which drives the hot roller gear [C]. Rotation passes from the gear [B] through the idle gear [D] to the exit roller drive gear [E]. The pressure roller is driven by the friction between the two fusing rollers.

7.4 FUSING LAMP CONTROL

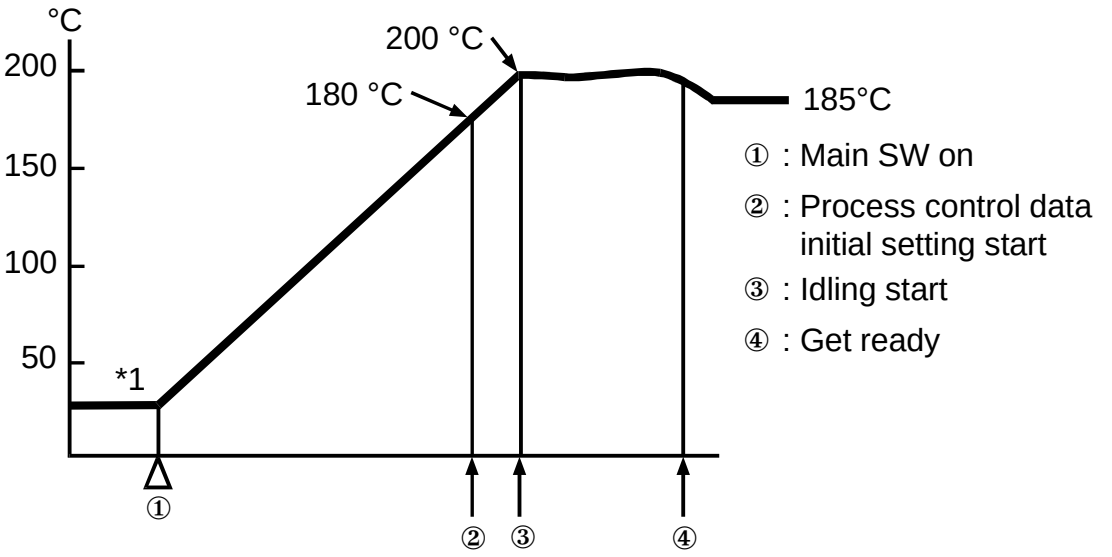

A176D627.wmf

When the main switch is turned on the CPU starts sending a trigger pulse to the fusing control circuit to turn on the fusing lamp.

When the CPU detects a fusing temperature of 200°C through the thermistor, the copier starts fusing idling. This idling period can be adjusted by SP mode (1 SP Adjustment - PAGE 1). When the fusing idling finishes, the warm-up period is completed and the Ready indicator turns on. After this, fusing temperature is controlled at 185°C. If the fusing temperature is above 100°C when the main switch is turned on, the copier does not go into the fusing idling mode.

When the fusing temperature reaches 180°C (in the case that the main switch is turned on while the fusing temperature is less than 100°C), the machine starts the process control data initial setting.

The CPU also changes the fusing lamp on period at every check cycle. The change is calculated according to the result of the previous check. This keeps the fusing temperature as close as possible to the target temperature.

If the fusing lamp (950 W) is turned on or off while the exposure lamp is on, the power supplied to the exposure lamp may fluctuate, possibly degrading the copy image. To prevent this, the fusing lamp does not change while the exposure lamp is on: it stays either on or off.

The standard fusing temperature control mode is:
On-off control ..... European version
Phase control ..... Other versions

By cutting the JP501 on the optics control board, the control mode become to the another mode.

7.5 INVERTER AND PAPER EXIT

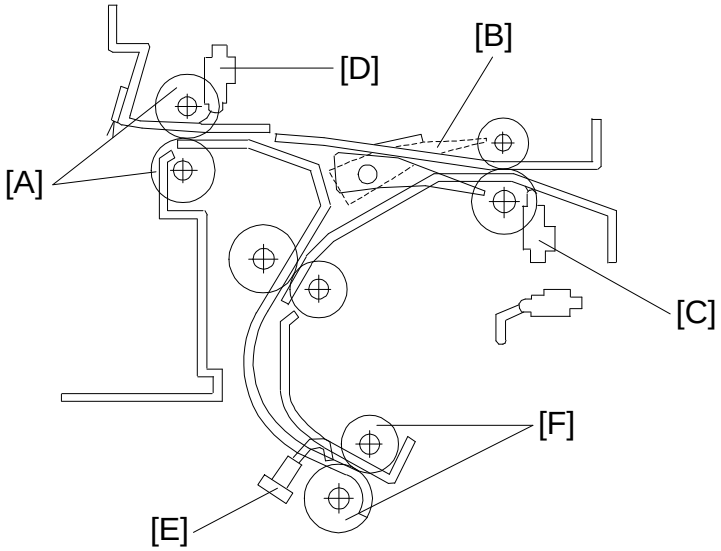

A176D628.wmf

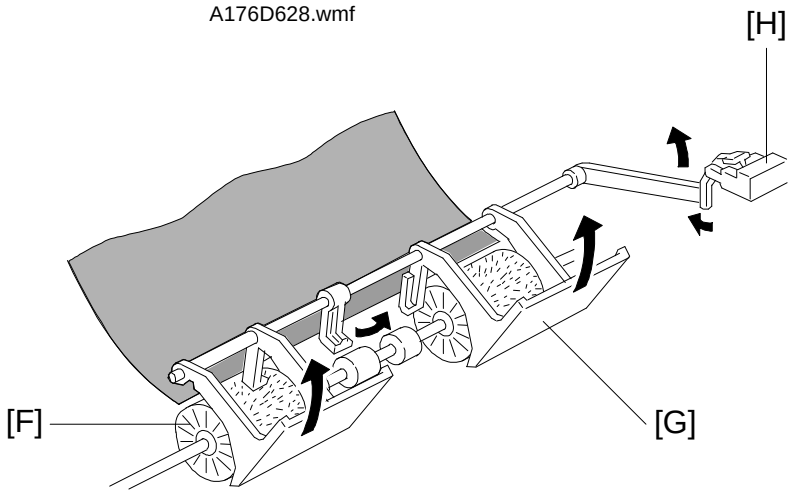

A176D629.wmf

After passing the fusing unit, copies enter the inverter unit where paper is distributed to the paper exit rollers [A] or the duplex unit.
The junction gate solenoid changes the position of the junction gate [B]. In duplex mode, the junction gate solenoid turns on to raise the junction gate so that the junction gate guides the paper into the duplex unit.
The fusing exit sensor [C] and exit sensor [D] monitor paper misfeeds.

The duplex transport sensor [E] is used not only to monitor paper misfeed detection, but also to activate the duplex jogger motor.

When the paper passes the duplex transport roller [F], the paper pushes the paper guide [G] up, and the actuator on the rear end of the paper guide shaft de-activates the paper guide sensor [H]. The duplex entrance sensor monitors paper misfeeds.

7.6 INVERTER AND EXIT DRIVE MECHANISM

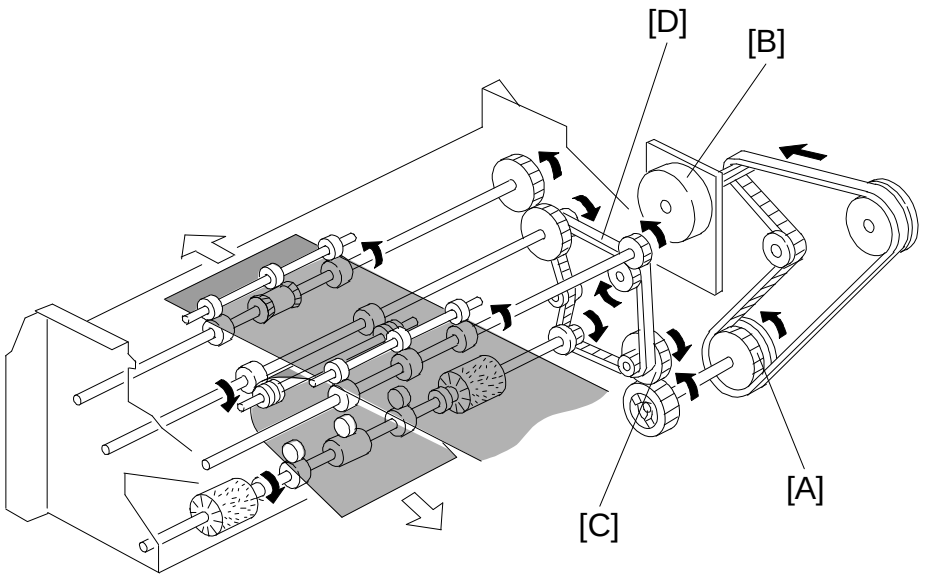

A176D630.wmf

The gear [A] transmits the drive from the fusing/duplex drive motor [B] to the next gear [C]. This gear [C] transmits the drive to the paper exit and the inverter section through the timing belt [D].

8. DUPLEX

8.1 OVERVIEW

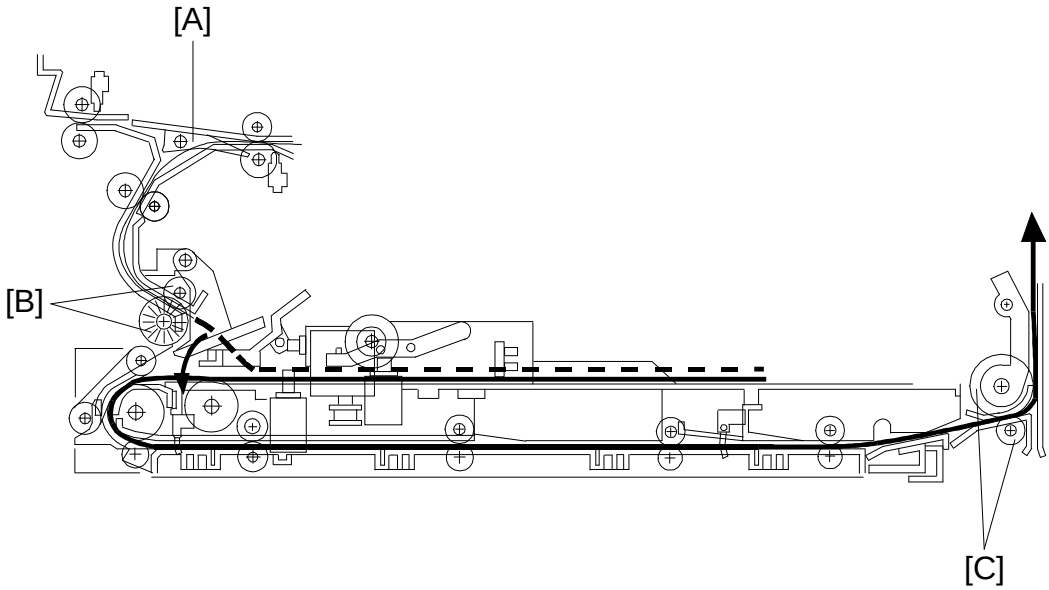

A176D631.wmf

In this mode the junction gate [A] directs sheets exiting the fusing unit to the duplex tray entrance. After that, all sheets follow the path through the entrance rollers [B]. After all front side copying is completed, the sheets follow (the sheets on the duplex tray are fed in order from the bottom to the top) the path through the duplex feed mechanism and vertical transport rollers [C] to the registration rollers.

8.2 DRIVE MECHANISM

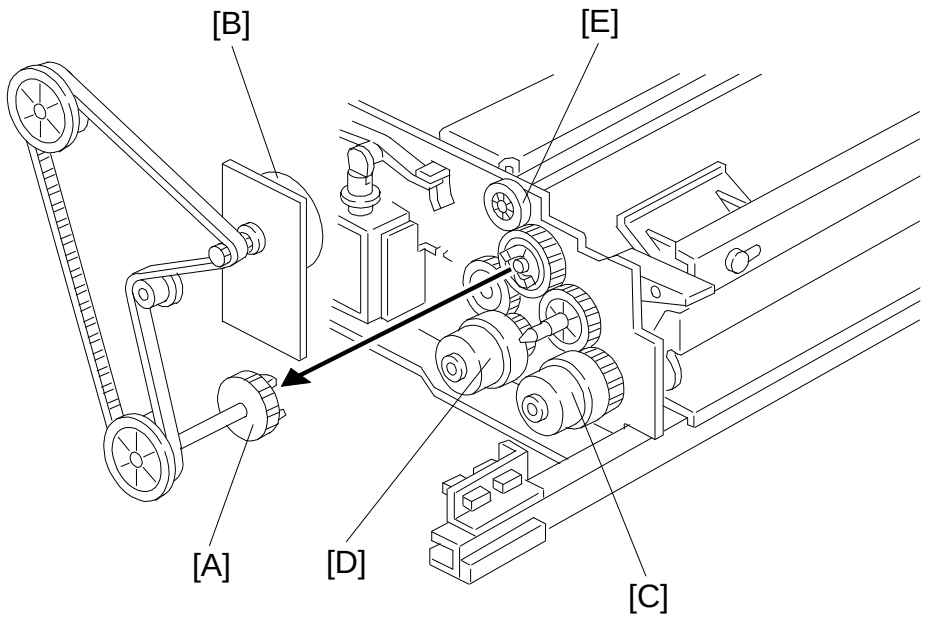

A176D632.wmf

The duplex drive gear [A] transmits drive from the fusing/duplex drive motor [B] to the duplex unit. This drive is transmitted to the duplex paper feed section under the control of the duplex feed clutch [C] and transmitted to the duplex transport section under the control of the duplex transport clutch [D]. The duplex pick-up roller is driven by the gear [E], so this roller continuously rotates while the fusing/duplex drive motor is on.

8.3 DUPLEX ENTRANCE TO DUPLEX TRAY

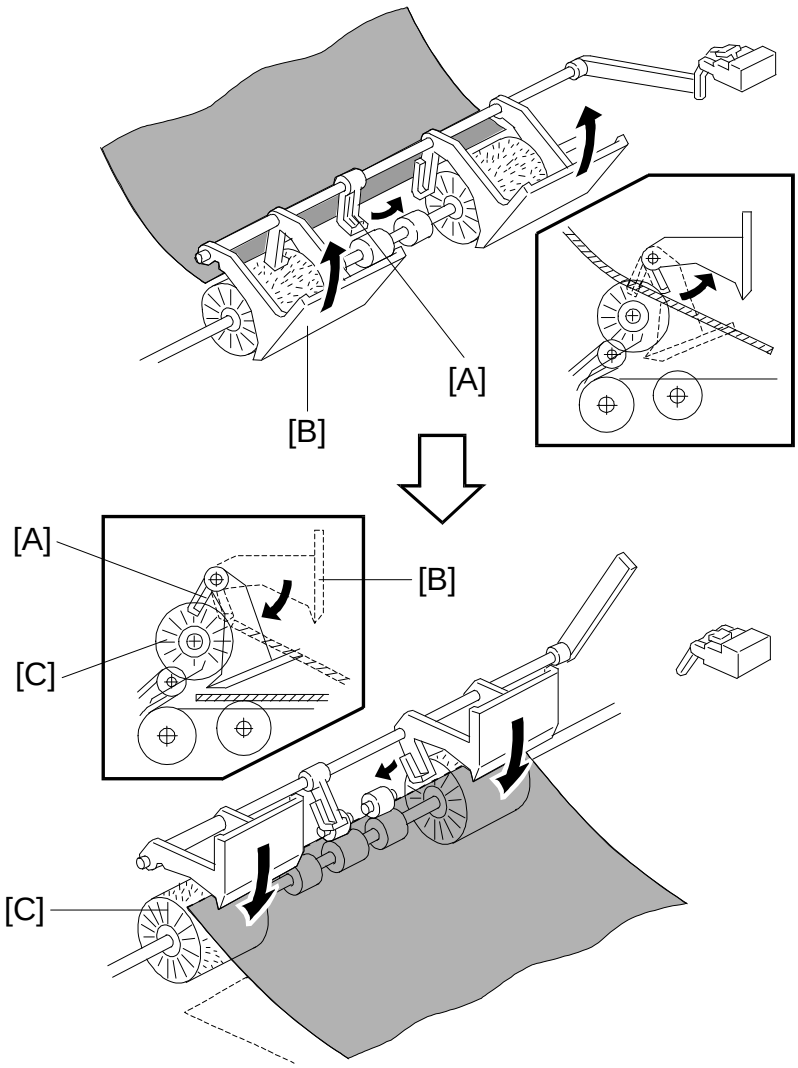

A176D633.wmf

After paper passes through the junction gate, it pushes the feeler [A] up. The feeler and the paper guide [B] form one part, so that when it is pushed up, the paper guide is moved out of the paper path.

The paper then enters the duplex unit. After the paper's trailing edge passes the feeler, nothing holds it up and the paper guide falls into place and is ready to guide the paper under brush roller.

(If the paper is caught on top of the brush roller [C], the guide pushes it under as it falls.)

8.4 DUPLEX STACKING

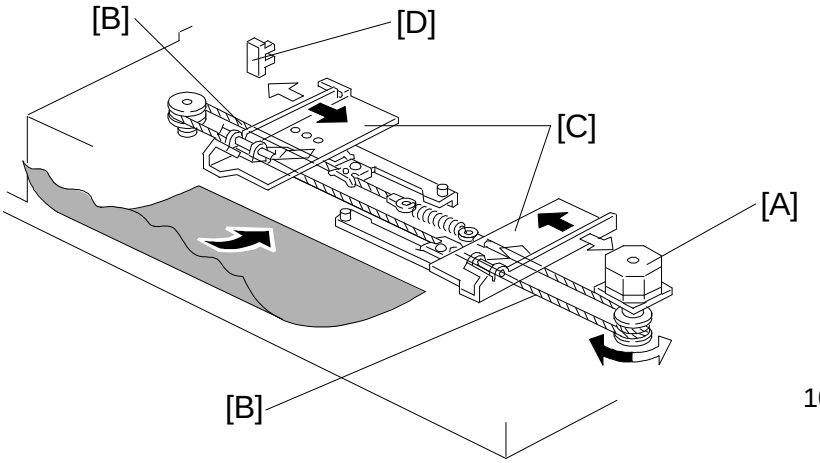

A176D634.wmf

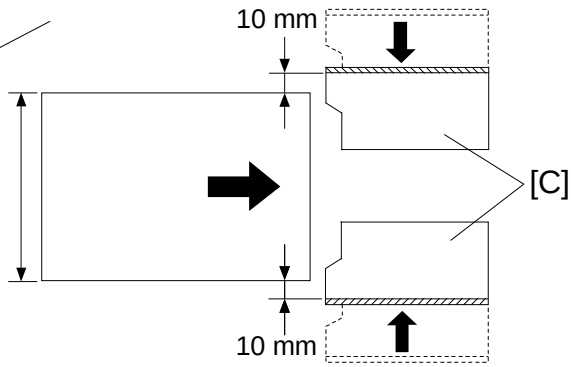

A176D635.wmf

The jogger motor (stepping motor) [A] drives the side fence drive wire [B] to move the side fences [C] inward or outward.

When the main switch is turned on, the jogger motor rotates to place the jogger fences at the home position by monitoring the signal of the jogger home position sensor [D].

When the start key is pressed, the jogger motor rotates to position the side fences according to the selected paper size. 30 ms after the duplex transport sensor detects the leading edge of the paper (OFF $\rightarrow$ ON), the jogger motor rotates to position the jogger side fences 10 mm away from the selected paper size. When the copy paper is delivered in the duplex tray, actually 150 ms after the duplex transport sensor detects the trailing edge of the paper (ON $\rightarrow$ OFF), the jogger fences move inward to square the paper. 30 ms after the duplex transport sensor detects the leading edge of the next copy paper, the jogger fences move back to the previous positions (10 mm away from the paper size) again.

The jogger fences move inward to square the paper stack for every copy paper stack at the same timing as before. After the last copy of the first side copying enters the duplex tray, the jogger fences remain against the paper stack.

8.5 DUPLEX PICK-UP ROLLER MECHANISM

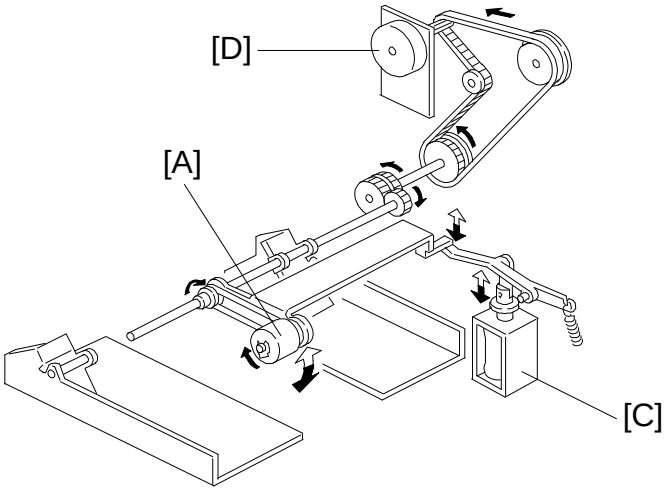

A176D636.wmf

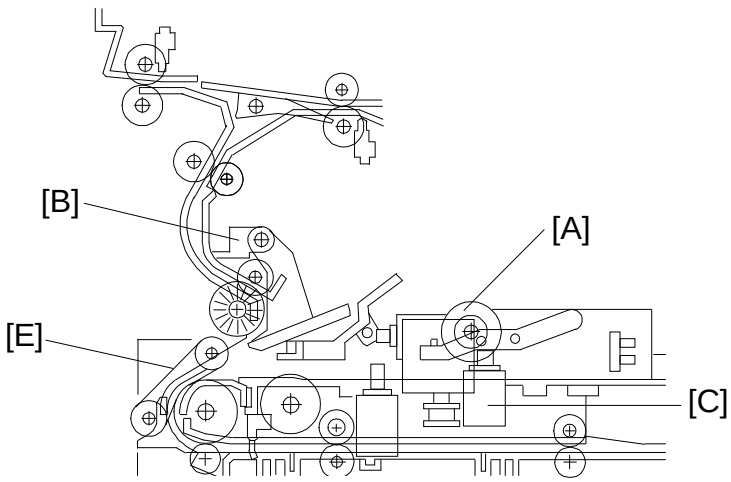

A176D637.wmf

The positioning roller [A] is basically in the upper position. 150 ms after the duplex transport sensor [B] detects the trailing edge of the paper (ON → OFF), the positioning solenoid [C] turns on to lower the positioning roller until it contacts the paper. The positioning roller continuously rotates clockwise while the fusing/duplex motor [D] rotates. The positioning solenoid turns on until the leading edge of the paper hits the separation belts [E].

30 ms after the duplex transport sensor [B] detects the leading edge (OFF → ON) of the next paper, the positioning roller solenoid turns off to raise the positioning roller so that the positioning roller does not disturb the next paper as it enters.

8.6 DUPLEX PAPER FEED

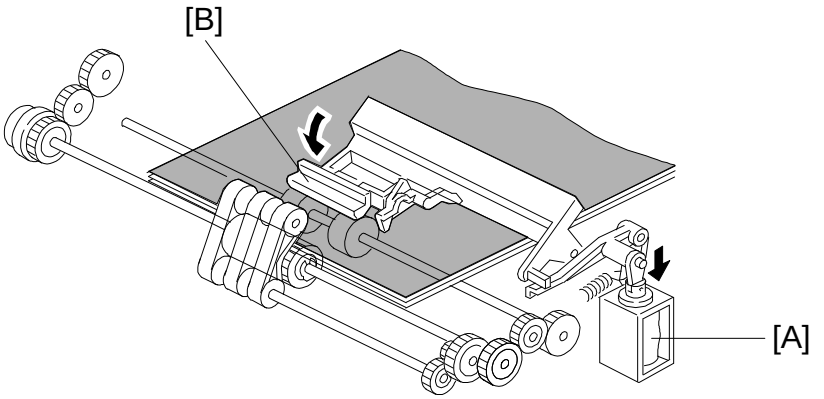

A176D638.wmf

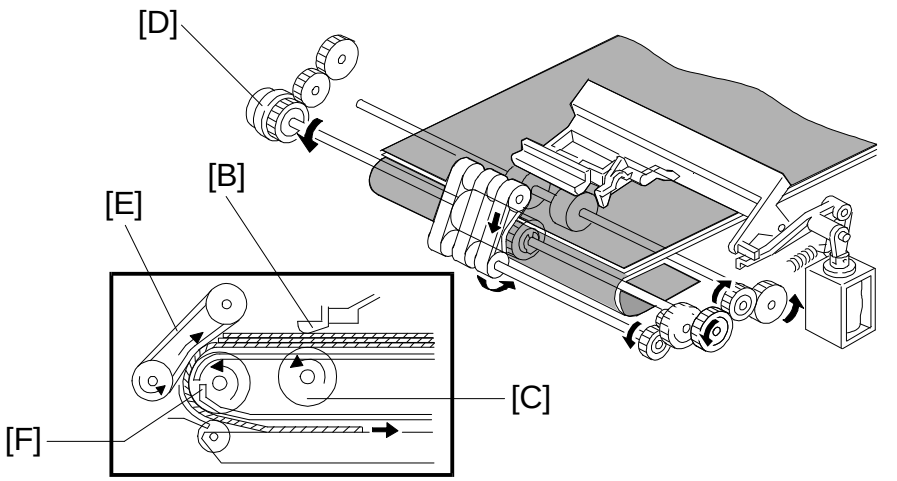

A176D639.wmf

The paper on the duplex tray is fed in order from the bottom to the top sheet.

After all copies are stacked on the duplex tray, the duplex pressure solenoid [A] turns on to lower the pressure arm [B] so that the pressure arm presses the paper against the pick up roller [C].

Then, the paper feed clutch [D] turns on to rotate the pick-up roller [C], separation belts [E] and the feed roller [F].

The separation belts [E] and the feed roller [F] rotate in opposite directions. Only the bottom paper is fed because the separation belt prevents any other paper from feeding.
The feed roller advances the bottom paper past the separation belts because the force of the feed roller is greater than the resistance of the separation belts. The separation belts prevent multiple feeds because the resistance of the separation belt is greater than the friction between the papers.

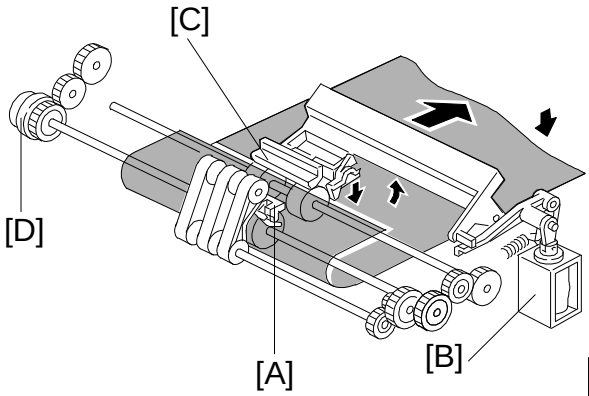

A176D640.wmf

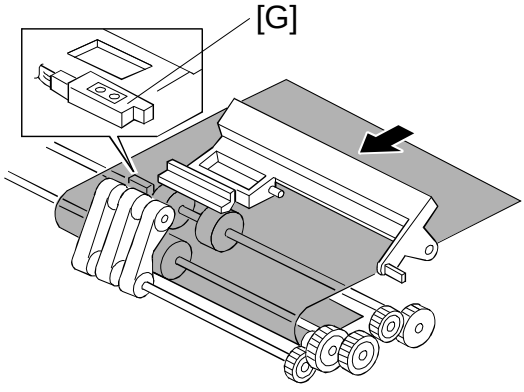

A176D641.wmf

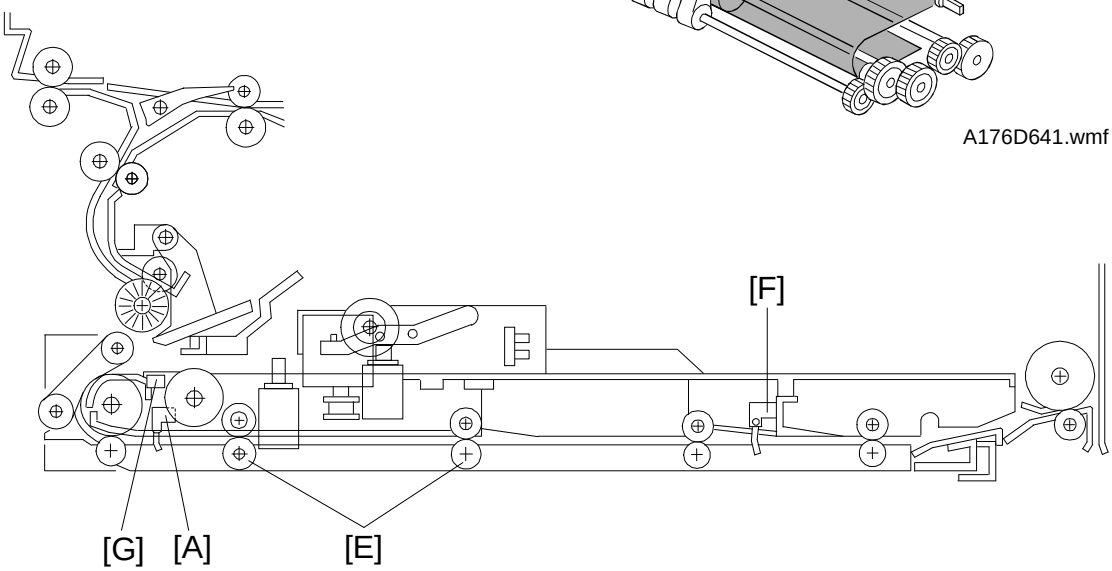

A176D642.wmf

When the duplex entrance sensor [A] detects the trailing edge of the last paper, the pressure solenoid [B] turns off to raise the pressure arm [C].

200 ms after the duplex entrance sensor [A] detects the leading edge of the paper, the duplex feed clutch [D] turns off and the paper is transported by the duplex transport rollers [E].

When the paper activates the duplex exit sensor [F], the duplex transport clutch [D] turns off and the paper waits there until the feed timing is adjusted to match the registration clutch on timing of the previous paper.

The duplex paper end sensor [G], which is a reflective type photo sensor, detects the duplex paper end condition.

9. ENERGY STAR COMPLIANT MACHINES (North American version only)

In conjunction with the modification for the Energy Star compliance, field technicians are requested to understand the changes in operation modes so as to configure the machine for the customer specific environment/ requirements. This bulletin refers to all differences between the Energy Star compliant machines and the other machines produced previously.

Mode	Non-Energy Star	Energy Star
Auto Off Mode	When the copier is used after the weekly timer has turned it off, the copier will turn itself back off after the selected time. The auto off time can be set from 1 to 999 minutes, or the function can be turned off. Default: Off	The copier turns off after the selected time after the last copying job. The time can be adjusted from 1 to 120 minutes. This mode cannot be canceled. Default: 90 minutes
Simplex/Duplex Mode	Single sided original to single sided copy is default setting mode at the factory.	Single sided original to two sided copy is default setting mode at the factory. Note: Program #5 which the copier refers to at initialization holds the mode.
Weekly Timer	Available	Because the auto off mode is a mandatory standard feature of the Energy Star standards, the weekly timer is no longer available.
Anticondensation heaters	All plugged in	All unplugged. (CN2, 4, and 5 on the lightening arrestor PCB) 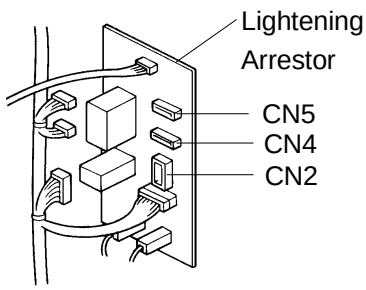 Note: All anti-condensation heaters are still on the machine.

Because the attached "Energy Star Information" will be available together with the Operating Instructions, make sure that the customer understands how the machine operates to save energy.

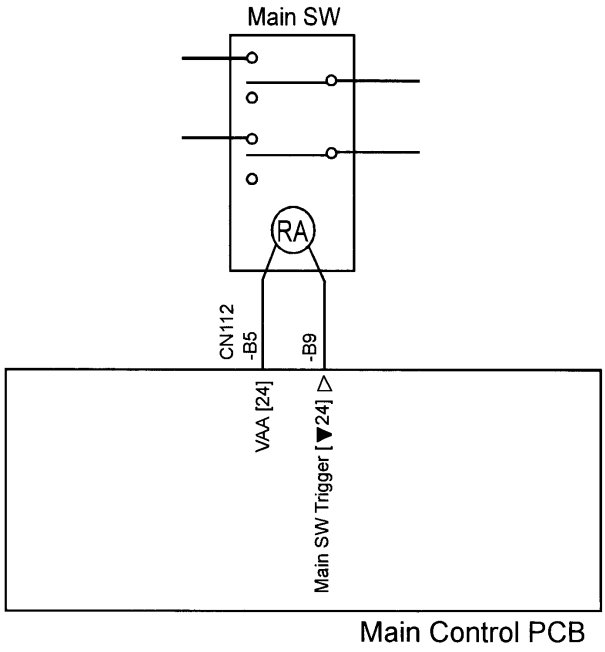

A176D649.img

10. ENERGY SAVING INFORMATION

As an Energy Star Partner, we have determined that this copier model meets Energy Star Guidelines for energy efficiency.

This product was designed to reduce the environmental impact associated with copying equipment by means of energy saving feature such as AUTO OFF and DUPLEX DEFAULT MODES.

10.1 About The Energy Saving Features of this Copier

10.1.1 Auto Off Mode

NOTE: There is an explanation of Auto Off mode in your Operating Instructions. The explanation of Auto Off mode described below is a supplement/correction of that given in your Operating Instructions.

NOTE: The Weekly Timer is not available on this copier because of the Auto Off mode.

To conserve energy, this copier model automatically turns off 90 minutes after the last copying job has been completed. Power consumption is reduced from 0.25 kW (standby) to less than 0.01 kW.

To exit the Auto Off Mode, turn on the main switch. The main switch for this copier has three positions, press it all the way and hold for 1 - 2 seconds.

Changing The Auto Off Timer

1. Press the **Clear Modes** key.
2. Press the **Clear/Stop** key for more than 3 seconds until the User Tools Menu appears on the touch panel display.
3. Touch the **[1] Auto reset/ Auto off** key.

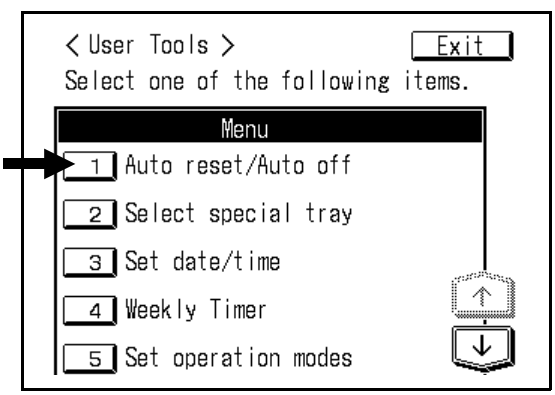

A176D645.img

4. Adjust the Auto off timer following the instructions on the display.
   - Time can be adjusted from 1 to 120 minutes in 1 minute steps.
   - You cannot cancel the Auto off mode. The **[OFF]** key cannot be selected.
5. To return to the User Tools Menu, touch the **[Menu]** key.
6. To exit from the User Tools condition, touch the **[Exit]** key.

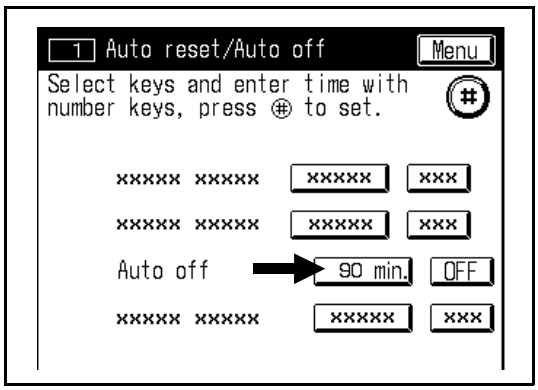

A176D646.img

10.1.2 Duplex Default Mode

NOTE: There is an explanation of the Duplex mode in your Operating Instructions. The explanation of the Duplex mode described below is a supplement/correction of that given in your Operating Instructions.

The factory (Default) setting in Menu 5 (Set operation modes) of the User Tools has been set at "PROGRAM 5" rather than "NORMAL". This allows copy modes stored in Program 5 be set as the default. (For detail, refer to Page 16 of your Operating Instruction Book.)

To save paper resources, the following Duplex mode has been selected as the factory (default) setting using Program 5;

- Copiers with the document feeder and the sorter stapler are set for two sided copies from an even number of originals.
- Copiers with the recirculating document handler and the finisher are set for two sided copies from one sided originals.

Canceling The Duplex Default Mode

To cancel the Duplex Default mode, store one-sided copy mode in Program 5 as follows:

1. Press the **Clear Modes** key.
2. Touch the **[Duplex/Series Copies]** key to cancel the duplex mode.

   Note: The illustration on the right shows display for the document feeder and the sorter stapler system.

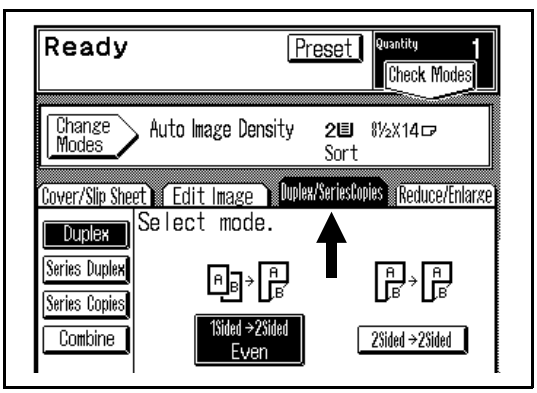

A176D647.img

3. Press the **Program** key.
4. Touch the **[Store Program]** key.
5. Touch the **[5]** key.
   Then, the display shows "Program 5 has been stored. Do you want to revise the program?".
6. Touch the **[Yes]** key to overwrite a new program.
7. Touch the **[5]** key again to enter a new program.

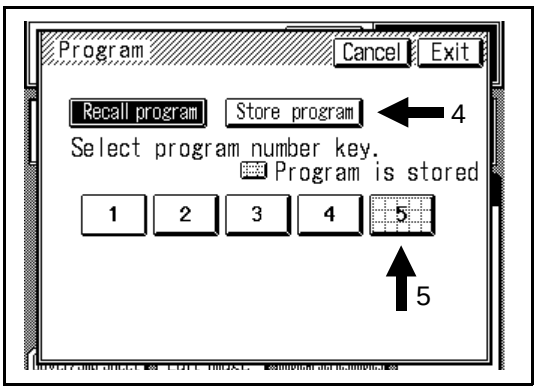

A176D648.img

Changing Duplex Default Mode

To change a duplex mode set at the factory as a default to an another duplex mode you need as a default, select the appropriate duplex mode and overwrite it in Program 5 as follows;

1. Press the **Clear Modes** key.
2. Touch the **[Duplex/Series Copies]** key to cancel the duplex mode. Then, touch the **[Duplex/Series Copies]** key again and select the appropriate duplex mode as a default.

- For the sorter stapler system, you can select either "Two sided copies from an odd number of originals" or "Two sided copies from two sided originals".
- For the finisher system, you can select "Two sided copies from two sided originals".

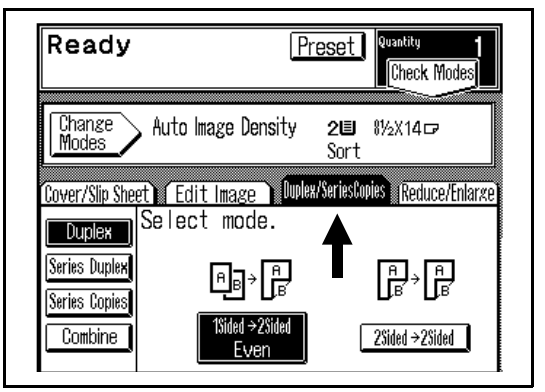

A176D647-2.img

Note: The illustration on the right shows display for the document feeder and the sorter stapler system.

3. Press the **Program** key.
4. Touch the **[Store Program]** key.
5. Touch the **[5]** key.
   Then, the display show "Program 5 has been stored. Do you want to revise the program?".
6. Touch the **[Yes]** key to overwrite a new program.
7. Touch the **[5]** key again to enter a new program.

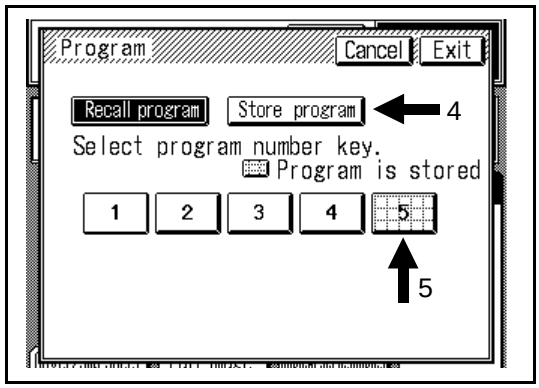

A176D648-2.img

Recycled Paper

Please contact your sales or service representative for recommended recycled paper types that may be used in this copier.

SECTION 3

INSTALLATION

1. INSTALLATION REQUIREMENTS

1.1 ENVIRONMENT

1. Temperature Range: 10°C to 30°C (50°F to 86°F)
2. Humidity Range: 15% to 90% RH
3. Ambient Illumination: Less than 1,500 lux (Do not expose to direct sunlight.)
4. Ventilation: Room air should turn over at least 3 times/hour.)
5. Ambient Dust: Less than 0.15 mg/m^3 (4 x 10^3 Oz/yd^3)
6. Room Size: More than 10 m^3 (13.4 yd^3)
7. If the place of installation is air-conditioned or heated, do not place the machine.
   a) where it will be subjected to sudden temperature changes.
   b) where it will be directly exposed to cool air from an air conditioner.
   c) where it will be directly exposed to heat from a heater.
8. Do not place the machine where it will be exposed to corrosive gasses.
9. Do not install the machine at any location over 2,000 m (6,500 feet) above sea level.
10. Place the copier on a strong and level base.
11. Do not place the machine where it may be subjected to strong vibrations.

1.2 MACHINE LEVEL

1. Front to back: Within 5 mm (0.2") of level
2. Right to left: Within 5 mm (0.2") of level

NOTE: The machine legs may be screwed up or down in order to level the machine. Set a carpenter's level on the exposure glass.

1.3 MINIMUM SPACE REQUIREMENTS

Place the copier near the power source, providing clearance as shown:

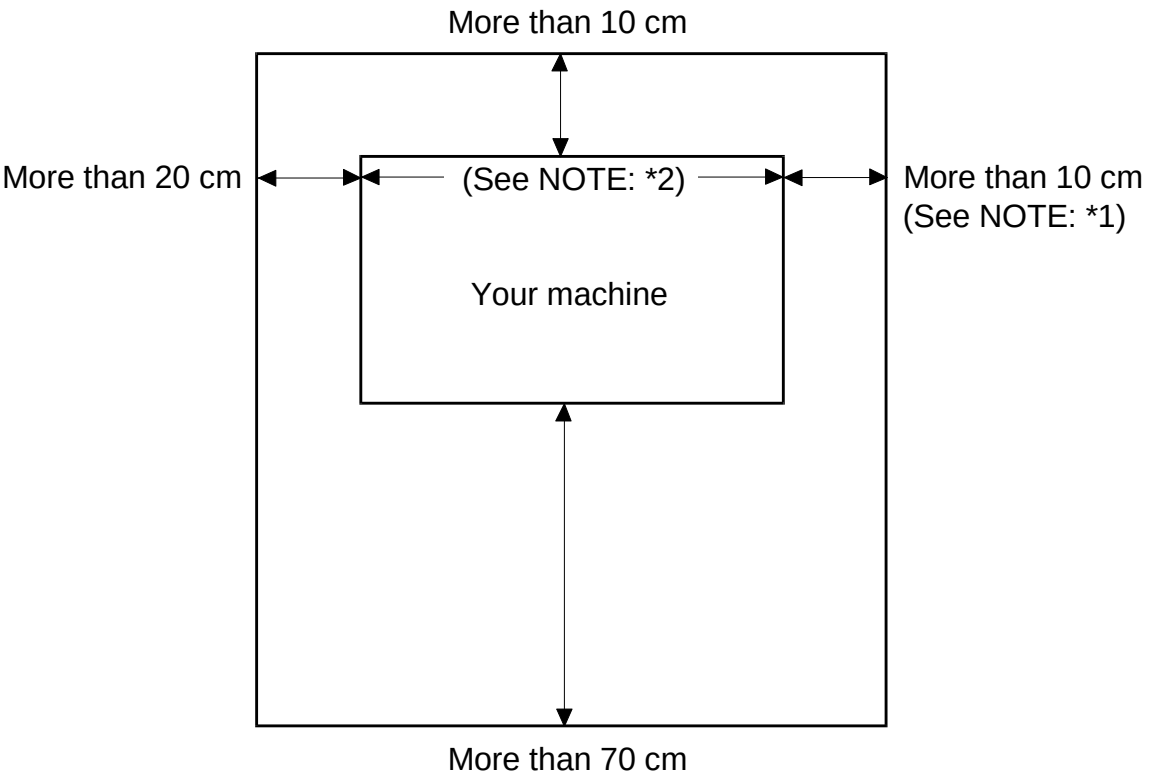

A176I500.wmf

NOTE: *1. If the LCT is not installed, the distance between the wall and the edge of the by-pass feed table must be more than 30 cm.

*2. Copier only: 128.0 cm (with LCT 134.7 cm)
Copier + S/S: 125.6 cm (with LCT 156.8 cm)
Copier + Finisher: 136.1 cm (with LCT 167.3 cm)

1.4 POWER REQUIREMENTS

1. Input voltage level: 120 V/60 Hz: More than 20 A
   220 ~ 240 V, 50/60 Hz: More than 10 A
2. Permissible voltage fluctuation: 10%
3. Permissible extension cord:
   At least 300 V/30 A capacity and less than 5 m (16.4 feet) long.

   NOTE: a) be sure to ground the machine. (Do not ground it to a gas pipe.)
   b) Make sure the plug is firmly inserted in the outlet.
   c) Avoid multi-wiring.

4. Do not set anything on the power cord.

2. COPIER INSTALLATION

2.1 ACCESSORY CHECK

Check the quantity and condition of the accessories in the box according to the following list:

Description	Q'ty
1. Sensor Cover	1
2. Flat Head Screw 4 x 6	1
3. Leveling Foot	2

2.2 COPIER INSTALLATION PROCEDURE

NOTE: Since the installation procedure is not packed with the copier as an accessory, always bring this manual with you.

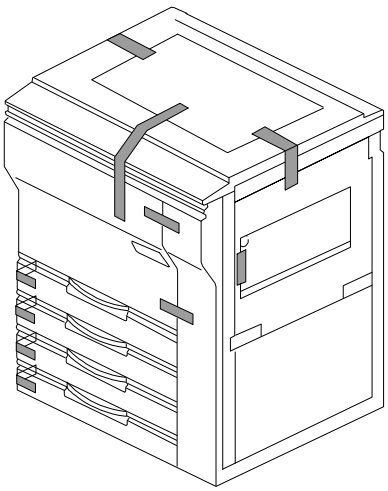

A176I501.wmf

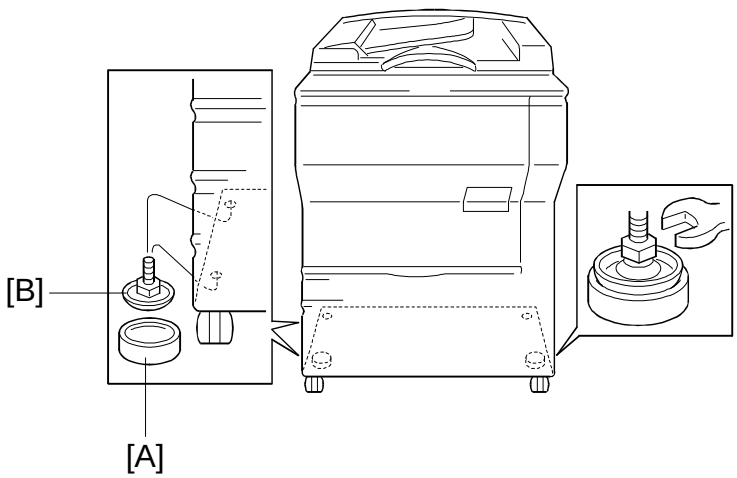

A176I502.wmf

⚠ CAUTION

When installing the copier, make sure that the copier is unplugged.

NOTE: Insert the leveling shoes [A] under the leveling feet [B] for the front side, and level the machine before starting the installation. (The leveling feet [B] can be screwed up or down.) Extra leveling shoes (AH013008) and leveling feet (AH011004) are available as spare parts.

1. Remove the tape strips.

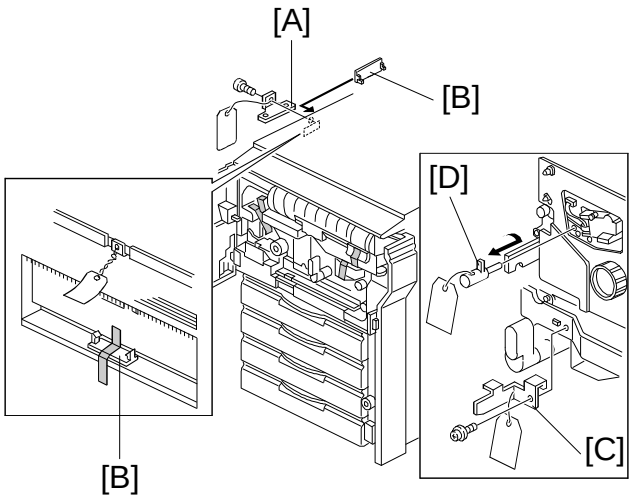

A176I504.wmf

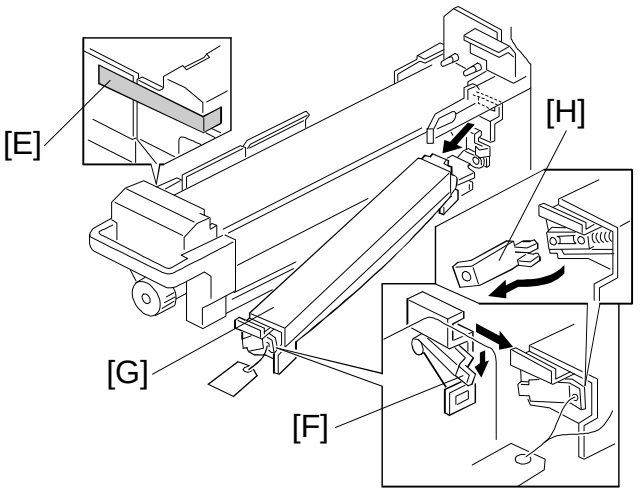

A176I503.wmf

2. Open the front doors.
3. Remove the tape strips.
4. Remove the scanner clamp [A] (1 screw) and install the cap [B] stuck on the paper exit bracket with a tape.
5. Remove the transfer belt lock plate [C] (1 screw).
6. Turn about 180° then remove the cleaning unit lock pin [D].
7. Remove the strip of filament tape [E] of the fusing unit. Pull out the fusing unit. Lower the lever [F], remove the oil supply unit [G], and remove the front and rear clamps [H]. Reinstall the oil supply unit and push in the fusing unit.

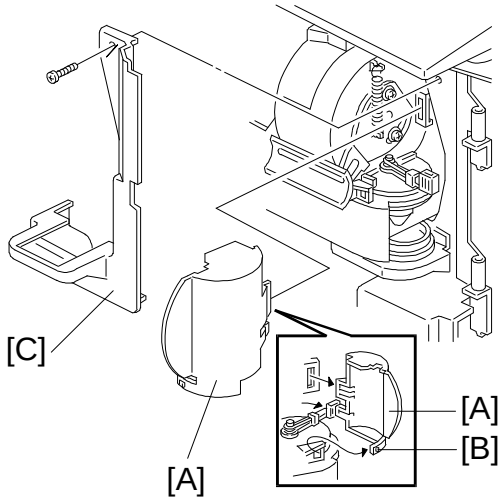

A176I505.wmf

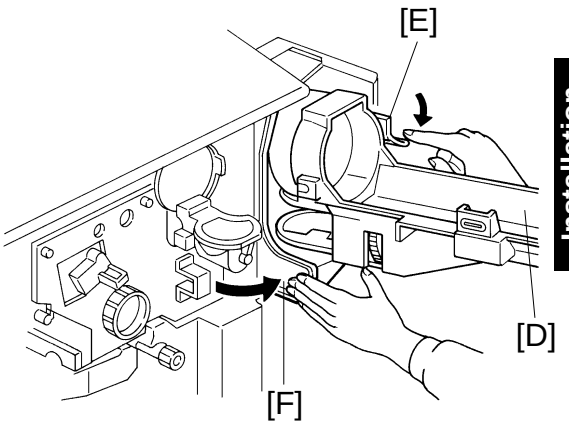

A176I506.img

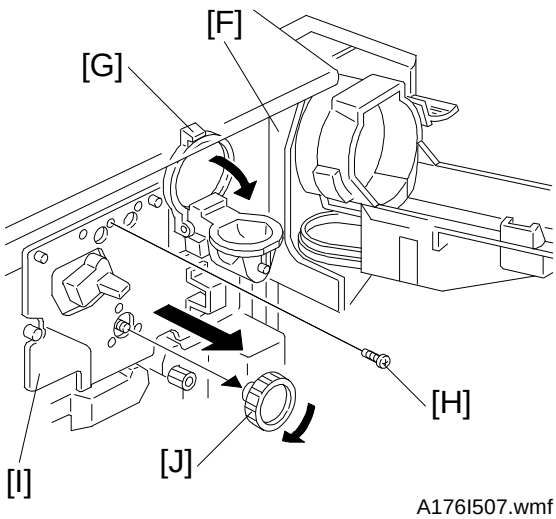

A176I507.wmf

8. Remove the shutter cover [A] by releasing the hook [B].
9. Remove the shutter inner cover [C] (1 screw).
10. Open the toner bottle holder [D].

    NOTE: To open the toner bottle completely, while lowering the shutter lever [E], push the bracket [F] to the right.

11. Close the toner hopper cap [G].
12. Remove the screw [H] fixing the drum stay [I].
13. Remove the drum stay knob [J] and the drum stay [I].

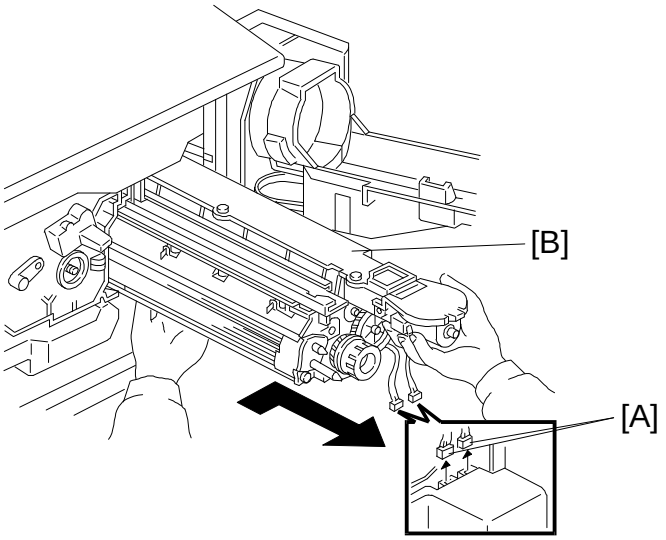

A176I508.wmf

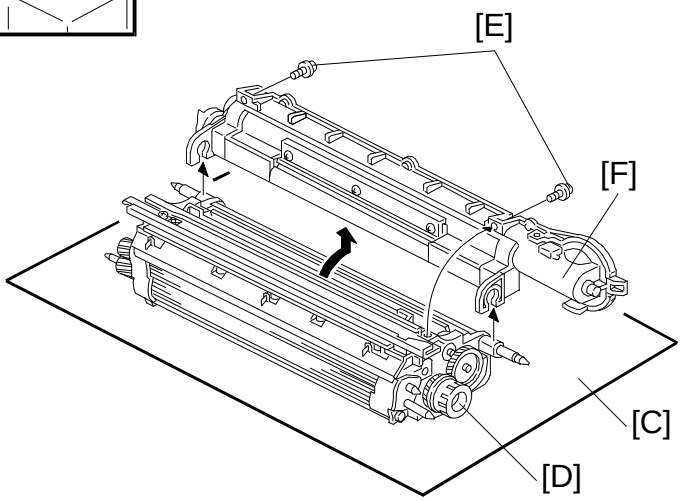

A176I509.wmf

14. Disconnect two connectors [A].
15. Pull out the development unit [B].

NOTE: 1. To prevent drum scratches, push the development unit to the right while pulling it out.

2. Place the development unit on the sheet [C] attached with the new developer to prevent foreign matter from being attracted to the sleeve rollers.
3. When pulling out the development unit, do not pull the knob [D].

16. Remove two screws [E] fixing the toner hopper [F].
17. Turn the toner hopper 90 degree, then, move it up to remove it from the development unit.

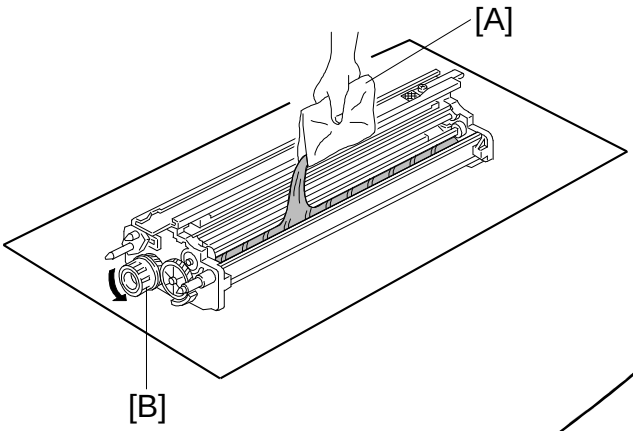

A176I510.wmf

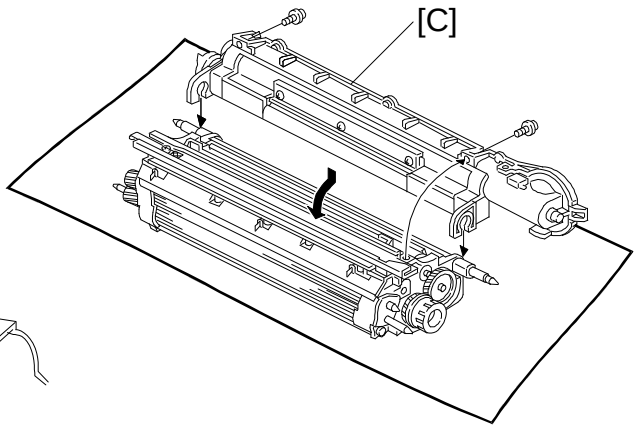

A176I511.wmf

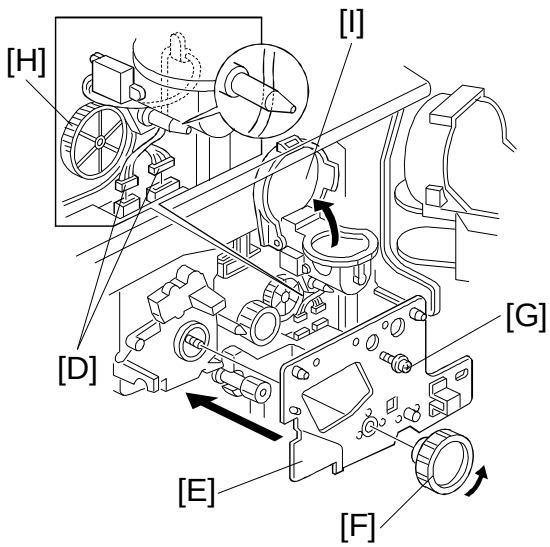

A176I512.wmf

18. Evenly pour in one pack of developer [A] while turning the knob [B].
19. Install the toner hopper [C] to the development unit (2 screws).
20. Install the development unit to the machine.
21. Connect two connectors [D].
22. Install the drum stay [E] and fix the drum stay knob [F] and one screw [G].

    NOTE: When installing the drum stay, be careful not to pinch the harness and keep the harness away from the gear [H].
23. Open the toner hopper cap [I].

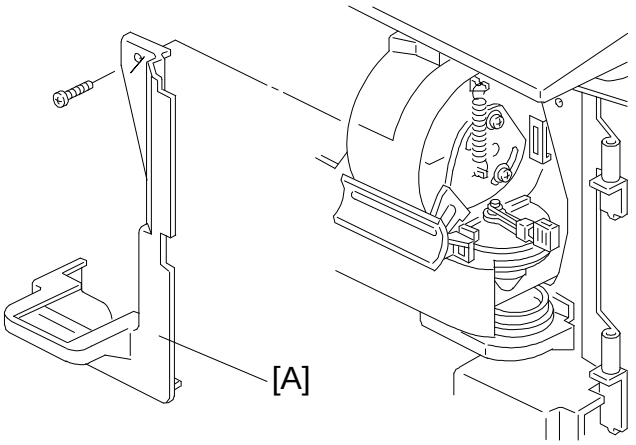

A176I513.wmf

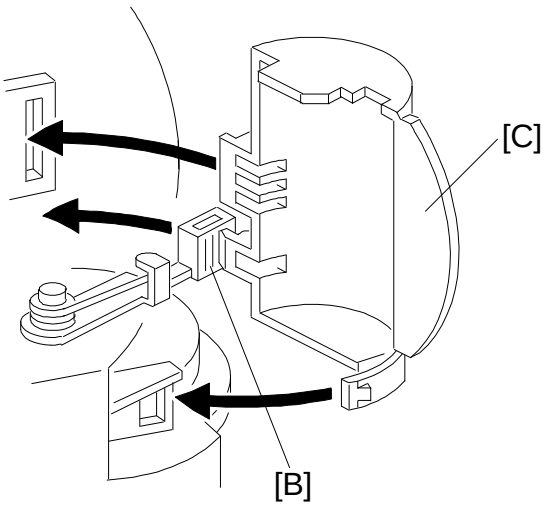

A176I514.wmf

24. Install the shutter inner cover [A] (1 screw).
25. While pushing the lever [B], set the shutter cover [C].
26. Set a toner bottle by following the instructions on the decal.

    NOTE: Before plugging in the power cord, install the guidance ROMs. (-26, -27 machines) (See page 3-13)

27. Plug in the power cord, then turn on the main switch. The machine automatically enter the process control data initial setting mode.

NOTE: Do not make any copy until completing developer initial setting. Do not turn off the main switch during the process control data initial setting mode.

28. Enter SP mode as follows:
    1) Press the clear modes key.
    2) Enter "107".
    3) Press the clear/stop key for more than 3 seconds.

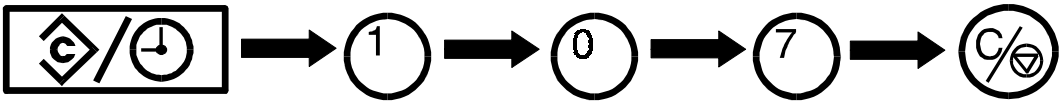

29. Press the "SP Adjustment" key [A].

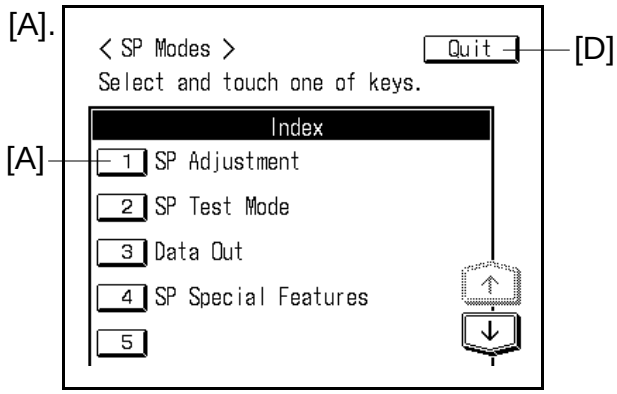

A176I515.img

30. Press the "Start" key [B] of the developer initial setting.

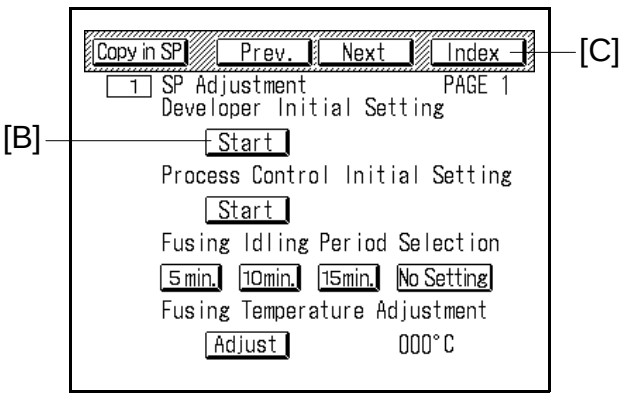

A176I516.img

NOTE: Developer initial setting stops automatically.

31. Press the "Index" key [C].

32. Press the "Quit" key [D] to exit SP mode.

    NOTE: If the developer initial setting is not completed, you cannot exit the SP mode by pressing the "Quit" key. If this occur, turn off and on the main switch then repeat steps 27 to 31 again. If the result is the same, see the troubleshooting section "SC352" (Page 6- 9).

33. (Only in France)
    This step is for the 50 CPM version machine only.
    a) Enter SP mode and press "SP Adjustment" key.
    b) Open page 17 and enter "1" into No. 7 entry.
    c) Exit SP mode.

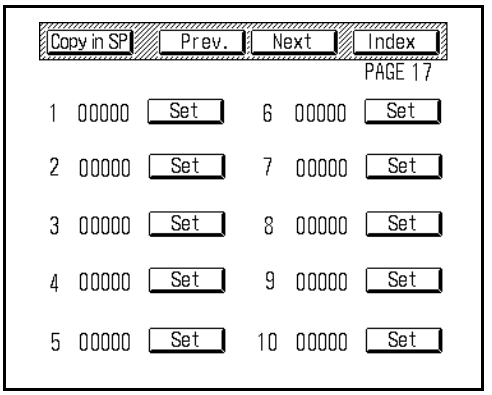

A176I531.img

34. Check copy quality and machine operation.

2.3 GUIDANCE ROM, INSTALLATION (OPTION: EUROPE VERSION ONLY)

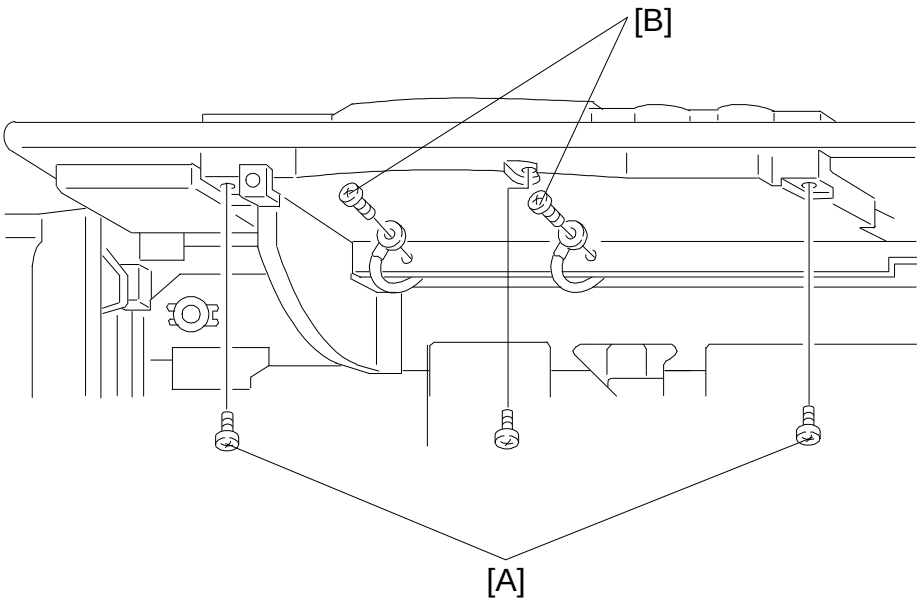

A176I517.wmf

1. If necessary, replace the three guidance ROMs on the operation panel PCB with the optional guidance ROMs as follows:
   1) Remove three screws [A].
   2) Remove the two screws [B] securing the protective earth wires.

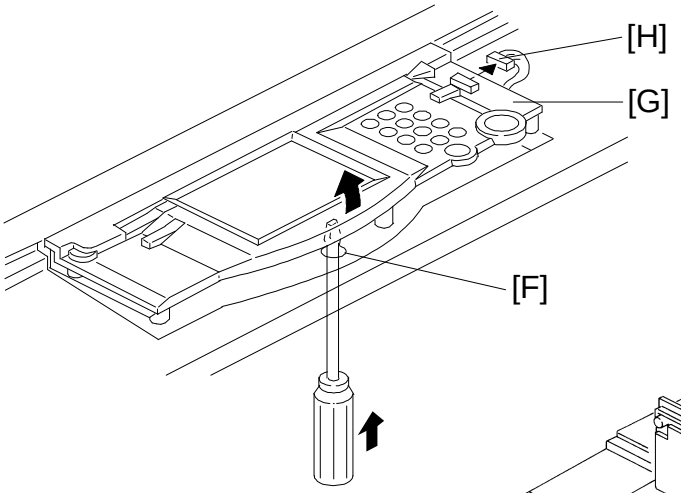

A176I518.wmf

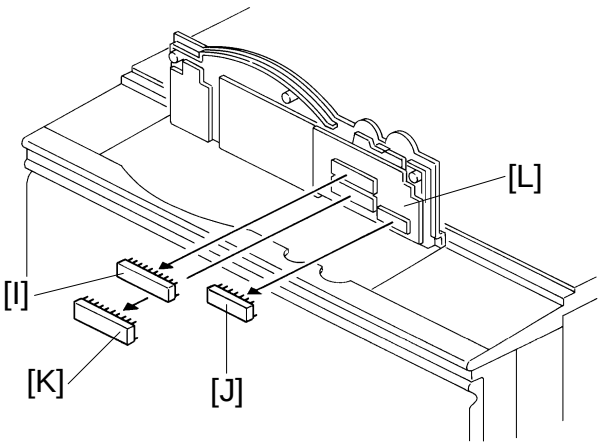

A176I519.img

3) Insert the screw driver from the hole [F] and push the operation panel [G] up.
4) Disconnect the connector [H].
5) Replace the guidance ROMs (IC111 [I], IC112 [J], IC113 [K]) on the operation panel PCB [L].
6) Re-install the operation panel, the left inner cover and the left front door.

NOTE: Be carful not to touch the grouding wire terminal with the circuit pattern on the operation panel when re-installing the operation panel.

2. After installing the new guidance ROMs, plug in the power cord and turn on the main switch then perform the "touch panel display position adjustment" as follows.
   1) Press the interrupt key then press the clear/stop key more than three seconds.

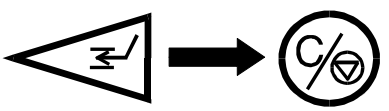

   2) Follow the guidance on the LCD.

2.4 PLATEN COVER (OPTION) INSTALLATION

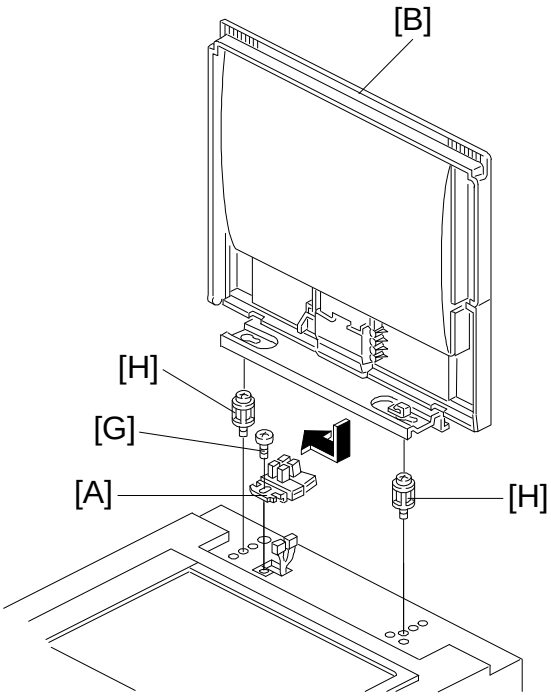

A176I520.wmf

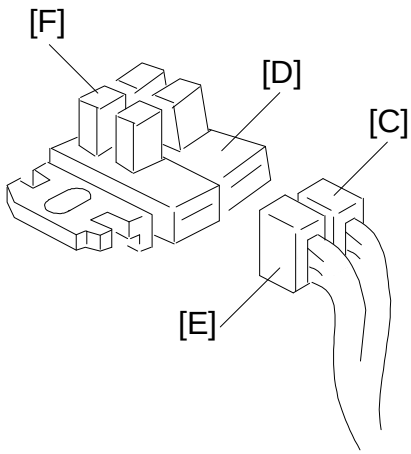

A176I521.wmf

Install the optional platen cover as follows:

1. Install the sensor ass'y [A] which is an accessory of the platen cover [B] as follows:
   1) Connect the red connector [C] to the rear sensor [D].
   2) Connect the white connector [E] to the front sensor [F].
   3) Secure the sensor assembly with a screw [G].

2. Install the platen cover hooks [H].

3. Install the platen cover [B].

2.5 PAPER SIZE CHANGE

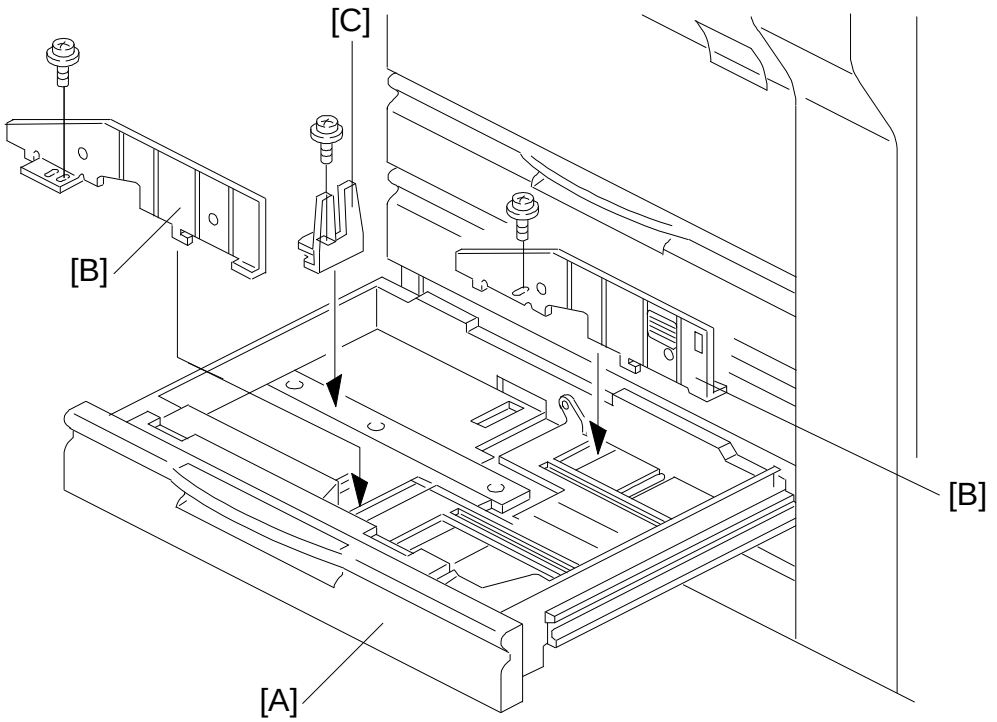

A176I522.wmf

At the factory, all paper cassettes are set as A4 sideways. According to the customer's request, change the paper size as follows.

2.5.1 550 Sheets Paper Tray

1. Draw out the paper feed tray [A].
2. Change the position of the front and the rear side fences [B] (2 screws each) and end fence [C] (one screw) according to the paper size.
3. Stick a size decal on the tray.

4. Enter SP mode as follows:
   1) Press the mode clear key.
   2) Enter "107".
   3) Press the clear/stop key more than 3 seconds.

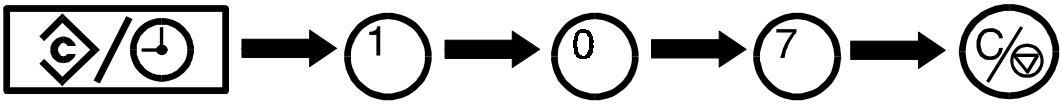

5. Press the "SP Special Feature" key [A].

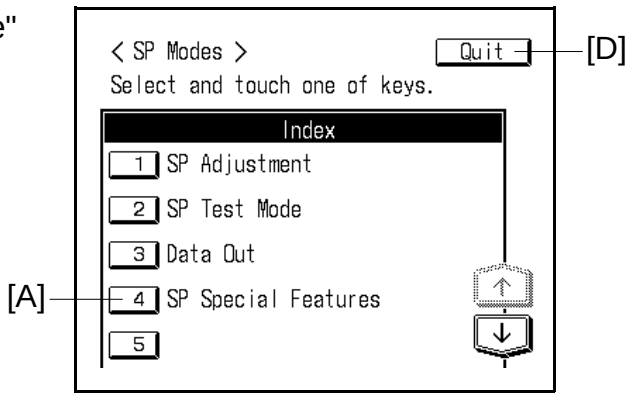

A176I515.img

6. Press the "Next" key [B] 6 or 7 times to select the paper tray size setting mode (page 7 or 8) and press the appropriate paper size key of the appropriate feed station.

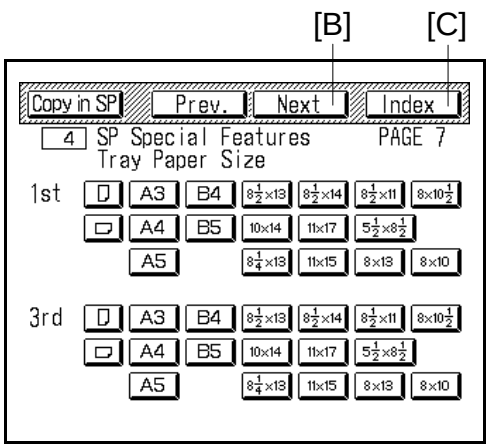

A176I523.img

7. Press the "Index" key [C].
8. Press the "Quit" key [D] to exit SP mode.
9. Check copy quality and machine operation.

2.5.2 1,500 Sheets Paper Tray

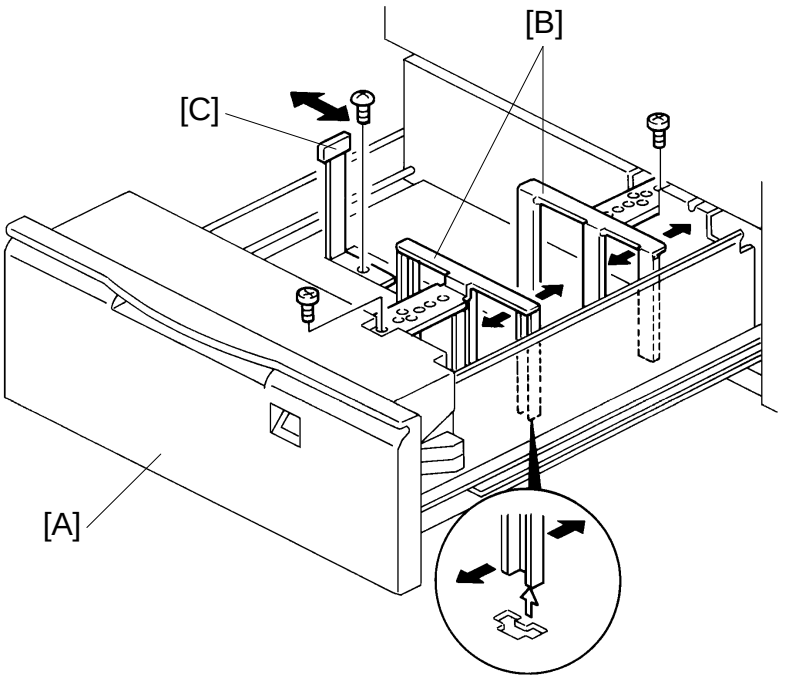

A176I524.img

1. Draw out the third feed tray [A].
2. Change the position of the front and the rear side fences [B] (1 screw each) and the end fence [C] (one screw) according to the paper size.
3. Perform steps 3 to 8 from the previous page.

2.6 KEY COUNTER HOLDER INSTALLATION (OPTION)

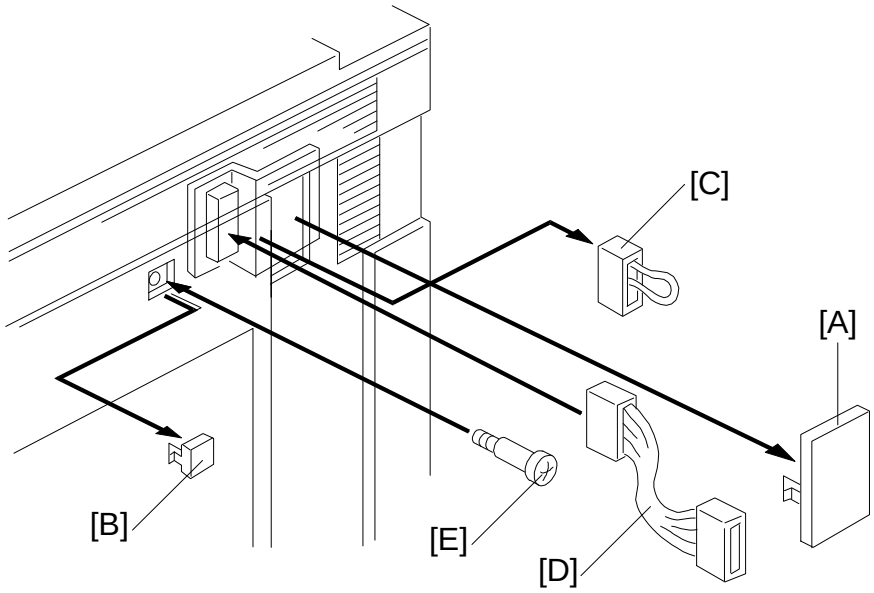

A176I525.wmf

⚠ CAUTION

Unplug the copier power cord before starting the following procedure.

NOTE: The Key Counter Bracket Set includes the following parts. The key counter holder and key counter should be procured locally.

1. Key Counter Bracket 1
2. Key Counter Plate Nut 2
3. Key Counter Cover 1
4. Accessory Harness 1
5. Screws 4
6. Stepped Screw 1

1. Remove the two plastic caps [A] and [B] on the right upper cover of the copier.
2. Replace the short-circuit connector [C] with the connector of the accessory harness [D].
3. Install the stepped screw [E].

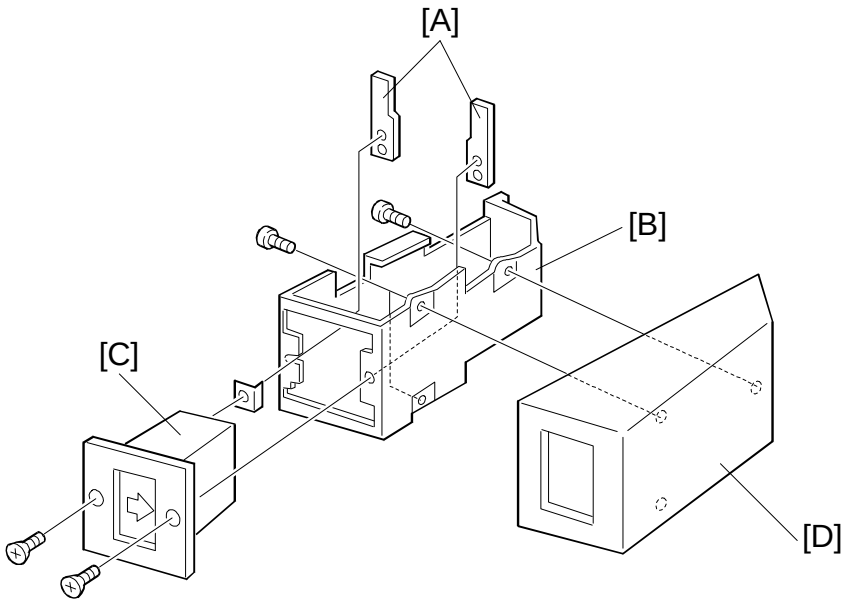

A176I526.wmf

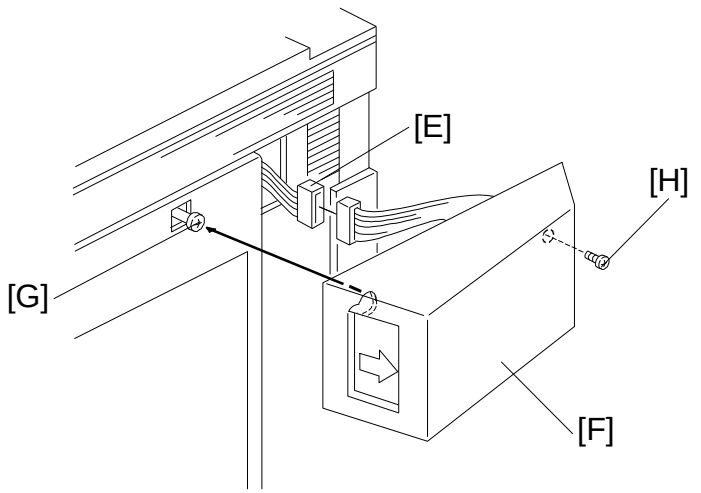

A176I527.wmf

4. Hold the key counter plate nuts [A] on the inside of the key counter bracket [B] and insert the key counter holder [C].
5. Fix the key counter holder [C] to the bracket [B] (2 screws).
6. Install the key counter cover [D] (2 screws).
7. Connect the connector [E] of the key counter holder.
8. Hook the key counter holder assembly [F] to the stepped screw [G].
9. Secure the key counter holder assembly [F] with a screw [H].

2.7 IMAGE DENSITY ADJUSTMENT

The copy image density is already adjusted to the standard level at the factory. If a customer requests to have the image density adjusted, it can be done through the User Tool mode.

1. Enter the User Tool mode as follows:
   1) Press the clear mode key.
   2) Press the clear/stop key more than 3 seconds.

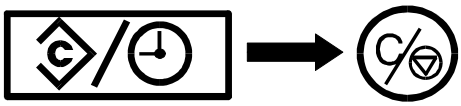

2. Press the "Set operation modes" key [A].

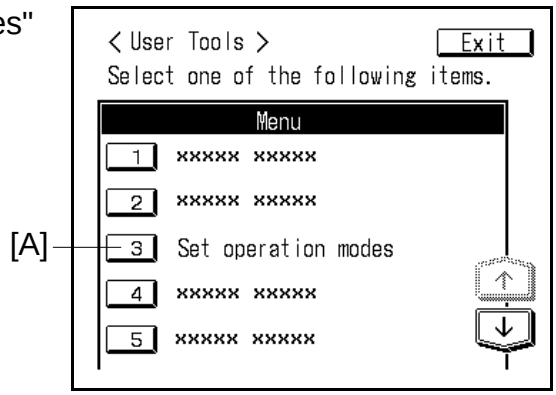

A176I528.img

3. Press the "Next" key once [B].

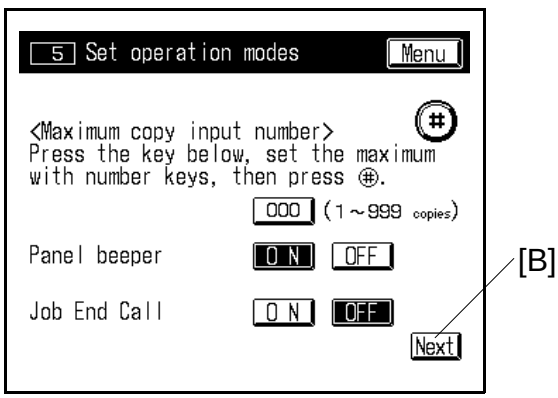

A176I529.img

4. Select appropriate Image Density level (5 steps) adjustment:
   1) Press appropriate ID level key [A].
   2) Press the enter key [B].

5. Press the "Menu" key [C].

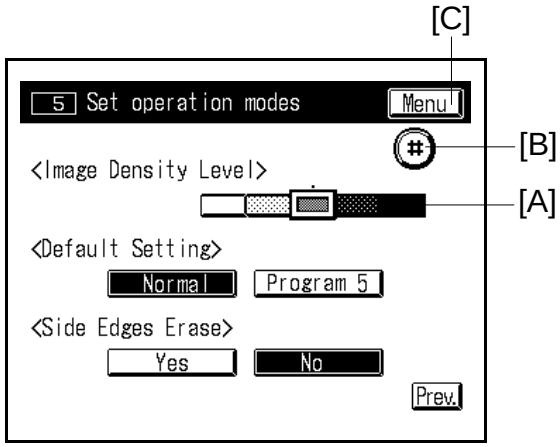

A176I530.img

6. Press the "Exit" key [D] to exit User Tools mode.

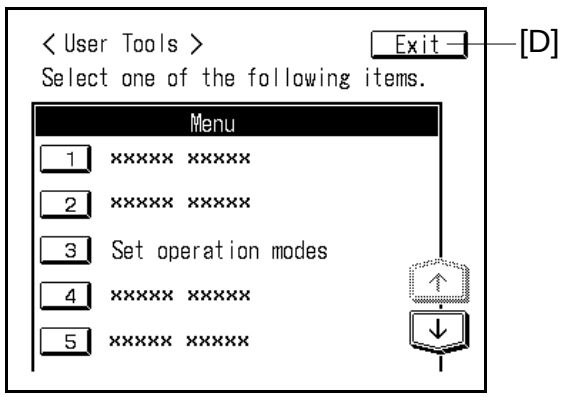

A176I528-2.img

7. Check copy quality.

3. DUAL JOB FEEDER (A610)

3.1 ACCESSORY CHECK

Check the accessories against the following list:

Description	Q'ty
1. Stepped Screw	2
2. Sponge Retainer	1
3. Philips Pan Head Screw with Washer - M5 x 10	2
4. Hinge Stopper Bracket	2
5. Philips Pan Head Screw - M4 x 6	2
6. Feed-out Guide Mylar	1
7. Decal	1

3.2 INSTALLATION PROCEDURE

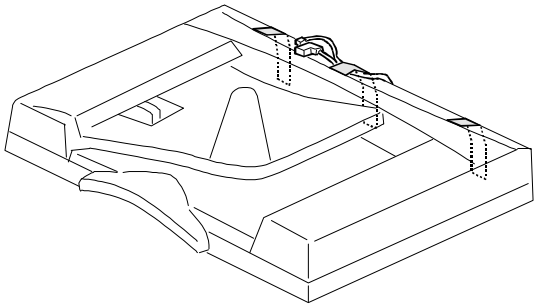

A610I500.wmf

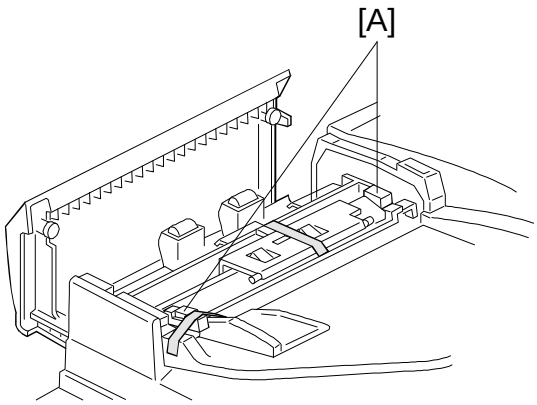

A610I501.wmf

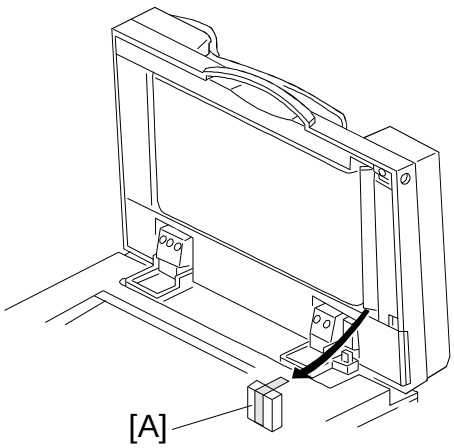

A610I502.wmf

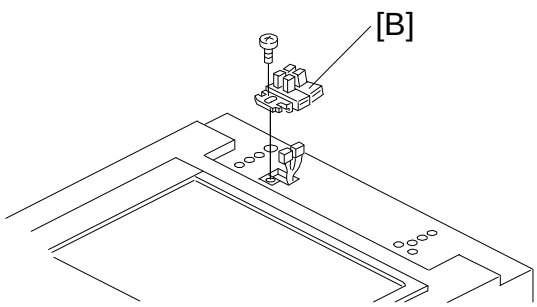

A610I510.wmf

⚠ CAUTION

Unplug the copier power cord before starting the following procedure.

1. Remove the tape strips and the cushions [A] as shown.
2. Remove the sensor [B], if installed (1 screw).

NOTE: Sensor [B] is not installed with the copier. It is an accessory of the platen cover (option).

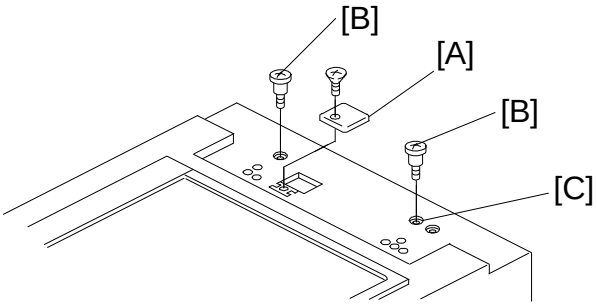

A610I511.wmf

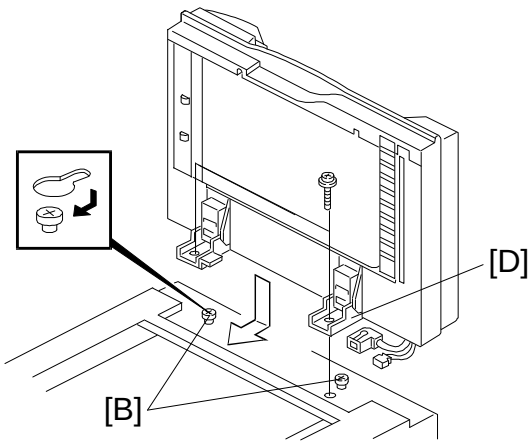

A610I512.wmf

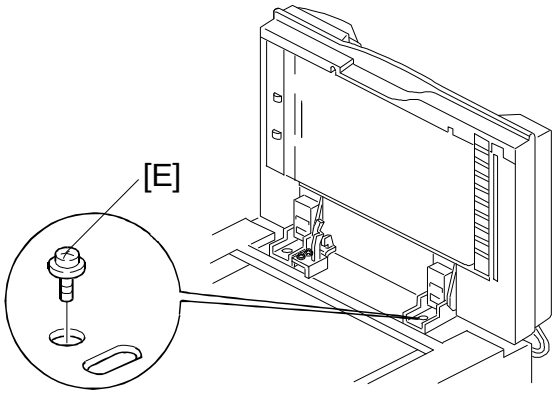

A610I513.wmf

3. Install the cover [A] with the screw (if necessary). The cover and screw are supplied as an accessory with the copier.
4. Install two stepped screws [B].

   NOTE: There is one screw hole on the left side for the stepped screw. However, there are two screw holes on the right where the stepped screw is to be installed. Install the stepped screw into the inner screw hole [C], as shown in the illustration.
5. Mount the DF to the copier [B] by inserting the screws into the holes of the DF hinge [D], then slide the DF to the front as shown.
6. Secure the DF to the copier by using the screw hole as shown (2 screws - M 5 x 10 [E]).

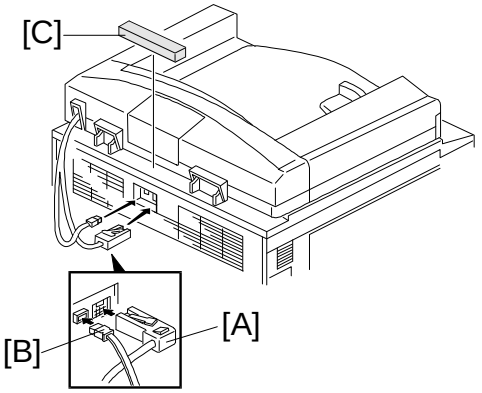

A610I514.wmf

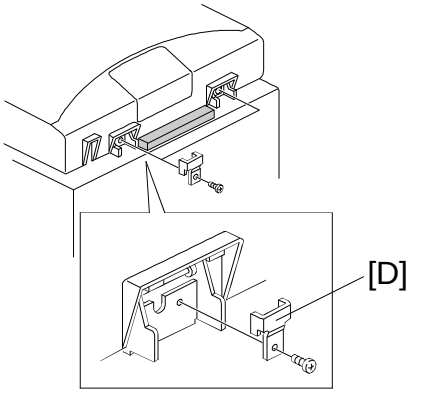

A610I507.wmf

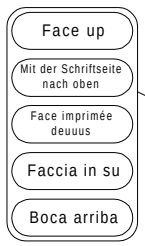

A610I515.wmf

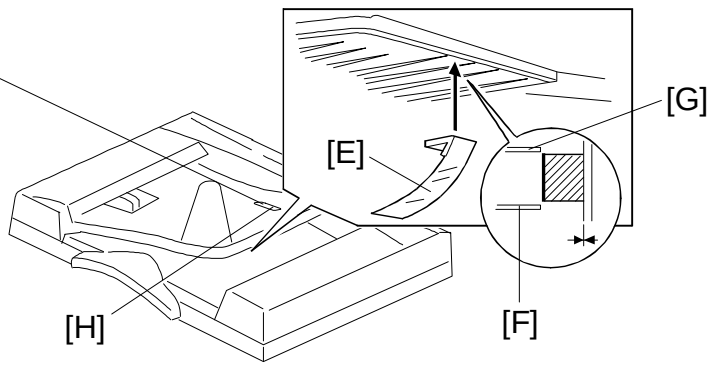

A610I508.wmf

7. Remove the small cap on the upper rear cover, then connect the main connector [A] and the fiber optic cable connector [B].

⚠ CAUTION

When connecting the fiber optic cable, make sure to mount it over the main connector to prevent it from being bent.

8. Attach the sponge retainer [C] to the top cover as shown.
9. Secure the hinge stopper bracket [D], as shown (2 screws - M4 x 6).
10. Attach the feed-out guide mylar [E] under the original table. Attach it between the 3rd [F] and 4th [G] ribs (counting from the rear).
11. Apply appropriate decal at [H].
12. Plug in the copier and turn on the main switch.

    NOTE: The copier automatically recognizes that the DF has been installed.
13. Make copies using the DF and confirm the machine functions properly.
14. Explain to the customer that some settings may now be changed, according to the characteristics of each original.

4. SORTER STAPLER (A606)

4.1 ACCESSORY CHECK

Check the contents of the box according to the following list.

Description	Q'ty
1. Front connection Bracket	1
2. Rear Connecting Bracket	1
3. Cushion	1
4. Entrance Guide Mylar	1
5. Proof Tray	1
6. Caster Stopper	2
7. Relay Guide	1
8. Philips Pan Head Screw - M4 x 12	4
9. Philips Pan Head Screw - M4 x 6	4
10. Punch Position Decal (Punch version only)	1

4.2 INSTALLATION PROCEDURE

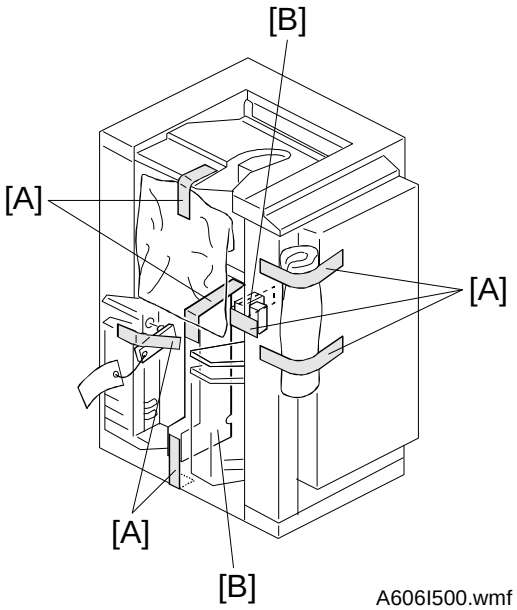

A606I500.wmf

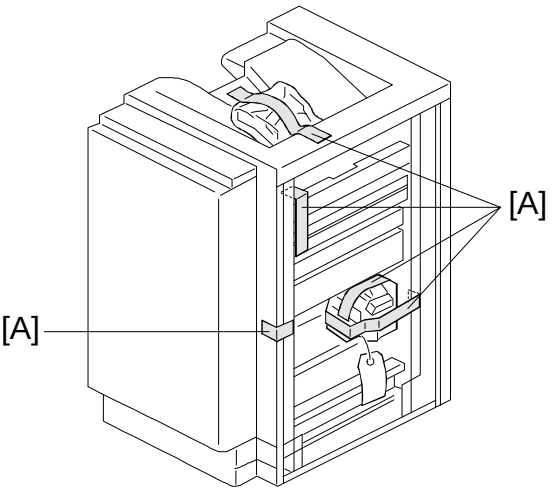

A606I501.wmf

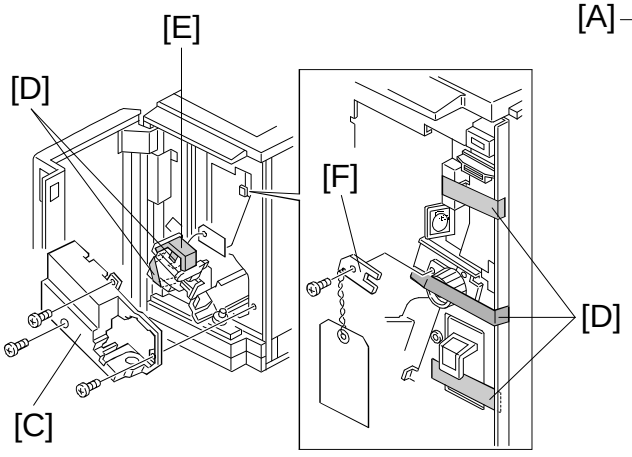

A606I502.wmf

⚠ CAUTION

Unplug the copier power cord before starting the following procedure.

1. Remove the strips of tape [A] and the cushions [B].
2. Open the front door and remove the inner cover [C] (3 screws).
3. Remove the strips of tape [D] and remove the cushion [E]. Then re-install the inner cover [C]. Remove the shipping retainer [F] (1 screw, punch version only).

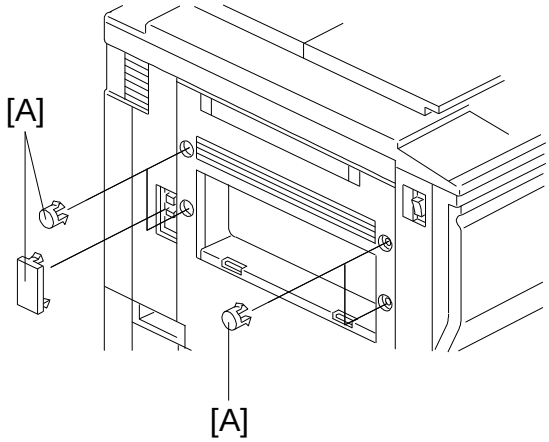

A606I503.wmf

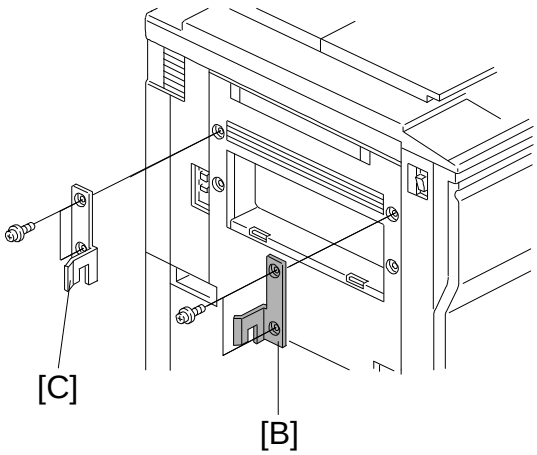

A606I504.wmf

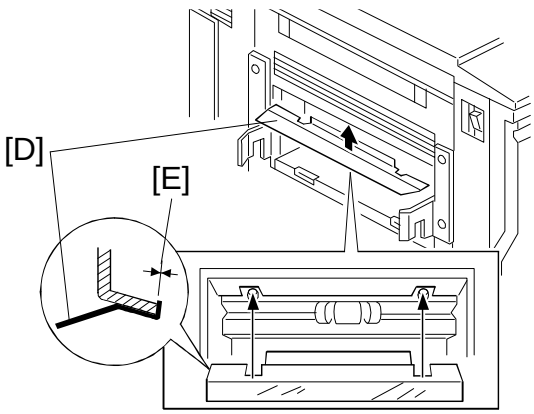

A606I505.wmf

4. Remove five plastic caps [A] on the copier's left cover.
5. Install the front connecting bracket [B] (2 screws - M4 x 12) and the rear connecting bracket [C] (2 screws - M4 x 12) on the copier.
6. Stick the entrance guide mylar [D] on the copier exit area as shown.

   NOTE: Align the edge [E] of the cover and the mylar.

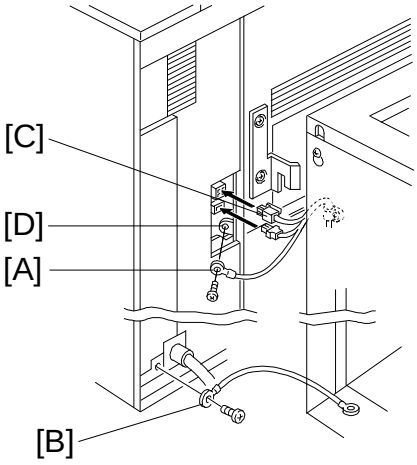

A606I506.wmf

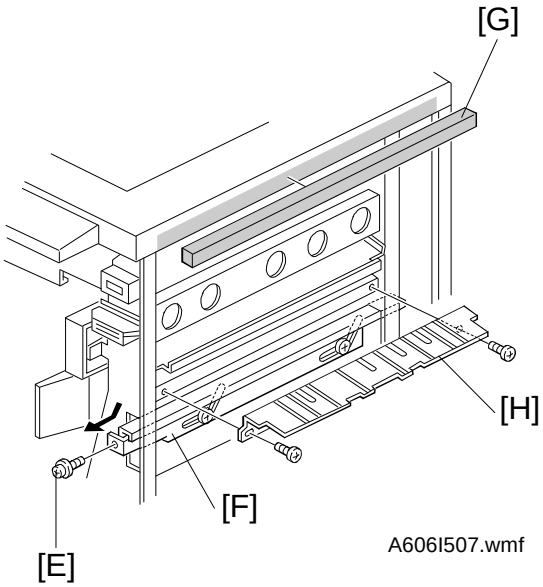

A606I507.wmf

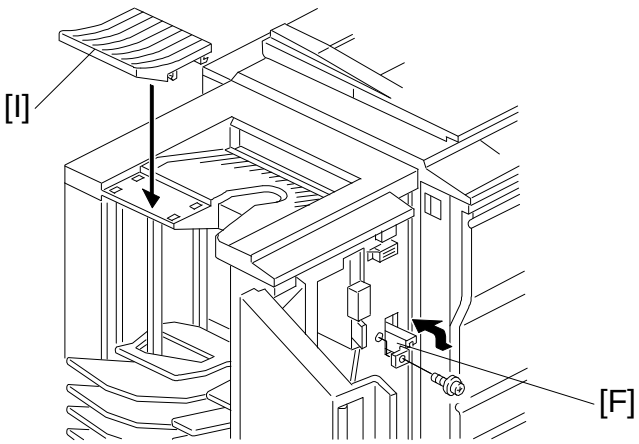

A606I508.wmf

7. Secure the protective earth wire [A]* (1 screw) and the wire [B] (1 screw).

   NOTE*: For all models other than those intended for North America, the green wire is intended as a functional earth and should be connected as shown.

8. Connect the 4P connector [C] and the fiber optic connector [D].

9. Open the front door of the sorter stapler and remove the screw [E] fixing the locking lever [F], then lower the locking lever.

10. Stick the cushion [G] on the proof tray. Install the relay guide [H] (2 screws).

11. Align and press the sorter stapler against the copier and fix them by raising the locking lever [F].

12. Secure the locking lever (1 screw).

13. Install the proof tray [I].

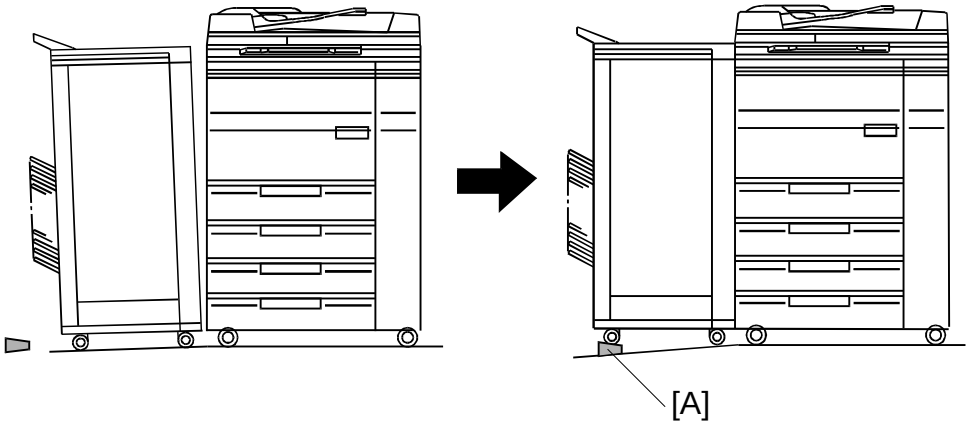

A606I509.wmf

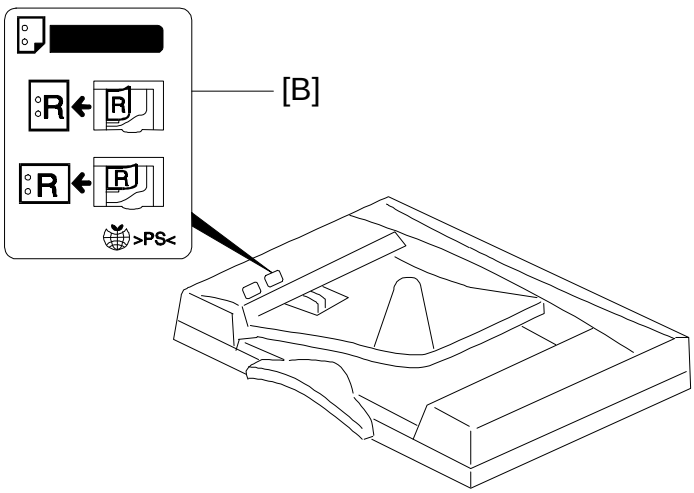

A606I510.wmf

14. If the gap between the top of the sorter stapler and the copier is too great, adjust by placing caster stoppers [A].
15. Stick the punch position decal [B] on the DF entrance cover (punch version only).
16. Plug in the copier.
17. Turn on the main switch of the copier and test the operation of the sorter stapler.

    NOTE: The copier automatically recognizes that the sorter stapler has been installed.

5. RECIRCULATING DOCUMENT HANDLER (A607)

5.1 ACCESSORY CHECK

Check the accessories in the box according to the following list:

Description	Q'ty
1. Switch Actuator	1
2. Hinge Stopper	2
3. Shoulder Screw (+) - M5	2
4. Shoulder Screw (+) - M5	2
5. Shoulder Screw (+) - M4	2
6. Philips Pan Head Screw - M4 x 6	2
7. Truss Screw - M4 x 6	1

5.2 INSTALLATION PROCEDURE

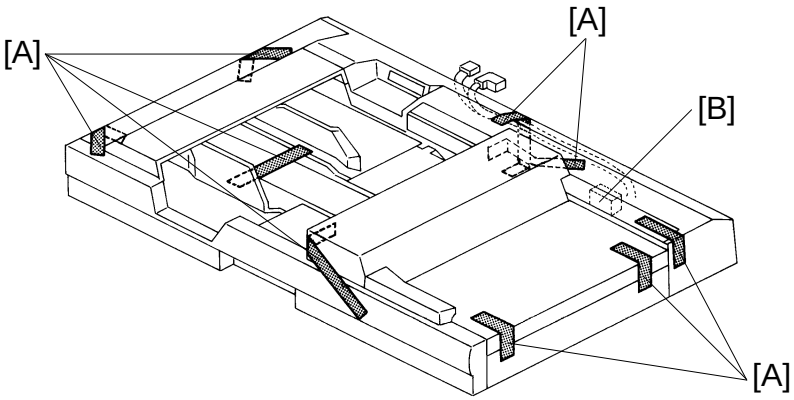

A607I500.img

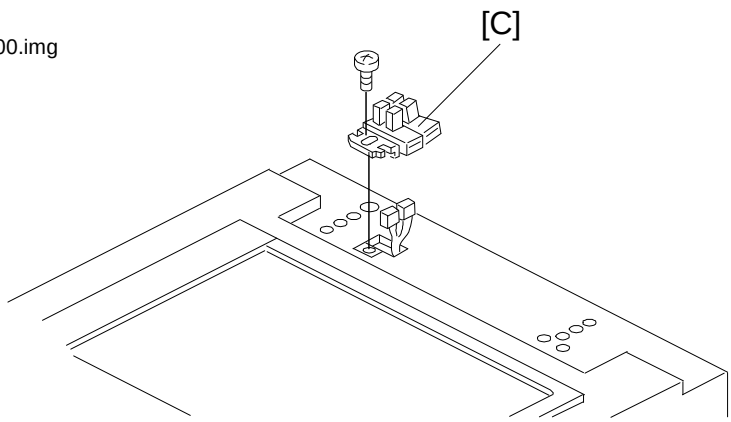

A607I501.wmf

⚠ CAUTION

When installing the Recirculating Document Handler (RDH), make sure that the copier is unplugged.

1. Remove the tape strips [A] and the cushion [B] clamping the belt unit.
2. Remove the sensor [C] from the copier (1 screw).

NOTE: Sensor [C] is not installed to the copier when it is packed in its box.
Sensor [C] is an accessory of the platen cover (option).

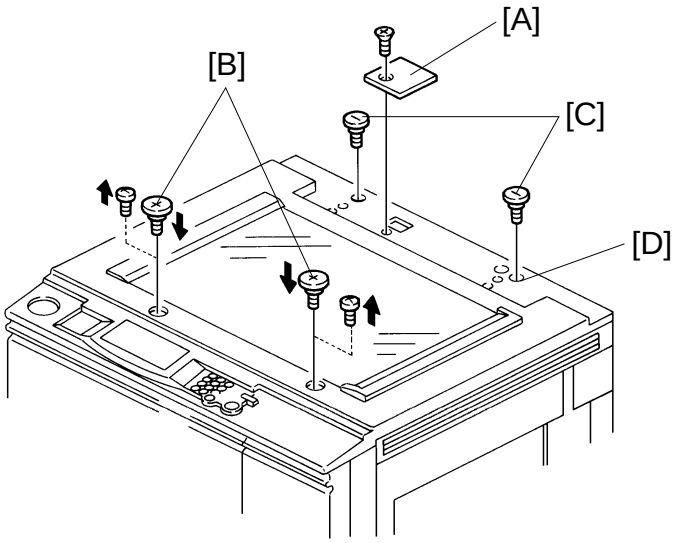

A607I502.img

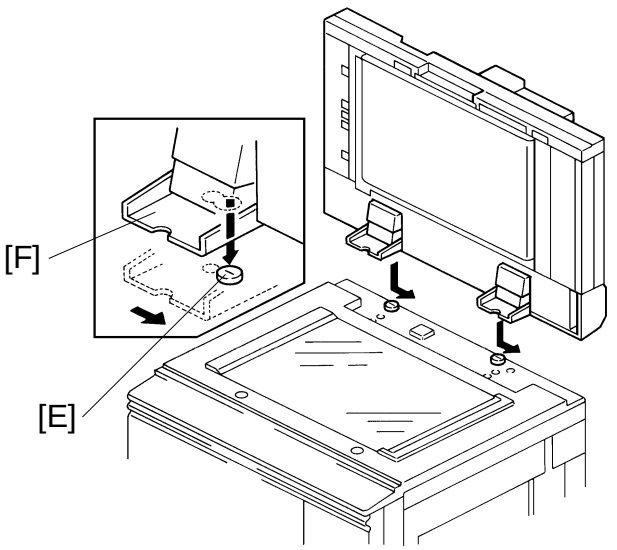

A607I503.img

3. Install the cover [A] with a screw (if necessary). The cover and screw are supplied as an accessory with the copier.
4. Replace the front two screws with M4 shoulder screws [B] and install the 6 mm collar M5 shoulder screws [C] to hook the RDH.

   NOTE: There is one screw hole available on the left side for one of the stepped screw. However there are two screw hole available on the right where the stepped screw is to be installed.
   Install the stepped screw into the outer screw hole [D] as shown in the illustration.
5. Mount the RDH to the two stepped screws [E] by aligning the holes in the RDH hinge [F] and the stepped screws, then slide the RDH to the right as shown.

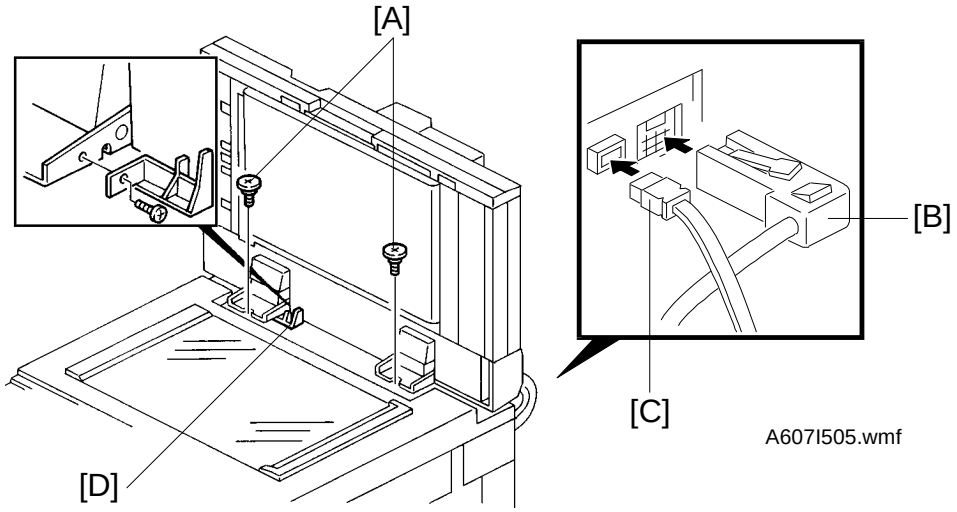

A607I505.wmf

A607I504.img

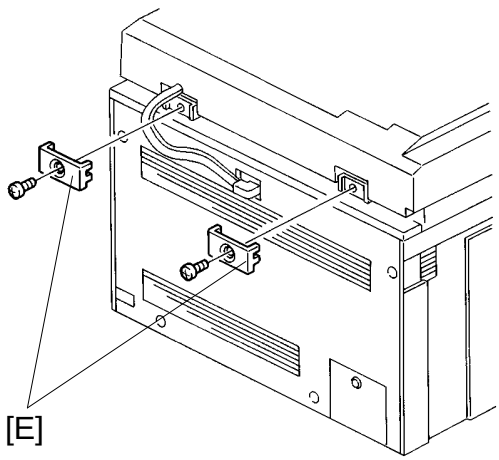

A607I506.img

6. Secure the RDH to the copier with two 2 mm collar M5 shoulder screws [A].
7. Remove a small cap on the upper rear cover of the copier then connect the connector [B] and the fiber optic cable connector [C].

⚠ CAUTION

Place the fiber optic cable [C] over the electrical cable [B] so as not to bend the fiber optic cable [C] while opening and closing the RDH.

8. Install the switch actuator [D] (1 screw).
9. Close the RDH then install the two angle stoppers [E].
10. Plug in the copier and turn on the main switch.

    NOTE: The copier automatically recognizes that the RDH has been installed.

11. Make copies using the RDH and confirm the copy image.

6. FINISHER (A608)

6.1 ACCESSORY CHECK

Check the accessories in the box according to the following list.

Description	Q'ty
1. Front Connecting Bracket	1
2. Rear Connecting Bracket	1
3. Relay Guide	1
4. Entrance Guide	1
5. Shift Tray	1
6. Cushion - 5 x 10 x 345	1
7. Cushion - 5 x 10 x 125	1
8. Cushion - 5 x 10 x 637	1
9. Philips Truss Head Screw - M4 x 8	4
10. Philips Pan Head Screw - M4 x 12	4
11. Philips Pan Head Screw - M4 x 6	4
12. Caster Stopper	2

6.2 INSTALLATION PROCEDURE

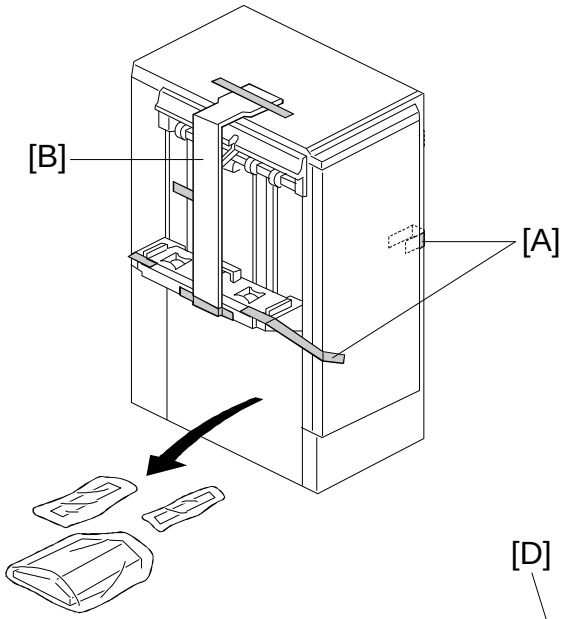

A608I500.wmf

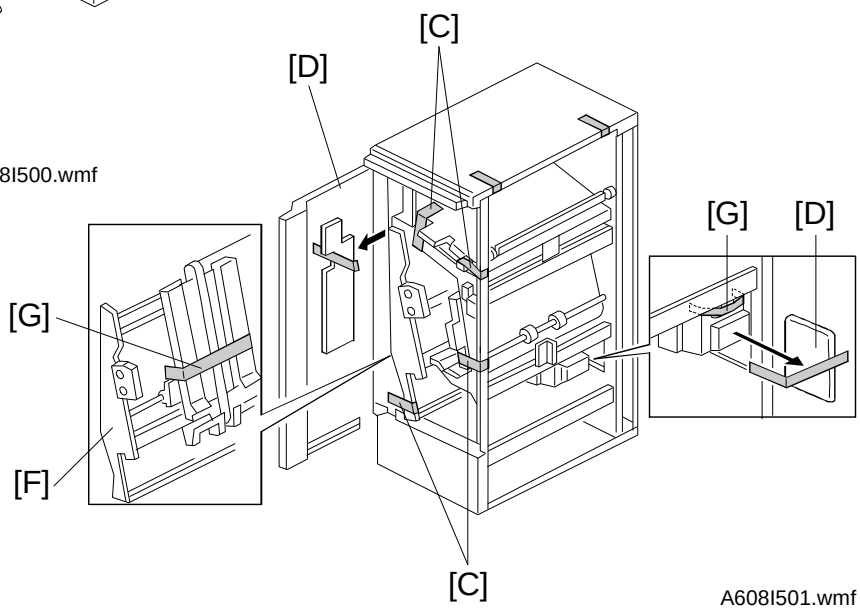

A608I501.wmf

⚠ CAUTION

Unplug the power cord before beginning the following procedure.

1. Remove the strips of tape [A] and the cushions [B].
2. Open the front door and remove the strips of tape [C] and cushions [D].
3. Extend the staple unit [F].
4. Remove the strip of tape [G].

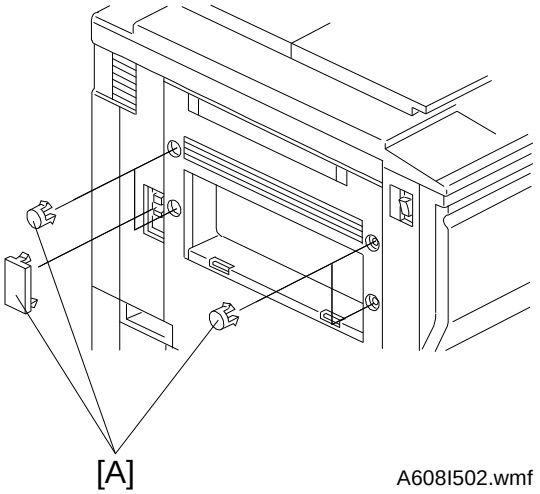

A608I502.wmf

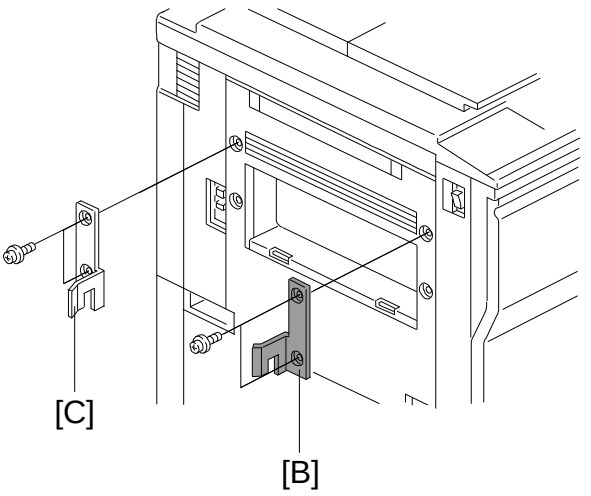

A608I503.wmf

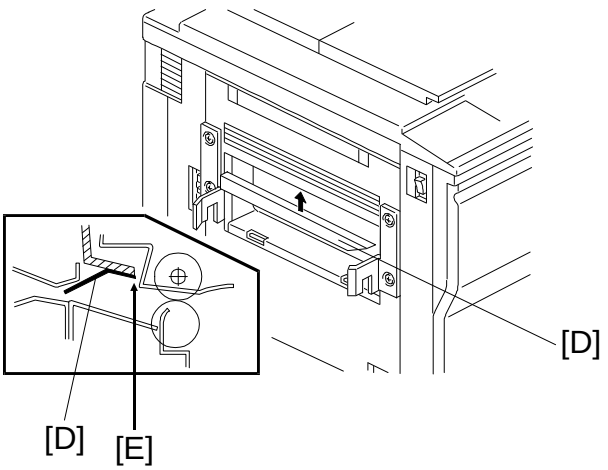

A608I504.wmf

5. Remove five plastic caps [A] on the copier's left cover.
6. Install the front connecting bracket [B] (2 screws - M4 x 12) and the rear connecting bracket [C] (2 screws - M4 x 12) on the copier.
7. Stick the entrance guide mylar [D] on the copier exit area as shown.

   NOTE: Align the edge [E] of the cover and the mylar.

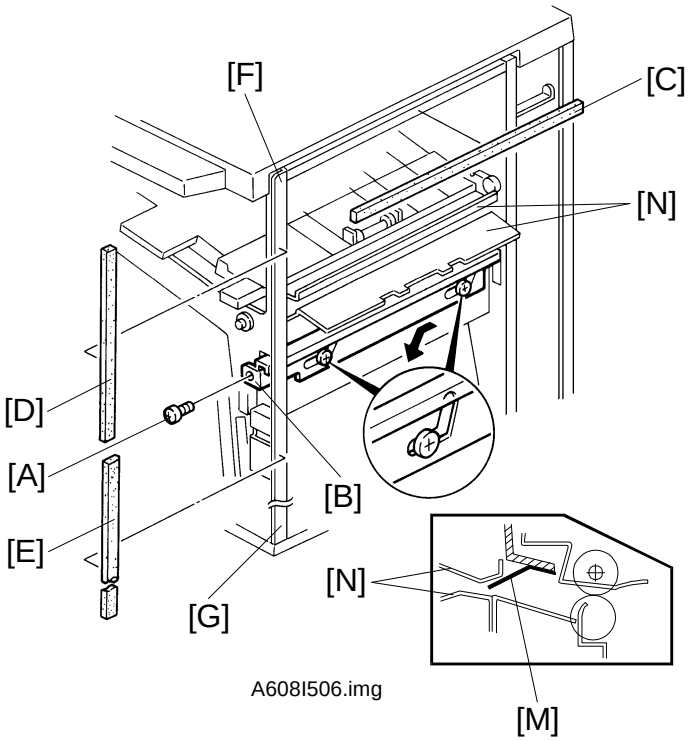

A608I506.img

A608I507.wmf

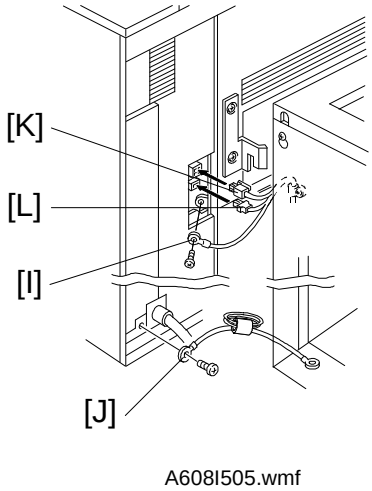

A608I505.wmf

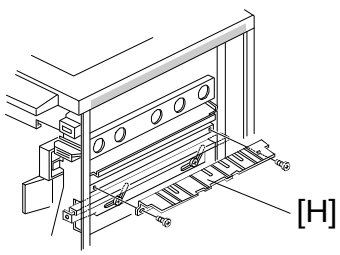

A608I510.wmf

8. Open the front door of the finisher and remove the screw [A] fixing the locking lever [B], then lower the locking lever.
9. Stick the cushions [C] (middle), [D] (short), [E] (long) as shown.

   NOTE: Stick the cushion [C] on the metal stay (not on the cover).
   Align the upper edge of the cushion [D] with the edge of the stay [F].
   Align the lower edge of the cushion [E] with the edge of the stay [G].
10. Install the relay guide [H] (2 screws).
11. Secure the protective earth wire [I]* (1 screw) and the wire [J] (1 screw).

    ***NOTE:** For all models other than those intended for North America, the green wire is meant to be used as a functional earth and should be connected as shown.
12. Connect the fiber optics connector [K] and the 4P connector [L].
13. Align and press the finisher against the copier and fix them by raising the locking lever [B].

    NOTE: At this time, confirm that the mylar [M] is located between the guides [N].
14. Secure the locking lever (1 screw).

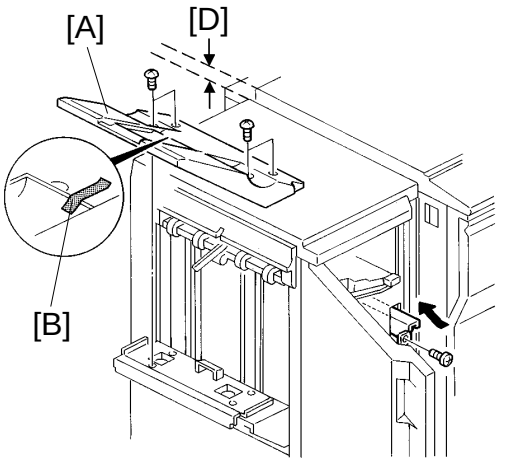

A608I508.img

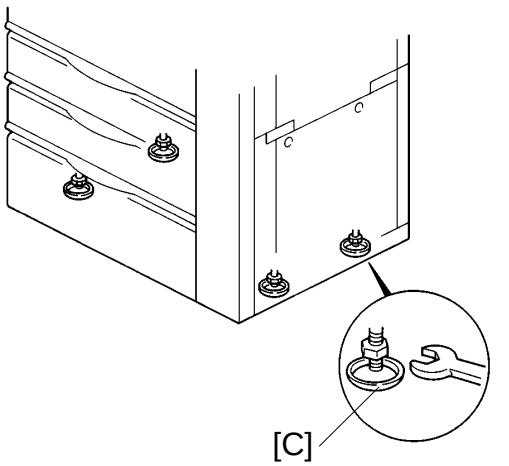

A608I509.img

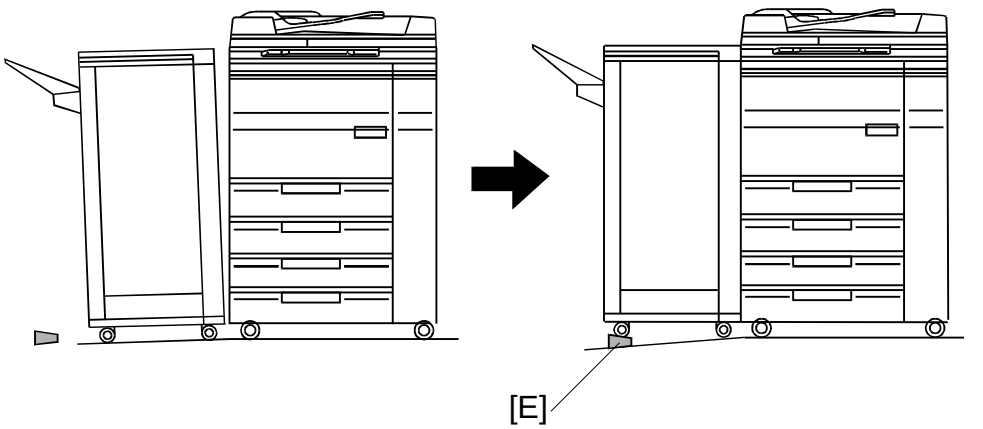

A608I511.wmf

15. Install the shift tray [A] with 4 screws - M4 x 8 (remove tape [B]).
16. Adjust the height of the copier by using the leveling foot [C] so that the difference in level between the copier [D] and the finisher will be 30 ± 1 mm.
17. To ensure grounding between the copier and finisher, insert caster stoppers [E] under the caster as shown.
18. Plug in the copier.
19. Turn on the main switch of the copier and test the operation of the finisher.

    NOTE: The copier recognizes automatically that the finisher is installed.

7. LCT (A609)

7.1 ACCESSORY CHECK

Check the accessories in the box according to the following list:

Description	Q'ty
1. LCT feed unit	1
2. Small cover - left cover	1
3. Philips pan head screw - M4 x 6	3
4. Philips pan head screw - M4 x 16	3
5. Tapping screw - M4 x 8	1

7.2 INSTALLATION PROCEDURE

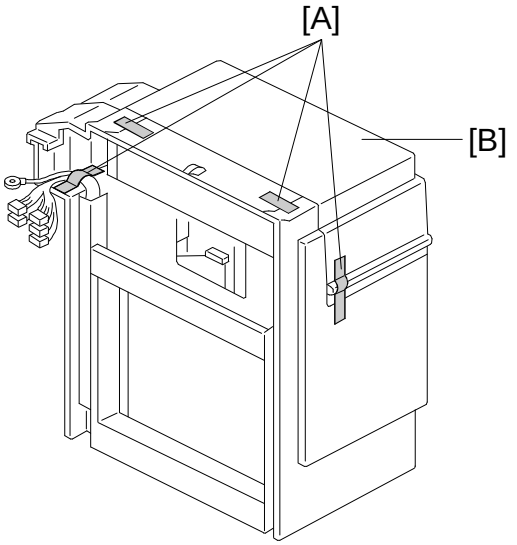

A609I500.wmf

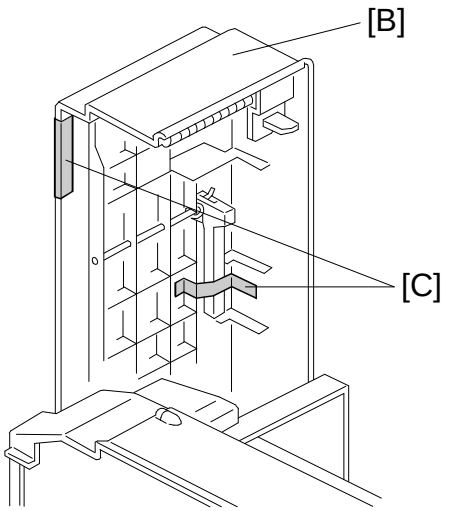

A609I501.wmf

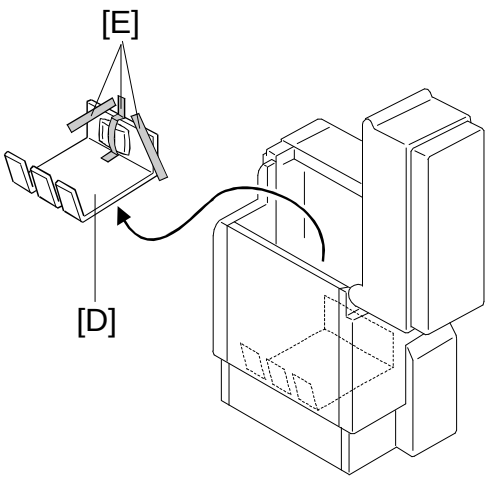

A609I502.wmf

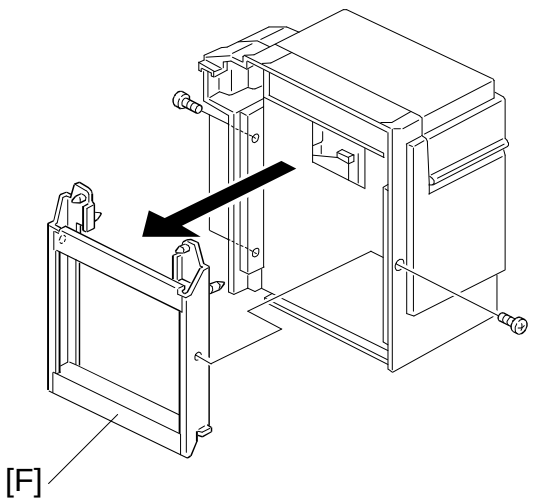

A609I503.wmf

⚠ CAUTION

Unplug the copier power cord before starting the following procedure.

1. Remove the four strips of tape [A].
2. Open the LCT cover [B] and remove the tape [C] fixing the paper trailing edge stopper.
3. Remove the tray cushion [D] secured with three strips of tape [E].
4. Remove the LCT connector [F] (3 screws).

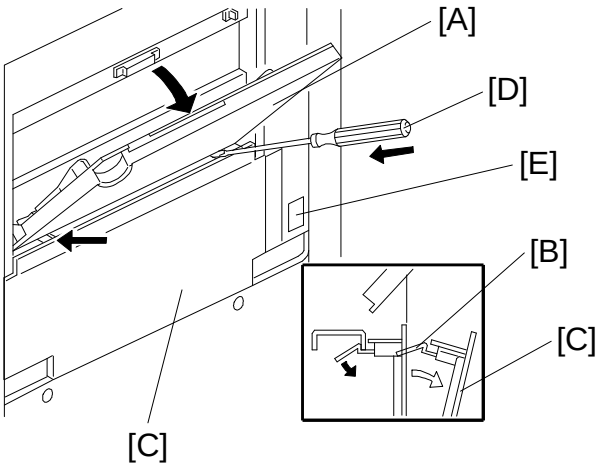

A609I504.wmf

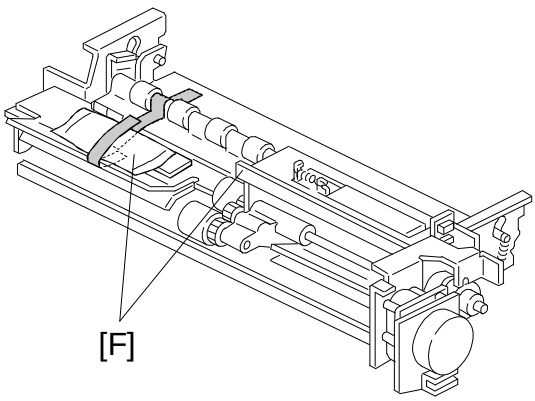

A609I505.wmf

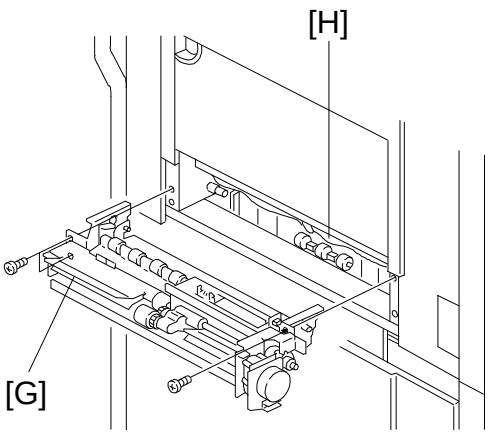

A609I506.wmf

5. Open the by-pass table [A] approximately 45 degrees and push the stoppers [B] of the feed unit cover [C] by using a small flat head screw driver [D], then remove the feed unit cover.
6. Remove the harness cover [E].
7. Remove the shipping retainers [F].
8. Install the LCT feed unit [G] to the copier (3 screws - M 4 x 6).

⚠ CAUTION

Do not pinch the harness [H] located below the by-pass table.

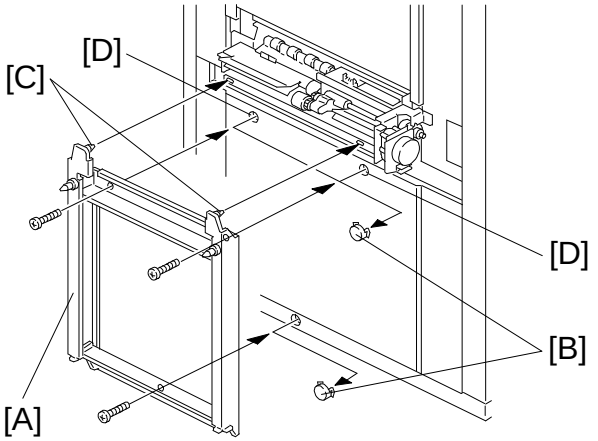

A609I507.wmf

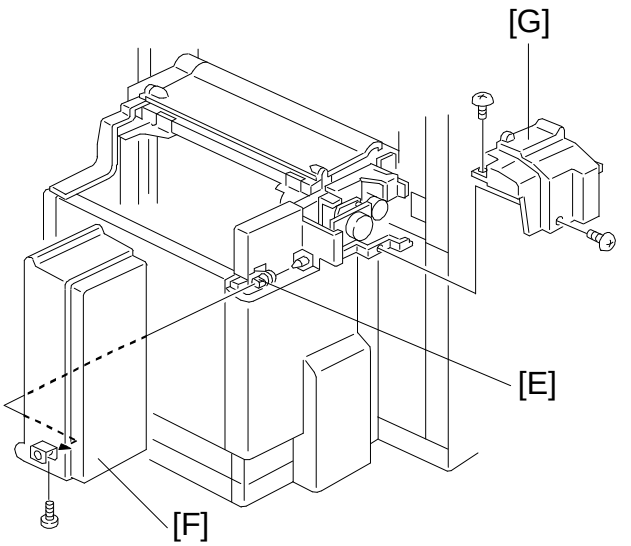

A609I508.wmf

9. Install the LCT connector [A] to the copier.
   1) Remove the three caps [B].
   2) Set the two pins [C] of the LCT connector into the two holes [D] on the LCT feed unit.
   3) Install the LCT connector to the copier (3 screws - M4 x 16).
10. Remove the screw fixing the upper cover hinge [E] then slide and remove the LCT cover [F].
11. Remove the rear upper cover [G] (2 screws).

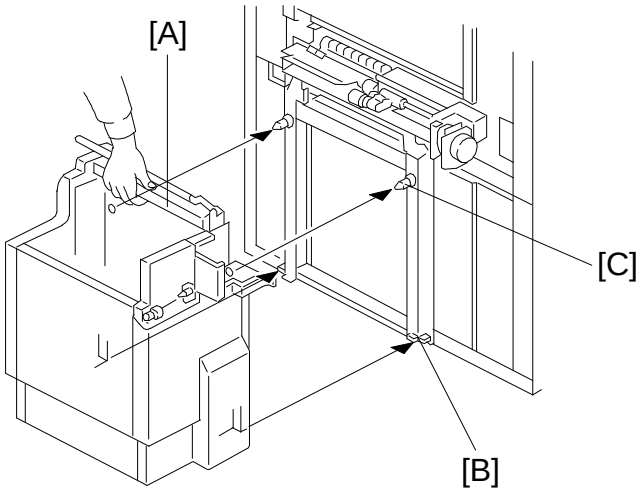

A609I509.wmf

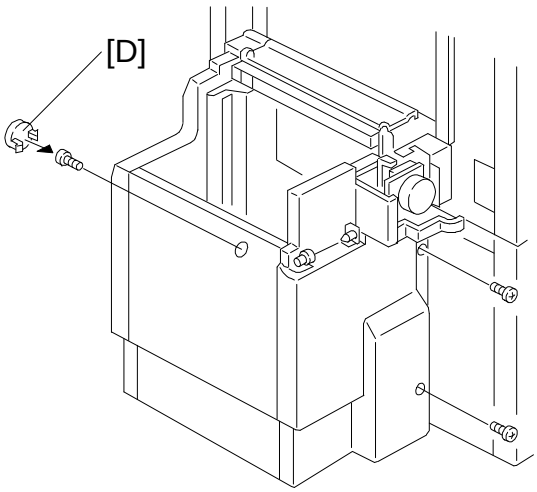

A609I510.wmf

12. Hold the upper stay [A] of the LCT and place the LCT on the plates [B] of the LCT connector.

⚠ CAUTION

Properly place the LCT on the plate [B] of the LCT connector.

13. Insert the two pins [C] on the LCT connector into the two holes on the LCT.
14. Secure the LCT to the LCT connector (3 screws - M 4 x 8).
15. Set the cap [D] in the front screw access hole.

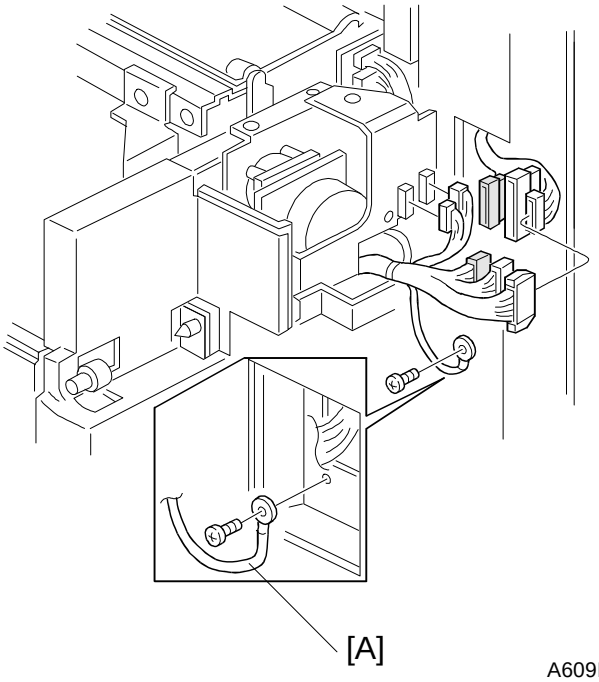

A609I511.wmf

16. Connect the connectors.
    1) Between the copier and the LCT (3 connectors).
    - 13P white
    - 13P red
    - 16P white

    2) Between the LCT and the LCT feed unit (2 connectors).
    - 10P white
    - 8P white

17. Secure the protective earth wire [A] on the copier.

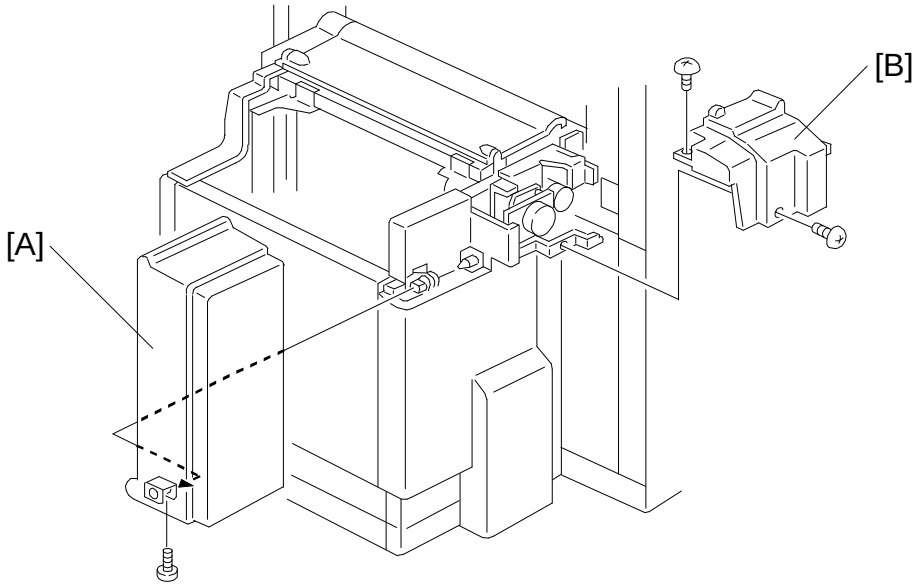

A609I512.wmf

18. Install the rear upper cover [A] (2 screws).
19. Install the LCT cover [B] (1 screw).
20. Plug in the copier and check machine operation.

NOTE: The copier automatically recognizes that the LCT has been installed.

7.2.1 PAPER SIZE CHANGE

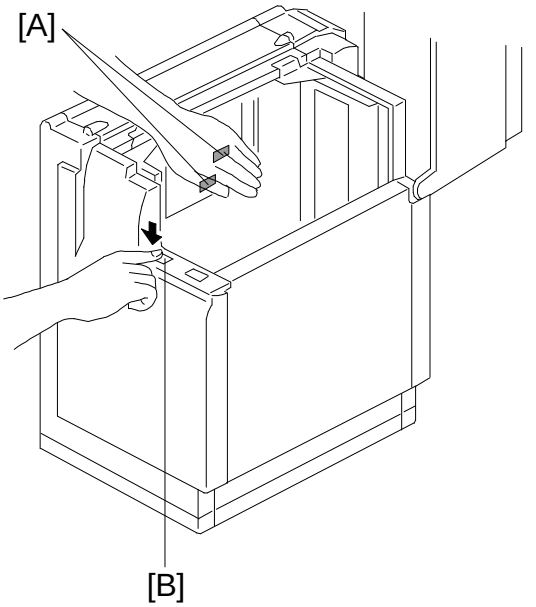

A609I513.wmf

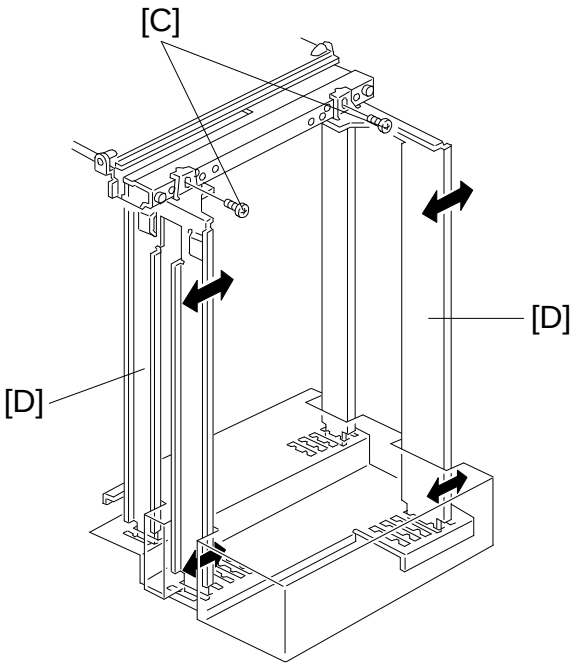

A609I514.wmf

Change the paper size, if the customer requests it.

NOTE: A4/Letter sideways is the factory setting.

1. While covering two sensors [A] with your hand, press the tray down key [B] to lower the bottom tray.
2. Remove the screws [C] fixing the front and the rear side fences [D].
3. Tilt the side fences to the right (front view) and lift to remove.
4. Position the side fences according to the paper size.
5. Fix the side plates (1 screw each).

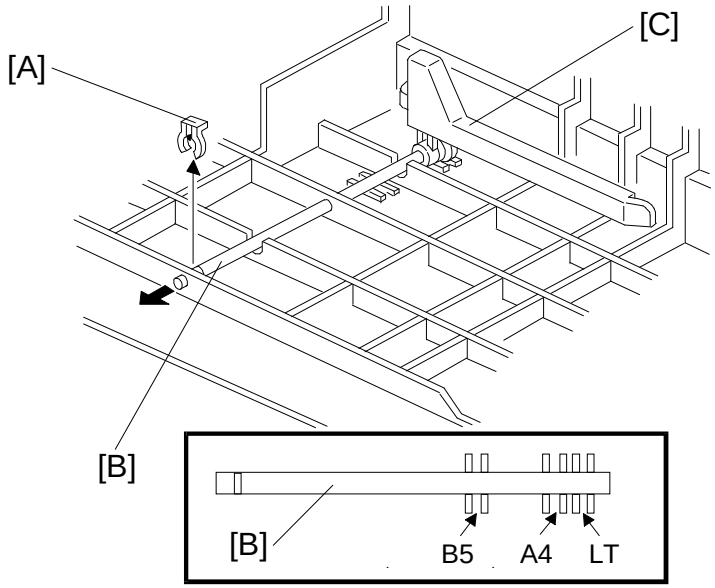

A609I515.wmf

6. Remove the clip [A] and pull out the shaft [B]. Position the paper trailing edge stopper [C] according to the paper size.
7. Re-install the shaft [B] and the clip [A].
8. Enter SP mode as follows:
   1) Press the clear mode key.
   2) Enter "107".
   3) Touch the clear/stop key for more than 3 seconds.

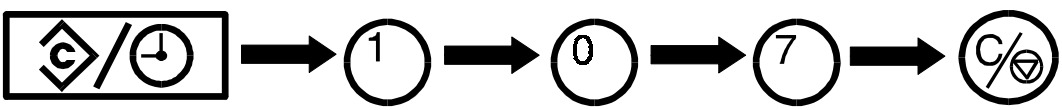

9. Touch the "SP Special Features" key [D].

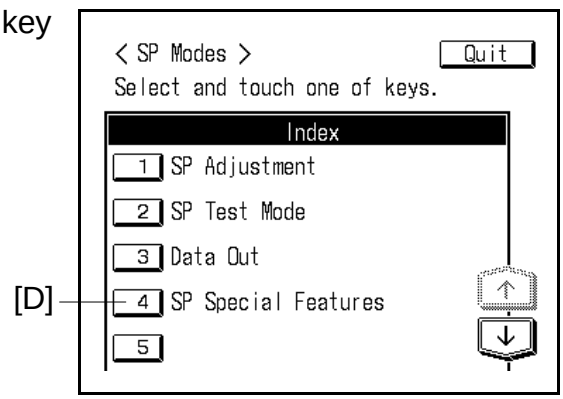

A609I516.img

10. Touch the "Next" key [A] seven times to select the paper size setting mode (page 8), then touch the appropriate paper size of "LCT" [B].
11. Touch the "Index" key [C].

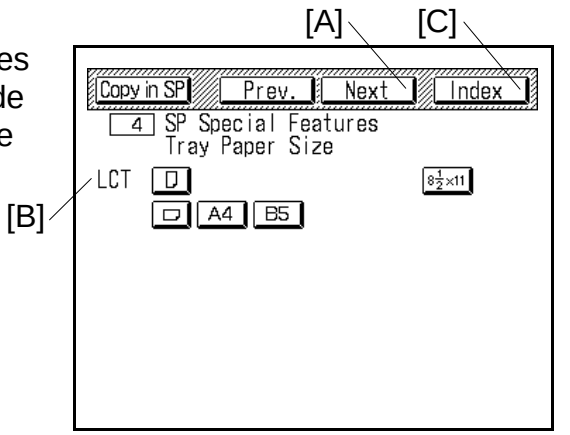

A609I517.img

12. Touch the "Quit" key [D].

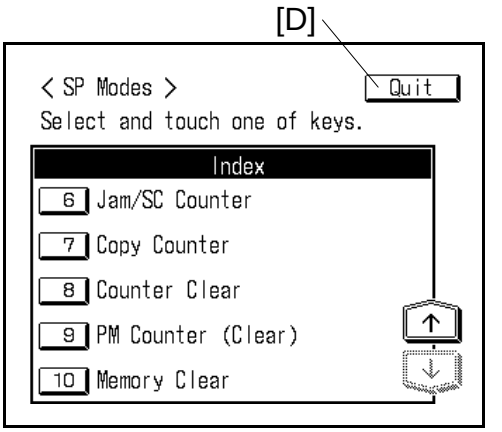

A609I518.img

13. Check the copy quality and machine operation.

SECTION 4

SERVICE TABLES

1. SERVICE REMARKS

1.1 HANDLING THE DRUM

The organic photoconductor drum is comparatively more sensitive to light and ammonia gas than a selenium drum.

1. Never expose the drum to direct sunlight.
2. Never touch the drum surface with bare hands. When the drum surface is touched with fingers or becomes dirty, wipe with a dry cloth or clean with wet cotton. Wipe with a dry cloth after cleaning with wet cotton.
3. Never use alcohol to clean the drum; alcohol dissolves the drum surface.
4. Store the drum in a cool, dry place away from heat.
5. Take care not to scratch the drum as the drum layer is thin and is easily damaged.
6. Never expose the drum to corrosive gases such as ammonia gas.
7. Always keep the drum in its protective sheet when out of the copier. Also always close the protective shutter on the drum unit when keeping the drum unit out of the copier. Doing so avoids exposing the drum to bright light or direct sunlight. This will protect the drum from light fatigue.
8. Process control data initial setting (1 SP Adjustment - PAGE 1) must be performed when a new drum is installed.

1.2 DRUM UNIT

1. Make sure that the drum unit is set in position and the drum stay is secured with a screw before the main switch is turned on. If the drum unit is loose, poor contact of the drum connectors may cause electrical noise, resulting in unexpected malfunctions (RAM data change is the worst case).
2. To prevent drum scratches, remove the development unit before removing the drum unit.

1.3 CHARGE CORONA

1. Clean the corona wires with a dry cloth. Do not use sandpaper or solvent.
2. Clean the charge corona casing with water first to remove NOX based compounds. Then clean it with alcohol if any toner still remains on the casing.
3. Clean the end blocks with a blower brush first to remove toner and paper dust. Then clean with alcohol if any toner still remains.
4. Do not touch the corona wires with bare hands. Oil stains may cause white bands on copies.
5. Make sure that the corona wires are correctly positioned between the cleaner pads and that there is no foreign material (iron filings, etc.) on the casing.
6. When installing new corona wires, do not bend or scratch the wire surface to avoid any uneven charge. Also be sure that the corona wires are correctly positioned in the end blocks. (See charge corona wire replacement.)
7. Clean the charge grid plate with a blower bush (not with a cloth).
8. Do not touch the charge grid plate with bare hands. Also, do not bend the charge grid plate or make any dent in it. Doing so may cause uneven charge.

1.4 OPTICS

1. When installing the exposure glass, make sure that the white mark on the edge of the glass faces up. This side has received special treatment to make it smoother and generate less static electricity.
2. When moving the 1st or 2nd scanners, always hold them at the center. Move them slowly, carefully, and gently.
3. Do not bend or crease the exposure lamp flat cable.
4. Do not touch the following parts with bare hands:
   a) Reflectors
   b) Exposure lamp
   c) Mirrors and lens
   d) V_D, ADS, and V_L patterns

5. To clean the mirrors and lens, use only a clean soft cloth dampened with alcohol or water.
6. Do not turn the vertical lamp position adjusting cam. Adjusting the vertical lamp position is very difficult because the filament cannot be seen clearly as the lamp is frosted.
7. The mirror surface with the reflective coating must face the light path. The spring plates must contact the reverse side of the mirror (the side without the reflective coating).
8. Because the toner shielding filter is coated with an anti-static solution (which is removed when wiped with water or alcohol) clean the toner shielding filter very gently to avoid generating static electricity, and wipe with a dry cloth.

1.5 ERASE LAMP

1. A narrower lead edge erase margin increases the possibility of fusing jams. The margin should be at least 1.0 mm.
2. After cleaning the erase lamp unit, rub it gently with your finger to discharge any static electricity on the unit surface.
3. Use only a dry cloth to clean the potential sensor.

1.6 DEVELOPMENT UNIT

1. Be careful not to nick or scratch the development roller sleeves.
2. Place the development unit on a sheet of paper after removing it from the copier. This prevents any small metal objects (staples, clips, E-rings, etc.) from being attracted to the development roller and getting inside the unit.
3. Be careful not to bend the terminals on the rear side.
4. Clean the drive gears after removing the used developer.
5. Never load different types of developer or toner into the development unit. Doing so will cause poor copy quality and toner scattering inside the copier.
6. Developer initial setting is necessary when new developer is loaded.
   Do not perform the developer initial setting with used developer.
   Do not make any copy before initial setting.
7. When removing the development unit, push it to the right to prevent the drum from being scratched by part of the development unit.
8. The doctor gap and the development roller position must not be adjusted in the field as they are precisely adjusted at the factory using special tools. Do not loosen any screws covered with white paint.
9. Before pulling out the development unit, disconnect two connectors.
10. When pulling out the development unit, do not pull the knob.
11. When setting the development unit in the machine, do not forget to connect the two connectors.

1.7 TRANSFER BELT UNIT

1. Do not touch the transfer belt with bare hands.
2. When servicing the transfer belt cleaning unit, be careful not to damage the edge of the cleaning blade.
3. Apply setting powder or toner to the new cleaning blade.

1.8 CLEANING SECTION

1. When servicing the cleaning section, be careful not to damage the edge of the cleaning blade.
2. Do not touch the cleaning brush with bare hands.

3. Before disassembling the cleaning section, place a sheet of paper under it to catch any toner falling from it.
4. Empty the used toner collection bottle at every PM.
5. Apply setting powder to the new cleaning blade.

1.9 PRE-TRANSFER LAMP

1. After cleaning the pre-transfer lamp filter, rub it gently with your finger to discharge any static electricity on the filter.

1.10 PAPER FEED

1. Do not touch the pick-up, feed, and separation rollers and the friction pads with bare hands.
2. The side fences and the rear fence of the paper trays should be positioned correctly to align with the actual paper size. Otherwise, paper misfeeds may occur.
3. Be careful when reinstalling the paper feed (pick-up, feed, separation) rollers in the paper tray unit. They are not interchangeable with the feed rollers of the by-pass feed tray and 3.5 k LCT because the feeding direction is different.
4. When actuating the front door safety switch to check the machine operation while the front doors are open, also actuate the lower front door safety switch. Otherwise, the paper feed motor does not activate, causing SC501.

1.11 FUSING UNIT

1. Be careful not to damage the edges of the hot roller strippers or their tension springs.
2. Do not touch the fusing lamp with bare hands.
3. Make sure that the fusing lamp is positioned correctly (the green connector must be at the rear) and that it does not touch the inner surface of the hot roller.
4. Level the oil supply roller while it is stored, otherwise the silicone oil in the oil supply roller comes out from the lower part.

2. SERVICE PROGRAM MODE

2.1 SERVICE PROGRAM MODE OPERATION

The service program (SP) mode is used to check electrical data, change modes, and adjust values.

2.1.1 Service Program Access Procedure

1. Press the clear modes key.
2. Enter "107".
3. Hold down the clear/stop key for more than 3 seconds until the service program menu appears on the touch panel display.

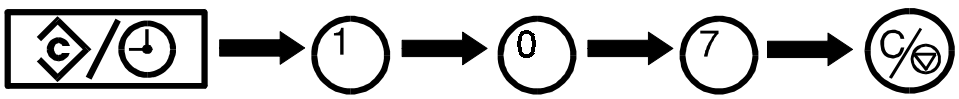

4. Touch a number [A] on the display to access the desired function.
   This copier has 9 service program modes (mode [5] is not used).
   Only 5 service program modes are visible on the touch panel display at one time.
   Use the down key [B] or the up key [C] to see other service program mode menus.

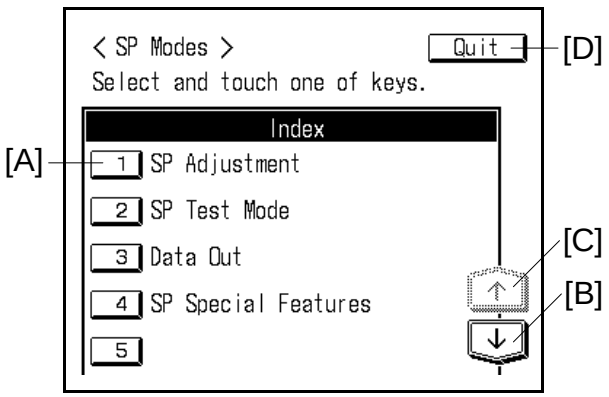

A175M500.img

2.1.2 To Exit SP Mode

1. Touch the [Quit] key [D].

2.1.3 To Return to the Index Menu

1. Return to the index menu by touching Index [A] on the display.

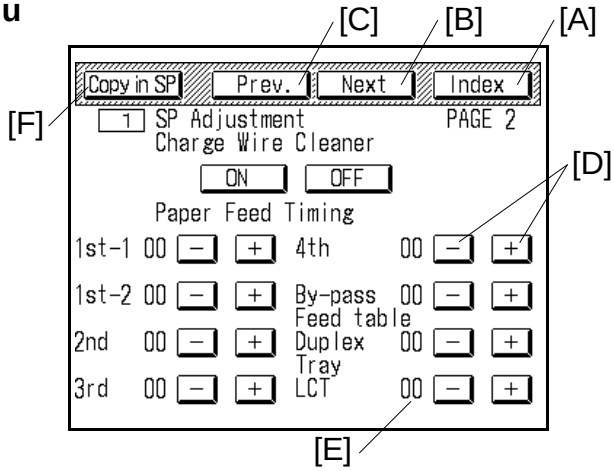

A176M501.img

2.1.4 Change the Menu Screen

1. To move to the next page, touch Next [B].
2. To move to the previous page, touch Prev. [C].

NOTE: For the adjustments for which the settings are entered by using − + [D], the default value is "00".

2.1.5 Access to "Copy in SP" Mode

1. Press Copy in SP [F] to access "Copy in SP" mode. The LCD changes as shown on the right.
2. Select the appropriate copy mode and make trial copies.
3. Return to the SP mode by pressing SP mode [G].

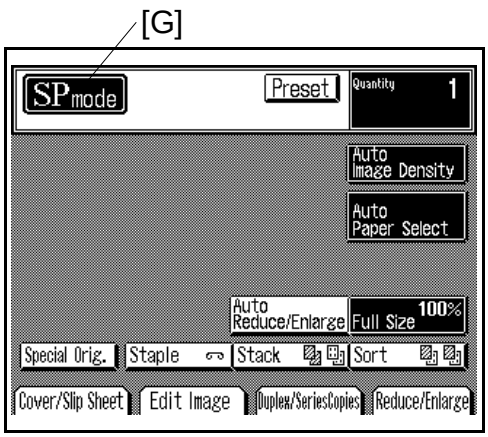

A176M502.img

Service Tables

2.2 SERVICE PROGRAM MODE TABLE

1 SP ADJUSTMENT

PAGE 1

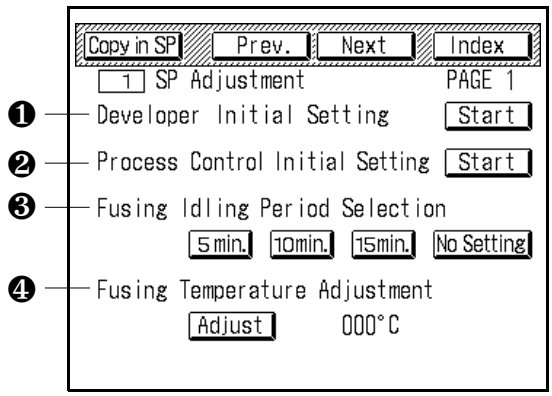

A176M503.img

Item	Function	Note
❶	Both the TD sensor toner supply target voltage (VREF) and the TD sensor gain value are set automatically by using new developer.	With new developer, do not make any copy before performing the developer initial setting. This mode is required when new developer is installed or the TD sensor is replaced.
❷	Starts the process control data initial setting.	Perform this program when the following parts have been replaced (or cleaned). Drum potential sensor/ Exposure lamp/Drum/ Charge corona wire and casing/ Mirrors/Lamps around the drum/ Charge P.P./RAM etc.
❸	Increases the period to sufficiently heat the pressure roller at power on. **Default:** 5 min	Perform this only if poor fusing occurs just after the power is turned on.
❹	Adjusts the fusing temperature (1°C/step). Procedure: 1) Touch [Adjust] . 2) Enter the appropriate number by using the number keys. 3) Press the enter key.	Increase only when thick paper is used and poor fusing occurs. Default: 185°C

1 SP ADJUSTMENT

PAGE 2

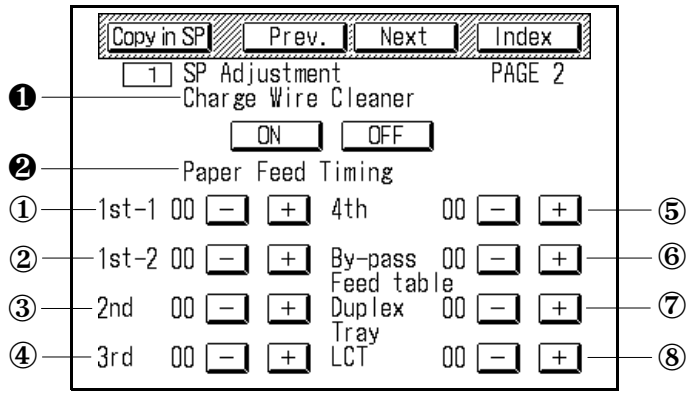

A176M501.img

Item	Function	Note
❶	Enables or disables the automatic charge corona wire cleaning mechanism. **Default:** ON	Select OFF only when a cleaning mechanism malfunction occurs.
❷	Changes the paper feed clutch on timing to adjust the paper buckle at the registration roller (1 mm/step).	Refer to "6.6 Paper Feed Timing Adjustment" in section 5. ① First paper feed clutch ON timing at the first copy ② First paper feed clutch ON timing after the first copy. ③ 2nd paper feed clutch ON timing. ④ 3rd paper feed clutch ON timing. ⑤ 4th paper feed clutch ON timing. ⑥ By-pass feed clutch ON timing. ⑦ Duplex feed clutch ON timing. ⑧ LCT feed clutch ON timing.

1 SP ADJUSTMENT

PAGE 3

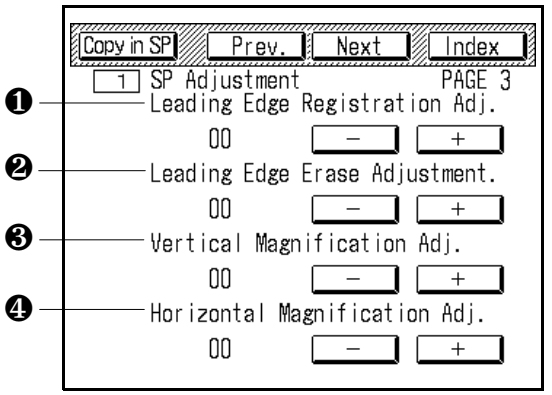

A176M504.img

PAGE 4

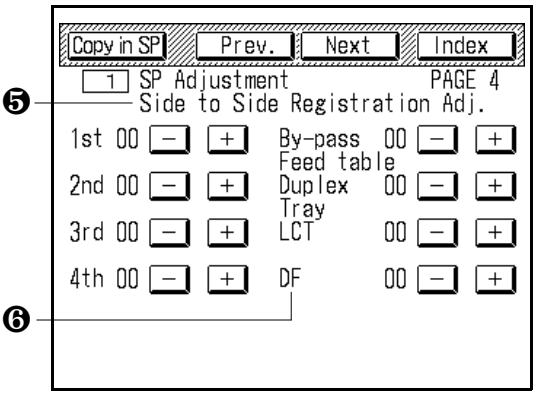

A176M505.img

Item	Function	Note
❶	Changes the ON timing of the registration clutch (0.5 mm/step).	**Adjustment standard:** 0 ± 2 mm
❷	Changes the OFF timing of the erase lamp to adjust the leading edge erase margin (0.5 mm/step).	**Adjustment standard:** 3.5 ± 2.5 mm
❸	Adjusts magnification in the paper feed direction by adjusting the scanner motor speed (0.1%/step).	Perform this adjustment when the optic control PCB has been replaced. **Adjustment standard:** 100 ± 1%
❹	Adjusts magnification perpendicular to the direction of the paper feed. The lens position in the full size mode is changed (0.1%/step).	Perform this adjustment when the optic control PCB has been replaced. **Adjustment standard:** 100 ± 1%
❺	Adjusts the lens horizontal stop position for each paper feed section (0.1 mm/step).	Refer to "8.6.2 Side-To-Side Registration Adjustment" in Section 5.
❻	Adjusts the lens horizontal stop position to compensate for variations in the side to side positioning of the original.	

1 SP ADJUSTMENT

PAGE 5

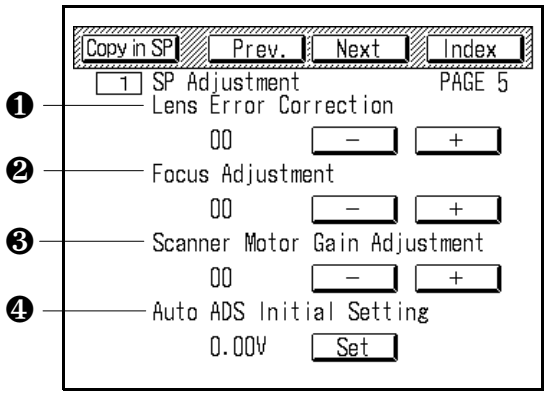

A176M506.img

PAGE 6

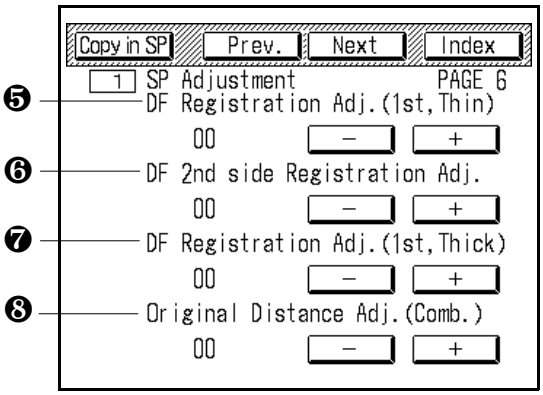

A176M507.img

Item	Function	Note
❶	Adjusts the lens position to correct magnification in enlarge/reduce modes.	Input only the value marked on the lens.
❷	Adjusts the 3rd scanner home position to correct the focus.	
❸	Factory use only	Do not change the setting.
❹	Adjusts the ADS sensor output to 2.7 ± 0.1 V while scanning the ADS pattern.	This mode is also performed during the process control data initial setting.
❺	Adjusts the original stop position (thin original mode) against the original side scale in one-sided original mode (0.5 mm/step).	Refer to page 46 of the DJF manual.
❻	Adjusts the original stop position against the original side scale in two-sided original mode (0.5 mm/step).	Refer to page 48 of the DJF manual.
❼	Adjust the original stop position (thick original mode) against the original side scale in one sided original mode (0.5 mm/stop).	
❽	Adjust the gap between the 1st original and 2nd original in combine 2 original mode (1.3 mm/step).	

1 SP ADJUSTMENT

PAGE 7

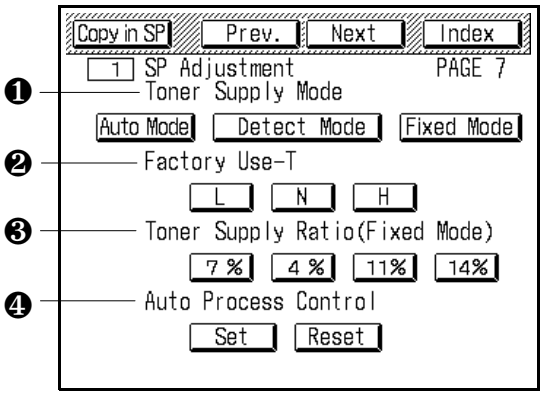

A176M508.img

PAGE 8

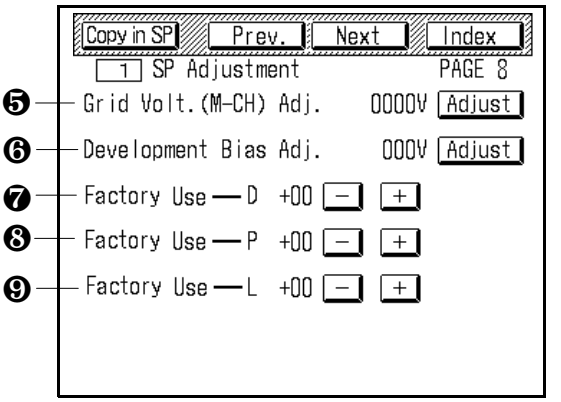

A176M509.img

Item	Function	Note
❶	Selects toner supply mode. (See the process control section for details about each supply mode.) **Default:** Auto Mode	Select "Auto Mode" in the field.
❷	Factory use only	Select "N" in the field.
❸	Changes the toner supply ratio in fixed toner supply mode. **Default:** 4%	Be careful, there is no overtoning protection system.
❹	Enables and disables the auto process control (V_R, V_L, V_D corrections). (See the process control section for details.) **Default:** Set	Normally select "Set". Select "Reset" only to check if the cause of the problem is related to process control or not.
❺	Inputs the grid bias voltage when auto process control is disabled or after RAM is cleared (1 V/step). **Default:** 870 V	Enter the setting using the number keys, then touch "Enter".
❻	Inputs the development bias voltage when auto process control is disabled or after RAM is cleared (1 V/step). **Default:** 220 V	Enter the setting using the number keys, then touch "Enter".
❼	Factory use only	Do not change the setting in the field.
❽	Factory use only	Do not change the setting in the field.
❾	Factory use only.	Do not change the setting in the field.

1 SP ADJUSTMENT

PAGE 9

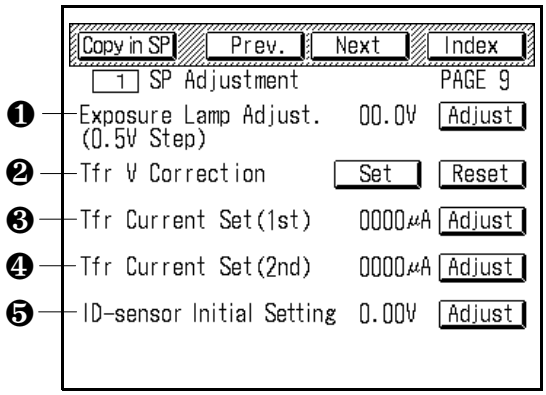

A176M510.img

PAGE 10

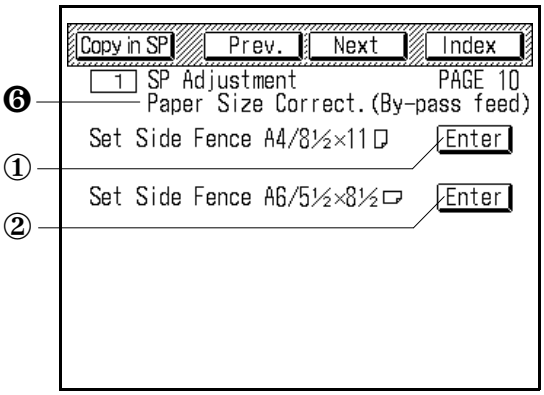

A176M511.img

Item	Function	Note
❶	Inputs the exposure lamp voltage when auto process control is disabled or RAM is cleared (0.5 V/step). **Default:** 65.0 V	Enter the setting using the number keys, then touch [Adjust] .
❷	Selects whether or not the transfer voltage detected in the process control data initialization is used for compensation of transfer current output control.	Default: [Set] H: Tfr current setting (2nd) x 1.0 x paper size compensation M: Tfr current setting (2nd) x 0.9 x paper size compensation L: Tfr current setting (2nd) x 0.8
❸	Adjusts the transfer current for the 1st side (1 μA/step). **Default:** 40 μA (A175), 45 μA (others)	**Standard Data:** 40 μA (A175), 45 μA (others) Enter the setting using the number keys, then touch [Adjust] .
❹	Adjusts the transfer current for the 2nd side (1 μA/step). **Default:** 50 μA (A175), 55 μA (others)	**Standard Data:** 50 μA (A175), 55 μA (others) Enter the data by using the number keys, then touch [Adjust] .
❺	Adjusts VSG to 4.0 ± 0.2 V.	This mode is also performed during the process control data initial setting.
❻	Initializes the by-pass paper size sensor.	**Procedure:** 1. Set the by-pass table side fence to the A4/8 1/2 x 11 position, then touch the [Enter] key ①. 2. Set the by-pass table side fence to the A6/5 1/2 x 8 1/2 position, then touch the [Enter] key ②. Perform this mode when the by-pass paper size sensor has been replaced.

Service Tables

1 SP ADJUSTMENT

PAGE 11 A4/A3 VERSION

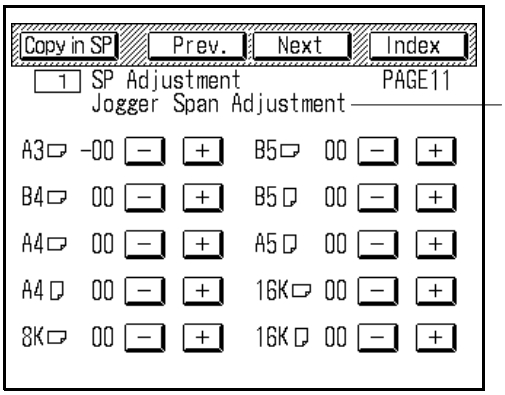

A176M512.img

PAGE 12 T/DLT VERSION

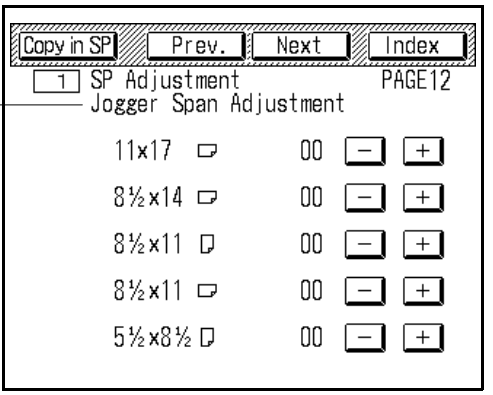

A176M513.img

Item	Function	Note
❶	Adjusts the duplex jogger fence position for each paper size (0.3 mm/step).	Press [+] to decrease the distance between the side fences. Press [−] to increase the distance between the side fences. **Procedure:** 1. Enter SP mode then press Copy in SP. **Note:** Press Copy in SP after changing the setting to correctly store the changed setting in memory. If not, sometimes the setting will not be stored in memory. 2. Feed a sheet of paper to the duplex tray. 3. Take out the duplex unit then check the paper and jogger fence position. 4. Return to SP mode (touch the SP mode key). 5. Touch the [+] or [−] key to adjust the jogger fence position so that the distance between the fences becomes 1 mm wider than the paper width.

1 SP ADJUSTMENT

PAGE 13

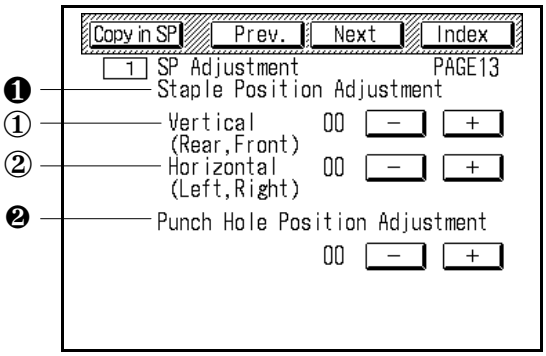

A176M514.img

NOTE: PAGE 16 is for factory use only.

PAGE 14 A4/A3 VERSION

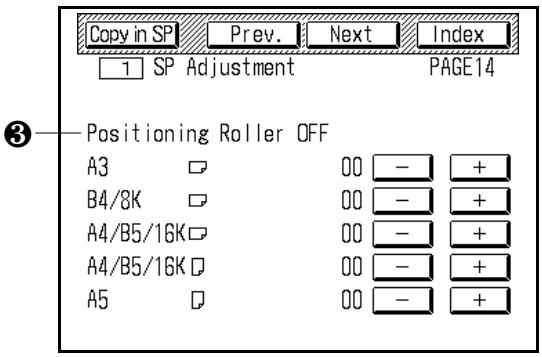

A176M515.img

PAGE 15 T/DLT VERSION

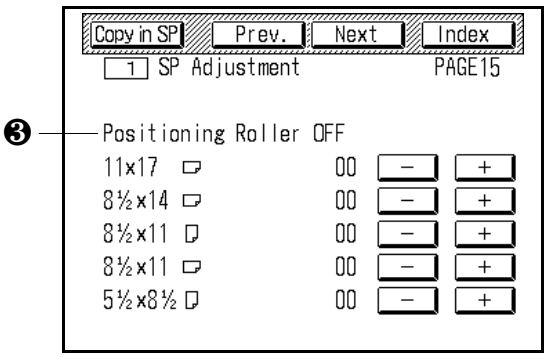

A176M516.img

Item	Function	Note
❶	Adjusts the staple position. ① Adjusts the vertical staple position. ② Adjusts the horizontal staple position (0.5 mm/step). 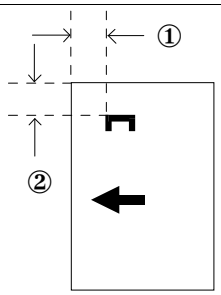	This mode affects only the Sorter Stapler (horizontal and vertical) and the Finisher (horizontal only).
❷	Adjust the vertical punch holes position (1 mm/step). 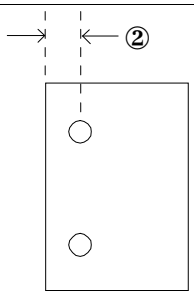	This mode affects only the sorter stapler with punch machine.
❸	Changes the duplex positioning roller up timing to adjust the paper buckle at the separation roller (5 ms/step).	Adjust the timing so that the paper leading edge just touches the separation belt without any buckle.

Service Tables

1 SP ADJUSTMENT

PAGE 17

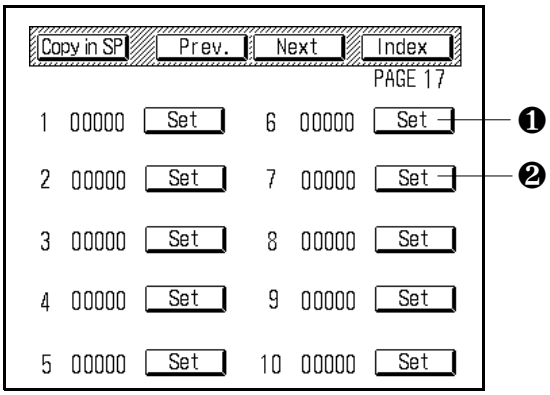

A176M519.img

Item	Function	Note
❶	Selects whether the Taiwanese paper sizes (8 k, 16 k) are detected in the 2nd tray or not.	European and Asian versions only Not detected: 0 (Default) 8 k, 16 k paper sizes are detected: 1
❷	Selects the machine version.	50 CPM version in France ..... 1 Others (Default) 0

2 SP TEST MODE

PAGE 1

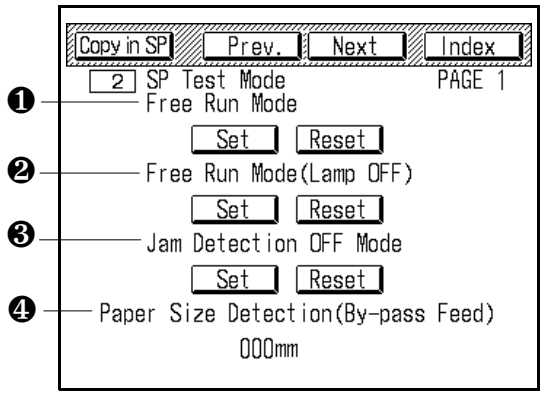

A176M517.img

PAGE 2

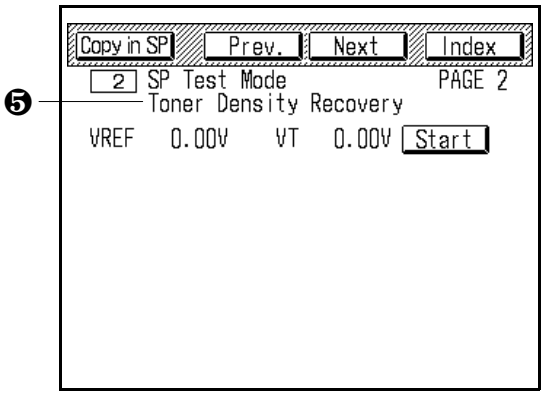

A176M518.img

Item	Function	Note
❶	Operates the copier without feeding paper.	Place sheets of white paper (A3 or 11" x 17") on the exposure glass.
❷	Operates the copier without feeding paper or turning on the exposure lamp.	Do not operate the machine in this mode for a long time because a lot of toner is used.
❸	Disables jam detection. (Not effective for peripherals.)	This mode is only effective in the "Copy in SP" mode.
❹	Indicates the paper width detected by the by-pass paper size sensor.	
❺	Rotates the main and development motors and turns on the toner supply clutch to supply toner to the development unit. The T.D. sensor toner supply target voltage (V_{REF}) and detected voltage (V_T) are indicated.	Toner is supplied under the following conditions. 1. Toner supply ratio: 25% 2. Repeats 0.5 s ON and 1.5 s, OFF. 3. Continues for 30 s. Check the image after this SP mode is completed.

2 SP TEST MODE

PAGE 3

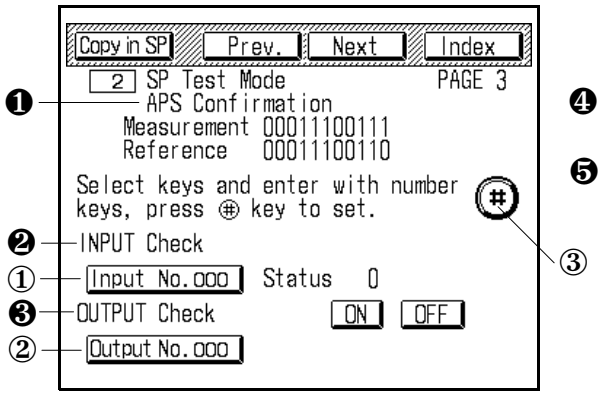

A176M520.img

PAGE 4

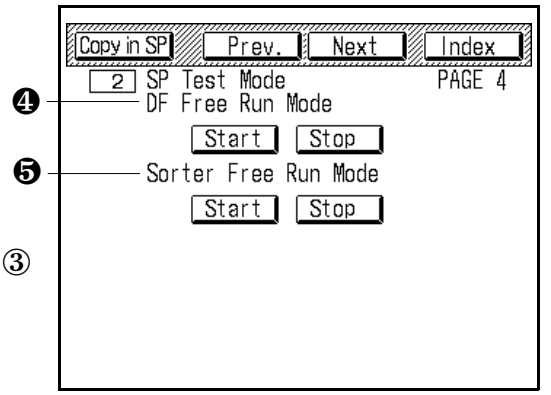

A176M521.img

Item	Function	Note
❶	Use to check if the original size sensors are correctly activated and de-activated.	Status 0 ------ de-activated (no paper) Status 1 ------ activated (paper)
❷	Use to check if the sensors or switches are correctly activated and de-activated. **Access this mode as follows:** 1. Touch the input mode key ①. 2. Enter the sensor/switch/signal number by using the number keys on the operation panel. (Refer to the input check mode on page 4-40.) 3. Touch the enter key ③.	Status 0 ------ de-activated (no paper) Status 1 ------ activated (paper)
❸	Use to check that the copier electrical components are functioning properly. **Access this mode as follows:** 1. Touch the output mode key ②. 2. Enter the electrical component number by using the number keys on the operation panel (refer to the output check mode on page 4-46). 3. Press the enter key ③.	Touch [ON] to activate and touch [OFF] to de-activate the electrical component.
❹	Operates the DF without copier operation.	**Procedure:** 1. Set originals on the table. 2. Touch [Start] .
❺	Operates the sorter stapler or finisher without copier operation.	The sorter operates as if 3 copies are made from five originals in sort and staple mode. No stapling is actually done.

2 SP TEST MODE

PAGE 5

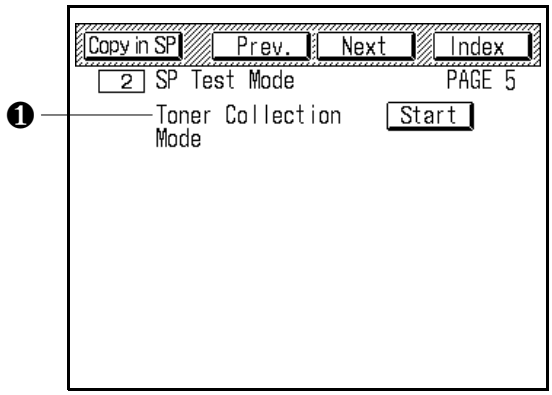

A176M522.img

Item	Function	Note
❶	Operates the toner collection drive mechanism.	After touching the Start key, the toner collection motor turns on for 1 minute.

3 DATA OUT MODE

PAGE 1

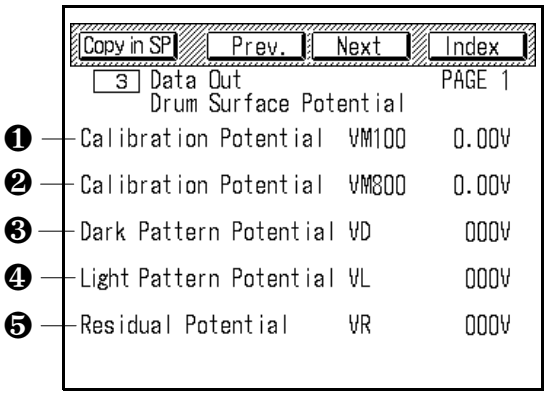

A176M523.img

PAGE 2

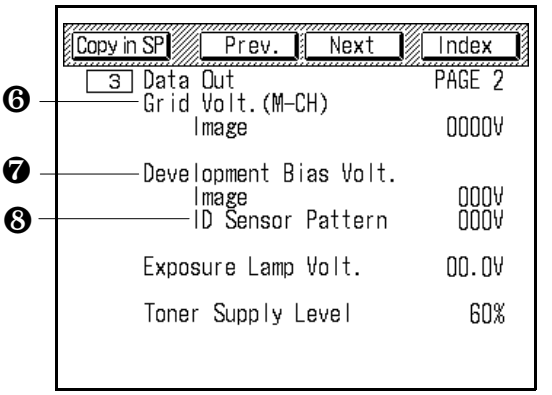

A176M524.img

Item	Function	Note
❶	Indicates the drum potential sensor output when –100 V is applied to the drum.	**Standard:** 0.1 ~ 0.7 V
❷	Indicates the drum potential sensor output when –800 V is applied to the drum.	**Standard:** 2.7 V ~ 4.2 V
❸	Indicates the drum potential when detecting the V_D pattern.	**Standard:** V_R + 770 ± 20 V
❹	Indicates the drum potential when detecting the V_L pattern.	**Standard:** V_R + 140 ± 20V
❺	Indicates the drum potential when detecting the bare drum surface.	**Standard:** 0 ~ 200 V
❻	Indicates the charge corona grid bias voltage decided during process control data initial setting.	Works only when auto process control is enabled. (1 SP Adjustment - PAGE 7) **Standard: 870 ~ 1,200 V**
❼	Indicates the development bias voltage decided during process control data initial setting.	Works only when auto process control is enabled. (1 SP Adjustment - PAGE 7) **Standard: VR –220 V**
❽	Indicates the ID sensor bias voltage decided during process control data initial setting.	Works only when auto process control is enabled. (1 SP Adjustment - PAGE 7) **Standard: 300 V ~ 400 V**

NOTE: ❸ ~ ❺ are absolute values.

3 DATA OUT MODE

PAGE 2

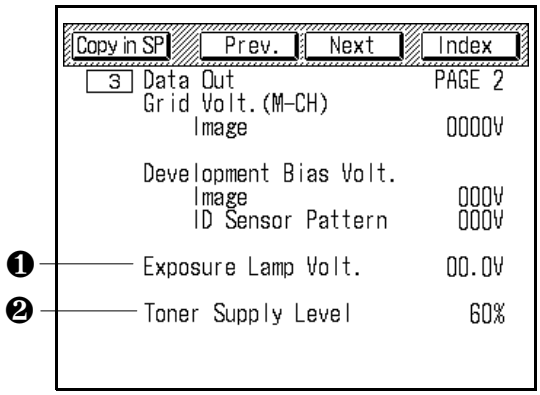

A176M524.img

PAGE 3

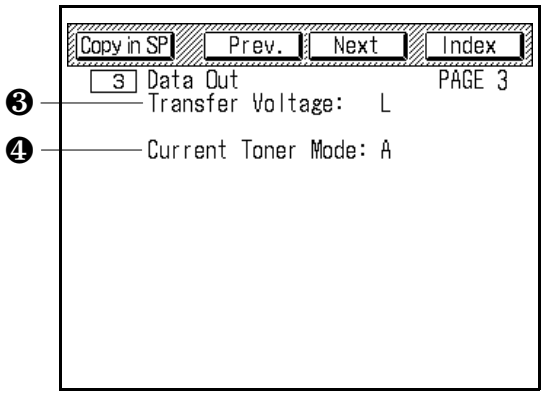

A176M525.img

Item	Function	Note
❶	Indicates the exposure lamp voltage (ID Level 4) decided during process control data initial setting.	Works only when auto process control is enabled (1 SP Adjustment - PAGE 7.) **Standard:** 50 ~ 80 V
❷	Indicates the toner supply level by image area ratio on the original surface. This value changes every copy through fuzzy control.	
❸	Indicates the transfer voltage detected in the process control data initialization.	L: 0 ~ 3 kV M: 3 ~ 5 kV H: 5 kV ~
❹	Indicates the current toner supply mode:	A: Auto Mode T: Detected Mode (Drum potential sensor or ID sensor abnormal) C: Fixed Mode (TD sensor abnormal, constant mode)

3 DATA OUT MODE

PAGE 4

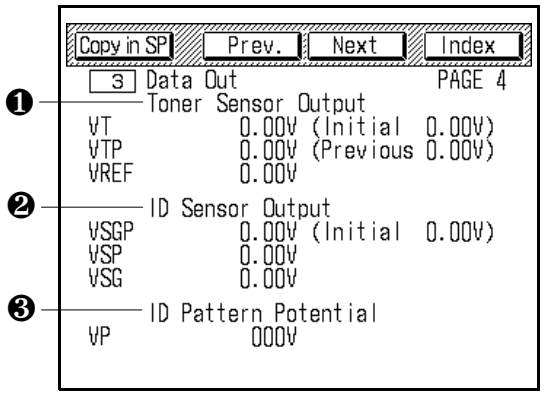

A176M526.img

Item	Function	Note
❶	Indicates the TD sensor output: VT: Current detected voltage Initial: TD sensor output at last process control data initial setting. Previous: Previous detected voltage during ID sensor compensation. VTP: Last detected voltage during ID sensor compensation. VREF: Toner supply level target voltage.	**Standard:** 0.5 ~ 4.0 V
❷	Indicates the ID sensor output VSGP: ID sensor output while detecting the bare drum surface (with dev. bias and development roller rotation). VSP: ID sensor output while detecting the ID sensor pattern image. VSG: ID sensor output while detecting the bare drum surface (without development bias and without development roller rotation).	VSGP is not used for auto image density control. **Abnormal condition:** VSGP < 2.5 V VSP > 2.5 V VSG < 2.5 V
❸	Indicates the drum potential while detecting the ID sensor pattern (grid voltage = –700 V).	**Standard:** 600 ~ 700 V

3 DATA OUT MODE

PAGE 5

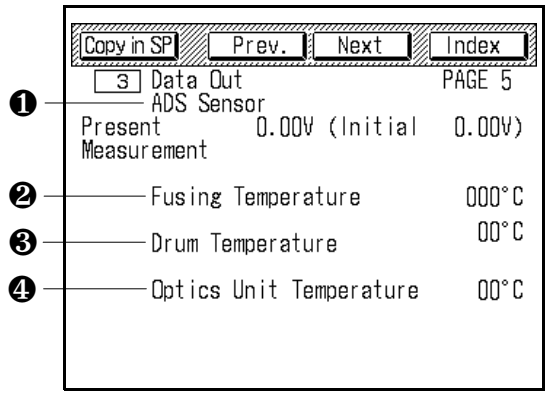

A176M527.img

Item	Function	Note
❶	Indicates the ADS sensor output at every scan.	**Standard:** 2.7 ± 0.1 V Present: Output at last detection. Initial: Output at ID sensor initial setting.
❷	Indicates the fusing temperature based on the fusing thermistor output.	**Standard:** Around 185°C
❸	Indicates the drum temperature based on the drum thermistor output.	
❹	Indicates the optics temperature based on the optics thermistor output.	

4 SP SPECIAL FEATURES

PAGE 1

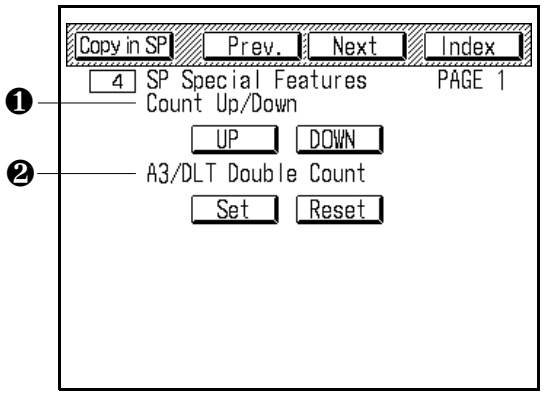

A176M528.img

Item	Function	Setting		Default
❶	Selects copy count up or down.	Set Reset	Count up Count down	Reset
❷	Counts once or twice when an A3 or 11" x 17" copy is made.	Set Reset	Count twice Count once	Reset

4 SP SPECIAL FEATURES

PAGE 2

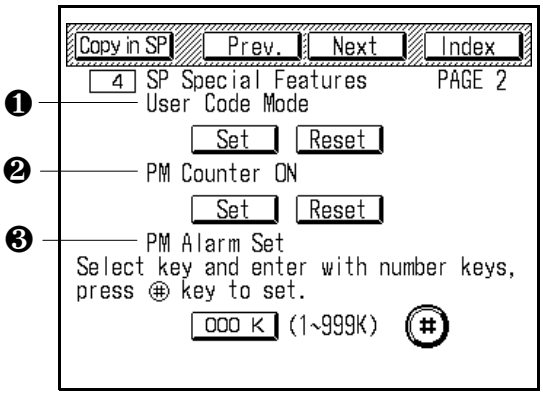

A176M529.img

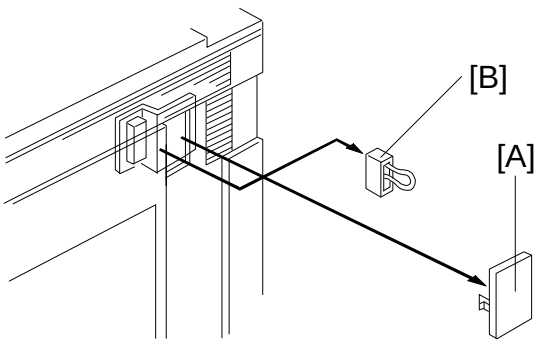

A176M568.wmf

Item	Function	Setting		Default
❶	Enables user code mode. * See the note below.	Set Reset	Enable Disable	Reset
❷	Enables the PM alarm.	Set Reset	Enable Disable	Reset
❸	Selects the PM alarm interval after the counter was cleared (using 9 PM Counter Clear - PAGE 1)			120 k

NOTE: 1) To enable user code mode, perform the following procedure.

2) When Set is selected, at least one user code should have been already entered.

1. Register at least one user code by using user tool No. 8.
2. Enter SP mode then enable the user code mode by selecting Set .
3. Turn off the main switch.
4. Remove the plastic cap [A] on the right upper cover.
5. Disconnect the key counter short-circuit connector [B].
6. Return the plastic cap [A].
7. Turn on the main switch and check the operation.

4 SP SPECIAL FEATURES

PAGE 3

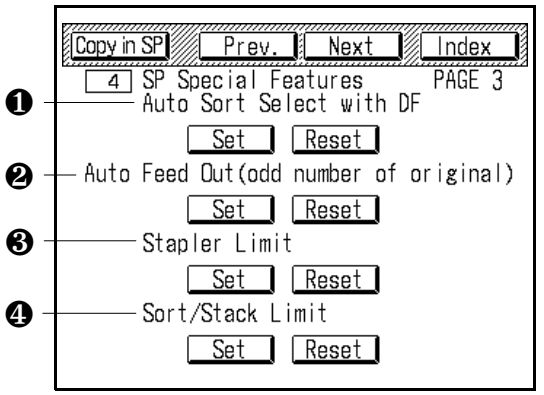

A176M530.img

Item	Function	Setting		Default
❶	Enables automatic sort mode selection when 2 or more is entered in the copy counter and an original is set on the DJF feed tray.	Set Reset	Enable Disable	Set
❷	Enables automatic feed-out of the last copy on the duplex tray without copying when an odd number of originals is set on the DJF feed tray.	Set Reset	Enable Disable	Set
❸	Changes the maximum copy quantity limit in staple mode. **Default: 50**	Set Reset	40 50	Reset
❹	Changesthe maximum copy quantity limit in sort mode and in stack mode. **Default: 50**	Set Reset	40 50	Reset

4 SP SPECIAL FEATURES

PAGE 4

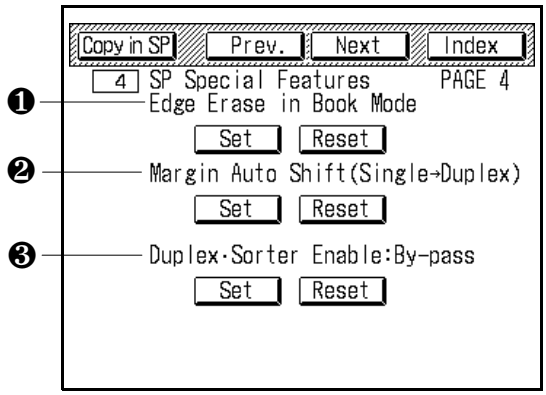

A176M531.img

Item	Function	Setting		Default
❶	Enables automatic access to the border/center erase mode in platen cover mode.	Set Reset	Enable Disable	Reset
❷	Enables automatic selection of a right margin (5 mm, 0.2") for the duplex back side when making two-sided copies from one-sided originals.	Set Reset	Enable Disable	Set
❸	Enables the duplex and sorter function from the by-pass feed. The paper size is detected by the by-pass paper size sensor and registration sensor (±5 mm). The following sizes are used for this mode: A3, A4, B4, B5 "11 x 17", 8 1/2 x 11" The following modes are available: One-sided original to two-sided copy Two-sided original to two-sided copy Sort, Stack, Staple, Punch • Skew problems may occur in duplex mode.	Set Reset	Enable Disable	Reset

Service Tables

4 SP SPECIAL FEATURES

PAGE 5

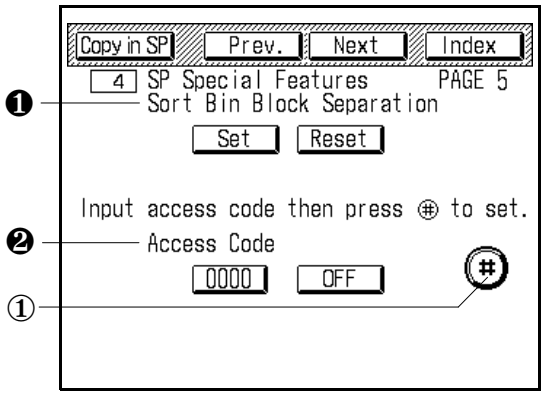

A176M532.img

Item	Function	Setting		Default
❶	Enables the separation of two different sort or stack jobs into two different blocks of the bins. 1st block: from 1st to 10th bins, 2nd block: from 12th to 20th bins. If a job selected requires 11 bins or more, 1st to 20th bins are used for the 1st block. If a different sort or stack mode is selected after the 1st sort or stack job is finished in the 1st block, the 2nd block is used for the job. After the job, when a different job is selected again, a message will appear advising operators to remove the copy paper from the bins.	Set Reset	Enable Disable	Set
❷	Limits user access to User Tools No. 10 and 11 to only those who know the access code. **Procedure:** 1. Touch the 0000 Key. 2. Input the access code with the number keys. 3. Touch the enter key ①. *See the caution below.			0000

NOTE: After enabling this mode, be sure to instruct the key operator not to forget the access code.

4 SP SPECIAL FEATURES

PAGE 6

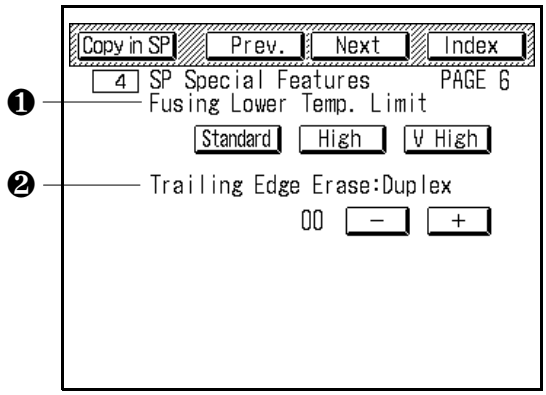

A176M533.img

Item	Function	Setting		Default
❶	Selects the fusing lower temperature limit. During a copy run, when the fusing temperature drops to a certain temperature, the copy speed will reduce to keep good fusing conditions. If customers complain of poor fusing of copies, change the setting. In standard mode, CPM down does not occur except for the Japanese 70 CPM version. Standard: No CPM down 65 CPM at less than 150°C (Japanese 70 CPM version) High: 40 CPM at less than 150°C V High: 40 CPM at less than 170°C			Standard
❷	Adjusts the trailing edge erase for transport to the duplex tray to solve the problem of the paper rolling around the pressure roller from the duplex feed (1 mm/step).			

4 SP SPECIAL FEATURES

PAGE 7

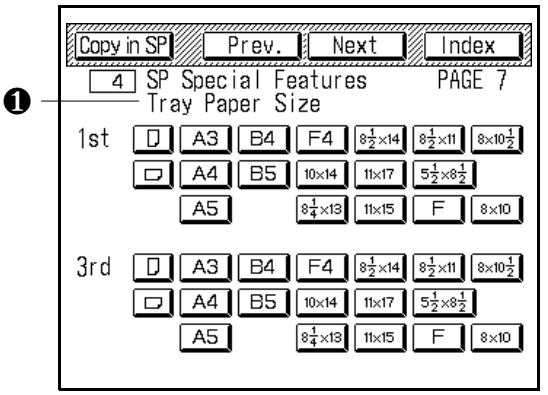

A176M534.img

PAGE 8

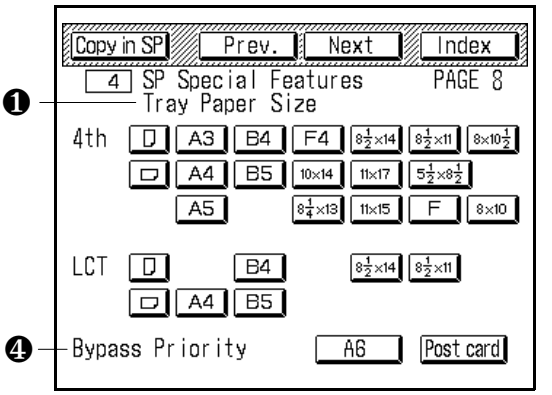

A176M535.img

PAGE 9

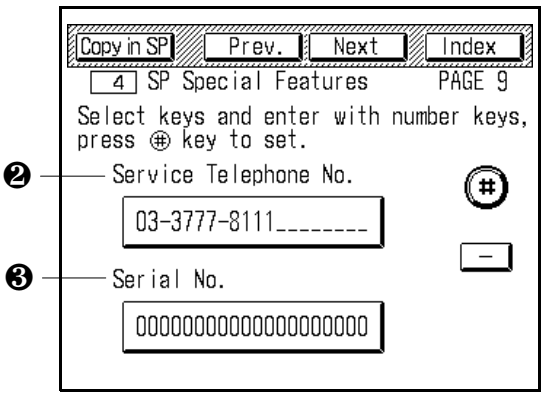

A176M536.img

Item	Function	Note
❶	Selects the paper size for each paper feed station. Refer to section 3 for details of the paper size change procedure.	1. The default is A4 or 8 1/2 x 11 sideways. 2. B4 or 8 1/2 x 14 for LCT is used for the Japanese version only. Do not select these sizes.
❷	Holds the service center telephone number. This telephone number is indicated on the LCD with the SC number when a problem occurs.	**Entering procedure:** 1. Touch [00000000000000000000] . 2. Enter the phone number by pressing the number keys. (Touch [–] if you wish to enter a hyphen) 3. Touch (#) .
❸	Holds the copier's serial number.	
❹	This is for the Japanese version only. Do not select "post card".	Default: [A6]

4 SP SPECIAL FEATURES

PAGE 10

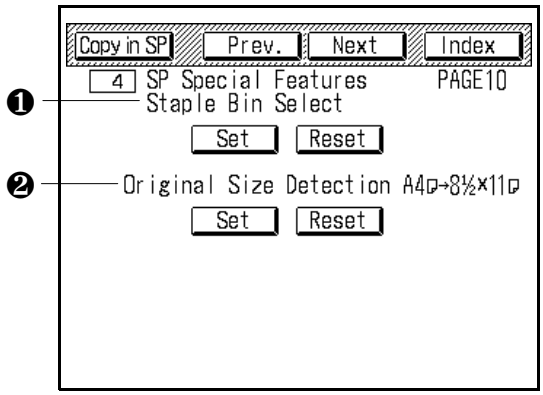

A176M537.img

PAGE 11

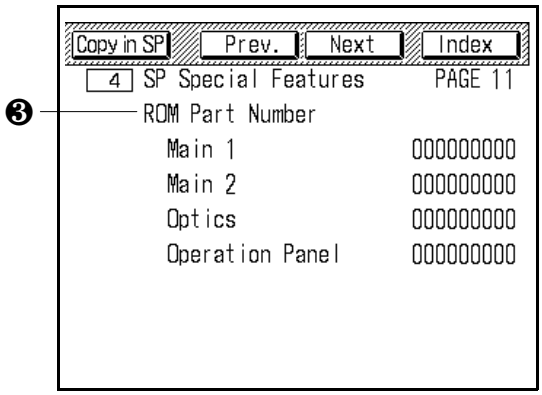

A176M538.img

Item	Function	Setting		Default
❶	Selects the staple mode for the 1st job when the staple mode is selected for the 2nd job in the pre-set mode.	Set Reset	Enable Disable	Reset
❷	The original size detection system for this model cannot distinguish between A4 and 8 1/2 x 11. This mode enables recognition of A4 and 8 1/2 x 11 originals as A4 size for the A4/A3 version or as 8 1/2 x 11 for the LT/DLT version.	Set Reset	Enable Disable	Reset
❸	Indicates the part number, with ROM suffixes, on each PCB. *See the note below.			

NOTE: Only the production date is indicated for the operation panel (guidance) ROMs.

6 JAM/SC COUNTERS

PAGE 1

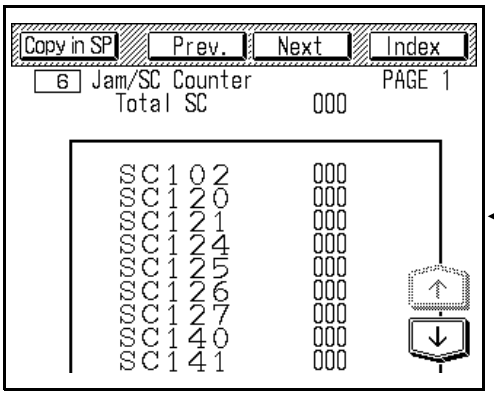

A176M539.img

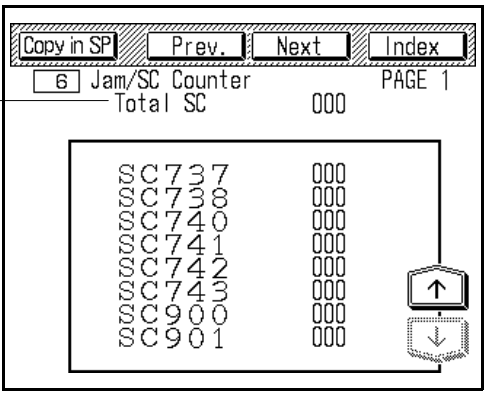

A176M540.img

Item	Function	Note
❶	Indicates the total number of occurrences of each SC code.	Press ↑ to scroll up. Press ↓ to scroll down. See Section 6 for details of each SC code. The counters for SCs that have not occurred are not displayed.

6 JAM/SC COUNTERS

PAGE 2

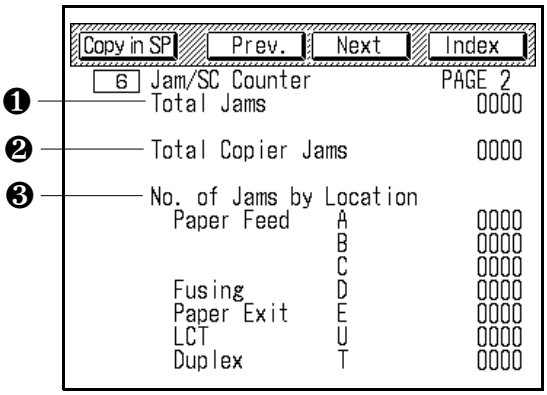

A176M541.img

PAGE 3

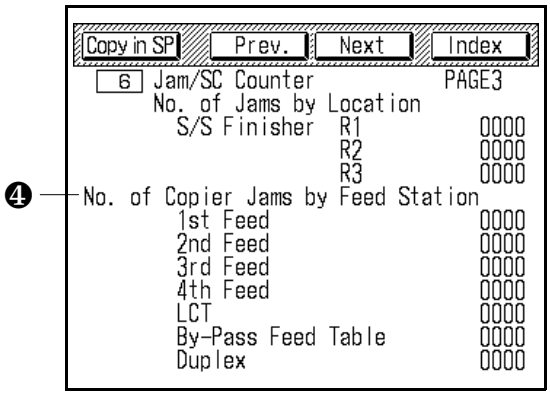

A176M542.img

PAGE 4

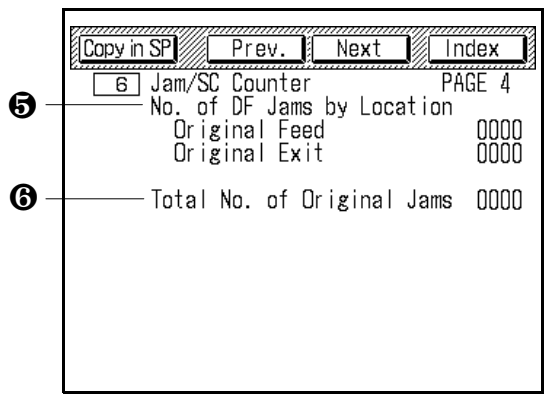

A176M543.img

Item	Function	Note
❶	Indicates the total number of jams in the copier and all peripherals.	
❷	Indicates the total number of jams in the copier only.	
❸	Indicates the total number of jams at each location.	**Locations:** 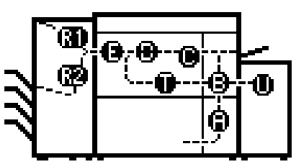
❹	Indicates the total number of jams for each feed station.	
❺	Indicates the total number of jams at each location in the DF.	
❻	Indicates the total number of jams in the DF.	

Service Tables

7 COPY COUNTERS

PAGE 1

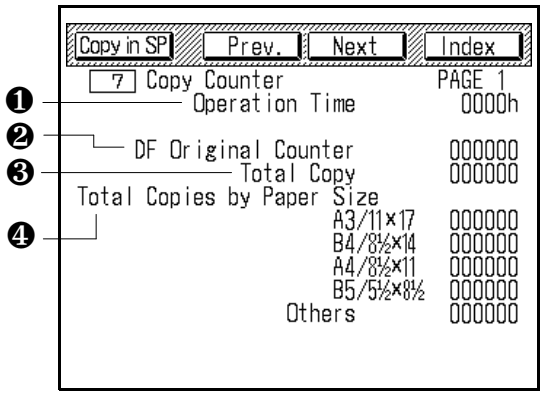

A176M544.img

PAGE 2

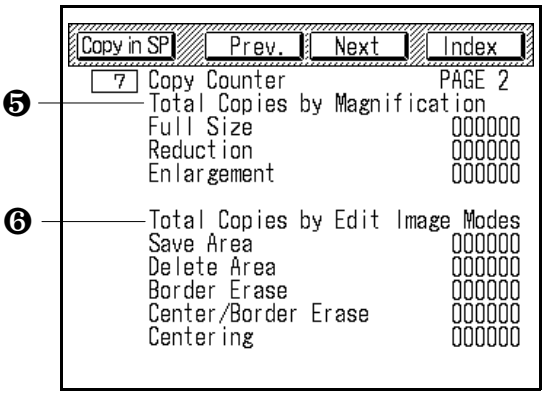

A176M545.img

Item	Function	Note
❶	Indicates the total main motor rotation time.	
❷	Indicates the total number of originals fed by the DF.	
❸	Indicates the total number of copies.	
❹	Indicates the total number of copies for each paper size.	
❺	Indicates the total number of copies for each magnification.	
❻	Indicates the total number of copies for each edit image mode.	

7 COPY COUNTERS

PAGE 3

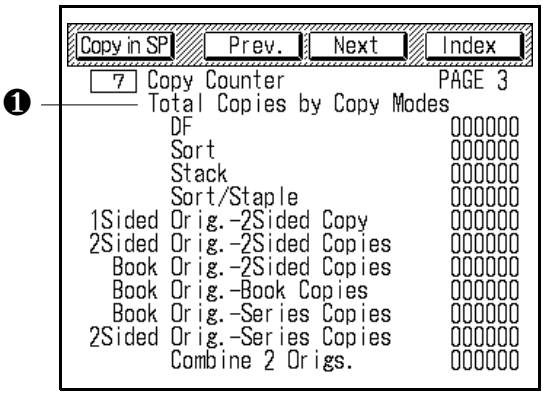

A176M546.img

PAGE 4

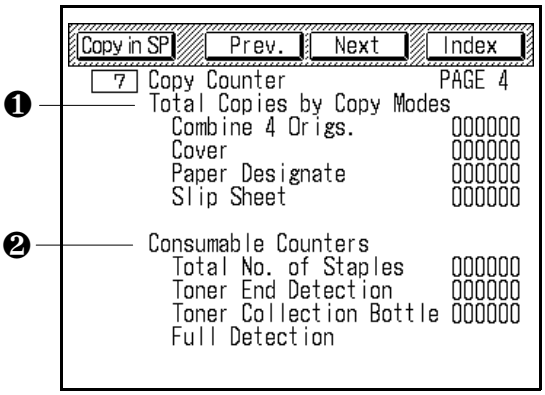

A176M547.img

PAGE 5

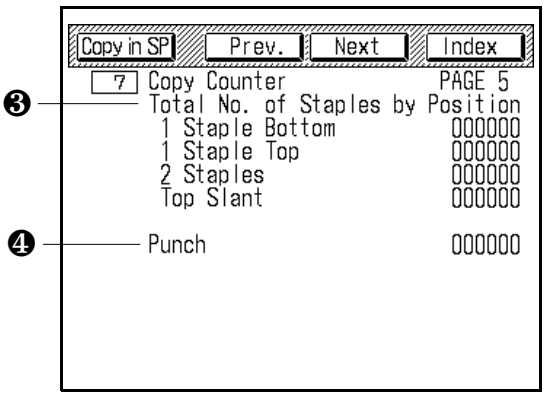

A176M548.img

PAGE 6

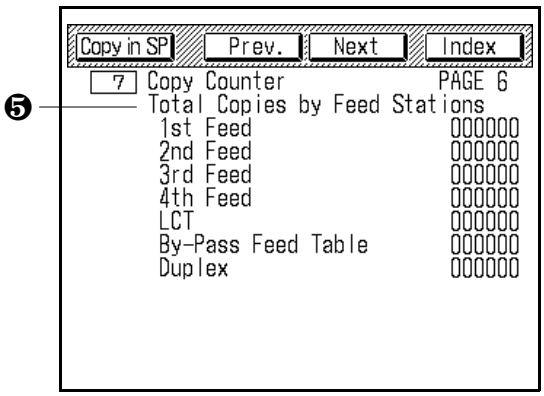

A176M549.img

Item	Function	Note
❶	Indicates the total number of copies for each copy mode.	
❷	Indicates the total number related to consumables.	
❸	Indicates the total number of staples for each staple position.	
❹	Indicates the total number of punches.	
❺	Indicates the total number of copies broken down by paper feed station.	

8 COUNTER CLEAR

PAGE 1

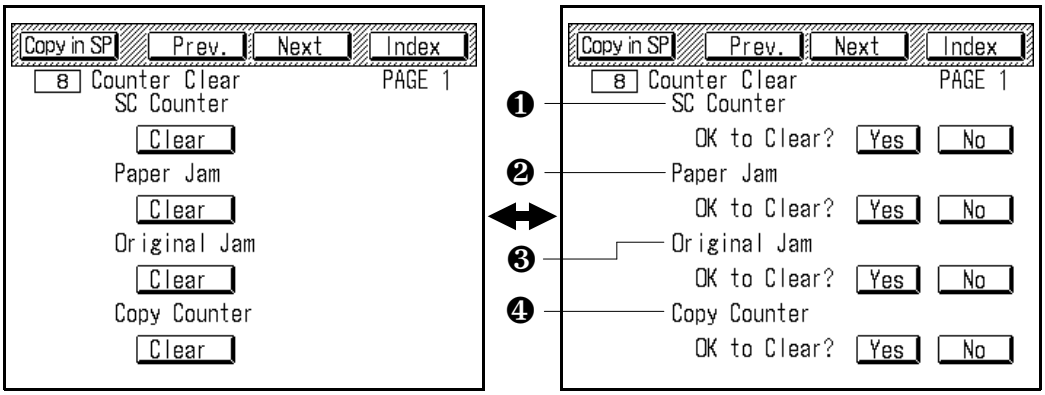

A176M550.img A176M551.img

PAGE 2

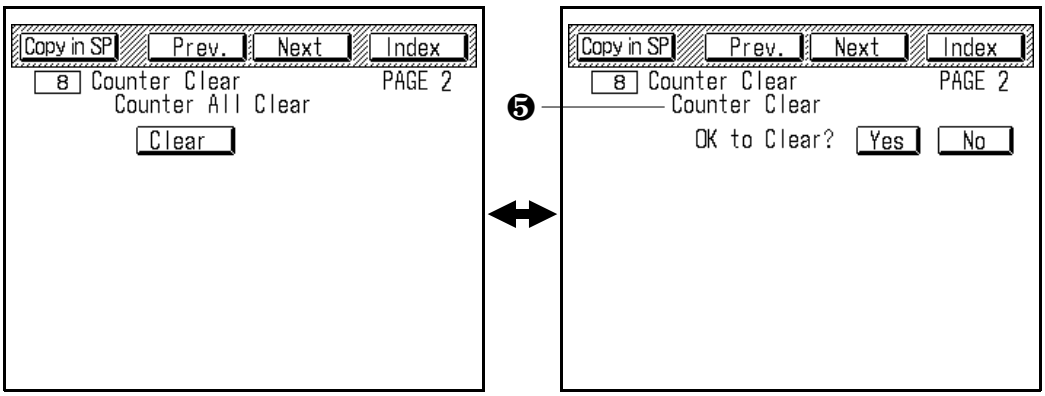

A176M552.img A176M553.img

Item	Function	Note
❶	Clears all SC counters.	Procedure to clear: 1. Touch [Clear] . The display changes as shown above right. 2. Touch [Yes] . (Touch [No] to cancel.) The display returns to the one shown above left and the beeper sounds four times.
❷	Clears all paper jam counters.	
❸	Clears all original jam counters.	
❹	Clears all copy counters except the total copy counter.	
❺	Clears all counters (❶ ~ ❹) except the total copy counter.	

NOTE: The total copy counter can be cleared only by the RAM clear procedure. Test copies in the factory increment the initial total copy counter in SP mode. Therefore, the start count is not zero.

9 PM COUNTER CLEAR

PAGE 1

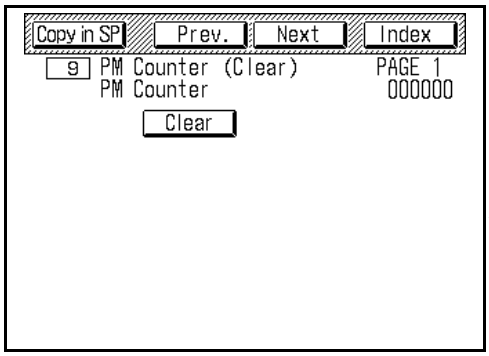

A176M554.img

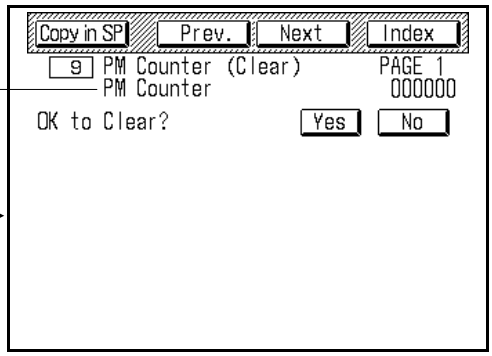

A176M555.img

PAGE 2

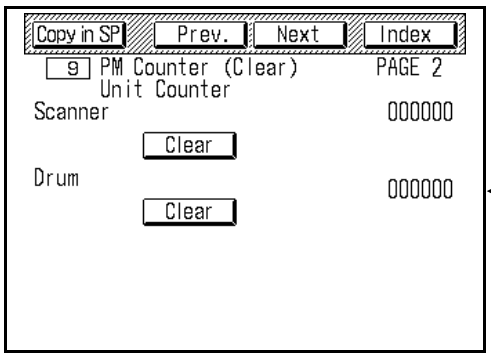

A176M556.img

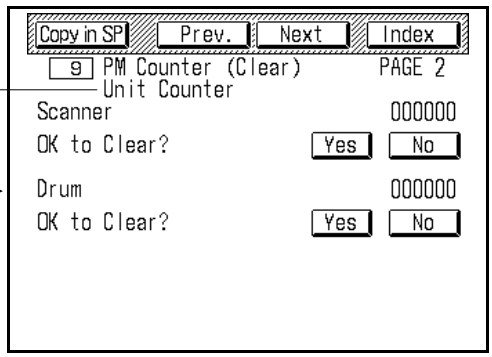

A176M557.img

PAGE 3

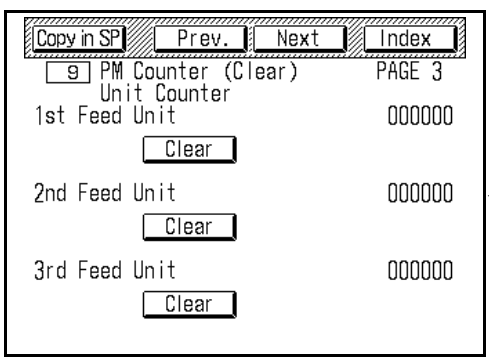

A176M558.img

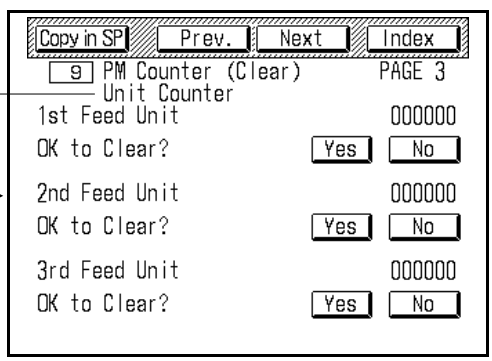

A176M559.img

Item	Function	Note
❶	1. Indicates the total number of copies since the last PM (PM counter). 2. Clears the PM counter.	**Procedure to clear:** 1. Touch [Clear] . The display changes as shown above right. 2. Touch [Yes] . (Touch [No] to cancel.) The display returns to the one shown above left.
❷	1. Indicates the total number of copies since the last PM for each unit (unit counter). 2. Clears each unit counter.	

9 PM COUNTER CLEAR

PAGE 4

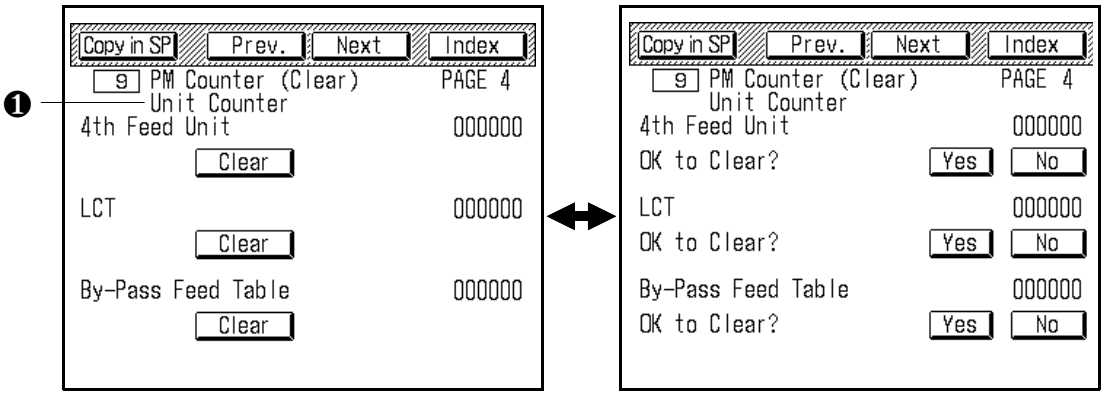

A176M560.img A176M561.img

PAGE 5

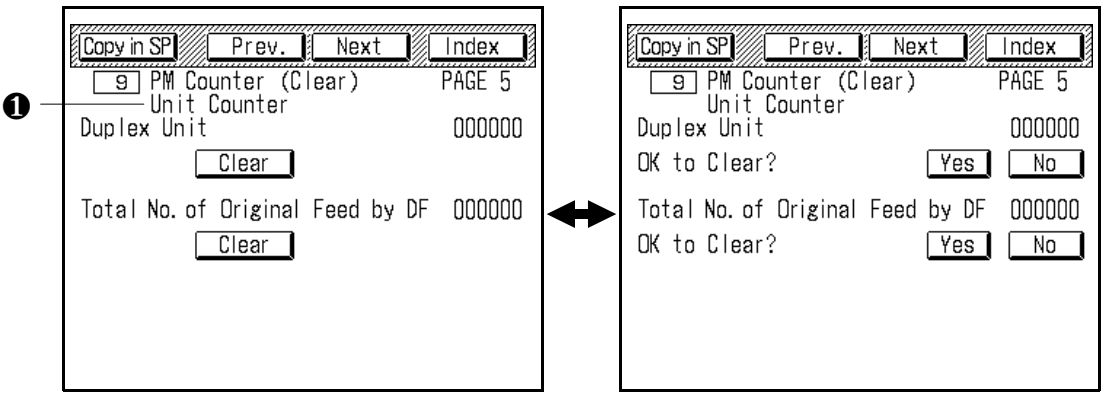

A176M562.img A176M563.img

Item	Function	Note
❶	1. Indicates the total number of copies since the last PM for each unit. (unit counter) 2. Clears each unit counter.	**Procedure to clear:** 1. Touch [Clear] . The display changes as shown above right. 2. Touch [Yes] . (Touch [No] to cancel.) The display returns to the one shown above left.

10 MEMORY CLEAR

PAGE 1

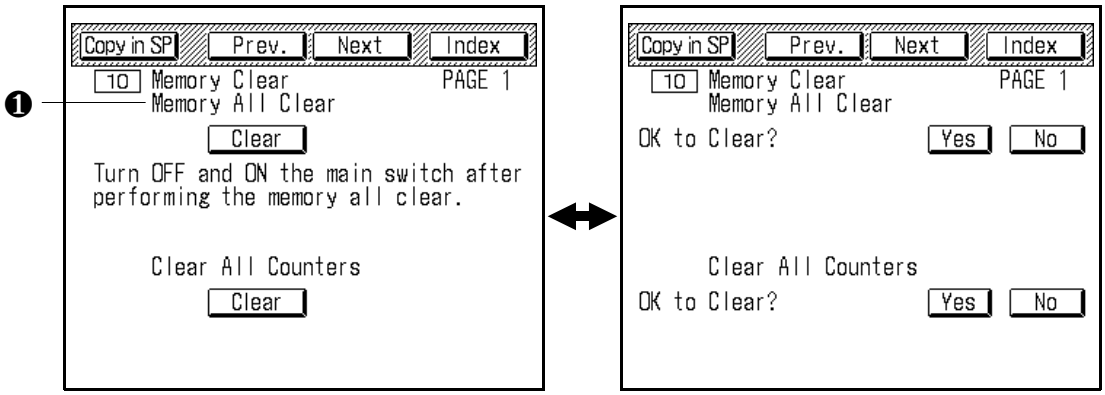

A176M564.img A176M565.img

Item	Function	Note
❶	Returns all settings to the default settings.	**Procedure to clear:** 1. Touch [Clear] and open the door. The display changes as shown above right. 2. Touch [Yes] . (Touch [No] to cancel.) The display returns to the one shown above left and the beeper sounds twice. 3. Turn the main switch off and on. After clearing all memory, do at least the following: 1. Perform the process control data initial setting. 2. Install new developer and then perform the Toner Density sensor (Developer) initial setting. 3. Input the Lens Error Correction setting ([1] SP Adjustment - PAGE 5).

2.3 SENSOR/SWITCH/SIGNAL DATA CHECK (INPUT MODE)

– How to check the sensor/switch/signal –

1. Enter SP mode as follows:
   1) Press the mode clear key.
   2) Enter "107"
   3) Hold down the clear/stop key for more than 3 seconds.

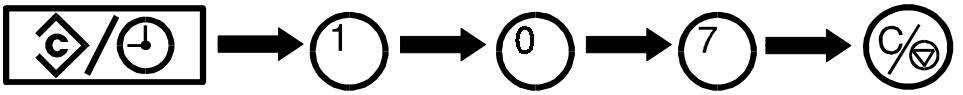

2. Touch [2] [A] on the display to access SP test mode.

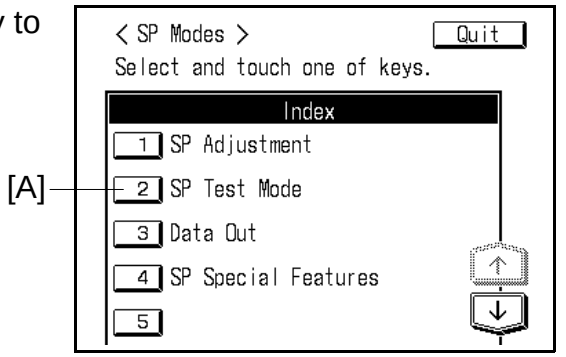

A176M570.img

3. Touch [Next] [B] on the display twice.

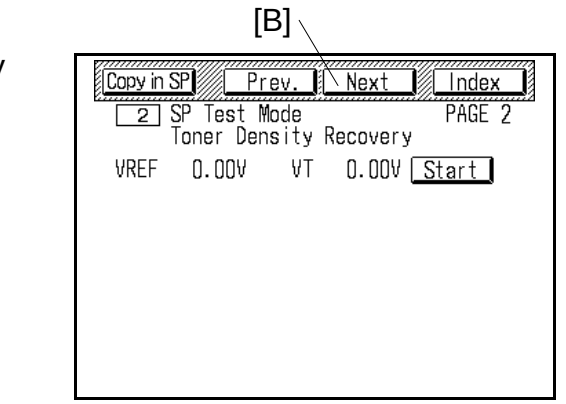

A176M571.img

4. 1) Touch [Input No. 00] [C].
   2) Enter the input sensor/switch/signal number by using the number keys (refer to the table on the following pages).
   3) Press the Enter key [D].

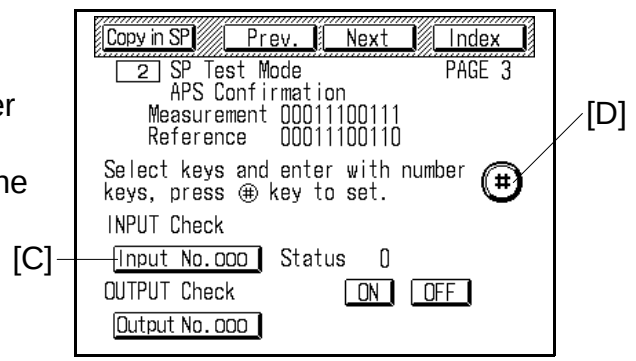

A176M572.img

Input No	Sensor/Switch/|Signal	Status	
		0	1
1	Registration Sensor	Paper not detected	Paper detected
2	Fusing Exit Sensor	Paper not detected	Paper detected
3	Exit Sensor	Paper not detected	Paper detected
4	Vertical Transport Sensor	Paper not detected	Paper detected
5	1st Tray Set Switch (A175 only)	Not set	Set
6	By-pass Paper End Sensor	Paper detected	Paper not detected
7	2nd Paper End	Paper detected	Paper not detected
8	3rd Paper End	Paper detected	Paper not detected
9	Built-in LCT Tray Down Key	Pressed	Not pressed
10	2nd Paper Near End Sensor	Not near end	Near end
11	3rd Paper Near End Sensor	Not near end	Near end
12	Built-in LCT Paper Set	Paper not detected	Paper detected
13	2nd Paper Size Switch (All SW)	Set	Not set
14	2nd Tray Set Detection	Not set	Set
15	3rd Tray Set Switch (4-tray version only)	Not set	Set
16	Built-in LCT Set Detection/4th Tray Set Switch	Not set	Set
17	1st Paper Feed Sensor	Paper not detected	Paper detected
18	2nd Paper Feed Sensor	Paper not detected	Paper detected
19	3rd Paper Feed Sensor	Paper not detected	Paper detected
20	4th Paper Feed Sensor	Paper not detected	Paper detected
21	2nd Lift Sensor	Not lifted	Lifted
22	3rd Lift Sensor	Not lifted	Lifted
23	Built-in LCT Tray Down Sensor/4th Lift Sensor	Tray down	Tray not down
24	Fusing Set Detection.	Not set	Set
25	Drum Unit Set Detection	Not set	Set
26	Right Tandem Paper End Sensor	Paper detected	Paper not detected
27	Left Tandem Paper End Sensor	Paper detected	Paper not detected
28	Right Tandem Tray Set Detection	Not set	Set
29	Left Tandem Tray Set Detection	Not set	Set
30	Rear Fence Return Sensor	Not at return position	At return position
31	Rear Fence HP Sensor	Not at HP	At HP
32	Base Plate Down Sensor (Tandem)	Not down	Down
33	1st Paper Near End Sensor (Tandem)	Not at near end	Near end
34	1st Lift Sensor (Tandem)	Not lifted	Lifted
35	Side Fence HP Sensor	At HP	Not at HP
36	3.5 k LCT Paper End Sensor	Paper detected	Paper not detected
37	3.5 k LCT Set Detection	Not set	Set
38	3.5 k LCT Lift Sensor	Not lifted	Lifted
39	3.5 k LCT Tray Down Key	Not pressed	Pressed

Input No	Sensor/Switch/|Signal	Status	
		0	1
40	3.5 k LCT Feed Sensor	Paper not detected	Paper detected
41	3.5 k LCT Tray Down Sensor	Tray not down	Tray down
42	3.5 k LCT Door Switches	Closed	Open
43	3.5 k LCT Paper Position Sensor	Paper not detected	Paper detected
44	Duplex Jogger HP Sensor	Not at HP	At HP
45	Duplex Entrance Sensor	Paper not detected	Paper detected
46	Duplex Transport Sensor	Paper not detected	Paper detected
47	Duplex Exit Sensor	Paper not detected	Paper detected
48	Duplex Unit Set Detection	Not set	Set
49	Duplex Paper End Sensor	Paper not detected	Paper detected
50	Toner End Sensor	Toner present	No toner
51	Toner Overflow Switch	No overflow	Overflow
52	By-Pass Table Switch	Closed	Open
53	Front Door Safety Switch	Closed	Open
54	Toner Collection Bottle Set Switch	Set	Not set
55	By-Pass Feed Motor Lock Detection	Not detected	Detected
56	Development Motor Lock Detection	Not detected	Detected
57	Main Motor Lock Detection	Not detected	Detected
58	Not used	—	—
59	Paper Feed Motor Lock Detection	Not detected	Detected
60	Fusing/Duplex Drive Motor Lock Detection	Not detected	Detected
61	By-pass Paper Feed Motor Lock Detection	Not detected	Detected
62	Duplex Paper Guide Sensor	Paper not detected	Paper detected
63	Not used	—	—
64	Not used	—	—
65	3.5 k LCT Paper Near End Sensor	Paper detected	Paper not detected (Near end)
66	Guide Plate Position Sensor	Closed	Open
67	3.5 k LCT Motor Lock	Not detected	Detected
68	Side Fence Closed Detection		
Input Nos. 69 ~ 90 are not used.			
91	Auto Response Sensor	Not detected	Detected
92	Key Counter Connector	Open	Short
Input Nos. 93 ~ 100 are not used.			
101	Entrance Sensor (S/S)	Paper detected	Paper not detected
	Entrance Sensor (Finisher)	Paper detected	Paper not detected
102	Proof Exit Sensor (S/S)	Paper detected	Paper not detected
	Exit Sensor (Finisher)	Paper detected	Paper not detected
103	Jam Sensor (Phototransistor) (S/S)	Paper detected	Paper not detected
	Shift Tray Half Turn Sensor (Finisher)	At HP	Not at HP

Input No	Sensor/Switch/|Signal	Status	
		0	1
104	Bin Sensor (Phototransistor) (S/S)	Paper detected	Paper not detected
	Stack Height Sensor 2 (Finisher)	At HP	Not at HP
105	Bin HP Sensor (S/S)	Not at HP	At HP
	Stack Height Sensor 1 (Finisher)	Not at HP	At HP
106	Wheel Sensor (S/S)	Not interrupted	Interrupted
	Shift Tray Lower Limit Sensor (Finisher)	At lowest position	Not at lowest position
107	Bin Rear Plate Release Sensor (S/S)	Not at release position	At release position
	Jogger Unit Entrance Sensor (Finisher)	Paper detected	Paper not detected
108	Bin Rear Plate HP Sensor (S/S)	Not at HP	At HP
	Jogger Unit Paper Sensor (Finisher)	Paper not detected	Paper detected
109	Jogger HP Sensor (S/S)	Not at HP	At HP
	Jogger HP Sensor (Finisher)	Not at HP	At HP
110	Grip HP Sensor (S/S)	Not at HP	At HP
	Staple Unit HP Sensor (Finisher)	Not at HP	At HP
111	Staple Unit HP Sensor (S/S)	Not at HP	At HP
	Stack Feed-out Belt HP Sensor (Finisher)	At HP	Not at HP
112	Staple HP Sensor (S/S)	At HP	Not at HP
	Staple Hammer HP Sensor (Finisher)	At HP	Not at HP
113	Staple End Sensor (S/S)	Present	Empty
	Staple End Sensor (Finisher)	At HP	Not at HP
114	Paper Sensor (S/S)	Paper detected	Paper not detected
	Not Used	—	—
115	Door Safety Switch (S/S)	Closed	Open
	Front Door Safety Switch (Finisher)	Closed	Open
116	Sorter Main Motor Encoder (S/S)	—	—
117	Punch Unit Set Detection (S/S with punch version)	Not Detected	Detected
118	Punch Home Position Sensor (S/S with punch version)	At HP	Not at HP
119	Punch Rubbish (Waste) Overflow Sensor (S/S with punch version)	Not Overflow	Overflow
120	Cartridge Set Sensor (S/S)	Cartridge not Set	Cartridge Set
121	Staple Unit Set Detection (S/S)	Not Detected	Detected
122	Staple Unit Pull-out Position Sensor (S/S)	At Pull-out Position	Not at Pull-out Position
Input Nos. 123 ~ 130 are not used.			
131	Scanner HP Sensor	Not at HP	At HP
132	Lens Vertical HP Sensor	At HP	Not at HP
133	Lens Horizontal HP Sensor	At HP	Not at HP
134	3rd Scanner HP Sensor	Not at HP	At HP

Input No	Sensor/Switch/|Signal	Status	
		0	1
135	Platen Cover Position Sensor 1	Not interrupted	Interrupted
136	Platen Cover Position Sensor 2	Not interrupted	Interrupted
137	Optics Thermistor	Low Temp.	High Temp.
Input Nos. 138 ~ 150 are not used.			
151	Not Used (DJF)	—	—
	One Turn Sensor (RDH)	At HP	Not at HP
152	Original Set SN (DJF)	Original not detected	Original detected
	Pulse Generator Sensor (RDH)	Interrupted	Not interrupted
153	Original Feed SN (DJF)	Original not detected	Original detected
	Original Set Sensor (RDH)	Original not detected	Original detected
154	Not Used (DJF)	—	—
	Recycle Sensor (RDH)	Original not detected	Original detected
155	Lift Switch (DJF)	Down	Sifted
	Original Width Sensor (RDH)	Original not detected	Original detected
156	Feed-out Motor Encoder Pulse (DJF)	—	—
	Registration Sensor (RDH)	Original not detected	Original detected
157	Belt Drive Motor Encoder Pulse (DJF)	—	—
	Inverter Sensor (RDH)	Original not detected	Original detected
158	Feed-in Motor Encoder Pulse (DJF)	—	—
	Feed-out Sensor (RDH)	Original not detected	Original detected
159	Registration SN 2 (DJF)	Original not detected	Original detected
	Not used (RDH)	—	—
160	Original Width SN 1 (DJF)	Original not detected	Original detected
	Transport Belt Motor Encoder Pulse (RDH)	—	—
161	Original Width SN 2 (DJF)	Original not detected	Original detected
	Feed-in Motor Encoder Pulse (RDH)	—	—
162	Original Width SN 3 (DJF)	Original not detected	Original detected
	Inverter Motor Encoder Pulse (RDH)	—	—
163	Registration SN 1 (DJF)	Original not detected	Original detected
	Feed-out Motor Encoder Pulse (RDH)	—	—

Input No	Sensor/Switch/|Signal	Status	
		0	1
164	Feed-out SN (DJF)	Original not detected	Original detected
	Lift Switch (RDH)	Down	Lifted
165	Not used (DJF)	—	—
	RDH Position Sensor (RDH)	Lifted	Down
166	DF Position SN (DJF)	Open	Closed
	Not used (RDH)	—	—
167	Feed Cover Switch (DJF)	Closed	Open
	Not used (RDH)	—	—
168	Not Used (DJF)	—	—
	Not used (RDH)	—	—
169	Original Length SN (DJF)	Interrupted	Not interrupted
	Not used (RDH)	—	—

2.4 ELECTRICAL COMPONENT CHECK (OUTPUT MODE)

NOTE: The motors keep turning in this mode regardless of the upper or lower limit sensor signals. To prevent mechanical or electrical damage, do not keep an electrical component on for a long time.

– How to check the sensor/switch/signal –

1. Enter SP mode as follows:
   1) Press the mode clear key.
   2) Enter "107".
   3) Hold down the clear/stop key for more than 3 seconds.

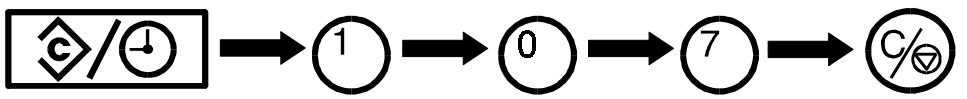

2. Touch 2 [A] on the display to access SP Test mode.

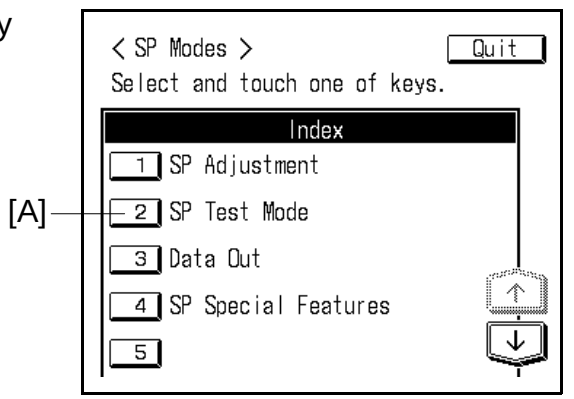

A176M570-2.img

3. Touch Next [A] on the display twice.

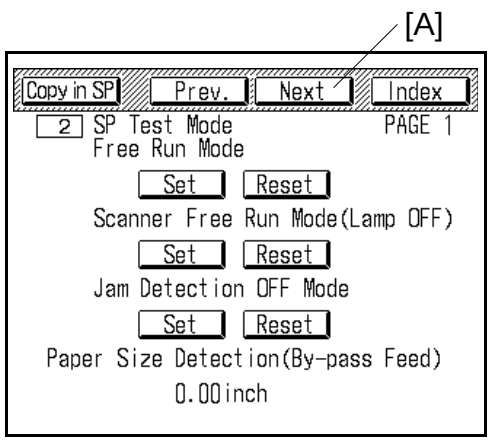

A176M573.img

4. 1) Touch [Output No. 00] [B].
   2) Enter the electrical component number by using the number keys on the operation panel. (Refer to the table on the following pages.)
   3) Press the Enter key [C].
   4) Press [ON] [D] to activate and press [OFF] [E] to de-activate the electrical component.

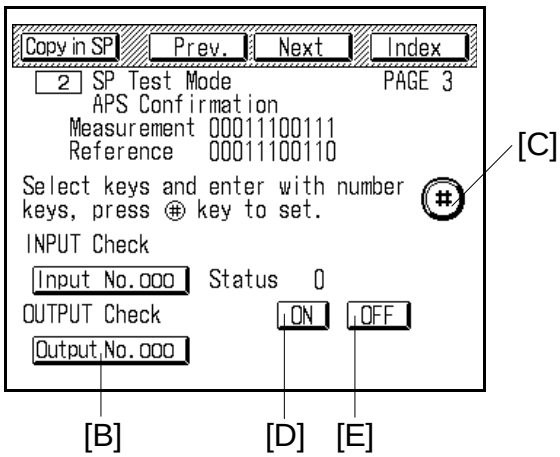

A176M572-2.img

NOTE: When listening for the activation sound, keep the front door open. If the front door is closed, when [OFF] is touched, mechanical noise caused by home positioning obscures the actual de-activation sound.

Output Check Mode Table

Output No.	Electrical Component
1	Not used
2	Junction Solenoid
3	LCT Feed Clutch
4	By-pass Feed Clutch
5	Duplex Transport Clutch
6	Toner Supply Clutch
7	By-pass Pick-up Solenoid
8	Guide Plate Solenoid
9	LCT Pick-up Solenoid
10	Toner Bottle Motor
11	Duplex Transport Clutch
12	Pressure Arm Solenoid
13	Duplex Positioning Solenoid
14	LCT Down Key LED
15	Not used
16	Main Motor Forward
17	Main Motor Reverse
18	Fusing/Duplex Drive Motor
19	Development Motor
20	By-pass Feed Motor - Low Speed
21	By-pass Feed Motor - High Speed (First Copy from 1st feed tray)
22	LCT Motor - Up
23	LCT Motor - Down
24	Paper Feed Motor - Low
25	Paper Feed Motor - High (First Copy from 1st feed tray)
26	Anti-condensation Heater Relay
27	1st Pick-up Solenoid
28	2nd Pick-up Solenoid
29	3rd Pick-up Solenoid
30	4th Pick-up Solenoid
31	1st Pressure Solenoid
32	2nd Pressure Solenoid
33	3rd Pressure Solenoid
34	4th Pressure Solenoid
35	Toner Collection Motor - High
36	Toner Collection Motor - Low
37	Tandem Lock Solenoid
38	1st Lift Motor (Up)
39	1st Lift Motor (Down)
40	2nd Lift Motor (Up)
41	2nd Lift Motor (Down)
42	3rd Lift Motor (Up)

Output No.	Electrical Component
43	3rd Lift Motor (Down)
44	4th Lift Motor (Up)
45	4th Lift Motor (Down)
46	Rear Fence Drive Motor (Counterclockwise)
47	Rear Fence Drive Motor (Clockwise)
48	1st Paper Feed Clutch
49	2nd Paper Feed Clutch
50	3rd Paper Feed Clutch
51	4th Paper Feed Clutch
52	Registration Clutch
53	Main Power Relay
54	Erase Lamp
55	Charge Wire Cleaner Motor
56	Transfer Belt Positioning Solenoid
57	Potential Calibration Mode (–100 V)
58	Potential Calibration Mode (–800 V)
59	QL/PTL
60	Charge Corona/Grid (Copying)
61	Charge Corona/Grid (ID Sensor Pattern)
62	Development Bias (Copying)
63	Development Bias (Non-image Area)
64	Development Bias (ID Sensor Pattern)
65	Transfer Current
66	Exhaust Fan - Low
67	Exhaust Fan - High
68	Built-in LCT (Up)
69	Built-in LCT (Down)
70	Optics Cooling Fan-2
71	AC Drive Cooling Fan
72	Duplex Cooling Fan
73	Scanner Drive Motor Cooling Fan
74	Drum Exhaust Fan - High
75	Drum Exhaust Fan - Low
76	LCT Feed Motor - High
77	LCT Feed Motor -Low
78	Drum Grounding Relay OFF (Float)
79	Not Used
80	Main Switch Off Solenoid
Output Nos. 81 ~ 100 are not used	
101	Main Motor: Proof mode (S/S)/Transport Drive Motor (Finisher)
102	Main Motor: Sort mode (S/S)
	Not Used (Finisher)
103	Exit Motor (S/S)/Exit Drive Motor (Finisher)

Output No.	Electrical Component
104	Turn Gate Solenoid (S/S)
	Junction Gate Solenoid (Finisher)
105	Bin Drive Motor (S/S)
	Positioning Roller Solenoid (Finisher)
106	Jogger Motor (S/S)
	Jogger Motor (Finisher)
107	Bin Rear Plate Drive Motor (S/S)
	Shift Motor (Finisher)
108	Grip Motor (S/S)
	Stack Feed-out Motor (Finisher)
109	Grip Positioning Solenoid (S/S)
	Shift Tray Lift Motor (Finisher)
110	Grip Solenoid (S/S)
	Not used (Finisher)
111	Staple Unit Drive Motor (S/S)
	Staple Drive Motor (Finisher)
112	Staple Motor (S/S)
	Stapler Motor (Finisher)
113	Punch Motor (S/S)
	Not used (Finisher)
Output Nos. 114 ~130 are not used	
131	Optics Cooling Fan
Output Nos. 132 ~ 151 are not used	
152	Not used (DJF)/Original Gate Solenoid (RDH)
153	Not used (DJF)/Inverter Solenoid (RDH)
154	"READY" LED (DJF)/Push Plate Solenoid (RDH)
155	"AUTO" LED (DJF)/Feed-in Clutch (RDH)
156	Not used (DJF)/Not used (RDH)
157	Feed-in motor (DJF)/Not used (RDH)
158	Feed-out Motor (DJF)/Feed-in Motor (RDH)
159	Not used (DJF)/(RDH)
160	Belt Drive Motor (DJF)/Transport Belt Motor (RDH)
161	Not used (DJF)/Not used (RDH)
162	Separation Solenoid - SADF (DJF)/Inverter Motor (RDH)
163	Not used (DJF)/Feed-out Motor (RDH)
164	Not used (DJF)/Not used (RDH)
165	Stopper Solenoid (DJF)/Friction Belt Motor (RDH)
166	Inverter Solenoid (DJF)/"READY" LED ON (RDH)
167	Feed-In Clutch (DJF)/Not used (RDH)
168	Not used (DJF)/Not used (RDH)

2.5 USER TOOLS

This mode is for the key operators in charge of this copier. The operator can change or set the copier's default settings using the following user tools.

2.5.1 How To Access The User Tools

1. Press the Clear Modes key.
2. Hold down the Clear/Stop key for more than 3 seconds until the User Tool Menu appears on the touch panel display.

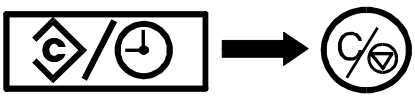

3. Select the menu number to use by touching the touch panel display.

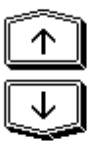

This copier has 12 user tools for the European version and 10 user tools for the U.S.A. version. You can see 5 user tools on the touch panel display at the same time. Use these keys to see the rest of the user tool menu.

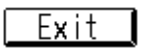

Use to exit the user tools.



Use to return to the user tool menu display.

2.6 TOUCH PANEL DISPLAY POSITION ADJUSTMENT

Due to inaccurate display position adjustment, it is possible that the touch panel sometimes does not respond if the key is touched.

In this case, precisely adjust the touch panel display position as follows:

1. Press the interrupt key then hold down the clear/stop key for more than three seconds.

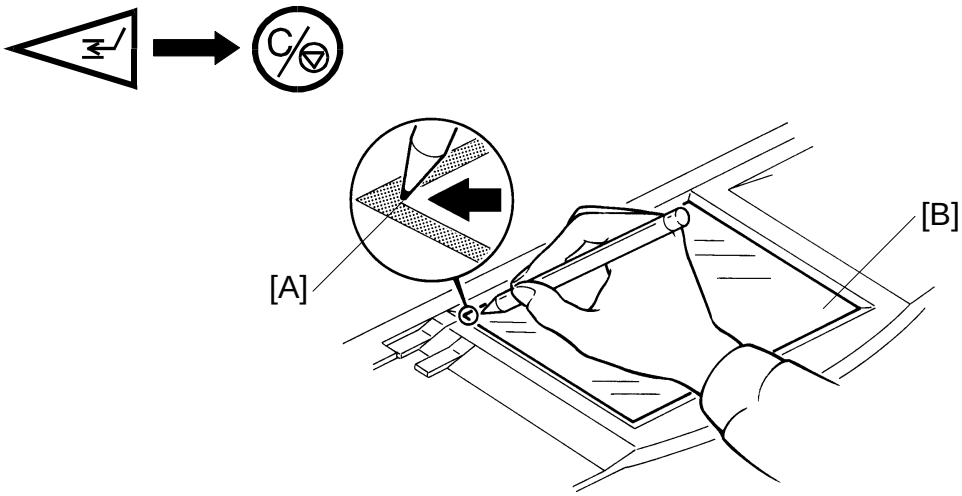

A176M575.img

2. Follow the guidance on the LCD.
3. Touch the upper left corner [A].
4. Touch the lower right corner [B].

   NOTE: When touching the corner, do not touch inaccurately with finger but touch the corner precisely using a sharp object such as a pen (do not press too hard to avoid any damage).

5. Touch a few positions to confirm that the touch panel is correctly adjusted.

   NOTE: When a part of the touch panel display is touched, the responding position indicates a "+" mark. If this "+" mark is more than 7 mm away from the actually touched point, press the clear/stop key and start the adjustment from the beginning.

6. If the adjustment is correct, press the enter key "#".

   NOTE: Do not skip this step, otherwise, the result of the latest adjustment is ignored.

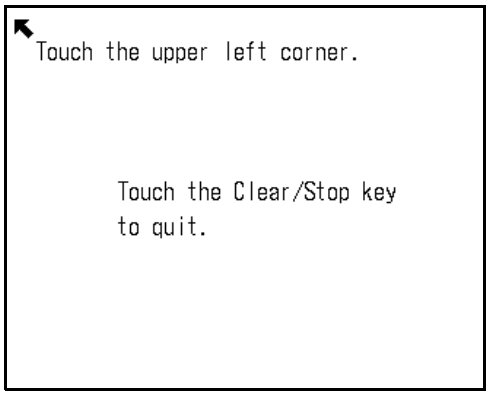

A176M576.img

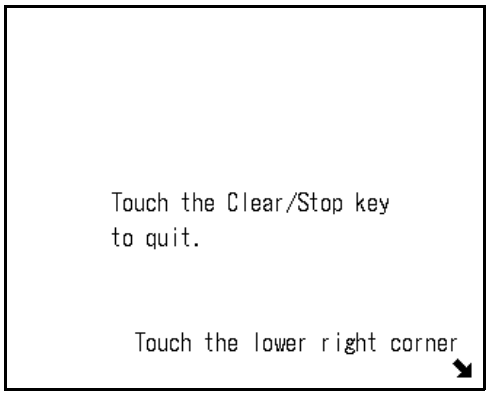

A176M577.img

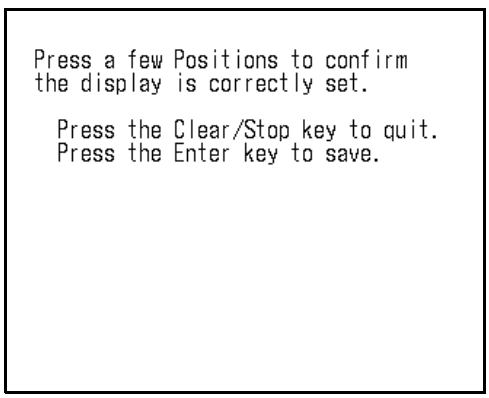

A176M578.img

3. PREVENTIVE MAINTENANCE SCHEDULE

3.1 PM TABLE

NOTE: The numbers mentioned for PM intervals indicate the number of copies.

Symbol key: C: Clean R: Replace L: Lubricate I: Inspect

	EM	120 K	240 K	360 K	NOTE
OPTICS					
Mirrors, Lens, Reflectors		C	C	C	Cotton pad with water, or blower brush.
Exposure Glass	C	C	C	C	Alcohol or glass cleaner.
Platen Cover Sheet	C	R	R	R	Alcohol or water (replace if necessary).
Scanner Guide Rail		C	C	C	Dry cloth.
ADS, Original Size Sensor	C	C	C	C	Blower brush.
Toner Shield Filter	C	C	C	C	Dry cloth. Discharge any static before installation.
Scanner/Lens Guide Rods		L	L	L	Refer to NOTE 1.
Scanner Drive Motor					Replace at 5000 k (70 CPM machine only)
PAPER FEED (for each paper feed station)					
Paper Feed Rollers (Paper Trays)	C	R	R	R	Water. Replace pick-up, feed, and separation rollers as a set.
Paper Feed Rollers (By-pass/LCT)	C	R	R	R	Water, replace pick-up, feed, and separation rollers as a set.
Paper Feed Guide Plate		C	C	C	Alcohol.
Registration Sensor		C	C	C	Blower brush.
Vertical Transport Rollers		C	C	C	Water
Paper Dust Cleaner		C	C	C	Dry cloth or blower brush
Registration Rollers		C	C	C	Water or alcohol.
Vertical Transport Guide Pin			L		Refer to NOTE 2.
AROUND THE DRUM					
Corona Wires	C	R	R	R	Dry cloth or water.
Wire Cleaner			R		
Cleaner Drive Gear			L		Refer to NOTE 3.
Charge Grid		R	R	R	
VD, VL, ADS Pattern	C	C	C	C	Dry cloth.
Drum Grounding Terminal					Replace at 1.2 M. Lubricate with KS660 (G0049668) at replacement.
End Blocks and Casing	C	C	C	C	Water.

	EM	120 K	240 K	360 K	NOTE
Pre Transfer Lamp Filter	C	C	C	C	Dry cloth and blower brush. Discharge any static before installation.
Quenching Lamp	C	C	C	C	Dry cloth and blower brush.
ID Sensor	C	C	C	C	Blower brush.
Erase Lamp Unit	C	C	C	C	Dry cloth.
Pick-off Pawls	C	C	R	C	
Drum Potential Sensor	C	C	C	C	Dry cloth or blower brush.
Cleaning Blade		R	R	R	
Cleaning Seal		C	C	C	Replace if necessary.
Cleaning Brush			R		
Toner Collection Bottle	C	C	C	C	Empty used toner.
Cleaning Drive Section			L		Refer to NOTE 4.
DEVELOPMENT UNIT					
Developer		R	R	R	
Upper Seal		C	C	C	
Side Seals		C	C	C	
Air Filter		R	R	R	Vacuum cleaner
Toner Bottle Holder	C	C	C	C	Dry cloth.
Toner Receiver	C	C	C	C	Dry cloth.
Toner Bottle Holder		L	L	L	Refer to NOTE 5.
TRANSFER BELT UNIT					
Transfer Belt	C	C	R	C	Dry cloth, clean both sides.
Cleaning Blade		R	R	R	
Belt Drive/Guide/ Bias Rollers		C	C	C	Dry cloth
FUSING/PAPER EXIT UNIT					
Hot Roller		C	R	C	Replace if necessary.
Pressure Roller and Pressure Roller Bearings		C	R	C	Replace if necessary.
Stripper Pawls	C	C	R	C	Replace.
Fusing Entrance and Exit Guides		C	C	C	Suitable solvent.
Fusing Thermistor		C	C	C	Suitable solvent. Refer to NOTE 6.
Transport/Exit Rollers			C		Water.
Hot Roller Isolating Bushing			L		Refer to NOTE 6.
Oil Supply Roller		R	R	R	
Pressure Roller Cleaning Roller		R	R	R	
Oil Supply Cleaning Roller		R	R	R	
Oil Supply Cleaning Blade		R	R	R	



	EM	120 K	240 K	360 K	NOTE
DUPLEX (for duplex copies)					
Feed Roller		R	R	R	
Separation Belts		R	R	R	
Pick-up/Transport Rollers		C	C	C	
Positioning Pins/Holes		L	L	L	Refer to NOTE 7.
OTHERS					
Ozone Filter			R		
Drive Belts		I	I	I	Replace if necessary.
Exit Sensor		C	C	C	Blower brush.
Development Drive Gear				C	
Dust Protection Filter			R		70 CPM machine only.
SORTER STAPLER (A606)					
Rollers	C	C	C	C	Water.
Bins		C	C	C	Water.
Bushings		L	L	L	Use Launa oil or equivalent.
Gears		L	L	L	Use Grease-501.
Stapler					Replace after 200 k staples.
Punch Unit					Replace after 1000 k copies with punch.
Exit Mylars					Replace after 1000 k copies.
RECIRCULATING DOCUMENT HANDLER (A607)					
Transport Belts	C	C	R	C	Belt cleaner. Replace if necessary.
Feed Roller	C	R	R	R	Alcohol. Replace if necessary.
Separation Belt	C	R	R	R	Alcohol. Replace if necessary.
FINISHER					
Rollers		C	C	C	Water.
Bushings		L	L	L	Use Launa oil or equivalent.
Gears		L	L	L	Use Grease-501.
Stapler					Replace after 200 k staples.
DUAL JOB FEEDER (for originals) (A610) Estimated C/O is 2.5.					
	EM	**48 K**	**96 K**	**144 K**	**NOTE**
Transport Belt	C	R	R	R	Belt cleaner. Replace if necessary.
Pick-up Roller	C	C	C	C	Alcohol. Replace if necessary.
Feed Roller	C	R	R	R	Alcohol. Replace if necessary.
Separation Belts	C	R	R	R	Alcohol. Replace if necessary.
Sensors	C	C	C	C	Blower brush.

The location of the parts which should be lubricated at PM, are shown in the following figures:

NOTE 1: Scanner/Lens Guide Rods

1. Lubricate the horizontal and vertical lens guide rods [A] with Launa Oil every 120 k copies.

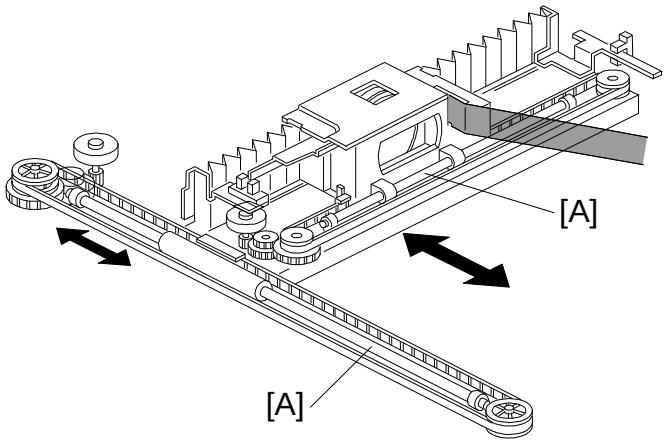

A176M579.wmf

2. Lubricate the third scanner guide rod [B] with Launa oil every 120 k copies.

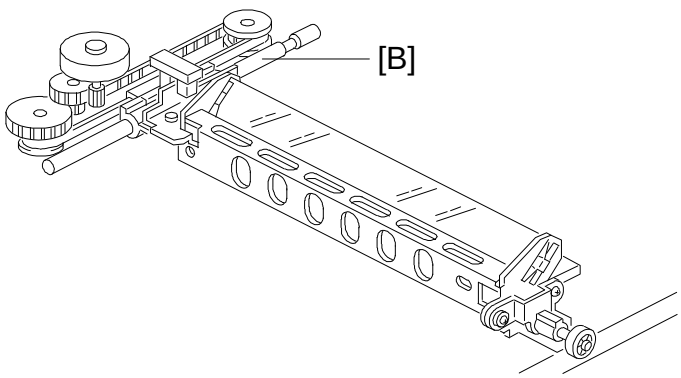

A176M580.wmf

NOTE 2: Vertical Transport Guide Lock Pin

1. Lubricate the vertical transport guide lock pin [A] with Mobil Temp. 78 every 240 k copies.

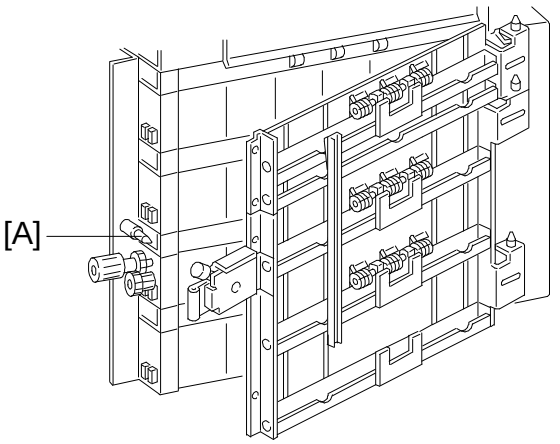

A176M581.wmf

NOTE 3: Charge Wire Cleaner Drive Gears

1. Open the drive motor cover [B] (2 screws).

   NOTE: When re-installing the cover, do not tighten the screws too much.

2. Lubricate the charge wire cleaner drive gears [C] with Grease G501 every 240 k copies.

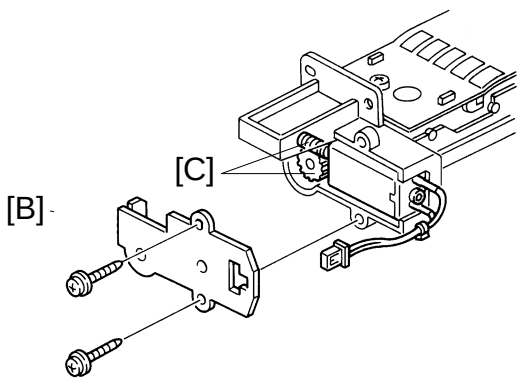

A176M582.img

NOTE 4: Cleaning Drive Section

1. Lubricate the cleaning blade shift cam [A] with Grease G501 every 240 k copies.

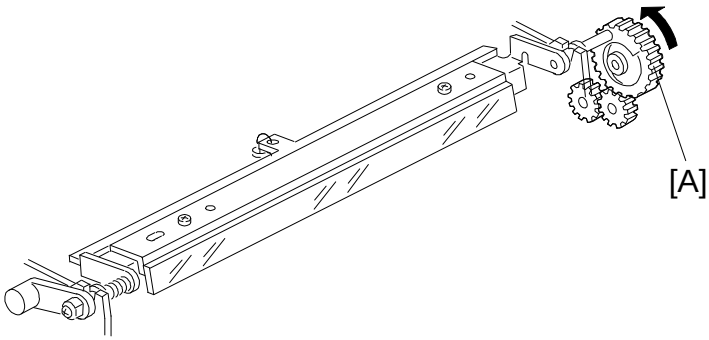

A176M583.wmf

2. Lubricate the cleaning section drive gear [B] with Grease G501 every 240 k copies.

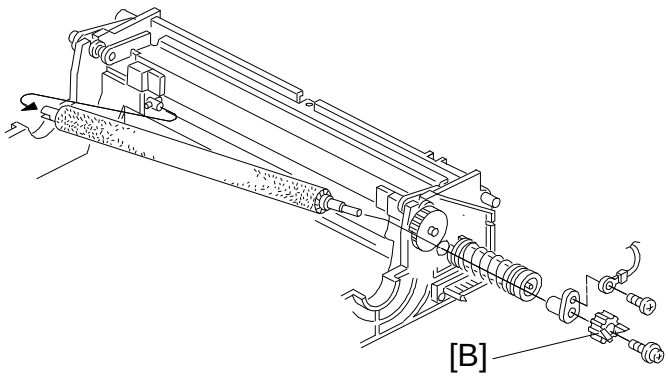

A176M584.wmf

NOTE 5: Toner Bottle Holder

1. Lubricate the toner bottle drive gears [C] with Grease G501 every 120 k copies.
2. Lubricate the toner bottle holder [D] with Mobil Temp. 78 every 120 k copies.

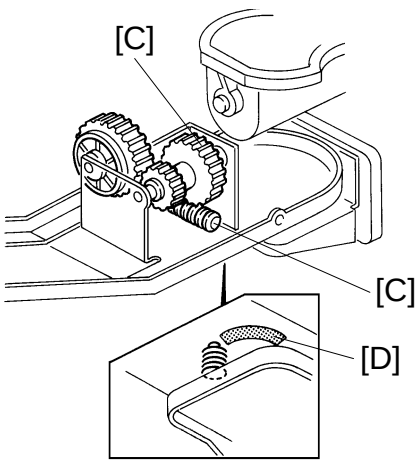

A176M585.img

NOTE 6: Fusing Section

1. Clean the surface of the fusing thermistor [A] where touching the hot roller at every PM.

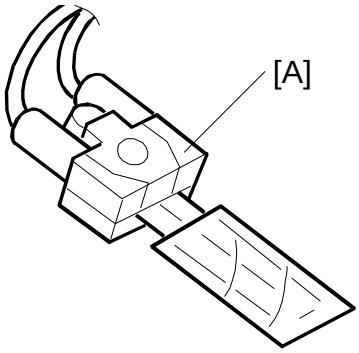

A176M586.wmf

2. Lubricate the inner and outer surface of the isolating bushing [B] with BARRIERTA L55/2 grease every 240 k copies.

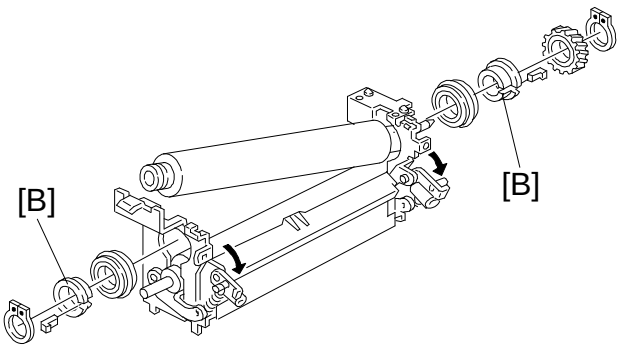

A176M587.wmf

NOTE 7: Duplex Unit

1. Lubricate the two positioning pins [C] and two positioning holes [D] with Mobil Temp. 78 every 120 k copies.

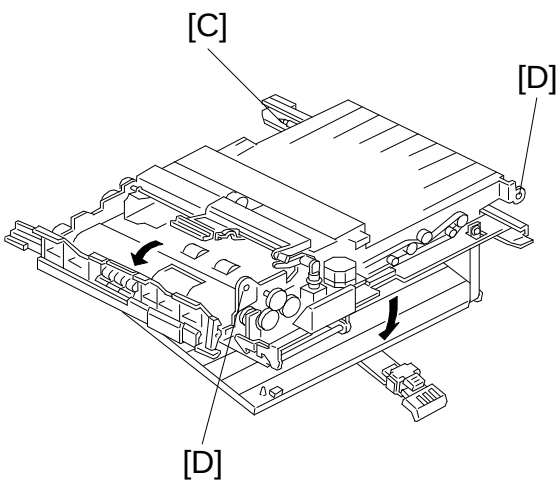

A176M588.wmf

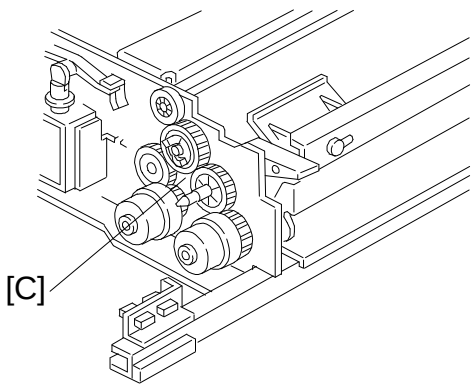

A176M589.wmf

NOTE 8: Development Unit

1. Lubricate the bias terminal (sleeve roller shaft) [A] with Grease: KS660: SHIN-ETSU

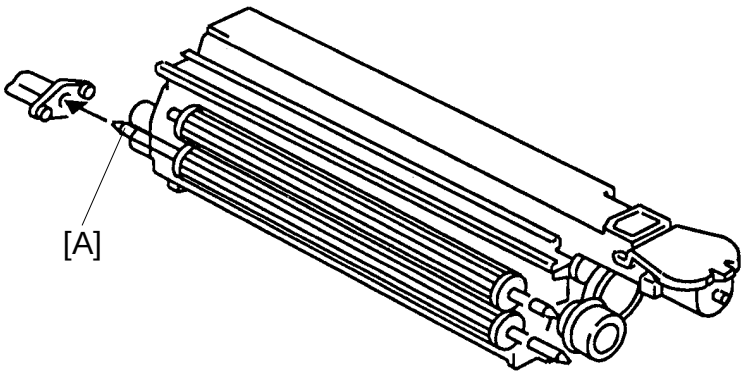

A176M590.img

NOTE: Use only conductive grease, otherwise bias voltage will not be properly applied to the development rollers.

3.2 EXPLANATION OF REGULAR PM

Item		Explanation
Optics Unit	Mirrors, Lens, Reflector, Exposure Glass, Platen Cover, Toner Shield Filter	Stains on any part of the optics unit result in black lines or areas of decreased sharpness on the copy. Periodic cleaning is required. The exposure glass and the platen cover sheet must also be cleaned. If stains on the platen cover sheet cannot be removed, it must be replaced.
	Exposure Lamp	Deterioration of the exposure lamp affects the copy. Check the lamp at regular intervals and replace if discolored.
	V_D, V_L, and ADS Patterns	If paper dust or toner accumulates on the V_D, V_L, and ADS patterns, the image density cannot be controlled correctly. This results in light or dark copies. Clean these patterns at regular intervals.
Transfer Belt Unit	Transfer Belt	A dirty or old transfer belt causes poor image transfer due to its weak chargeability. Clean (both front and rear sides) or replace the transfer belt at regular intervals.
	Belt Drive/ Guide/Bias Rollers	Dirty rollers shift the transfer belt to the front or rear.
	Cleaning Blade	A dirty or worn out cleaning blade will cause toner to adhere to the rear side of the copy. The blade must be replaced at regular intervals.
Paper Feed, Registration	Paper Feed Roller, Pick-up Roller, Separation Roller	This machine uses paper trays, a by-pass feed table, and an LCT for paper feeding. If paper dust adheres to the paper feed rollers or if these rollers are worn out, paper may not feed correctly, or skewing may result. Replacing is required at regular intervals.
	Registration Roller	A dirty registration roller can cause paper to register incorrectly, skew, or jam. Cleaning is required at regular intervals.
	Paper Dust Cleaner	Too much paper dust caught in the cleaner causes paper dust overflow. This results in early deterioration of the cleaning blade, fusing rollers, etc. Clean at regular intervals.
	Registration Sensor	A dirty registration sensor causes paper jams. Clean at regular intervals.

Item		Explanation
Around the Drum	Charge Corona Wires/ Wire Cleaner/ Charge Corona Grid	Dirty charge corona wires may cause uneven image density. They should be replaced at regular intervals.
	End Blocks	Toner tends to accumulate on the corona end blocks. This can result in a high voltage leak. Clean end blocks at regular intervals.
	Drum Grounding Terminal	Too much drum grounding terminal deterioration causes poor drum grounding. This results in dirty background and drum potential sensor calibration errors.
	QL	If toner accumulates on the QL, dirty background or a repeating negative image may result. Clean the QL at regular intervals.
	PTL	If paper dust or toner accumulates on the PTL filter, its efficiency may be reduced. This can cause toner to be reattracted to the drum during transfer, reducing image density. Clean the PTL filter at regular intervals.
	ID Sensor	If too much paper dust or toner accumulates on the ID sensor, the toner density cannot be controlled correctly. This results in light copy or over toning. Clean this sensor at regular intervals.
	Erase Lamp	If toner accumulates on the erase lamp, dirty background may occur in the erased area that becomes progressively worse during long copy runs. Also this affects sensor pattern detection, causing incorrect toner density and exposure lamp control. Clean this lamp at regular intervals.
	Cleaning Blade	A dirty or worn out cleaning blade will cause black lines on copies or scratches on the drum. The blade must be replaced at regular intervals.
	Cleaning Brush	A worn out cleaning brush will not clean the drum surface effectively, resulting in dirty background and damage to the cleaning blade. Replace at regular intervals.
	Toner Collection Bottle	If the toner collection bottle becomes full, a service call condition occurs and copying is disabled. Empty the toner collection bottle at regular intervals.
	Pick-off Pawls	After long usage, the point that touches the drum becomes worn and the area contacting the drum is increased. This may cause drum filming, resulting in vertical gray lines on the copy.

Item		Explanation
Development Unit	Developer	The tribo-chargeability of overused developer decreases. This results in toner scattering. Developer must be replaced at regular intervals.
	Bias Terminal	Less lubricant increases the friction between the bias terminal and the bias receptacle. This may degrade the terminal.
Fusing Unit	Thermistor	If toner accumulates on the thermistor, fusing temperature control may not be accurate. Clean the thermistor at regular intervals.
	Stripper Pawls	Toner or dust adhering to the stripper pawls can cause a paper jam. Clean or replace the pawls at regular intervals.
	Fusing Entrance and Exit Guides	Toner piling up on the guide plate will cause dirty background on the copy or paper jam. Clean the guide plate at regular intervals.
	Oil Supply Roller	If the oil inside is used up, toner and paper powder adheres to the surface of the hot roller resulting in hot-offset problems.
	Pressure Roller Cleaning Roller	An excessively dirty cleaning roller applies a heavy load to the fusing/duplex drive roller, resulting in SC520.
	Oil Supply Roller Cleaning Roller	An excessively dirty cleaning roller cannot clean foreign substance off the oil supply roller. This causes stains on the copy.
	Oil Supply Cleaning Blade	An excessively dirty cleaning blade cannot clean foreign substance off the oil supply roller. This causes stains on the copy.
Duplex Unit	Separation/Feed/ Transport Rollers and Separation Belts	If paper dust adheres to the separation/feed/transport rollers and the separation belts, paper may not feed correctly, or skewing may result. Replacement is required at regular intervals.
Others	Ozone Filter	When an ozone filter deteriorates, ozone produced in the copier will not be absorbed, causing headaches, irritation, or other discomfort. Replace at regular intervals.
	Dust Protection Filter (70 CPM version only)	After the dust protection filter has absorbed a lot of foreign material, sufficient cool air cannot be supplied by the drum cooling fan. Toner may be clogged in the cleaning unit.
DJF	Transport Belt	A dirty transport belt can leave stains on copies. Replace the belt at regular intervals.
	Pick-up Roller, Feed Roller, Separation Belt	When dirty, these rollers and this belt can leave stains on the copy paper. Also, original misfeeds or multi-feeds may occur. Replace these parts at regular intervals.

Item		Explanation
RDH	Transport Belt	A dirty transport belt can leave stains on copies. Clean or replace the belt at regular intervals.
	Feed Roller Separation Belts	When dirty, these rollers and these belts can leave stains on the copier. Also, original misfeeds or multi-feeds may occur. Replace these parts at regular intervals.

3.3 REGULAR PM PROCEDURE

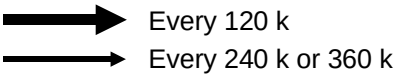

1. Make a copy

Make a copy of an O-S-A3 test chart at manual image density level 4.

2. Optics (every 120 k)

2-1. Clean the mirrors, lens and reflectors by using a soft cloth, cotton pad with water, or a blower brush.
2-2. Clean the exposure glass with alcohol or water.
2-3. Clean the scanner guide rail with a dry cloth.
2-4. Clean the magnification guide rail with a dry cloth.
2-5. Clean the ADS sensor and the original width and length sensors with a blower brush.
2-6. Inspect the exposure lamp, and if necessary, replace it.
2-7. Lubricate the lens and 3rd scanner drive guide rods [Launa oil].

3. Around the Drum (every 120 k)

3-1. Remove and open the drum unit and clean the ID and Drum Potential sensors with a blower brush.
3-2. Clean the pick-off pawls and the toner shield filter. Discharge any static electricity on the filter.
3-3. Clean the QL, PTL filter, and erase lamp with a dry cloth. Discharge any static before installation.
3-4. Clean the end blocks and casing with water or alcohol.
3-5. Replace the grid plate and corona wire.
3-6. Clean the registration rollers and paper dust cleaner.
3-7. Empty the toner collection bottle.
3-8. Clean the inside of the cleaning section, cleaning brush, and seals.
3-9. Replace the cleaning blade.

Lubricate the cleaning drive gears (every 240 k) [Grease-G501]

Replace the wire cleaner and lubricate the drive gears [Grease-G501] (every 240 k)

Replace the cleaning brush (every 240 k)

Replace the pick-off pawl (every 240 k)

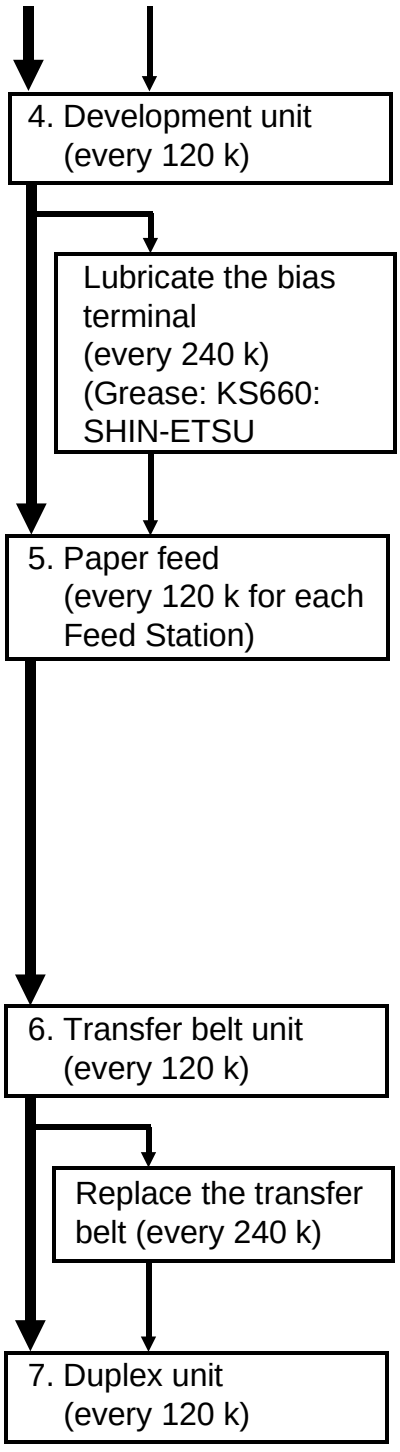

4-1. Remove the developer.
4-2. Clean the development unit and gears.
4-3. Pour a pack of new developer.
4-4. Replace the air filter.
4-5. Clean the toner bottle holder and toner receiver.
4-6. Lubricate the bottle drive mechanism [Grease G-501].

5-1. Clean the paper guide plates and vertical transport/relay rollers.
5-2. Replace the paper feed, pick-up, and separation rollers.

Note: The feed (pick-up, feed, separation) rollers for the 1st ~ 3rd feed trays are different from the feed rollers for the by-pass feed table and 3.5 k LCT. There is no interchangeability.

5-3. Clean the registration sensor.
5-4. Lubricate the transport guide lock pin.

6-1. Clean the transfer belt.
6-2. Replace the transfer unit cleaning blade.
6-3. Clean the belt drive/guide rollers and bias roller.

7-1. Replace the separation roller and separation belts.
7-2. Clean the feed and transport rollers.
7-3. Lubricate the duplex positioning pins.

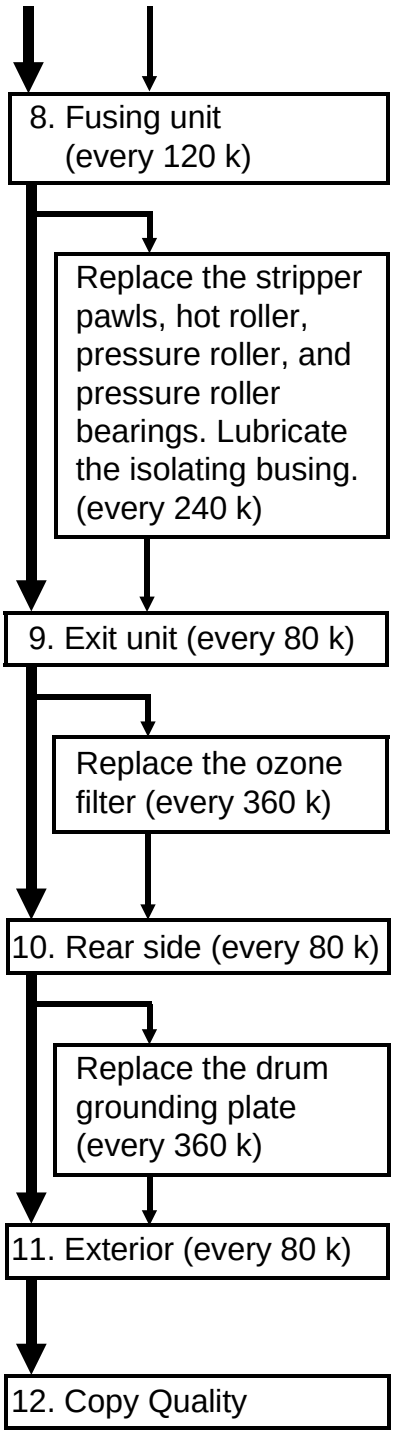

8-1. Clean the entrance and exit guide plates.
8-2. Clean the thermistor.
8-3. Clean the stripper pawls.
8-4. Replace the oil supply roller.
8-5. Replace the oil supply cleaning roller.
8-6. Replace the pressure roller cleaning roller.
8-7. Replace the oil supply cleaning blade.

9-1. Clean the exit rollers.
9-2. Inspect the antistatic brush.
9-3. Clean the exit sensor.

10-1. Lubricate the gears.
10-2. Inspect the timing belts.

11-1. Clean the covers.

12-1. Perform the developer initial setting. (1 SP Adjustment - PAGE 1).

12-2. Perform the process control data initial setting. (1 SP Adjustment - PAGE 1).

NOTE: Perform the developer initial setting only when new developer is installed.
Never make any copies with the new developer before the developer initial setting.

SECTION 5

REPLACEMENTS AND ADJUSTMENTS

1. EXTERIOR AND INNER COVER REMOVAL

1.1 FRONT SIDE

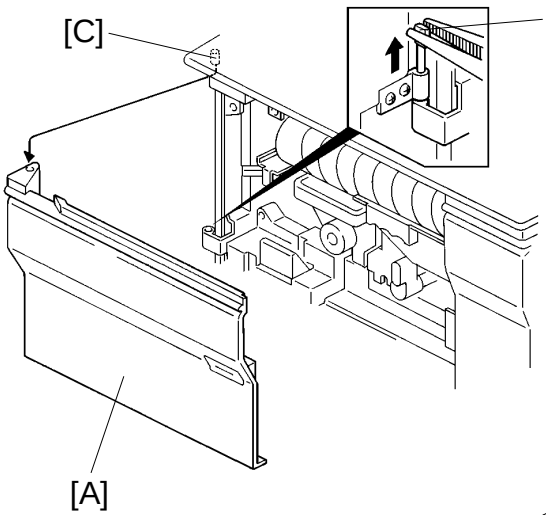

A176R500.img

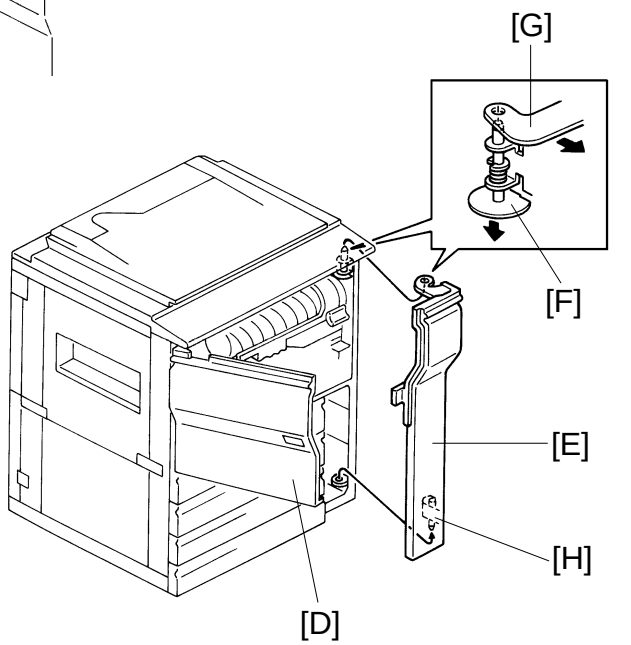

A176R501.img

1.1.1 Left Front Cover

1. Open the left front door [A] then unhook the chain (1 screw).
2. Pull out the pin [B].
3. Unhook the upper pin [C].

1.1.2 Right Front Door

1. Open the left front door [D].
2. Open the right front door [E].
3. Lower the pin [F] to unhook the upper hinge bracket [G].
4. Unhook the lower pin [H].

1.2 REAR SIDE

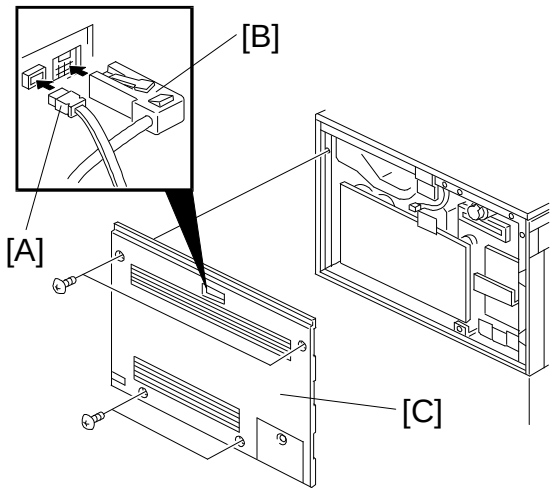

A176R502.wmf

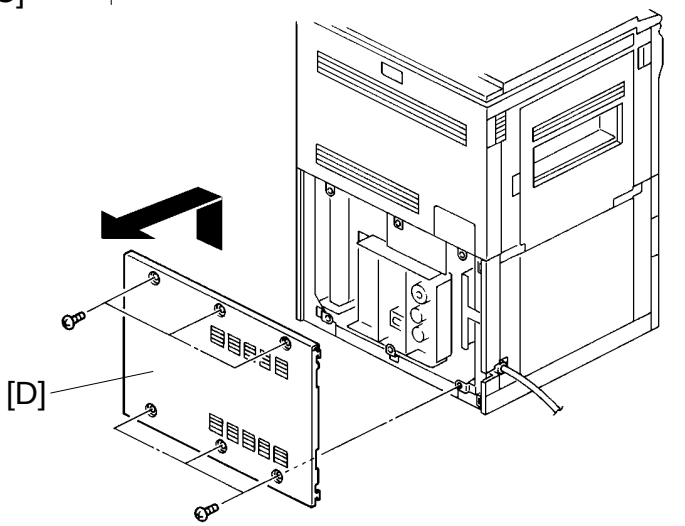

A176R503.img

1.2.1 Upper Rear Cover

1. Turn off the main switch.
2. If the DJF or RDH is installed, disconnect the fiber optics connectors [A] and [B].

   NOTE: After the upper rear cover is re-installed, set the fiber optics connectors [A] and [B] so that the fiber optic cable [A] is located over the electrical cable [B]. Also, the fiber optic cable [A] should not bend while opening and closing the DJF or RDH.
3. Remove the upper rear cover [C]. (4 screws)

1.2.2 Lower Rear Cover

1. Remove the lower rear cover [D]. (6 screws)

   NOTE: When installing the lower rear cover, set the hooks in the holes on the right and left side covers.

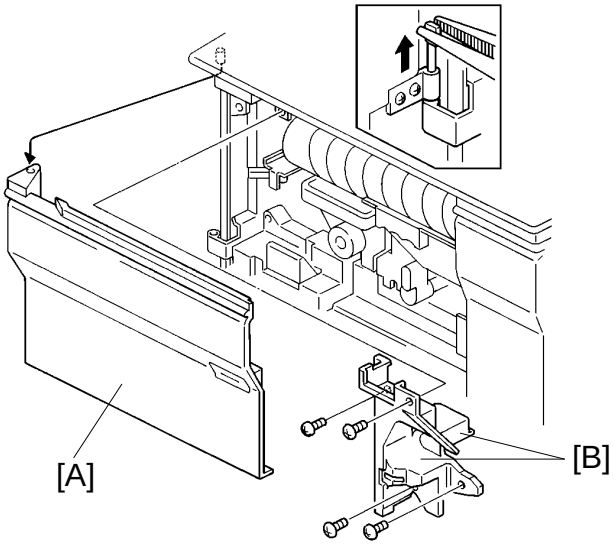

A176R504.img

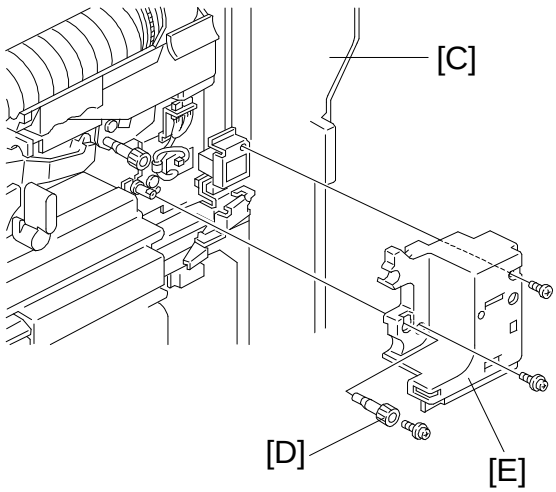

A176R505.wmf

1.2.3 Left Inner Cover

1. Remove the left front door [A].
2. Remove the left inner cover (4 screws) [B].

1.2.4 Right Inner Cover

1. Open the right door [C].
2. Remove knob (B1) [D] (1 screw).
3. Remove the right inner cover [E] (2 screws).

1.2.5 Shutter Inner Cover

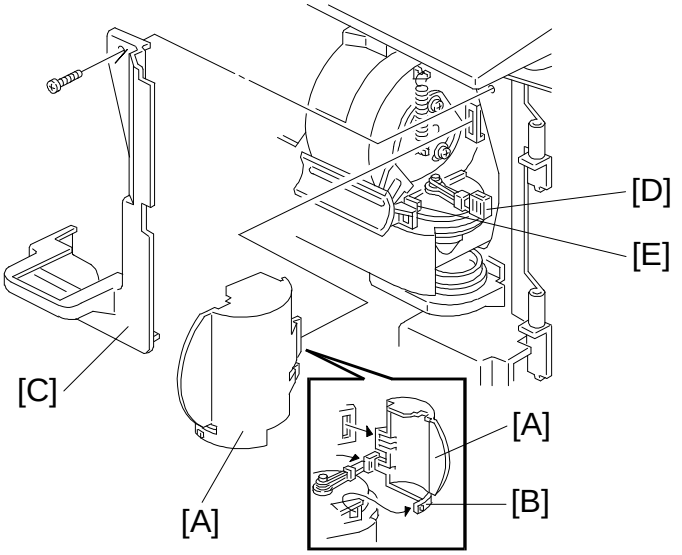

A176R506.wmf

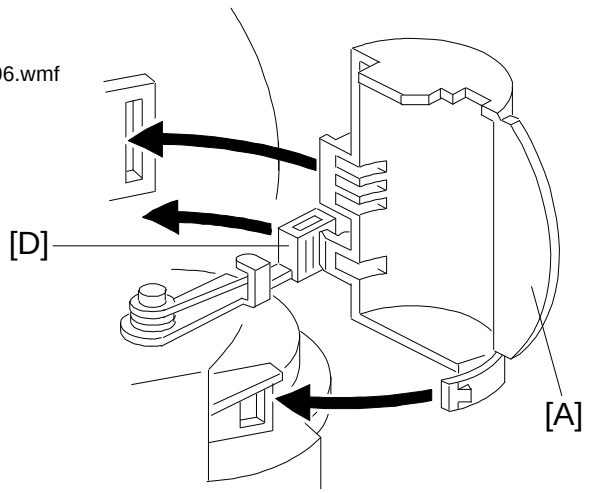

A176R507.wmf

1. Open the right door.
2. Remove the shutter cover [A] by releasing the hook [B].
3. Remove the shutter inner cover [C] (1 screw).

NOTE: 1) Be sure to move the lever [D] until it contact the part [E].

2) While installing the shutter cover [A], the lever [D] must be pushed as shown.

1.3 RIGHT SIDE

1.3.1 Feed Unit Cover

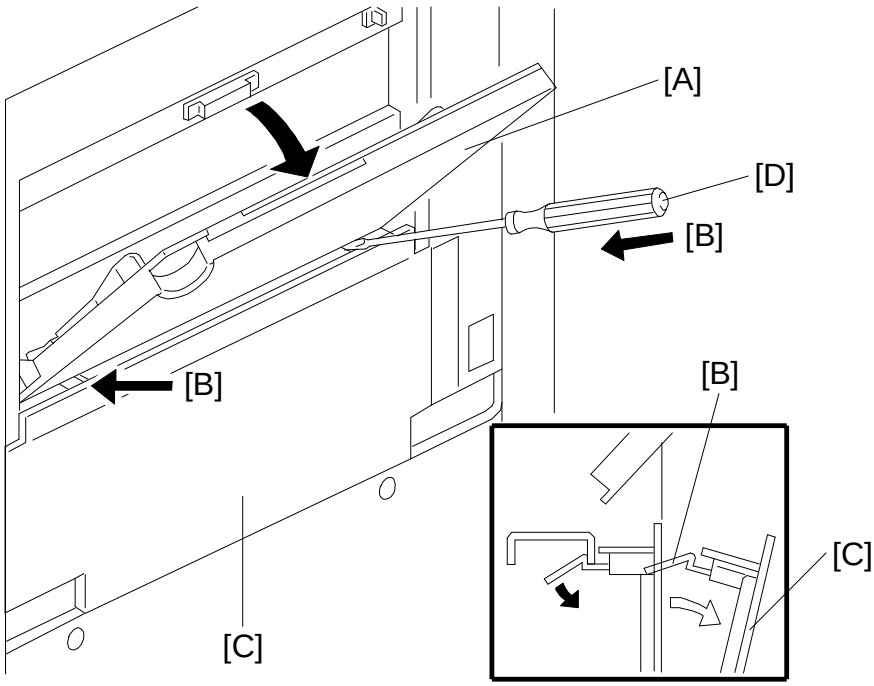

A176R508.wmf

1. Open the by-pass table [A] approximately 45 degrees and push the stoppers [B] of the feed unit cover [C] by using a small flat head screw driver [D], then remove the feed unit cover.

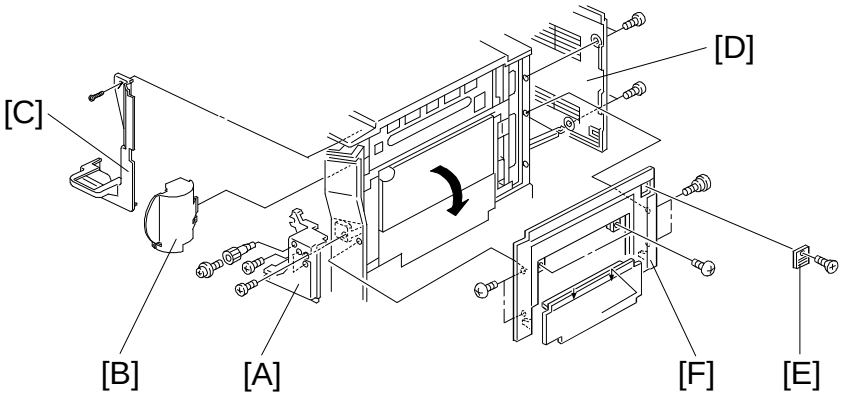

A176R509.wmf

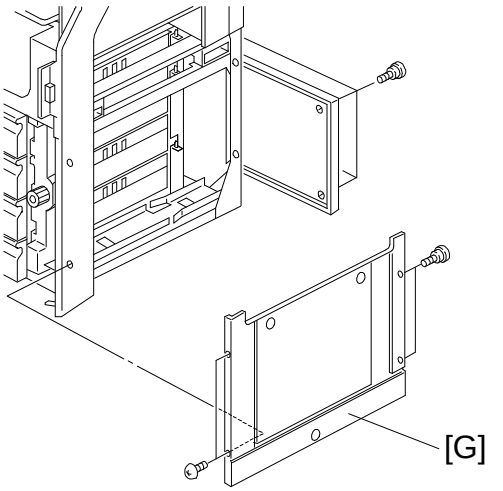

A176R510.wmf

1.3.2 Upper Right Cover

1. Remove the right inner cover [A], shutter cover [B] and the shutter inner cover [C]. (Refer to Shutter Inner Cover Removal.)
2. Remove the upper rear cover [D]. (Refer to Upper Rear Cover Removal.)
3. Remove the small cover [E] (1 screw).
4. Open the manual feed table and remove the upper right cover [F] (6 screws).

1.3.3 Lower Right Cover

1. Remove the lower rear cover. (Refer to Lower Rear Cover Removal.)
2. Open the right door.

   NOTE: When installing the lower right cover, set the hooks in the holes on the right and left side covers.
3. Remove the lower right cover [G] (4 screws).

1.4 LEFT SIDE

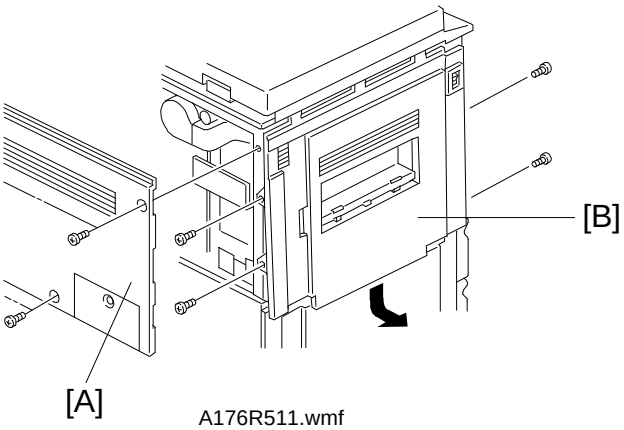

A176R511.wmf

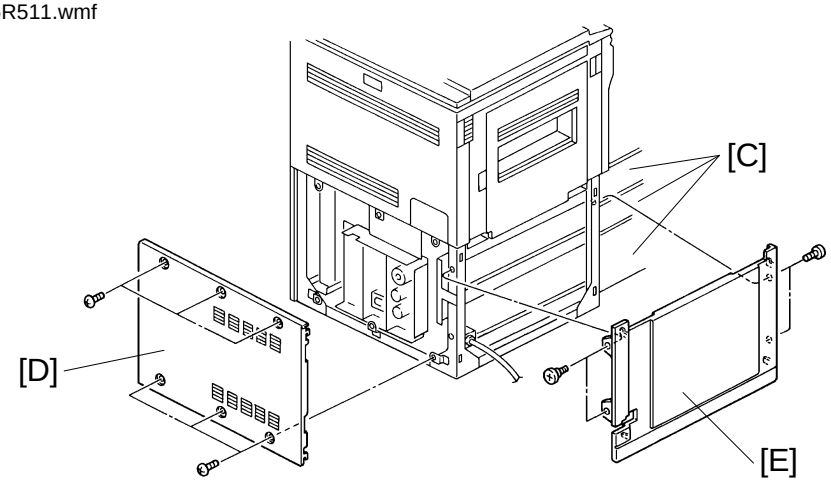

A176R512.img

1.4.1 Upper Left Cover

1. Remove the left inner cover. (Refer to Left Inner Cover Removal.)
2. Remove the upper rear cover [A]. (Refer to Upper Rear Cover Removal.)
3. Remove the upper left cover [B] (4 screws).

NOTE: When installing the upper left cover, set the hooks in the holes on the right and left side covers.

1.4.2 Lower Left Cover

1. Pull out the second, the third feed, and the fourth trays [C].
2. Remove the lower rear cover [D].
3. Remove the lower left cover [E] (4 screws).

NOTE: When installing the lower left cover, set the hooks in the holes on the right and left side covers.

1.5 OPERATION PANEL

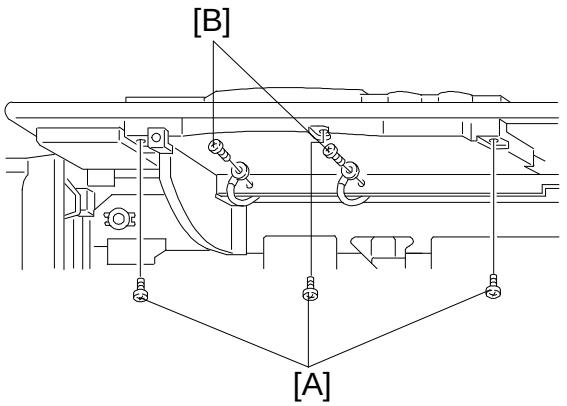

A176R513.wmf

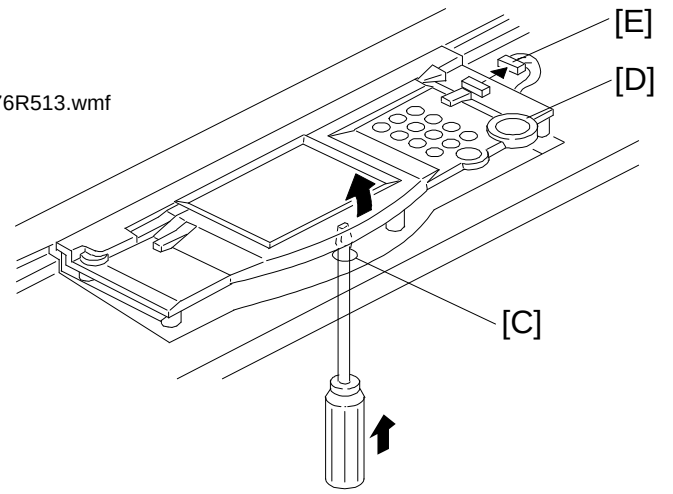

A176R514.wmf

1. Turn off the main switch.
2. Remove the left door. (Refer to Left Door Removal.)
3. Remove the left inner cover. (Refer to Left Inner Cover Removal.)
4. Open the right door.
5. Open the toner bottle.
6. Remove three screws [A].
7. Remove two screws [B] securing the protective earth wires.
8. Insert the screw driver through the hole [C] and push the operation panel [D] up.
9. Disconnect the connector [E].

NOTE: Be sure not to damage the harness by pulling the connector too strongly.

1.6 UPPER SIDE

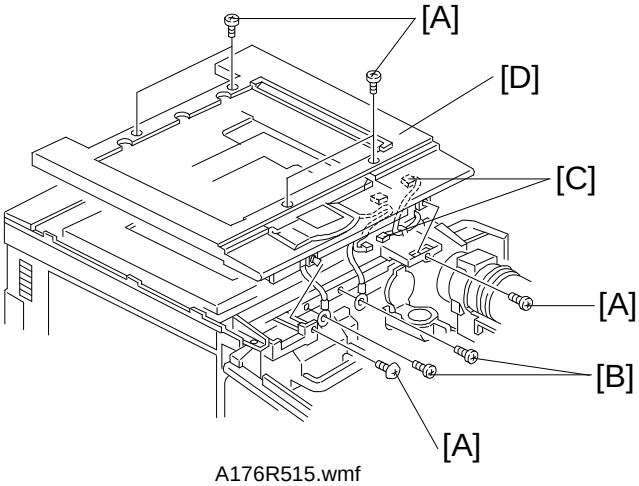

A176R515.wmf

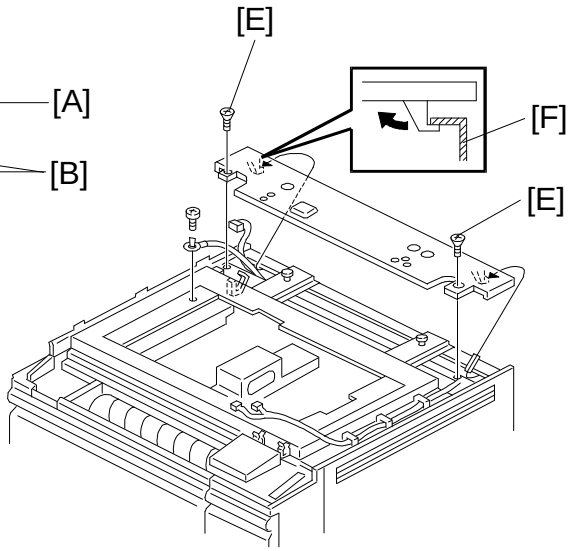

A176R516.wmf

1.6.1 Upper Cover

1. Turn off the main switch.
2. Remove six screws [A].
3. Remove two screws [B] securing the grounding wires.
4. Disconnect two connectors [C].
5. Remove the upper cover [D].

1.6.2 Rear Upper Cover

1. Turn off the main switch.
2. Remove the platen cover or document feeder (DJF or RDH) from the copier.
3. Remove the upper cover.
4. Remove the 2 screws securing the rear upper cover [E].
5. Disengage the hooks [F] by sliding the rear upper cover to the front and remove it.

2. OPTICS

2.1 EXPOSURE GLASS REMOVAL

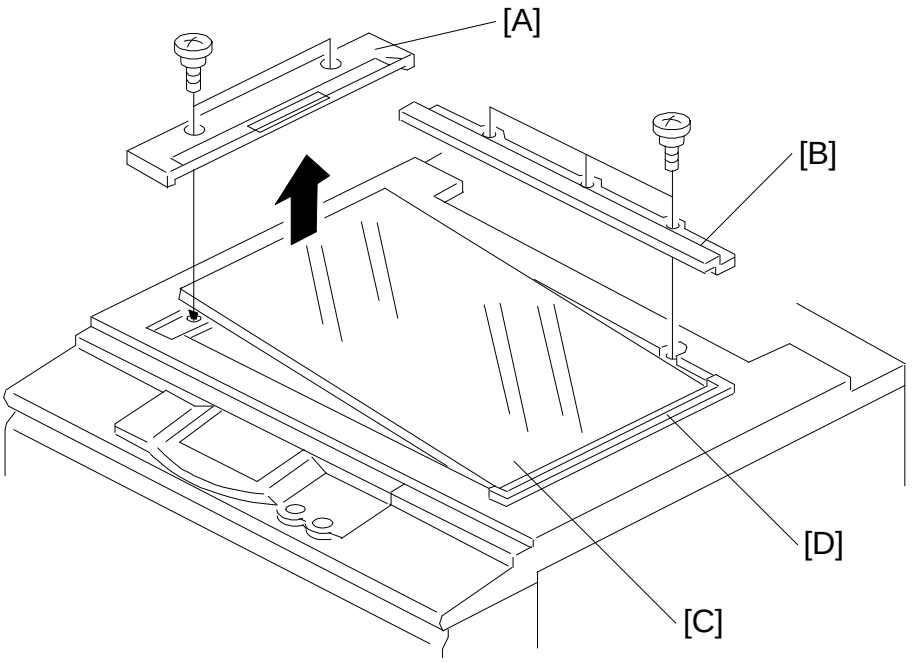

A176R517.wmf

1. Turn off the main switch.
2. Remove the left scale [A] (2 shoulder screws).
3. Remove the rear scale [B] (3 screws).
4. Grasp the left edge of the exposure glass [C] and lift slightly. Slide the other edge out from under the right glass holder [D]. Remove the exposure glass.

   NOTE: When reinstalling the exposure glass, make sure that the mark (white) on the edge of the glass is located at the rear right corner. This side is smoother and it generates less static electricity when the RDH is used.

2.2 EXPOSURE LAMP REPLACEMENT

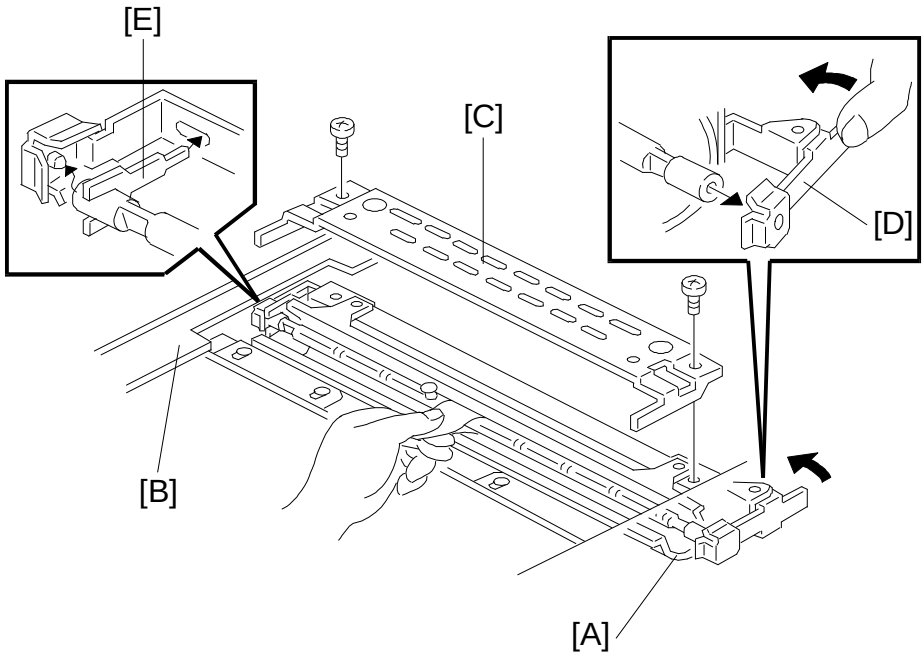

A176R518.wmf

NOTE: Do not touch the reflector or the new exposure lamp with your bare hands. Use a strip of paper as shown. (Oil marks from fingers on the lamp or reflectors will be affected by heat from the lamp.)

1. Remove the exposure glass. (Refer to Exposure Glass Removal.)
2. Move the first scanner [A] to the cutout position at the rear frame [B]. (See illustration.)
3. Remove the reflector cover [C] (2 screws).
4. While holding the lamp with the paper strip, release the lamp terminal [D] as shown; then, take out the lamp.
5. Install a new lamp. Use a strip of paper as shown to hold the lamp. Confirm that the lamp is properly set by both terminals and that the clip [E] is set properly.

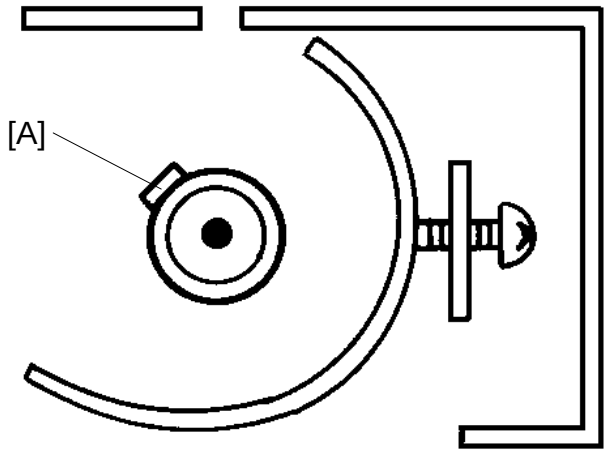

A176R519.img

NOTE: Make sure that the blister [A] on the lamp points towards the reflector opening (left side of the copier) as shown.

6. Reassemble the copier.
7. Turn on the main switch and enter SP mode, then perform the process control data initial setting (1 SP Adjustment - PAGE 1).

2.3 OPTICS THERMOSWITCH REPLACEMENT

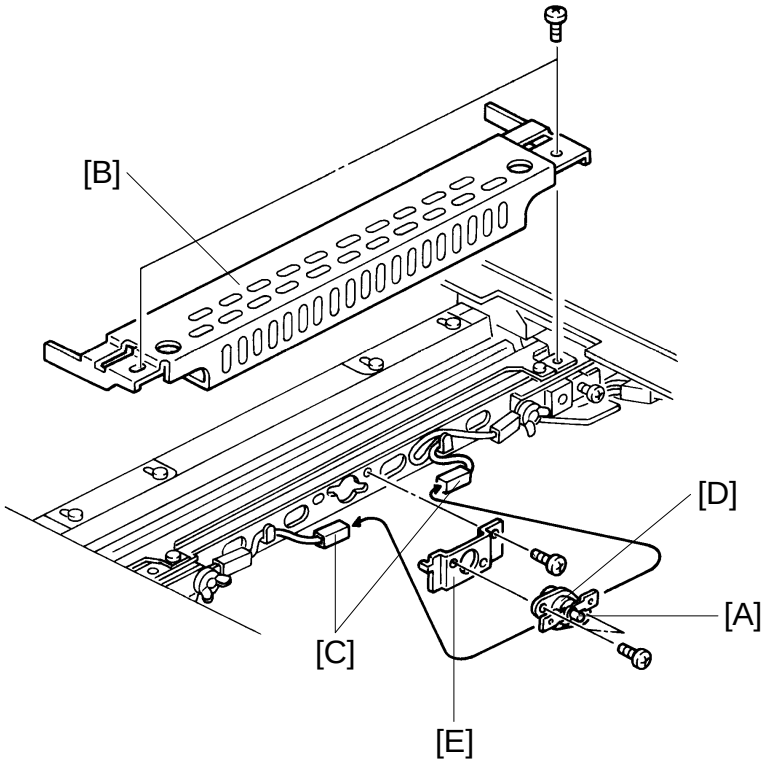

A176R520.img

NOTE: The thermoswitch can be reset manually by pushing the red button [A] when the exposure lamp area cools.

1. Remove the exposure glass. (Refer to Exposure Glass Removal.)
2. Move the first scanner to the cutout position at the rear frame.
3. Remove the reflector cover [B] (2 screws).
4. Remove the exposure lamp leads [C] from the terminals on both sides of the thermoswitch [D].
5. Remove the thermoswitch bracket [E] (1 screw).
6. Remove the thermoswitch from the bracket (2 screws), and replace it.

2.4 SCANNER HP SENSOR REPLACEMENT

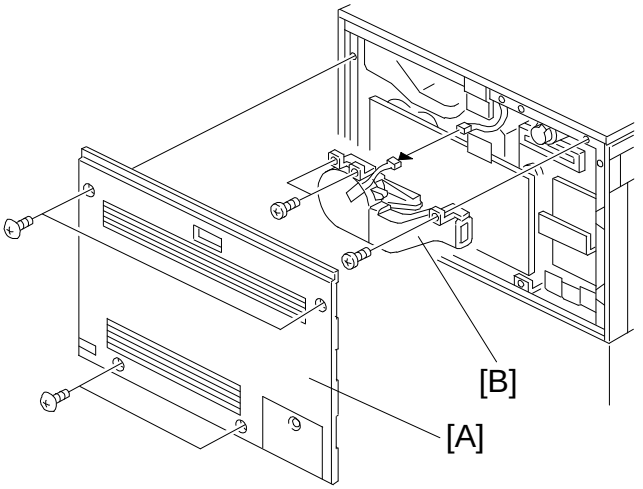

A176R521.wmf

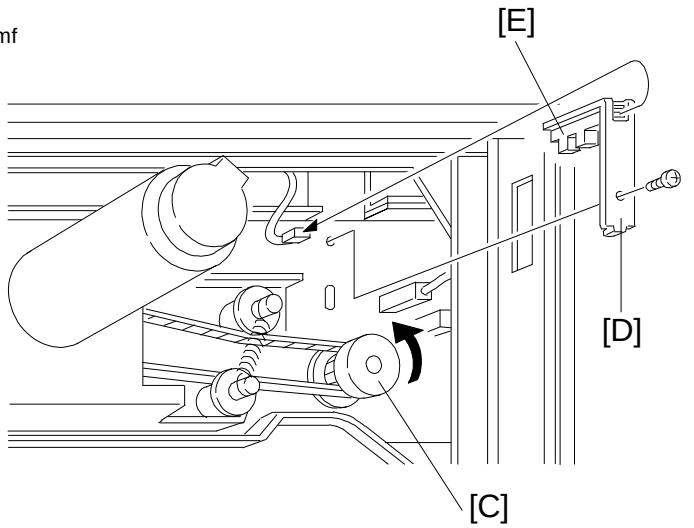

A176R522.wmf

1. Remove the upper rear cover [A]. (Refer to Upper Rear Cover Removal.)
2. Remove the exhaust fan [B] (3 screws).
3. Manually turn the scanner drive pulley [C] counterclockwise to move the scanners about 10 mm to the left (rear view).
4. Remove the scanner HP sensor bracket [D] (1 screw).
5. Disconnect the connector.
6. Replace the scanner HP sensor [E] (1 screw).

2.5 ADS SENSOR REMOVAL

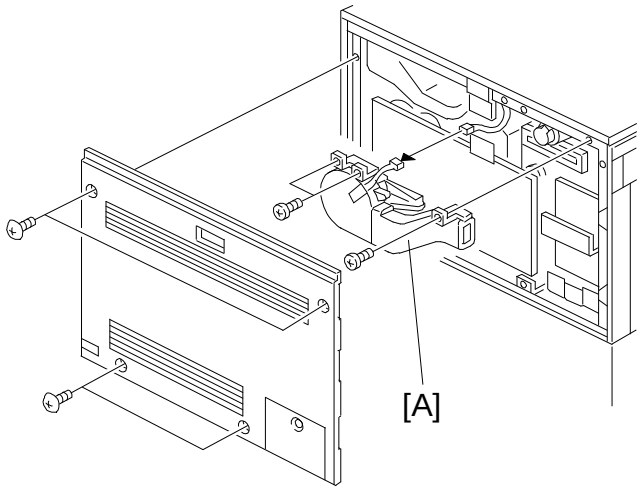

A176R521-2.wmf

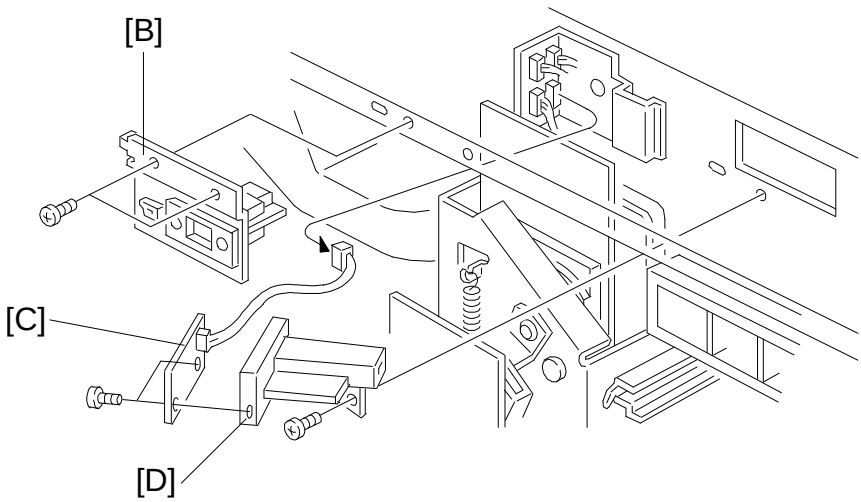

A176R524.wmf

1. Remove the exhaust fan [A]. (Refer to Scanner HP Sensor Replacement.)
2. Remove the DJF/RDH connector bracket [B] (2 screws).
3. Remove the ADS Sensor [C] with the cover [D] (1 screw).
4. Replace the ADS Sensor [C] (2 screws).
5. Assemble the copier.
6. Turn on the main switch and enter SP mode, then perform the Auto ADS initial setting (1 SP Adjustment - PAGE 5).

2.6 SCANNER DRIVE MOTOR

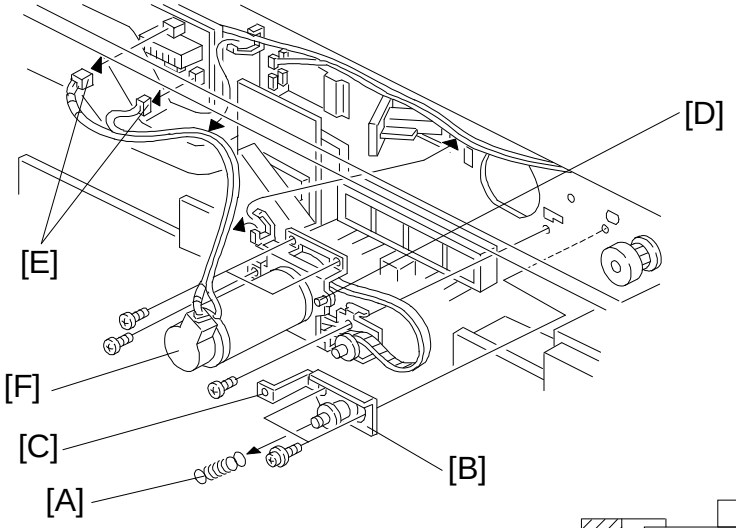

A176R525.wmf

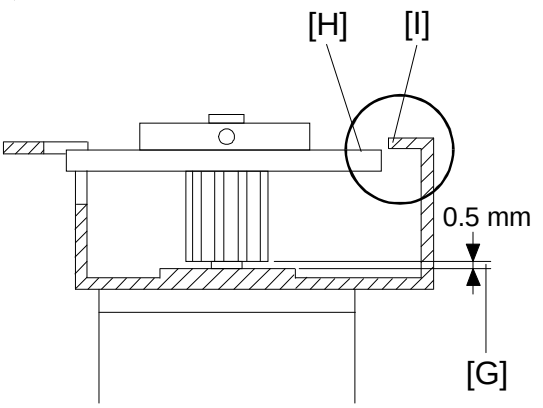

A176R526.wmf

1. Remove the exhaust fan. (Refer to Scanner HP Sensor Replacement.)
2. Remove the tension spring [A].
3. Remove the tension tightener [B].

   NOTE: Re-install the tightener as follows;

   1) Hook part [C] of the bracket on the screw [D] installed on the scanner drive motor bracket.
   2) Hook the tension spring [A].
   3) Install two screws.

4. Remove the two connectors [E] from the Optic Control Board.
5. Remove the scanner motor [F] (4 screws).

   NOTE: While replacing the drive pulley, the gap [G] should be 0.5 mm so that the upper edge [H] of the pulley is lower than the upper surface [I] of the bracket, as shown. After installing the scanner motor, perform the scanner control adjustment. (Refer to Scanner Control Adjustment.)

2.7 SCANNER DRIVE WIRES REPLACEMENT

- Removal -

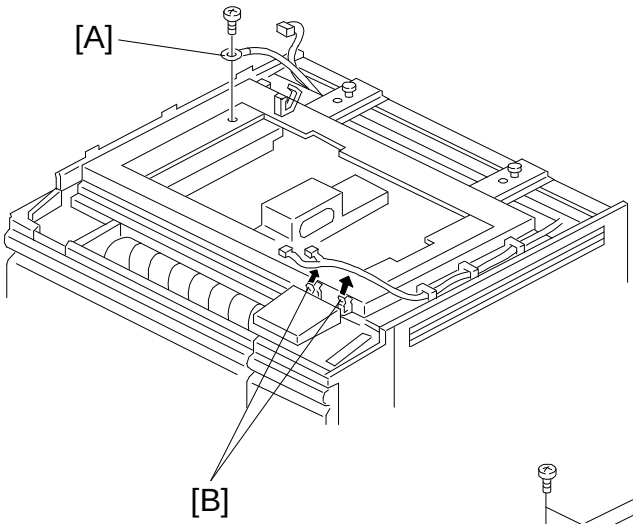

A176R527.wmf

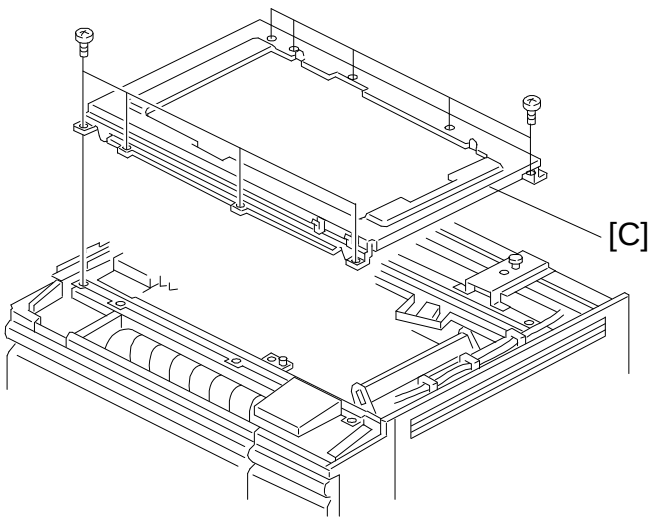

A176R528.wmf

1. Turn off the main switch.
2. Remove the exposure glass.
3. Remove the upper cover and the rear upper cover.
4. Remove the optics thermistor [A] (1 screw, 1 harness clamp).
5. Remove the scanner HP sensor with bracket . (Refer to Scanner HP Sensor Replacement.)
6. Remove the scanner drive motor. (Refer to Scanner Drive Motor Replacement)
7. Unhook the harness from the two harness clamps [B].
8. Remove the upper optics frame [C] (9 screws).

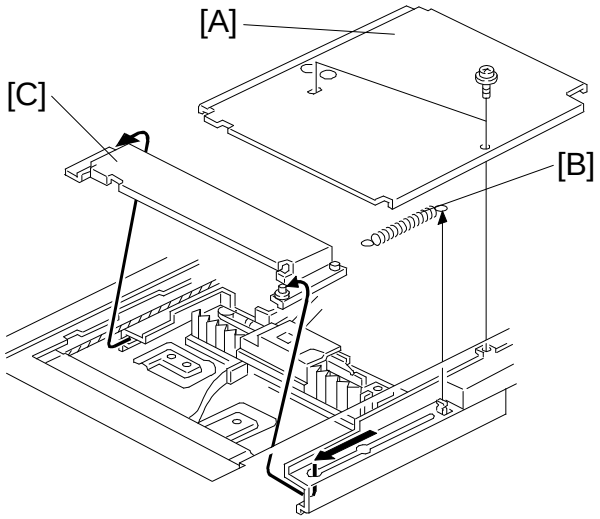

A176R529.wmf

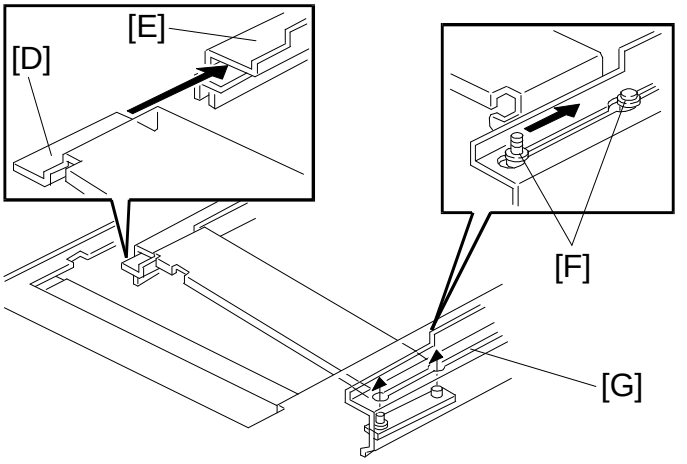

A176R530.wmf

9. Remove the lens unit cover [A] (2 screws).
10. Unhook the tension spring [B].
11. Remove the lens shield plate [C].

NOTE: When installing the lens shield plate, set the rear part [D] of the lens shield plate between the guides [E] as shown. Then set the grooves on the guide pins [F] in the rail [G].
After reinstalling the tension spring, confirm that movement of the lens shield plate is smooth.

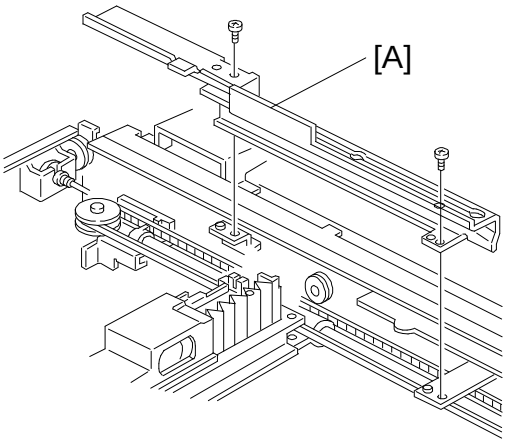

A176R531.wmf

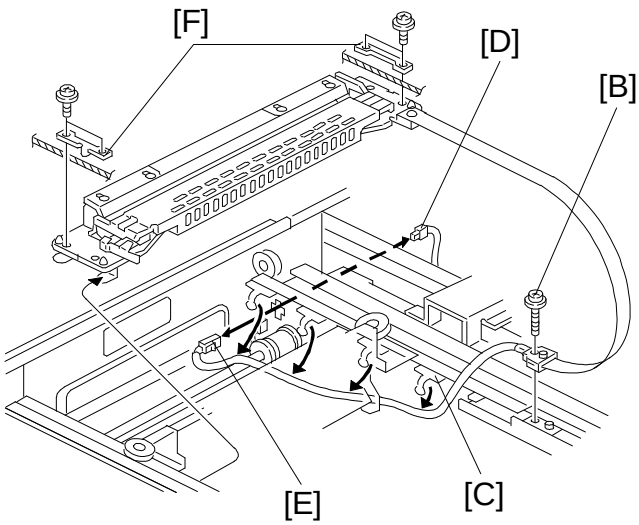

A176R532.wmf

12. Remove the front bracket [A] (2 screws).
13. Remove the screw [B] securing the scanner flat cable.
14. Unhook the four harness clamps [C].
15. Disconnect the connector [D] outside the optic side frame.
16. Remove the connector [E] from the optic side frame.
17. Remove the scanner clamps [F] securing both sides of the first scanner unit to the scanner wires (4 screws).

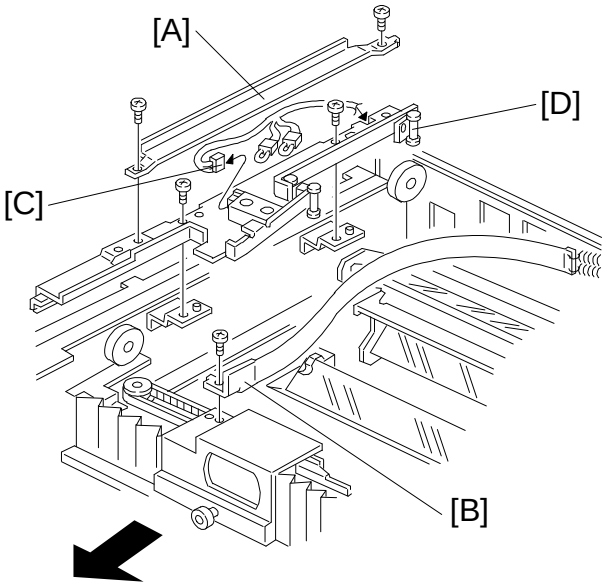

A176R533.wmf

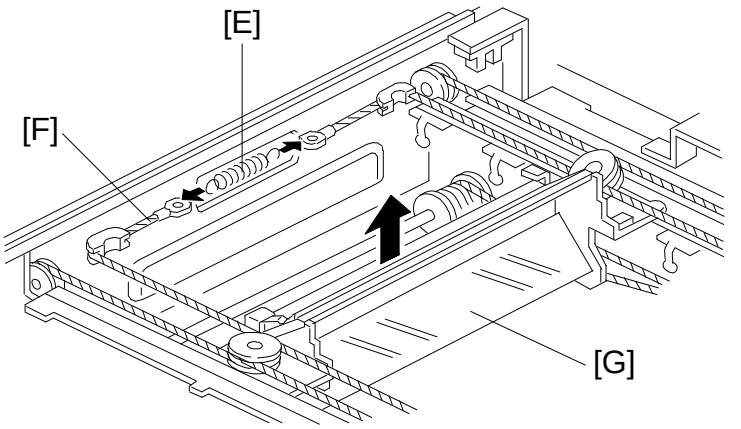

A176R534.wmf

18. Remove the harness cover [A] (2 screws).
19. Remove the light shield mylar bracket [B] (1 screw).
20. Disconnect the paper length size sensor connector [C] and move the lens unit to the left, then remove the rear bracket [D] (2 screws).
21. Unhook the tension spring [E] and remove the scanner wire [F].
22. Remove the second scanner [G].

NOTE: When re-installing the mylar bracket [B], be sure not to create any gap between the bracket and the lens cover.

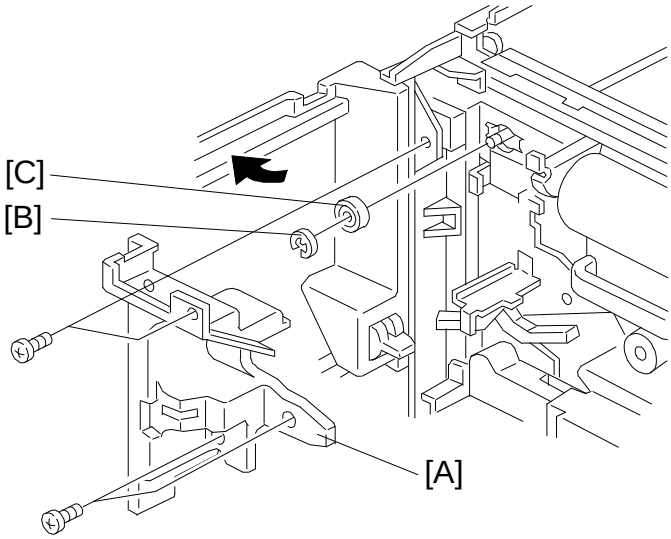

A176R535.wmf

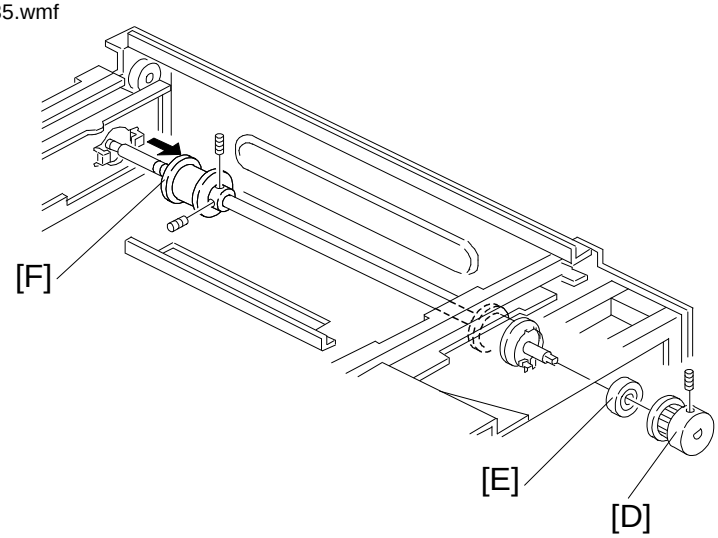

A176R536.wmf

23. Remove the left inner cover [A] (4 screws).
24. Remove the E-ring [B] of the scanner drive shaft and remove the front ball bearing [C].
25. Remove the rear drive pulley [D] (1 Allen screw) and remove the rear ball bearing [E].
26. Loosen the two Allen screws of the front drive pulley [F] and slide the pulley about 10 cm to the rear then take out the drive shaft.

- INSTALLATION -

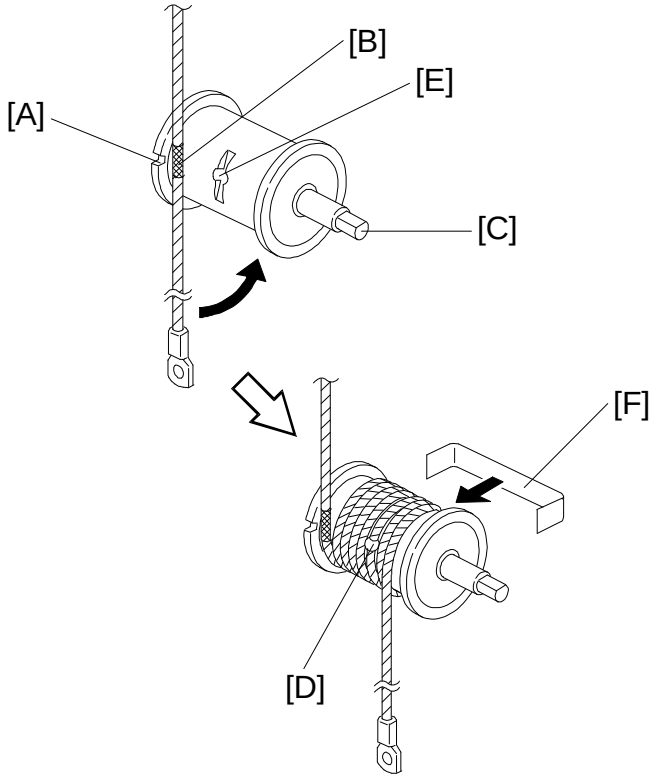

A176R537.wmf

1. Round the rear scanner drive wire on the rear pulley as follows:
   1) Align the cut out [A] on the edge of the rear drive pulley and the blue mark [B] on the wire as shown.
   2) Round the wire counterclockwise 5 times as shown (in the illustration, the D-cut [C] on the shaft is at the front side) then set the bead [D] on the wire in the hole [E] on the pulley.
      (In this condition, the bead just reaches the hole on the pulley.)
   3) After setting the bead in the hole, round the wire two more times (in total 7 times).
   4) Fix the wire with tape [F] as shown.

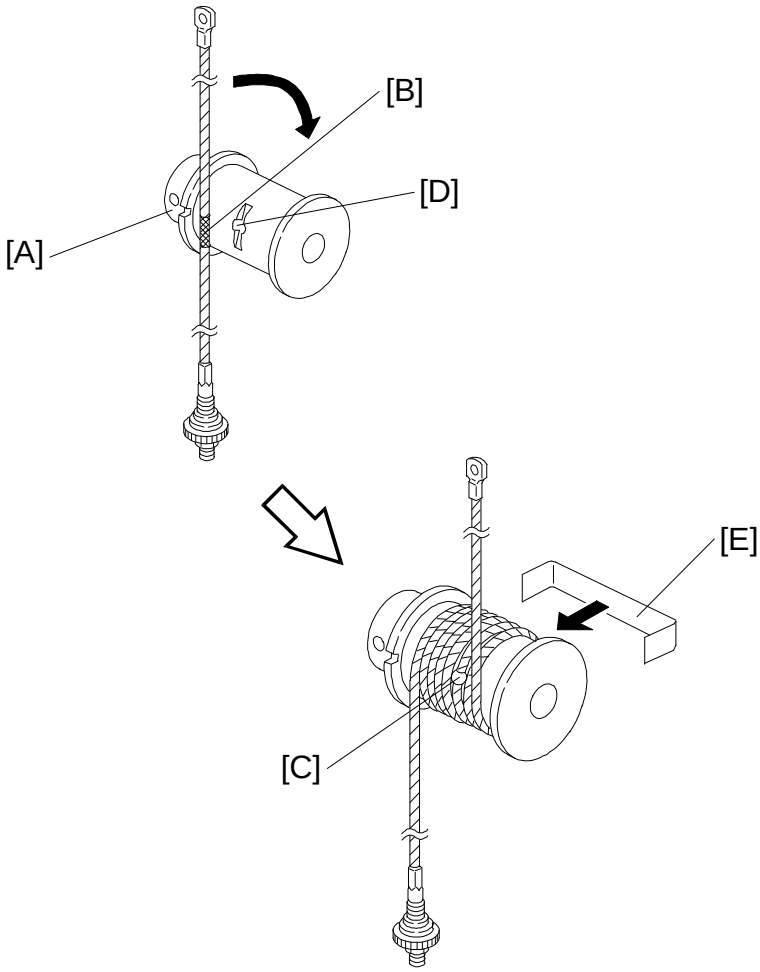

A176R538.wmf

2. Round the front scanner drive wire on the front pulley as shown:
   1) Align the cut out [A] on the edge of the front drive pulley and the red mark [B] on the wire.
   2) Round the wire clockwise 5 times as shown (in the illustration, the Allen screw holes are at the rear side) then set the bead [C] on the wire in the hole [D] on the pulley.
      (In this condition, the bead just reaches to the hole on the pulley.)
   3) After setting the small ball in the hole, round the wire twice more (in total 7 times).
   4) Fix the wire with tape [E] as shown.

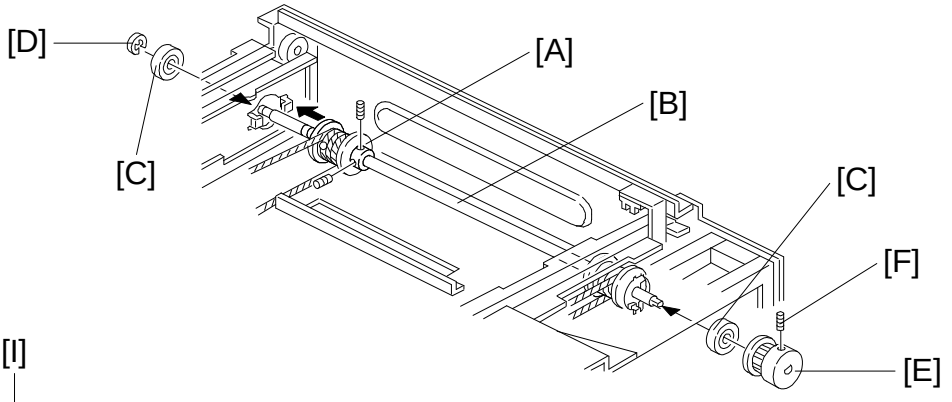

A176R539.wmf

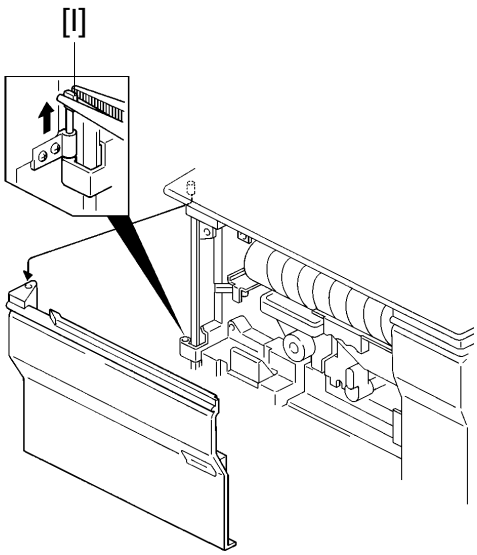

A176R541.img

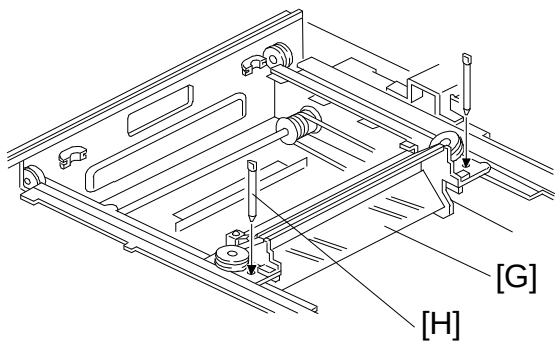

A176R540.wmf

3. Set the front drive pulley [A] on the drive shaft. (Leave the Allen screws loosened.)
4. Place the scanner drive shaft [B] in the holes on the optics front and rear side frames.
5. Set ball bearings [C] on both sides of the scanner drive shaft.
6. Set the E-ring [D] on the front end of the scanner drive shaft.
7. Set, and fully push in, the scanner drive pulley [E] on the front end of the scanner drive shaft, then tighten the Allen screw [F].
8. Install the scanner drive motor. (Refer to Scanner Drive Motor Replacement.)
9. Place the second scanner [G] on the guide rail and fix it there by using two jig pins [H].

NOTE: This jig pin is used as the left door hinge pin [I]. However, only one pin is used on the copier, so it is necessary to prepare another one.

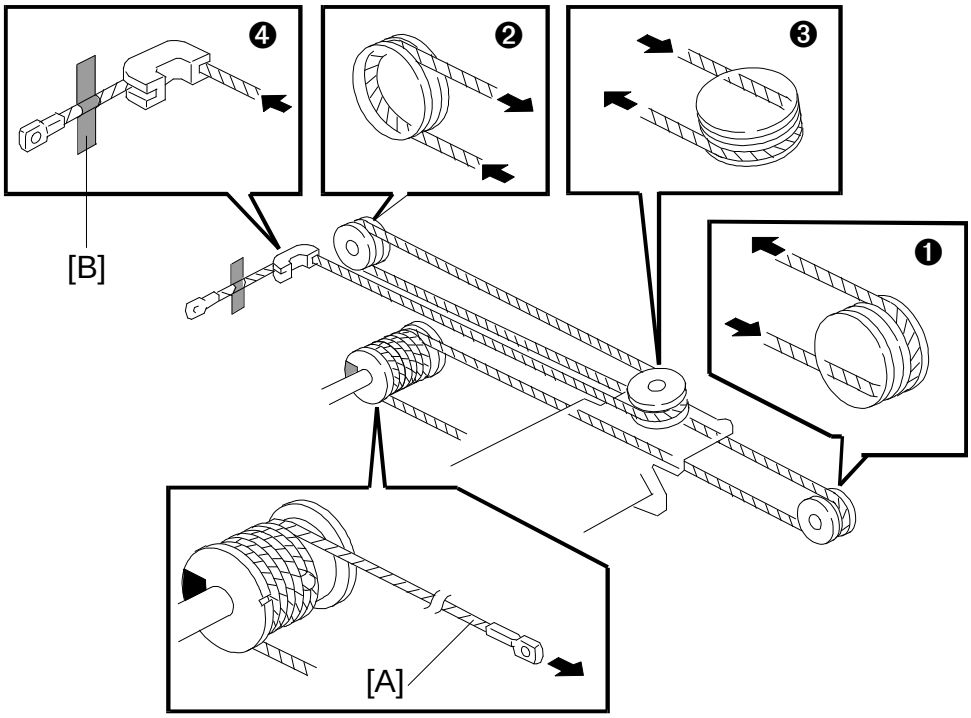

A176R542.wmf

10. Route the shorter end [A] of the rear scanner drive wire in the following order.

    ❶ Rear track counterclockwise
    ❷ Clockwise
    ❸ Lower track clockwise.
    ❹ Fix the end of the wire on the frame with tape [B].

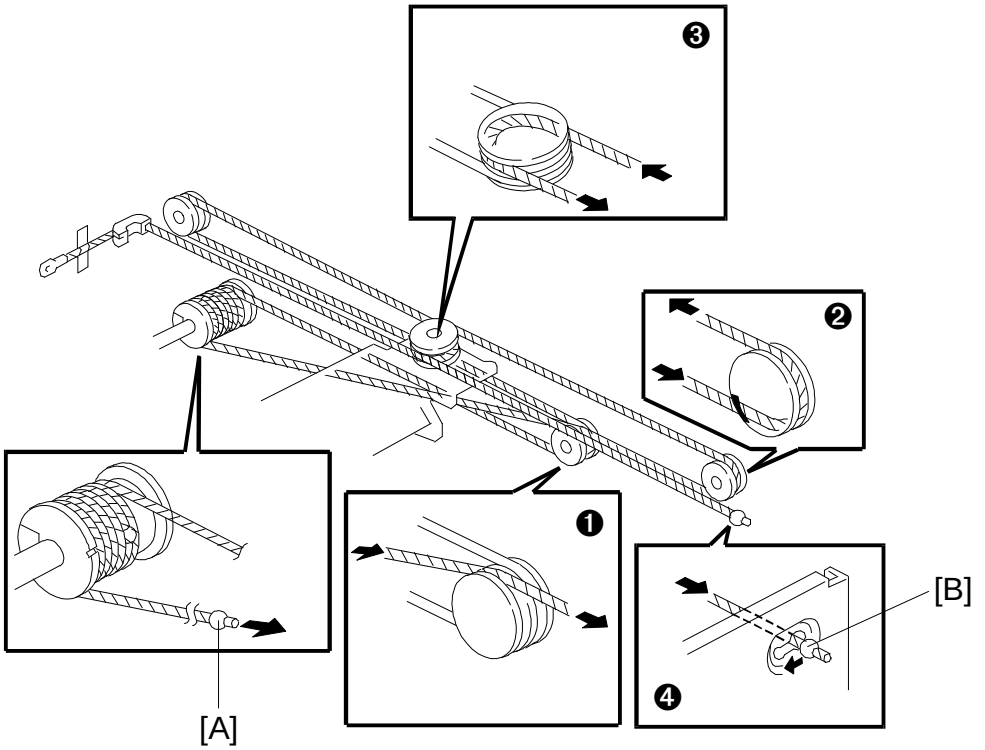

A176R543.wmf

11. Route the longer end [A] of the rear scanner drive wire in the following order.

    ❶ Through front track, upper side.
    ❷ Counterclockwise.
    ❸ Upper track counterclockwise.
    ❹ Hook the end [B] of the wire on the cutout on the right optics side frame.

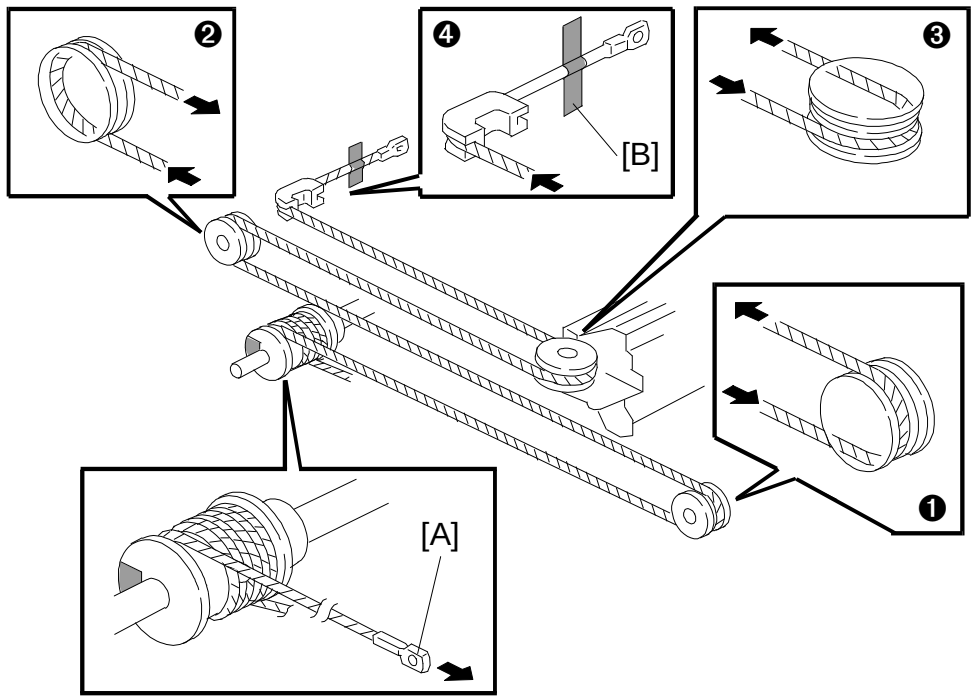

A176R544.wmf

12. Route the shorter end [A] of the front scanner drive wire in the following order.

    ❶ Front track counterclockwise
    ❷ Clockwise
    ❸ Lower track clockwise.
    ❹ Fix the end of the wire on the frame with tape [B].

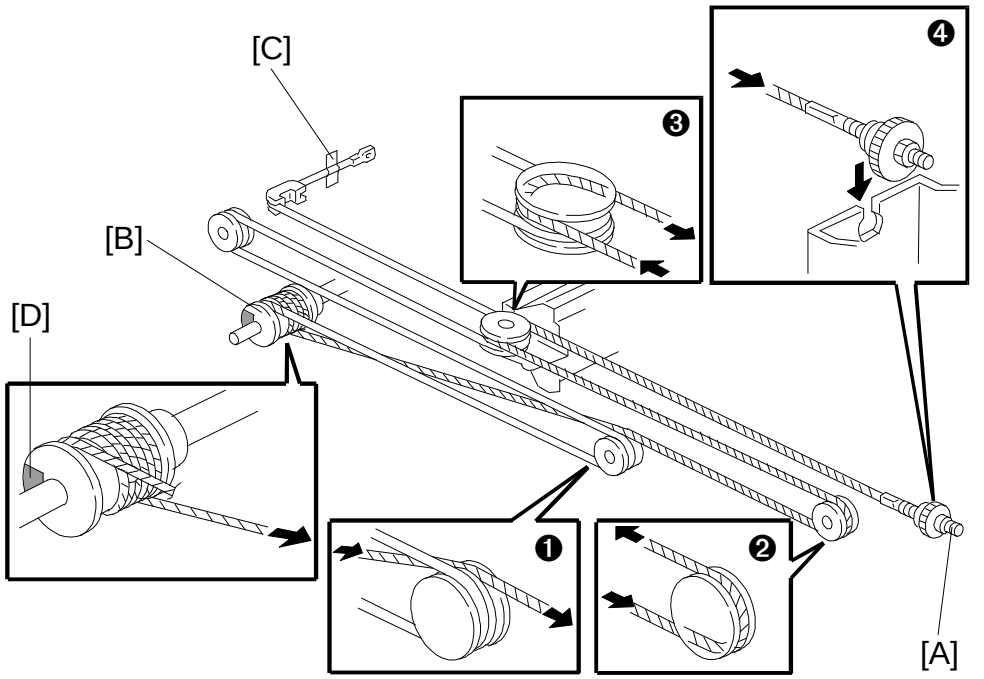

A176R545.wmf

13. Route the longer end [A] of the front scanner drive wire in the following order.

    ❶ Through rear track, upper side.
    ❷ Counterclockwise.
    ❸ Upper track clockwise.
    ❹ Hook the end of the wire [A] on the cut out on the right optics side frame.

14. Slightly push the front drive pulley [B] against the front optics side frame and tighten the two Allen screws.

15. Remove the jig pins securing the second scanner.

16. Remove the tapes [C] fixing the ends of the scanner drive wires and hook the ends of the scanner drive wires with the tension springs.

17. Remove the tapes [D] fixing the wire to the front and rear drive pulleys.

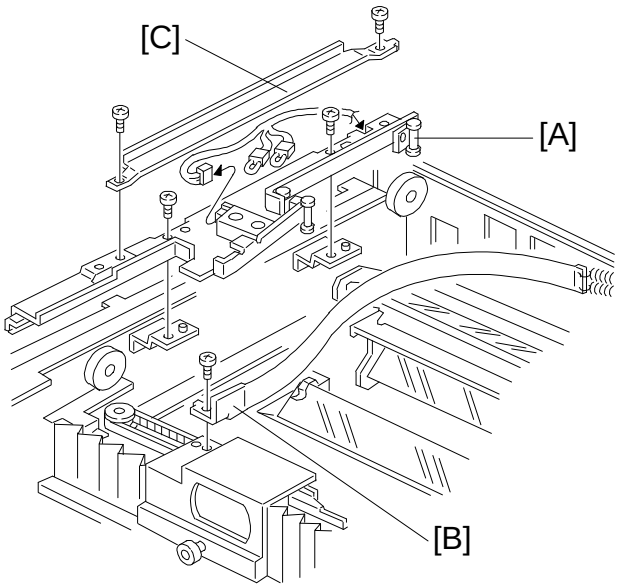

A176R546.wmf

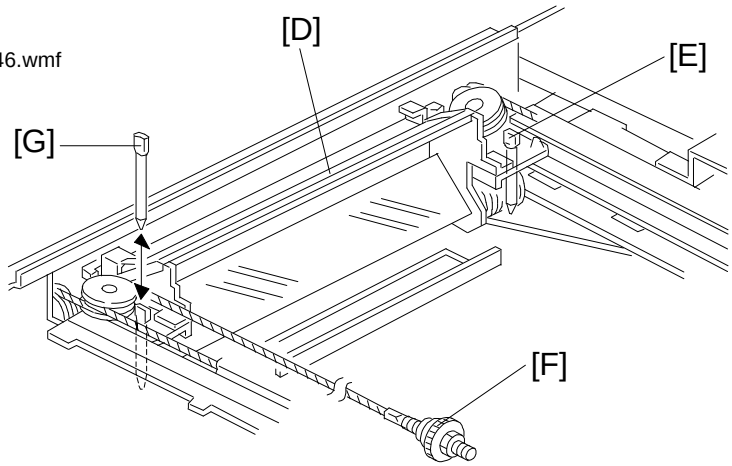

A176R547.wmf

18. Install the rear bracket [A] (2 screws, 1 connector), shielding mylar bracket [B] (1 screw) and harness cover [C] (2 screws).

19. Adjust the second scanner alignment as follows:

- Second Scanner Alignment -

1) Move the second scanner [D] to the left end position. Fix the rear side of the second scanner by inserting the jig pin [E] in the holes on the rear side of the second scanner and the rear guide rail.
2) Turn the adjusting nut [F] to adjust the second scanner alignment so that the jig pins [G] can be smoothly set in the holes on the front side of the second scanner and the front guide rail.

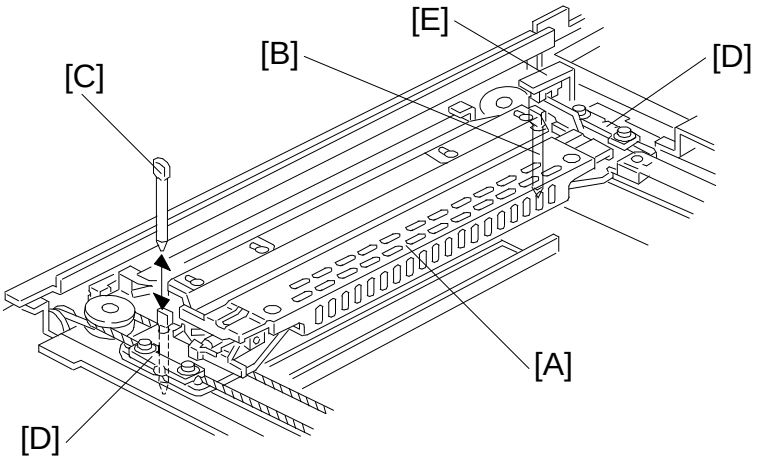

A176R548.wmf

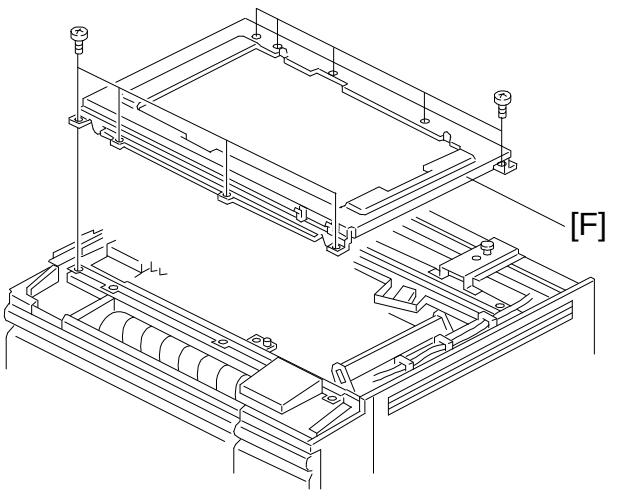

A176R549.wmf

20. Place the first scanner unit on the guide rail then adjust the first scanner alignment as follows:

- First Scanner Alignment -

1) Move the first scanner [A] to the left end position. Fix the rear end of the first scanner by inserting the jig pin [B] in the holes on the first scanner and the guide rail.
2) Position the first scanner so that the jig pin [C] can be smoothly set in the holes on the first scanner and the guide rail, then tighten the wire clamp brackets [D] (4 screws).

21. Install the scanner HP sensor [E] (1 screw).

22. Secure the scanner flat cable (1 screw).

23. Install the upper optics frame [F] (9 screws).

Except for 70 CPM version

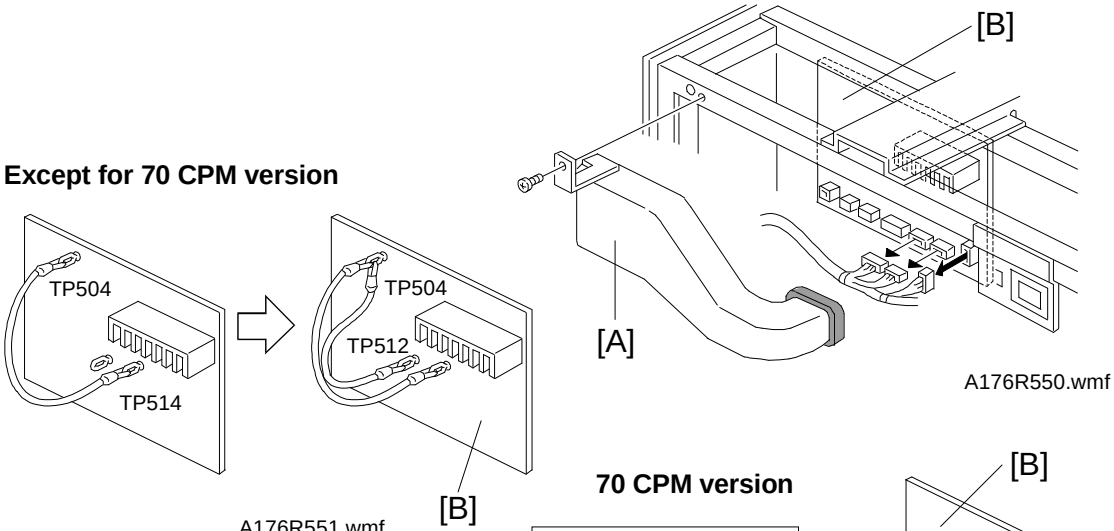

A176R550.wmf

A176R551.wmf

70 CPM version

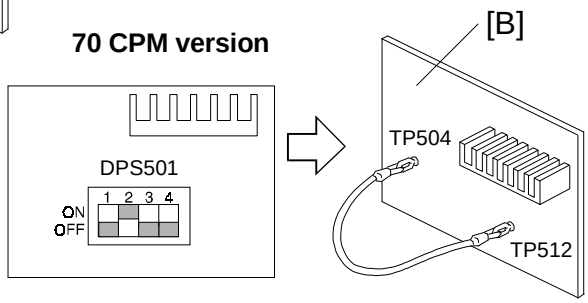

A176R720.wmf

24. Turn on the main switch and perform the scanner free run for about 5 minutes to break in the wires and to confirm correct scanner movement as follows:

- Scanner Free Run -

1. Remove the air inlet duct [A] (1 screw).
2. Remove CN502, CN503, CN504 from the optic control Board [B].
3. Short-circuit TP514 and TP504 (GND) on the optics control Board (except for 70 CPM version).
4. Turn on No. 2 of DIP SW 501 on the optics control board (70 CPM version only).
5. Turn on the main switch.
6. Short-circuit TP512 and TP504 (GND), then the machine automatically starts the scanner free run.
7. Turn off the main switch.

25. After performing the scanner free run, check the second scanner alignment, then the first scanner alignment.

26. Perform the scanner control adjustment. (Refer to Scanner Control Adjustment.)

27. Check the copy image.

2.8 SCANNER CONTROL ADJUSTMENT (except for 70 CPM version)

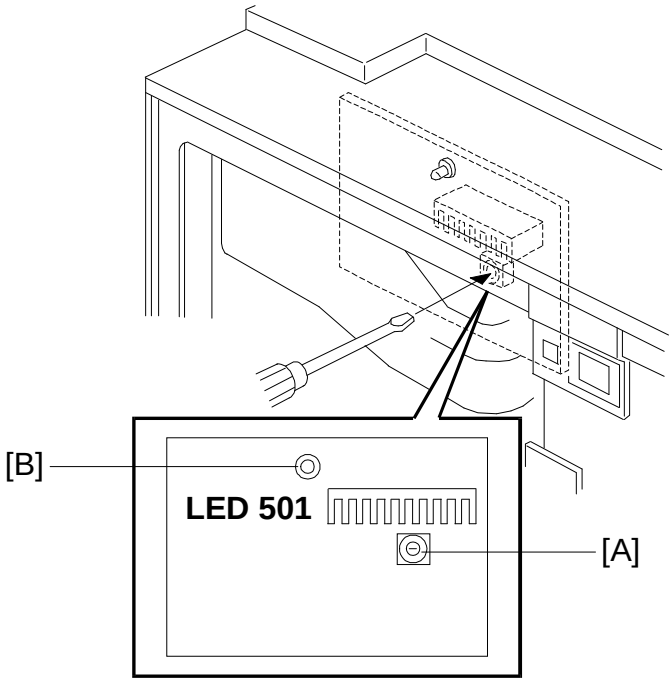

A176R552.wmf

Perform this adjustment under any one of the following conditions:

After the scanner motor replacement
After the scanner wire replacement
After the scanner timing belt replacement
After replacing the optics control Board

1. Perform the free run (2 Test Mode - PAGE 1) 30 times.
2. After the free run is completed, turn the rotary dip switch [A] until LED 501 [B] turns on.

   NOTE: If this adjustment is improper, the timing between the scanner and the paper feed will be also improper, causing paper jams at the registration roller, or causing scanner noise due to wire vibration.

2.9 THIRD SCANNER REMOVAL

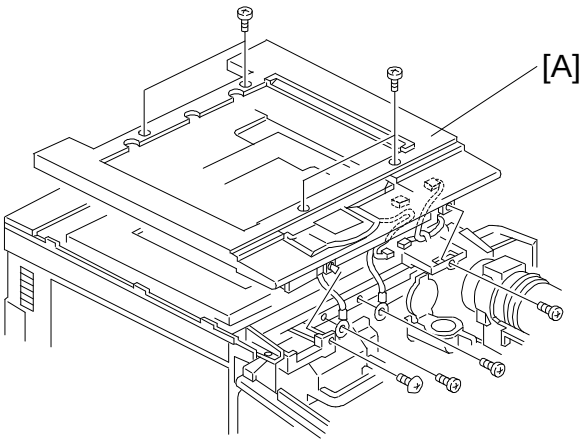

A176R553.wmf

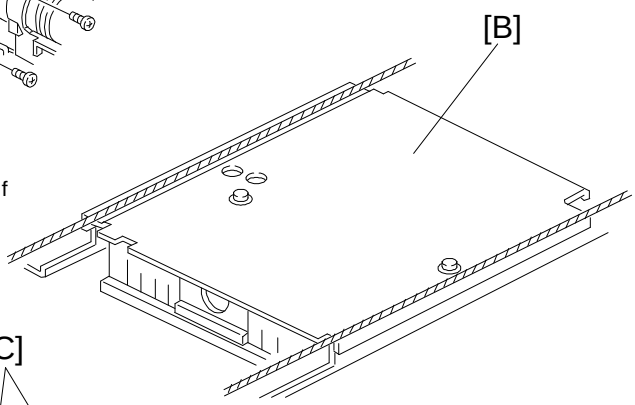

A176R554.wmf

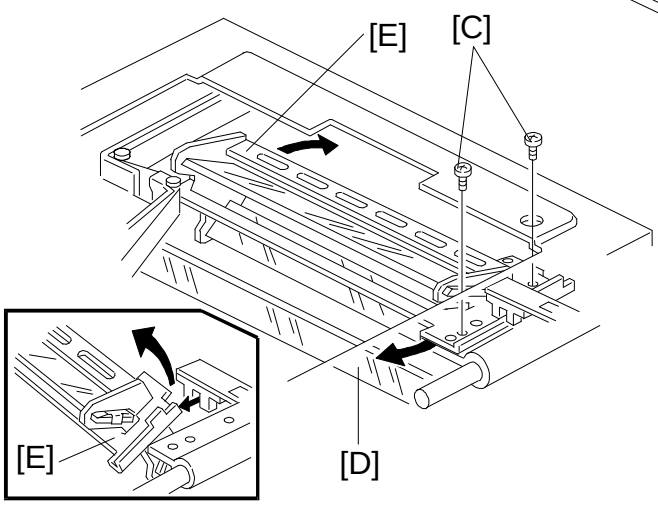

A176R555.wmf

1. Remove the exposure glass. (Refer to Exposure Glass Removal.)
2. Remove the upper cover [A]. (Refer to Upper Cover Removal.)
3. Remove the lens unit cover [B] (2 screws).
4. Remove the two screws [C] fixing the front third scanner bracket.
5. Remove the sixth mirror [D].
6. Remove the third scanner [E] as shown.

2.10 THIRD SCANNER DRIVE MOTOR/HP SENSOR REPLACEMENT

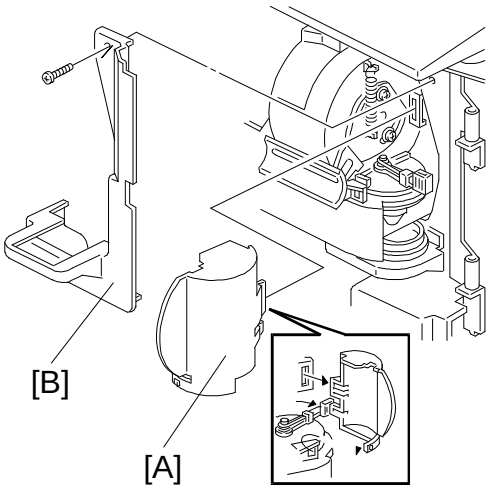

A176R556.wmf

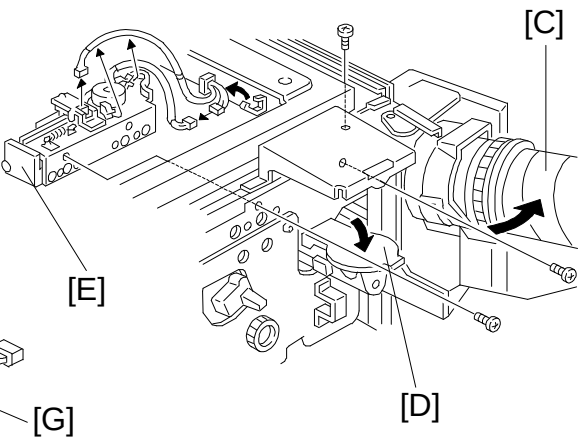

A176R557.wmf

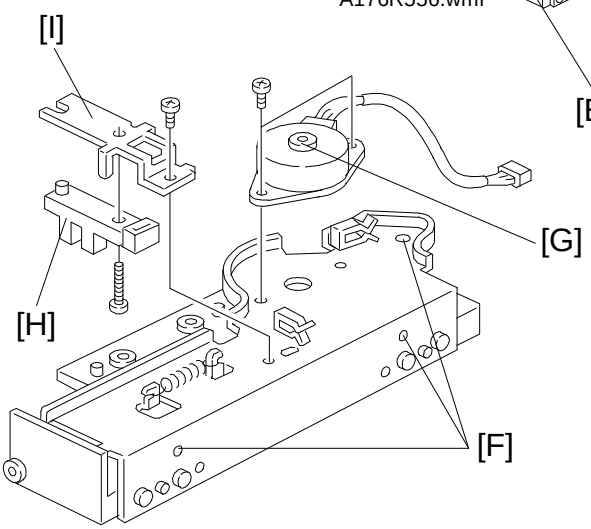

A176R558.wmf

1. Remove the third scanner unit. (Refer to the Third Scanner Removal.)
2. Open the right front cover then remove the shutter cover [A].
3. Remove the shutter inner cover [B] (1 screw).
4. Open the toner bottle [C] and close the toner hopper cover [D].
5. Remove the third scanner drive unit [E] (3 screws [F]).
6. Replace the third scanner drive motor [G] (1 connector, 2 screws).
7. Remove the third scanner HP sensor [H] with the bracket [I] (1 screw).
8. Replace the third scanner HP sensor (1 screw).

2.11 LENS HORIZONTAL DRIVE BELT REMOVAL

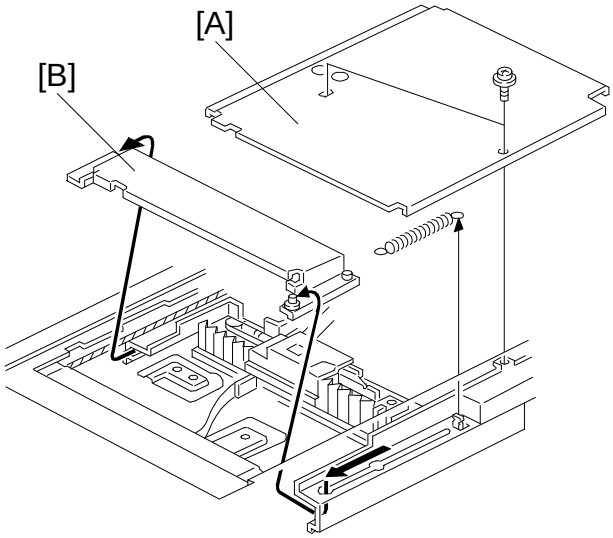

A176R559.wmf

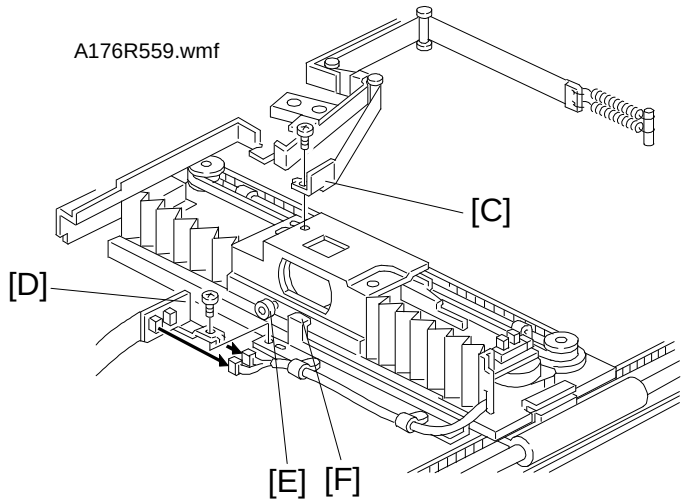

A176R560.wmf

1. Remove the lens unit cover [A] and light shielding plate [B]. (Refer to Scanner Drive Wires Replacement.)
2. Remove the light shielding mylar bracket [C] (1 screw).

   NOTE: When re-installing the mylar bracket [C], be sure not to create any gap between the bracket and the lens cover.
3. Remove the flat cable bracket [D] (1 screw, 2 connectors).
4. Position the roller [E] underneath the bracket [F].

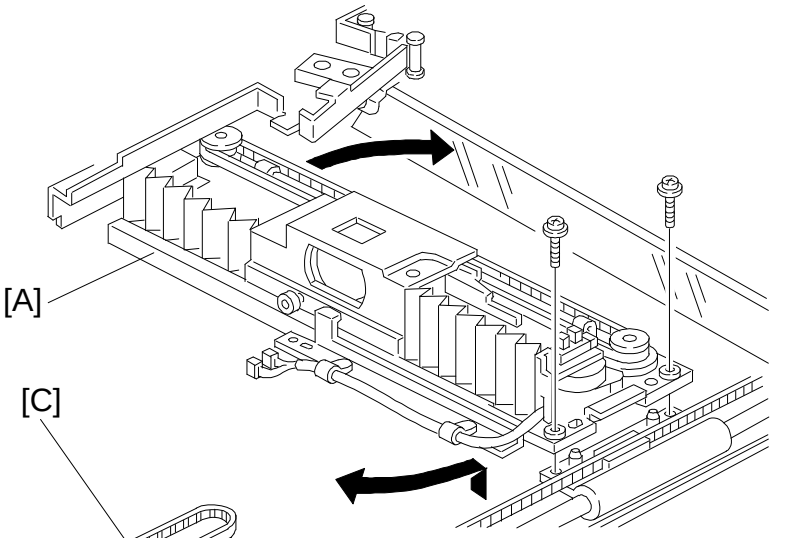

A176R561.wmf

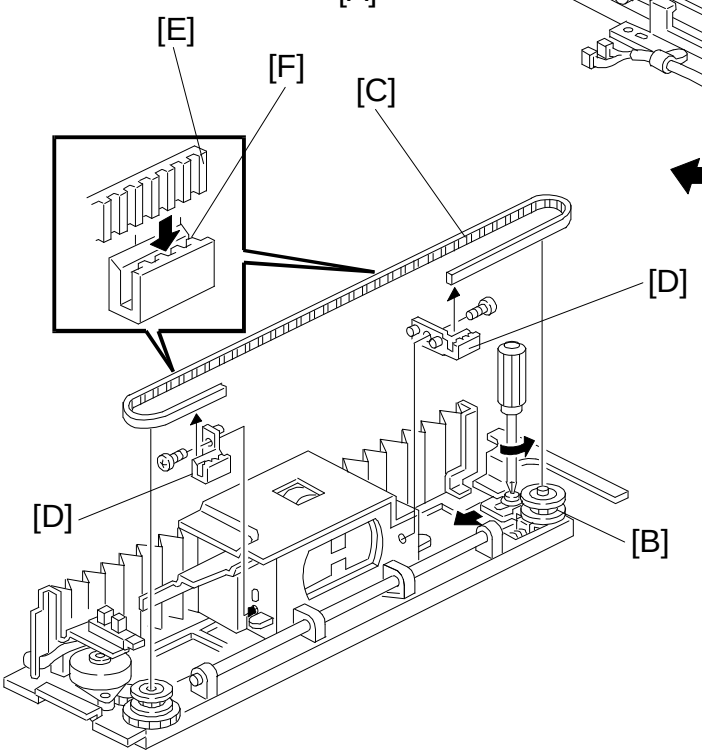

A176R562.wmf

5. Remove the lens unit [A] (2 screws).
6. Loosen the tension pulley bracket [B] (1 screw).
7. Push the pulley bracket to the front then unhook the timing belt [C].
8. Remove the two timing belt holders [D] (1 screw each).

NOTE: When setting the timing belt, align the end [E] of the timing belt to the edge [F] of the belt holder.

2.12 LENS VERTICAL DRIVE BELT REMOVAL

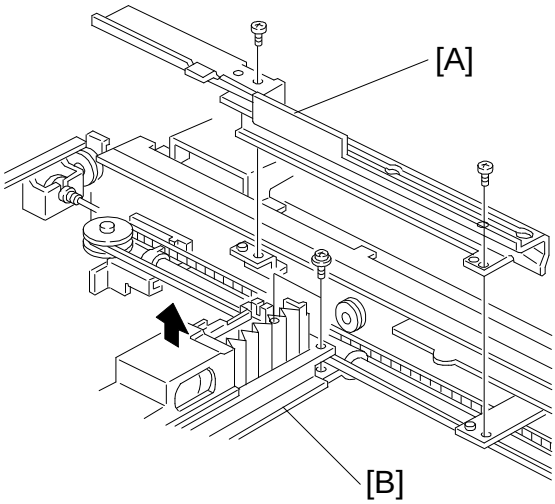

A176R563.wmf

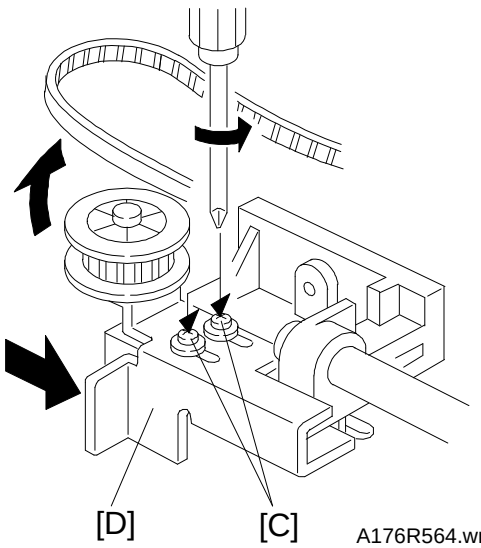

A176R564.wmf

1. Remove the third scanner drive unit. (Refer to Third Scanner Drive Motor Replacement.)
2. Remove the front bracket [A]. (Refer to Scanner Drive Wires Replacement.)
3. Remove the lens unit [B]. (Refer to Lens Horizontal Drive Belt Replacement.)
4. Loosen the two screws [C] fixing the tension pulley bracket [D].
5. Push the tension pulley bracket to the left (front view) then unhook the timing belt.

2.13 ORIGINAL SIZE SENSORS (2 LENGTH SENSORS, 1 WIDTH SENSOR)

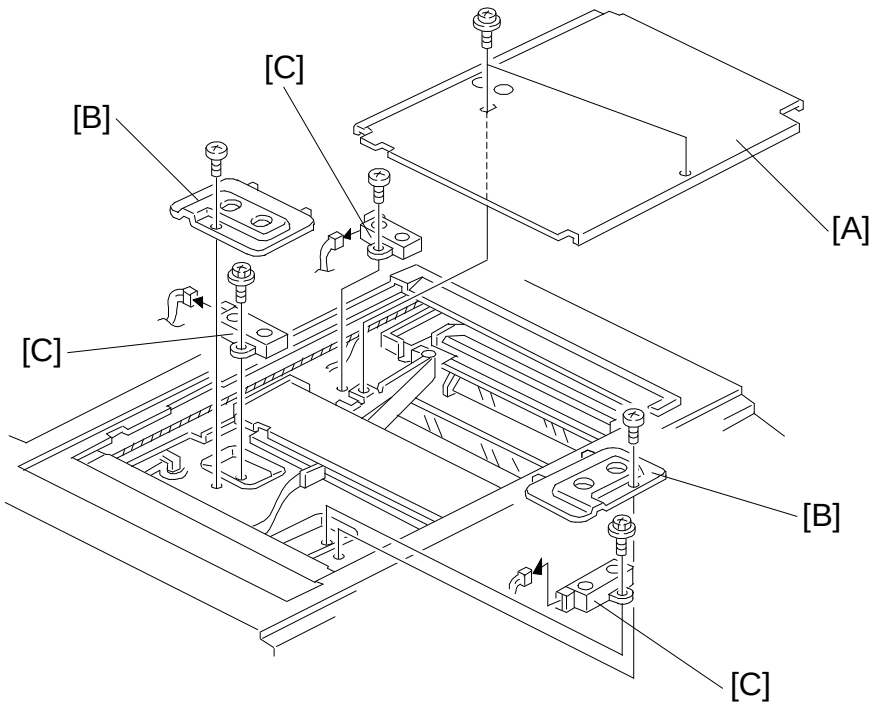

A176R565.wmf

1. Remove the exposure glass. (Refer to Exposure Glass Removal.)
2. Remove the lens unit cover [A] (2 screws).
3. Remove the original size sensor covers [B] (1 screw each).
4. Replace each original size sensor [C] (1 screw, 1 connector each).

3. DEVELOPMENT AND TONER SUPPLY

3.1 DEVELOPMENT UNIT REMOVAL

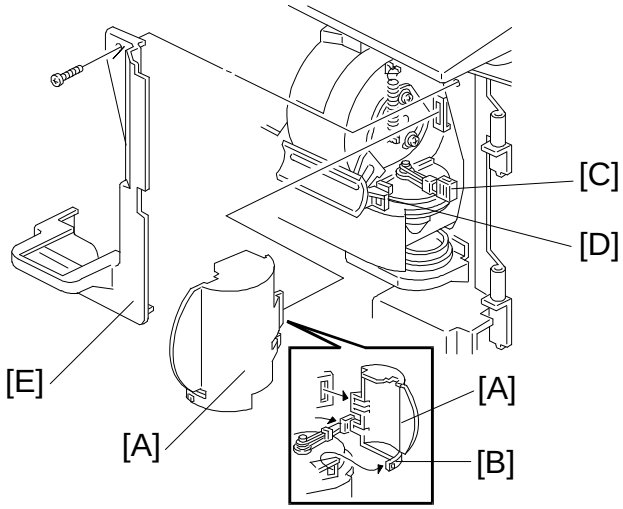

A176R568.wmf

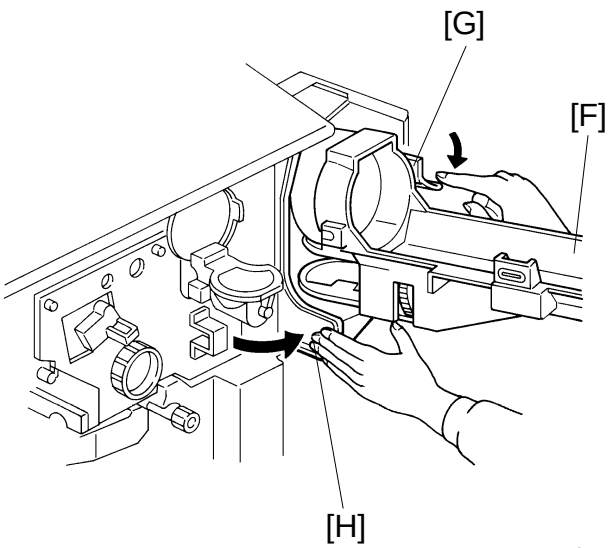

A176R569.img

1. Turn off the main switch.
2. Open the front doors.
3. Remove the shutter cover [A] by releasing the hook [B].

   NOTE: Be sure to move the lever [C] until it contacts part [D] (fully to the front).
4. Remove the shutter inner cover [E] (1 screw).
5. Open the toner bottle holder [F].

   NOTE: To open the toner bottle holder completely, while lowering the shutter lever [G], push the bracket [H] to the right.

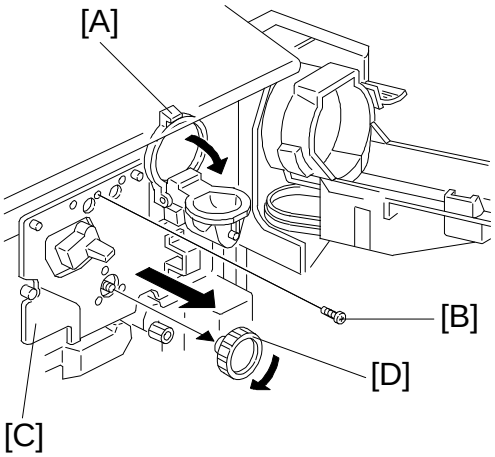

A176R570.wmf

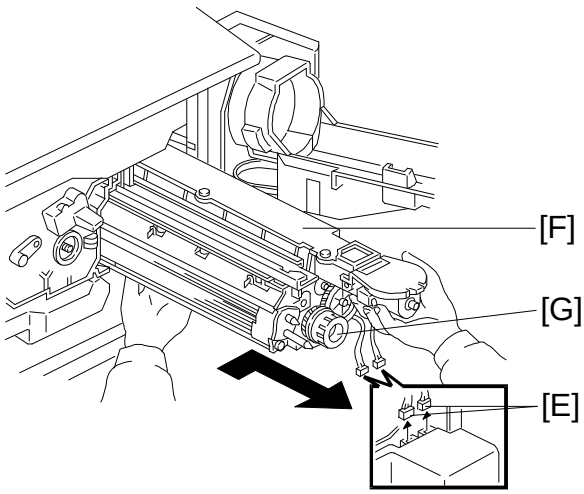

A176R571.wmf

6. Close the toner hopper cap [A].
7. Remove the screw [B] fixing the drum stay [C].
8. Remove the drum stay knob [D] then take out the drum stay.
9. Disconnect the two connectors [E].
10. Pull out the development unit [F].

NOTE: 1) To prevent drum scratches, push the development unit to the right while pulling it out.

2) When installing the development unit, do not forget to set the two connectors [E].

3) When installing the drum stay, be careful not to pinch the harness. Also, keep the harness away from gears.

4) When pulling out the development unit, do not hold the knob [G].

5) Keep the development unit connector as far as possible away from the development unit when the unit is cleaned using a vacuum cleaner.

6) Do not touch the pins of the development unit connector when the development unit is carried away from the main frame or cleaned.

3.2 DEVELOPER REPLACEMENT

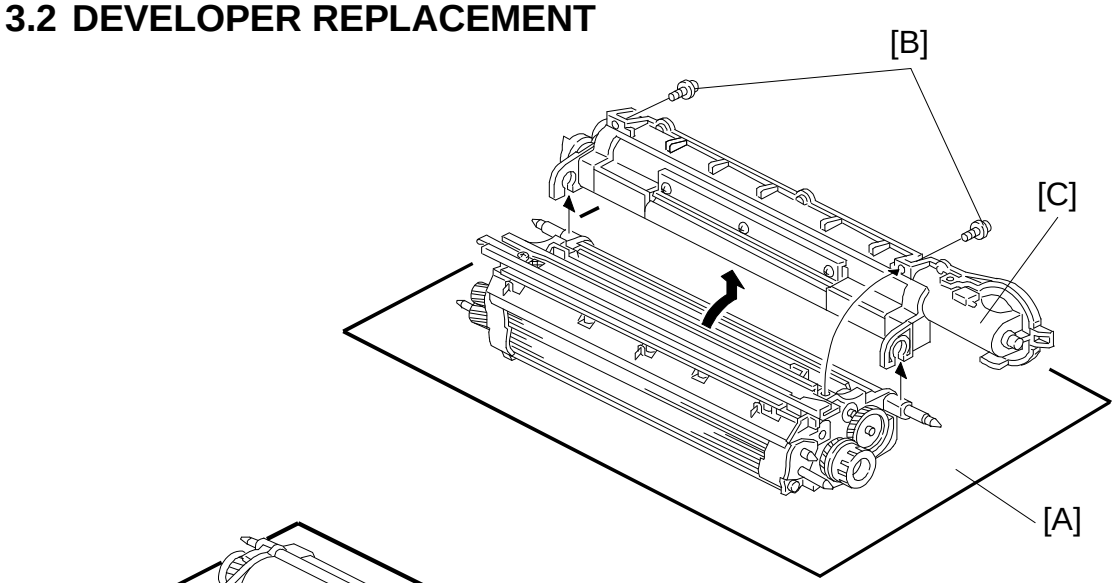

A176R572.wmf

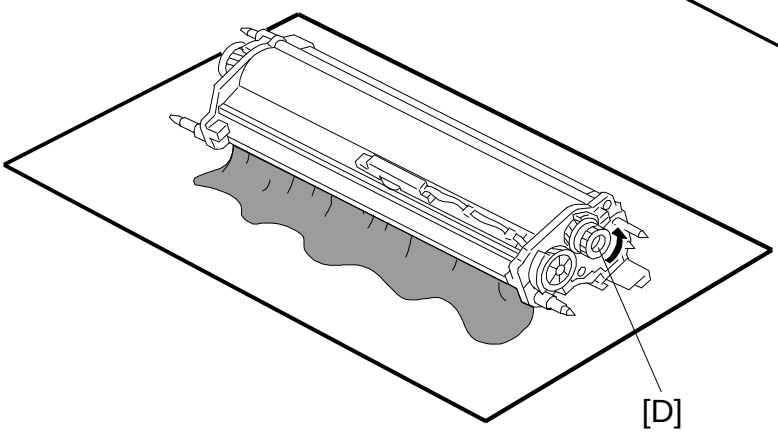

A176R573.wmf

1. Take out the development unit. (Refer to Development Unit Removal.)
2. Place the development unit on the sheet [A] included with new developer.
3. Remove the two screws [B] fixing the toner hopper [C].
4. Turn the toner hopper 90 degree, then move it up to remove it from the development unit.
5. Turn over the development unit then turn the paddle roller knob [D] to empty developer onto the sheet. (The one way clutch in the knob [D] allows turning the paddle roller counterclockwise only.)

   NOTE: Dispose of used developer according to local regulations.

Make sure that no developer remains on the development rollers or in the development unit.

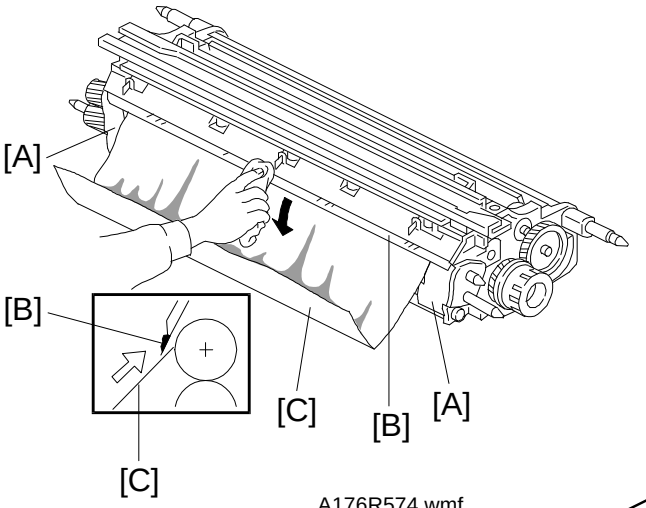

A176R574.wmf

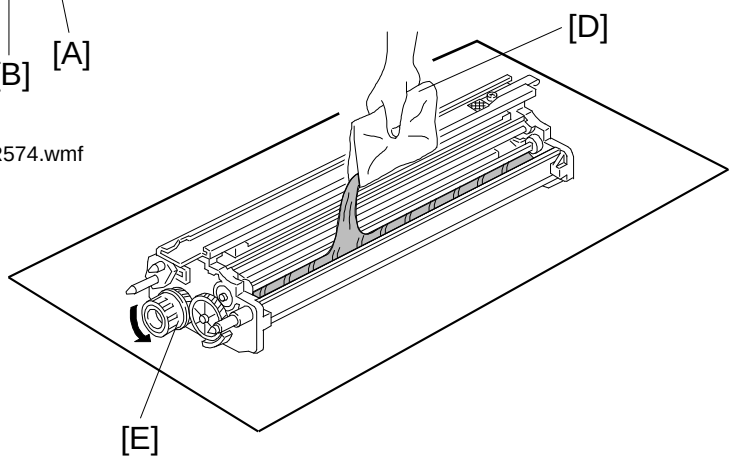

A176R575.wmf

6. Clean the side seals [A] and entrance seal [B].

   NOTE: Cover the sleeve rollers with a sheet of paper [C] to prevent the used developer being attracted to the sleeve rollers.

7. Evenly pour in one pack of developer [D] while turning the knob [E].

8. Re-install the toner hopper, then re-assemble the machine.

   NOTE: 1) Be sure to set to connectors after installing the development unit in the machine.

   2) Tilt the toner hopper so that there is toner near toner end sensor.

9. Turn on the main switch, then perform developer initial setting (1 SP Adjustment - PAGE 1).

NOTE: 1) Never make any copy with the new developer before completing the developer initial setting, otherwise toner density control will be abnormal.

2) If the developer initial setting is not completed, you cannot exit the SP mode by pressing the "Quit" key. If this occur turn the main switch off and on, then perform the initial setting again. If the result is the same, see the troubleshooting section "SC352" (Page 6-9).

3.3 DEVELOPMENT ROLLERS REPLACEMENT

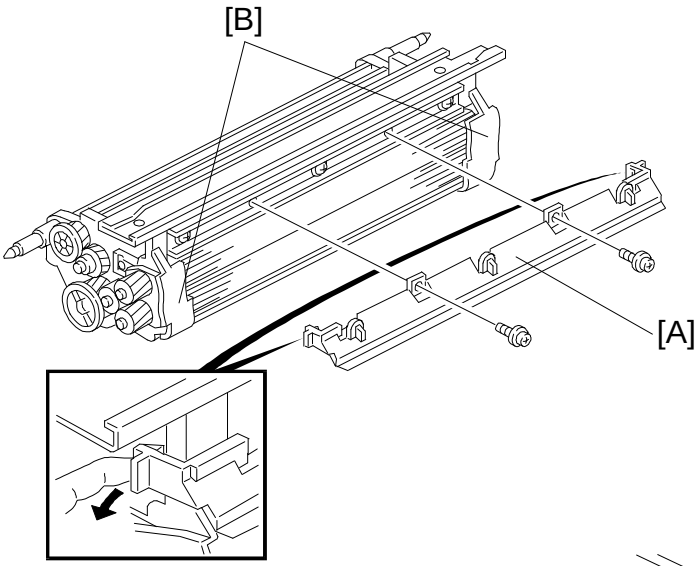

A176R576.wmf

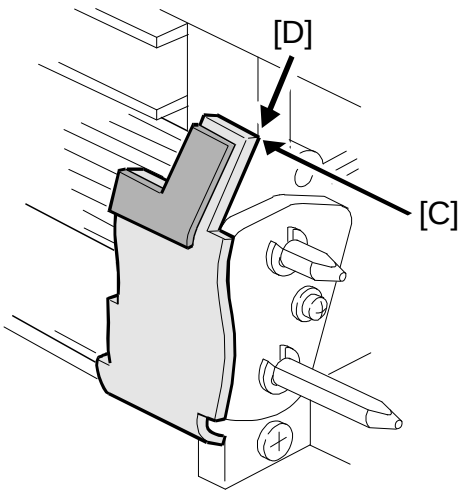

A176R577.wmf

1. Remove the developer. (Refer to Developer Replacement.)
2. Remove the developer entrance seal [A] (2 screws, 2 hooks).
3. Remove the front and rear side seals [B].

NOTE: When re-assembling the development unit, use new side seals and align the edge of the side seals to the corner [C] and the edge [D] as shown.

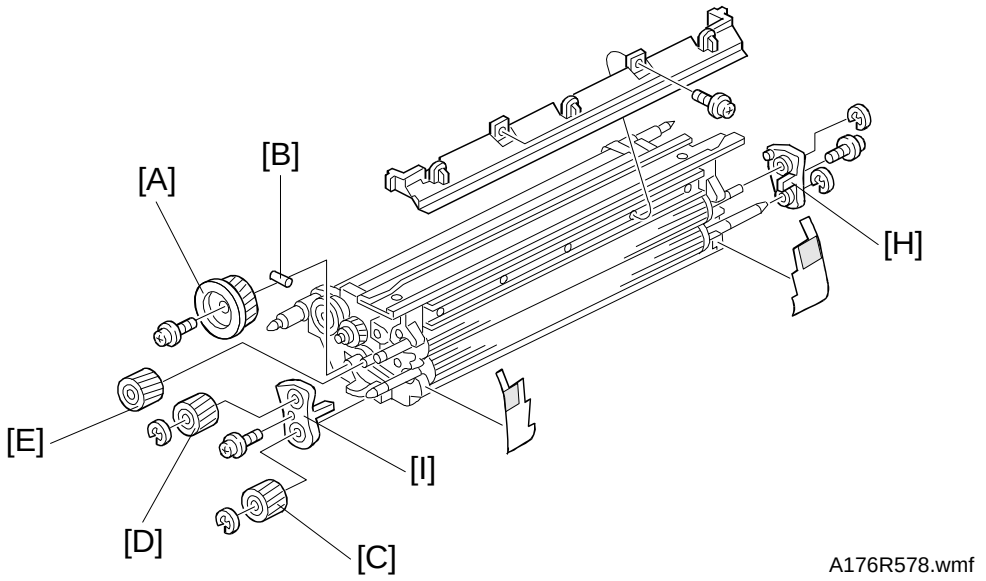

A176R578.wmf

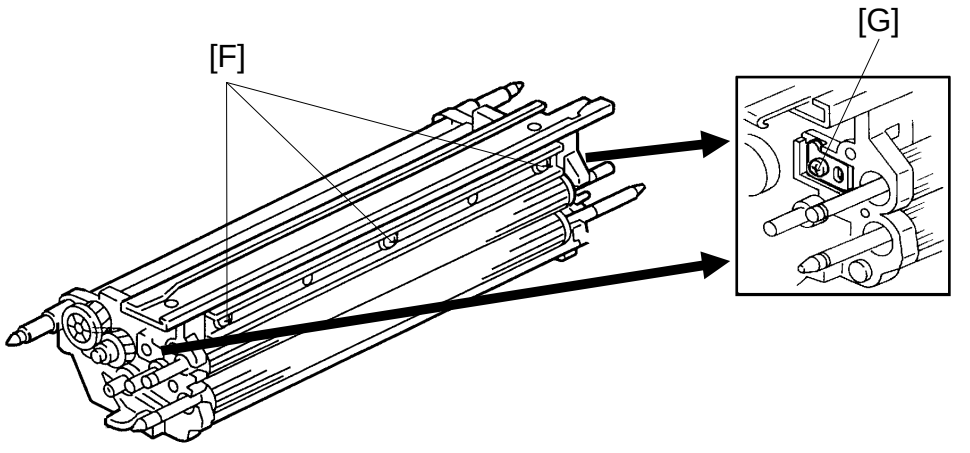

A176R579.img

4. Remove the coupling gear [A] (1 screw).

   NOTE: Be careful not to lose the pin [B].

5. Remove the gear [C] (1 E-ring), gear [D] (1 E-ring) and gear [E].

⚠ CAUTION

Do not touch the screws at [F] and [G].
If the screws at [F] are loosened, the doctor gap will be improper.
If the screws at [G] are loosened, the photoconductor gap and magnetic field angle will be improper.
If either of them become abnormal, toner density control will be abnormal.

6. Remove the front roller holder [H] (1 screw and 2 E-rings) and rear roller holder [I] (1 screw).

7. Replace the sleeve rollers.
8. Re-assemble the development unit and set the developer, then re-assemble the copier.

NOTE: 1) If the original developer (already used) is returned to the development unit, do not perform the developer initial setting.
2) If the new developer is set, never make any copy before completing the developer initial setting (1 SP Adjustment - PAGE 1).

3.4 TONER DENSITY SENSOR REPLACEMENT

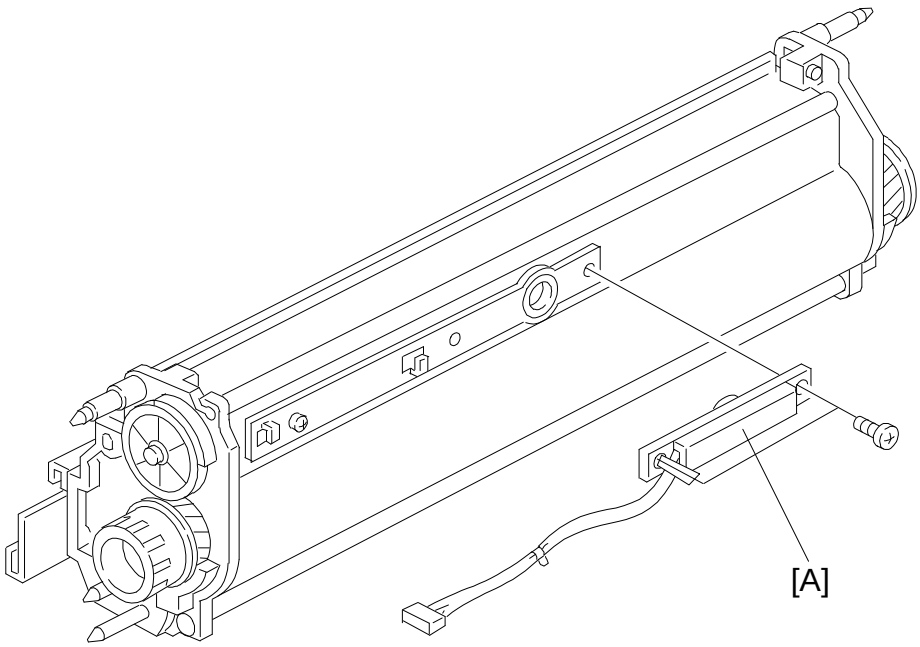

A176R580.wmf

1. Remove the developer. (Refer to Developer Replacement.)
2. Replace the TD sensor [A] (2 screws).

   NOTE: Before installing the TD (Toner Density) sensor, clean the development unit well so that no carrier particle remains in the gap between the TD sensor and the development unit casing.
3. Install the new developer and perform the developer initial setting.

NOTE: Never make any copy before completing the developer initial setting.

3.5 TONER BOTTLE DRIVE MOTOR REPLACEMENT

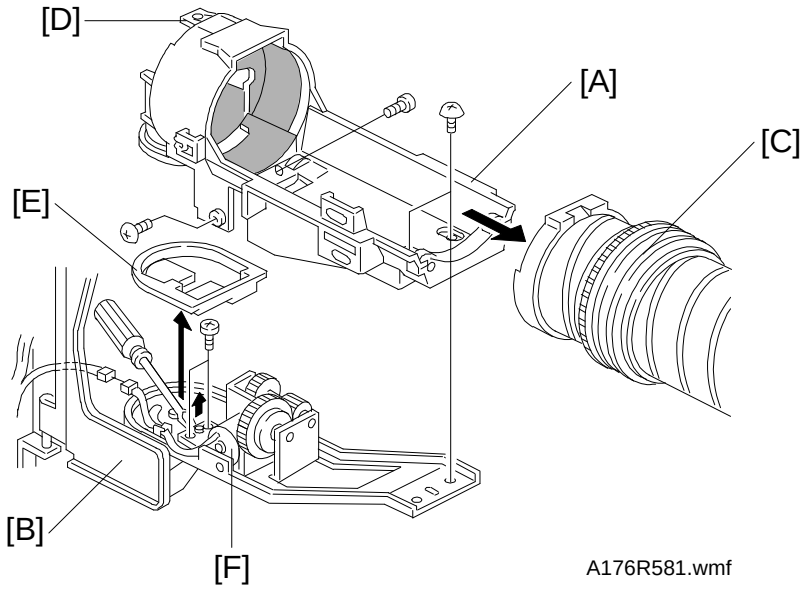

A176R581.wmf

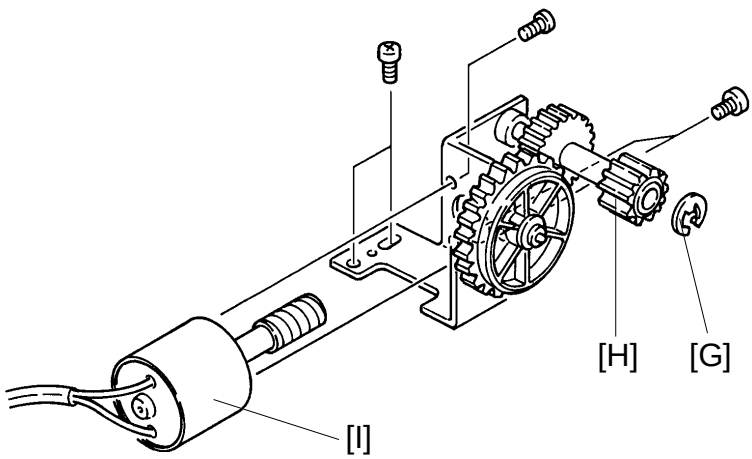

A176R582.img

1. Open the toner bottle holder [A] with the bracket [B]. (Refer to Development Unit Removal.)
2. Remove the toner bottle [C].
3. Remove four screws then remove the toner bottle holder by unhooking the hole [D] from the pin on the hinge.
4. Remove the toner receiver [E].
5. Remove the toner bottle drive motor assembly [F] (1 connector, 2 screws).
6. Remove an E-ring [G] and slide the gear [H] to access a screw.
7. Replace the toner bottle drive motor [I] (3 screws - M3 x 4).

4. DRUM UNIT

4.1 DRUM UNIT REMOVAL AND OPC DRUM REPLACEMENT

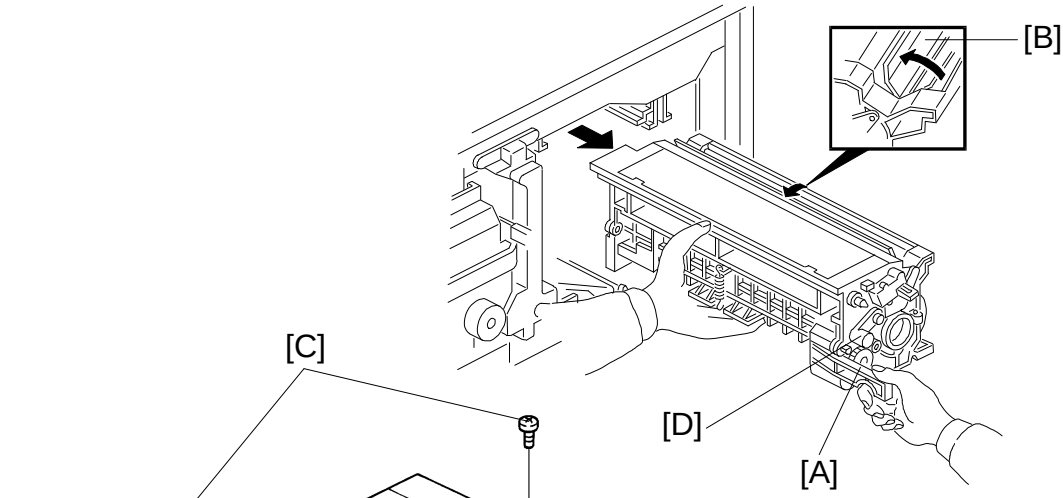

A176R583.wmf

A176R584.img

1. Take out the development unit. (Refer to Development Unit Removal.)
2. Lower the transfer belt unit.
3. Take out the drum unit by holding the knob [A].

   NOTE: Close the protective shutter [B] to protect the OPC drum from light when the drum unit is left outside the machine for servicing.
4. Open the upper drum unit (2 screws [C]).
5. Replace the OPC drum. Then remove the drum protective sheet from the new drum.

   NOTE: When returning the drum unit to the copier, do not forget to open the protective shutter [B].
   If it is hard to completely set the drum unit in the machine because the gear is disengaged, then push in the drum unit while holding down the cleaning blade release knob [D].

4.2 QUENCHING LAMP REPLACEMENT

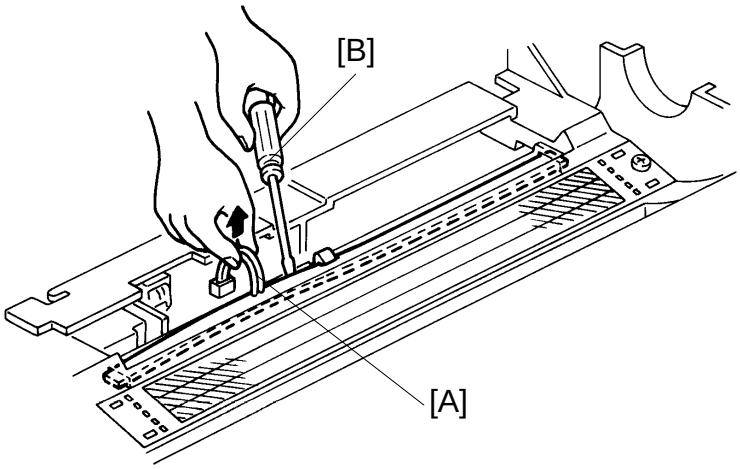

A176R585.img

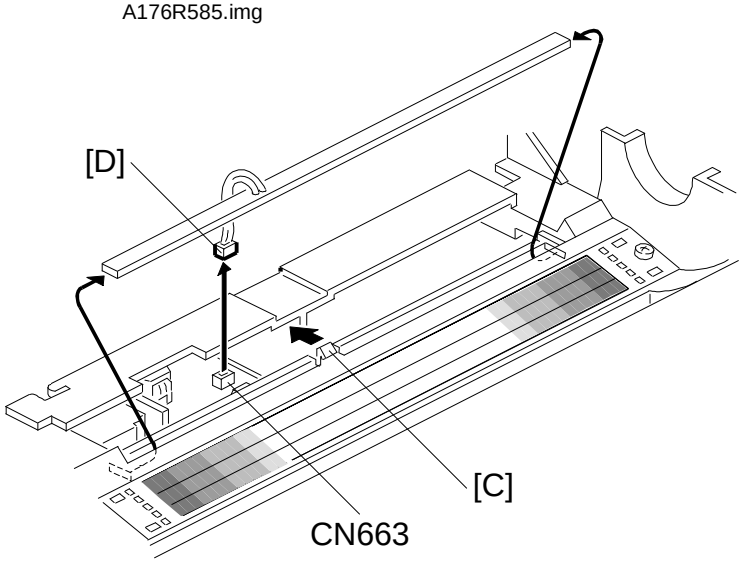

A176R586.wmf

1. Remove the OPC drum. (Refer to Drum Unit Removal and OPC Drum Replacement.)

   NOTE: Wrap a protective sheet or a few sheets of paper around the drum to protect it from light.

2. Slightly pull up the wires [A] on the quenching lamp, then insert the head of the small flat head screw driver [B] between the quenching lamp and the drum unit casing to release the hook [C] at the center of the quenching lamp.

   NOTE: Do not pull the wire too strongly.

3. Disconnect the connector [D].

4. Replace the quenching lamp.

4.3 GRID PLATE/CHARGE WIRE/WIRE CLEANER REPLACEMENT

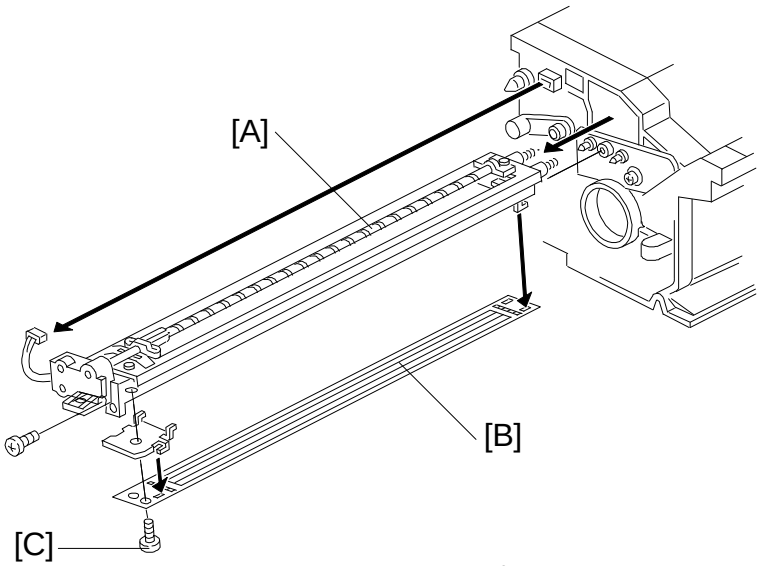

A176R587.wmf

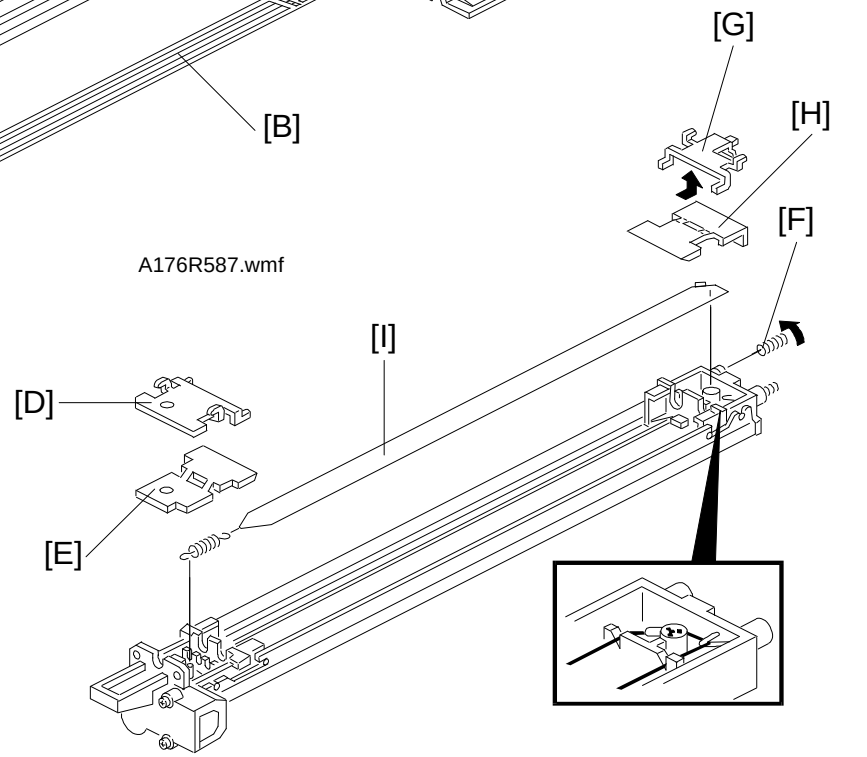

A176R588.wmf

1. Take out the main charge corona [A] (1 screw, 1 connector).
2. Remove the grid plate [B] (1 plastic screw, 4 hooks).

   NOTE: When installing the grid plate, do not tighten the plastic screw [C] too strongly.
3. Remove the front grid terminal [D], then the front end block cover [E].
4. Remove the terminal spring [F].
5. Slide the rear grid terminal [G] to the rear and remove it, then remove the rear end block cover [H].
6. Remove the charge corona wire [I].

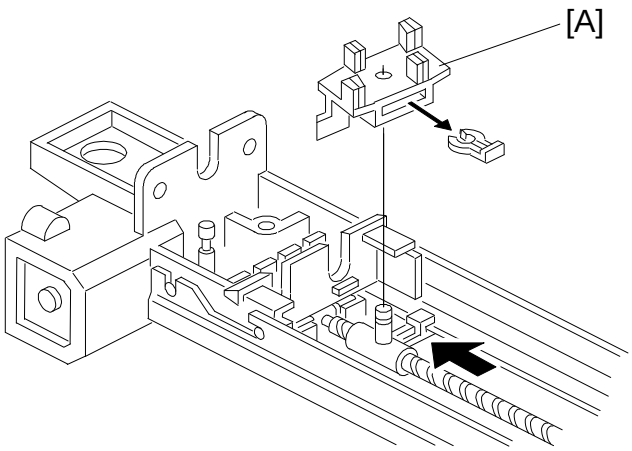

A176R589.wmf

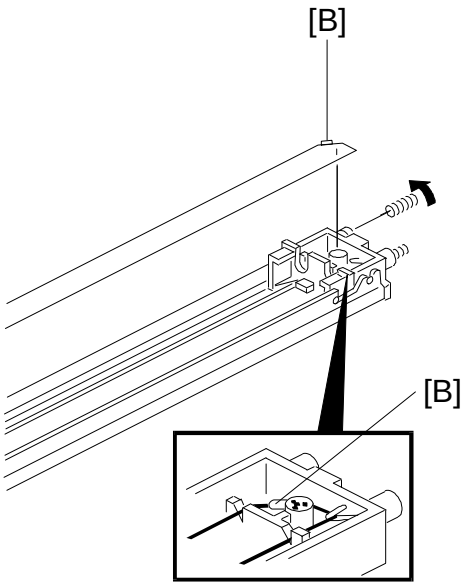

A176R590.wmf

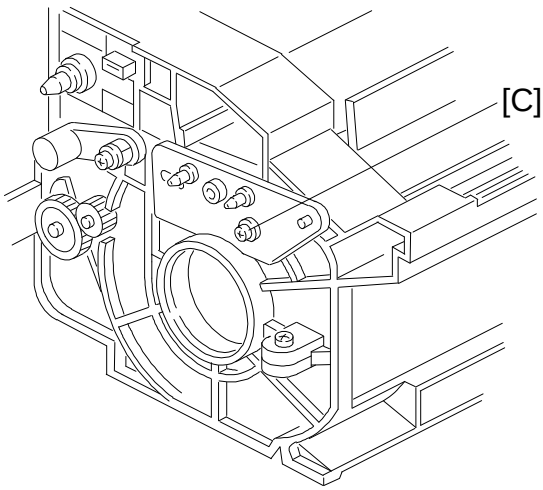

A176R591.wmf

7. Remove the wire cleaner [A] (1 snap ring).
8. Install the wire cleaner and the charge corona wire.

NOTE: Locate the joint part [B] of the wire in the rear end block as shown.
Correctly set the wire between the wire cleaner pads.
Do not loosen the screw [C], otherwise the charge corona height will change.

4.4 ERASE LAMP AND DRUM POTENTIAL SENSOR REPLACEMENT

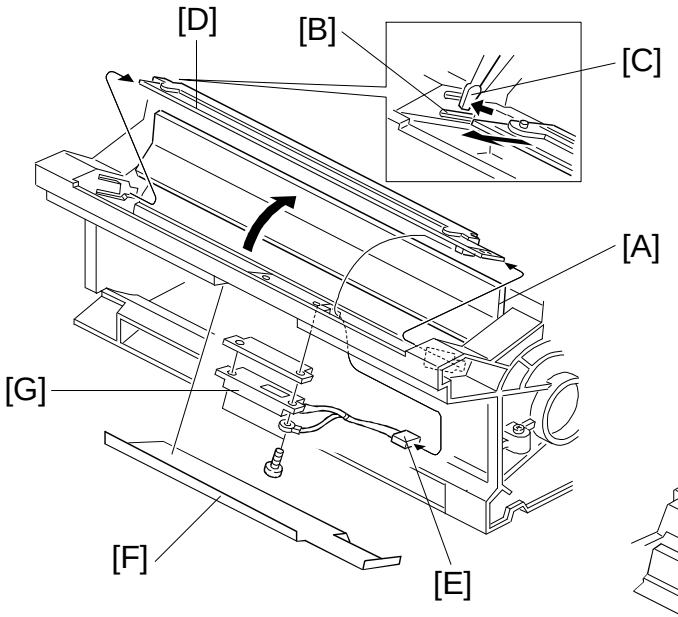

A176R592.wmf

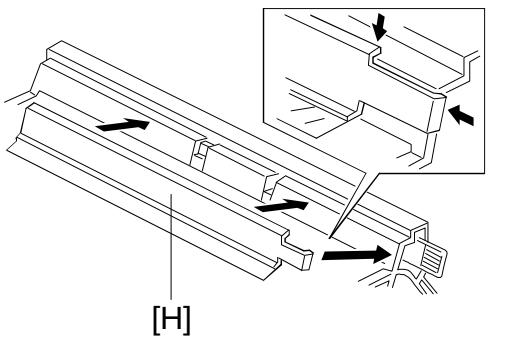

A176R593.wmf

1. Open the drum shutter [A].
2. While pushing the hook [B] to the front by using a small flat head screw driver [C], move up the front side of the erase lamp [D] as shown.
3. Slide the erase lamp to the front to release the rear side of the erase lamp from the drum unit casing.
4. Disconnect the connector [E].

   NOTE: Before removing the drum potential sensor, set a few sheets of paper between the sensor and the OPC drum to protect the drum surface.
5. Replace the drum potential sensor [F].

⚠ CAUTION

After replacing the drum potential sensor, perform the process control data initial setting. (1 SP Adjustment - PAGE 1)

4.5 CLEANING BLADE REPLACEMENT

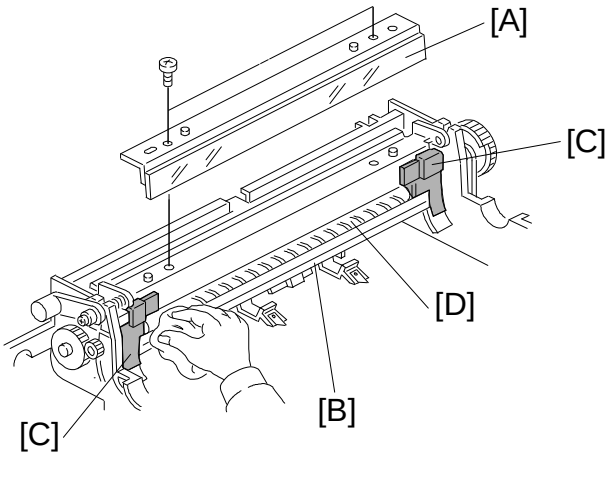

A176R594.wmf

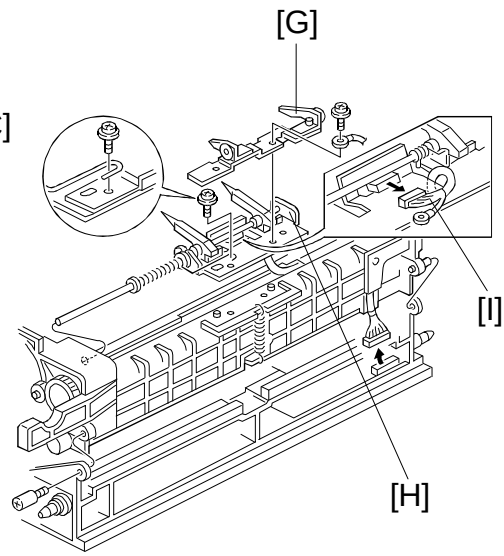

A176R595.wmf

1. Remove the OPC drum. (Refer to Drum Unit Removal and OPC Drum Replacement.)
2. Remove the cleaning blade [A] (2 screws).
3. Clean the entrance seal [B], side seals [C] and cleaning brush [D].

   NOTE: When a vacuum cleaner is used, to protect the electrical parts from static electricity, disconnect the connector on the charge power pack and remove the ID sensor as follows:

   1) Disconnect the 12P connector on the charge power pack [E].
   2) Remove the screw [F] and separate the upper and the lower drum units.
   3) Remove the spur bracket [G] and pick-off pawl bracket [H] (2 screws).
   4) Disconnect the connector [I].
   5) While turning the bracket counterclockwise (front view), slide the pick-off pawl bracket to the rear.
4. Install the new cleaning blade.

   NOTE: Do not clean the edge of the cleaning blade with cloth, otherwise it damages the edge and causes black lines on copy images. Do not touch the edge of the new cleaning blade, if some setting powder or toner on the blade edge is removed, apply toner there. When installing the cleaning blade, do not pinch the side seals.

4.6 CLEANING BRUSH REPLACEMENT

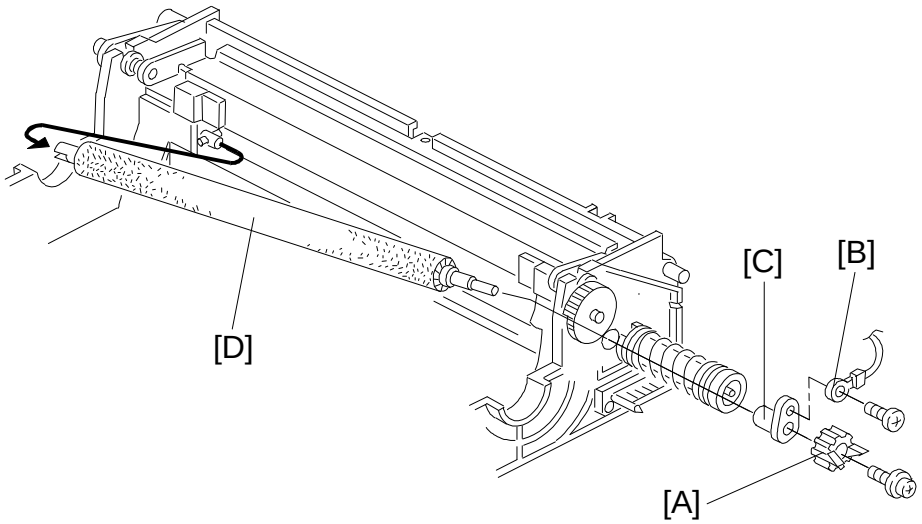

A176R596.wmf

1. Remove the cleaning blade. (Refer to Cleaning Blade Replacement.)
2. Remove the coupling gear [A] (1 screw).
3. Remove the grounding wire [B] (1 screw).
4. Remove the bushing [C].
5. Pull the cleaning brush shaft to the rear to release the cleaning brush [D], then remove the cleaning brush.

   NOTE: Do not touch the cleaning brush with oily hands.
   After replacement, clean the ID sensor surface.

4.7 PICK-OFF PAWL REPLACEMENT

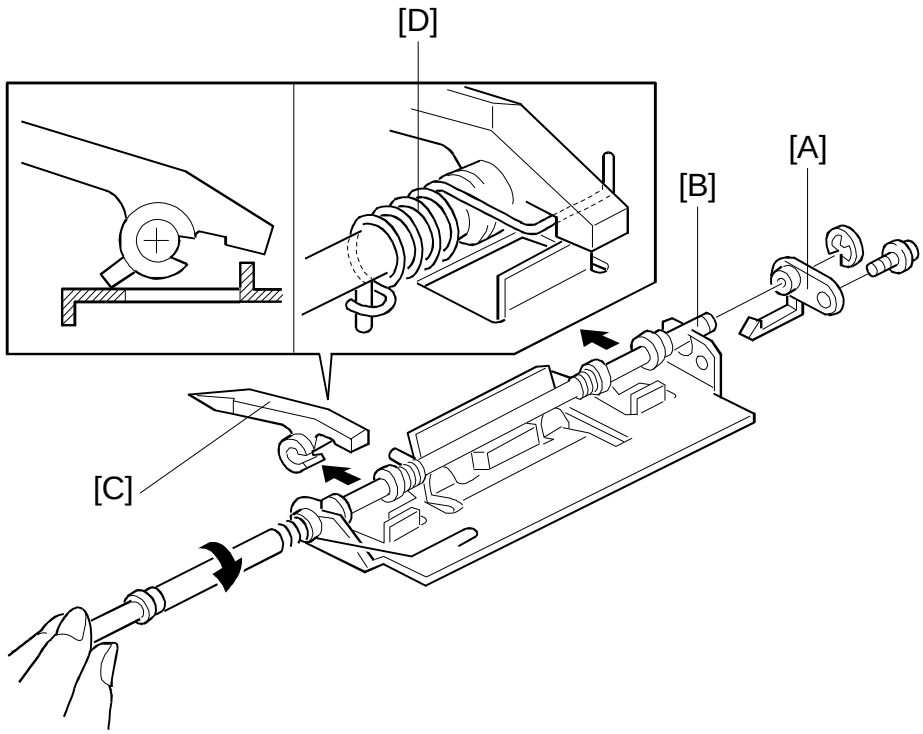

A176R597.wmf

1. Remove the bushing [A] (1 screw and retaining ring).
2. While pulling the shaft [B] to the rear, turn the pick-off pawl about 45 degree clockwise (front view) and move up the pick-off pawl.
3. Replace the pick-off pawl [C].

   NOTE: Do not forget to hook the tension spring [D].
   After replacement, check the smooth movement of the pick-off pawl.

4.8 TONER COLLECTION MOTOR REPLACEMENT

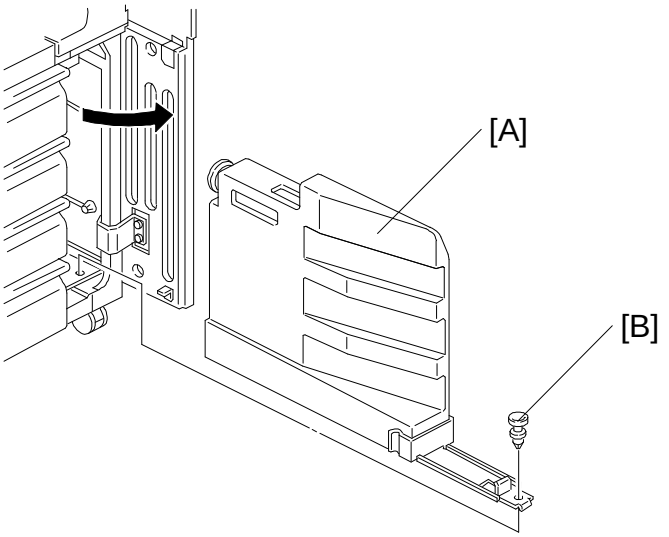

A176R598.wmf

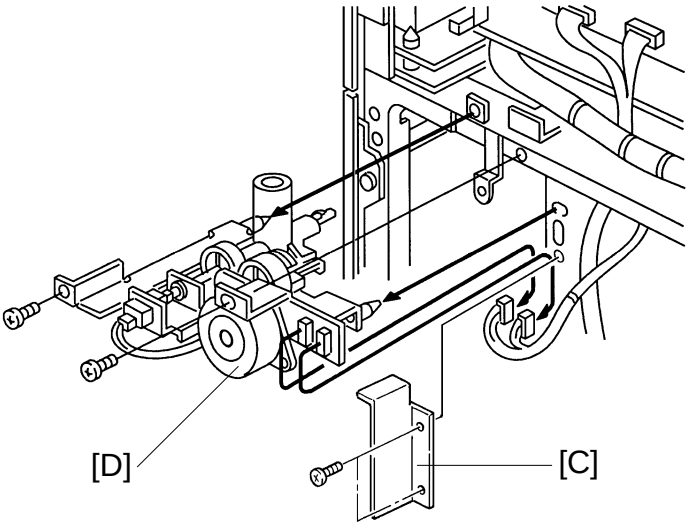

A176R599.img

NOTE: Before starting the procedure remove the drum unit and the transfer belt unit to prevent toner from dropping in the machine.

1. Open the front doors then remove the toner collection bottle [A] (1 push-lock [B]).
2. Remove the upper and lower rear covers. (Refer to Upper and Lower Rear Covers Removal.)
3. Remove the tank cover bracket [C] (2 screws).
4. Remove the toner collection motor [D] (2 connectors, 2 screws).

   NOTE: When re-installing the toner collection motor, be sure to set the 2 positioning pins in the holes on the machine rear frame.

4.9 OZONE FILTER REPLACEMENT

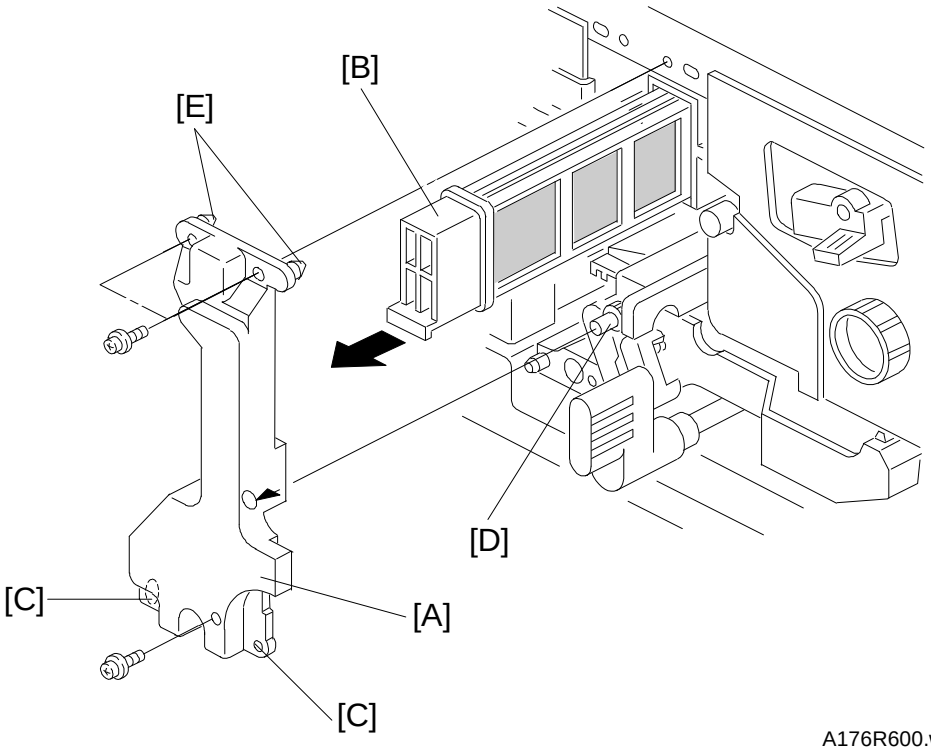

A176R600.wmf

1. Open the front doors and open the toner bottle holder.
2. Remove the transfer belt unit prop [A] (3 screws).
3. Replace the ozone filter [B].

NOTE: To install the transfer belt unit prop smoothly, set in order the lower pins [C], drive roller shaft [D], and the upper pins [E].

5. TRANSFER BELT UNIT

5.1 TRANSFER BELT UNIT REMOVAL/INSTALLATION

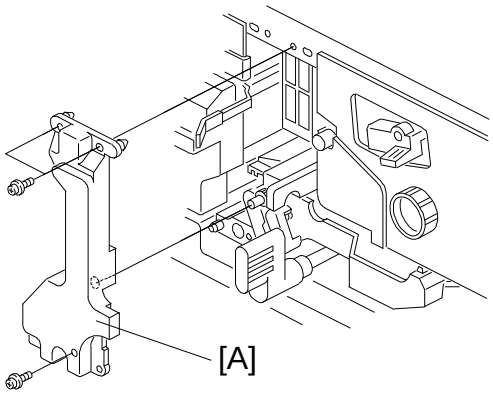

A176R601.wmf

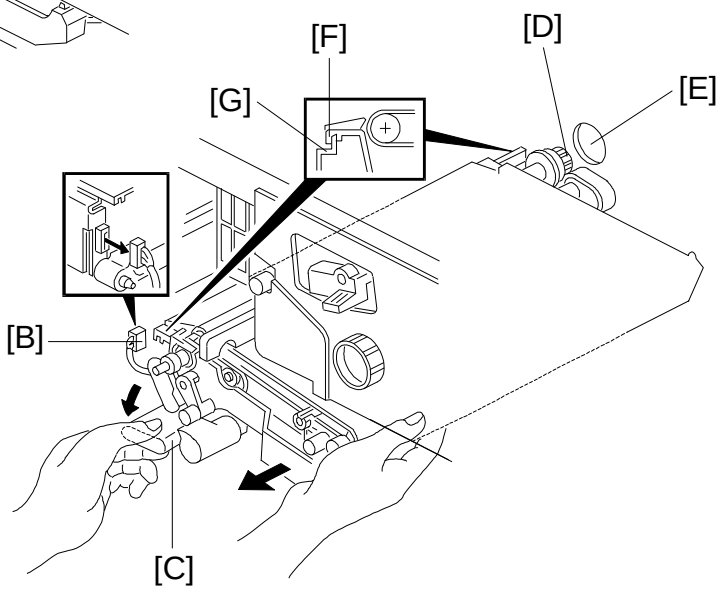

A176R602.wmf

- Removal -

1. Turn off the main switch.
2. Remove the transfer belt unit prop [A] (3 screws).
3. Disconnect the connector [B].
4. While turning the lever [C] counterclockwise, take out the transfer belt unit.

   NOTE: 1) Do not touch the transfer belt with oily hands.
   2) Take care not to scratch the OPC drum with part of the transfer belt unit. Be careful when installing the transfer belt unit.

- Installation -

1. While turning the lever [C] counterclockwise, install the transfer belt unit.

   NOTE: 1) Insert the gear [D] in the hole [E] on the rear frame.
   2) Place the slot [F] of the transfer belt unit on the rail [G].

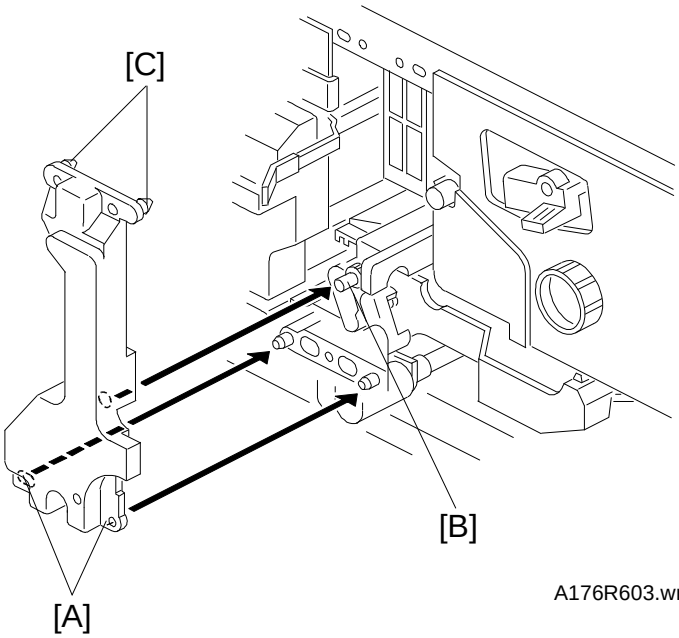

A176R603.wmf

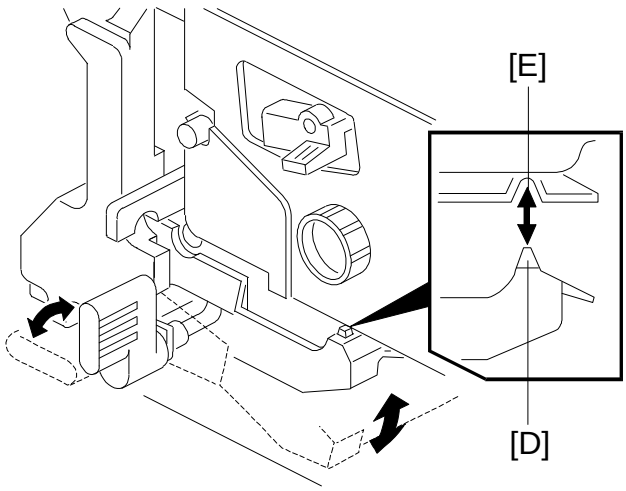

A176R604.wmf

2. Install the transfer belt unit prop (3 screws).

   NOTE: To install the transfer belt unit prop smoothly, set in order the lower pins [A], drive roller shaft [B], and the upper pins [C].

3. After installation, confirm the following points:
   1) Smooth up-down movement of the transfer belt unit,
   2) Part [D] of the transfer belt unit is inside the drum stay,
   3) Part [D] of the transfer belt unit is set in the dent [E] on the drum unit casing.

5.2 TRANSFER BELT REPLACEMENT

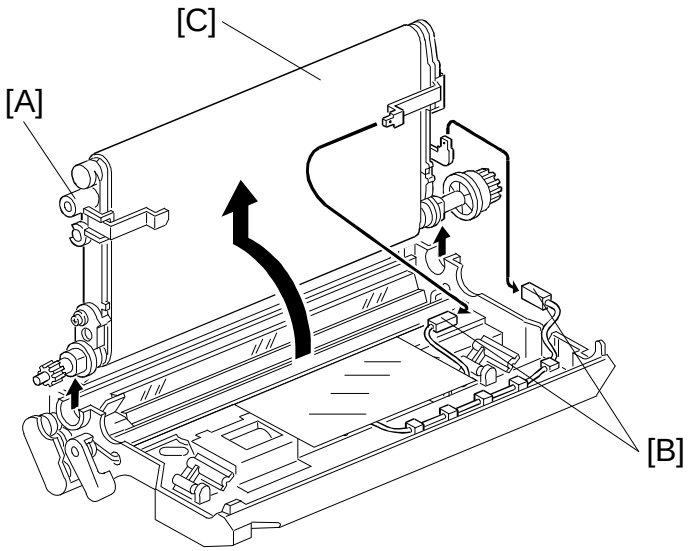

A176R605.wmf

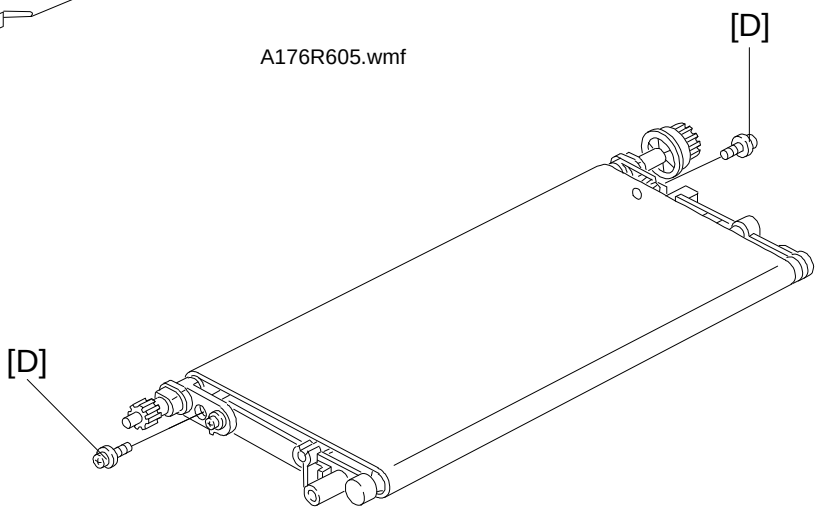

A176R606.wmf

1. Take out the transfer belt unit. (Refer to Transfer Belt Unit Removal.)
2. While raising the knob [A], disconnect the two connectors [B].
3. Turn the transfer belt upper unit [C] 90 degrees counterclockwise, then raise and remove it.
4. Remove the screws [D].

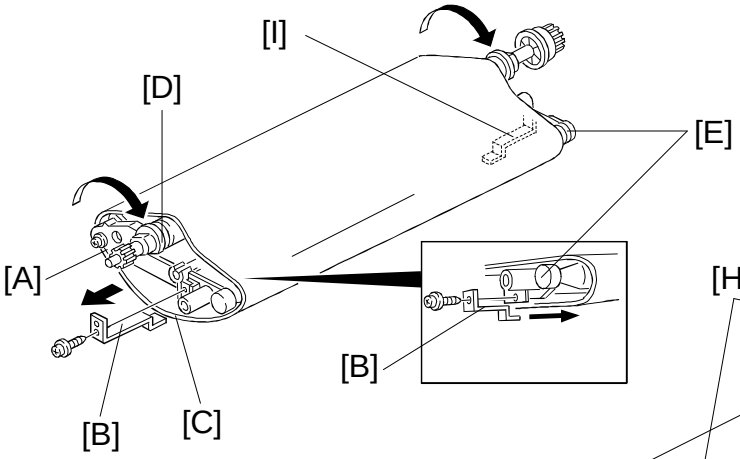

A176R607.wmf

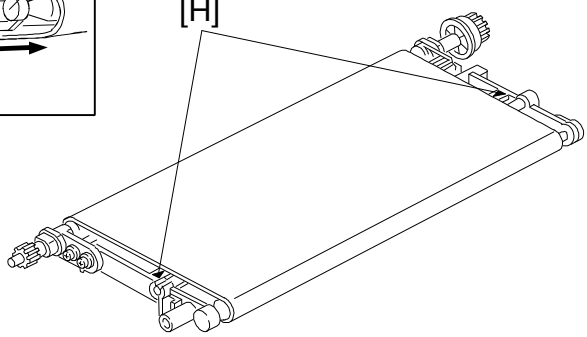

A176R608.wmf

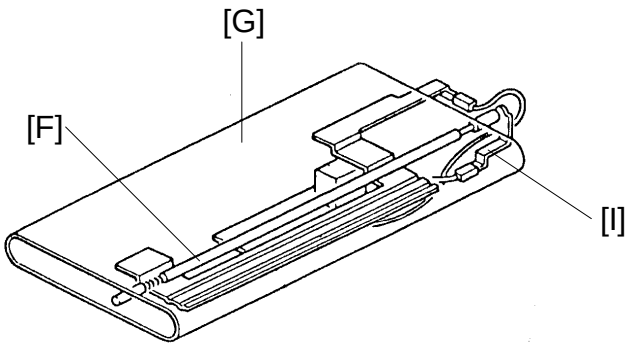

A176R609.img

5. Turn the belt drive roller holder [A] clockwise (front view) and remove the bias terminal [B] (1 screw).
6. Replace the transfer belt [C].

NOTE: 1) Before installing the transfer belt, clean both sides of the transfer belt with a dry cloth (do not use alcohol).

2) Before installing the transfer belt, clean the following items with alcohol.

- Belt drive roller [D]
- Belt roller [E]
- Bias roller [F]
- Discharge terminal [G]

3) Position the transfer belt at the center of the belt roller [E]. (Both marks [H] should be visible.)

4) Set the transfer belts inside the bias terminals [B] and [I].

5.3 CLEANING BLADE REPLACEMENT

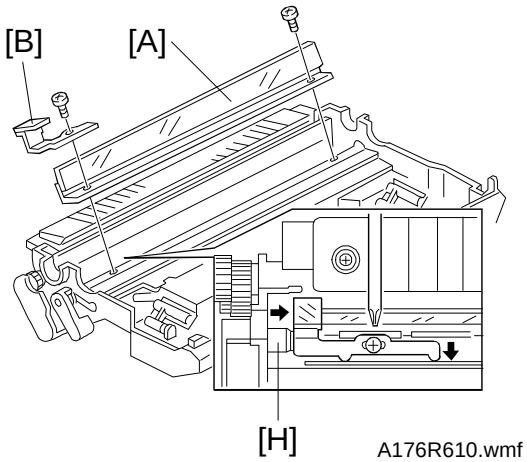

A176R610.wmf

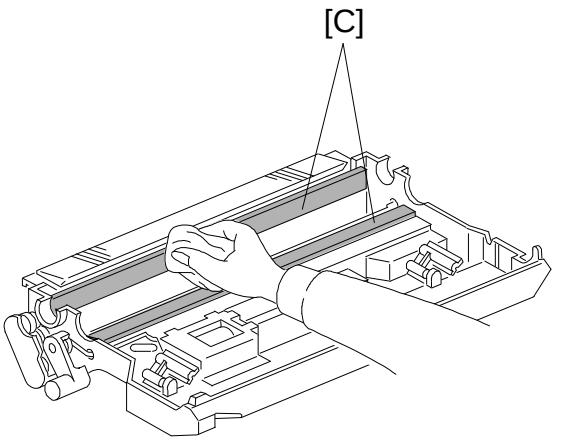

A176R612.wmf

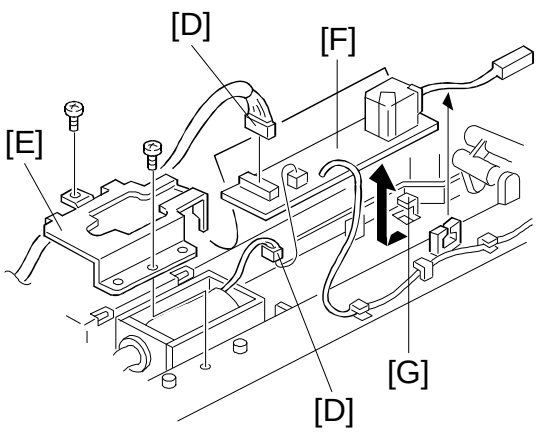

A176R611.wmf

1. Remove the transfer belt unit. (Refer to Transfer Belt Replacement.)
2. Remove the cleaning blade [A] and the small blade [B] (2 screws).
3. Clean the seals [C].

   NOTE: When using a vacuum cleaner, to protect the transfer power pack from static electricity, remove the power pack as follows:

   1) Disconnect two connectors [D].
   2) Remove the solenoid bracket [E] (2 screws).
   3) While pushing the power pack toward the solenoid [F], release the power pack from the hook [G].

4. Install the new cleaning blade.

   NOTE: Do not touch the edge of the cleaning blade. If some of the setting powder on the blade edge is removed, apply setting powder or toner there.

   1) Install the small blade [B] so that the front edge of the blade contacts with the spring holder [H].

6. PAPER FEED

6.1 PAPER TRAY UNIT REMOVAL

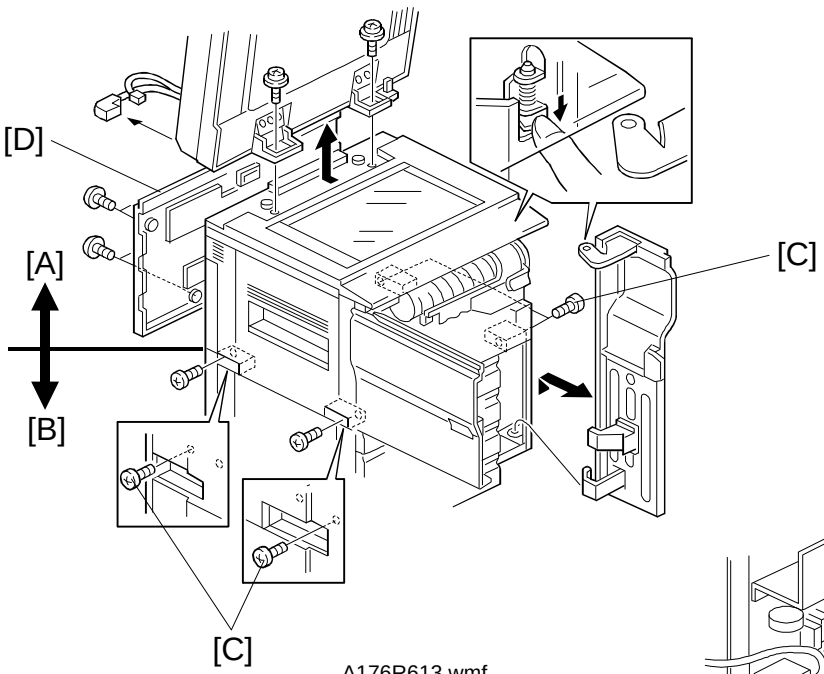

A176R613.wmf

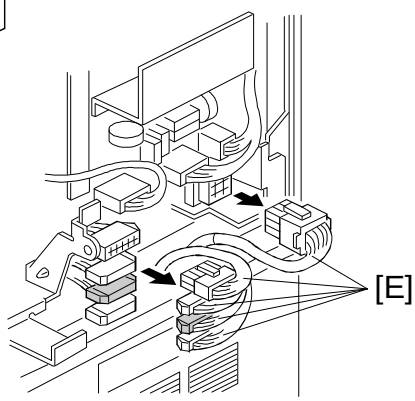

A176R614.wmf

To facilitate transportation, the upper part of the copier (copier main frame) [A] and the lower part of the copier (paper tray unit) [B] can be separated as follows:

1. Turn off the main switch.
2. Remove the front covers. (Refer to Front Cover Removal.)
3. Remove the four screws [C].
4. Open the small rear cover [D] (1 screw).
5. Remove the five connectors [E].
6. Remove the copier main frame [A] from the paper tray unit [B].

NOTE: When re-installing the copier main frame on the paper tray unit, do not pinch the harness between the copier main frame and the paper feed unit.

6.2 PAPER TRAY REMOVAL

- Tandem Tray Removal (1st tray of the A176/A177/A191/A192 copier) -

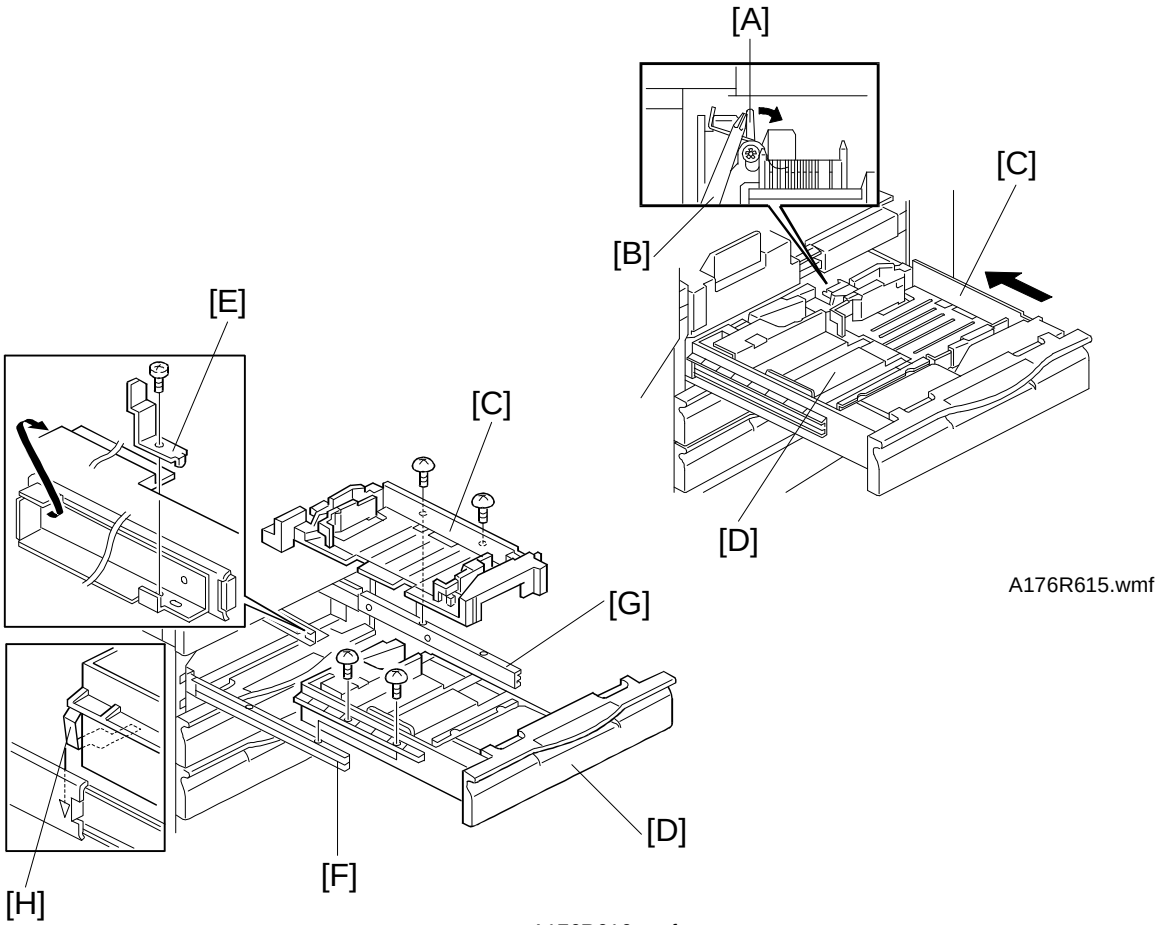

A176R615.wmf

A176R616.wmf

1. Open the left door and draw out the tandem tray.
2. While pushing the release lever [A] to the right with the head of the screw driver [B], slightly push the right tandem tray [C] to separate it from the left tandem tray [D].
3. Remove the stopper [E] (1 screw).
4. Remove the left tandem tray [D] from the left guide Accuride [F] (2 screws).
5. While holding the right tandem tray [C] from the bottom, remove the right tandem tray from the right guide Accuride [G] (2 screws).

   NOTE: 1) If two screws are removed without holding the right tandem tray, it will drop.

   2) Be careful not to deform the grounding plate [H] when reinstalling the left tandem tray.

- Universal Tray/550 sheet tray/Built-in LCT Removal -

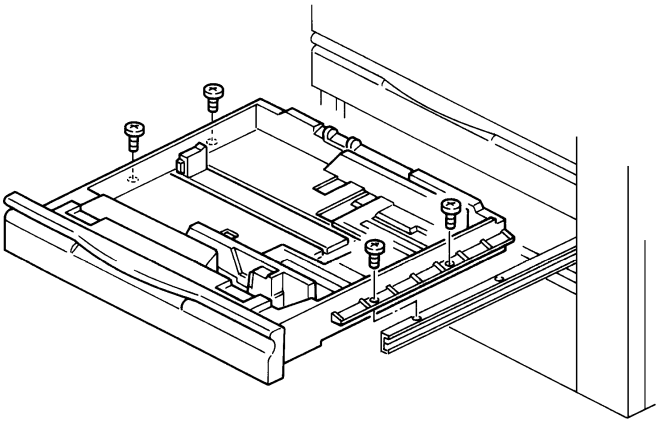

A176R617.img

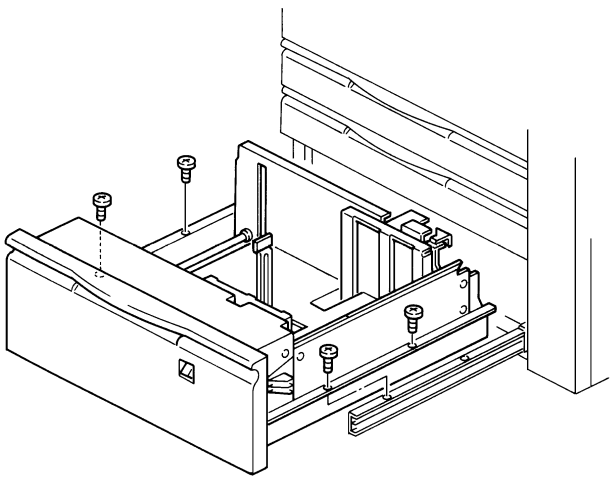

A176R618.img

1. Draw out the tray.
2. Remove the tray from both guide Accurides as shown (4 screws).

6.3 PAPER FEED ROLLERS REPLACEMENT

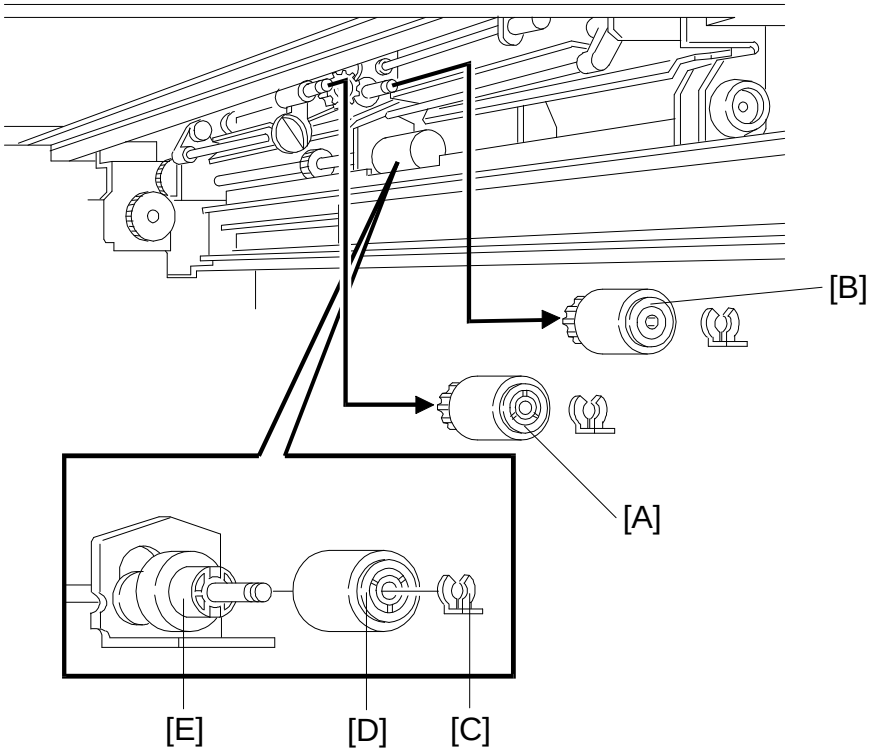

A176R619.wmf

1. Turn off the main switch.
2. Remove the paper tray where the feed rollers belong to. (Refer to Paper Tray Removal.)
3. Remove the pick-up roller [A] (1 snap ring).
4. Remove the feed roller [B] (1 snap ring).
5. Remove the snap ring [C] fixing the separation roller [D] then separate the separation roller [D] from the torque limiter [E].

NOTE: 1) The paper feed (pick-up, feed, separation) rollers used in the 1st ~ 3rd feed units in the paper tray unit are different from the feed rollers used in the by-pass feed table and 3.5 k LCT.

2) Do not touch the surface of the rollers with oily hand.

6.4 TANDEM REAR FENCE DRIVE BELT REMOVAL

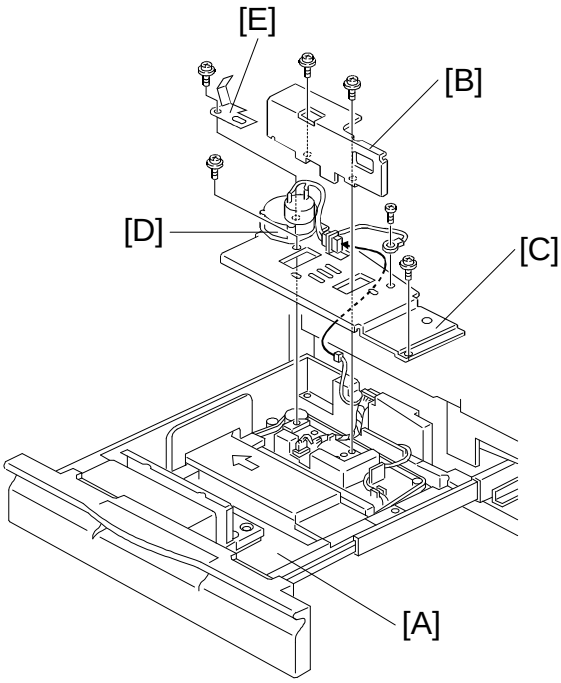

A176R620.wmf

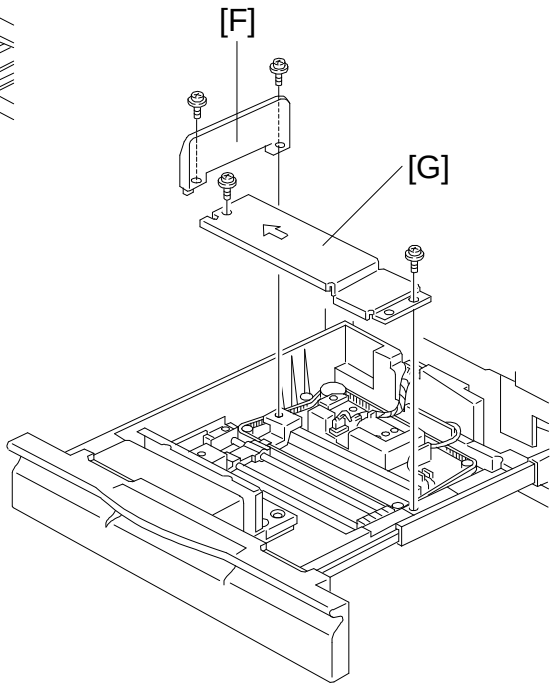

A176R621.wmf

1. Draw out the tandem tray.
2. Separate the right tandem tray from the left tandem tray [A]. (Refer to Tandem Tray Removal.)
3. Remove the rear fence [B] on the left tandem tray (2 screws).
4. Remove the rear base plate [C] with the rear fence drive motor [D] (3 screws, 1 connector, 1 grounding screw, and 1 grounding plate [E]).
5. Remove the end fence [F] (2 screws).
6. Remove the center bottom plate [G] (2 screws).

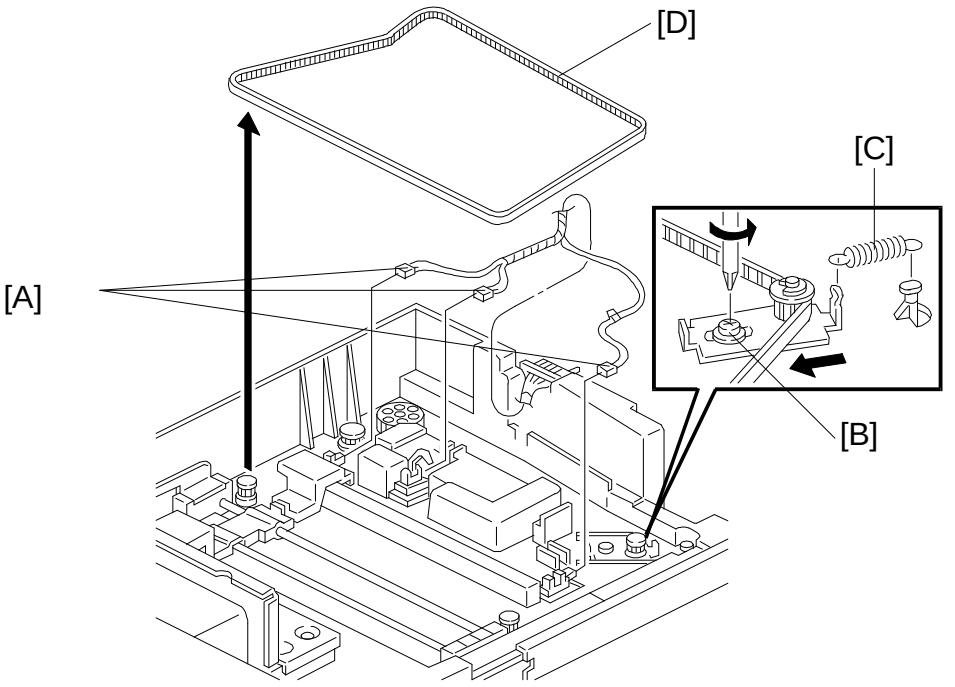

A176R622.wmf

7. Disconnect the three connectors [A].
8. Loosen the tightener screw [B] and unhook the tension spring [C].
9. Remove the timing belt [D].

NOTE: When installing the timing belt, hook the spring [C] then, tighten the screw [B].

6.5 TANDEM SIDE FENCE MOTOR REMOVAL

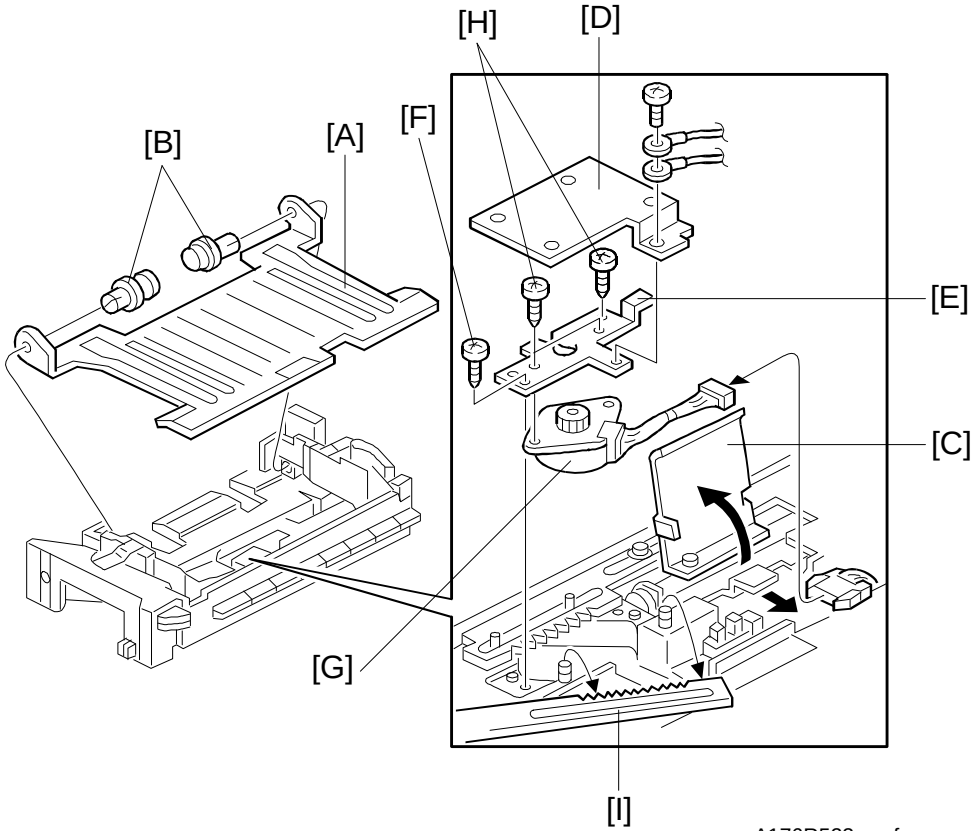

1. Remove the bottom plate [A] of the right tandem tray (2 nylon rivets [B]).
2. Raise the lift arm [C] (2 screws).
3. Remove the cover [D] (1 screw).
4. Remove the bracket [E] (2 screws [F]).
5. Remove the side fence drive motor [G] (2 screws [H]).

NOTE: When installing the side fence drive motor, move both side fences to the innermost position, then set the motor gear between the two rack gears [I].

6.6 PAPER FEED TIMING ADJUSTMENT

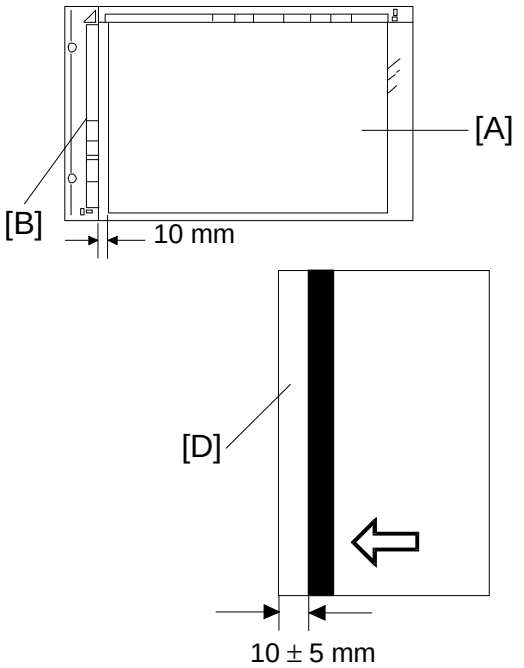

A176R624.wmf

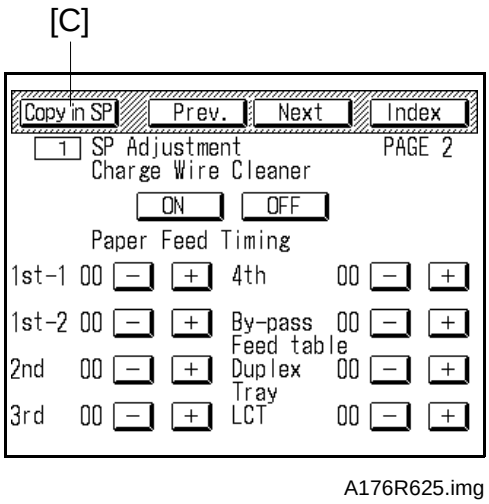

A176R625.img

1) Paper feed timing adjustment for the 1st feed station

1. Place a white paper on the exposure glass so that there is a gap of 10 mm between the white paper [A] and the left scale [B].
2. Enter SP mode (refer to Service Program Access Procedure) and access the 1 SP Adjustment - PAGE 2.
3. Touch the **"Copy in SP"** key [C] then select the 1st feed station.
4. Enter a copy quantity of "2" using the number keys.
5. Touch the **"SP Mode"** key.
6. Press the **Start** key and evaluate the width of the white area [D] on the copy. The adjustment standard is 10 ± 5 mm.

NOTE: In this mode, the registration roller does not stop for registration. Do not make copies in "Copy in SP" mode for this adjustment. In "Copy in SP" mode, the registration clutch stops normally.

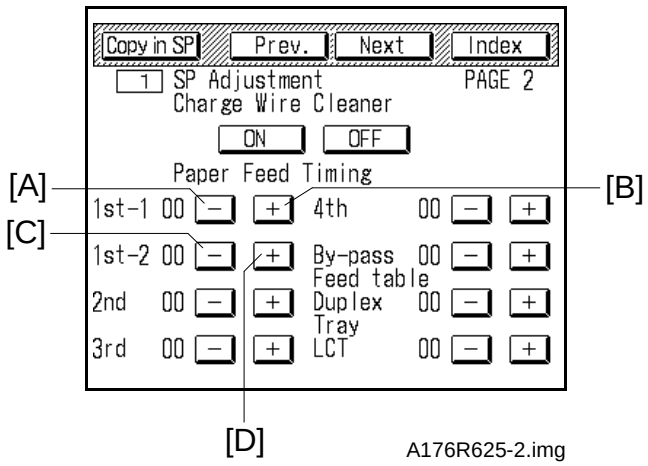

7. For the first copy, touch the – key [A] or the + key [B] to adjust the white area width.
8. For the second copy, touch the – key [C] or the + key [D] to adjust the white area width.
9. Repeat steps 6 to 8.

2) Paper feed timing adjustment for the 2nd, 3rd, 4th feed stations, the LCT and duplex unit.

Refer to Paper Feed Timing Adjustment for the 1st feed station.

NOTE: Concerning the adjustment for the 1st feed station, it is necessary to adjust the feed timing for the 1st and 2nd papers individually. However, for the other feed stations, it is necessary to adjust the feed timing only for the 1st paper fed.

Therefore, you can skip steps 4 and 7 of the paper feed timing adjustment for the 1st feed station.

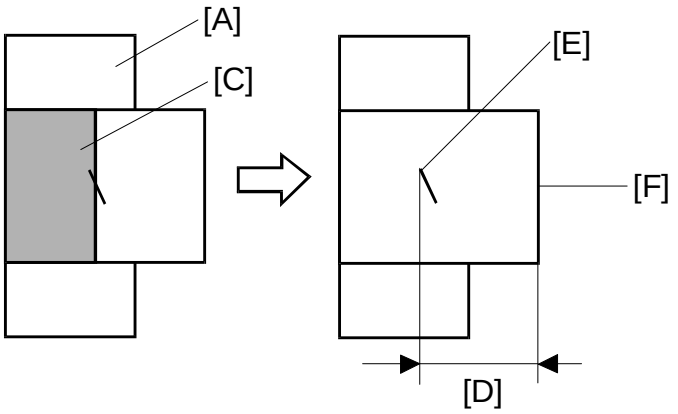

A176R626.wmf

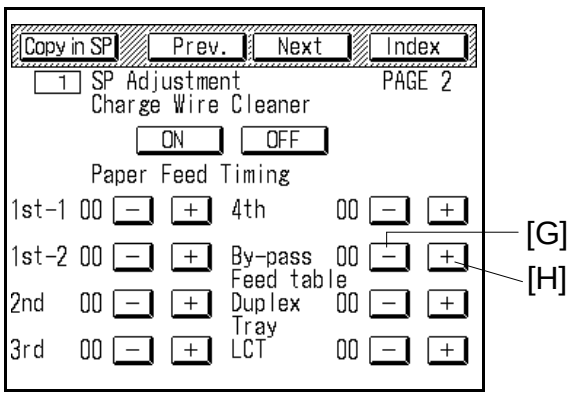

A176R625-3.img

3) Paper feed timing adjustment for the by-pass feed station

1. Set two sheets of paper on the by-pass feed table [A].
2. Enter SP mode (refer to Service Program Access Procedure) and access 1 SP Adjustment - PAGE 2.
3. Touch the **"Copy in SP"** key [B].
4. Select the by-pass feed station.
5. Press the **start** key then when the paper stops for registration, mark the trailing edge [C] of the paper on the next paper as shown.
6. Measure the distance [D] between the leading edge of the mark [E] and the trailing edge of the paper [F] as shown. The adjustment standard is 106 ~ 115 mm.
7. Touch the **"SP Mode"** key.
8. Touch the – key [G] or the + key [H] to adjust the distance [D].
9. Touch the **"Copy in SP"** [B].
10. Repeat steps 5 to 9.

6.7 PAPER FEED CLUTCH REMOVAL

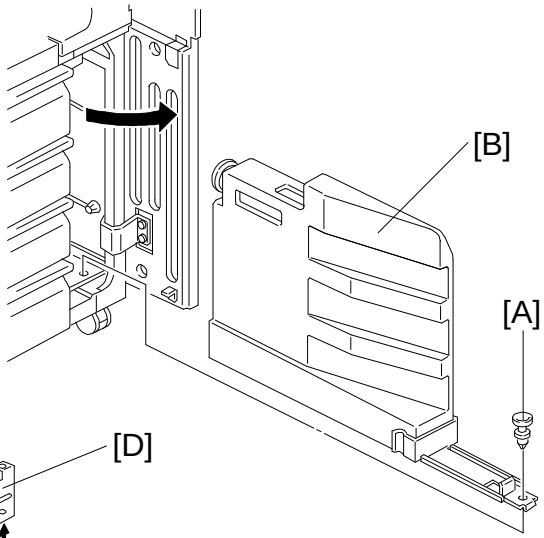

A176R627.wmf

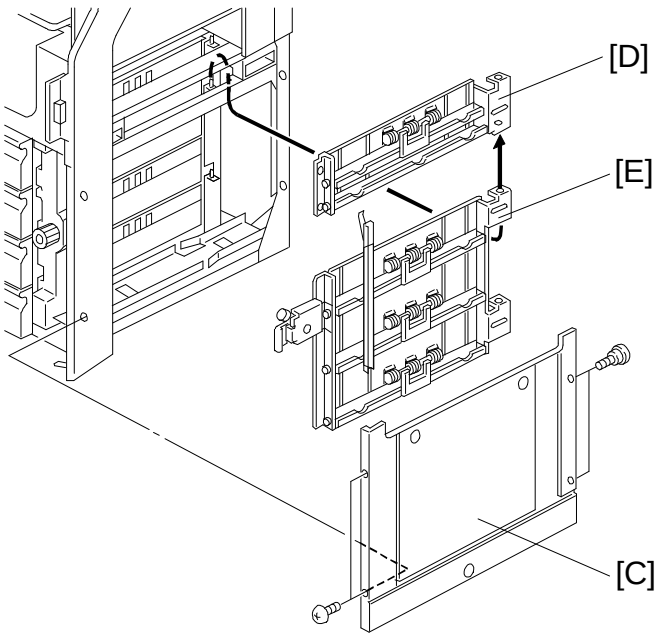

A176R628.wmf

1. Turn off the main switch then open the right front door and remove the push-lock [A].
2. Remove the toner collection bottle [B].

   NOTE: If the LCT is installed, remove it from the copier.
3. Remove the lower right cover [C]. (Refer to Lower Right Cover Removal.)
4. Remove the upper then the lower vertical transport guides [D] and [E].

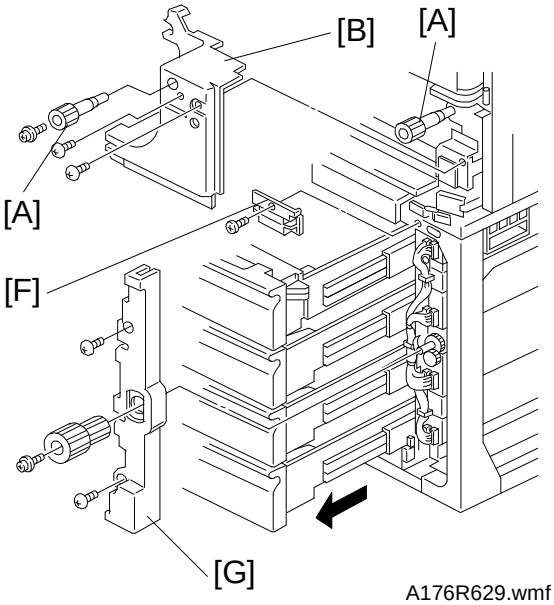

A176R629.wmf

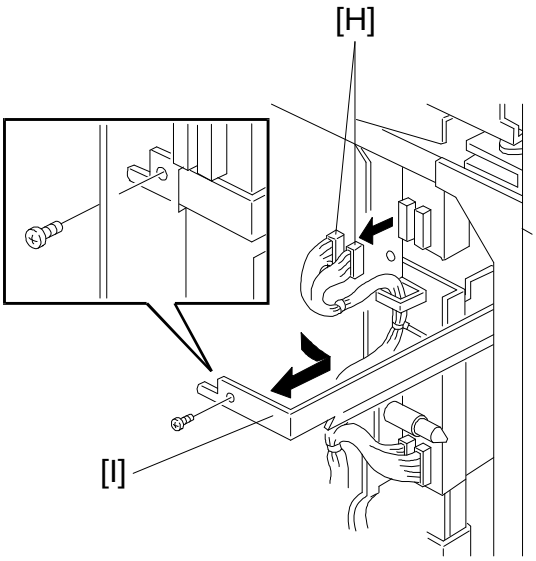

A176R630.wmf

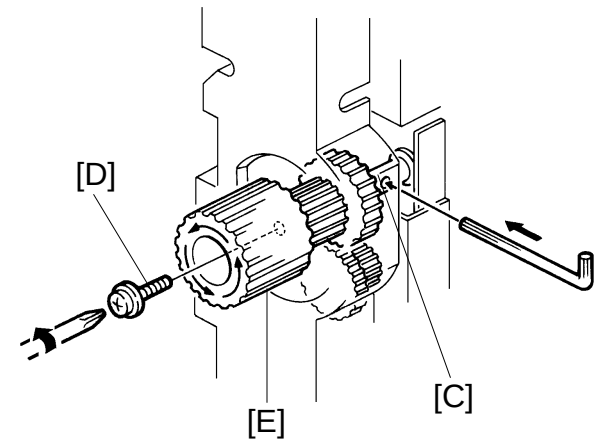

A176R631.img

5. Remove the knobs [A] (1 screw each) then remove the right inner cover [B] (2 screws).
6. While holding the shaft [C] with an Allen key, remove the fixing screw [D], then remove the knob [E].
7. Remove the magnet [F].
8. Pull out all paper trays then remove the paper tray unit inner cover [G] (2 screws).
9. Remove the two connectors [H].
10. Remove the support bracket [I] (1 screw).

    NOTE: The support bracket is used only for the first feed station.

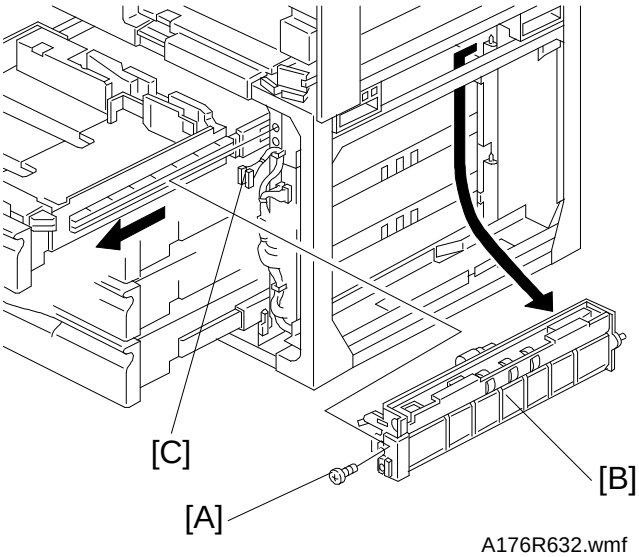

A176R632.wmf

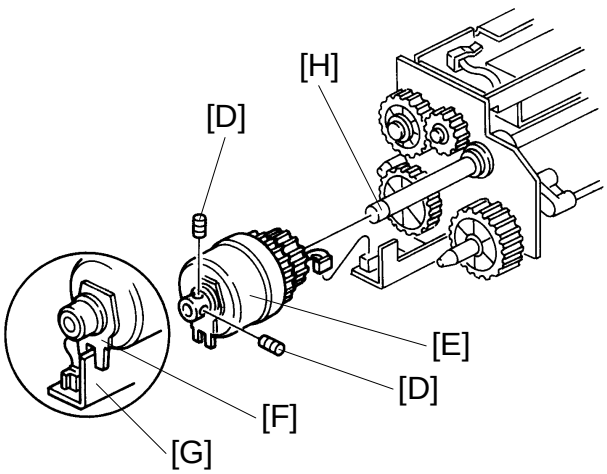

A176R633.img

11. Fully draw out the paper tray.
12. Remove the two screws [A] fixing the tray feed unit [B].
13. Disconnect the connectors [C].
14. Remove the tray feed unit.
15. Loosen the two Allen screws [D].
16. Remove the tray feed clutch [E] (1 connector).

NOTE: When re-installing the tray feed clutch, set the stopper [F] of the clutch on the edge of the bracket [G] then fully push in the clutch on the feed roller shaft [H] and secure the Allen screws [D].

6.8 BY-PASS FEED TABLE REMOVAL

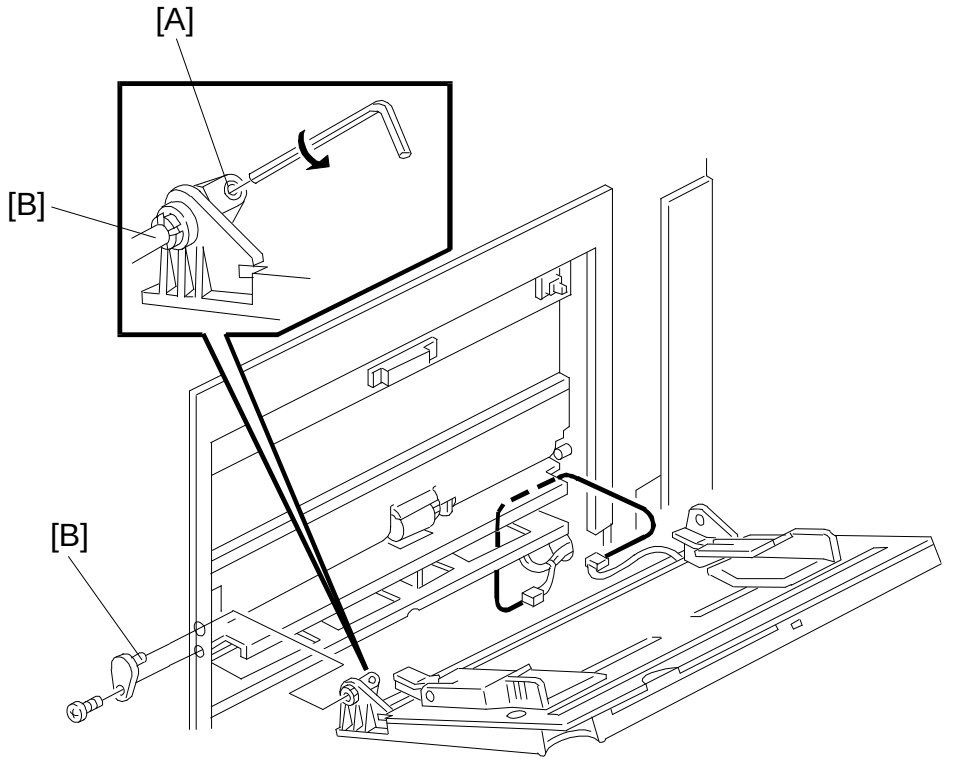

A176R634.wmf

1. Remove the right inner cover. (Refer to Right Inner Cover Removal.)
2. Remove the total counter with bracket (1 screw, 1 connector).
3. Loosen the Allen screw [A] on the hinge.
4. Remove the hinge pin [B] (1 screw).
5. Remove the by-pass feed table (1 connector).

6.9 BY-PASS FEED ROLLERS REPLACEMENT

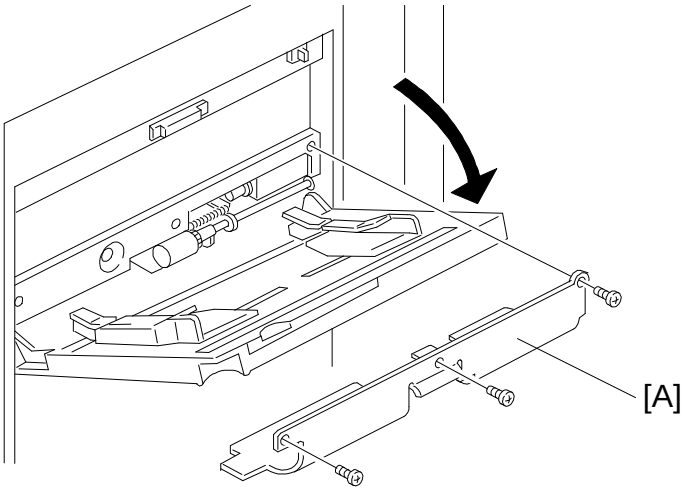

A176R635.wmf

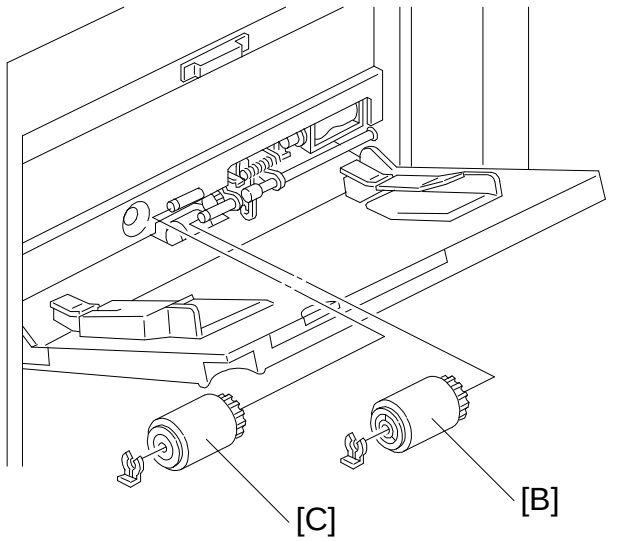

A176R636.wmf

1. Open the by-pass feed table then remove the cover [A] (3 screws).
2. Replace the pick-up roller [B] (1 snap ring) and the feed roller [C] (1 snap ring).

NOTE: The paper feed (pick-up, feed, separation) rollers used in the by-pass feed table and LCT are different from the paper feed rollers used in the 1st ~ 3rd feed units in the paper tray unit. They are not interchangeable.

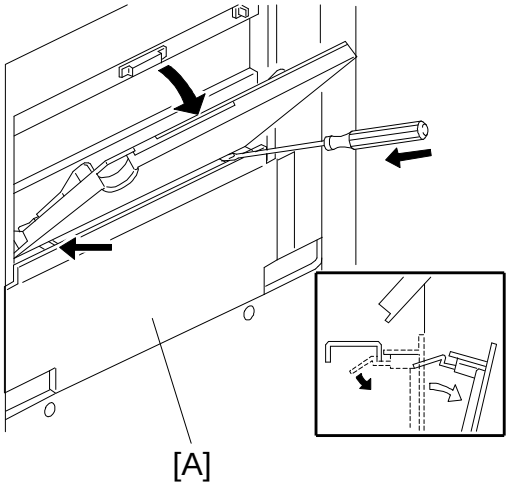

A176R637.wmf

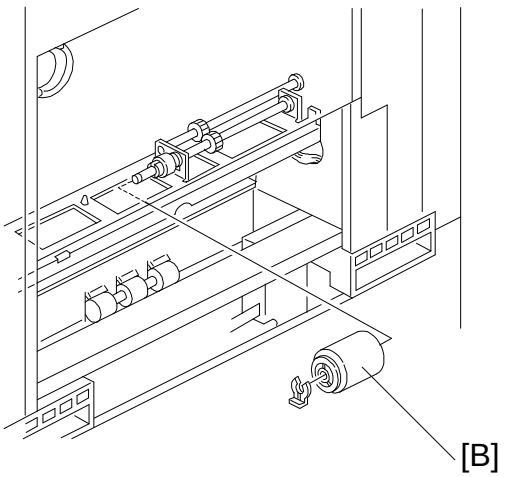

A176R638.wmf

3. Remove the feed unit cover [A] as shown.
4. Replace the separation roller [B] (1 snap ring).

6.10 BY-PASS PAPER SIZE SENSOR REPLACEMENT

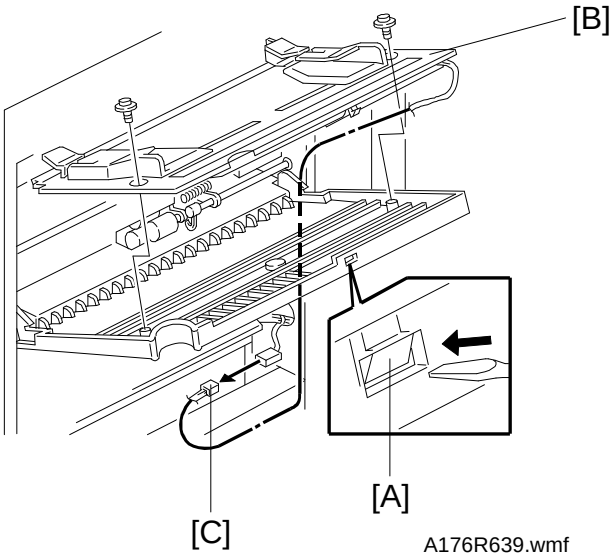

A176R639.wmf

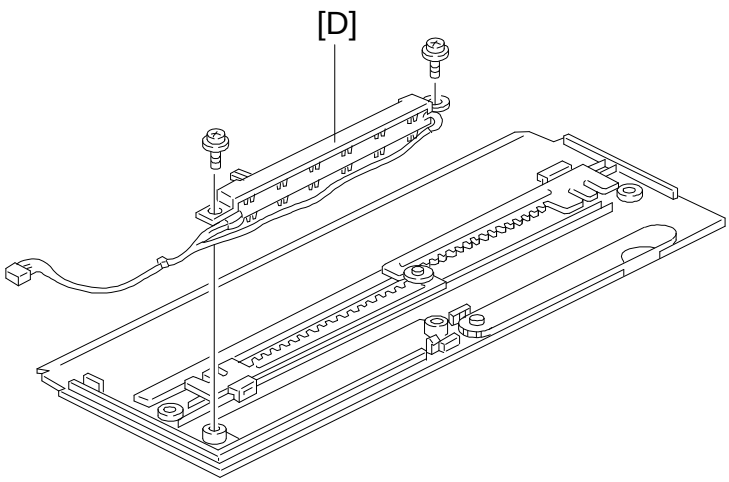

A176R640.wmf

1. Turn off the main switch.
2. Open the by-pass table and remove the feed unit cover. (Refer to Feed Unit Cover Removal.)
3. While pushing the hook [A] with the head of the flat head screw driver as shown, remove the table assembly [B] (2 screws, 1 connector [C]).
4. Remove the by-pass paper size sensor [D] (2 screws).

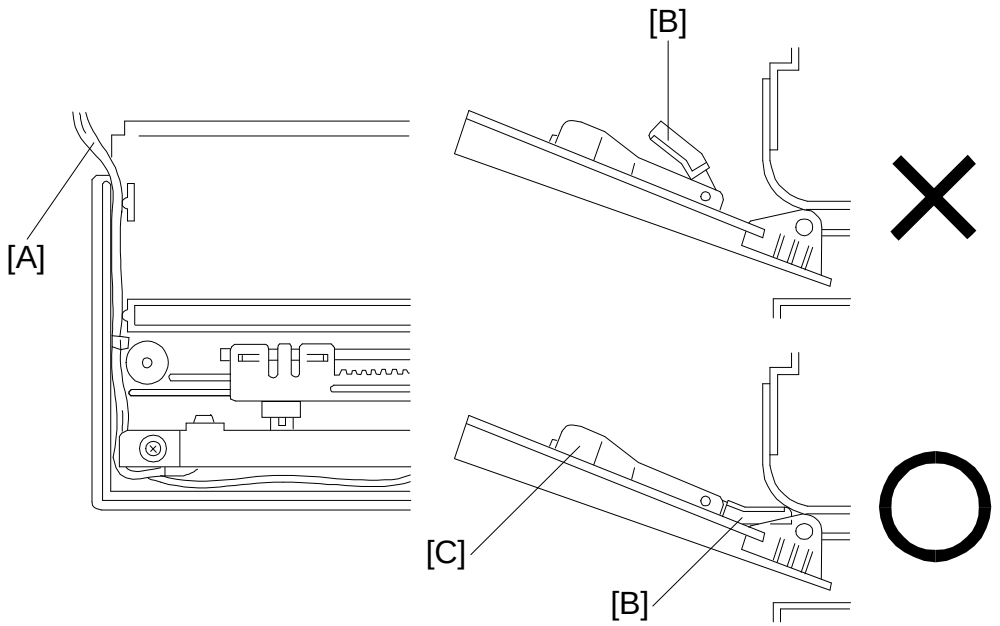

A176R641.wmf

5. Re-install the by-pass paper size sensor then reassemble the by-pass feed table.

   NOTE: When installing the table assembly, route the wires [A] correctly as shown.
   The paper guides [B] must be in the lower position as shown.

6. Perform the by-pass feed sensor paper size correction (1 SP Adjustment - PAGE 10) as follows:
   1) Enter SP mode (refer to Service Program Access Procedure) then access 1 SP Adjustment - PAGE 10.
   2) Place the side fence [C] at the A4 or 8 1/2 x 11 sideways position according to the paper size decal on the table.
   3) Place the side fence [C] at the A6 or 4 1/2 x 5 1/2 lengthwise position according to the paper size decal on the table.

6.11 BY-PASS FEED CLUTCH REMOVAL

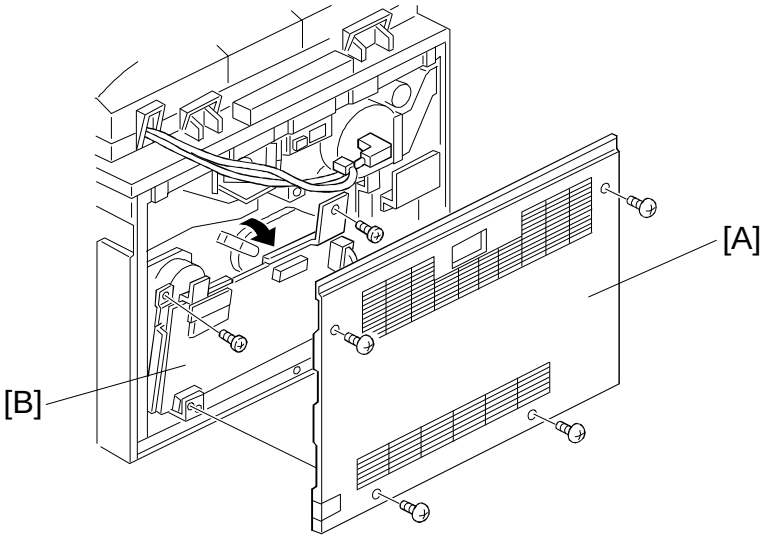

A176R642.wmf

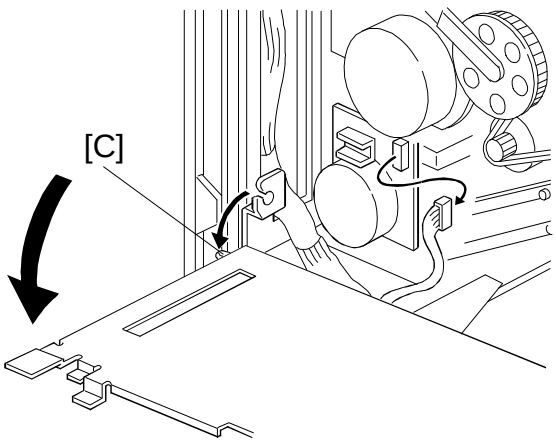

A176R643.wmf

1. Remove the upper rear cover [A]. (Refer to Upper Rear Cover Removal.)
2. Lower the main control board [B] (2 screws).
3. Unhook the main control board bracket hinge [C].

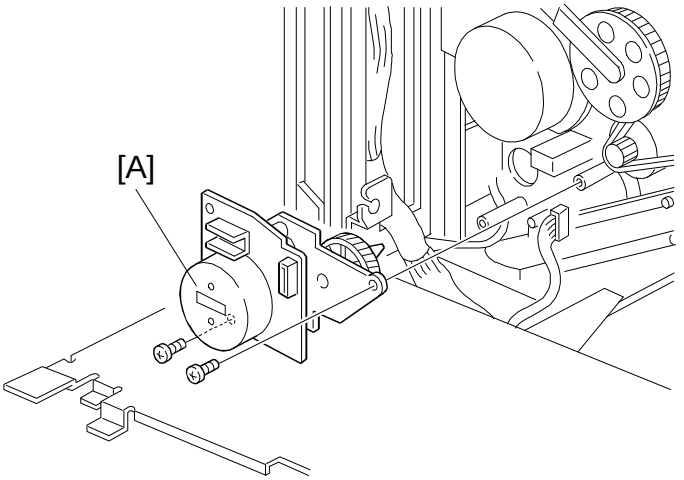

A176R644.wmf

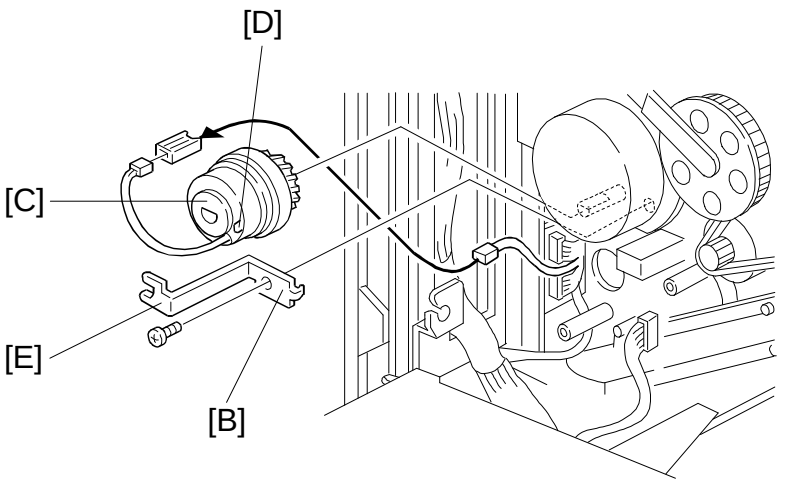

A176R645.wmf

4. Remove the by-pass feed motor [A] (2 screws).
5. Remove the clutch stopper [B] (1 screw).

   NOTE: When re-installing the by-pass feed clutch [C], set the pin [D] of the clutch in the cutout [E] of the stopper.
6. Remove the by-pass feed clutch (1 connector).

6.12 REGISTRATION CLUTCH REMOVAL

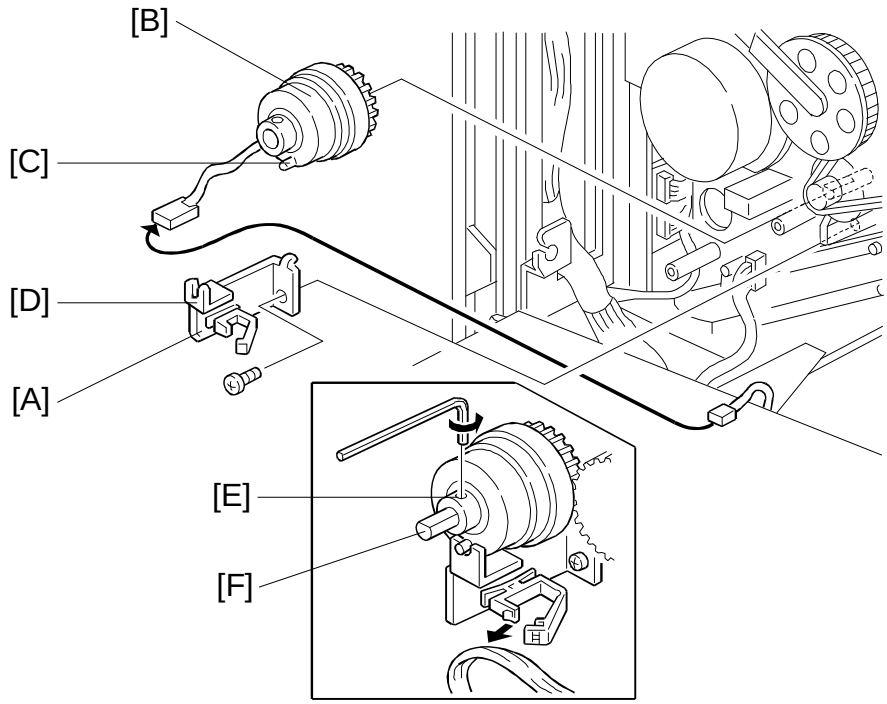

A176R646.wmf

1. Lower then unhook the main control board bracket hinge. (Refer to By-Pass Feed Clutch Removal.)
2. Remove the clutch stopper [A] (1 screw).

   NOTE: When re-installing the registration clutch [B], set the pin [C] of the clutch in the cutout of the stopper [D].
3. Loosen the Allen screw [E].
4. Remove the registration clutch (1 connector).

   NOTE: When re-installing the registration clutch, fully push in the clutch on the registration roller shaft [F] and secure the Allen screw.

6.13 PAPER DUST CLEANER REMOVAL

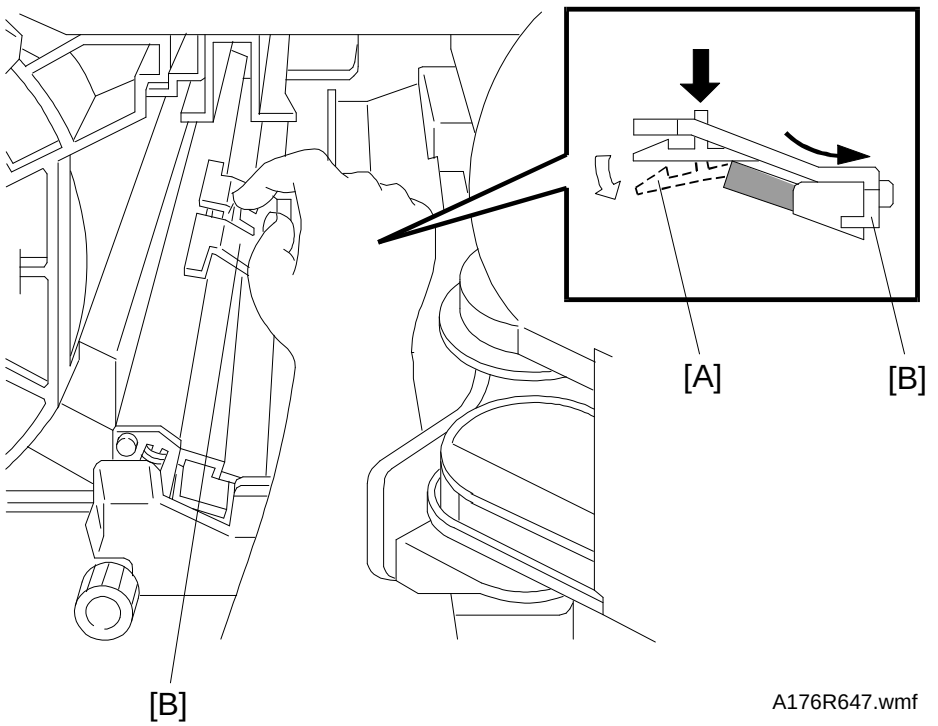

1. Remove the development unit. (Refer to Development Unit Removal.)
2. While pushing down the hook lever [A], remove the paper dust cleaner [B].
3. Remove paper dust inside the paper dust cleaner and clean the inside of the cleaner with a dry cloth or a blower-brush.

6.14 REGISTRATION SENSOR REMOVAL

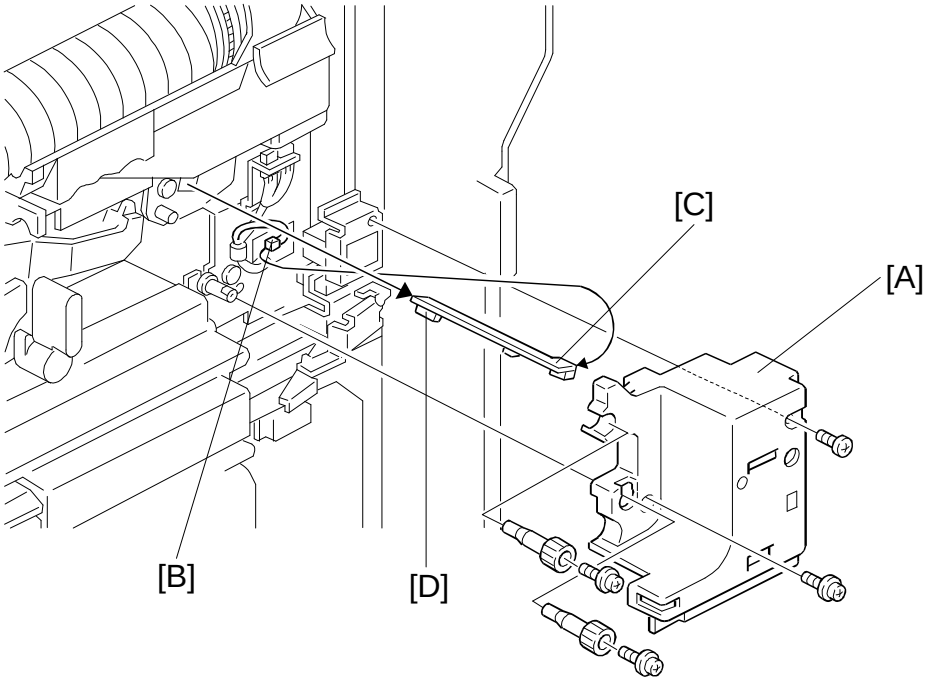

A176R648.wmf

1. Remove the right inner cover [A]. (Refer to Right Inner Cover Removal.)
2. Disconnect the connector [B].
3. Pull out the registration sensor assembly [C].
4. Clean the photo sensor [D] with a blower-brush.

6.15 COPIER FEED UNIT REMOVAL

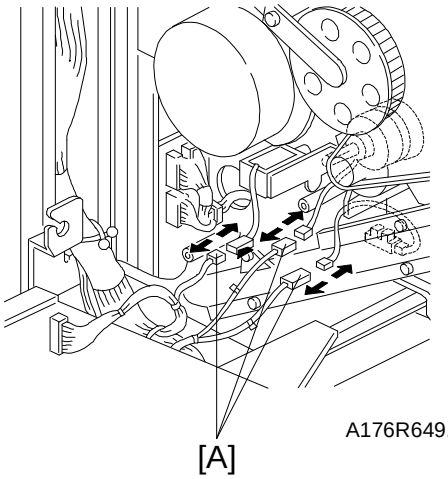

A176R649.wmf

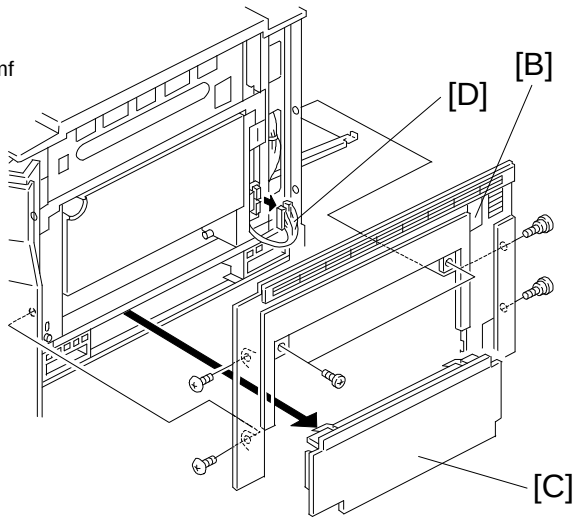

A176R650.wmf

1. Remove the development unit. (Refer to Development Unit Removal.)
2. Remove the right inner cover. (Refer to Right Inner Cover Removal.)
3. Remove the by-pass feed motor. (Refer to By-pass Feed Clutch Removal.)
4. Remove the three connectors [A] for the guide plate positioning solenoid, registration clutch, and the pick-up solenoid.

   NOTE: Before disconnecting the connectors, make sure to identify them. Some of the connectors use identical pin leads but they are not interchangeable. Take special care not to misconnect the positioning solenoid and registration clutch connectors.
5. Remove the upper right cover [B] and the paper feed unit cover [C].
6. Disconnect the three connectors [D].
7. Draw out the duplex unit about 10 cm.

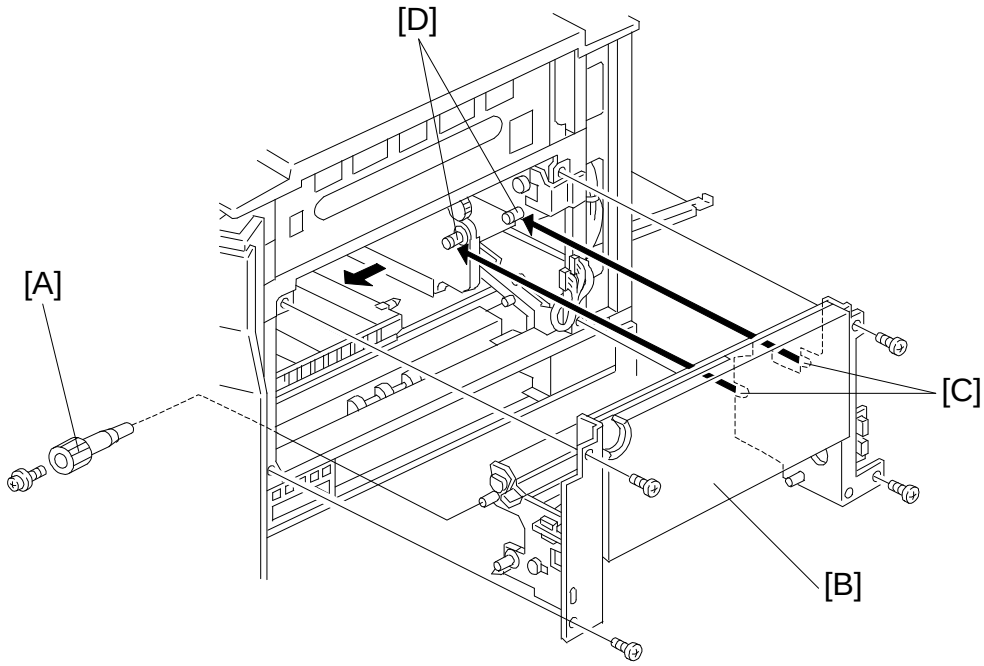

A176R651.wmf

8. Remove the registration roller knob [A] (1 screw).
9. Remove the copier feed unit [B] (4 screws).

NOTE: When installing the copier feed unit to the copier:

1) Do not pinch the harness.
2) Keep the duplex unit drawn out.
3) Fit the two cut outs [C] to the pins [D].

6.16 TANDEM FEED TRAY PAPER SIZE CHANGE

NOTE: 1) At the factory, all paper trays (1st, 2nd and 3rd) are set as A4 sideways. At the customer's request, change the paper size as follows.

2) For the 550 sheet fixed paper tray and the 1500 sheet built-in LCT, refer to the installation procedure section.

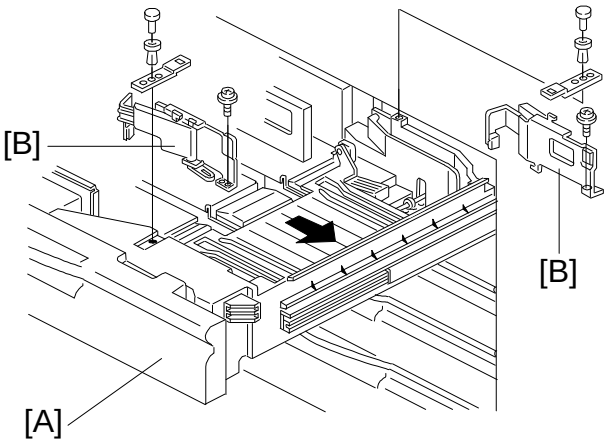

A176R652.wmf

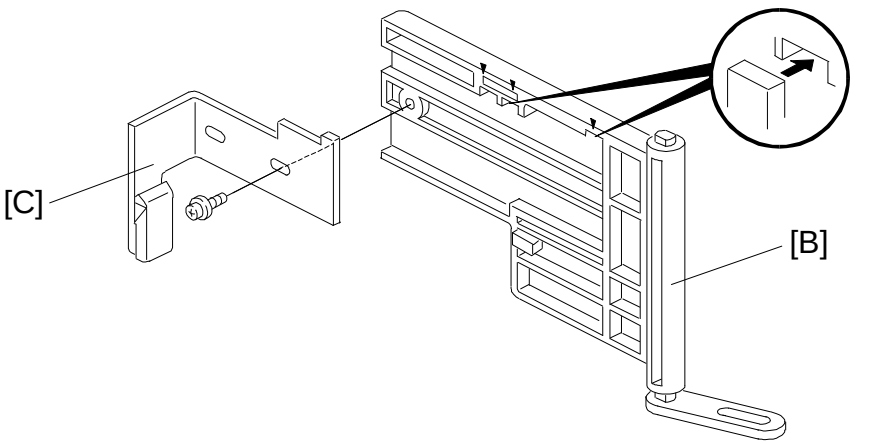

A176R653.wmf

- Used as tandem tray for A4 sideways or smaller size paper -

1. Draw out the tandem tray [A].
2. Remove the rear and front side fences [B] (one screw and one pushlock each) on the right tandem tray.
3. Re-position the end fences [C] on both rear and front side fences (1 screw each) according to the paper size.

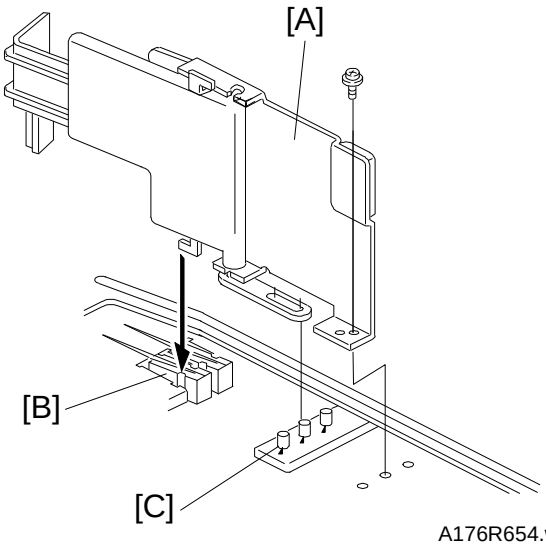

A176R654.wmf

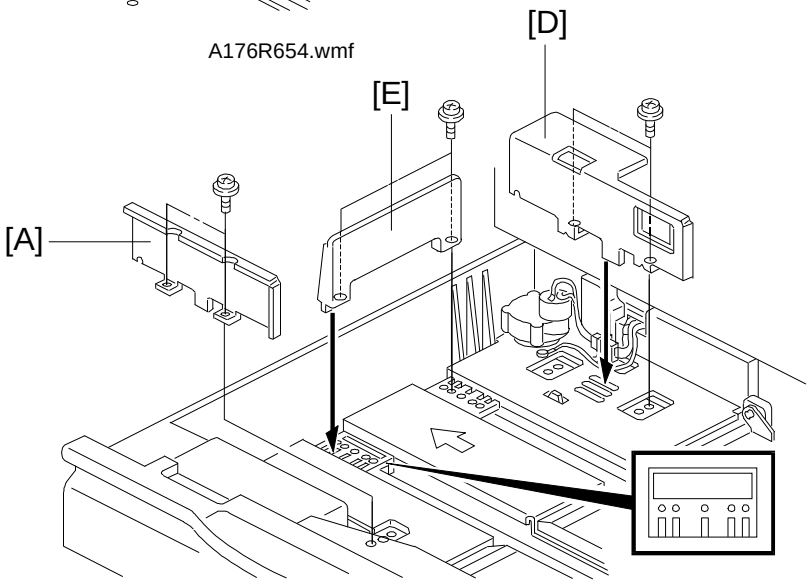

A176R655.wmf

4. Re-install both side fences [A] to the appropriate position according to the paper size, as shown.

   NOTE: The position of the side fence holders [B] and the pins [C] on the lack gear differs according the paper size (from the outside pin: A4, 11", B5).

5. Change the position of the front and rear side fences [D] (2 screws each) and end fence [E] (2 screws) on the left tandem tray according to the paper size.

6. Enter SP mode (refer to Service Program Access Procedure) and access 4 SP Special Features - PAGE 7.

7. Select the appropriate paper size according to position of the side and end fences.

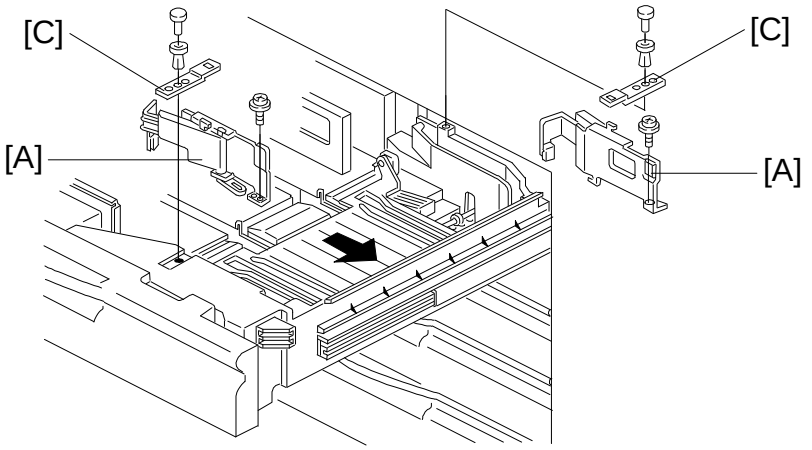

A176R652-2.wmf

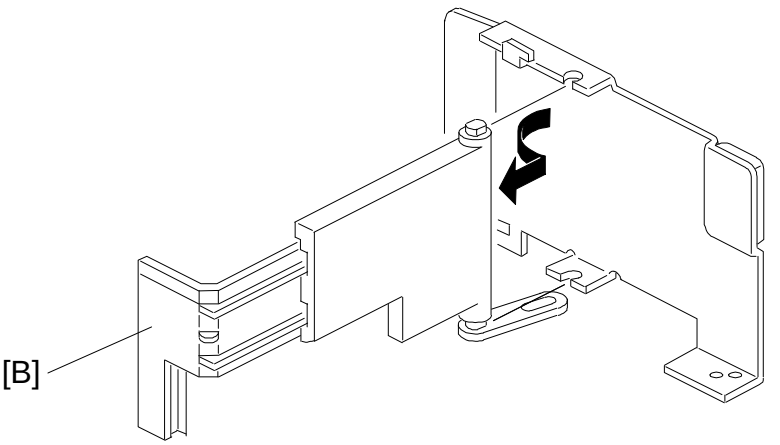

A176R656.wmf

- Used as fixed tray for paper longer than A4/Letter sideways -

1. Draw out the tandem tray.
2. Remove the rear and the front side fences [A] (1 screw and 1 push-lock pin each) on the right tandem tray.
3. Remove the end fences [B] on both the rear and the front side fences (2 screws each).

   NOTE: It is not necessary to re-install the end fences.
4. Install both side fences to the appropriate position according to the paper size (one screw and one lock pin for each side fence).

   NOTE: Support plates [C] are used only for A4, B5, and letter lengthwise sizes.
   Keep the end fences and support plates for future use.

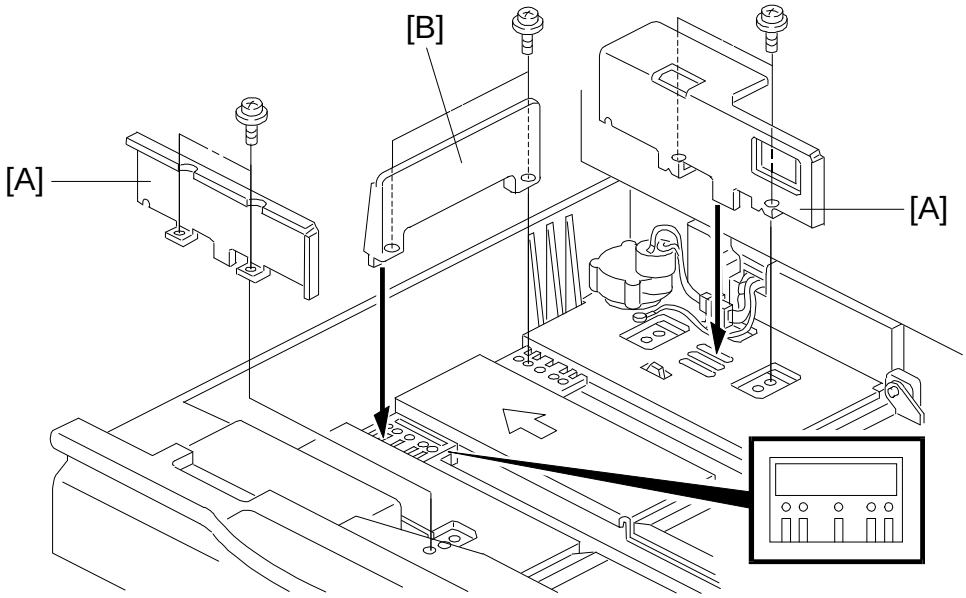

A176R655-2.wmf

5. Change the position of the front and rear side fences [A] (2 screws each) and end fence [B] (2 screws) of the left tandem tray according to the paper size.
6. Enter SP mode (refer to Service Program Access Procedure) and access 4 SP Special Features - PAGE 7.
7. Select the appropriate paper size according to the side and end fences position.

6.17 UNIVERSAL TRAY PAPER SIZE CHANGE

At the factory, the universal paper tray is set as A4/8 1/2" x 11" sideways. Normally, paper size is changed by the customer by following the operating instructions.
Only when the customer needs the A5/5 1/2" x 8 1/2" lengthwise paper size does a service representative need to change the paper size. In this case, proceed as follows:

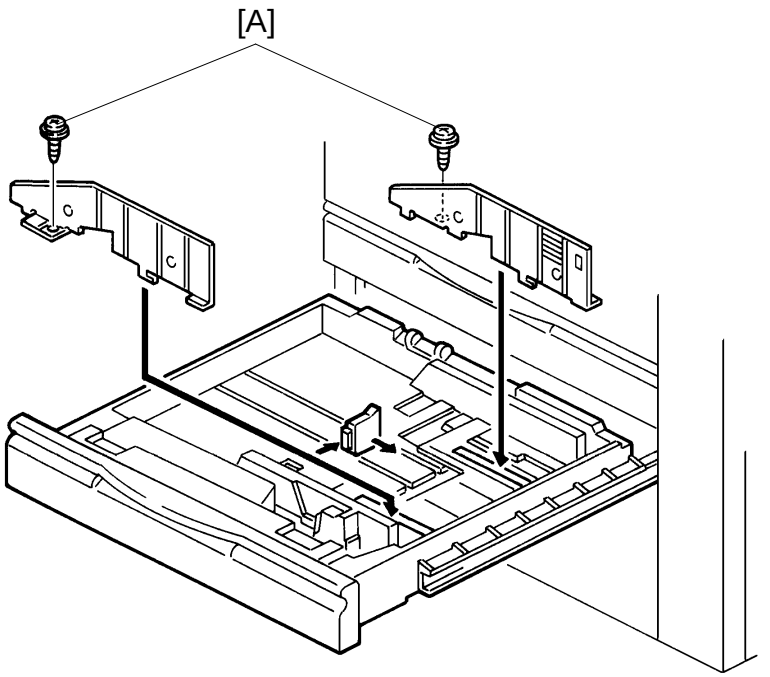

A176R657.img

1. Install the front and rear side fences [A] (2 screws).

NOTE: These side fences are the same as the side fences used in the 550 sheet fixed paper tray.
These side fences are options, order them as service parts.

7. FUSING UNIT

7.1 FUSING UNIT REMOVAL

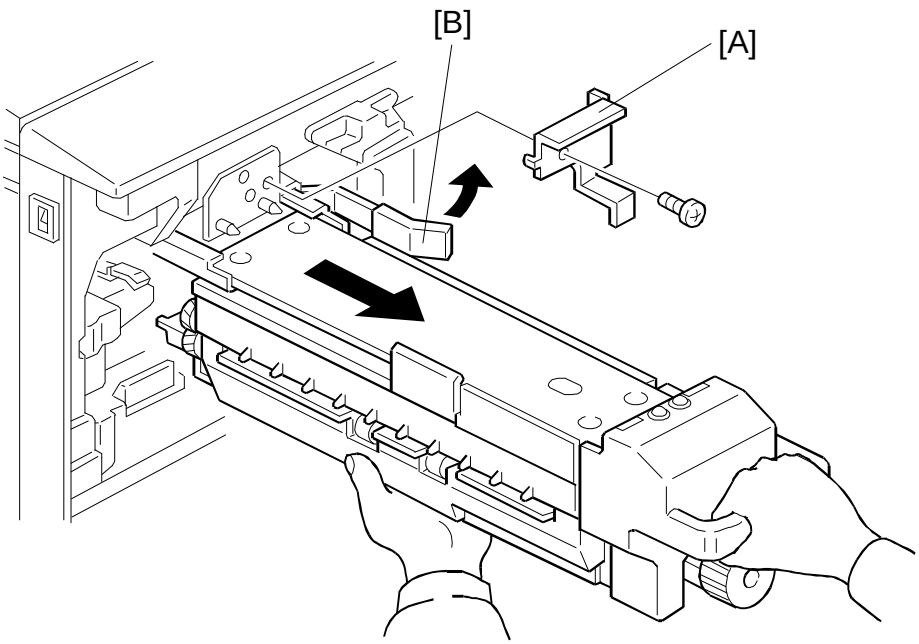

A176R658.wmf

1. Turn off the main switch.
2. Open the left front door.
3. Remove the stopper [A] (1 screw).
4. While releasing the lever [B], pull out the fusing unit as shown.
   NOTE: Hold the bottom of the fusing unit as shown.

7.2 FUSING THERMISTOR REPLACEMENT

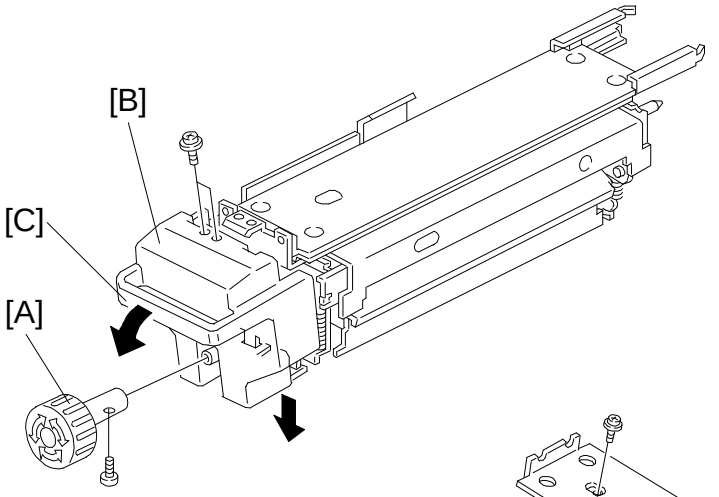

A176R659.wmf

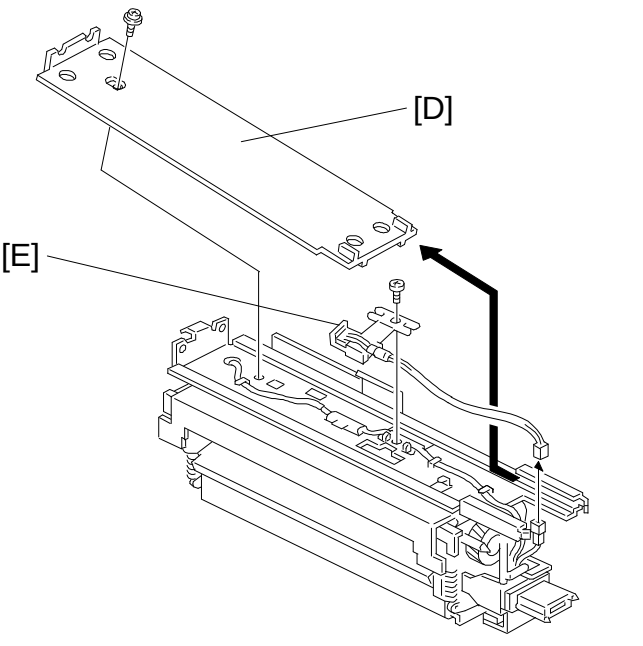

A176R660.wmf

1. Remove the fusing unit. (Refer to Fusing Unit Removal.)
2. Remove the knob [A] (1 screw).
3. Remove the two screws fixing the fusing front cover [B].
4. Pull the lever [C] then lower the cover [B] to unhook the fusing unit.
5. Remove the fusing unit upper cover [D] (1 screw).
6. Replace the thermistor [E] (1 screw, 1 connector).

NOTE: When re-assembling the fusing unit, secure the harness in the clamps correctly.
Apply a little silicone oil at the thermistor's point of contact with the hot roller.

7.3 FUSING THERMOFUSE REPLACEMENT

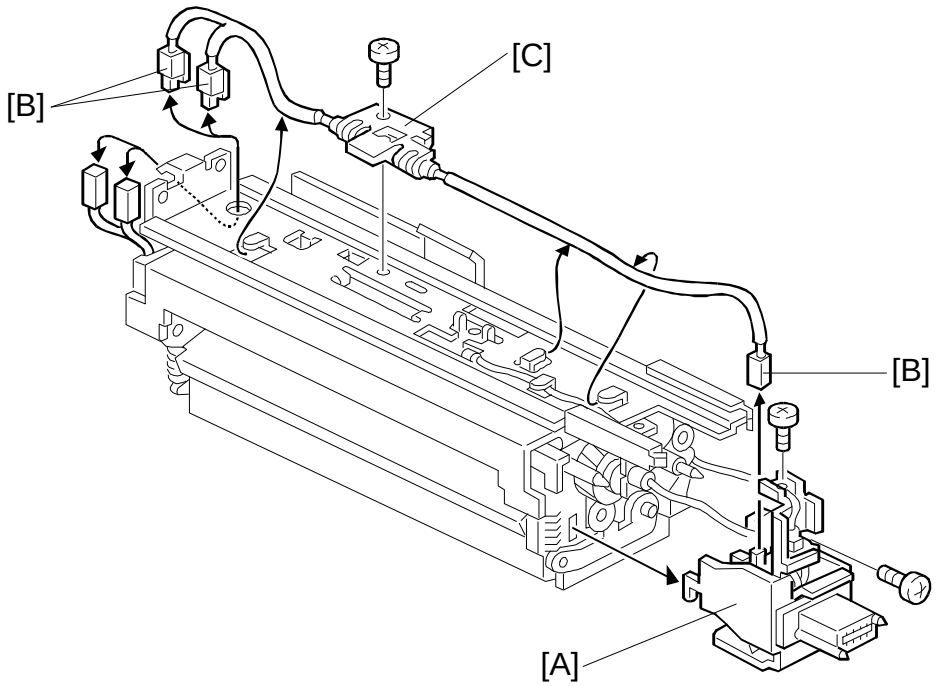

A176R661.wmf

1. Remove the fusing unit upper cover. (Refer to Fusing Thermistor Replacement.)
2. Remove the terminal bracket [A] (2 screws, 1 hook).
3. Disconnect the three connectors [B].
4. Replace the fusing thermofuse [C] (1 screw).

NOTE: When re-assembling the fusing unit, secure the harness in the clamps correctly.

7.4 FUSING LAMP REPLACEMENT

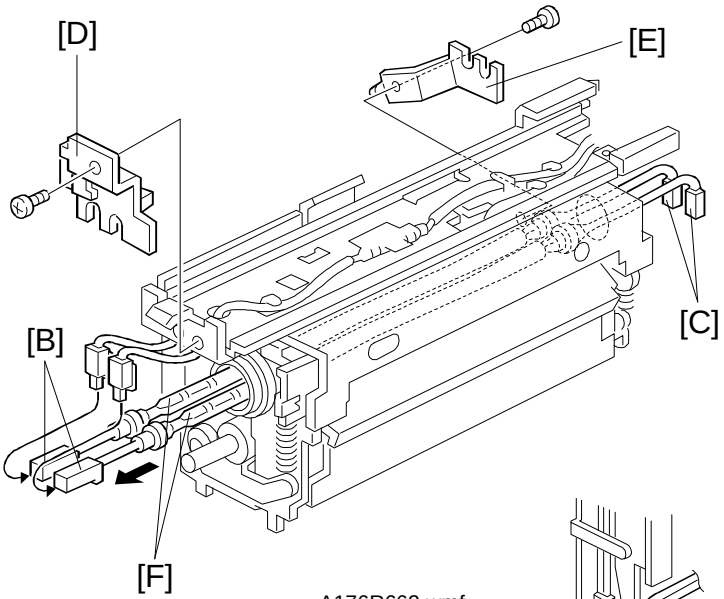

A176R662.wmf

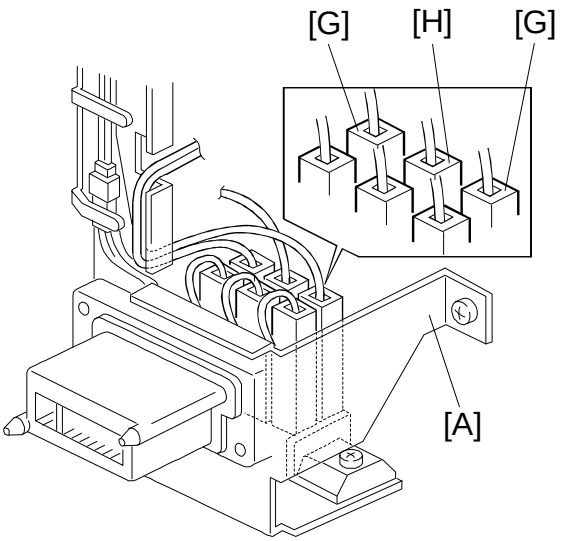

A176R663.wmf

1. Remove the fusing unit. (Refer to Fusing Unit Removal.)
2. Remove the terminal bracket [A] (2 screws).
3. Disconnect the front connectors [B] and the rear connectors [C].
4. Remove the front fusing lamp holder [D] and the rear fusing lamp holder [E] (1 screw each).
5. Replace the fusing lamp [F].

NOTE: Locate the green connector [C] of the fusing lamp to the rear side. Set the connectors from the fusing lamps (green) [G] and from the thermofuse (white) [H] in the correct position on the terminal.

7.5 HOT ROLLER REPLACEMENT

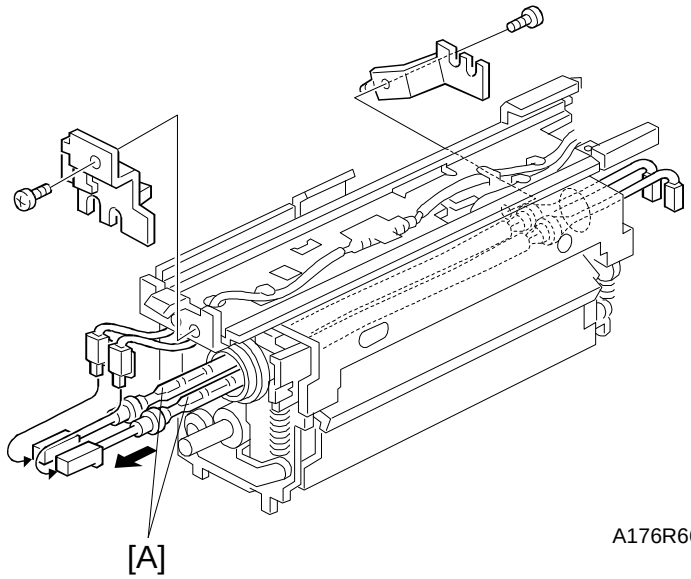

A176R662-2.wmf

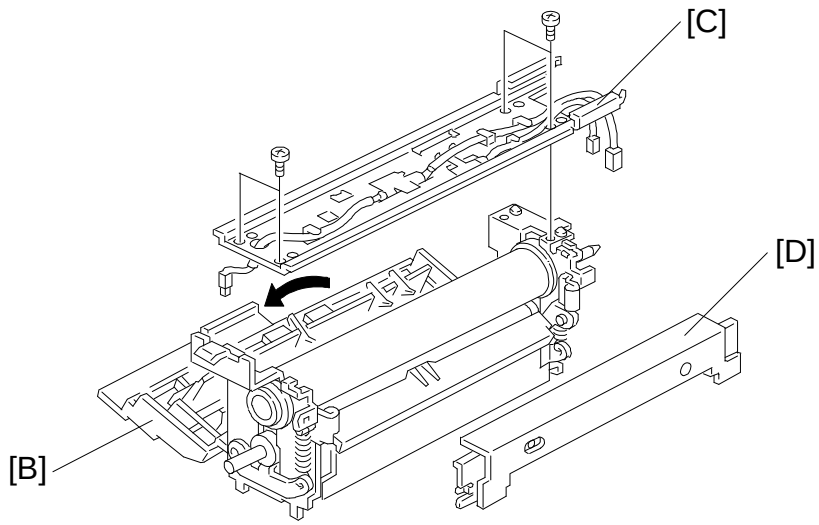

A176R665.wmf

1. Remove the fusing lamps [A]. (Refer to Fusing Lamp Replacement.)
2. Lower the fusing exit assembly [B].
3. Remove the upper stay [C] (4 screws).
4. Remove the oil supply unit [D] (Refer to Oil Supply Roller Replacement).

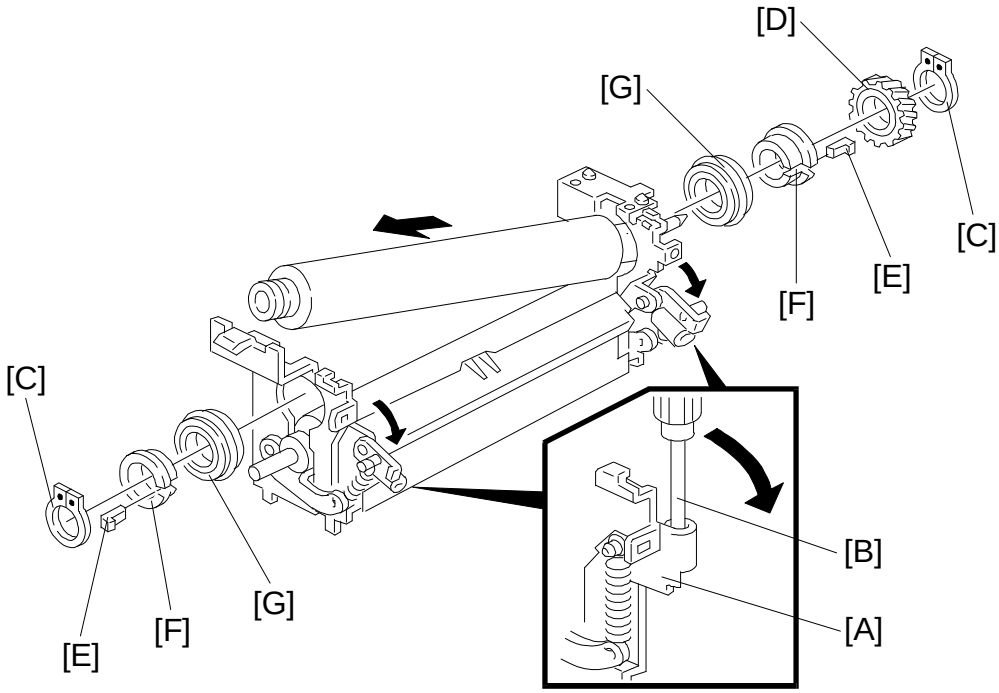

A176R666.wmf

5. Lower both side pressure spring holders [A] by using the screw driver [B] as a lever.
6. Remove the front and rear C-rings [C], gear [D], antistatic spacers [E] isolating bushings [F] and bearings [G].

   NOTE: When installing a new fusing roller:

   1) Lubricate the inner and the outer surface of the isolating bushings [F] with BARRIERTA L55/2 grease.
   2) Lubricate the fusing drive gears and their shafts with grease G501.
   3) Peel off 3 cm (1 inch) form both ends of the protective sheet, and install the hot roller.
      Before applying fusing pressure, remove the rest of the protective sheet.

7.6 PRESSURE AND BEARING ROLLER REPLACEMENT

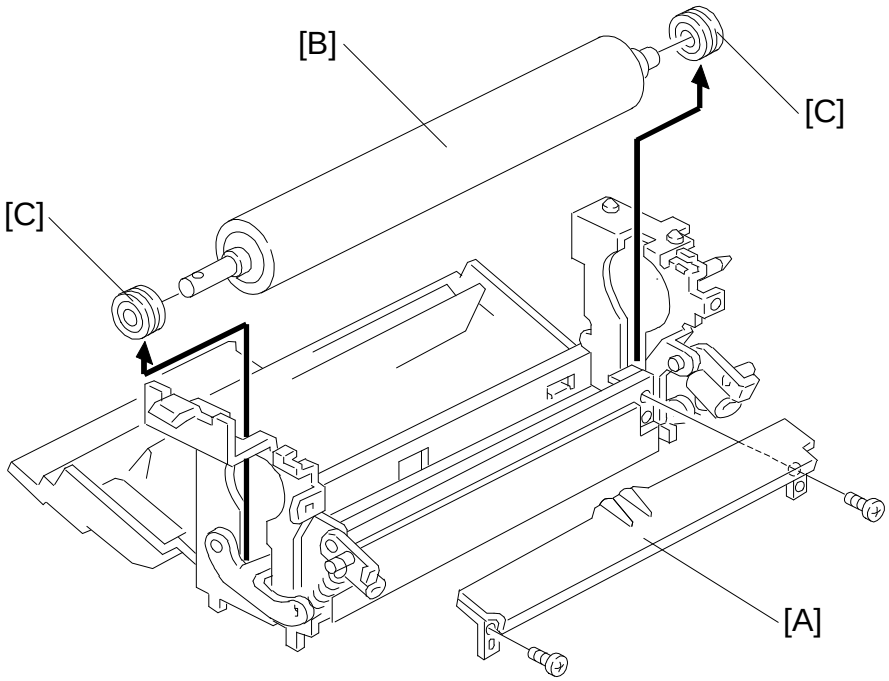

A176R667.wmf

1. Remove the hot roller. (Refer to Hot Roller Replacement.)
2. Remove the lower fusing entrance guide [A] (2 screws).
3. Lift the pressure roller [B] and remove it.
4. Replace pressure roller and bearings [C].

   NOTE: When installing a new pressure roller:

   1) Lubricate the roller shaft and the inner surface of the bearings with BARRIERTA L55/2 grease.
   2) Lubricate the fusing drive gears and their shafts with G501 grease.
5. Re-assemble the machine.

7.7 FUSING STRIPPER PAWL REPLACEMENT

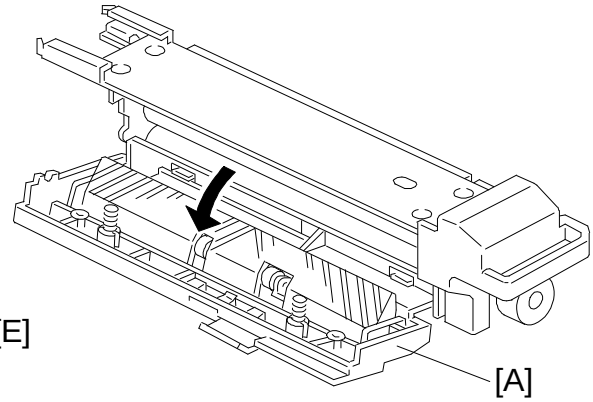

A176R668.wmf

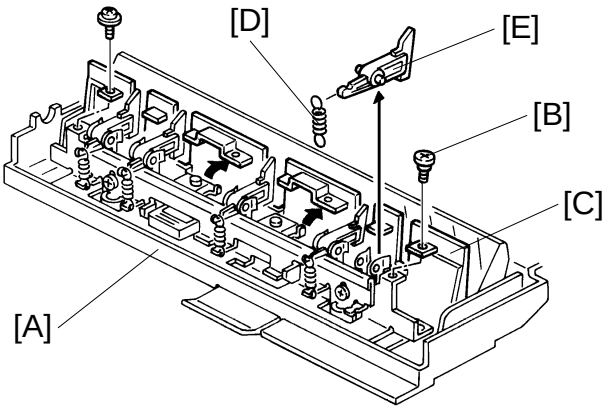

A176R669.img

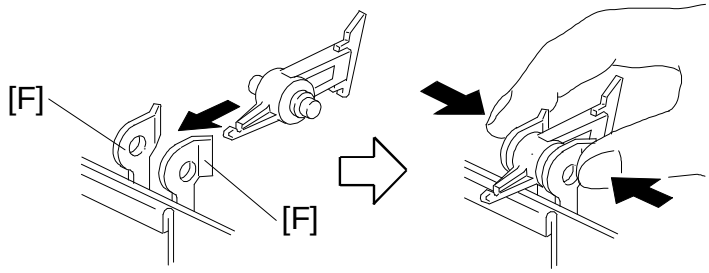

A176R670.wmf

1. Turn off the main switch and pull out the fusing unit.
2. Lower the fusing exit assembly [A].
3. Remove the two screws (the front screw [B] is a stepped screw) fixing the upper exit guide [C].
4. Unhook the spring [D] then replace the strippers [E].

   NOTE: After setting the fusing stripper pawl, confirm that the strippers are correctly held by the stripper holders [F] as shown.
   If not, remove the stripper and bend the holders [F] inward.
   Apply the grease-Barrierta L55/2 on the inner surface of the holder [F].

7.8 FUSING PRESSURE ADJUSTMENT

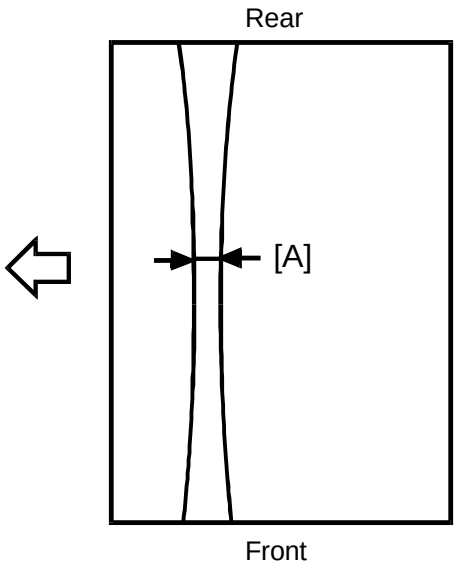

A176R671.wmf

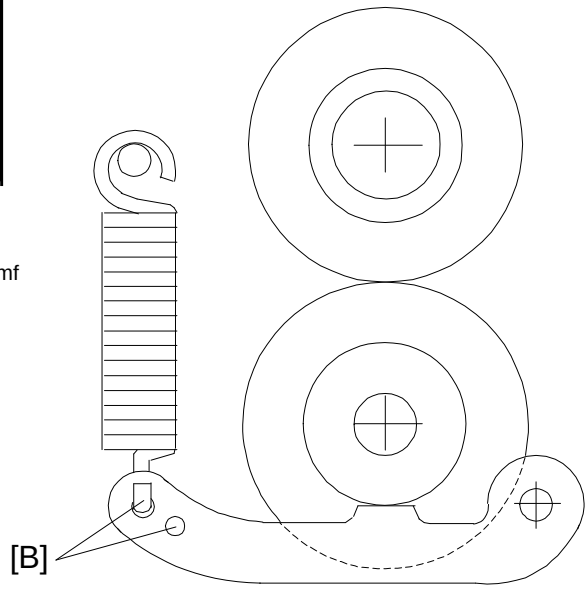

A176R672.wmf

NIP BAND WIDTH ADJUSTMENT STANDARD: 8.1 ± 0.8 mm (A175), 10.0 ± 0.5 (others)

1. Make a black copy (sky shot, A3/Double Letter paper).
2. As soon as the paper starts to exit, open the left door to stop the paper in the fusing unit.
3. Wait about 20 seconds, then turn the fusing knob quickly to deliver the paper.
4. Measure the nip band width [A] at the center.
5. If the nip band width is not within 8.1 ± 0.8 mm, change the spring hook position [B].

7.9 PAPER EXIT UNIT REPLACEMENT

- Removal -

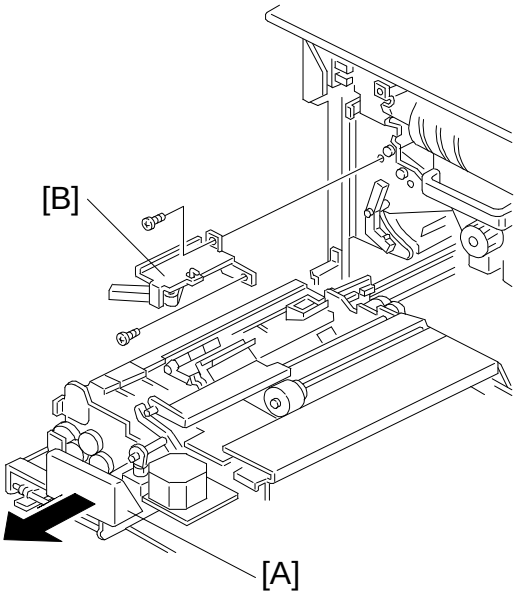

A176R673.wmf

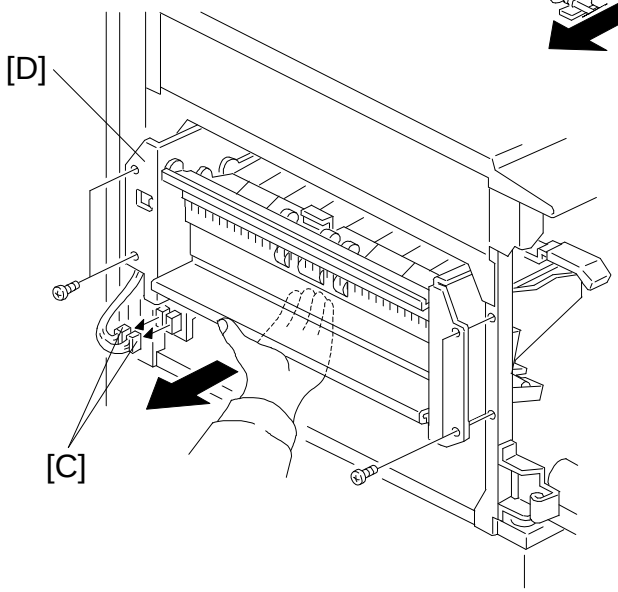

A176R674.wmf

1. Remove the upper left cover. (Refer to Upper Left Cover Removal.)
2. Draw out the duplex unit [A].
3. Remove the lever bracket [B] (2 screws).
4. Disconnect the two connectors [C].
5. Take out the paper exit unit [D] (4 screws).

   NOTE: Place the paper exit unit so that the paper exit roller comes to the bottom to prevent the brush roller from being pressed and damaged.

- Installation -

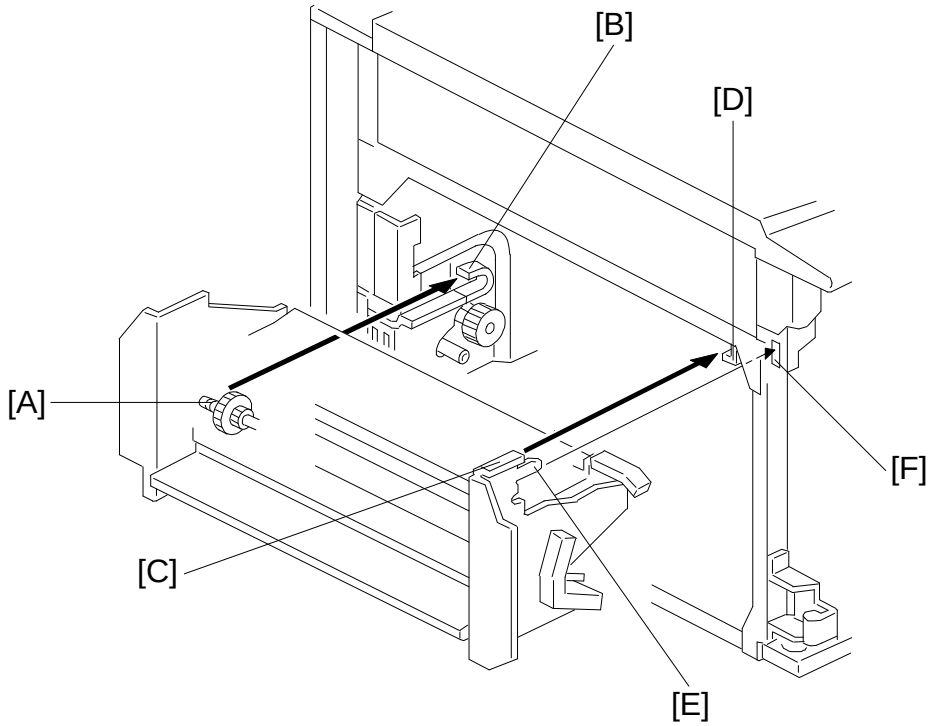

A176R675.wmf

1. Set the paper exit unit in the following order:
   1) Set the drive shaft [A] on the left rail [B].
   2) Set the plate [C] on the right rail [D].
   3) Set the positioning pin [E] in the hole [F].

2. Install the paper exit unit (2 connectors, 4 screws).

3. Re-assemble the copier.

7.10 OIL SUPPLY/CLEANING ROLLER REPLACEMENT

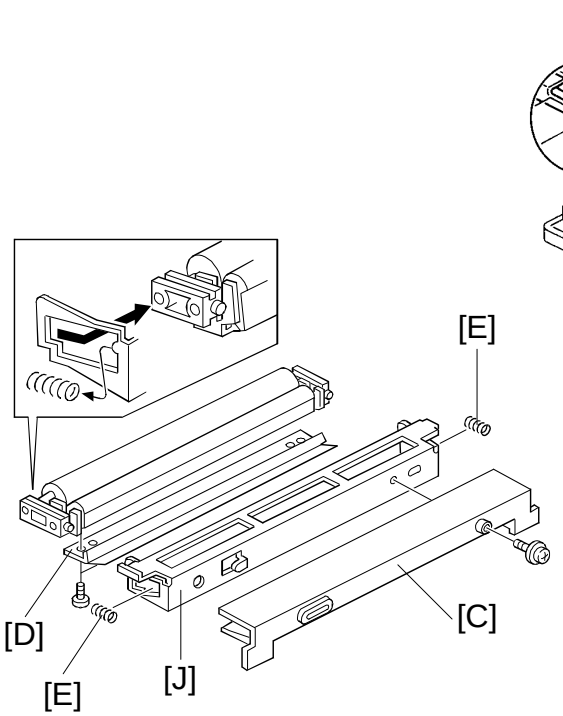

A176R676.img

A176R716.wmf

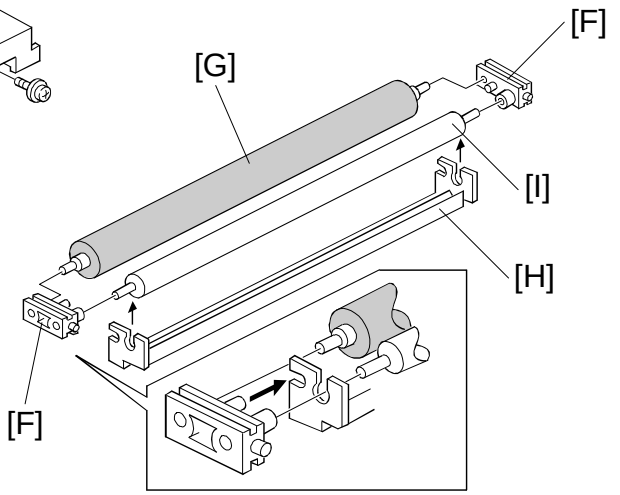

A176R717.wmf

1. Pull out the fusing unit.
2. Lower the lever [A].
3. Remove the oil supply unit [B].
4. Remove the upper entrance guide [C] (1 screw).
5. Remove the mylar bracket [D] (2 screws).
6. Remove the springs [E].
7. Remove the bushings [F].
8. Remove the oil supply roller [G], the oil supply cleaning blade [H] (3 screws), and the cleaning roller [I].
9. Install the new cleaning blade [H], cleaning roller [I] and oil supply roller [G] then reassemble the unit.

   NOTE: Install the cleaning blade [H], cleaning roller [I], oil supply roller [G] and bushing [F]. Then, install the assembled parts to the bracket [J].

7.11 PRESSURE ROLLER CLEANING ROLLER REPLACEMENT

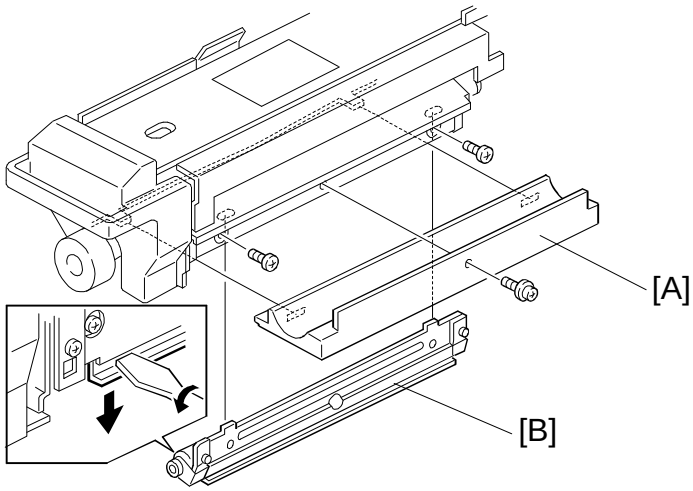

A176R677.wmf

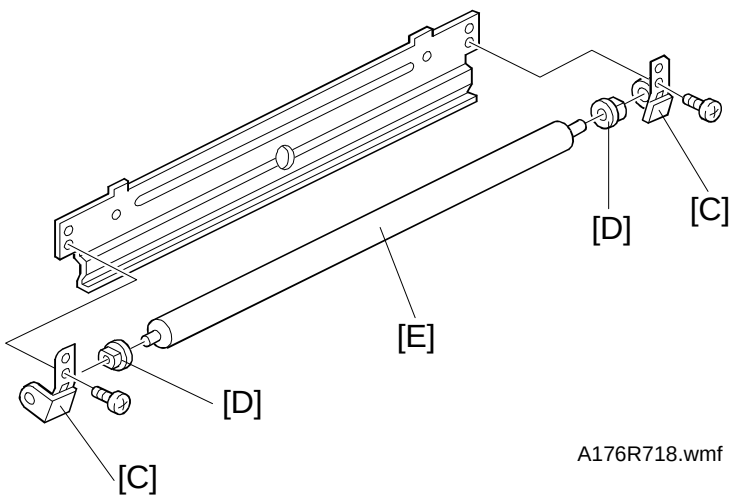

A176R718.wmf

1. Pull out the fusing unit.
2. Remove the bottom plate [A] (1 screw).
3. Remove the cleaning roller unit [B] (2 screws).
4. Remove the brackets [C] (1 screw each).
5. Remove the bushings [D].
6. Replace the cleaning roller [E].
7. Reassemble the unit.

8. DUPLEX UNIT

8.1 FEED ROLLER REPLACEMENT

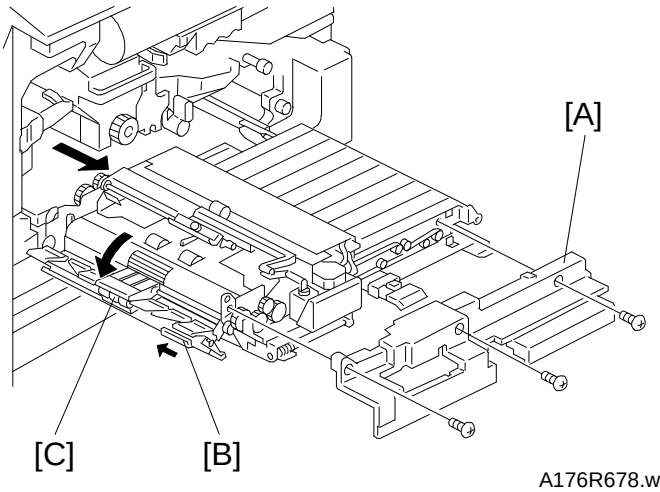

A176R678.wmf

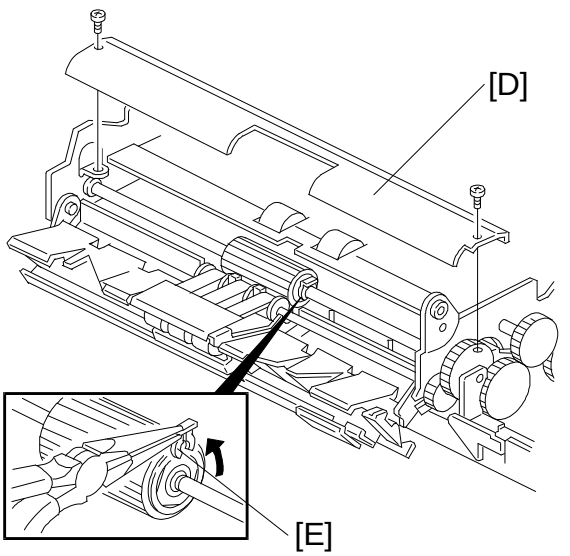

A176R679.wmf

1. Open the front doors and draw out the duplex unit.
2. Remove the duplex front cover [A] (3 screws).
3. Slide the lever [B] to the rear then open the duplex reverse assembly [C].
4. Remove the lower separation guide plate [D] (2 screws).
5. Remove the snap ring [E].

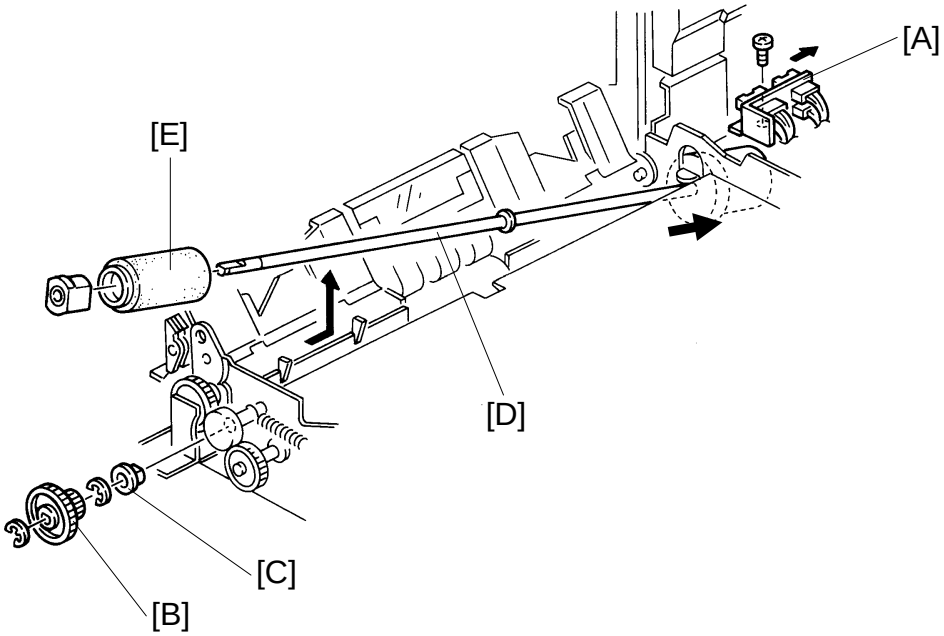

A176R680.img

6. Remove the harness bracket [A] (1 screw).
7. Remove the gear [B] (1 E-ring).
8. Remove the bushing [C] (1 E-ring).
9. Slide the feed roller shaft [D] to the rear then slide the feed roller [E] to the front and replace it as shown.

8.2 SEPARATION BELTS REPLACEMENT

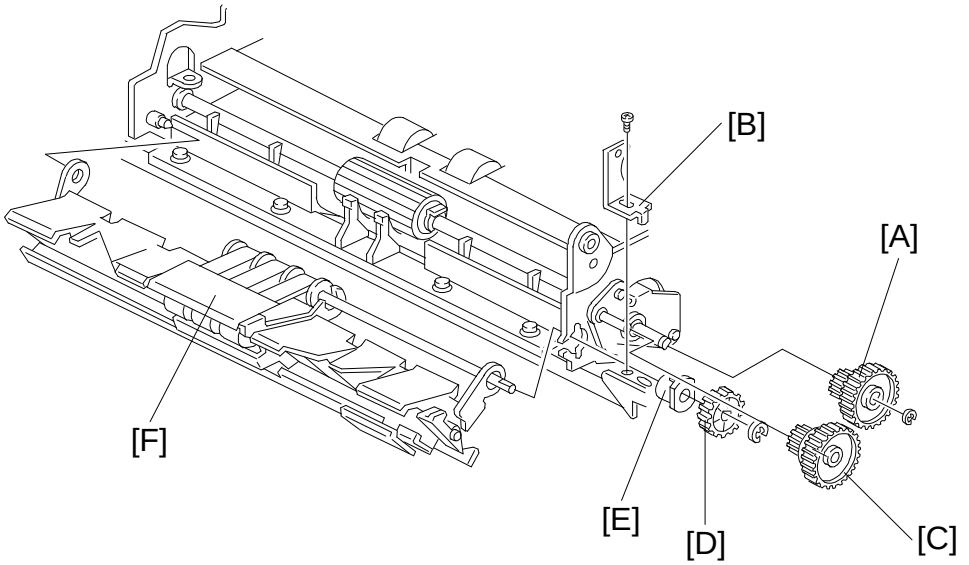

A176R681.wmf

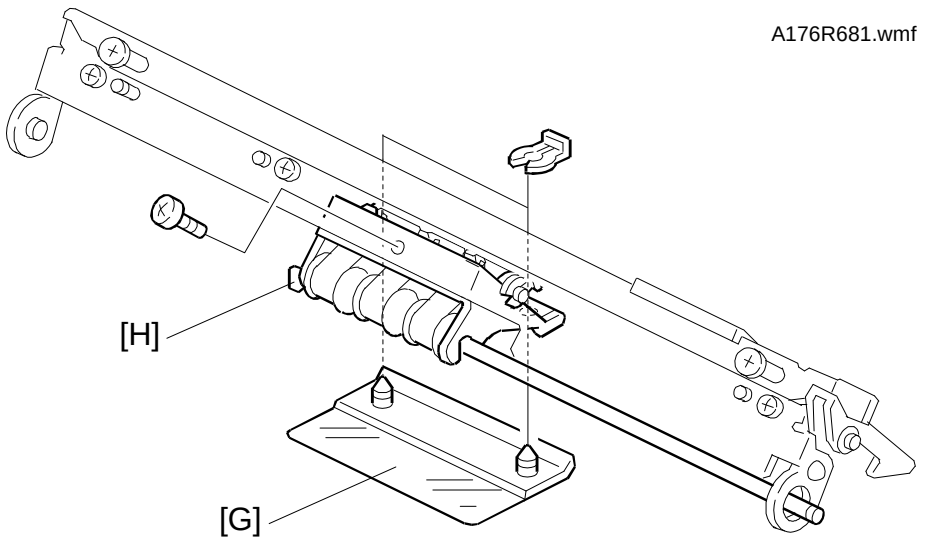

A176R682.wmf

1. Open the front doors and draw out the duplex unit.
2. Remove the gear [A] (1 E-ring).
3. Remove the bracket [B] (1 screw) then remove the gear [C].
4. Remove the gear [D] and the bushing [E] (1 E-ring).
5. Remove the separation belt unit [F].
6. Remove the guide mylar [G] (2 snap rings) and belt assembly [H] (1 screw).

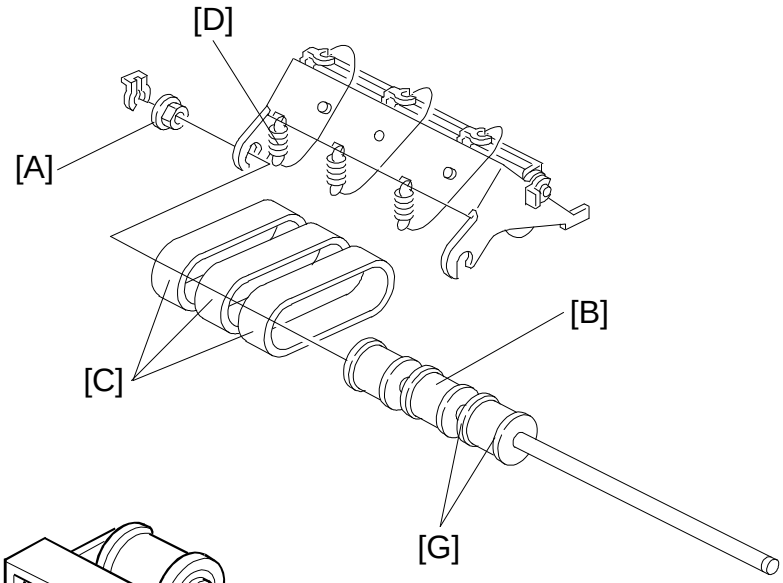

A176R683.wmf

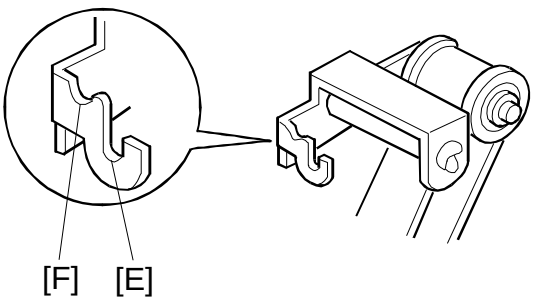

A176R684.wmf

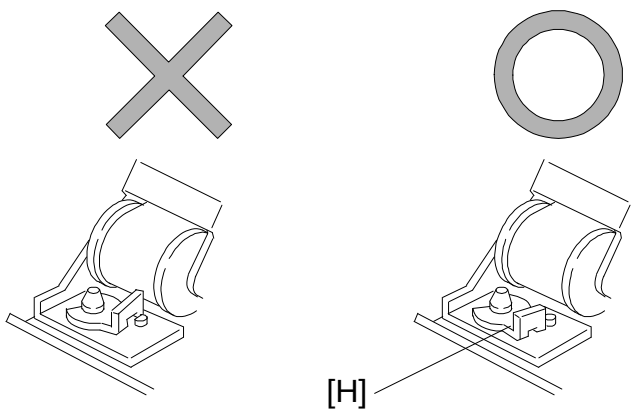

A176R685.wmf

7. Remove the bushing [A] (1 snap ring).
8. Remove the drive roller [B].
9. Replace the three separation belts [C] as a set.

NOTE: When setting the tension spring [D], set it on the hook [E] normally. The hook [F] applies higher separation pressure. Confirm that the separation belt is correctly set between the guides [G].
Confirm that the snap rings [H] do not touch the separation belts.

8.3 DUPLEX UNIT REMOVAL

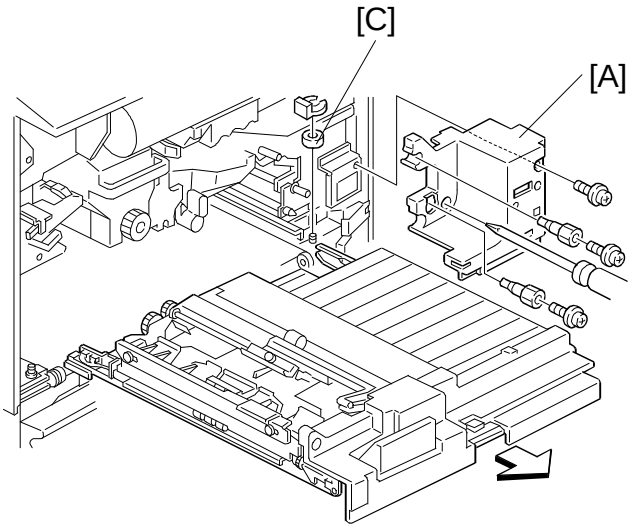

A176R686.wmfV

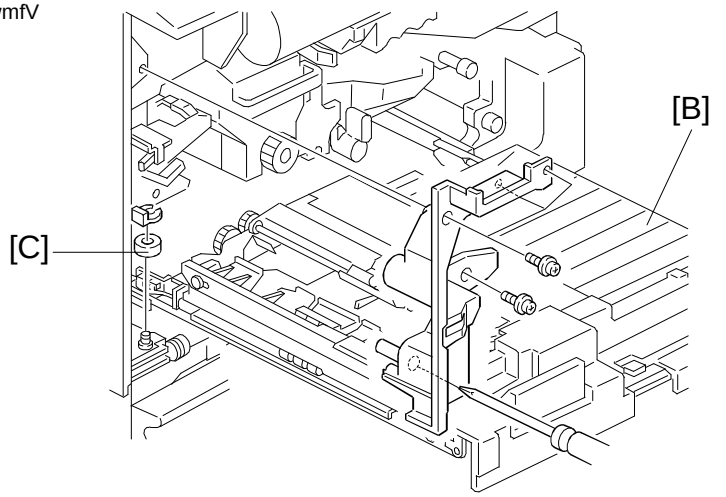

A176R687.wmf

1. Open the front doors and remove the left door.
2. Remove the right inner cover [A]. (Refer to the right inner cover removal.)
3. Draw out the duplex unit [B] until the stop position.
4. Take out the right and left stopper pulleys [C] (1 snap ring each).
5. Take out the duplex unit.

8.4 SEPARATION CLUTCH/TRANSPORT CLUTCH REMOVAL

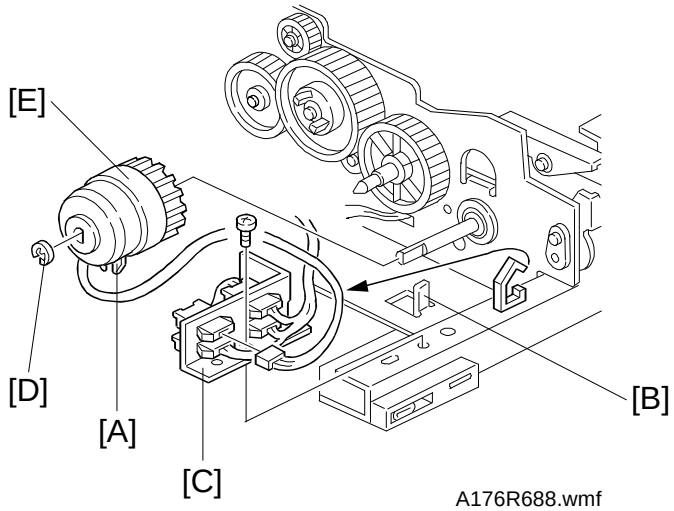

A176R688.wmf

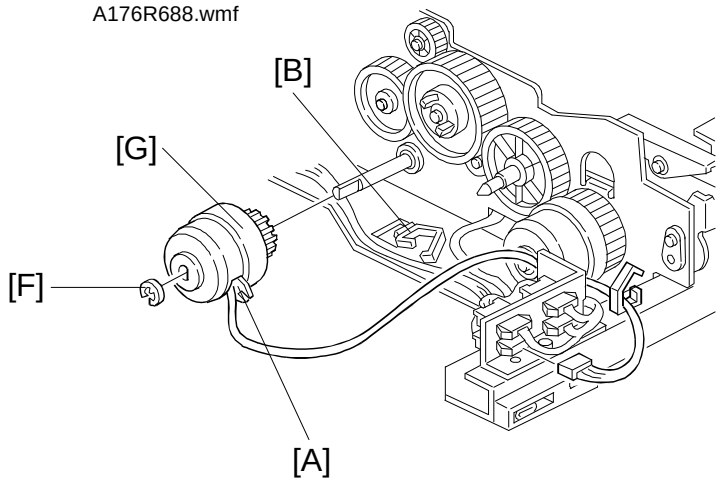

A176R689.wmf

Before replacing both clutches, take out the duplex unit. (Refer to Duplex Unit Removal.)

NOTE: When installing both clutches, be sure to set the stopper [A] to the projection [B].

- Separation Clutch -

1. Remove the harness bracket [C] (1 screw).
2. Remove the E-ring [D].
3. Replace the separation clutch [E].

- Transport Clutch -

1. Remove the E-ring [F].
2. Replace the separation clutch [G].

8.5 JOGGER MOTOR REPLACEMENT

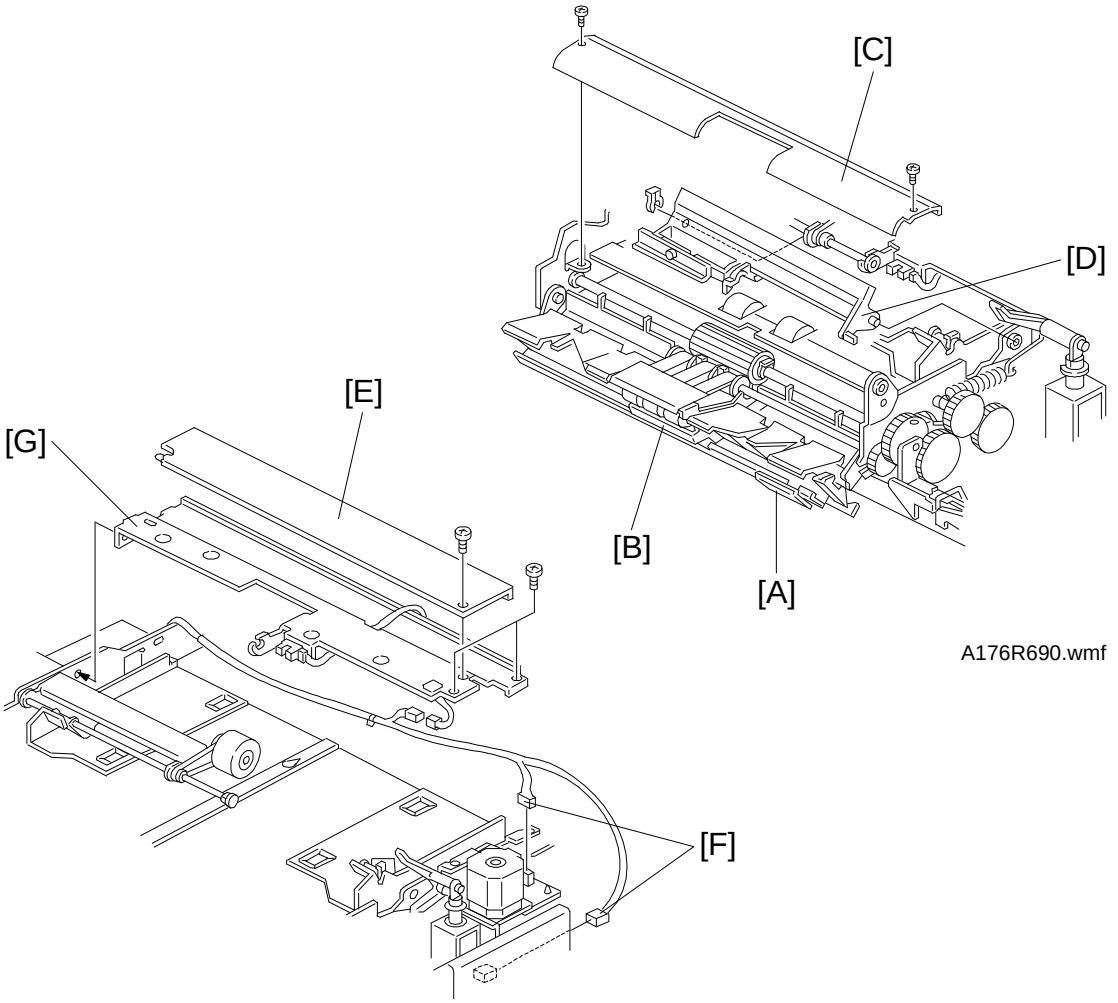

A176R690.wmf

A176R691.wmf

1. Take out the duplex unit. (Refer to the duplex unit removal.)
2. Remove the duplex front cover (3 screws).
3. Slide the lever [A] to the rear then open the separation belt unit [B].
4. Remove the lower separation guide plate [C] (2 screws).
5. Remove the pressure arm [D] (1 snap-ring).
6. Remove the harness cover [E] (1 screw).
7. Remove the two connectors [F].
8. Remove the upper stay [G] (4 screws, 1 connector).

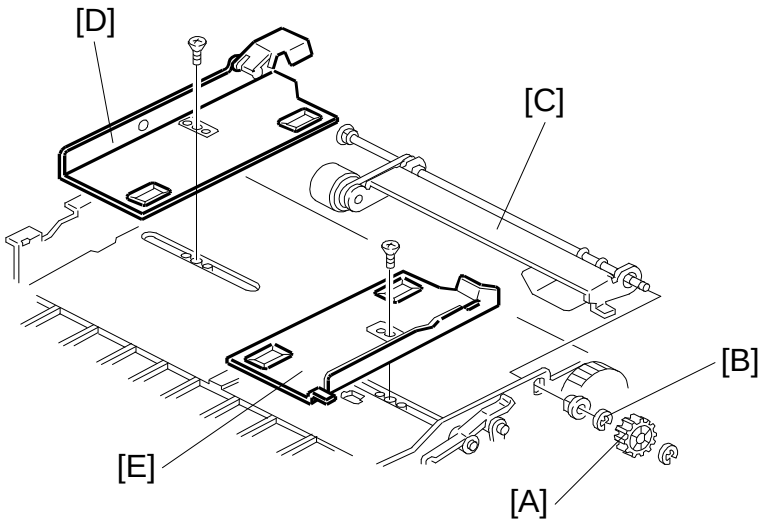

A176R692.wmf

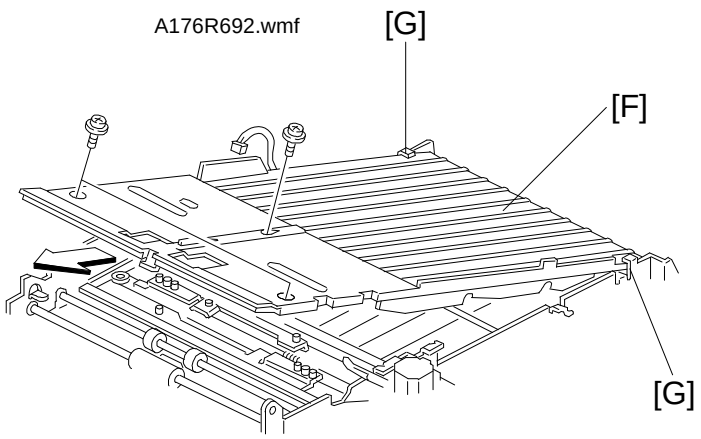

A176R693.wmf

9. Remove the positioning roller drive gear [A] (1 E-ring).
10. Remove the bushing [B] (1 E-ring).
11. Remove the positioning roller assembly [C].
12. Remove the front jogger fence [D] and the rear jogger fence [E] (1 screw each).
13. Remove the duplex tray [F] (3 screws and a connector).

    NOTE: To release the hooks [G], slide the duplex tray to the upper left as shown.

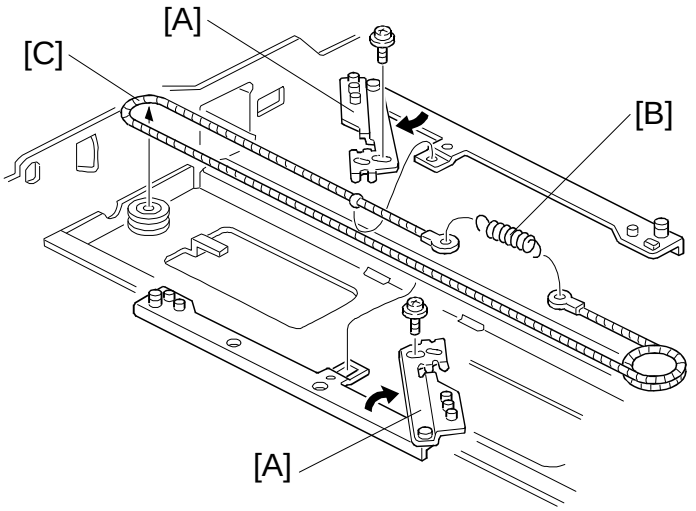

A176R694.wmf

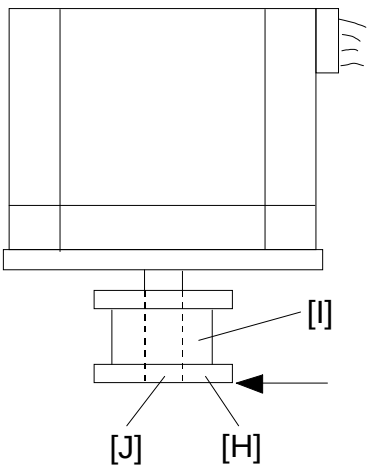

A176R696.wmf

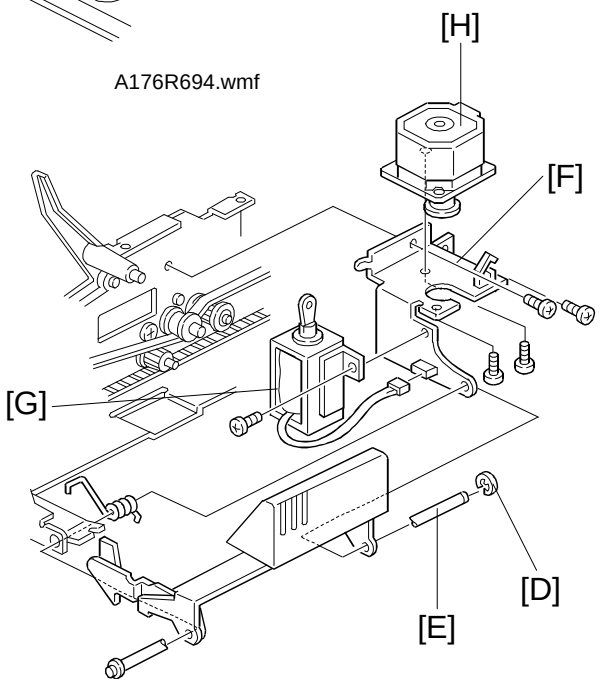

A176R695.wmf

14. Remove the drive wire stoppers [A].
15. Unhook the tension spring [B] and remove the drive wire [C].
16. Remove the E-ring [D] and slide the shaft [E] to the left.
17. Remove the jogger motor bracket [F] (1 screw).
18. Remove the pressure arm solenoid [G] (1 screw).
19. Replace the jogger motor [H] (2 screws).

    NOTE: When installing the drive pulley [I] to the jogger motor shaft, align the shaft head [J] with the pulley head [H].
20. Re-assemble the duplex unit.

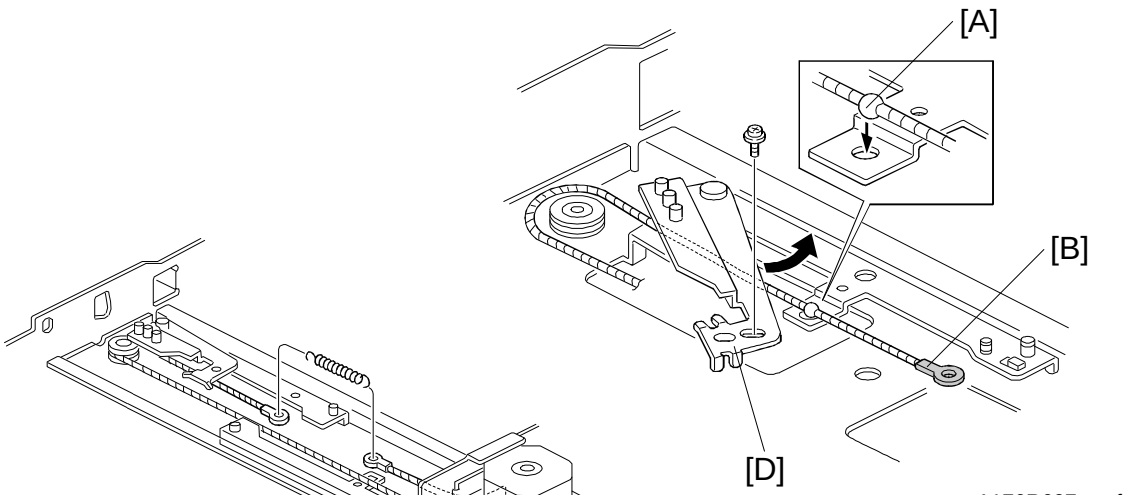

A176R697.wmf

A176R698.wmf

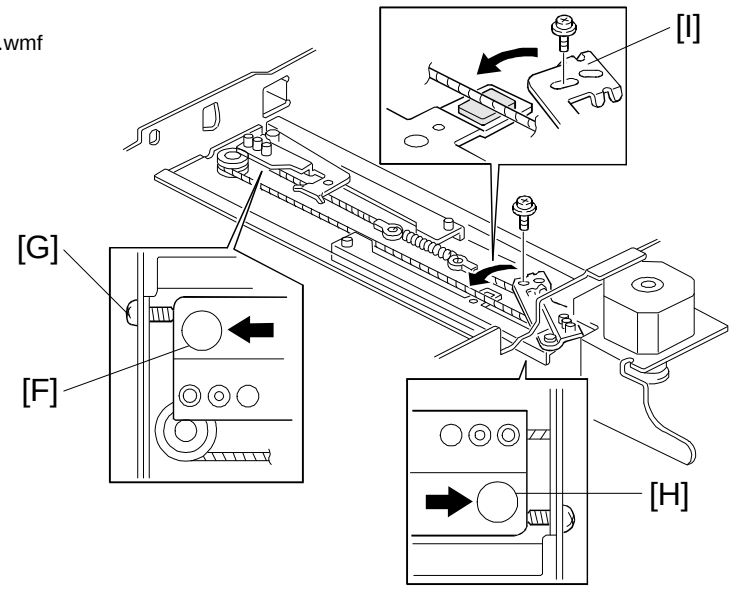

A176R699.wmf

- Jogger Drive Wire Installation -

1) Set the bead [A] which is closer to the red colored hook [B] in the hole [C] and install the stopper [D] (1 screw).
2) Round the drive wire twice around the drive motor pulley [E] as shown.
3) Move the rear jogger fence bracket [F] to the rear end position (until the bracket [F] touches the screw [G]) and keep this condition.
4) Under the above condition, place the front jogger fence bracket [H] to the front end position (until the bracket [H] touches the front screw).
5) Install the stopper [I] to fix the front jogger fence bracket with the wire.

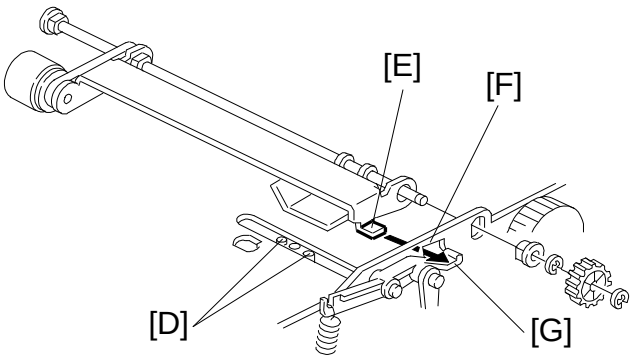

A176R515.wmf

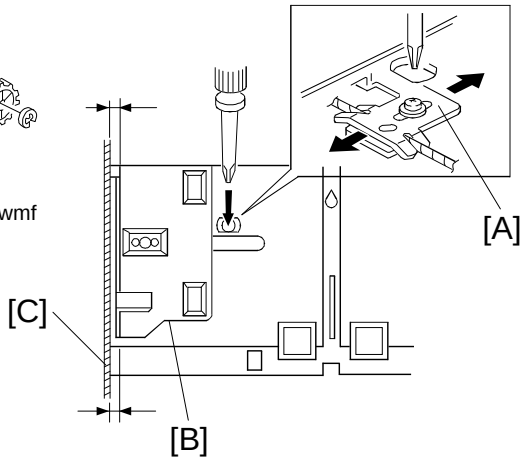

A176R719.wmf

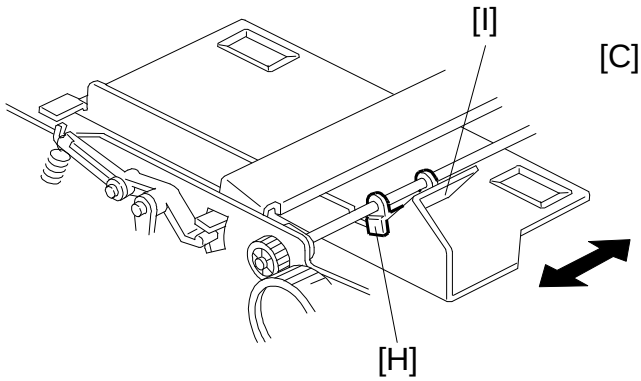

A176R700.wmf

NOTE: 1) Adjust the position of the stopper [A] so that the jogger fences [B] and side plate [C] are parrallel.

2) When installing the jogger fences, confirm if the two positioning pins [D] are correctly set in the two holes on the side fences after the screw is set.

3) When installing the positioning roller assembly, insert the plate [E] in the hole [F] on the rear frame, then set the plate on the lever [G].

4) When installing the rear paper press mylar, set the hook [H] to the rear jogger fence [I] as shown so that the mylar moves together with the jogger fence [I].

5) After installing the jogger fences, manually move the jogger fences [I] to confirm that they move smoothly.

6) After re-assembling the duplex unit, manually pull the plungers of the positioning roller solenoid and the pressure arm solenoid to confirm that the positioning roller assembly and the pressure arm move up and down correctly.

7) After re-assembling the duplex unit, adjust the jogger fence width so that the distance between both side fences become 1 mm wider than the paper size, when paper is set on the duplex tray.

(1 SP Adjustment - PAGE 10.)

8.6 COPY QUALITY ADJUSTMENT

8.6.1 SP Adjustment Mode

The copy quality adjustments in the table below can be performed by using the appropriate 1 SP Adjustment mode.

Item	SP Adjustment - PAGE	Standard	Change Amount/1 step	Default
Leading edge registration	3	0 ± 2 mm	0.5 mm	00
Leading edge erase margin	3	3.5 ± 2.5 mm	0.5 mm	00
Vertical magnification	3	100 ± 1%	0.1%	00
Horizontal magnification	3	100 ± 1%	0.1%	00
Side to side registration	4	0 ± 2 mm	0.1%	00
Focus in full size	5	—	0.1%	00
Focus in enlarge/ reduce (Lens error correction)	5	—	0.1%	00

NOTE: When performing multiple adjustments, perform the items in order from top to bottom.
Perform each adjustment as explained in the next pages.

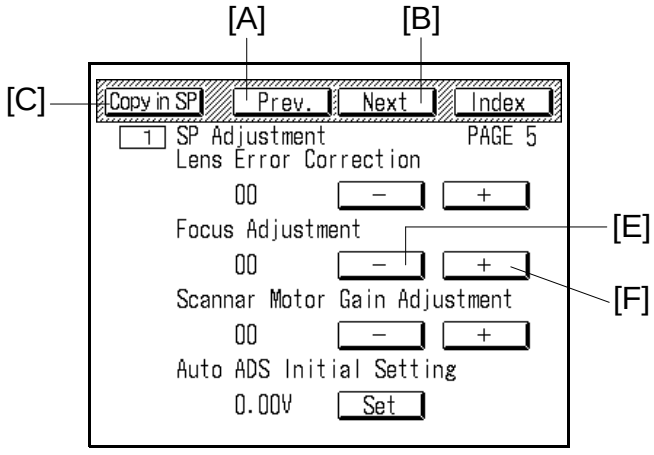

A176R701.img

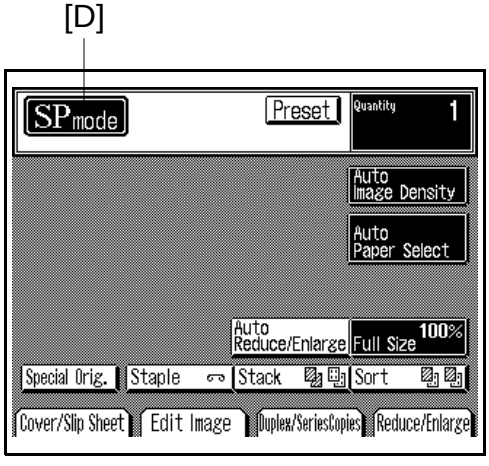

A176R702.img

1. Enter SP mode (refer to Service Program Access Procedure) and access [1] SP Adjustment mode.
2. Access the appropriate page by touching the "Prev." [A] or "Next" [B] key.
3. Touch the "Copy in SP" key [C] then select the proper copy mode.
4. Make a copy of the OS-A3 chart.
5. Confirm if copy quality is within the adjustment standard.
6. If the copy quality is not correct, touch the "SP Mode" key [D] at the left upper corner of the LCD panel.
7. Touch the – key [E] or the + key [F] to change the data, then repeat steps 3 to 6 until the copy quality becomes within the adjustment standard.
8. Exit the SP mode.

8.6.2 Side-to-side Registration Adjustment (except for copier with RDH and Finisher)

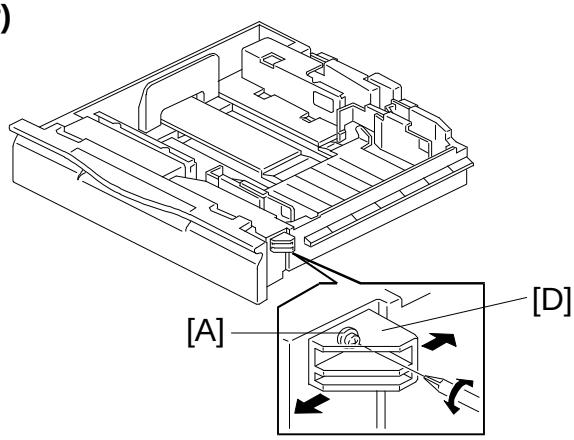

A176R703.wmf

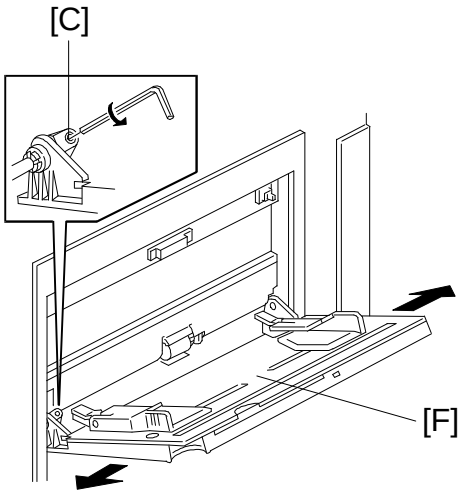

A176R705.wmf

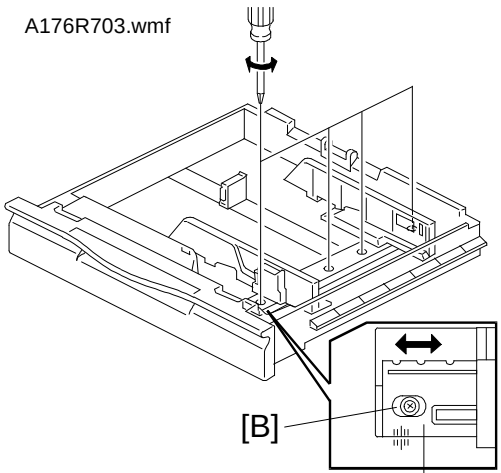

A176R704.wmf

– Rough Adjustment –

1. Loosen the screws [A] for the tandem tray or built-in LCT, [B] for 550 sheets fixed tray or universal tray, or [C] for by-pass feed tray.
2. Move the tray position by moving parts [D], [E] and [F] of the trays.

– Fine Adjustment –

1. Enter SP mode (refer to the service program access procedure) and access the side to side registration adjustment mode (1 SP Adjustment - PAGE 4).
2. Adjust side-to-side registration for each feed station by changing the SP mode data.

   NOTE: Copies can be made in SP mode. Touch "Copy in SP" key to select the paper feed station.
   Adjustment standard: Less than ± 2 mm difference between original and copy.

8.6.3 Side-to-side Registration Adjustment (copier with RDH and Finisher)

If the side-to-side image registration for paper fed from the duplex tray should be adjusted, follow the entire procedure below.

If the side-to side registration for duplex tray feed does not need to be adjusted but side-to-side registration for the paper feed tray should be adjusted, follow only steps 4 and 5 of the procedure below.

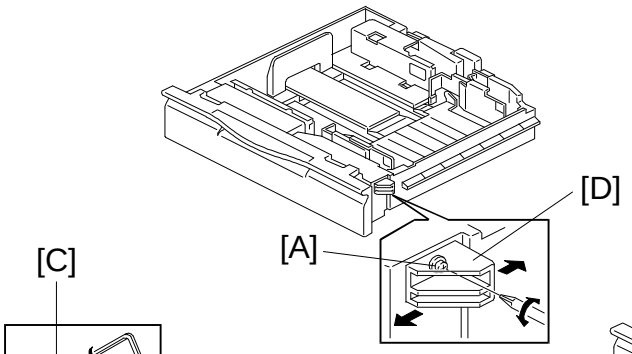

A176R703-2.wmf

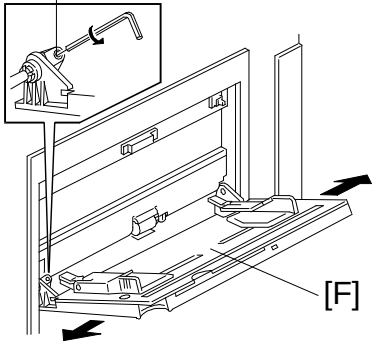

A176R705-2.wmf

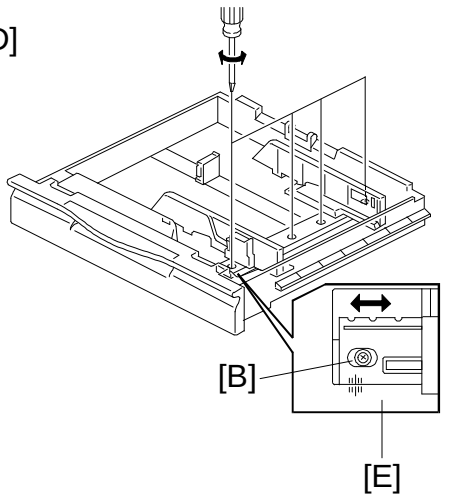

A176R704-2.wmf

1. Enter SP mode (refer to the service program access procedure) and access the side to side registration adjustment mode (1 SP Adjustment - PAGE 4).
2. Adjust side-to-side registration for the duplex tray by changing the SP mode data.

   NOTE: Copies can be made in SP mode. Touch "Copy in SP" key to select the paper feed station.

   Adjustment standard: Less than ± 2 mm difference between original and copy.
3. Change the SP data of each paper feed tray so that it is the same as the SP data of the duplex tray.
4. Loosen the screws [A] for the tandem tray or built-in LCT, [B] for universal tray, or [C] for by-pass feed tray.
5. Reposition the tray by moving parts [D], [E] and [F] of the trays.

8.6.4 Uneven Exposure Adjustment

When:	If the exposure is uneven.
Purpose:	To maintain even exposure.
Adjustment standard:	The side-to-side variation of the gray scales on the test chart should be less than one level.
How:	Change the position of the exposure lamp or exposure adjustment wings to make light intensity from the exposure lamp even across its length.

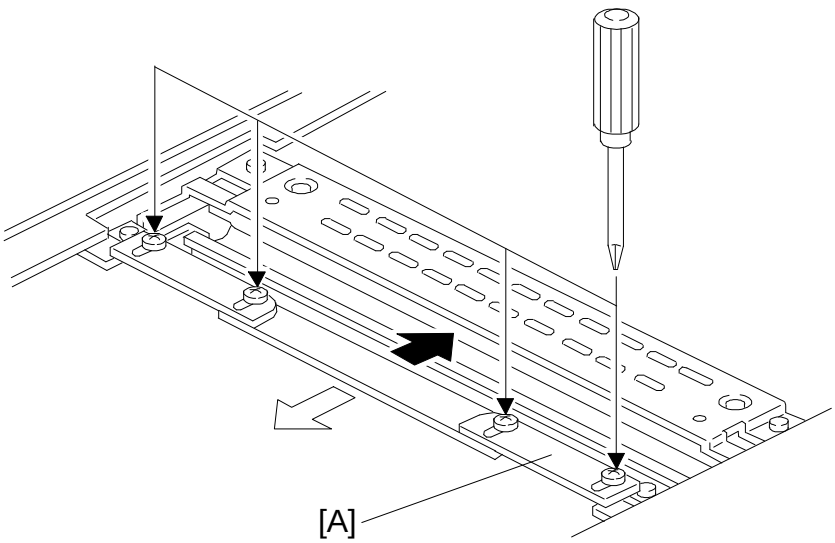

A176R706.wmf

Wing positioning:

Image turns darker.

Image turns lighter.

1. Remove the exposure glass. (See Exposure Glass Removal.)
2. Position the adjustment wings [A] so that the side-to-side copy image density variation is within the adjustment standard.
3. Turn on the main switch and enter SP mode, then perform the process control data initial setting (1 SP Adjustment - PAGE 1).

NOTE: If uneven density is not solved by this adjustment, proceed to the steps 4 and 5 in the next page.

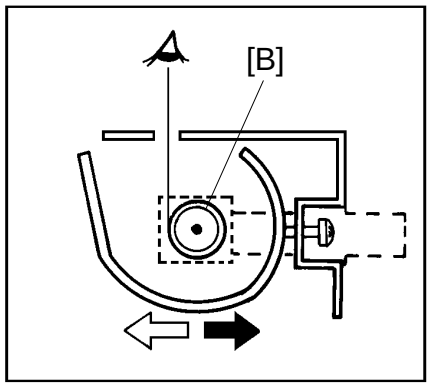

A176R707.img

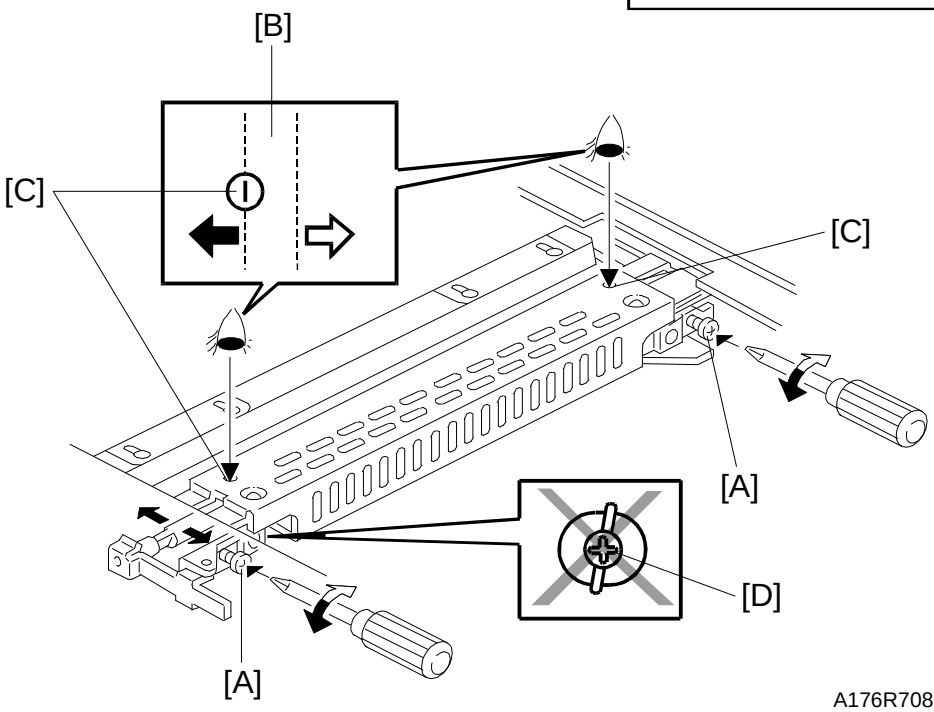

A176R708.wmf

4. Turn the screw [A] to correct the position of the filament. The **left edge** of the exposure lamp [B] should be directly beneath the center of the sight hole [C] in the reflector cover.

⚠ CAUTION

Do not touch the screw [D].

5. Turn on the main switch and enter SP mode, then perform the process control data initial setting (1 SP Adjustment - PAGE 1).

8.6.5 Image Density Adjustment

When: The copy image density is already adjusted to the standard level at the factory, and process control maintains copy image density until the next PM. If the customer asks you to adjust the image density, it can be done by using the User Tool mode.

Purpose: To adjust the copy image density.

How: The User Tool "image density level" mode changes the development bias voltage.

1. Enter User Tool mode and access [5] Set operation modes.
2. Press the [Next] key once.
3. Select the appropriate image density level (5 steps).

   adjustment:

   1) Press the appropriate ID level key [A].
   2) Press the enter key [B].

4. Press the "Menu" key [C].

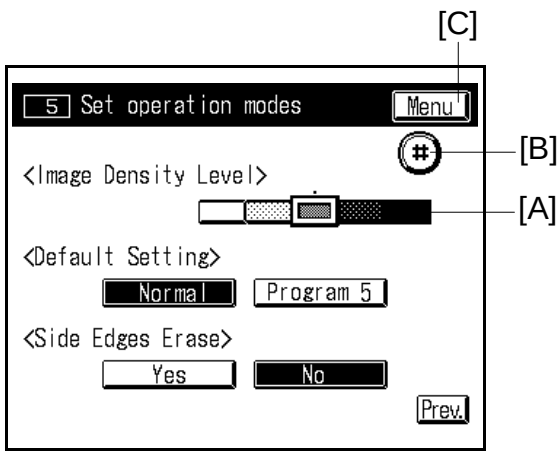

A176R709.img

5. Press the "Exit" key [D] to exit User Tool mode.

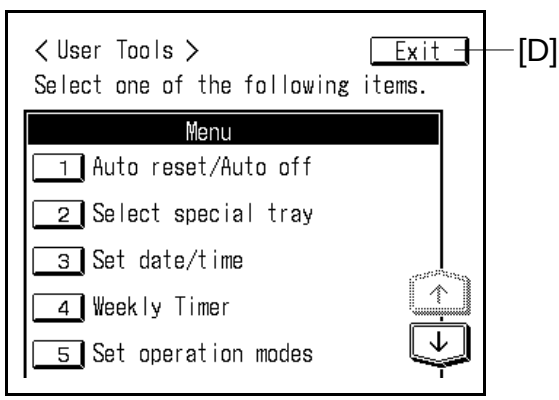

A176R710.img

6. Check copy quality.

8.6.6 Scanner Height Adjustment

When: If optically skewed images appear after adjusting the 1st and 2nd scanner positions.

Purpose: To maintain a proper copy image.

How: Turn the 3rd scanner height adjusting cam. This changes the 3rd scanner's height.

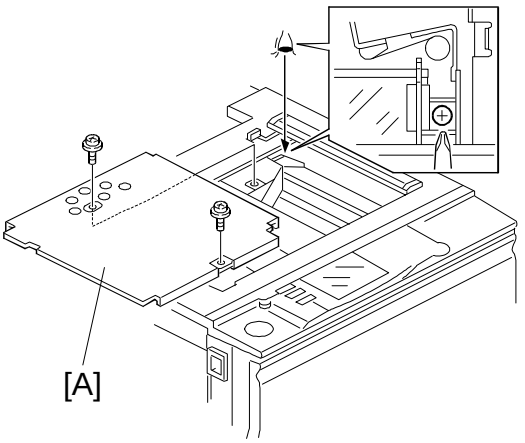

A176R566.wmf

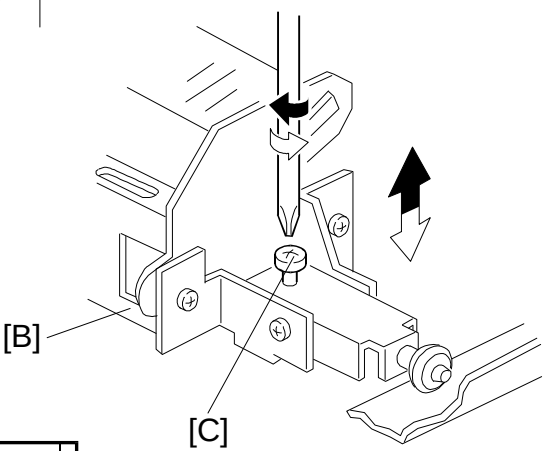

A176R567.wmf

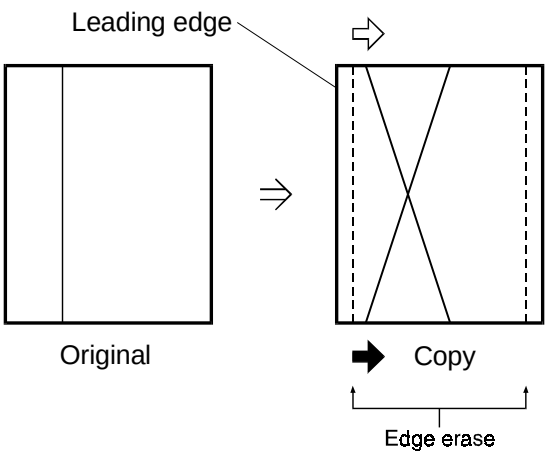

Front advanced against leading and trailing erase edge:

➡ Raise adjustment screw

Rear advanced against leading and trailing erase edge:

⇨ Lower adjustment screw

A176R523.wmf

1. Remove the exposure glass.
2. Remove the lens unit cover [A] (2 screws).
3. Adjust the 3rd scanner [B] height by the adjustment screw [C].

SECTION 6

TROUBLESHOOTING

1. SERVICE CALL CONDITIONS

1.1 SUMMARY

There are 4 levels of service call conditions.

Level	Definition	Display
A	The SC can only be reset by service representative (see note in the next page) to prevent the machine from being damaged. The copier cannot be operated at all.	SC display will not be canceled. 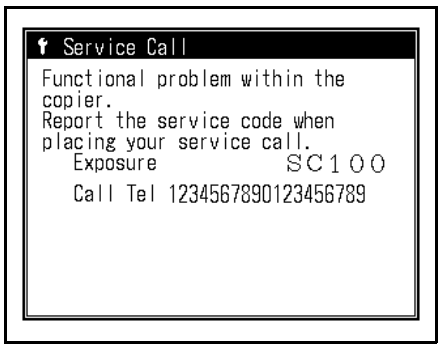
B	The copier can be operated as usual except for the unit related to the service call.	If the related function is selected, this display appears. 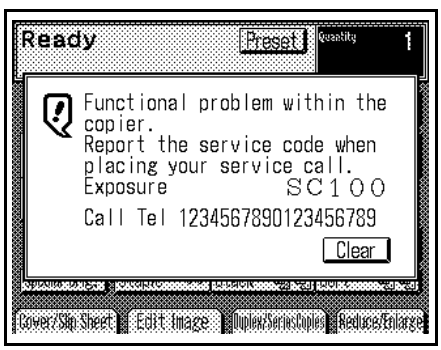
C	Only the SC counter is incremented. The copier can be operated as usual.	SC will not be displayed.
D	The SC can be reset by turning main switch off and on if the SC is caused by misdetection.	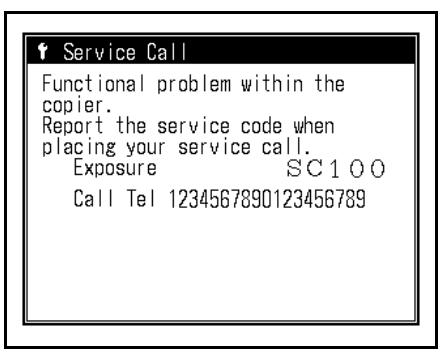

NOTE: 1) If the problem is related to electrical circuit boards, first disconnect then reconnect the connectors before replacing the PCBs.

2) If the problem is related to motor lock, first check the mechanical load before replacing motors or sensors.

3) To reset the SC of "Level: A", enter SP mode then turn off and on the main switch.

4) When an SC condition occurs while in SP mode, the display does not indicate the SC number. You can recognize the SC condition because in this condition, you cannot exit the SP mode by touching the Quit key.

If this occurs, confirm the SC number as follows:

1. Perform the same procedure to duplicate the SC condition.
2. Enter "Copy in SP" mode. You can see the SC number on the display. You can also confirm the SC number by checking the increment of the SP mode SC counter (6 Jam/SC Counter - PAGE 1).

1.2 EXPOSURE

SC101 - Exposure lamp malfunction - abnormal On/Off

Definition: [level: A]

During the lamp off condition, the optics control board detects a lamp voltage.

Possible causes

- Exposure lamp open
- Triac shorted
- Exposure lamp thermoswitch open
- Optics control board defective

SC103 - Power source frequency detection error

Definition: [level: D]

Detects frequencies out of the 45Hz to 65Hz range.

Possible causes:

- Abnormal power source
- Electrical noise
- AC drive board defective
- Optics control board defective

SC104 - Exposure lamp malfunction - abnormal off

Definition: [level: D]

The scanner start signal is received even if the main relay off condition is detected.

Possible causes:

- Main relay defective
- Communication error between the main control board and the optics control board because of a poor harness connection.
- Optics control board defective

1.3 SCANNER

SC120 - Scanner home position sensor abnormal - stays off

Definition: [level: D]

The scanner home position sensor does not detect the on condition even if the scanner returns home.

Possible causes:

- Scanner home position sensor defective
- Optics control board defective

SC121 - Scanner home position sensor abnormal - stays on

Definition: [level: D]

The scanner home position sensor does not detect the off condition even if the scanner leaves the scanner home position sensor by 120 mm.

Possible causes:

- Scanner home position sensor defective
- Scanner motor defective
- Scanner HP sensor short

SC125 - Low scanner speed

Definition: [level: D]

The scanner speed, detected by the optics control board through the encoder, is lower than the specified speed.

Possible causes:

- Scanner drive motor defective
- Optics Control Board defective

SC126 - High scanner speed

Definition: [level: D]

The scanner speed, detected by the optics control board through the encoder, is higher than the specified speed.

Possible causes:

- Scanner drive motor defective
- Optics control board defective

SC127 - Scanner drive motor encoder failure

Definition: [level: D]

Scanner rotating direction detected by the optics control board through the encoder is opposite to the specified direction.

Possible causes:

- Scanner drive motor defective
- Optics control board defective

1.4 LENS MAGNIFICATION

SC140 - Lens vertical home position sensor abnormal - stays off

Definition: [level: D]

When the lens returns to the home position, the lens vertical home position sensor does not detect the on condition for 2 seconds or more, and more than twice.

Possible causes:

- Lens vertical home position sensor shorted
- Lens vertical drive motor defective
- Optics control board defective

SC141 - Lens vertical home position sensor abnormal - stays on

Definition: [level: D]

When the lens returns to the home position, the lens vertical home position sensor does not detect the off condition for 3.5 seconds or more, and more than twice.

Possible causes:

- Lens vertical home position sensor open
- Lens vertical drive motor defective
- Optics control board defective

SC142 - Lens horizontal home position sensor abnormal - stays off

Definition: [level: D]

When the lens returns to the home position, the lens horizontal home potion sensor does not detect the on condition for 1.7 seconds or more, and more than twice.

Possible causes:

- Lens horizontal home position sensor short
- Lens horizontal drive motor defective
- Optics control board defective

SC143 - Lens horizontal home position sensor abnormal - stays on

Definition: [level : D]

When the lens leaves from the home position, the lens horizontal home potion sensor does not detect the off condition for 2.3 seconds or more, and more than twice.

Possible causes:

- Lens horizontal home position sensor open
- Lens horizontal drive motor defective
- Optics control board defective

SC144 - 3rd scanner home position sensor abnormal - stays off

Definition: [level: D]

When the 3rd scanner returns to the home position, the 3rd scanner home position sensor does not detect the on condition for 1.2 seconds or more, and more than twice.

Possible causes:

- 3rd scanner home position sensor shorted
- 3rd scanner drive motor defective
- Optics control board defective

SC145 - 3rd scanner home position sensor abnormal - stays on

Definition: [level: D]

When the 3rd scanner leaves from the home position the 3rd scanner home position sensor does not detect the off condition for 2.0 seconds or more, and more than twice.

Possible causes:

- 3rd scanner home position sensor open
- 3rd scanner drive motor defective
- Optics control board defective

SC146 - Abnormal magnification operation

Definition: [level: D]

The lens vertical drive motor or the lens horizontal drive motor move for no apparent reason in the ready condition.

Possible causes:

- Lens vertical drive motor defective
- Lens horizontal drive motor defective
- 3rd scanner drive motor defective
- Optics control board defective

1.5 OPTICS THERMISTOR

SC190 - Optics thermistor open

Definition: [level: D]

The optics thermistor is open.

Possible causes:

- Optics thermistor open

NOTE: When the optics thermistor is shorted, no SC code is indicated. The exhaust fan rotates quickly and continuously.

SC191 - Scanner motor thermistor open

Definition: [level: D]

The scanner motor thermistor is open.

Possible causes:

- Scanner drive motor defective

SC192 - High Scanner Motor Temperature (70 CPM)

Definition: [level: D]

The temperature of the scanner motor is 80°C or more.

Possible causes:

- Scanner motor clooing fan defective

1.6 MAIN CHARGE

SC302 - Charge corona leakage

Definition: [level: D]

The charge power pack detects a charge corona leakage (output: 0 V) for 4.8 ms, or detects the output to be more than 7 kV, 10 times in one job.

Possible causes:

- Main charge corona unit defective
- Main charge power pack defective
- High voltage control board defective

SC303 - Charge corona wire cleaner failure

Definition: [level: C]

The current of the charge corona wire cleaner drive motor is over the specified current within 4 seconds after the cleaner motor starts.
The charge corona wire cleaner does not move back to the end block within 30 seconds.

Possible causes:

- Charge corona wire cleaner drive motor defective
- Insufficient lubrication for the charge corona wire cleaner drive mechanism (G501 grease)
- High voltage control board defective

1.7 DEVELOPMENT

SC341 - Development motor locked

Definition: [level: D]

Development motor lock signal stays low more than 1 second in development motor on condition.

Possible causes:

- Extra load in the development unit
- Development motor defective
- Main control board defective

SC342 - Toner collection motor locked

Definition: [level: D]

The toner collection sensor output does not change (OFF → ON or ON → OFF) for more than 2.55 seconds in the toner collection motor on condition.

Possible causes:

- Toner collection sensor defective
- Toner collection motor defective
- Toner clog in the toner collection pipe

SC343 - Toner collection bottle at improper position

Definition: [level: D]

Toner bottle set switch is off and the front door is closed.

Possible causes:

- Toner collection bottle set switch defective
- Toner collection bottle is set incorrectly

1.8 PROCESS SENSOR

SC351 - Abnormal Vsg Detection (Vsg > 4.2V)

Definition: [level: C]

The detected Vsg value is over 4.2 V.

Possible causes:

- ID sensor defective
- Main control board defective

SC352 - Incomplete TD sensor initial setting

Definition: [level: C]

The output voltage of the TD sensor is higher than 2.6 V or lower than 2.4 V during the developer initial setting mode.

VOUT to get 2.5 V for the TD sensor output is higher than 10 V or lower than 2 V.

Possible causes:

- Connector [A] not set correctly
- Toner density sensor defective
- Abnormal toner concentration

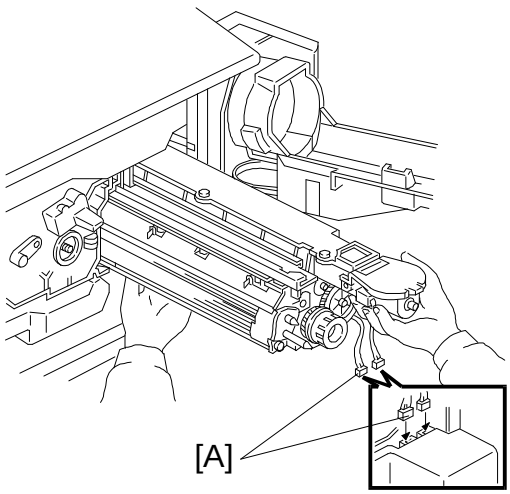

A176T502.wmf

SC353 - Abnormal Vsp Detection (Vsp ≥ 2.5 V: lighter pattern)

Definition: [level: C]

Vsp is 2.5 V or higher.

Possible causes:

- ID sensor defective
- OPC drum
- High voltage control board defective
- Poor contact of the development bias terminal

SC354 - Abnormal Vsg detection (Vsg ≤ 2.5 V)

Definition: [level: C]

Vsg is 2.5 V or less.

Possible causes:

- ID sensor defective
- OPC drum
- Dirty charge corona casing
- Quenching lamp defective
- Erase lamp defective
- Cleaning blade defective
- Dirty ID sensor

SC355 - Abnormal VTD detection (VTD ≥ 4 V)

Definition: [level: C]

VTD is 4 V or higher.

Possible causes:

- Toner density sensor defective
- Toner concentration too low

SC356 - Abnormal VTD detection (VTD < 0.5 V)

Definition: [level: C]

VTD is less than 0.5 V.

Possible causes:

- Toner density sensor defective
- Toner concentration is too high

SC357 - Abnormal Vsp detection (Vsp/Vsg ≥ 25%)

Definition: [level: C]

Vsp/Vsg is 25% or higher.

Possible causes:

- ID sensor defective
- OPC drum
- Dirty ID sensor

SC358 - Abnormal Vsp detection (Vsp/Vsg < 2.5%)

Definition: [level: C]

Vsp/Vsg is less than 2.5%.

Possible causes:

- ID sensor defective
- OPC drum
- Toner scattering

SC361 - Incomplete drum potential sensor calibration

Definition: [level: C]

When the process control initial setting is performed and a development bias of –100 V or –800 V is applied to the drum shaft, the drum potential voltage is out of these ranges:
$0.1 \leq V_{-100} \leq 0.7$ [V] or $2.7 \leq V_{-800} \leq 4.2$ [V].

Possible causes:

- Drum potential sensor defective
- Drum shaft terminal not grounded
- OPC drum
- Main charge corona unit defective

SC364 - Abnormal V_D detection

Definition: [level: C]

V_D is out of specification (V_R + 770 ± 20 V).

Possible causes:

- Drum potential sensor defective
- OPC drum
- Main charge corona unit defective

SC365 - Abnormal V_L detection

Definition: [level: C]

V_L is out of specification (V_R + 140 ± 20 V).

Possible causes:

- Drum potential sensor defective
- OPC drum
- Main charge corona unit defective
- Optics too dirty

SC366

Definition: [level: C]

V_R is larger than 360 V in the process control initialization.

Possible causes

- OPC drum
- Drum shaft terminal not ground

1.9 TRANSFER CURRENT

SC402 - Transfer current leakage

Definition: [level: D]

When the transfer power pack output voltage exceeds 4.5 kV for 200 ms or more, the output current is multiplied by 0.8. If this condition occurs 11 time in a row, an SC is displayed.

Possible causes:

- Transfer belt defective
- Transfer power pack defective
- Poor contact at transfer bias roller, discharge plate terminals

1.10 DRUM

SC440 - Abnormal main motor speed

Definition: [level: D]

Lock signal stays low in the main motor on condition for 1.0 second or more.

Possible causes:

- Main motor defective

SC442 - Drum thermistor open

Definition: [level: D]

The drum thermistor is open.

Possible causes:

- Drum thermistor defective

1.11 PAPER FEED

SC500 - Abnormal manual feed drive motor speed

Definition: [level : D]

Lock signal stays low in the manual feed motor on condition for 1.0 second or more.

Possible causes:

- Manual feed motor defective

SC501 - Abnormal paper feed drive motor speed

Definition: [level: D]

Lock signal stays low in the paper feed motor on condition for 1.0 second or more.

Possible causes:

- Paper feed motor defective
- Paper feed control board defective

SC502 - Abnormal 1st lift motor movement

Definition: [level: B]

The 1st lift sensor detects high condition for 10 seconds or more after the 1st lift motor starts. The first time, after the paper tray is opened and closed, the 1st lift motor starts again. If the above condition occurs twice, this SC is displayed.

Possible causes:

- 1st lift sensor shorted
- 1st lift motor defective
- Paper feed control board defective

SC503 - Abnormal 2nd lift motor movement

Definition: [level: B]

The 2nd lift sensor detects the high condition for 10 seconds or more after the 2nd lift motor starts. The first time, after the paper tray is opened and closed, the 2nd lift motor starts again. If the above condition occurs twice, this SC is displayed.

Possible causes:

- 2nd lift sensor shorted
- 2nd lift motor defective
- Paper feed control board defective

SC504 - Abnormal 3rd lift motor (1.5 k LCT motor for A096 copier) movement

Definition: [level: B]

The 3rd lift sensor detects the high condition for 10 seconds or more after the 3rd lift motor starts. The first time, after the paper tray is opened and closed, the 3rd lift motor starts again. If the above condition occurs twice, this SC is displayed.

Possible causes:

- 3rd lift sensor shorted
- 3rd lift motor (1.5 k LCT motor for A096 copier) defective
- Paper feed control board defective

SC506 - Abnormal 3.5 k LCT motor movement

Definition: [level: B]

The LCT lift sensor detects the low condition for 10 seconds or more after the LCT motor starts. The first time, after the LCT cover is opened and closed, the LCT motor starts again. If the above condition occurs twice, this SC is displayed.

Possible causes:

- LCT motor defective
- LCT lift sensor shorted

SC507 - Abnormal 3.5 k LCT feed motor movement

Definition: [level: B]

The LCT feed motor is locked for 1 second or more after this motor starts.

Possible causes:

- LCT feed motor defective

SC508 - Abnormal tandem rear fence drive motor movement

Definition: [level: B]

It takes 10 seconds or more for the rear fence return sensor to detect the on condition after the rear fence drive motor starts.
It takes 10 seconds or more for the rear fence home position sensor to detect the on condition after this fence starts moving to the home position.
When the tray is set, the rear fence return sensor and the rear fence the home position sensor are on.

Possible causes:

- Rear fence drive motor defective
- Rear fence HP sensor defective
- Rear fence return sensor defective

SC510 - Abnormal tandem side fence home position detection - stays off

Definition: [level: B]

When the side fence goes back to the home position or the side fence drive motor works to open the fence, the side fence positioning sensor does not detect the on condition for 5 seconds or more.

Possible causes:

- Side fence drive motor defective
- Side fence positioning sensor open

SC511 - Abnormal tandem side fence home position detection - stays on

Definition: [level: B]

When the side fence goes back to the home position or the side fence drive motor works to close the fence, the side fence positioning sensor stays on for 5 seconds.

Possible causes:

- Side fence drive motor defective
- Side fence positioning sensor shorted

1.12 DUPLEX

SC520 - Abnormal fusing/duplex drive motor movement

Definition: [level: D]

The lock signal stays low for 1.0 second after the fusing/duplex drive motor starts.

Possible causes:

- Fusing/duplex drive motor defective
- Cleaning roller is too dirty and applies a great load to the fusing/duplex drive motor.

SC522 - Abnormal jogger home position sensor detection - stays off

Definition: [level: B]

The jogger home position sensor does not detect the on condition for 5 seconds or more after the fusing/duplex drive motor starts.

Possible causes:

- Jogger motor defective
- Jogger HP sensor open

SC523 - Abnormal jogger home position sensor detection - stays on

Definition: [level: B]

The jogger home position sensor does not detect the off condition for 1 second after its sensor detects the on condition in the initializing mode.

Possible causes:

- Jogger drive motor defective
- Jogger HP sensor shorted

1.13 FUSING

SC541 - Fusing thermistor open

Definition: [level: A]

Detects the fusing thermistor open condition for 2 ms or more after turning the main switch on.

Possible causes:

- Fusing thermistor open
- Optics control board defective

SC542 - Start key stays red

Definition: [level: A]

The fusing temperature does not reach the specified temperature after 5 minutes from turning the main switch on.

Possible causes:

- Fusing lamp defective
- AC Drive board defective
- Fusing thermistor defective

SC543 - Fusing overheat (detected by the main control board)
SC544 - Fusing overheat (detected by the optics control board)

Definition: [level: A]

The fusing temperature stays over 231°C for 5 seconds.

Possible causes:

- AC drive board defective
- Fusing thermistor defective
- Optics control board defective
- Main control board defective

SC545 - Low fusing temperature (detected by the main control board)
SC546 - Low fusing temperature (detected by the optics control board)

Definition: [level: A]

The fusing temperature stays lower than 100°C for 5 seconds after the machine becomes ready.

Possible causes:

- Fusing thermistor defective
- AC drive board defective
- Fusing lamp open
- Main control board defective
- Optics control board defective

SC547 - Fusing lamp continuously lit

Definition: [level: A]

Fusing lamp continuously lights for 70 seconds after the machine becomes ready. However, if the door is open, paper jams, or the fusing unit is out of position, the ready condition is canceled and the main relay opens.

Possible causes:

- AC drive board

SC548 - Unstable fusing temperature

Definition: [level: A]

If the fusing temperature changes by 21°C/second four times in 1 minute, this SC is displayed.

Possible causes:

- AC drive board defective
- Thermistor defective

1.14 SYSTEM CONTROL

SC600 - Communication error (main control board and operation panel)

Definition: [level: D]

The main control board does not communicate with the operation panel.

Possible causes:

- Main control board defective
- Operation panel defective
- Harness defective

SC601 - Communication error (main control board and optics control board)

Definition: [level: D]

The main control board does not communicate with the optics control board.

Possible causes:

- Main control board defective
- Optics control board defective
- Harness defective

SC603 - Main control board malfunction (CPU)

Definition: [level: D]

Communication to the main control board is not completed.

Possible causes:

- Main control board defective

SC620 - Communication error (main control board and DJF/RDH main board)

Definition: [level: B]

The main board does not communicate with the DJF/RDH main board.

Possible causes:

- Main control board defective
- DJF/RDH main board defective
- Harness defective
- Fiber optics defective

SC621 - Communication error (main control board and sorter staplers/ finisher main board)

Definition: [level: D]

The main control board does not communicate with the sorter stapler/ finisher main board.

Possible causes:

- Main control board defective
- Sorter stapler/finisher main board defective
- Harness defective
- Fiber optics defective

1.15 DUAL JOB FEEDER/RECIRCULATING DOCUMENT HANDLER

SC700 - Abnormal DJF/RDH feed-in motor movement
SC701 - Abnormal DJF/RDH transport belt motor movement
SC702 - Abnormal DJF/RDH feed out motor movement
SC703 - Abnormal RDH inverter motor movement

Definition: [level: B]

Encoder pulse is not detected by the DJF/RDH main board in the main motor on condition. The first time, a jam occurs. The second time, an SC is displayed.

Possible causes:

- DJF/RDH feed motor defective
- DJF/RDH transport motor defective
- DJF/RDH feed out motor defective
- DJF/RDH inverter motor defective

1.16 FINISHER/SORTER STAPLER

SC730 - Abnormal *transport motor sorter stapler/finisher) movement

Definition: [level: D]

When the encoder pulse is not detected by the SS (or finisher) main board for 200 ms after the *transport motor starts, a jam is displayed. If this occurs twice, an SC is displayed.

Possible causes:

- *Transport motor

	Sorter Stapler	Finisher
*	Main motor	Transport drive motor

SC731 - Abnormal bin drive (lift) motor movement (sorter staplers)

Definition: [level: B]

If the wheel sensor (bin lift timing sensors) is not off after 2 seconds from when the bin drive (lift) motor stars, jam "R2" is indicated.
If the wheel sensor (bin lift timing sensors) is not on after 2 seconds from when the wheel sensor (bin lift timing sensors) detects off, jam "R2" is indicated.
If the condition above occurs twice, an SC is displayed.

Possible causes:

- Wheel sensor (bin lift timing sensors) defective
- Bin drive (Lift) motor defective

SC732 - Tray shift motor (finisher)

Definition: [level: B]

The shift tray half turn sensor does not detect the on condition for 2 seconds after the finisher tray shift motor starts.
The first time, a jam is indicated. The 2nd time, an SC is displayed.

Possible causes:

- Tray shift motor defective
- Shift tray half turn sensor defective

SC733 - Shift tray lift motor (finisher)

Definition: [level: B]

The stack height sensor 1 or 2 do not detect the on condition for the specified time after the finisher shift tray lift motor.

Possible causes:

- Shift tray lift motor defective
- Stack height sensor 1 or 2 defective

SC735 - Abnormal jogger motor movement (sorter staplers/finisher)

Definition: [level: B]

When the jogger moves back to the home position, the jogger home position sensor does not detect the on condition within 650 pulses. Then, a jam is indicated.

When the jogger moves from the home position forward, and moves back to the home position, the jogger home position sensor does not detect the on condition within 100 pulses. Then, a jam is indicated.

If the above condition occurs twice, an SC is displayed.

Possible causes:

- Jogger motor defective
- Jogger home position sensor defective

SC737 - Abnormal gripper motor movement (sorter staplers)

Definition: [level: B]

When the gripper moves to the staple position, the gripper home position sensor does not detect the on condition. Then a jam is indicated.

When the gripper moves from the staple position to the bin position, the gripper home position sensor does not detect the on condition within 1070 pulses. Then a jam is indicated.

When the gripper moves to the home position, the gripper home position sensor does not detect the on condition within 1.25 seconds. Then a jam is indicated.

When the gripper moves from the home position forward, and moves back to the home position, the gripper home position does not detect the on condition within 500 ms or more. Then a jam is indicated.

If the above condition occurs twice, an SC is displayed.

Possible causes:

- Gripper motor defective
- Gripper home position sensor defective

SC738 - Abnormal staple motor movement (sorter staplers)

Definition: [level: B]

The staple home position sensor does not detect the on condition within 600 ms after the motor starts. Then a jam is indicated. If this occurs twice, this SC is displayed.

Possible causes:

- Staple unit (staple motor) defective
- Staple is jammed in the staple unit.

SC740 - Abnormal staple unit drive motor movement (sorter stapler/ finisher)

Definition: [level: B]

The staple unit home position sensor does not detect the on condition when the staple unit is in the home position. A jam is indicated.
The staple unit home position sensor does not detect the on condition (within 1640 pulses) when the staple unit moves to the home position. A jam is indicated.
The staple unit home position sensor does not detect the on condition (within 280 pulses) when the staple unit moves forward from the home position and moves back to the home position. A jam is indicated.
If the above condition occurs twice, this SC is displayed.

Possible causes:

- Staple unit drive motor defective
- Staple unit home position sensor defective

SC741 - Abnormal bin rear plate motor movement (sorter stapler)

Definition: [level: B]

When the rear bin plate is open, the bin rear plate open sensor does not detect the on condition for 750 ms or more after the motor starts. Then a jam is indicated.
When the rear bin plate is closed, the bin rear plate home position sensor does not detect the on condition for 750 ms or more after the motor starts. Then a jam is indicated.
In the initial condition, the bin rear plate open sensor does not detect the on condition for 1.25 seconds or more after the motor starts. Then a jam is indicated.
If the above condition occurs twice, this SC is displayed.

Possible causes:

- Bin rear plate drive motor defective
- Bin rear plate open sensor defective
- Bin rear plate home position sensor defective

SC742 - Abnormal stack feed out motor movement (finisher)

Definition: [level: B]

No encoder pulses is detected for 500 ms. or more.

Possible causes:

- Stack feed out motor defective

SC743 - Punch motor abnormal (sorter stapler with punch)

Definition: [level: B]

When turning on the main switch, the punch home position sensor is not activated within 1100 pulses. Then an R2 jam is indicated.
In punch mode, the punch home position sensor is not activated within 950 pulses after rotating the punch motor. Then an R2 jam is indicated. If the above condition occurs twice, this SC is displayed.

Possible causes:

- Punch motor
- Punch home position sensor

SC744 - Staple jam release abnormal (sorter stapler)

Definition: [level B]

In the initial condition the paper sensor is activated and the staple home position sensor is de-activated. Then, an R3 (staple) jam is indicated. If this condition occurs 4 times in a row, this SC is displayed.

Possible causes:

- Stapler

1.17 OTHERS

SC900 - Total counter failure (staying in the off condition)

Definition: [level: D]

The total counter stays in the off condition.

Possible causes:

- Total counter defective

SC901 - Total counter failure (staying in the on condition)

Definition: [level: D]

The total counter stays in the on condition.

Possible causes:

- Total counter defective

SC full used toner bottle

Definition: [level: A]

The toner overflow switch is activated.

Possible causes:

- Toner collection bottle is full
- Toner overflow switch defective

NOTE: Clear the SC full used toner bottle as follows:

1) While the main switch is on, open the front doors then take out the toner collection bottle (used toner bottle).
2) Remove the toner collection bottle then empty and clean the bottle.
3) Install the empty toner collection bottle.
4) Close the front doors.

SC940 - Main Switch Abnormal (U.S.A. version only)

Definition: [level: A]

The Main switch does not turn off after sending the reset signal two times in a row.

Possible causes:

- Main switch
- Main PCB

2. ELECTRICAL COMPONENT DEFECTS

2.1 SENSORS

NOTE: All photo-interrupters go low (GND) when the actuator interrupts the gap between the LED and the photo transistor.

Component (Symbol)	CN	Condition	Symptom (when the main switch turns on)
Scanner HP (S-1)	512-1	Open	SC125 is displayed
		Shorted	SC121 is displayed
Platen Cover Position-1 (S-2)	512-7	Open	APS and AMS do not function correctly.
		Shorted	—
Platen Cover Position-2 (S-3)	518-1	Open	"Original is on the glass" indicator is displayed even if the original on the glass has already been removed.
		Shorted	—
Lens vertical HP (S-4)	512-5	Open	SC141 is displayed
		Shorted	SC140 is displayed
Lens Horizontal HP (S-5)	513-1	Open	SC143 is displayed
		Shorted	SC142 is displayed
3rd Scanner HP (S-6)	511-1	Open	SC145 is displayed
		Shorted	SC144 is displayed
By-Pass Paper End (S-7)	108-A5	Open	"Paper end" indicator is not displayed even if there is no paper on the by-pass feed table.
		Shorted	"Paper end" indicator is displayed even if paper is set on the by-pass feed table.
Guide Plate Position (S-8)	108-B9	Open	"Guide plate open" indicator is not displayed even if the guide plate is open.
		Shorted	"Guide plate open" indicator is displayed even if the guide plate is closed.
Jogger HP (S-9)	112-A10	Open	Jogger motor locks (SC522 counts up)
		Shorted	Jogger motor locks (SC523 counts up)
Vertical Transport (S-10)	108-A2	Open	—
		Shorted	—
Duplex Exit (S-11)	112-A8	Open	"Paper Jam T" indicator is displayed even if there is no paper.
		Shorted	Whenever a duplex copy is made, "Paper Jam T" occurs.
Duplex Entrance Sensor (S-12)	112-A7	Open	"Paper Jam T" indicator is displayed even if there is no paper.
		Shorted	Whenever a duplex copy is made, "Paper Jam T" occurs.

Component (Symbol)	CN	Condition	Symptom (when the main switch turns on)
Duplex Paper End (S-13)	112-A9	Open	"Copies left in the duplex tray...." indicator is displayed even if there is paper in the duplex tray.
		Shorted	Only one rear side copy is made regardless of the quantity of copies.
Duplex Transport (S-14)	109-A4	Open	"Paper Jam T" indicator is displayed even if there is no paper.
		Shorted	Whenever a duplex copy is made, "Paper Jam T" occurs.
Exit (S-15)	109-A2	Open	"Paper Jam E" indicator is displayed even if there is no paper.
		Shorted	Whenever the copy is fed out, "Paper Jam D" occurs.
Fusing Exit (S-16)	109-B7	Open	"Paper Jam D" indicator is displayed even if there is no paper.
		Shorted	Whenever a copy is made, "Paper Jam C and D" occurs.
Paper Guide (S-17)	109-B4	Open	—
		Shorted	Whenever a duplex copy is made, "Paper Jam T" occurs.
Auto Image Density (S-18)	507-1	Open	Image density will be abnormal.
		Shorted	
Original Length-1 (S-19)	508-8, 9, 10	Open	The CPU cannot properly detect original size. APS and AMS do not function correctly.
		Shorted	
Original Length-2 (S-20)	509-3, 4, 5	Open	The CPU cannot properly detect original size. APS and AMS do not function correctly.
		Shorted	
Original Width (S-21)	508-3, 4, 5	Open	The CPU cannot properly detect original size. APS and AMS do not function correctly.
		Shorted	
By-Pass Paper Size (S-22)	114-6	Open	The CPU recognizes that the paper width is 319 mm regardless of the side fence position.
		Shorted	The CPU recognizes that the paper width is 100 mm regardless of the side fence position.
Toner Density (S-23)	114-3	Open	Machine quits auto toner supply mode and enters fixed supply mode.
		Shorted	
Registration (S-24)	108-A7	Open	"Paper Jam C" indicator is displayed even if there is no paper.
		Shorted	Whenever a copy is made, "Paper Jam C" occurs.
Toner End (S-25)	108-B14	Open	Toner is added even if there is too much toner in the toner hopper.
		Shorted	Toner is not supplied even if there is no toner in the toner hopper.

Component (Symbol)	CN	Condition	Symptom (when the main switch turns on)
Auto-Response (S-26)	113-B3	Open	The machine does not exit "Screen Saver" mode even if an operator approaches the machine.
		Shorted	"Screen Saver" mode does not work.
Drum Potential (S-27)	110-10	Open	Machine quits auto process control and enters fixed toner supply mode.
		Shorted	
Image Density (S-28)	111-3	Open	Machine quits auto toner supply mode and enters detect mode.
		Shorted	
1st Paper End (S-29)	401-A5	Open	"Paper end" indicator is not displayed even if there is no paper on the paper tray.
		Shorted	"Paper end" indicator is displayed even if paper is set.
1st Paper Near End (S-30)	412-A2	Open	"Paper near end" indicator is not displayed even if the tray is almost empty.
		Shorted	"Paper near end" indicator is displayed even if there is enough paper on the paper tray.
1st Paper Feed (S-31)	402-A1	Open	Whenever paper is fed, it is folded.
		Shorted	"Paper jam A" indicator is displayed even if there is no paper.
2nd Paper Near End (S-32)	412-A5	Open	"Paper near end" indicator is not displayed even if the tray is almost empty.
		Shorted	"Paper near end" indicator is displayed even if there is enough paper on the paper tray.
1st Lift (S-33)	401-A2	Open	"Add paper" indicator is displayed even if there is paper on the tray.
		Shorted	The tray bottom plate locks at the upper position.
2nd Paper End (S-34)	401-B5	Open	"Paper end" indicator is not displayed even if there is no paper on the paper tray.
		Shorted	"Paper end" indicator is displayed even if paper is set.
Toner Collection Motor (S-35)	412-B5	Open	SC342 is displayed.
		Shorted	
2nd Lift (S-36)	401-B2	Open	"Add paper" indicator is displayed even if there is paper on the tray.
		Shorted	The tray bottom plate locks at the upper position.
3rd Lift (S-37)	403-A2	Open	"Add paper" indicator is displayed even if there is paper on the tray.
		Shorted	The tray bottom plate locks at the upper position.

Component (Symbol)	CN	Condition	Symptom (when the main switch turns on)
3rd Paper Near End (4 Tray version only) (S-38)	412-A8	Open	"Paper near end" indicator is not displayed even if the tray is almost empty.
		Shorted	"Paper near end" indicator is displayed even if there is enough paper on the paper tray.
3rd Paper End (S-39)	403-A5	Open	"Paper end" indicator is not displayed even if there is no paper on the paper tray.
		Shorted	"Paper end" indicator is displayed even if paper is set.
3rd Paper Feed (S-40)	402-A8	Open	Whenever paper is fed, it is folded.
		Shorted	"Paper jam A" indicator is displayed even if there is no paper.
2nd Paper Feed (S-41)	402-B1	Open	Whenever paper is fed, it is folded.
		Shorted	"Paper jam A" indicator is displayed even if there is no paper.
Base Plate Down (Tandem version only) (S-42)	404-A10	Open	The bottom plate lift lever locks at the lowest position.
		Shorted	The bottom plate is not lowered when paper on the left tray shifts to the right tray and paper is set in the improper position.
Side Fence Positioning (Tandem version only) (S-43)	404-A13	Open	SC510 is displayed
		Shorted	SC511 is displayed
Rear Fence Return (Tandem version only) (S-44)	404-B10	Open	When the rear fence reaches the return position, the rear plate locks there then SC508 is displayed.
		Shorted	SC508 is displayed.
Rear Fence HP (Tandem version only) (S-45)	404-B6	Open	SC508 is displayed.
		Shorted	When the rear fence reaches the return position, SC508 is displayed.
Left Tandem Paper End (Tandem version only) (S-46)	404-B12	Open	The rear fence moves back and forth continuously.
		Shorted	The paper on the left tray is not moved to the right tray.
LCT Near End (1,500 Tray version only) (S-47)	412-A7	Open	"Paper near end" indicator is not displayed even if the tray is almost empty.
		Shorted	"Paper near end" indicator is displayed even if there is enough paper on the paper tray.
Tray Down (1,500 Tray version only) (S-48)	403-B2	Open	When the bottom plate is lowered, it locks at the lowest position.
		Shorted	"Paper end" indicator is displayed even if there is paper on the tray.
Tray Paper End (1,500 Tray version only) (S-49)	412-A11	Open	The bottom plate raises & lowers even if no paper is set.
		Shorted	The bottom plate does not raise even if paper is set on the tray.

2.2 SWITCHES

Component	CN No.	Condition	Symptom
By-Pass Table (SW-1)	108-B11	Open	"Open the by-pass tray" indicator is displayed even if the by-pass tray is opened. Print key stays red.
		Shorted	By-pass feed motor continuously turns.
Front Door Safety (SW-2)	—	Open	"Close the door" indicator lights even if the front door is closed.
		Shorted	Copier does not turn off when the front doors are open.
1st Tray Set (A175 copier only) (SW-3)	407-B8	Open	When the 1st tray is selected, SC502 is displayed.
		Shorted	The 1st tray cannot be selected even if the 1st tray is set in the machine.
2nd Paper Size (SW-4)	407-A2 ~ A6	Open	The CPU cannot detect proper paper size, and misfeeds may occur when a copy is made.
		Shorted	
Toner Overflow (SW-5)	412-B9	Open	SC "Full Used Toner Bottle" indicator lights even if the toner bottle is not full.
		Shorted	SC "Full Used Toner Bottle" indicator does not light even if the toner bottle becomes full.
Toner Collection Bottle Set (SW-6)	412-B7	Open	No caution is displayed on the LCD even if the toner collection bottle is set incorrectly.
		Shorted	SC343 is displayed.
Lower Front Door Safety (SW-7)	410-1	Open	Whenever paper is fed from the tray unit, SC501 is displayed.
		Shorted	—
3rd Tray Set (4 Trat version only) (SW-8)	407-B1	Open	When the 3rd tray is selected, SC504 is displayed.
		Shorted	The 3rd tray cannot be selected even if the 3rd tray is set in the machine.
Main (SW-9)	—	Open	The copier does not turn on.
		Shorted	The copier does not turn off.
Tray Down (1,500 Tray version only) (SW-10)	402-B14	Open	The 3rd tray bottom plate stays at the lowest position.
		Shorted	The 3rd tray bottom plate stays at the highest position.

2.3 FUSES

2.3.1 DC Power Supply Board

Component	Condition	Symptom
FU801 (125 V, 10 A)	Open	Power is not provided when the main switch is on (No indicator displayed on the operation panel).
FU802 (125 V, 5 A)	Open	Power is not provided when the main switch is on (No indicator displayed on the operation panel).
FU803 (125 V, 6.3 A)	Open	When the 3rd feed station is selected, SC504 is displayed.
FU804 (125 V, 6.3 A)	Open	When the main switch is turned on, SC900 is displayed.
FU805 (125 V, 6.3 A)	Open	When each feed station is selected, the following indication is displayed: 1st : SC510 2nd: Add Paper 3rd : SC504 When the paper is fed from the By-pass feed table, SC342 is displayed.
FU806 (125 V, 6.3 A)	Open	When the 3rd feed station is selected, SC504 is displayed. DJF (RDH) and Sorter Stapler (Finisher) do not operate.

COPIER ELECTRICAL COMPONENT LAYOUT

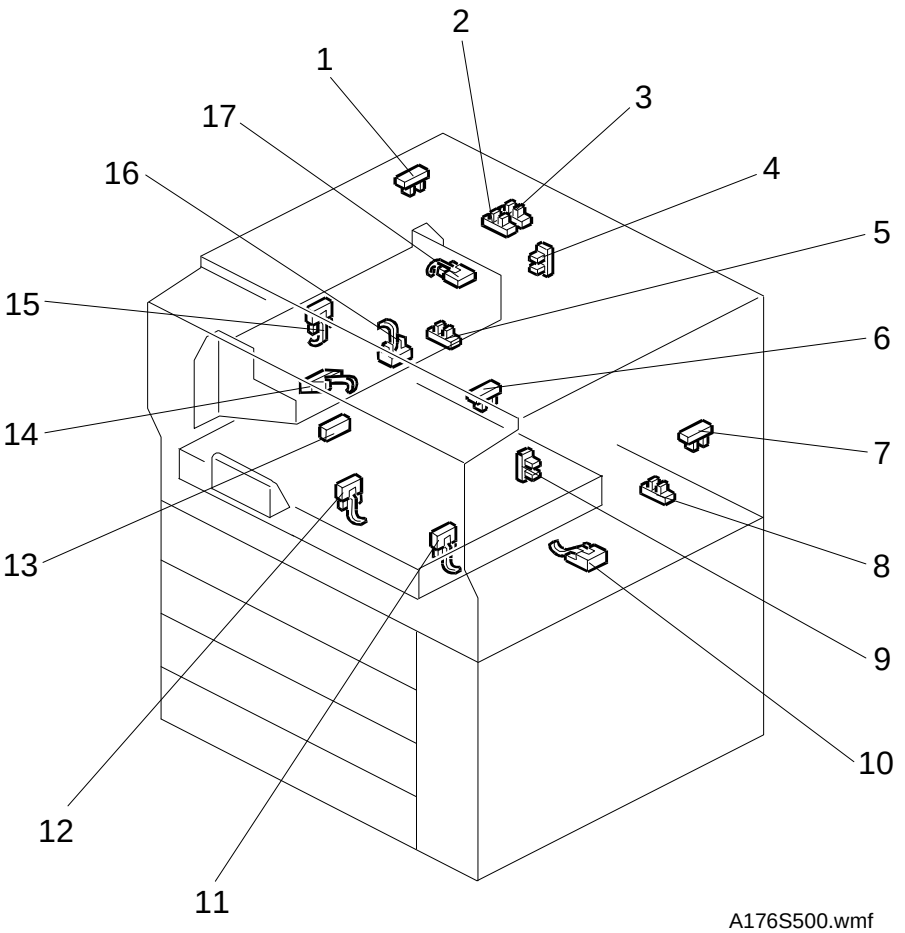

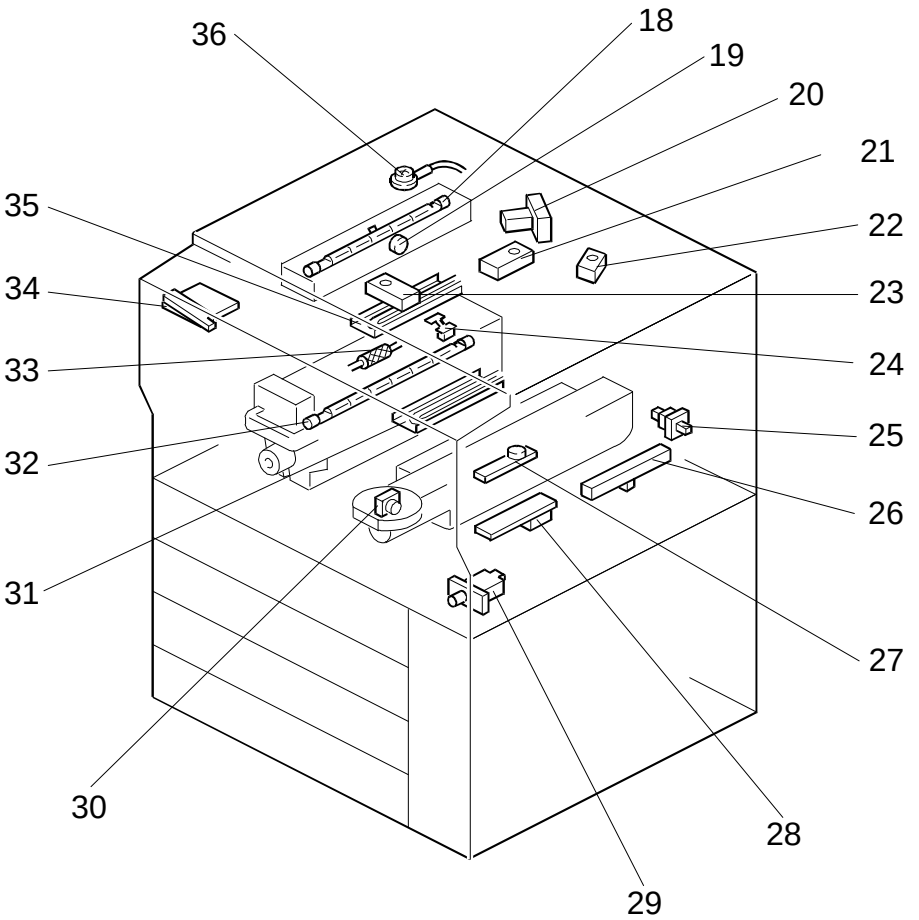

A176S501.wmf

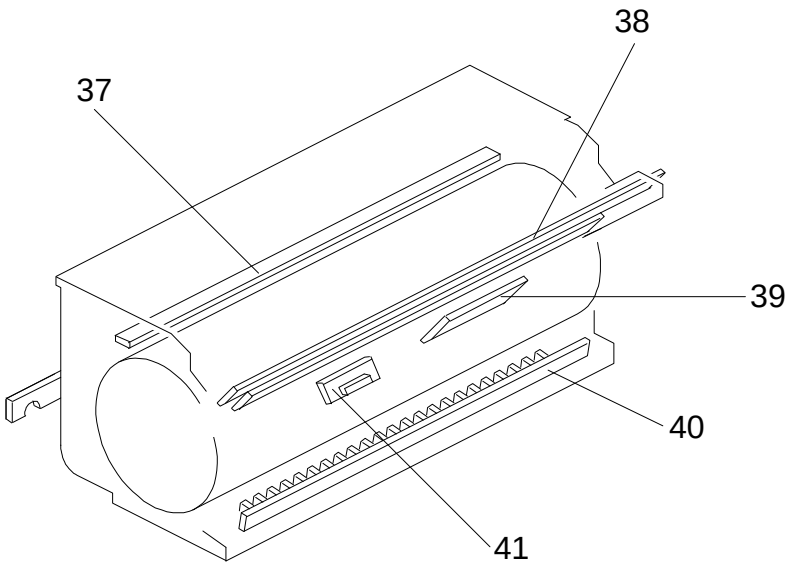

A176S502.wmf

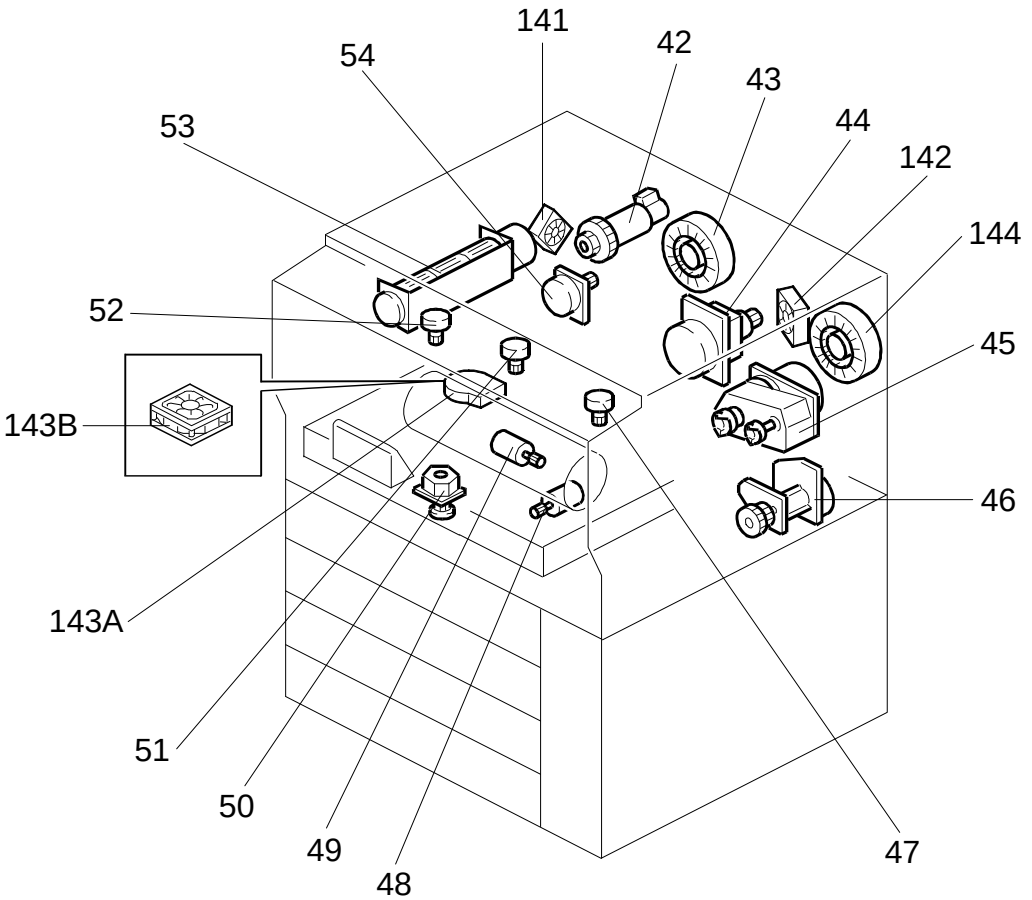

A176S503.wmf

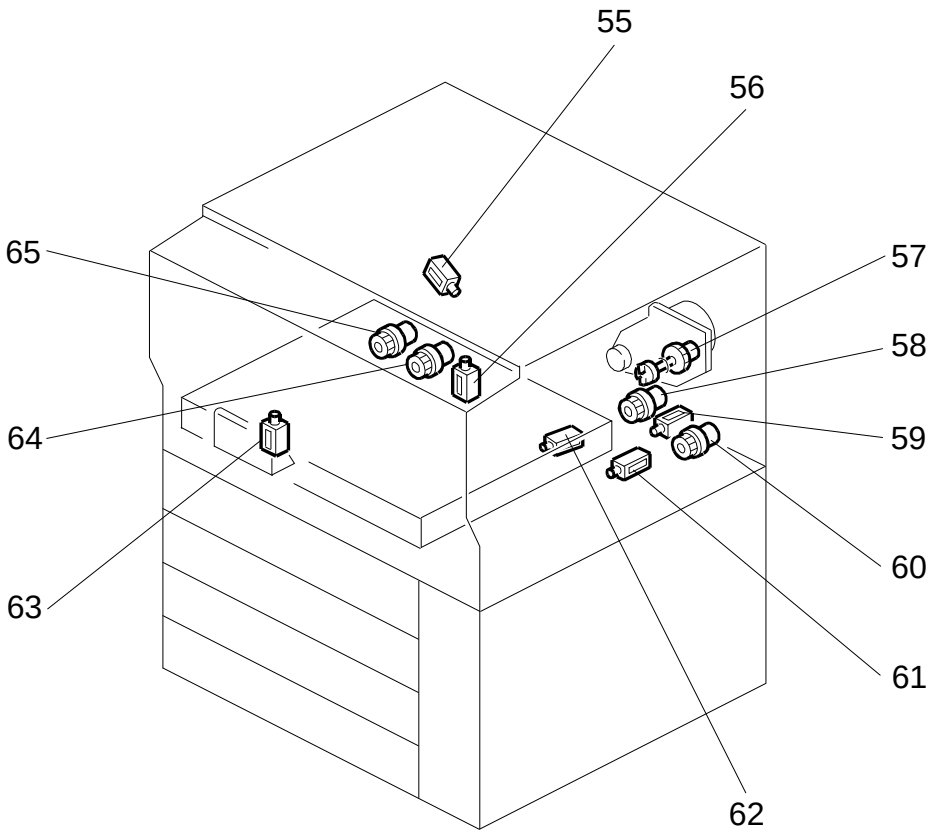

A176S504.wmf

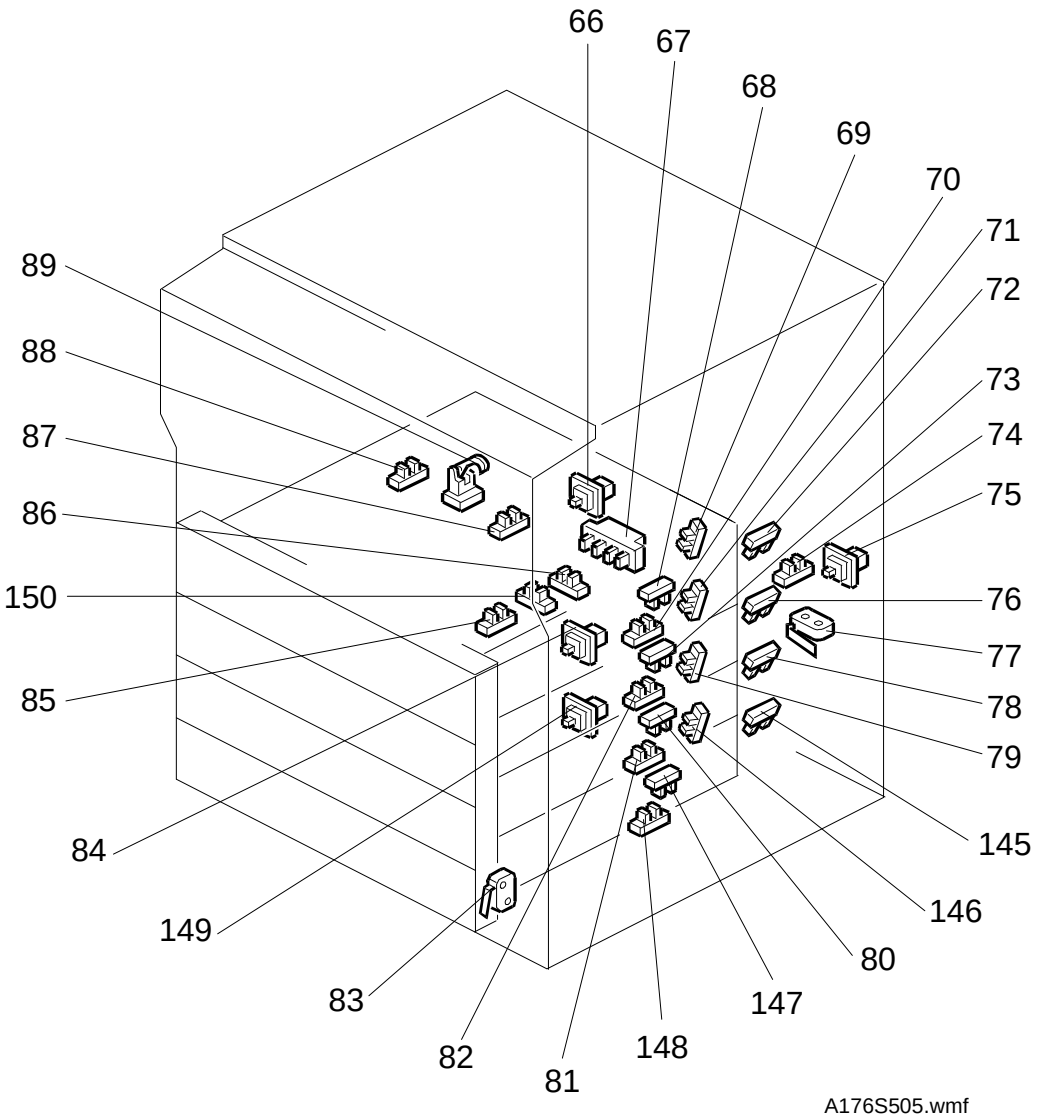
66
67
68
69
70
71
72
73
74
75
76
77
78
79
145
146
80
147
148
81
82
83
149
84
85
150
86
87
88
89
A176S505.wmf

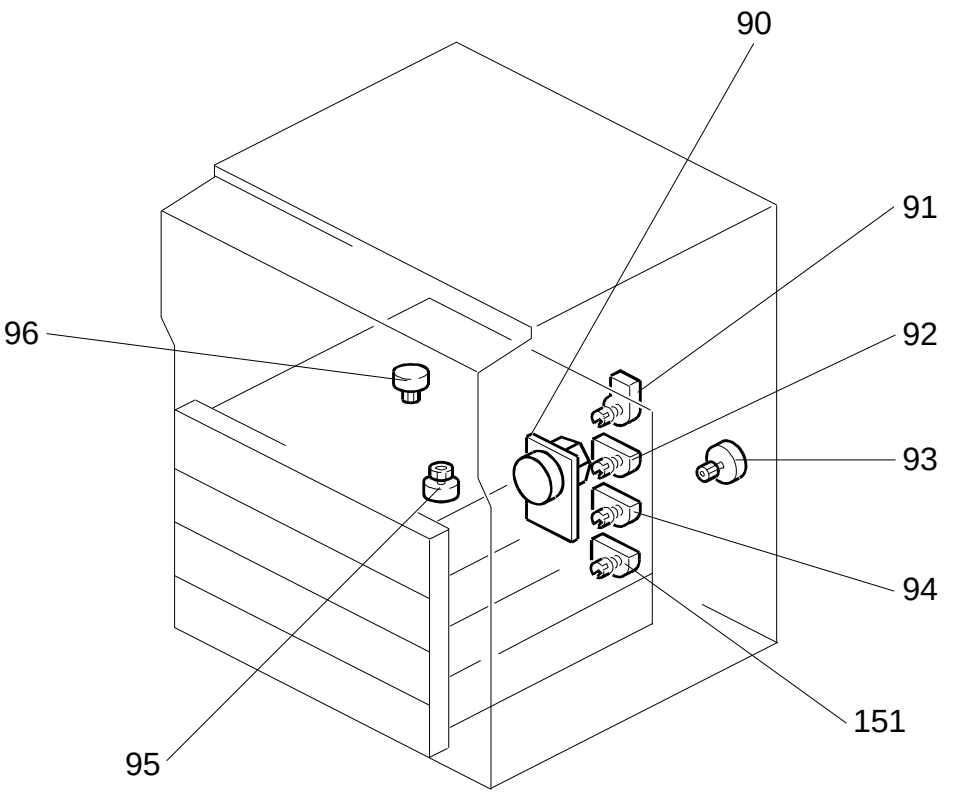

A176S506.wmf

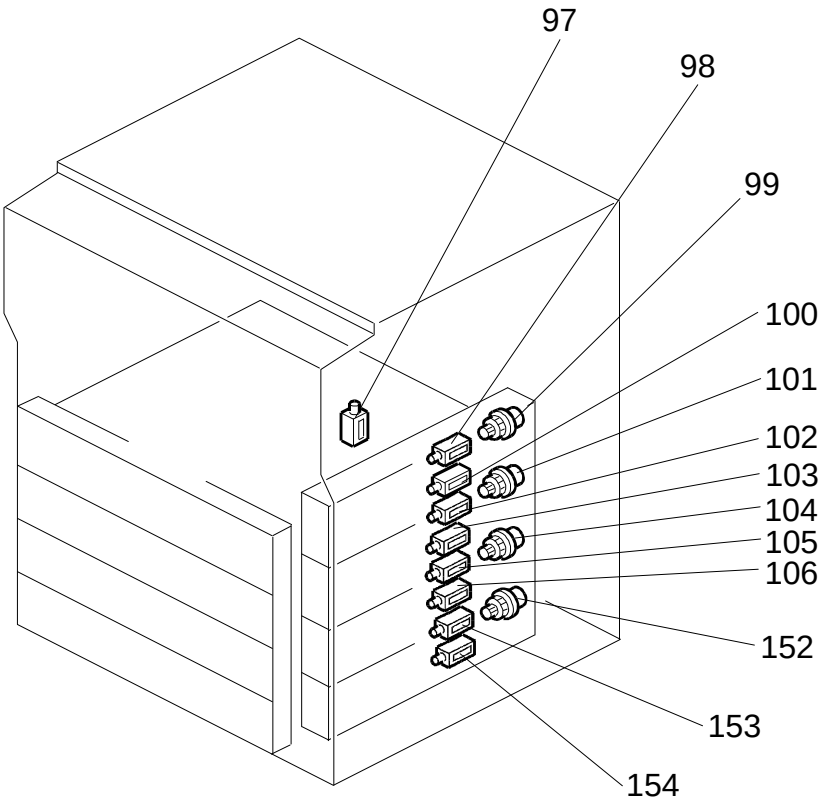

A176S507.wmf

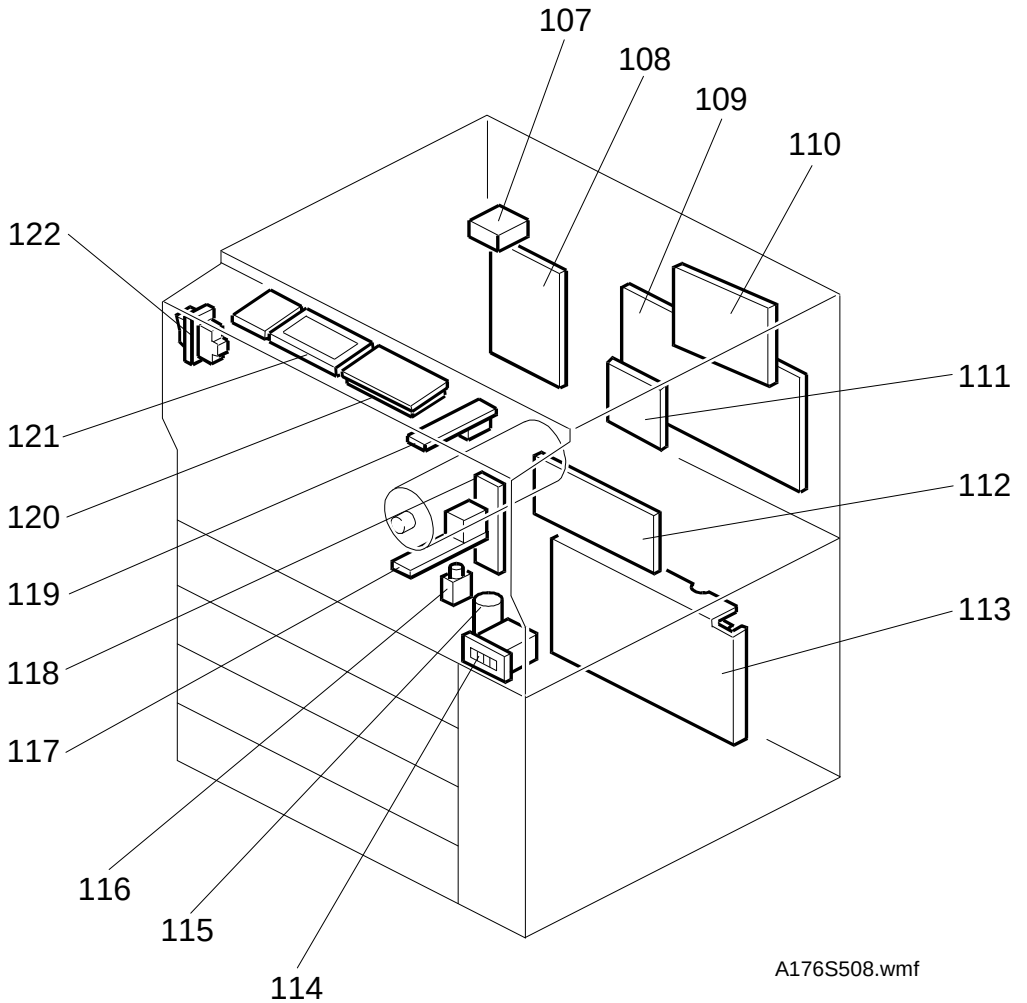
107
108
109
110
122
111
121
112
120
119
113
118
117
116
115
114
A176S508.wmf

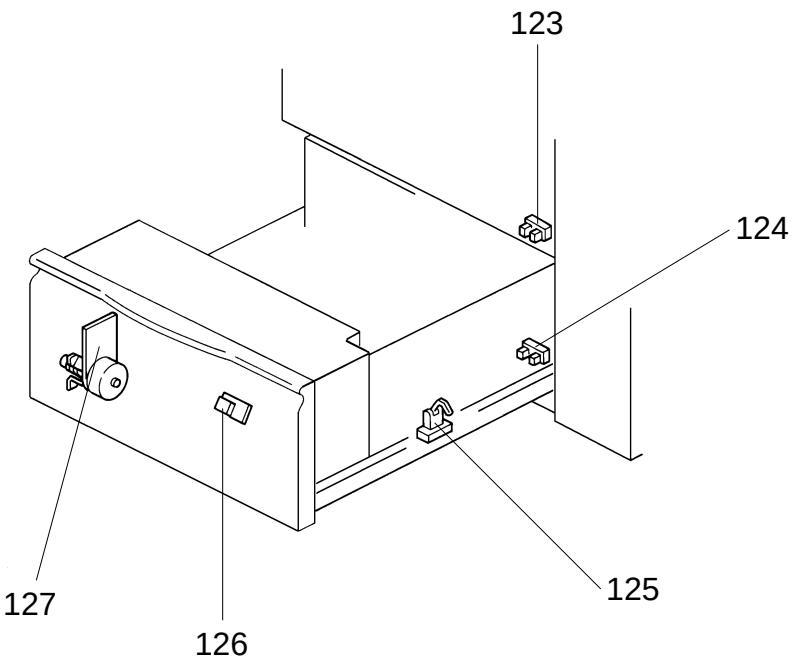

A176S509.img

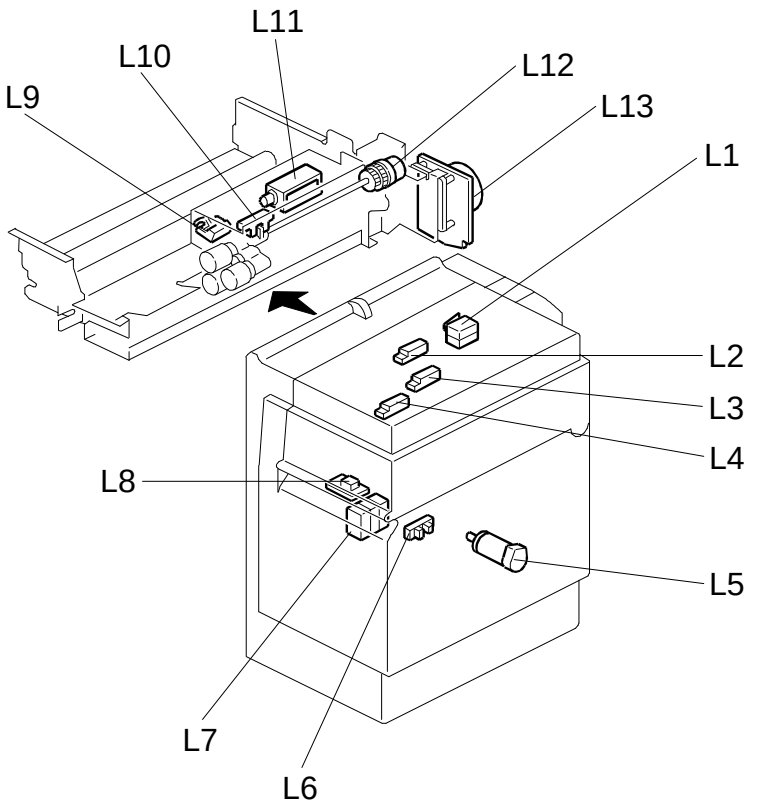

A176S510.wmf

Copier

Symbol	Description	Index No.	P-to-P
Motors			
M1	Scanner Drive	42	P9
M2	Exhaust Fan	43	L9
M3	Main	44	I9
M4	Development Drive	45	G9
M5	By-pass Feed	46	H9
M6	3rd Scanner Drive	47	P11
M7	Toner Bottle Drive	48	H9
M8	Charge Wire Cleaner Drive	49	O1
M9	Jogger	50	Q6
M10	Lens Horizontal Drive	51	M11
M11	Lens Vertical Drive	52	M11
M12	Optic Cooling Fan	53	N11
M13	Fusing/Duplex Drive	54	H9
M14	Paper Feed	90	E8
M15	1st Lift	91	A5
M16	2nd Lift	92	A5
M17	Toner Collection	93	E7
M18	3rd Lift (4 Tray version only)	94	A5
M19	Side Fence Drive (Tandem version only)	95	E3
M20	Rear Fence Drive (Tandem version only)	96	E2
M21	LCT Motor (1,500 Tray version only)	127	A2
M22	AC Drive Cooling Fan (60/70 CPM version only)	141	N2
M23	Optic Cooling Fan-2 (60/70 CPM version only)	142	N2
M24	Duplex Cooling Fan	*143A, B	K2
M25	Drum Cooling Fan (70 CPM version only)	144	M2
M26	4th Lift (4 Tray version only)	151	A5
* (A: 60/70 CPM, B: 50/51 CPM)			
Magnetic Clutches			
MC1	Toner Supply	57	G9
MC2	Registration	58	M9
MC3	By-pass Feed	60	L9
MC4	Duplex Transport	64	Q6
MC5	Duplex Feed	65	Q5
MC6	1st Feed	99	A9

Symbol	Description	Index No.	P-to-P
MC7	2nd Feed	101	A8
MC8	3rd Feed	104	A9
MC9	4th Feed (4 Tray version only)	152	A8
Switches			
SW1	By-pass Table	25	M9
SW2	Front Door Safety	29	F10
SW3	1st Tray Set (Non-Tandem version only)	66	A5
SW4	2nd Paper Size	67	A6
SW5	Toner Overflow	75	A3
SW6	Toner Collection Bottle Set	77	A3
SW7	Lower Front Door Safety	83	E8
SW8	3rd Tray Set (4 Tray version only)	84	A6
SW9	Main	122	H11
SW10	Tray Down (1500 Tray version only)	126	A2
SW11	4th Tray Set (4 Tray version only)	149	A6
Solenoids			
SOL1	Junction Gate	55	K2
SOL2	Duplex Positioning	56	Q6
SOL3	By-pass Pick-up	59	L9
SOL4	Guide Plate	61	M9
SOL5	Transfer Belt Positioning	62	Q2
SOL6	Pressure Arm	63	Q6
SOL7	Tandem Lock	97	A6
SOL8	1st Pick-up	98	A11
SOL9	1st Separation Roller	100	A10
SOL10	2nd Pick-up	102	A10
SOL11	2nd Separation Roller	103	A9
SOL12	3rd Pick-up	105	A7
SOL13	3rd Separation Roller	106	A9
SOL14	4th Pick-up (4 Tray version only)	153	A7
SOL15	4th Separation Roller (4 Tray version only)	154	A8
Sensors			
S1	Scanner HP	1	L11
S2	Platen Cover Position-1	2	L11
S3	Platen Cover Position-2	3	Q11

Symbol	Description	Index No.	P-to-P
S4	Lens Vertical HP	4	L11
S5	Lens Horizontal HP	5	P11
S6	3rd Scanner HP	6	Q11
S7	By-Pass Paper End	7	K9
S8	Guide Plate Position	8	M9
S9	Jogger HP	9	Q7
S10	Vertical Transport	10	K9
S11	Duplex Exit	11	Q7
S12	Duplex Entrance Sensor	12	A7
S13	Duplex Paper End	13	Q7
S14	Duplex Transport	14	K2
S15	Exit	15	K2
S16	Fusing Exit	16	L2
S17	Paper Guide	17	L2
S18	Auto Image Density	20	N11
S19	Original Length-1	21	O11
S20	Original Length-2	22	O11
S21	Original Width	23	N11
S22	By-Pass Paper Size	26	Q5
S23	Toner Density	27	Q5
S24	Registration	28	L9
S25	Toner Near End	30	M9
S26	Auto-Response	34	J9
S27	Drum Potential	39	M2
S28	Image Density	41	N2
S29	1st Paper End	68	A11
S30	1st Paper Near End	69	A5
S31	1st Paper Feed	70	A10
S32	2nd Paper Near End	71	A4
S33	1st Lift	72	A11
S34	2nd Paper End	73	A10
S35	Toner Collection Motor	74	A3
S36	2nd Lift	76	A10
S37	3rd Lift	78	A8
S38	3rd Paper Near End (4 Tray version only)	79	A4
S39	3rd Paper End	80	A8
S40	3rd Paper Feed	81	A9
S41	2nd Paper Feed	82	A9
S42	Base Plate Down (Tandem version only)	85	E2

Symbol	Description	Index No.	P-to-P
S43	Side Fence Positioning (Tandem version only)	86	E2
S44	Rear Fence Return (Tandem version only)	87	E1
S45	Rear Fence HP (Tandem version only)	88	E2
S46	Left Tandem Paper End (Tandem version only)	89	E1
S47	LCT Near End (1,500 Tray version only)	123	A2
S48	Tray Down (1,500 Tray version only)	124	A3
S49	Tray Paper Set (1,500 Tray version only)	125	A2
S50	Side Fence Close (Tandem version only)	150	E3
S51	4th Lift (4 Tray version only)	145	A7
S52	4th Paper Near End (4 Tray version only)	146	A4
S53	4th Paper End (4 Tray version only)	147	A7
S54	4th Paper Feed (4 Tray version only)	148	A8
PCBs			
PCB1	AC Drive	108	I10
PCB2	Main	109	I7
PCB3	Optic Control	110	L10
PCB4	Development Bias Control	111	P4
PCB5	Paper Feed Control	112	C5
PCB6	DC Power Supply Unit	113	E10
PCB7	Guidance	120	K9
PCB8	Operation Panel	121	K9
Lamps			
L1	Exposure	18	J12
L2	Fusing	32	K12
L3	Quenching	37	O2
L4	Erase	38	M2
L5	Pre-transfer	40	O2
Power Packs			
PP1	Transfer	117	Q3
PP2	Charge	119	P4
Others			
TS1	Optics Thermoswitch	19	J11
TF1	Fusing Thermofuse	33	J11

Symbol	Description	Index No.	P-to-P
TH1	Fusing Thermistor	24	K12
TH2	Optics Thermistor	36	L12
TH3	Drum Thermistor (Located on the ID Sensor Ass'y)	41	N12
H1	Transfer Anti-Condensation	31	G11
H2	Optics Anti-Condensation	35	G11
RA1	Main Power Relay	107	I11
CO1	Total Counter	114	J9
NF1	Noise Filter	115	C12
CB1	Circuit Breaker	116	C12
LA1	Lightening Arrestor	118	E11

3.5 k LCT

Symbol	Name	Index No.	P-to-P
Sensors			
LS1	Paper End	L2	H2
LS2	Paper Near End	L3	H2
LS3	Paper Position	L4	G2
LS4	Tray Down	L6	I2
LS5	Feed	L9	I2
LS6	Lift	L10	H2
Switches			
LSW1	Feed Unit Cover	L1	I2
LSW2	LCT Cover	L7	K2
LSW3	Tray Down	L8	H2
Motors			
LM1	LCT	L5	J2
LM2	Feed	L13	J2
Others			
LSOL1	Pick-up	L11	J2
LMC1	Feed	L12	J2

Point To Point Diagram (A175 5911)

