CS120 (A327)

PARTS CATALOG

INTRODUCTION

This chapter instructs you the numbers and names of these parts on this machine.

INDEX to PARTS CATALOG

1. EXTERIOR (A327) 2
2. TRANSPORT SECTION (A327) 4
3. SORTER MAIN BOARD (A327) 6
4. SORTER MAIN HARNESS (A327) 8
5. DECAL AND DOCUMENT (A327) 10

Parts Index 12

1. EXTERIOR (A327)

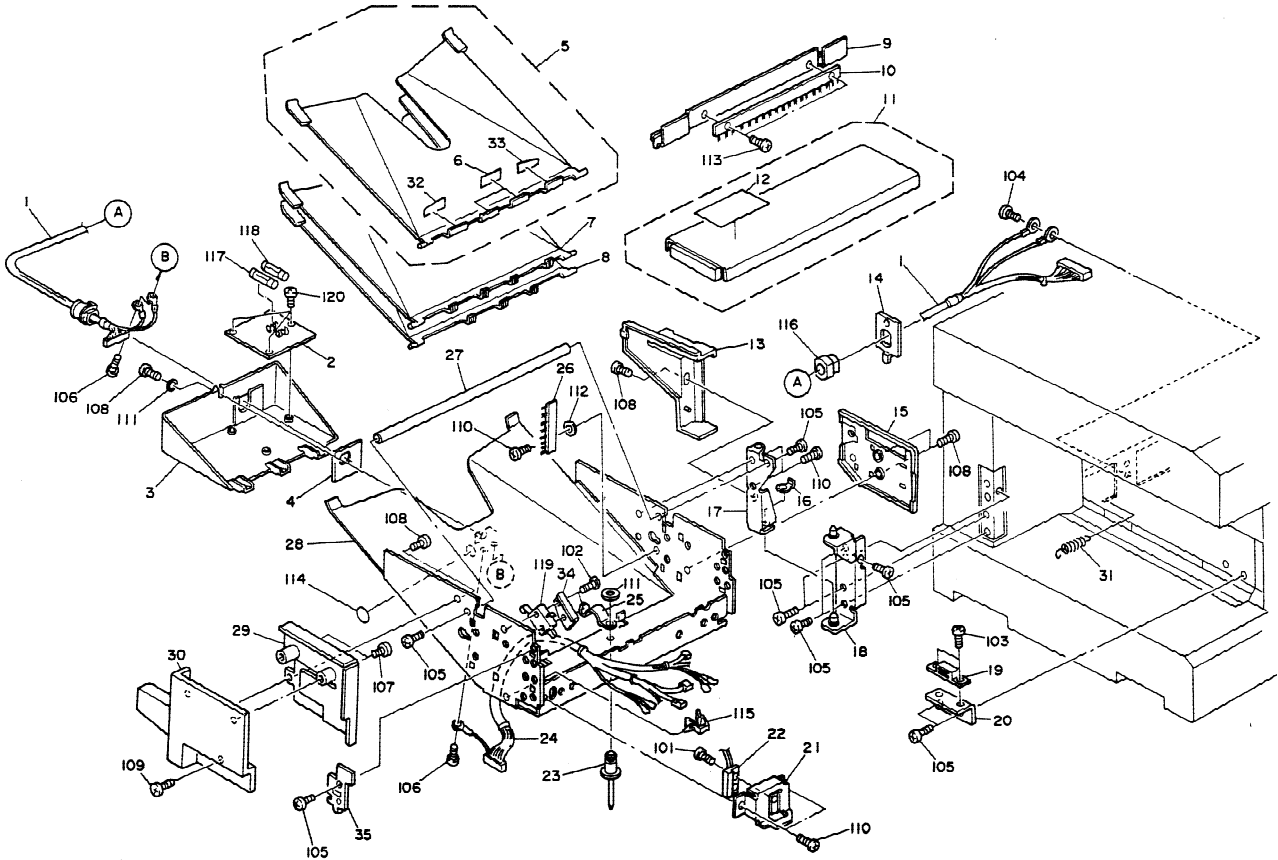

1. EXTERIOR (A327)

Index No.	Part No.	Description	Q'ty per Assembly
1	A327 5610	Interface Harness - 110V	1
1	A327 5615	Interface Harness - 220/240V	1
2	A327 5510	Sorter Main Board	1
3	A467 6161	Lower Cover	1
4	6802 5961	Strain Relief Plate	1
5	A490 3005	Sorter Bin - Top	1
6	6801 3145	Paper Stopper	2
7	A414 3151	Sorter Bin - Even	4
8	A414 3111	Sorter Bin - Odd	4
9	6801 6211	Top Stay	2
10	6769 2272	Antistatic Brush	2
11	A490 6001	Upper Cover	1
12	A490 7802	Misfeed Removal Decal	1
13	A490 6141	Hinge Cover	1
14	A327 5960	Sorter Bracket	1
15	A490 6131	Rear Cover	1
16	5447 2681	Snap Ring	1
17	A490 1020	Upper Hinge Bracket	1
18	A490 1021	Lower Hinge Bracket	1
19	6802 7125	Magnet - Sorter Mounting Base	1
20	A490 7511	Magnet Catch Bracket	1
21	A490 5951	Sensor Bracket	1
22	6802 5640	Reed Switch	1
23	6802 5839	Cord Clamp Rivet	1
24	6801 5600	Sorter Main Harness	1
25	6802 5838	Cord Clamp - M16	1
26	6802 3161	Antistatic Brush - Bin	1
27	AA14 0279	Frame Shaft	1
28	A490 1011	Sorter Frame	1
29	A327 6121	Front Support Cover	1
30	A327 6111	Front Cover	1
31	AA06 0356	Exit Cover Spring	1
32	A490 3146	Front Mylar Seal - Top Bin	1
33	A490 3147	Rear Mylar Seal - Top Bin	1
34	6802 5971	Home Position Switch Cover	1

Index No.	Part No.	Description	Q'ty per Assembly
35	A327 1091	Support Bracket	1
101	0313 0060W	Philips Pan Head Screw - M3x6	
102	[illegible]160W	Philips Pan Head Screw - M3x16	
103	[illegible]060W	Philips Pan Head Screw - M4x6	
104	0314 0080M	Philips Pan Head Screw - M4x8	
105	0314 0080W	Philips Pan Head Screw - M4x8	
106	0315 0080M	Philips Pan Head Screw - M5x8	
107	0324 0080Z	Sunk Screw - 4x8	
108	0354 0080F	Screw - M4x8	
109	0354 0100F	Screw - M4x10	
110	0434 0060W	Tapping Screw - M4x6	
111	0700 0040B	Flat Washer - M4 100 Pcs/Set	
112	0703 0040B	Philips Washer - M4	
113	0960 3006W	Philips Flange Screw - M3x6	
114	1005 0335	Earth Mark	
115	1105 0087	Clamp	
116	1106 0366	Cord Clamp	
117	1107 0406	Fuse - 250V,0.5A	
118	1107 0409	Fuse - 250V,1A	
119	1204 1376	Microswitch	
120	0314 0050W	Philips Pan Head Screw - M4x5	

2. TRANSPORT SECTION (A327)

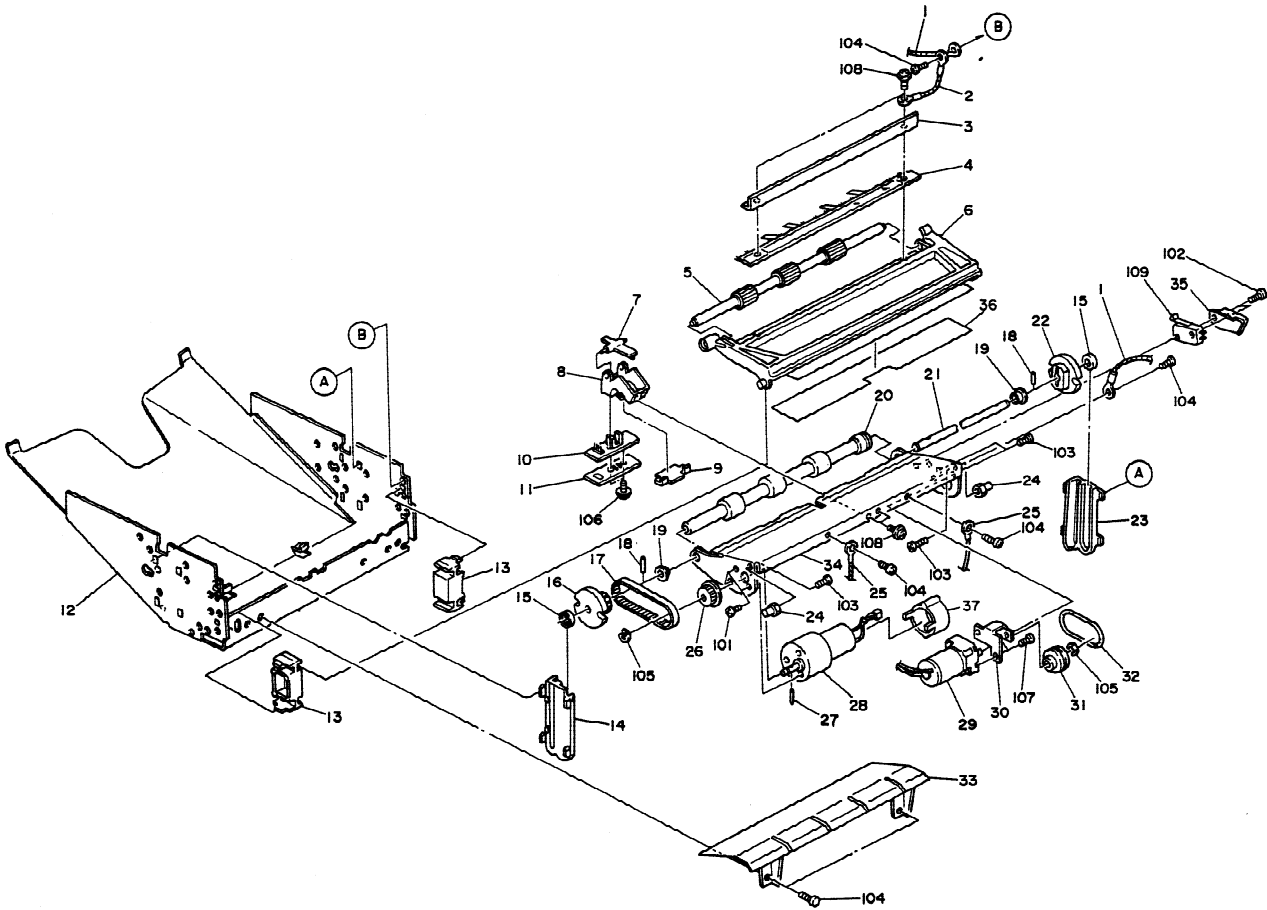

2. TRANSPORT SECTION (A327)

Index No.	Part No.	Description	Q'ty per Assembly
1	6802 5720	Grounding Wire	2
2	6802 5703	Grounding Wire	1
3	6802 2032	Antistatic Brush Angle	1
4	A327 2031	Antistatic Brush - Feed Out	1
5	6801 2021	Upper Exit Roller	1
6	6802 2015	Upper Guide Plate	1
7	6802 2357	Exit Sensor Feeler	1
8	6802 2355	Exit Sensor Bracket	1
9	6801 5921	Harness Guidebracket	1
10	6801 5520	Exit Sensor Board	1
11	6801 5911	Insulating Sheet - Exit Sensor	1
12	A490 1011	Sorter Frame	1
13	6802 1025	Up-down Plate Guide	2
14	6802 1021	Front Slot Liner	1
15	6802 2239	Slot Roller	2
16	6802 2233	Transfer Wheel - A	1
17	6802 2317	Timing Belt - 80XL	1
18	6802 2217	Parallel Key	2
19	6802 2215	Bushing	2
20	6801 2123	Lower Exit Roller	1
21	6802 2213	Bin Drive Shaft	1
22	6802 2237	Transfer Wheel - B	1
23	6802 1023	Rear Slot Liner	1
24	6802 2117	Shaft - Lower Guide Plate	2
25	6801 5600	Sorter Main Harness	1
26	6802 2313	Timing Pulley - 12T	1
27	6802 2315	Drive Pulley Shaft	1
28	A327 5406	Bin Drive Motor	1
29	A423 5410	DC Motor - 24V 2.9W	1
30	6801 2331	Bracket - Roller Drive Motor	1
31	6801 2335	Roller Drive Pulley	1
32	6801 2322	Belt - M3 x 175	1
33	A467 2510	Guide Plate	1
34	6801 2115	Lower Guide Plate	1
35	6802 5972	Wheel Switch Cover	1

Index No.	Part No.	Description	Q'ty per Assembly
36	6802 2035	Upper Reinforcement Guide	1
37	A327 2318	Thermofuse Cover	1
101	0313 0050W	Philips Pan Head Screw - M3x5	
102	0313 0160W	Philips Pan Head Screw - M3x16	
103	0314 0060W	Philips Pan Head Screw - M4x6	
104	0434 0060W	Tapping Screw - M4x6	
105	0720 0040E	Retaining Ring - M4	
106	0965 3008W	Tapping Screw With Flat Washer - M3x8	
107	0965 3010W	Tapping Screw With Flat Washer - M3x10	
108	0965 4008W	Tapping Screw With Flat Washer - M4x8	
109	1204 1376	Microswitch	

3. SORTER MAIN BOARD (A327)

CAPACITOR

SYMBOL NO.	INDEX NO.
C101	112
C102	113
C103	112
C104	113
C105	114
C107	114

CONNECTOR

SYMBOL NO.	INDEX NO.
CN101	101
CN102	102

DIODE

SYMBOL NO.	INDEX NO.
D101	110

FUSE

SYMBOL NO.	INDEX NO.
FU101	104
(FU101)	103
FU102	105
(FU102)	103

IC

SYMBOL NO.	INDEX NO.
IC101	111

PU

SYMBOL NO.	INDEX NO.
PU101	109

RESISTOR

SYMBOL NO.	INDEX NO.
R101	117
R102	119
R103	120
R104	118
R105	115
R106	123
R107	123
R108	123
R109	123
R110	115
R111	116
R112	122
R113	124
R114	121
R115	115
R116	116
R117	122
R118	123
R119	125

TRANSISTOR

SYMBOL NO.	INDEX NO.
Q101	108
Q102	106
Q103	107
Q104	107

3. SORTER MAIN BOARD (A327)

Index No.	Part No.	Description	Q'ty per Assembly
*	A327 5510	Sorter Main Board	1

Index No.	Part No.	Description	Q'ty per Assembly
101	1103 1732	Connector - 10P	
102	1103 1735	Connector - 13P	
103	1104 0307	Fuse Holder	
104	1107 0386	Fuse - 1A	
105	1107 0406	Fuse - 250V,0.5A	
106	1400 0072	Transistor - 2SC372Y	
107	1400 0301	Transistor - 2SC1213AK	
108	1401 0266	Transistor - 2SD1260 - P.Q	
109	1401 0325	Transistor Array - PU4320	
110	1401 0832	Diode - 100V 1A	
111	1408 0200	IC - TA75339P	
112	1604 1386	Capacitor - 100mF +-20% 50V	
113	1605 0604	Capacitor - 0.1mF 50V	
114	1606 1336	Capacitor - 10000pF -20% +80% 50V	
115	1611 4102	Resistor - 1K Ohm 1/4T +-5%	
116	1611 4103	Resistor - 10k Ohm 1/4T +-5%	
117	1611 4121	Resistor - 120 Ohm 1/4T +-5%	
118	1611 4222	Resistor - 2.2K Ohm 1/4T +-5%	
119	1611 4223	Resistor - 22k Ohm 1/4T +-5%	
120	1611 4302	Resistor - 3.0k Ohm 1/4T +-5%	
121	1611 4332	Resistor - 3.3K Ohm 1/4T +-5%	
122	1611 4392	Resistor - 3.9k Ohm 1/4T +-5%	
123	1611 4472	Resistor - 4.7K Ohm 1/4W +-5%	
124	1611 4473	Resistor - 47K Ohm 1/4T +-5%	
125	1611 4752	Resistor - 7.5k Ohm 1/4T +5%	

4. SORTER MAIN HARNESS (A327)

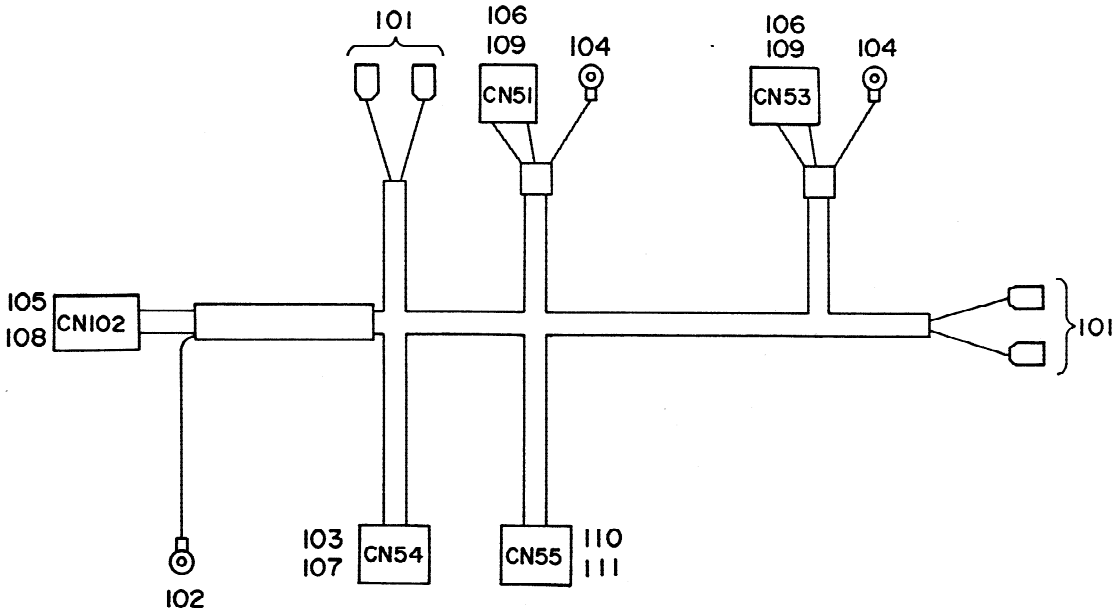

4. SORTER MAIN HARNESS (A327)

Index No.	Part No.	Description	Q'ty per Assembly
*	6801 5600	Sorter Main Harness	1

Index No.	Part No.	Description	Q'ty per Assembly
101	1100 0298	Solid Strand	
102	1100 1159	Ground Terminal	
103	1100 0861	Socket Terminal - Large	
104	1100 1264	Wire Terminal	
105	1100 1327	Contact	
106	1100 1328	Contact	
107	1102 0415	Connector Housing	
108	1102 1921	Connector - 13P	
109	1102 1964	Connector - 2P	
110	6802 5817	Connector - 5P	
111	6802 5823	Key - PK100C	

5. DECAL AND DOCUMENT (A327)

1

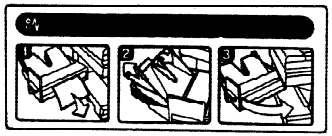

2

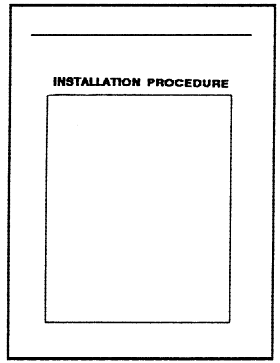

5. DECAL AND DOCUMENT (A327)

Index No.	Part No.	Description	Q'ty per Assembly
1	A490 7802	Misfeed Removal Decal	1
2	A327 8615	Instruction Proceduer	1

Index No.	Part No.	Description	Q'ty per Assembly

PARTS INDEX

Part No.	Description	Paper and Index No.
A327 1091	Support Bracket	3- 35
A327 2031	Antistatic Brush - Feed Out	5- 4
A327 2318	Thermofuse Cover	5- 37
A327 5406	Bin Drive Motor	5- 28
A327 5510	Sorter Main Board	3- 2
A327 5510	Sorter Main Board	7- *
A327 5610	Interface Harness - 110V	3- 1
A327 5615	Interface Harness - 220/240V	3- 1
A327 5960	Sorter Bracket	3- 14
A327 6111	Front Cover	3- 30
A327 6121	Front Support Cover	3- 29
A327 8615	Instruction Proceduer	11- 2

Part No.	Description	Paper and Index No.
AA06 0356	Exit Cover Spring	3- 31
AA14 0279	Frame Shaft	3- 27
A414 3111	Sorter Bin - Odd	3- 8
A414 3151	Sorter Bin - Even	3- 7
A423 5410	DC Motor - 24V 2.9W	5- 29
A467 2510	Guide Plate	5- 33
A467 6161	Lower Cover	3- 3
A490 1011	Sorter Frame	3- 28
A490 1011	Sorter Frame	5- 12
A490 1020	Upper Hinge Bracket	3- 17
A490 1021	Lower Hinge Bracket	3- 18
A490 3005	Sorter Bin - Top	3- 5
A490 3146	Front Mylar Seal - Top Bin	3- 32
A490 3147	Rear Mylar Seal - Top Bin	3- 33
A490 5951	Sensor Bracket	3- 21
A490 6001	Upper Cover	3- 11
A490 6131	Rear Cover	3- 15
A490 6141	Hinge Cover	3- 13
A490 7511	Magnet Catch Bracket	3- 20
A490 7802	Misfeed Removal Decal	3- 12
A490 7802	Misfeed Removal Decal	11- 1
5447 2681	Snap Ring	3- 16
6769 2272	Antistatic Brush	3- 10
6801 2021	Upper Exit Roller	5- 5
6801 2115	Lower Guide Plate	5- 34
6801 2123	Lower Exit Roller	5- 20
6801 2322	Belt - M3 x 175	5- 32
6801 2331	Bracket - Roller Drive Motor	5- 30
6801 2335	Roller Drive Pulley	5- 31
6801 3145	Paper Stopper	3- 6
6801 5520	Exit Sensor Board	5- 10
6801 5600	Sorter Main Harness	3- 24
6801 5600	Sorter Main Harness	5- 25
6801 5600	Sorter Main Harness	9- *
6801 5911	Insulating Sheet - Exit Sensor	5- 11

Part No.	Description	Paper and Index No.
6801 5921	Harness Guidebracket	5- 9
6801 6211	Top Stay	3- 9
6802 1021	Front Slot Liner	5-14
6802 1023	Rear Slot Liner	5-23
6802 1025	Up-down Plate Guide	5-13
6802 2015	Upper Guide Plate	5- 6
6802 2032	Antistatic Brush Angle	5- 3
6802 2035	Upper Reinforcement Guide	5-36
6802 2117	Shaft - Lower Guide Plate	5-24
6802 2213	Bin Drive Shaft	5-21
6802 2215	Bushing	5-19
6802 2217	Parallel Key	5-18
6802 2233	Transfer Wheel - A	5-16
6802 2237	Transfer Wheel - B	5-22
6802 2239	Slot Roller	5-15
6802 2313	Timing Pulley - 12T	5-26
6802 2315	Drive Pulley Shaft	5-27
6802 2317	Timing Belt - 80XL	5-17
6802 2355	Exit Sensor Bracket	5- 8
6802 2357	Exit Sensor Feeler	5- 7
6802 3161	Antistatic Brush - Bin	3-26
6802 5640	Reed Switch	3-22
6802 5703	Grounding Wire	5- 2
6802 5720	Grounding Wire	5- 1
6802 5817	Connector - 5P	9-110
6802 5823	Key - PK100C	9-111
6802 5838	Cord Clamp - M16	3-25
6802 5839	Cord Clamp Rivet	3-23
6802 5961	Strain Relief Plate	3- 4
6802 5971	Home Position Switch Cover	3-34
6802 5972	Wheel Switch Cover	5-35
6802 7125	Magnet - Sorter Mounting Base	3-19

Part No.	Description	Paper and Index No.
0313 0050W	Philips Pan Head Screw - M3x5	5-101
0313 0060W	Philips Pan Head Screw - M3x6	3-101
0313 0160W	Philips Pan Head Screw - M3x16	3-102
0313 0160W	Philips Pan Head Screw - M3x16	5-102
0314 0050W	Philips Pan Head Screw - M4x5	3-120
0314 0060W	Philips Pan Head Screw - M4x6	3-103
0314 0060W	Philips Pan Head Screw - M4x6	5-103
0314 0080M	Philips Pan Head Screw - M4x8	3-104
0314 0080W	Philips Pan Head Screw - M4x8	3-105
0315 0080M	Philips Pan Head Screw - M5x8	3-106
0324 0080Z	Sunk Screw - 4x8	3-107
0354 0080F	Screw - M4x8	3-108
0354 0100F	Screw - M4x10	3-109
0434 0060W	Tapping Screw - M4x6	3-110
0434 0060W	Tapping Screw - M4x6	5-104
0700 0040B	Flat Washer - M4 100 Pcs/Set	3-111
0703 0040B	Philips Washer - M4	3-112
0720 0040E	Retaining Ring - M4	5-105
0960 3006W	Philips Flange Screw - M3x6	3-113
0965 3008W	Tapping Screw With Flat Washer - M3x8	5-106
0965 3010W	Tapping Screw With Flat Washer - M3x10	5-107
0965 4008W	Tapping Screw With Flat Washer - M4x8	5-108
1005 0335	Earth Mark	3-114
1100 0298	Solid Strand	9-101
1100 0861	Socket Terminal - Large	9-103
1100 1159	Ground Terminal	9-102
1100 1264	Wire Terminal	9-104
1100 1327	Contact	9-105
1100 1328	Contact	9-106
1102 0415	Connector Housing	9-107
1102 1921	Connector - 13P	9-108
1102 1964	Connector - 2P	9-109
1103 1732	Connector - 10P	7-101
1103 1735	Connector - 13P	7-102
1104 0307	Fuse Holder	7-103

Part No.	Description	Paper and Index No.
1105 0087	Clamp	3-115
1106 0366	Cord Clamp	3-116
1107 0386	Fuse - 1A	7-104
1107 0406	Fuse - 250V,0.5A	3-117
1107 0406	Fuse - 250V,0.5A	7-105
1107 0409	Fuse - 250V,1A	3-118
1204 1376	Microswitch	3-119
1204 1376	Microswitch	5-109
1400 0072	Transistor - 2SC372Y	7-106
1400 0301	Transistor - 2SC1213AK	7-107
1401 0266	Transistor - 2SD1260 - P.Q	7-108
1401 0325	Transistor Array - PU4320	7-109
1401 0832	Diode - 100V 1A	7-110
1408 0200	IC - TA75339P	7-111
1604 1386	Capacitor - 100mF ±20% 50V	7-112
1605 0604	Capacitor - 0.1mF 50V	7-113
1606 1336	Capacitor - 10000pF -20% +80% 50V	7-114
1611 4102	Resistor - 1K Ω 1/4T ±5%	7-115
1611 4103	Resistor - 10k Ω 1/4T ±5%	7-116
1611 4121	Resistor - 120 Ω 1/4T ±5%	7-117
1611 4222	Resistor - 2.2K Ω 1/4T ±5%	7-118
1611 4223	Resistor - 22k Ω 1/4T ±5%	7-119
1611 4302	Resistor - 3.0k Ω 1/4T ±5%	7-120
1611 4332	Resistor - 3.3K Ω 1/4T ±5%	7-121
1611 4392	Resistor - 3.9k Ω 1/4T ±5%	7-122
1611 4472	Resistor - 4.7K Ω 1/4W ±5%	7-123
1611 4473	Resistor - 47K Ω 1/4T ±5%	7-124
1611 4752	Resistor - 7.5k Ω 1/4T +5%	7-125

Part No.	Description	Paper and Index No.