ПРИЛОЖЕНИЕ (5)

(Серия CR)

Содержание

Описание плат

1. Блок-схема ..... APX(5)-1

2.Расположение плат ..... APX(5)-2

3. Главная плата ..... APX(5)-3 до 9

4. Блок питания ..... APX(5)-10 до 12

5. Плата датчиков установки тубы с краской ..... APX(5)-13

6. Дополнительная плата ..... APX(5)-14 и 15

1. Блок-схема


Выключ. безопасности
CN3
Блок питания
CN4
CN2
CN6
Плата панели
Главный мотор
Другие компоненты
CN7
CN5
CN8
CN9
CN3
Другие компоненты
CN4
Другие компоненты
Плата датчиков установки тубы
Датчик установки барабана
Термого-ловка
CN2
Главная плата
CN6
Другие компоненты
Источник света 1
CN3
Сканер (300 dpi)
CN4
Источник света 2
(только CR1630)
CN3
CN1
CN10
Другие компоненты
CN11
CN15
Разделитель тиражей
CN1
Компьютерный интерфейс
CN2
CN4
Идентификатор пользователя
Дополнительная плата
N.C.
CN3

2. Расположение плат

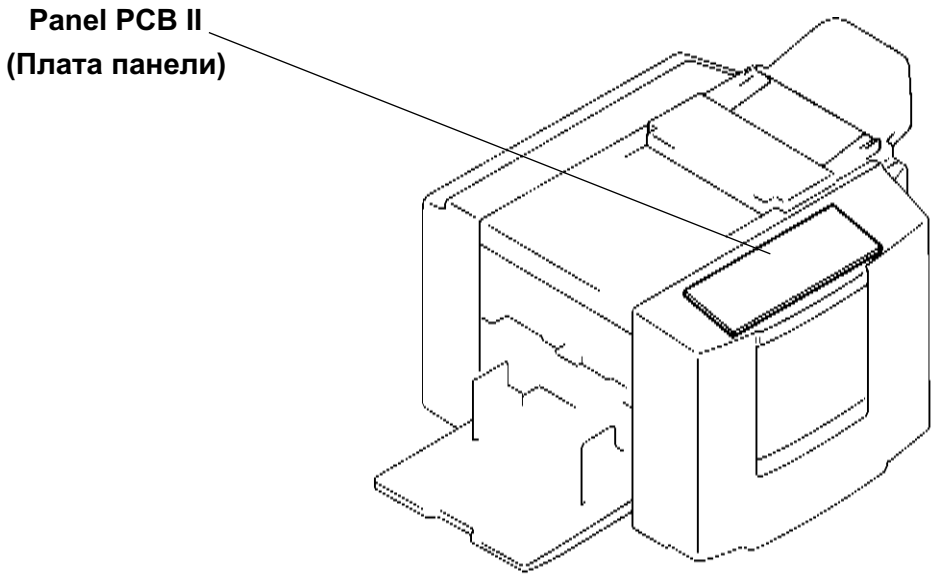

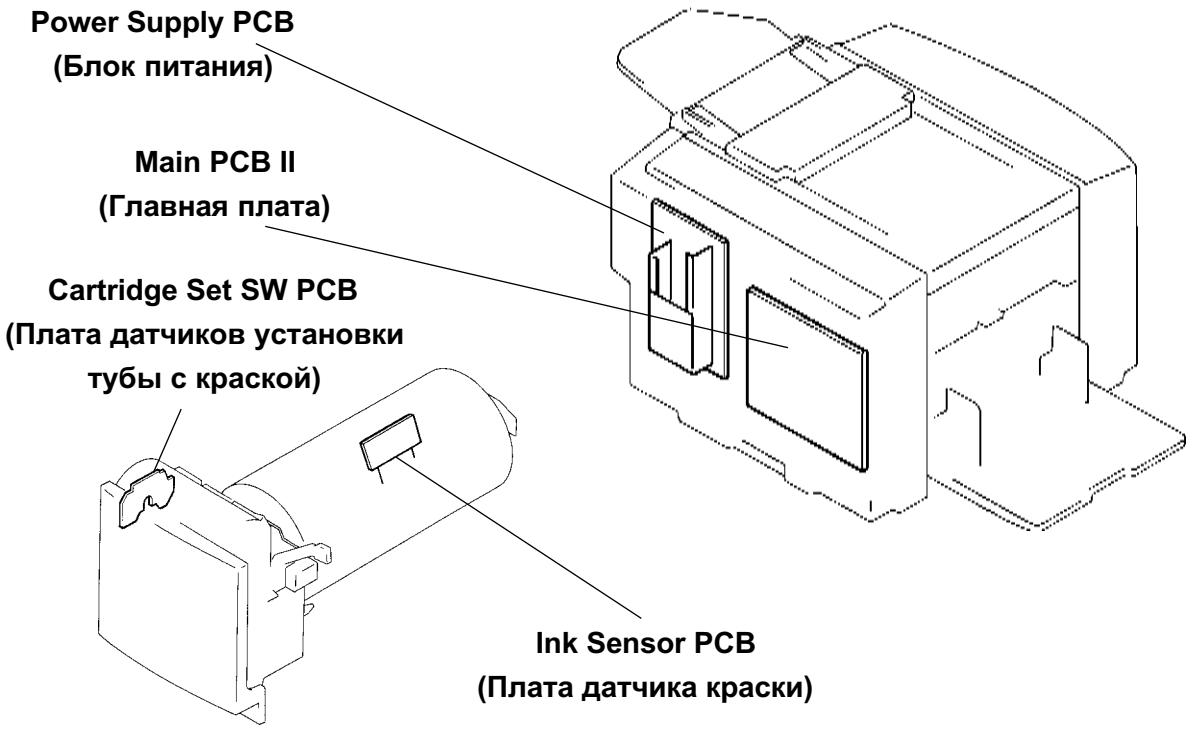

3. Главная плата

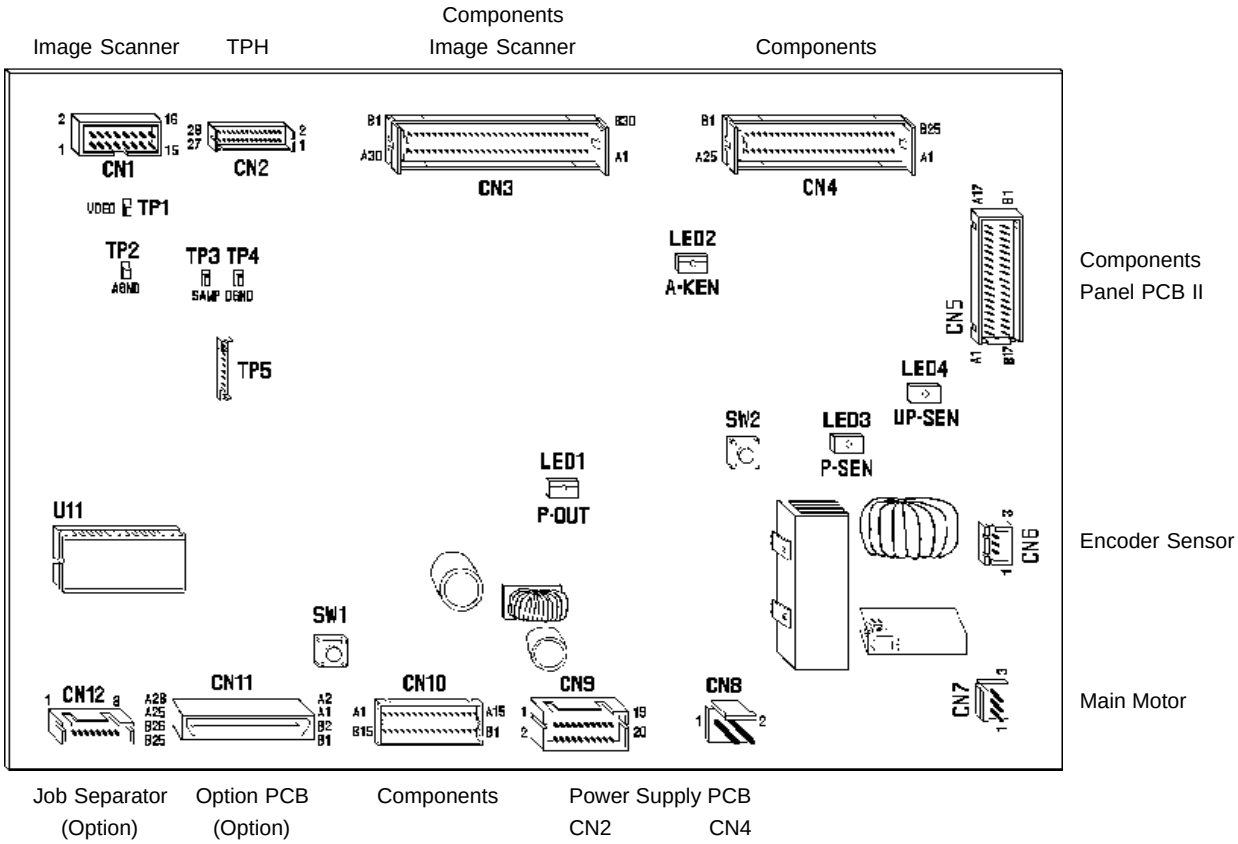

SW

SW1 : For factory adjustment only
SW2 : Drum (Main motor) 15 rpm

LED

			When LED is ON
LED1:	**P-OUT**	-Paper Receiving	SensorPaper detected (Reflected light detected)
LED2:	**A-KEN**	-Position A Sensor	Position A detected (Light path is blocked)
LED3:	**P-SEN**	-Paper Sensor	Paper detected (Light path is blocked)
LED4:	**UP-SEN**	-Elevator Upper Limit Sensor	Upper Limit Position detected (Light path is blocked)

TP

TP1 : **VDEO** For factory adjustment only
TP2 : **AGND** For factory adjustment only
TP3 : **SAMP** For factory adjustment only
TP4 : **DGND** For factory adjustment only

ОПИСАНИЕ ГЛАВНОЙ ПЛАТЫ (2/7)

a: Wire Harness; Image Scanner
b: Wire Harness III; TPH-Signal
c: Wire Harness; Main-Power
d: Wire Harness; JS III

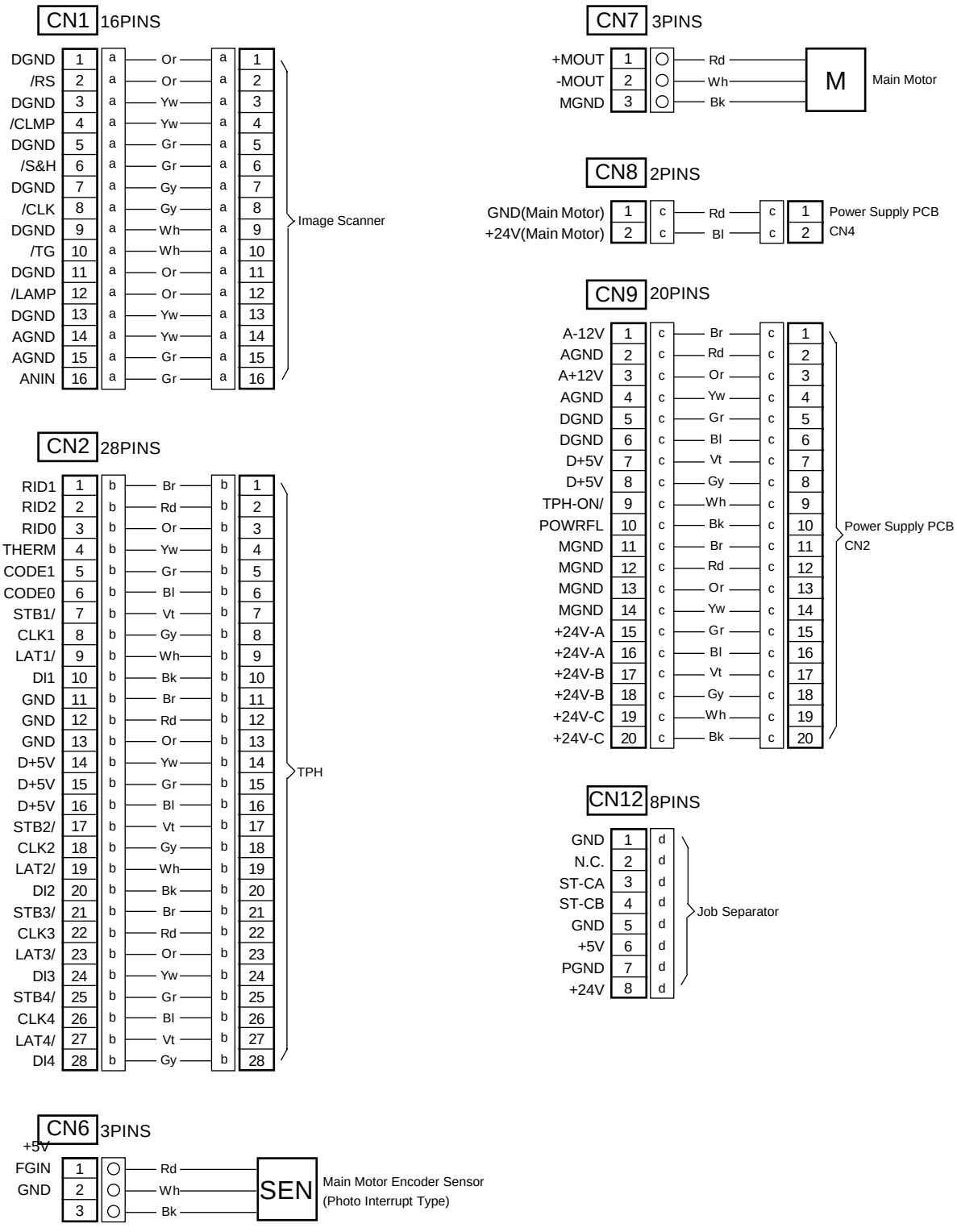

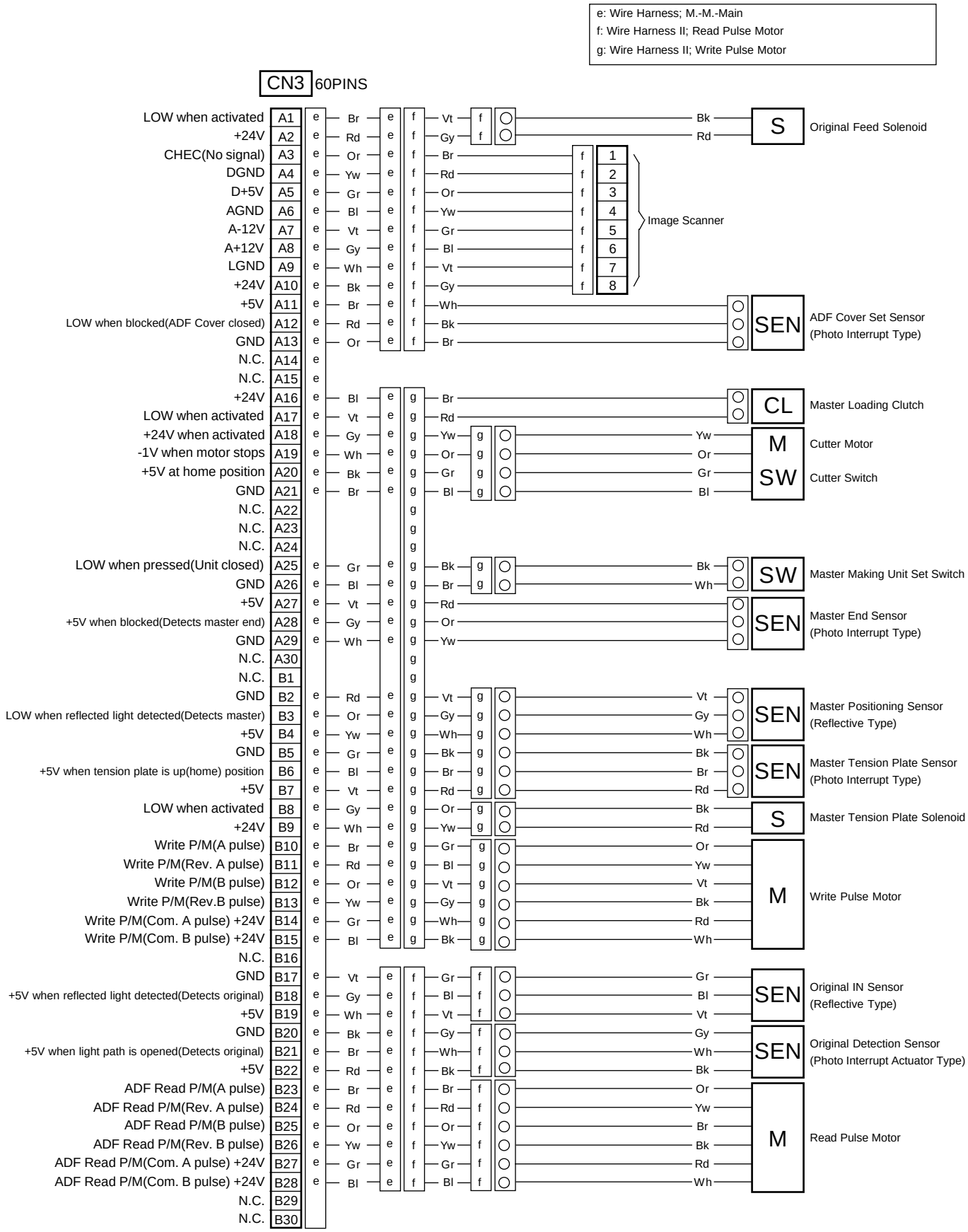
e: Wire Harness; M.-M.-Main
f: Wire Harness II; Read Pulse Motor
g: Wire Harness II; Write Pulse Motor
CN3 60PINS
LOW when activated A1 e Br e f Vt f Bk S Original Feed Solenoid
+24V A2 e Rd e f Gy f Rd
CHEC(No signal) A3 e Or e f Br f 1
DGND A4 e Yw e f Rd f 2
D+5V A5 e Gr e f Or f 3
AGND A6 e Bl e f Yw f 4
A-12V A7 e Vt e f Gr f 5
A+12V A8 e Gy e f Bl f 6
LGND A9 e Wh e f Vt f 7
+24V A10 e Bk e f Gy f 8
Image Scanner
+5V A11 e Br e f Wh SEN ADF Cover Set Sensor (Photo Interrupt Type)
LOW when blocked(ADF Cover closed) A12 e Rd e f Bk
GND A13 e Or e f Br
N.C. A14 e
N.C. A15 e
+24V A16 e Bl e g Br CL Master Loading Clutch
LOW when activated A17 e Vt e g Rd
+24V when activated A18 e Gy e g Yw g Yw M Cutter Motor
-1V when motor stops A19 e Wh e g Or g Or
+5V at home position A20 e Bk e g Gr g Gr SW Cutter Switch
GND A21 e Br e g Bl g Bl
N.C. A22 g
N.C. A23 g
N.C. A24 g
LOW when pressed(Unit closed) A25 e Gr e g Bk g Bk SW Master Making Unit Set Switch
GND A26 e Bl e g Br g Wh
+5V A27 e Vt e g Rd SEN Master End Sensor (Photo Interrupt Type)
+5V when blocked(Detects master end) A28 e Gy e g Or
GND A29 e Wh e g Yw
N.C. A30 g
N.C. B1 g
GND B2 e Rd e g Vt g Vt SEN Master Positioning Sensor (Reflective Type)
LOW when reflected light detected(Detects master) B3 e Or e g Gy g Gy
+5V B4 e Yw e g Wh g Wh
GND B5 e Gr e g Bk g Bk SEN Master Tension Plate Sensor (Photo Interrupt Type)
+5V when tension plate is up(home) position B6 e Bl e g Br g Br
+5V B7 e Vt e g Rd g Rd
LOW when activated B8 e Gy e g Or g Bk S Master Tension Plate Solenoid
+24V B9 e Wh e g Yw g Rd
Write P/M(A pulse) B10 e Br e g Gr g Or M Write Pulse Motor
Write P/M(Rev. A pulse) B11 e Rd e g Bl g Yw
Write P/M(B pulse) B12 e Or e g Vt g Vt
Write P/M(Rev.B pulse) B13 e Yw e g Gy g Bk
Write P/M(Com. A pulse) +24V B14 e Gr e g Wh g Rd
Write P/M(Com. B pulse) +24V B15 e Bl e g Bk g Wh
N.C. B16
GND B17 e Vt e f Gr f Gr SEN Original IN Sensor (Reflective Type)
+5V when reflected light detected(Detects original) B18 e Gy e f Bl f Bl
+5V B19 e Wh e f Vt f Vt
GND B20 e Bk e f Gy f Gy SEN Original Detection Sensor (Photo Interrupt Actuator Type)
+5V when light path is opened(Detects original) B21 e Br e f Wh f Wh
+5V B22 e Rd e f Bk f Bk
ADF Read P/M(A pulse) B23 e Br e f Br f Or M Read Pulse Motor
ADF Read P/M(Rev. A pulse) B24 e Rd e f Rd f Yw
ADF Read P/M(B pulse) B25 e Or e f Or f Br
ADF Read P/M(Rev. B pulse) B26 e Yw e f Yw f Bk
ADF Read P/M(Com. A pulse) +24V B27 e Gr e f Gr f Rd
ADF Read P/M(Com. B pulse) +24V B28 e Bl e f Bl f Wh
N.C. B29
N.C. B30

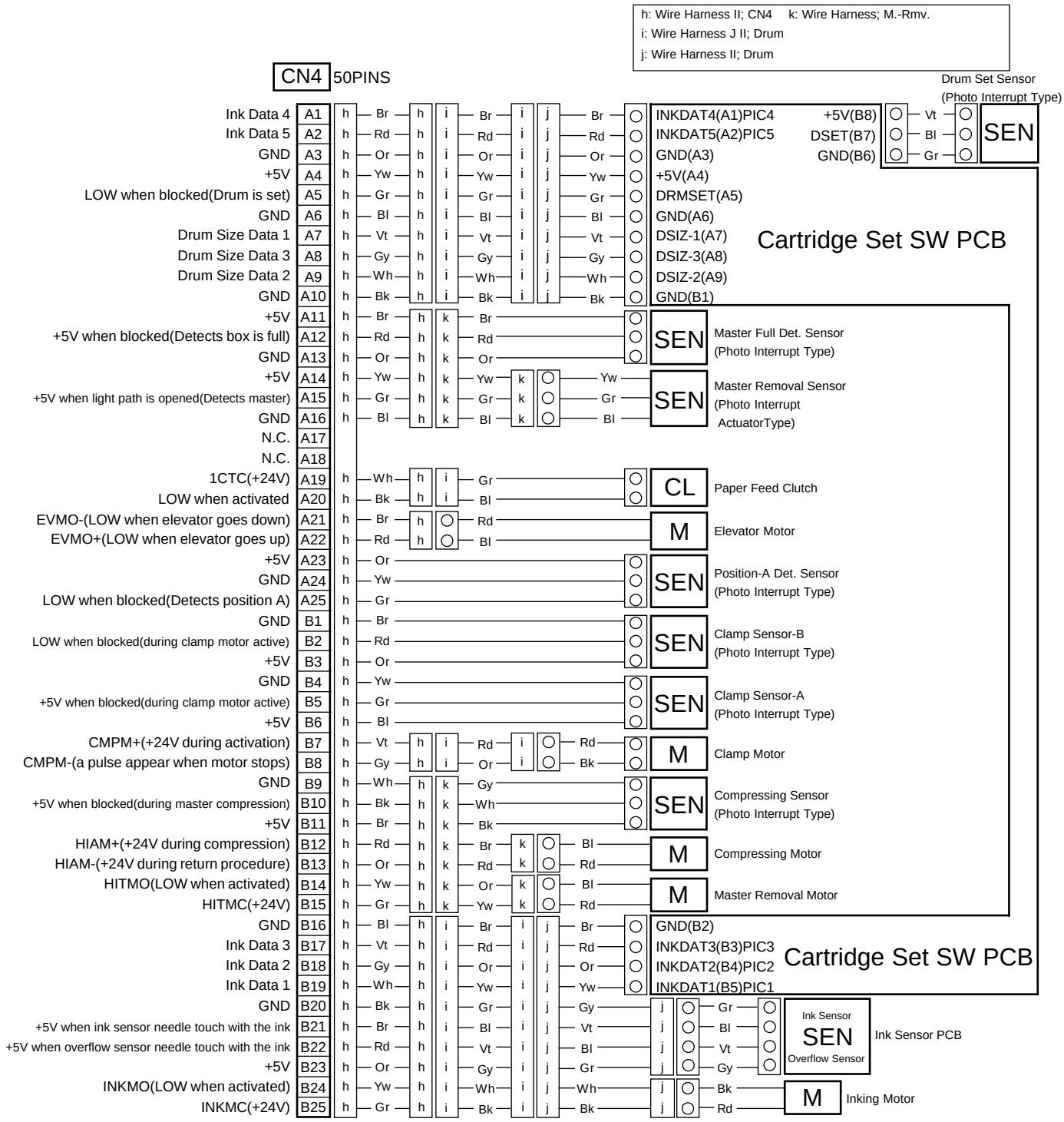
h: Wire Harness II; CN4 k: Wire Harness; M.-Rmv.
i: Wire Harness J II; Drum
j: Wire Harness II; Drum
CN4 50PINS
Drum Set Sensor
(Photo Interrupt Type)
Ink Data 4 A1
Ink Data 5 A2
GND A3
+5V A4
LOW when blocked(Drum is set) A5
GND A6
Drum Size Data 1 A7
Drum Size Data 3 A8
Drum Size Data 2 A9
GND A10
INKDAT4(A1)PIC4
INKDAT5(A2)PIC5
GND(A3)
+5V(A4)
DRMSET(A5)
GND(A6)
DSIZ-1(A7)
DSIZ-3(A8)
DSIZ-2(A9)
GND(B1)
+5V(B8)
DSET(B7)
GND(B6)
SEN
Cartridge Set SW PCB
+5V A11
+5V when blocked(Detects box is full) A12
GND A13
SEN
Master Full Det. Sensor
(Photo Interrupt Type)
+5V A14
+5V when light path is opened(Detects master) A15
GND A16
SEN
Master Removal Sensor
(Photo Interrupt
ActuatorType)
N.C. A17
N.C. A18
1CTC(+24V) A19
LOW when activated A20
CL
Paper Feed Clutch
EVMO-(LOW when elevator goes down) A21
EVMO+(LOW when elevator goes up) A22
M
Elevator Motor
+5V A23
GND A24
LOW when blocked(Detects position A) A25
SEN
Position-A Det. Sensor
(Photo Interrupt Type)
GND B1
LOW when blocked(during clamp motor active) B2
+5V B3
SEN
Clamp Sensor-B
(Photo Interrupt Type)
GND B4
+5V when blocked(during clamp motor active) B5
+5V B6
SEN
Clamp Sensor-A
(Photo Interrupt Type)
CMPM+(+24V during activation) B7
CMPM-(a pulse appear when motor stops) B8
M
Clamp Motor
GND B9
+5V when blocked(during master compression) B10
+5V B11
SEN
Compressing Sensor
(Photo Interrupt Type)
HIAM+(+24V during compression) B12
HIAM-(+24V during return procedure) B13
M
Compressing Motor
HITMO(LOW when activated) B14
HITMC(+24V) B15
M
Master Removal Motor
GND B16
Ink Data 3 B17
Ink Data 2 B18
Ink Data 1 B19
GND B20
GND(B2)
INKDAT3(B3)PIC3
INKDAT2(B4)PIC2
INKDAT1(B5)PIC1
Cartridge Set SW PCB
+5V when ink sensor needle touch with the ink B21
+5V when overflow sensor needle touch with the ink B22
+5V B23
Ink Sensor
SEN
Overflow Sensor
Ink Sensor PCB
INKMO(LOW when activated) B24
INKMC(+24V) B25
M
Inking Motor

m: Wire Harness III; CN5
n: Wire Harness III; P.-F.

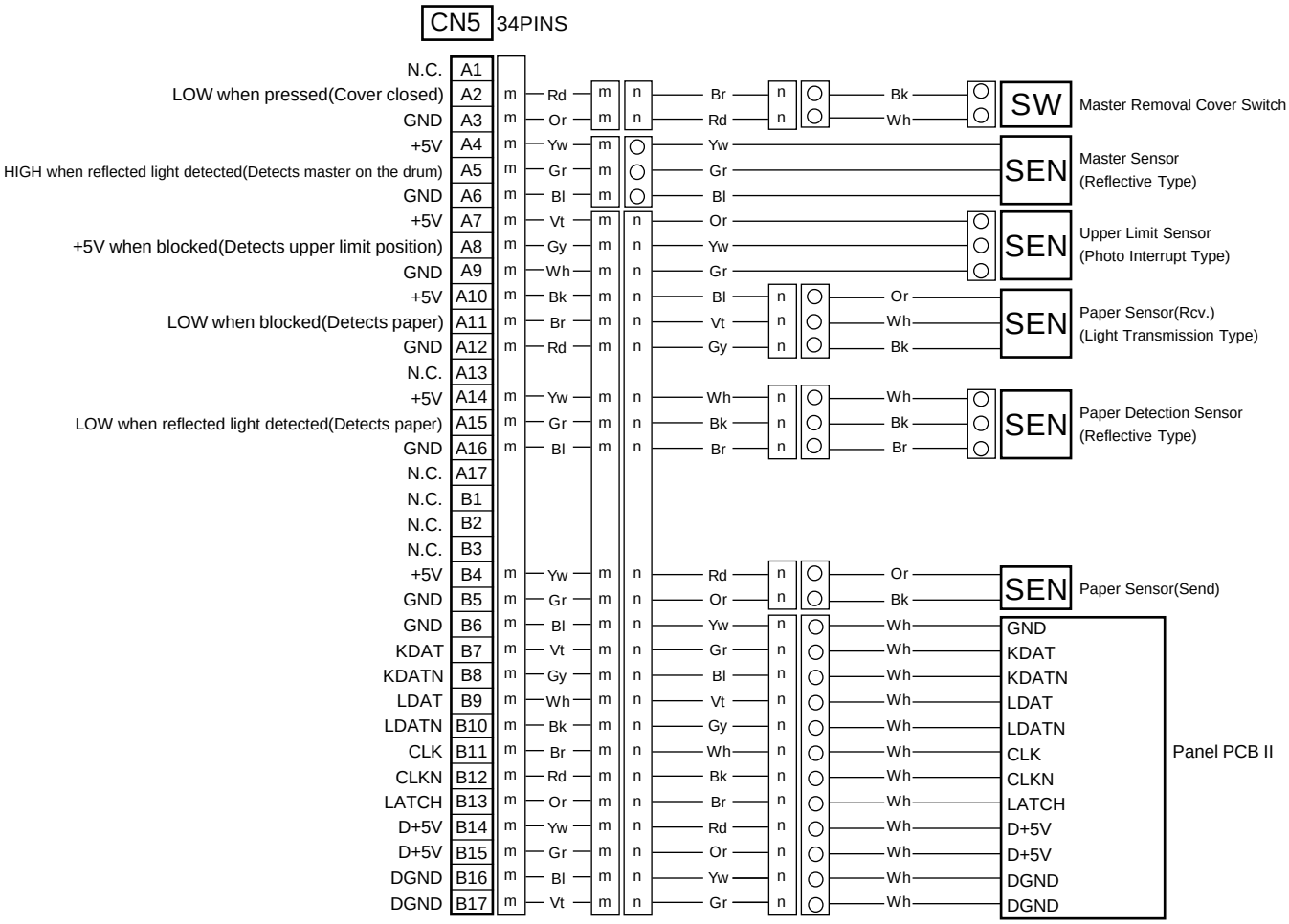

ОПИСАНИЕ ГЛАВНОЙ ПЛАТЫ (6/7)

n: Wire Harness III; P.-F.
p: Wire Harness II; CN10

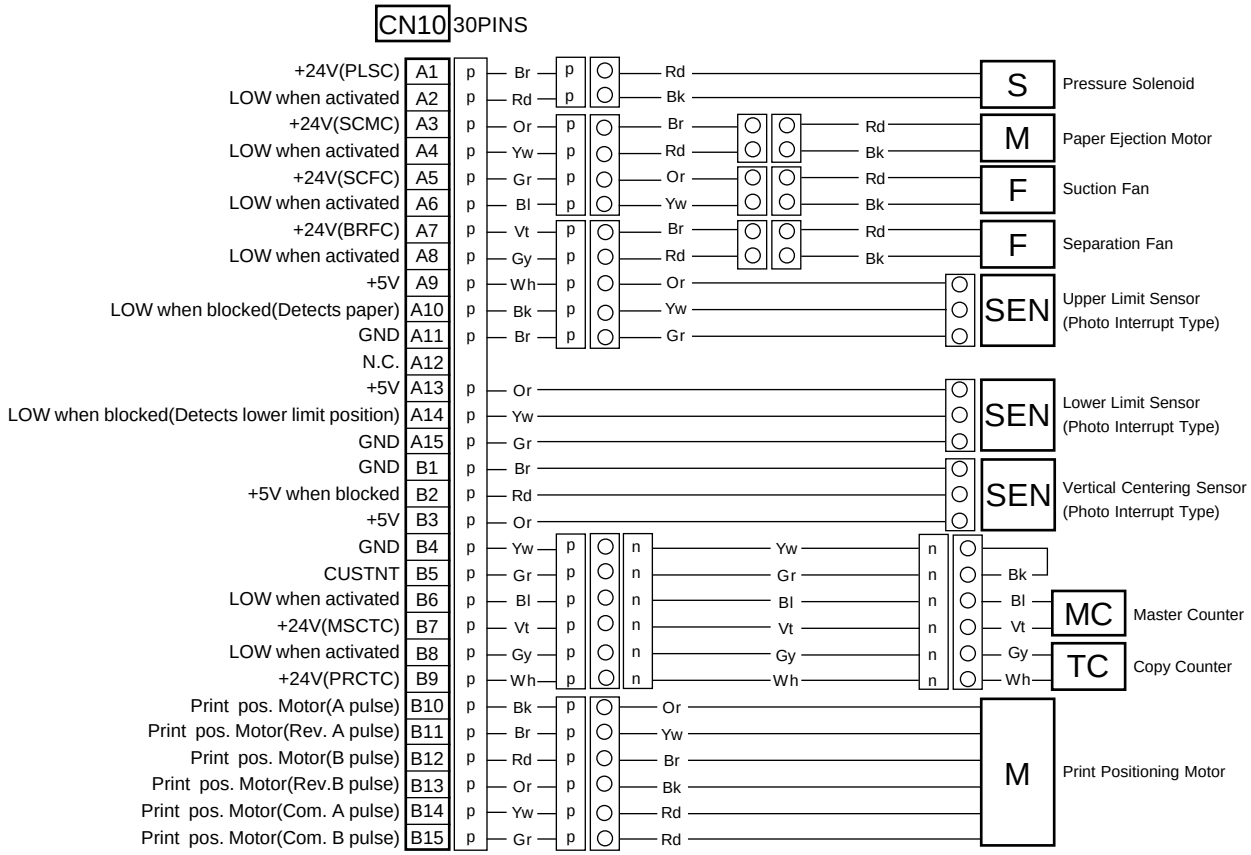

q: Wire Harness; I/F

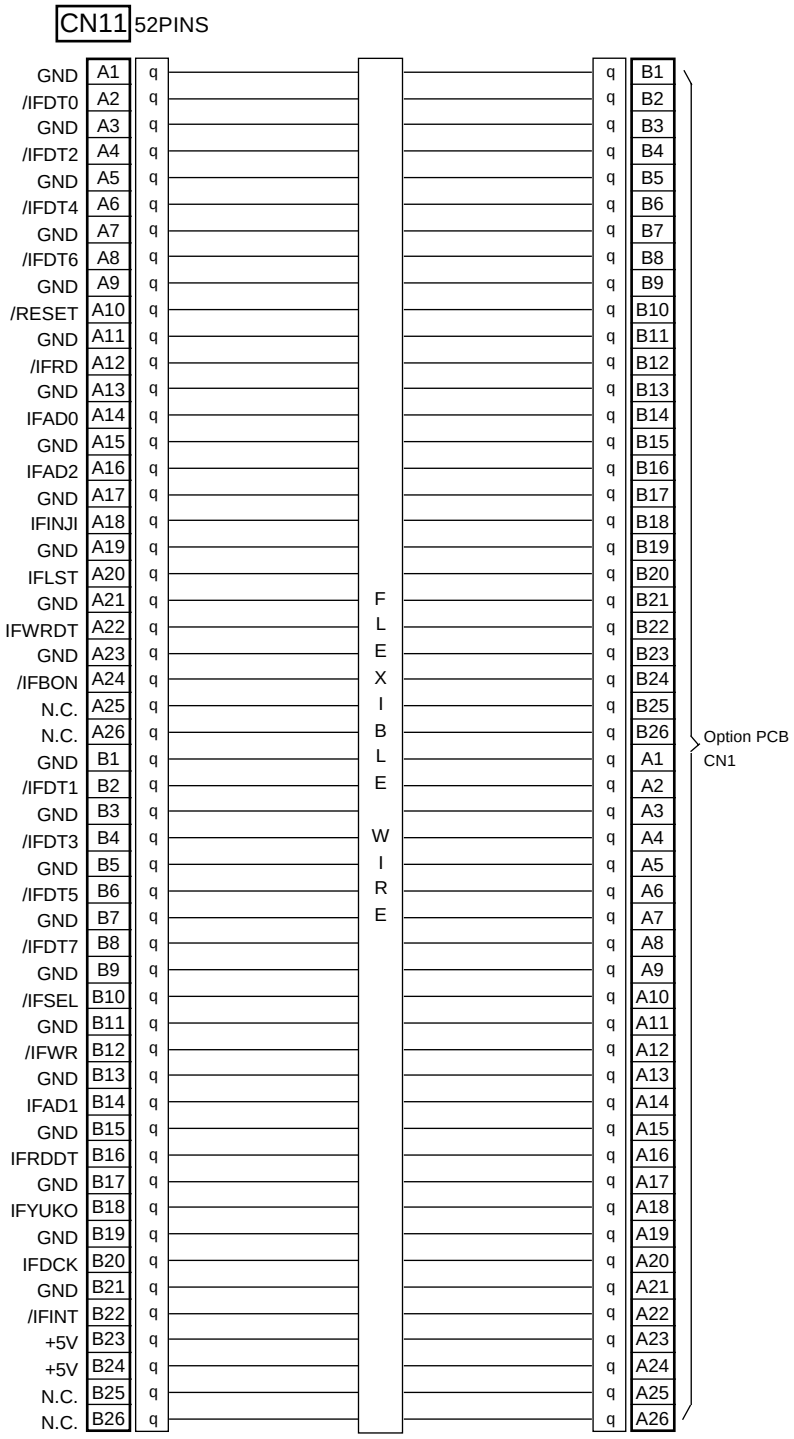

4. Блок питания

4-1. Блок питания (100-120V)

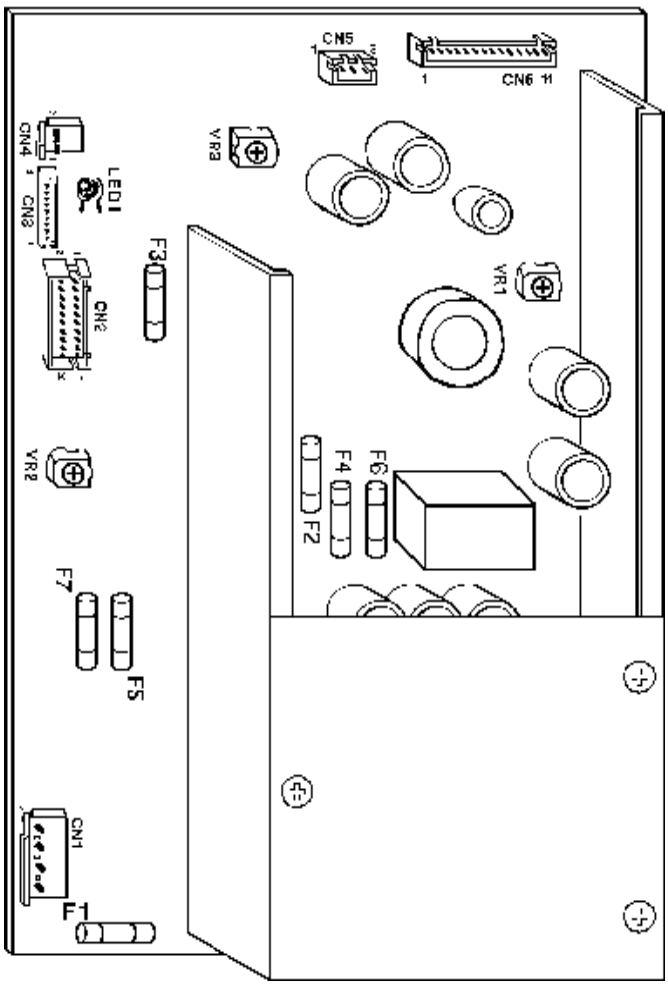

CN

CN1 : From Main Power Switch
CN2 : To Main PCB II CN9
CN3 : To Safety Switches
CN4 : To Main PCB II CN8
CN5 : For adjusting of TPH voltage
CN6 : To TPH

VR

VR1 : For factory adjustment only
VR2 : For factory adjustment only
VR3 : For adjusting of TPH voltage

LED

LED1 : Lights up when all three safety switches closed (RL1 ON)

FUSE

No.	Specification	Voltage/ Pin number	Area
F1	10A 125V	Main Fuse	Input Voltage
F2	8A 125V	+24V (CN4, Pin2)	Main PCB II
F3	3.15A 125V	+24V (CN2, Pin15, 16, 19 & 20)	Main PCB II
F4	3.15A 125V	+24V (CN2, Pin17 & 18)	Main PCB II
F5	1A 125V	-12V (CN2, Pin1)	Main PCB II
F6	3.15A 125V	+24V (CN3)	All Safety Switchs
F7	1A 125V	+12V (CN2, Pin3)	Main PCB II

4-2. Блок питания (200-240V)

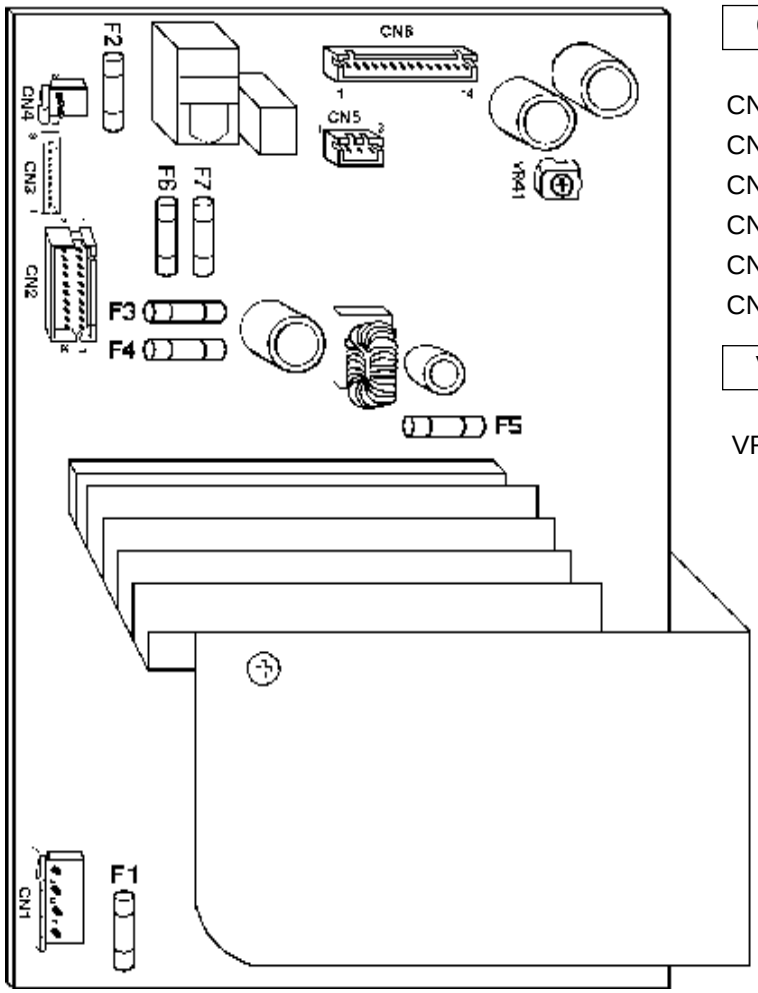

CN

CN1 : From Main Power Switch
CN2 : To Main PCB II CN9
CN3 : To Safety Switches
CN4 : To Main PCB II CN8
CN5 : For adjustment of TPH voltage
CN6 : To TPH

VR

VR41 : For adjustment of TPH voltage

FUSE

No.	Specification	Voltage/ Pin number	Area
F1	4A 250V	Main Fuse	Input Voltage
F2	6.3A 250V	+24V (CN4, Pin2)	Main PCB II
F3	3.15A 250V	+24V (CN2, Pin15, 16, 19 & 20)	Main PCB II
F4	3.15A 250V	+24V (CN2, Pin17 & 18)	Main PCB II
F5	3.15A 250V	-12V (CN2, Pin1)	Main PCB II
F6	1A 250V	+24V (CN3)	All Safety Switchs
F7	1A 250V	+12V (CN2, Pin3)	Main PCB II

ПРИЛОЖЕНИЕ (5)

ОПИСАНИЕ БЛОКА ПИТАНИЯ (3/3)

c: Wire Harness; Main-Power
s: Wire Harness(II); TPH-Power
j: Wire Harness; Safety SW

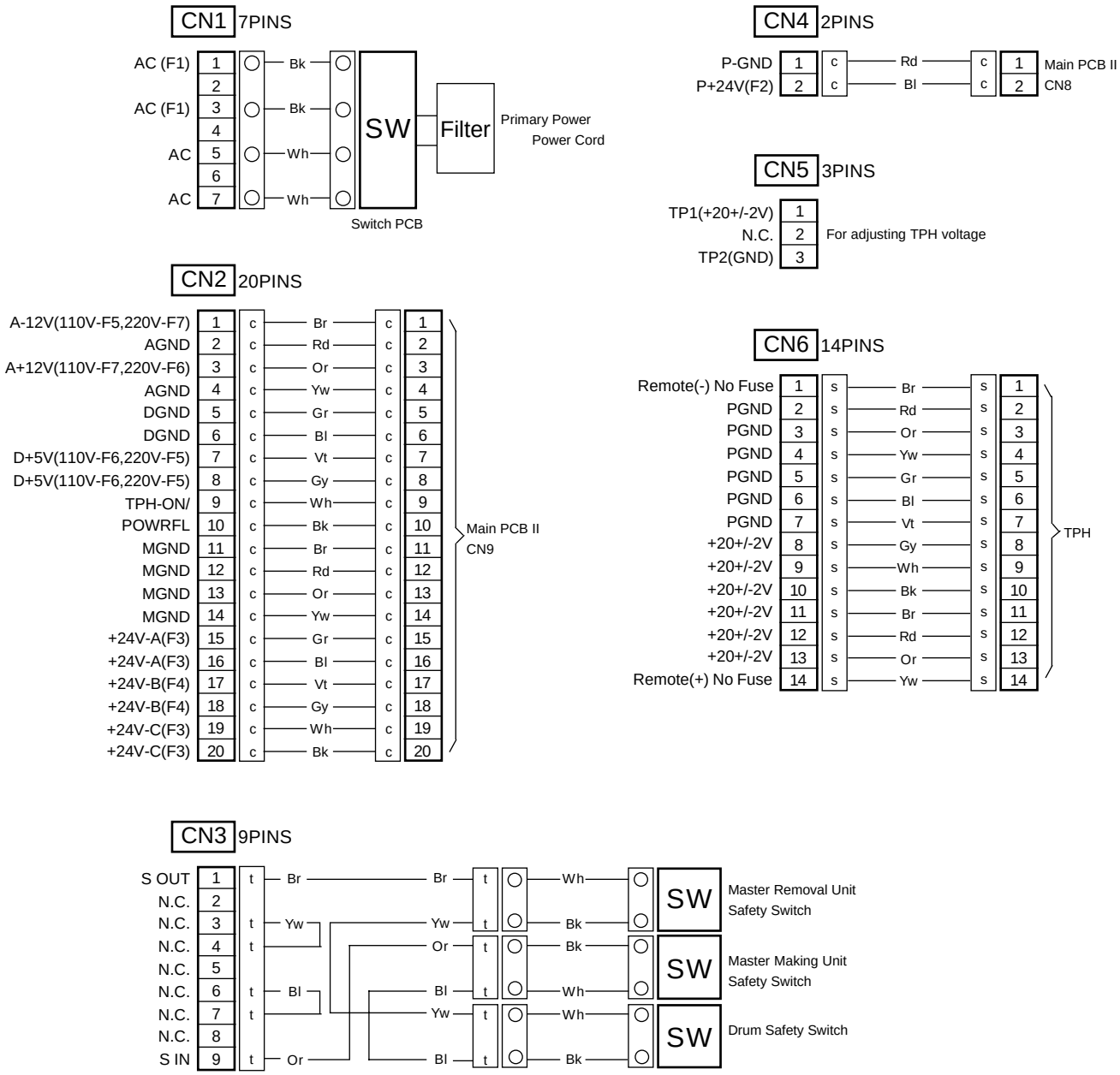

4. Плата датчиков установки тубы

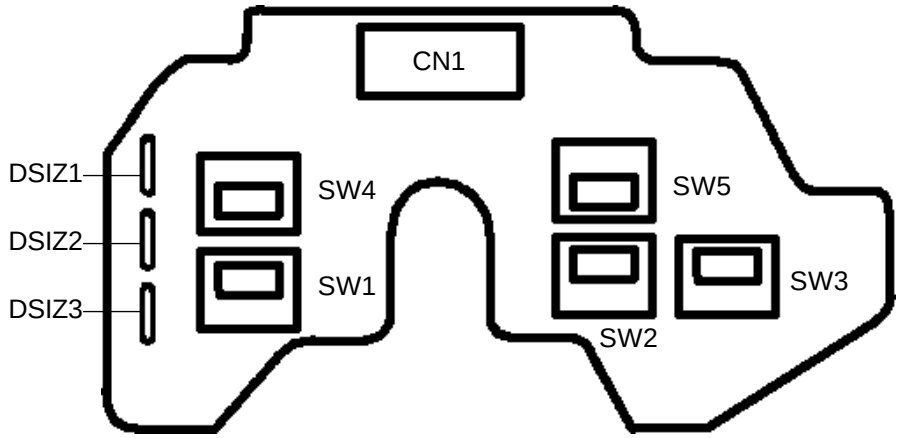

Drum Size/ Color Setting (Cartridge Set SW PCB)

	B4/ Black	B4/ Color	A4/ Black	A4/ Color	Legal/ Black	Legal/ Color
DSIZ1	——	——	Cut	Cut	——	——
DSIZ2	——	——	——	——	Cut	Cut
DSIZ3	——	Cut	——	Cut	——	Cut

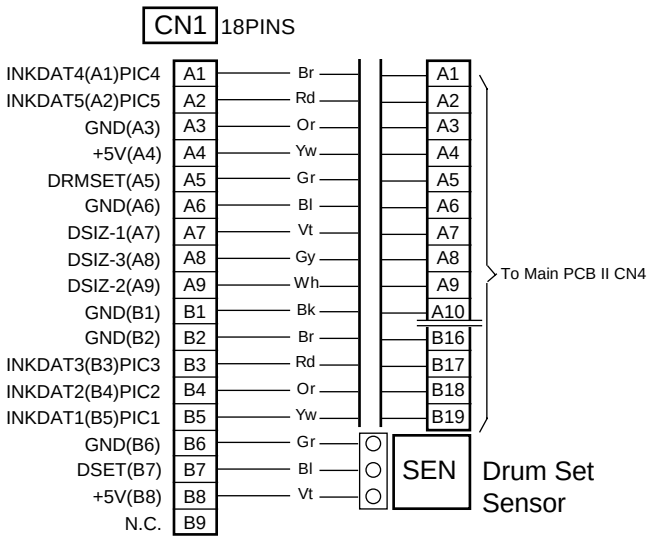

5. Дополнительная плата

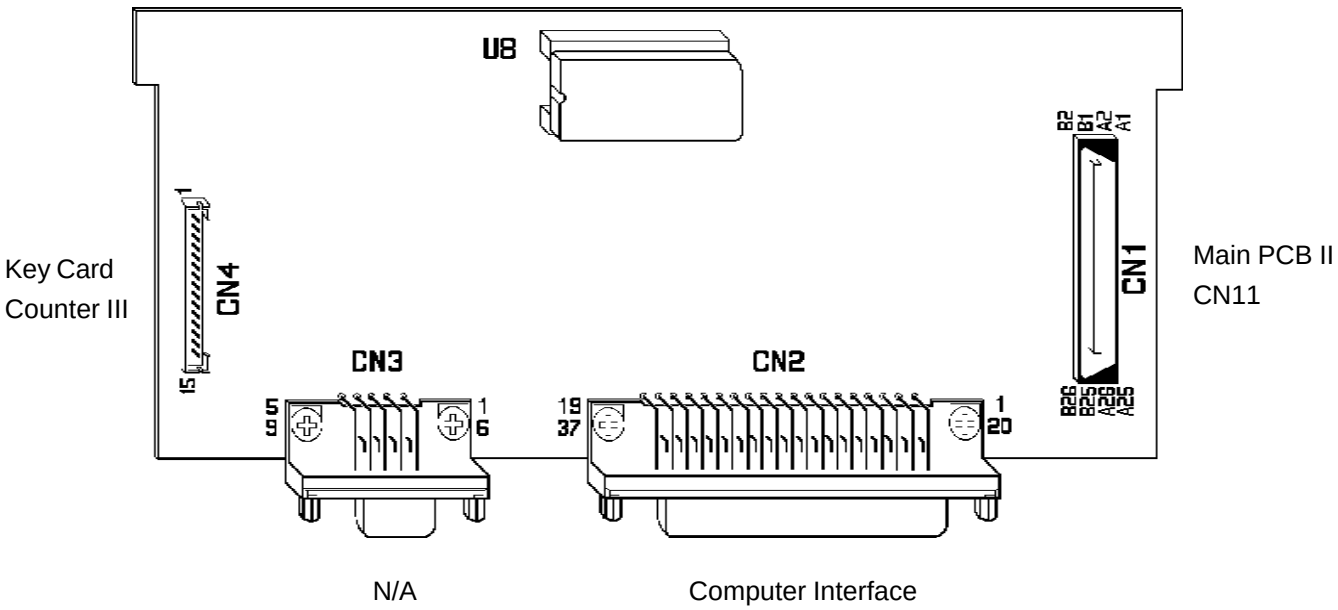

q: Wire Harness; I/F

