Fig. 1 MAIN BODY AREA

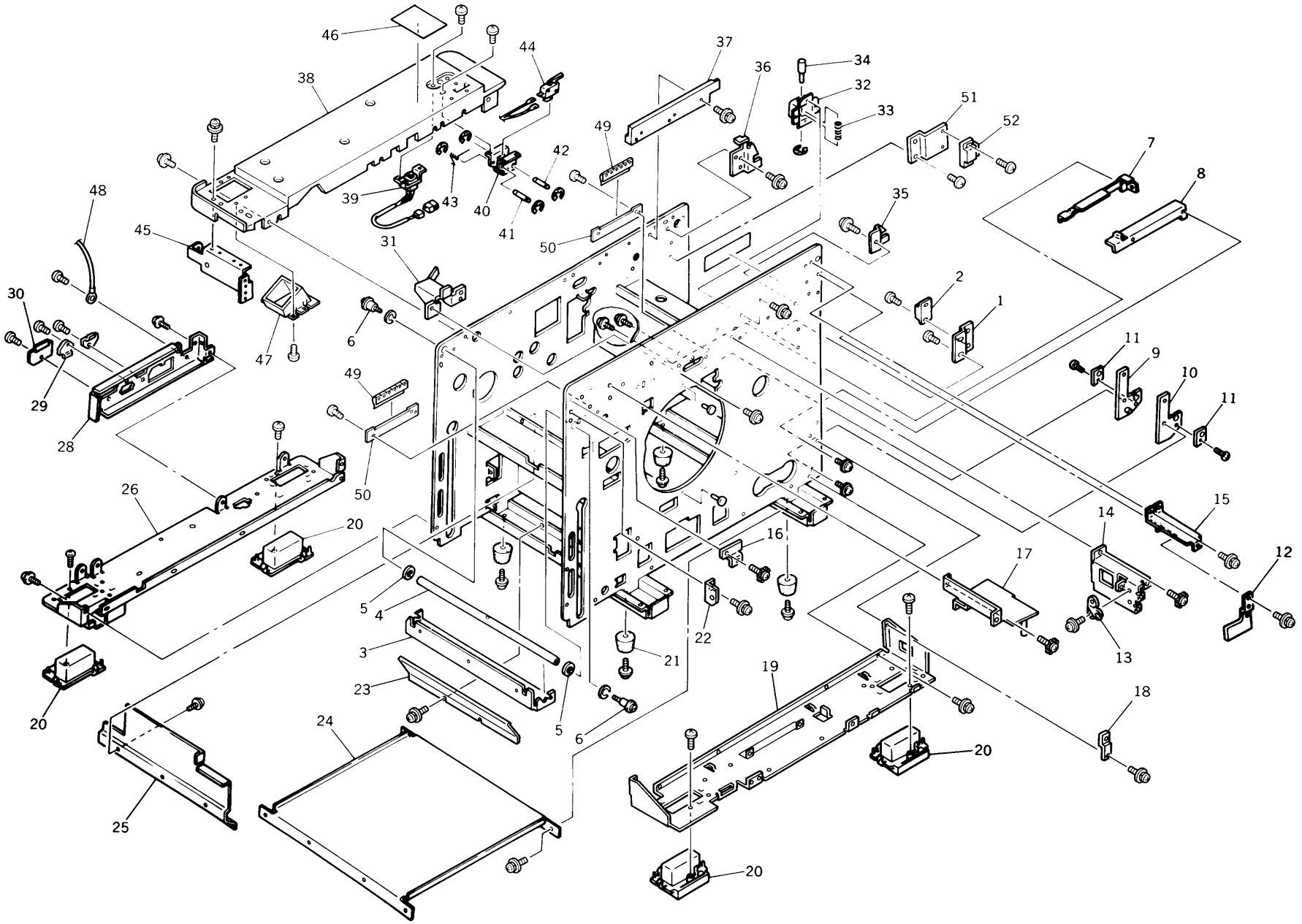

Fig. 2 ELEVATOR – SCRAPER AREA

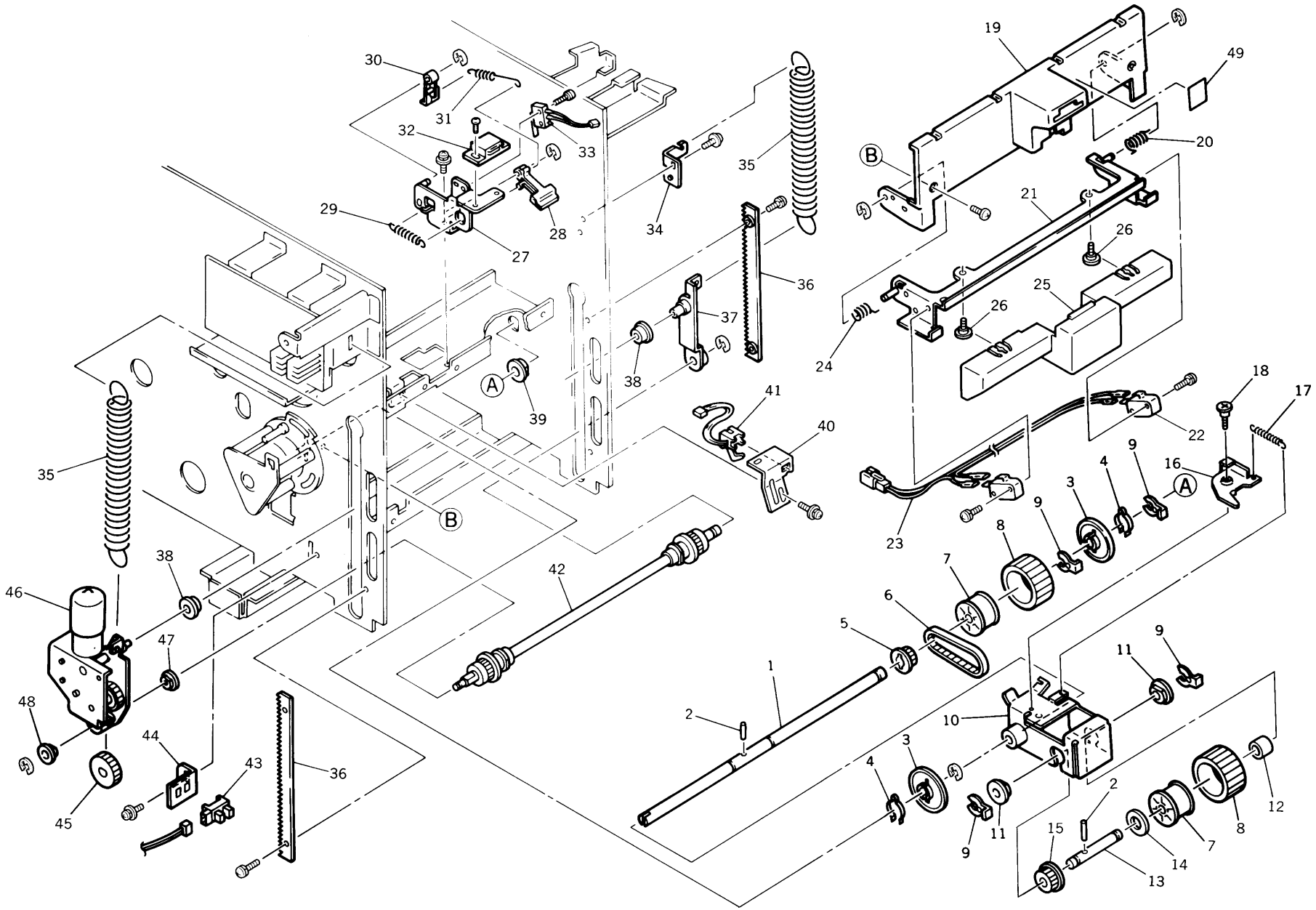

Fig. 3 PAPER-FEED TRAY(FR2950)

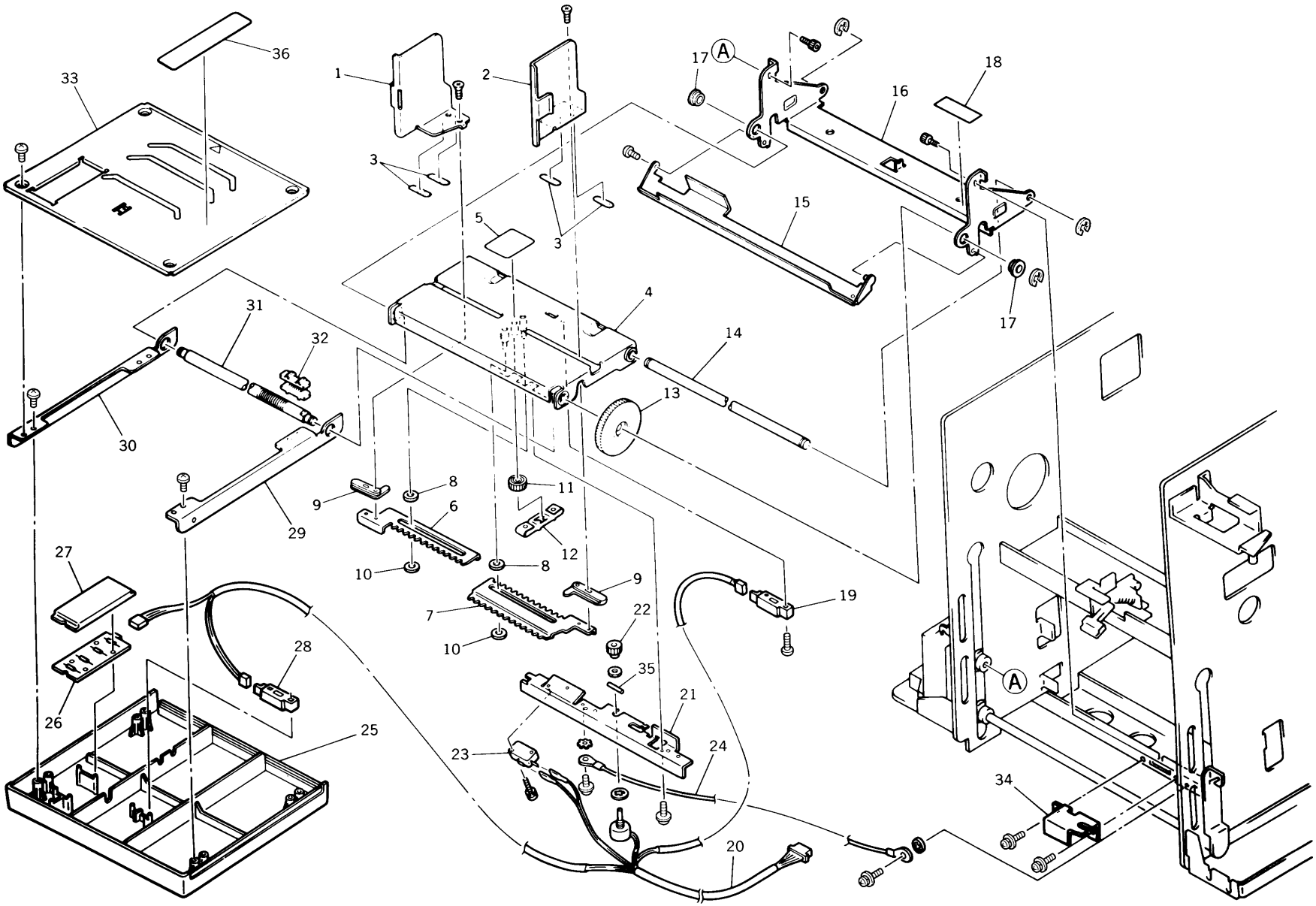

Fig. 4 PAPER-FEED TRAY(FR3950)

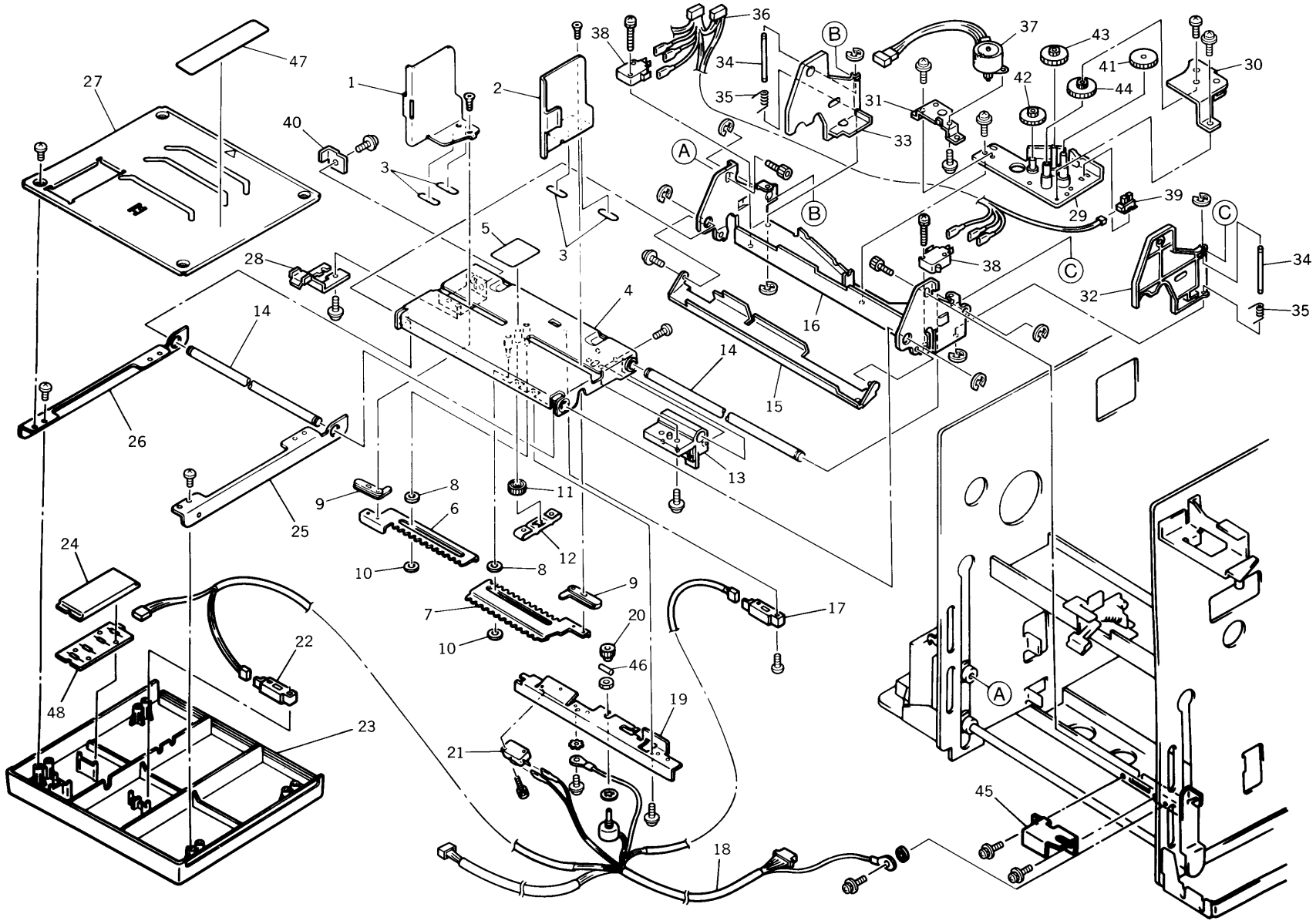

Fig. 5 DRIVE MECHANISM AREA (FR2950)

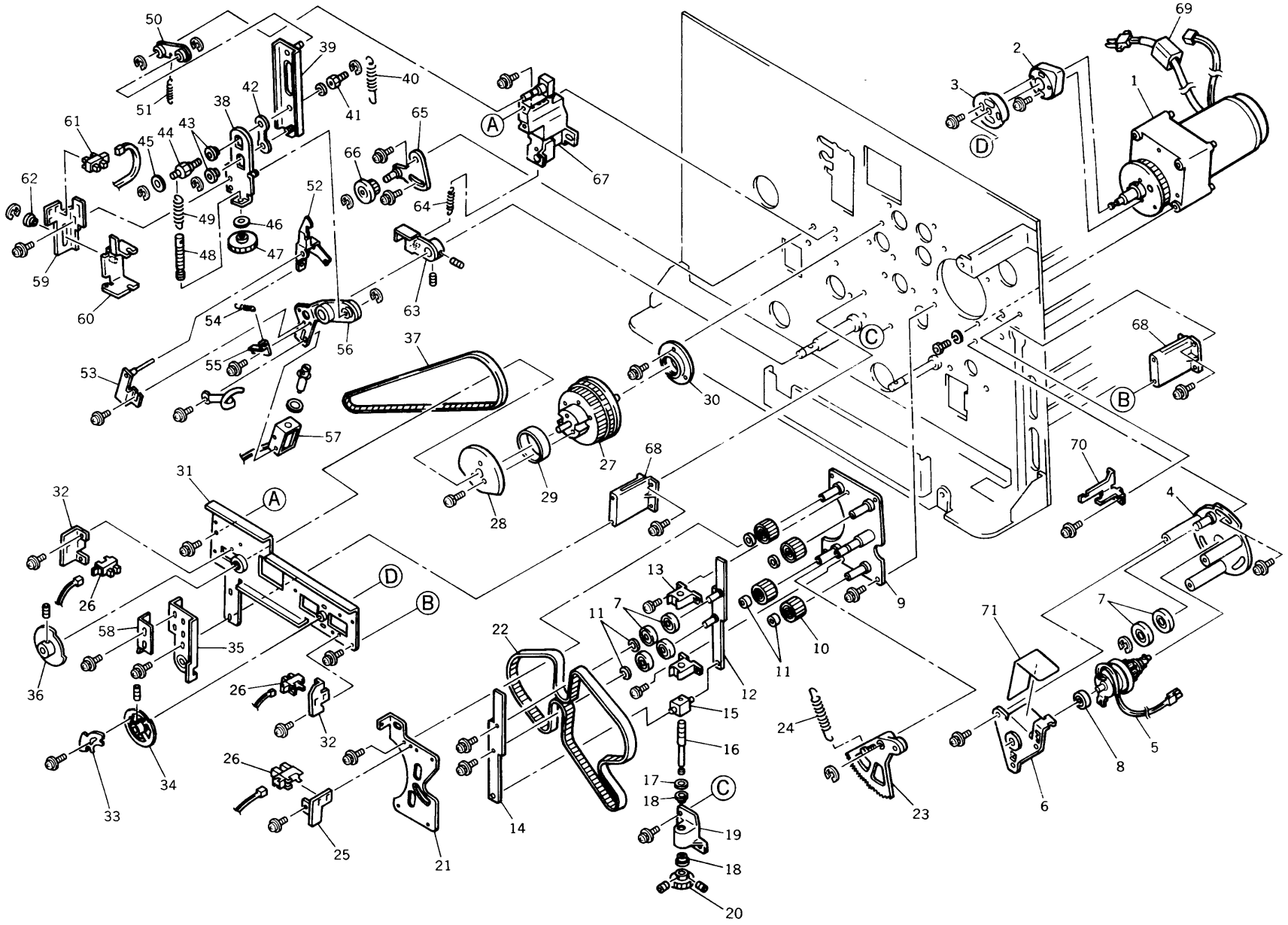

Fig. 6 DRIVE MECHANISM AREA (FR3950)

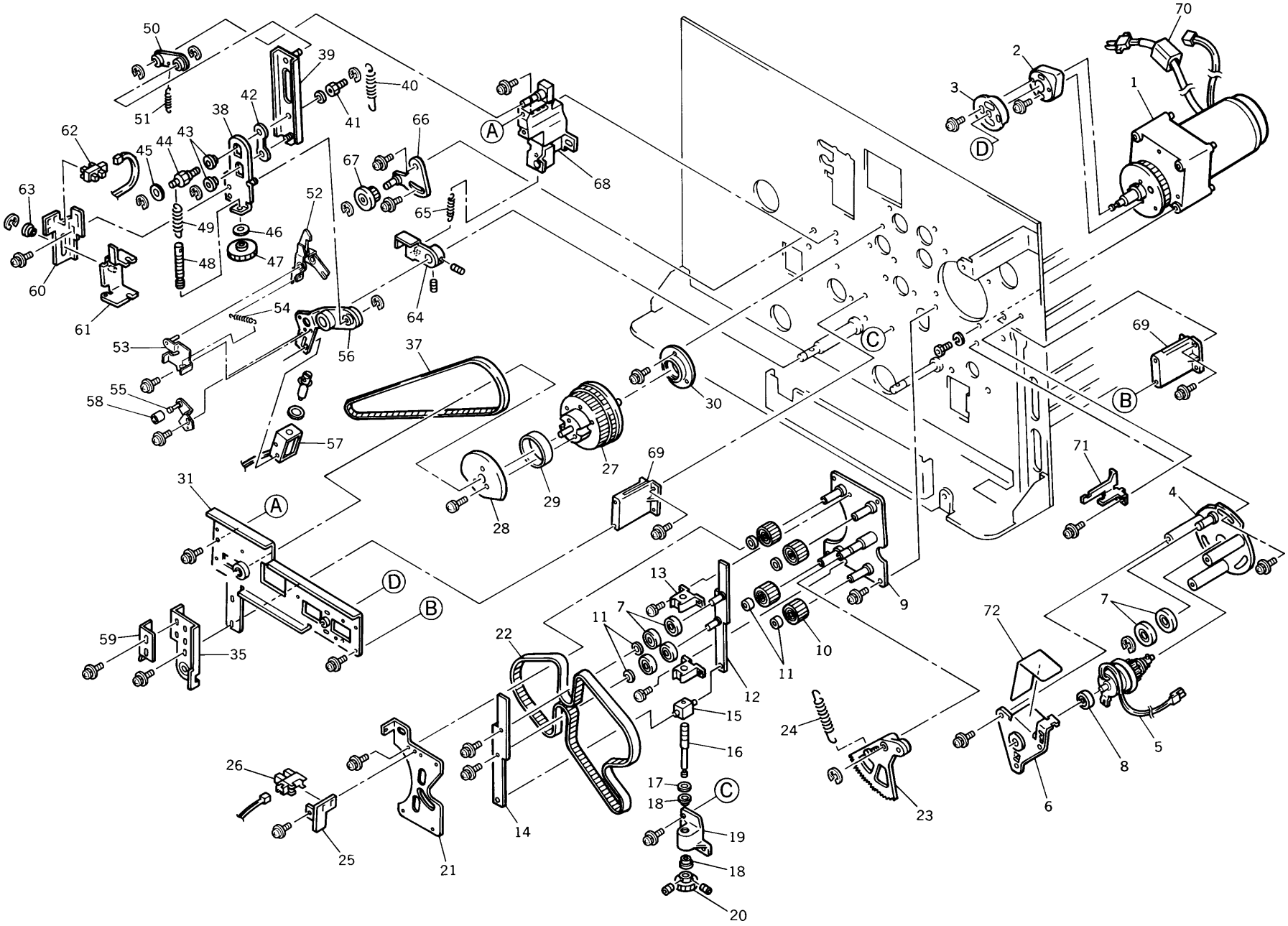

Fig. 7 ROLLER SYSTEM AREA(FR2950)

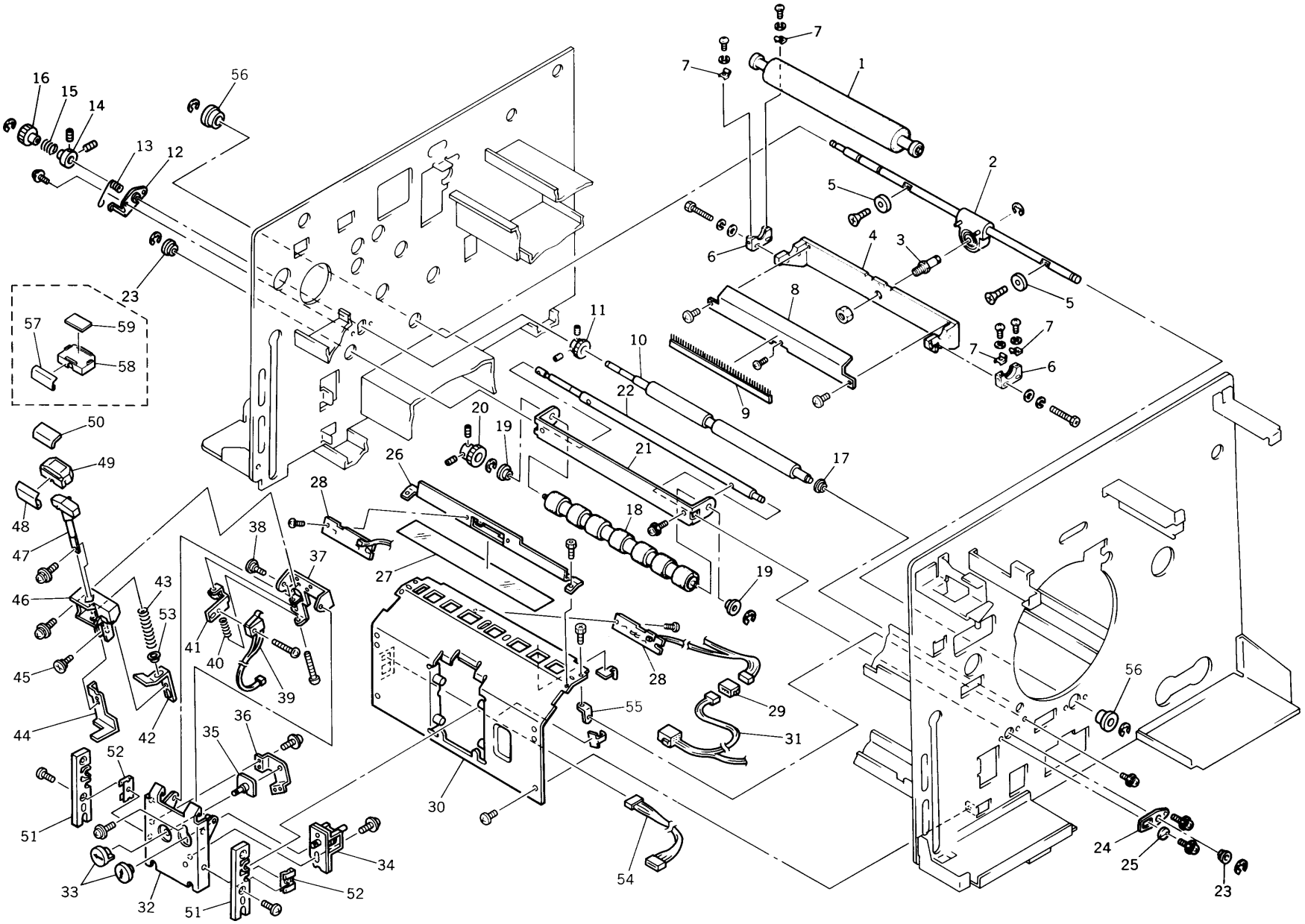

Fig. 8 ROLLER SYSTEM AREA(FR3950)

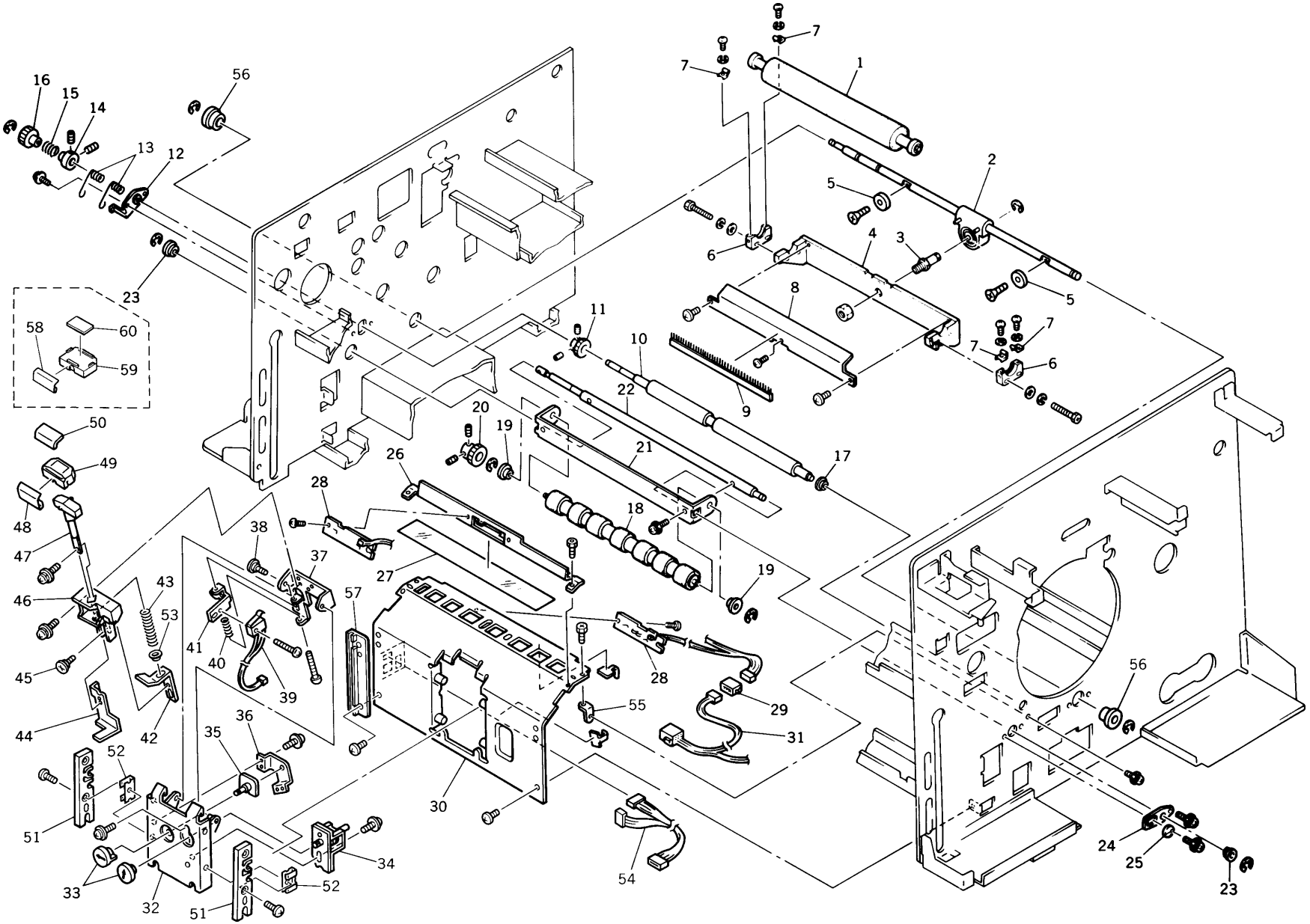

Fig. 9 SQUEEGEE-INK PUMP UNIT AREA (Black)

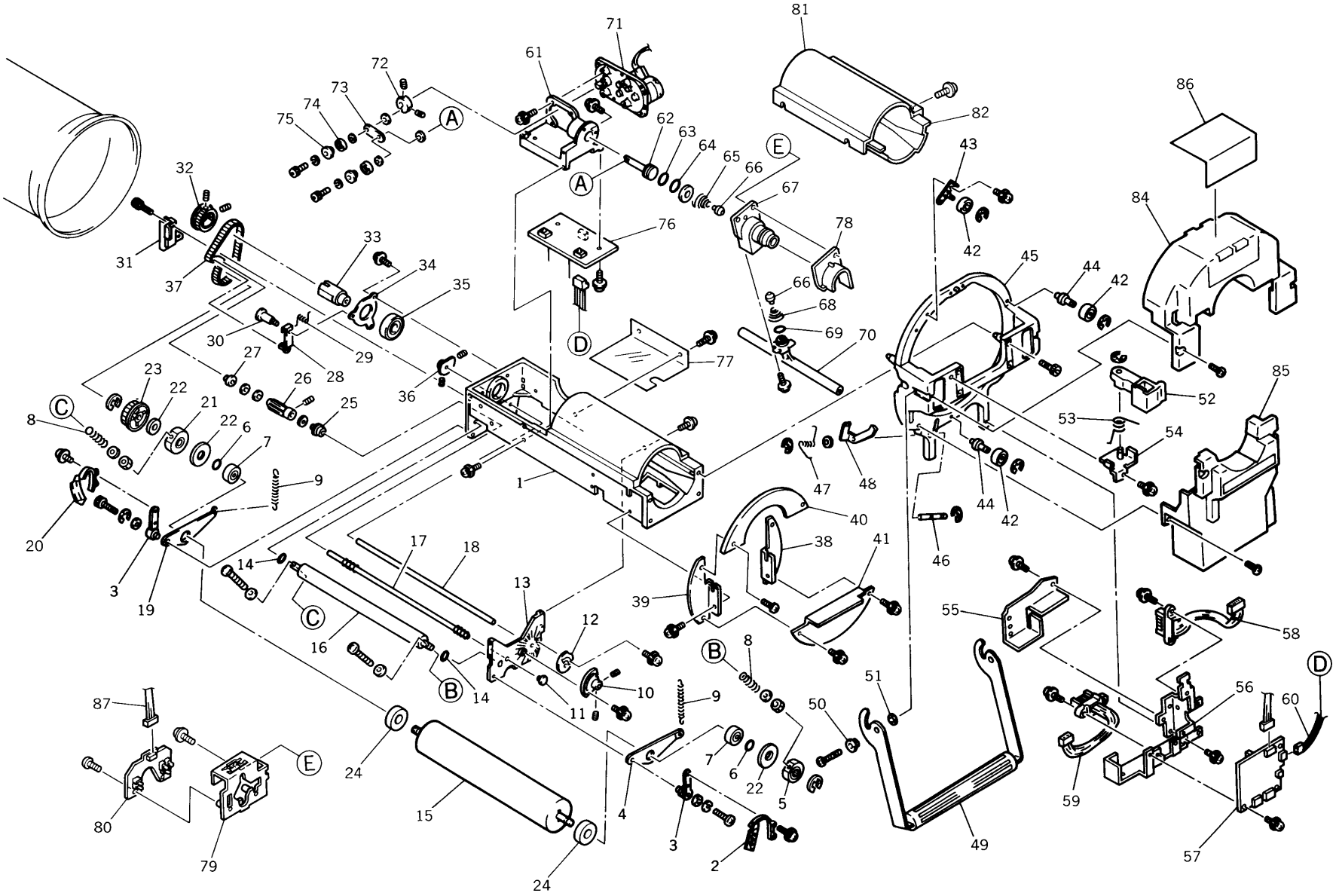

Fig. 10 SQUEEGEE-INK PUMP UNIT AREA (Color)

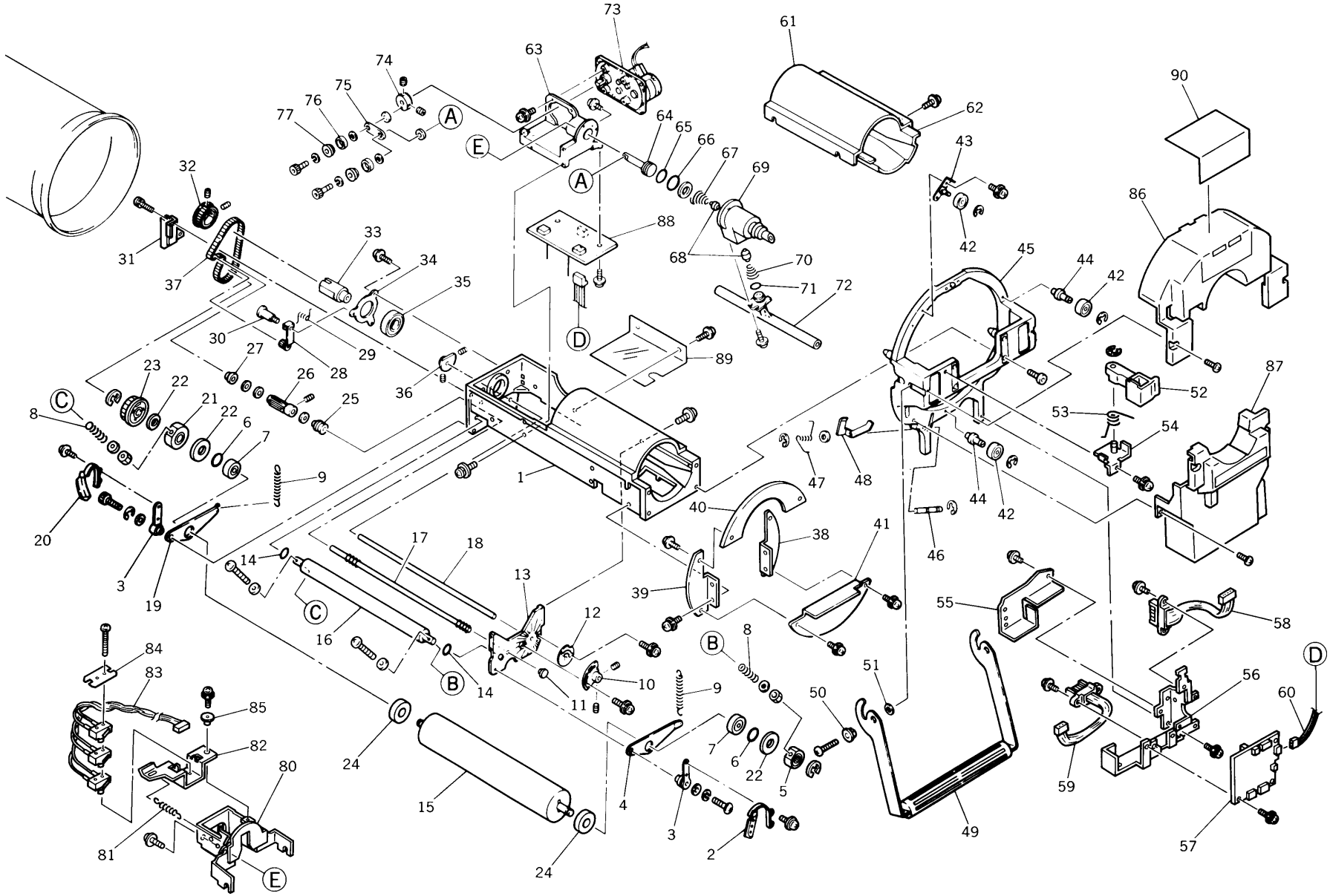

Fig. 11 DRUM-SCREEN AREA (FR2950)

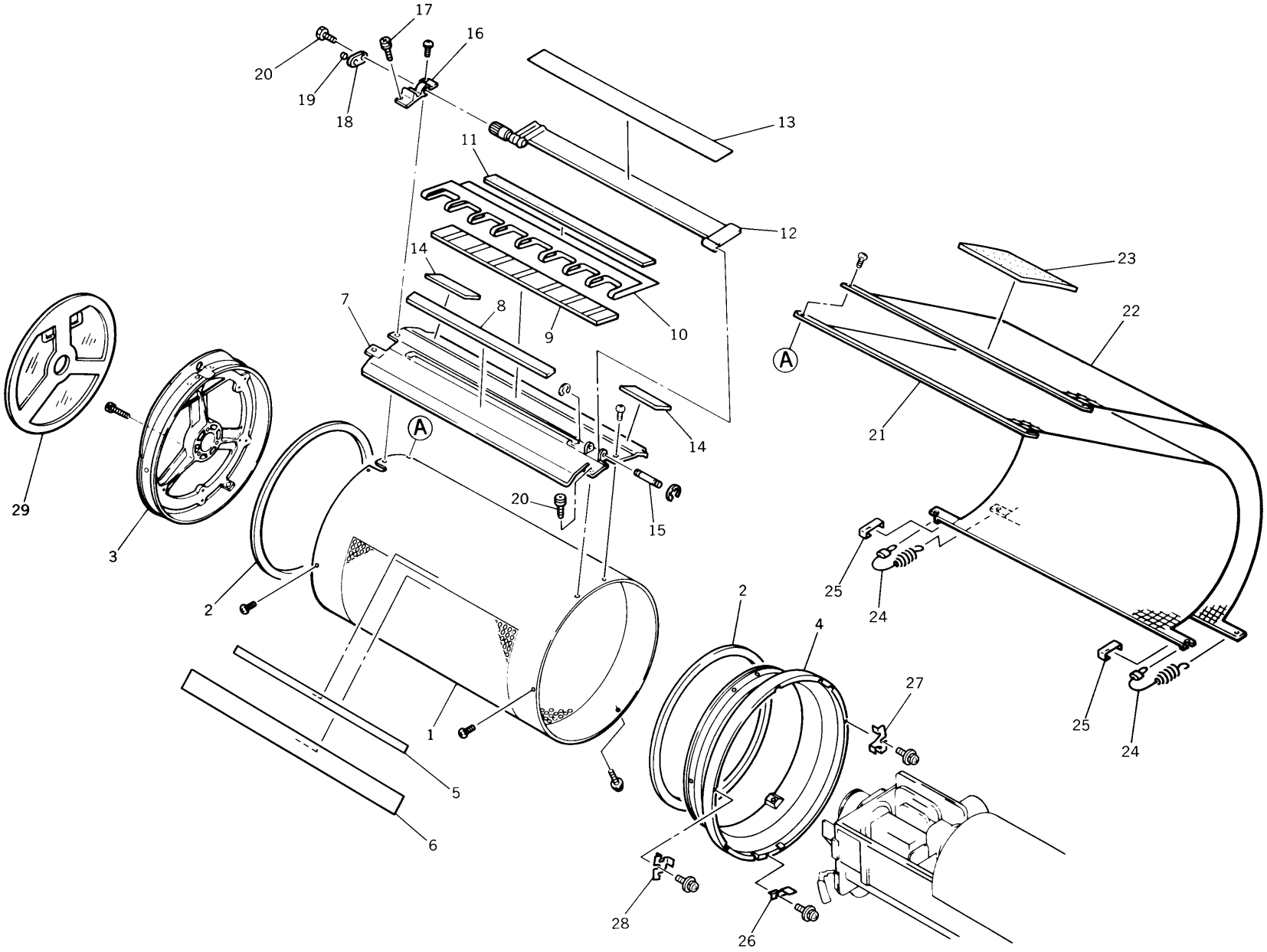

Fig. 12 DRUM-SCREEN AREA (FR3950)

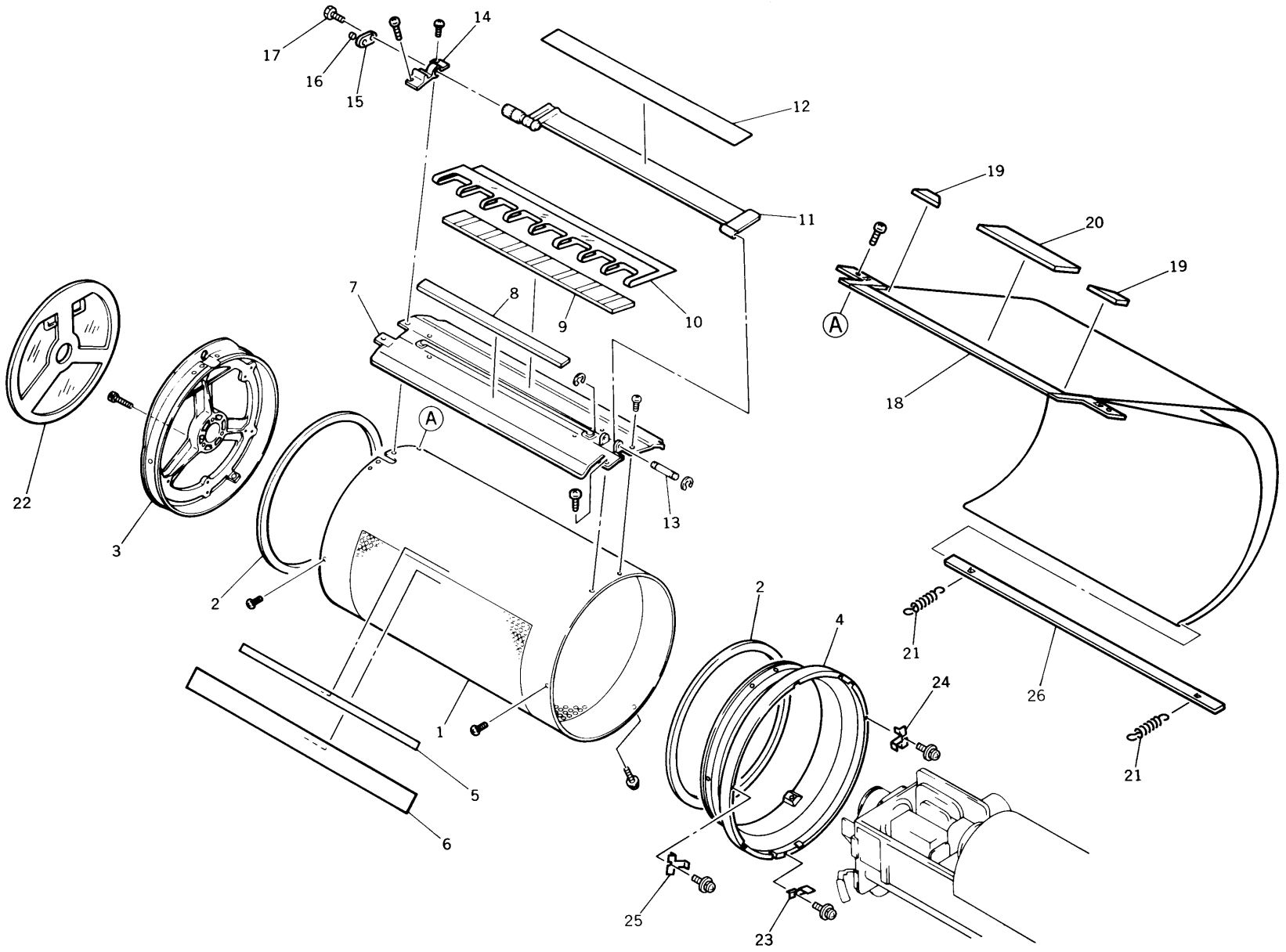

Fig. 13 LOCK LEVER AREA

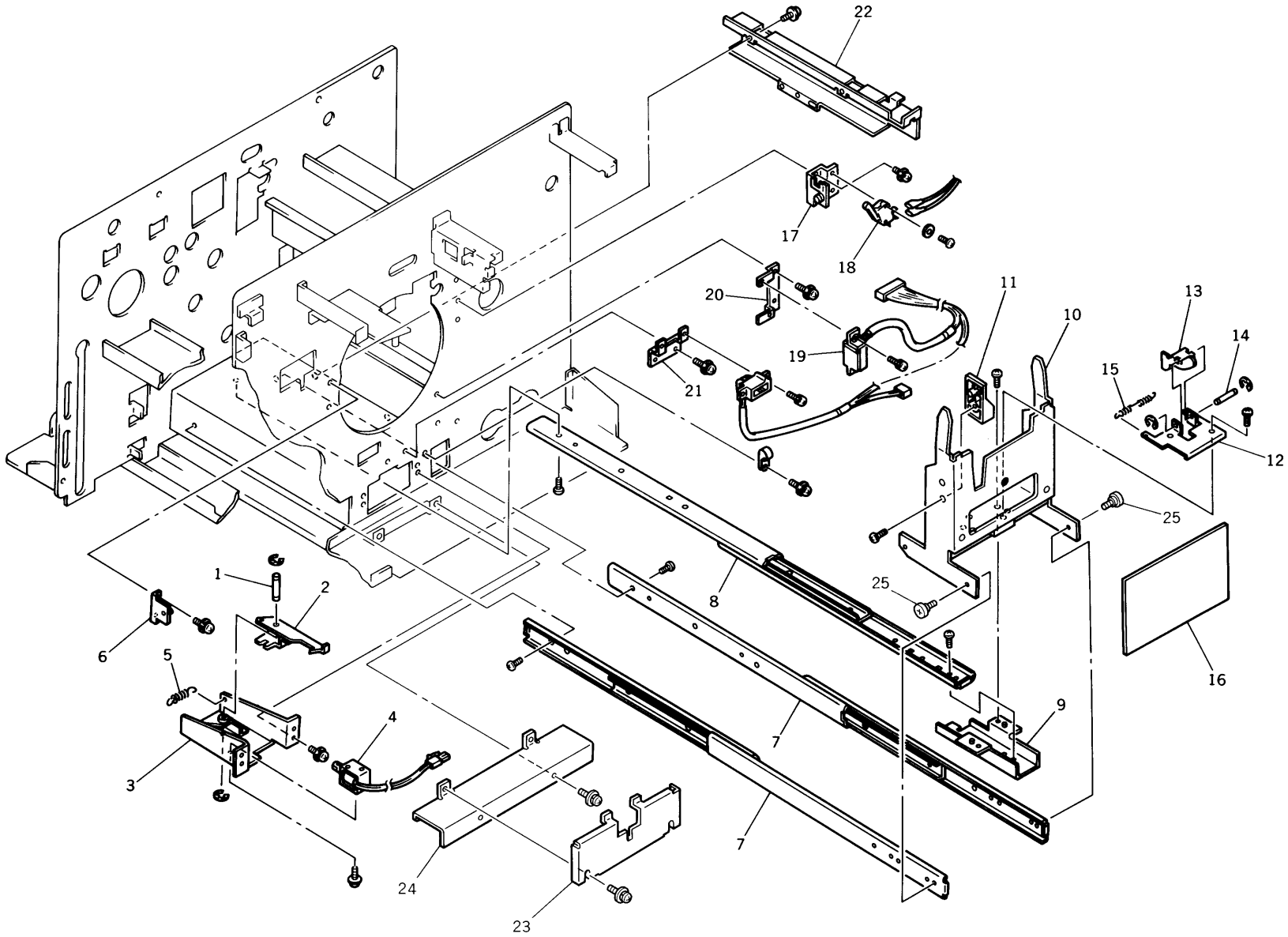

Fig. 14 CLAMP-PRESSURE CONTROL AREA

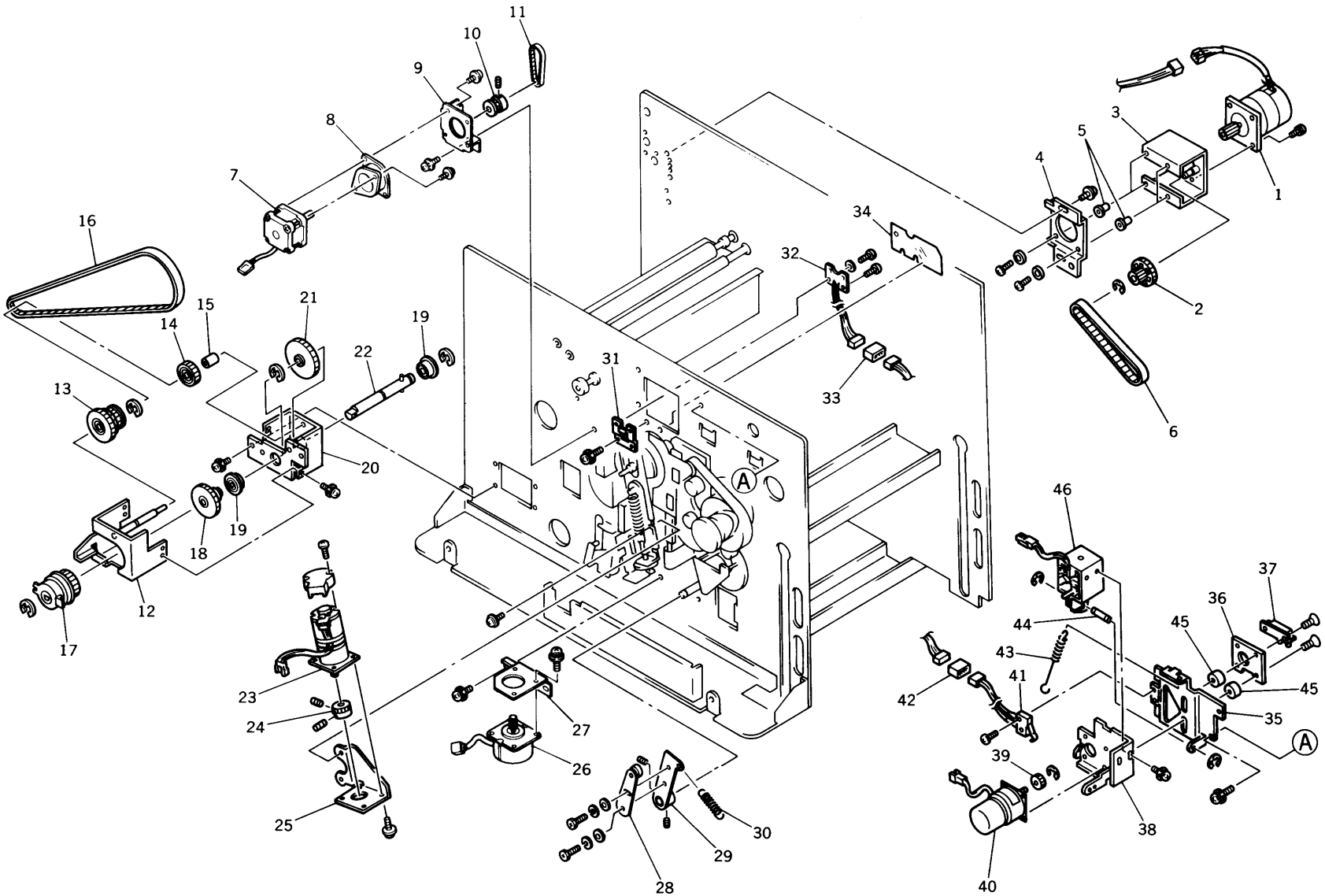

Fig. 15 SEPARATOR AREA (FR2950)

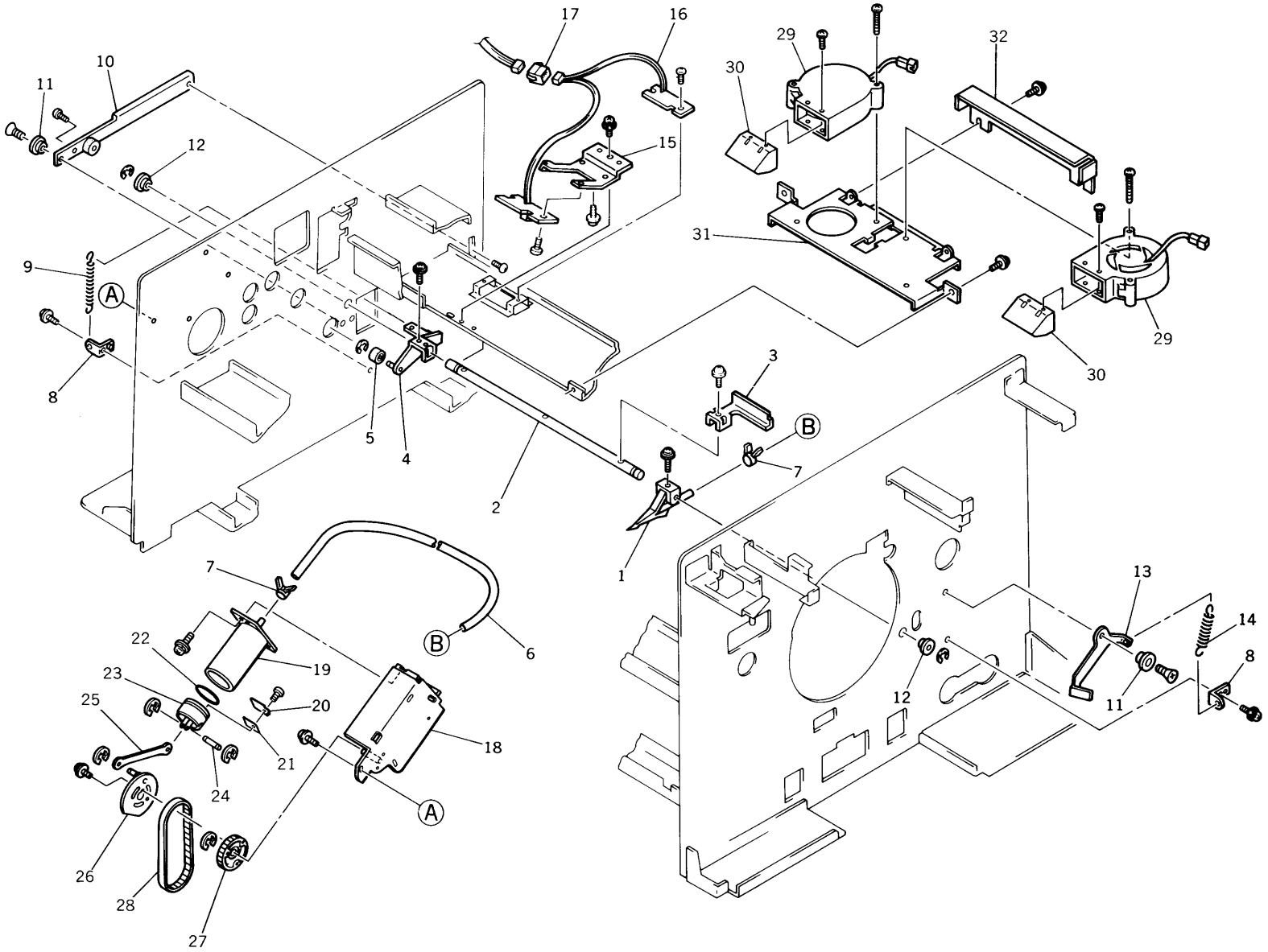

Fig. 16 SEPARATOR AREA (FR3950)

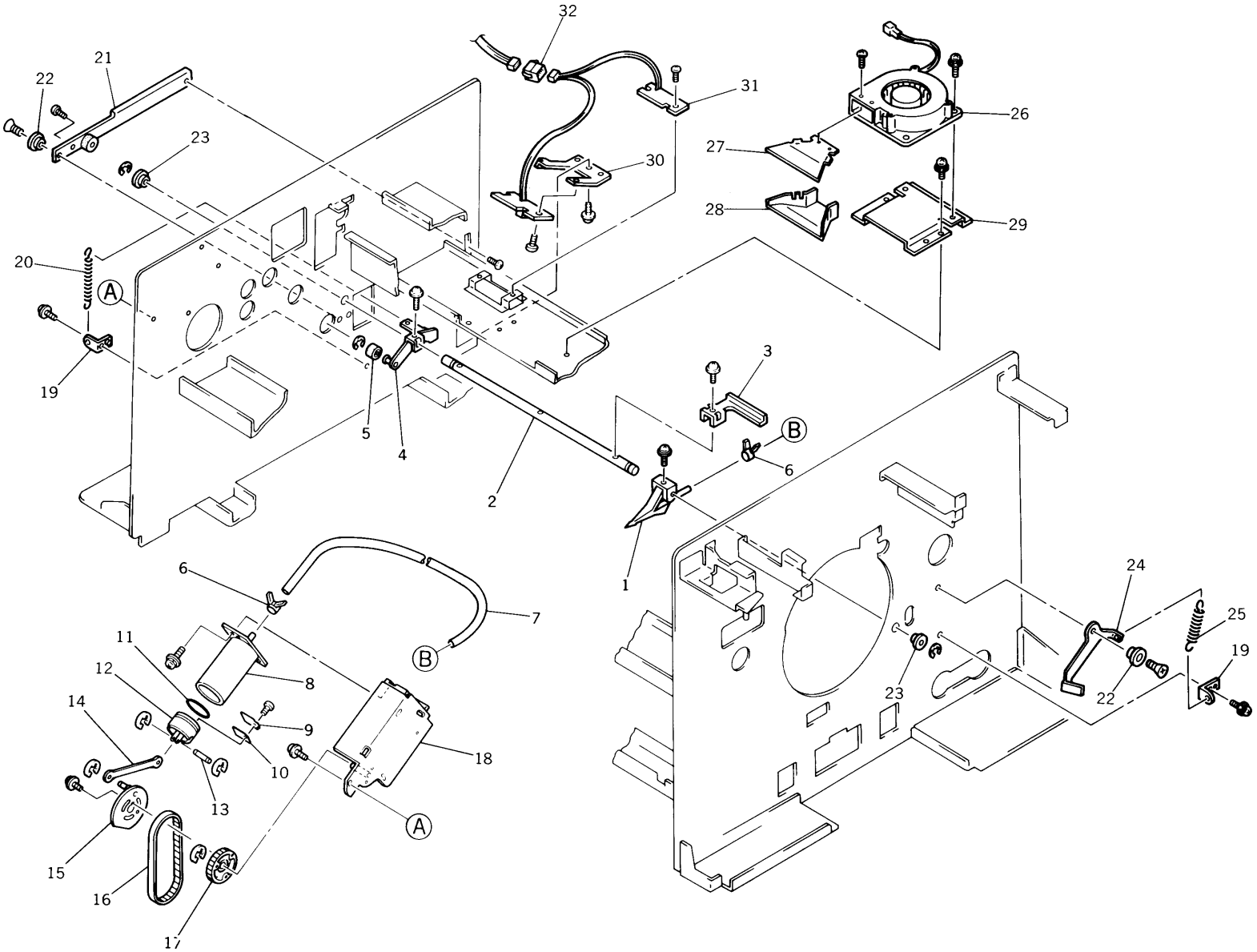

Fig. 17 SUCTION UNIT

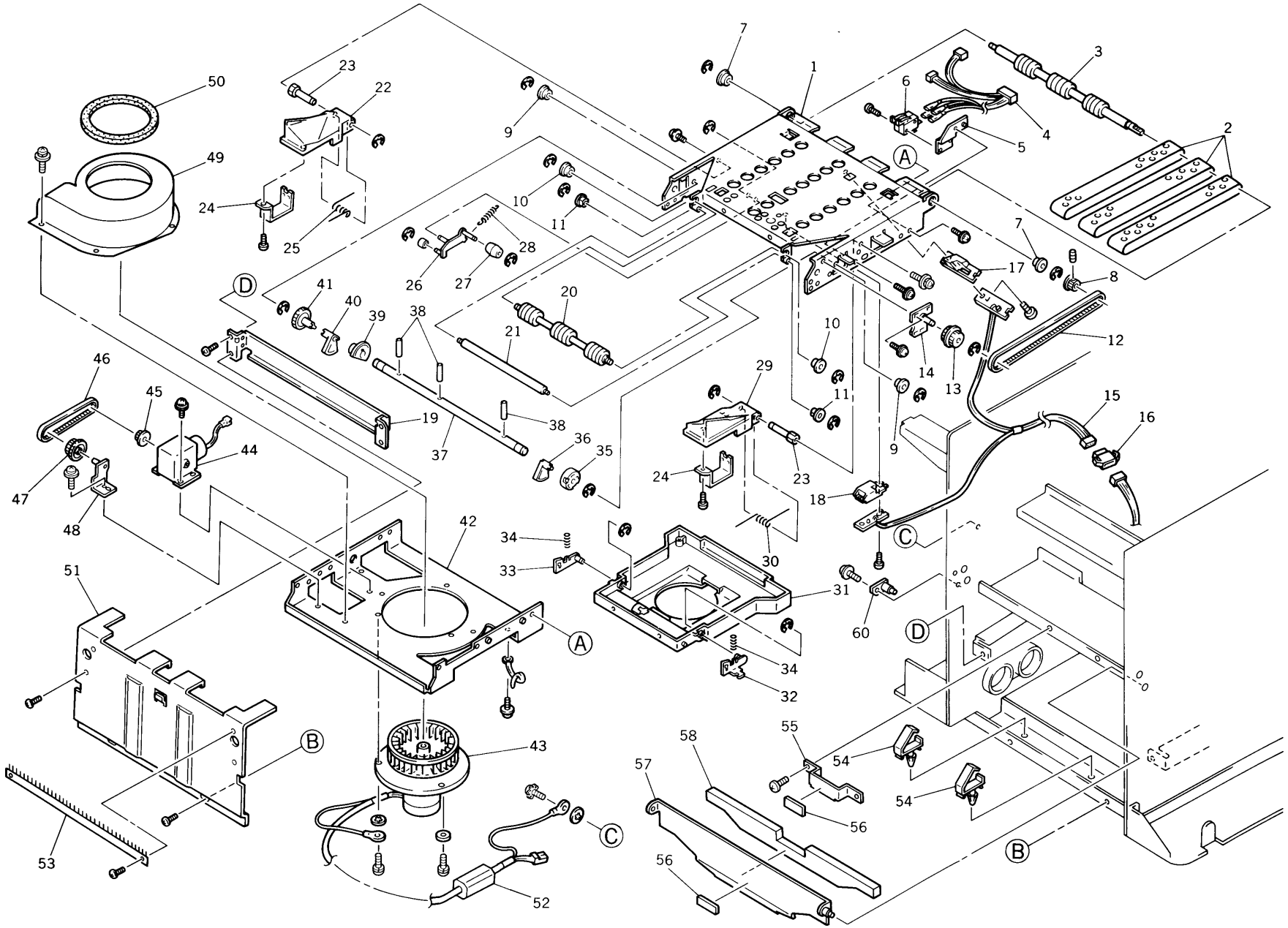

Fig. 18 PRECISION STACKING TRAY

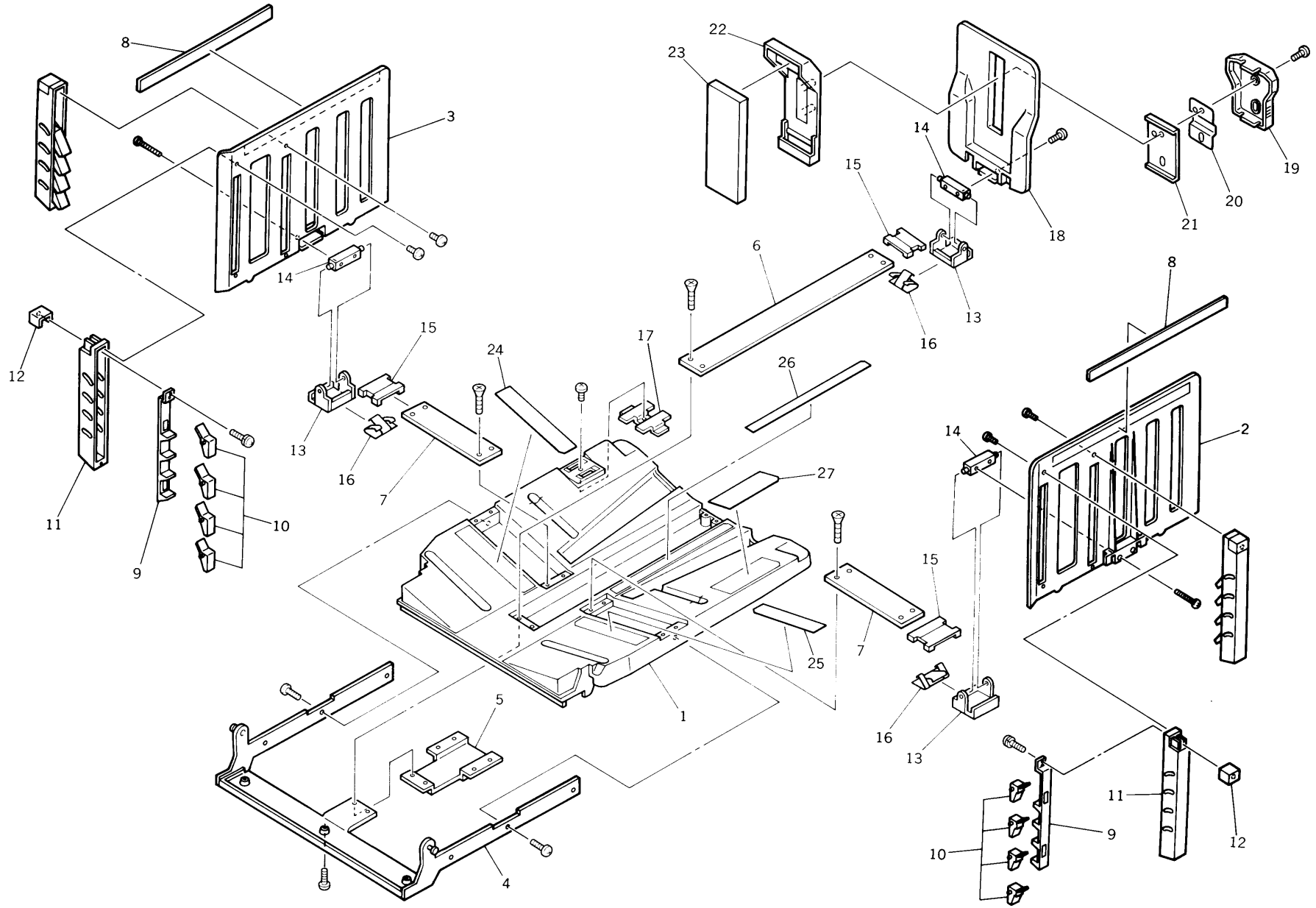

Fig. 19 ADF AREA (1)

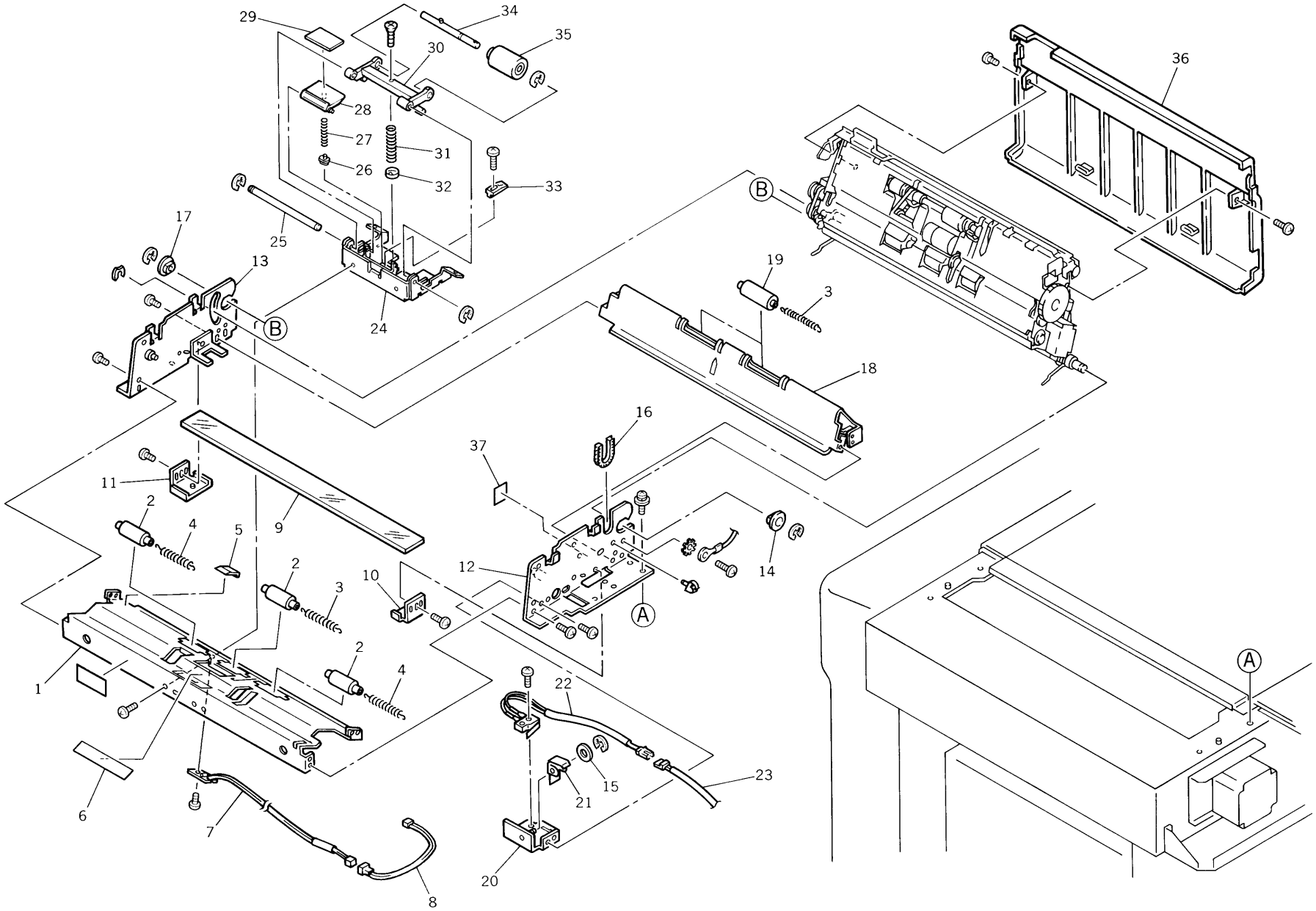

Fig. 20 ADF AREA (2)

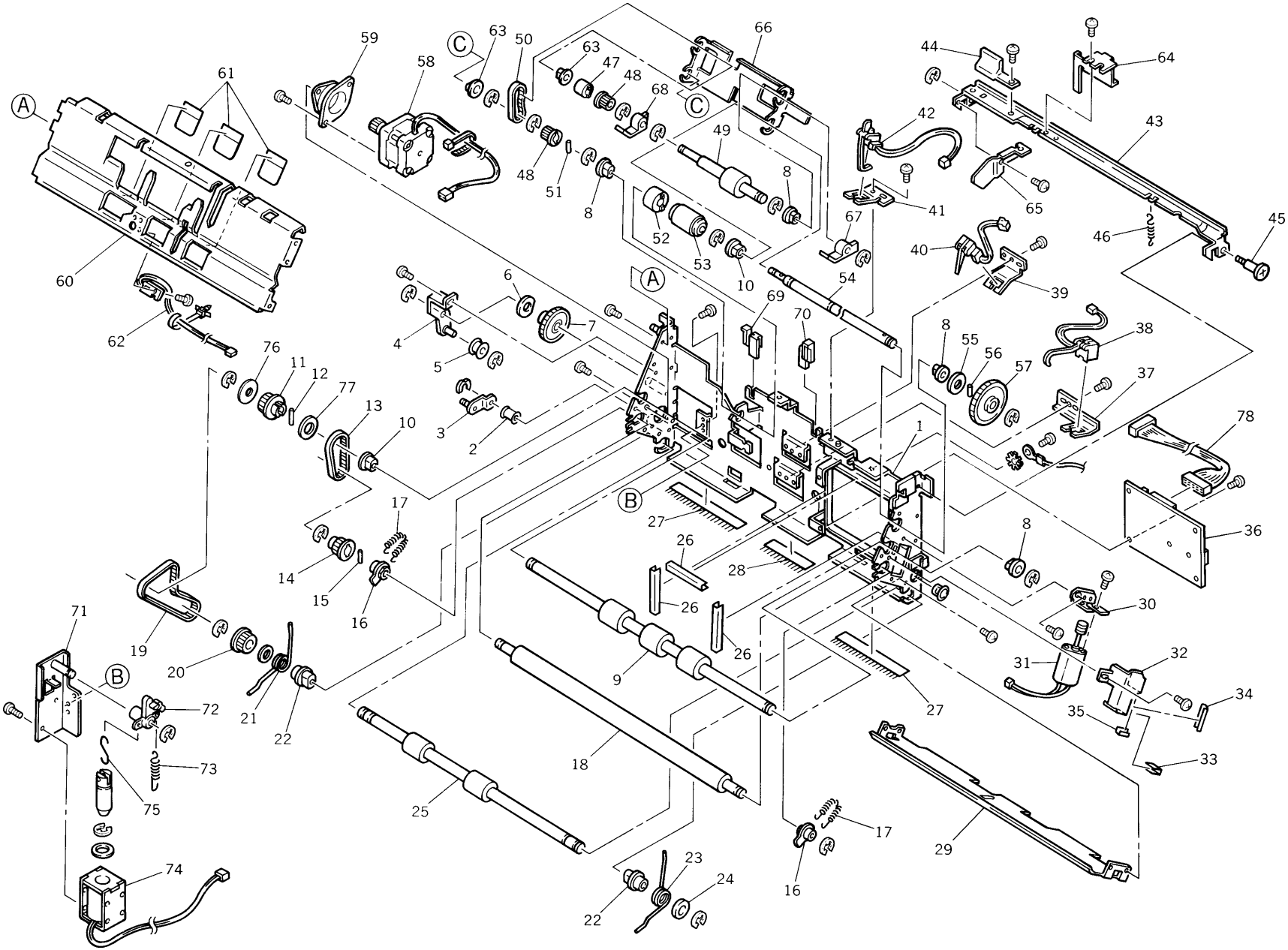

Fig. 21 SCANNER AREA (1)

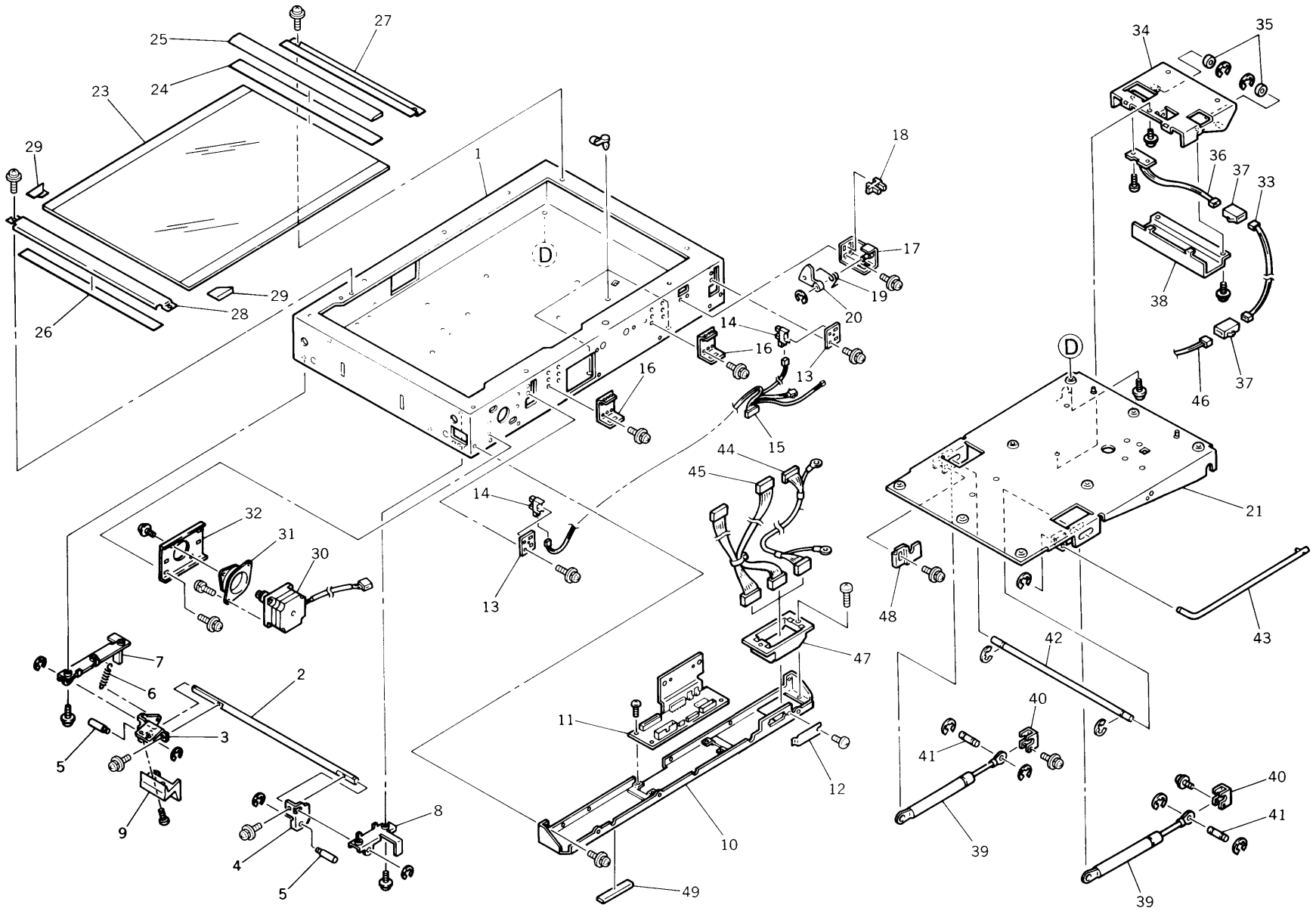

Fig. 22 SCANNER AREA (2)

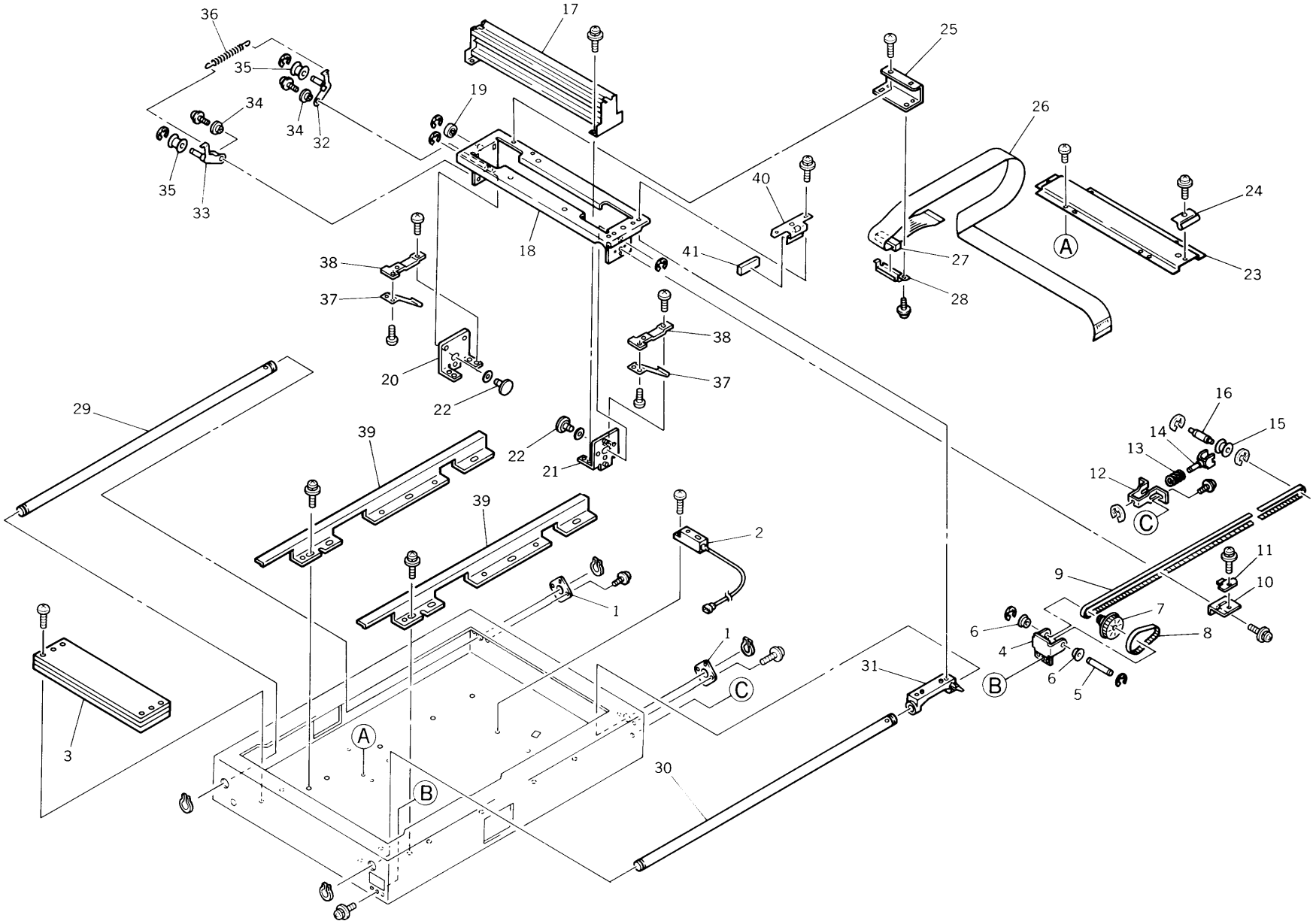

Fig. 23 MASTER-MAKING AREA (1) (FR2950)

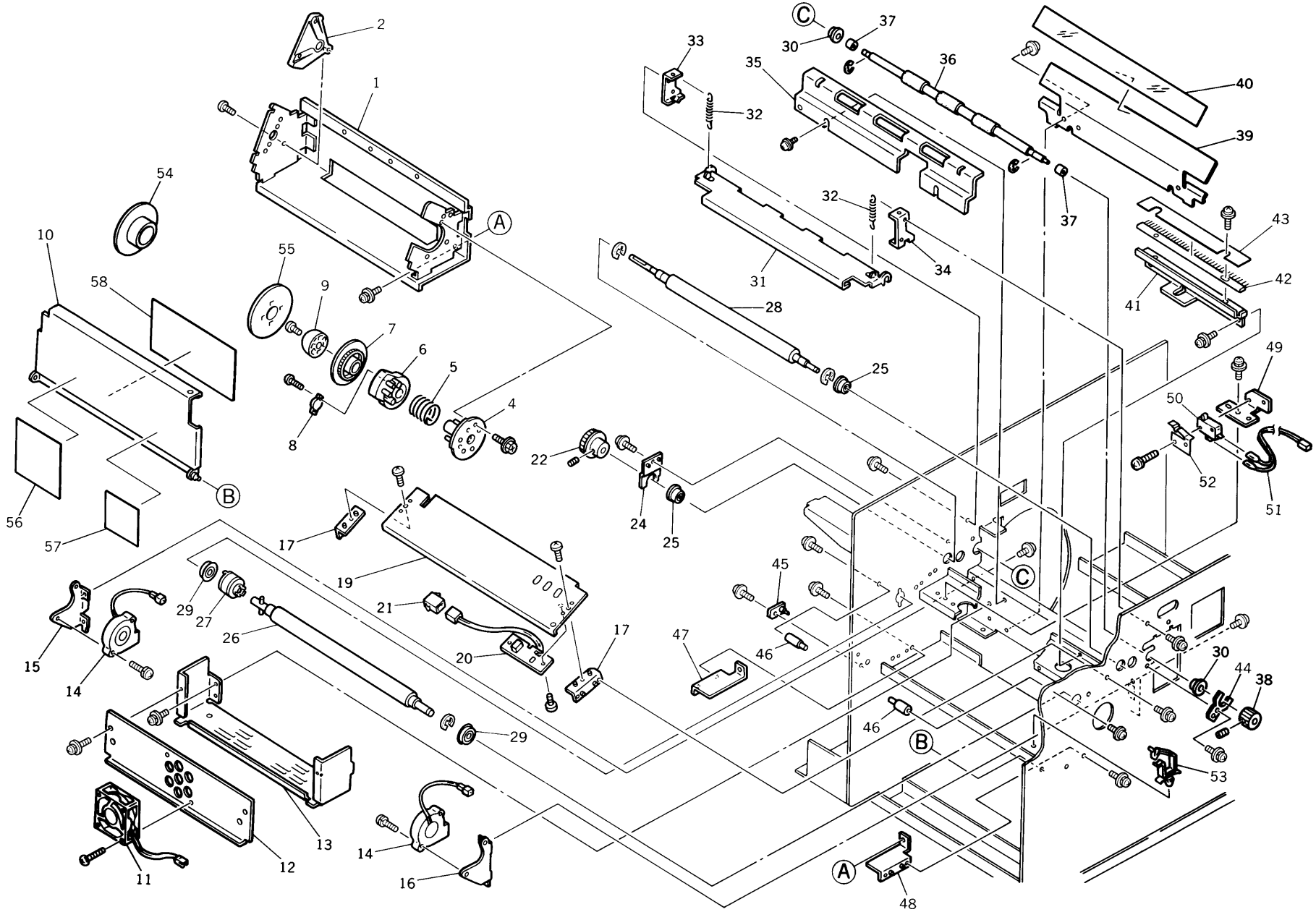

Fig. 24 MASTER-MAKING AREA (2) (FR2950)

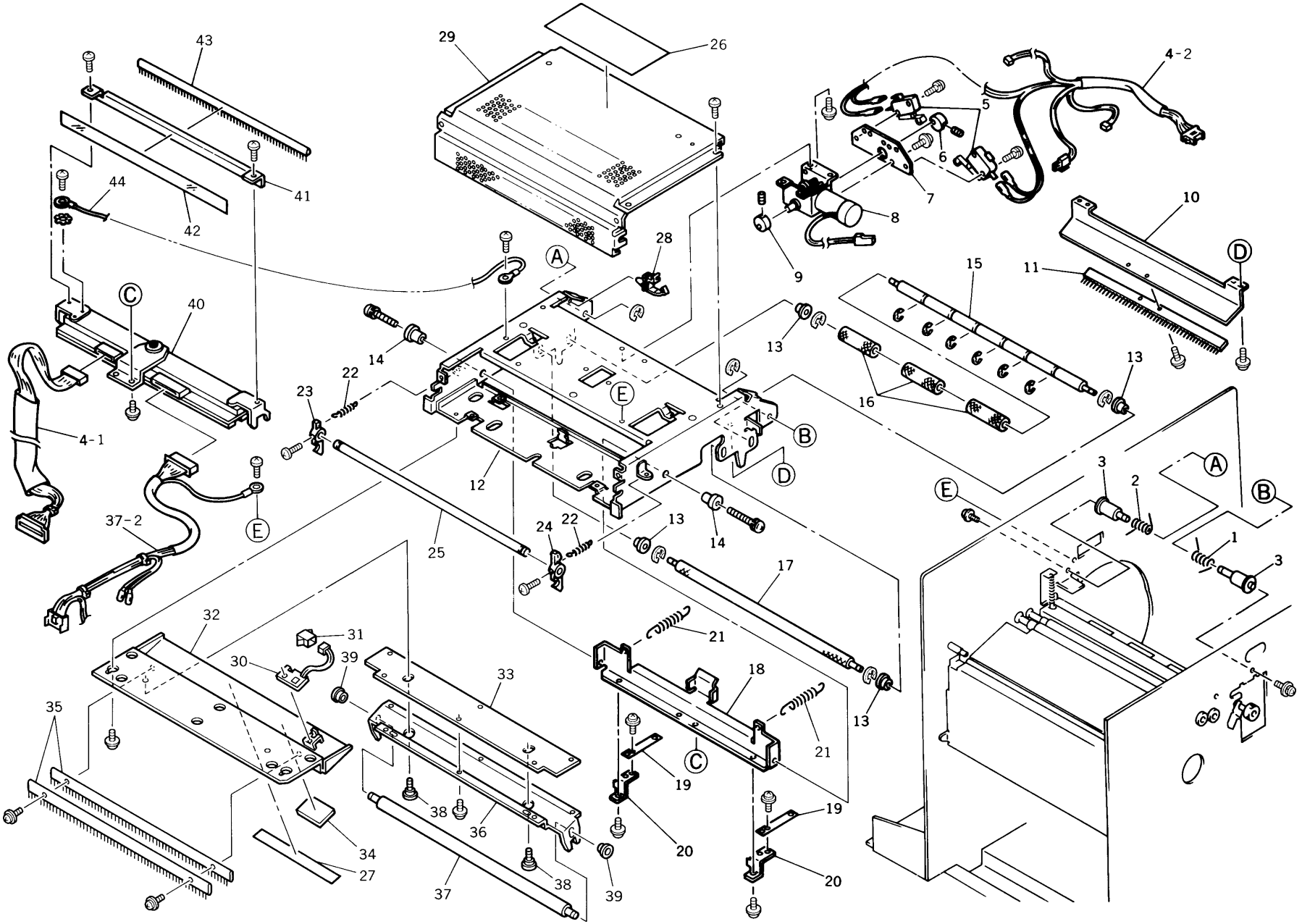

Fig. 25 MASTER-MAKING AREA (1) (FR3950)

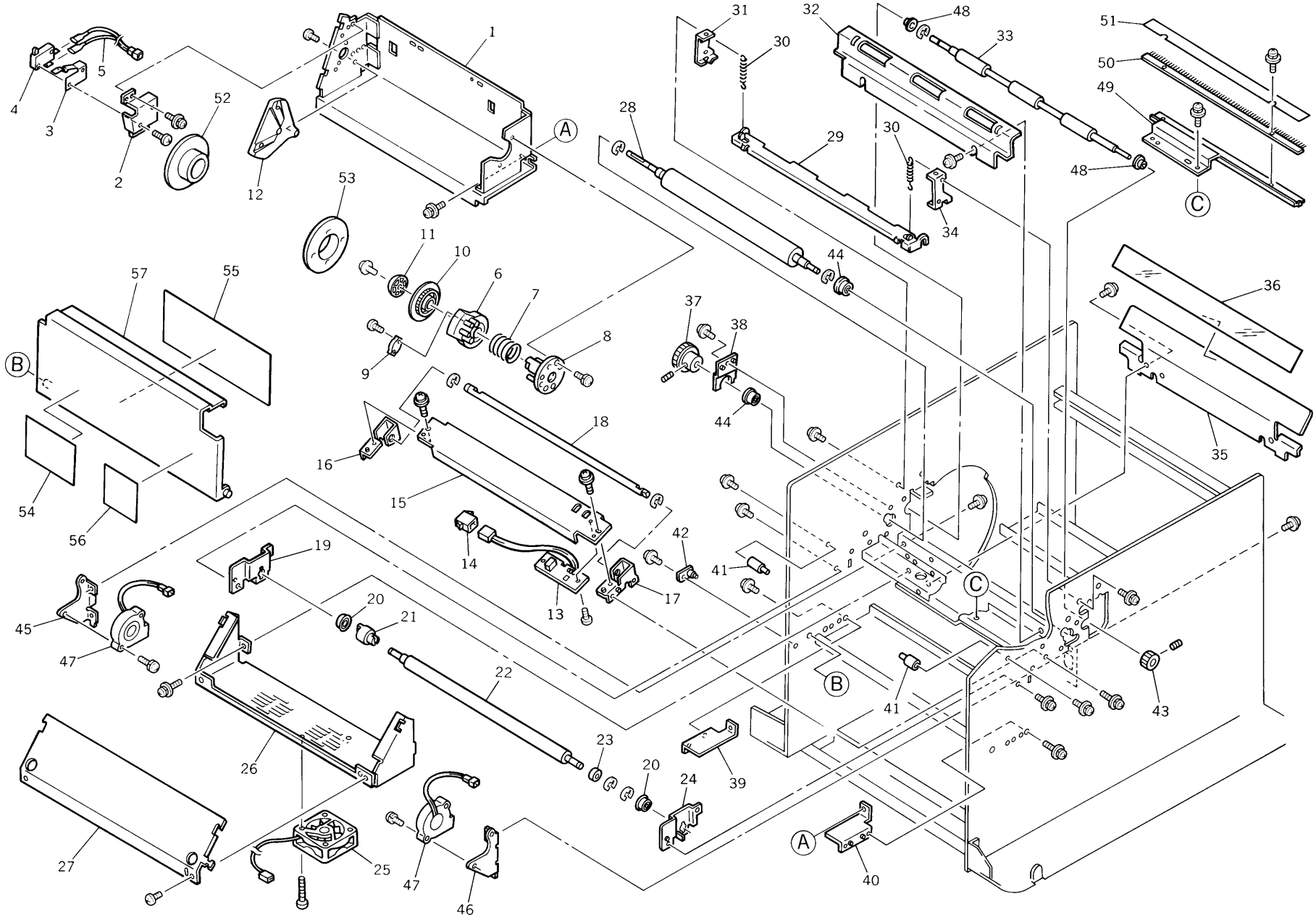

Fig. 26 MASTER-MAKING AREA (2) (FR3950)

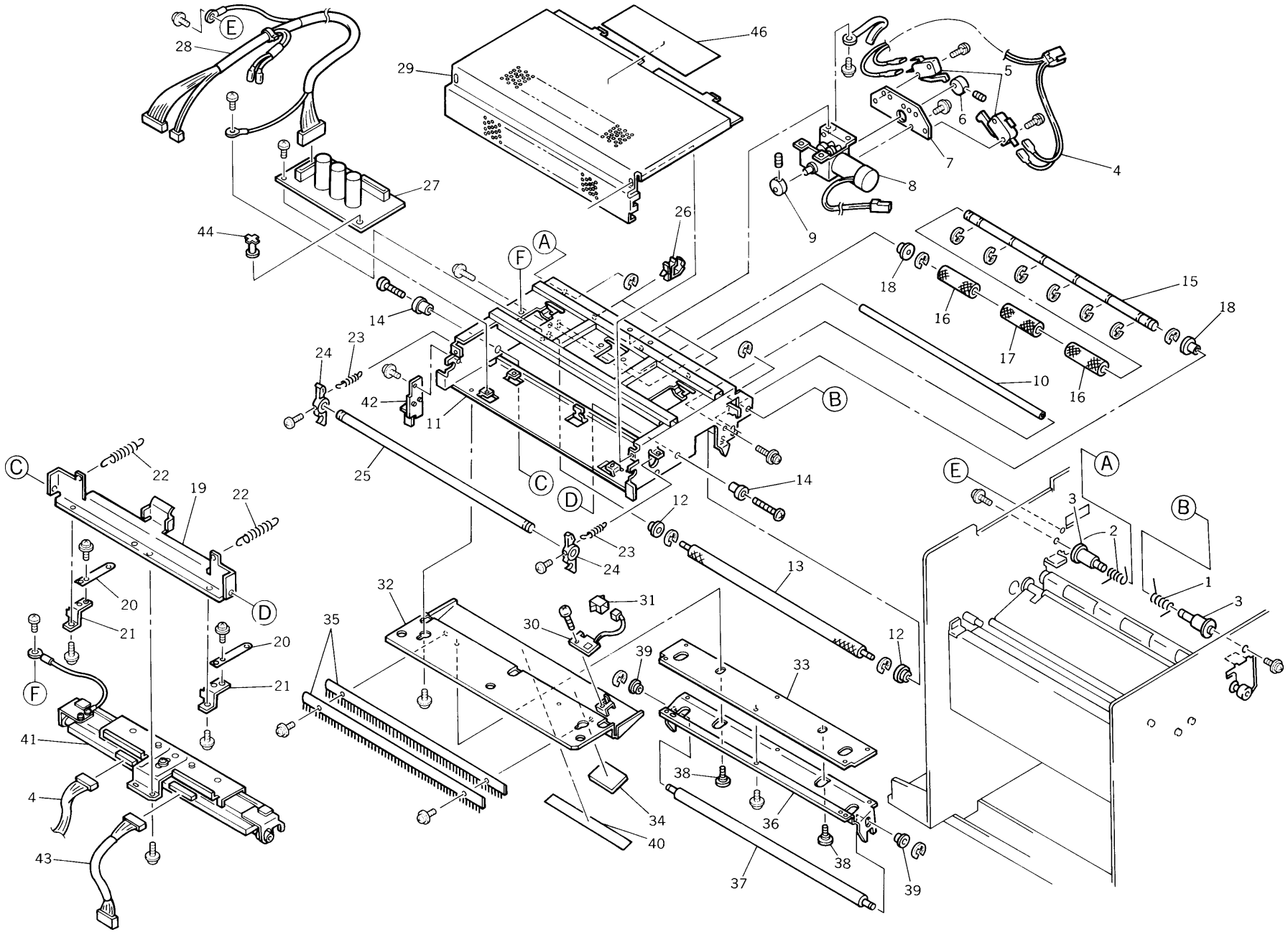

Fig. 27 CUTTER UNIT

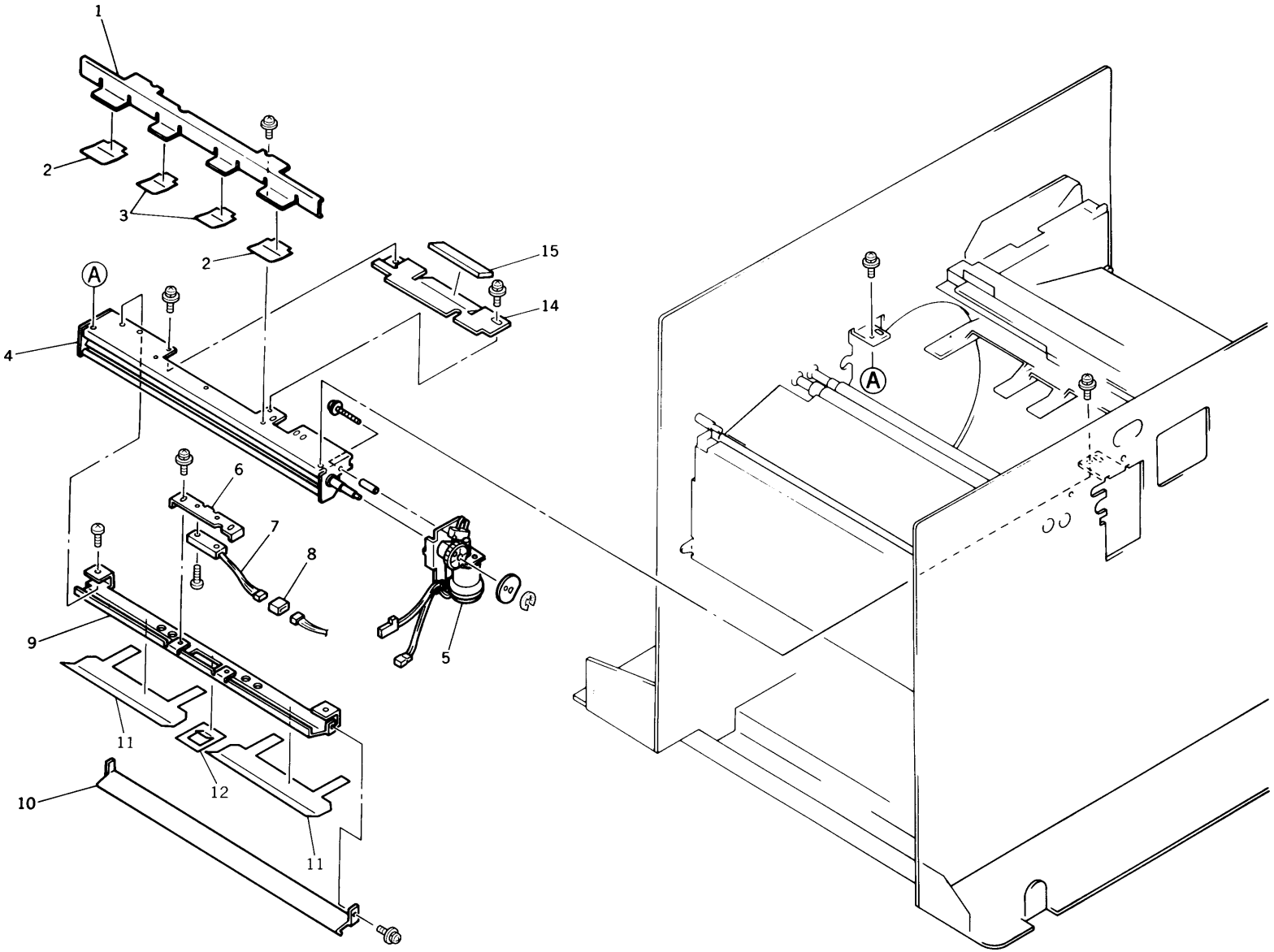

Fig. 28 MASTER REMOVAL UNIT (FR2950)

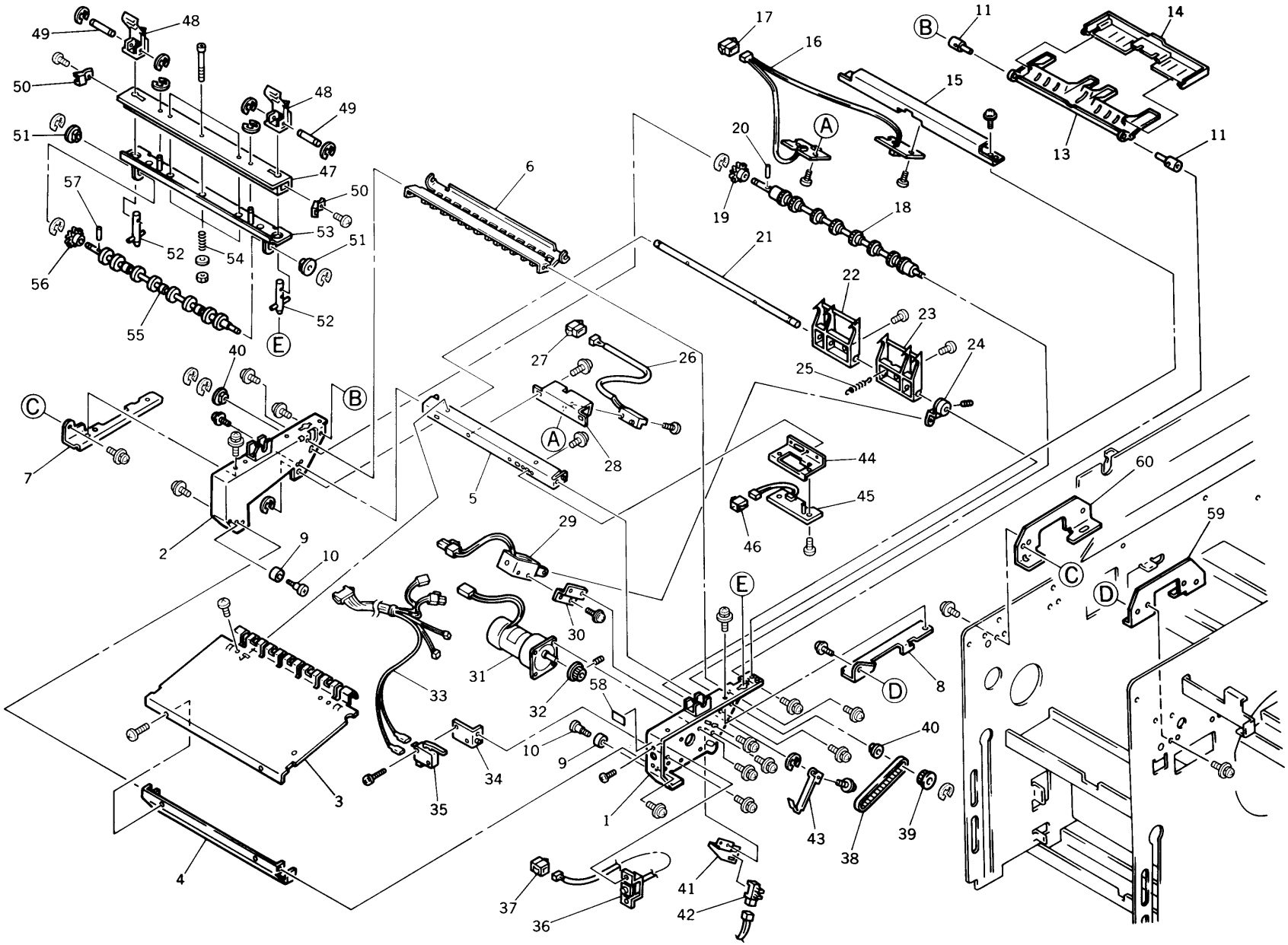

Fig. 29 MASTER REMOVAL UNIT (FR3950)

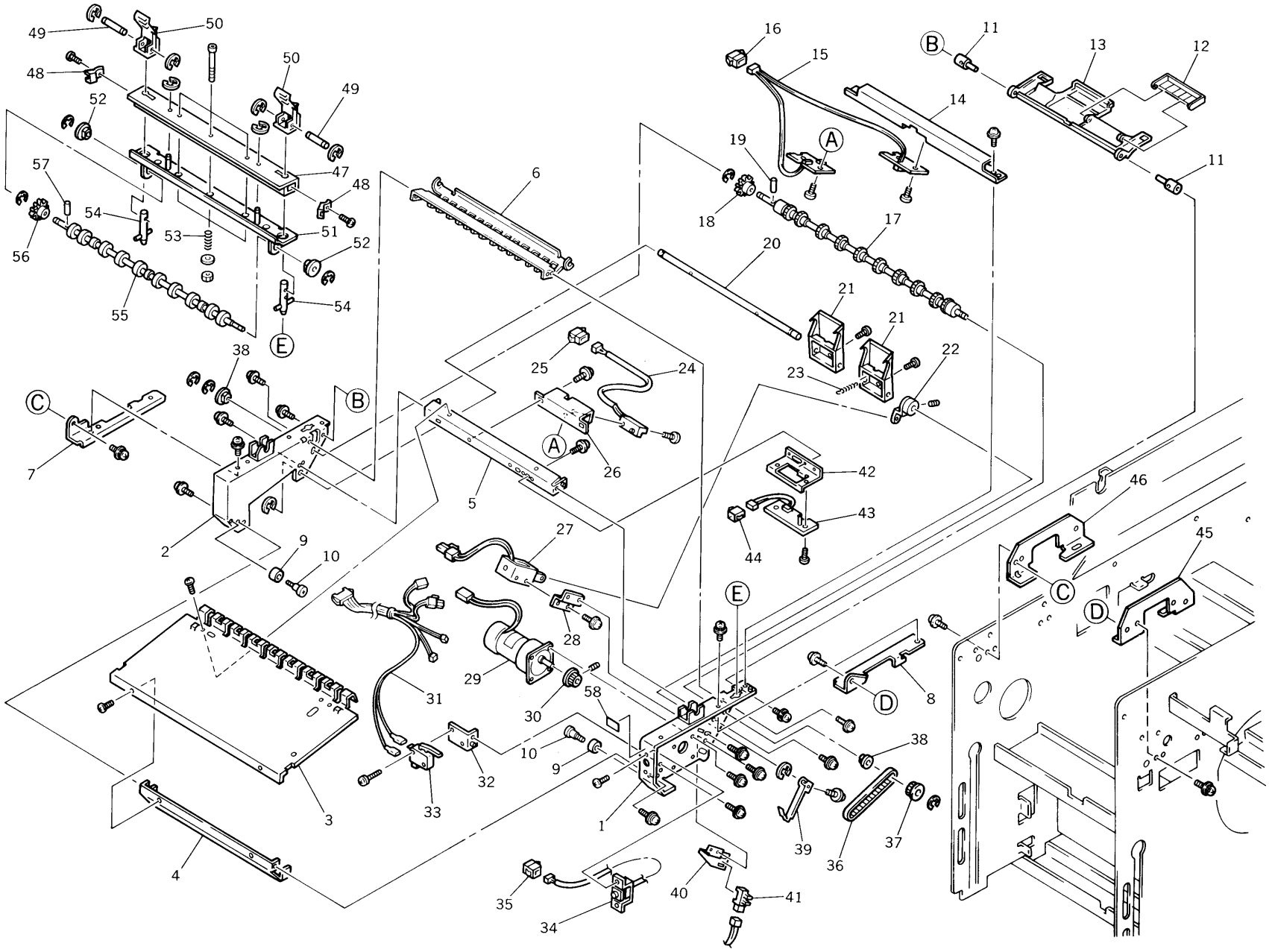

Fig. 30 MASTER DISPOSAL BOX

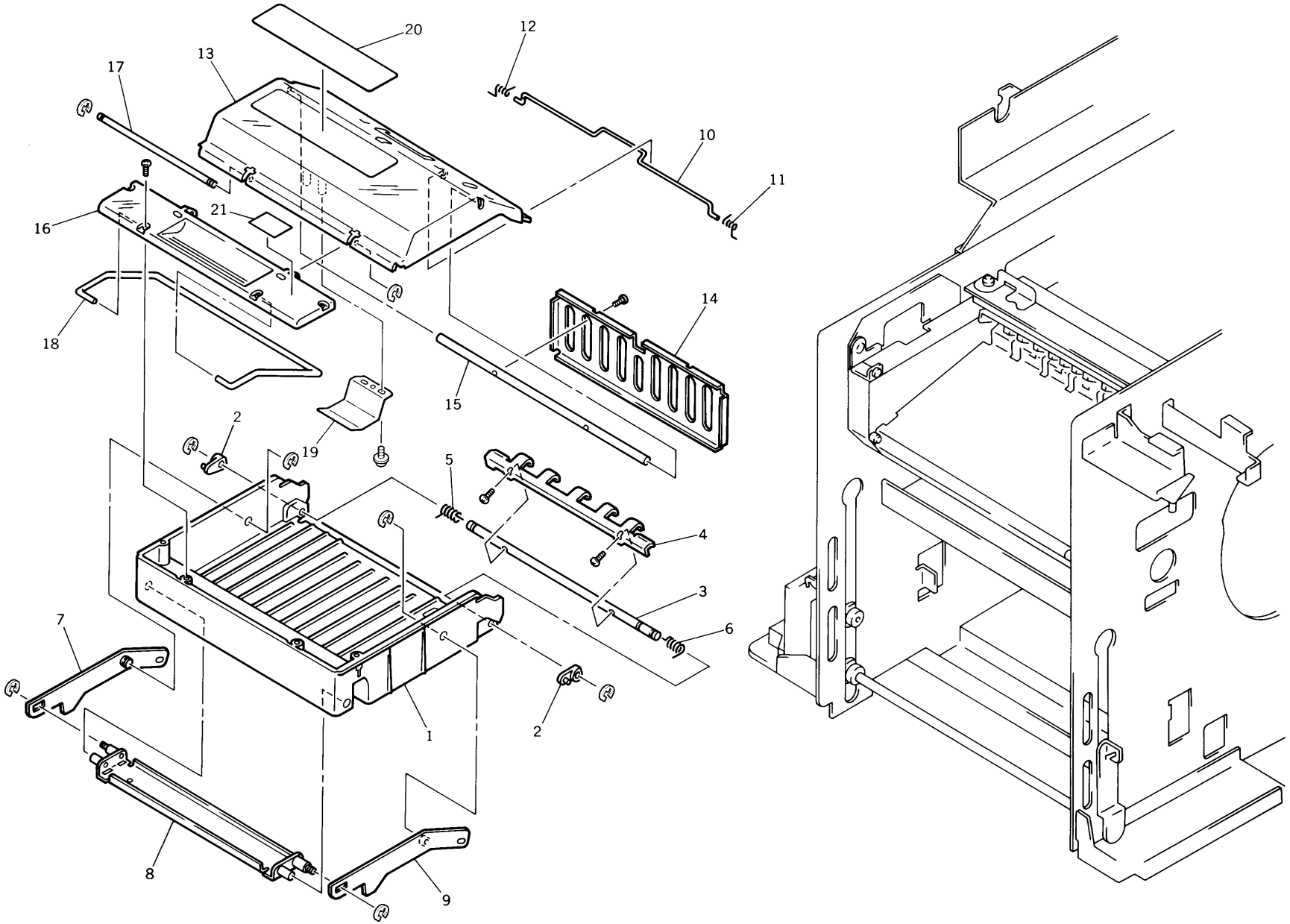

Fig. 31 ELECTRICAL COMPONENT AREA (1)

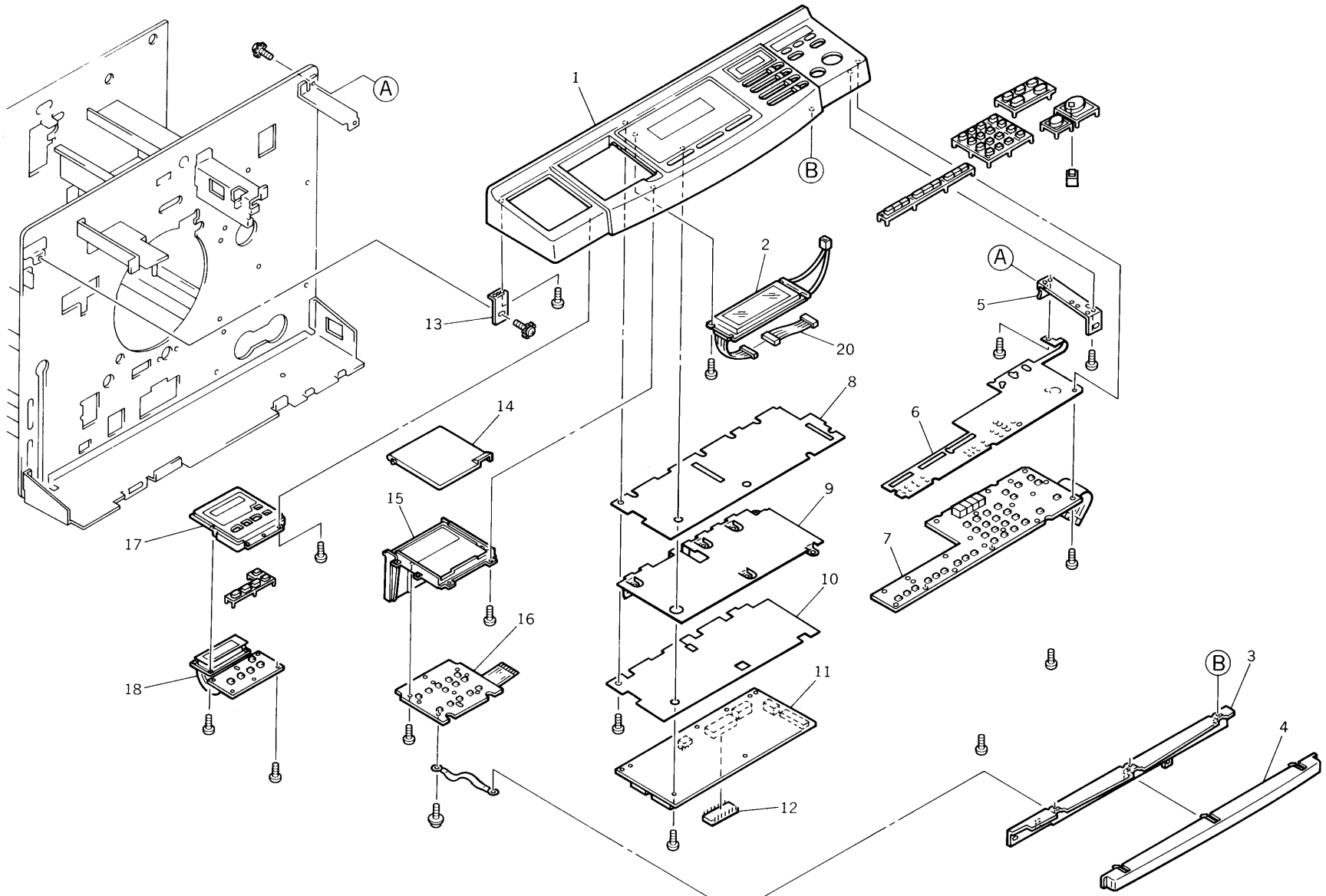

Fig. 32 ELECTRICAL COMPONENT AREA (2)

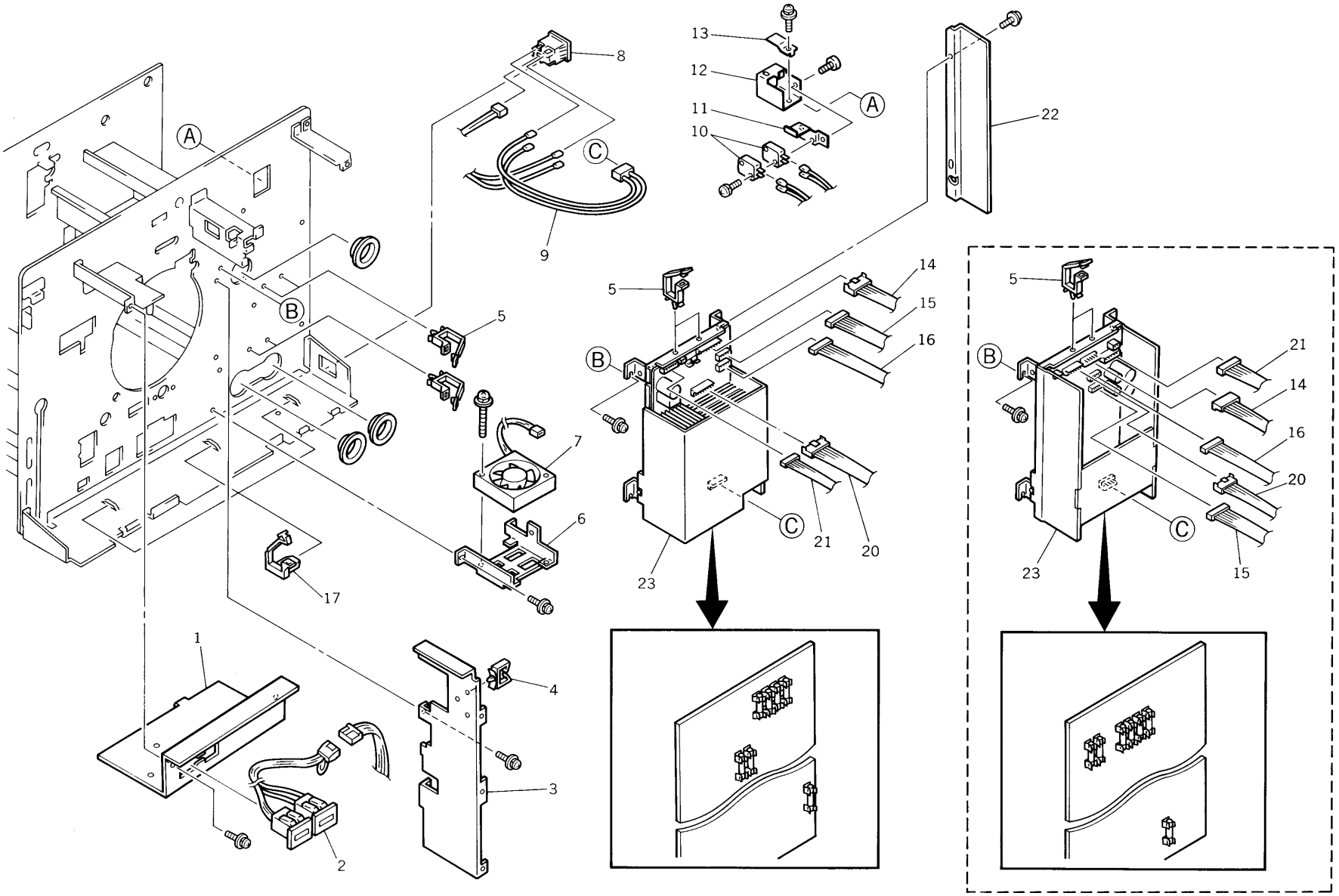

Fig. 33 ELECTRICAL COMPONENT AREA (3)

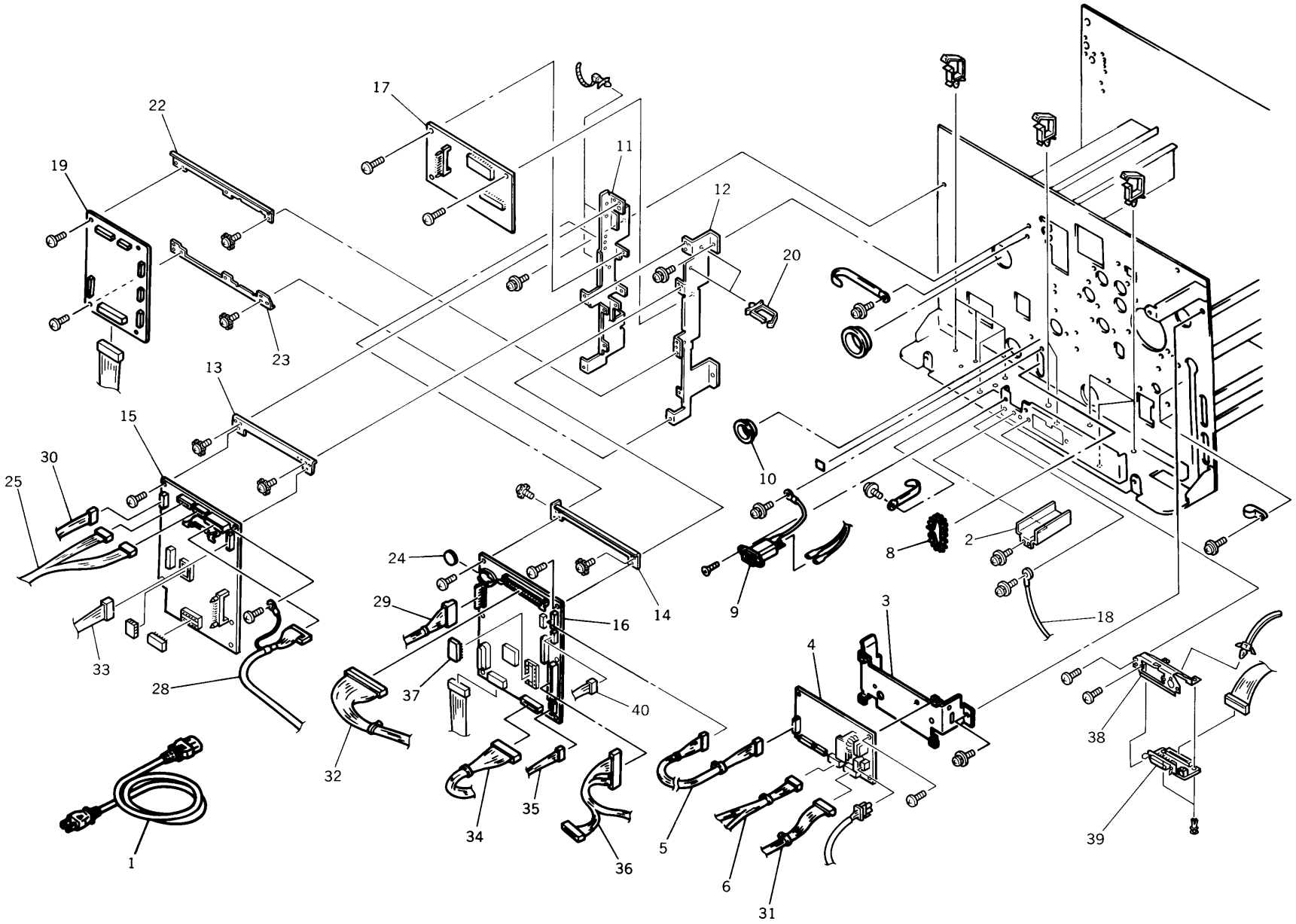

Fig. 34 EXTERIOR COVER AREA

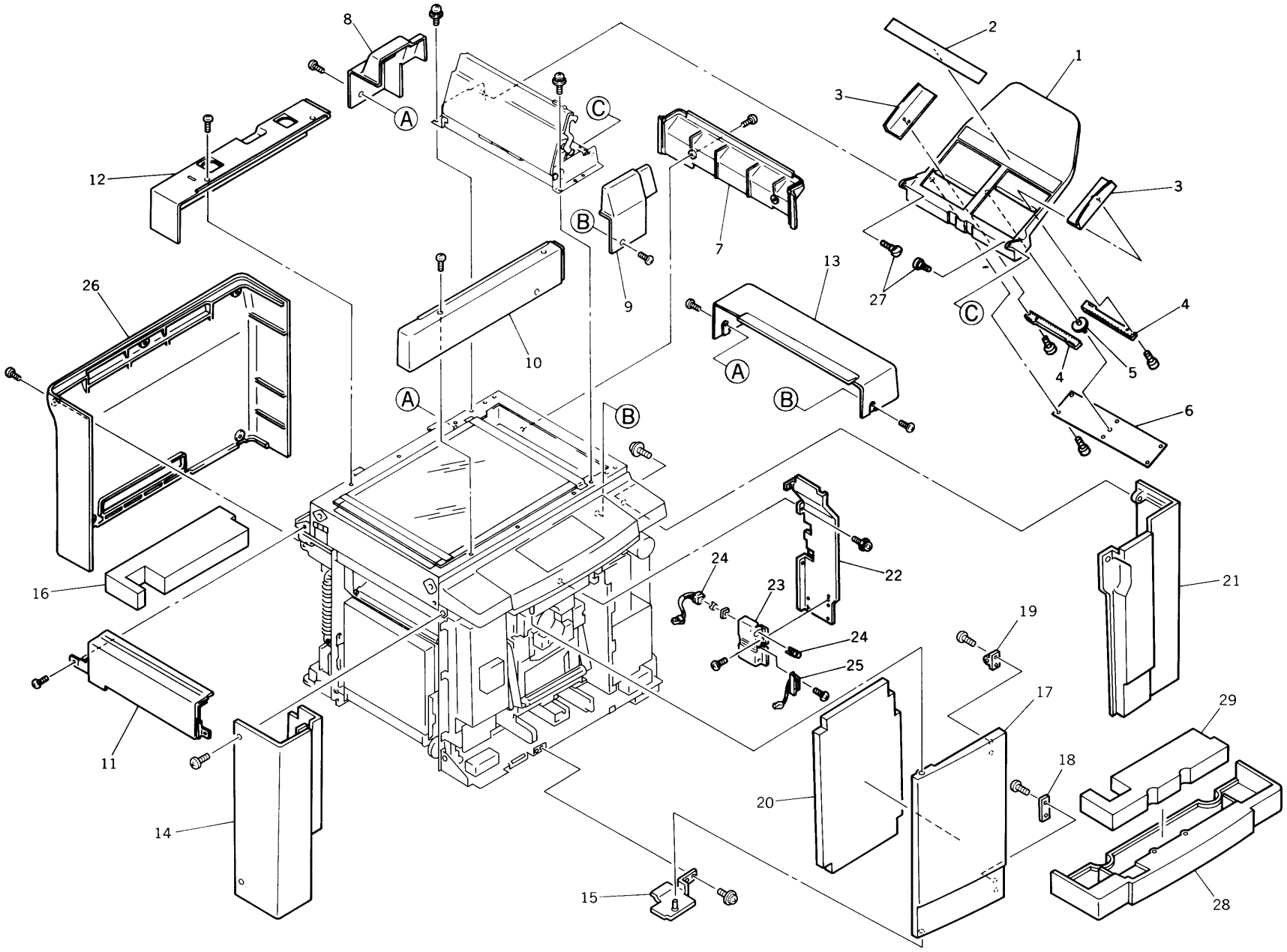

Fig. 35 STAGE COVER

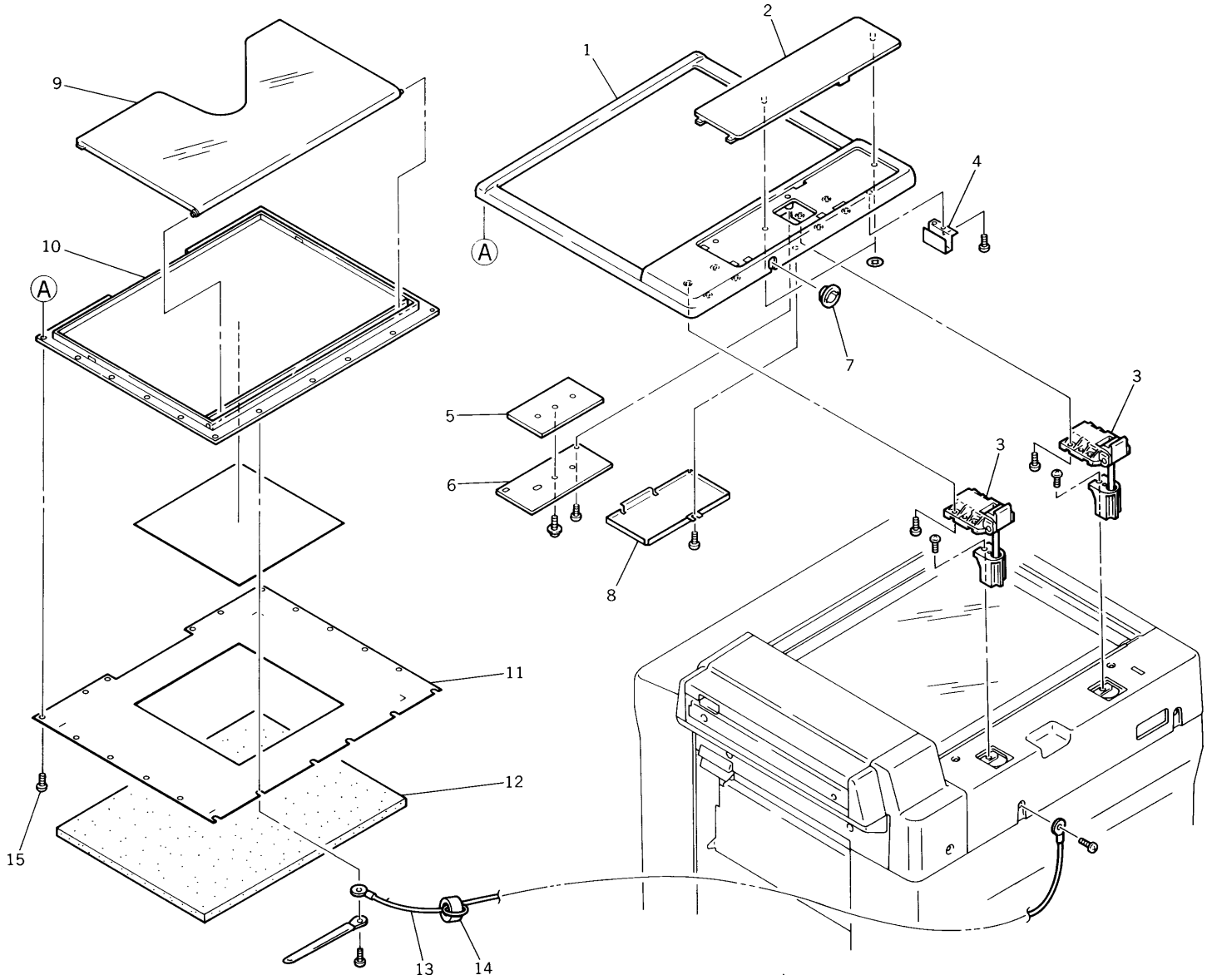

Fig. 36 DIGITIZER

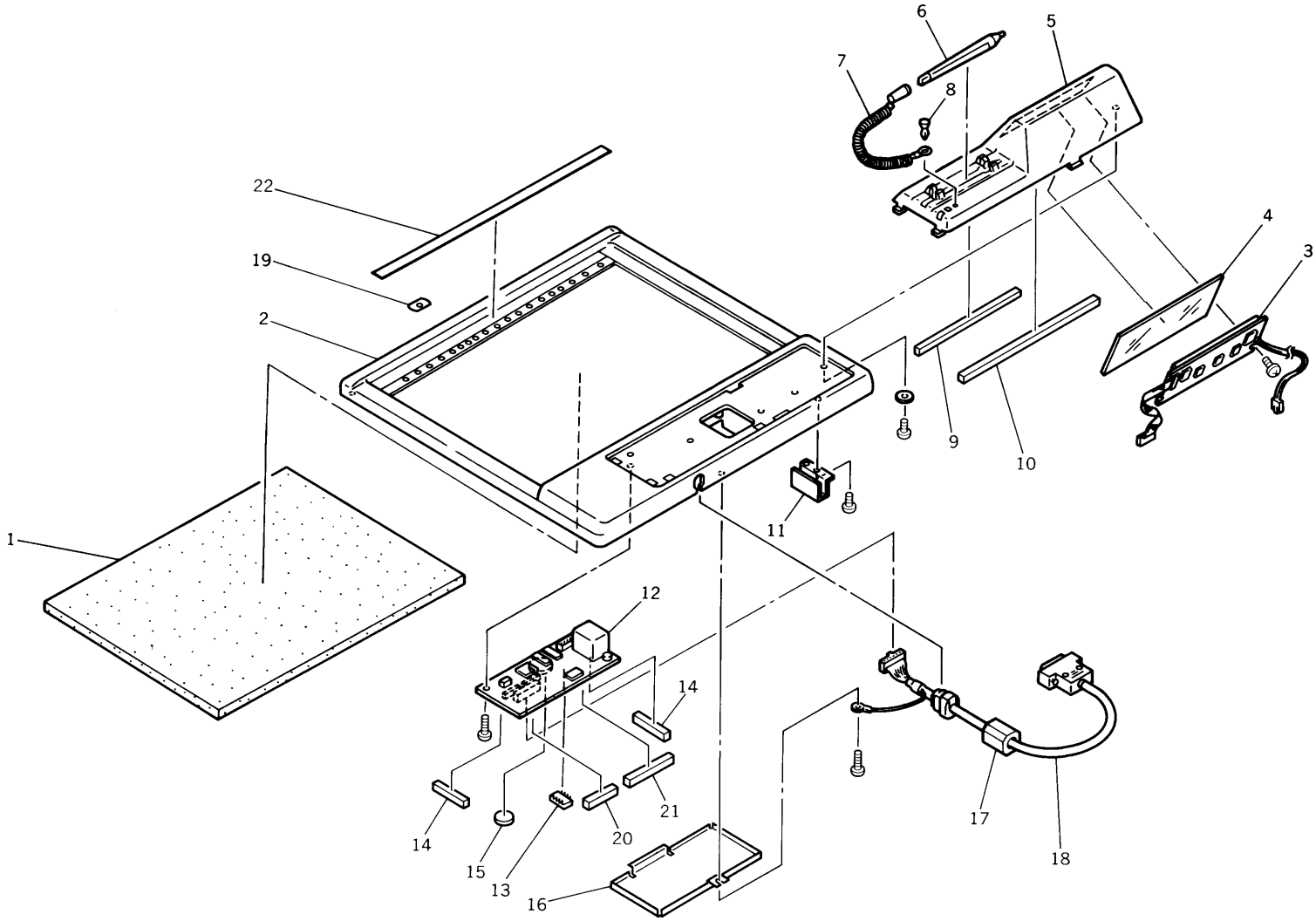

Fig. 37 SC UNIT

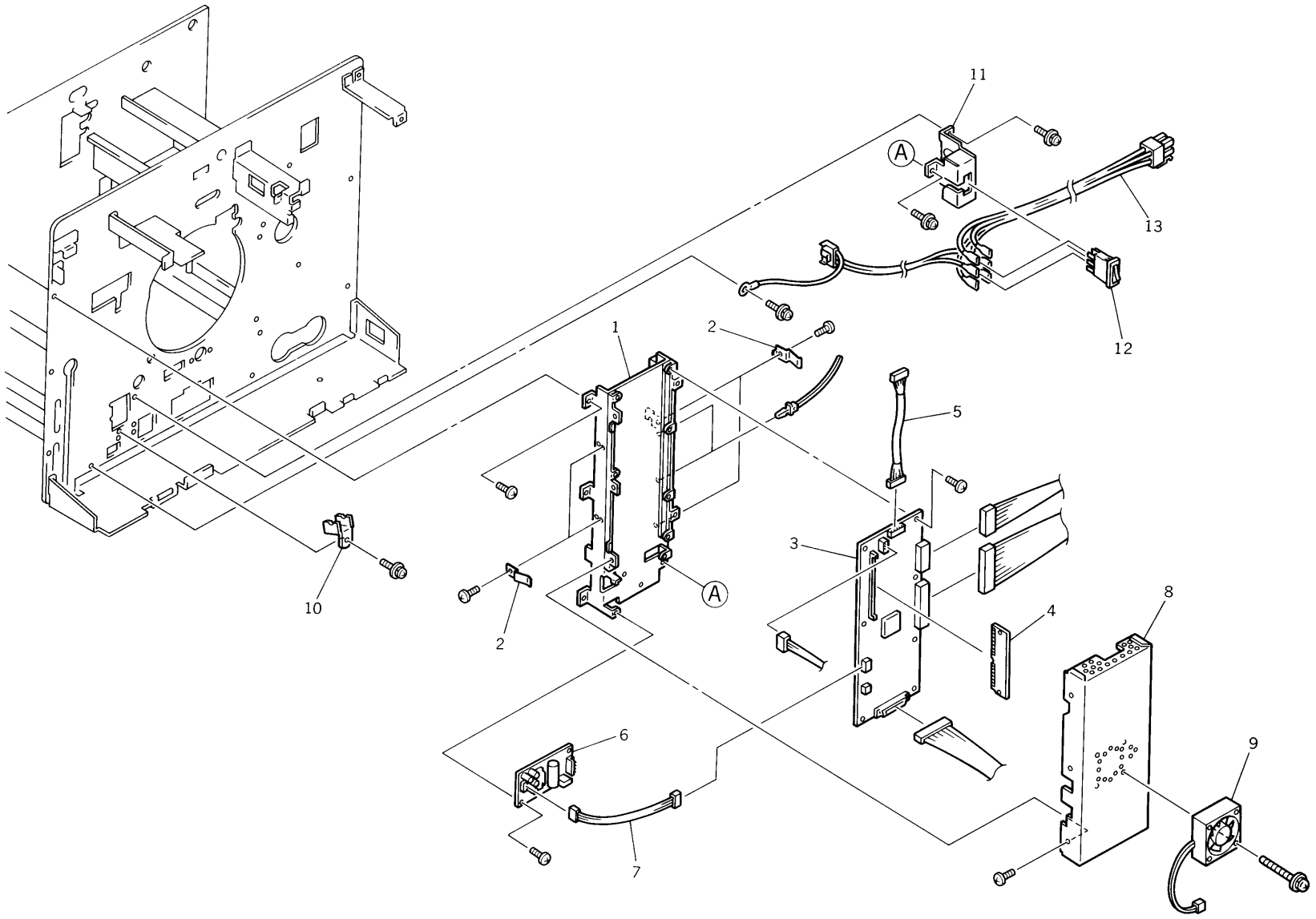

Fig. 38 CONNECTING PARTS FOR OPTION

