Fig. 1 MAIN BODY AREA

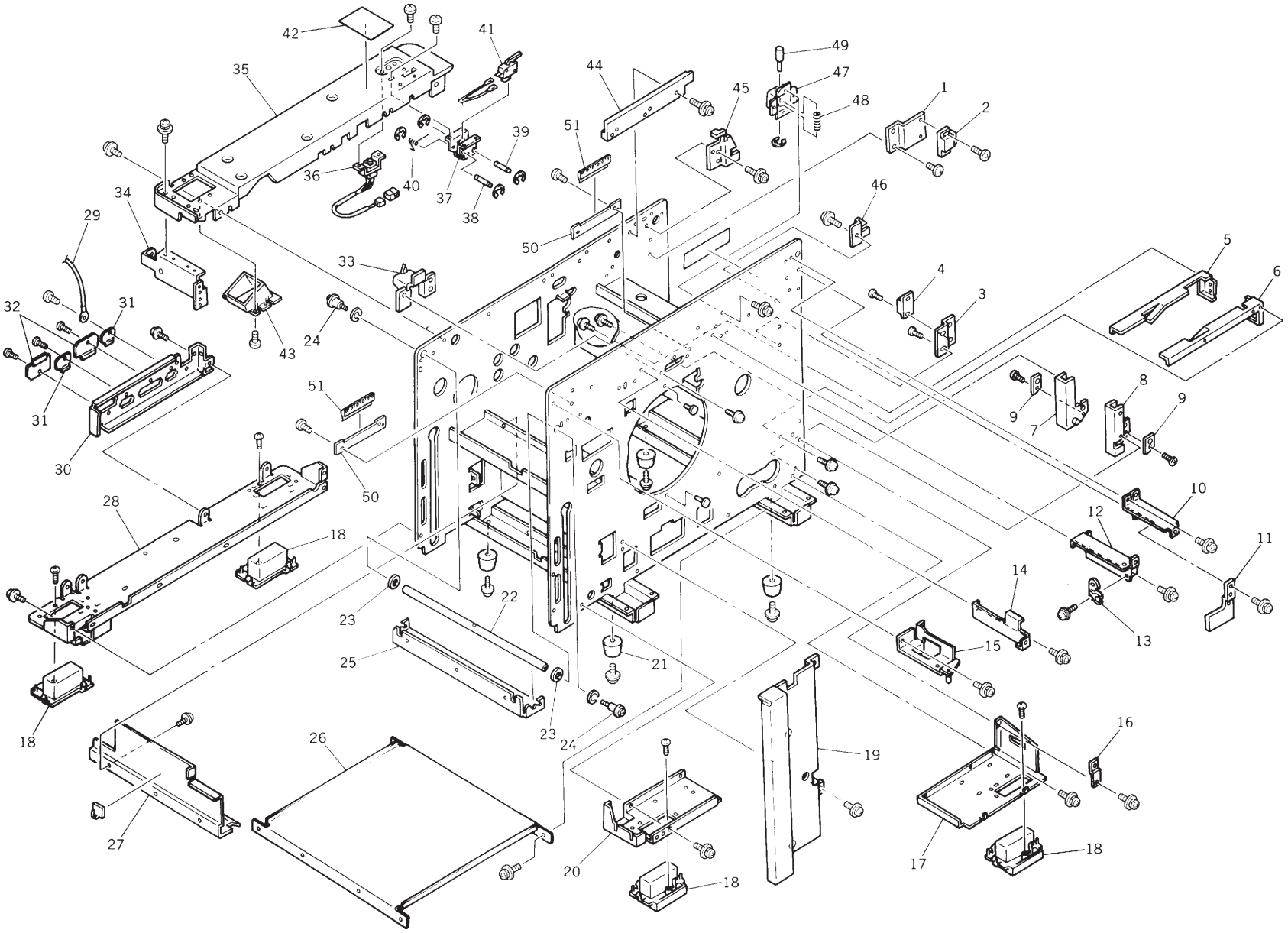

No.	Part No.	Part Name	Q'ty	Remark
	017-93110-100	Magnet Catch Ass'y D; P. -Rcv.-T.; CE		
1	017-23405-307	*Bracket D; Magnet Catch; P. -Rcv.-T.; CE	1	
2	660-05000-018	*Magnet Catch SM50P	1	
	011-93110-009	Magnet Catch Ass'y; P.-Rcv.-T.		
3	011-13122-109	*Bracket; Magnet Catch; P. -Rcv.-T.	1	
4	660-05000-018	*Magnet Catch SM50P	1	
5	019-23205-108	Bracket R; Suction; A3	1	
6	019-23204-004	Bracket F; Suction; A3	1	
7	019-23403-201	Set Plate R; P. -Rcv.-T.; A3	1	
8	019-23401-209	Set Plate F; P. -Rcv.-T.; A3	1	
9	019-13119-009	Lock Plate; P. -Rcv.-T.	2	
10	011-17206-005	Bracket E; Keyboard	1	
11	011-17231-000	Set Plate Upper; Front Right Cover	1	
	019-97220-001	Keyboard Bracket D Ass'y		
12	019-17206-003	*Bracket D; Keyboard	1	
13	002-17017-203	*Cover Catch B; Front	1	
14	019-17205-007	Bracket C; Keyboard	1	
15	019-17202-008	Upper Hinge	1	
16	011-17209-004	Set Plate; Front Right Cover	1	
17	017-17210-103	Bottom Plate (Right)	1	
18	017-17220-109	Carrying Grasp	4	
19	011-34502-009	Inner Cover; CE	1	
20	019-37212-000	Bracket; Hinge; CE	1	
21	660-01000-200	Rubber Foot K-45	4	
22	019-26201-006	Fulcrum Shaft; FB	1	
23	607-09001-003	Metal; S14 x 18 x 4.5	2	
24	018-16202-007	Stepped Screw; M6 x 10	2	
25	019-46205-008	Fulcrum Support Plate; FB; CE	1	
26	014-11114-100	Bottom Cover; A3; CE	1	
27	014-14119-405	Front Cover; M.-Rmv.; A3; CE	1	
28	017-17217-205	Bottom Plate (Left); CE	1	
29	488-90021-002	Ground Wire; U3-1000-R4	1	
30	017-37224-003	Mount II; Connector; CE	1	200V
30	017-17221-008	Mount; Connector	1	100V
31	017-17222-004	Blind Plate C; Connector	2	

No.	Part No.	Part Name	Q'ty	Remark
32	017-17223-000	Blind Plate D; Connector	2	
33	019-25006-307	Bracket; Wire Harness; CE	1	
34	019-26217-000	Bracket; Back Cover; CE	1	
35	019-26218-103	Upper Rear Frame; FB; CE	1	
36	019-60014-002	Switch A; CE	1	
37	017-16121-000	Bracket; Upper Cover Set SW	1	
38	017-16122-006	Shaft A; Upper Cover Set SW	1	
39	017-16123-002	Shaft B; Upper Cover Set SW	1	
40	017-16124-106	Spring; Upper Cover Set SW	1	
41	443-02004-002	Micro-SW: AM50039C331F	1	
42	550-21301-000	Seal; Master Cut	1	
42	550-21302-006	Seal; Master Cut; Pic.	1	
43	019-16067-000	Cap 2; CE	1	
44	019-17251-203	Lock Plate; Support Shaft	1	
45	019-17252-307	Hook Plate (R): FB; CE	1	
46	018-16229-100	Hook Plate (F): FB; CE	1	
47	018-16241-100	Bracket; Damper Stopper; CE	1	
48	018-16242-009	Spring; Damper Stopper	1	
49	018-16243-102	Cap; Damper Stopper	1	
50	019-11501-208	Bracket; Ground Finger	2	
51	481-30007-000	Ground Finger	2	

Fig. 2 ELEVATOR – SCRAPER AREA

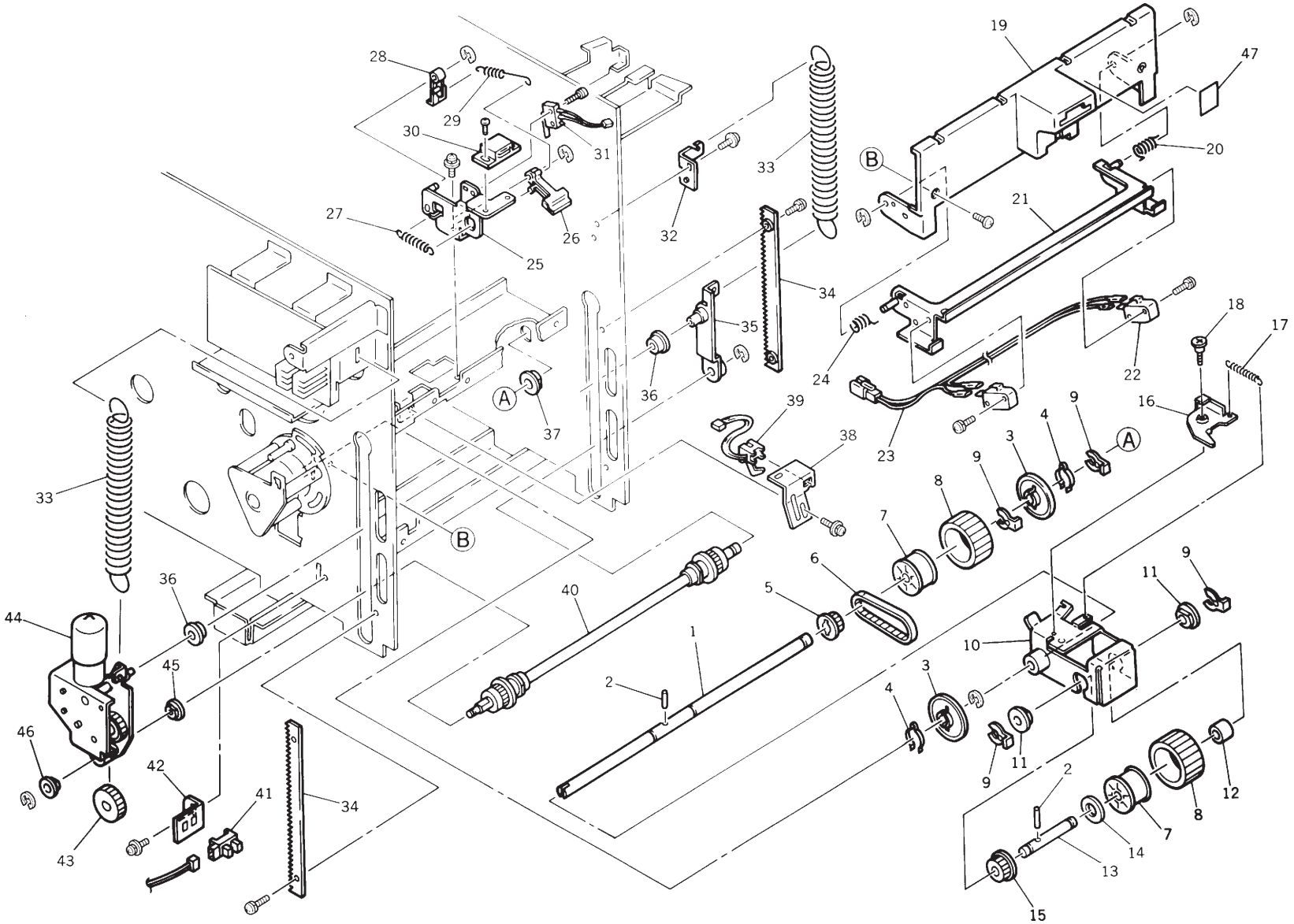

No.	Part No.	Part Name	Q'ty	Remark
	019-91811-407	Scraper Ass'y; CE		
1	019-21805-108	*Shaft; Pickup Roller	1	
2		*Pin; ϕ2 x 14	2	Ref.Pg.II-27
3	011-11522-002	*Paper Guide Roller	2	
4	000-06123-007	*Stopper; Paper Guide Roller	2	
5	611-42100-001	*Pulley; P21-3M060 (HTD)	1	
6	620-31776-002	*Belt; 177-3M-6	1	
	019-11810-103	*Pickup Roller Ass'y	2	
7	006-11332-009	**Core; Pickup Roller	2	
8	019-11806-106	**Rubber Roller; Pickup	2	
9	019-11812-106	*Lock Ring	4	
10	019-11801-104	*Holder Plate; Scraper; CE	1	
11	607-16000-802	*Metal; F10 x 18/16 x 5; 22 x 1.5	2	
12	017-11818-002	*Scraper Collar	1	
13	017-11812-004	*Shaft; Scraper	1	
14	638-90000-012	*Washer; 18 x 10.4 x 0.4	1	
15	611-42600-004	*Pulley; P26-3M060 (HTD)	1	
16	019-11803-000	*Upper Arm; Scraper	1	
17	019-11804-006	*Spring; Scraper	1	
18	635-17613-004	*Stepped Screw; M3 x 4	1	
	019-91800-103	Feed Tray Safety SW Ass'y; A3; CE		
19	019-41801-109	*Cover; Pickup Roller; CE	1	
20	017-11819-009	*Spring F; Safety SW	1	
21	019-21802-109	*Bracket; Feed Tray Safety SW; CE	1	
22	443-02000-708	*Micro-SW; AM50630A331	2	
23	019-55032-000	*Wire Harness; Feed Tray Safety SW	1	
24	017-11820-007	*Spring B; Safety SW	1	
	019-91830-002	P.-F. Pressure Adj. Lever Ass'y		
25	017-11805-008	*Bracket; P.-F. Pressure Adj. Lever	1	
26	011-11810-105	*P.-F. Pressure Adj. Lever	1	
27	011-11815-000	*Spring: P.-F. Pressure Adj. Lever	1	
28	017-11808-007	*Hook; P.-F. Pressure Adj.	1	
29	019-11811-100	*Spring B; P.-F. Pressure Adj.	1	
30	660-05000-301	*Magnet Catch; SM-41	1	
31	017-60025-000	*Micro-SW Ass'y 3	1	

No.	Part No.	Part Name	Q'ty	Remark
32	017-11640-009	Bracket; Elevator Spring	1	
33	019-21602-002	Spring; Elevator	2	
34	002-11719-303	Rack; Elevator	2	
35	017-11602-301	Link Plate; Elevator	1	
36	002-11717-009	Collar; Elevator	2	
37	607-16000-403	Metal; F10 x 15/14 x 5.5; 20 x 2.5	1	
38	019-11814-206	Bracket; Upper Limit Sensor	1	
39	017-60007-001	Upper Limit Sensor	1	
40	019-91600-007	Shaft; Elevator	1	
41	443-30003-003	Sensor; LG-203D	1	
42	017-11648-000	Bracket; Lower Limit Sensor	1	
43	017-11649-006	Gear; Elevator	1	
44	017-91620-003	Unit/Elevator Motor	1	
45	607-15000-000	Metal; F8 x 13/12 x 5; 16 x 2	1	
46	607-12001-006	Metal; F5 x 10/9 x 4; 12 x 1.5	1	
47	550-20687-001	Seal; P.-Feed Pressure	1	
47	550-20688-008	Seal; P.-Feed Pressure; Pic.	1	

Fig. 3 PAPER-FEED TRAY

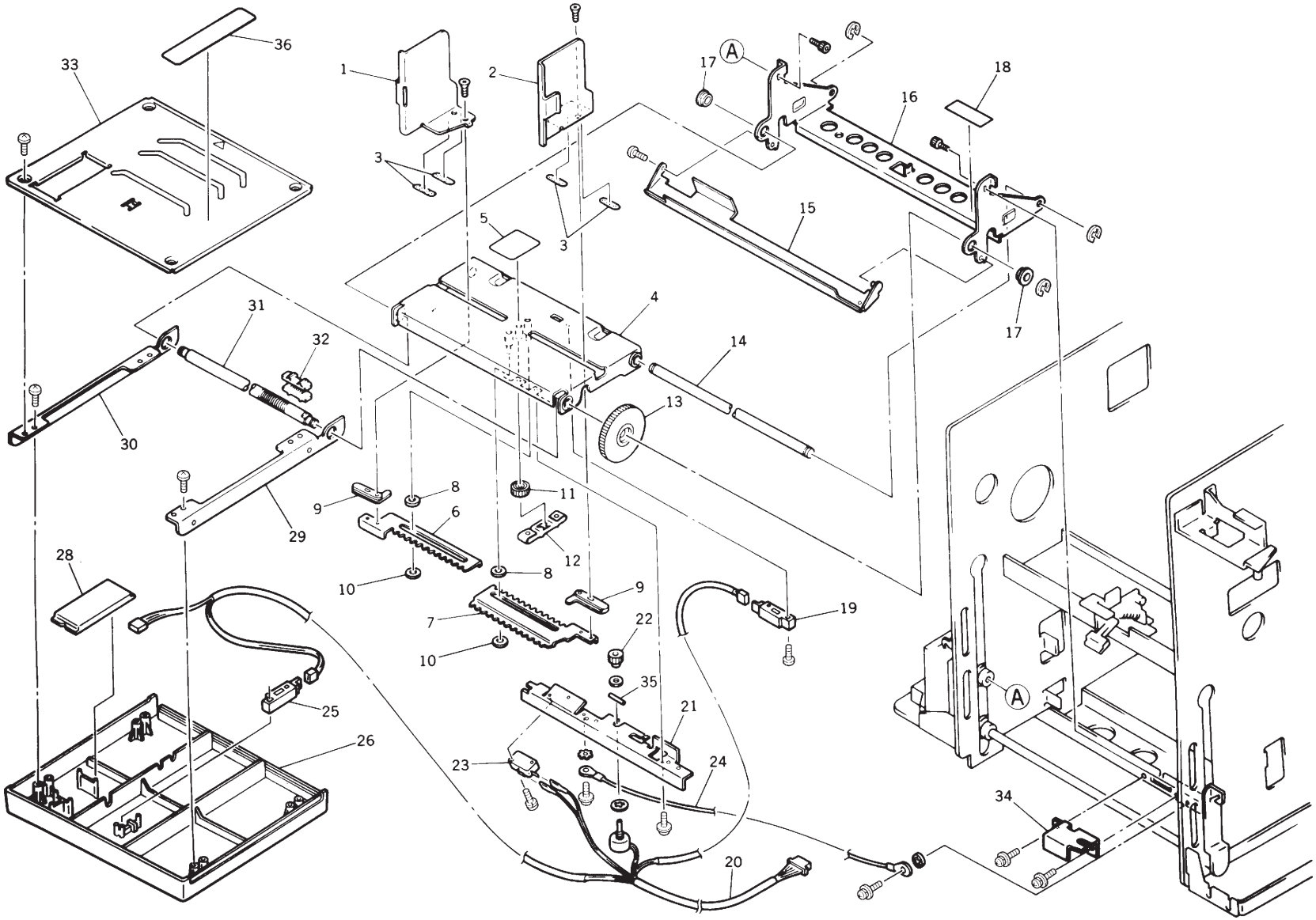

No.	Part No.	Part Name	Q'ty	Remark
	019-91500-207	Unit/Paper-Feed Tray; A3; CE		
	019-91501-203	Unit/Paper-Feed Tray; A3; US; CE		U.S.A.
1	011-11510-209	*Side Guide L; P. -F. -T.	1	
2	011-11509-200	*Side Guide R; P. -F. -T.	1	
3	019-11524-100	*Slide Sheet; P. -F. -T.	4	
4	019-41502-209	*Paper Feed Tray; CE	1	
4	019-41503-205	*Paper Feed Tray; US; CE	1	U.S.A.
5	011-11516-002	*L.O. Sheet	1	
6	019-21513-107	*Slide Rack; P. -F. -T.; CE	1	
7	019-21512-100	*Slide Rack F; P. -F. -T.; CE	1	
8	011-11513-003	*Collar; Slide Rack; P. -F. -T.	2	
9	019-11522-108	*Link Plate; Side Guide; P. -F. -T.	2	
10	638-90616-005	*Washer; 6.1 x 12 x 1.6	2	
11	011-11514-000	*Gear; Slide Rack; P. -F. -T.	1	
12	014-11533-006	*Spring; Slide Rack	1	
13	011-11524-005	*Adj. Dial	1	
14	019-21501-001	*Shaft B; P. -F. -T.	1	
15	019-21514-308	*Actuater Plate; P. -F. -T.; CE	1	
16	019-41517-001	*Bracket; P. -F. -T.; CE	1	
17	607-15006-009	*Metal; F8 x 16 x5; 18 x 1.1	2	
18	550-20590-105	*Seal; P. -F. -T.	1	
18	550-21121-001	*Seal; P. -F. -T.; US	1	U.S.A.
19	443-30002-007	*Sensor K; PS-R11LB	1	
20	019-55016-307	*Wire Harness II; P. -F. -T.	1	
21	019-21518-109	*Bracket; Size VR; P. -F. -T.; CE	1	
22	017-11516-103	*Size Gear; P. -F. -T.	1	
23	443-02000-708	*Micro-SW; AM50630A331	1	
24	488-90009-002	*Ground Wire; P. -F. -T.	1	
25	443-32001-008	*Sensor S; GP2A20L	1	
26	014-11529-203	*Feed Board Cover	1	
28	017-11519-102	*Lead SW Cover; P. -F. -T.; CE	1	
29	019-11521-101	*Support Plate L; Feed Board; CE	1	
30	019-11520-105	*Support Plate R; Feed Board; CE	1	
31	014-11502-003	*Shaft A; P. -F. -T.	1	
32	011-11523-106	*Adj. Nut; P. -F. -T.	1	

No.	Part No.	Part Name	Q'ty	Remark
33	019-41519-004	*Feed Board; CE	1	
34	019-11502-000	Connector Cover	1	
35		Pin; ϕ2 x 10	1	Ref.Pg.II-27
36	550-21292-108	Seal; Paper Side Guide	1	

Fig. 4 DRIVE MECHANISM AREA

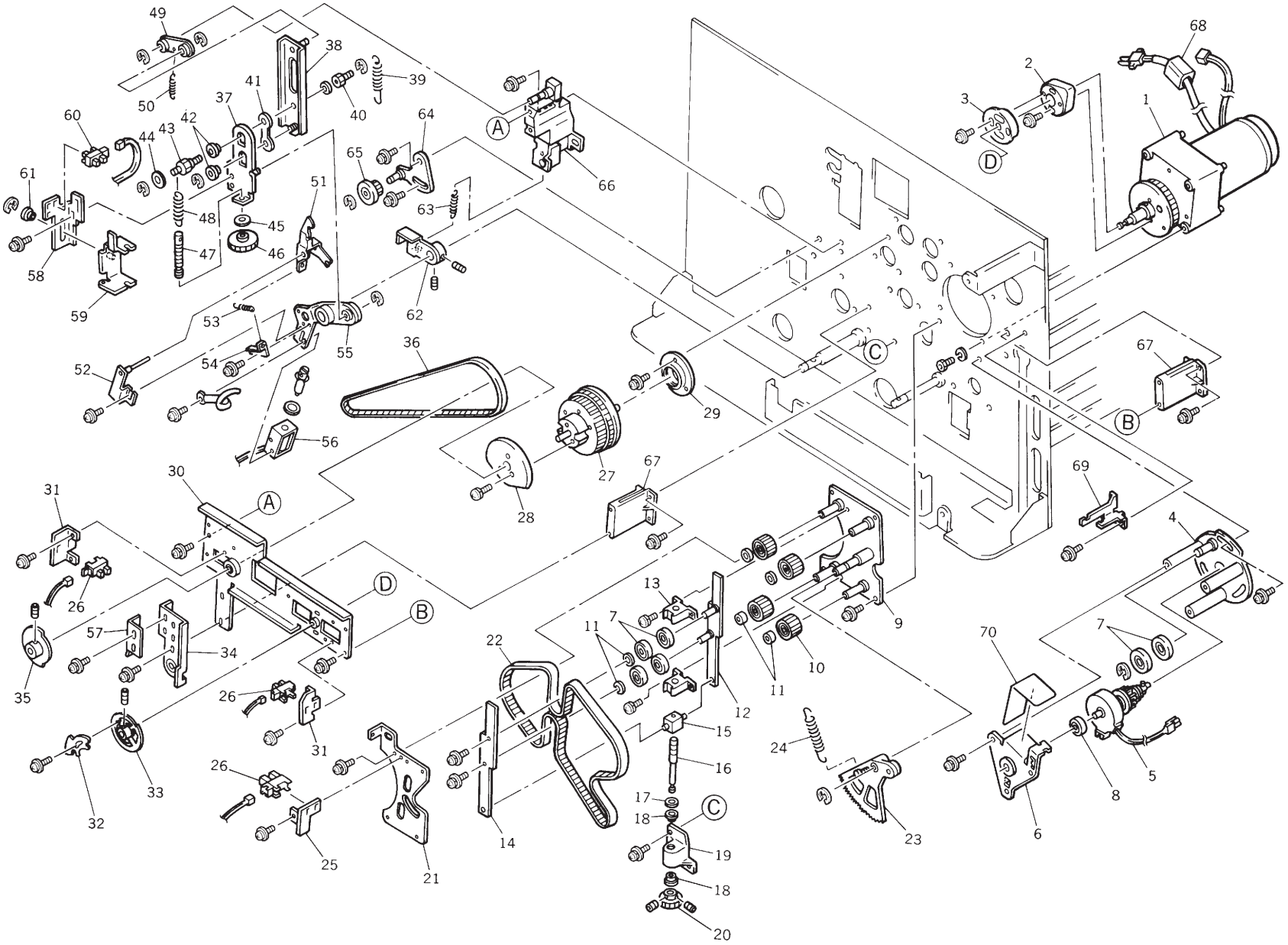

No.	Part No.	Part Name	Q'ty	Remark
	019-91211-000	Unit/Main Motor; T		
1	019-91216-002	*Main Motor Ass'y; T	1	
	011-60027-106	**Photoelectron Disc.	1	
	017-60031-000	**Encoder Sensor	1	
2	002-11220-007	*Cam; Guide Roller	1	
3	011-11240-309	*Cam; Timing Roller	1	
	019-91220-107	Unit/Drive; CE		
4	019-11213-008	*Base Plate; P. -F. Clutch	1	
5	019-65001-006	*P. -F. Clutch	1	
6	019-11220-101	*Bracket; P. -F. Clutch; CE	1	
7	600-08242-006	*Bearing; 628ZZ	6	
8	600-20061-009	*Bearing; 608ZZ	1	
9	011-11208-103	*Base Shaft Plate; Slide Plate	1	
10	019-11201-000	*Idler Pulley	4	
11	002-11227-001	*Spacer; Slide Plate	6	
12	019-11209-000	*Slide Plate (Base)	1	
13	002-11225-009	*Support Block; Slide Plate	2	
14	006-11224-109	*Slide Plate (Front)	1	
15	011-11231-008	*Shaft Block; Slide Plate	1	
16	011-11230-001	*Shaft; Slide Plate	1	
17	638-90616-005	*Washer; 6.1 x 12 x 1.6	1	
18	607-13000-003	*Metal; F6 x 10/9 x 4; 12 x 1.5	2	
19	011-11220-006	*Shaft Base Block; Slide Plate	1	
20	011-11232-004	*Gear; Slide Plate	1	
21	011-11227-000	*Reinforce Plate; Slide Plate	1	
22	620-78309-003	*Belt; 830-5GT-11	1	
23	002-11291-109	*Sector Gear	1	
24	011-11296-002	Spring; Sector Gear	1	
25	017-11201-200	Bracket A; Sensor	1	
26	443-30003-003	Sensor; LG-203D	3	
	019-91227-004	Main Shaft Ass'y; A3		
27	019-91228-000	*Main Pulley; Main Shaft	1	
28	019-21201-105	*Cam; Pressure Roller; A3	1	
29	006-11216-106	Bearing House A; Main Shaft	1	
30	017-11209-405	Face Plate; Main Shaft	1	

No.	Part No.	Part Name	Q'ty	Remark
31	017-11202-001	Bracket B; Sensor	2	
	019-91231-001	P Disc Ass'y		
32	019-11238-000	*Range Adj. Plate; P Disc	1	
33	019-11235-001	*P Disc	1	
34	019-11224-000	Face Plate; Pressure Shaft	1	
35	011-11255-004	Pressure Sensor Disc	1	
36	620-97506-006	Belt; 750-3GT-6	1	
	019-91230-102	Pressure Link Ass'y		
37	017-11215-006	*Pressure Link; Bottom	1	
38	017-11214-000	*Pressure Link; Top	1	
39	019-21202-004	*Spring C; Pressure Link	1	
40	017-11217-009	*Link Boss B	1	
41	017-11224-005	*Link Spacer	1	
42	607-15002-003	*Metal; F8 x 12 x 5; 16 x 2	2	
43	017-11216-002	*Link Boss A	1	
44	638-90804-006	*Washer; 8 x 15 x 0.4	1	
45	607-70815-005	*Washer; UH3000	1	
46	011-11245-009	*Gear; Pressure Adj. Screw	1	
47	017-11227-004	*Pressure Adj. Screw	1	
48	017-11225-001	*Spring; Pressure Link	1	
49	017-11223-009	*Linking Plate; Drive Base	1	
50	017-11234-000	*Spring; Linking Plate	1	
51	019-11226-002	*Hook Lever	1	
52	019-11231-103	*Shaft; Hook Lever	1	
53	019-11230-000	*Spring; Hook Lever	1	
54	011-11289-006	*Bracket; Hook Lever Spring	1	
55	011-11280-106	*Pressure Hook	1	
56	019-65012-008	*Pressure Solenoid	1	
57	019-11225-006	Resting Position Plate; Pressure Lever	1	
	017-91206-002	Pressure Det. Ass'y		
58	017-11231-001	*Bracket A; Pressure Control	1	
59	017-11232-202	*Bracket B; Pressure Control	1	
60	443-30005-006	*Sensor; GP1A71A	1	
61	607-11001-002	*Metal; F4 x 6 x 2.2; 8 x 1	1	
62	019-11240-102	Pressure Lever	1	

No.	Part No.	Part Name	Q'ty	Remark
63	019-11223-003	Spring; Pressure Link	1	
64	019-13610-209	Bracket; Tension Pulley	1	
65	011-11254-202	Tension Pulley	1	
66	017-11208-000	Base Shaft Plate; Pressure	1	
67	011-11234-104	Main Bracket; Face Plate	2	
68	435-00025-000	Core; SFC-6	1	
69	019-18051-100	Guide; Motor Wire Harness; CE	1	
70	019-11222-007	Cover; Paper Feed Clutch; CE	1	

No.	Part No.	Part Name	Q'ty	Remark

MEMO

Fig. 5 ROLLER SYSTEM AREA

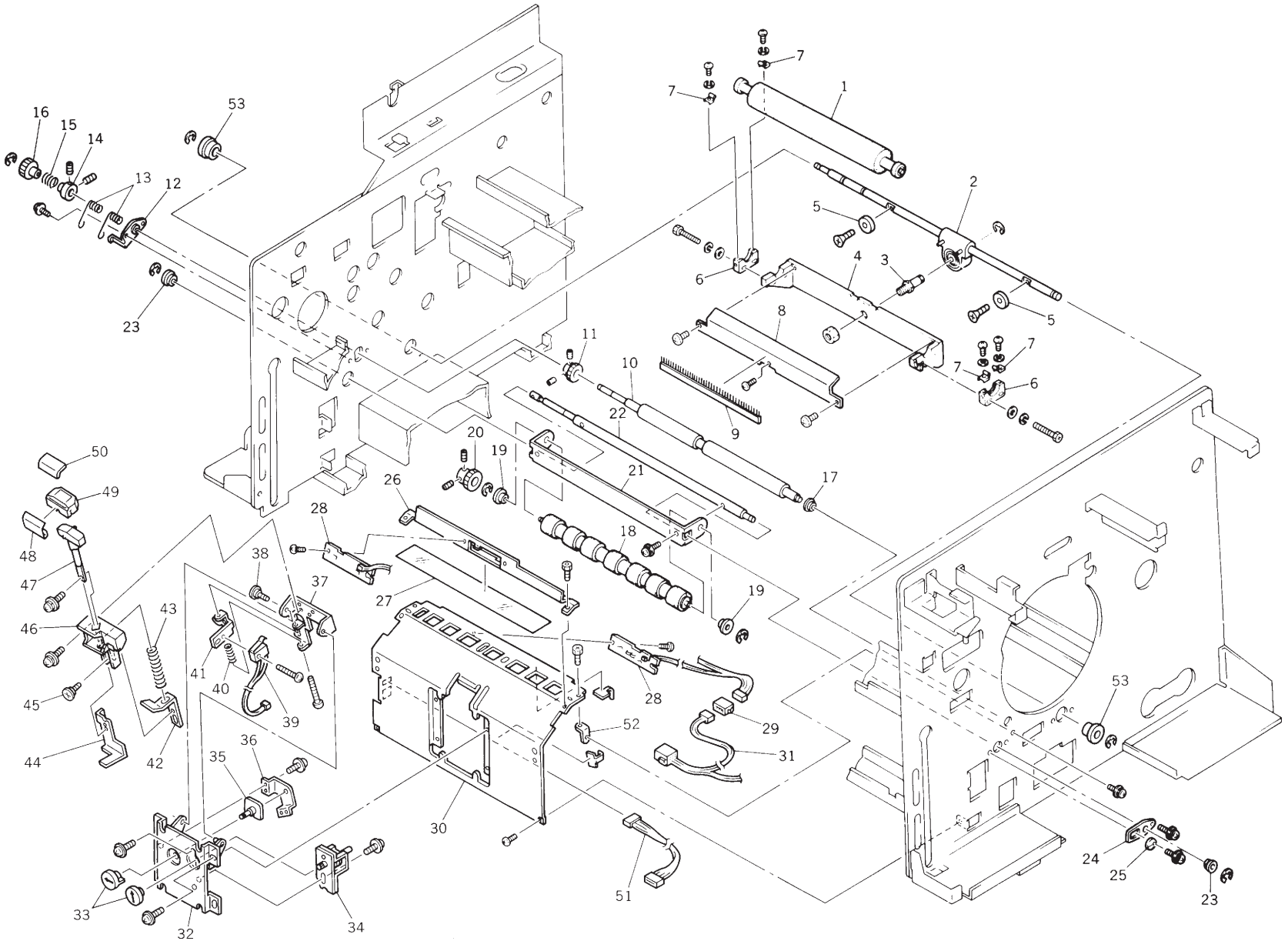

No.	Part No.	Part Name	Q'ty	Remark
1	014-91420-002	Pressure Roller Ass'y; A3	1	
	014-91410-309	Pressure Shaft Ass'y; A3; CE		
2	014-91412-000	*Pressure Shaft; A3	1	
3	002-11405-007	*Center Shaft; Pressure	1	
4	014-11406-209	*Pressure Roller Support; A3; CE	1	
5	014-11410-001	*Support Collar; A3	2	
6	002-11402-008	*Adjuster; Press.-Roll. Support	2	
7	002-11404-108	*Roller Holder; Pressure	4	
8	014-11404-206	*Guide Cover; Pressure; A3	1	
9	014-11405-008	*De-electricity Brush; A3	1	
	014-91320-008	Guide Roller Ass'y; A3		
10	014-11301-202	*Guide Roller; A3	1	
11	006-11306-008	*Gear A; Guide Roller	1	
12	002-11412-003	*Shaft Catch; Guide Roller	1	
13	002-11210-109	*Load Spring; Guide Roller	2	
14	006-11304-005	*Guide Shaft	1	
15	006-11305-109	*One-Way Spring	1	
16	006-11303-009	*Gear; Guide Roller	1	
17	600-50059-017	Bearing; FLW688ZZ	1	
	019-91310-009	Timing Roller Ass'y; A3		
18	014-11303-205	*Timing Roller; A3	1	
19	607-13000-402	*Metal; F6 x 10/9 x 6; 12 x 1.5	2	
20	006-11307-004	*Gear B; Timing Roller	1	
21	019-21302-009	*Bracket; Timing Roller	1	
22	019-21301-002	*Shaft; Timing Roller	1	
23	607-15000-000	Metal; F8 x 13/12 x 5; 16 x 2	2	
24	000-01327-100	Adj. Plate; Guide Roller; CE	1	
25	000-01328-107	Adj. Eccentric; Guide Roller; CE	1	
	019-91720-002	Unit/Guide Plate; A3		
26	019-21716-008	*Guide Plate (Upper)	1	
27	019-11702-009	*Sheet; Guide Plate	1	
28	017-60003-006	*Paper Sensor	1	
29		**Junction Connector; 6P	1	Ref.Pg.II-27
30	019-21717-004	*Guide Plate (Lower)	1	
31	017-55039-108	*Wire Harness; Guide Plate; 49	1	

No.	Part No.	Part Name	Q'ty	Remark
	019-91712-000	*Unit/Stripper (Dial)		
32	019-11744-003	**Bracket; Stripper Unit (Dial)	1	
33	019-11739-000	**Adj. Dial; Stripper	2	
34	019-11750-100	**Worm Gear Box; Stripper (Dial)	1	
35	019-11760-106	**Cam Plate; Stripper (Dial)	1	
36	019-11741-101	**Bracket; Stripper Shaft (Dial)	1	
37	019-11748-009	**Bracket; Stripper Base (Dial)	1	
38	635-17624-006	**Stepped Screw; ϕ6x2.2; M4x2.5	1	
39	019-60020-002	**Micro SW Ass'y 4 (Stack)	1	
40	019-11756-001	**Spring; Stack Paper Feed SW	1	
41	019-11755-005	**Bracket II; Stack Paper Feed SW	1	
42	019-11740-105	**Spring Stopper; Stripper (Dial)	1	
43	019-11738-003	**Spring; Stripper (Dial)	1	
44	019-11749-102	**Actuator Plate II; Stack P.-F. SW	1	
45	635-17523-005	**Stepped Screw; ϕ5x2; M3x3	1	
46	019-11742-108	**Housing; Stripper (Dial)	1	
47	019-11737-104	**Shaft; Stripper (Dial)	1	
48	019-11734-202	**Cover (STND); Stripper Sheet	1	*
49	019-11733-109	**Base; Stripper Sheet	1	
50	019-11731-009	**Stripper Sheet (SHRT); 80	1	*
51	019-55015-009	*Wire Harness J; Guide Plate	1	
52	011-11713-002	L Plate; Guide Plate	2	
53	607-17000-105	Metal; F12 x 18 x 10; 24 x 2.5	2	
*	Optional Choice			
48	019-11735-209	Cover (SHRT); Stripper Sheet		
50	019-11732-005	Stripper Sheet (SHRT); 90		
50	019-11736-000	Stripper Sheet (SHRT); U		
50	019-11764-004	Stripper Sheet (SHRT); 70		
50	019-11765-000	Stripper Sheet (SHRT); 60		

Fig. 6 SQUEEGEE-INK PUMP UNIT AREA

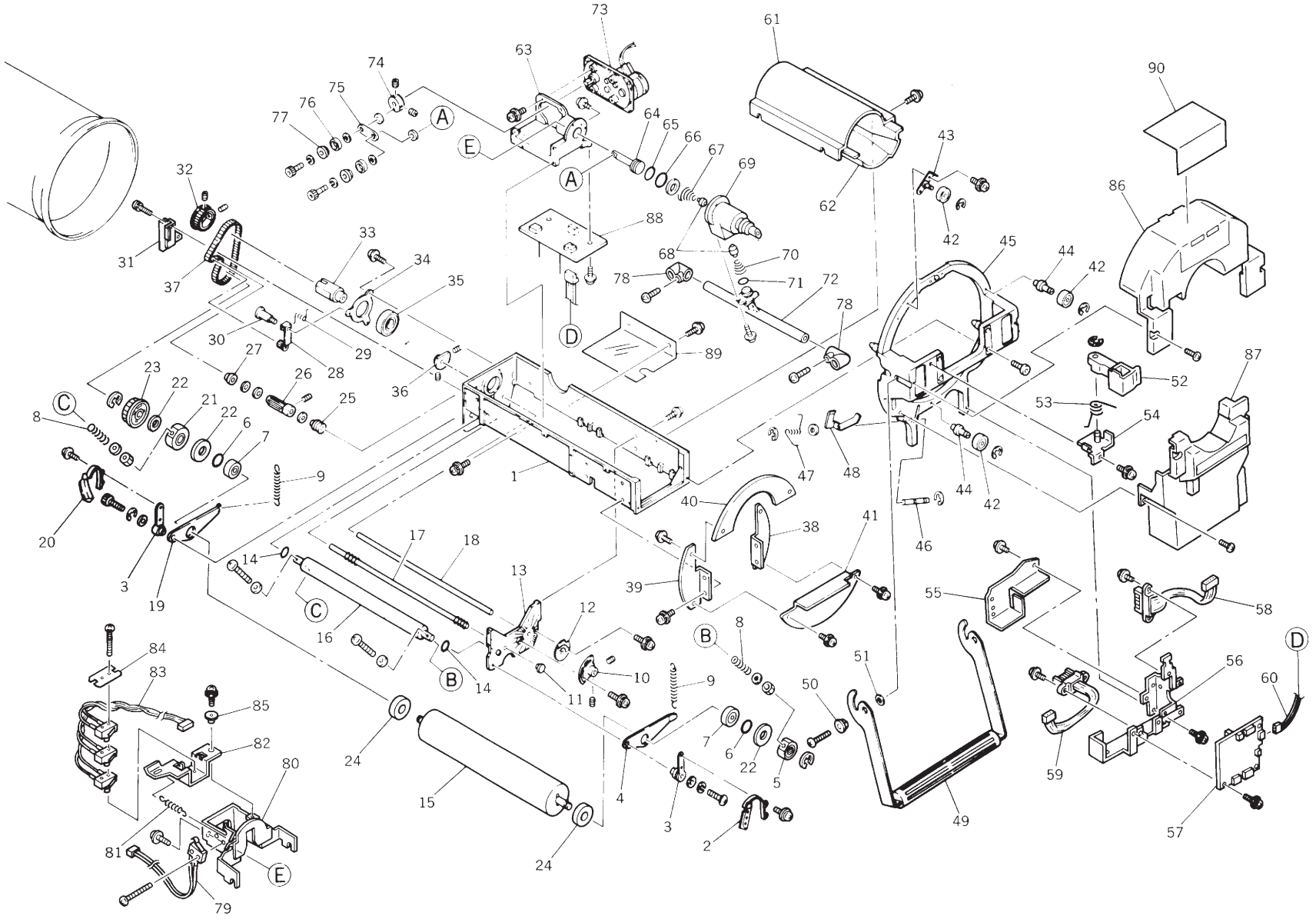

No.	Part No.	Part Name	Q'ty	Remark
	019-92200-002	Unit/Squeegee; A3		
1	014-12201-104	*Squeegee Stay; A3	1	
2	000-02254-506	*Ink Blocking Plate (Front)	1	
3	002-12219-002	*Adj. Boss; Ink Blocking	2	
4	019-12206-005	*Adj. Plate (Front); Squeegee	1	
5	014-12227-103	*Reverse Rotation Stopper AII	1	
6	640-60080-001	*O Ring; P8-1.9	2	
7	601-10192-005	*Bearing; 6800ZZ	2	
8	000-02211-009	*Spring; Squeegee Gap	2	
9	002-12234-001	*Spring; Adj. Plate (Front)	2	
10	002-12213-101	*Sector Adjustor; Squeegee	1	
11	002-12240-001	*Shaft Catch; Drive; Squeegee	1	
12	002-12209-007	*Adj. Collar A; Squeegee	1	
13	011-12211-302	*Side Frame; Squeegee	1	
14	640-60140-012	*O Ring; P14-2.4	2	
15	014-12221-407	*Squeegee Roller; A3	1	
16	014-12226-000	*Doctor Roller II; A3	1	
17	014-12252-000	*Drive Shaft; Squeegee; A3	1	
18	014-12251-004	*Adj. Shaft; Squeegee; A3	1	
19	019-12207-001	*Adj. Plate (Back); Squeegee	1	
20	000-02255-502	*Ink Blocking Plate (Back)	1	
21	019-22206-003	*Reverse Rotation Stopper B	1	
22	638-90000-020	*Washer; 18 x 10.2 x 0.2	3	
23	011-12205-000	*Pulley; Squeegee Roller	1	
24	019-12208-008	*Spacer; 18 x 10 x 1.8	2	
25	640-70030-100	*V Ring; VRY2.7 x 3.5 x 4.1	1	
26	002-12238-104	*Axis; Drive Shaft; Squeegee	1	
27	607-10000-010	*Metal; F3 x 5 x 3; 8 x 1.4	1	
28	002-12229-105	*Tensioner; Squeegee	1	
29	002-12233-005	*Spring; Tensioner; Squeegee	1	
30	011-12221-006	*Fulcrum; Tensioner; Squeegee	1	
31	011-12241-007	*Shaft Support II; Squeegee	1	
	011-12206-406	*Ass'y; Shaft Joint	1	
32		**Pulley; Main Shaft	1	
33		**Shaft Joint	1	

No.	Part No.	Part Name	Q'ty	Remark
34		**Bearing Holder A; Squeegee	1	
35		**Bearing; 6202ZZ	1	
36	002-12210-005	*Adj. Collar B; Squeegee	1	
37	620-21209-002	*Squeegee Belt; B120M x L-9.5	1	
38	011-12222-401	Bracket R; Drum Cover F	1	
39	011-12223-408	Bracket L; Drum Cover F	1	
40	011-12213-100	Drum Cover F (Upper)	1	
41	011-12224-005	Drum Cover F (Lower)	1	
	017-92300-002	Unit/Drum Frame		
42	000-01169-106	*Support Roller; Drum	3	
43	002-12410-004	*Adj. Plate; Support Roller	1	
44	002-12409-103	*Support Shaft; Support Roller	2	
45	017-12201-602	*Frame; Drum	1	
46	019-12315-009	*Shaft; Locking Plate II; Drum	1	
47	019-12307-006	*Spring; Locking Plate; Drum	1	
48	019-12314-002	*Locking Plate II; Drum	1	
49	017-12216-103	*Drum Lever	1	
50	002-12407-003	*Boss A; Drum Lever	2	
51	002-12418-102	*Spacer; Drum Lever	2	
52	014-12295-001	Lever; Bottle Stopper	1	
53	014-12297-004	Spring; Stopper Lever	1	
54	017-12211-004	Bracket; Stopper Lever	1	
55	017-12213-007	Inner Cover; Drum	1	
56	017-22301-001	Bracket II; Drum Control PCB2	1	
57	019-51005-106	Drum Control PCB2	1	
58	017-55028-106	Wire Harness; Drum (R)	1	
59	017-55029-005	Wire Harness; Drum (L)	1	
60	019-55010-104	Wire Harness; Drum Inner	1	
	014-12216-101	Bottle Guide II Ass'y		
61	011-12208-000	*Bottle Guide (Over)	1	
62	014-12217-000	*Bottle Guide II (Base)	1	
	019-92240-004	Unit/Ink Pump; 37		
63	002-12303-305	*Bracket; Inking Motor	1	
64	002-12304-107	*Piston Inking Pump	1	
65	640-60140-012	*O Ring; P14-2.4	1	

No.	Part No.	Part Name	Q'ty	Remark
66	640-60220-024	*O Ring; P22-2.4	1	
67	000-07119-100	*Coil Spring; Inking Pump	1	
68	011-12151-008	*Valve; Inking Pump	2	
69	014-12211-002	*Inking Pump Body; A3	1	
70	011-12147-108	*Coil Spring; Inking Pump; RC	1	
71	640-60100-118	*O Ring; P10A-2.4	1	
72	014-12213-005	*Ink Distributor; A3	1	
73	017-65016-602	*Inking Motor	1	
74	002-12307-203	*Linking Disc; Inking Pump	1	
75	002-12308-013	*Linking Plate; Inking Pump	1	
76	002-12309-001	*Collar; Inking Pump	2	
77	002-12310-107	*Collar Holder; Inking Pump	2	
78	019-32206-001	*Elbow; Ink Distributor	2	
79	019-60023-001	Bottle Set SW II	1	
80	019-32202-103	Bracket; Bottle SW	1	
81	019-32201-000	Spring; Bottle SW	1	
	019-92231-005	Bottle Set SW Ass'y		
82	019-32203-207	*Holder; Bottle SW	1	
83	019-60010-309	*Bottle Set SW	1	
84	019-12210-002	*Set Plate; Bottle SW	1	
85	011-12218-005	Boss; Bottle Set SW	1	
86	019-32302-000	Drum Cover (Upper)	1	
87	019-32303-007	Drum Cover (Lower)	1	
88	017-60020-300	Drum PCB	1	
	484-00000-800	*Pilot Lamp	1	
89	017-12215-107	PCB Cover; Drum	1	
90	550-21399-000	Seal; Ink (HD Black)	1	
90	552-21400-105	Seal; Ink (HD Black); Pic.	1	
90	550-21502-005	Seal; Ink (HD Black); CH	1	
	550-21293-007	Color Seal Set		
		*Seal; Ink (Blue)	1	
		*Seal; Ink (Red)	1	
		*Seal; Ink (Yellow)	1	
		*Seal; Ink (Brown)	1	
		*Seal; Ink (Green)	1	

No.	Part No.	Part Name	Q'ty	Remark
		*Seal; Ink (Marine Red)	1	
		*Seal; Ink (Bright Red)	1	
		*Seal; Ink (Purple)	1	
		*Seal; Ink (Federal Blue)	1	
		*Seal; Ink (Medium Blue)	1	
		*Seal; Ink (Grey)	1	
		*Seal; Ink (Light Grey)	1	
		*Seal; Ink (Teal)	1	
		*Seal; Ink (Burgundy)	1	
		*Seal; Ink (Fluorescent Pink)	1	
		*Seal; Ink (Fluorescent Orange)	1	

MEMO

Fig. 7 SQUEEGEE-INK PUMP UNIT AREA (Color Drum)

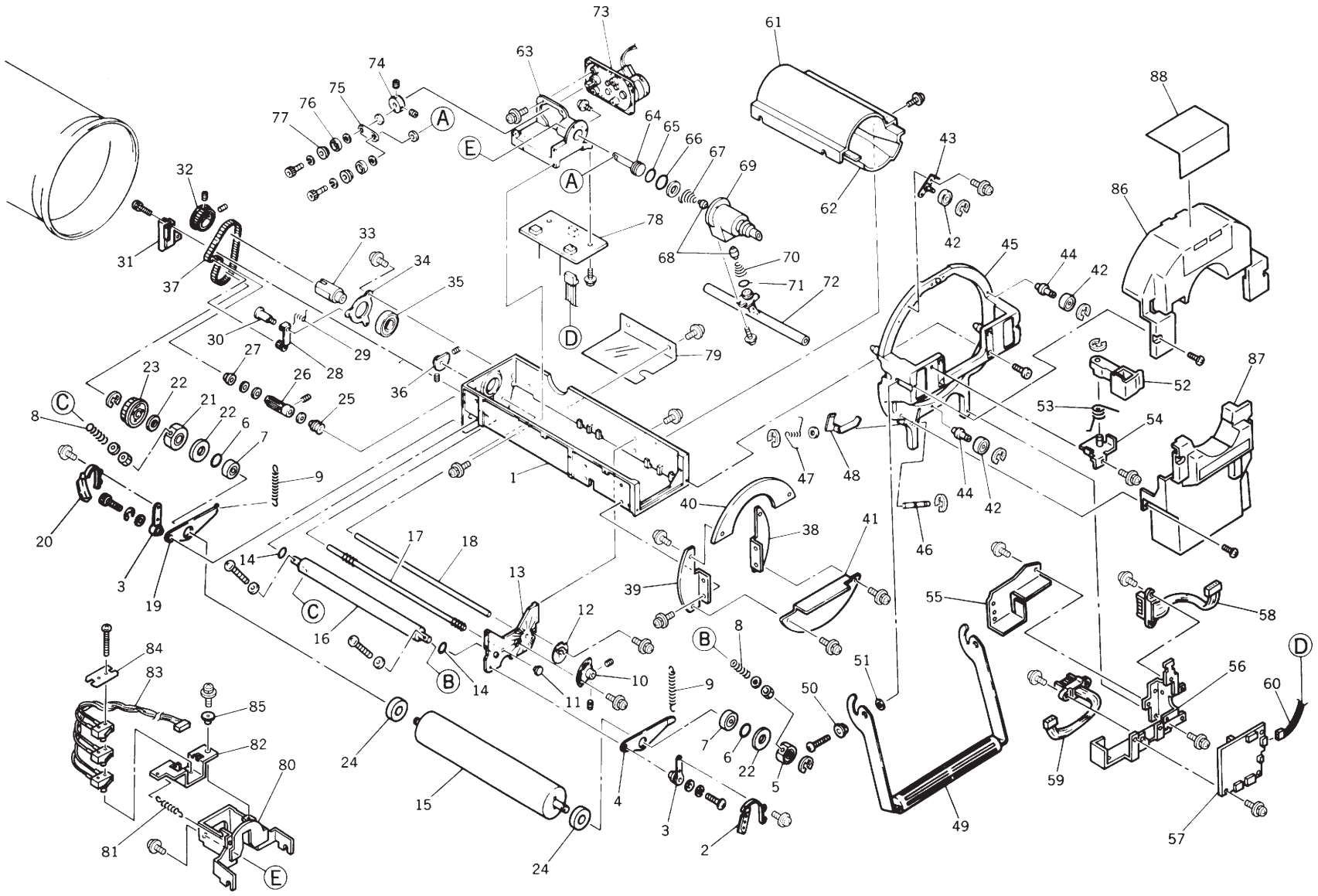

No.	Part No.	Part Name	Q'ty	Remark
	019-92200-002	Unit/Squeegee; A3		
1	014-12201-104	*Squeegee Stay; A3	1	
2	000-02254-506	*Ink Blocking Plate (Front)	1	
3	002-12219-002	*Adj. Boss; Ink Blocking	2	
4	019-12206-005	*Adj. Plate (Front); Squeegee	1	
5	014-12227-103	*Reverse Rotation Stopper AII	1	
6	640-60080-001	*O Ring; P8-1.9	2	
7	601-10192-005	*Bearing; 6800ZZ	2	
8	000-02211-009	*Spring; Squeegee Gap	2	
9	002-12234-001	*Spring; Adj. Plate (Front)	2	
10	002-12213-101	*Sector Adjustor; Squeegee	1	
11	002-12240-001	*Shaft Catch; Drive; Squeegee	1	
12	002-12209-007	*Adj. Collar A; Squeegee	1	
13	011-12211-302	*Side Frame; Squeegee	1	
14	640-60140-012	*O Ring; P14-2.4	2	
15	014-12221-407	*Squeegee Roller; A3	1	
16	014-12226-000	*Doctor Roller II; A3	1	
17	014-12252-000	*Drive Shaft; Squeegee; A3	1	
18	014-12251-004	*Adj. Shaft; Squeegee; A3	1	
19	019-12207-001	*Adj. Plate (Back); Squeegee	1	
20	000-02255-502	*Ink Blocking Plate (Back)	1	
21	019-22206-003	*Reverse Rotation Stopper B	1	
22	638-90000-020	*Washer; 18 x 10.2 x 0.2	3	
23	011-12205-000	*Pulley; Squeegee Roller	1	
24	019-12208-008	*Spacer; 18 x 10 x 1.8	2	
25	640-70030-100	*V Ring; VRY2.7 x 3.5 x 4.1	1	
26	002-12238-104	*Axis; Drive Shaft; Squeegee	1	
27	607-10000-010	*Metal; F3 x 5 x 3; 8 x 1.4	1	
28	002-12229-105	*Tensioner; Squeegee	1	
29	002-12233-005	*Spring; Tensioner; Squeegee	1	
30	011-12221-006	*Fulcrum; Tensioner; Squeegee	1	
31	011-12241-007	*Shaft Support II; Squeegee	1	
	011-12206-406	*Ass'y; Shaft Joint	1	
32		**Pulley; Main Shaft	1	
33		**Shaft Joint	1	

No.	Part No.	Part Name	Q'ty	Remark
34		**Bearing Holder A; Squeegee	1	
35		**Bearing; 6202ZZ	1	
36	002-12210-005	*Adj. Collar B; Squeegee	1	
37	620-21209-002	*Squeegee Belt; B120M x L-9.5	1	
38	011-12222-401	Bracket R; Drum Cover F	1	
39	011-12223-408	Bracket L; Drum Cover F	1	
40	011-12213-100	Drum Cover F (Upper)	1	
41	011-12224-005	Drum Cover F (Lower)	1	
	017-92300-002	Unit/Drum Frame		
42	000-01169-106	*Support Roller; Drum	3	
43	002-12410-004	*Adj. Plate; Support Roller	1	
44	002-12409-103	*Support Shaft; Support Roller	2	
45	017-12201-602	*Frame; Drum	1	
46	019-12315-009	*Shaft; Locking Plate II; Drum	1	
47	019-12307-006	*Spring; Locking Plate; Drum	1	
48	019-12314-002	*Locking Plate II; Drum	1	
49	017-12216-103	*Drum Lever	1	
50	002-12407-003	*Boss A; Drum Lever	2	
51	002-12418-102	*Spacer; Drum Lever	2	
52	014-12295-001	Lever; Bottle Stopper	1	
53	014-12297-004	Spring; Stopper Lever	1	
54	017-12211-004	Bracket; Stopper Lever	1	
55	017-12213-007	Inner Cover; Drum	1	
56	017-22301-001	Bracket II; Drum Control PCB2	1	
57	019-51005-106	Drum Control PCB2	1	
58	017-55028-106	Wire Harness; Drum (R)	1	
59	017-55029-005	Wire Harness; Drum (L)	1	
60	019-55010-104	Wire Harness; Drum Inner	1	
	014-12216-101	Bottle Guide II Ass'y		
61	011-12208-000	*Bottle Guide (Over)	1	
62	014-12217-000	*Bottle Guide II (Base)	1	
	019-92220-003	Unit/Ink Pump; A3		
63	002-12303-305	*Bracket; Inking Motor	1	
64	002-12304-107	*Piston Inking Pump	1	
65	640-60140-012	*O Ring; P14-2.4	1	

No.	Part No.	Part Name	Q'ty	Remark
66	640-60220-024	*O Ring; P22-2.4	1	
67	000-07119-100	*Coil Spring; Inking Pump	1	
68	011-12151-008	*Valve; Inking Pump	2	
69	014-12211-002	*Inking Pump Body; A3	1	
70	011-12147-108	*Coil Spring; Inking Pump; RC	1	
71	640-60100-118	*O Ring; P10A-2.4	1	
72	014-12213-005	*Ink Distributor; A3	1	
73	017-65016-602	*Inking Motor	1	
74	002-12307-203	*Linking Disc; Inking Pump	1	
75	002-12308-013	*Linking Plate; Inking Pump	1	
76	002-12309-001	*Collar; Inking Pump	2	
77	002-12310-107	*Collar Holder; Inking Pump	2	
78	017-60020-300	Drum PCB	1	
	484-00000-800	*Pilot Lamp	1	
79	017-12215-107	PCB Cover; Drum	1	
80	019-22203-209	Bracket; Bottle SW	1	
81	019-12211-009	Spring; Bottle SW	1	
	019-92230-203	Bottle Set SW Ass'y		
82	019-12209-004	*Holder; Bottle SW	1	
83	019-60010-309	*Bottle Set SW	1	
84	019-12210-002	*Set Plate; Bottle SW	1	
85	011-12218-005	Boss; Bottle Set SW	1	
86	019-12302-101	Drum Cover (Upper)	1	
87	019-12303-108	Drum Cover (Lower)	1	
88	550-20981-104	Seal; Ink (Black)	1	
88	550-20982-100	Seal; Ink (Black); Pic.	1	
	550-21293-007	Color Seal Set		
		*Seal; Ink (Blue)	1	
		*Seal; Ink (Red)	1	
		*Seal; Ink (Yellow)	1	
		*Seal; Ink (Brown)	1	
		*Seal; Ink (Green)	1	
		*Seal; Ink (Marine Red)	1	
		*Seal; Ink (Bright Red)	1	
		*Seal; Ink (Purple)	1	

No.	Part No.	Part Name	Q'ty	Remark
		*Seal; Ink (Federal Blue)	1	
		*Seal; Ink (Medium Blue)	1	
		*Seal; Ink (Grey)	1	
		*Seal; Ink (Light Grey)	1	
		*Seal; Ink (Teal)	1	
		*Seal; Ink (Burgundy)	1	
		*Seal; Ink (Fluorescent Pink)	1	
		*Seal; Ink (Fluorescent Orange)	1	

MEMO

Fig. 8 DRUM-SCREEN AREA

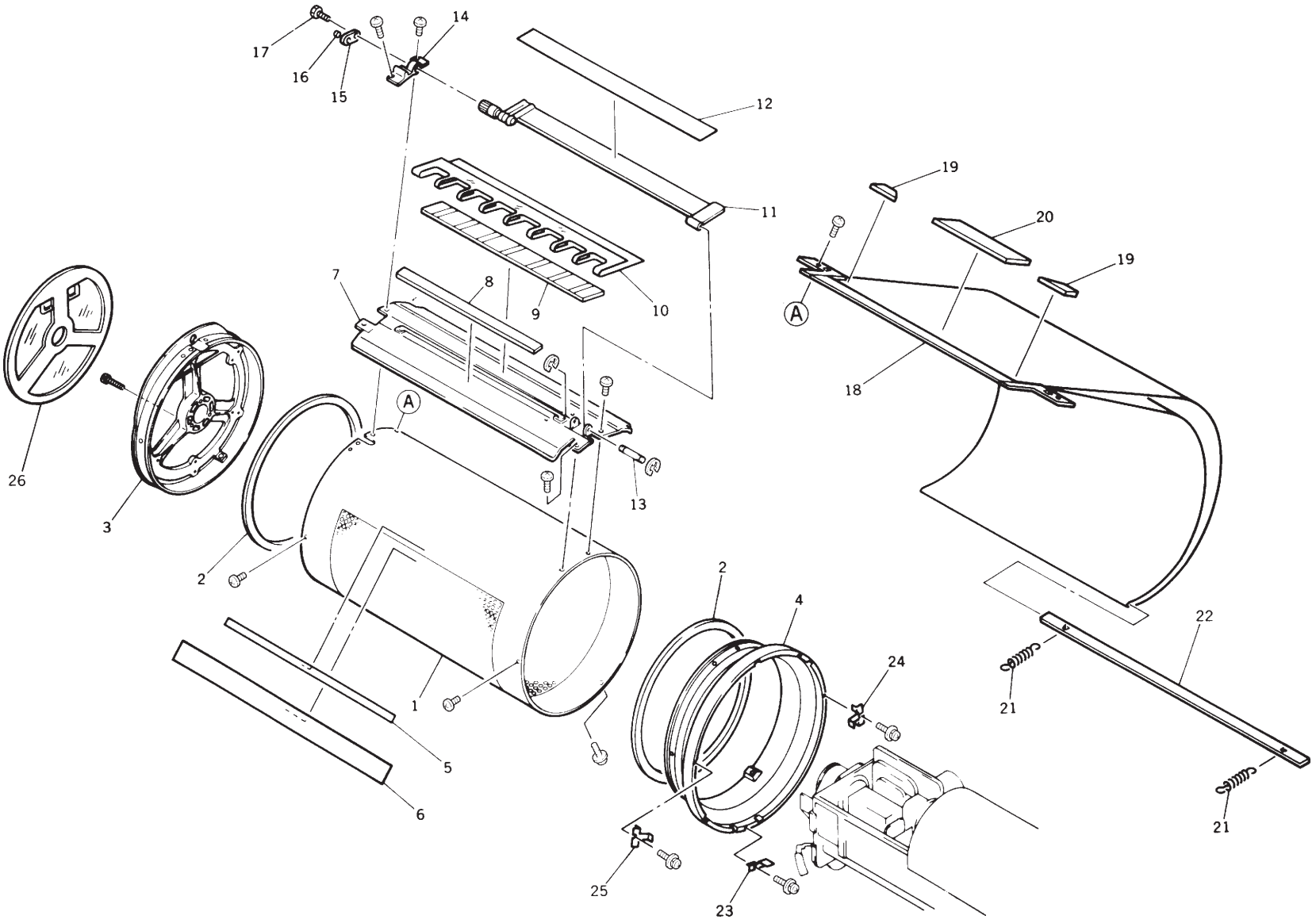

No.	Part No.	Part Name	Q'ty	Remark
	019-92120-009	Unit/Drum Screen; A3II		A3
	019-92115-005	Unit/Drum Screen; A4W		A4W
	019-92110-003	*Drum Body Ass'y; A3	1	A3
1	014-12101-002	**Drum Body; A3	1	A3
1	014-12130-002	**Drum Body; A4W	1	A4W
2	011-12139-008	**Drum Seal	2	
3	014-12103-005	**Drum Body Support (Left); A3	1	
4	019-22101-104	**Drum Body Support (Right); A3	1	
5	014-12114-007	*Seal Tape; A3	1	
6	014-12116-301	*Ink Blocking Sheet; A3	1	
	019-92410-007	*Clamp Plate Base Ass'y		
7	019-22108-206	**Clamp Plate Base	1	
8	011-12130-000	**Clamp Magnet B	1	
9	019-22111-002	**Clamp Magnet A; A3	1	
10	014-12121-607	**Sheet; Clamp Plate; A3	1	
11	019-32417-304	**Clamp Plate Ass'y; II	1	
12	014-12115-003	**Clamp Sub-Plate	1	
13	011-12114-005	**Shaft; Clamp Plate	1	
14	011-12124-108	*Compensator	1	
	011-92106-008	*Ass'y; Angular Magnet Plate		
15		**Plate II; Angular Magnet	1	
16		**Magnet TDK REC 18 D5 x 2	1	
17	011-12155-208	*Screw; Angular Magnet	1	
18	019-22102-305	*Screen Ass'y; A3	1	
19	019-22113-102	*Anti-Wrinkle Strip; Drum	1	
20	019-22112-106	*Light Absorber Strip; A3	1	
21	019-22107-102	*Spring; Screen	2	
22	019-22106-106	*Screen Hanger(Lower)	1	
23	017-12205-101	Position A Plate	1	
24	019-12214-008	Position C2 Plate	1	
25	019-12215-004	Position C1 Plate	1	
26	011-12116-202	Drum Cover R	1	

No.	Part No.	Part Name	Q'ty	Remark

Fig. 9 LOCK LEVER AREA

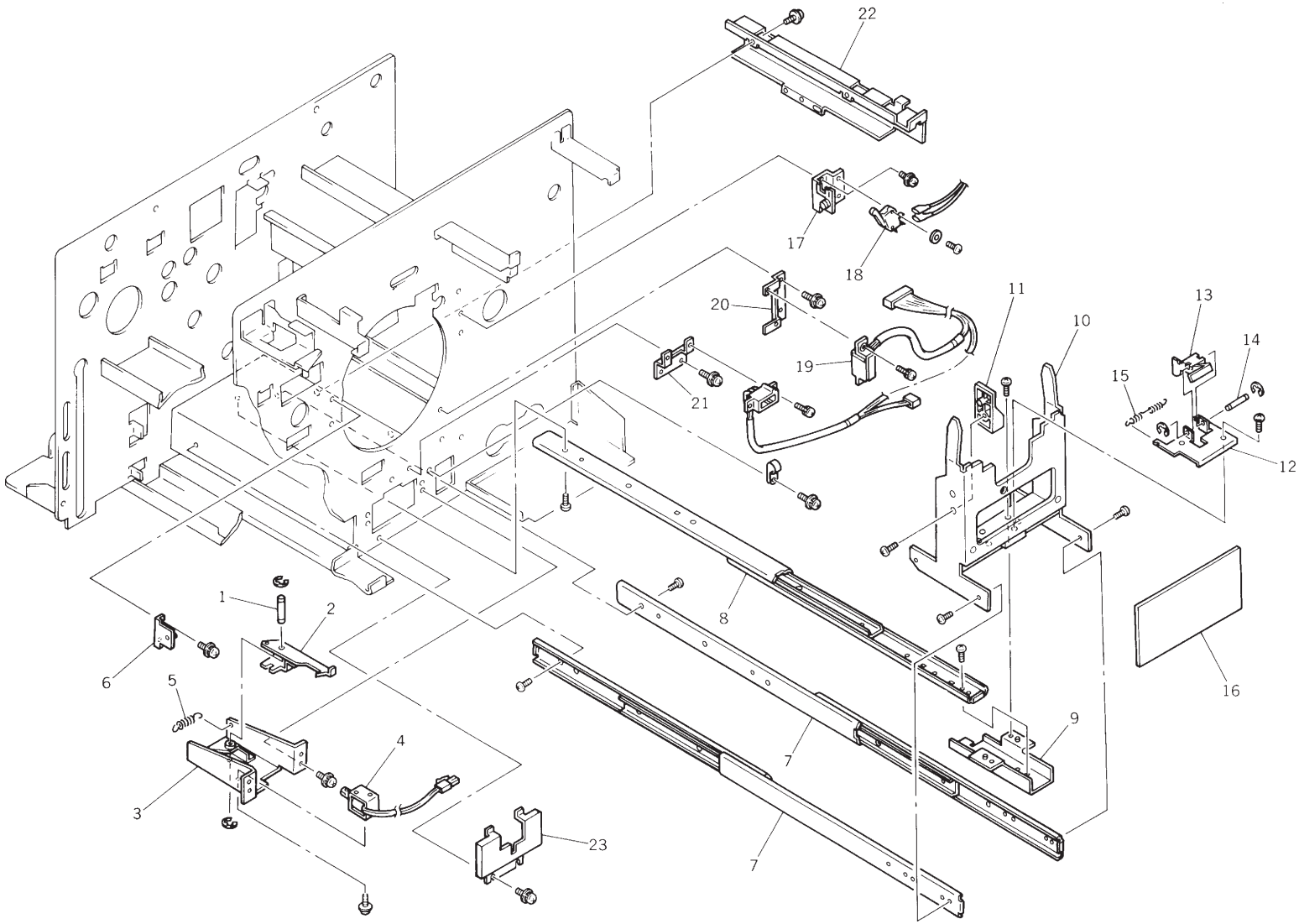

No.	Part No.	Part Name	Q'ty	Remark
	014-92351-004	Unit/Drum Lock		
1	014-12311-007	*Shaft; Lock	1	
2	014-12322-106	*Lock Hook; Drum Lock	1	
3	014-12324-109	*Bracket; Drum Lock	1	
4	019-65014-000	*Lock Solenoid	1	
5	014-12326-004	*Spring; Lock	1	
6	011-12311-005	Drum Catch (L)	1	
7	014-12301-109	Rail; Drum; A3	2	
8	019-12301-008	Rail B; Drum	1	
9	014-12310-108	Rail Bracket; Drum	1	
	019-92101-004	Drum Holder Ass'y		
10	017-12601-309	*Drum Holder	1	
11	019-12304-007	*Guide Block; Drum Holder	1	
12	017-12605-100	*Lever Base; Drum Holder	1	
13	017-12604-103	*Lever; Drum Holder	1	
14	017-12606-009	*Shaft; Drum Holder	1	
15	017-12607-005	*Spring; Drum Holder	1	
16	550-20983-000	Seal; Drum Holder	1	
16	550-20984-006	Seal; Drum Holder; Pic.	1	
	019-92320-008	Drum Set SW Ass'y		
17	019-12308-002	*Drum Catch (R) II	1	
18	443-00120-609	*Micro-SW; E21-91N	1	
19	019-55028-003	Wire Harness; CN15	1	*1
19	019-55096-009	Wire Harness; CN15; CE	1	*2
20	019-12223-007	Bracket A; Connector; Drum	1	
21	017-12203-001	Bracket B; Connector; Drum	1	
22	017-21108-208	Bracket; Wire Harness	1	
23	014-37203-004	Cover; Drum Lock; CE	1	

No.	Part No.	Part Name	Q'ty	Remark
*1.	All U.S.,Latin , Asia (Mtr.) models			
*2.	Europe (Pic.) model			

Fig. 10 CLAMP-PRESSURE CONTROL AREA

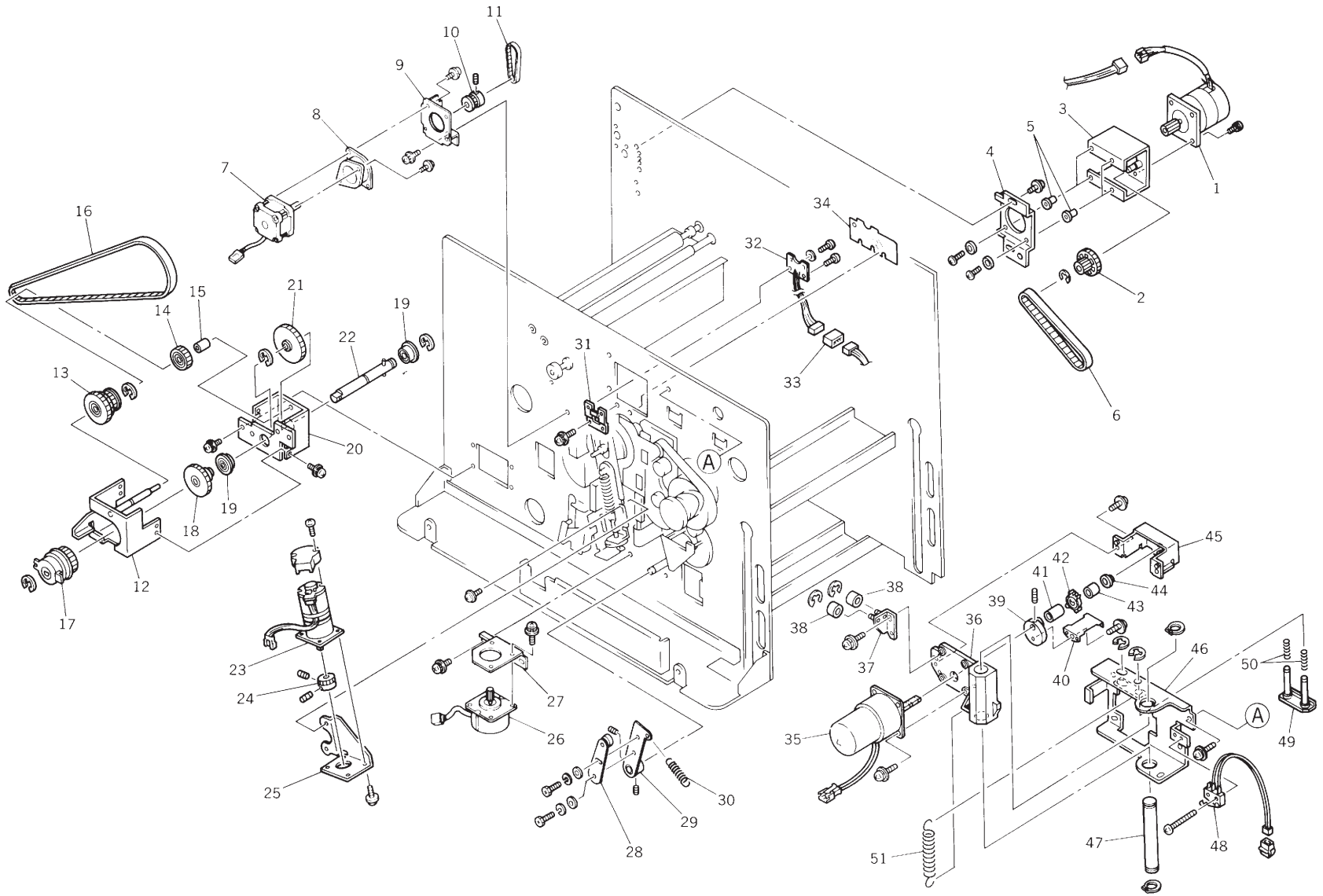

No.	Part No.	Part Name	Q'ty	Remark
	019-95041-002	Unit/Write Pulse Motor		
1	019-65017-107	*Write Pulse Motor	1	
2	019-35020-006	*Pulley; Write Pulse Motor	1	
3	011-15146-102	*Bracket; Write Pulse Motor	1	
4	019-15125-006	*Base Plate; Write Pulse Motor	1	
5	665-04950-205	*Nut; E-632	4	
6	620-21869-002	Belt; B186 M x L-9.5	1	
	017-95050-007	Unit/Loading Pulse Motor		
7	017-65015-207	*Loading Pulse Motor	1	
8	014-15155-006	*Mount; Loading Pulse Motor	1	
9	011-15037-109	*Bracket; Loading Pulse Motor	1	
10	009-35214-009	*Pulley PM (16); Exit Roller	1	
11	620-20714-005	Belt; B71M x L4.8	1	
	019-93602-104	Unit/Clutch; A3		
12	019-23605-505	*Clutch Cover; A3	1	
13	019-13601-200	*Gear A; Clutch	1	
14	019-13604-004	*Idler Gear; Clutch	1	
15	634-05020-000	*Collar; ϕ 5.1 x 2.5	1	
16	620-97506-006	*Belt; 750-3GT-6	1	
17	019-65007-101	*Suction Clutch	1	
18	019-13602-001	*Gear B; Clutch	1	
19	600-08168-108	*Bearing; SC866ZZNR/1K	2	
20	019-23601-208	*Bracket; Suction Drive; A3	1	
21	019-13603-105	*Drive Gear; Clutch	1	
22	019-23604-304	*Shaft; Clutch; A3	1	
	017-91266-005	Pressure Control Motor Ass'y	1	
23	017-65005-309	*Pressure Control Motor	1	
24	011-11244-002	*Gear; Pressure Control Motor	1	
25	017-11229-007	*Bracket; Pressure Control Motor	1	
	017-91240-103	Unit/Print Positioning Motor		
26	017-11240-108	*Print Positioning Motor	1	
27	019-11214-004	*Bracket; Print Positioning Motor	1	
	006-91440-001	Unit/Adj. Plate; Timing Lever		
28	002-11421-100	*Adj. Plate; Timing Lever	1	
29	006-11308-108	*Timing Lever	1	

No.	Part No.	Part Name	Q'ty	Remark
30	006-11311-206	Spring; Timing Lever; R3	1	
	017-93220-002	Angular Sensor Ass'y		
31	017-12409-009	*Bracket; Angular Sensors	1	
32	017-60016-000	*Angular Sensor	1	
33		**Junction Connector; 4P	1	Ref.Pg.II-27
34	002-12537-403	Protection Sheet	1	
	019-92400-001	Unit/Clamp		
35	019-65019-002	*Clamp Motor	1	
36	019-32403-001	*Base Plate; Clamp	1	
37	019-32412-000	*Stopper Plate; Clamp	1	
38	607-03000-005	*Metal; S4 x 8 x 3	2	
39	019-32404-105	*Cam; Clamp	1	
40	019-32416-006	*Plate Spring; Clamp	1	
41	634-06120-009	*Collar; ϕ6 x 12	1	
42	019-32405-101	*Drive Gear; Clamp	1	
43	634-06060-006	*Collar; ϕ6 x 6	1	
44	607-13004-009	*Metal; F6 x 8 x 7; 10 x 1	1	
45	019-32411-004	*Compensator Plate	1	
46	019-32410-008	*Frame; Clamp	1	
47	019-32406-000	*Shaft; Clamp	1	
48	019-92237-003	*Clamp Switch	1	
49	019-32407-201	*Guide Plate; Clamp Cam	1	
50	019-32402-102	*Spring B; Clamp	2	
51	019-32401-009	*Spring A; Clamp	1	

Fig. 11 SEPARATOR AREA

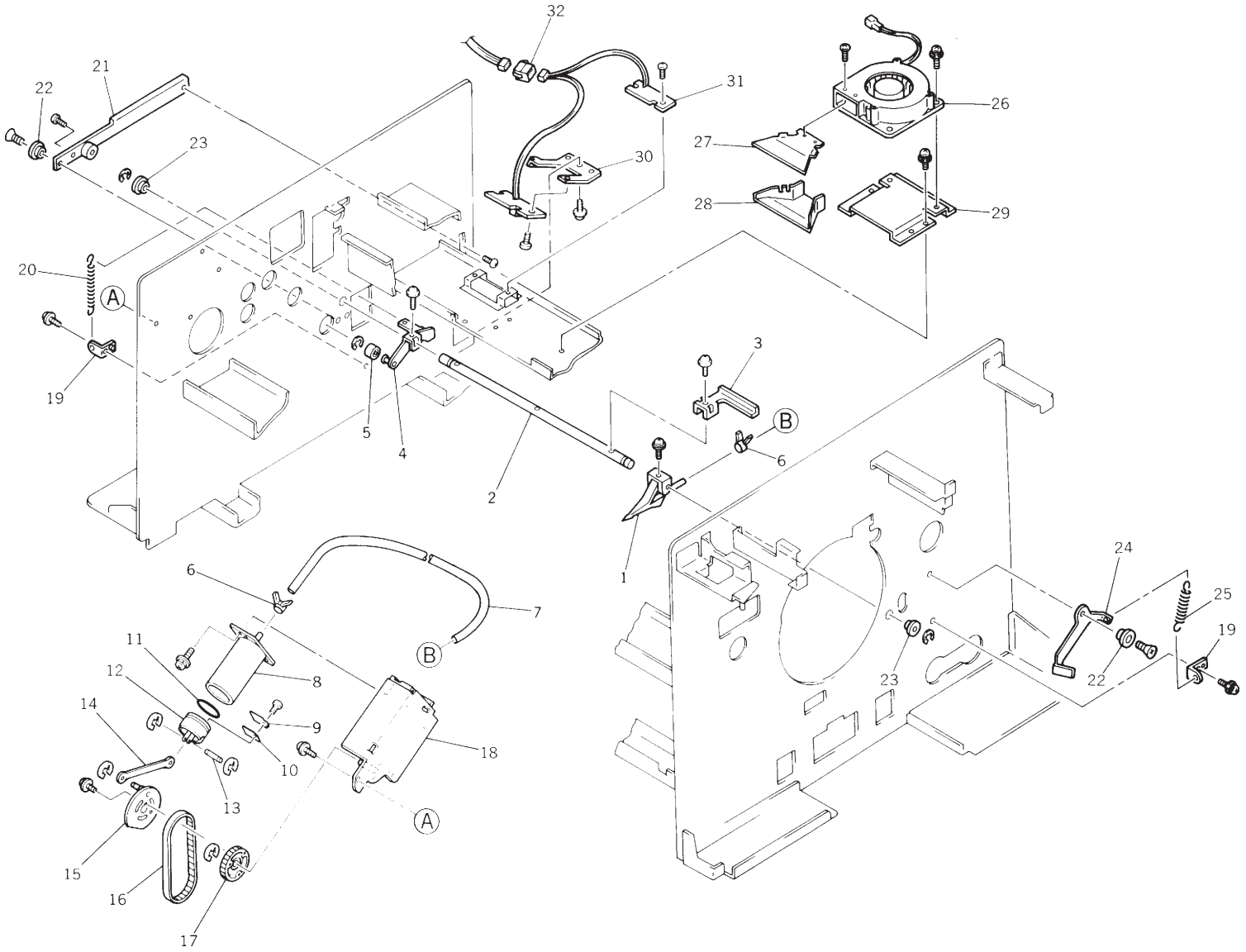

No.	Part No.	Part Name	Q'ty	Remark
	019-93300-108	Separator Ass'y; A3; CE		
1	019-13301-109	*Separator II	1	
2	019-23301-107	*Shaft; Separator II; A3; CE	1	
3	011-13311-106	*Release Lever	1	
4	011-13301-208	*Lever; Separator	1	
5	000-01515-004	*Collar; Separator	1	
6	665-02901-002	*Power Band T10	2	
7	019-13514-005	*Air Hose; Separator	1	
	019-93320-109	Air Pump Ass'y		
8	019-13501-000	*Cylinder; Air Pump	1	
9	019-13517-004	*Cylinder Valve II; Air Pump	1	
10	019-13518-000	*Cylinder Valve Sheet; Air Pump	1	
11	640-67340-009	*O Ring; P34-3.6	1	
12	019-13516-105	*Piston Head II; Air Pump	1	
13	019-13512-002	*Arm Shaft; Air Pump	1	
14	019-13511-103	*Arm; Air Pump	1	
15	019-13504-000	*Cam Plate; Air Pump	1	
16	620-73758-004	*Belt; 375-5GT-8	1	
17	019-13503-003	*Cam Pulley; Air Pump	1	
18	019-13507-106	*Bracket; Air Pump	1	
19	011-13310-002	Hook Plate	2	
20	002-13352-202	Spring; Separator	1	
21	011-13307-206	Adj. Stopper; Separator	1	
22	011-13306-005	Collar A; Separator	2	
23	607-15000-000	Metal; F8 x 13/12 x 5; 16 x 2	2	
24	017-13301-007	Release Lever; Separator	1	
25	007-13121-100	Spring; Release Lever	1	
	019-93310-006	Separation Fan Ass'y		
26	019-65006-008	*Separation Fan	1	
27	014-13311-108	*Nozzle (Upper); Separation	1	
28	014-13310-004	*Nozzle (Lower); Separation	1	
29	014-13312-007	Bracket; Separation Fan	1	
	019-93201-207	Paper Receiving Sensor IV (Receive) Ass'y		
30	017-23314-000	*Bracket II; P. -Rcv. Sensor II (Receive)	1	
31	019-60013-200	*Paper Receiving Sensor IV (Receive)	1	

No.	Part No.	Part Name	Q'ty	Remark
32		**Junction Connector; 6P	1	Ref.Pg.II-27

Fig. 12 SUCTION UNIT

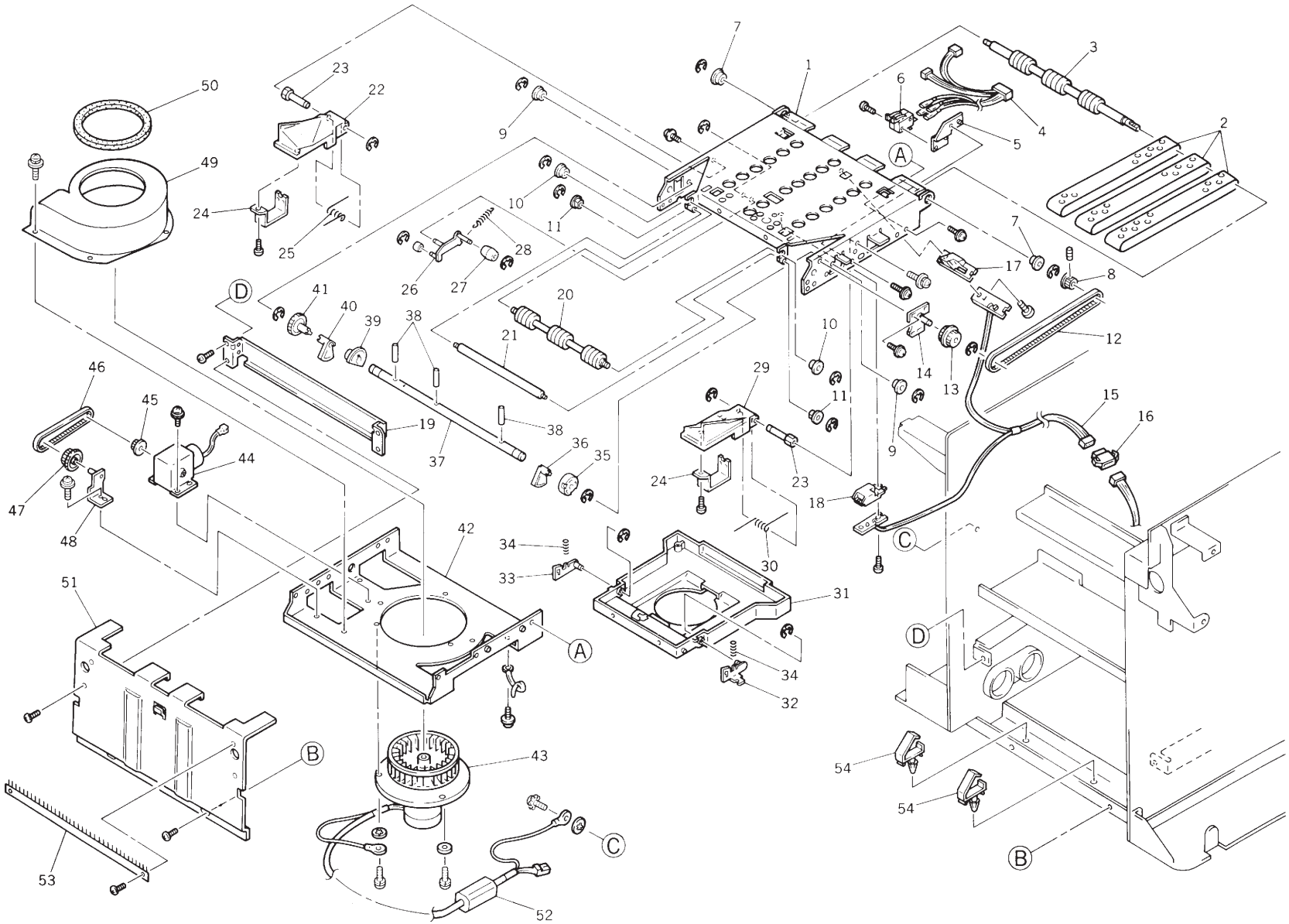

No.	Part No.	Part Name	Q'ty	Remark
	019-93200-200	Suction Unit W; A3; CE		
1	017-13201-800	*Face Cover W; Suction	1	
2	011-13220-003	*Transfer Belt	3	
3	017-13247-002	*Drive Shaft; Suction	1	
4	019-55036-103	*Wire Harness; Suction	1	
5	017-13229-209	*Adj. SW Plate; Suction	1	
6	443-02006-005	*Micro-SW; ABV1236413	2	
7	600-08168-000	*Bearing NMB; LNR-1680HH	2	
8	011-13204-008	*Pulley; Suction Motor	1	
9	607-13000-003	*Metal; F6 x 10/9 x 4; 12 x 1.5	2	
10	600-50046-004	*Bearing; FLAWBC6-12ZZA	2	
11	607-11003-005	*Metal; F4 x 6/5.6 x 5.9; 9 x 1	2	
12	620-22394-008	*Belt; 239-M x L-4.8	1	
13	019-13203-000	*Gear Pulley 38; Suction	1	
14	017-13237-104	*Fulcrum Plate II; Gear Pulley; Suction	1	
15	019-60012-204	*Paper Receiving Sensor (Send) IV	1	
16		**Junction Connector; 4P	1	Ref.Pg.II-27
17	017-13220-104	*Cover; Paper Rcv. Sensor 1	1	
18	017-13221-208	*Cover; Paper Rcv. Sensor 2	1	
19	017-13240-008	*Stay; Suction	1	
20	017-13235-004	*Idler Shaft; Suction	1	
21	017-13236-205	*Belt Idler; Suction	1	
22	019-13137-007	*Jump Wing (F); Suction; A3	1	
23	017-13205-202	*Shaft; Jump Wing	2	
24	017-13208-007	*Wing Plate; Suction	2	
25	017-13239-000	*Spring; Jump Wing (F)	1	
26	017-13211-008	*Shaft Plate; Belt Roller; Suction	1	
27	017-13216-000	*Belt Roller; Suction	1	
28	017-13210-001	*Spring; Belt Roller; Suction	1	
29	019-13138-003	*Jump Wing (R); Suction; A3	1	
30	017-13241-004	*Spring; Jump Wing (R)	1	
31	017-13219-300	*Suction Cover W (Upper)	1	
32	017-13255-005	*Side Flap (R); Suction	1	
33	017-13252-006	*Side Flap (F); Suction	1	
34	017-13257-008	*Spring; Side Flap; Suction	2	

No.	Part No.	Part Name	Q'ty	Remark
35	017-13228-105	*SW Cam; Suction	1	
36	017-13226-102	*Wing Cam (R); Suction	1	
37	017-13222-107	*Shaft; Wing Cam; Suction	1	
38		*Pin; ϕ 2x 8	3	Ref.Pg.II-27
39	017-13225-106	*Roller Cam; Suction	1	
40	017-13224-207	*Wing Cam (F); Suction	1	
41	017-13223-006	*Cam Gear; Suction	1	
42	017-13232-102	*Bracket; Suction Fan	1	
43	019-65010-102	*Suction Fan Ass'y; CE	1	
44	017-65006-003	*Wing Motor; Suction	1	
45	017-13248-009	*Pulley; Wing Motor	1	
46	620-62256-007	*Belt; B60S3M225	1	
47	017-13246-006	*Wing Gear; Suction	1	
48	017-13242-000	*Shaft Plate; Wing Gear	1	
49	011-13206-205	*Suction Fan Cover	1	
50	017-13233-001	*Seal	1	
51	019-43201-206	Cover Plate II; Suction; CE	1	
52	435-00025-000	Core; SFC-6	1	
53	017-13258-004	De-electricity Brush; Suction	1	
54	665-02031-008	Clamp; CP2311	2	

Fig. 13 PRECISION STACKING TRAY

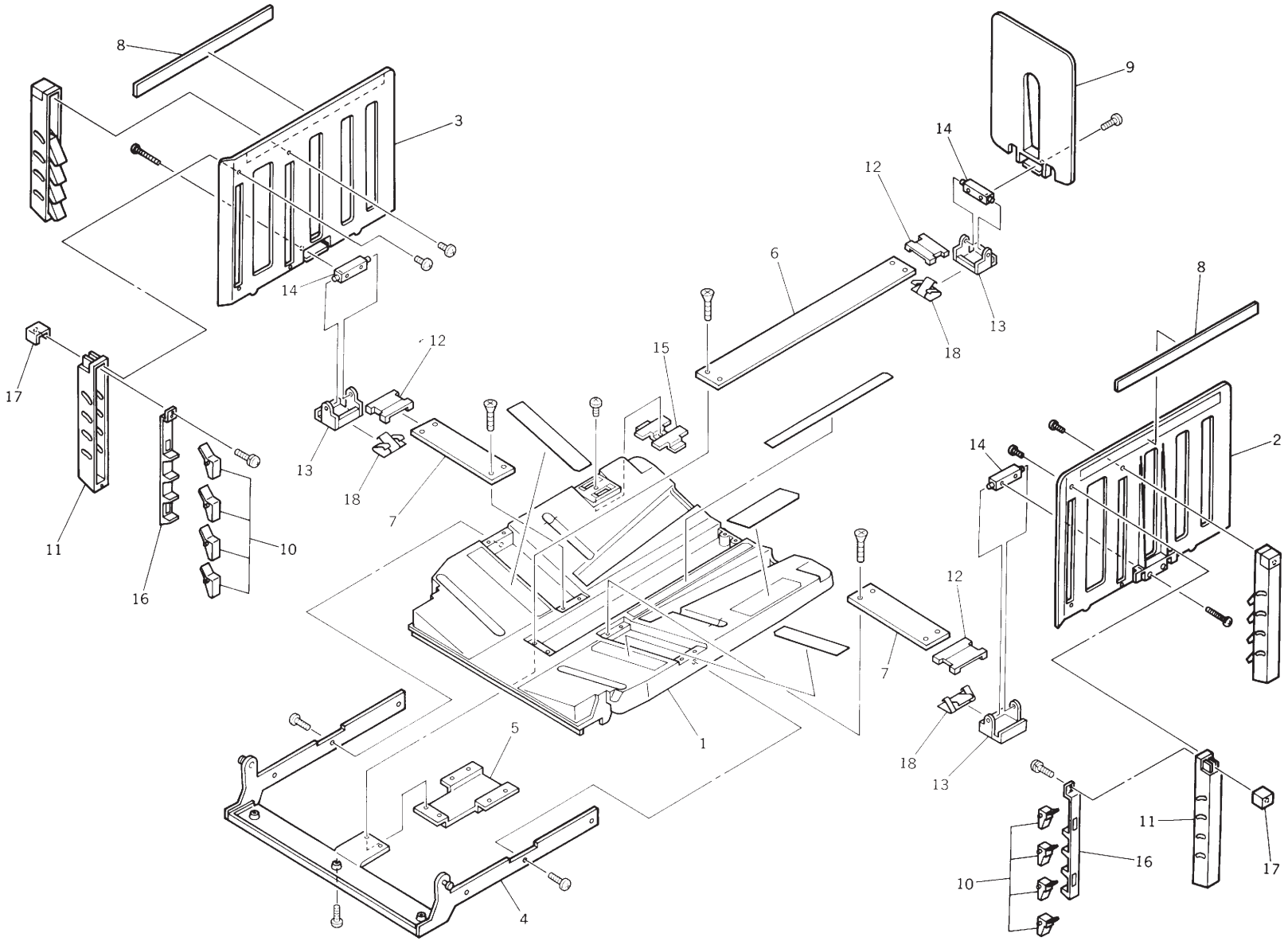

No.	Part No.	Part Name	Q'ty	Remark
	019-93114-053	Unit/Paper Receiving Tray W		
1	019-13125-106	*Receiving Tray Plate	1	
2	019-13102-009	*Paper Guide F; P. -Rcv. -T.	1	
3	019-13103-005	*Paper Guide R; P. -Rcv. -T.	1	
4	019-13126-005	*Frame; P. -Rcv. -T.	1	
5	019-13130-002	*Ground Plate; P. -Rcv. -T.	1	
6	019-13131-106	*Slide Rail A; P. -Rcv. -T.	1	
7	019-13132-102	*Slide Rail B; P. -Rcv. -T.	2	
8	019-13112-004	*Reinforce Plate; P. -Rcv. -T.	2	
9	019-13113-108	*Back Stop; P. -Rcv. -T.	1	
10	019-13115-208	*Flap; P. -Rcv. -T.	16	
11	019-13116-107	*Flap Cover; P. -Rcv. -T.	4	
12	015-35226-004	*Slide Plate; P. -Rcv. -T.	3	
13	015-35223-102	*Slide Base; P. -Rcv. -T.	3	
14	007-13124-109	*Base Block; Paper Guide; Rcv.	3	
15	019-13133-109	*Catch Plate; P. -Rcv. -T.	1	
16	015-35244-304	*Flap Adj. Plate; P. -Rcv. -T.	4	
17	015-35246-005	*Adj. Lever; P. -Rcv. -T.	4	
18	015-35225-300	*Plate Spring; P. -Rcv. -T.	3	
	550-21296-103	Seal; P. -Rcv. -T.; US		
	550-21298-106	Seal; P. -Rcv. -T.; Pic.		
	550-21299-102	Seal; P. -Rcv. -T.		

No.	Part No.	Part Name	Q'ty	Remark

Fig. 14 ADF AREA (1)

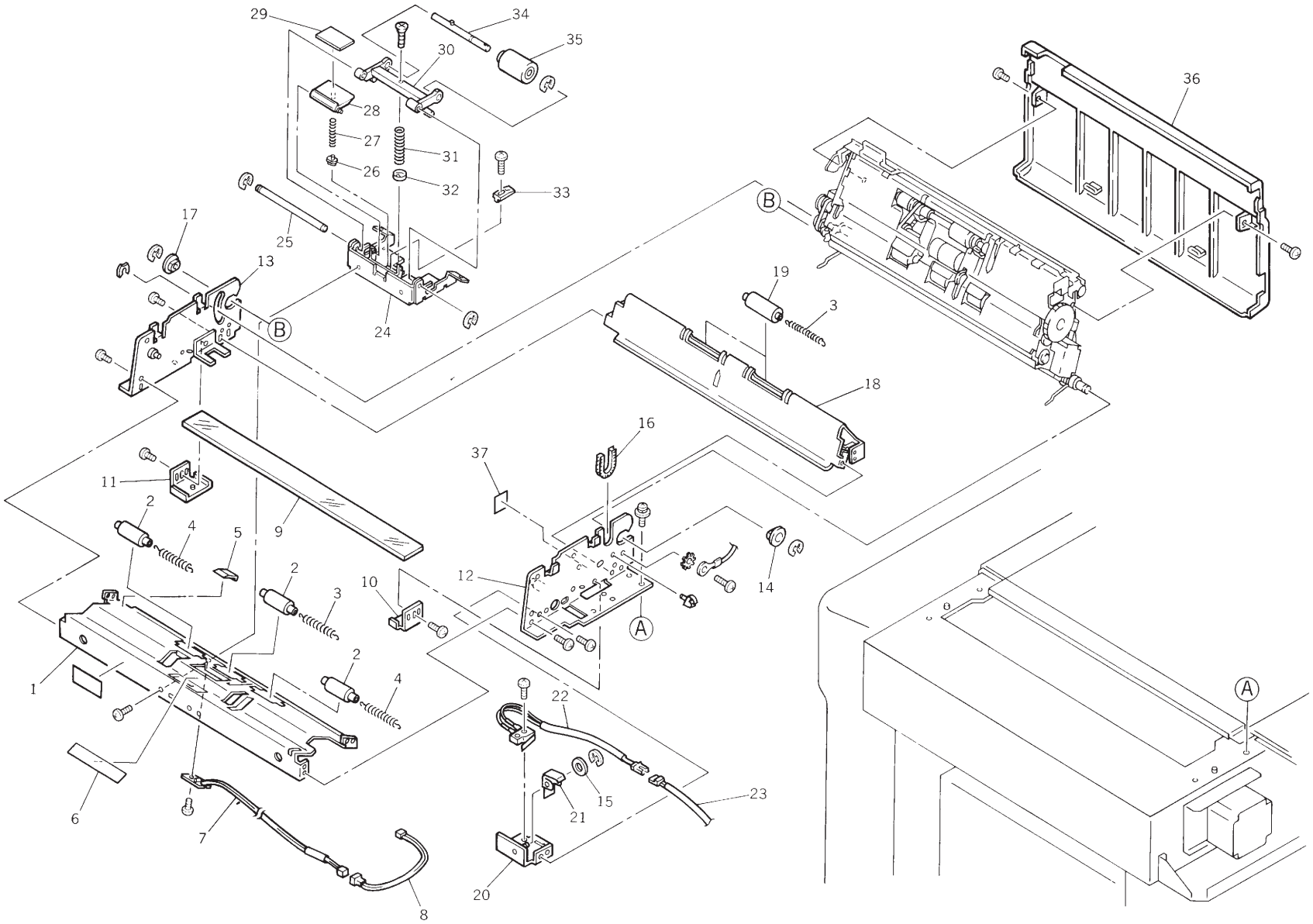

No.	Part No.	Part Name	Q'ty	Remark
		Unit/ADF; FB		
		*ADF AREA (2)		
1	019-36526-000	*Original Guide Base (F); FB-ADF	1	
2	017-16542-005	*Roller (Lower); ADF	3	
3	017-16555-000	*Roller (Spring); ADF	3	
4	018-16590-104	*Roller Spring II; ADF	2	
5	019-36515-009	*Guide; Belt	1	
6	019-36516-005	*Sheet; Original Guide Base	1	
7	018-16568-001	*Original IN Sensor (Receive); FB-ADF	1	
8	018-16569-008	*Wire Harness; Original IN Sensor	1	
9	018-16502-108	*Glass Plate; Image Scanner	1	
10	018-16533-100	*Glass Holder R; Image Scanner	1	
11	018-16534-107	*Glass Holder L; Image Scanner	1	
12	019-36530-008	*Side Frame R; FB-ADF	1	
13	018-16508-203	*Side Frame L; FB-ADF	1	
14	018-16548-000	*Metal; 8M	1	
15	639-00405-008	*Washer; 4 x 6.5 x 0.5	1	
16	018-16578-201	*Free Bushing	1	
17	018-16554-000	*Metal; Exit Roller	1	
18	018-16592-000	*Original Guide Base (R); FB-ADF	1	
19	018-16593-006	*Exit Wheel; ADF; FB	2	
20	018-16598-105	*Bracket; ADF SW	1	
21	018-16600-002	*Actuator; ADF SW	1	
22	018-16570-006	*ADF SW; FB	1	
23	018-16571-002	*Wire Harness; FB-ADF SW	1	
24	019-36533-007	*Frame B; FB-Original Guide	1	
25	019-36537-002	*Stripper Shaft; FB-ADF	1	
26	019-36524-008	*Tray Push; FB-ADF	1	
27	019-36519-004	*Tray Spring; FB-ADF	1	
28	019-36518-008	*Stripper Tray; FB-ADF	1	
29	019-36520-002	*Stripper Pad; FB-ADF	1	
30	019-36534-003	*Stripper Arm; FB-ADF	1	
31	019-36535-000	*Spring; Stripper Arm	1	
32	018-16580-001	*Spacer; Stripper; FB-ADF	1	
33	019-36517-001	*Spring Plate; FB-ADF	1	
34	019-36509-009	*Shaft; Stripper Roller	1	
35	019-36536-006	*Stripper Roller; FB-ADF	1	
36	018-16305-507	Cover B; FB-ADF	1	
37	550-20760-000	Seal; Image Scanner	1	

Fig. 15 ADF AREA (2)

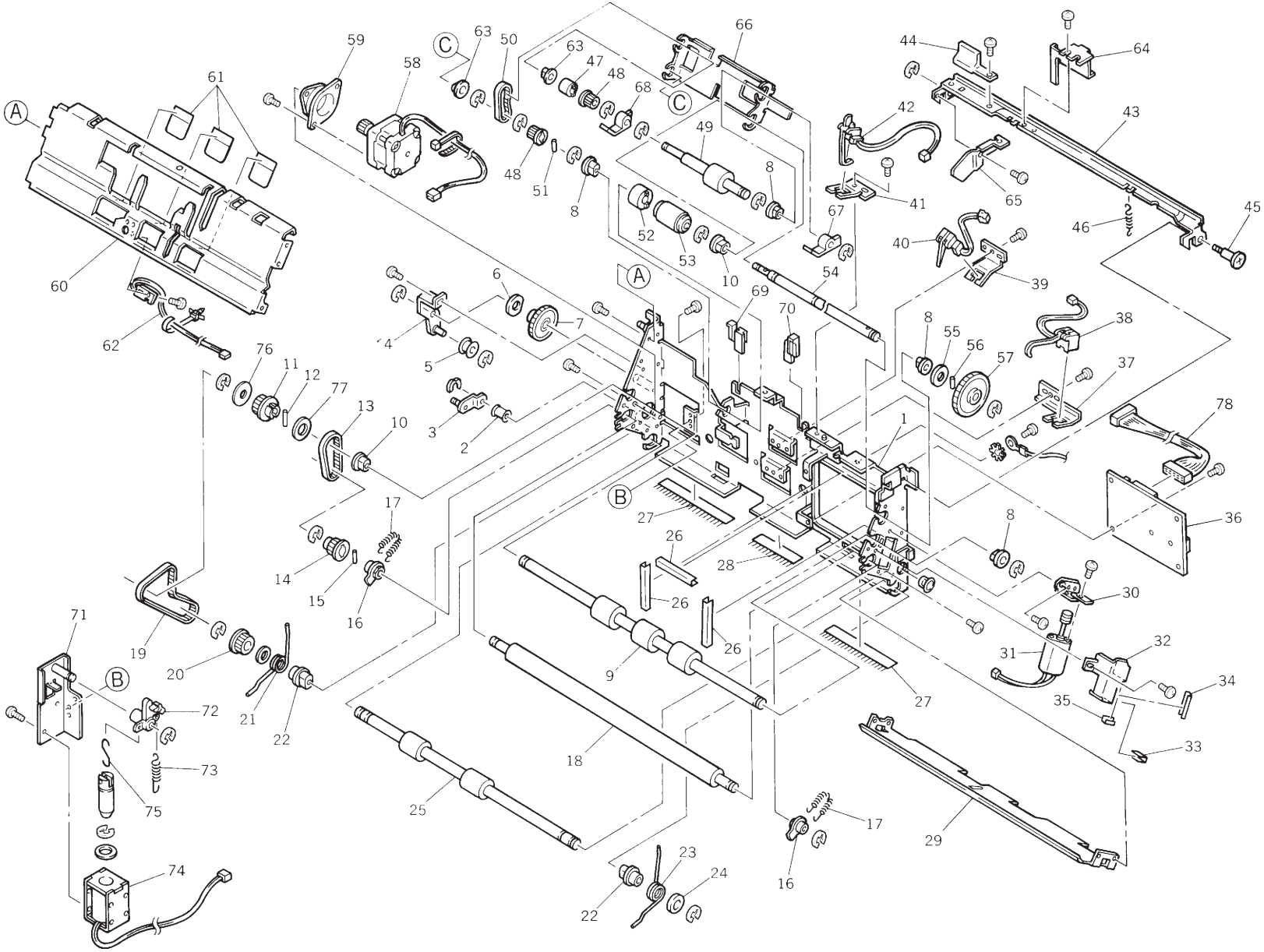

No.	Part No.	Part Name	Q'ty	Remark
		Unit/ADF; FB		
		*ADF AREA (1)		
1	019-36529-000	*Upper Frame; FB-ADF	1	
2	018-16543-009	*Tension Pulley A; FB-ADF	2	
3	018-16506-006	*Stopper Plate; FB-ADF	1	
4	018-16507-100	*Tension Plate; FB-ADF	1	
5	018-16510-003	*Tension Pulley B; FB-ADF	1	
6	018-16546-008	*Spacer; Main Gear; FB-ADF	1	
7	018-16503-104	*Main Gear; FB-ADF	1	
8	018-16548-000	*Metal; 8M	4	
9	018-16513-002	*Transfer Roller; FB-ADF	1	
10	018-16547-004	*Metal; 8P	2	
11	019-36539-005	*Pulley; Transfer Roller	1	
12		*Pin; ϕ 2 x 14	1	Ref.Pg.II-27
13	018-16572-009	*Belt B; 56	1	
14	018-16544-005	*Pulley; Read Roller	1	
15		*Pin; ϕ 2 x 10	1	Ref.Pg.II-27
16	018-16550-102	*Housing; Read Roller	2	
17	017-16562-006	*Spring; Read Roller	2	
18	018-16516-109	*Read Roller	1	
19	018-16585-003	*Belt; 118	1	
20	018-16545-001	*Exit Pulley; FB-ADF	1	
21	018-16559-002	*Spring L; FB-ADF	1	
22	018-16549-007	*Housing; Exit Roller	2	
23	018-16558-006	*Spring R; FB-ADF	1	
24	018-16552-008	*Spacer; Exit Roller	1	
25	018-16514-009	*Exit Roller (Upper); FB-ADF	1	
26	018-16577-000	*Bushing; FB-ADF	3	
27	018-16555-007	*De-electricity Brush A; FB-ADF	2	
28	017-16546-000	*De-electricity Brush B; ADF	1	
29	018-16591-003	*Guide Plate; FB-ADF	1	
30	018-16522-001	*Bracket; ADF Motor	1	
31	018-16561-104	*ADF Motor; FB	1	
32	018-16518-101	*Motor Cover; FB-ADF	1	
33	018-16582-004	*Bushing (2); ADF Motor	1	

No.	Part No.	Part Name	Q'ty	Remark
34	018-16581-008	*Bushing (1); ADF Motor	1	
35	018-16583-000	*Bushing (3); ADF Motor	1	
36	017-51032-001	*ADF PCB	1	
37	018-16537-009	*Bracket; Original Regist. Sensor	1	
38	018-16565-002	*Original Regist. Sensor	1	
39	018-16535-103	*Bracket; Original Out Sensor	1	
40	018-16566-009	*Original Out Sensor	1	
41	018-16536-002	*Bracket; Original Det. Sensor	1	
42	018-16564-006	*Original Det. Sensor	1	
43	019-36528-003	*Hook Plate; FB-ADF	1	
44	018-16532-007	*Open Lever; FB-ADF	1	
45	018-16504-003	*Stepped Screw; M4 x 13	1	
46	019-36540-003	*Spring; Open Lever	2	
47	018-16575-008	*Collar; Pickup Roller; FB-ADF	1	
48	017-16530-007	*Pulley A; ADF	2	
49	019-36531-004	*Pickup Roller (Upper); FB-ADF	1	
50	017-16588-005	*Belt; 44	1	
51		*Pin; ϕ 2 x 10	1	Ref.Pg.II-27
52	018-16541-006	*Collar; Stripper Roller	1	
53	019-36536-006	*Stripper Roller; FB-ADF	1	
54	019-36532-000	*Shaft; Stripper Roller; FB-ADF	1	
55	018-16526-007	*Spacer; WHG	1	
56		*Pin; ϕ 2 x 12	1	Ref.Pg.II-27
57	017-16538-008	*Gear; ADF	1	
58	018-16563-000	*Read Pulse Motor; FB-ADF	1	
59	017-16595-001	*Mount; Read Pulse Motor	1	
60	019-36527-007	*Original Guide (F); FB-ADF	1	
61	019-36521-009	*Sheet Guide; FB-ADF	3	
62	018-16567-005	*Original IN Sensor (Send)	1	
63	018-16551-001	*Metal; 6	2	
64	019-36511-003	*Lever; Hook Plate	1	
65	019-36512-000	*Plate; Hook Plate	1	
66	019-36501-000	*Pickup Roller Frame; FB-ADF	1	
67	019-36503-000	*Lever Shutter R	1	
68	019-36504-007	*Lever Shutter L	1	

No.	Part No.	Part Name	Q'ty	Remark
69	019-36505-003	*Claw L; FB-ADF	1	
70	019-36506-000	*Claw R; FB-ADF	1	
71	019-36502-004	*Bracket; Pickup Solenoid	1	
72	019-36507-006	*Lever; Pickup	1	
73	019-36514-002	*Spring; Pickup Solenoid	1	
74	019-36538-009	*Pickup Solenoid; FB-ADF	1	
75	019-36510-007	*Link; Pickup Solenoid	1	
76	019-36523-001	*Collar; Transfer Roller	1	
77	019-36522-005	*Spacer; Transfer Roller	1	
78	019-55094-006	Wire Harness; ADF (FB)	1	

No.	Part No.	Part Name	Q'ty	Remark

MEMO

Fig. 16 SCANNER AREA (1)

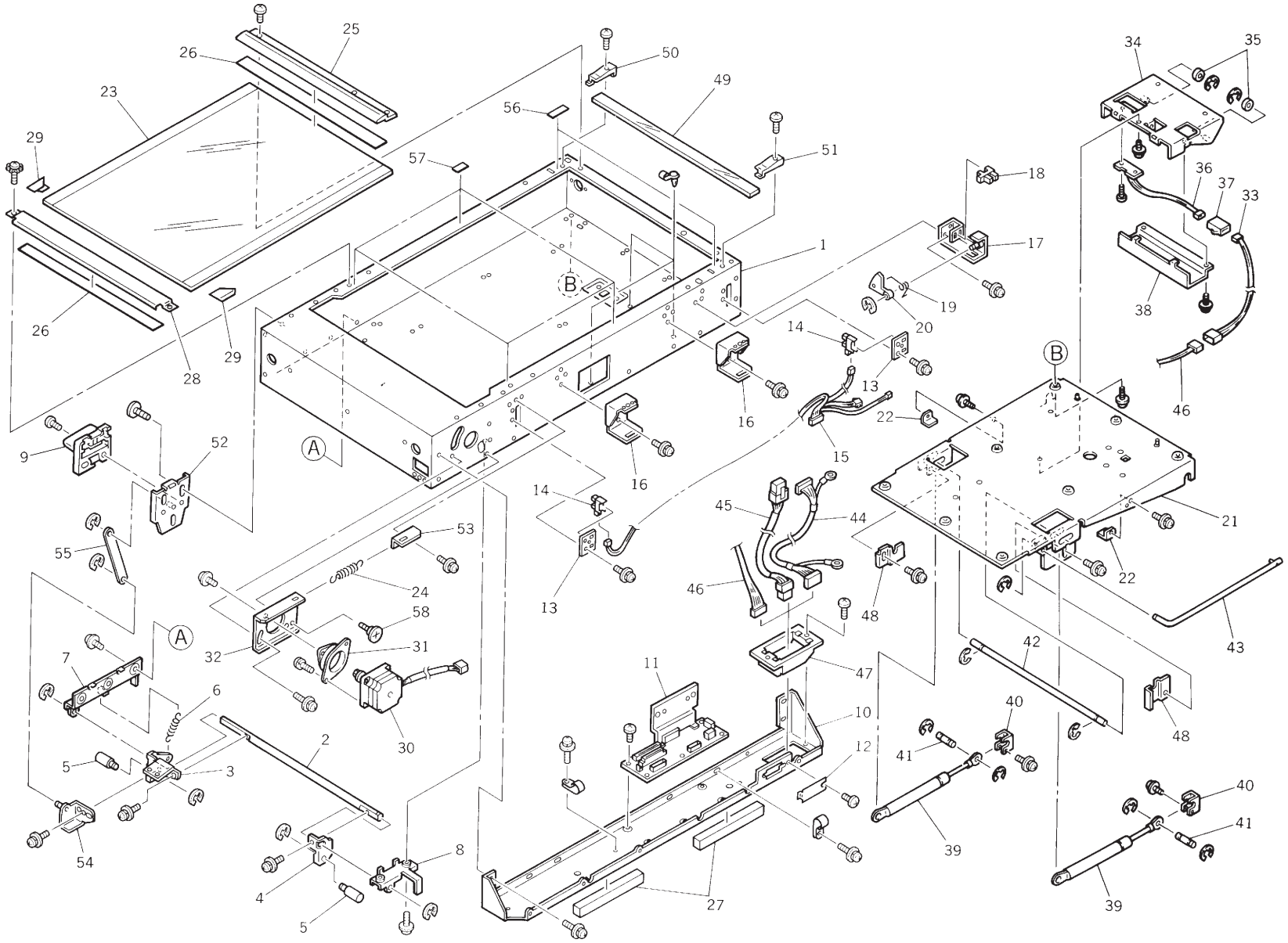

No.	Part No.	Part Name	Q'ty	Remark
1	019-36002-109	Main Frame; FB-Scanner	1	
2	019-26214-000	Hook Shaft; FB; A3	1	
3	018-16220-200	Hook Base (F); FB-Hook Shaft	1	
4	018-16222-105	Hook Base (R); FB-Hook Shaft	1	
5	018-16218-000	Shaft; Hook Base	2	
6	018-16223-004	Spring; Hook Shaft	1	
7	019-36202-108	Bracket (F); Hook Shaft	1	
8	018-36227-103	Bracket (R); Hook Shaft	1	
9	019-36201-004	Open Lever; Hook Shaft	1	
10	019-36025-109	Back Frame; FB-Scanner	1	
11	019-96050-005	Flat Bed PCB	1	
12	018-16064-003	Blind Plate; FB-Back Frame	1	
13	018-16031-105	Bracket; FB-Pos. Sensor	2	
14	443-30003-003	Sensor; LG-203D	2	
15	018-55001-108	Wire Harness; FB	1	
16	019-36015-006	Hinge Bracket; FB-Scanner; CE	2	
17	019-36020-000	Bracket; Stage Cover Sensor	1	
18	443-30003-003	Sensor; LG-203D	1	
19	018-16035-003	Actuator Spring; Stage Cover Sensor	1	
20	018-16032-101	Actuator Stage Cover Sensor	1	
21	019-26202-800	Bottom Plate; FB-Scanner; CE	1	
22	018-16250-206	Damper Hook; FB-Scanner; CE	2	
23	019-36006-104	Stage Glass	1	
24	018-16223-004	Spring; Hook Shaft	1	
25	019-36008-000	Original Stopper	1	
26	018-16067-207	Shading Plate (R)	2	
27	481-30004-000	Gasket; 80	2	
28	018-16039-106	Glass Holder (R)	1	
29	018-16071-000	Protection Tape; Stage Glass	2	
30	018-65000-002	R Pulse Motor; FB	1	
31	018-16073-002	Shock-Absorbent Rubber	1	
32	019-36022-002	Bracket; R Pulse Motor	1	
33	019-55024-105	Wire Harness; Disposal Box Master Sensor	1	
34	017-24148-200	Disposal Box Guide; CE	1	
35	017-24151-007	Guide Collar; Disposal Box Guide	2	

No.	Part No.	Part Name	Q'ty	Remark
36	019-60000-001	Disposal Box Master Sensor	1	
37		*Junction Connector; 3P	2	Ref.Pg.II-27
38	017-24154-103	Sensor Cover; Disposal Box Guide; CE	1	
39	610-00002-207	Damper; FB	2	
40	019-16215-009	Damper Bottom Bracket	2	
41	019-16214-100	Shaft; Damper Bottom Bracket	2	
42	019-27240-102	Shaft; Damper	1	
43	019-17255-004	Support Shaft Lock	1	
44	019-55087-000	Wire Harness; Image-FBI	1	
45	019-55088-006	Wire Harness; Image-FBI Power	1	
45	019-55097-005	Wire Harness; Image-FBI Power; CE	1	Europe
46	019-55037-002	Wire Harness; Removal Guide	1	
47	019-16066-003	Cap I; CE	1	
48	019-17241-305	Shaft Stopper; Damper; CE	1	
49	019-36007-003	Glass Plate; Scanner	1	
50	019-36009-006	Glass Holder F; Scanner	1	
51	019-36010-004	Glass Holder R; Scanner	1	
52	019-36207-002	Bracket; Open Lever	1	
53	019-36023-009	Hook Plate; Scanner	1	
54	019-36203-007	Fulcrum Plate; FB-Hook Shaft	1	
55	019-36206-006	Link Plate; FB-Hook Shaft	1	
56	019-36026-008	Set Sheet A; Stage Glass	2	
57	019-36027-004	Set Sheet B; Stage Glass	4	
58	635-17814-000	Stepped Screw; M4 x 4.3	1	

Fig. 17 SCANNER AREA (2)

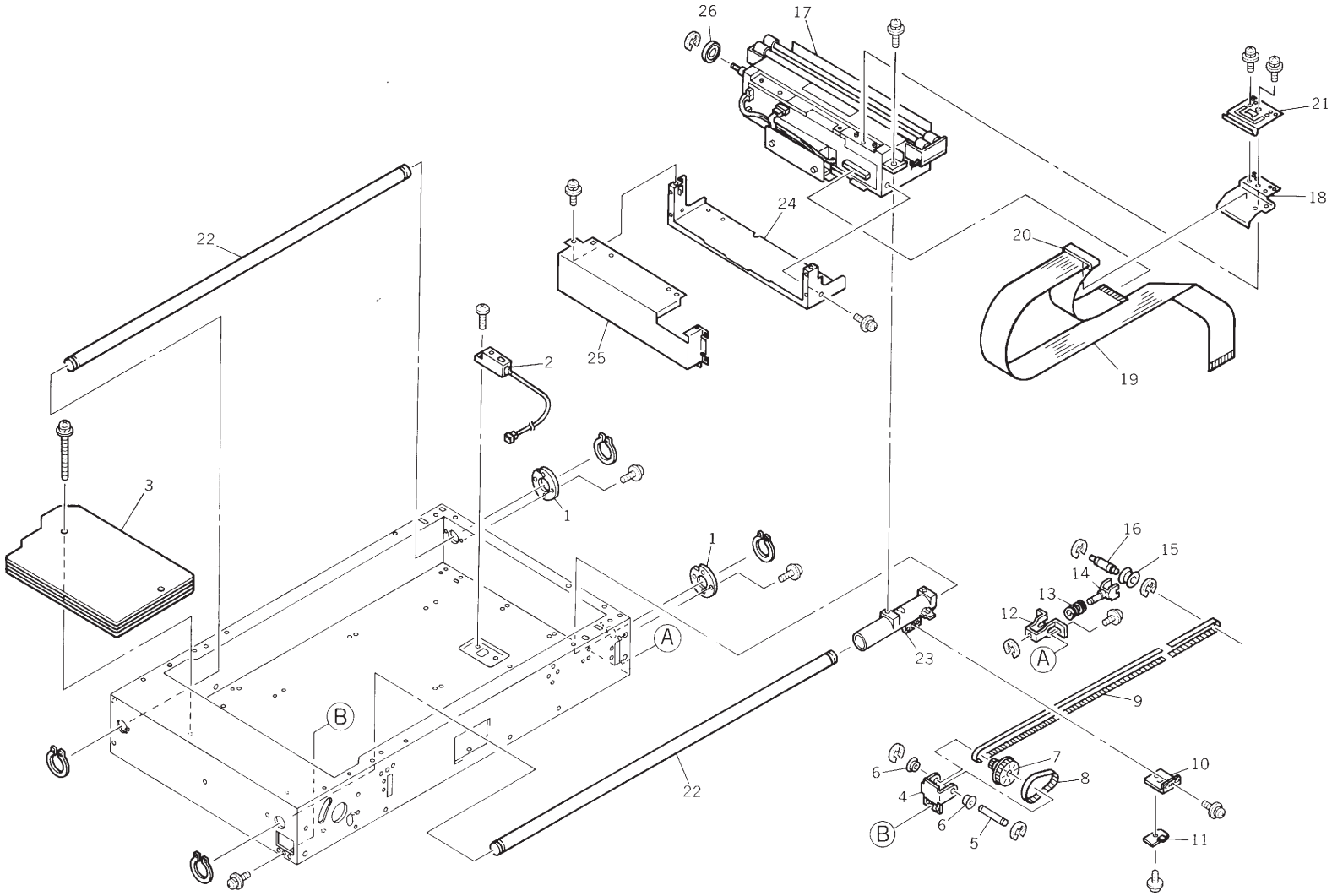

No.	Part No.	Part Name	Q'ty	Remark
1	019-36014-000	Adj. Plate; FB-Slide Shaft	2	
2	018-60000-101	Original Det. Sensor; FB	1	
3	015-27128-001	Balance Weight; FB	4	
4	019-36011-000	Drive Pulley Holder; FB-Scanner	1	
5	018-16017-005	Drive Pulley Shaft; FB-Scanner	1	
6	600-50046-004	Bearing; FLAWBC6-12ZZA	2	
7	611-30090-000	Pulley; P63/20-2M-6; HTD	1	
8	620-81966-007	Belt; 196-2GT	1	
9	620-89996-100	Belt; 1344-2GT	1	
10	018-16019-008	Belt Stand Plate; FB-Scanner	1	
11	018-16020-006	Belt Holder Plate; FB-Scanner	1	
12	018-16023-005	Tension Holder; FB-Scanner	1	
13	018-16027-000	Tension Spring; FB-Scanner	1	
14	018-16024-001	Tension Plate; FB-Scanner	1	
15	611-01420-000	Pulley; ϕ 14 x 8	1	
16	018-16022-009	Tension Shaft; FB-Scanner	1	
17	015-71001-108	Image Scanner 600	1	
17	019-60024-008	Image Scanner 600 CE	1	Europe
18	019-36016-100	Wire Stand; FB-Image	1	
19	015-58000-003	Image Flexible Wire	1	
20	435-00018-004	TDK Core; HF70SH40 x 1.3 x 8	1	
21	019-36017-009	Core Holder	1	
21	019-36028-000	Core Holder CE	1	Europe
	019-36029-007	Core Cover	1	Europe
22	019-36013-003	Slide Shaft; FB-Scanner	2	
23	019-36001-005	Slide Guide; FB-Scanner	1	
24	019-36018-102	Image Scanner Cover B	1	
25	019-36019-109	Image Scanner Cover S	1	
26	600-06172-108	Bearing; DDR-1760 x 2 ZZR	1	

No.	Part No.	Part Name	Q'ty	Remark

Fig. 18 MASTER-MAKING AREA (1)

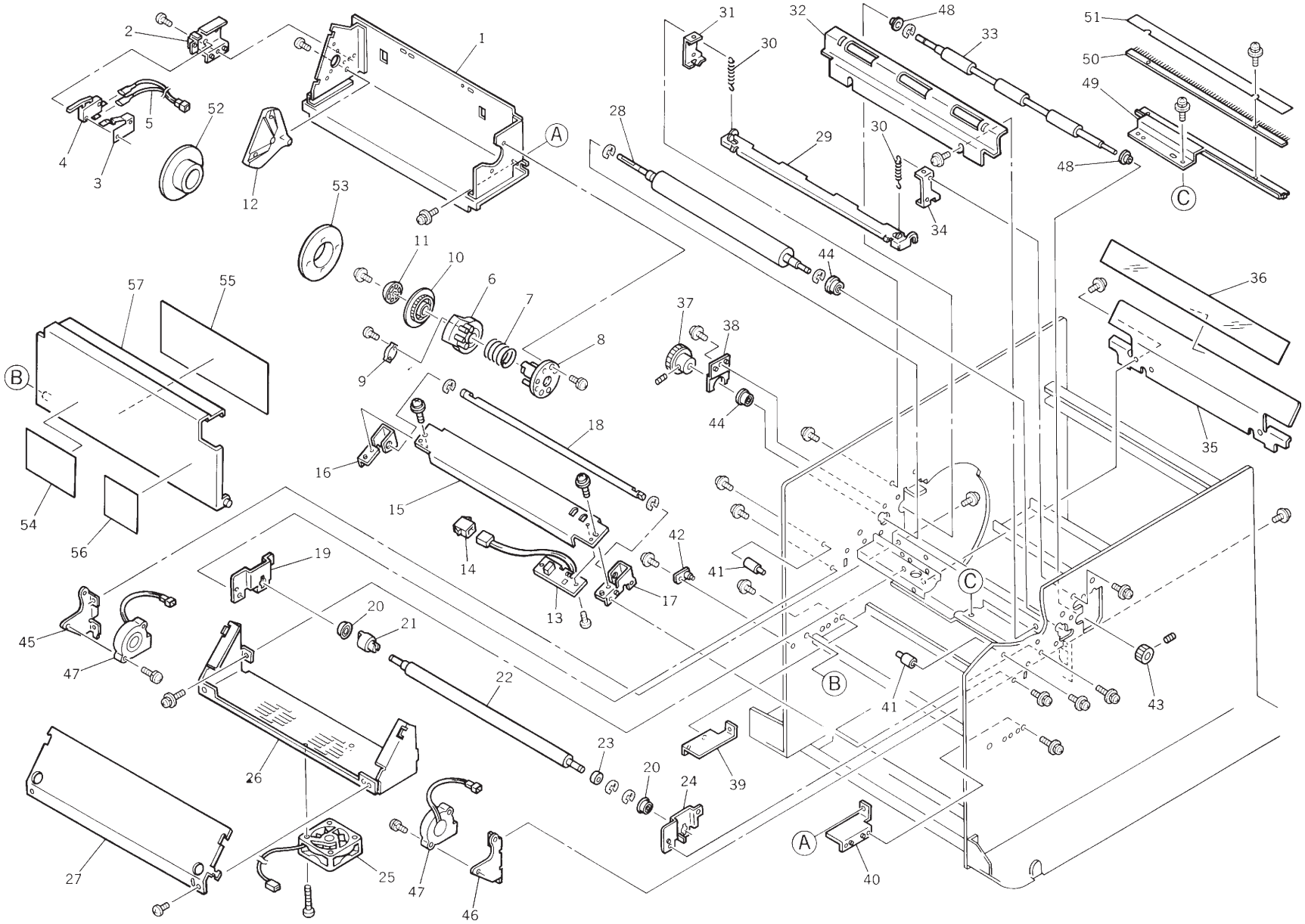

No.	Part No.	Part Name	Q'ty	Remark
	019-95204-009	Unit/Master Roll Holder; 377		
1	019-35028-007	*Master Roll Holder	1	
2	019-25527-200	*Bracket; Micro-SW; M.-M.	1	
3	019-25533-005	*Actuator Plate; Micro-SW	1	
4	443-02008-008	*Micro-SW; AM50030C33	1	
5	019-55004-104	*Wire Harness; Master Loading Unit SW	1	
	019-95211-005	Guide Flange Ass'y		
6	019-15270-006	*Damper Case	1	
7	019-15273-005	*Spring; Master Holder	1	
8	019-15254-000	*Shaft Flange; Master Holder	1	
9	610-00007-004	*HG Damper, 2G50-E	1	
10	019-15253-004	*Damper Gear	1	
11	019-15255-007	*Stopper; Guide Flange	1	
12	019-35032-004	Guide Holder D; Master Holder	1	
	019-95070-100	Set Guide Plate Ass'y; A3		
13	019-60015-106	*Master End Sensor (Send)	1	
14		**Junction Connector; 4P	1	Ref.Pg.II-27
15	019-25519-002	*Set Guide Plate; A3	1	
16	019-25518-006	Stay L; Set Guide Plate	1	
17	019-25517-000	Stay R; Set Guide Plate	1	
18	019-25516-100	Set Guide Shaft	1	
19	019-25602-007	Base Plate F; Tension Roller	1	
20	600-06105-001	Bearing; DDLF - 1060ZZH	2	
21	019-25604-000	Torque Limiter; Tension Roller	1	
22	019-95600-001	Tension Roller Ass'y	1	
23	607-05001-009	*Metal; S6 x 10 x 6	1	
24	019-25603-003	Base Plate R; Tension Roller	1	
	019-95095-005	Stocker Ass'y; A3		
25	017-65011-007	*Loading Fan; Stocker	1	
26	019-25111-003	*Stocker	1	
27	019-25112-107	Stocker Cover	1	
28	019-95077-007	Write Roller, A3	1	
29	019-35024-109	Master Guide Plate; A3	1	
30	014-15146-007	Spring; Master Guide Plate	2	
31	014-15144-209	Spring Hanger L; Master Guide Plate; CE	1	

No.	Part No.	Part Name	Q'ty	Remark
32	014-15191-100	Guide Plate; Load; A3	1	
33	014-15102-000	Load Roller (Lower); M. -M.	1	
34	014-15145-205	Spring Hanger R; Master Guide Plate; CE	1	
35	019-24126-104	Bracket; Aero Guide Sheet; CE	1	
36	019-24127-100	Aero Guide Sheet; A3	1	
37	019-35021-002	Pulley G; 600	1	
38	014-15182-003	Fixing Plate; Pulley G	1	
39	017-15214-004	Holder Stay F	1	
40	017-15213-008	Holder Stay R	1	
41	011-15001-007	Support Shaft	2	
42	014-15214-002	Set Plate; Cover	1	
43	011-15110-000	Pulley; Loading Roller (Lower)	1	
44	601-10228-000	Bearing; 0900ZZNR	2	
45	017-24152-100	Bracket F; Master Removal Fan	1	
46	017-24153-107	Bracket R; Master Removal Fan	1	
47	019-65005-001	Master Removal Fan	2	
48	607-15000-809	Metal; F8 x 16 x 6; 18 x 2	2	
49	019-35008-006	Bracket; De-electricity Brush	1	
50	019-25101-105	De-electricity Brush	1	
51	019-25103-000	Protection Sheet; De-electricity Brush	1	
52	019-35035-003	Flange F; Master Roll	1	
53	019-35036-000	Flange R; Master Roll	1	
54	550-21141-002	Seal; Paper Guide Set	1	
54	550-21142-009	Seal; Paper Guide Set; Pic.	1	
55	550-20987-005	Seal; Setting Master	1	
55	550-20988-001	Seal; Setting Master; Pic.	1	
56	550-21073-007	Seal; P -Rcv. -T.; Caution	1	
57	019-35033-000	Cover; Master Roll Holder	1	

Fig. 19 MASTER-MAKING AREA (2)

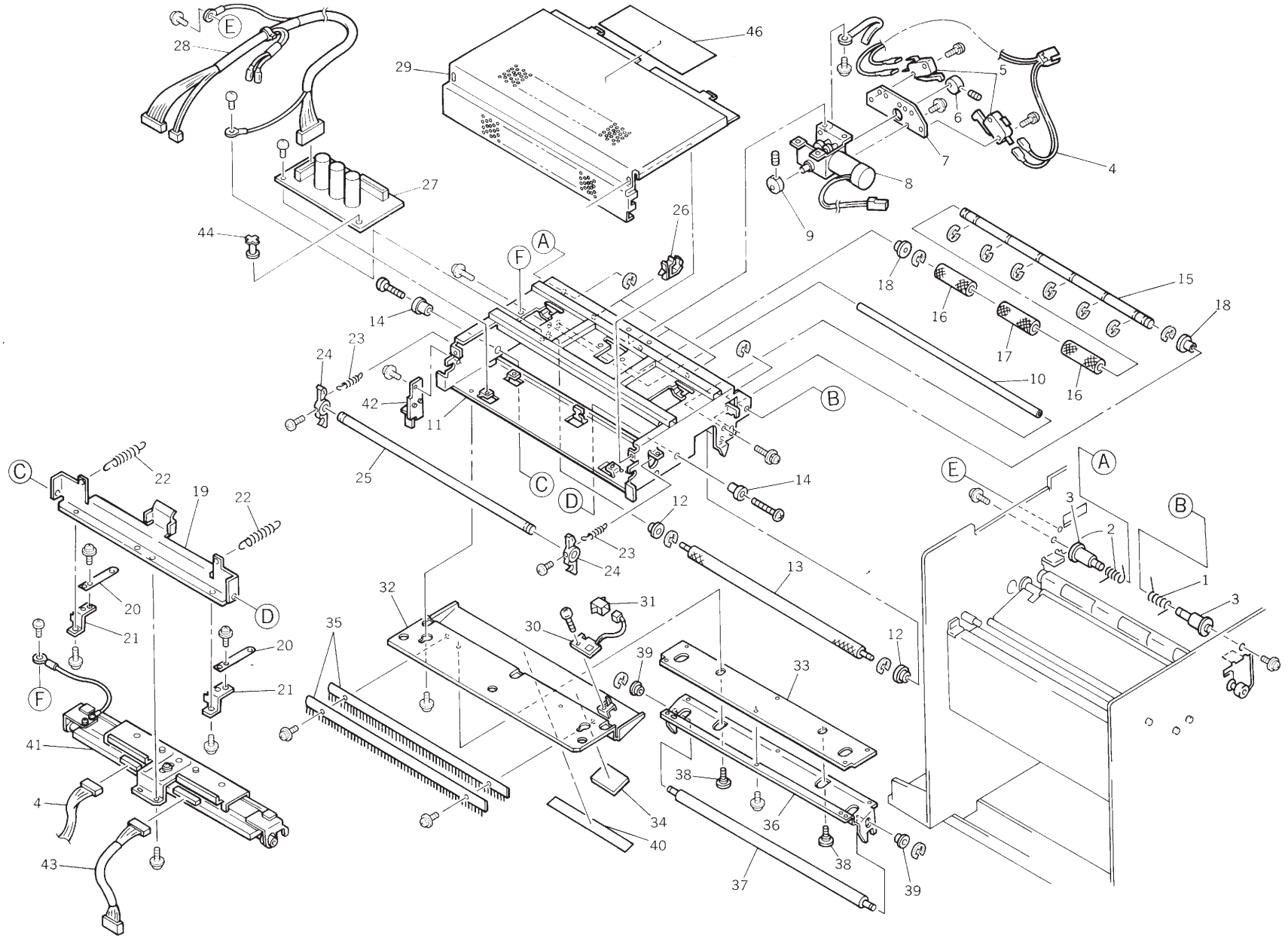

No.	Part No.	Part Name	Q'ty	Remark
	019-95001-000	Unit/Master Making; A3		
	019-95002-007	Unit/Master Making; A3 CE		Europe
1	019-25532-009	*Spring (Right); M. -M.	1	
2	019-25531-002	*Spring (Left); M. -M.	1	
3	014-15021-107	*Fulcrum III; M. -M.; CE	2	
4	019-55089-100	Wire Harness; M. -M. - Image	1	
4	019-55098-001	Wire Harness; M. -M. - Image; CE	1	Europe
5	443-02007-001	*Micro-SW; AM50036C331	2	
6	011-15708-208	*Switch Cam	1	
7	019-25612-002	*Bracket; Micro-SW	1	
8	019-65016-100	*Thermal Pressure Motor Ass'y	1	
9	011-15117-005	*Cam; Thermal Pressure Motor	1	
10	014-15028-004	*Reinforce Shaft	1	
11	019-35002-105	*Frame A; M. -M.	1	
12	607-11000-200	*Metal; F4 x 7 x 6; 10 x 1.5	2	
13	014-15018-009	*Catch Roller (Upper); A3	1	
14	011-15004-006	*Fulcrum; TPH	2	
15	019-25007-001	*Shaft; Load Roller	1	
16	017-15009-001	*Load Roller	2	
17	014-15007-007	*Load Roller	1	
18	607-13000-607	*Metal; F6 x 9 x 7; 11 x 1	2	
19	019-35006-003	*Bracket; TPH; A3	1	
20	019-35016-009	*Pressure Assist Plate	2	
21	019-35015-100	*Bracket; Pressure Assist Plate; CE	2	
22	019-25511-001	*Spring; TPH Pressure	2	
23	011-15098-000	*Hook Spring	2	
24	011-15013-005	*Open/Close Hook	2	
25	014-15008-003	*Shaft; Open/Close Hook; A3	1	
26	665-04014-003	Snap Bushing; SB-2000-26	1	
27	019-51043-059	Sub-Power Supply PCB	1	
28	019-55092-100	Wire Harness; TPH Power	1	
29	019-35007-000	Cover A; M. -M.	1	
	019-95050-052	Copy Guide Plate (Lower) Ass'y		
30	019-60022-005	*Master End Sensor (Receive)	1	
31		**Junction Connector; 3P	1	Ref.Pg.II-27

No.	Part No.	Part Name	Q'ty	Remark
32	019-25605-006	*Copy Guide Plate (Lower)	1	
33	019-25608-005	*Base A; Nip Roller	1	
34	014-15013-007	*Sheet; Light Absorber; M. -M.	1	
35	014-15011-004	*De-electricity Bar; M. -M.; A3	2	
36	019-25609-001	*Base B; Nip Roller	1	
37	019-25610-000	*Nip Roller	1	
38	635-17614-000	*Stepped Screw, M4 x 4.5	2	
39	607-13003-002	*Metal; F6 x 8 x 3; 10 x 1	2	
40	550-20118-104	TPH Seal	1	
41	019-95037-056	TPH Ass'y; 600A3	1	
42	019-35037-006	Actuator Plate; Micro-SW; M. -M.	1	
43	019-55090-000	Wire Harness; TPH Power	1	
44	505-00350-102	Cap Spacer	1	
46	550-20671-105	Seal; M. -M.	1	
46	550-20672-101	Seal; M. -M.; Pic.	1	

Fig. 20 CUTTER UNIT

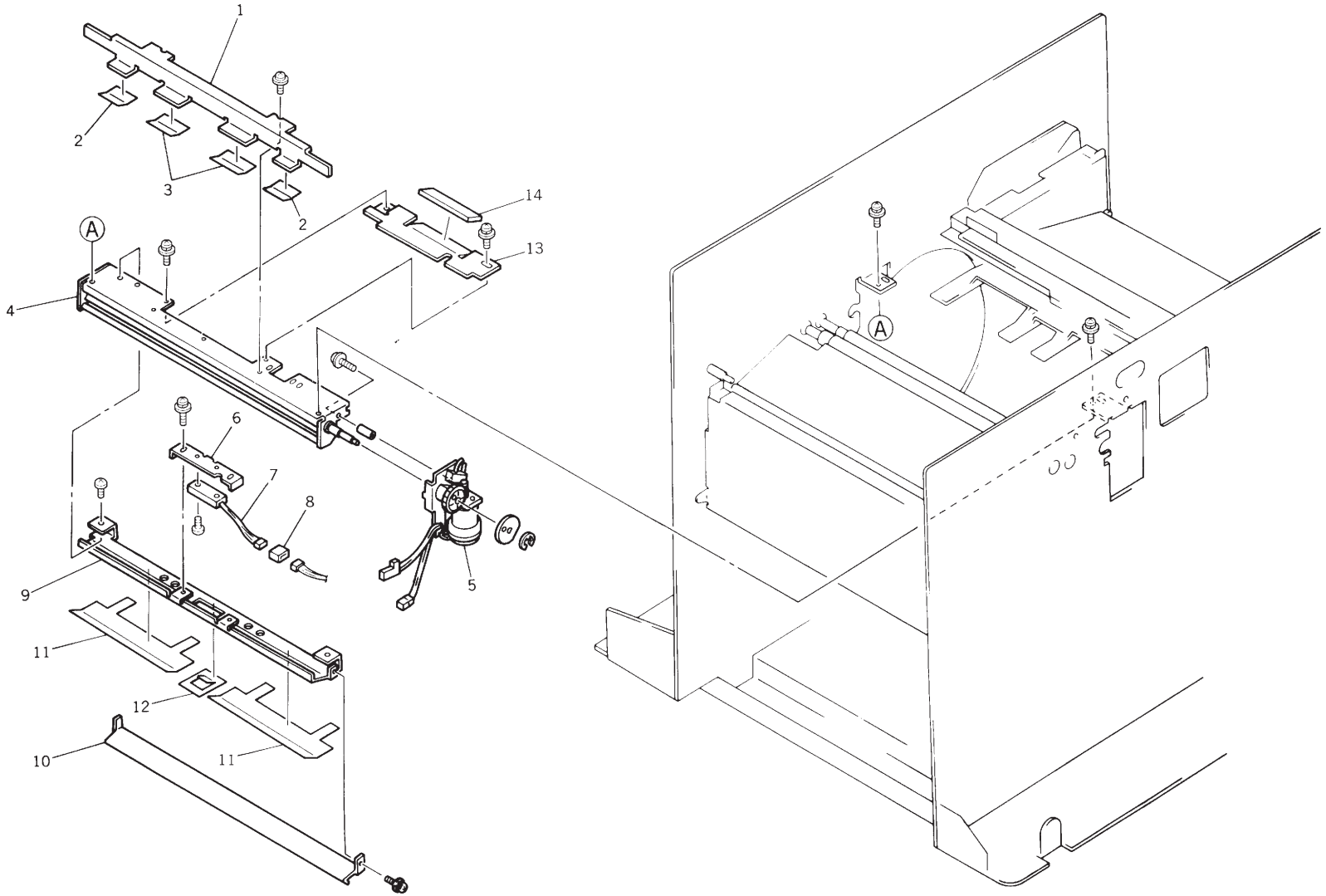

No.	Part No.	Part Name	Q'ty	Remark
	019-95100-009	Set Sheet Plate Ass'y; A3		
1	019-25115-009	*Set Sheet Plate; A3	1	
2	019-25116-005	*Set Sheet	2	
3	014-15116-205	*Set Sheet E	2	
	019-95300-202	Unit/Cutter; A3; CE		
4		*Cutter Body	1	
5	019-65008-205	**Cutter Motor Ass'y; CE	1	
	019-25309-008	**Gear; Cutter Motor	1	
6	017-15306-006	*Bracket; Master Positioning Sensor	1	
7	019-60019-101	*Master Positioning Sensor II	1	
8		*Junction Connector; 3P	1	Ref.Pg.II-27
9	019-25301-309	*Cutter Cover	1	
10	019-25307-102	*Cutter Guide	1	
11	019-25311-100	*Cutter Guide Sheet (A3)	2	
12	019-25312-300	*Cutter Center Guide Sheet	1	
13	019-25305-002	*Master Guide Stopper Plate	1	
14	019-25306-009	*Master Guide Stopper Cushion	1	

No.	Part No.	Part Name	Q'ty	Remark

Fig. 21 MASTER REMOVAL UNIT

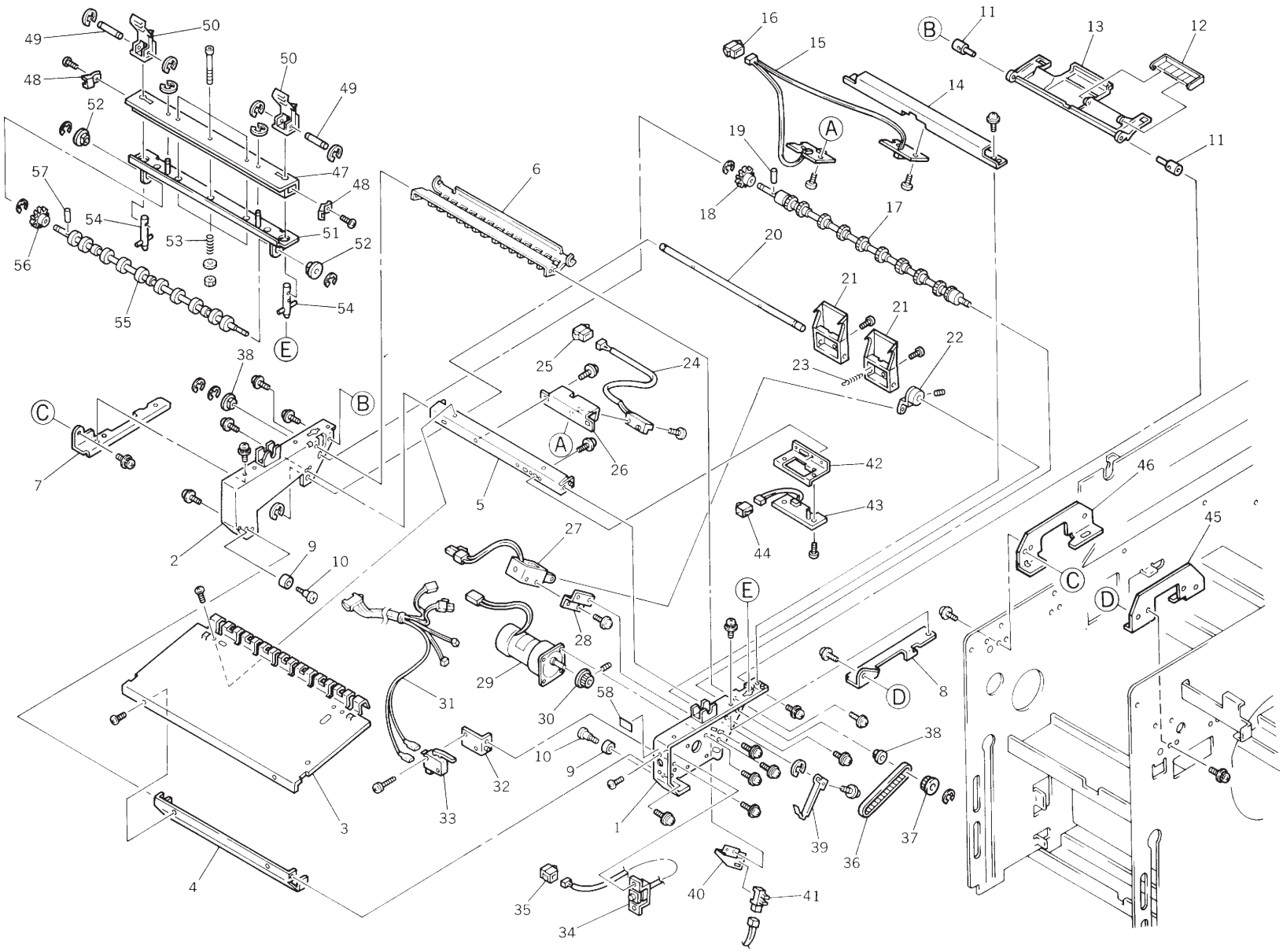

No.	Part No.	Part Name	Q'ty	Remark
	019-94100-102	Unit/Master Removal; A3; CE		
1	017-44101-103	*Right-Side Frame; M. -Rmv.; CE	1	
2	017-44104-102	*Left-Side Frame; M. -Rmv.; CE	1	
3	019-44103-003	*Base Plate; M. -Rmv; A3; CE	1	
4	019-44102-007	*Stay B; M. -Rmv.; CE	1	
5	019-24101-004	*Stay A; M. -Rmv.	1	
6	019-24104-208	*Guide Plate; M. -Rmv.; A3; CE	1	
7	017-44112-008	*Set Plate R; M. -Rmv.; CE	1	
8	017-44111-001	*Set Plate F; M. -Rmv.; CE	1	
9	017-14114-006	*Set Collar; M. -Rmv.	2	
10	017-14115-002	*Screw; M. -Rmv.	2	
11	017-14116-009	*Fulcrum; Master Guide; M. -Rmv.	2	
12	019-24111-000	*Guide Plate; M. -Rmv.; A3	1	
13	019-24110-100	*Master Guide; M. -Rmv.; A3	1	
14	019-44108-102	*Upper Stay; M. -Rmv.; CE	1	
15	017-60001-208	*Master Removal Sensor	1	
16		**Junction Connector; 5P	1	Ref.Pg.II-27
17	019-24105-000	*Vertical Transport Roller (Down); A3	1	
18	612-03103-009	*Gear B; 1.25 x 14	1	
19		*Pin; ϕ 2.5 x 8	1	Ref.Pg.II-27
20	019-24107-002	*Shaft; M. -Rmv. Hook; A3	1	
21	007-17121-104	*Master Removal Hook	2	
22	011-14115-009	*Linking Plate; M. -Rmv. Hook	1	
23	000-10148-030	*Spring B	1	
24	017-60037-105	*Master Sensor II	1	
25		**Junction Connector; 3P	1	Ref.Pg.II-27
26	017-14111-309	*Sensor Bracket; M. -Rmv.	1	
27	019-65015-007	*Master Removal Solenoid	1	
28	017-14122-106	*Bracket; M. -Rmv. Solenoid	1	
29	017-65003-004	*M. -Rmv. Vertical Transport Motor	1	
30	002-14517-000	*Pulley; Duct	1	
31	019-55005-003	*Wire Harness; M. -Rmv.	1	
32	011-14408-006	*Bracket; Disposal Box SW	1	
33	443-00121-109	*Micro-SW; 21-52N	1	
34	017-60010-002	*Switch A	1	

No.	Part No.	Part Name	Q'ty	Remark
35		**Junction Connector; 2P	1	Ref.Pg.II-
27				
36	620-32916-002	*Belt; 291-3M-6	1	
37	011-14121-106	*Pulley B; M. -Rmv.	1	
38	607-13000-402	*Metal; F6 x 10/9 x 6; 12 x 1.5	2	
39	017-24109-108	*Actuator; M. -Rmv. Hook Sensor	1	
40	017-24110-009	*Bracket; M. -Rmv. Hook Sensor	1	
41	443-30005-006	*Sensor; GP1A71A	1	
42	017-24108-101	*Bracket; Disposal Box Master Sensor	1	
43	019-60001-008	*Disposal Box Master Sensor (Rcv.)	1	
44		**Junction Connector; 3P	1	Ref.Pg.II-
27				
45	017-44113-004	Fixing Plate F; M. -Rmv.; CE	1	
46	017-44114-000	Fixing Plate R; M. -Rmv.; CE	1	
	019-94115-207	Holder Ass'y; V. - Transport Roller; A3; CE		
47	019-44116-105	*Upper Holder A; V. - Transport Roller; A3; CE	1	
48	017-24141-001	*Lock Plate	2	
49	017-24140-005	*Knob Shaft; M. -Rmv.	2	
50	017-24139-104	*Knob; M. -Rmv.	2	
51	019-44112-002	*Upper Holder B; V. - Transport Roller; A3; CE	1	
52	607-13000-003	*Metal; F6 x 10/9 x 4; 12 x 1.5	2	
53	007-14113-100	*Spring; Vertical Transport	3	
54	017-24138-000	*Guide Boss; M. -Rmv.	2	
55	019-24119-108	*Vertical Transport Roller (UP); A3	1	
56	612-03103-009	*Gear B; 1.25 x 14	1	
57		*Pin; ϕ 2.5 x 8	1	Ref.Pg.II-
27				

Fig. 22 MASTER DISPOSAL BOX

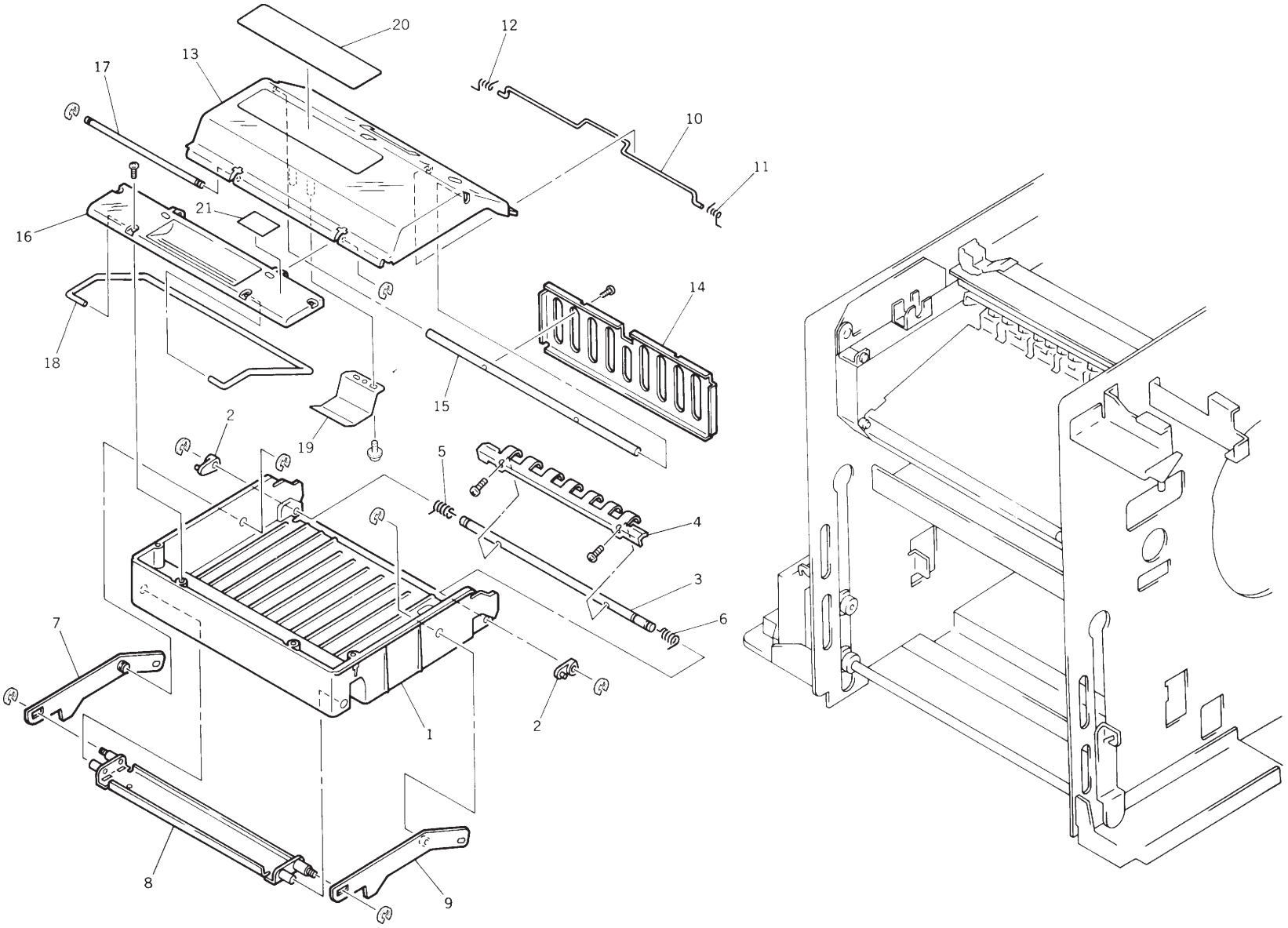

No.	Part No.	Part Name	Q'ty	Remark
58	550-20059-108	Seal; P. -F. -T. Down	1	
	019-94130-109	Unit/Master Disposal Box; A3; CE		
1	019-44131-007	*Disposal Box; A3; CE	1	
2	011-14421-207	*Guide Cam; Disposal Box	2	
3	019-24137-009	*Guide Shaft; Disposal Box; A3	1	
4	019-24134-000	*Guide Plate; Disposal Box; A3	1	
5	011-14422-203	*Guide Spring; Disposal Box	1	
6	017-14167-002	*Guide Spring B; Disposal Box	1	
7	017-14161-101	*H. -Lever (R); Disposal Box	1	
8	019-24135-006	*Lever Frame; Disposal Box; A3	1	
9	017-14159-107	*H. -Lever (F); Disposal Box	1	
10	014-14465-001	*Lock Shaft; Disposal Box; A3	1	
11	011-14428-007	*Lock Spring (Right)	1	
12	011-14429-003	*Lock Spring (Left)	1	
13	019-24132-104	*Disposal Box Cover; A3	1	
14	017-14166-103	*Compression Plate; Disposal Box	1	
15	019-24138-005	*Shaft; Compression Plate; A3	1	
16	019-24133-003	*Disposal Box Cover B; A3	1	
17	014-14469-007	*Shaft; Disposal Box Cover; A3	1	
18	017-14163-007	*Disposal Shaft	1	
19	019-14231-007	*Hinge Reinforcement; Disposal Box	1	
20	550-20690-002	Seal; Master Disposal	1	
20	550-20691-009	Seal; Master Disposal; Pic.	1	
21	550-20693-001	Seal; Set Disposal Box	1	

No.	Part No.	Part Name	Q'ty	Remark

Fig. 23 ELECTRICAL COMPONENT AREA (1)

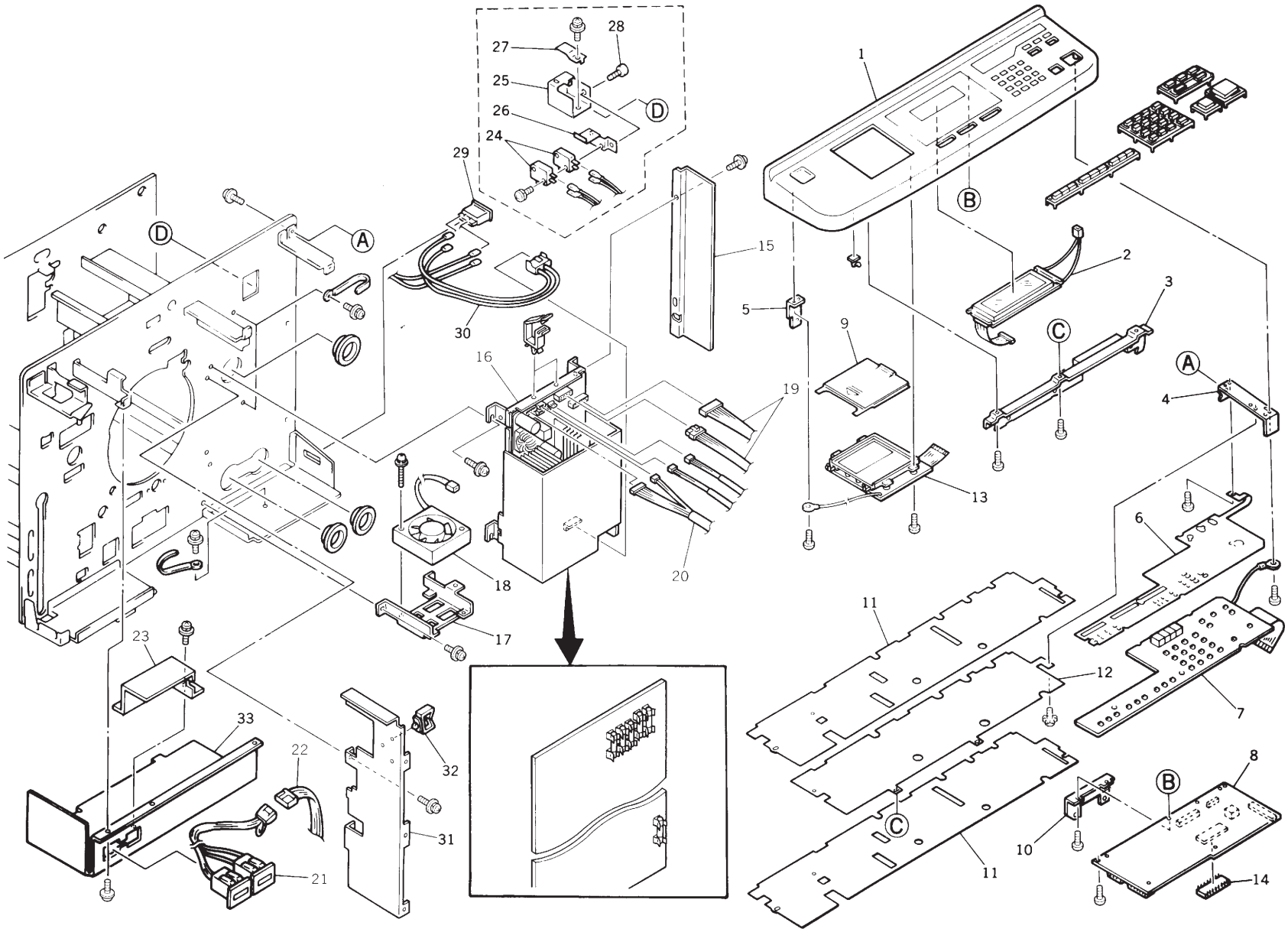

No.	Part No.	Part Name	Q'ty	Remark
21	550-20694-008	Seal; Set Disposal Box; Pic.	1	
	019-97010-007	Unit/Operation Panel; 3770		
	019-97008-100	Unit/Operation Panel; 3770 US		
	019-97009-009	Unit/Operation Panel; 3770 Pic.		Europe, Ch
1	019-97150-003	*Key Board Cover; 3770		
2	019-97090-000	*LCD; Panel	1	
3	019-17090-307	*Reinforce Plate; Panel; CE	1	
4	017-17051-005	*Bracket B; Keyboard	1	
5	017-17050-106	*Bracket A; Keyboard	1	
6	019-17008-007	*Mylar Sheet; Panel SW	1	
7	019-51003-103	*Main SW PCB; Panel	1	
8	019-51002-107	*LCD CTL PCB	1	
9	019-17011-008	*Door; Panel	1	
10	019-17099-002	*Grand Plate; Panel	1	
11	019-17010-109	*Sheet A; Panel	2	
12	019-17009-100	*Sheet B; Panel	1	
13	019-97060-004	*Sub-Panel Ass'y; 3770	1	
13	019-97058-000	*Sub-Panel Ass'y; 3770 US	1	
13	019-97059-006	*Sub-Panel Ass'y, 3770 Pic.	1	
14	019-80031-	RPU	1	U.S.A.
14	019-80032-	RPE	1	Europe
14	019-80033-	RPA	1	Asia
15	017-17232-204	Side Cover; Power Supply	1	
16	019-51041-102	Power Supply PCB VIII H100	1	100V
16	019-51042-001	Power Supply PCB VIII H200	1	200V
17	019-17242-107	Bracket; Power Supply Fan	1	
18	019-65003-009	Fan; Power Supply	1	
19	019-55091-104	Wire Harness; Power	1	
19	019-55099-105	Wire Harness; Power; CE	1	Europe
20	019-55092-100	Wire Harness; TPH Power	1	
21	011-65022-200	Counter	1	
22	019-55078-000	Wire Harness; CN14; CE	1	
23	014-17207-100	Back Cover; Counter	1	

No.	Part No.	Part Name	Q'ty	Remark
	019-96105-101	Interlock Switch; FB		
24	443-00210-004	*Micro-SW; DDIL-AIAA	2	
25	019-16236-103	*Bracket; Interlock Switch FB	1	
26	018-16239-105	*Bracket B; Interlock Switch FB	1	
27	018-16254-007	*Plate Spring; Interlock Switch FB	1	
28	635-19404-003	*Stepped Screw; M4 x 4.5	1	
29	443-10800-209	Power Switch; AJ921001B3	1	
30	019-55025-004	Inlet Terminal; 100V	1	
30	019-55079-007	Inlet Terminal; 200V; CE	1	
31	019-18121-001	Cover Plate; Power Supply	1	
32	665-02025-504	Wire Saddle; WS-4W	3	
33	019-37209-203	Bracket; Counter; En; CE	1	
33	019-37210-201	Bracket; Counter; Pic.; CE	1	
		[For Power Supply PCB H100]		
	485-00002-401	Fuse 10A 125V 5.2 ULTS C	1	
	485-00001-804	Fuse 8A 125V 5.2 ULTS C	1	
	485-00003-408	Fuse 3.15A 125V ULTS C	5	
		[For Power Supply PCB H200]		
	485-00003-300	Fuse 5A 250V 5.2 SET	1	
	485-02520-000	Fuse 6.3A 250V 5.2 SET	1	

Fig. 24 ELECTRICAL COMPONENT AREA (2)

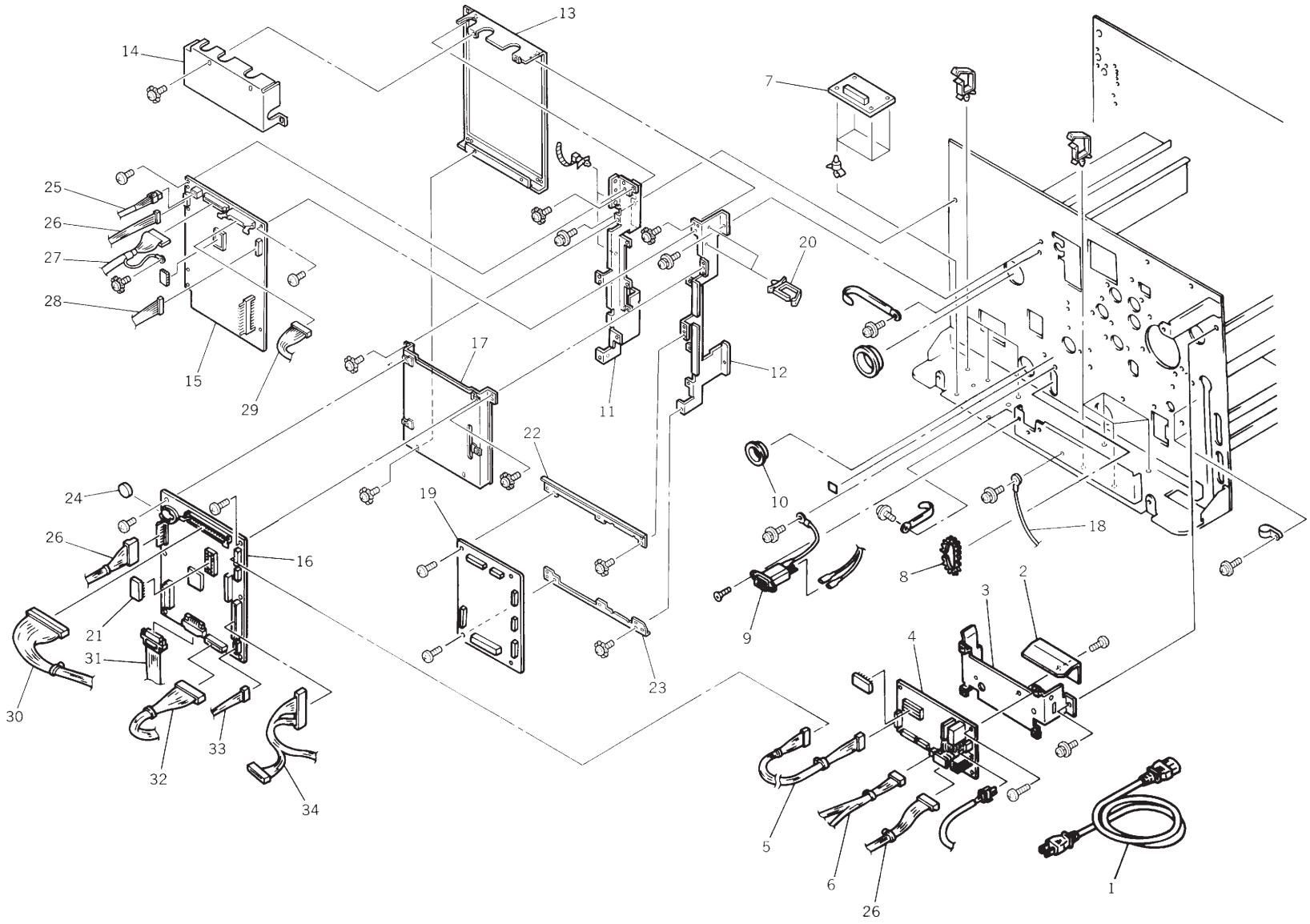

No.	Part No.	Part Name	Q'ty	Remark
	485-00003-203	Fuse 3.15A 250V 5.2 SET	5	
1	488-00013-103	Power Cord; 100V	1	
1	488-00014-100	Power Cord; US	1	
1	488-00015-106	Power Cord; 200V	1	
1	480-00033-007	Power Cord; CH	1	
2	019-27301-004	Protection Plate; Motor Con.	1	
3	019-17236-204	Bracket; Motor Control PCB	1	
4	019-51040-106	Motor Control PCB2	1	
5	017-55017-007	Wire Harness; Motor Con.-System	1	
6	017-55031-204	Wire Harness; Elevator Motor	1	
7	019-51030-003	De-electricity PCB	1	*2
8	665-04037-003	Free Bushing; NJ-23	1	
9	019-55025-004	Inlet Terminal; 100V	1	
9	019-55079-007	Inlet Terminal; 200V; CE	1	
10	665-04014-003	Snap Bushing; SB-2000-26	2	
11	019-38101-007	Bracket (R); System PCB	1	
12	019-38102-003	Bracket (L); System PCB	1	
13	019-38107-005	Bracket; Image PCB	1	
14	019-38103-000	Cover (U); PCB	1	
15	019-51044-101	Image Processing PCB; IPIF	1	
16	019-51000-503	System PCB 2	1	
17	019-38104-006	Cover (L); PCB	1	
18	488-90021-002	Ground Wire; U3-1000-R4	1	
19	019-51047-003	Option PCB A III	1	
20	665-02040-007	Wire Saddle; LWS-2N-VO-MB6	2	
21	019-80021-	System ROM; GR	1	
22	019-18129-002	Bracket E; Option PCB; CE	1	
23	019-18130-000	Bracket F; Option PCB; CE	1	
24	408-02301-008	Battery; CR-2450	1	
25	019-55088-006	Wire Harness; Image-FBI Power	1	
25	019-55097-005	Wire Harness; Image-FBI Power; CE	1	Europe
26	019-55091-104	Wire Harness; Power	1	
26	019-55099-105	Wire Harness; Power; CE	1	Europe

No.	Part No.	Part Name	Q'ty	Remark
27	019-55087-000	Wire Harness; Image-FBI	1	
28	019-55089-100	Wire Harness; M. -M. -Image	1	
28	019-55098-001	Wire Harness; M. -M. -Image; CE	1	Europe
29	018-55016-008	Wire Harness; Image-Digitizer; CE	1	
30	019-55066-100	Wire Harness; CN7; CE	1	
31	019-55077-004	Wire Harness; Panel-System; CE	1	
32	019-55028-003	Wire Harness; CN15	1	*1
32	019-55096-009	Wire Harness; CN15; CE	1	*2
33	019-55078-000	Wire Harness; CN14; CE	1	
34	019-55014-509	Wire Harness; CN9	1	*1
*1	All U.S., Latin, Asia (Mtr.) models			
*2	Europe model			

Fig. 25 EXTERIOR COVER AREA

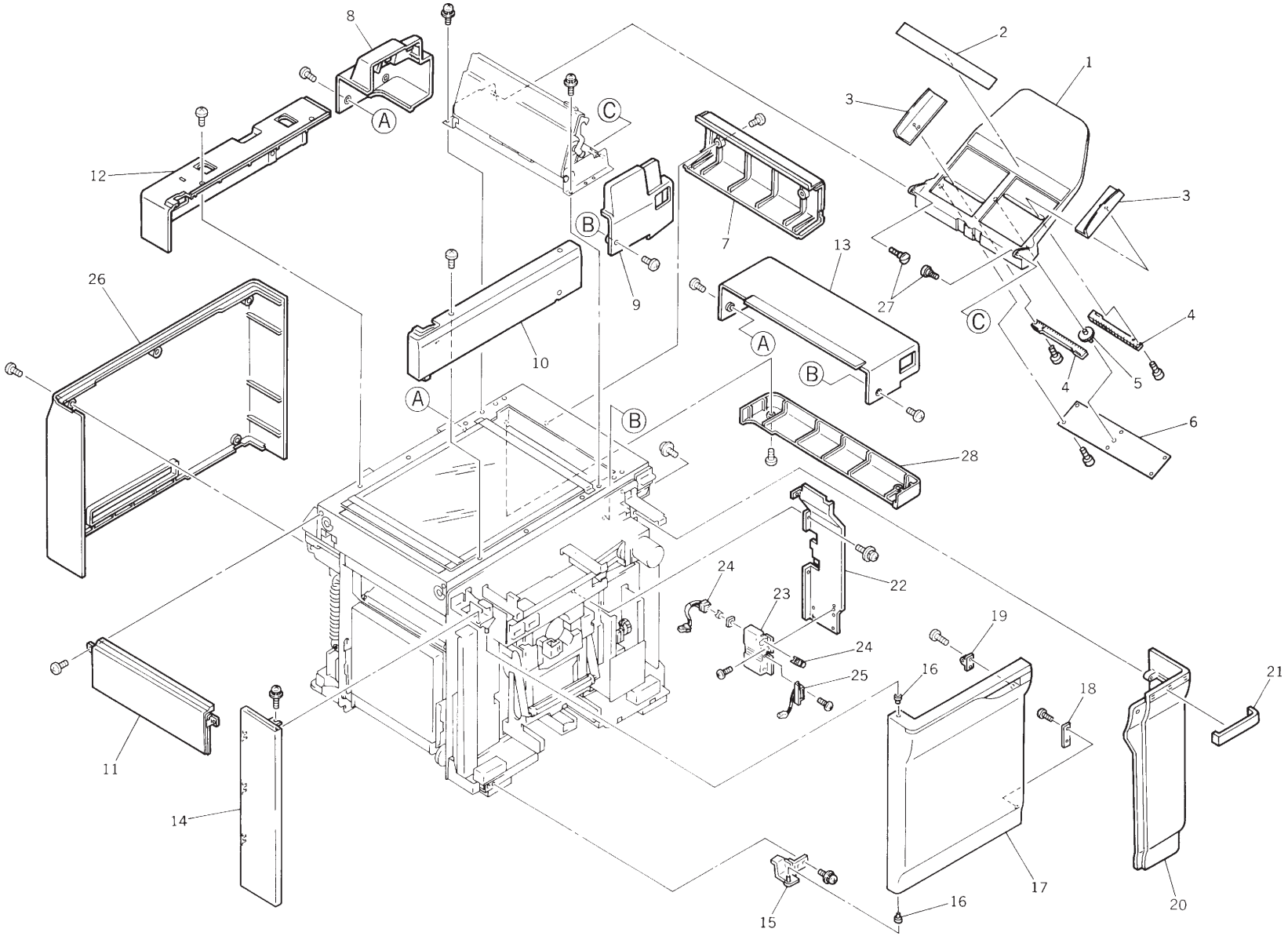

No.	Part No.	Part Name	Q'ty	Remark
34	019-55095-002	Wire Harness; CN9; CE	1	*2
	018-96600-008	Original Tray Ass'y; FB		
1	018-16309-200	*Original Tray; FB	1	
2	550-20682-107	*Seal; Original Size	1	
3	018-16310-101	*Original Side Guide	2	
4	017-17105-008	*Slide Rack; Original Holder	2	
5	005-24114-003	*Shaft Gear; Original Holder	1	
6	017-16021-005	*Rack Cover; ADF Cover	1	
7	019-36308-003	ADF Cover (Right); FB	1	
8	019-36307-007	ADF Cover (R); FB	1	
9	019-36306-000	ADF Cover (F); FB	1	
10	019-36301-106	Scanner Cover (F); FB	1	
11	019-36303-001	Scanner Cover (Left); FB	1	
12	019-36302-005	Scanner Cover (R); FB	1	
13	019-36304-008	Scanner Cover (Right); FB	1	
14	011-17105-306	Front Left Cover	1	
15	019-17215-002	Lower Hinge; Front	1	
16	002-17006-007	Shaft Catch; Front Cover	2	
	019-97200-000	Front Cover Ass'y		
17	019-17101-104	*Front Cover	1	
18	011-17102-005	*Magnet Catch Plate; Front	1	
19	002-17016-002	*Cover Catch A; Front	1	
	550-20998-007	*Seal; Manual Pocket	1	
20	019-17104-308	Front Right Cover	1	
21	019-27231-006	Mole; 3770	1	
22	019-35022-009	Inner Cover A	1	
23	011-37211-005	Switch Box; CE	1	
24	011-60007-008	Rotation SW; A Position	1	
25	011-60020-004	Front Cover Set SW	1	
26	014-17101-000	Back Cover; A3	1	
27	018-16312-007	Shaft; Original Tray	2	

No.	Part No.	Part Name	Q'ty	Remark

Fig. 26 STAGE COVER

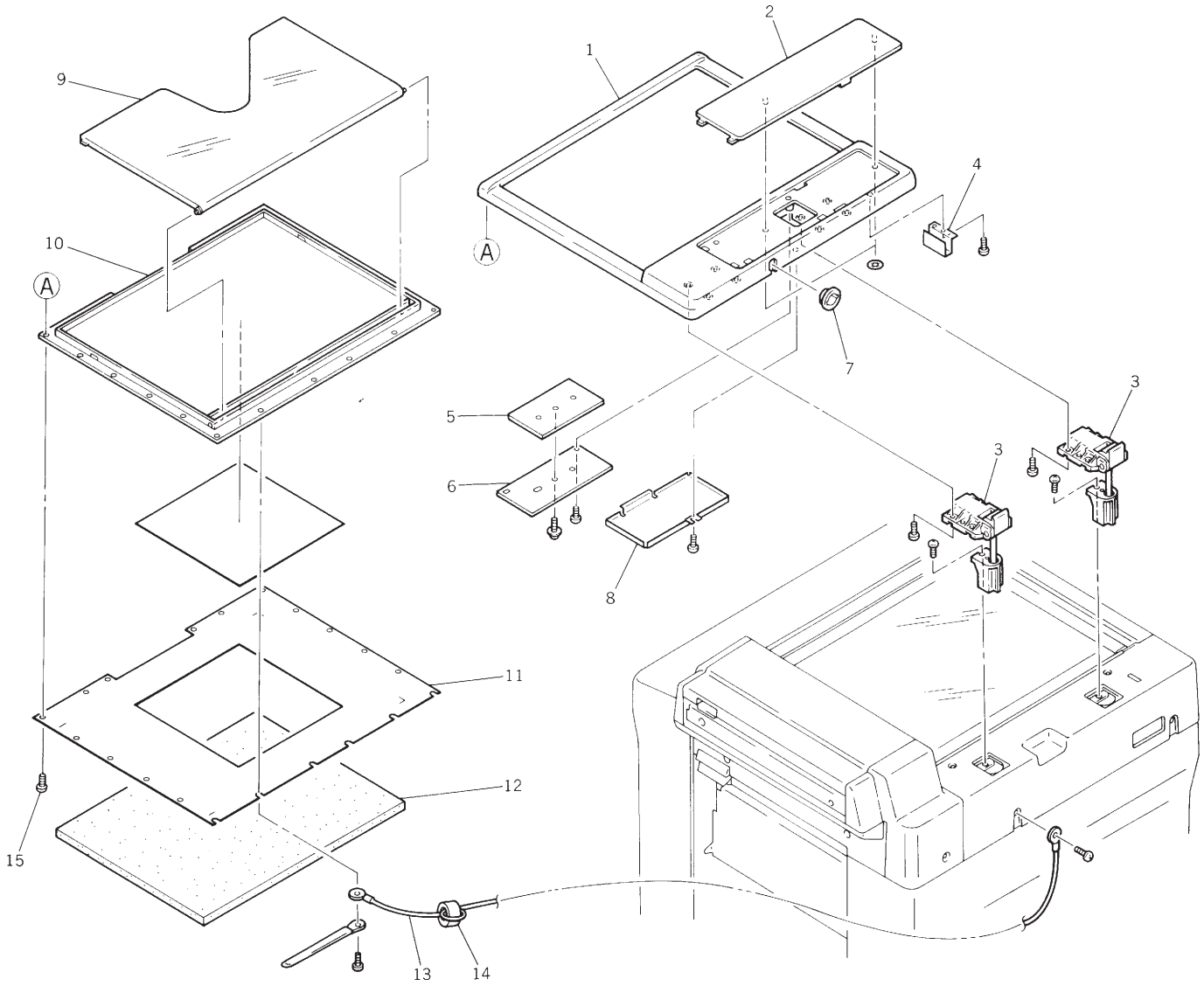

No.	Part No.	Part Name	Q'ty	Remark
28	019-36305-004	Scanner Cover (LR)	1	
	018-96200-115	Unit/Stage Cover		
1	018-16401-204	*Stage Cover; FB	1	
2	018-16413-008	*Cover B; Stage Cover	1	
3	018-96210-005	*Stage Cover Hinge Ass'y	2	
4	018-16420-004	*Actuator Plate; Stage Cover	1	
5	018-16417-100	*Balance Weight C; Stage Cover	1	
6	018-16416-104	*Balance Weight B; Stage Cover	1	
7	018-16418-000	*Cord Cap; Stage Cover	1	
8	018-16406-206	*PCB Cover; Stage Cover	1	
9	018-16411-102	*Original Holder Cover (Upper); Stage Cover	1	
10	018-16412-400	*Original Holder Cover (Lower); Stage Cover	1	
11	018-16415-701	*Balance Weight A; Stage Cover	1	
12	018-16425-006	*Stage Pad (W); Stage Cover	1	
13	488-90019-105	*Ground Wire; R4-440-R4	1	
14	435-00020-009	*Core; TR-23-11-14	1	

Fig. 27 DIGITIZER

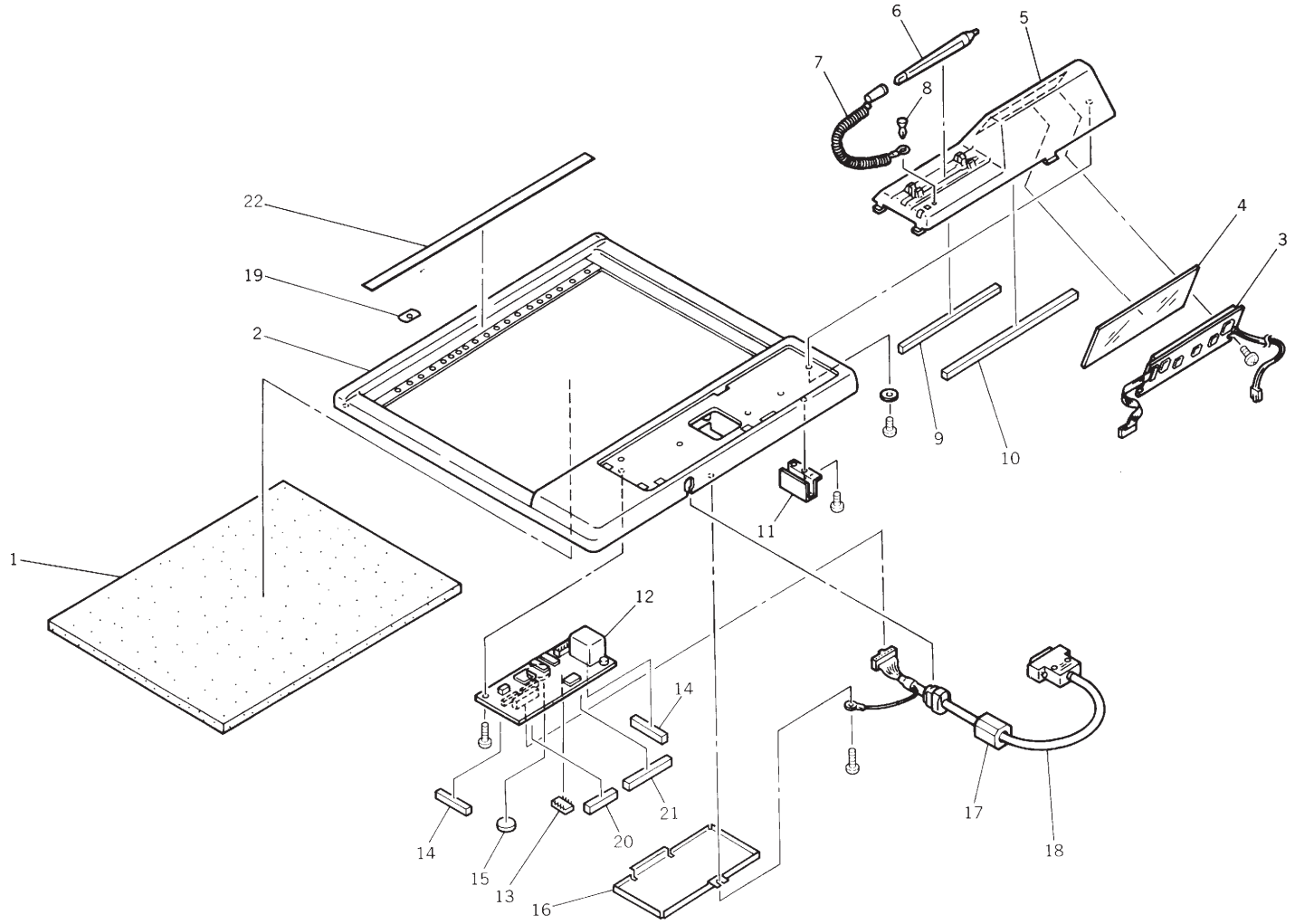

No.	Part No.	Part Name	Q'ty	Remark
15	635-11307-106	*Stepped Screw; 3 x 7	10	
1	018-16425-006	Stage Pad (W); Stage Cover	1	
2	018-96230-200	Ass'y/Digitizer Stage Cover; FB; CE	1	Europe
2	019-96220-008	Ass'y/Digitizer Cover; FB	1	
3	011-70508-005	LCD; DMF5005N	1	
4	018-16431-006	LCD Filter; Digitizer	1	
5	018-16435-001	LCD Cover; Digitizer; CE	1	Europe
5	018-16403-100	LCD Cover; Digitizer	1	
6	018-16427-203	Stylus Pen III	1	
7	665-09004-006	Stylus Pen Holder	1	
8	665-04951-104	Clip; Stylus Pen Holder	1	
9	481-30012-003	Gasket; LCDF	1	Europe
10	481-30013-000	Gasket; LCDR	1	Europe
11	018-16420-004	Actuator Plate; Stage Cover	1	
12	018-51004-803	Digitizer PCB III	1	
13	018-70017-002	INF ROM (OP); Digitizer	1	Kr, UK
13	018-70018-009	INF ROM (ST); Digitizer	1	Ja, US
13	018-70019-005	INF ROM (OP1); Digitizer	1	Gr, Fr
13	018-70020-003	INF ROM (OP2); Digitizer	1	It, Sp
14	481-30010-000	Gasket; PCB2	2	Europe
15	408-02300-001	Battery	1	
16	018-16406-206	PCB Cover; Stage Cover	1	
17	435-00027-003	Ferrite Core; SFC-10	1	Europe
18	018-55015-001	Wire Harness; Digitizer III ; CE	1	
19		SW Guide; Digitizer	1	
20	481-30009-002	Gasket; PCB1	1	Europe
21	481-30011-007	Gasket; PCB3	1	Europe
22	550-20764-006	Digitizer Seal; Ja, US	1	
22	550-20861-001	Digitizer Seal; Gr	1	
22	550-20862-008	Digitizer Seal; Fr	1	
22	550-20863-004	Digitizer Seal; It	1	
22	550-20864-000	Digitizer Seal; Sp	1	
22	550-20865-007	Digitizer Seal; In	1	
22	550-20866-003	Digitizer Seal; Ch	1	

No.	Part No.	Part Name	Q'ty	Remark

Fig. 28 CONNECTING PARTS FOR OPTION

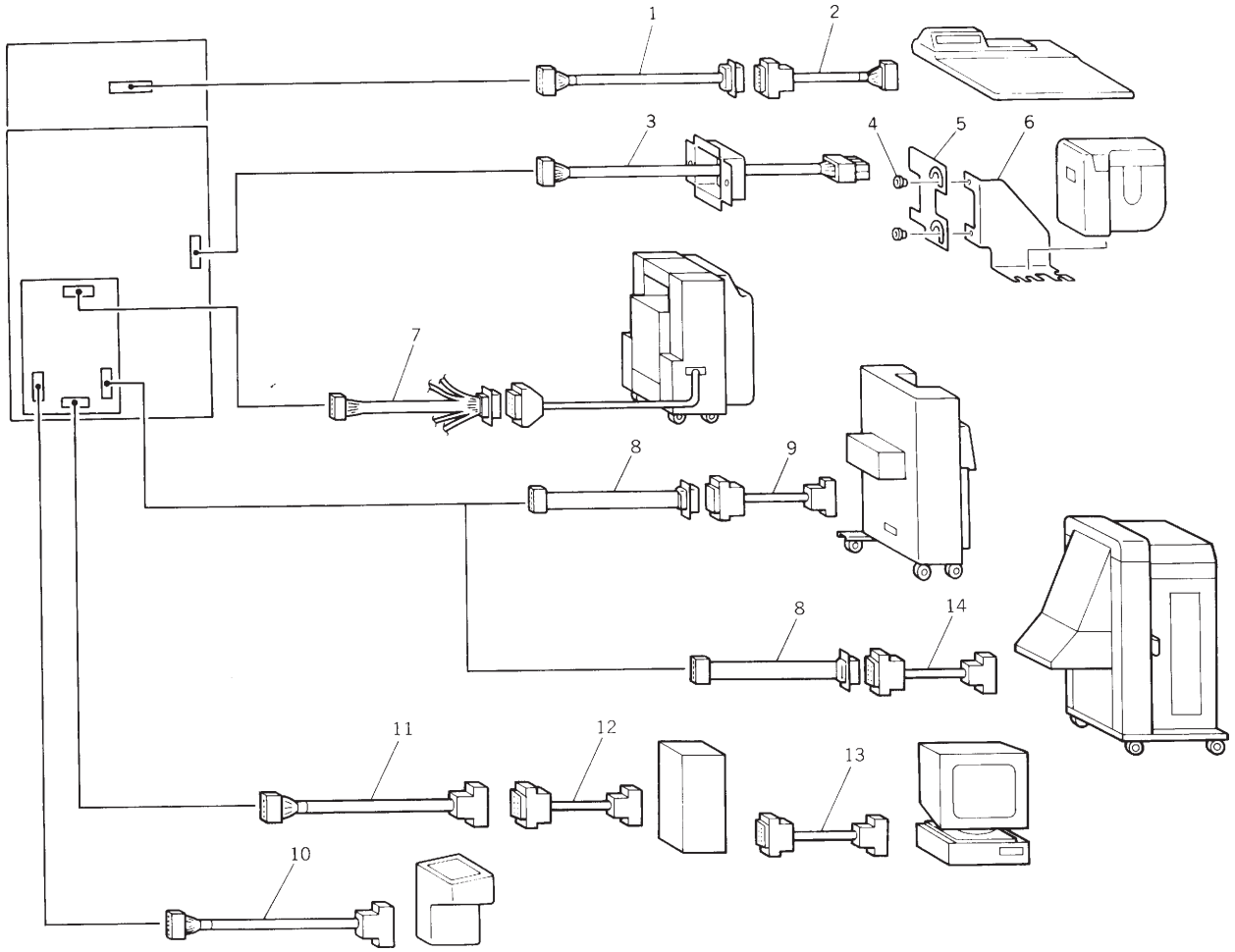

No.	Part No.	Part Name	Q'ty	Remark
22	550-20867-000	Digitizer Seal; Kr	1	
1	018-55016-008	Wire Harness; Image-Digitizer; CE	1	
2	018-55015-001	Wire Harness; Digitizer III; CE	1	
3	017-97300-108	Wire Harness; JS III; CE	1	
4	011-13916-008	Boss; JS Bracket	2	
5	017-13901-004	Positioning Bracket; JS III	1	
6	017-13902-000	Bracket; JS III	1	
6	019-13143-007	Job Separator Bracket EX	1	*1
7	017-55054-000	Inner COM Wire Harness; SF	1	
8	017-55049-006	Wire Harness; RA-RC Sorter Inner	1	
9	026-55040-008	Wire Harness; GR-TM2500	1	
10	019-55074-102	Wire Harness II; Counter III; CE	1	
11	017-55062-002	Wire Harness; EXE-I/F	1	
12	101-55000-002	SCII Cable (Video Cable); 10 m	1	
*13	101-55014-003	Parallel Cable (Wide Type)	1	
14	025-55001-005	Wire Harness; TM-I/F	1	

No.	Part No.	Part Name	Q'ty	Remark

MEMO