I. PARTS LIST

Fig. 1.	MAIN BODY AREA: (RC4000, RC4500, RC5600/D)	2
Fig. 2	MAIN BODY AREA: (RC5800)	4
Fig. 3	MAIN BODY AREA: (RC6300)	6
Fig. 4	ELEVATOR-SCRAPER AREA	8
Fig. 5	PAPER-FEED TRAY	10
Fig. 6	DRIVE MECHANISM AREA	12
Fig. 7	ROLLER SYSTEM AREA: (RC4000, RC4500, RC5600/D, RC5800)	16
Fig. 8	ROLLER SYSTEM AREA: (RC6300)	18
Fig. 9	SQUEEGEE-INK PUMP UNIT AREA	20
Fig. 10	DRUM-SCREEN AREA	24
Fig. 11	LOCK LEVER AREA: (RC4000, RC4500, RC5600/D, RC5800)	26
Fig. 12	LOCK LEVER AREA: (RC6300)	28
Fig. 13	CLAMP-PRESSURE CONTROL AREA	30
Fig. 14	SEPARATOR AREA	32
Fig. 15	SUCTION UNIT: (RC4000, RC4500, RC5600/D, RC5800)	34
Fig. 16	SUCTION UNIT: (RC6300)	36
Fig. 17	PAPER RECEIVING TRAY	38
Fig. 18	SCANNER AREA (1): (RC4000)	40
Fig. 19	SCANNER AREA (2): (RC4000)	42
Fig. 20	SCANNER AREA (1): (RC4500, RC5600/D)	44
Fig. 21	SCANNER AREA (2): (RC4500, RC5600/D)	46
Fig. 22	SCANNER AREA (3): (RC4500, RC5600/D)	48
Fig. 23	SCANNER AREA (1): (RC5800, RC6300)	50
Fig. 24	SCANNER AREA (2): (RC5800)	54
Fig. 25	SCANNER AREA (2): (RC6300)	56
Fig. 26	ADF AREA (1): (RC5800, RC6300)	58
Fig. 27	ADF AREA (2): (RC5800, RC6300)	60
Fig. 28	MASTER-MAKING AREA (1): RC4000, RC4500, RC5600/D, RC5800)	64
Fig. 29	MASTER-MAKING AREA (2): (RC4000)	66
Fig. 30	MASTER-MAKING AREA (2): (RC4500, RC5600/D, RC5800)	68
Fig. 31	MASTER-MAKING AREA (1): (RC6300)	70
Fig. 32	MASTER-MAKING AREA (2): (RC6300)	72
Fig. 33	CUTTER UNIT: (RC4000, RC4500, RC5600/D, RC5800)	74
Fig. 34	CUTTER UNIT: (RC6300)	76
Fig. 35	MASTER REMOVAL UNIT: (RC4000, RC4500, RC5600/D, RC5800)	78
Fig. 36	MASTER REMOVAL UNIT: (RC6300)	80
Fig. 37	MASTER DISPOSAL BOX	82
Fig. 38	ELECTRICAL COMPONENT AREA (1): (RC4000)	84
Fig. 39	ELECTRICAL COMPONENT AREA (1): (RC4500, RC5600/D)	86
Fig. 40	ELECTRICAL COMPONENT AREA (1): (RC5800)	88
Fig. 41	ELECTRICAL COMPONENT AREA (1): (RC6300)	90
Fig. 42	ELECTRICAL COMPONENT AREA (2): (RC4000, RC4500, RC5600/D)	92
Fig. 43	ELECTRICAL COMPONENT AREA (2): (RC5800, RC6300)	94
Fig. 44	EXTERIOR COVER AREA: (RC 4000, RC4500, RC5600/D)	96
Fig. 45	EXTERIOR COVER AREA: (RC5800, RC6300)	98
Fig. 46	EXTERIOR COVER AREA (ADF): (RC5800, RC6300)	100
Fig. 47	DIGITIZER: (RC5800, RC6300)	102

Fig. 1 MAIN BODY AREA (RC4000, RC4500, RC5600/D)

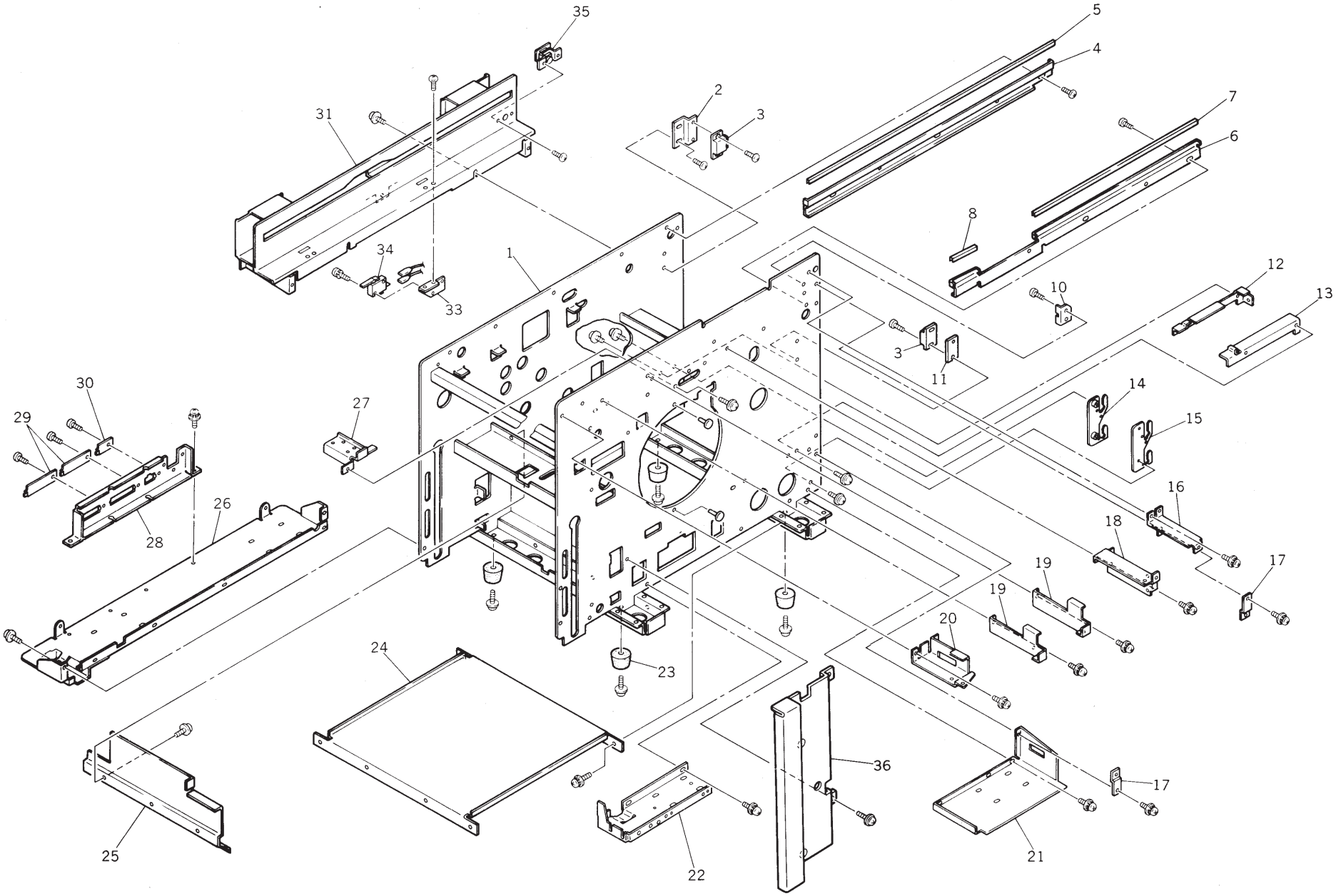

No.	Part No.	Part Name	Q'ty	Remark
1		Main Side Frame	1	
	011-93110-009	Magnet Catch Ass'y; P.-Rcv.-T.		
2	011-13122-001	* Bracket; Magnet Catch; P.-Rcv.-T.	1	
3	660-05000-018	* Magnet Catch SM50P	2	
4	011-16101-102	Rail (Left)	1	
5	011-16109-006	Rail Edge (Left)	1	
6	011-16102-109	Rail (Right)	1	
7	011-16110-004	Rail Edge L (Right)	1	
8	011-16111-000	Rail Edge S (Right)	1	
10	011-16037-005	Stopper III; Scanner	1	
11	011-15272-000	Spacer; Magnet Catch	1	
12	011-11112-009	Bracket R; Suction	1	
13	011-11111-002	Bracket F; Suction	1	
14	011-13146-008	Set Plate R; P.-Rcv.T.	1	
15	011-13144-005	Set Plate F; P.-Rcv.T.	1	
16	011-17206-005	Bracket E; Keyboard	1	
17	011-17209-004	Set Plate; Front Right Cover	2	
18	011-17205-106	Bracket D; Keyboard	1	
19	011-17204-002	Bracket C; Keyboard	2	
20	011-17201-003	Upper Hinge	1	
21	011-17208-202	Bottom Plate (Right)	1	
22	011-17207-109	Bracket; Hinge	1	
23	660-01000-200	Rubber Foot K-45	4	
24	011-11113-102	Bottom Cover	1	
25	011-14120-002	Front Cover; M.-Rmv.	1	
26	011-17213-400	Bottom Plate (Left)	1	
27	011-15080-004	Bracket; Wire Harness	1	
28	011-17229-102	Mount; Connector; 200 V	1	
28	011-17230-003	Mount; Connector; 100 V	1	
29	011-17219-000	Blind Plate A; Connector	2	
30	011-17220-008	Blind Plate B; Connector	1	
31	011-16103-105	Upper Rear Frame	1	
33	011-16112-007	Bracket A; Micro-SW	1	
34	443-00120-501	Micro-SW; E21-51N	1	
35	011-60022-007	Switch A	1	

No.	Part No.	Part Name	Q'ty	Remark
36	011-14502-002	Inner Cover	1	
	550-20080-000	Seal; Master Loading	1	

Fig. 2 MAIN BODY AREA (RC5800)

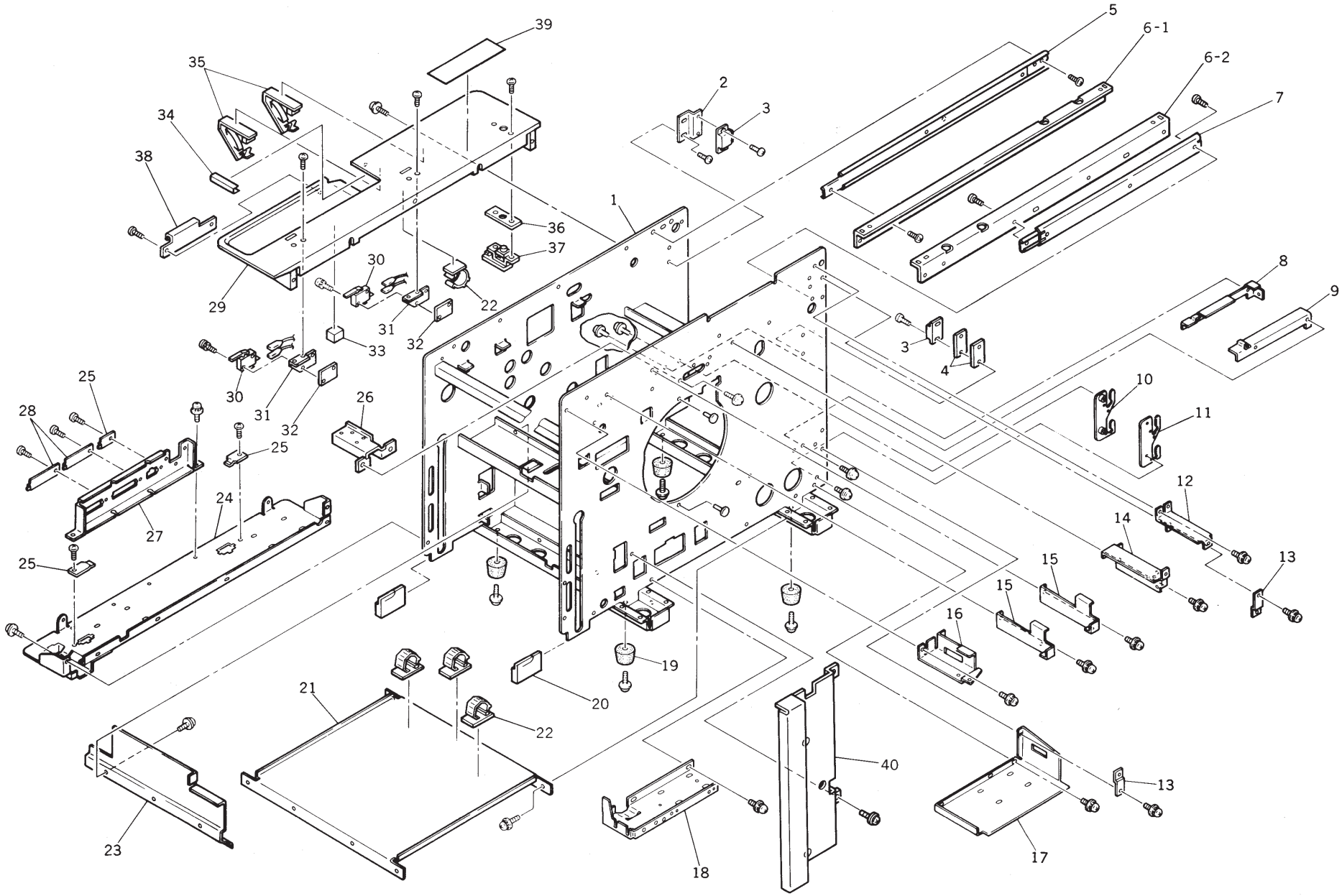

No.	Part No.	Part Name	Q'ty	Remark
1		Main Side Frame	1	
2	011-13122-001	Bracket; Magnet Catch; P.-Rcv.-T.	1	
3	660-05000-018	Magnet Catch SM50P	2	
4	011-15272-000	Spacer; Magnet Catch	2	
	012-96070-005	Rail (Left) Ass'y; 58		
5	012-16110-109	* Rail (Left); 58	1	
6-1	012-16121-003	* Rail Bracket (Left)	1	
	012-96065-001	Rail (Right) Ass'y; 58		
6-2	012-16120-309	* Rail Bracket (Right)	1	
7	012-16109-100	* Rail (Right); 58	1	
8	011-11112-009	Bracket R; Suction	1	
9	011-11111-002	Bracket F; Suction	1	
10	011-13146-008	Set Plate R; P.-Rcv.-T.	1	
11	011-13144-005	Set Plate F; P.-Rcv.-T.	1	
12	011-17206-005	Bracket E; Keyboard	1	
13	011-17209-004	Set Plate; Front Right Cover	2	
14	011-17205-106	Bracket D; Keyboard	1	
15	011-17204-002	Bracket C; Keyboard	2	
16	011-17201-003	Upper Hinge	1	
17	011-17208-202	Bottom Plate (Right)	1	
18	011-17207-109	Bracket; Hinge	1	
19	660-01000-200	Rubber Foot K-45	4	
20	012-16115-003	Support Cover	2	
21	011-11113-102	Bottom Cover	1	
22	665-02010-000	Clamp DKN-16	4	
23	011-14120-002	Front Cover; M.-Rmv.	1	
24	011-17213-400	Bottom Plate (Left)	1	
25	011-17220-008	Blind Plate B; Connector	3	
26	011-15080-004	Bracket; Wire Harness	1	
27	011-17229-102	Mount; Connector; 200V	1	
27	011-17230-003	Mount; Connector; 100V	1	
28	011-17219-000	Blind Plate A; Connector	2	
	012-96041-200	Upper Rear Frame Ass'y; 58		
29	012-16101-401	* Upper Rear Frame; 58	1	
30	443-00121-206	* Micro-SW; E21-51S	2	

No.	Part No.	Part Name	Q'ty	Remark
31	012-16113-000	* Bracket C; Micro-SW	2	
32	011-16029-002	* Bracket; Interlock Switch	2	
33	011-12413-002	* Cushion; Clamp Solenoid	1	
34	012-16107-108	* Edging	1	
35	665-00300-109	* Flat Cable Clamp; FCN-50P	2	
36	012-16119-009	* Spacer; Switch A	1	
37	011-60022-007	* Switch A	1	
38	012-16105-105	Cover Stopper	1	
39	550-20280-106	Seal; Setting Master; 58	1	
39	550-20281-102	Seal; Setting Master; 58Pic.	1	
40	011-14502-002	Inner Cover	1	

Fig. 3 MAIN BODY AREA (RC6300)

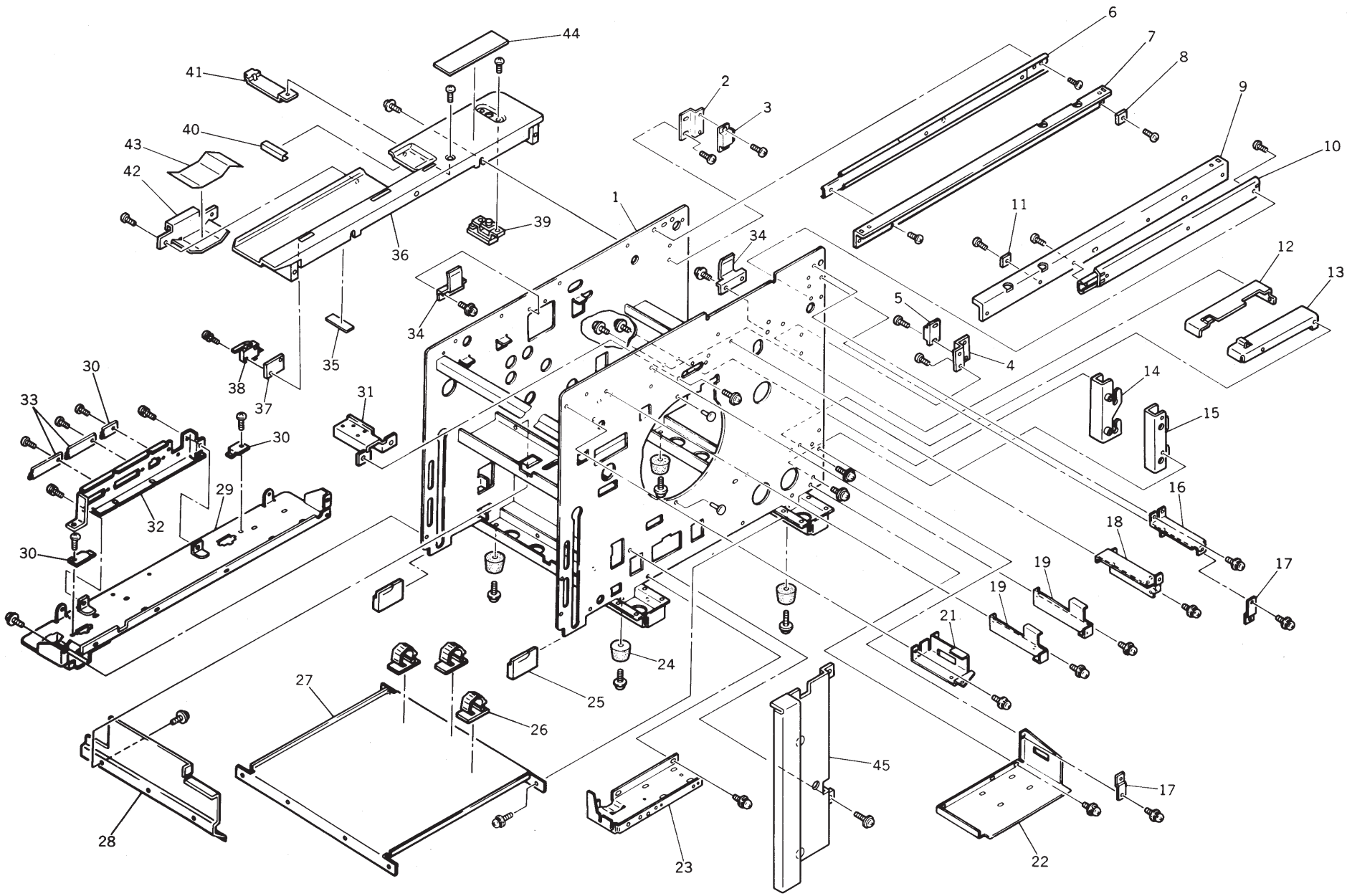

No.	Part No.	Part Name	Q'ty	Remark
1		Main Side Frame	1	
	014-93110-000	Magnet Catch B Ass'y; P.Rcv.-T.		
2	014-13410-009	* Bracket B; Magnet Catch; P.-Rcv.-T.	1	
3	660-05000-018	* Magnet Catch SM50P	1	
	011-93110-009	Magnet Catch Ass'y; P.-Rcv.-T.		
4	011-13122-001	* Bracket; Magnet Catch; P.-Rcv.-T.	1	
5	660-05000-018	* Magnet Catch SM50P	1	
	014-96070-000	Rail (Left) Ass'y; A3		
6	012-16110-109	* Rail (Left); 58	1	
7	014-16006-004	* Rail Bracket (Left); A3	1	
8	012-16117-006	* Stopper B; 58	1	
	012-96065-001	Rail (Right) Ass'y; 58		
9	012-16120-309	* Rail Bracket (Right)	1	
10	012-16109-100	* Rail (Right); 58	1	
11	012-16117-006	* Stopper B; 58	1	
12	014-11112-000	Bracket R; Suction; A3	1	
13	014-11111-004	Bracket F; Suction; A3	1	
14	014-13403-100	Set Plate R; P.-Rcv.-T.; A3	1	
15	014-13401-107	Set Plate F; P.-Rcv.-T.; A3	1	
16	011-17206-005	Bracket E; Keyboard	1	
17	011-17209-004	Set Plate; Front Right Cover	2	
18	011-17205-106	Bracket D; Keyboard	1	
19	011-17204-002	Bracket C; Keyboard	2	
21	011-17201-003	Upper Hinge	1	
22	011-17208-202	Bottom Plate (Right)	1	
23	011-17207-109	Bracket; Hinge	1	
24	660-01000-200	Rubber Foot K-45	4	
25	012-16115-003	Support Cover	2	
26	665-02010-000	Clamp DKN-16	3	
27	014-11114-003	Bottom Cover; A3	1	
28	014-14119-103	Front Cover; M.-Rmv.; A3	1	
29	011-17213-400	Bottom Plate (Left)	1	
30	011-17220-008	Blind Plate B; Connector	3	
31	014-15161-103	Bracket; Wire Harness	1	
	011-97241-000	Mount Ass'y; Connector; 100 V		

No.	Part No.	Part Name	Q'ty	Remark
32	011-17230-003	* Mount; Connector; 100 V	1	
33	011-17219-000	* Blind Plate A; Connector	2	
	011-97249-001	Mount Ass'y; Connector; 200 V		
32	011-17229-102	* Mount; Connector; 200 V	1	
33	011-17219-000	* Blind Plate A; Connector	2	
34	012-16116-107	Stopper A; 58	2	
	014-96040-003	Upper Rear Frame Ass'y; A3		
35	012-16125-106	* Sponge; Upper Rear Frame	1	
36	014-16001-100	* Upper Rear Frame; A3	1	
37	011-16029-002	* Bracket; Interlock Switch	1	
38	443-00121-206	* Micro-SW; E21-51S	1	
39	011-60022-007	* Switch A	1	
40	012-16107-108	* Edging	1	
41	012-16123-006	Flat Cable Clamp Plate A	1	
42	014-16008-104	Cover Stopper II	1	
43	014-16009-003	Sheet; Cover Stopper II	1	
44	550-20280-106	Seal; Setting Master; 58	1	
44	550-20281-102	Seal; Setting Master; 58Pic.	1	
45	011-14502-002	Inner Cover	1	

Fig. 4 ELEVATOR-SCRAPER AREA

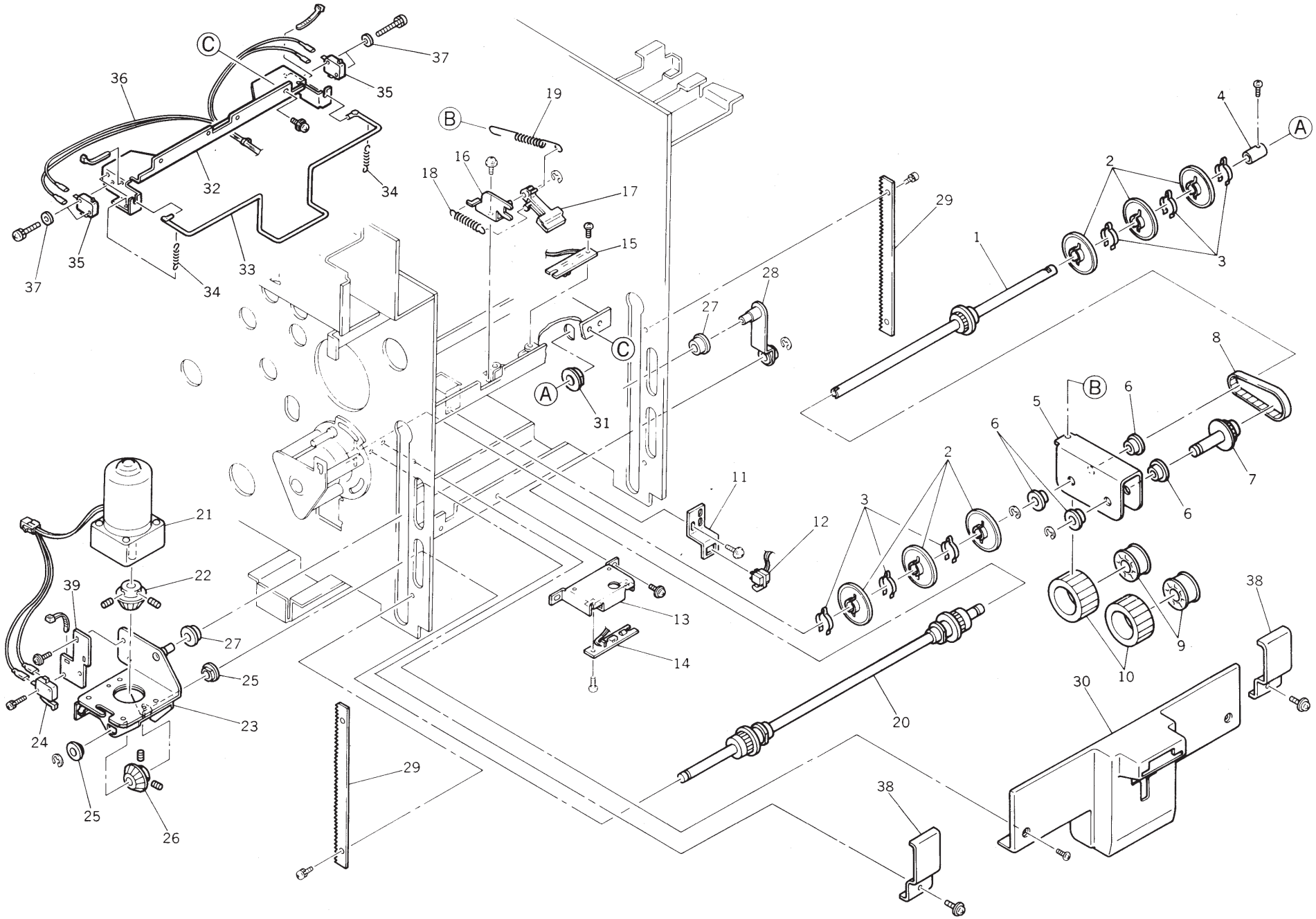

No.	Part No.	Part Name	Q'ty	Remark
	011-91810-003	Scraper Ass'y		
	014-91810-005	Scraper Ass'y; A3		
1	011-91814-009	* Shaft; Pickup Roller	1	
1	014-91814-000	* Shaft; Pickup Roller; A3	1	RC6300
2	011-11522-002	* Paper Guide Roller	6	
3	000-06123-007	* Stopper; Paper Guide Roller	6	
4	011-11816-103	* Collar; Shaft; Pickup Roller	1	
5	011-11805-004	* Holder Plate; Scraper	1	
6	607-16000-802	* Metal; F10 x 18/16 x 5; 22 x 1.5	4	
7	011-91812-006	* Shaft; Scraper	1	
8	620-31776-002	* Belt; 177-3M-6	1	
	011-11817-002	* Pickup Roller Ass'y	1	
9	006-11332-009	** Core; Pickup Roller	2	
10	011-11818-009	** Rubber Roller; Pickup	2	
	011-91820-009	Upper Limit Sensor Ass'y		
11	011-11806-000	* Bracket; Upper Limit Sensor	1	
12	011-60029-001	* Upper Limit Sensor	1	
	011-91850-005	Paper Det. Sensor (Receive) Ass'y		
13	011-11814-003	* Bracket; Paper Det. Sensor (Receive)	1	
14	011-60002-103	* Paper Det. Sensor (Receive)	1	
15	011-60001-204	Paper Det. Sensor (Send)	1	
	011-91830-004	P.-F. Pressure Adj. Lever Ass'y		
16	011-11807-007	* Bracket; P.-F. Pressure Adj. Lever	1	
17	011-11810-008	* P.-F. Pressure Adj. Lever	1	
18	011-11815-000	* Spring; P. -F. Pressure Adj. Lever	1	
19	011-11811-209	Spring; P.-F.Pressure	1	
20	011-91610-004	Shaft; Elevator	1	
20	014-11601-001	Shaft; Elevator; A3	1	RC6300
	011-91620-107	Unit/Elevator Motor		
21	011-65001-105	* Elevator Motor	1	
22	002-11715-006	* Bevel Gear; Elevator	1	
23	011-11606-001	* Bracket; Elevator Motor	1	
24	443-00120-706	* Micro-SW; E21-92N	1	
39	011-11610-009	* Bracket; Lower Limit SW	1	
25	607-15000-000	Metal; F8 x 13/12 x 5; 16 x 2	2	

No.	Part No.	Part Name	Q'ty	Remark
26	002-11715-006	Bevel Gear; Elevator	1	
27	002-11717-009	Collar; Elevator	2	
28	011-11602-006	Link Plate; Elevator	1	
29	002-11719-206	Rack; Elevator	2	
30	011-41813-109	Cover; Pickup Roller	1	
30	011-41817-007	Cover; Pickup Roller; Pic.	1	
31	607-16000-403	Metal; F10 x 15/14 x 5.5; 20 x 2.5	1	
	011-91530-205	Feed Tray Safety SW Ass'y		
	014-91530-002	Feed Tray Safety SW Ass'y; A3		RC6300
32	011-41814-202	* Bracket; Feed Tray Safety SW	1	
32	014-41814-107	* Bracket; Feed Tray Safety SW; A3	1	RC6300
33	011-41815-101	* Safety Bar	1	
33	014-41815-006	* Safety Bar; A3	1	RC6300
34	011-41816-000	* Spring; Safety SW	2	
35	443-02000-600	* Micro-SW; AH73503608MSW	2	
36	011-55072-101	* Wire Harness; Feed Tray Safety SW	1	
37	638-90304-003	* Washer; 3.5 x 24 x 0.4	2	
38	014-11814-102	Sub-Cover; Pickup Roller	2	RC6300

Fig. 5 PAPER-FEED TRAY

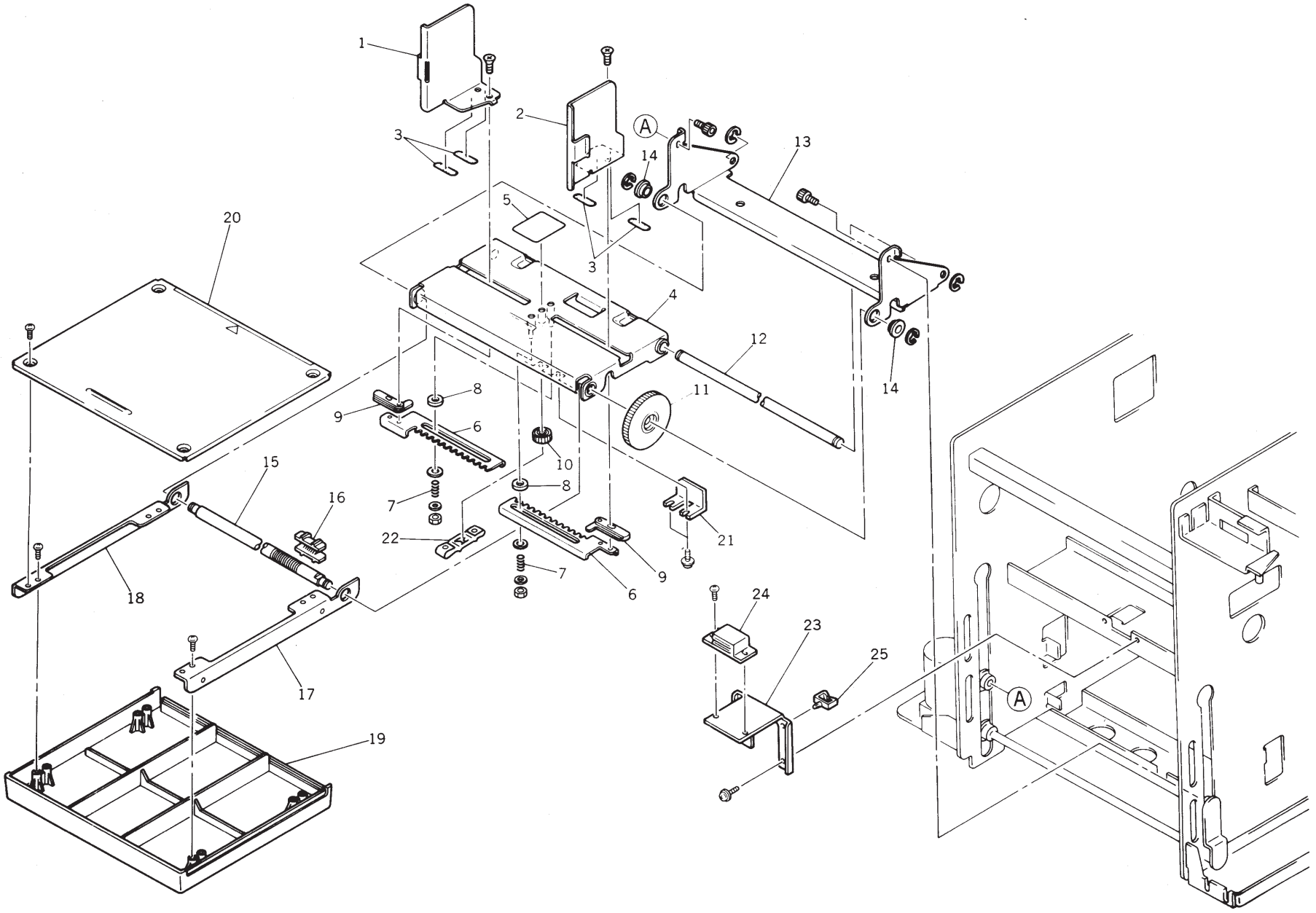

No.	Part No.	Part Name	Q'ty	Remark
	011-91500-004	Unit/Paper-Feed Tray		
	011-91520-005	Unit/Paper-Feed Tray; 100US		U.S.A.
	014-91500-006	Unit/Paper-Feed Tray; A3		
	014-91520-007	Unit/Paper-Feed Tray; A3; US		U.S.A.
1	011-11510-004	* Side Guide L; P.-F.-T.	1	
2	011-11509-006	* Side Guide R; P.-F.-T.	1	
3	011-11515-006	* Slide Sheet; P.-F.-T.	4	
4	011-11504-101	* Paper Feed Tray	1	
4	014-11504-103	* Paper Feed Tray; A3	1	RC6300
4	014-41528-007	* Paper Feed Tray; A3; US	1	RC6300 U.S.A
5	011-11516-002	* L.O. Sheet	1	
6	011-11511-000	* Slide Rack; P.-F.-T.	2	
6	014-11511-002	* Slide Rack; P.-F.-T.; A3	2	RC6300
7	011-11517-009	* Spring; Slide Rack	2	
8	011-11513-003	* Collar; Slide Rack; P.-F.-T.	4	
9	011-11512-104	* Link Plate; Side Guide; P.-F.-T.	2	
10	011-11514-000	* Gear; Slide Rack; P.-F.-T.	1	
11	011-11524-005	* Adj. Dial	1	
12	011-11503-008	* Shaft B; P.-F.-T.	1	
12	014-11503-000	* Shaft B; P.-F.-T.; A3	1	RC6300
13	011-11501-102	* Bracket; P.-F.-T.	1	
13	014-11501-007	* Bracket; P.-F.-T.; A3	1	RC6300
14	600-50059-017	* Bearing; FLW 688ZZ	2	
15	011-11502-001	* Shaft A; P.-F.-T.	1	
15	014-11502-003	* Shaft A; P.-F.-T.; A3	1	RC6300
16	011-11523-106	* Adj. Nut; P.-F.-T.	1	
17	011-11527-004	* Support Plate L; Feed Board	1	
18	011-11526-008	* Support Plate R; Feed Board	1	
19	011-11529-007	* Feed Board Cover	1	
19	014-11529-009	* Feed Board Cover; A3	1	RC6300
20	011-11528-000	* Feed Board	1	
20	011-41528-005	* Feed Board; 100US	1	U.S.A.
20	014-11528-100	* Feed Board; A3	1	RC6300
21	011-11532-105	* Nut Holder	1	
22	014-11533-006	* Spring; Slide Rack; A3	1	

No.	Part No.	Part Name	Q'ty	Remark
	011-91840-000	Magnet Catch Ass'y; P.-F.-T.	1	
23	011-11812-000	* Bracket; Magnet Catch	1	
24	660-05000-301	* Magnet Catch; SM-41	1	
25	665-02025-105	* Wire Saddle; WS-A-2-02	1	

Fig. 6 DRIVE MECHANISM AREA

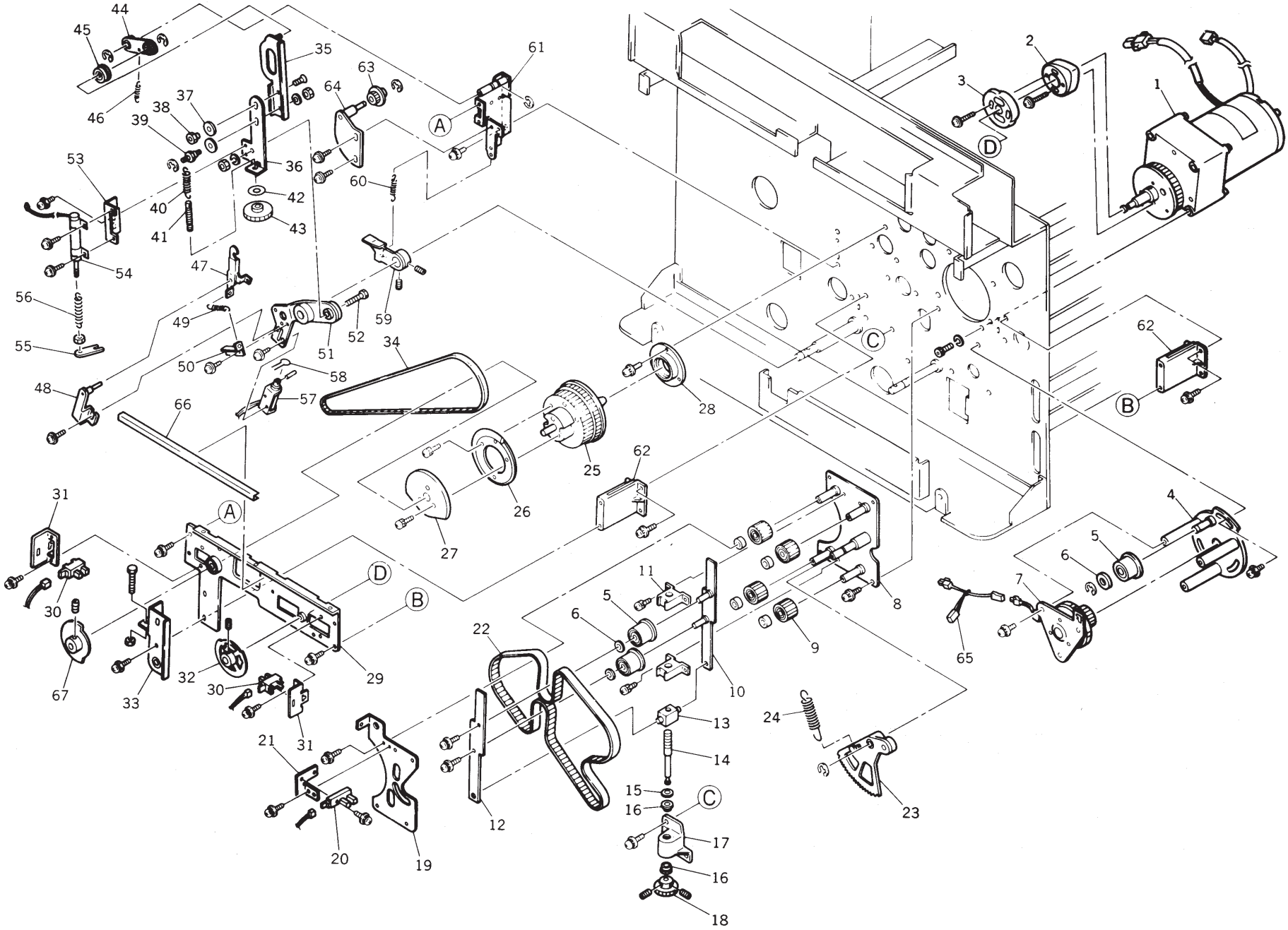

No.	Part No.	Part Name	Q'ty	Remark
	011-91200-108	Unit/Main Motor		
1	011-91203-000	* Main Motor Ass'y; SU	1	
	011-60027-106	** Photoelectron Disc.	1	
	011-60026-002	** Encoder Sensor	1	
2	002-11220-007	* Cam; Guide Roller	1	
3	011-11240-309	* Cam; Timing Roller	1	
	014-91220-003	Unit/Drive		All RC Model
4	011-11204-000	* Base Plate; P.-F. Clutch	1	
5	002-11242-000	* Idler	3	
6	002-11227-001	* Spacer; Slide Plate	3	
7	011-11201-001	* Unit/P.-F. Clutch	1	
8	011-11208-006	* Base Shaft Plate; Slide Plate	1	
9	002-11244-003	* Idler Pulley	4	
10	006-11222-009	* Slide Plate (Base)	1	
11	002-11225-009	* Support Block; Slide Plate	2	
12	006-11224-109	* Slide Plate (Front)	1	
13	011-11231-008	* Shaft Block; Slide Plate	1	
14	011-11230-001	* Shaft; Slide Plate	1	
15	638-90616-005	* Washer; 6.1 x 12 x 1.6	1	
16	607-13000-003	* Metal; F6 x 10/9 x 4; 12 x 1.5	2	
17	011-11220-006	* Shaft Base Block; Slide Plate	1	
18	011-11232-004	* Gear; Slide Plate	1	
19	011-11227-000	* Reinforce Plate; Slide Plate	1	
20	443-30000-500	Sensor; OS3701R-03	1	
21	014-11203-006	* Bracket; Pressure Det. Sensor; A3	1	RC6300
21	011-11239-009	* Bracket; Pressure Det. Sensor	1	
22	620-48309-009	* Belt; 830-5M-15	1	
23	002-11291-109	* Sector Gear	1	
24	011-11296-002	Spring; Sector Gear	1	
	014-91225-005	Main Shaft Ass'y; A3		RC6300
25	011-11212-003	* Main Pulley; Main Shaft	1	RC6300
26	011-11238-002	* Disc Plate; Main Shaft	1	RC6300
27	014-11207-001	* Cam; Pressure Roller II; A3	1	RC6300
	011-91225-100	Main Shaft Ass'y; B4		
25	011-11212-003	* Main Pulley; Main Shaft	1	

No.	Part No.	Part Name	Q'ty	Remark
26	011-11238-002	* Disc Plate; Main Shaft	1	
27	011-11258-003	* Cam; Pressure Roller; B4	1	
	011-91226-000	Main Shaft Ass'y; A4		
25	011-11212-003	* Main Pulley; Main Shaft	1	
26	011-11238-002	* Disc Plate; Main Shaft	1	
27	011-11257-007	* Cam; Pressure Roller; A4	1	
28	006-11216-009	Bearing House A; Main Shaft	1	
29	011-11249-209	Face Plate; Main Shaft	1	
	011-91250-008	Paper Feed Clutch Sensor Ass'y		
30	443-30000-403	* Sensor; OS3705-02	1	
31	011-11243-006	* Bracket; P Disc Sensor	1	
32	011-11235-003	P Disc	1	
33	011-91235-009	Face Plate; Pressure Shaft	1	
34	620-37506-007	Belt; 750-3M-6	1	
	014-91230-009	Pressure Link Ass'y		
35	002-11247-100	* Pressure Link; Top	1	
36	011-11241-100	* Pressure Link; Bottom	1	
37	204-03310-019	* Spacer; Paper Feed Clutch	2	
38	002-11250-100	* Stopper Shaft	1	
39	002-11251-204	* Spring Hanger Shaft	1	
40	014-11204-002	* Spring II; Pressure Link	1	
41	014-11205-009	* Pressure Adj. Screw II	1	
42	607-50800-109	* Washer; TW0815	1	
43	011-11245-009	* Gear; Pressure Adj. Screw	1	
44	002-11255-013	* Linking Plate; Drive Base	1	
45	600-50061-003	* Bearing; FL608ZZ	1	
46	002-11303-000	* Spring B; Pressure Link	1	
47	011-11276-206	* Hook Lever	1	
48	011-11270-003	* Shaft; Hook Lever	1	
49	002-11304-006	* Spring; Hook Lever	1	
50	011-11289-006	* Bracket; Hook Lever Spring	1	
51	011-11280-009	* Pressure Hook	1	
52	002-11259-108	* Connecting Shaft; Link	1	
	011-91208-109	Pressure Det. Ass'y		
53	011-11248-105	* Bracket; Pressure Control	1	

No.	Part No.	Part Name	Q'ty	Remark
54	011-60008-306	* Pressure Det. Potentiometer	1	
55	011-11247-001	* Linking Plate; Pressure Control	1	
56	011-11259-000	* Spring; Pressure Det.	1	
57	011-91245-004	Pressure Solenoid Ass'y	1	
58	638-80801-009	* Ring Washer; 8.2 x 10.2 x 1		
59	011-11284-209	Pressure Lever	1	
60	002-11303-000	Spring B; Pressure Link	1	
61	011-11222-106	Base Shaft Plate; Pressure	1	
62	011-11234-007	Main Bracket; Face Plate	2	
63	011-11254-008	Tension Pulley	1	
64	011-11251-106	Bracket; Tension Pulley	1	
65	011-55028-102	Wire Harness; Stack Paper SW	1	
66	011-70022-005	Edging Plate	1	
67	011-11255-004	Pressure Sensor Disc.	1	

No.	Part No.	Part Name	Q'ty	Remark

Fig. 7 ROLLER SYSTEM AREA (RC4000, RC4500, RC5600/D, RC5800)

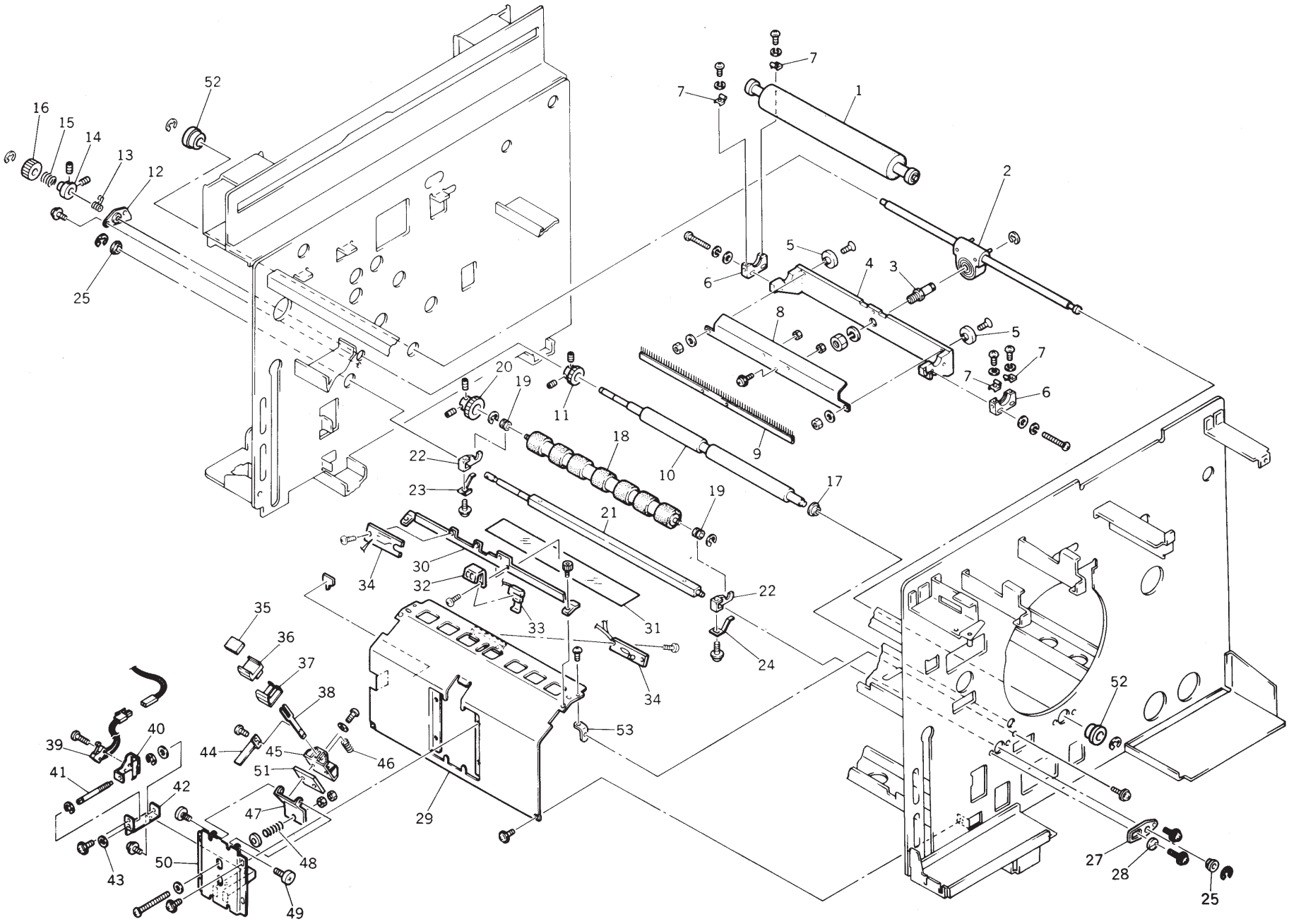

No.	Part No.	Part Name	Q'ty	Remark
1	011-91420-000	Pressure Roller Ass'y; B4	1	
1	011-91421-007	Pressure Roller Ass'y; A4	1	
	011-91410-102	Pressure Shaft Ass'y; B4		
	011-91411-001	Pressure Shaft Ass'y; A4		
2	011-91412-008	* Pressure Shaft	1	
3	002-11405-007	* Center Shaft; Pressure	1	
4	011-11403-208	* Pressure Roller Support	1	
5	006-11312-008	* Support Collar; R3	2	
6	002-11402-008	* Adjuster; Press.-Roll. Support	2	
7	002-11404-108	* Roller Holder; Pressure	4	
8	011-11409-001	* Guide Cover; Pressure; B4	1	
8	011-41409-006	* Guide Cover; Pressure; A4	1	
9	011-11404-000	* De-electricity Brush; B4	1	
9	011-41404-004	* De-electricity Brush; A4	1	
	011-91320-006	Guide Roller Ass'y		
10	011-11301-006	* Guide Roller	1	
11	006-11306-008	* Gear A; Guide Roller	1	
12	002-11412-003	* Shaft Catch; Guide Roller	1	
13	002-11210-109	* Load Spring; Guide Roller	1	
14	006-11304-005	* Guide Shaft	1	
15	006-11305-109	* One-Way Spring	1	
16	006-11303-009	* Gear; Guide Roller	1	
17	600-50059-017	Bearing; FLW688ZZ	1	
	011-91310-000	Timing Roller Ass'y		
18	006-11301-006	* Timing Roller	1	
19	607-05000-207	* Metal; S6 x 12 x 10M	2	
20	006-11307-004	* Gear B; Timing Roller	1	
21	011-11302-002	* Shaft; Timing Roller	1	
22	000-01326-007	* Timing Roller Supporter	2	
23	002-11428-007	* Roller Stopper A; Timing	1	
24	002-11429-003	* Roller Stopper B; Timing	1	
25	607-15000-000	Metal; F8 x 13/12 x 5; 16 x 2	2	
27	000-01327-003	Adj. Plate; Guide Roller	1	
28	000-01328-000	Adj. Eccentric; Guide Roller	1	
	011-91700-208	Unit/Guide Plate		

No.	Part No.	Part Name	Q'ty	Remark
29	011-11701-306	* Guide Plate (Lower)	1	
30	011-11714-203	* Guide Plate (Upper)	1	
31	011-11718-101	* Sheet; Guide Plate	1	
32	011-11717-105	* Bracket; Paper Buckle Det. Sensor	1	
33	011-60023-100	* Paper Buckle Det. Sensor	1	
34	011-60003-207	* Paper Sensor	1	
	011-91702-103	* Unit/Stripper		
35	002-11557-001	** Stripper Pad; SU	1	
36	011-11710-003	** Base Plate; Stripper	1	
37	011-11709-102	** Stripper Pad Cover	1	
38	002-11544-007	** Sliding Plate; Stripper	1	
39	002-68470-204	** Stack Paper Feeding SW	1	
40	002-11546-000	** Bracket; Stack Paper Feeding SW	1	
41	002-11549-009	** Adj. Shaft; Stripper	1	
42	002-11548-002	** Adjuster; Stripper	1	
43	002-11550-007	** Stopper Washer; Stripper	1	
44	011-11712-006	** Actuator Plate; Stack P.-F. SW	1	
45	002-11542-004	** Housing; Stripper	1	
46	002-11543-000	** Spring; Stripper	1	
47	011-11708-009	** Angular Adj. Plate; Stripper	1	
48	006-11518-013	** Stripper Fixing Spring	1	
49	011-11711-107	** Fulcrum Screw; Stripper	2	
50	011-11704-003	** Bracket; Stripper Unit	1	
51	011-11720-009	** Stripper Noise Reduction Sheet	1	
52	607-17000-105	Metal; F12 x 18 x 10; 24 x 2.5	2	
53	011-11713-002	L Plate; Guide Plate	2	

Fig. 8 ROLLER SYSTEM AREA (RC6300)

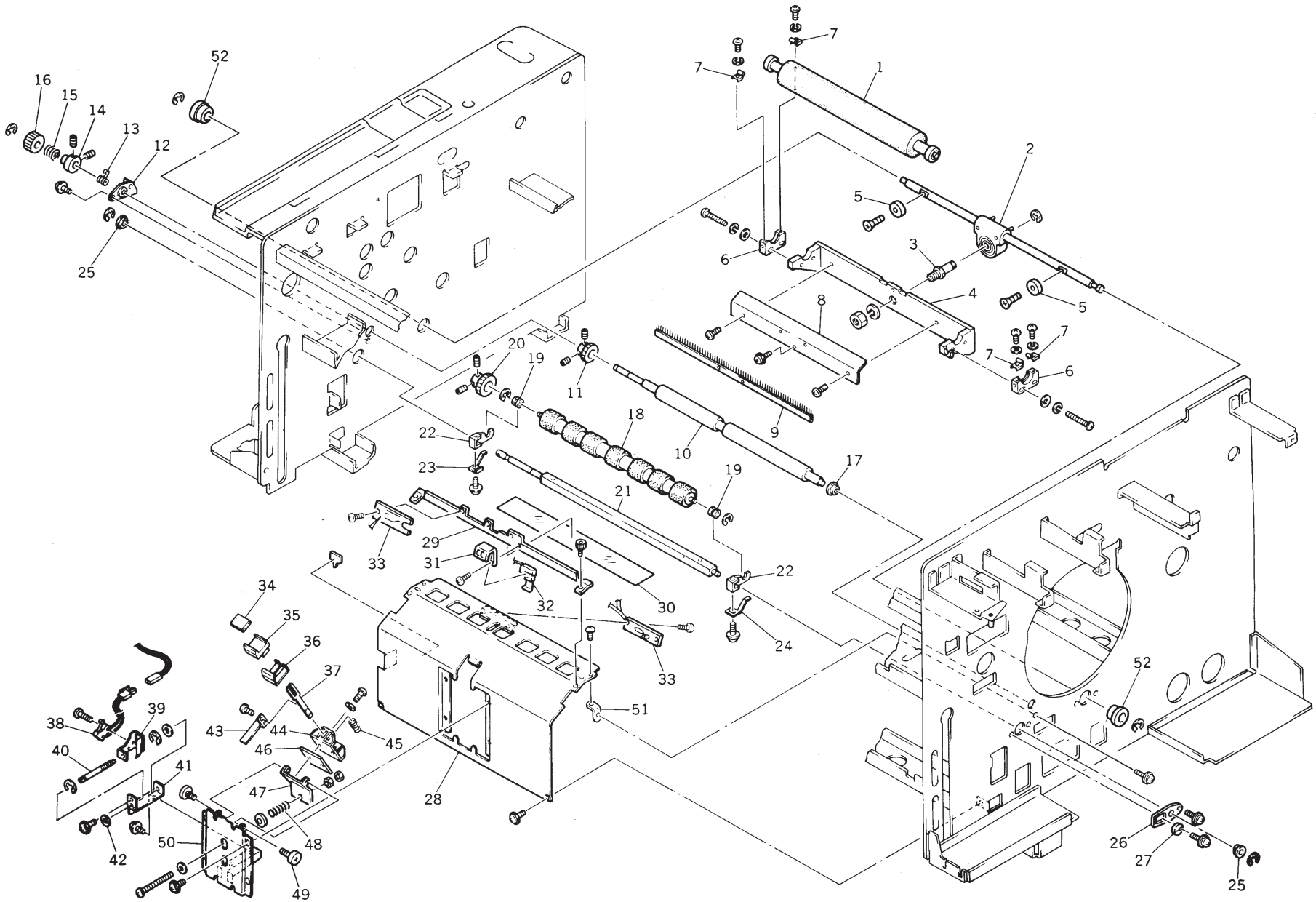

No.	Part No.	Part Name	Q'ty	Remark
1	014-91420-002	Pressure Roller Ass'y; A3	1	
	014-91410-104	Pressure Shaft Ass'y; A3		
2	014-91412-000	* Pressure Shaft; A3	1	
3	002-11405-007	* Center Shaft; Pressure	1	
4	014-11406-101	* Pressure Roller Support; A3	1	
5	014-11410-001	* Support Collar; A3	2	
6	002-11402-008	* Adjuster; Press.-Roll. Support	2	
7	002-11404-108	* Roller Holder; Pressure	4	
8	014-11404-001	* Guide Cover; Pressure; A3	1	
9	014-11405-008	* De-electricity Brush; A3	1	
	014-91320-008	Guide Roller Ass'y; A3		
10	014-11301-105	* Guide Roller; A3	1	
11	006-11306-008	* Gear A; Guide Roller	1	
12	002-11412-003	* Shaft Catch; Guide Roller	1	
13	002-11210-109	* Load Spring; Guide Roller	2	
14	006-11304-005	* Guide Shaft	1	
15	006-11305-109	* One-Way Spring	1	
16	006-11303-009	* Gear; Guide Roller	1	
17	600-50059-017	Bearing; FLW688ZZ	1	
	014-91310-002	Timing Roller Ass'y; A3		
18	014-11303-000	* Timing Roller; A3	1	
19	607-05000-207	* Metal; S6 x 12 x 10 M	2	
20	006-11307-004	* Gear B; Timing Roller	1	
21	014-11302-101	* Shaft; Timing Roller; A3	1	
22	000-01326-007	* Timing Roller Supporter	2	
23	002-11428-007	* Roller Stopper A; Timing	1	
24	002-11429-003	* Roller Stopper B; Timing	1	
25	607-15000-000	Metal; F8 x 13/12 x 5; 16 x 2	2	
26	000-01327-003	Adj. Plate; Guide Roller	1	
27	000-01328-000	Adj. Eccentric; Guide Roller	1	
	014-91700-005	Unit/Guide Plate; A3		
28	014-11701-006	* Guide Plate (Lower); A3	1	
29	014-11714-000	* Guide Plate (Upper); A3	1	
30	011-11718-101	* Sheet; Guide Plate	1	
31	011-11717-105	* Bracket; Paper Buckle Det. Sensor	1	

No.	Part No.	Part Name	Q'ty	Remark
32	011-60023-100	* Paper Buckle Det. Sensor	1	
33	011-60003-207	* Paper Sensor	1	
	011-91702-103	* Unit/Stripper	1	
34	002-11557-001	** Stripper Pad; SU	1	
35	011-11710-003	** Base Plate; Stripper	1	
36	011-11709-102	** Stripper Pad Cover	1	
37	002-11544-007	** Sliding Plate; Stripper	1	
38	002-68470-204	** Stack Paper Feeding SW	1	
39	002-11546-000	** Bracket; Stack Paper Feeding SW	1	
40	002-11549-009	** Adj. Shaft; Stripper	1	
41	002-11548-002	** Adjuster; Stripper	1	
42	002-11550-007	** Stopper Washer; Stripper	1	
43	011-11712-006	** Actuator Plate; Stack P.-F. SW	1	
44	002-11542-004	** Housing; Stripper	1	
45	002-11543-000	** Spring; Stripper	1	
46	011-11720-009	** Stripper Noise Reduction Sheet	1	
47	011-11708-009	** Angular Adj. Plate; Stripper	1	
48	006-11518-013	** Stripper Fixing Spring	1	
49	011-11711-107	** Fulcrum Screw; Stripper	2	
50	011-11704-003	** Bracket; Stripper Unit	1	
51	011-11713-002	L Plate; Guide Plate	1	
52	607-17000-105	Metal; F12 x 18 x 10; 24 x 2.5	2	

Fig. 9 SQUEEGEE-INK PUMP UNIT AREA

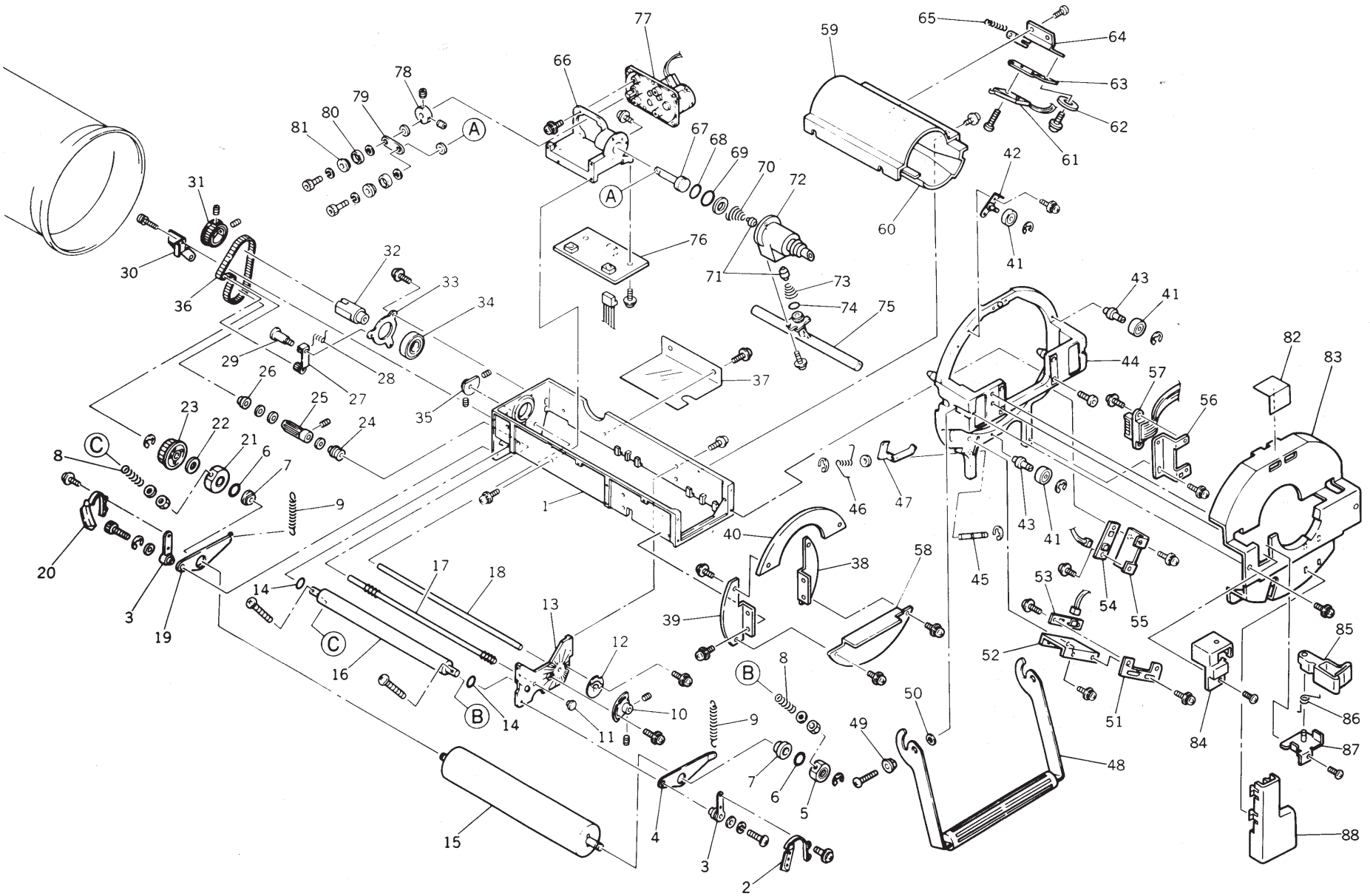

No.	Part No.	Part Name	Q'ty	Remark
		Unit/Squeegee		
1	011-12204-101	* Squeegee Stay	1	
1	014-12201-007	* Squeegee Stay; A3	1	RC6300
2	000-02254-506	* Ink Blocking Plate (Front)	1	
3	002-12219-002	* Adj. Boss; Ink Blocking	2	
4	002-12208-000	* Adj. Plate (Front); Squeegee	1	
5	002-12217-000	* Reverse Rotation Stopper A	1	
6	640-60080-001	* O Ring; P8-1.9	2	
7	607-16000-918	* Metal; F10 x 16 x 6; 19 x 2; 14.5 x 8	2	
7	607-16000-900	* Metal; F10 x 16 x 6; 19 x 2; 14.5 x 1	2	RC6300
8	000-02211-009	* Spring; Squeegee Gap	2	
9	002-12234-001	* Spring; Adj. Plate (Front)	2	
10	002-12213-101	* Sector Adjustor; Squeegee	1	
11	002-12240-001	* Shaft Catch; Drive; Squeegee	1	
12	002-12209-007	* Adj. Collar A; Squeegee	1	
13	011-12211-205	* Side Frame; Squeegee	1	
14	640-60140-012	* O Ring; P14-2.4	2	
15	002-12201-219	* Squeegee Roller	1	
15	014-12221-008	* Squeegee Roller; A3	1	RC6300
16	002-12205-001	* Doctor Roller	1	
16	014-12224-007	* Doctor Roller; A3	1	RC6300
17	002-12239-305	* Drive Shaft; Squeegee	1	
17	014-12252-000	* Drive Shaft; Squeegee; A3	1	RC6300
18	002-12216-100	* Adj. Shaft; Squeegee	1	
18	014-12251-004	* Adj. Shaft; Squeegee; A3	1	RC6300
19	002-12237-000	* Adj. Plate (Back); Squeegee	1	
20	000-02255-502	* Ink Blocking Plate (Back)	1	
21	002-12218-006	* Reverse Rotation Stopper B	1	
22	638-90000-020	* Washer; 18 x 10.2 x 0.2	1	
23	002-12222-003	* Pulley; Squeegee Roller	1	
24	640-70030-100	* V Ring; VRY2.7 x 3.5 x 4.1	1	
25	002-12238-104	* Axis; Drive Shaft; Squeegee	1	
26	607-10000-010	* Metal; F3 x 5 x 3; 8x 1.4	1	
27	002-12229-105	* Tensioner; Squeegee	1	
28	002-12233-005	* Spring; Tensioner; Squeegee	1	

No.	Part No.	Part Name	Q'ty	Remark
29	011-12221-006	* Fulcrum; Tensioner; Squeegee	1	
30	011-12241-007	* Shaft Support II; Squeegee	1	
	011-12206-007	* Ass'y; Shaft Joint	1	
31	002-12223-107	** Pulley; Main Shaft	1	
32	011-12207-100	** Shaft Joint	1	
33	002-12227-005	** Bearing Holder A; Squeegee	1	
34	601-10007-003	** Bearing; 6202ZZ	1	
35	002-12210-005	* Adj. Collar B; Squeegee	1	
36	620-21309-104	* Squeegee Belt; B130/65M x L9.5	1	
37	011-12209-103	* PCB Cover; Drum	1	
38	011-12222-002	* Bracket R; Drum Cover F	1	
39	011-12223-009	* Bracket L; Drum Cover F	1	
40	011-12213-100	* Drum Cover F (Upper)	1	
	011-92300-009	Unit/Drum Frame		
	014-92300-000	Unit/Drum Frame II		RC6300
41	000-01169-106	* Support Roller; Drum	3	
42	002-12410-004	* Adj. Plate; Support Roller	1	
43	002-12409-006	* Support Shaft; Support Roller	2	
44	011-12301-000	* Frame; Drum	1	
44	014-12281-000	* Frame II; Drum	1	RC6300
45	002-12414-000	* Shaft; Locking Plate; Drum	1	
46	011-12305-005	* Spring; Locking Plate; Drum	1	
47	002-12413-003	* Locking Plate; Drum	1	
48	011-12321-000	* Drum Lever	1	
49	002-12407-003	* Boss A; Drum Lever	2	
50	002-12418-005	* Spacer; Drum Lever	2	
51	011-12320-209	Adj. Plate; Magnet A Det. Sensor	1	
52	011-12319-006	Bracket; Magnet A Det. Sensor	1	
53	011-60025-006	Magnet A Det. Sensor	1	
54	011-60024-000	Magnet C Det. Sensor	1	
55	011-12315-000	Bracket; Magnet C Det. Sensor	1	
56	011-12313-008	Bracket B; Connector; Drum	1	
57	011-55009-205	Wire Harness; Drum	1	
57	014-55001-001	Wire Harness; Drum; A3	1	RC6300
58	011-12220-107	Drum Cover F (Lower)	1	

No.	Part No.	Part Name	Q'ty	Remark
	011-42212-001	Bottle Guide	1	
	014-12216-101	Bottle Guide II Ass'y	1	RC6300
59	011-12208-000	* Bottle Guide (Over)	1	RC6300
60	014-12217-000	* Bottle Guide II (Base)	1	RC6300
61	011-60019-200	Bottle Set SW	1	
62	011-12218-005	Boss; Bottle Set SW	1	
63	011-12217-009	Adj. Plate; Bottle SW	1	
64	011-12216-002	Bracket; Bottle SW	1	
65	011-12219-001	Spring; Bottle SW	1	
	011-92220-005	Unit/Ink Pump		
	014-92220-015	Unit/Ink Pump; A3		RC6300
66	002-12303-305	* Bracket; Inking Motor	1	
67	002-12304-107	* Piston; Inking Pump	1	
68	640-60140-012	* O Ring; P14-2.4	1	
69	640-60220-024	* O Ring; P22-2.4	1	
70	000-07119-100	* Coil Spring; Inking Pump	1	
71	011-12151-008	* Valve; Inking Pump	2	
72	011-12201-200	* Inking Pump Body	1	
72	014-12211-002	* Inking Pump Body; A3	1	RC6300
73	011-12147-108	* Coil Spring; Inking Pump; RC	1	
74	640-60100-118	* O Ring; P10A-2.4	1	
75	011-12153-000	* Ink Distributor II	1	
75	014-12213-005	* Ink Distributor; A3	1	RC6300
76	011-51009-200	* Drum PCB	1	
77	011-65007-103	* Inking Motor	1	
78	002-12307-203	* Linking Disc; Inking Pump	1	
79	002-12308-013	* Linking Plate; Inking Pump	1	
80	002-12309-001	* Collar; Inking Pump	2	
81	002-12310-107	* Collar Holder; Inking Pump	1	
82	550-20077-106	Seal; Ink (Black)	1	
82	550-20215-100	Seal; Ink (Black); Pic.	1	
82	550-20091-109	Seal; Ink (Blue)	1	
82	550-20092-105	Seal; Ink (Red)	1	
82	550-20093-101	Seal; Ink (Yellow)	1	
82	550-20094-108	Seal; Ink (Brown)	1	

No.	Part No.	Part Name	Q'ty	Remark
82	550-20095-104	Seal: Ink (Green)	1	
82	550-20613-105	Seal; Ink (Black); A3	1	
82	550-20621-000	Seal; Ink (Blue); A3	1	
82	550-20622-007	Seal; Ink (Red); A3	1	
82	550-20623-003	Seal; Ink (Yellow); A3	1	
82	550-20624-000	Seal; Ink (Brown); A3	1	
82	550-20625-006	Seal; Ink (Green); A3	1	
82	550-20614-101	Seal; Ink (Black); A3; Pic.	1	
82	550-20626-002	Seal; Ink (Blue); A3; Pic.	1	
82	550-20627-009	Seal; Ink (Red); A3; Pic.	1	
82	550-20628-005	Seal; Ink (Yellow); A3; Pic.	1	
82	550-20629-001	Seal; Ink (Brown); A3; Pic.	1	
82	550-20630-000	Seal; Ink (Green); A3; Pic.	1	
83	011-12302-006	Cover; Drum	1	
83	014-12302-105	Drum Cover II	1	RC6300
84	014-12299-007	Cover; Bottle Stopper	1	RC6300
85	014-12295-001	Lever; Bottle Stopper	1	RC6300
86	014-12297-004	Spring; Stopper Lever	1	RC6300
87	014-12291-006	Bracket; Stopper Lever	1	RC6300
88	011-12303-100	Connector Cover; Drum	1	

Fig. 10 DRUM-SCREEN AREA

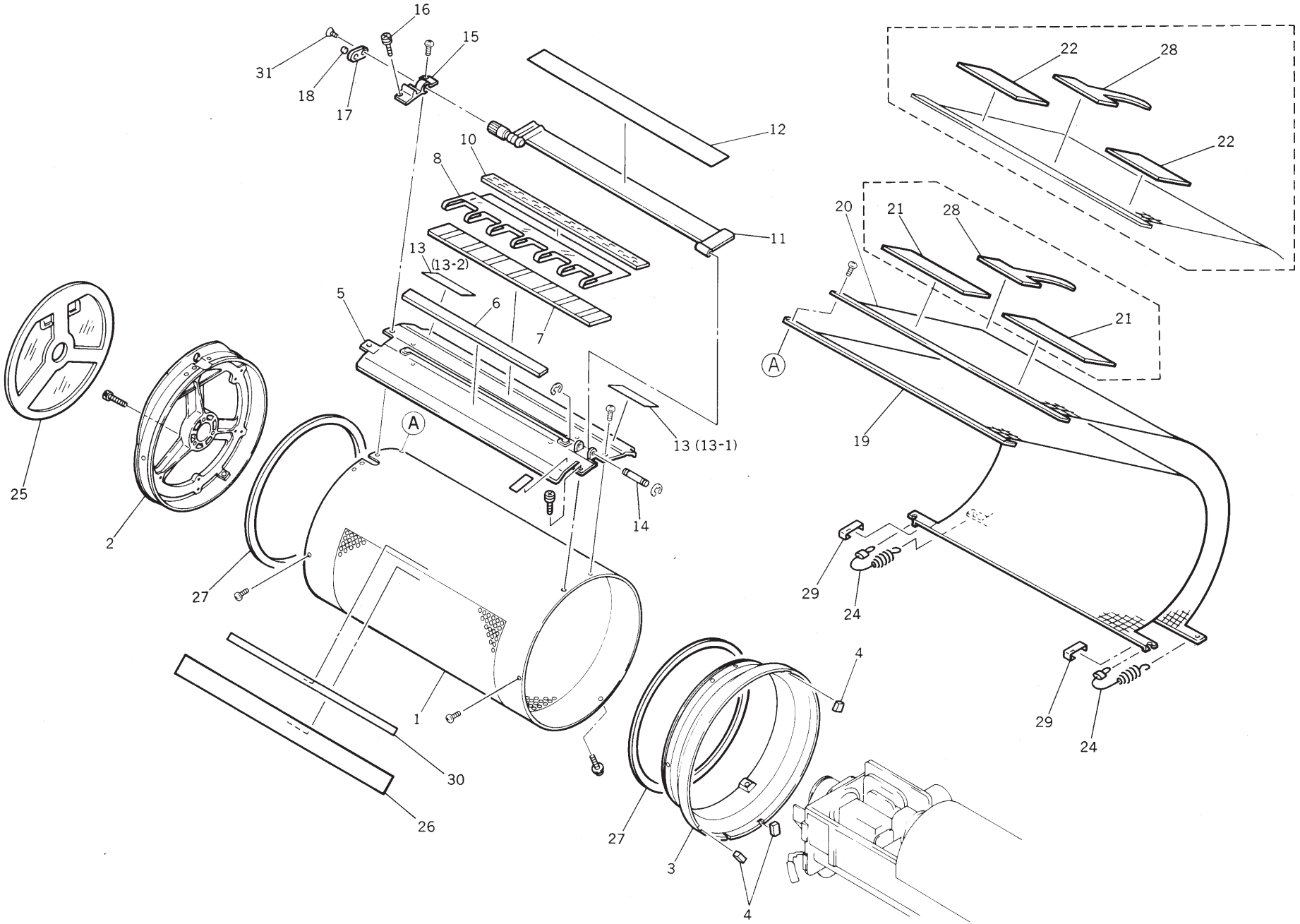

No.	Part No.	Part Name	Q'ty	Remark
	014-92100-001	Unit/Drum Screen; A3		RC6300
	011-92100-000	Unit/Drum Screen; B4		
	011-92101-006	Unit/Drum Screen; 100US		U.S.A.
	011-92102-002	Unit/Drum Screen; A4		
1	014-12101-002	* Drum Body; A3	1	RC6300
1	011-12101-205	* Drum Body; B4	1	
1	011-42101-200	* Drum Body; 100US	1	
1	011-42102-206	* Drum Body; A4	1	
2	011-12123-705	* Drum Body Support (Left)	1	
2	014-12103-005	* Drum Body Support (Left); A3	1	RC6300
3	011-12133-204	* Drum Body Support (Right)	1	
4	011-12118-000	* Magnet C	3	
5	011-12120-102	* Clamp Plate Base	1	
5	014-12106-004	* Clamp Plate Base; A3	1	RC6300
6	011-12130-000	* Clamp Magnet B	1	
7	014-12120-104	* Clamp Magnet A; A3	1	RC6300
7	002-12110-108	* Clamp Magnet A; B4	1	
7	011-12143-005	* Clamp Magnet A; A4	1	
8	011-12132-305	* Sheet; Clamp Plate	1	
8	014-12121-208	* Sheet; Clamp Plate; A3	1	RC6300
10	002-12134-104	* Sticker Sheet; Drum	1	
10	014-12118-100	* Sticker Sheet; Drum; A3	1	RC6300
11	011-12110-301	* Clamp Plate Ass'y	1	
11	014-12104-001	* Clamp Plate Ass'y; A3	1	RC6300
12	011-12129-100	* Clamp Sub-Plate	1	
12	014-12115-003	* Clamp Sub-Plate; A3	1	RC6300
13	011-12134-006	* Sheet; Drum; B4	2	
13-1	014-12126-005	* Sheet (Left); Drum; A3	1	RC6300
13-2	014-12125-009	* Sheet (Right); Drum; A3	1	RC6300
14	011-12114-005	* Shaft; Clamp Plate	1	
15	011-12124-108	* Compensator	1	
16	011-12141-100	* Screw; Spring Hanger	2	
	011-92106-008	* Ass'y; Angular Magnet Plate		
17	011-12154-007	** Plate II; Angular Magnet	1	
18	660-05500-100	** Magnet TDK REC 18 D5 x 2	1	

No.	Part No.	Part Name	Q'ty	Remark
19	011-12105-200	* Screen A	1	
19	014-12109-003	* Screen A; A3	1	RC6300
20	011-12107-009	* Screen B	1	
20	014-12122-000	* Screen B; A3	1	RC6300
21	011-12146-004	* Separate Sheet; B4	2	
21	014-12119-009	* Separate Sheet; A3	2	RC6300
22	011-12145-008	* Light Absorber Strip 30; A4	2	
24	011-12136-009	* Spring; Screen	2	
25	011-12116-202	* Drum Cover R	1	
26	014-12116-204	* Ink Blocking Sheet; A3	1	RC6300
26	011-12140-006	* Ink Blocking Sheet; B4	1	
26	011-12142-009	* Ink Blocking Sheet; A4	1	
27	011-12139-008	* Drum Seal	2	
28	011-12144-206	* Separator Guide Plate	1	
28	014-12124-100	* Separator Guide Plate; A3	1	RC6300
29	011-12131-007	* Hanger Plate	2	
30	011-12104-000	* Seal Tape	1	
30	014-12114-007	* Seal Tape; A3	1	RC6300
31	011-12155-003	* Screw; Angular Magnet	1	

Fig. 11 LOCK LEVER AREA (RC4000, RC4500, RC5600/D, RC5800)

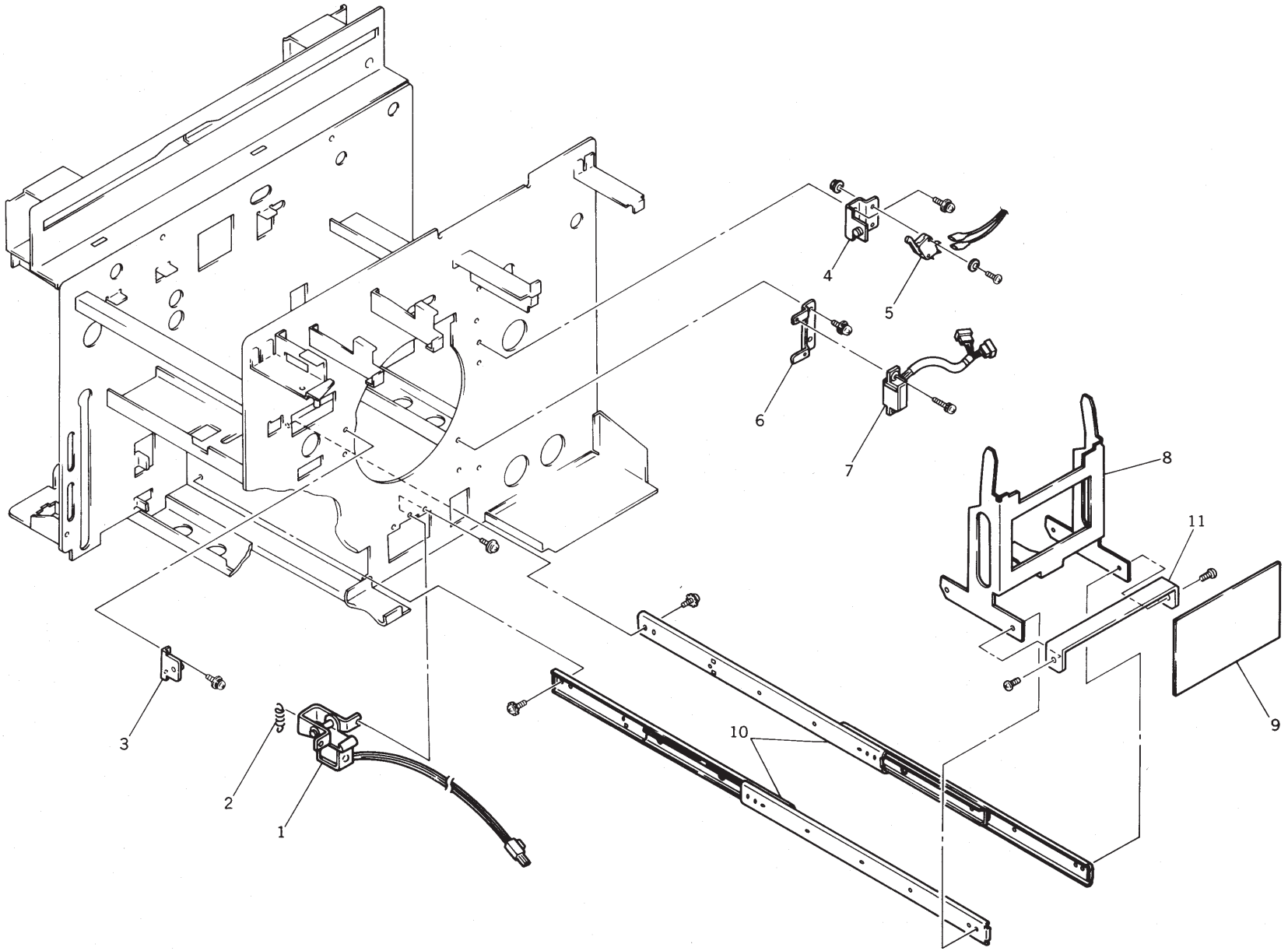

No.	Part No.	Part Name	Q'ty	Remark
1	011-92350-006	Unit/Drum Lock	1	
2	007-11305-009	* Spring; Lock	1	
3	011-12311-005	Drum Catch (L)	1	
	011-92320-000	Drum Set SW Ass'y		
4	011-12317-003	* Drum Catch (R)	1	
5	443-00120-609	* Micro-SW; E21-91N	1	
6	011-12304-009	Bracket A; Connector; Drum	1	
7	011-55008-004	Wire Harness; Drum Drawer	1	
8	011-12314-101	Drum Holder	1	
9	011-42316-001	Cover; Drum Holder	1	
9	011-42317-008	Cover; Drum Holder; Pic.	1	
10	011-12306-001	Rail; Drum	2	
11	011-12332-100	Reinforcing Plate; Drum Holder	1	

No.	Part No.	Part Name	Q'ty	Remark

Fig. 12 LOCK LEVER AREA (RC6300)

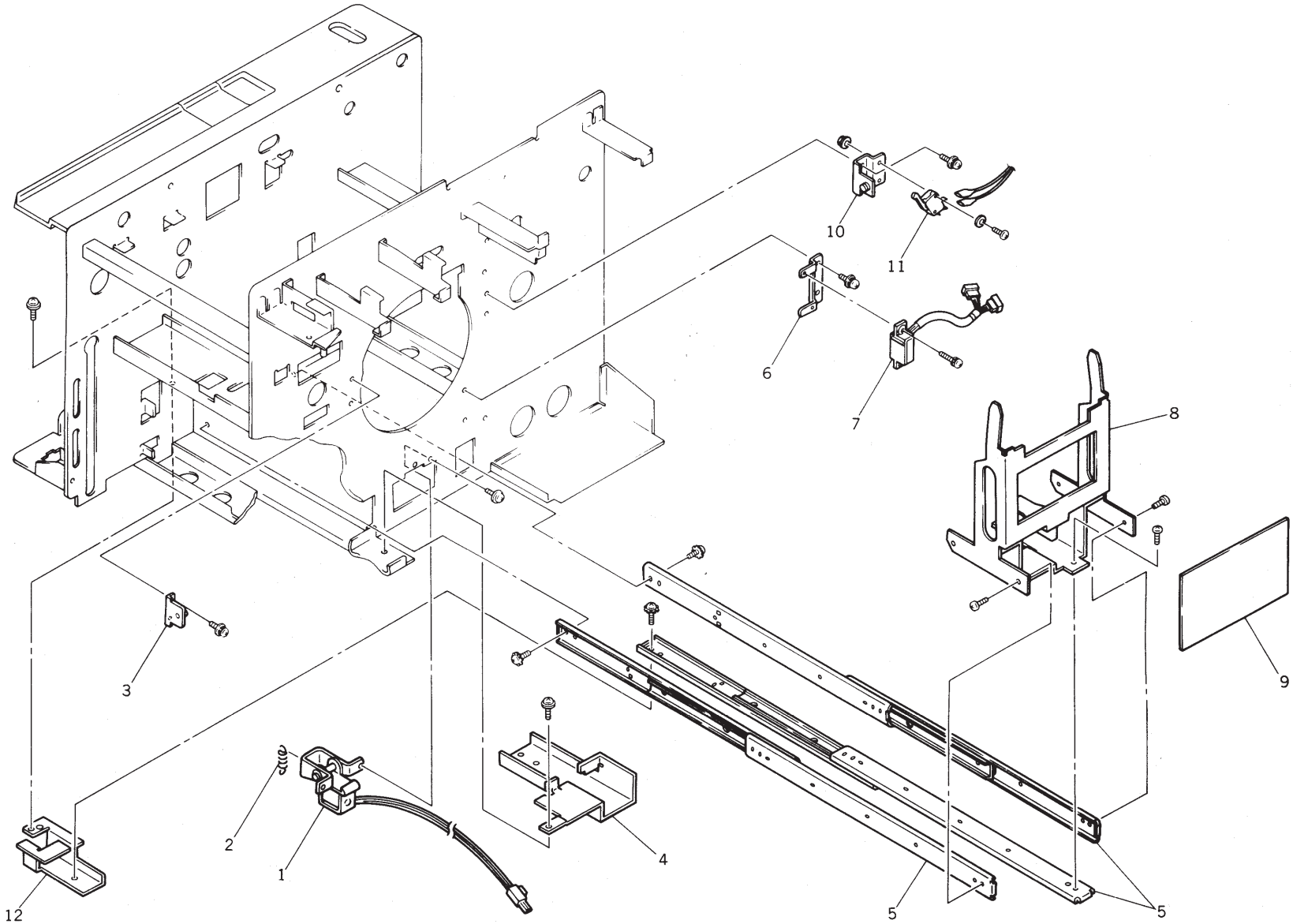

No.	Part No.	Part Name	Q'ty	Remark
1	011-92350-006	Unit/Drum Lock	1	
2	007-11305-009	* Spring; Lock	1	
3	011-12311-005	Drum Catch (L)	1	
4	014-12305-007	Bracket (F); Drum Rail	1	
5	014-12301-109	Rail; Drum; A3	3	
	011-92310-004	Wire Harness Ass'y; Drum Drawer		
6	011-12304-009	* Bracket A; Connector; Drum	1	
7	011-55008-004	* Wire Harness; Drum Drawer	1	
8	014-12307-000	Drum Holder III	1	
9	011-42316-001	Cover; Drum Holder	1	
9	011-42317-008	Cover; Drum Holder; Pic.	1	
	011-92320-000	Drum Set SW Ass'y		
10	011-12317-003	* Drum Catch (R)	1	
11	443-00120-609	* Micro-SW; E21-91N	1	
12	014-12306-003	Bracket (R); Drum Rail	1	

No.	Part No.	Part Name	Q'ty	Remark

Fig. 13 CLAMP-PRESSURE CONTROL AREA

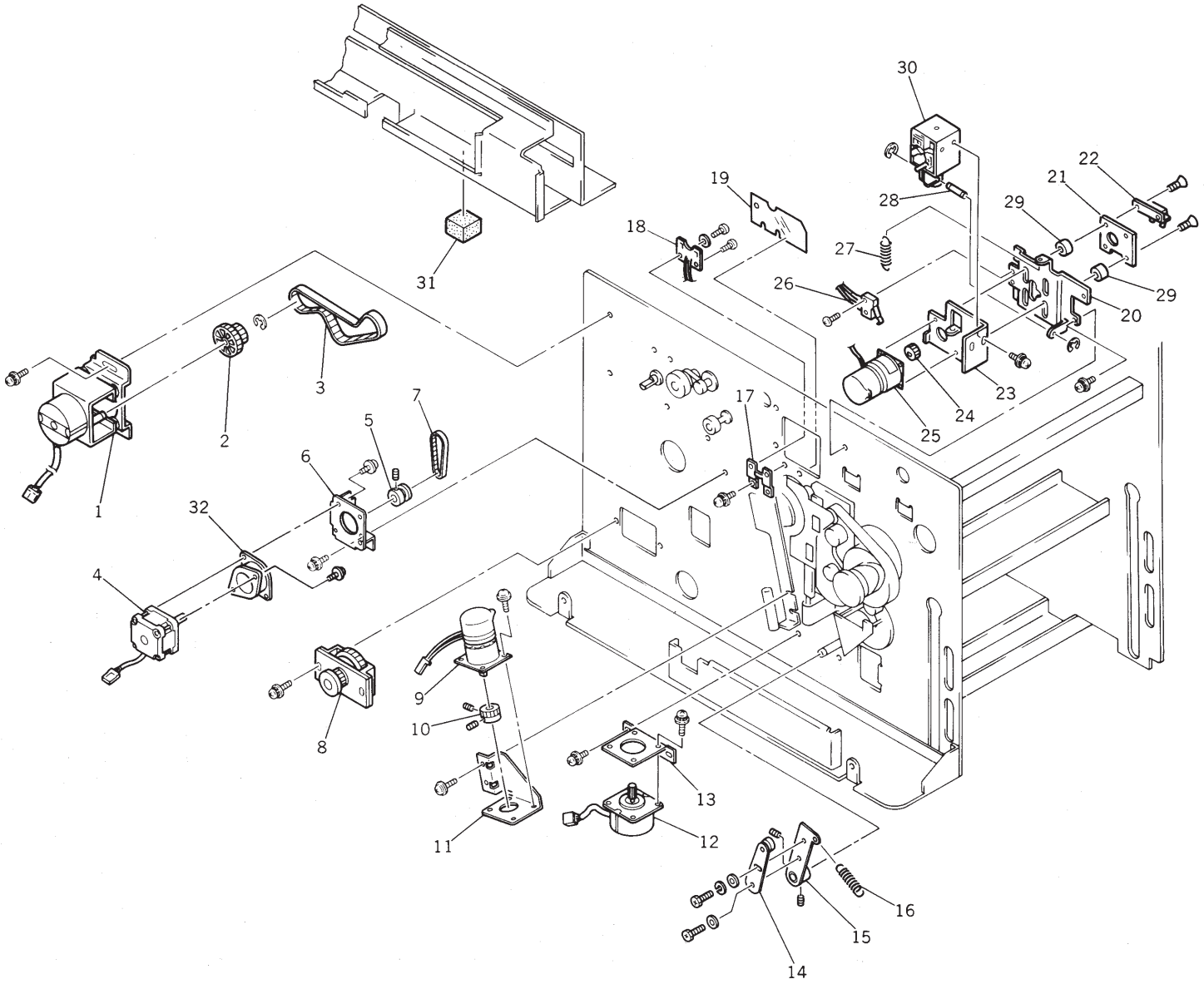

No.	Part No.	Part Name	Q'ty	Remark
1	011-95041-004	Unit/Write Pulse Motor	1	
2	011-15018-007	* Pulley; Write Pulse Motor	1	
3	620-21559-003	Belt; B115 M x L-9.5	1	
	011-95050-208	Unit/Loading Pulse Motor	1	
4	011-65013-006	* Loading Pulse Motor	1	
5	009-35214-009	* Pulley PM (16); Exit Roller	1	
6	011-15037-001	* Bracket; Loading Pulse Motor	1	
	014-95050-005	Unit/Loading Pulse Motor; A3		RC6300
4	014-65013-008	* Loading Pulse Motor; A3	1	RC6300
5	009-35214-009	* Pulley PM (16); Exit Roller	1	RC6300
6	011-15037-001	* Bracket; Loading Pulse Motor	1	RC6300
32	014-15155-006	* Mount; Loading Pulse Motor; A3	1	RC6300
7	620-20714-005	Belt; B71 M x L-4.8	1	
8	011-91230-007	Unit/Drive Gear; Transfer Belt	1	
8	014-91235-009	Unit/Drive Gear; Transfer Belt; A3	1	RC6300
	011-91265-005	Pressure Control Motor Ass'y		
9	011-65009-009	* Pressure Control Motor	1	
10	011-11244-002	* Gear; Pressure Control Motor	1	
11	011-11293-003	* Bracket; Pressure Control Motor	1	
	011-91240-002	Unit/Print Positioning Motor		
12	011-11294-107	* Print Positioning Motor	1	
13	011-11229-003	* Bracket; Print Positioning Motor	1	
	006-91440-001	Unit; Adj. Plate; Timing Lever	1	
14	002-11421-002	* Adj. Plate; Timing Lever	1	
15	006-11308-000	* Timing Lever	1	
16	006-11311-109	Spring; Timing Lever; R3	1	
	011-93220-009	Angular Sensor Ass'y		
17	011-12415-005	* Bracket; Angular Sensors	1	
18	011-60004-106	* Angular Sensor	1	
19	002-12537-209	Protection Sheet	1	
	011-92400-003	Unit/Clamp		
	014-92400-005	Unit/Clamp; A3		RC6300
20	011-12403-309	* Base Plate; Clamp Solenoid	1	
20	014-12401-006	* Base Plate; Clamp Solenoid; A3	1	RC6300
21	011-12405-107	* Bracket; Compensator Plate	1	

No.	Part No.	Part Name	Q'ty	Remark
22	011-12409-200	* Compensator Plate	1	
23	011-12406-200	* Bracket; Clamp Solenoid	1	
23	014-12402-100	* Bracket; Clamp Solenoid; A3	1	RC6300
	011-92402-006	* Clamp Motor Ass'y	1	
24	011-12411-000	** Gear; Clamp Motor	1	
25	011-65003-108	** Clamp Motor	1	
26	011-60030-107	* Clamp Safety Switch	1	
27	011-12402-108	* Spring; Clamp Solenoid	1	
28	011-12410-003	* Plunger Pin; Clamp Solenoid	1	
29	011-12412-006	* Spacer; Compensator Plate	2	
30	011-65004-309	* Clamp Solenoid	1	
31	011-12413-002	Cushion; Clamp Solenoid	1	

Fig. 14 SEPARATOR AREA

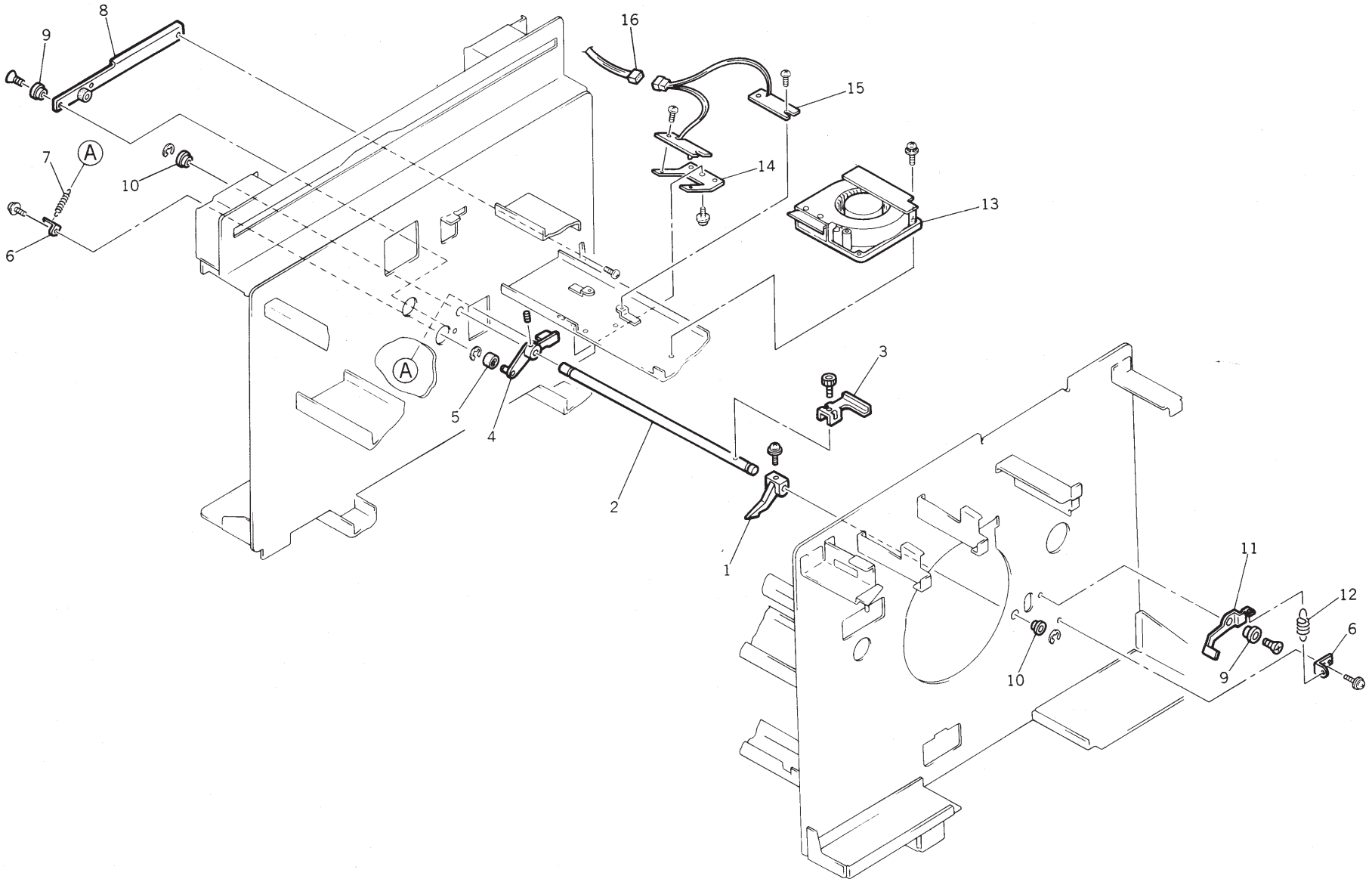

No.	Part No.	Part Name	Q'ty	Remark
	011-93300-002	Separator Ass'y		
	014-93300-004	Separator Ass'y; A3		RC6300
1	011-13312-005	* Separator	1	
2	011-13304-002	* Shaft; Separator	1	
2	014-13301-307	* Shaft; Separator; A3	1	RC6300
3	011-13311-009	* Release Lever	1	
4	011-13301-100	* Lever; Separator	1	
4	014-13302-001	* Lever; Separator II	1	RC6300
5	000-01515-004	* Collar; Separator	1	
6	011-13310-002	Hook Plate	2	
7	002-13352-105	Spring; Separator	1	
8	011-13307-109	Adj. Stopper; Separator	1	
9	011-13306-005	Collar A; Separator	2	
10	607-15000-000	Metal; F8 x 13/12 x 5; 16 x 2	1	
11	011-13305-009	Release Lever; Separator	1	
12	007-13121-100	Spring; Release Lever	1	
13	011-93310-105	Separation Fan	1	
13	011-93315-000	Separation Fan Ass'y II	1	RC6300
	011-93215-005	Paper Receiving Sensor (Receive) Ass'y	1	
14	011-11110-006	* Bracket; P.-Rcv. Sensor 1 (Receive)	1	
15	011-60036-105	* Paper Receiving Sensor (Receive)	1	
16	011-55065-008	Wire Harness; P.-Rcv. Sensor	1	

No.	Part No.	Part Name	Q'ty	Remark

Fig. 15 SUCTION UNIT (RC4000, RC4500, RC5600/D, RC5800)

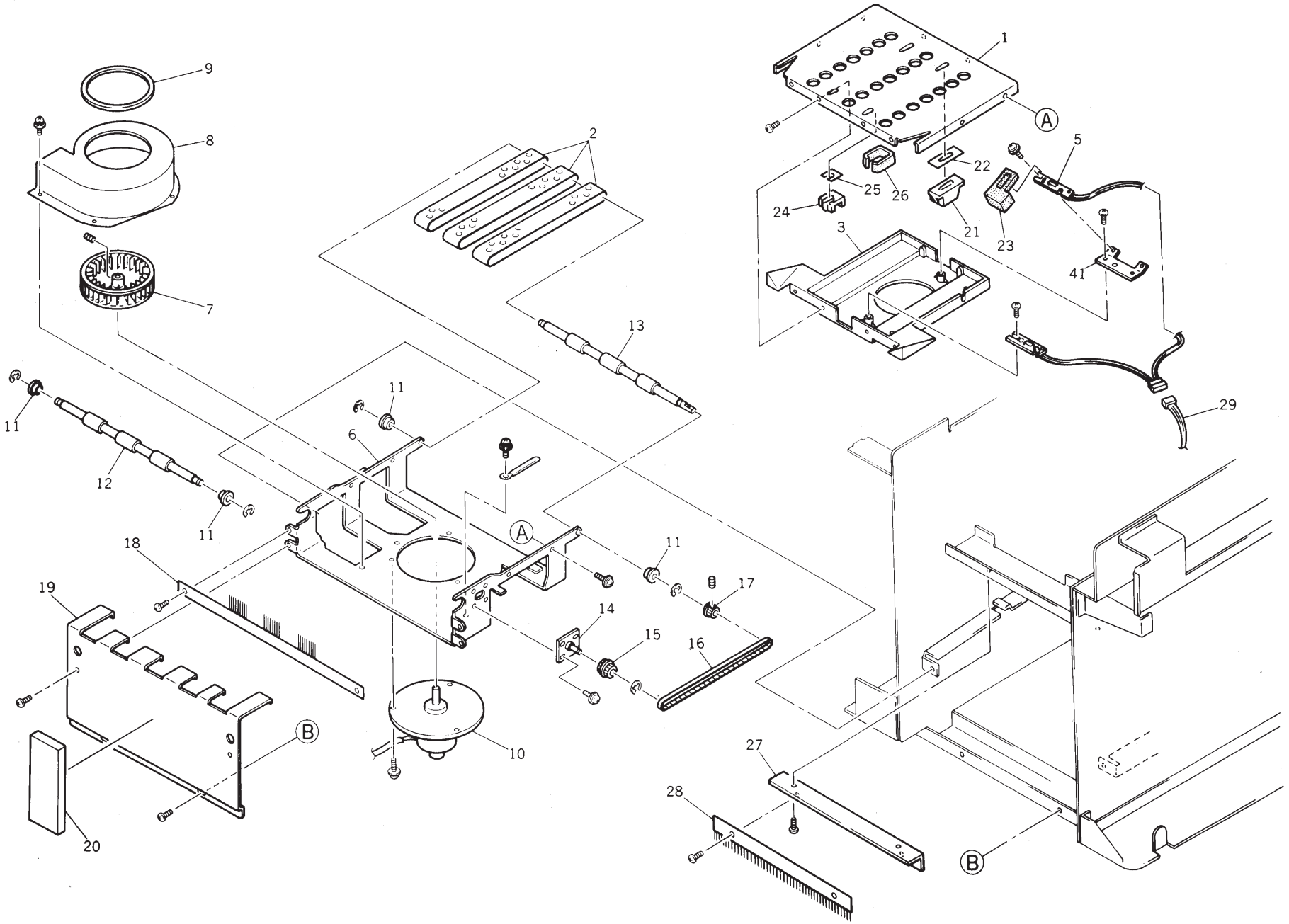

No.	Part No.	Part Name	Q'ty	Remark
	011-93206-006	Suction Unit		
1	011-13203-206	* Face Cover; Suction	1	
2	011-13220-003	* Transfer Belt	3	
3	011-13201-106	* Suction Cover (Upper)	1	
4	011-13219-102	* Bracket; P.-Rcv. Sensor 1 (Send)	1	
5	011-60035-109	* Paper Receiving Sensor (Send)	1	
6	011-13232-109	* Suction Cover (Lower)	1	
7	011-13215-107	* Suction Fan	1	
8	011-13206-108	* Suction Fan Cover	1	
9	011-13207-007	* Seal	1	
10	011-65006-301	* Suction Motor	1	
11	600-50059-017	* Bearing; FLW688ZZ	4	
12	011-13209-107	* Transfer Shaft B; Suction	1	
13	011-13208-100	* Transfer Shaft A; Suction	1	
14	011-13212-000	* Fulcrum Plate; Gear Pulley; Suction	1	
15	002-13252-003	* Gear Pulley B; Suction	1	
16	620-22364-001	* Belt; B236 M x L-4.8	1	
17	011-13204-008	* Pulley; Suction Motor	1	
18	011-13231-005	* De-electricity Brush; P.-Rcv.	1	
19	011-13205-004	* Cover Plate; Suction	1	
20	011-13134-000	* Damper; Cover Plate; Suction	1	
21	011-13233-008	* Dust-proof Cover 1; Rcv.	1	
22	011-13237-003	* Dust-proof Tape 1; Rcv.	1	
23	011-13235-000	* Dust-proof Sponge 1; Rcv.	1	
24	011-13234-004	* Dust-proof Cover 2; Rcv.	1	
25	011-13238-000	* Dust-proof Tape 2; Rcv.	1	
26	011-13236-007	* Dust-proof Sponge 2; Rcv.	1	
	011-93230-004	De-electricity Brush Ass'y		
27	011-13224-106	* Bracket; De-electricity Brush; Suction	1	
28	011-13225-102	* De-electricity Brush	1	
29	011-55064-001	Wire Harness; P.-Rcv. Sensor (Send)	1	

No.	Part No.	Part Name	Q'ty	Remark

Fig. 16 SUCTION UNIT (RC6300)

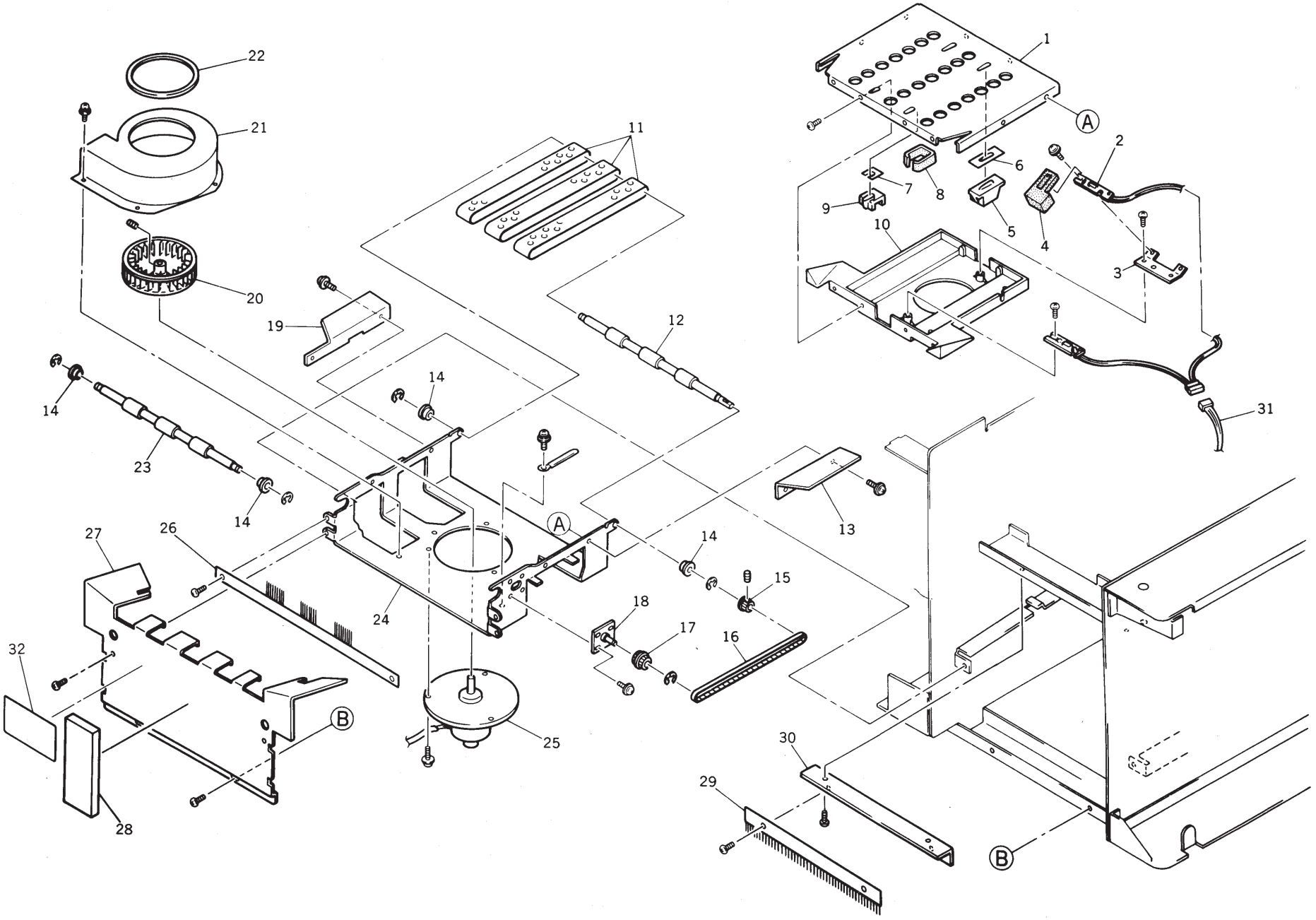

No.	Part No.	Part Name	Q'ty	Remark
	014-93200-000	Suction Unit III		
1	014-13210-000	* Face Cover II; Suction	1	
2	011-60035-109	* Paper Receiving Sensor (Send)	1	
3	011-13219-102	* Bracket; P.-Rcv. Sensor 1 (Send)	1	
4	011-13235-000	* Dust-proof Sponge 1; Rcv.	1	
5	011-13233-008	* Dust-proof Cover 1; Rcv.	1	
6	011-13237-003	* Dust-proof Tape 1; Rcv.	1	
7	011-13238-000	* Dust-proof Tape 2; Rcv.	1	
8	011-13236-007	* Dust-proof Sponge 2; Rcv.	1	
9	011-13234-004	* Dust-proof Cover 2; Rcv.	1	
10	011-13201-106	* Suction Cover (Upper)	1	
11	011-13220-003	* Transfer Belt	3	
12	011-13208-100	* Transfer Shaft A; Suction	1	
13	014-13203-003	* Suction Cover R	1	
14	600-50059-017	* Bearing; FLW688ZZ	4	
15	011-13204-008	* Pulley; Suction Motor	1	
16	620-22364-001	* Belt; B236 M x L-4.8	1	
17	002-13252-003	* Gear Pulley B; Suction	1	
18	011-13212-000	* Fulcrum Plate; Gear Pulley; Suction	1	
19	014-13202-007	* Suction Cover F	1	
20	011-13215-107	* Suction Fan	1	
21	011-13206-108	* Suction Fan Cover	1	
22	011-13207-007	* Seal	1	
23	011-13209-107	* Transfer Shaft B; Suction	1	
24	011-13232-109	* Suction Cover (Lower)	1	
25	011-65006-301	* Suction Motor	1	
26	011-13231-005	De-electricity Brush; P.-Rcv.	1	
27	014-13201-108	Cover Plate; Suction; A3	1	
28	011-13134-000	Damper; Cover Plate; Suction	1	
29	011-13225-102	De-electricity Brush	1	
30	011-13224-106	Bracket; De-electricity Brush; Suction	1	
31	011-55064-001	Wire Harness; P.-Rcv. Sensor (Send)	1	
32	550-20584-008	Seal; P.-Rcv.-T. Pos.	1	

No.	Part No.	Part Name	Q'ty	Remark

Fig. 17 PAPER RECEIVING TRAY

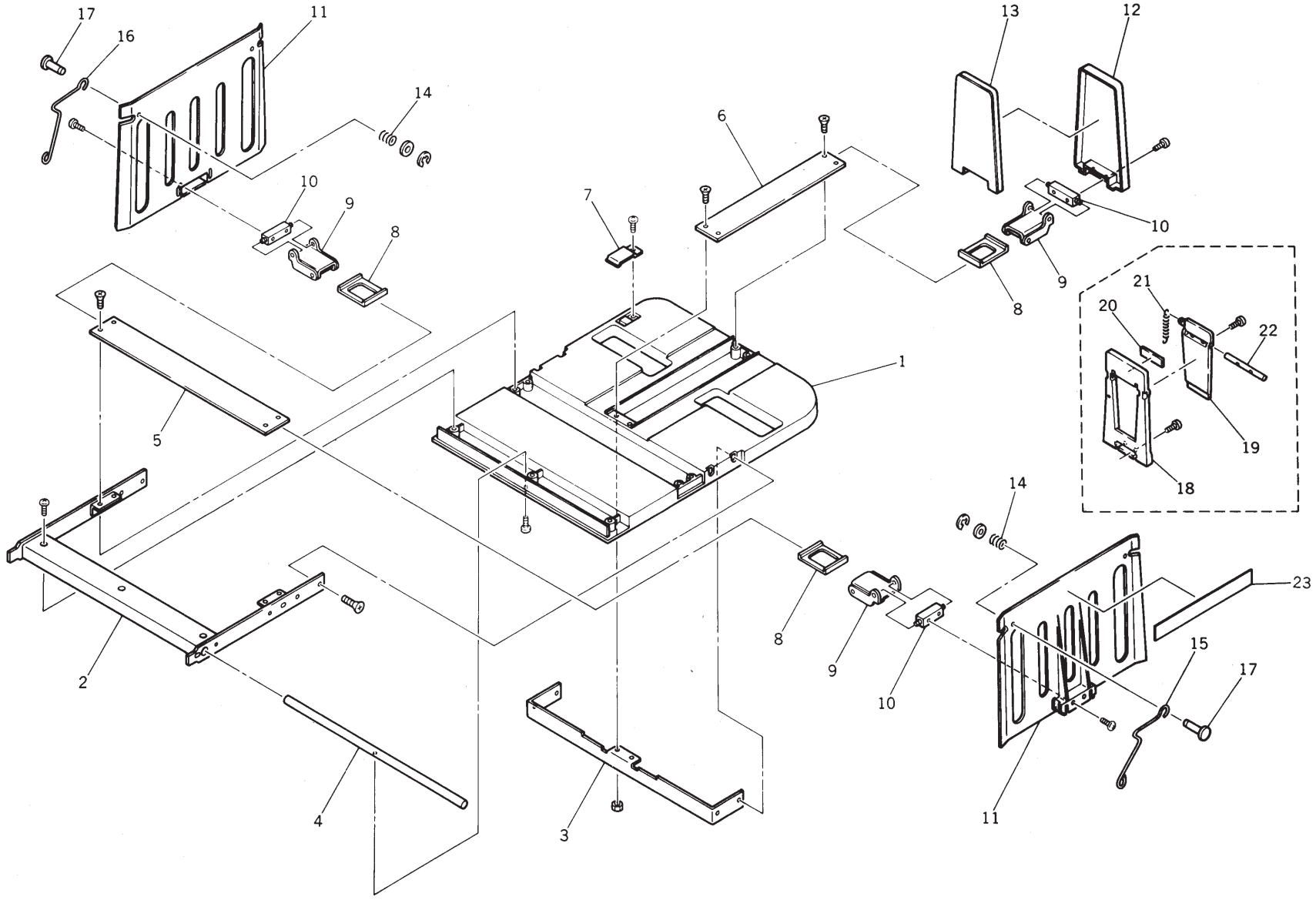

No.	Part No.	Part Name	Q'ty	Remark
	011-93100-402	Unit/Paper Receiving Tray II		
	011-93105-102	Unit/Paper Receiving Tray; 100US		U.S.A.
	014-93100-005	Unit/Paper Receiving Tray; A3	1	RC6300
	014-93105-007	Unit/Paper Receiving Tray; A3; 100US	1	RC6300 U.S.A.
1	011-13115-102	* Receiving Tray Plate II	1	
1	011-43102-102	* Receiving Tray Plate II; 100US	1	U.S.A.
2	011-13102-108	* Frame A; Paper Receiving Tray	1	
2	014-13101-006	* Frame A; Paper Receiving Tray; A3	1	RC6300
3	011-13106-006	* Frame B; Paper Receiving Tray	1	
4	011-13112-103	* Shaft; Paper Receiving Tray	1	
5	011-13108-106	* Slide Rail A; P.-Rcv.-T.	1	
6	011-13109-102	* Slide Rail B; P.-Rcv.-T.	1	
7	011-13107-002	* Catch Plate; P.-Rcv.-T.	1	
8	000-04123-000	* Slide Frame; Paper Guide; Rcv.	3	
8	014-13113-004	* Slide Frame; Paper Guide; Rcv. ; A3	3	RC6300
9	007-13101-001	* Slide Guide; Paper Guide; Rcv.	3	
9	014-13110-005	* Slide Guide; Paper Guide; Rcv. ; A3	3	RC6300
10	007-13124-109	* Base Block; Paper Guide; Rcv.	3	
11	011-13110-208	* Paper Guide; P.-Rcv.-T.	2	
12	011-13111-000	* Back Stop; P.-Rcv.-T.	1	
13	011-13133-100	* Damper; Back Stop; P.-Rcv.-T.	1	
14	011-13141-006	* Spring; Paper Guide; P.-Rcv.-T.	2	
15	011-13142-002	* Paper Guiding Arm F; P.-Rcv.-T.	1	
16	011-13143-009	* Paper Guiding Arm R; P.-Rcv.-T.	1	
17	011-13135-006	* Pin; Paper Guide	2	
18	006-11714-203	* Back Stop A; P.-Rcv.-T.; 100US	1	U.S.A.
19	006-11715-102	* Back Stop B; P.-Rcv.-T.; 100US	1	U.S.A.
20	006-11719-000	* Vibration Stopper; Back Stop; 100US	1	U.S.A.
21	006-11717-008	* Spring; Back Stop; Rcv.; 100US	1	U.S.A.
22	006-11716-109	* Hinge; Back Stop; Rcv.; 100US	1	U.S.A.
23	550-20087-004	Seal; Guide; P.-Rcv.-T.	1	

No.	Part No.	Part Name	Q'ty	Remark

Fig. 18 SCANNER AREA (1) (RC4000)

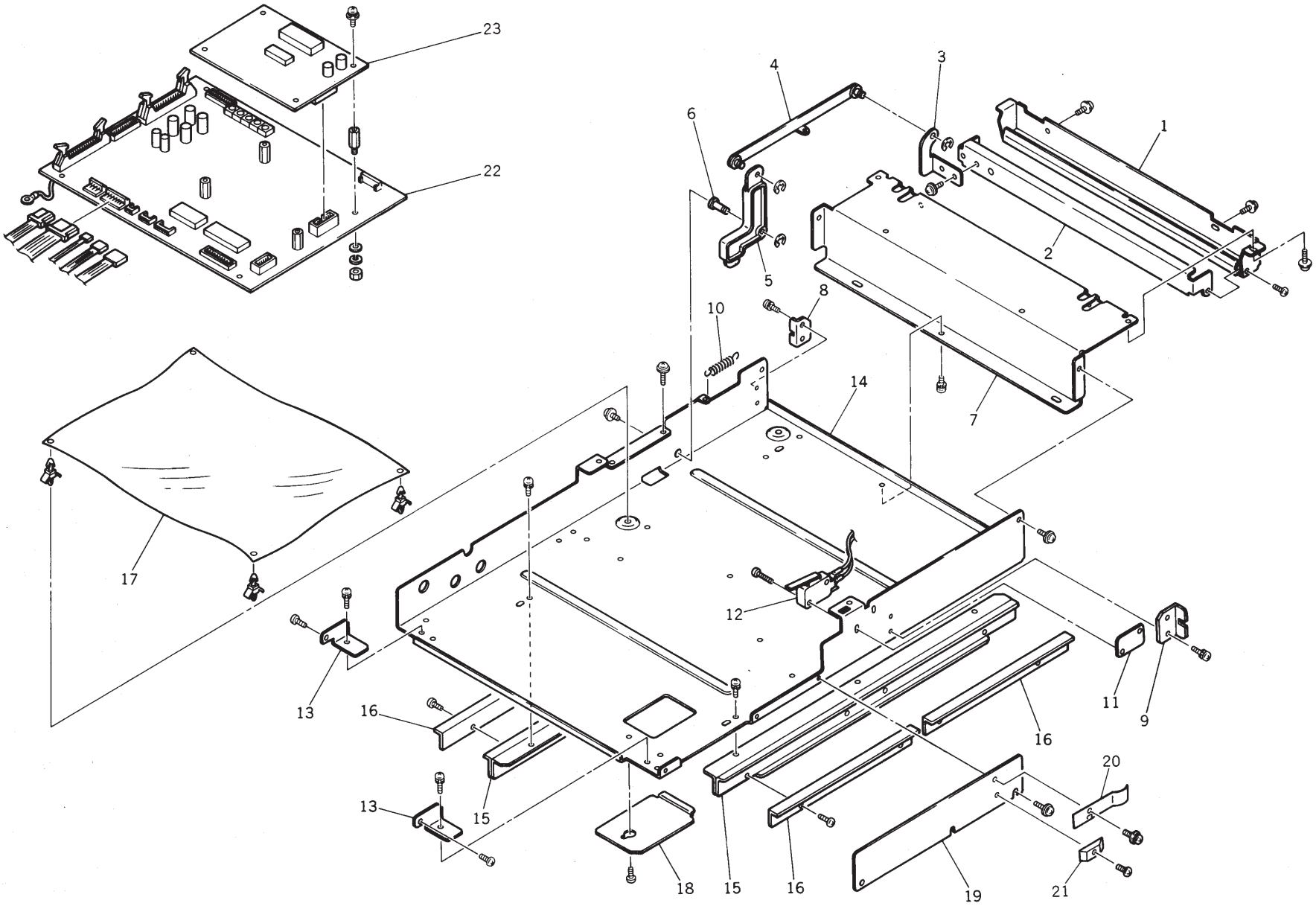

No.	Part No.	Part Name	Q'ty	Remark
	011-96041-202	Scanner Bottom Plate Ass'y		
1	011-16010-107	* Handle Cover; Scanner	1	
2	011-16011-103	* Handle; Scanner	1	
3	011-16012-002	* Link Plate A; Scanner	1	
4	011-16013-009	* Link Plate B; Scanner	1	
5	011-16015-001	* Slide Lock; Scanner	1	
6	011-16026-003	* Boss B; Link Plate B; Scanner	1	
7	011-16009-001	* Bracket; Handle; Scanner	1	
8	011-16037-005	* Stopper III; Scanner	1	
9	011-16039-008	* Stopper IV; Scanner	1	
10	011-16027-000	* Spring; Link Plate B; Scanner	1	
11	011-16029-002	* Bracket; Interlock Switch	1	
12	011-60009-205	* ADF Interlock SW	1	
13	011-16008-102	* Hinge; ADF Cover	2	
14	011-16007-203	* Bottom Plate; Scanner	1	
15	011-16016-008	* Bracket; Rail; Scanner	2	
16	011-16019-007	* Rail; Scanner	4	
17	011-16005-006	Sheet; Image Processing PCB	1	
18	011-16020-102	Bottom Blind Plate; Scanner	1	
19	011-16035-002	Side Blind Plate; Scanner	1	
20	011-16040-006	Front Ground Plate	1	
21	011-16032-100	Actuater Guide	1	
22	011-51035-104	Image Processing PCB III GA	1	
23	011-51526-205	Joint PCB	1	

No.	Part No.	Part Name	Q'ty	Remark

Fig. 19 SCANNER AREA (2) (RC4000)

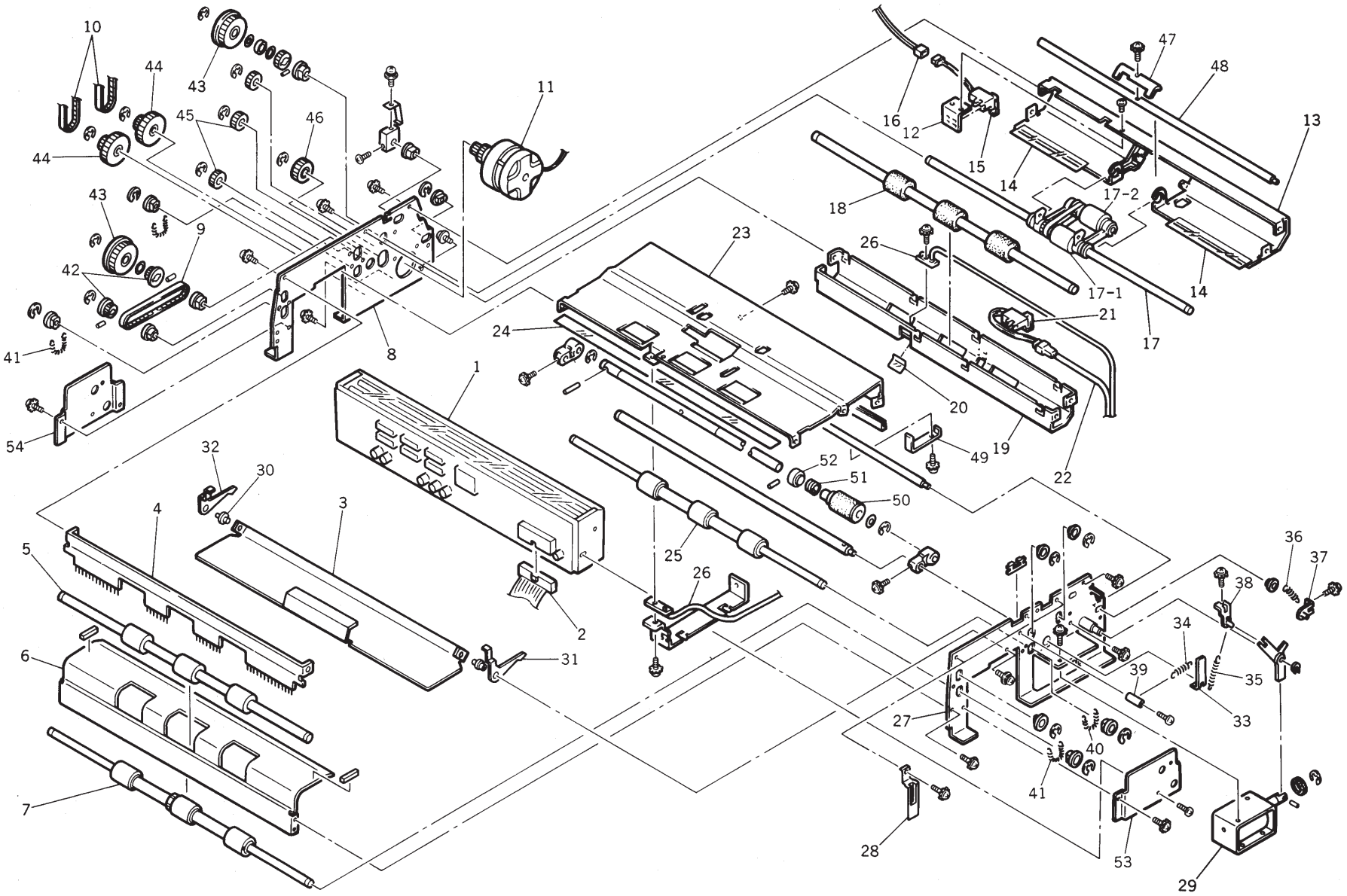

No.	Part No.	Part Name	Q'ty	Remark
1	011-70053-202	Image Scanner; 40	1	
2	011-55127-208	Wire Harness; Image Scanner; 40	1	
	011-96046-000	Unit/ADF II		
3	011-96102-007	* Original Guide 4 Ass'y	1	
4	011-96104-000	* De-electricity Brush Ass'y	1	
5	011-16345-001	* Exit Roller (Upper); Scanner	1	
6	011-16360-000	* Original Guide 5; Scanner	1	
7	011-96115-001	* Exit Roller (Lower); Scanner	1	
8	011-16379-003	* Side Frame R; Scanner	1	
9	011-16333-003	* Belt; 246-3M-4	1	
10	011-16328-000	* Belt; B 87M x L3.2	1	
11	011-96107-106	* Read Pulse Motor	1	
	011-96113-009	* Original Guide 1	1	
12	011-16356-003	** Sensor Stay	1	
13	011-16359-002	** Original Guide 1; Scanner	1	
14	011-16358-006	** Sheet; Original Guide 1; Scanner	2	
15	011-16357-000	** Original Sensor A	1	
16	011-96101-205	* Wire Harness; Original Regist./Det. Sensor	1	
17	011-96116-008	* Shaft; Original Feed	1	
17-1	011-16365-002	** Upper Original Pickup Roller	1	
17-2	011-16366-009	** Original Feed Roller	1	
18	011-16346-008	* Transfer Roller; Scanner	1	
	011-96117-004	* Original Guide 3 Ass'y	1	
19	011-16373-005	** Original Guide 3	1	
20	011-16372-009	** Sheet; Original Guide 3; Scanner	1	
21	011-16371-002	** Original Sensor B	1	
22	011-96101-205	* Wire Harness; Original Regist./Det. Sensor	1	
	011-96118-000	* Original Guide 2 Ass'y	1	
23	011-16377-000	** Original Guide 2	1	
24	011-16374-001	** Sheet; Original Guide 2; Scanner	1	
25	011-96111-006	* Transfer Roller (Lower)	1	
26	011-96100-209	* Original IN Sensor	1	
27	011-16378-007	* Side Frame L; Scanner	1	
28	011-16315-005	* Lever	3	
29	011-96105-103	* Original Feed Solenoid	1	

No.	Part No.	Part Name	Q'ty	Remark
30	011-16308-009	* Shaft; Open Lever	2	
31	011-16309-005	* Open Lever L; ADF	1	
32	011-16310-003	* Open Lever R; ADF	1	
33	011-16325-000	* Separation Lever; ADF	1	
34	011-16322-001	* Separation Spring; ADF	1	
35	011-16323-008	* Release Spring; ADF	1	
36	011-16324-004	* Registration Spring; ADF	1	
37	011-16327-003	* Registration Lever; ADF	1	
38	011-16326-007	* Release Lever; ADF	1	
39	011-16321-005	* Spacer; 3 x 12	1	
40	011-16347-004	* Spring; Transfer Roller	2	
41	011-16361-007	* Spring; Exit Roller	2	
42	011-16334-000	* Pulley II; ADF	2	
43	011-16331-000	* Pulley I; ADF	2	
44	011-16330-004	* Pulley; ADF	2	
45	011-16336-002	* Gear; G28	4	
46	011-16335-006	* Gear; G40	1	
47	011-16340-000	* Lever; Original Guide 1	1	
48	011-16341-006	* Shaft; Original Guide 1	1	
49	011-16342-002	* Registration Stopper	1	
50	011-16383-000	* Stripper Roller; ADF	1	
51	011-16382-004	* One-Way Spring; Stripper Roller	1	
52	011-16381-008	* Holder; One-Way Spring	1	
53	011-16048-104	Bracket L; Image Scanner; 40	1	
54	011-16049-100	Bracket R; Image Scanner; 40	1	
	550-20081-006	Seal; Scanner Cleaning	1	

Fig. 20 SCANNER AREA (1) (RC4500, RC5600/D)

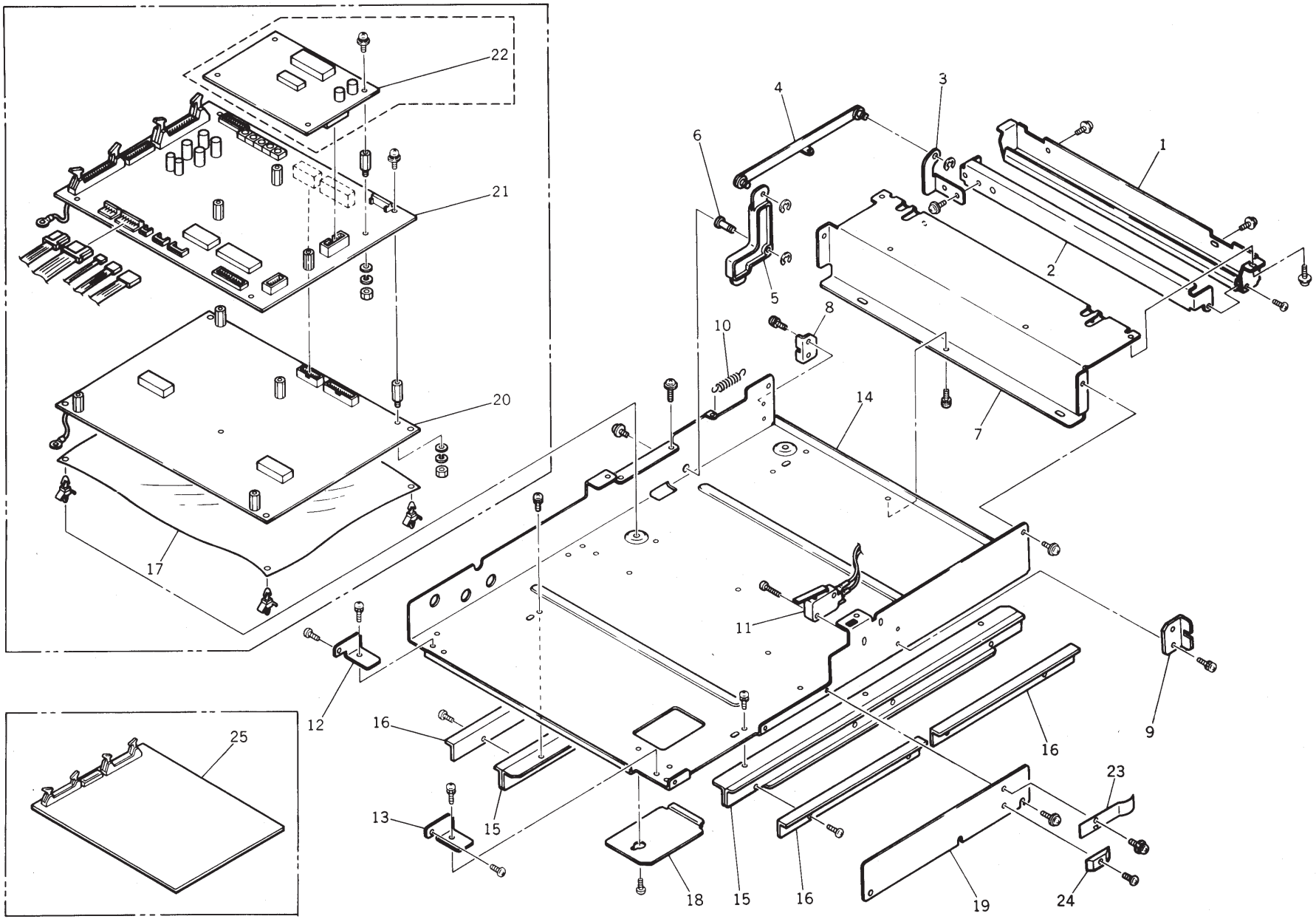

No.	Part No.	Part Name	Q'ty	Remark
	011-96041-202	Scanner Bottom Plate Ass'y		
1	011-16010-107	* Handle Cover; Scanner	1	
2	011-16011-103	* Handle; Scanner	1	
3	011-16012-002	* Link Plate A; Scanner	1	
4	011-16013-009	* Link Plate B; Scanner	1	
5	011-16015-001	* Slide Lock; Scanner	1	
6	011-16026-003	* Boss B; Link Plate B; Scanner	1	
7	011-16009-001	* Bracket; Handle; Scanner	1	
8	011-16037-005	* Stopper III; Scanner	1	
9	011-16039-008	* Stopper IV; Scanner	1	
10	011-16027-000	* Spring; Link Plate B; Scanner	1	
11	011-60009-205	* ADF Interlock SW	1	
12	011-16050-001	* Hinge II; ADF Cover	1	
13	011-16008-102	* Hinge; ADF Cover	2	
14	011-16007-203	* Bottom Plate; Scanner	1	
15	011-16016-008	* Bracket; Rail; Scanner	2	
16	011-16019-007	* Rail; Scanner	4	
17	011-16005-006	* Sheet; Image Processing PCB	1	
18	011-16020-102	Bottom Blind Plate; Scanner	1	
19	011-16035-002	Side Blind Plate; Scanner	1	
	011-90020-203	Unit/Image Processing PCB; 56D, 56		
	011-90025-205	* Unit/Image Processing PCB; 45	1	
20	011-51005-302	** Image Processing PCB B	1	
21	011-51004-306	** Image Processing PCB A	1	
22	011-51016-100	* Image Processing PCB C; 56D, 56	1	
23	011-16040-006	Front Ground Plate	1	
24	011-16032-100	Actuater Guide	1	
25	011-51028-000	Image Processing PCB GA	1	

No.	Part No.	Part Name	Q'ty	Remark

Fig. 21 SCANNER AREA (2) (RC4500, RC5600/D)

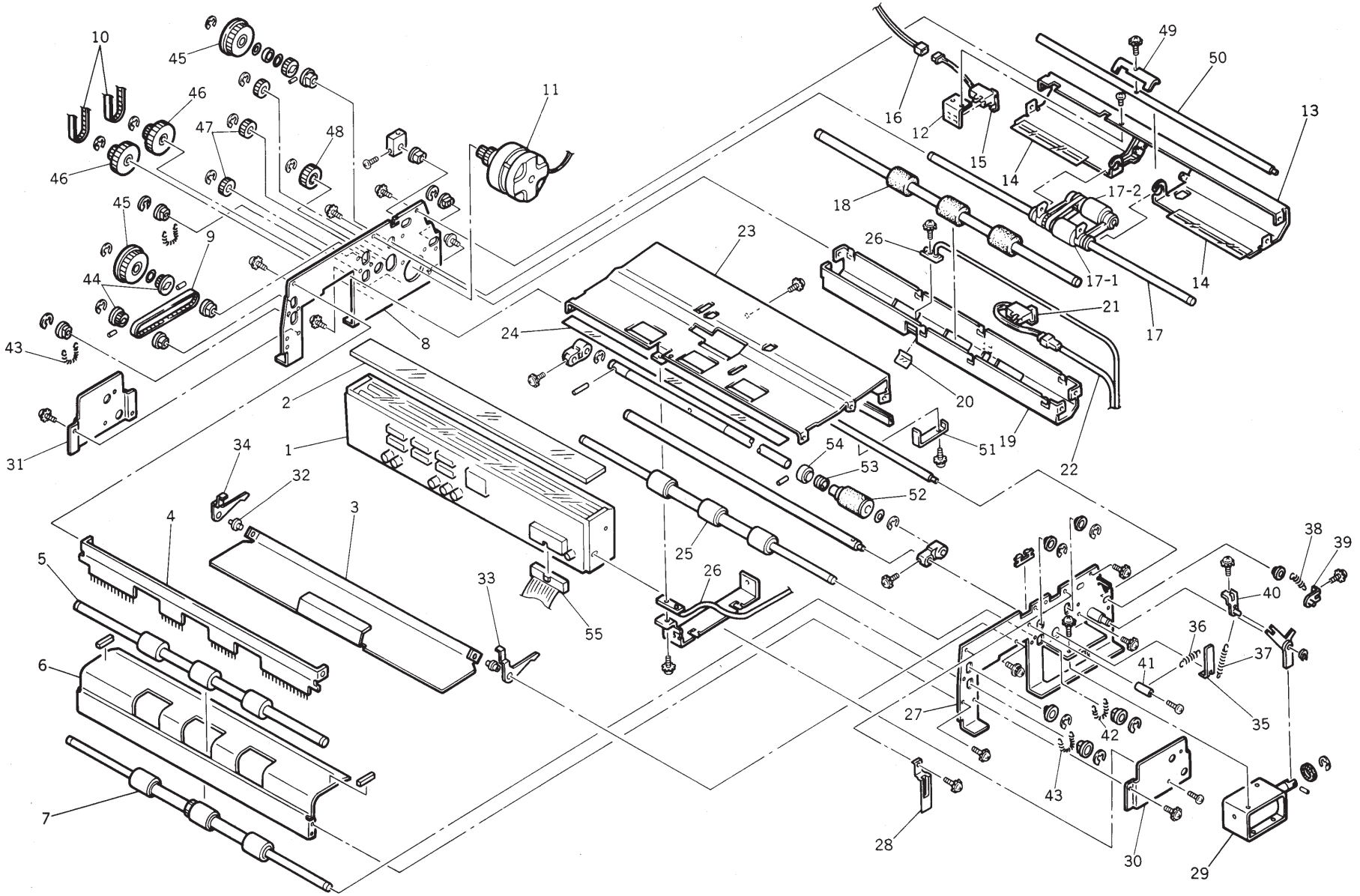

No.	Part No.	Part Name	Q'ty	Remark
1	011-70001-300	Image Scanner	1	
2	011-70058-000	* Glass Plate; Image Scanner	1	
	011-96046-000	Unit/ADF II		
3	011-96102-007	* Original Guide 4 Ass'y	1	
4	011-96104-000	* De-electricity Brush Ass'y	1	
5	011-16345-001	* Exit Roller (Upper); Scanner	1	
6	011-16360-000	* Original Guide 5; Scanner	1	
7	011-96115-001	* Exit Roller (Lower); Scanner	1	
8	011-16378-007	* Side Frame L; Scanner	1	
9	011-16333-003	* Belt; 246-3M-4	1	
10	011-16328-000	* Belt; B 87M x L3.2	1	
11	011-96107-106	* Read Pulse Motor	1	
	011-96113-009	* Original Guide 1	1	
12	011-16356-003	** Sensor Stay	1	
13	011-16359-002	** Original Guide 1; Scanner	1	
14	011-16358-006	** Sheet; Original Guide1; Scanner	2	
15	011-16357-000	** Original Sensor A	1	
16	011-96101-205	* Wire Harness; Original Regist./Det. Sensor	1	
17	011-96116-008	* Shaft; Original Feed	1	
17-1	011-16365-002	** Upper Original Pickup Roller	1	
17-2	011-16366-009	** Original Feed Roller	1	
18	011-16346-008	* Transfer Roller; Scanner	1	
	011-96117-004	* Original Guide 3 Ass'y	1	
19	011-16373-005	** Original Guide 3	1	
20	011-16372-009	** Sheet; Original Guide 3; Scanner	1	
21	011-16371-002	** Original Sensor B	1	
22	011-96101-205	* Wire Harness; Original Regist./Det. Sensor	1	
	011-96118-000	* Original Guide 2 Ass'y	1	
23	011-16377-000	** Original Guide 2	1	
24	011-16374-001	** Sheet; Original Guide 2; Scanner	1	
25	011-96111-006	* Transfer Roller (Lower)	1	
26	011-96100-209	* Original IN Sensor	1	
27	011-16379-003	* Side Frame R; Scanner	1	
28	011-16315-005	* Lever	3	
29	011-96105-103	* Original Feed Solenoid	1	

No.	Part No.	Part Name	Q'ty	Remark
30	011-16031-007	* Bracket L; Image Scanner	1	
31	011-16302-000	* Bracket R; Image Scanner	1	
32	011-16308-009	* Shaft; Open Lever	2	
33	011-16309-005	* Open Lever L; ADF	1	
34	011-16310-003	* Open Lever R; ADF	1	
35	011-16325-000	* Separation Lever; ADF	1	
36	011-16322-001	* Separation Spring; ADF	1	
37	011-16323-008	* Release Spring; ADF	1	
38	011-16324-004	* Registration Spring; ADF	1	
39	011-16327-003	* Registration Lever; ADF	1	
40	011-16326-007	* Release Lever; ADF	1	
41	011-16321-005	* Spacer; 3 x 12	1	
42	011-16347-004	* Spring; Transfer Roller	2	
43	011-16361-007	* Spring; Exit Roller	2	
44	011-16334-000	* Pulley II; ADF	2	
45	011-16331-000	* Pulley I; ADF	2	
46	011-16330-004	* Pulley; ADF	2	
47	011-16336-002	* Gear; G28	4	
48	011-16335-006	* Gear; G40	1	
49	011-16340-000	* Lever; Original Guide 1	1	
50	011-16341-006	* Shaft; Original Guide 1	1	
51	011-16342-002	* Registration Stopper	1	
52	011-16383-000	* Stripper Roller; ADF	1	
53	011-16382-004	* One-Way Spring; Stripper Roller	1	
54	011-16381-008	* Holder; One-Way Spring	1	
55	011-55006-109	Wire Harness; Image Scanner	1	
	550-20081-006	Seal; Scanner Cleaning	1	

Fig. 22 SCANNER AREA (3) (RC4500, RC5600/D)

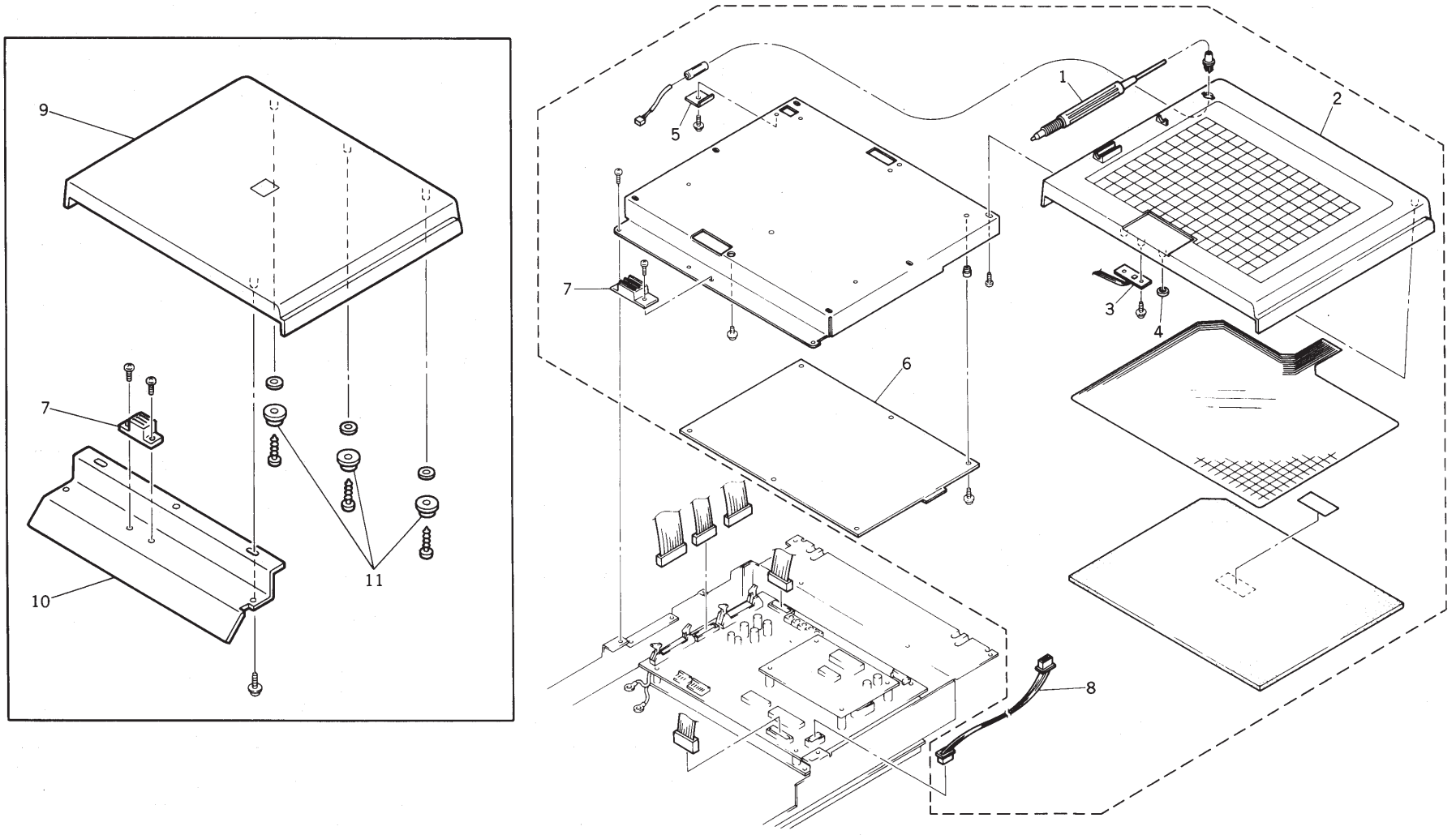

No.	Part No.	Part Name	Q'ty	Remark
	011-96501-009	Unit/Digitizer; 56D 100US		U.S.A.
	011-96502-005	Unit/Digitizer; 56D		
1	011-96520-003	* Stylus Pen	1	
2	011-96511-004	* Digitizer; 56D 100US	1	U.S.A.
2	011-96512-000	* Digitizer; 56D	1	
3	011-60000-003	* Scroll Sensor; 56D	1	
4	011-17515-008	* Spacer; Digitizer; 56D	1	
5	011-17514-001	* Cable Hold Plate; Stylus Pen; 56D	1	
6	011-51011-302	* Digitizer PCB; 56D	1	
7	660-05000-026	* Magnet Catch; SM-77S	1	
8	011-55007-008	Wire Harness; Digitizer; 56D	1	
	011-96065-004	Unit/Top Cover; 100US		U.S.A.
	011-96067-007	Unit/Top Cover		
7	660-05000-026	* Magnet Catch; SM-77S	1	
9	011-47110-207	* Top Cover; 100US	1	U.S.A.
9	011-47111-009	* Top Cover	1	
10	011-16002-007	* Bracket; Top Cover	1	
11	011-16004-107	* Boss; Top Cover	3	

No.	Part No.	Part Name	Q'ty	Remark

Fig. 23 SCANNER AREA (1) (RC5800, RC6300)

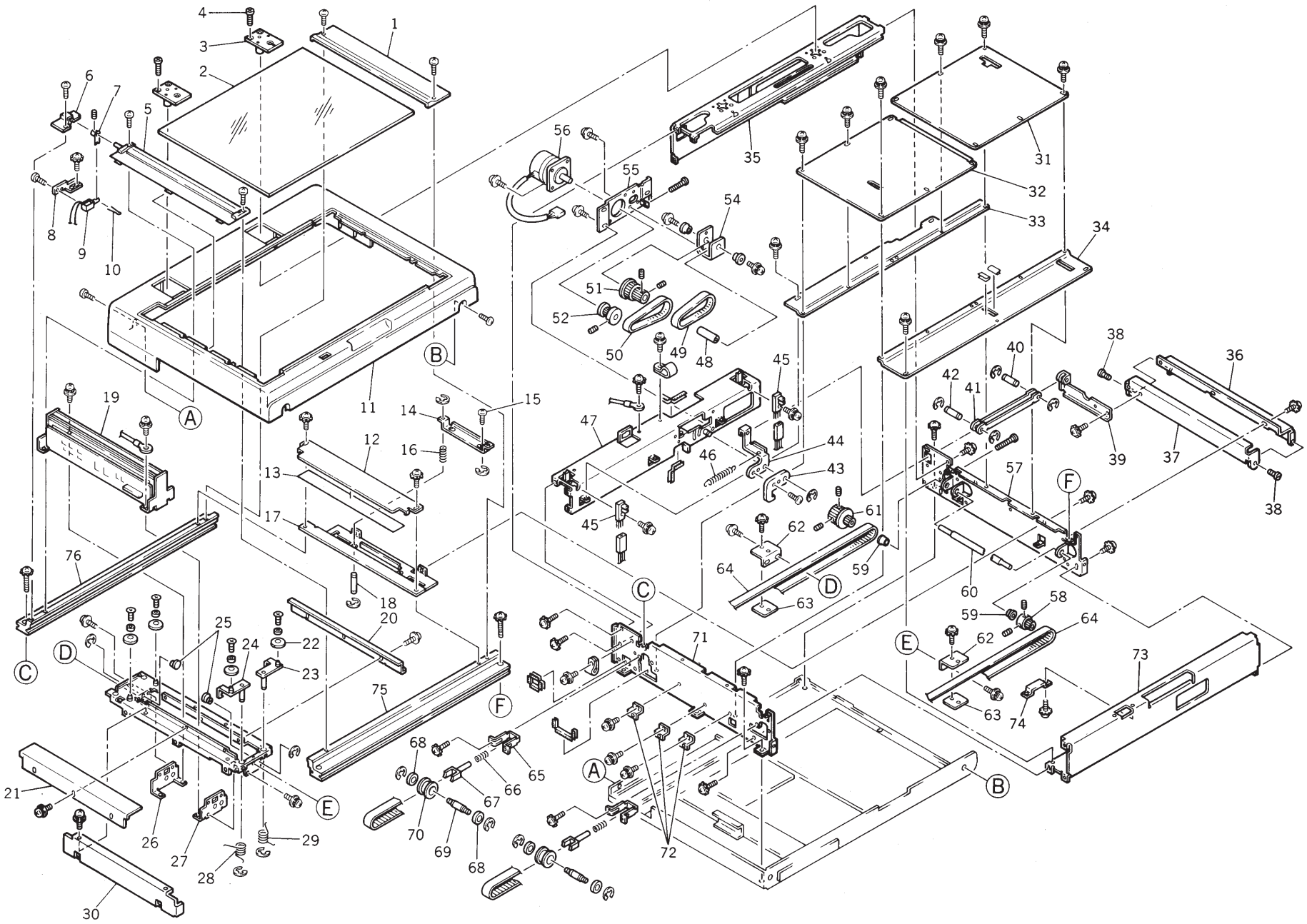

No.	Part No.	Part Name	Q'ty	Remark
	012-96111-100	Unit/Scanner; 58		RC5800
	012-96110-104	Unit/Scanner; 58US		RC5800 U.S.A.
	014-96111-105	Unit/Scanner; 63		RC6300
	014-96110-109	Unit/Scanner; 63US		RC6300 U.S.A.
		* Scanner Area (1)		
		* Scanner Area (2)		
1	012-16210-006	Shading Cover	1	
2	012-16288-005	Stage Glass	1	
2	012-16279-103	Stage Glass; US	1	U.S.A.
3	012-16257-002	Spacer Holder	2	
4	012-16258-009	Flat-Head Screw M4 x 6	6	
5	012-16295-001	Stopper Ass'y	1	
5	012-16294-005	Stopper Ass'y; US	1	U.S.A.
6	012-16203-000	Solenoid Cover	1	
7	012-16292-002	Stopper Crank	1	
8	012-16205-002	Solenoid Holder	1	
9	012-65001-005	Stopper Solenoid	1	
10	012-16206-009	Solenoid Pin	1	
11	012-16281-000	Scanner Cover	1	
12	012-16209-008	Shading Plate	1	
13	012-16208-001	Shading Mylar	1	
14	012-16260-003	CCD Fixing Plate	1	
15	012-16261-000	CCD Fixing Screw	2	
16	012-16263-002	Lifting Spring	2	
17	012-16259-005	Sub-Frame	1	
18	012-16262-006	Lifting Pin	2	
	012-96215-208	Unit/CCD		
19	012-70001-501	* CCD; CIPS305MS5A-1	1	
20	012-16275-108	* CCD Cover (Left)	1	
21	012-16274-101	* CCD Cover (Right)	1	
22	012-16268-004	* Roller; CCD	4	
23	012-16266-001	* Roller Tension Plate (Right)	1	
24	012-16267-008	* Roller Tension Plate (Left)	1	
25	012-16273-008	* AJ Pin	2	
26	012-16271-005	* CCD Holder (Front)	1	

No.	Part No.	Part Name	Q'ty	Remark
27	012-16272-001	* CCD Holder (Rear)	1	
28	012-16270-009	* Roller Spring (Left)	1	
29	012-16269-000	* Roller Spring (Right)	1	
30	012-16287-106	* CCD Cover	1	
31	012-16276-007	Blind Plate A	1	
32	012-16277-003	Blind Plate B	1	
33	012-16251-004	Blind Plate C	1	
34	012-16278-000	Guide Cover	1	
35	012-16256-103	Upper Back Frame	1	
36	012-16237-001	Grip Holder	1	
37	012-16236-005	Grip	1	
38	012-16238-008	Grip Pin	2	
39	012-16235-009	Grip Arm	1	
40	012-16229-009	Crank Pin	1	
	012-96205-008	Unit/Back Frame		
41	012-16228-002	* Crank Arm	1	
42	012-16229-009	* Crank Pin	1	
43	012-16226-000	* Hook	1	
44	012-16227-006	* Hook Holder	1	
45	443-30000-500	* Sensor; OS3701R-03	2	
46	012-16230-007	* Spring; Hook Holder	1	
47	012-16225-003	* Back Frame	1	
	012-96210-001	* Unit/Read Pulse Motor	1	
48	012-16233-006	** Pulley Shaft	1	
49	620-50716-002	** Belt; 142P2M6	1	
50	620-50806-001	** Belt; 160P2M6	1	
51	012-16232-000	** Pulley; P2M-42/24	1	
52	012-16231-003	** Pulley; P2M-20-M	1	
54	012-16234-002	** Bracket; Pulley	1	
56	012-65002-001	* Read Pulse Motor	1	
57	012-16222-101	Side Frame (Right)	1	
58	012-16220-001	Pulley; P2N-20-D	1	
59	600-08125-000	Bearing; MF128ZZS NSK	2	
60	012-16223-000	Drive Shaft	1	
61	012-16224-007	Pulley; P2M-20/36	1	

No.	Part No.	Part Name	Q'ty	Remark
62	012-16249-000	Driving Belt Holder Plate (Upper)	2	
63	012-16250-008	Driving Belt Holder Plate (Lower)	2	
64	620-55796-004	Belt; 1158P2M6	1	
65	012-16243-001	Tension Holder	2	
66	012-16247-007	Tension Spring	2	
67	012-16246-000	Tension Pulley Holder	2	
68	600-06102-002	Bearing; MR 106ZZS	4	
69	012-16245-004	Shaft; Tension Pulley	2	
70	012-16244-008	Tension Pulley	2	
71	012-16221-008	Side Frame (Left)	1	
72	012-16248-003	Reinforce Fitting	3	
73	012-16218-007	Front Frame	1	
74	012-16219-003	Magnet Plate	1	
75	012-16264-009	Front Rail	1	
76	012-16265-005	Back Rail	1	

No.	Part No.	Part Name	Q'ty	Remark

Fig. 24 SCANNER AREA (2) (RC5800)

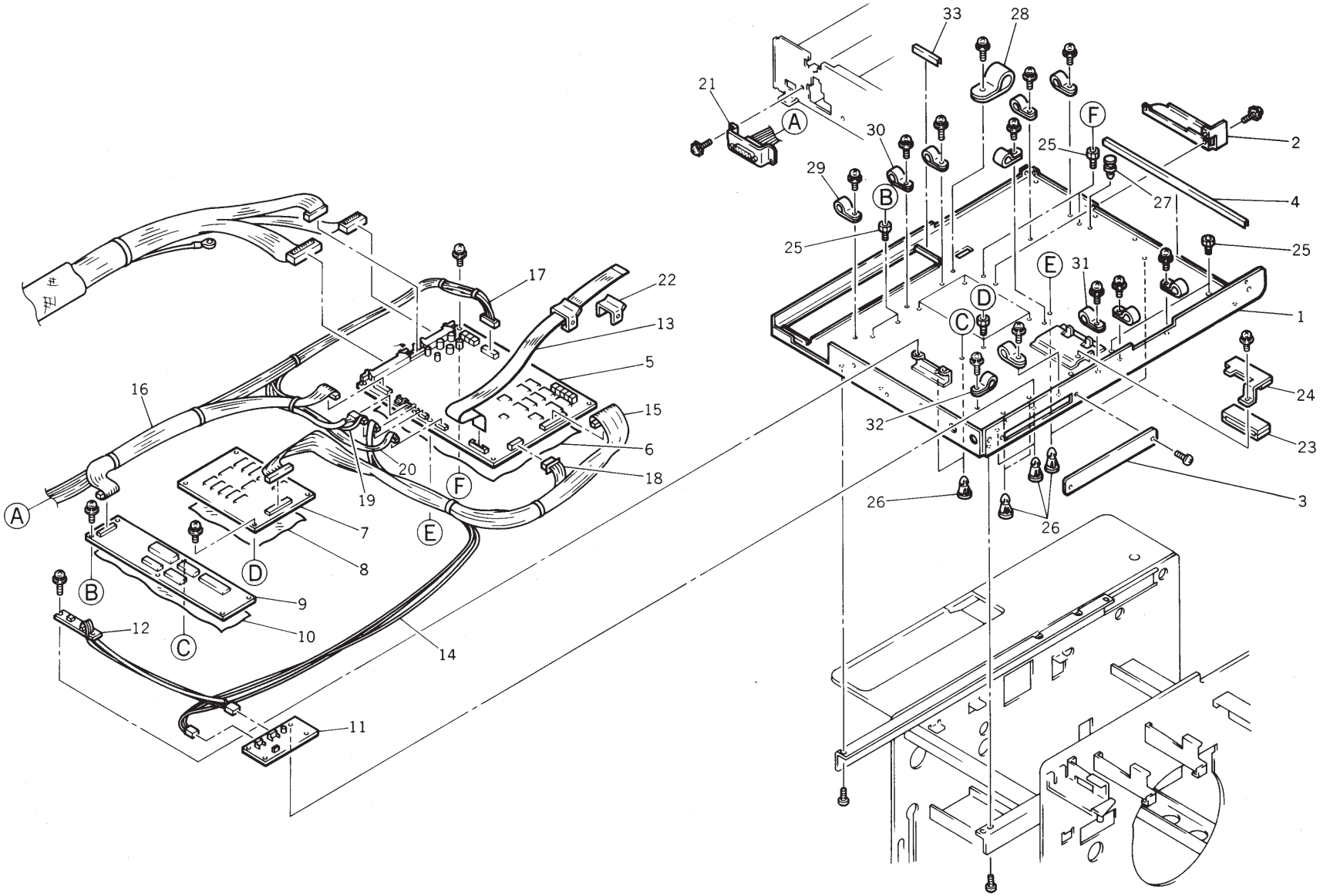

No.	Part No.	Part Name	Q'ty	Remark
1	012-16211-304	Scanner Bottom Plate	1	
2	012-16213-005	Sub-Base Frame	1	
3	012-16201-007	Blind Cover	1	
4	012-16252-000	Edge Fitting; Scanner Bottom Plate	1	
5	012-51007-000	Image Processing PCB (GA); RC5800	1	
6	012-16215-008	Sheet; Image Processing PCB; 58	1	
7	012-51016-204	A.C.C. PCB	1	
8	012-16216-004	Sheet; A.C.C. PCB	1	
9	012-51009-003	Trimming PCB	1	
10	012-16214-001	Sheet; Trimming PCB	1	
11	012-51017-103	Original Det. Sensor PCB II	1	
12	012-60018-201	Original Det. Sensor	1	
13	012-96218-002	Wire Harness; CCD Ass'y	1	
14	012-55029-203	Wire Harness; Original Det. Sensor	1	
15	012-55033-103	Wire Harness; A.C.C.	1	
16	014-55005-104	Wire Harness; Trimming PCB	1	
17	012-55031-305	Wire Harness; ADF	1	
18	012-55011-002	Wire Harness; Digitizer	1	
19	012-55056-103	Junction Wire; Stopper Solenoid	1	
20	012-55032-204	Wire Harness; Home-Pos. Sensor	1	
21	012-16217-000	Bracket; Connector	1	
22	012-16296-008	Bracket C; Core Set	1	
23	435-00015-005	Core Set; 2643-164501	1	
24	012-16298-000	Bracket B; Core Set	1	
25	012-16212-009	Spacer; L4.8	12	
26	505-00050-109	Spacer; KGLS-5RTVOL	8	
27	505-00050-206	Spacer; KGPS-5RT	3	
28	665-02021-207	Nylon Clip; NK-13N	1	
29	665-02021-100	Nylon Clip; NK-10N	2	
30	665-02021-002	Nylon Clip; NK-8N	4	
31	665-02020-901	Nylon Clip; NK-6N	3	
32	665-02020-804	Nylon Clip; NK-2N	5	
33	012-16253-007	Edge Fitting 1		
	012-16254-003	Edge Fitting 2		
	012-16255-000	Edge Fitting 3		

No.	Part No.	Part Name	Q'ty	Remark
	435-00004-003	Core Set; ESD QR-25	1	

Fig. 25 SCANNER AREA (2) (RC6300)

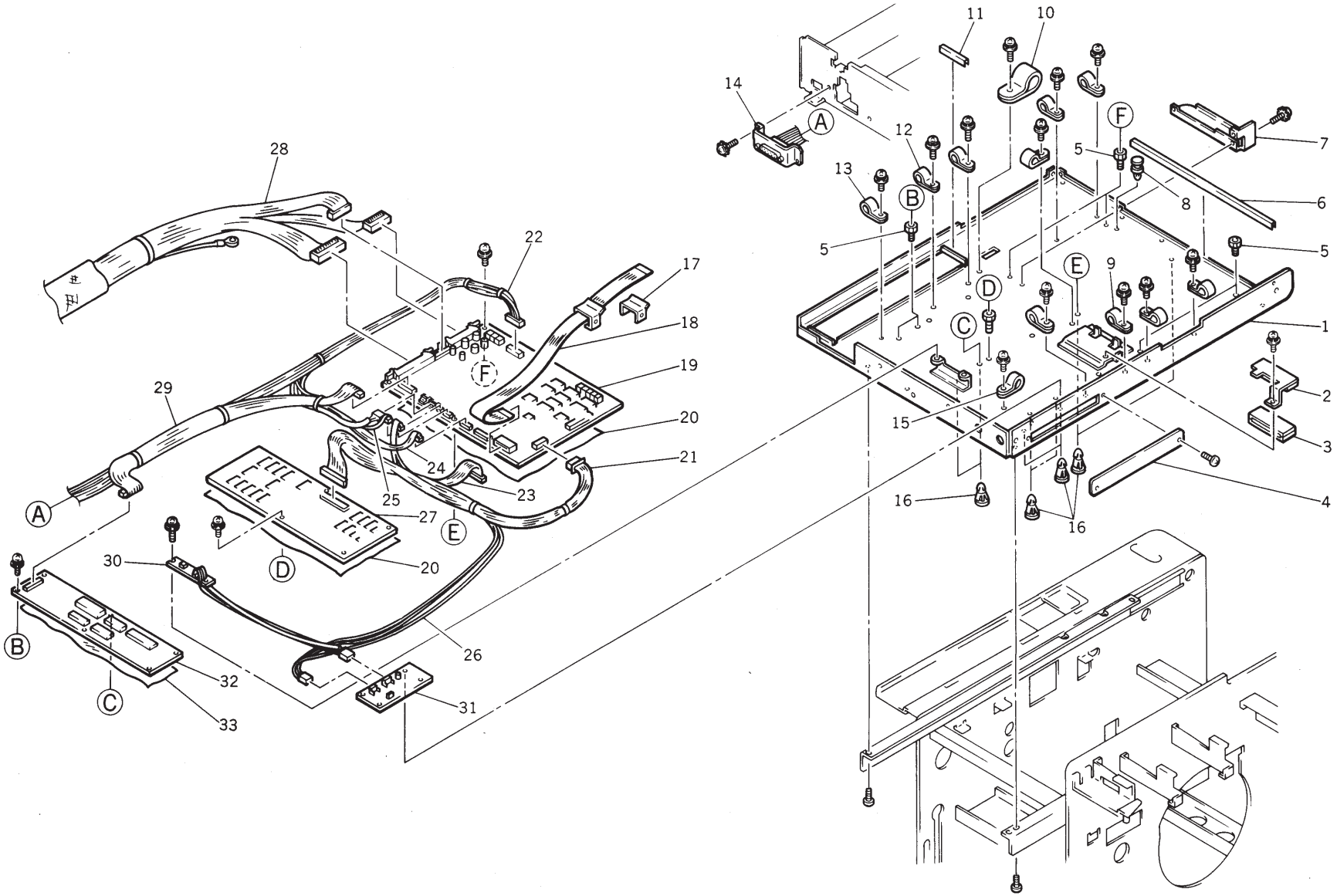

No.	Part No.	Part Name	Q'ty	Remark
1	012-16211-304	Scanner Bottom Plate	1	
2	012-16298-000	Bracket B; Core Set	1	
3	435-00015-005	Core Set; 2643-164501	1	
4	012-16201-007	Blind Cover	1	
5	012-16212-009	Spacer; L4.8	12	
6	012-16252-000	Edge Fitting; Scanner Bottom Plate	1	
7	012-16213-005	Sub-Base Frame	1	
8	505-00050-109	Spacer; KGLS-5RTVOL	8	
9	665-02020-901	Nylon Clip; NK-6N	3	
10	665-02021-207	Nylon Clip; NK-13N	1	
11	012-16253-007	Edge Fitting 1	1	
12	665-02021-002	Nylon Clip; NK-8N	4	
13	665-02021-100	Nylon Clip; NK-10N	2	
14	012-16217-000	Bracket; Connector	1	
15	665-02020-804	Nylon Clip; NK-2N	5	
16	505-00050-206	Spacer; KGPS-5RT	8	
17	012-16296-008	Bracket C; Core Set	1	
18	012-96218-002	Wire Harness; CCD Ass'y	1	
19	014-50000-104	Image Processing PCB; A3	1	
20	012-16215-008	Sheet; Image Processing PCB; 58	1	
21	012-55011-002	Wire Harness; Digitizer	1	
22	012-55031-305	Wire Harness; ADF	1	
23	014-55002-105	Wire Harness; Image-MTF	1	
24	012-55032-204	Wire Harness; Home-Pos. Sensor	1	
25	012-55056-103	Junction Wire; Stopper Solenoid	1	
26	012-55029-203	Wire Harness; Original Det. Sensor	1	
27	014-50001-003	MTF2 PCB	1	
28	012-55057-207	Wire Harness; Image Processing; 58	1	
29	014-55005-104	Wire Harness; Trimming PCB	1	
30	012-60018-201	Original Det. Sensor	1	
31	012-51017-103	Original Det. Sensor PCB II	1	
32	012-51009-003	Trimming PCB	1	
33	012-16214-001	Sheet; Trimming PCB	1	

No.	Part No.	Part Name	Q'ty	Remark

Fig. 26 ADF AREA (1) (RC5800, RC6300)

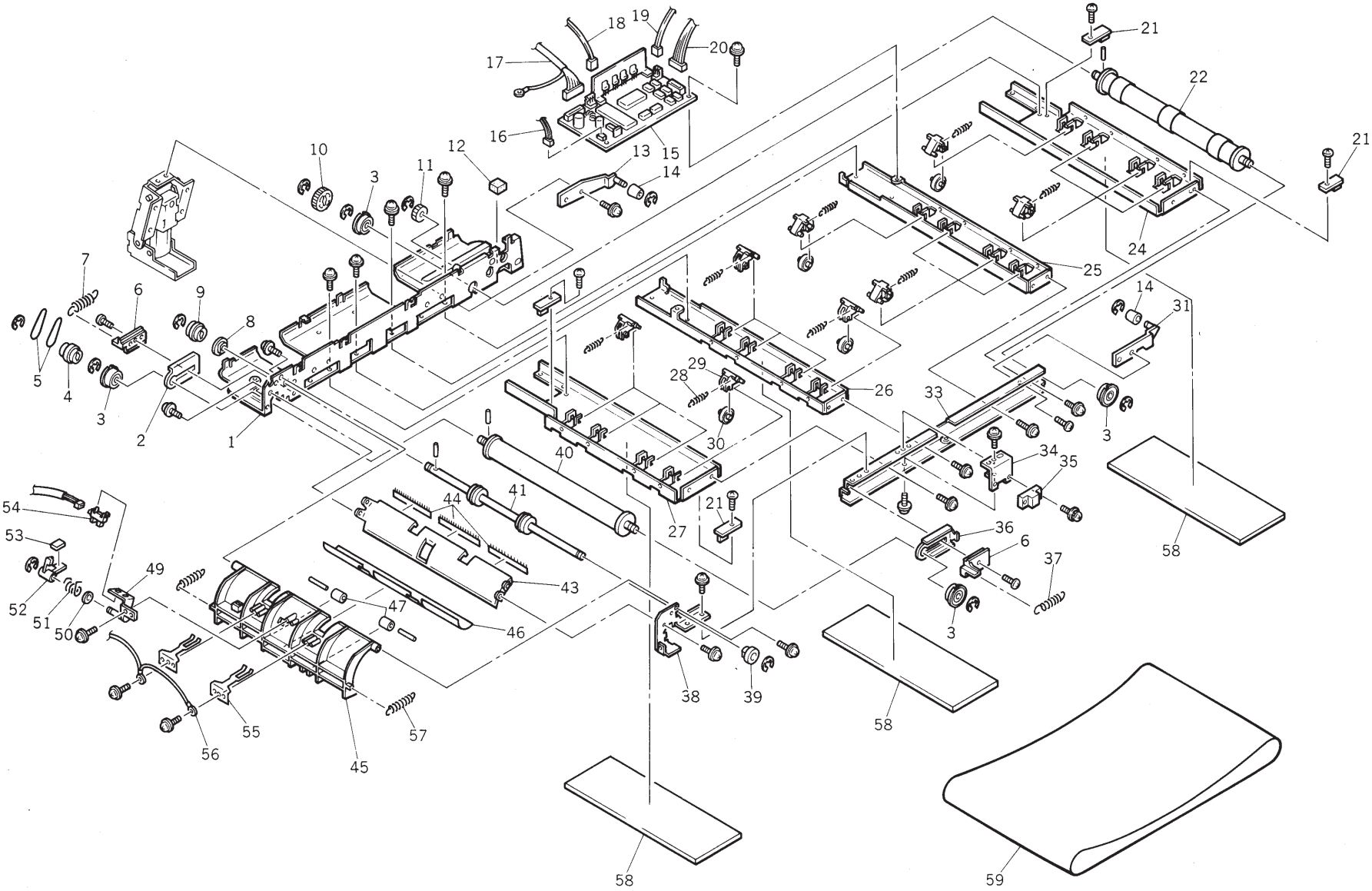

No.	Part No.	Part Name	Q'ty	Remark
1	012-16401-103	ADF Rear Frame	1	
2	012-16402-002	Tension Plate (Rear)	1	
3	600-08162-002	Bearing; L816ZZ	4	
4	012-16403-009	Or.-Trans Belt Pulley	1	
5	640-63320-003	O Ring; S32 - 1.8	2	
6	012-16404-005	Holder Plate; O.T.B. Pulley	2	
7	012-16405-001	Spring; Belt Tension (Back)	1	
8	607-13000-801	Metal; 6S	1	
9	012-16406-008	ADF Ejection Pulley	1	
10	012-16407-004	Belt Gear	1	
11	012-16408-000	Gear; 28	1	
12	012-16409-007	Damper	1	
	012-96201-002	Unit/Side-shift Prevention Collar (Rear)		
13	012-16410-005	* Adj. Plate (Rear); Side-shift Prevention	1	
14	012-16411-001	* Collar; Side-shift Prevention	2	
15	012-51901-100	ADF Control PCB	1	
16	012-55901-008	Wire Harness; Ori.-Exit Sensor	1	
17	012-55907-006	Wire Harness; ADF Control	1	
18	012-55903-000	Wire Harness; Open/Close SW	1	
19	012-55904-007	Wire Harness; ADF Motor	1	
20	012-55905-003	Wire Harness; Original Feed	1	
21	012-16412-008	DF Spacer	4	
22	012-16413-004	Or.-Trans Belt Roller (Right)	1	
24	012-16414-000	ADF Stay (Right)	1	
25	012-16415-007	ADF Mid Stay (Right)	1	
26	012-16416-003	ADF Mid Stay (Left)	1	
27	012-16417-000	ADF Stay (Left)	1	
28	012-16418-006	Spring; Holding Roller	16	
29	012-16419-002	Arm; Holding Roller	16	
30	012-16420-000	Holding Roller	16	
	012-96202-009	Unit/Side-shift Prevention Collar (Front)		
31	012-16421-007	* Adj. Plate (Front); Side-shift Prevention	1	
33	012-16422-003	ADF Front Frame; 58	1	
34	012-16423-000	Bracket; ADF Magnet Catch	1	
35	660-05000-700	Magnet Catch	1	

No.	Part No.	Part Name	Q'ty	Remark
36	012-16424-006	Tension Plate (Front)	1	
37	012-16425-002	Spring; Belt Tension (Front)	1	
38	012-16426-009	Side Frame; ADF Ejection	1	
39	011-16339-001	Metal; 6 mm	1	
40	012-16427-005	Or.-Trans Belt Roller (Left)	1	
41	012-16428-001	ADF Ejection Roller	1	
43	012-16429-008	ADF Ejection Plate	1	
44	012-16522-008	De-electricity Brush	3	
	012-96204-001	Unit/ADF Ejection Guide		
45	012-16430-103	* ADF Ejection Guide	1	
46	012-16431-002	* Mylar Sheet; ADF Ejection	1	
47	012-16432-009	* Collar; ADF Ejection	2	
49	012-16433-005	* Bracket; ADF Ejection Sensor	1	
50	012-16434-001	* Collar; ADF Ejection Sensor	1	
51	012-16435-008	* Spring; ADF Ejection Sensor	1	
52	012-16436-004	* Actuator; ADF Ejection Sensor	1	
53	012-16437-000	* Stopper	1	
54	443-30000-608	* Sensor; TLP1217(C2)	1	
55	012-16438-007	Spring; Original Exit Plate	2	
56	012-55906-204	Ground Wire	1	
57	012-16439-003	Spring; Original Exit Guide	2	
58	012-16440-109	Hold Plate; Original Loading	3	
59	012-16441-008	Belt; Original Loading	1	

Fig. 27 ADF AREA (2) (RC5800, RC6300)

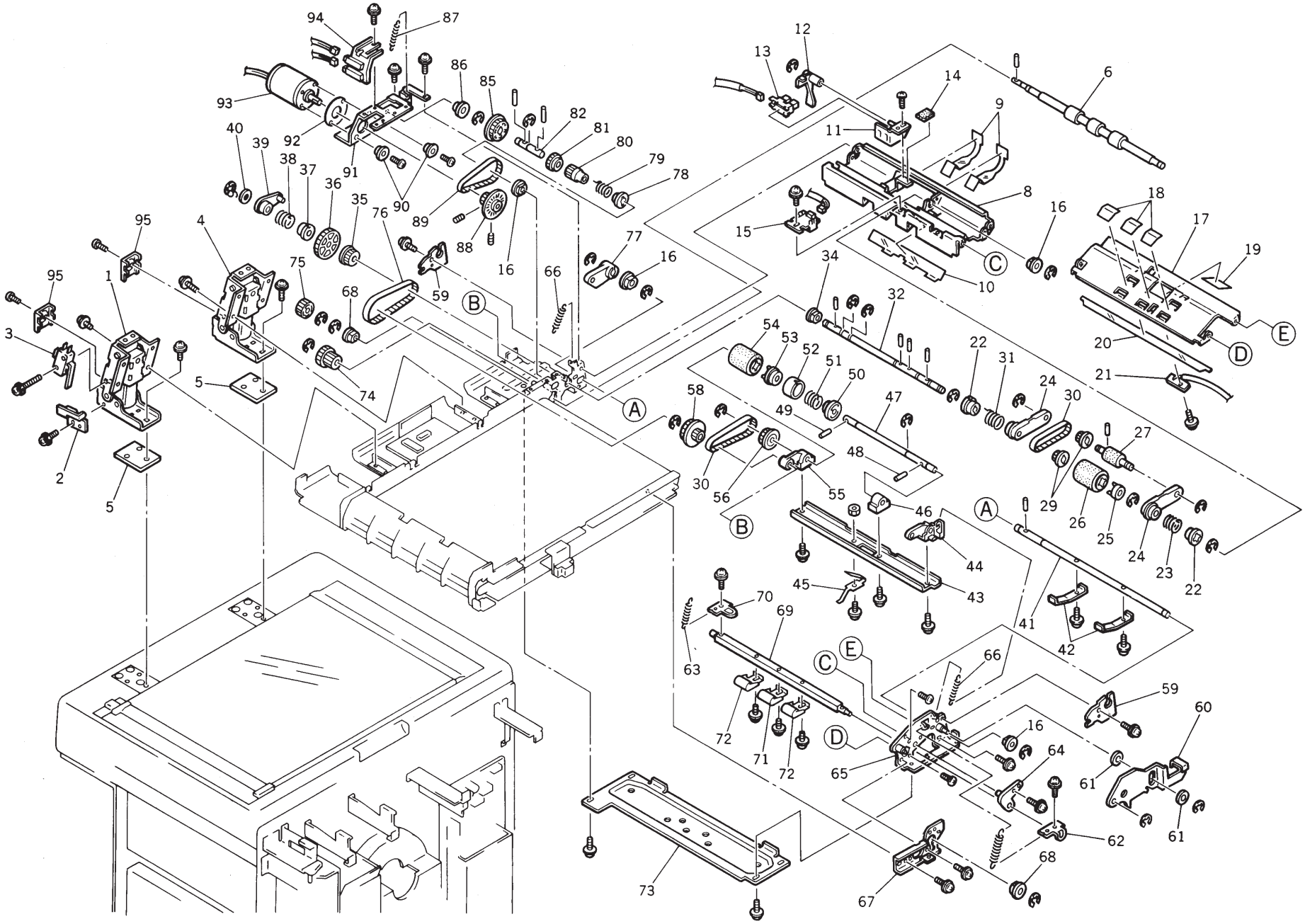

No.	Part No.	Part Name	Q'ty	Remark
1	012-16442-004	ADF Hinge (Left)	1	
2	012-16443-000	Actuator Plate; ADF SW	1	
3	443-01000-704	Micro-SW; V62-1A4	1	
4	012-16444-007	ADF Hinge (Right)	1	
5	012-16445-003	ADF Hinge Spacer	2	
6	012-16446-000	Registration Roller	1	
	012-96213-000	Unit/Original Feed (Upper)		
8	012-16447-006	* Upper Guide Plate; ADF	1	
9	012-16448-002	* Mylar Sheet; Original Feed	2	
10	011-16449-009	* Mylar Sheet; Original Feed (Up)	1	
11	012-16450-007	* Bracket; ADF Original Det. Sensor	1	
12	012-16451-003	* Actuator; ADF Original Det. Sensor	1	
13	443-30000-608	* Sensor; TLP1217(C2)	1	
14	012-16452-000	* Stopper; Original Feed Roller	1	
15	012-60901-008	ADF Registration Sensor (Receive)	1	
16	011-16339-001	Metal; 6 mm	3	
	012-96206-004	Unit/Original Feed (Lower)		
17	012-16453-006	* Lower Guide Plate; ADF	1	
18	012-16454-002	* Mylar Sheet; Registration	3	
19	012-16455-009	* Mylar Sheet; Separator	1	
20	012-16456-005	* Mylar Sheet; Original Feed (Low)	1	
21	012-60902-004	* ADF Registration Sensor (Send)	1	
	012-96207-000	Unit/Original Stripper		
22	012-16457-001	* Arbor	2	
23	012-16458-008	* Spring; Original Feed (Front)	1	
24	012-16459-004	* Link Plate; Original Feed Roller	2	
25	012-16460-002	* Joint; Original Feed	1	
26	012-16461-009	* Original Pickup Roller (Upper)	1	
27	012-16462-005	* Original Feed Roller	1	
29	012-16463-001	* Pulley 18	2	
30	620-50504-005	* Belt; B4OS2M100	1	
31	012-16464-008	* Spring; Original Feed (Back)	1	
32	012-16465-004	* Shaft; Original Pickup Roller	1	
34	011-16339-001	* Metal; 6 mm	1	
35	012-16466-000	* Pulley; Original Pickup	1	

No.	Part No.	Part Name	Q'ty	Remark
36	012-16467-007	* Gear; Original Pickup	1	
37	012-16468-003	* Arbor Clutch	1	
38	012-16469-000	* Release Spring Clutch	1	
39	012-16470-008	* Stopper Release Plate 2	1	
40	639-00605-007	* Washer; 6 x 10 x 0.5	1	
41	012-16471-004	Stopper Shaft; Original Feed	1	
42	012-16472-000	Stopper; Original Feed	2	
43	012-16473-007	Bracket; Original Separation Roller	1	
44	012-16474-003	Side Holder (Rear)	1	
45	012-16475-000	Ground Plate	1	
46	012-16476-006	Center Holder	1	
47	012-16477-002	Shaft; Original Separation Roller	1	
50	012-16478-009	Joint B; Original Sepa. Roller	1	
51	012-16479-005	Spring; Original Sepa. Roller	1	
52	012-16480-003	Spring Cover; Original Sepa. Roller	1	
53	012-16481-000	Joint; Original Sepa. Roller	1	
54	012-16482-006	Original Separation Roller	1	
55	012-16483-002	Side Holder (Front)	1	
56	012-16484-009	Pulley; Original Sepa. Roller	1	
58	012-16485-005	ADF Idler Pulley	1	
59	012-16486-001	Set Plate; Original Tray	2	
60	012-16487-008	Release Lever Ass'y	1	
61	638-90610-007	Washer; 6.5 x 13 x 1	2	
62	012-16488-004	Release Plate (Front); Registration Collar	1	
63	012-16489-000	Release Spring; Registration Collar	2	
64	012-16490-009	Set Plate; Registration Collar	1	
65	012-16491-005	Side Frame; Registration Collar	1	
66	012-16492-001	Spring; Side Holder	2	
67	012-16493-008	Joint Plate	1	
68	011-16344-005	Metal; 8 mm	2	
	012-96208-007	Unit/Original Registration Collar		
69	012-16494-004	* Shaft; Registration Collar	1	
70	012-16495-000	* Release Plate (Rear); Registration Collar	1	
71	012-16496-007	* Registration Collar M	1	
72	012-16497-003	* Registration Collar L	2	

No.	Part No.	Part Name	Q'ty	Remark
73	012-16498-000	ADF Base Cover	1	
74	012-16499-006	Gear 18/25	1	
75	012-16500-004	Gear; Registration Collar	1	
76	620-50634-006	Belt; B4OS2M126	1	
77	012-16501-000	Stopper Release Plate 1	1	
	012-96209-003	Unit/Clock Sensor Shaft		
78	012-16502-007	* Center Arbor; Clock	1	
79	012-16503-003	* Center Spring Clutch; Clock	1	
80	012-16504-000	* Center Gear; Clock	1	
81	012-16505-006	* Clutch Gear; Clock	1	
82	012-16506-002	* Center Shaft; Clock	1	
85	012-16507-009	* Pulley 60	1	
86	607-13000-909	Metal; F6 x 10/8 x 6; 12 x 2	1	
87	012-16508-005	Spring; Stopper Release	1	
	012-96214-007	Unit/ADF Motor		
88	012-16509-001	* Clock Disc Pulley	1	
89	620-50906-006	* Belt; B6OS2M180	1	
90	012-16510-000	* Collar; ADF Motor	2	
91	012-16511-006	* Bracket; ADF Motor	1	
92	012-16512-002	* Mylar; ADF Motor	1	
93	012-65901-006	* ADF Motor	1	
94	012-96211-008	* Unit/Clock Sensor	1	

No.	Part No.	Part Name	Q'ty	Remark

Fig. 28 MASTER-MAKING AREA (1) (RC4000, RC4500, RC5600/D, RC5800)

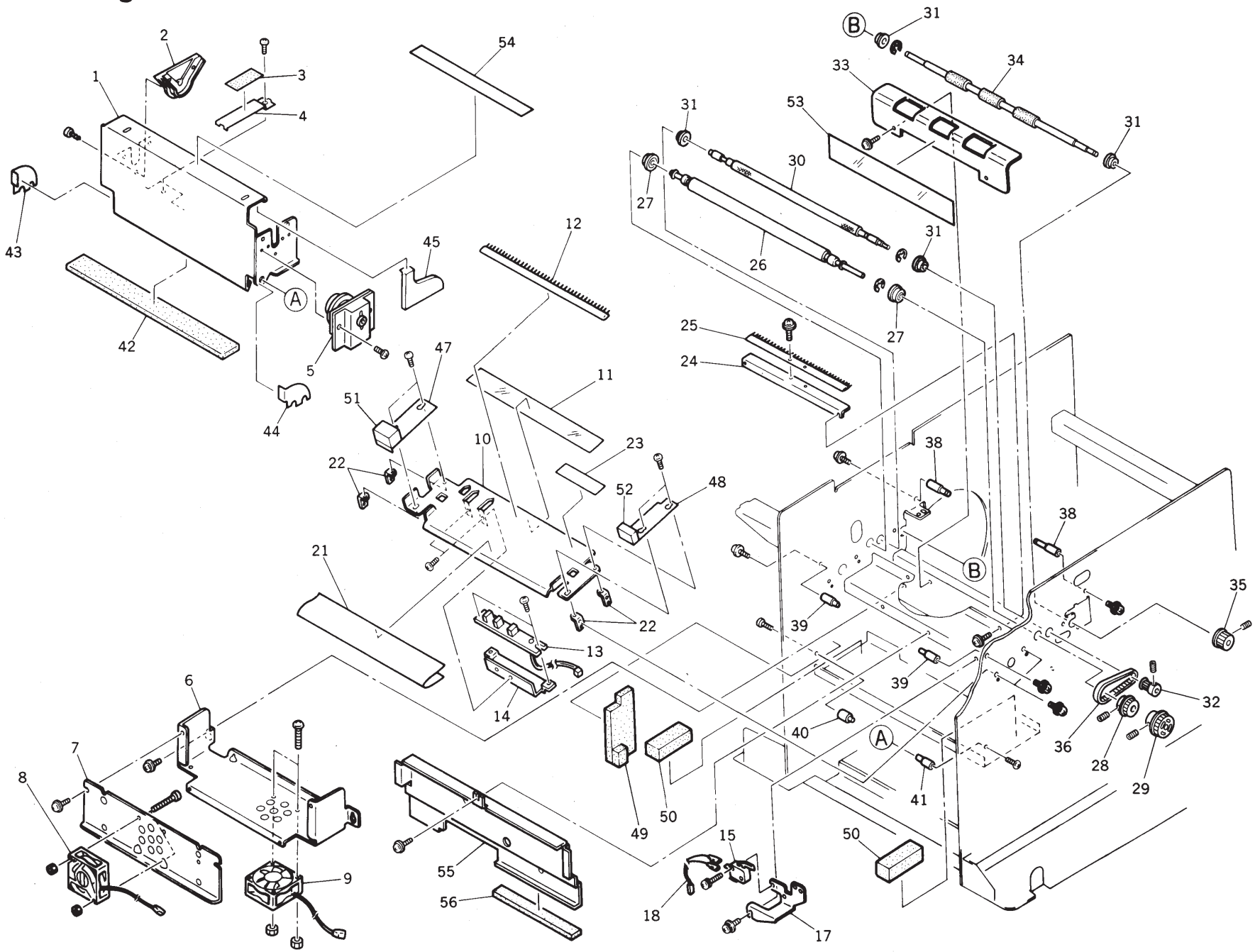

No.	Part No.	Part Name	Q'ty	Remark
	011-95207-107	Unit/Master Roll Holder D; B4		B4
1	011-15250-201	* Master Roll Holder	1	B4
2	011-15254-002	* Holder; Master Roll	1	B4
3	011-15263-001	* Cushion; Master Roll Holder	1	B4
4	011-15294-004	* Tension Plate; Master Roll Holder	1	B4
5	011-95208-103	* Unit/Damper; Master Roll Holder; B4	1	B4
	011-95212-100	Unit/Master Roll Holder D; A4		A4, Legal
1	011-15250-201	* Master Roll Holder	1	A4, Legal
2	011-15254-002	* Holder; Master Roll	1	A4, Legal
3	011-15263-001	* Cushion; Master Roll Holder	1	A4, Legal
4	011-15294-004	* Tension Plate; Master Roll Holder	1	A4, Legal
5	011-95211-104	* Unit/Damper; Master Roll Holder; A4	1	A4, Legal
	011-95095-007	Stocker Ass'y		
6	011-15023-000	* Frame A; Stocker	1	
7	011-15017-000	* Plate B; Stocker	1	
8	011-65025-004	* Loading Fan	1	
9	011-65012-107	* Storage Fan	1	
	011-95070-101	Set Guide Plate Ass'y	1	
10	011-15153-109	* Set Guide Plate; M.-M.	1	
11	011-15061-107	* Set Guide Sheet; M.-M.	1	
12	011-11404-000	*De-electricity Brush; B4	1	
13	011-60012-109	* Master End Sensor	1	
14	011-15143-006	* Bracket II; Master End Sensor	1	
	011-95360-002	Master Loading Unit SW Ass'y		
15	443-00120-501	* Micro-SW; E21-51N	1	
17	011-15113-000	* Bracket; Micro-SW; M.-M.	1	
18	011-55037-101	* Wire Harness; Master Loading Unit	1	
21	011-15162-000	Sheet; Master Guide Plate; M.-M.	1	
22	000-01138-006	L Plate; Guide Plate	4	
23	550-20078-102	Seal; Setting Master	1	
	011-95085-001	De-electricity Brush Ass'y	1	
24	011-15042-005	* Bracket; De-electricity Brush; M.-M.	1	
25	011-15041-009	* De-electricity Brush	1	
26	011-95077-009	Write Roller; 40	1	RC4000
26	011-95076-002	Write Roller	1	

No.	Part No.	Part Name	Q'ty	Remark
27	600-50059-017	Bearing; FLW688ZZ	2	
28	011-15120-006	Pulley A; Write Roller	1	
29	000-10126-002	Pulley G; Original Feed Roller	1	
30	011-15009-105	Catch Roller (Lower); M.-M.	1	
31	607-15000-809	Metal; F8 x 16 x 6; 18 x 2	4	
32	009-35214-009	Pulley PM (16); Exit Roller	1	
33	011-15155-209	Guide Plate; Load	1	
34	011-15025-305	Load Roller (Lower); M.-M.	1	
35	011-15110-000	Pulley; Loading Roller (Lower)	1	
36	620-20503-004	Belt; B50M x L3.2	1	
38	011-15028-100	Fulcrum; M.-M.	2	
39	011-15001-007	Support Shaft	2	
40	011-15269-107	Support Pin (Right); Master Holder	1	
41	011-15270-105	Support Pin (Left); Master Holder	1	
42	011-45263-006	Sponge; Master Holder	1	
43	011-15281-000	Cover Plate (Left); Master Holder	1	
44	011-15280-003	Cover Plate (Right); Master Holder	1	
45	011-45266-102	Dustproof Sponge (Right)	1	
47	011-15278-009	Set Guide Cover F	1	
48	011-15277-002	Set Guide Cover R	1	
49	011-45265-009	Dustproof Sponge (Left)	1	
50	011-45264-002	Dustproof Sponge	2	
51	011-45268-008	Set Guide Sponge F	1	
52	011-45267-001	Set Guide Sponge R	1	
53	011-15156-000	Guide Sheet; Stocker	1	
54	550-20079-109	Seal; Setting Procedure	1	
55	011-15159-000	Cover; Stocker	1	
56	011-45262-000	Sponge S	1	

Fig. 29 MASTER-MAKING AREA (2) (RC4000)

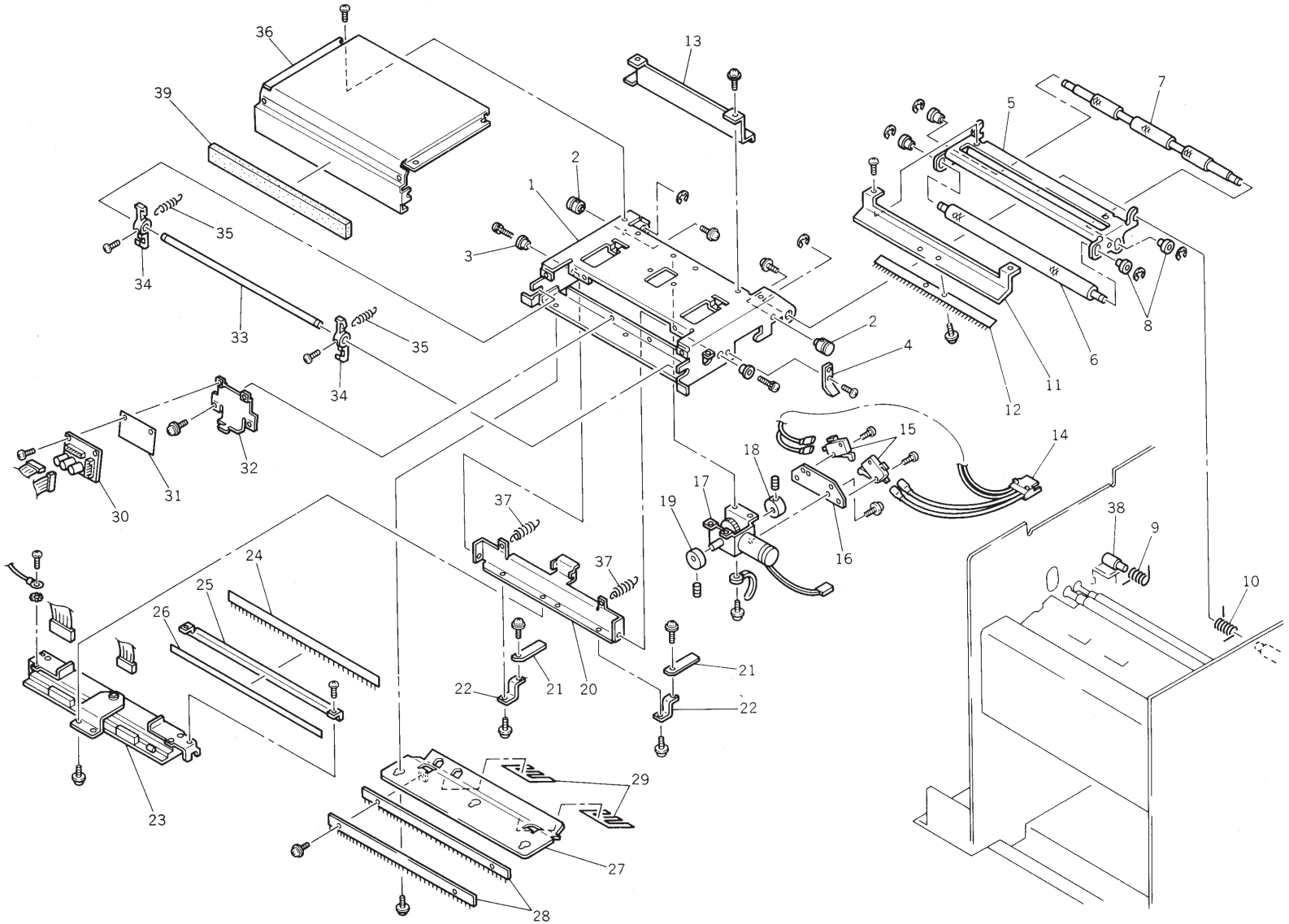

No.	Part No.	Part Name	Q'ty	Remark
1	011-15703-001	Frame A; M.-M.; 40	1	
2	011-15003-107	Shaft; Torsion	2	
3	011-15004-006	Fulcrum; TPH	2	
4	011-15129-208	Actuator; Micro-SW; M.-M.	1	
	011-95016-000	Frame B Ass'y; M.-M.		
5	011-15014-001	* Frame B; M.-M.	1	
6	011-15007-005	* Catch Roller (Upper); M.-M.	1	
7	011-15008-001	* Load Roller (Upper); M.-M.	1	
8	607-11000-200	* Metal; F4 x 7 x 6; 10 x 1.5	4	
9	011-15056-006	Spring (Right); M.-M.	1	
10	011-15055-000	Spring (Left); M.-M.	1	
11	011-15158-003	Bracket; De-electricity Brush	1	
12	011-15041-009	De-electricity Brush	1	
13	011-15721-107	Wire Harness Guide	1	
14	011-55137-106	Wire Harness; Thermal Pressure Motor	1	
15	443-00120-609	Micro-SW; E21-91N	2	
16	011-15710-008	Bracket; Micro-SW	1	
17	011-15707-201	Thermal Pressure Motor II Ass'y	1	
18	011-15078-003	Switch Cam	1	
19	011-15117-005	Cam; Thermal Pressure Motor	1	
20	011-15704-008	Bracket; TPH; 40	1	
21	011-15716-006	Pressure Assist Plate	2	
22	011-15717-002	Bracket; Pressure Assist Plate; K-TPH	2	Euro/Asia
22	011-15751-006	Bracket; Pressure Assist Plate; T-TPH	2	U.S.A.
	011-95037-007	K-TPH Ass'y; 40		Euro/Asia
23		* K-TPH	1	Euro/Asia
24	011-15733-008	* De-electricity Brush; K-TPH	1	Euro/Asia
25	011-15734-004	* Bracket; De-electricity Brush; K-TPH	1	Euro/Asia
26		* Protection Sheet A; K-TPH	1	Euro/Asia
	011-95038-003	T-TPH Ass'y; 40		U.S.A.
23		* T-TPH	1	U.S.A.
24	011-15036-005	* De-electricity Brush; TPH	1	U.S.A.
25	011-15034-002	* Bracket; De-electricity Brush; T-TPH	1	U.S.A.
26		* Protection Sheet A; T-TPH	1	U.S.A.
27	011-15711-101	Copy Guide Plate (Lower)	1	

No.	Part No.	Part Name	Q'ty	Remark
28	011-15051-004	De-electricity Bar; M.-M.	2	
29	011-15161-004	Set Sheet II; Copy Guide (Lower)	2	
	011-95011-008	Capacitor PCB II Ass'y		
30	011-51031-001	* Capacitor PCB	1	
31	011-15164-003	* Sheet; Capacitor PCB	1	
32	011-15713-007	* Bracket; Capacitor PCB	1	
	011-95018-002	Open/Close Hook Ass'y; M.-M.		
33	011-15010-006	* Shaft; Open/Close Hook	1	
34	011-15013-005	* Open/Close Hook	2	
35	011-15098-000	Hook Spring	2	
36	011-15712-000	Cover A; M.-M.;40	1	
37	011-15718-106	Spring; TPH Pressure	2	
38	011-15722-006	Fulcrum II; M.-M.	2	
39	011-15723-002	Sponge; M.-M. 40	1	

Fig. 30 MASTER-MAKING AREA (2) (RC4500, RC5600/D, RC5800)

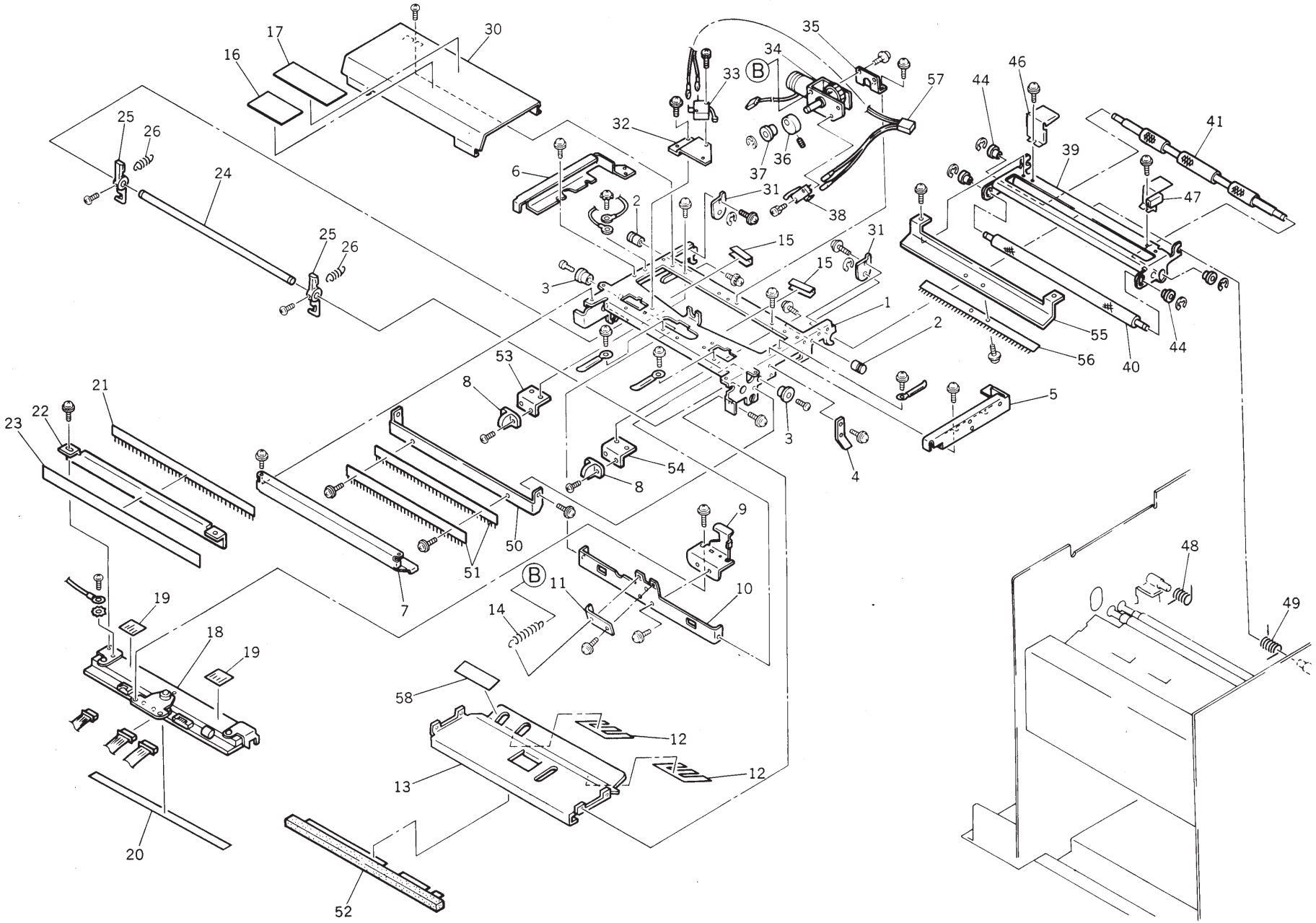

No.	Part No.	Part Name	Q'ty	Remark
1	011-15057-002	Frame A; M.-M.	1	
2	011-15003-107	Shaft; Torsion	2	
3	011-15004-006	Fulcrum; TPH	2	
4	011-15129-208	Actuator; Micro-SW; M.-M.	1	
5	011-15082-007	Cover (Right); M.-M.	1	
6	011-15083-003	Cover (Left); M.-M.	1	
7	011-15030-007	Copy Guide Plate (Upper)	1	
8	660-05100-004	Roll Fix	2	
9	011-15011-207	Bracket B; TPH	1	
10	011-15026-107	Bracket A; TPH	1	
11	011-15126-004	Actuator; Home Position SW; TPH	1	
12	011-15161-004	Set Sheet II; Copy Guide (Lower)	2	
13	011-15029-009	Copy Guide Plate (Lower)	1	
14	002-11424-206	Spring A; M.-M.	1	
15	011-14151-005	Wire Guard	2	
16	550-20082-002	Seal; Open	1	
17	550-20096-003	Seal; Remove Master	1	
	011-95035-004	TPH Ass'y		
18		* TPH	1	
19	011-15091-006	* Sheet; TPH	2	
20	011-15130-109	* Protection Sheet B; TPH	1	
21	011-15036-005	* De-electricity Brush; TPH	1	
22	011-15034-002	* Bracket; De-electricity Brush; T-TPH	1	
23	011-15035-009	* Protection Sheet A; TPH	1	
	011-95018-002	Open/Close Hook Ass'y; M.-M.	1	
24	011-15010-006	* Shaft; Open/Close Hook	1	
25	011-15013-005	* Open/Close Hook	2	
26	011-15098-000	Hook Spring	2	
30	011-15081-108	Cover A; M.-M.	1	
31	011-15012-009	Set Plate; M.-M.	2	
32	011-15118-001	Bracket; Micro-SW; T.-P.-M.	1	
33	443-00120-609	Micro-SW; E21-91N	1	
	011-95017-006	Thermal Pressure Motor Ass'y		
34	011-15115-304	* Thermal Pressure Motor	1	
35	011-15114-006	* Bracket; Thermal Pressure Motor	1	

No.	Part No.	Part Name	Q'ty	Remark
36	011-15117-005	* Cam; Thermal Pressure Motor	1	
37	607-12000-000	* Metal; F5 x 10 x 6; 12 x 1.5	1	
38	443-00120-609	* Micro-SW; E21-91N	1	
	011-95016-000	Frame B Ass'y; M.-M.		
39	011-15014-001	* Frame B; M.-M.	1	
40	011-15007-005	* Catch Roller (Upper); M.-M.	1	
41	011-15008-001	* Load Roller (Upper); M.-M.	1	
44	607-11000-200	* Metal; F4 x 7 x 6; 10 x 1.5	4	
46	011-15088-005	Cover (Left); Wire Harness; M.-M.	1	
47	011-15087-009	Cover (Right); Wire Harness; M.-M.	1	
48	011-15056-006	Spring (Right); M.-M.	1	
49	011-15055-000	Spring (Left); M.-M.	1	
50	011-15050-008	Bracket; De-electricity Bar	1	
51	011-15051-004	De-electricity Bar; M.-M.	2	
52	011-45270-002	Copy Guide Sponge	1	
53	011-15104-000	Bracket; Roll Fix (Right)	1	
54	011-15105-104	Bracket; Roll Fix (Left)	1	
55	011-15158-003	Bracket; De-electricity Brush	1	
56	011-15041-009	De-electricity Brush	1	
57	011-55045-104	Wire Harness; TPH Pos. SW	1	
58	011-15145-009	Reflection Sheet; M.-End	1	

Fig. 31 MASTER-MAKING AREA (1) (RC6300)

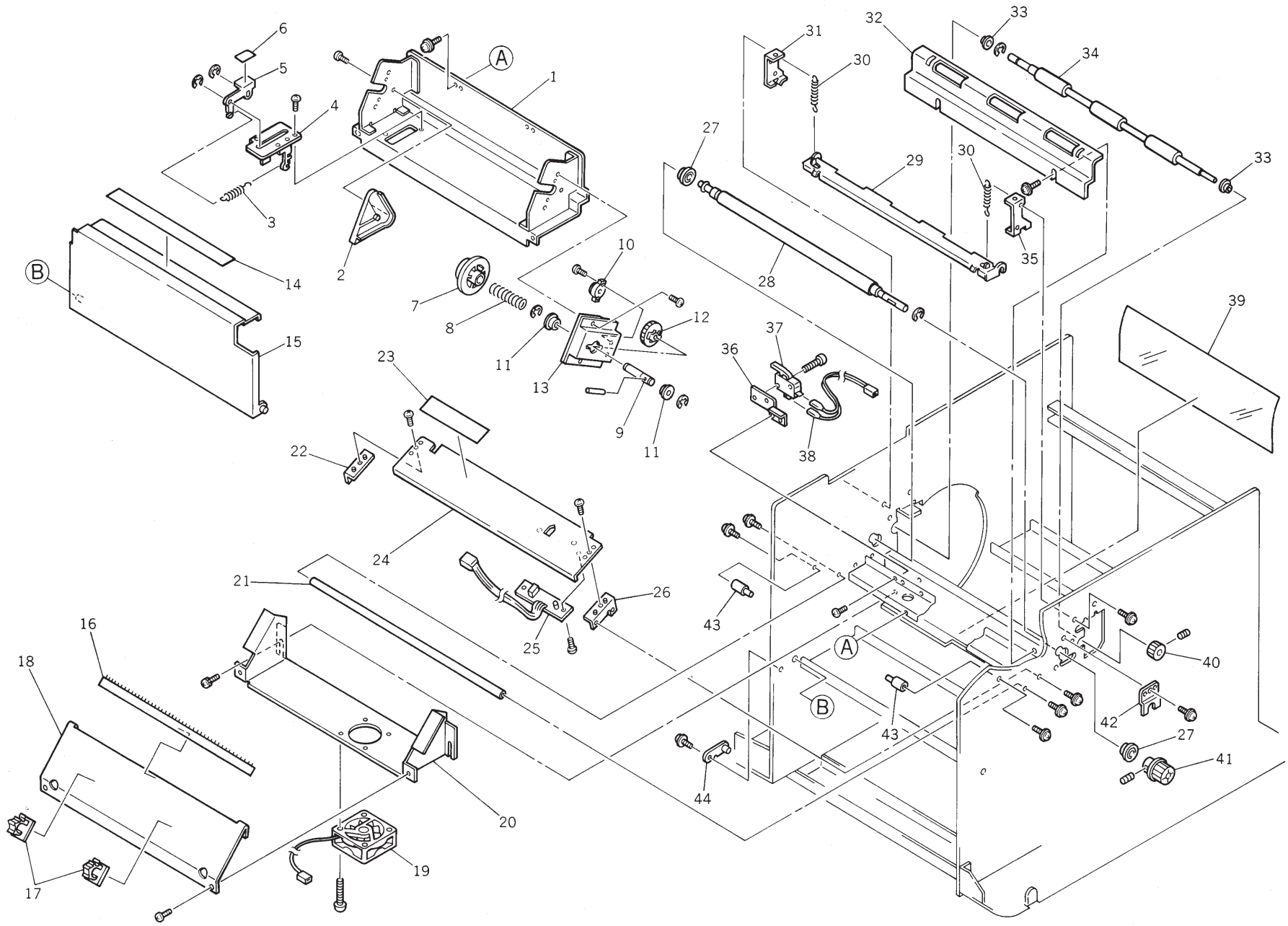

No.	Part No.	Part Name	Q'ty	Remark
	014-95207-109	Unit/Master Roll Holder; A3		
1	014-15204-309	* Master Roll Holder; A3	1	
2	011-15254-002	* Holder; Master Roll	1	
3	014-15255-000	* Tension Spring	1	
4	014-15253-008	* Tension Stay; Master Roll Holder	1	
5	014-15250-009	* Tension Arm; Master Roll Holder	1	
6	014-15256-007	* Tension Sheet; Master Roll Holder	1	
	014-95208-008	* Unit/Damper; Master Roll Holder; A3		
7	015-18252-000	** Master Holder II	1	
8	011-15268-100	** Holder Spring	1	
9	011-15306-100	** Shaft; Master Holder	1	
10	610-00001-006	** Damper 50F; Master Holder	1	
11	600-50057-006	** Bearing; FLAW678ZZA	2	
12	011-15307-106	** Damper Gear	1	
13	011-15303-003	** Bracket; Damper	1	
14	550-20079-109	Seal; Setting Procedure	1	
14	550-20222-009	Seal; Setting Procedure; Pic.	1	
15	014-15210-104	Cover; Master Roll Holder	1	
16	014-15106-005	De-electricity Brush; A3	1	
	014-95095-009	Stocker Ass'y; A3		
17	665-02010-000	* Clamp DKN-16	2	
18	014-15152-104	* Plate B; Stocker; A3	1	
19	011-65012-107	* Storage Fan	1	
20	014-15151-000	* Frame A; Stocker; A3	1	
21	014-15178-103	Set Guide Shaft	1	
22	014-15175-007	Stay L; Set Guide Plate	1	
23	550-20078-102	Seal; Setting Master	1	
23	550-20221-100	Seal; Setting Master; Pic.	1	
	014-95070-006	Set Guide Plate Ass'y; A3		
24	014-15173-101	* Set Guide Plate; A3	1	
25	014-60003-209	* Master End Sensor; A3	1	
26	014-15174-000	Stay R; Set Guide Plate	1	
27	600-50059-017	Bearing; FLW688ZZ	2	
28	014-95076-004	Write Roller; A3	1	
29	014-15131-107	Master Guide Plate; A3	1	

No.	Part No.	Part Name	Q'ty	Remark
30	014-15146-007	Spring; Master Guide Plate	2	
31	014-15144-101	Spring Hanger L; Master Guide Plate	1	
32	014-15191-002	Guide Plate; Load; A3	1	
33	607-15000-809	Metal; F8 x 16 x 6; 18 x 2	2	
34	014-15102-000	Load Roller (Lower); M.-M.; A3	1	
35	014-15145-108	Spring Hanger R; Master Guide Plate	1	
	014-95060-000	Master Loading Unit SW Ass'y		
36	014-15179-002	* Bracket; Micro-SW; M.-M.	1	
37	443-00120-501	* Micro-SW; E21-51N	1	
38	014-55003-004	* Wire Harness; Master Loading SW	1	
39	014-14131-103	Aero Guide Sheet; A3	1	
40	011-15110-000	Pulley; Loading Roller (Lower)	1	
41	000-10126-002	Pulley G; Original Feed Roller	1	
42	014-15182-003	Fixing Plate; Pulley G	1	
43	011-15001-007	Support Shaft	2	
44	014-15214-002	Set Plate; Cover	1	

Fig. 32 MASTER-MAKING AREA (2) (RC6300)

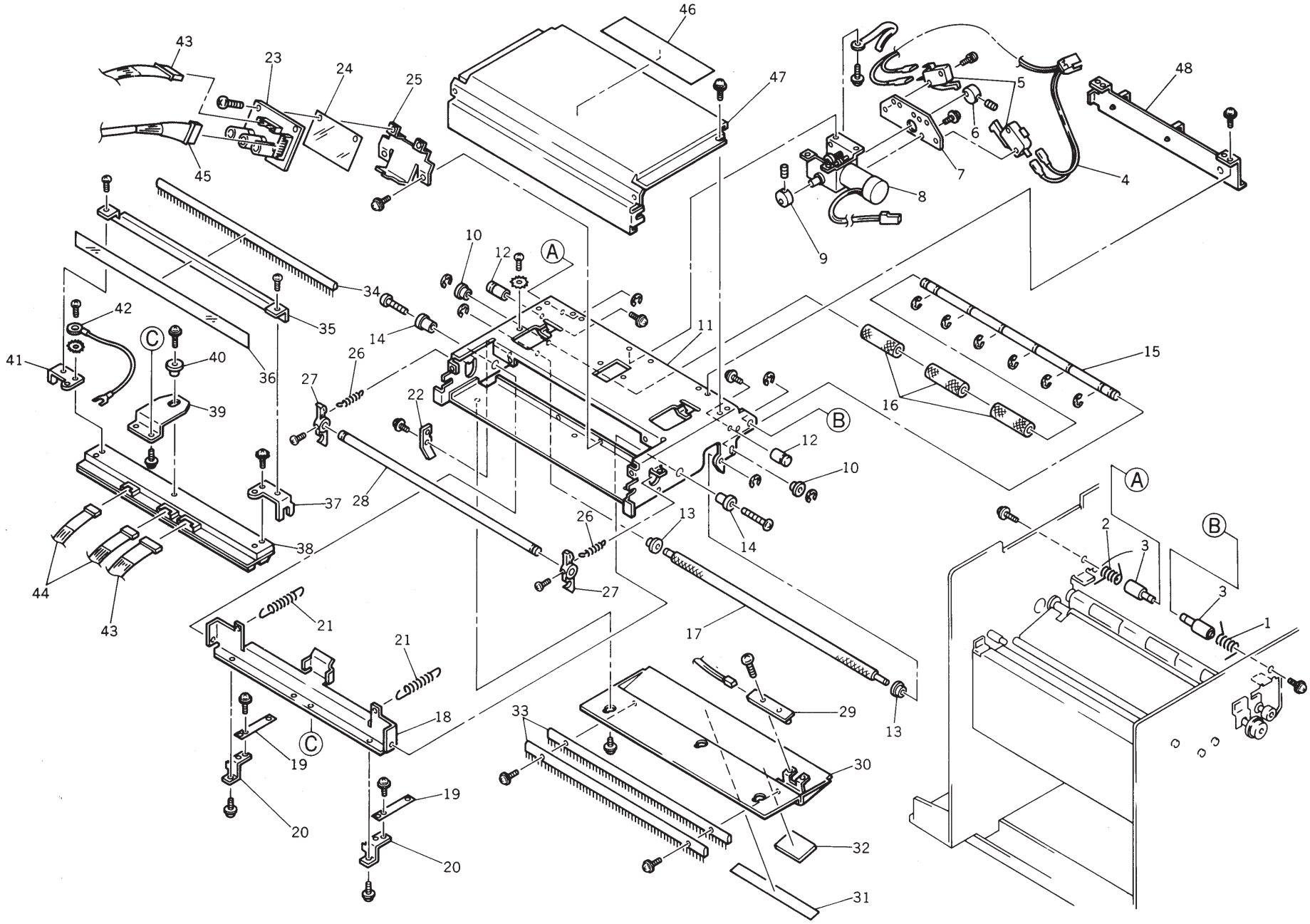

No.	Part No.	Part Name	Q'ty	Remark
1	011-15056-006	Spring (Right); M.-M.	1	
2	011-15055-000	Spring (Left); M.-M.	1	
	014-95010-003	Unit/Master Marking; A3		
3	011-15722-006	* Fulcrum II; M.-M.	2	
4	011-55137-106	* Wire Harness; Thermal Pressure Motor	1	
5	443-00120-609	* Micro-SW; E21-91N	2	
6	011-15708-100	* Switch Cam	2	
7	011-15710-008	* Bracket; Micro-SW	1	
8	011-15707-201	* Thermal Pressure Motor II Ass'y	1	
9	011-15117-005	* Cam; Thermal Pressure Motor	1	
10	607-13000-607	* Metal; F6 x 9 x 7; 11 x 1	2	
11	014-15003-109	* Frame A; M.-M.; A3	1	
12	011-15003-107	* Shaft; Torsion	2	
13	607-11000-200	* Metal; F4 x 7 x 6; 10 x 1.5	2	
14	011-15004-006	* Fulcrum; TPH	2	
15	014-15012-000	* Shaft; Load Roller	1	
16	014-15007-007	* Load Roller	1	
17	014-15018-009	* Catch Roller (Upper); A3	1	
18	014-15004-008	* Bracket; TPH; A3	1	
19	011-15716-006	* Pressure Assist Plate	2	
20	011-15751-006	* Bracket; Pressure Assist Plate; T-TPH	2	
21	011-15718-106	* Spring; TPH Pressure	2	
22	011-15129-208	* Actuator; Micro-SW; M.-M.	1	
	011-95011-008	* Capacitor PCB II Ass'y	1	
23	011-51031-001	** Capacitor PCB	1	
24	011-15164-003	** Sheet; Capacitor PCB	1	
25	011-15713-007	** Bracket; Capacitor PCB	1	
26	011-15098-000	* Hook Spring	2	
27	011-15013-005	* Open/Close Hook	2	
28	014-15008-003	* Shaft; Open/Close Hook; A3	1	
29	014-60002-105	Master End Sensor (Send); A3	1	
30	014-15014-100	Lower Cover; M.-M.; A3	1	
31	550-20118-007	Seal; TPH	1	
31	550-20228-007	Seal; TPH; Pic.	1	
32	014-15013-007	Sheet; Light Absorber; M.-M.	1	

No.	Part No.	Part Name	Q'ty	Remark
33	014-15011-004	De-electricity Bar; M.-M.; A3	2	
	014-95036-002	TPH Ass'y; A3		
34	014-15035-000	* De-electricity Brush; TPH; A3	1	
35	014-15033-008	* Bracket; De-electricity Brush; TPH; A3	1	
36	014-15034-004	* Protection Sheet A; TPH; A3	1	
37	014-15032-001	* Guide L; TPH; A3	1	
38	015-70100-005	* TPH; A3	1	
39	011-15750-000	* T-TPH Set Plate	1	
40	011-15073-105	* Boss; TPH	1	
41	014-15031-005	* Guide R; TPH; A3	1	
42	488-90003-101	* Ground Wire; U3-100-R3	1	
43	014-55006-003	Wire Harness; TPH; A3	1	
44	014-55004-000	Wire Harness; TPH Signal	1	
45	011-55070-206	Wire Harness; TPH-Power	1	
46	550-20082-002	Seal; Open	1	
46	550-20225-008	Seal; Open; Pic.	1	
47	014-15009-000	Cover A; M.-M.; A3	1	
48	014-15005-209	Wire Harness Guide; A3	1	

Fig. 33 CUTTER UNIT (RC4000, RC4500, RC5600/D, RC5800)

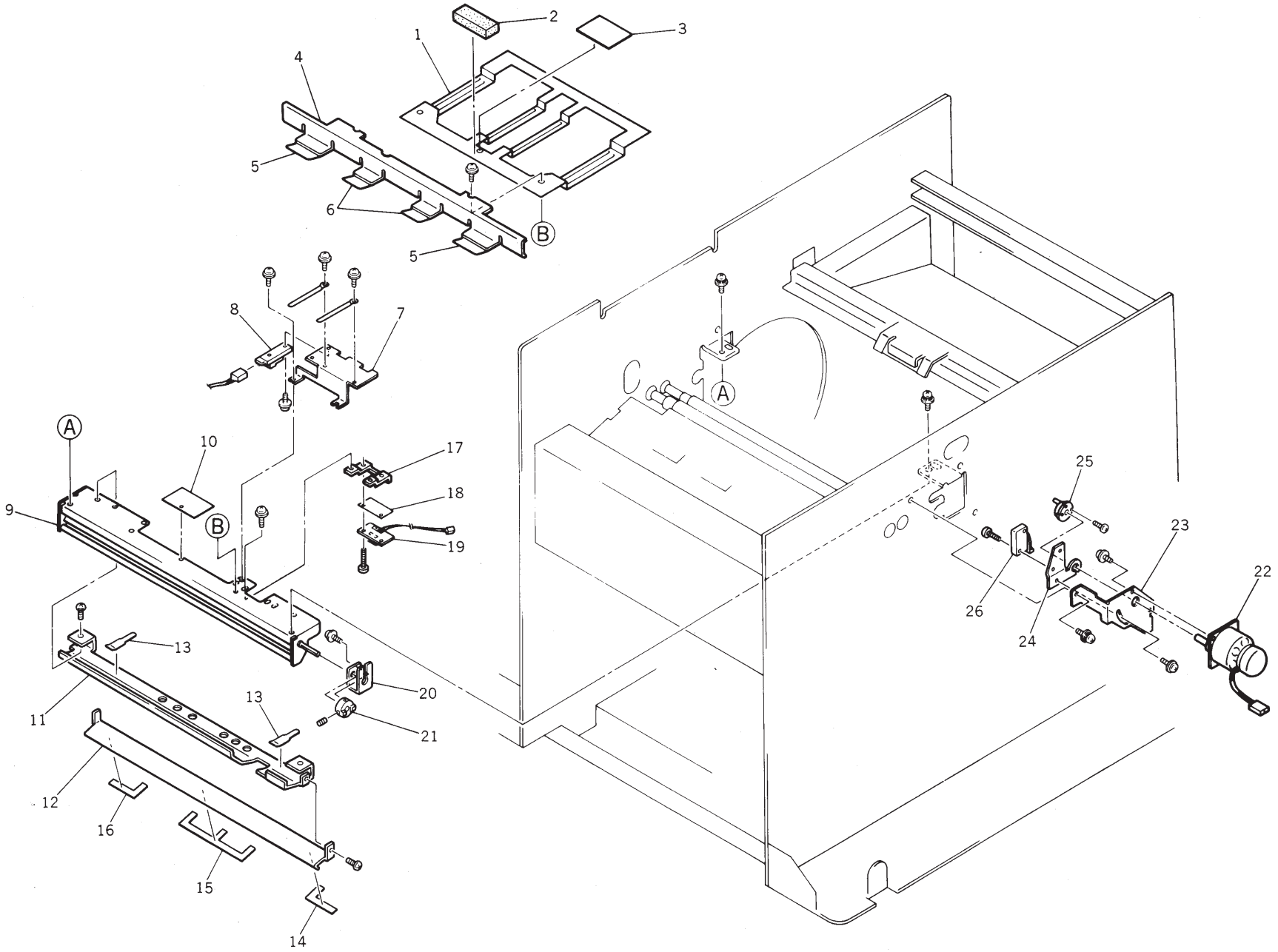

No.	Part No.	Part Name	Q'ty	Remark
1	011-14506-105	Master Guide C; M.-Rmv.	1	
2	011-15157-007	Stopper	1	
3	011-15293-008	Support Sheet; M.-Rmv.	1	
	011-95111-002	Cutter Cover A Ass'y		
4	011-15047-104	* Cutter Cover A Ass'y	1	
5	011-15049-000	* Set Sheet B	2	
6	011-15048-003	* Set Sheet A	2	
	011-95100-000	Master Sensor Ass'y	1	
7	011-15139-009	* Bracket; Master Sensor II	1	
8	011-60005-307	* Master Sensor	1	
	011-95121-105	Unit/Cutter II; B4		
	011-95122-101	Unit/Cutter II; A4		
9	011-15102-202	* Cutter Body	1	
10	011-15093-009	* Cutter Sheet B	1	
11	011-15175-005	* Cutter Cover D	1	
12	011-15176-001	* Cutter Guide IV	1	
13	011-15177-008	* Master Guide III	2	
14	011-15043-001	* Cutter Guide Sheet (Right)	1	
15	011-15169-005	* Cutter Guide Sheet III	1	
16	011-15044-008	* Cutter Guide Sheet (Left)	1	
17	011-15142-000	* Bracket; Master Positioning Sensor	1	
18	011-15059-102	* Sheet; Master Positioning Sensor	1	
19	011-60006-109	* Master Positioning Sensor	1	
20	011-15107-000	* Cutter Joint B	1	
21	002-11509-104	* Joint A	1	
	011-95045-107	Unit/Cutter Motor		
22	011-65014-002	* Cutter Motor	1	
23	011-15038-008	* Bracket; Cutter Motor	1	
24	011-15039-004	* Bracket; Cutter SW	1	
25	011-95046-006	* Cutter Joint A	1	
26	443-00120-900	* Micro-SW; E23-91	1	

No.	Part No.	Part Name	Q'ty	Remark

Fig. 34 CUTTER UNIT (RC6300)

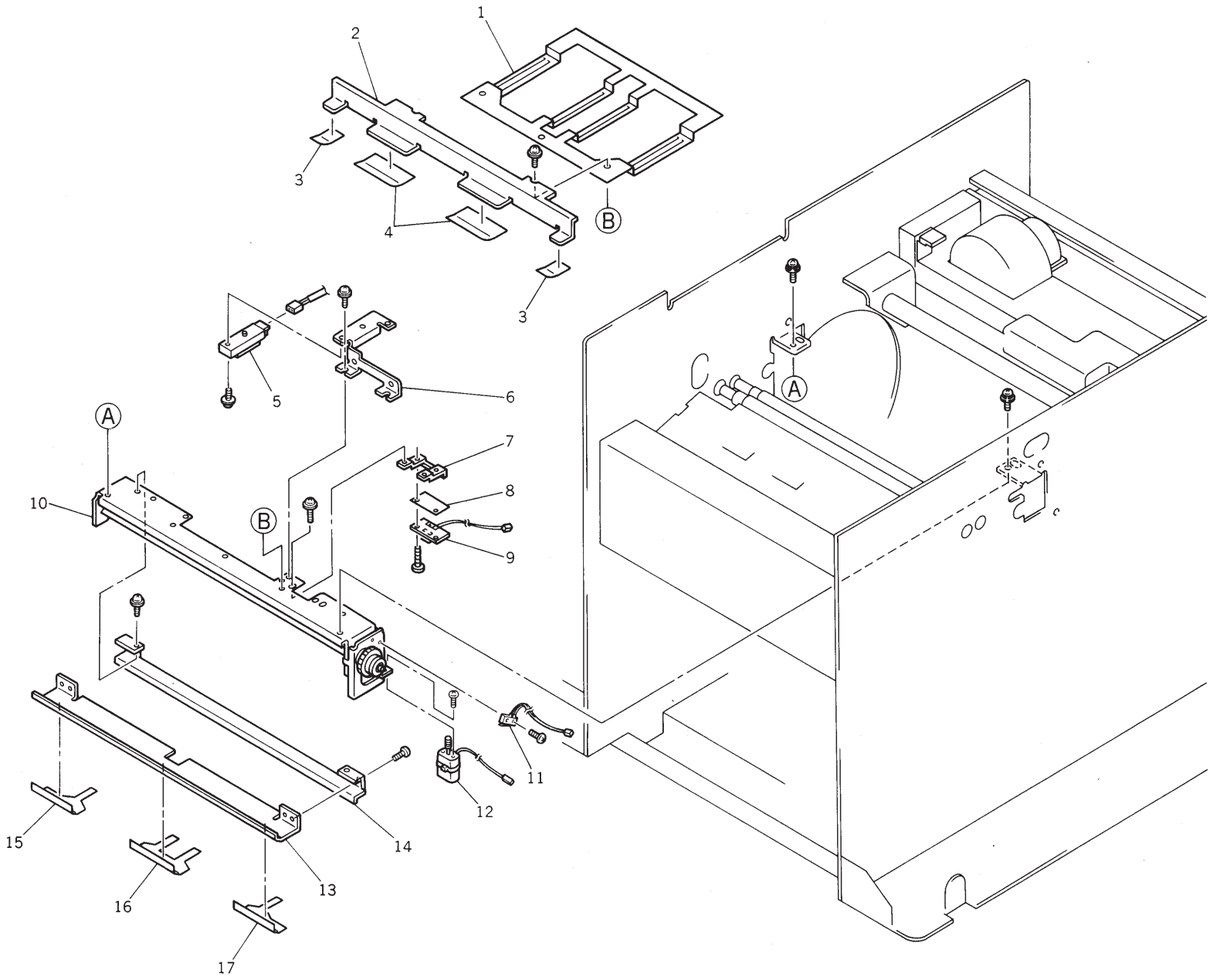

No.	Part No.	Part Name	Q'ty	Remark
1	014-14120-101	Master Guide; M.Rmv.; A3	1	
	014-95111-004	Cutter Cover A Ass'y; A3		
2	014-15111-009	* Cutter Cover A; A3	1	
3	014-15112-102	* Set Sheet C	2	
4	014-15116-108	* Set Sheet E	2	
	014-95120-003	Master Sensor Ass'y; A3		
5	011-60005-307	* Master Sensor	1	
6	014-15128-009	* Bracket; Master Sensor; A3	1	
	014-95115-000	Unit/Cutter; A3		
7	011-15142-000	* Bracket; Master Positioning Sensor	1	
8	011-15059-102	* Sheet; Master Positioning Sensor	1	
9	011-60006-109	* Master Positioning Sensor	1	
10	014-15124-003	* Cutter Body; A3	1	
11	014-60001-001	** Cutter SW; A3	1	
12	014-65000-003	** Cutter Motor; A3	1	
13	014-15119-000	* Guide Plate; Cutter; A3	1	
14	014-15123-007	* Cutter Guide; A3	1	
15	014-15127-207	* Cutter Guide Sheet A	1	
16	014-15125-204	* Cutter Guide Sheet B	1	
17	014-15126-200	* Cutter Guide Sheet C	1	

No.	Part No.	Part Name	Q'ty	Remark

Fig. 35 MASTER REMOVAL UNIT (RC4000, RC4500, RC5600/D, RC5800)

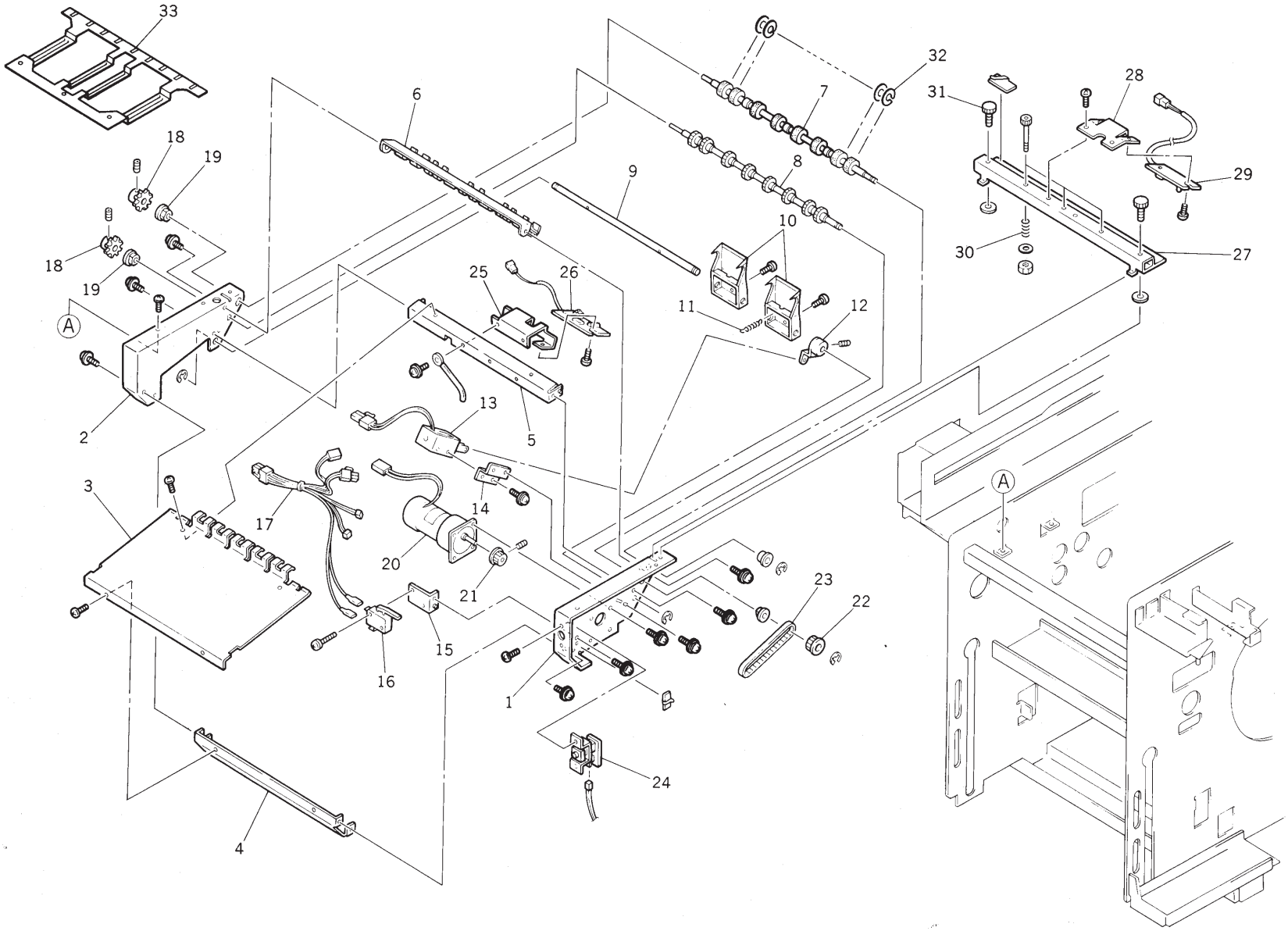

No.	Part No.	Part Name	Q'ty	Remark
	011-94410-308	Unit/Master Removal III; B4		
	011-94412-203	Unit/Master Removal III; A4		
1	011-14401-001	* Right-Side Frame; M.-Rmv.	1	
2	011-14402-008	* Left-Side Frame; M.-Rmv.	1	
3	011-14405-007	* Base Plate; M-Rmv.	1	
3	011-14433-000	* Base Plate II; M.-Rmv.	1	A4
4	011-14404-108	* Stay B; M.-Rmv.	1	
5	011-14403-004	* Stay A; M.-Rmv.	1	
6	011-14406-100	* Guide Plate; M.-Rmv.; B4	1	
6	011-14434-007	* Guide Plate II; M.-Rmv.	1	A4
7	011-14407-107	* Vertical Transport Roller (Up); B4	1	
7	011-14435-003	* Vertical Transport Roller II (Up); A4	1	A4
8	008-24108-005	* Vertical Transport Roller S (Down)	1	
8	011-14436-000	* Vertical Transport Roller II (Down); A4	1	A4
9	011-14430-109	* Shaft; M.-Rmv.Hook	1	
10	011-14170-000	* Master Removal Hook; A4	2	A4
10	011-14169-001	* Master Removal Hook (R); B4	1	B4
10	011-14168-005	* Master Removal Hook (L); B4	1	B4
11	000-10148-030	* Spring B	1	
12	011-14115-009	* Linking Plate; M.-Rmv. Hook	1	
13	011-65018-300	* Master Removal Solenoid	1	
14	000-10142-016	* Bracket; M.-Rmv. Solenoid	1	
15	011-14408-006	* Bracket; Disposal Box SW	1	
16	443-00121-109	* Micro-SW; 21-52N	1	
17	011-55056-203	* Wire Harness; M.-Rmv.	1	
18	612-03101-006	* Gear; Vertical Transport	2	
19	607-13000-402	* Metal; F6 x 10/9 x 4; 12 x 1.5	2	
20	011-65016-307	* M.-Rmv. Vertical Transport Motor	1	
21	002-14517-000	* Pulley Duct	1	
22	011-14121-009	* Pulley B; M.-Rmv.	1	
23	620-03066-105	* Belt; 264-3M-6	1	
24	011-60022-007	* Switch A	1	
25	011-14446-005	* Bracket II; Master Removal Sensor (Receive)	1	
26	011-60034-307	* Master Removal Sensor (Receive)	1	
	011-94422-004	* Holder Ass'y II; V.-Transport Roller	1	

No.	Part No.	Part Name	Q'ty	Remark
27	011-14437-006	** Holder II; V.-Transport Roller	1	
28	011-14409-100	** Bracket; Master Removal Sensor (Send)	1	
29	011-60033-300	** Master Removal Sensor (Send)	1	
30	007-14113-100	** Spring; Vertical Transport	3	
31	635-00416-108	** Set Screw; M4 x 16 (Black)	2	
32	639-00805-103	* Washer; 8.5 x 17.5 x 0.5; V-Trans.-Roller	16	
33	011-14506-105	Master Guide C; M.-Rmv.	1	

Fig. 36 MASTER REMOVAL UNIT (RC6300)

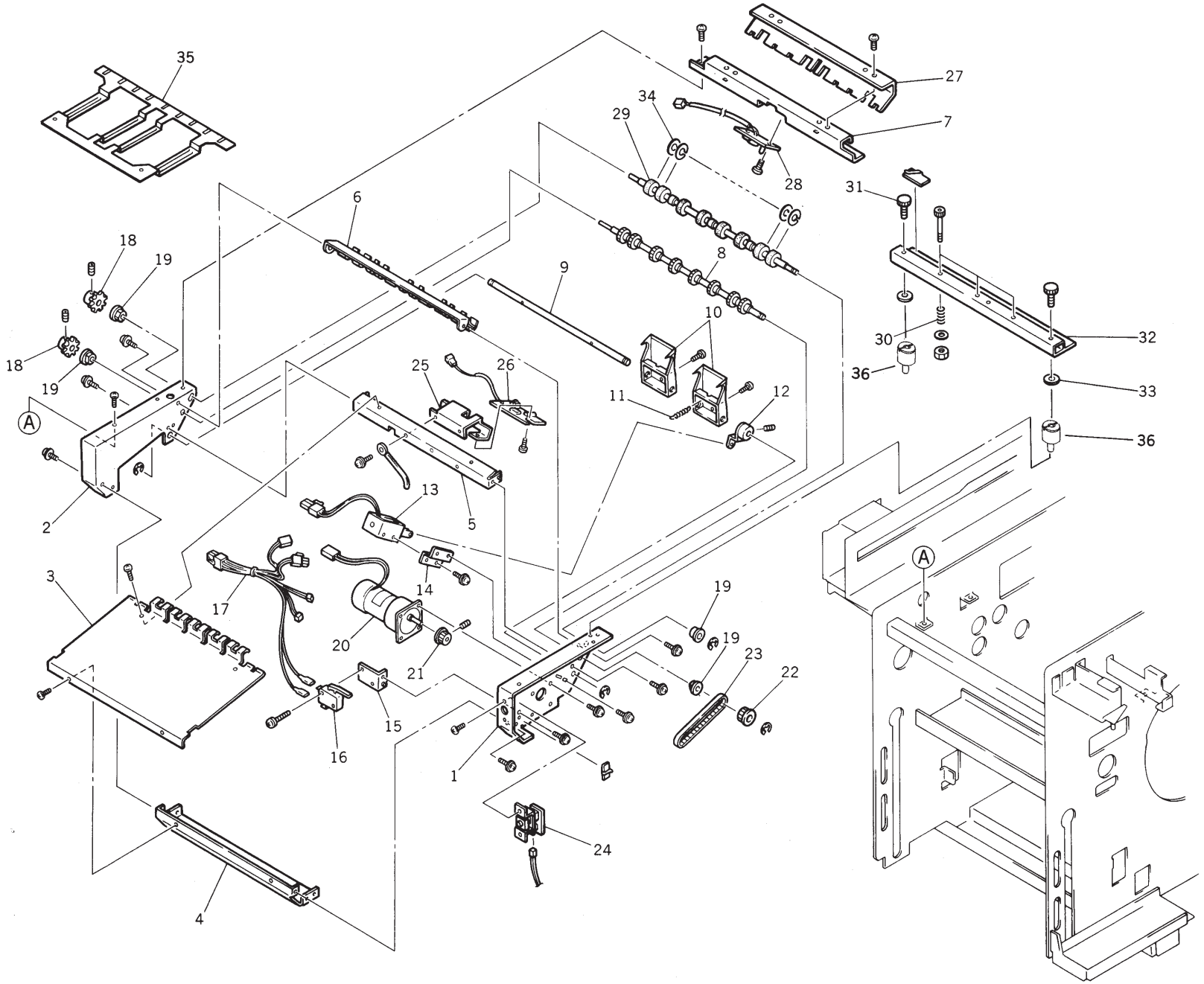

No.	Part No.	Part Name	Q'ty	Remark
	014-94400-002	Unit/Master Removal; A3		
1	014-14402-107	* Right-Side Frame; M.-Rmv.;A3	1	
2	014-14404-100	* Left-Side Frame; M.-Rmv.; A3	1	
3	014-14407-001	* Base Plate; M.-Rmv.; A3	1	
4	014-14406-102	* Back Plate; M.-Rmv.; A3	1	
5	014-14405-009	* Stay A; M.-Rmv.; A3	1	
6	014-14411-009	* Guide Plate; M.-Rmv.; A3	1	
7	014-14408-105	* Upper Plate; M.-Rmv.; A3	1	
8	014-14111-102	* Vertical Transport Roller (Down); A3	1	
9	014-14431-000	* Shaft; M.-Rmv. Hook; A3	1	
10	002-14143-011	* Master Removal Hook	2	
11	000-10148-030	* Spring B	1	
12	011-14115-009	* Linking Plate; M.Rmv. Hook	1	
13	011-65018-300	* Master Removal Solenoid	1	
14	000-10142-016	* Bracket; M.-Rmv. Solenoid	1	
15	011-14408-006	* Bracket; Disposal Box SW	1	
16	443-00121-109	* Micro-SW; 21-52N	1	
17	011-55056-203	* Wire Harness; M.-Rmv.	1	
18	002-14130-009	* Gear; Vertical Transport	2	
19	607-13000-402	* Metal; F6 x 10/9 x 6; 12 x 1.5	4	
20	011-65016-307	* M.-Rmv. Vertical Transport Motor	1	
21	002-14517-000	* Pulley; Duct	1	
22	011-14121-009	* Pulley B; M.-Rmv.	1	
23	620-32916-002	* Belt; 291-3M-6	1	
24	011-60022-007	* Switch A	1	
25	011-14446-005	* Bracket II; Master Removal Sensor (Receive)	1	
26	011-60034-307	* Master Removal Sensor (Receive)	1	
27	014-14432-006	* Feed Guide Plate; M.-Rmv.; A3	1	
28	011-60033-300	* Master Removal Sensor (Send)	1	
29	014-14110-009	* Vertical Transport Roller (Up); A3	1	
	014-94410-108	Holder Ass'y; V.-Transport Roller; A3		
30	007-14113-100	* Spring; Vertical Transport	3	
31	635-00409-004	* Plastic Head Screw; M4 x 9	2	
32	014-14428-203	* Upper Holder; V.-Transport Roller; A3	1	
33	638-92000-001	* Plastic Washer; Plastic Head Screw	2	

No.	Part No.	Part Name	Q'ty	Remark
34	639-00805-103	* Washer; 8.5 x 17.5 x 0.5; V-Trans.-Roller	16	
35	014-14120-101	Master Guide; M.-Rmv.; A3	1	
36	014-14441-005	Guide Screw; Feed Guide Plate	2	

Fig. 37 MASTER DISPOSAL BOX

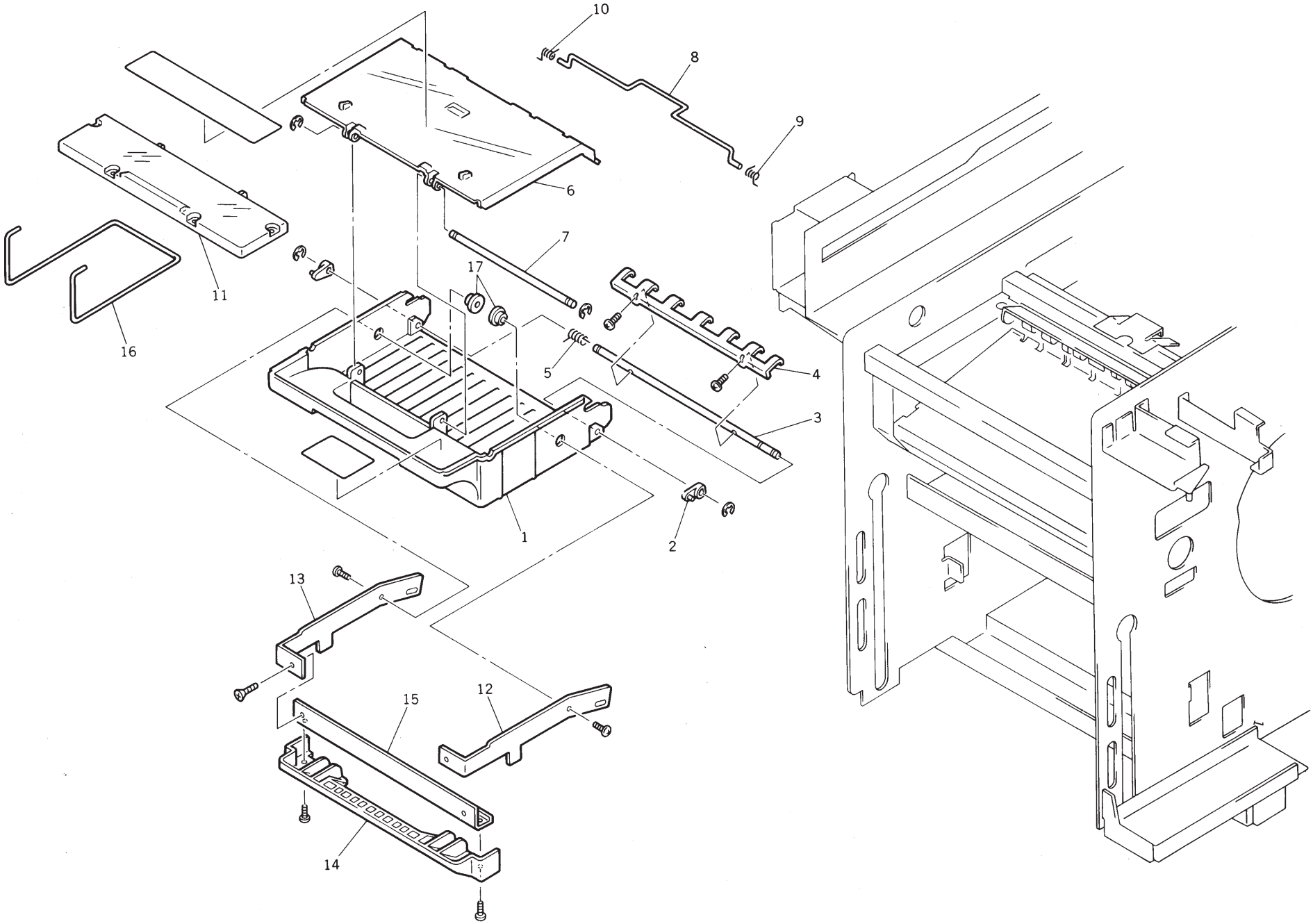

No.	Part No.	Part Name	Q'ty	Remark
	014-94435-000	Unit/Master Disposal Box; A3		RC6300
	014-94436-007	Unit/Master Disposal Box; A3; Pic.		RC6300
	011-94431-003	Unit/Master Disposal Box		B4
	011-94432-000	Unit/Master Disposal Box; Pic.		B4
	011-94433-006	Unit/Master Disposal Box II		A4
	011-94434-002	Unit/Master Disposal Box II; Pic.		A4
1	011-44415-007	* Disposal Box	1	
1	014-14451-000	* Disposal Box; A3	1	RC6300
1	011-44417-000	* Disposal Box; Pic.	1	
2	011-14421-100	* Guide Cam; Disposal Box	2	
3	011-14423-200	* Guide Shaft; Disposal Box	1	
3	014-14463-106	* Guide Shaft; Disposal Box; A3	1	RC6300
4	011-14420-103	* Guide Plate; Disposal Box	1	B4
4	014-14461-006	* Guide Plate; Disposal Box; A3	1	RC6300
4	011-14440-007	* Guide Plate II; Disposal Box	1	A4
5	011-14422-106	* Guide Spring; Disposal Box	1	
6	011-44416-003	* Disposal Box Cover	1	
6	011-44418-006	* Disposal Box Cover; Pic.	1	
6	014-44451-102	* Disposal Box Cover; A3	1	RC6300
6	014-44452-109	* Disposal Box Cover; A3; Pic.	1	RC6300
7	011-14425-008	* Shaft; Disposal Box Cover	1	
7	014-14469-007	* Shaft; Disposal Box Cover; A3	1	RC6300
8	011-14427-000	* Lock Shaft; Disposal Box	1	
8	014-14465-001	* Lock Shaft; Disposal Box; A3	1	RC6300
9	011-14428-007	* Lock Spring (Right)	1	
10	011-14429-003	* Lock Spring (Left)	1	
11	014-44453-105	* Disposal Box Cover B; A3	1	RC6300
11	014-44454-101	* Disposal Box Cover B; A3; Pic.	1	RC6300
12	011-14418-001	* H.-Lever (Right); Disposal Box	1	
12	014-14455-200	* H.-Lever (Right); Disposal Box; A3	1	RC6300
13	011-14419-008	* H.-Lever (Left); Disposal Box	1	
13	014-14458-200	* H.-Lever (Left); Disposal Box; A3	1	RC6300
14	011-14417-005	* Handle; Disposal Box	1	
14	014-14454-000	* Handle; Disposal Box; A3	1	RC6300
15	014-14460-107	* Frame; Disposal Handle	1	RC6300

No.	Part No.	Part Name	Q'ty	Remark
16	011-14426-209	* Disposal Shaft; Disposal Box	1	
16	014-14464-005	* Disposal Shaft; Disposal Box; A3	1	RC6300
17	011-14424-001	* Boss; Disposal Box	2	

Fig. 38 ELECTRICAL COMPONENT AREA (1) (RC4000)

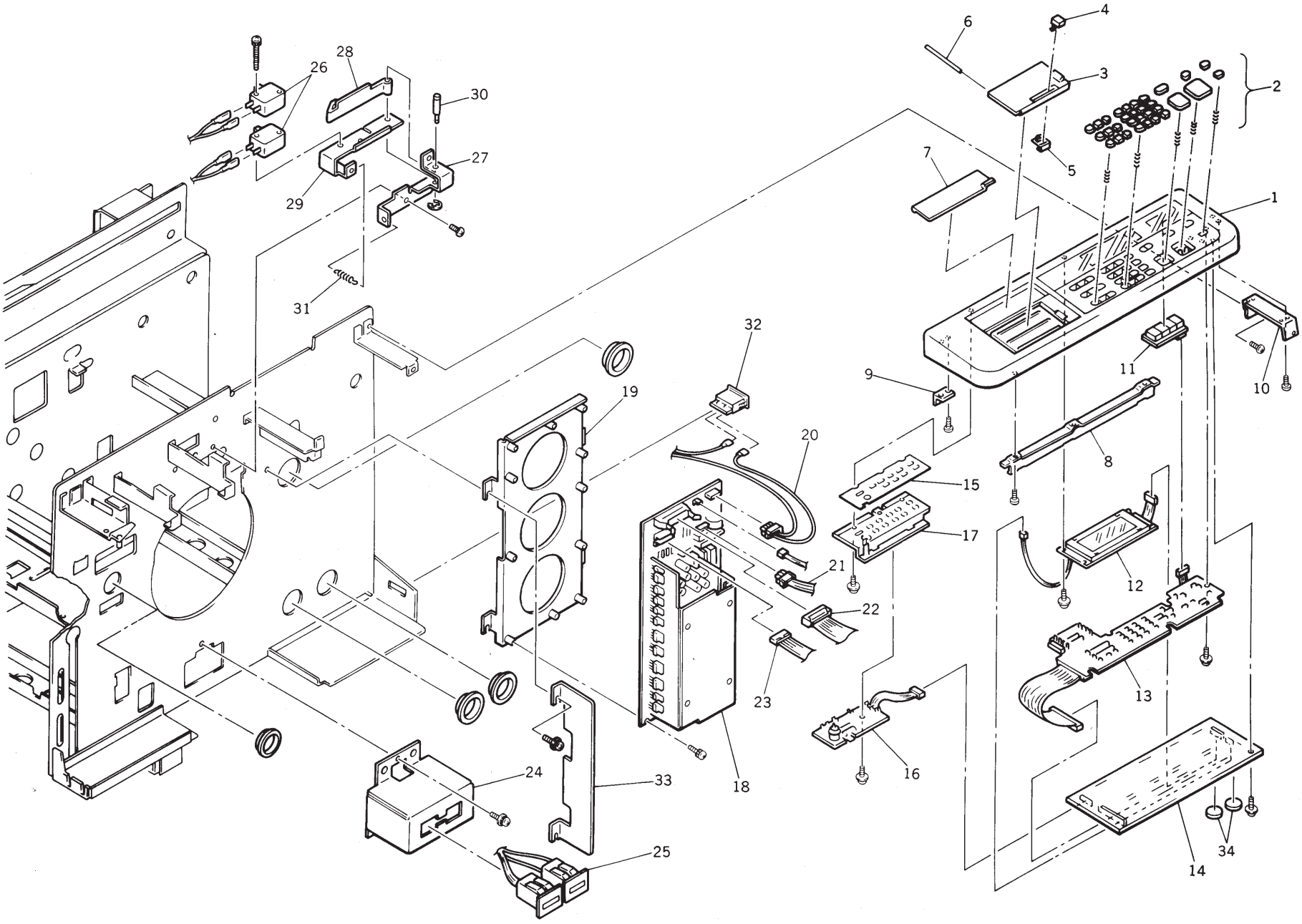

No.	Part No.	Part Name	Q'ty	Remark
	011-97551-204	Unit/Operation Panel; 40US		U.S.A.
	011-97552-200	Unit/Operation Panel; 40B4		Asia
	011-97553-207	Unit/Operation Panel; 40Pic		Europe
1	011-97555-005	* Key Board Cover Ass'y; 40US	1	
1	011-97556-001	* Key Board Cover Ass'y; 40B4	1	
1	011-97557-008	* Key Board Cover Ass'y; 40Pic	1	
2		** Key Switch		
	011-97540-008	* Pocket Cover Ass'y	1	
3	011-47554-105	** Pocket Cover	1	
4	011-17039-001	** Knob; Pocket Cover	1	
5	011-17040-000	** Plate Spring; Knob; Pocket Cover	1	
6	011-17041-006	* Shaft; Pocket Cover; Panel	1	
7	011-17037-009	* Door; Sub-Panel	1	
8	011-17046-105	* Reinforce Plate; Panel	1	
9	011-17047-004	* Bracket A; Panel	1	
10	011-17048-108	* Bracket B; Keyboard	1	
11	011-51505-003	* Panel Display PCB	1	
12	011-70508-005	* LCD; Panel	1	
13	011-51503-000	* Panel SW PCB	1	
14	011-51511-208	* Panel Main PCB	1	
15		* Sheet; Sub-Panel	1	
16	011-51518-008	* P. VR PCB	1	
17		* Sub-Panel Base	1	
	011-98200-200	Unit/Power Supply III-S; 100V		
	011-98205-105	Unit/Power Supply III-S; 200V		
18		* Power Supply PCB	1	
19		* Bracket; Power Supply PCB	1	
20	011-55116-001	Inlet Terminal; 100V	1	
20	011-55115-102	Inlet Terminal; 200V	1	
21	011-55070-206	Wire Harness; TPH-Power	1	
22	011-55004-203	Wire Harness; Image-Power	1	
23	011-55011-102	Wire Harness; Panel-Power	1	
	011-97235-000	Unit/Counter		
24	011-47210-104	* Bracket; Counter	1	
25	011-65022-200	* Counter	1	

No.	Part No.	Part Name	Q'ty	Remark
	011-91211-002	Interlock Switch		
26	443-00210-004	* Micro-SW; DDIL-AIAA	2	
27	012-16126-005	* Bracket II; Interlock Switch	1	
28	011-16118-102	* Actuator	1	
29	012-16127-001	* Bracket; Interlock Switch	1	
30	012-16130-002	* Shaft; Actuator	1	
31	012-16128-008	* Spring; Interlock Switch	1	
32	443-12000-005	Power Switch; JWZ 2120-2001	1	
33	011-18113-000	Cover Plate Left; Power Supply	1	
34	408-02300-001	Battery	2	
	011-70502-	Panel ROM; 11 En		

Fig. 39 ELECTRICAL COMPONENT AREA (1) (RC4500, RC5600/D)

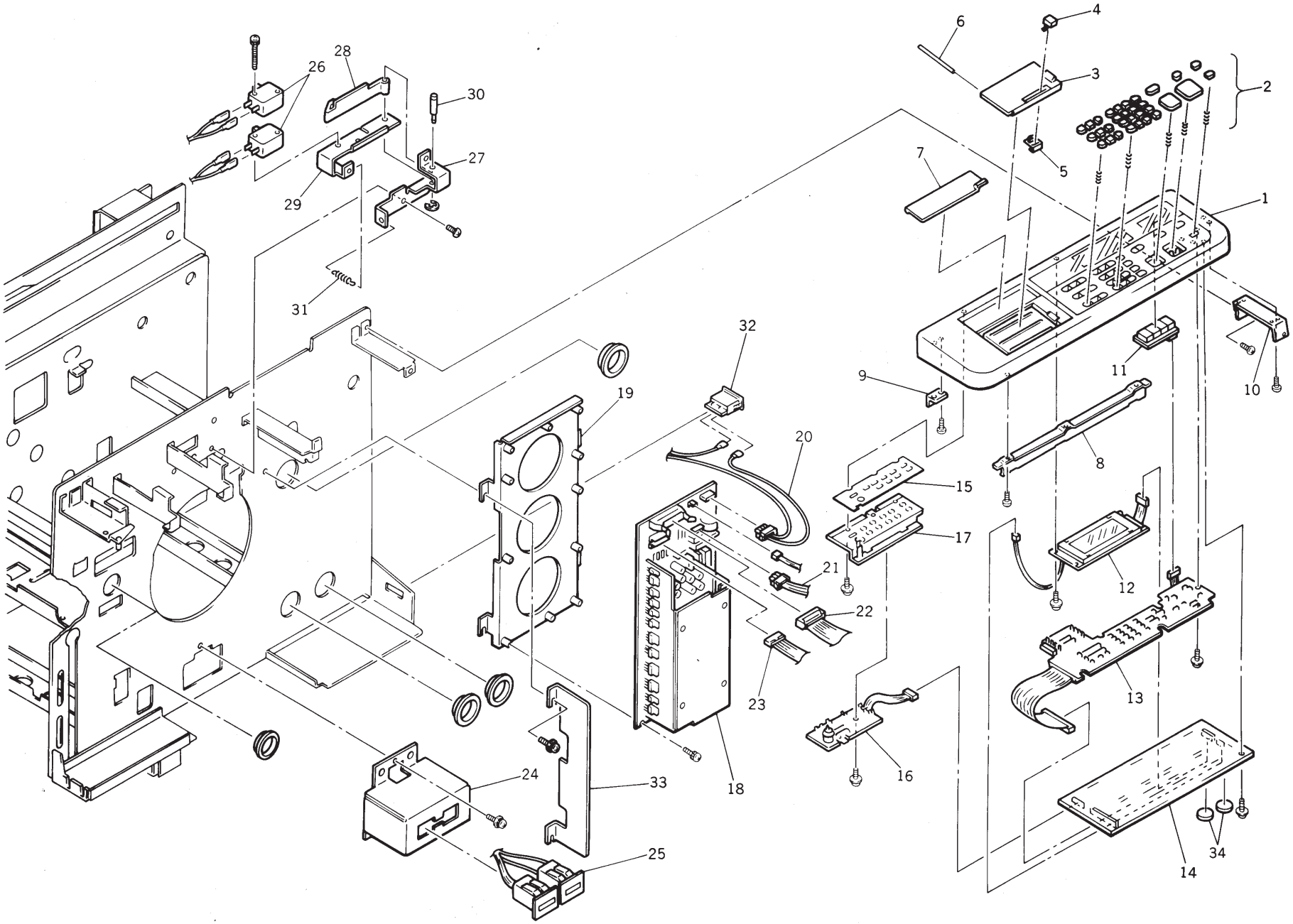

No.	Part No.	Part Name	Q'ty	Remark
	011-97530-509	Unit/Operation Panel; 56/D 100US		U.S.A.
	011-97531-505	Unit/Operation Panel; 56/D A4		
	011-97532-404	Unit/Operation Panel; 56/D B4		
	011-97533-303	Unit/Operation Panel; 56/D Pic.		
	011-97542-507	Unit/Operation Panel; 45 B4		
	011-97550-500	Unit/Operation Panel; 45 100US		U.S.A.
	011-97541-500	Unit/Operation Panel; 45 A4		
	011-97543-309	Unit/Operation Panel; 45Pic.		
1	011-97565-009	* Key Board Cover Ass'y; 56/D US	1	
1	011-97575-006	* Key Board Cover Ass'y; 56/D A4	1	
1	011-97585-001	* Key Board Cover Ass'y; 56/D B4	1	
1	011-97576-002	* Key Board Cover Ass'y; 56/D Pic.	1	
1	011-97580-000	* Key Board Cover Ass'y; 45 B4	1	
1	011-97560-009	* Key Board Cover Ass'y; 45 US	1	
1	011-97570-004	* Key Board Cover Ass'y; 45 A4	1	
1	011-97571-000	* Key Board Cover Ass'y; 45 Pic.	1	
2		** Key Switch		
	011-97540-008	* Pocket Cover Ass'y	1	
3	011-47554-105	** Pocket Cover	1	
4	011-17039-001	** Knob; Pocket Cover	1	
5	011-17040-000	** Plate Spring; Knob; Pocket Cover	1	
6	011-17041-006	* Shaft; Pocket Cover; Panel	1	
7	011-17037-009	* Door; Sub-Panel	1	
8	011-17046-105	* Reinforce Plate; Panel	1	
9	011-17047-004	* Bracket A; Panel	1	
10	011-17048-108	* Bracket B; Keyboard	1	
11	011-51505-003	* Panel Display PCB	1	
12	011-70508-005	* LCD; Panel	1	
13	011-51503-000	* Panel SW PCB	1	
14	011-51511-208	* Panel Main PCB	1	
15		* Sheet; Sub-Panel	1	
16	011-51517-001	* P. VR PCB; 56	1	
16	011-51518-008	* P.VR PCB	1	
17		* Sub-Panel Base	1	
	011-90000-504	Unit/ Power Supply; 100V		

No.	Part No.	Part Name	Q'ty	Remark
	011-90050-307	Unit/ Power Supply; 200V		
18		* Unit/Power Supply PCB		
19	011-18101-207	* Bracket; Power Supply PCB	1	
20	011-55116-001	Inlet Terminal; 100V	1	
20	011-55115-102	Inlet Terminal; 200V	1	
21	011-55070-206	Wire Harness; TPH-Power	1	
22	011-55004-203	Wire Harness; Image-Power	1	
23	011-55011-102	Wire Harness; Panel-Power	1	
	011-97235-000	Unit/Counter		
	011-97236-007	Unit/Counter; Pic.		
24	011-47210-104	* Bracket; Counter	1	
24	011-47211-100	* Bracket; Counter; Pic.	1	
25	011-65022-200	* Counter	1	
	011-91211-002	Interlock Switch		
26	443-00210-004	* Micro-SW; DDIL-AIAA	2	
27	012-16126-005	* Bracket II; Interlock Switch	1	
28	011-16118-102	* Actuator	1	
29	012-16127-001	* Bracket; Interlock Switch	1	
30	012-16130-002	* Shaft; Actuator	1	
31	012-16128-008	* Spring; Interlock Switch	1	
32	443-10800-101	Power Switch; AJ911001B3	1	
33	011-18113-000	Cover Plate Left; Power Supply	1	U.S.A.
34	408-02300-001	Battery	2	
	485-00001-600	Fuse 10A125V6.3 CES6	1	
	485-00001-804	Fuse 8A125V5.2 ULTSC	1	
	485-00002-509	Fuse 5A125V5.2 ULTSC	2	
	485-00003-408	Fuse 3.15A125V5.2 ULTSC	6	
	485-00003-505	Fuse 1A125V5.2 ULTSC	1	
	011-70502-	Panel ROM; 11 En		

Fig. 40 ELECTRICAL COMPONENT AREA (1) (RC5800)

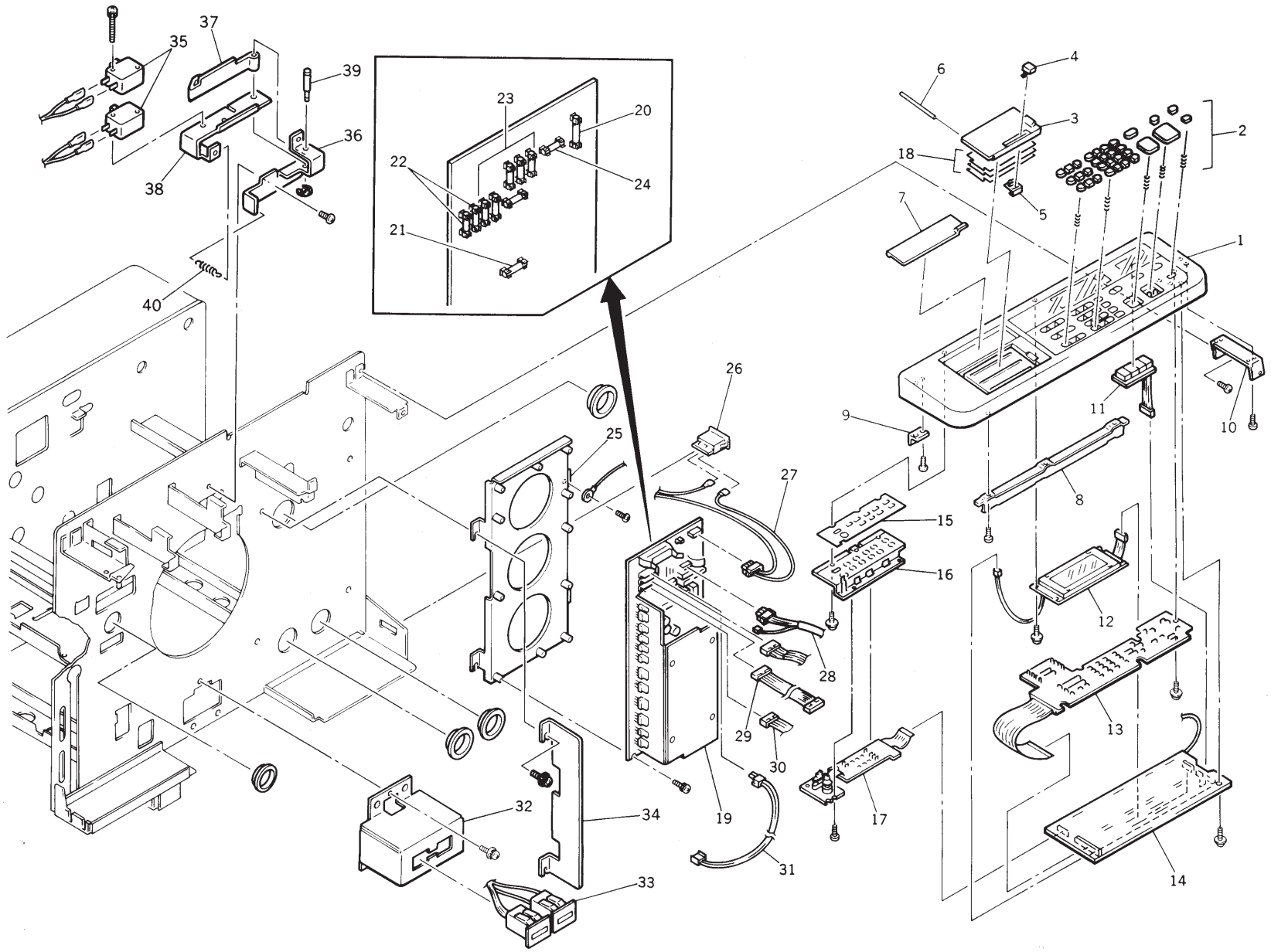

No.	Part No.	Part Name	Q'ty	Remark
	012-97104-205	Unit/Operation Panel; 58B		
	012-97102-202	Unit/Operation Panel; 58US		
	012-97105-201	Unit/Operation Panel; 58Pic.		
	012-96012-005	* Key Board Cover Ass'y; 58B		
	012-96011-009	* Key Board Cover Ass'y; 58US		
	012-96013-001	* Key Board Cover Ass'y; 58Pic.		
1		** Key Board Cover	1	
2		** Key Switch		
	012-96031-000	* Pocket Cover Ass'y; 58	1	
	011-97525-009	* Pocket Cover Ass'y; Pic.	1	
3	012-17032-101	** Pocket Cover; Pic.	1	
3	011-47560-008	** Pocket Cover	1	
4	011-17039-001	** Knob; Pocket Cover	1	
5	011-17040-000	** Plate Spring; Knob; Pocket Cover	1	
6	011-17041-006	* Shaft; Pocket Cover; Panel	1	
7	011-17037-009	* Door; Sub-Panel	1	
8	011-17046-105	* Reinforce Plate; Panel	1	
9	011-17047-004	* Bracket A; Panel	1	
10	011-17048-108	* Bracket B; Keyboard	1	
11	011-51505-003	*Panel Display PCB	1	
12	011-70508-005	* LCD; Panel	1	
13	011-51503-000	* Panel SW PCB	1	
14	012-51605-005	* P.Main PCB; 58	1	
15	012-17052-005	* SW Sheet; 58	1	
15	012-17053-001	* SW Sheet; 58Pic.	1	
16	011-17050-005	* Sub-Panel Base	1	
17	012-51606-001	* P.Sub SW PCB	1	
18	012-17012-003	Pocket Manual; 58	1	
18	012-17014-006	Pocket Manual; 58Pic.	1	
	011-90000-504	Unit/Power Supply; 100V		
	011-90050-307	Unit/Power Supply; 200V	1	
19		* Power Supply PCB	1	
20	485-00002-401	** Fuse 10A 125V 5.2ULTSC	1	
21	485-00001-804	** Fuse 8A 125V 5.2ULTSC	1	
22	485-00002-509	** Fuse 5A 125V 5.2ULTSC	2	

No.	Part No.	Part Name	Q'ty	Remark
23	485-00003-408	** Fuse 3.15A 125V 5.2ULTSC	6	
24	485-00003-505	** Fuse 1A 125V 5.2ULTSC	1	
25	011-18106-209	* Bracket; Power Supply PCB	1	
26	443-10800-101	Power Switch; AJ91100LB3	1	
27	011-55116-001	Inlet Terminal; 100V	1	
27	011-55115-102	Inlet Terminal; 200V	1	
28	011-55070-206	Wire Harness; TPH-Power	1	
29	011-55011-102	Wire Harness; Panel-Power	1	
30	012-55039-101	Wire Harness; Power- Image	1	
31	011-55062-009	Wire Harness; Main Motor	1	
	011-97235-000	Unit/Counter		
	011-97236-007	Unit/Counter; Pic.		
32	011-47210-104	* Bracket; Counter	1	
32	011-47211-100	* Bracket; Counter; Pic.	1	
33	011-65022-200	* Counter	1	
34	011-18113-000	Cover Plate Left; Power Supply	1	
	012-96080-000	Interlock Switch		
35	443-00210-004	* Micro-SW; DDIL-AIAA	2	
36	012-16126-005	* Bracket II; Interlock Switch	1	
37	011-16118-102	* Actuator	1	
38	012-16127-001	* Bracket; Interlock Switch	1	
39	012-16130-002	* Shaft; Actuator	1	
40	012-16128-008	* Spring; Interlock Switch	1	
	012-70101-	Panel ROM; 22En		

Fig. 41 ELECTRICAL COMPONENT AREA (1) (RC6300)

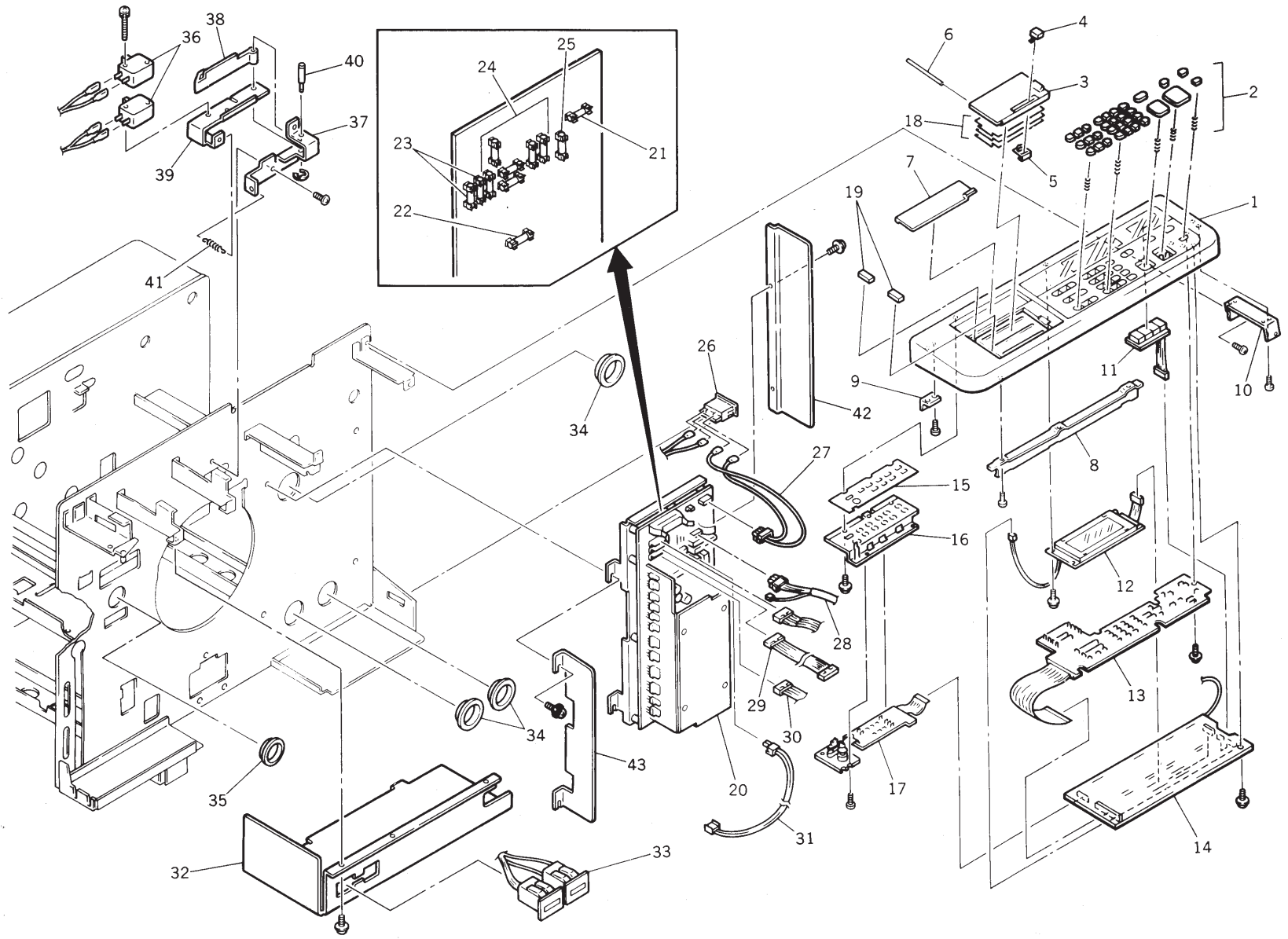

No.	Part No.	Part Name	Q'ty	Remark
	014-97110-005	Unit/Operation Panel; 63 US		
	014-97111-001	Unit/Operation Panel; 63 Pic.		
	014-97112-008	Unit/Operation Panel; 63		
	014-97210-000	* Key Board Cover Ass'y; 63 US		
	014-97211-006	* Key Board Cover Ass'y; 63 Pic.		
	014-97212-002	* Key Board Cover Ass'y; 63		
1	014-17015-007	** Key Board Cover; 63		
1	014-17016-003	** Key Board Cover; 63 Pic.		
2		** Key Switch		
	011-97525-009	* Pocket Cover Ass'y; Pic.	1	
	012-96031-000	* Pocket Cover Ass'y; 58	1	
3	012-17032-101	** Pocket Cover; Pic.	1	
3	011-47560-008	** Pocket Cover	1	
4	011-17039-001	** Knob; Pocket Cover	1	
5	011-17040-000	** Plate Spring; Knob; Pocket Cover	1	
6	011-17041-006	* Shaft; Pocket Cover; Panel	1	
7	011-17037-009	* Door; Sub-Panel	1	
8	011-17046-105	* Reinforce Plate; Panel	1	
9	011-17047-004	* Bracket A; Panel	1	
10	011-17048-108	* Bracket B; Keyboard	1	
11	011-51505-003	* Panel Display PCB	1	
12	011-70500-004	* LCD; DMF5005N	1	
13	011-51503-000	* Panel SW PCB	1	
14	011-51502-209	* Panel Main PCB	1	
15	014-17012-008	* Sheet; Sub-Panel; 63 US	1	
15	014-17013-004	* Sheet; Sub-Panel; 63 Pic.	1	
16	011-17050-005	* Sheet; Sub-Panel Base	1	
17	012-51606-001	* P.Sub SW PCB	1	
18	014-17052-000	Pocket Manual; 63	1	
18	014-17053-006	Pocket Manual; 63Pic.		
19	011-17049-007	Sponge; Pocket Manual	2	
20	011-90100-304	Power Supply PCB III H100	1	
20	011-90105-004	Power Supply PCB III H200	1	
21	485-00002-401	* Fuse 10A 125V 5.2 ULTSC	1	
22	485-00001-804	* Fuse 8A 125V 5.2 ULTSC	1	

No.	Part No.	Part Name	Q'ty	Remark
23	485-00002-509	* Fuse 5A 125V 5.2 ULTSC	2	
24	485-00003-408	* Fuse 3.15A 125V ULTSC	6	
25	485-01420-002	* Fuse 1A 250V 5.2 SD6	1	
26	443-12000-005	Power Switch; JWZ 2120-2001	1	
27	014-55008-006	Inlet Terminal; 100V; A3	1	
27	014-55009-002	Inlet Terminal; 200V; A3	1	
28	011-55010-505	Wire Harness; TPH-Power	1	
29	011-55011-102	Wire Harness; Panel-Power	1	
30	012-55039-101	Wire Harness; Power- Image	1	
31	011-55054-103	Wire Harness; Main Motor	1	
	014-97232-003	Unit/Counter; 63En		
	014-97233-000	Unit/Counter; 63Pic.		
32	014-17205-000	* Bracket; Counter; 63En	1	
32	014-17206-007	* Bracket; Counter; 63Pic.	1	
33	011-65022-200	* Counter	1	
34	665-04014-003	Snap Bushing; SB-2000-26	3	
35	665-04012-000	Snap Bushing; SB-1500-21	1	
	012-96080-000	Interlock Switch		
36	443-00210-004	* Micro-SW; DDIL-AIAA	2	
37	012-16126-005	* Bracket II; Interlock Switch	1	
38	011-16118-102	* Actuator	1	
39	012-16127-001	* Bracket; Interlock Switch	1	
40	012-16130-002	* Shaft; Actuator	1	
41	012-16128-008	* Spring; Interlock Switch	1	
42	011-18108-104	Side Cover; Power Supply	1	
43	011-18113-000	Cover Plate; Power Supply	1	
	014-80002-	Panel ROM; 33En		

Fig. 42 ELECTRICAL COMPONENT AREA (2) (RC4000, RC4500, RC5600/D)

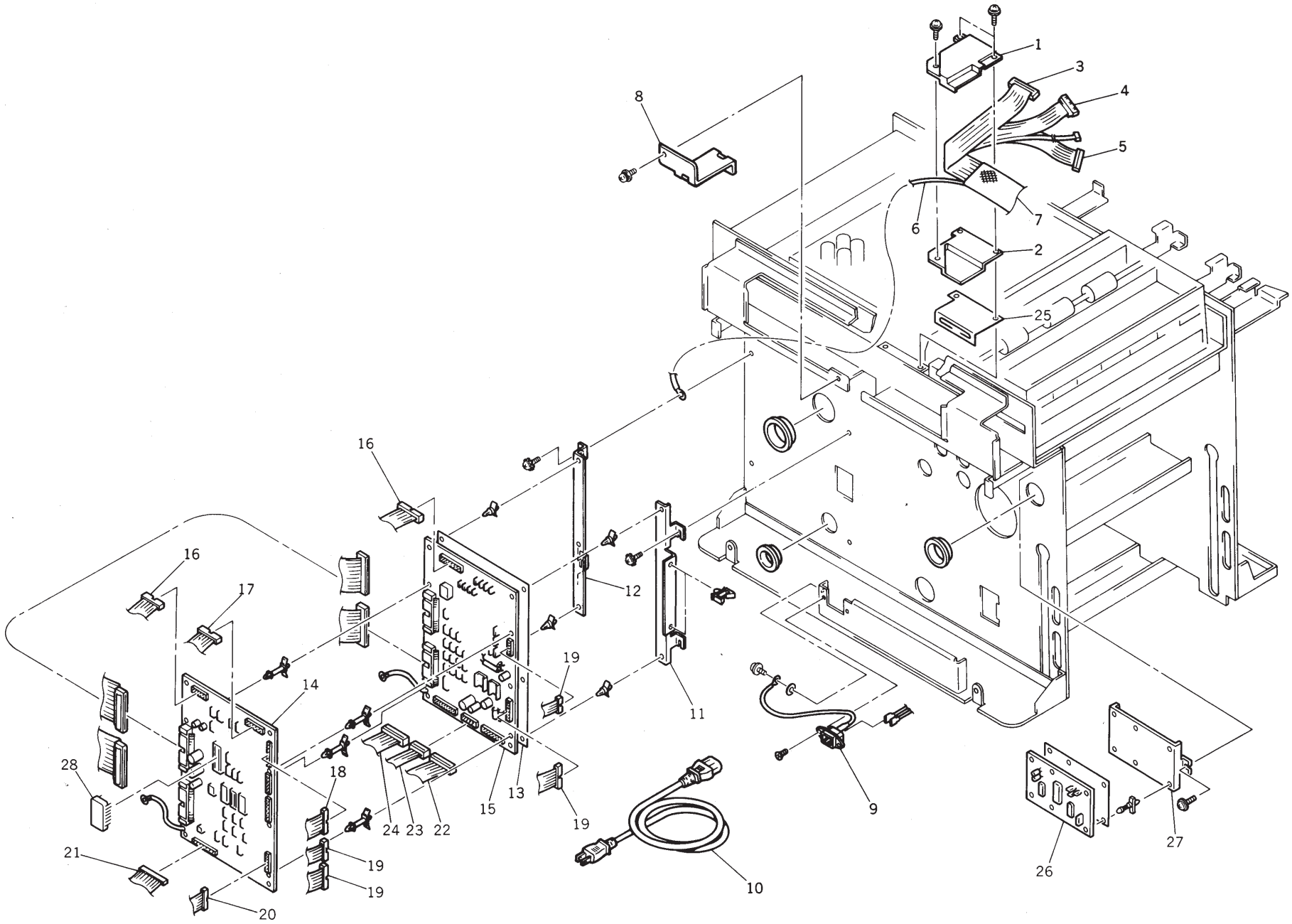

No.	Part No.	Part Name	Q'ty	Remark
1	011-16023-004	Wire Harness Stay (Upper); Scanner	1	
2	011-16024-000	Wire Harness Stay (Lower); Scanner	1	
	011-96055-009	Wire Harness Ass'y; Image; 40		RC4000
	011-96050-104	Wire Harness Ass'y; Image		
3	011-55004-203	* Wire Harness; Image-Power	1	
4	011-55138-005	* Wire Harness; Image-TPH; 40	1	RC4000
4	011-55005-404	* Wire Harness; TPH	1	
5	011-55134-107	* Wire Harness; CN2; Image Processing; 40	1	RC4000
5	011-55002-308	* Wire Harness; CN2; Image Processing	1	
6	011-55041-109	Ground Wire; Image	1	
7	011-70010-201	Protection Net; Wire Harness	1	
8	011-16107-003	Bracket; Wire Harness	1	
9	011-55116-001	Inlet Terminal; 100V	1	
9	011-55115-102	Inlet Terminal; 200V	1	
10	488-00013-103	Power Cord; 100V	1	
10	488-00014-100	Power Cord; US	1	
10	488-00015-106	Power Cord; 200V	1	
11	011-18102-009	Bracket (Right); System PCB	1	
12	011-18103-005	Bracket (Left); System PCB	1	
13	011-18104-001	Sheet; System PCB	1	
	011-98120-509	Unit/System PCB II	1	
14	011-51500-702	* System Main PCB II	1	
15	014-51501-000	* System Drive PCB III	1	
15	011-51501-709	System Drive PCB II	1	*
16	011-55087-109	Wire Harness; CN1 & CN8	1	
17	011-55134-107	Wire Harness; CN2; Image Processing; 40	1	RC4000
17	011-55002-308	Wire Harness; CN2; Image Processing	1	
18	011-55003-100	Wire Harness; CN3; Panel	1	
19	011-55090-100	Wire Harness; CN4, CN5,CN9 & CN10	1	
19	011-55090-100	Wire Harness; CN4,CN5,CN9 &CN10; 45	1	
19	011-55095-101	Wire Harness; CN4,CN5,CN9 & CN10; Pressure Det.	1	
20	011-55016-309	Wire Harness; CN6	1	
21	011-55017-100	Wire Harness; CN7	1	
22	011-55021-302	Wire Harness; CN11	1	
23	011-55001-204	Wire Harness; CN12; Power	1	

No.	Part No.	Part Name	Q'ty	Remark
24	011-55023-100	Wire Harness; CN13-S7	1	
25	011-16030-108	Ground Plate; Scanner	1	
26	011-51525-101	Pressure Control PCB II	1	
27	011-18506-002	Bracket; Pressure Control PCB	1	
28	011-70045-	System ROM; SP 11 G	1	
28	011-70019-	System ROM; SP 11	1	
*	System Drive PCB II (011-51500-709) is available for combination with Non-Dip SW Type System Main PCB.			

Fig. 43 ELECTRICAL COMPONENT AREA (2) (RC5800, RC6300)

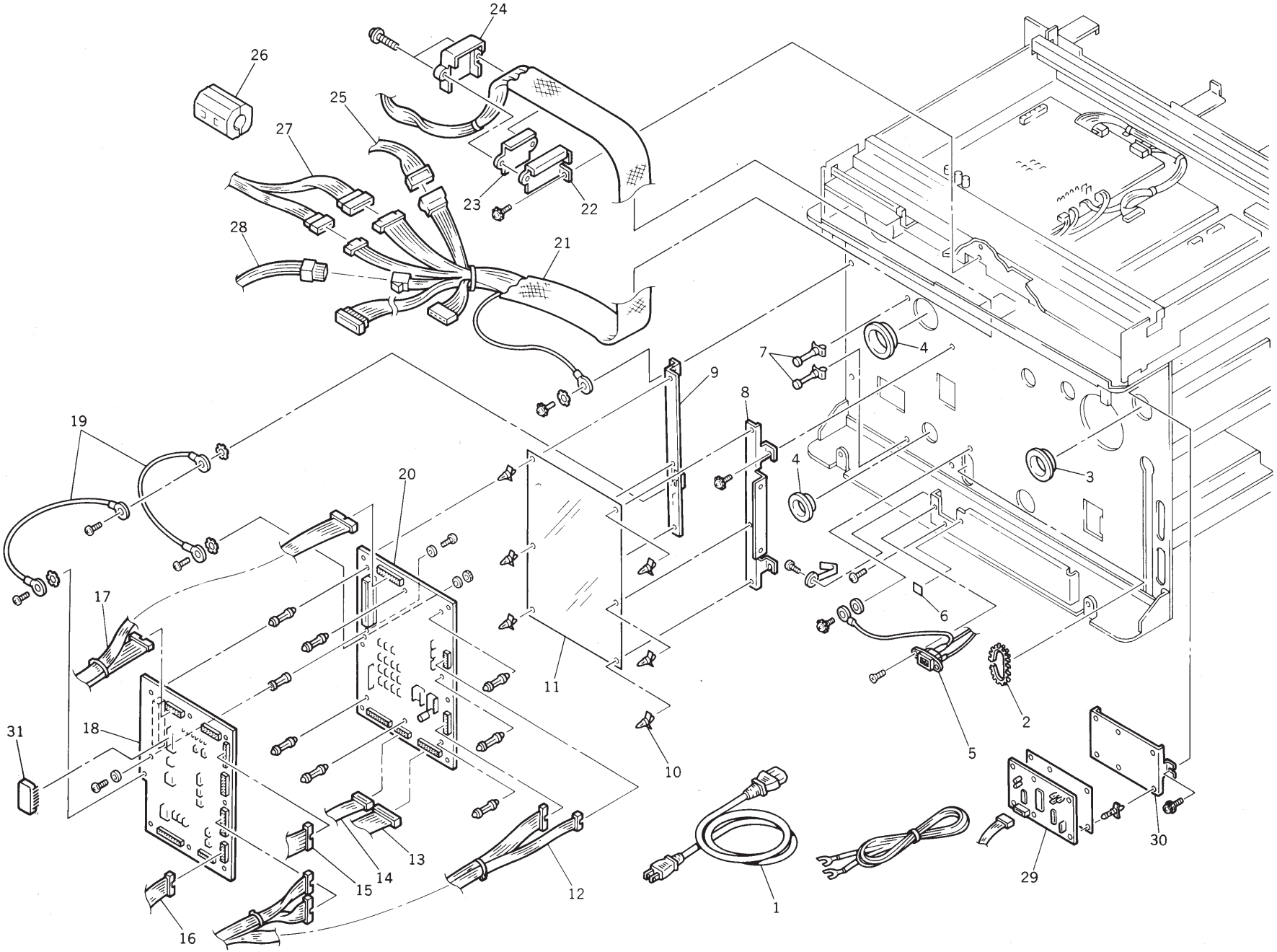

No.	Part No.	Part Name	Q'ty	Remark
1	488-00013-103	Power Cord; 100V	1	
1	488-00014-100	Power Cord; US	1	
1	488-00015-106	Power Cord; 200V	1	
2	665-04036-007	Free Bushing; KG-024K	1	
3	665-04012-000	Snap Bushing; SB-1500-21	1	
4	665-04014-003	Snap Bushing; SB-2000-26	2	
5	011-55116-001	Inlet Terminal; 100V	1	
5	011-55115-102	Inlet Terminal; 200V	1	
5	014-55009-002	Inlet Terminal; 200V; A3	1	RC6300
5	014-55008-006	Inlet Terminal; 100V; A3	1	RC6300
6	550-20119-003	Seal; Ground	1	
7	505-00600-001	Board Spacer; SPS-20	2	
8	011-18102-009	Bracket (Right); System PCB	1	
9	011-18103-005	Bracket (Left); System PCB	1	
10	505-00310-003	Support Post (R); SP-3-3-01	6	
11	011-18104-001	Sheet; System PCB	1	
12	011-55095-101	Wire Harness; CN4,CN5,CN9 & CN10; Pressure Det.	1	
13	011-55021-302	Wire Harness; CN11	1	
14	011-55001-204	Wire Harness; CN12; Power	1	
15	011-55003-100	Wire Harness; CN3; Panel	1	
16	011-55016-309	Wire Harness; CN6	1	
17	011-55087-109	Wire Harness; CN1 & CN8	1	
17	014-55007-000	Wire Harness; CN1 & CN8; A3	1	RC6300
	011-98120-509	Unit/System PCB II		
18	011-51500-702	* System Main PCB II	1	
19	488-90004-108	* Ground Wire	2	
20	014-51501-000	* System Drive PCB III	1	
20	011-51501-709	System Drive PCB II	1	*
21	012-55057-207	Wire Harness; Image Processing; 58	1	
22	012-16240-002	Bracket; Wire Harness	1	
23	012-16241-009	Holder A; Wire Harness	1	
24	012-16242-005	Holder B; Wire Harness	1	
25	012-55049-107	Junction Wire; CN2; Image	1	
26	435-00004-003	Core Set; ESD OR-25	1	
27	014-55004-000	Wire Harness; TPH Signal	1	

No.	Part No.	Part Name	Q'ty	Remark
28	012-55039-101	Wire Harness; Power- Image	1	
29	011-51525-101	Pressure Control PCB II	1	
30	011-18506-002	Bracket; Pressure Control PCB	1	
31	012-70004-	System ROM; SP22G		RC5800
31	014-80000-	System ROM; SP33G		RC6300
*	System Drive PCB II (011-51500-709) is available for combination with Non-Dip SW Type System Main PCB.			

Fig. 44 EXTERIOR COVER AREA (RC4000, RC4500, RC5600/D)

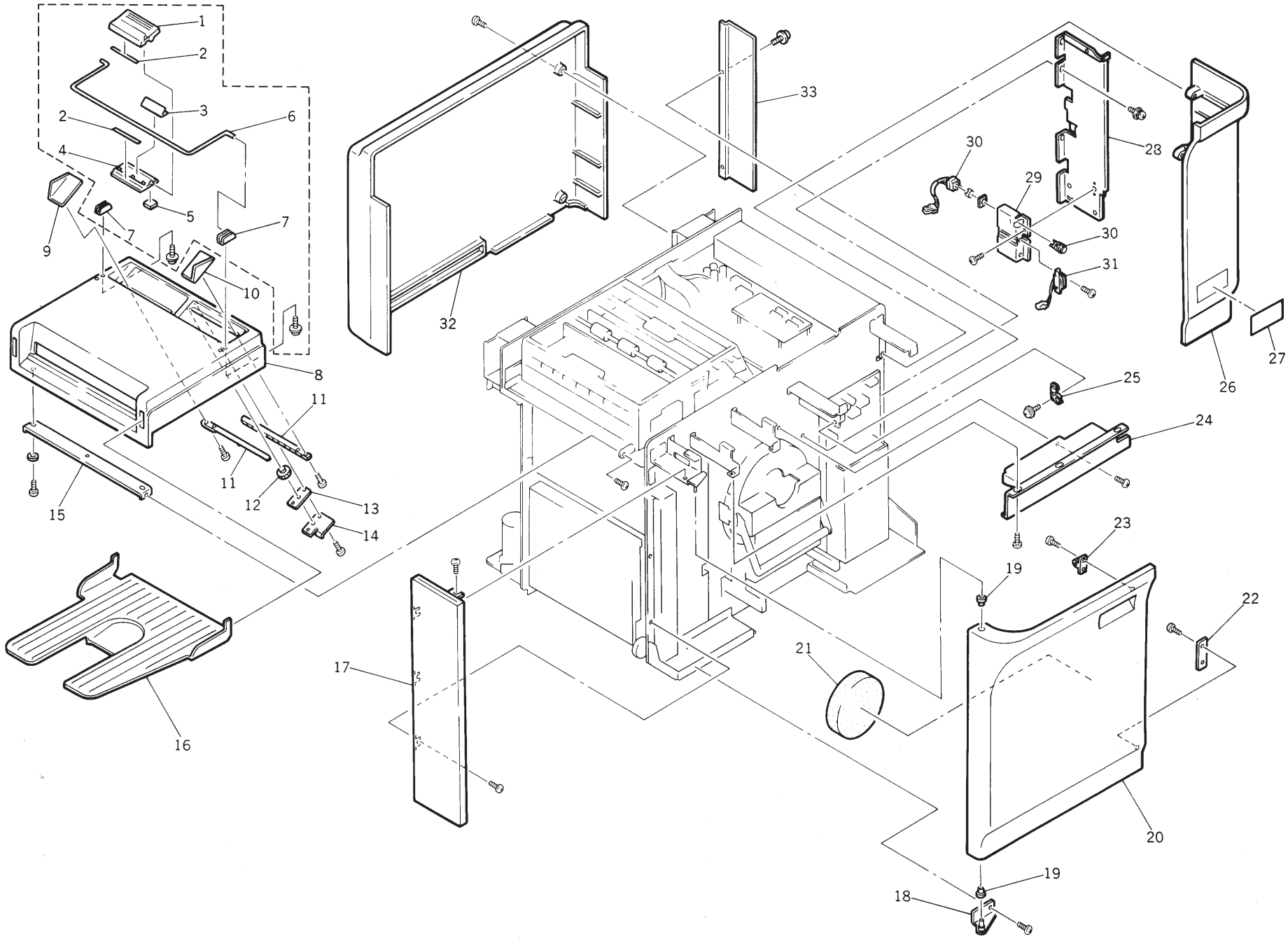

No.	Part No.	Part Name	Q'ty	Remark
	011-96070-008	Unit/ADF Cover; 56D		
	011-96075-000	* Unit/Clip; 56D		
1	011-17502-100	** Clip B	1	
2	011-17504-006	** Rubber; Clip	2	
3	011-17503-000	** Plate Spring; Clip	1	
4	011-17501-007	** Clip A; 56D	1	
5	011-17508-109	** Scroll Magnet; 56D	1	
6	011-17505-002	** Scroll Arm; 56D	1	
7	011-17506-009	** Fulcrum; 56D	2	
	011-96080-003	* Unit/ADF Cover; 45, 56		
8	011-17106-000	** ADF Cover	1	
9	011-17108-003	** Original Side Guide (Left)	1	
10	011-17107-007	** Original Side Guide (Right)	1	
11	009-35406-005	** Slide Rack; Original Holder (A3)	2	
12	005-24114-003	** Shaft Gear; Original Holder	1	
13	011-17109-000	** Set Plate; Original Holder	1	
14	011-16003-100	** Catch Plate; ADF Cover	1	
15	011-16001-108	** Set Plate; ADF Cover	1	
16	011-17113-007	Original Tray	1	
17	011-17105-004	Front Left Cover	1	
18	002-11131-004	Lower Hinge; Front	1	
19	002-17006-007	Shaft Catch; Front Cover	2	
20	011-17101-009	Front Cover	1	
21	002-12542-300	Cushion; Ink Bottle	1	
22	011-17102-005	Magnet Catch Plate; Front	1	
23	002-17016-002	Cover Catch A; Front	1	
24	011-14503-106	Inner Cover B	1	
25	002-17017-203	Cover Catch B; Front	1	
26	011-47103-103	Front Right Cover	1	
27	550-20362-005	Emblem; 4000	1	
27	550-20208-006	Emblem; 4500	1	
27	550-20209-002	Emblem; 5600	1	
27	550-20210-000	Emblem; 5600D	1	
	011-97210-008	Inner Cover A Ass'y		
28	011-17212-102	* Inner Cover A	1	

No.	Part No.	Part Name	Q'ty	Remark
29	011-17211-009	* Switch Box	1	
30	011-60007-008	* Rotation SW; A Position	1	
31	011-60020-004	* Front Cover Set SW	1	
32	011-47557-007	Back Cover	1	
33	011-18108-104	Side Cover; Power Supply	1	

Fig. 45 EXTERIOR COVER AREA (RC5800, RC6300)

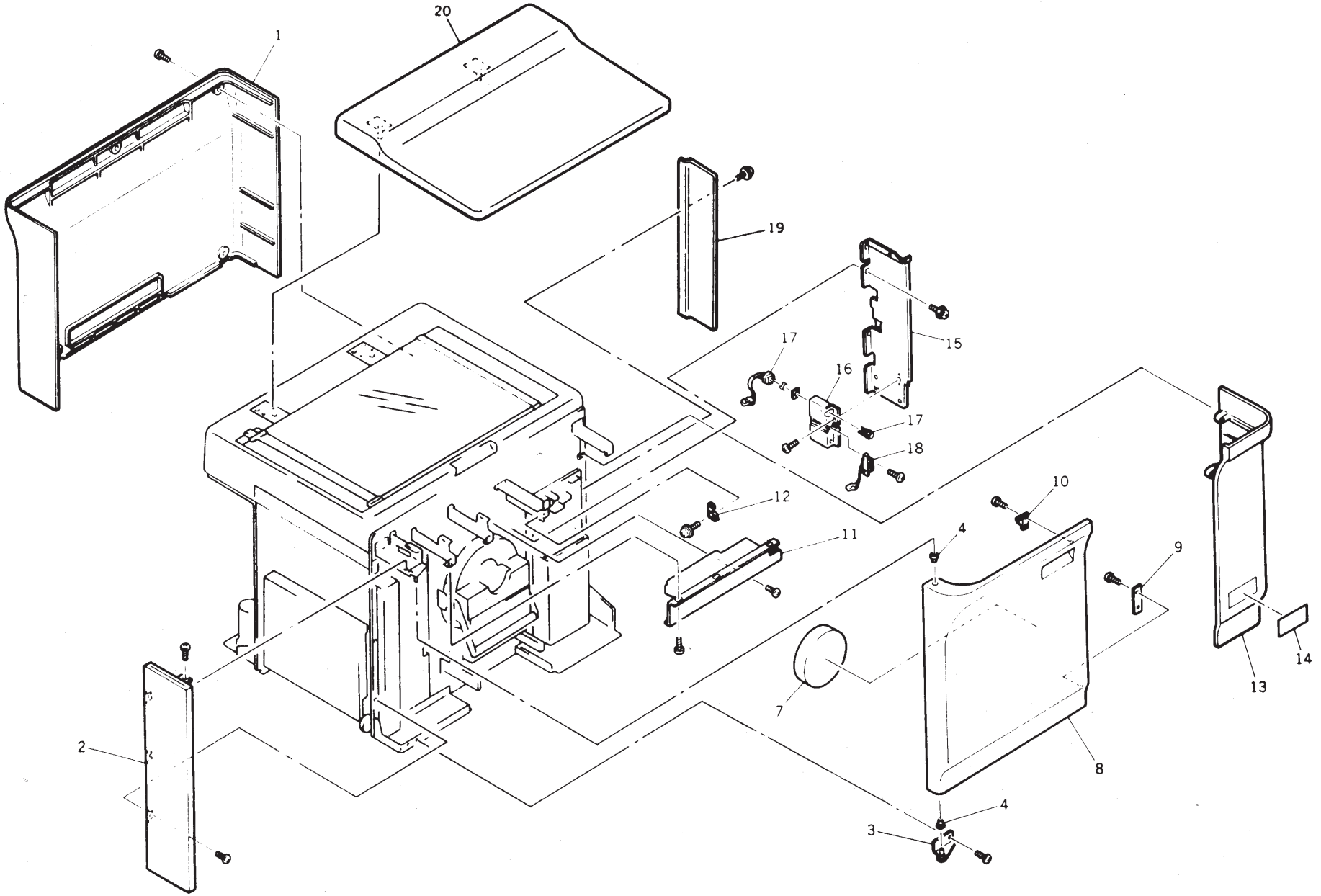

No.	Part No.	Part Name	Q'ty	Remark
1	012-17001-109	Back Cover; 58	1	
1	014-17101-000	Back Cover; A3	1	RC6300
2	011-17105-004	Front Left Cover	1	
3	002-11131-004	Lower Hinge; Front	1	
4	002-17006-007	Shaft Catch; Front Cover	2	
7	002-12542-300	Cushion; Ink Bottle	1	
	011-97200-002	Front Cover Ass'y		
8	011-17101-009	* Front Cover	1	
9	011-17102-005	* Magnet Catch Plate; Front	1	
10	002-17016-002	* Cover Catch A; Front	1	
11	011-17217-007	Inner Cover B	1	
12	002-17017-203	Cover Catch B; Front	1	
13	011-47103-103	Front Right Cover	1	
14	550-20241-003	Emblem; 5800	1	
14	550-20605-005	Emblem; 6300	1	RC6300
	011-97210-008	Inner Cover A Ass'y		
15	011-17212-102	* Inner Cover A	1	
16	011-17211-009	* Switch Box	1	
17	011-60007-008	* Rotation SW; A Position	1	
18	011-60020-004	* Front Cover Set SW	1	
19	011-18108-104	Side Cover; Power Supply	1	
20	012-96500-000	Unit/Stage Cover	1	

No.	Part No.	Part Name	Q'ty	Remark

Fig. 46 EXTERIOR COVER AREA (ADF): (RC5800, RC6300)

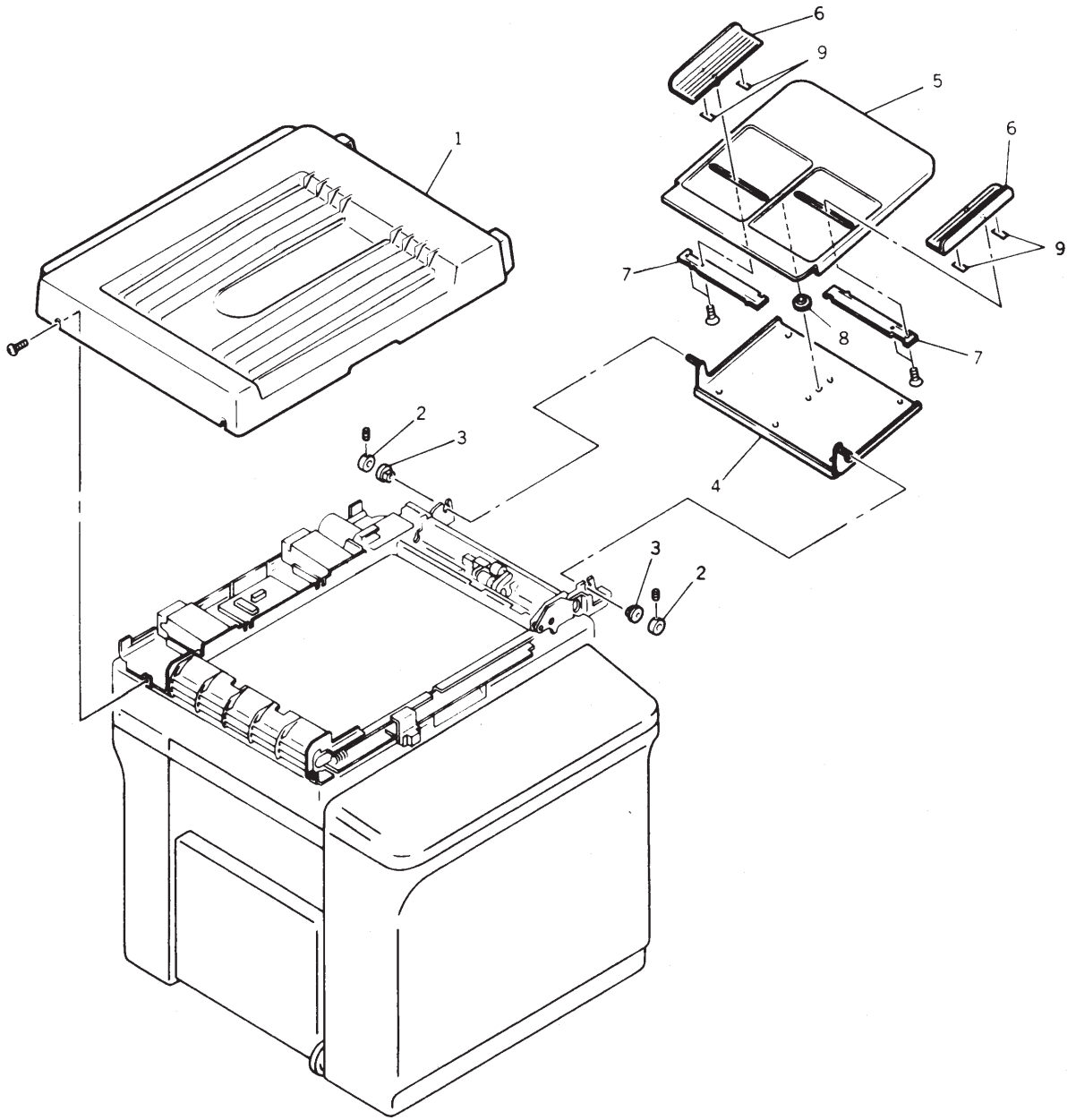

No.	Part No.	Part Name	Q'ty	Remark
1	012-16525-007	ADF Cover	1	
2	012-16514-005	Collar; Original Tray	2	
3	011-16339-001	Metal 6mm	2	
	012-96216-000	Unit/Original Tray		
	012-96217-006	Unit/Original Tray; Pic.		
4	012-16515-109	* Original Table Support Plate	1	
5	012-16527-000	* Original Feed Tray; Pic.	1	
5	012-16526-003	* Original Feed Tray; US	1	
6	012-16517-004	* Original Side Guide	2	
7	012-16520-005	* Slide Rack; Original Tray	2	
8	012-16521-001	* Center Gear; Original Tray	1	
9	012-16518-000	* Slide Sheet; Original Tray	4	

No.	Part No.	Part Name	Q'ty	Remark

Fig. 47 DIGITIZER (RC5800, RC6300)

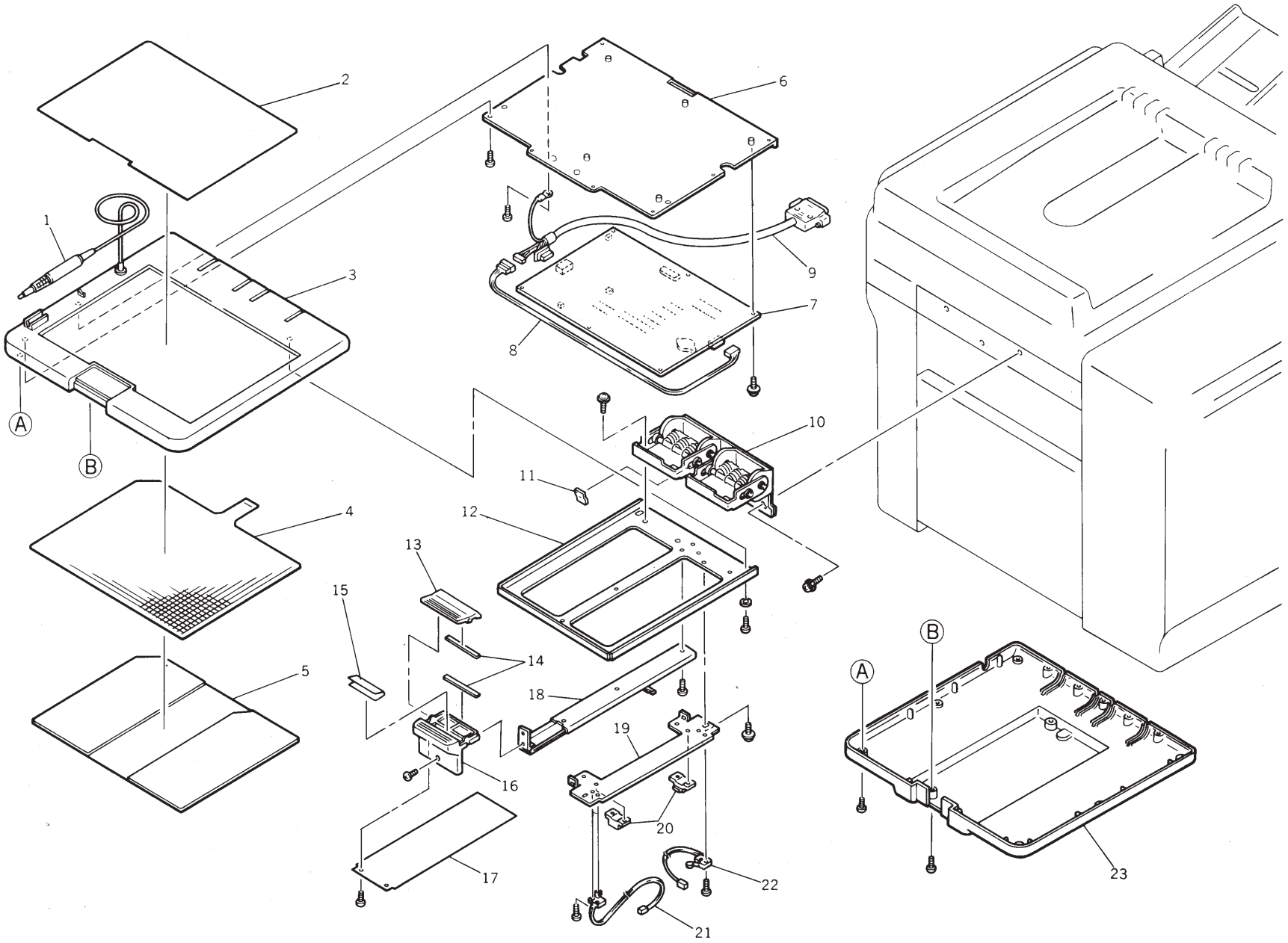

No.	Part No.	Part Name	Q'ty	Remark
1	011-96520-003	Stylus Pen	1	
	012-96601-000	Unit/Digitizer; 58US		
	012-96602-007	Unit/Digitizer; 58Eu		
	012-96603-003	Unit/Digitizer; 58Pic.		
	012-96611-006	* Digitizer Ass'y; 58US	1	
	012-96612-002	* Digitizer Ass'y; 58Eu	1	
	012-96613-009	* Digitizer Ass'y; 58Pic.	1	
2	011-45513-002	** Digitizer Sheet	1	
2	011-45514-009	** Digitizer Sheet; Pic.	1	
3	012-16624-102	** Digitizer Cover (Upper); 58US	1	
3	012-16625-001	** Digitizer Cover (Upper); 58Eu	1	
3	012-16626-008	** Digitizer Cover (Upper); 58Pic.	1	
4	011-17517-108	** Tablet	1	
5	012-16611-000	* Protection Sheet; Tablet	1	
6	012-16605-108	* Holding Plate; Tablet	1	
7	011-51011-302	* Digitizer PCB	1	
8	012-55009-008	* Wire Harness; Digitizer (Inner)	1	
9	012-55008-001	Wire Harness; Digitizer (Outer)	1	
10	012-16607-003	Hinge; Digitizer	1	
11	012-16616-002	Hinge Sponge	1	
12	012-16606-007	Frame; Digitizer; 58	1	
13	011-17502-100	Clip B	1	
14	011-17504-006	Rubber; Clip	2	
15	011-17503-000	Plate Spring; Clip	1	
16	012-16603-008	Lower Clip; 58	1	
17	012-16604-209	Original Slide Plate; Digitizer 58	1	
18	012-16608-000	Digitizer Rail; 58	1	
19	012-16610-004	Bracket; Scroll SW	1	
20	660-05000-603	Magnet Catch; TL-98S-AL-F	2	
21	012-60001-007	Scroll SW A	1	
22	012-60002-003	Scroll SW B	1	
23	012-16602-001	Digitizer Cover (Lower)	1	

No.	Part No.	Part Name	Q'ty	Remark

RC series

PARTS LIST
ver. 1.0