CHAPTER 9: MASTER CLAMP SECTION

Contents

Mechanism 9-2
1. Clamp Unit Home Positioning Mechanism 9-2
2. Clamp Plate Master Release Mechanism 9-3
3. Clamp Plate Master Clamp Mechanism 9-4

Removal and Assembly 9-5
1. Removing the Clamp Unit 9-5
2. Removing the Clamp Motor, Clamp Sensor A, Clamp Sensor B 9-6

Mechanism

1. Clamp Unit Home Positioning Mechanism

When the START key is pressed to create confidential or normal masters, the Clamp open arm [A] and Master release arm [B] are checked to ensure that they have returned to the home position (with the light paths to both Clamp sensors A [F] and B [G] open). If they are not at the home position, the Clamp motor [C] is activated to move the Clamp cam assembly [D] and return the Clamp open arm [A] and Master release arm [B] to the home position until the light paths to both Clamp sensors A [F] and B [G] are open.

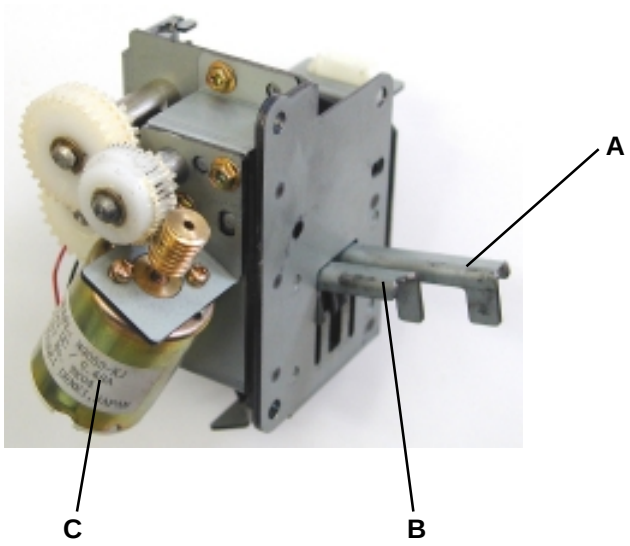

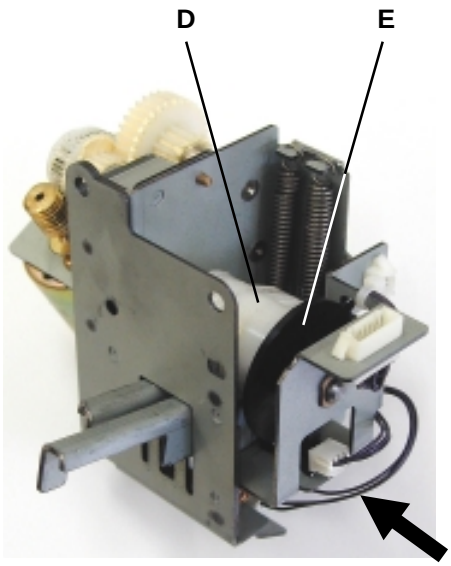

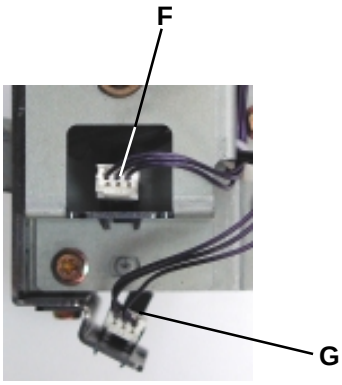

View in the direction of the arrow

A: Clamp open arm
B: Master release arm
C: Clamp motor
D: Clamp cam assembly
E: Clamp encoder sensor
F: Clamp sensor A
G: Clamp sensor B

2. Clamp Plate Master Release Mechanism

When the START key is pressed to create confidential or normal masters, the print drum makes one turn and checks for the presence of master on the print drum. Once the presence of a master on the drum has been checked, the drum returns to position-A, and the clamp plate master release operation starts.

The clamp motor activates and rotates the Clamp cam assembly [A]. This pushes down the Clamp open arm [B] and opens the Clamp plate [C]. The Master release arm [D] is then pushed down, and the Master release bar [E] is raised, releasing the master from the Clamp plate [C].

The clamp motor continues to run, and raises the Clamp open arm [B] and Master release arm [D]. The motor is switched off once the light path to Clamp sensor B [G] is opened.

(1) The Clamp open arm is pushed down, opening the Clamp plate.

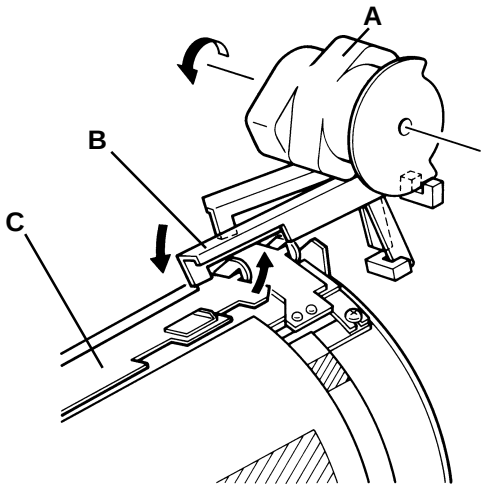

(2) The Master release arm is pushed down, raising the Master release bar and releasing the master.

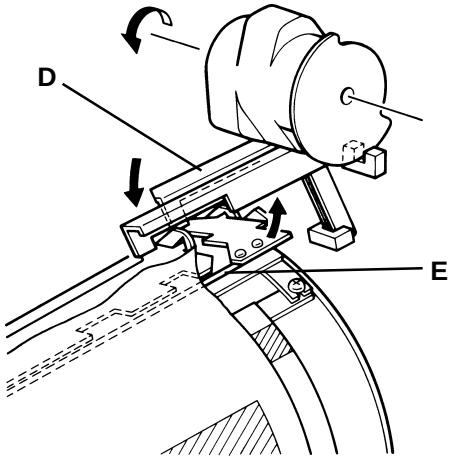

(3) The Clamp open arm and Master release arm are raised, and the motor switches off once the light path to Clamp sensor B is opened.

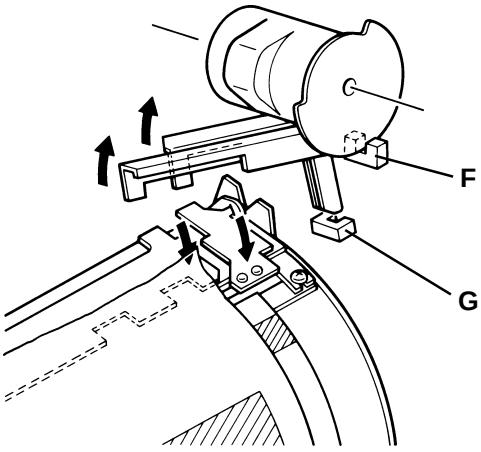

A: Clamp cam assembly
B: Clamp open arm
C: Clamp plate
D: Master release arm
E: Master release bar
F: Clamp sensor A
G: Clamp sensor B

3. Clamp Plate Master Clamp Mechanism

As the used master is removed from the print drum, the print drum makes one revolution and returns to position-A, and the clamp plate master clamp operation starts.

The clamp motor activates and rotates the Clamp cam assembly [A]. This pushes down the Clamp open arm [E] and opens the Clamp plate [B].

The clamp motor is switched off once the light path to Clamp sensor A [D] is opened. (It stops with Clamp plate [B] still open.)

The load pulse motor feeds a set amount of the master [G] onto the print drum, and the clamp motor activates to rotate the Clamp cam [A] and raise the Clamp open arm [E].

The clamp motor is switched off once the light path to Clamp sensor B [F] is opened. (The clamp unit is returned to the home position.)

(1) The Clamp open arm [E] is pushed down, opening the Clamp plate [B]. The clamp motor is switched off once the light path to Clamp sensor A [D] is opened (with Clamp plate [B] still open).

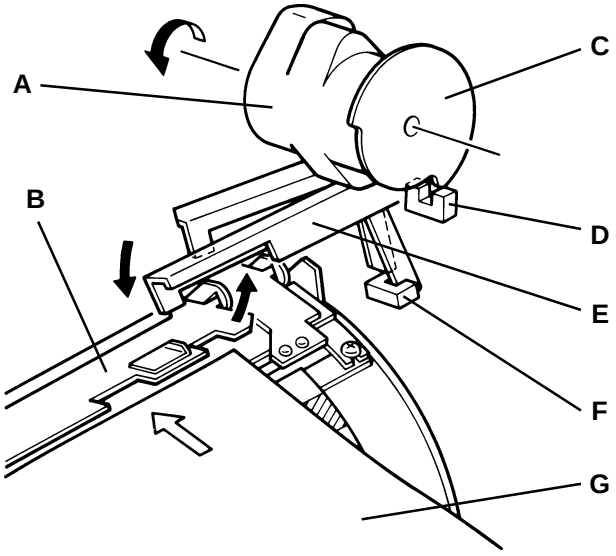

(2) The master [G] is fed onto the print drum, and the clamp motor is switched on, raising the Clamp open arm [E]. The clamp motor is switched off once the light path to Clamp sensor B [F] is opened. (Returns to home position.)

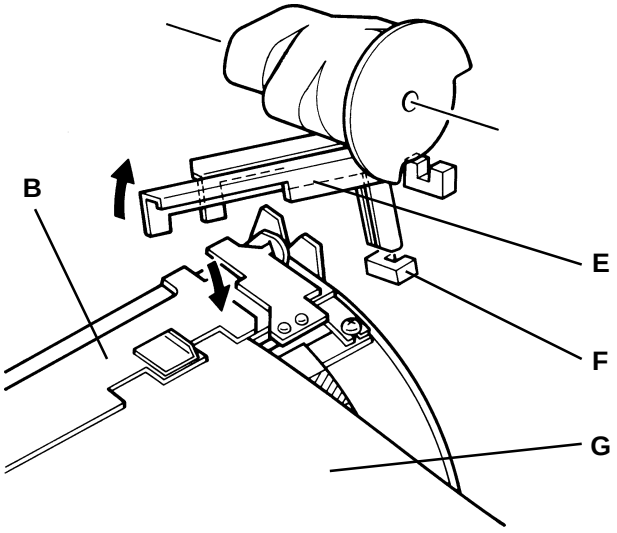

A: Clamp cam assembly
B: Clamp plate
C: Clamp encoder
D: Clamp sensor A
E: Clamp open arm
F: Clamp sensor B
G: Master

Removal and Assembly

1. Removing the Clamp Unit

(1) Remove the rear cover.

(2) Remove the Main PCB.

(3) Unplug the clamp motor connector [A] and sensor connector [B].

(4) Remove the mounting screws (M4 x 8: 3 pcs) [C] on the clamp unit, and remove the clamp unit.

[Precautions on Reassembly]

- Align the half-pierced sections.

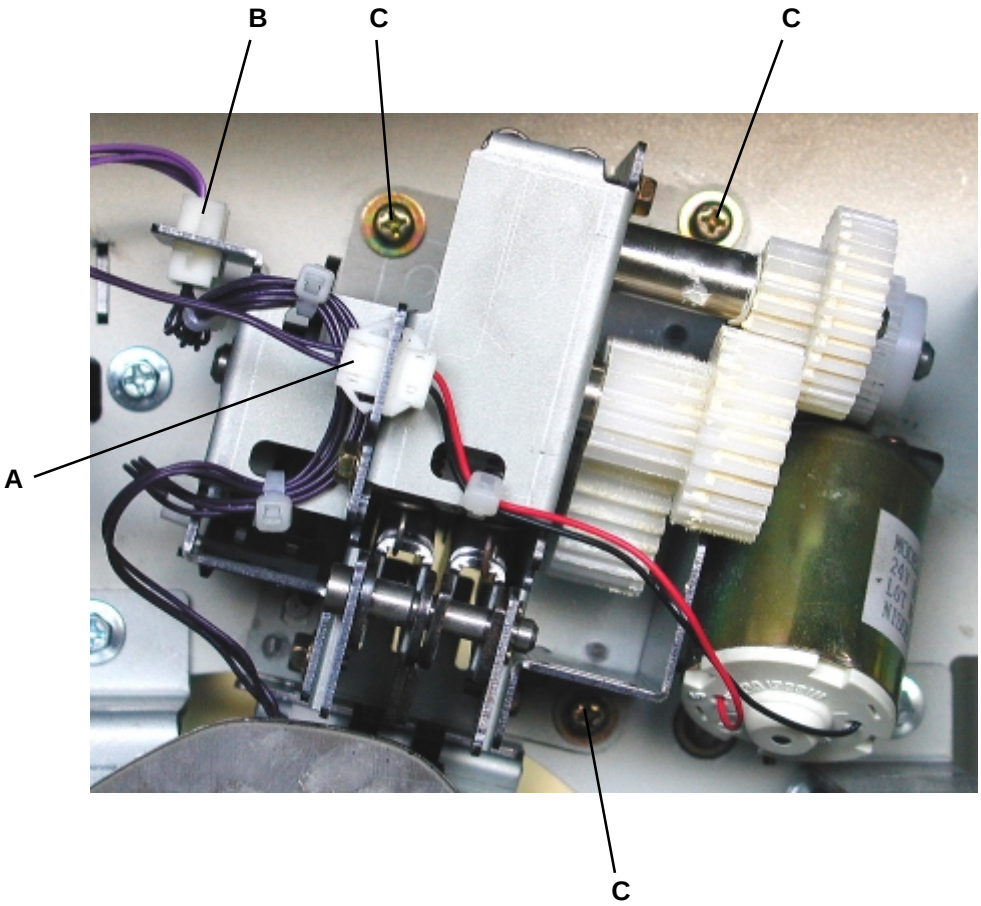

A: Clamp motor connector
B: Clamp sensor connector
C: Clamp unit mounting screw

2. Removing the Clamp Motor, Clamp Sensor A, Clamp Sensor B

Removing the Clamp Motor

(1) Remove the following components.
- Rear cover
- Main PCB
- Clamp unit

(2) Remove the E-ring and remove the Worm gear [A].

(3) Unplug the connector [C], remove the mounting screws, and remove the Clamp motor [B].

Removal of Clamp Sensor A

(1) Remove the following components.
- Rear cover
- Main PCB
- Clamp unit

(2) Remove the mounting screws (M3 x 6: 2 pcs) and remove the Shaft support bracket [D].

(3) Unplug the connector and remove Clamp sensor A [E].

Removal of Clamp Sensor B

(1) Remove the following components.
- Rear cover
- Main PCB
- Clamp unit

(2) Remove the mounting screw (M3 x 6: 1 pc) and remove the sensor bracket [F].

(3) Unplug the connector and remove Clamp sensor B [G] from the sensor bracket [F].

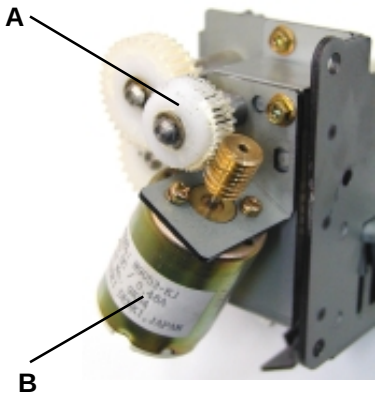

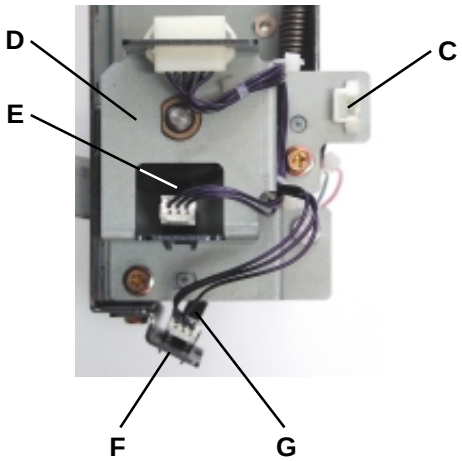

A: Worm gear
B: Clamp motor
C: Connector
D: Shaft support bracket
E: Clamp sensor A
F: Sensor bracket
G: Clamp sensor B