CHAPTER 12: ADF SCANNING SECTION

Contents

Mechanism 12-2

1. ADF Original Set Mechanism 12-2
2. ADF Original Scanning Mechanism (with Automatic Base Control) 12-6
3. ADF Original Scanning Mechanism 12-8

Removal and Assembly 12-11

1. Removing the Original Scraper Ass'y 12-11
2. Removing the Pickup Roller 12-13
3. Removing the Original Stripper Roller 12-14
4. Removing the ADF Original Detection, Original IN, and Original OUT Sensors 12-15
5. Removing the ADF Original Registration Sensor 12-16
6. Removing the ADF Read Pulse Motor 12-17
7. Removing the Registration Roller, Original Read Roller, and Original Ejection Roller (top) 12-19

Adjustment 12-22

1. ADF Scan Start Position Adjustment 12-22
2. ADF Horizontal Scan Position Adjustment 12-23
3. ADF Read Pulse Motor Speed Adjustment (Image Elongation & Shrinkage Adjustment) 12-24
4. Original IN Sensor Sensitivity Adjustment 12-25
5. ADF Image Skew Adjustment 12-26

Mechanism

1. ADF Original Set Mechanism

When the original is set along the original guide fence and pushed up against the Original stopper gate [C], the ADF original detection sensor [A] is activated (light path open) and the Master/Print indicator on the panel switches to “Master”. The thermal pressure motor operates to lower the thermal head until the TPH pressure sensor is activated.

After a preset interval, the ADF read pulse motor [O] reverses to lower the Pickup roller [B] in the direction shown by the arrows and withdraw the Original stopper gate [C] upwards. (The one-way clutch incorporated between the Registration roller gear [N] and registration roller shaft prevents the Registration roller [G] from rotating here.)

Once the Pickup roller [B] descends to push against the original, the Pickup roller [B] and Original stripper roller [D] rotate in the original transport direction, and a single original is fed forward by the action of the Original stripper roller [D] and Original stripper pad [E]. This activates the ADF original registration sensor [F] (light path blocked) and the edge of the original is stopped by the Stationary registration roller [G]. Once a preset interval has elapsed from when the ADF original registration sensor [F] was activated, the ADF read pulse motor [O] operates in the forward direction. This raises the Pickup roller [B] and at the same time rotating the Registration roller [G], Original read roller [I], and Original ejection roller (top) [J], which are all linked by the Timing belt [M], in the feed direction.

The original stops briefly after it has been moved 100 mm from the original set position.

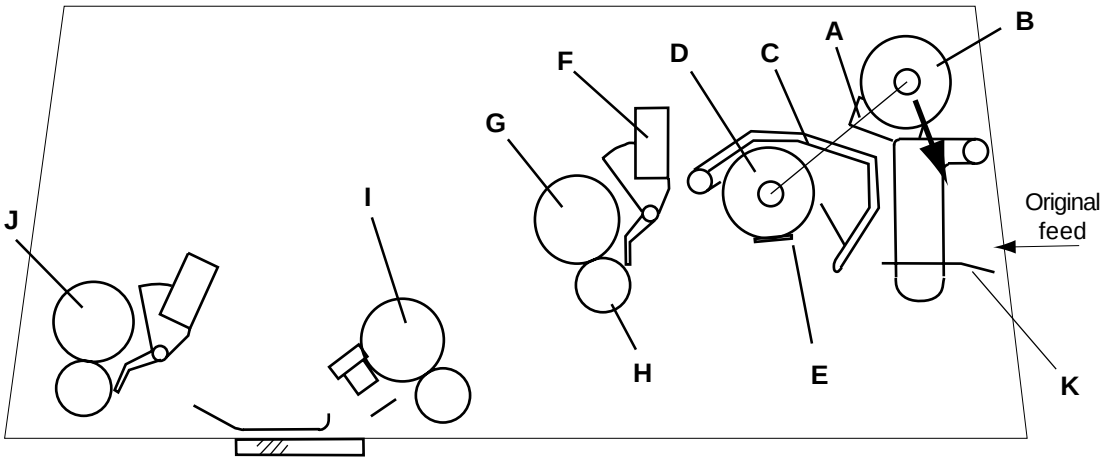

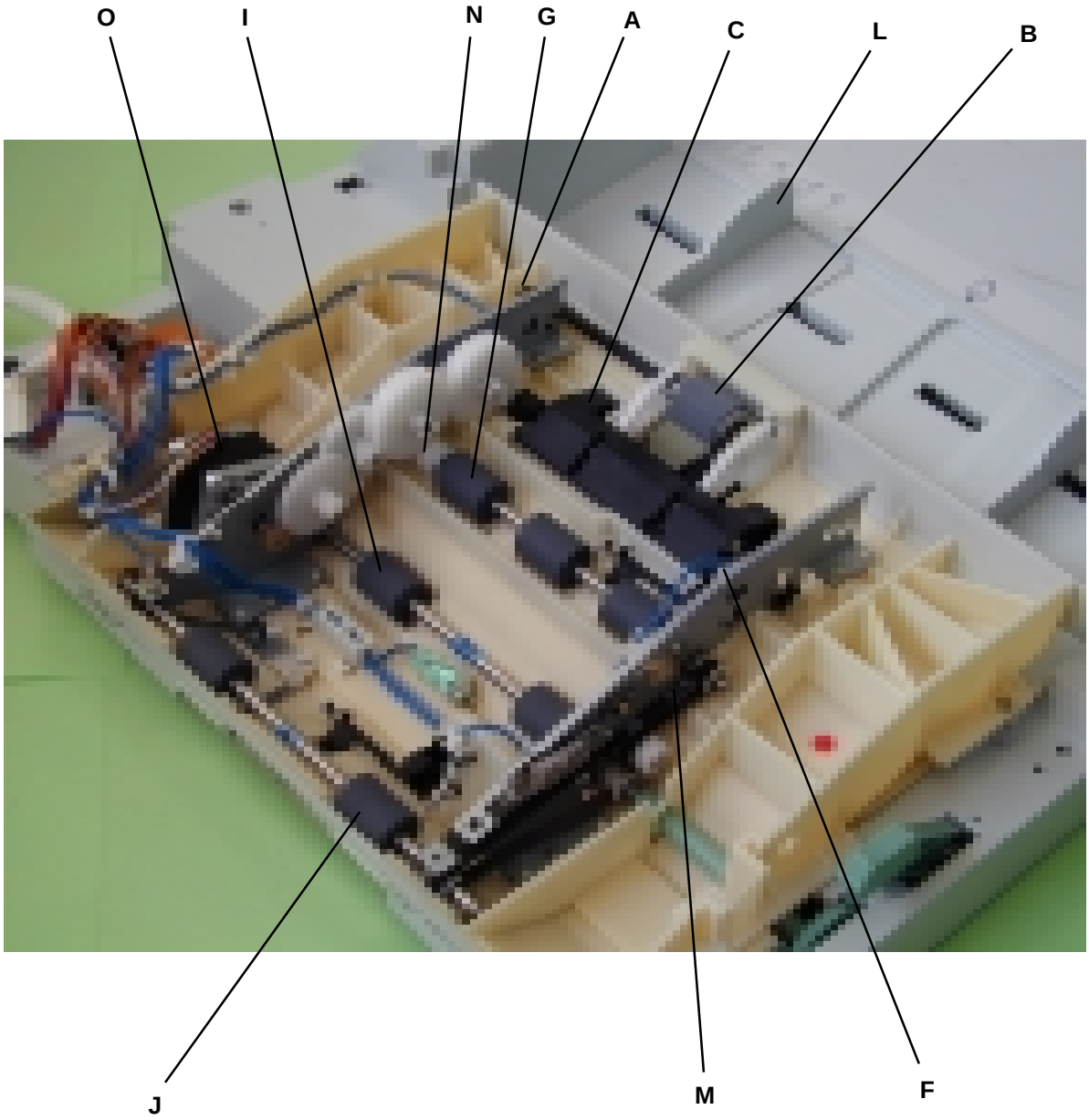

A: ADF original detection sensor
B: Pickup roller
C: Original stopper gate
D: Original stripper roller
E: Original stripper pad
F: ADF registration sensor
G: Registration roller
H: Registration driven roller
I: Original read roller
J: Original ejection Roller (top)
K: Original pickup pad
L: Original guide fence
M: Timing belt
N: Registration roller gear
O: ADF read pulse motor

ADF ORIGINAL SET MECHANISM

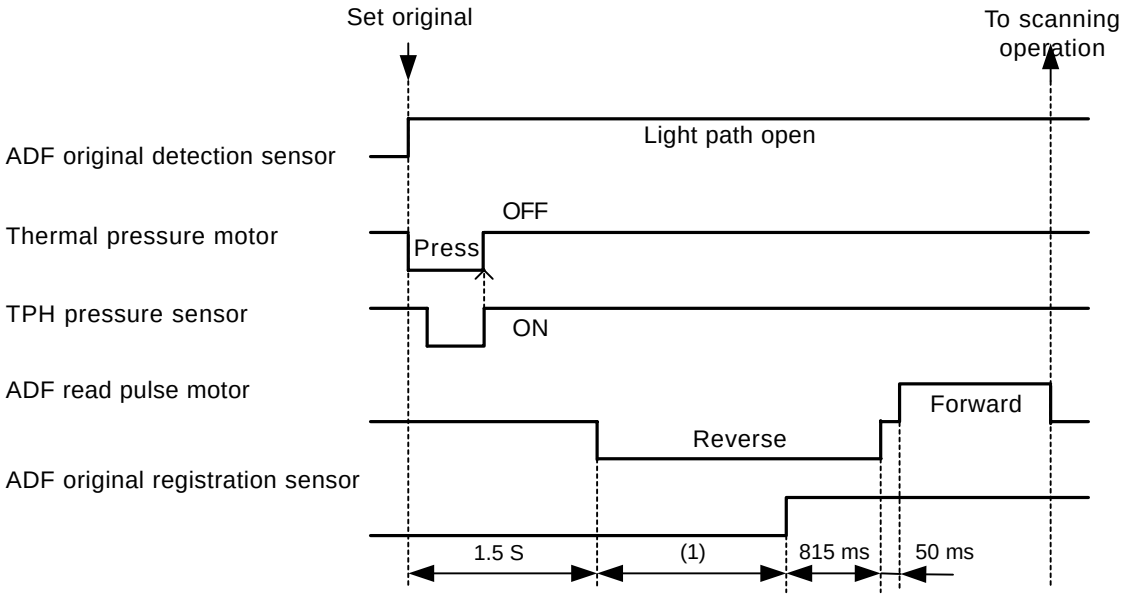

(1) “A10-107” is displayed if the ADF original registration sensor is not activated (light path blocked) even when the ADF read pulse motor transports the original 182 mm after the feeding in process begins.

[Memo]

2. ADF Original Scanning Mechanism (with Automatic Base Control)

(This operation only occurs when the original scanning density is set to "Auto".)

Once the ADF original setting operation is complete, pressing the START key illuminates the lamp.

The Flat bed read pulse motor is activated immediately, moving the Lamp carriage in the feed direction to the shading position. Shading adjustment is performed before moving back in the return direction and stopping at the ABC scanning position (3 + b) mm in front of the normal ADF scanning position.

The ADF read pulse motor meanwhile operates in the forward direction, rotating the Registration roller, Master lead roller, and Original ejection roller (top) in the feed direction. The original is fed forward 26.9 mm and stops after the Original IN sensor activates (light path blocked), and the intensity of the original background color is scanned by the image sensor in this position. The FB read pulse motor then moves the Lamp carriage back (3 + b) mm in the return direction. (Normal ADF original scanning position)

The ADF read pulse motor immediately operates in the forward direction, and at the same time, the read/write signal activates, causing scanning of the original to start.

The read/write signal is deactivated a preset interval after the Original IN sensor is deactivated (light path open) when the original is moved away (or immediately if the Write pulse motor has rotated the equivalent of the paper size as previously specified by the user settings). The ADF read pulse motor then operates at high speed as soon as scanning is complete.

Once the original is transported a preset distance after the Original OUT sensor deactivates, the ADF read pulse motor stops and the ADF original scanning operation is complete.

The Automatic Base Control function does not operate in Photo, Line/Photo, or Dot modes.

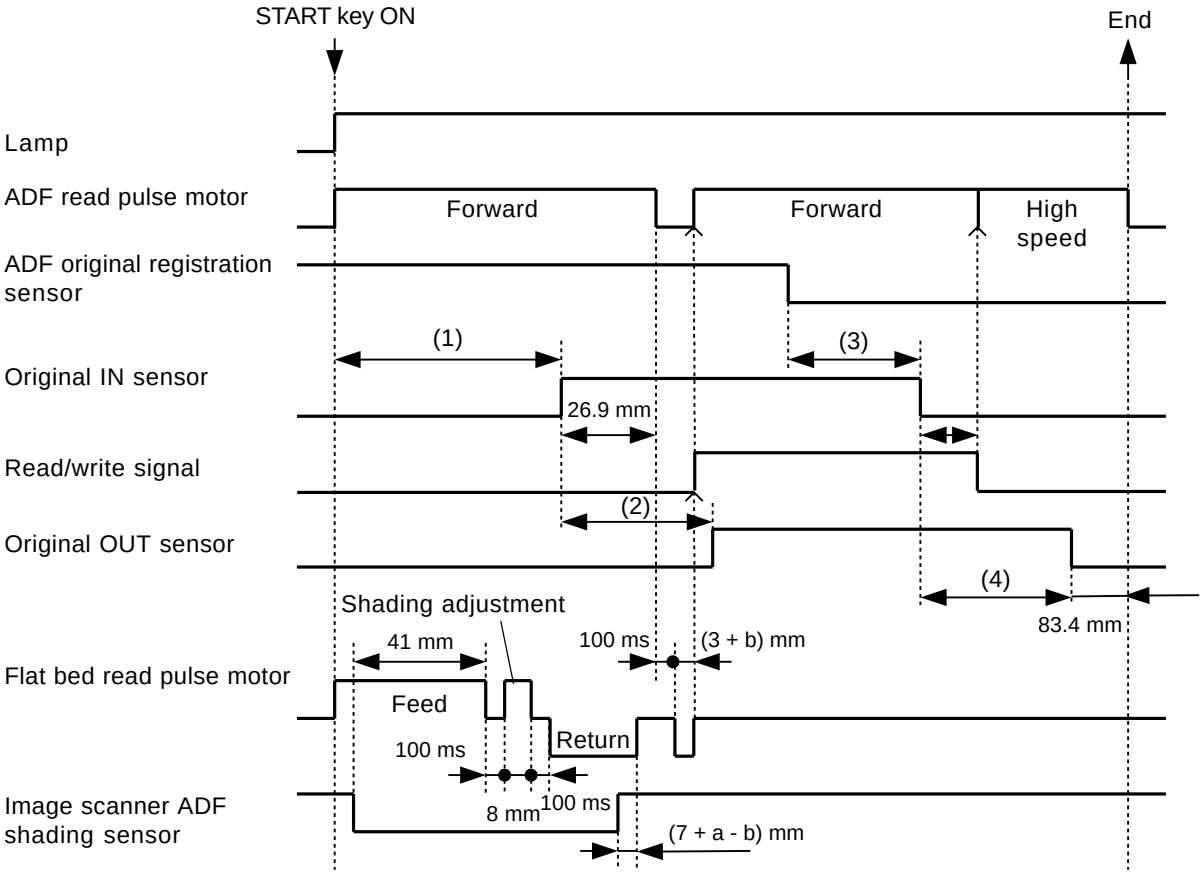

* L = paper size specified in user settings (mm)
Adjustment value a = Test mode No. 183 (ADF scanning mirror position adjustment)
Adjustment value b = Test mode No. 184 (ADF-ABC mirror position adjustment)

(1) “A10-108” is displayed if the Original IN sensor is not activated (light path blocked) even when the ADF read pulse motor transports the original 138 mm after the START key is pressed.

(2) “A10-109” is displayed if the Original OUT sensor is not activated (light path blocked) even when the ADF read pulse motor transports the original 117 mm after the Original IN sensor activates (light path blocked).

(3) “A10-105” is displayed if the Original IN sensor is not deactivated (light path open). This occurs even if the ADF read pulse motor transports the original 114 mm after the ADF original registration sensor has deactivated (light path open).

(4) “A10-106” is displayed if the Original OUT sensor is not deactivated (light path open). This occurs even if the ADF read pulse motor transports the original 117 mm after the Original IN sensor is deactivated (light path open).

Note: ABC stands for Automatic Base Control.

3. ADF Original Scanning Mechanism

Once the ADF original setting operation is complete, pressing the START key illuminates the lamp.

The Flat bed read pulse motor immediately activates, moving the Lamp carriage in the feed direction to the shading position. Shading adjustment is performed before moving back in the return direction and stopping at the normal ADF scanning position.

The ADF read pulse motor [M] meanwhile operates in the forward direction, rotating the Registration roller [A], Original read roller [C], and Original ejection roller (top) [J] in the feed direction. The original is fed forward 29.9 mm after the Original IN sensor [E] activates (light path blocked), activating the read/write signal and initiating a scan of the original. (The pickup roller returns to the standby position.)

The read/write signal is deactivated a preset interval after the Original IN sensor [E] is deactivated (light path open) when the original is moved away (or immediately if the Write pulse motor has rotated the equivalent of the paper size as previously specified in the user settings). The ADF read pulse motor [M] then operates at high speed as soon as scanning is complete.

Once the original is transported a preset distance after the Original OUT sensor [I] deactivates, the ADF read pulse motor [M] stops. This completes the ADF original scanning operation.

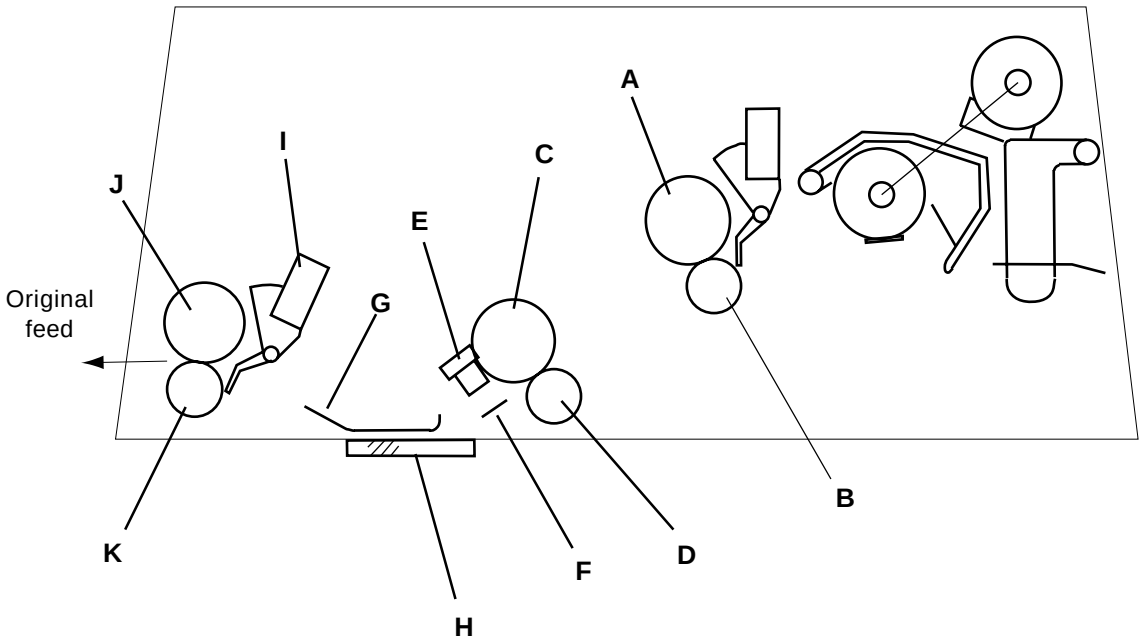

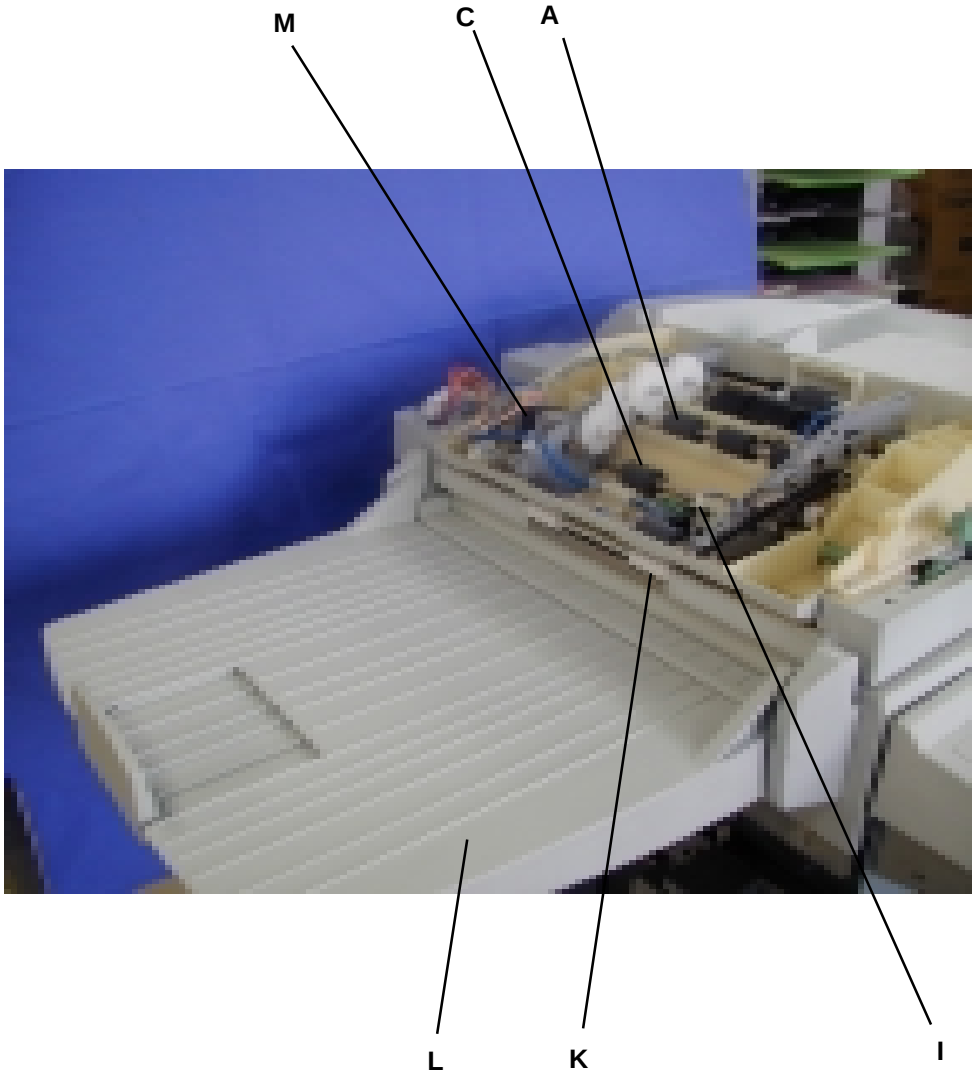

A: Registration roller
B: Registration driven roller
C: Original read roller
D: Original read driven roller
E: Original IN sensor
F: Reflecting plate
G: Shading plate
H: ADF stage glass
I: Original OUT sensor
J: Original ejection roller (top)
K: Original ejection roller (bottom)
L: Original receiving tray
M: ADF read pulse motor

ADF ORIGINAL SCANNING MECHANISM

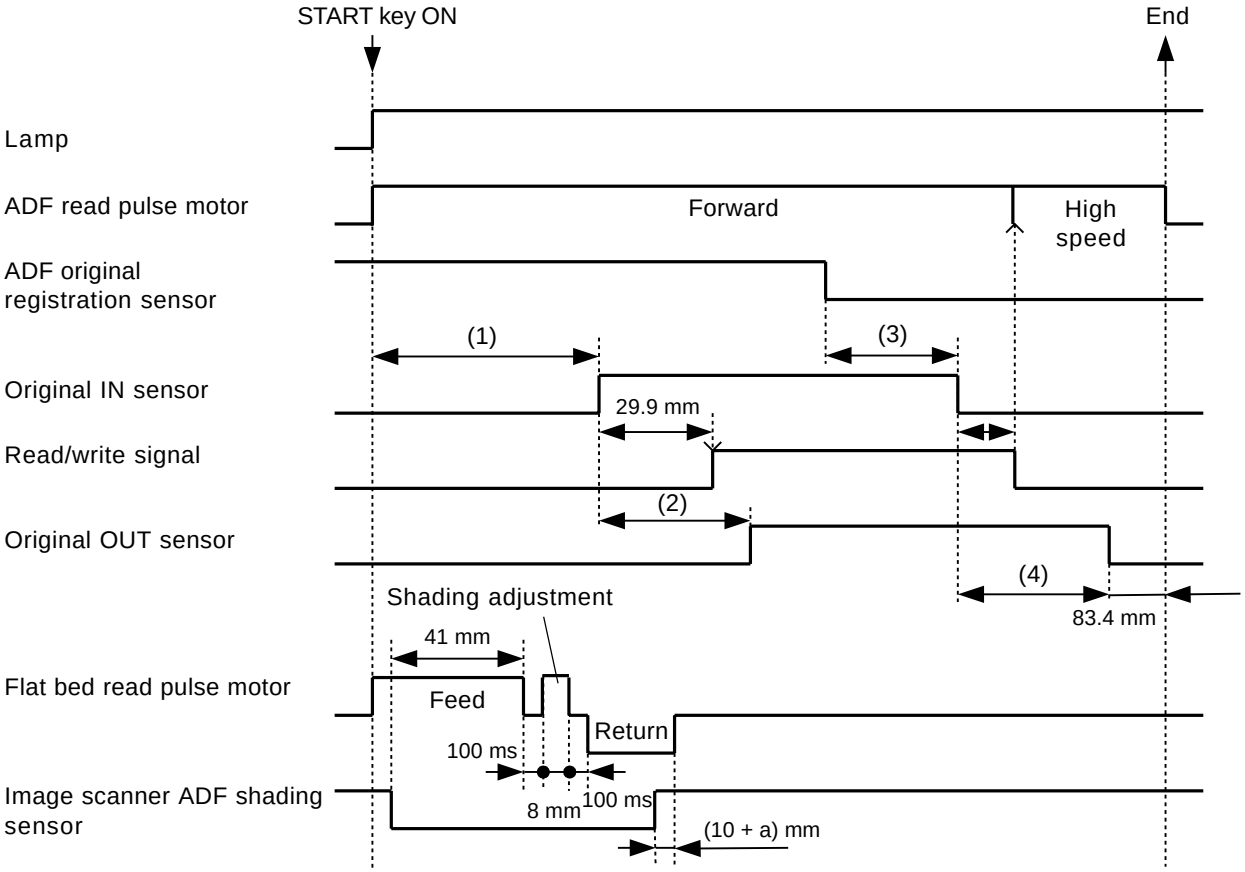

* L = paper size specified in user settings (mm)
  Adjustment value a = Test mode No. 183 (ADF scanning mirror position adjustment)

(1) "A10-108" is displayed if the Original IN sensor is not activated (light path blocked) even when the ADF read pulse motor transports the original 138 mm after the START key is pressed.

(2) "A10-109" is displayed if the Original OUT sensor is not activated (light path blocked). This occurs even when the ADF read pulse motor transports the original 117 mm after the Original IN sensor is activated (light path blocked).

(3) "A10-105" is displayed if the Original IN sensor is not deactivated (light path open). This occurs even if the ADF read pulse motor transports the original 114 mm after the ADF original registration sensor is deactivated (light path open).

(4) "A10-106" is displayed if the Original OUT sensor is not deactivated (light path open). This occurs even if the ADF read pulse motor transports the original 117 mm after the Original IN sensor is deactivated (light path open).

Removal and Assembly

1. Removing the Original Scraper Ass'y

(1) Switch off the power and open the ADF unit. Now remove the two screws (M3 x 10), and remove the ADF cover [A]. Finally, close the ADF unit.

(2) Remove the plastic lock rings [C] from both sides of the Original scraper ass'y [B], and then remove the bearing bushes [D]. Lift up the Original stopper gate [E] to remove the Original scraper ass'y.

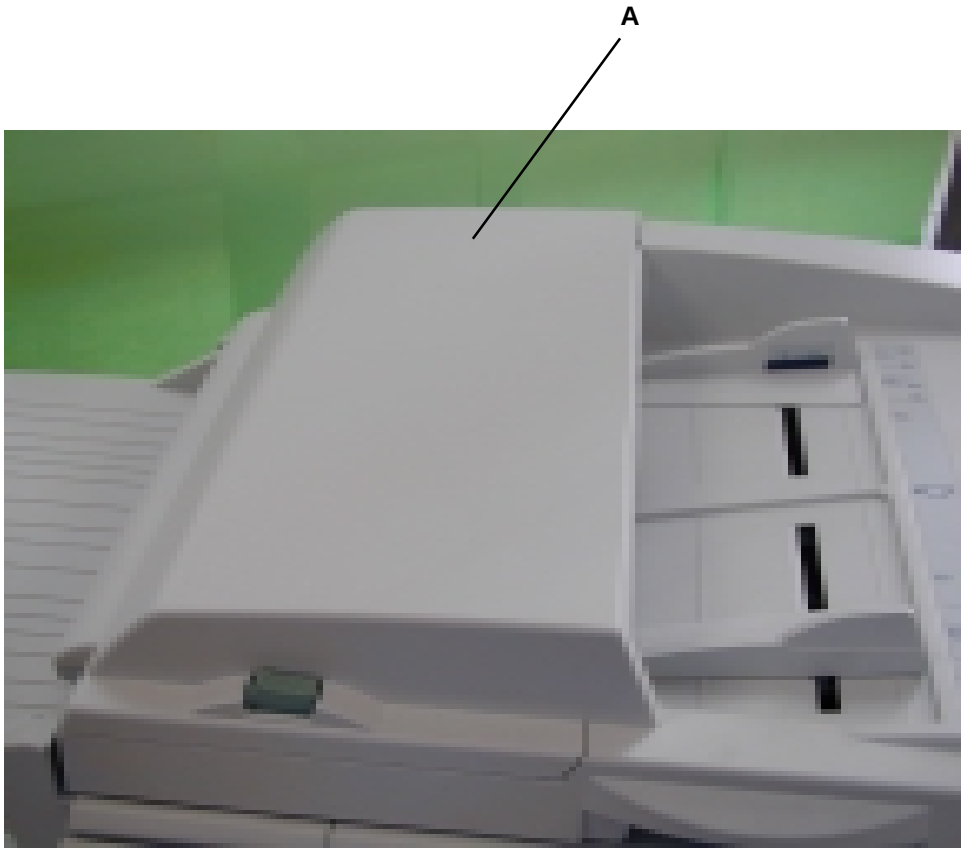

REMOVING THE ORIGINAL SCRAPER ASS'Y

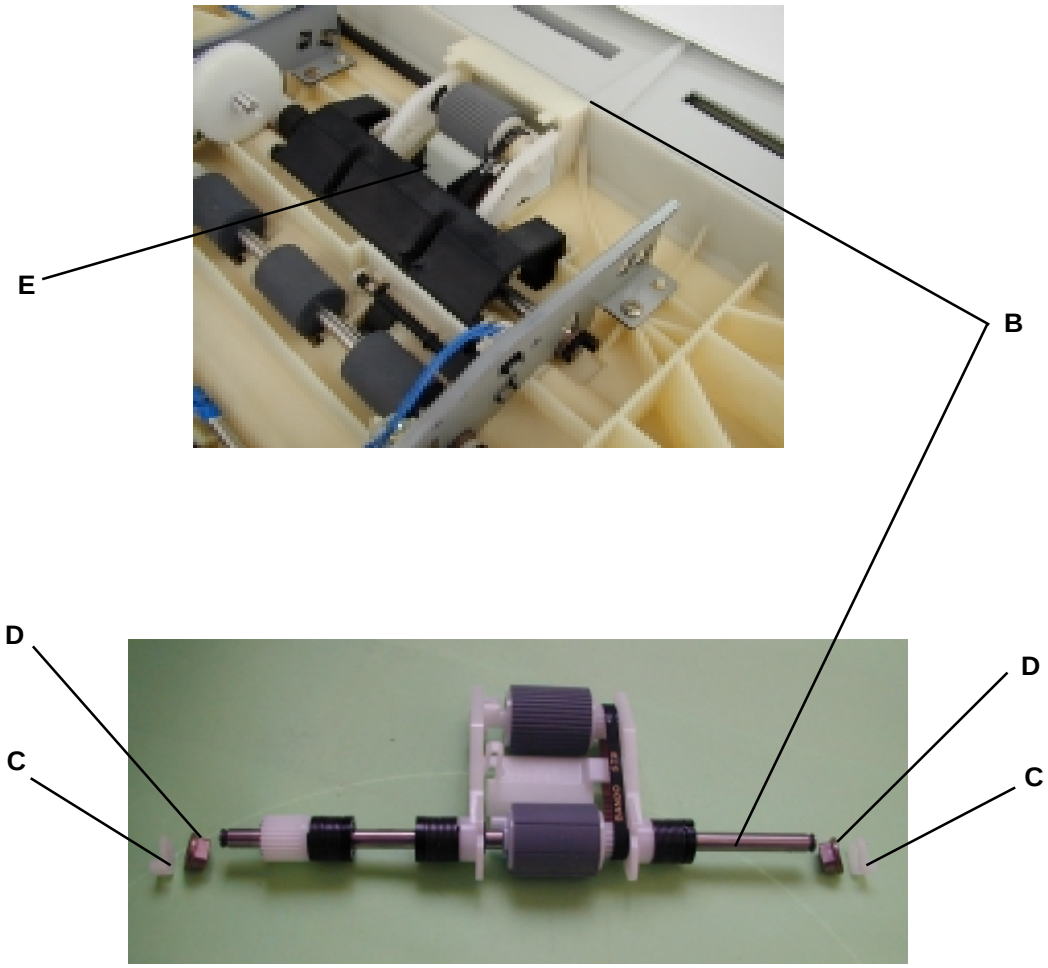

A: ADF cover
B: Original Scraper Ass'y
C: Lock ring
D: Bearing bush
E: Original stopper gate

2. Removing the Pickup Roller

(1) Switch off the power and open the ADF unit. Now remove the two screws (M3 x 10), and remove the ADF cover. Finally, close the ADF unit.

(2) Pull apart both ends of the Pickup roller frame ass'y [B] holding the Pickup roller [A], and remove the Pickup roller [A]. (Take care not to drop the washer on the right-hand side gear of the Pickup roller.)

[Precautions on Reassembly]

- Do not forget to insert the washer on the right-hand side gear on the Pickup roller.

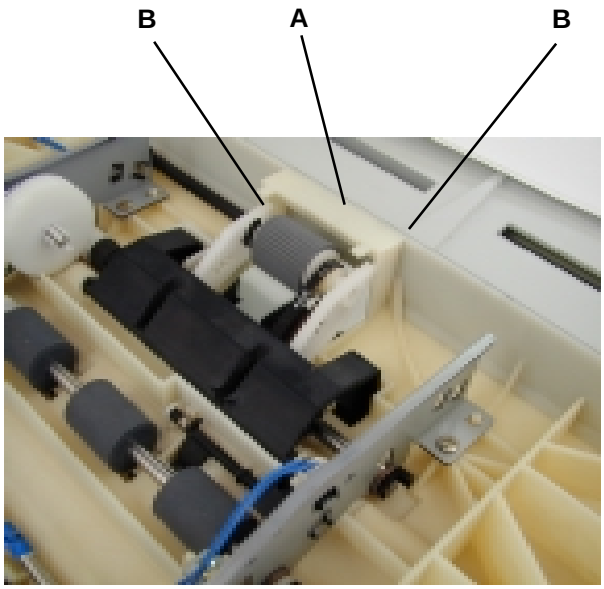

A: Pickup roller
B: Pickup roller frame ass'y

3. Removing the Original Stripper Roller

(1) Switch off the power and open the ADF unit. Now remove the two screws (M3 x 10), and remove the ADF cover. Finally, close the ADF unit.

(2) Remove the Original Scraper Ass'y. (See this chapter.)

(3) Remove the Pickup roller, (see this chapter.) and then remove the Intermediate guide [A].

(4) Remove the plastic Lock ring [C] on the left-hand side of the Original stripper roller [B], move the Original stripper roller [B] to the left, and then remove the right-hand E-ring [D]. Move the Pickup roller frame ass'y (right) [E] to the left, pull out the Pin [F] and then remove it to the right. (Take care not to drop the washer fitted to the gear side of the Original stripper roller.)

[Precautions on Reassembly]

- Fit the gear on the right-hand side as shown in the photograph, as the Original scraper roller contains a one-way clutch. Also, do not forget to insert the washer on the gear side.
- When engaging the pin into the Pickup roller frame ass'y (right), insert it into the shallower slot.

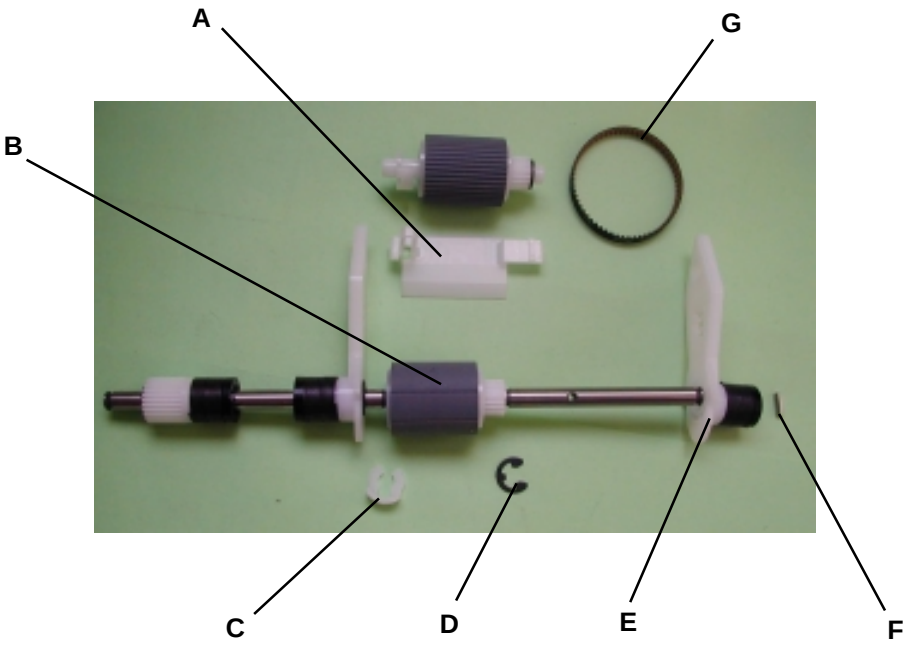

A: Intermediate guide
B: Original stripper roller
C: Lock ring
D: E-ring
E: Pickup roller frame ass'y (right)
F: Pin
G: ADF timing belt

4. Removing the ADF Original Detection, Original IN, and Original OUT Sensors

(1) Switch off the power and open the ADF unit. Now remove the two screws (M3 x 10), and remove the ADF cover. Finally, close the ADF unit.

Removing the ADF Original Detection Sensor

(2) Remove the connector, free the actuator by hand, and release the clips on the ADF original detection sensor [A] to remove it.

Removing the Original IN Sensor

(2) Remove the connector, remove the screw (M3 x 10), and then remove the Original IN sensor [B].

* After removing it, turn variable resistor VR1 on top of the ADF-PCB [C] to readjust LED1 to maximum brightness.

Removing the Original OUT Sensor

(2) Remove the connector, free the actuator by hand, and release the clips on the Original OUT sensor [D] to remove it.

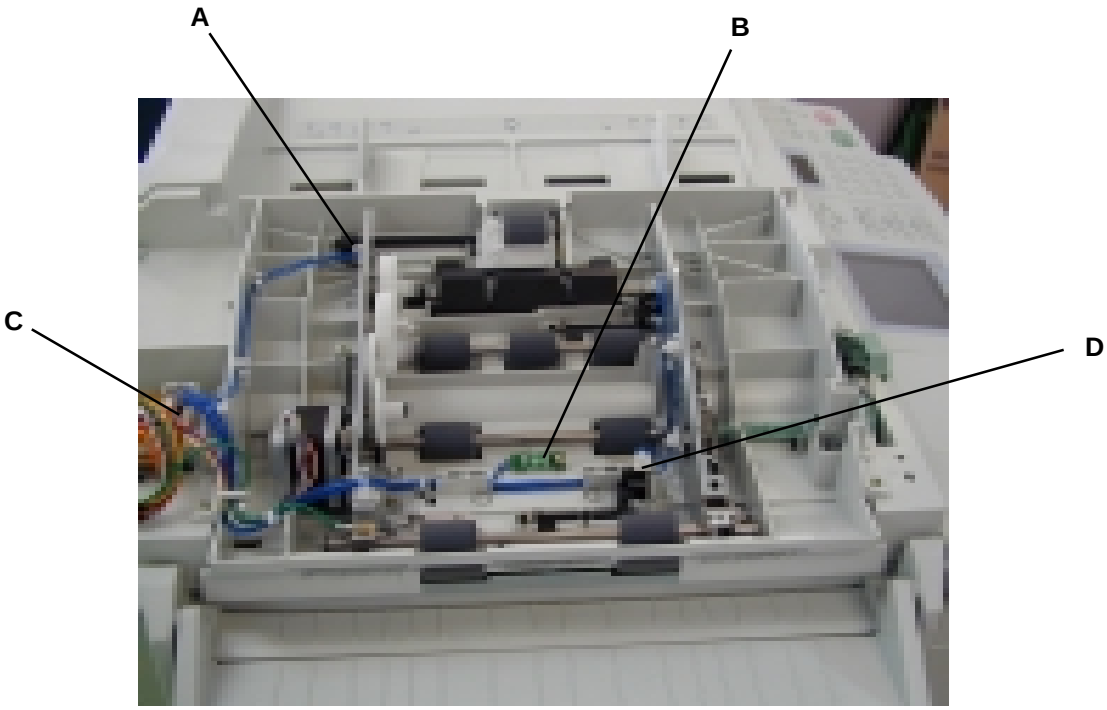

A: ADF original detection sensor
B: Original IN sensor
C: ADF-PCB
D: Original OUT sensor

5. Removing the ADF Original Registration Sensor

(1) Switch off the power and open the ADF unit. Now remove the two screws (M3 x 10), and remove the ADF cover. Finally, close the ADF unit.

(2) Remove the connector, lift up the actuator and move it to the left end, and release the clips on the ADF original registration sensor [A] to remove it.

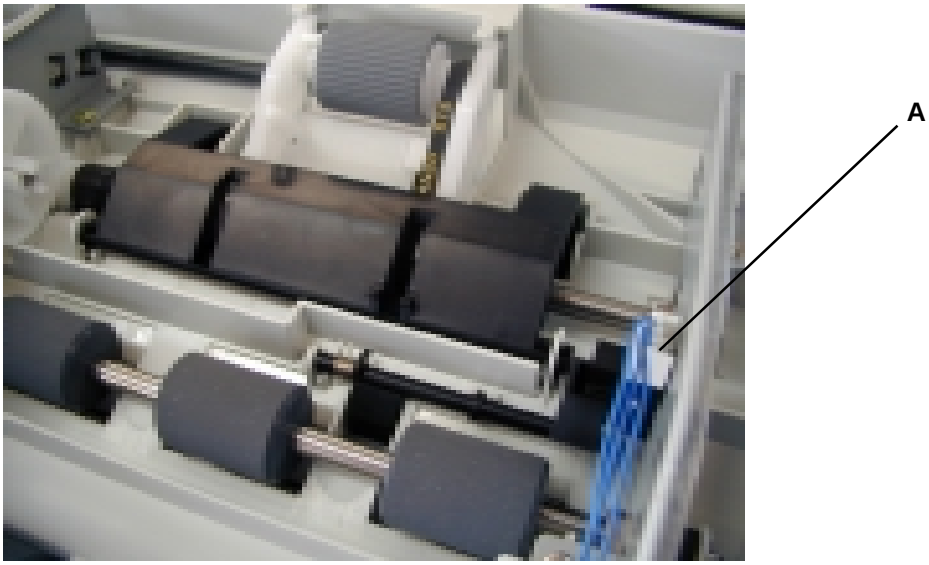

A: ADF original registration sensor

6. Removing the ADF Read Pulse Motor

(1) Switch off the power and open the ADF unit. Now remove the two screws (M3 x 10), and remove the ADF cover. Finally, close the ADF unit.

(2) Detach connectors CN1 and CN3 on the ADF-PCB [A], and remove the ground screw [C] on the ADF upper guide ass'y [B] together with the other screws (M3 x 6). (Take care not to drop the rosette washer fitted beneath the ground screw.)

(3) Remove the ADF upper guide ass'y [B] and four screws (M3 x 6).

(4) Remove the ADF read pulse motor [D] and two screws (M3 x 6).

[Precautions on Reassembly]

- When mounting the ADF upper guide ass'y, engage the two aligning pins.
- When attaching the ground screw, do not forget to insert the rosette washer.
- After mounting the ADF upper guide ass'y, readjust the Original IN sensor. Turn variable resistor VR1 on top of the ADF-PCB to readjust LED1 to maximum brightness.

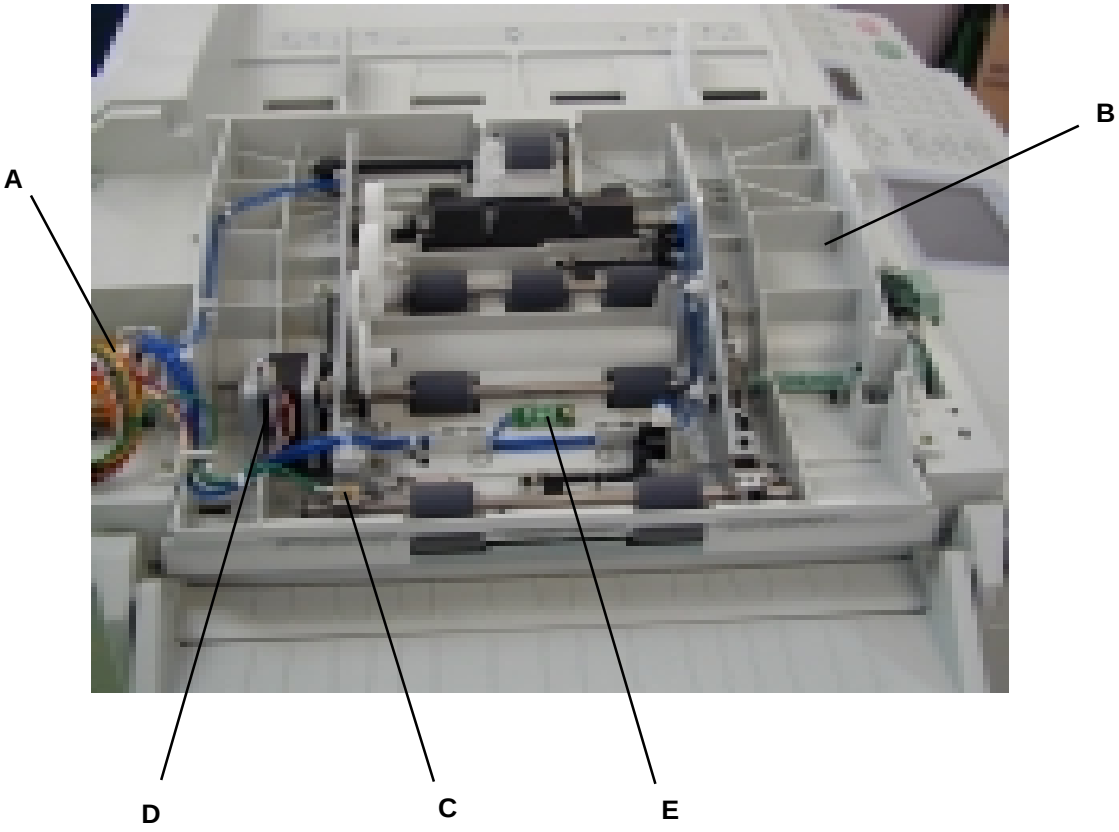

REMOVING THE ADF READ PULSE MOTOR

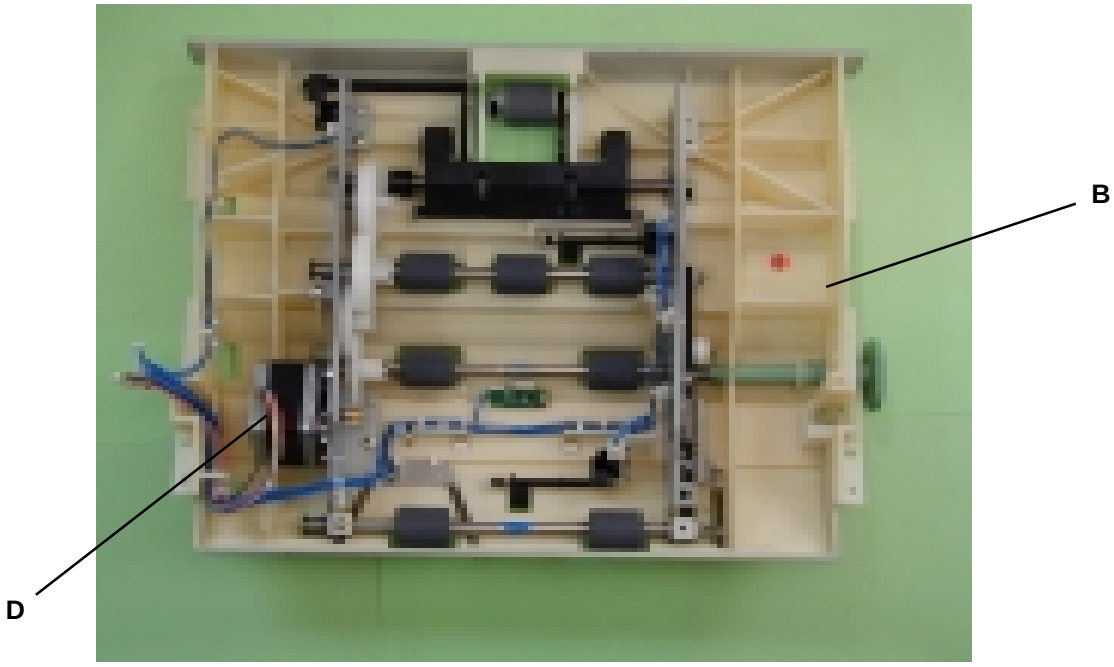

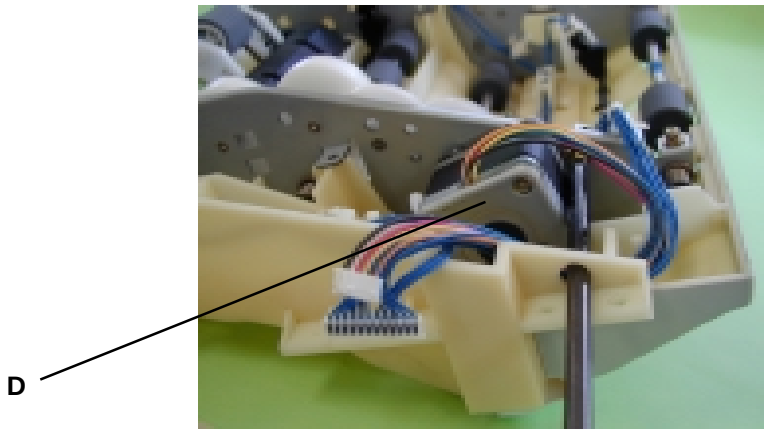

A: ADF-PCB
B: ADF upper guide ass'y
C: Ground screw
D: ADF read pulse motor
E: Original IN sensor

7. Removing the Registration Roller, Original Read Roller, and Original Ejection Roller (top)

(1) Switch off the power and open the ADF unit. Now remove the two screws (M3 x 10), and remove the ADF cover. Finally, close the ADF unit.

(2) Detach connectors CN1 and CN3 on the ADF-PCB, and remove the ground screw on the ADF upper guide ass'y and screws (M3 x 6). (Take care not to drop the rosette washer fitted beneath the ground screw.)

(3) Remove the ADF upper guide ass'y [A] and four screws (M3 x 10).

(4) Lift up the Jam release dial [B] towards the top left to pull it out.

(5) Remove the Idler spring [G], loosen the two screws on the Idler [F], and then loosen the tension on the ADF timing belt [H].

(6) Remove the three screws (M3 x 10) from both the ADF guide frame (front) [I] and ADF guide frame (rear) [J], and then remove the frames.

Removing the Registration Roller

(7) Remove the front E-ring [P], rear E-ring [M], washer [K], thrust spring [L], and washer [K] (take care, as the washer and thrust spring may fly out when the E-ring is removed). Next, pull out the Timing gear [Q], which is protrudes onto the front flat face, and then remove the Registration roller [C].

Removing the Original Read Roller

(7) Remove the front clutch spring [O], E-ring [P], rear E-ring [M], washer [K], thrust spring [L], and washer [K] (take care, as the washer and thrust spring may fly out when the E-ring is removed). Next, pull out the Timing gear [Q], which protrudes onto the front flat face, and then remove the Original read roller [D].

Removing the Original Ejection Roller (top)

(7) Remove the front E-ring [P], rear E-ring [M], washer [K], thrust spring [L], and washer [K] (take care, as the washer and thrust spring may fly out when the E-ring is removed). Next, pull out the Timing gear [Q], which protrudes onto the front flat face, and then remove the Original Ejection Roller (top) [E].

[Precautions on Reassembly]

- Insert the thrust spring at the rear of each roller, placing washers on either side, and securing the assembly with the E-ring.
- Note the insertion direction of the lugs on each timing gear.
- Attach the ADF timing belt as shown in the photograph.
- Engage the three pins in each case when securing the ADF guide frame (front) and ADF guide frame (rear). Also check that the bearing bushes are fitted correctly on each roller.
- After attaching the idler spring, the ADF timing belt tension is adjusted by loosening the two idler screws.

REMOVING THE REGISTRATION ROLLER, ORIGINAL READ ROLLER, AND ORIGINAL EJECTION ROLLER (TOP)

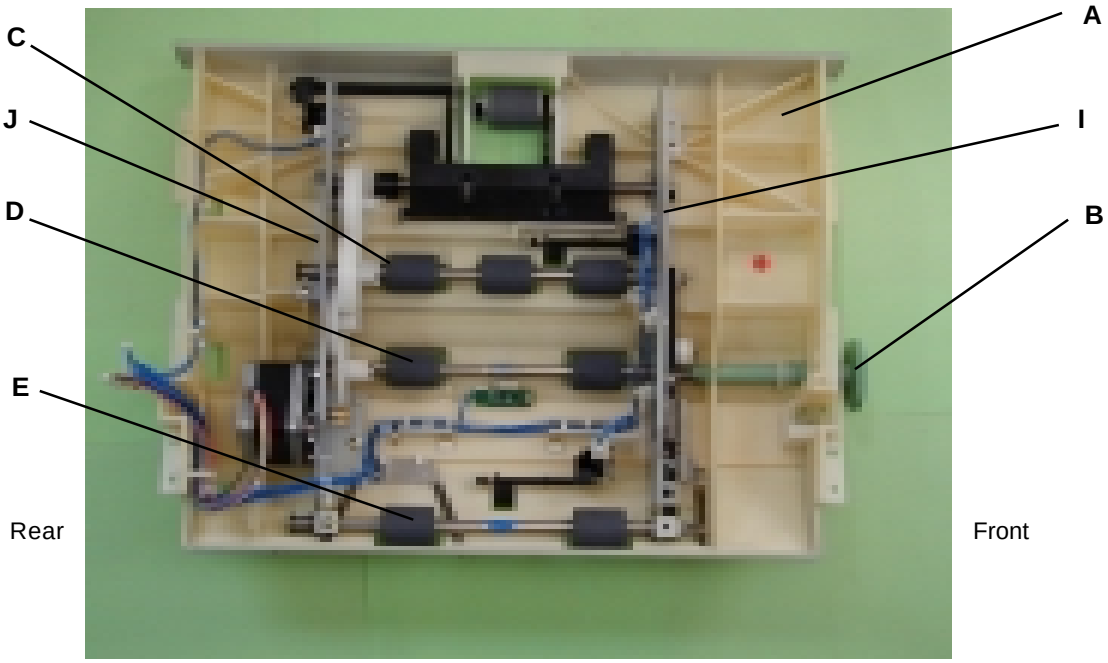

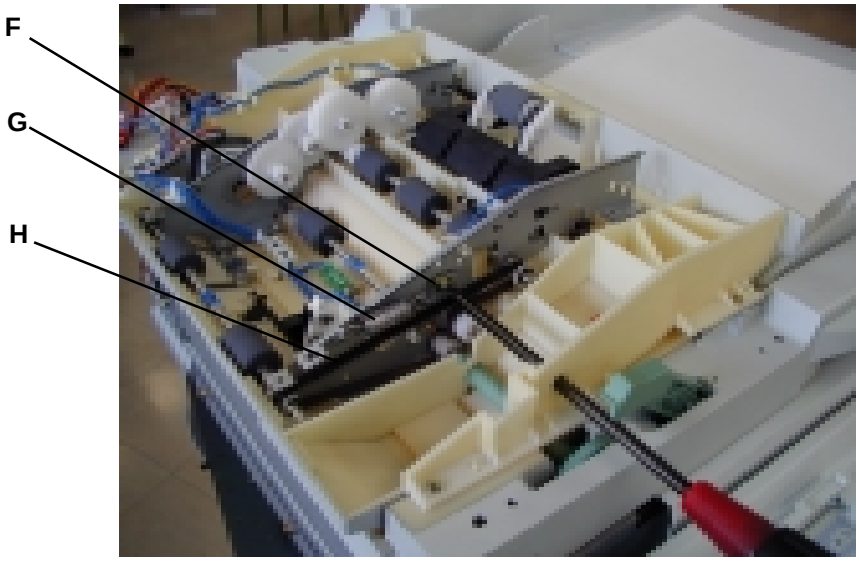

A: ADF upper guide ass'y
B: Jam release dial
C: Registration roller
D: Original read roller
E: Original Ejection Roller (top)
F: Idler
G: Idler spring
H: ADF timing belt
I: ADF guide frame (front)
J: ADF guide frame (rear)

REMOVING THE REGISTRATION ROLLER, ORIGINAL READ ROLLER, AND ORIGINAL EJECTION ROLLER (TOP)

Registration roller

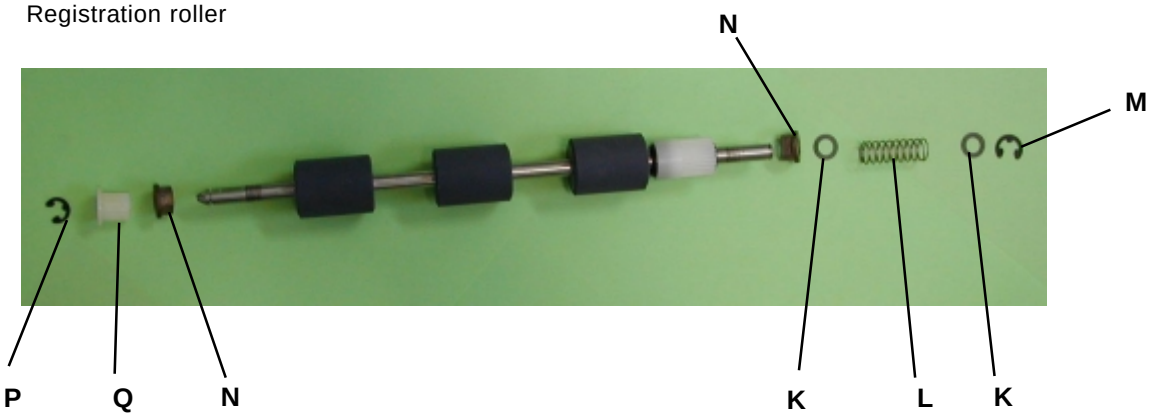

Original read roller

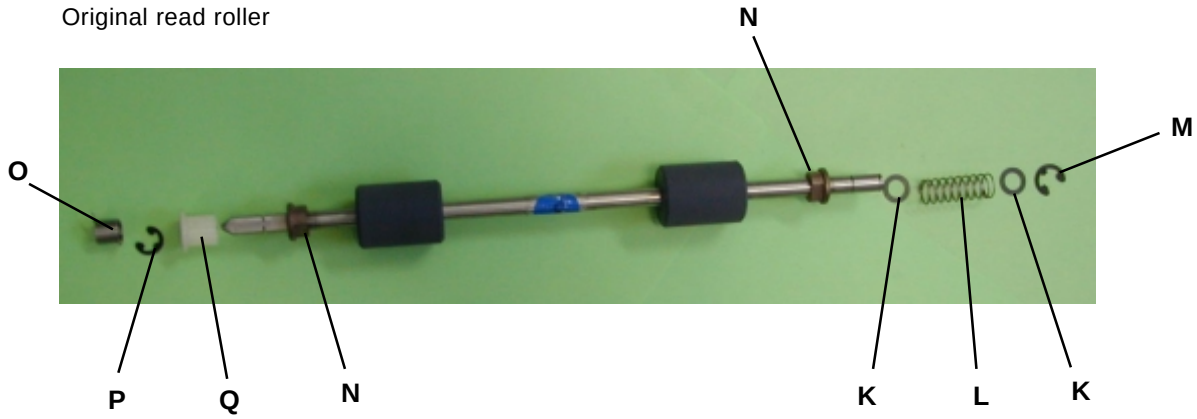

Original ejection roller (top)

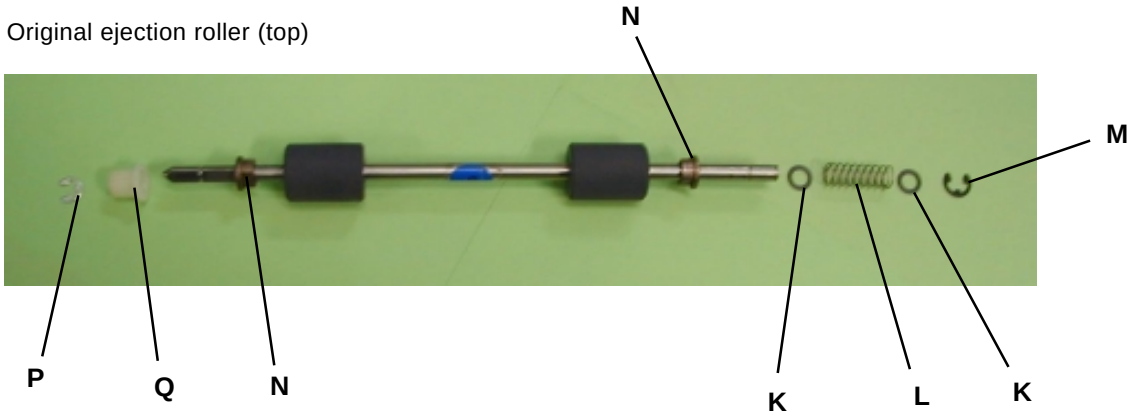

K: Washer
L: Thrust spring
M: E-ring
N: Bearing bush
O: Clutch spring
P: E-ring
Q: Timing gear

Adjustment

1. ADF Scan Start Position Adjustment

Checks and procedure

(1) Make a master with the ADF unit using an original with no blank margin at the top, and print.

(2) Examine the prints to check that the scanning start position is at 5 mm ± 2 mm from the top of the original.

(3) If the position is outside the specified parameters, adjust using test mode No. 186 (ADF scanning start position adjustment).

2. ADF Horizontal Scan Position Adjustment

Checks and procedure

(1) Place a sheet of B4 size paper on the paper feed tray, and make a master of test chart No. 15 using the ADF unit.

(2) Examine the master created on the print drum, and check that pattern “e” on the left and right of the original is not missing.

(3) If the pattern is missing, adjust using test mode No. 185 (ADF main scanning left/right adjustment).

3. ADF Read Pulse Motor Speed Adjustment (Image Elongation & Shrinkage Adjustment)

Before adjusting, first adjust the image elongation and shrinkage using the Write pulse motor speed adjustment (See chapter 13.)

Checks and procedure

(1) Place a sheet of B4 size paper on the paper feed tray, and make a master of test chart No. 15 using the ADF unit.

(2) Lay the print on top of the original to check that the image elongation and shrinkage is within ±1.4% at the 310-mm line.

(3) If the elongation and shrinkage is outside the specified parameters, adjust using test mode No. 187 (ADF scanning Image Elongation & Shrinkage Adjustment).

4. Original IN Sensor Sensitivity Adjustment

Procedure

(1) Open the ADF unit, remove the two screws (M3 x 10), and then remove the ADF cover. Finally, close the ADF unit.

(2) Turn variable resistor VR1 on top of the ADF-PCB to adjust LED1 to maximum brightness.

Checks after adjustment

- Check that LED1 on top of the ADF-PCB clears when the original (thin Riso paper inlet) is detected by the Original IN sensor.

5. ADF Image Skew Adjustment

Checks and procedure

(1) Place a sheet of B4 size paper on the paper feed tray, and make a master of test chart No. 15 using the ADF unit.

(2) Lay the print on top of the original with the 310-mm lines at the side parallel, and check that the skew (X) of the leading 160-mm line is within 2 mm.

(3) If the skew is outside the specified parameters, adjust as follows.

- Remove the screw (M4 x 6) on the ADF mount plate [A], rotate through 180° to open the ADF unit to 90°, and then loosen the two ADF unit retaining screws (M4 x 10).
- Loosen the nut [B] on the hinge assembly (right), and turn the ADF slide screw [C] (clockwise if as in Figure 2, and counter-clockwise if as in Figure 1) to adjust dimension T. Turning the screw clockwise increases dimension T.
- Tighten the two ADF unit retaining screws, and then tighten the nuts with the ADF slide screw secured.
- Make a master and print, and repeat the procedure from the beginning if the skew is still outside the specified parameters.

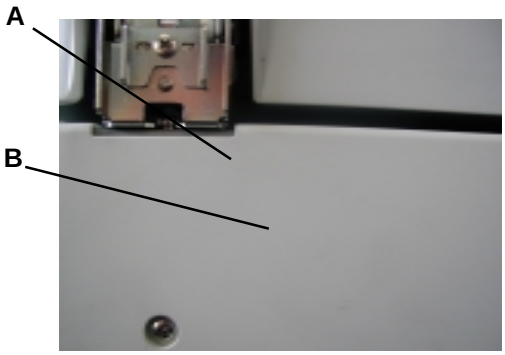

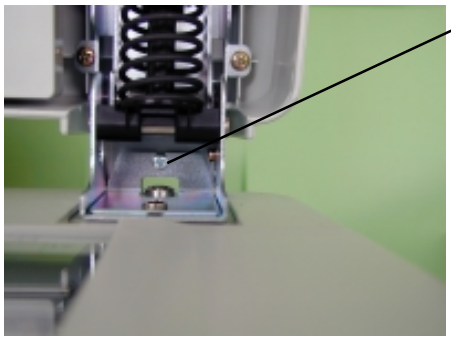



A: ADF mount plate
B: Nut
C: ADF slide screw

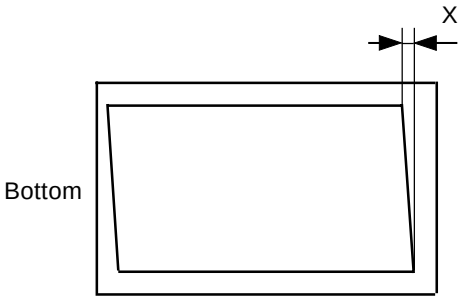

Figure 1

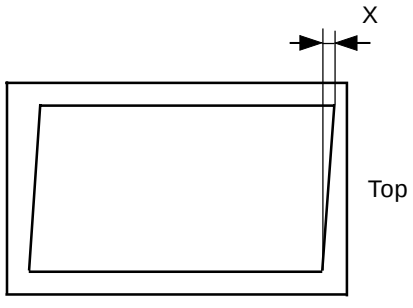

Figure 2