CHAPTER 19 DESCRIPTION OF PCBS

Contents

1.CONNECTIONS
1)BLOCK CHART 19-2
2)POWER SUPPLY AREA 19-3
3)PANEL CONTROL AREA 19-4
4)MOTOR CONTROL AREA 19-5
5)MASTER REMOVAL AREA 19-6
6)PAPER FEED AREA 19-7
7)PRINT DRUM AREA 19-8
8)PAPER EJECTION AREA 19-9
9)MASTER MAKING AREA 19-10
10)SCANNER AREA 19-11
11)OPTIONS 19-12
2.LOCATION OF PCBS 19-13
3..PCB FUNCTION DETAIL 19-14
4.SYSTEM PCB 19-15
5.POWER SUPPLY UNIT 19-16
6.DRIVE PCB 19-18
7.PANEL CONTROL PCB 19-19
8.PRINT DRUM CONTROL PCB 19-20
9.ADF PCB 19-21

COLOR ABBREVIATION IS AS FOLLOWS

W:WHITE	R:RED
BL:BLUE	B:BLACK
BR:BROWN	O:ORANGE
Y:YELLOW	GY:GRAY
GN:GREEN	V:VIOLET

《2000.07.11》

1.Connections

1)Block Chart

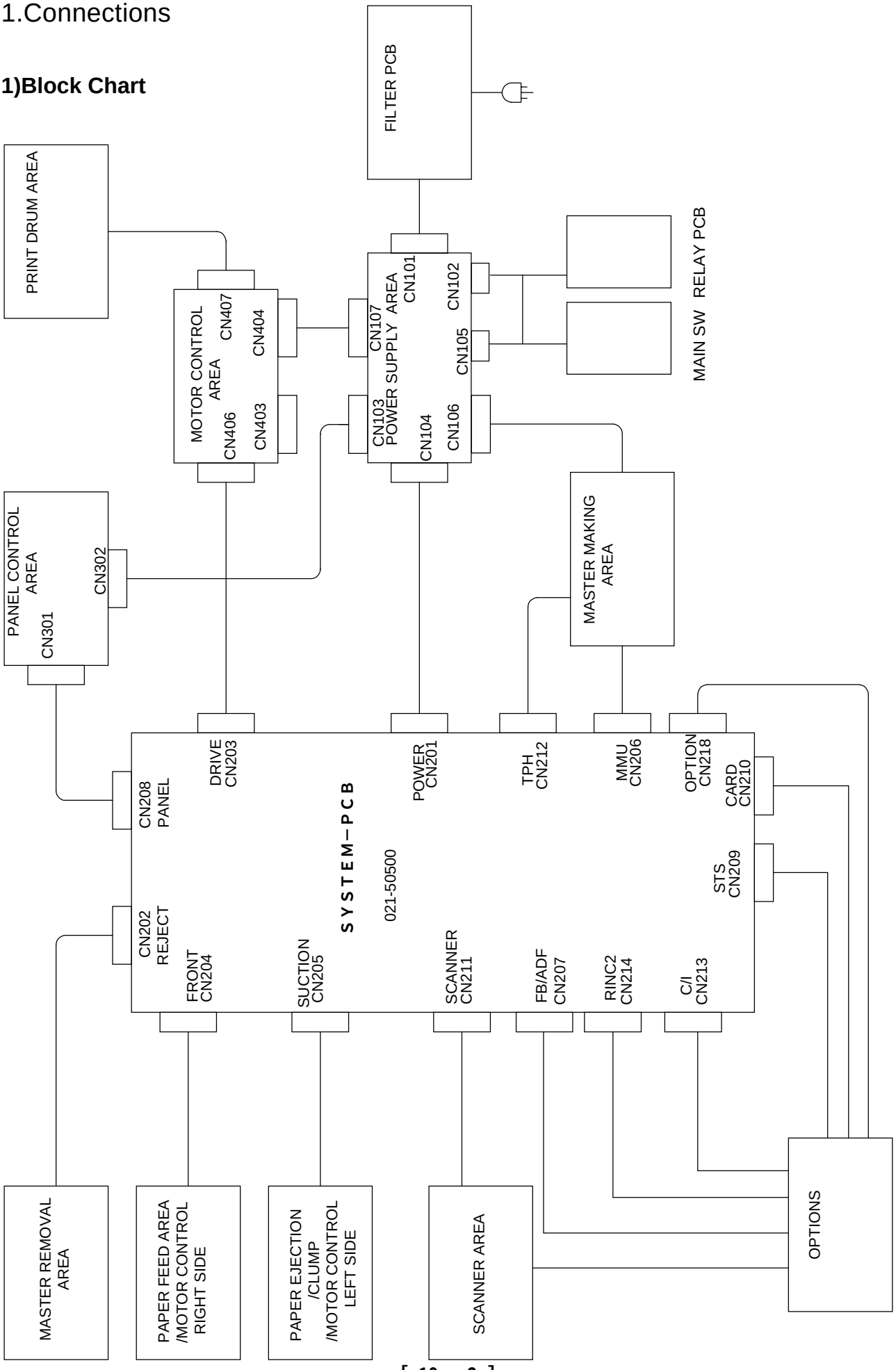

2)POWER SUPPLY AREA

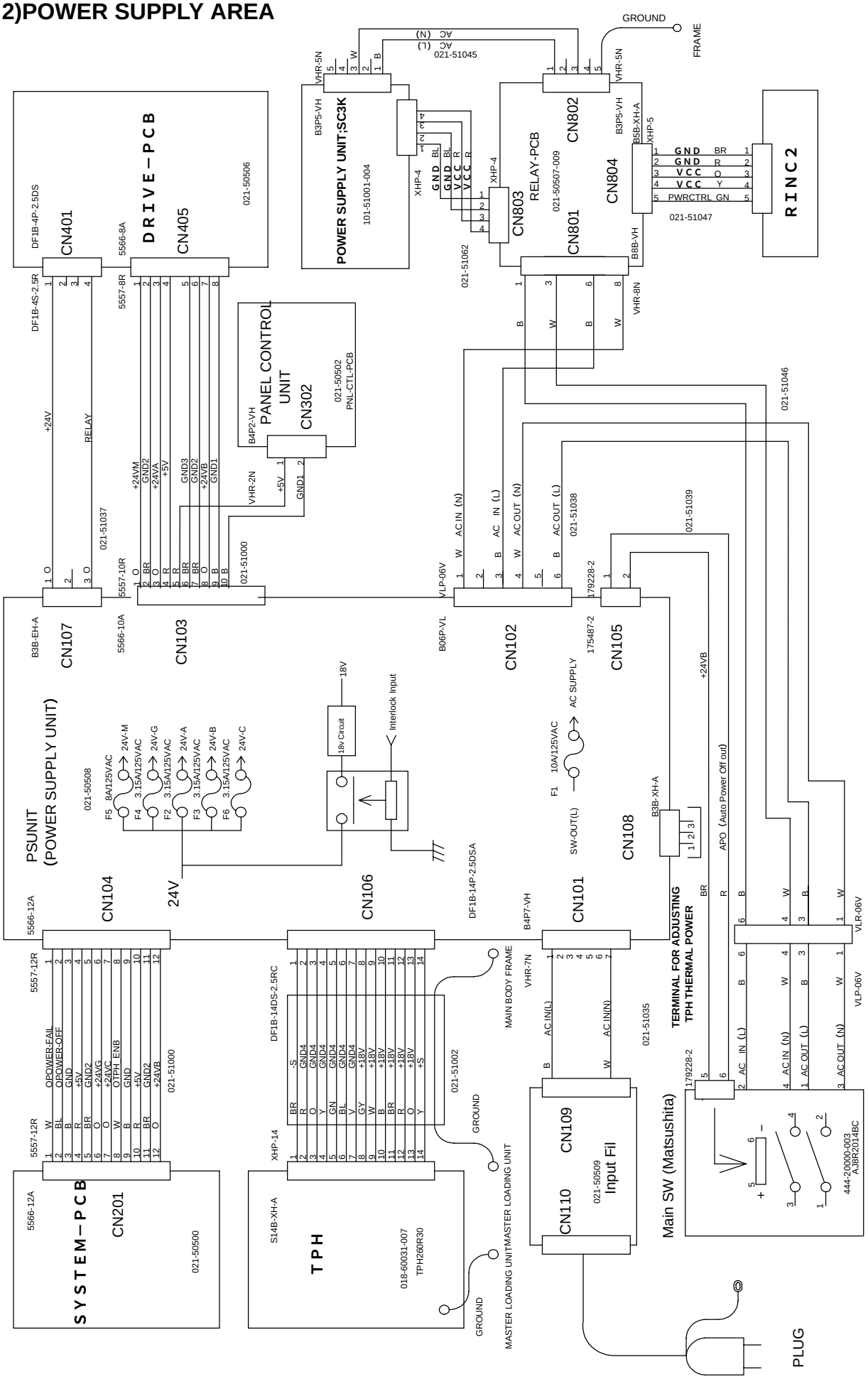

POWER SUPPLY UNIT

3)PANEL CONTROL AREA

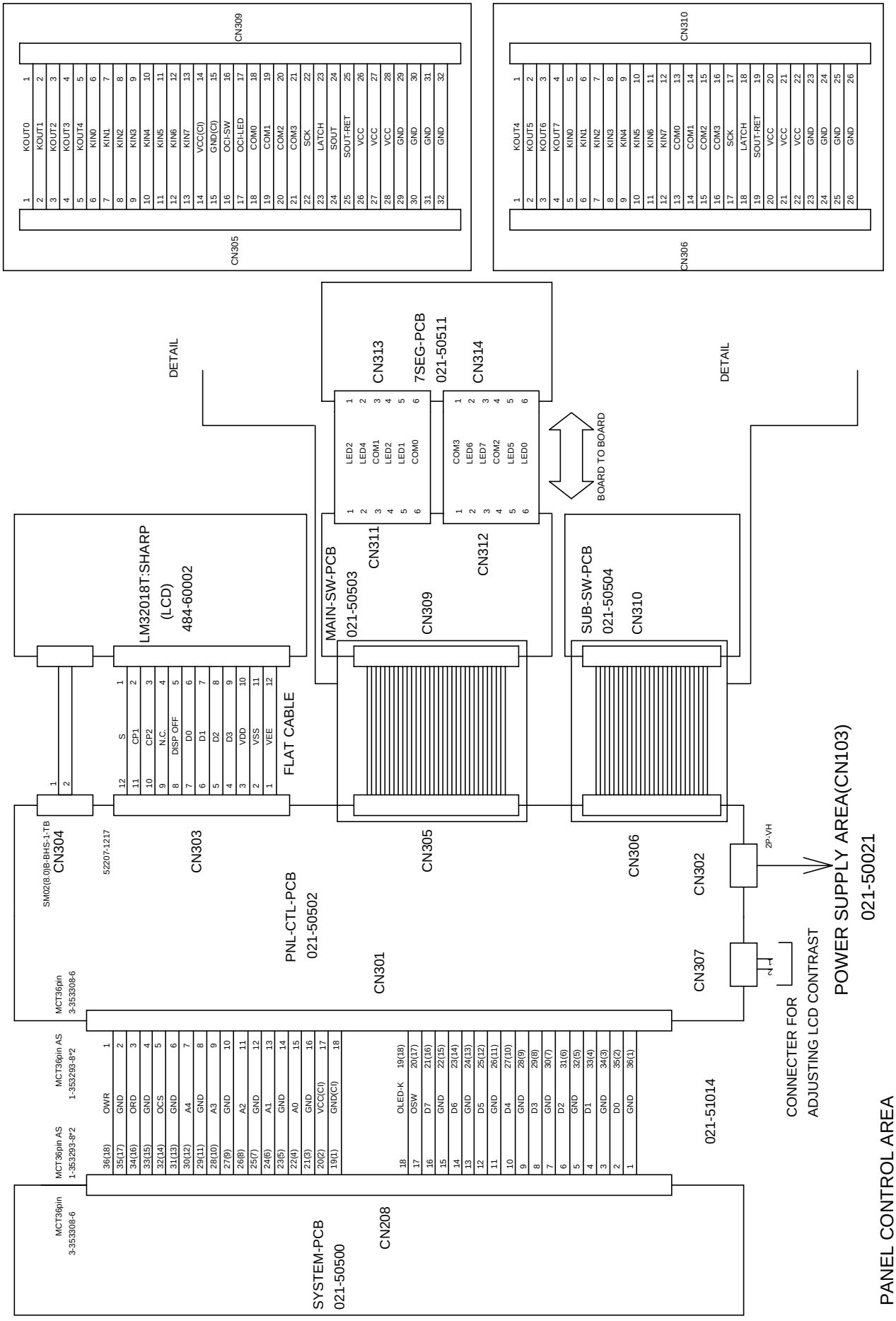

4)MOTOR CONTROL AREA

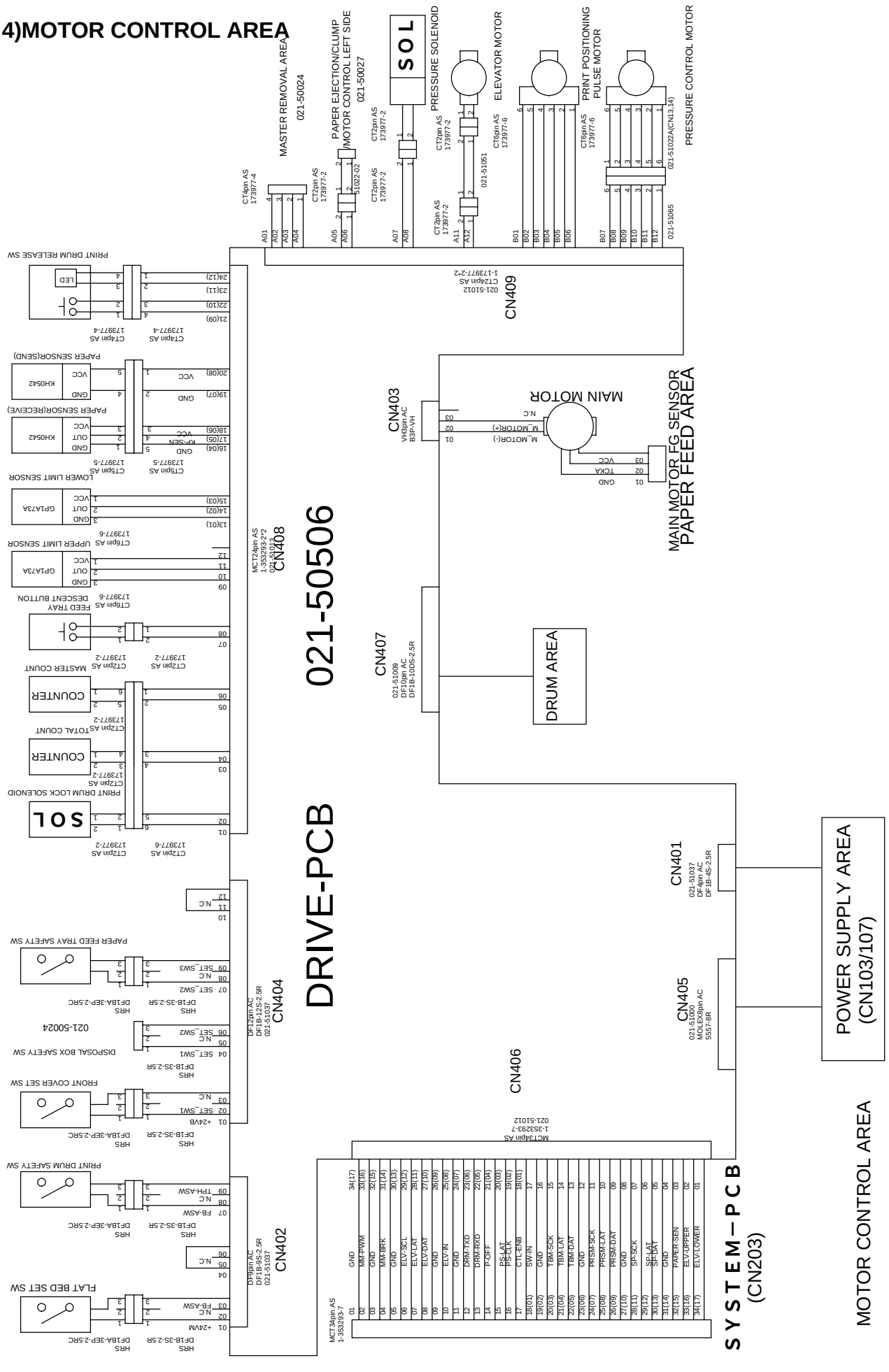

5)MASTER REMOVAL AREA

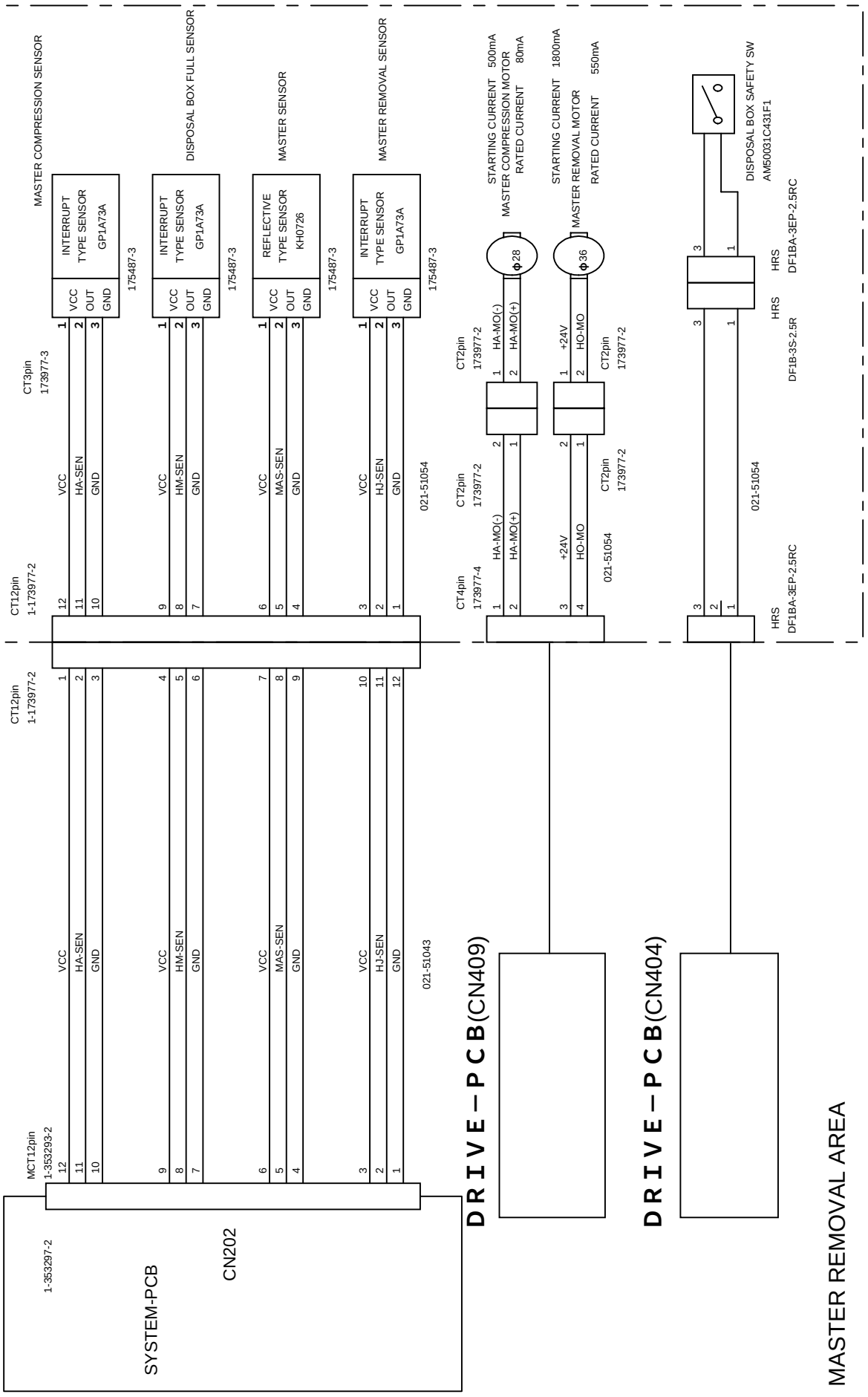

6)PAPER FEED AREA

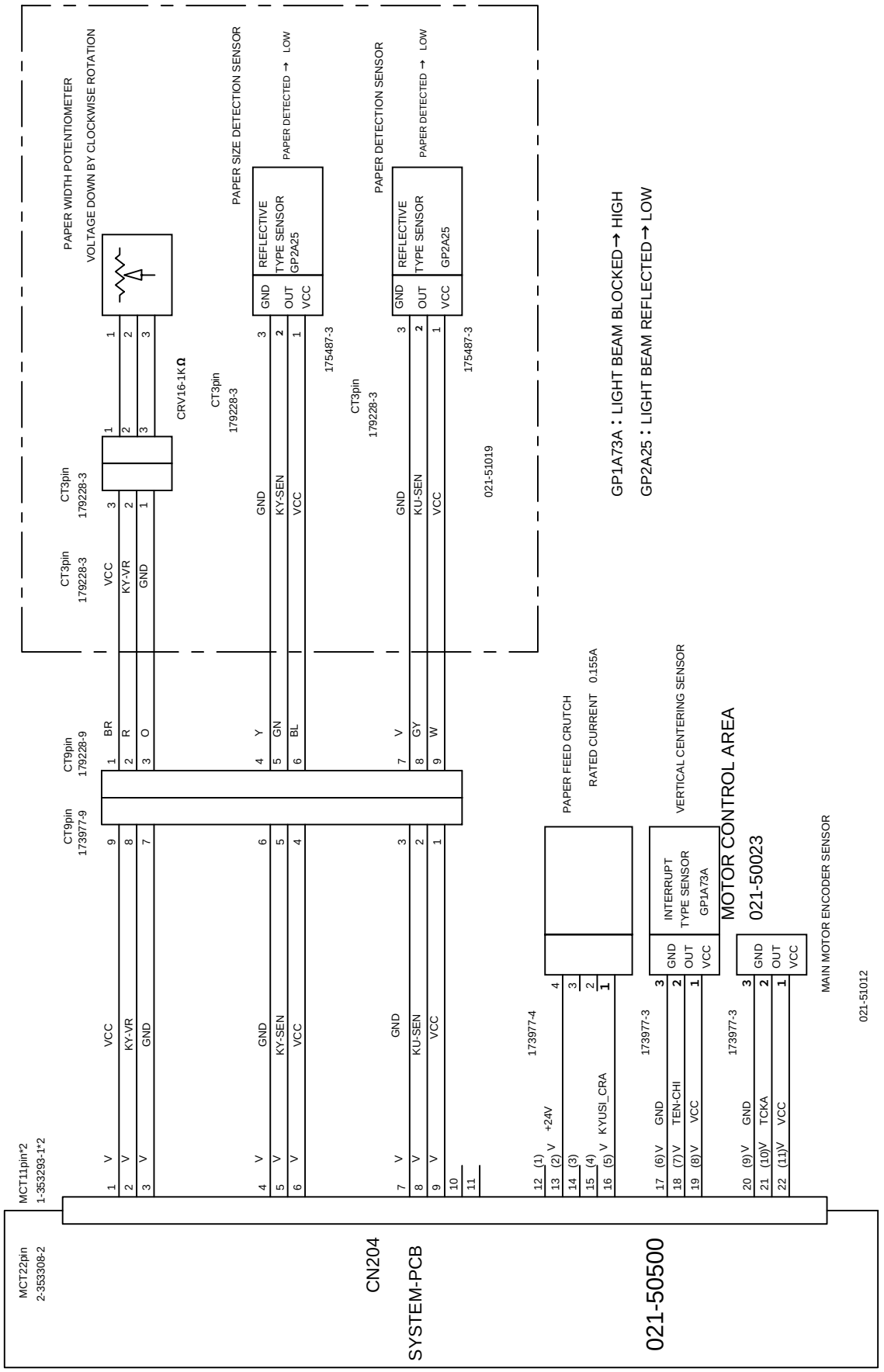

7)PRINT DRUM AREA

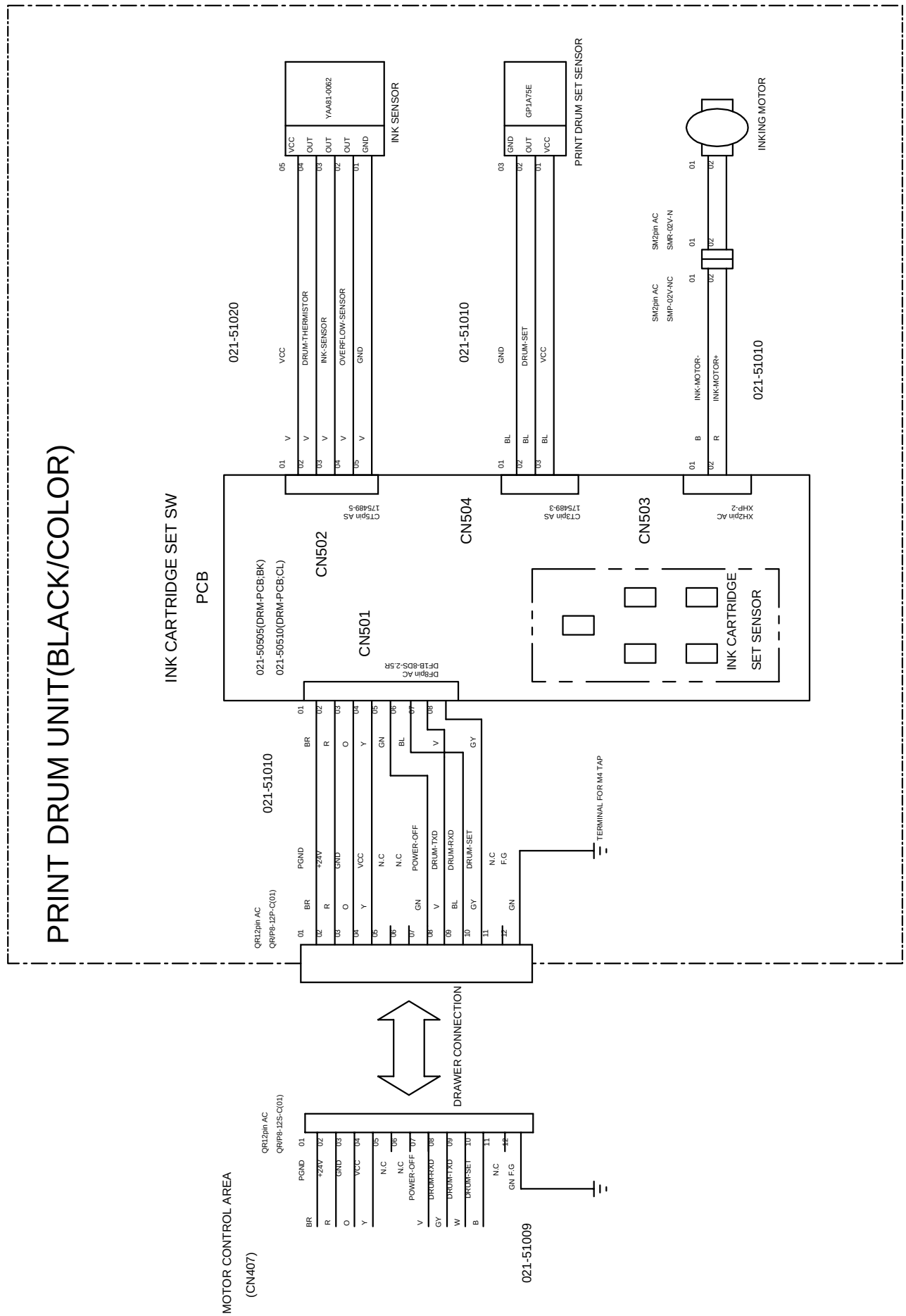

8)PAPER EJECTION AREA

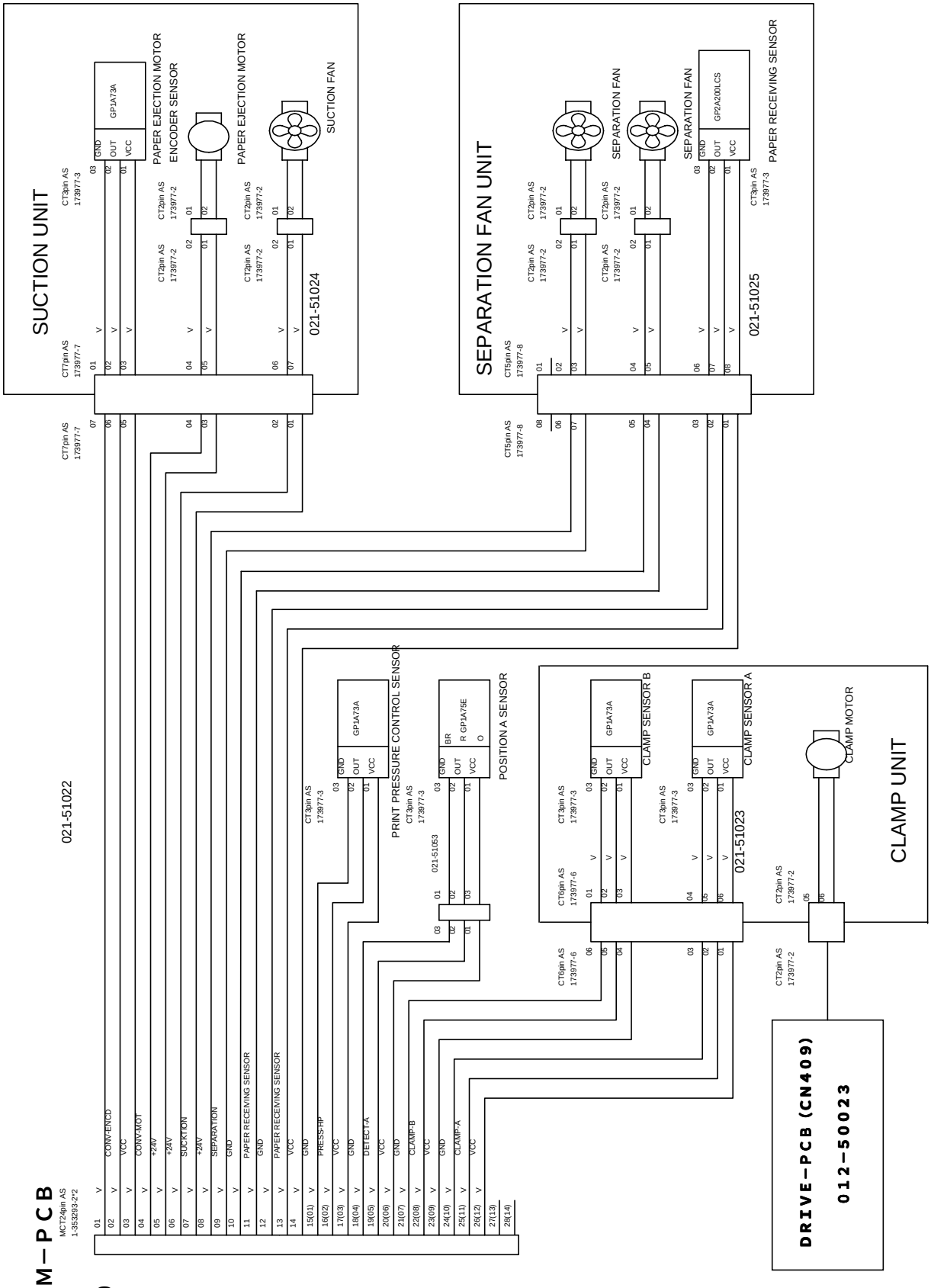

9)MASTER MAKING AREA

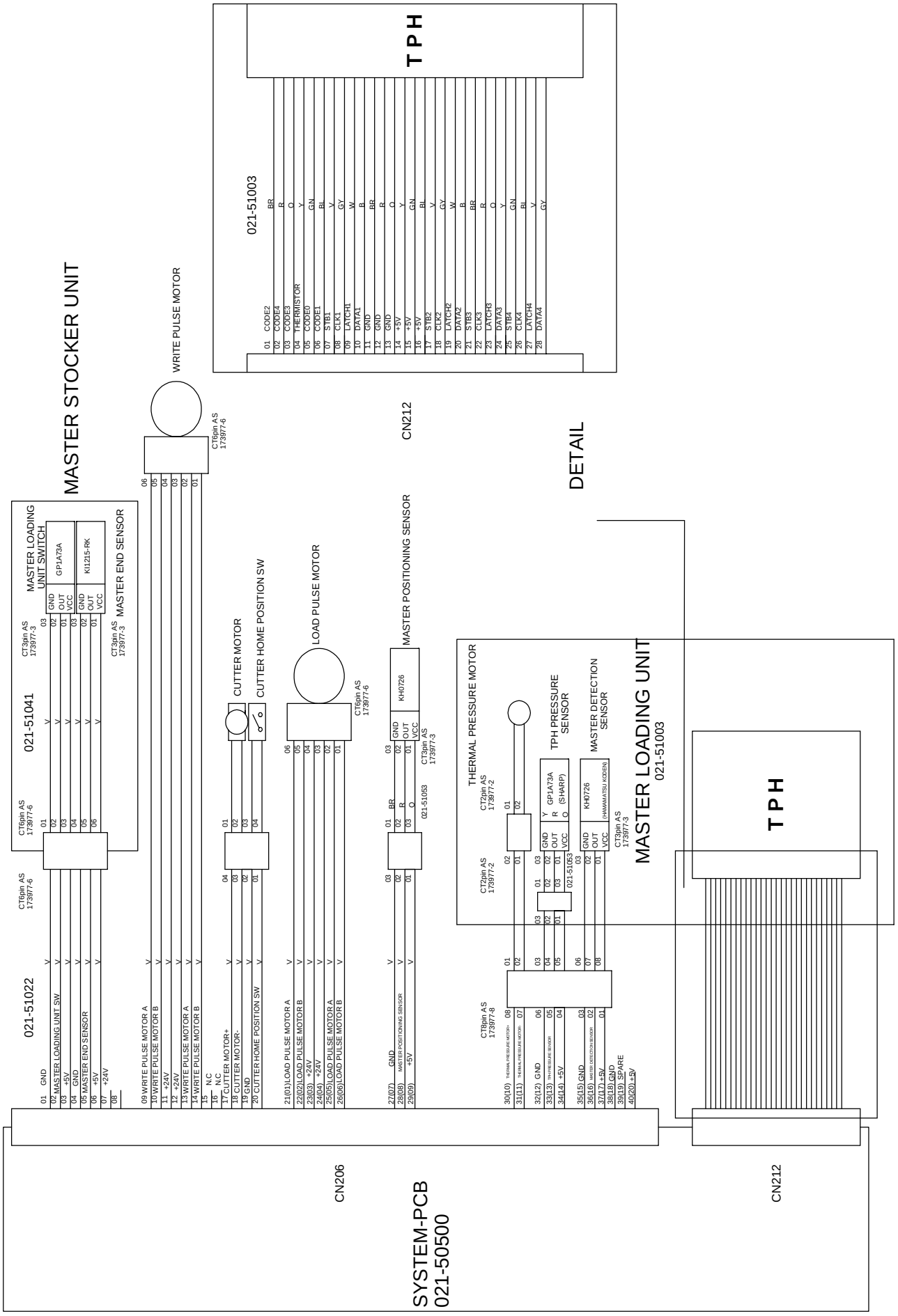

10)SCANNER AREA

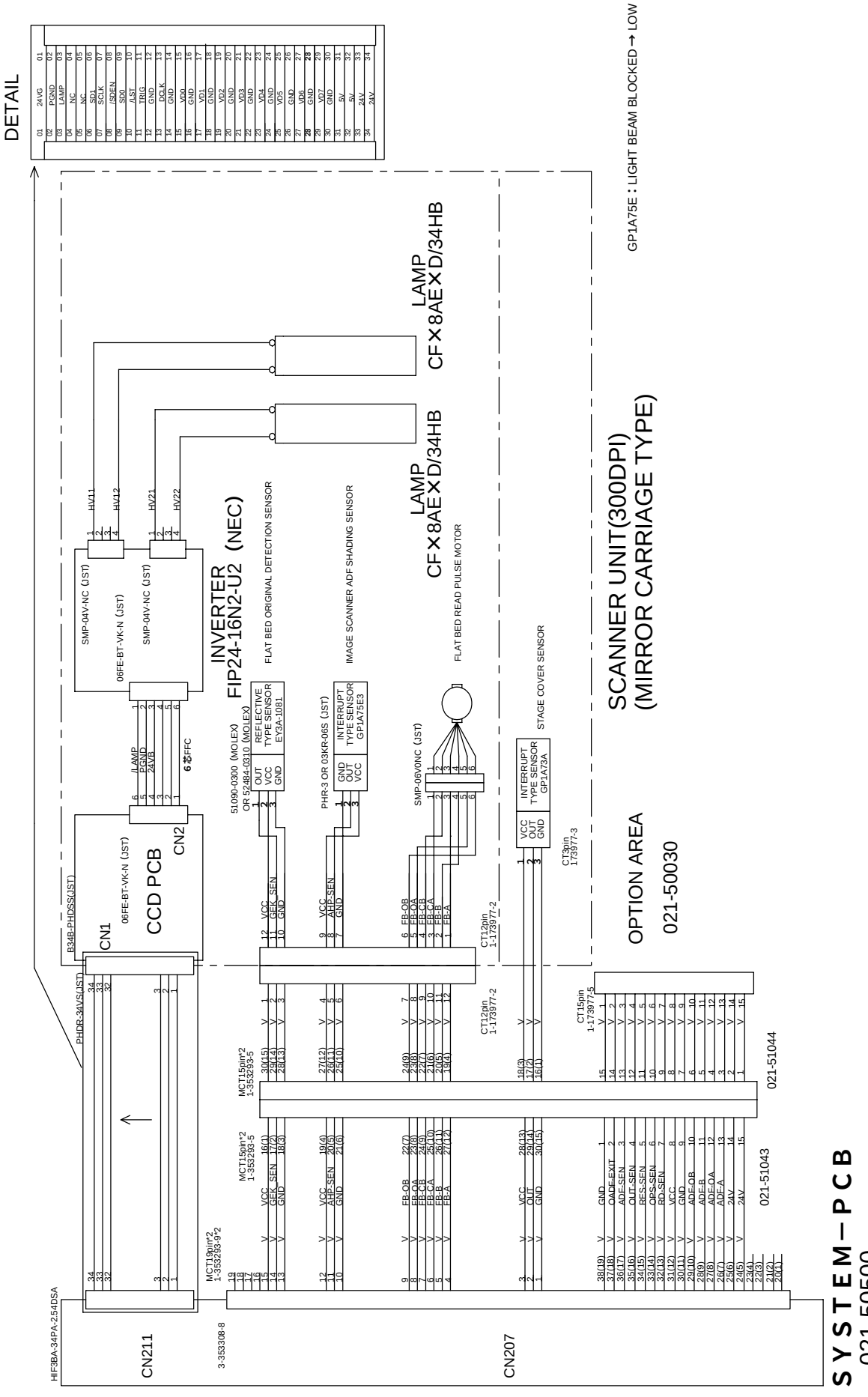

11)OPTIONS

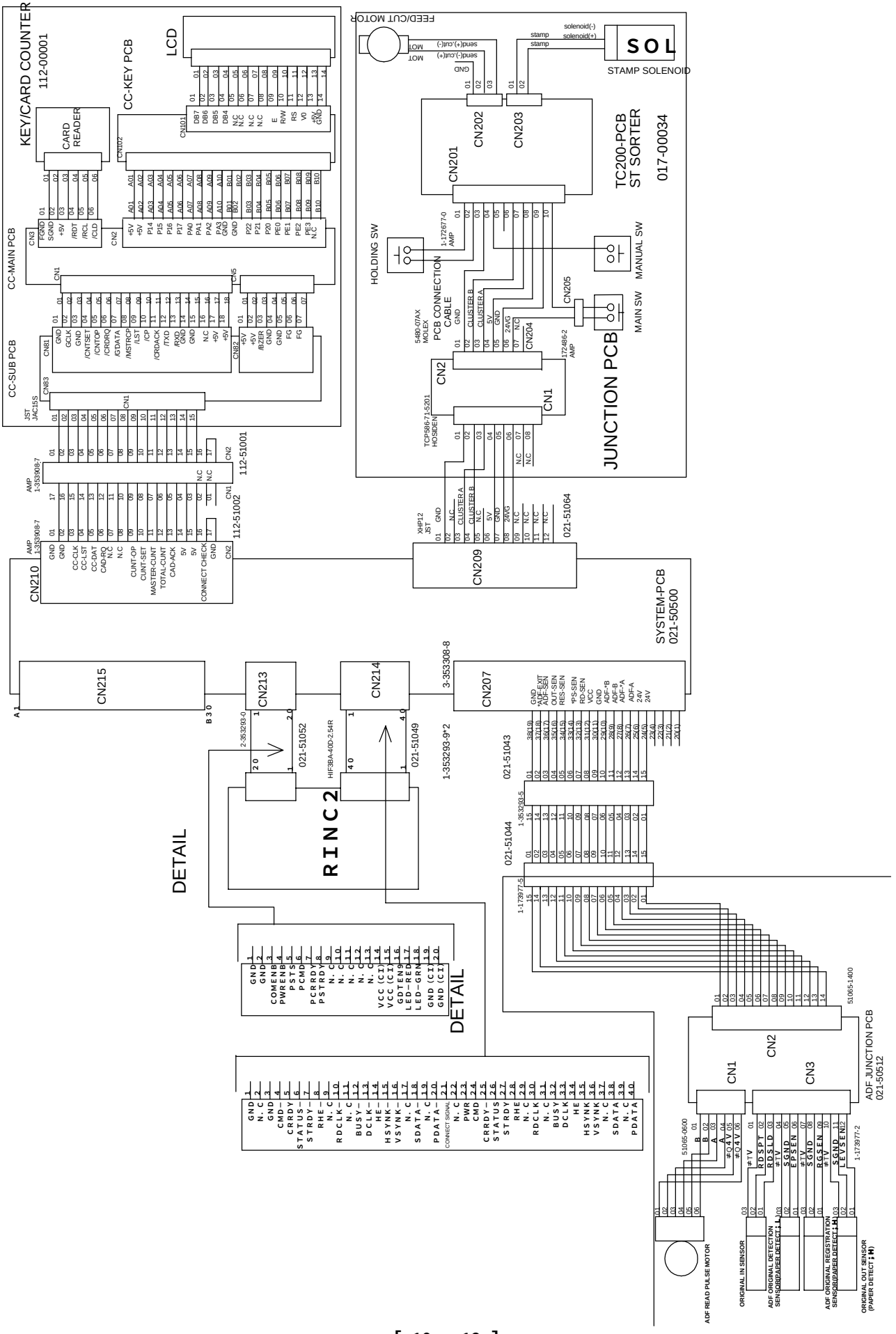
KEY/CARD COUNTER
112-00001
CARD READER
CC-KEY PCB
LCD
CC-MAIN PCB
CC-SUB PCB
JST JAC15S
AMP 1-353908-7
112-51001
112-51002
CN210
CN209
CN215
CN213
CN214
CN207
3-353308-8
SYSTEM-PCB
021-50500
021-51064
021-51052
021-51049
021-51043
021-51044
1-353293-9*2
2-353293-0
HIF3BA-40D-2.54R
RINC2
DETAIL
DETAIL
FEED/CUT MOTOR
STAMP SOLENOID
SOL
CN202
CN203
CN201
TC200-PCB
ST SORTER
017-00034
HOLDING SW
MANUAL SW
MAIN SW
PCB CONNECTION CABLE
5480-07AX
MOLEX
1-172677-0
AMP
CN204
CN205
172496-2
AMP
TCP586-71-5201
HOSIDEN
JUNCTION PCB
CN2
CN1
ADF JUNCTION PCB
021-50512
51065-1400
51065-0600
1-173977-5
1-173977-2
ADF READ PULSE MOTOR
ORIGINAL IN SENSOR
ADF ORIGINAL DETECTION SENSOR(PAPER DETECT L)
ADF ORIGINAL REGISTRATION SENSOR(PAPER DETECT H)
ORIGINAL OUT SENSOR (PAPER DETECT H)

2.LOCATION OF PCBS

FRONT

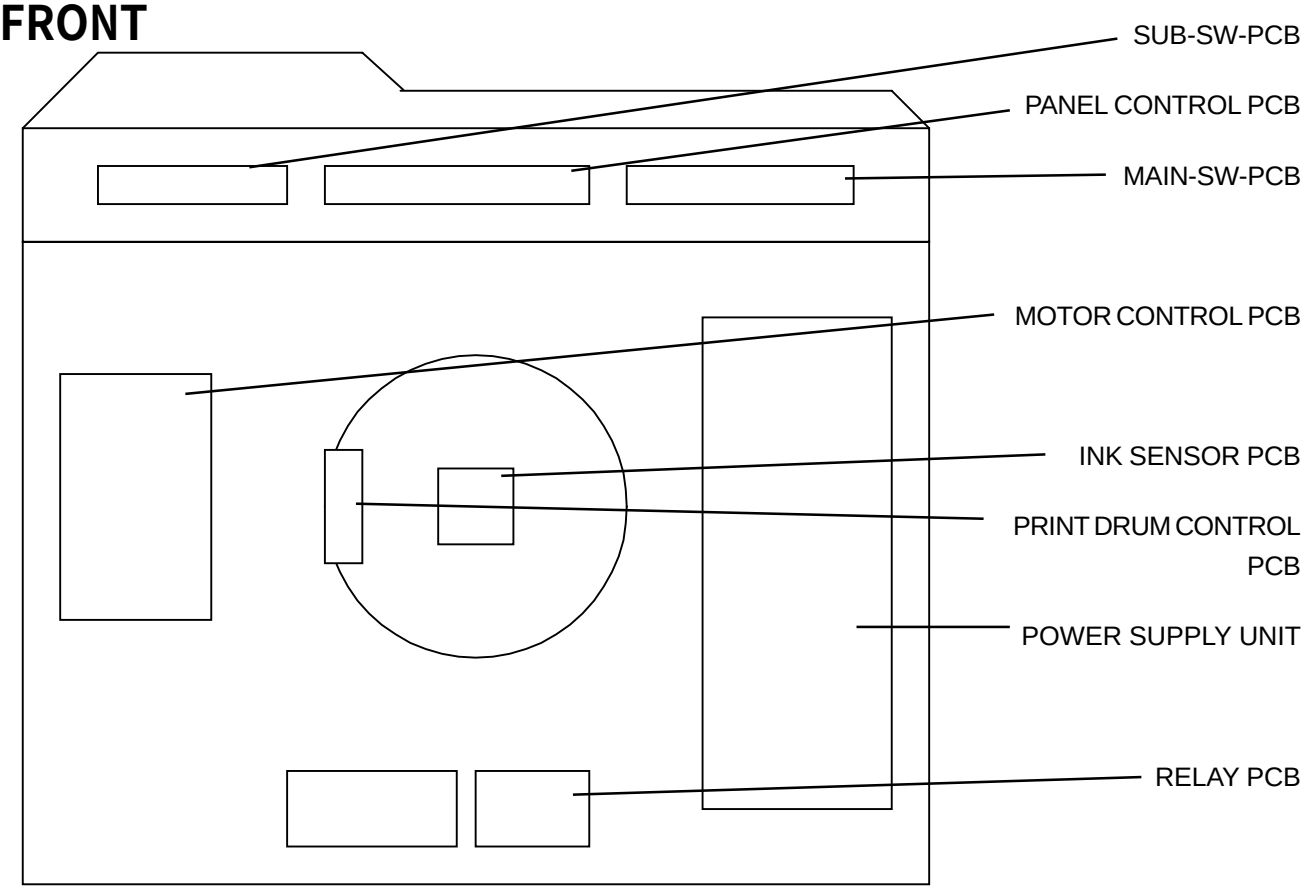

REAR

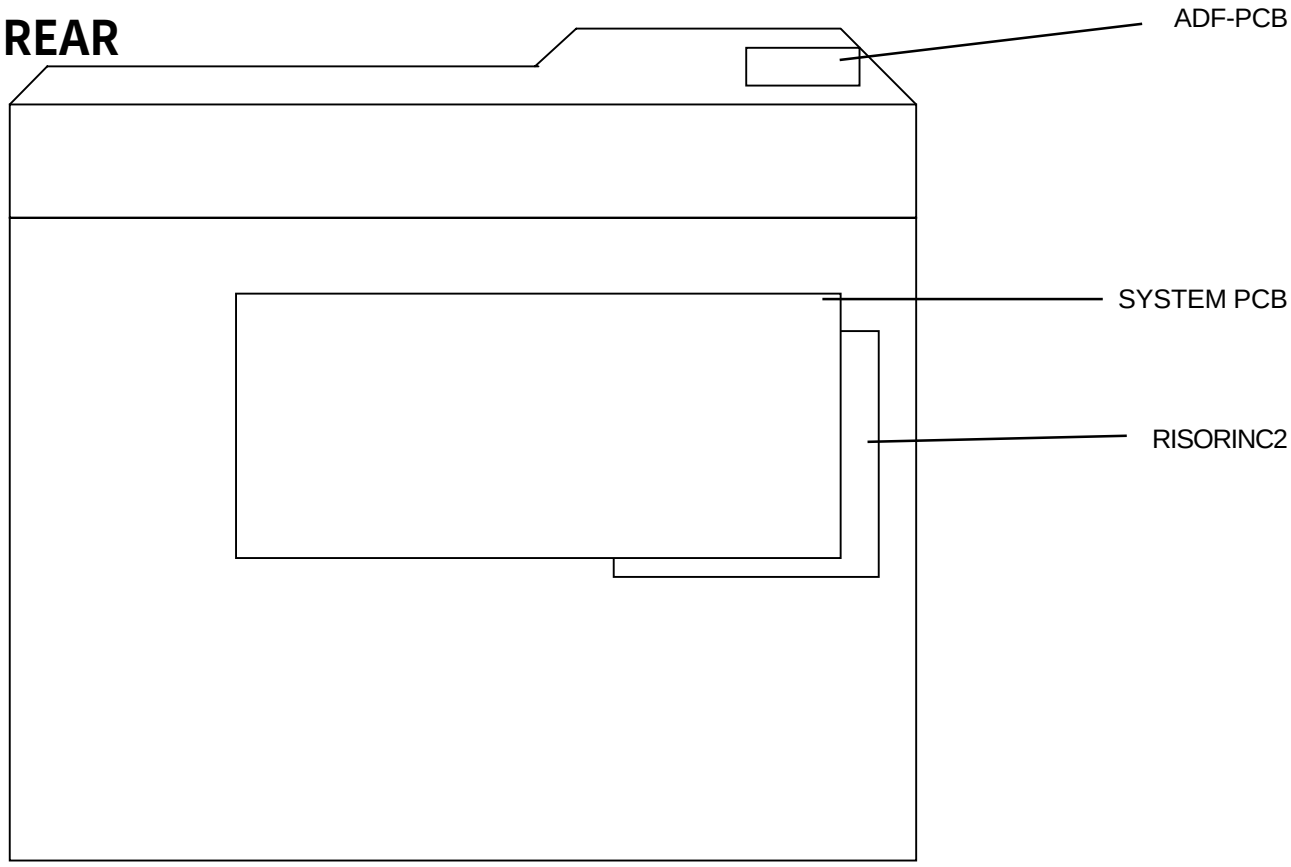

3.PCB FUNCTION DETAIL

PCB NAME	FUNCTION	MODEL
SYSTEM PCB	OVERALL CONTROL	*1
PSUNIT(POWER SUPPLY UNIT),PSUNIT 200	SUPPLY ALL VOLTAGES	*1
DRIVE PCB	CONTROL EACH MOTOR	*1
PDA ADF(ADF PCB)	DRIVE FUNCTION OF ADF UNIT	*1
PANEL CONTROL PCB	ENTER FUNCTION KEY,CONTROL DISPLAY	*1
MAIN SW PCB	ENTER NUMERAL KEY	*1
SUB SW PCB	ENTER SUB PANEL FUNCTION KEY	*1
DRM PCB;BK, DRM PCB;CL	JUNCTION OF SENSORS ON DRUM PCB	*1
RELAY PCB	CONTROL RISORINC2	*1
POWER SUPPLY UNIT ;SC3K	SUPPLY VOLTAGE FOR RISORINC2	*1
RINC2PCB;64MB	CONTROL COMPUTER INTERFACE FUNCTION	*1

*1:RN2000,RN2030,RN2050,RN2080,RN2100,RN2130,RN2150,RN2180

*2:RN2100,RN2130,RN2150,RN2180

4.SYSTEM PCB

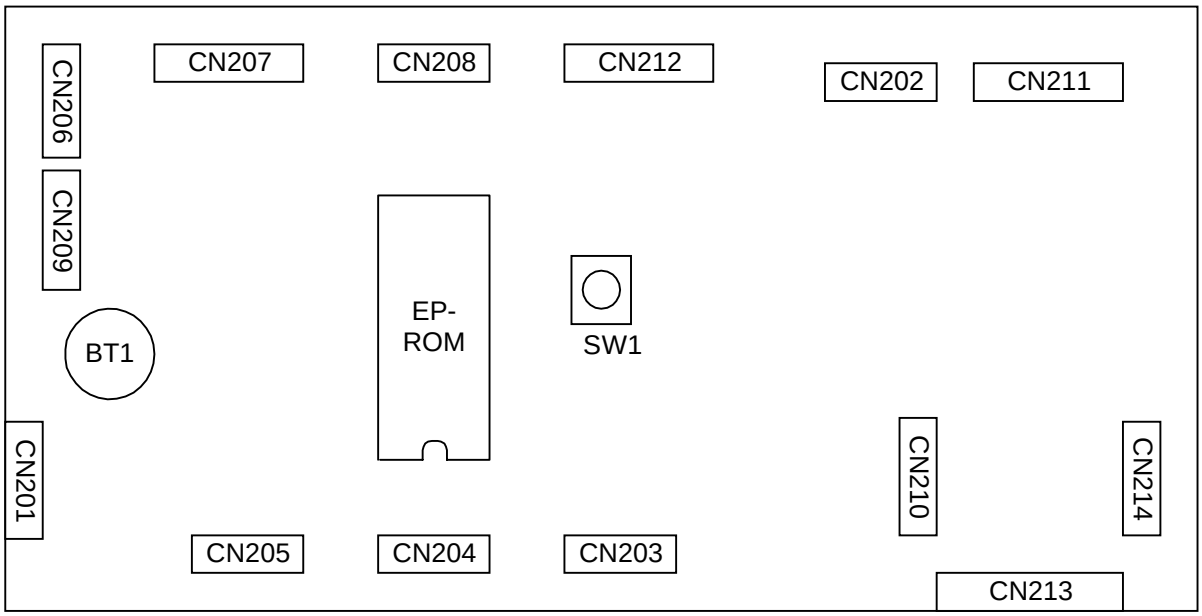

SW1:FREE ROTATION
BT1:BATTERY(CR2450)

5.POWER SUPPLY UNIT

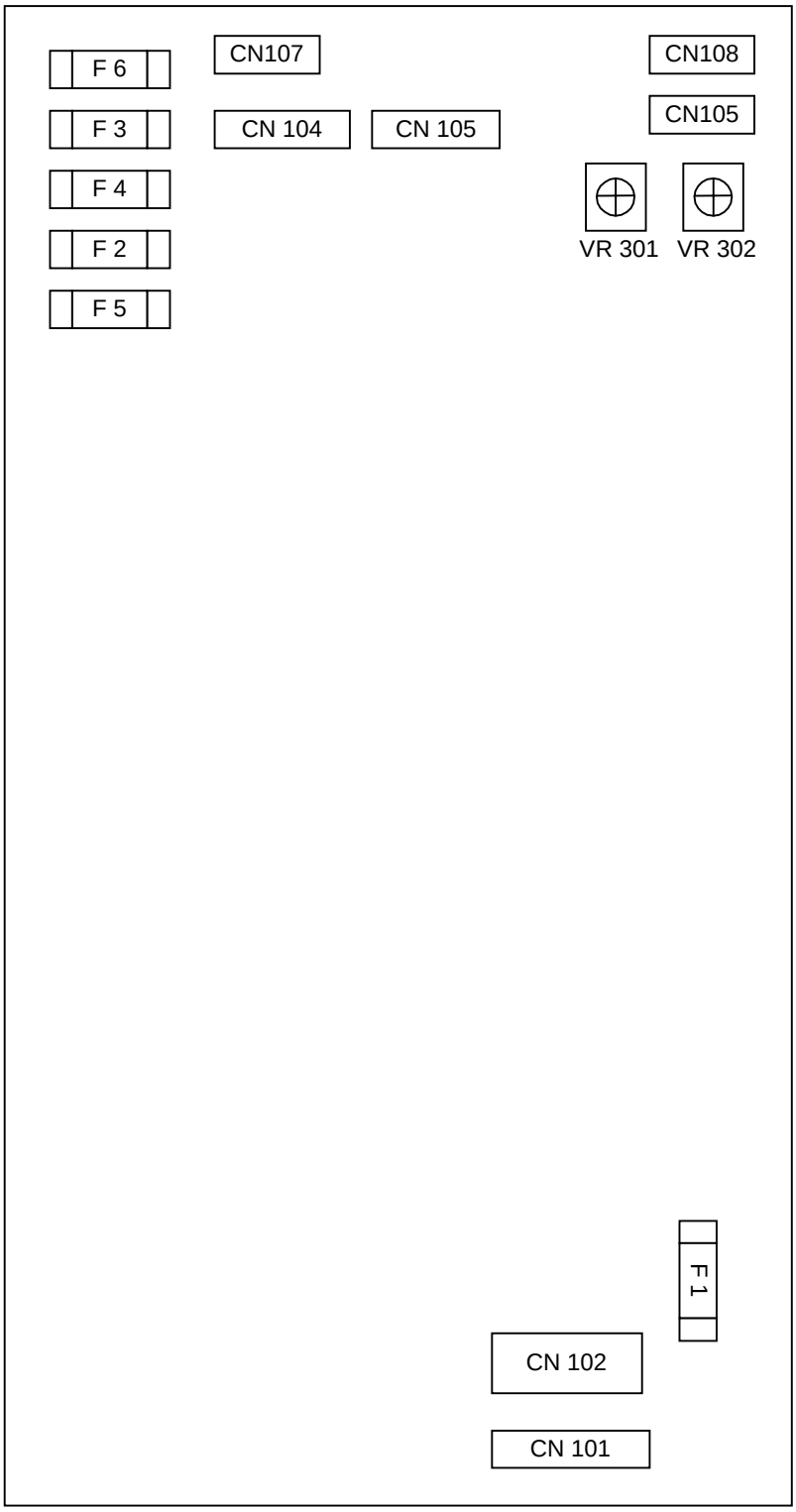

VR301:TPH THERMAL POWER ADJUSTMENT NORMAL
VR302:TPH THERMAL POWER ADJUSTMENT FINE
F1:FUSE 125V 10A
F2:FUSE 125V 3.15A
F3:FUSE 125V 3.15A
F4:FUSE 125V 3.15A
F5:FUSE 125V 8A
F6:FUSE 125V 3.15A

POWER SUPPLY UNIT FUSE CHART

FUSE NO.	SYSTEM	**PHENOMENON•** ^CONNECTED PARTS
F1 125V 10A	MAIN	**NO POWER**
F2 125V 3.15A	+24VA	LOCK SOLENOID TOTAL COUNTER MASTER COUNTER PRESSURE SOLENOID PRINT POSITIONING PULSE MOTOR PRESSURE CONTROL MOTOR INKING MOTOR
F3 125V 3.15A	+24VB	FLAT BED READ PULSE MOTOR ADF READ PULSE MOTOR WRITE PULSE MOTOR THERMAL PRESSURE MOTOR PAPER FEED CRUTCH PAPER EJECTION MOTOR CUTTER MOTOR LOAD PULSE MOTOR MASTER COMPRESSION MOTOR• EMASTER REMOVAL MOTOR ELEVATOR MOTOR CLAMP MOTOR
F4 125V 3.15A	+24VG	OPTIONS
F5 125V 8A	+24VM	MAIN MOTOR
F6 125V 3.15A	+24VC	SEPARATION FAN SUCTION FAN

6.DRIVE PCB

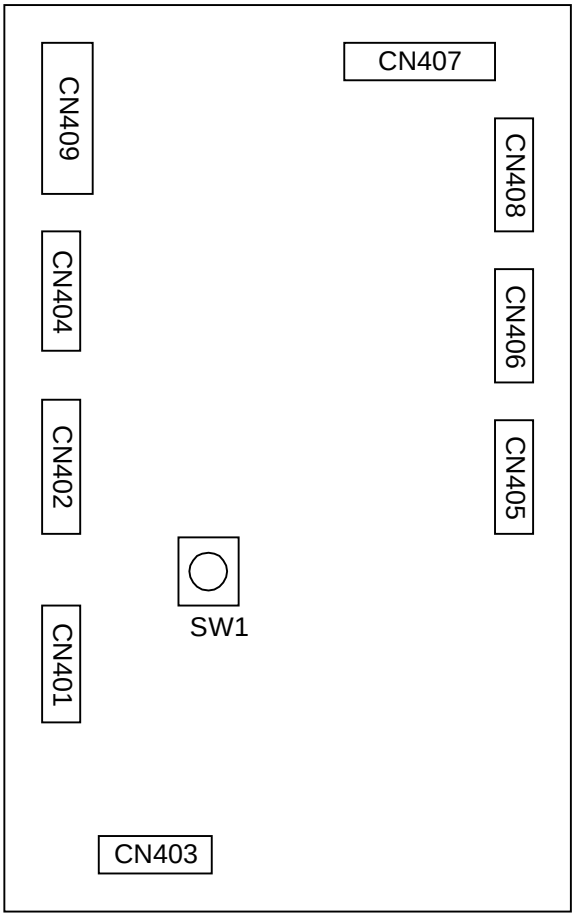

SW1:FREE ROTATION

7.PANEL CONTROL PCB

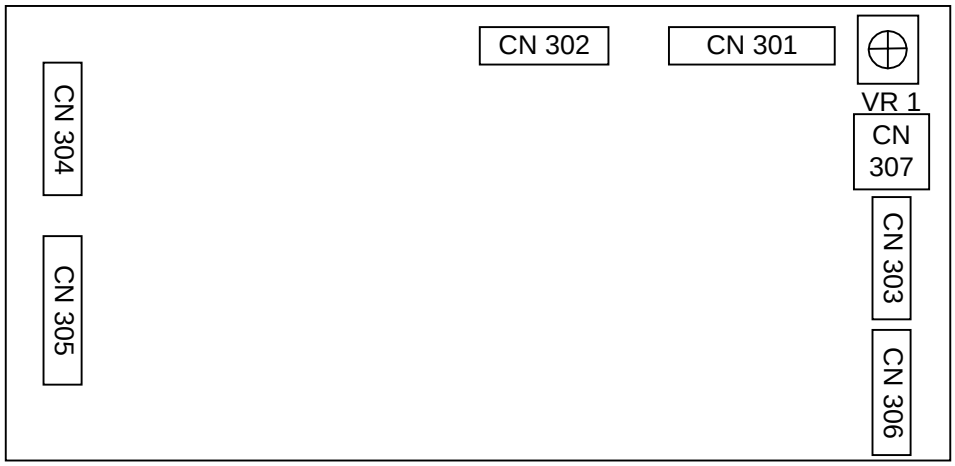

VR1:FOR ADJUST
LCD CONTRAST

8.PRINT DRUM CONTROL PCB

BLACK

SW1-5:INK CARTRIDGE SET SENSOR (BACK OF PCB)

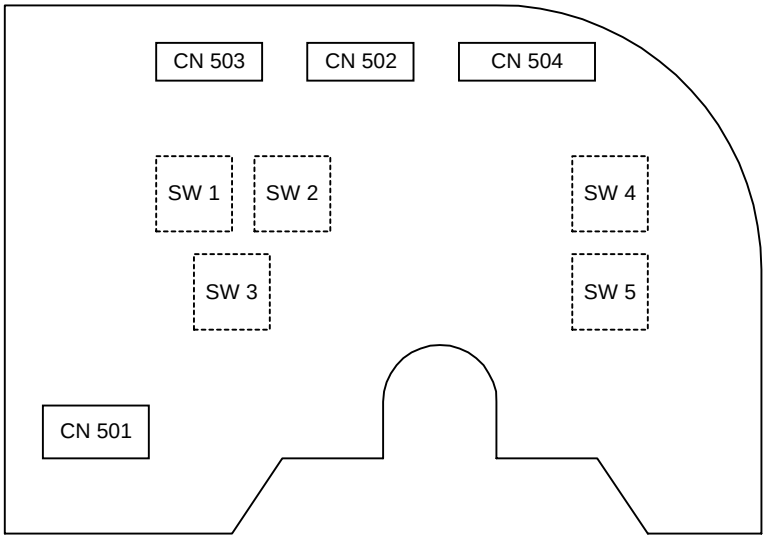

COLOR

SW1-5:INK CARTRIDGE SET SENSOR (BACK OF PCB)

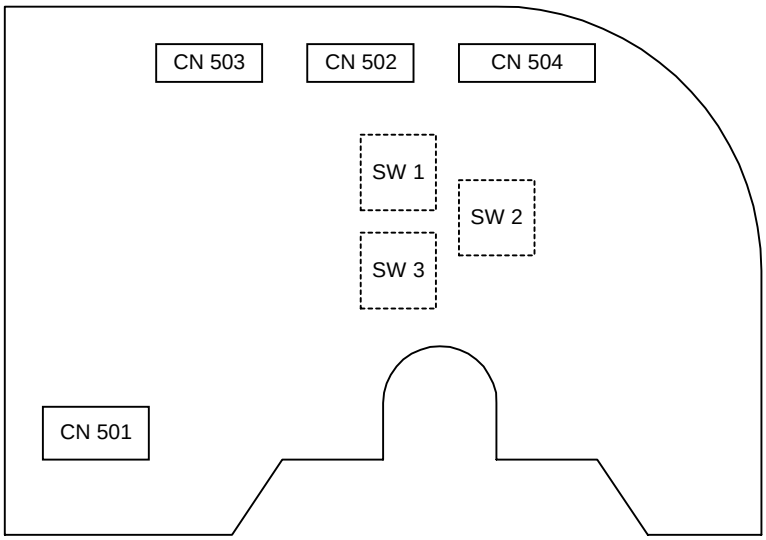

9.ADF PCB

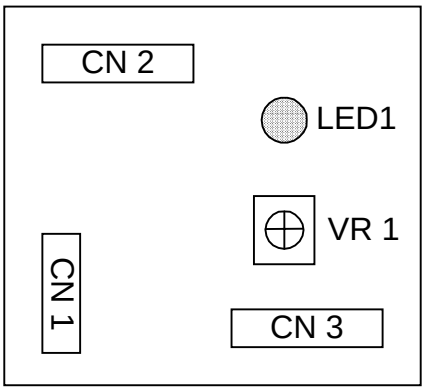

LED1:READ SENSOR DETECT

VR1:READ SENSOR ADJUST SENSITIVITY